Protected by AR

ACCORD

2003-2006
Service Manual

Protected by AR

General Information

Chassis and Paint Codes
2003 4-door Model 1-2
2003 2-door Model 1-3

Chassis and Paint Codes
2004 4-door Model 1-4
2004 2-door Model 1-5

Chassis and Paint Codes
2005 4-door Model 1-6
2005 2-door Model 1-7

Chassis and Paint Codes
2006 4-door Model 1-8
2006 2-door Model 1-9

Identification Number Locations 1-10

Danger/Warning/Caution Label Locations 1-11

Under-hood Emission Control Label 1-13

Lift and Support Points 1-14

Towing 1-15

Parts Marking 1-16

Protected by AR

Chassis and Paint Codes

2003 4-door Model

Vehicle Identification Number

1HG CM5 5 1 * 3 A 000001

a b c d e f g h

a. Manufacturer, Make and Type of Vehicle
1HG: HONDA OF AMERICA MFG., INC., U.S.A.
HONDA passenger vehicle
3HG: HONDA DE MEXICO S.A.DE.C.V.
HONDA passenger vehicle
JHM: HONDA MOTOR CO., LTD.
HONDA passenger vehicle

b. Line, Body and Engine Type
CM5: ACCORD/K24A4

c. Body Type and Transmission Type
5: 4-door Sedan/5-speed Manual
6: 4-door Sedan/5-speed Automatic

d. Vehicle Grade (Series)

U.S. model	Canada model
1: DX	1: DX
3: LX, LX-SULEV	3: LX
4: LX, LX-SULEV with Side Airbag	4: LX with Side Airbag
6: EX, EX-L EX-SULEV, EX-L-SULEV	6: EX, EX-L
7: EX, EX-L, EX-L-SULEV with Navigation	

e. Check Digit

f. Model Year
3: 2003

g. Factory Code
A:Marysville, Ohio Factory in U.S.A.
C:Saitama Factory in Japan
G:El Salto Factory in Mexico

h. Serial Number
000001—: U.S. model
700001—: U.S. model
800001—: Canada model

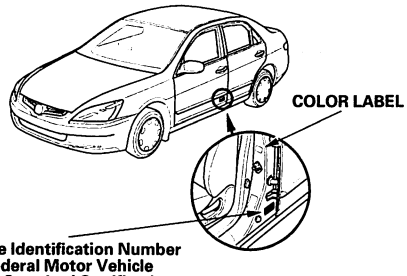

Vehicle Identification Number and Federal Motor Vehicle Safety Standard Certification.

Vehicle Identification Number and Canadian Motor Vehicle Safety Standard Certification.

Engine Number

K24A4 - 1000001

a b

a. Engine Type
K24A4: 2.4 L DOHC i-VTEC Sequential Multiport Fuel-injected engine

b. Serial Number
1HG: 1000001—
3HG: 1000001—
JHM: 1500001—

Transmission Number

APG6 - 1500001

a b

a. Transmission Type
APG6: 5-speed Manual (1500001—)
MCLA: 5-speed Automatic (1000001—)

b. Serial Number

Paint Code

Code	Color	U.S.	Canada
B-92P	Nighthawk Black Pearl	○	○
B-96P	Eternal Blue Pearl	○	○
G-508P	Noble Green Pearl	○	
NH-578	Taffeta White	○	
NH-623M	Satin Silver Metallic	○	○
NH-658P	Graphite Pearl	○	○
R-522P	Redondo Red Pearl	○	○
YR-538M	Desert Mist Metallic	○	○

BACK

Protected by AR

2003 2-door Model

Vehicle Identification Number

1HG CM7 1 2 * 3 A 000001

a b c d e f g h

a. Manufacturer, Make and Type of Vehicle
1HG: HONDA OF AMERICA MFG., INC., U.S.A.
HONDA passenger vehicle

b. Line, Body and Engine Type
CM7: ACCORD COUPE/K24A4

c. Body Type and Transmission Type
1: 2-door Coupe/5-speed Manual
2: 2-door Coupe/5-speed Automatic

d. Vehicle Grade (Series)

U.S. model	Canada model
2: LX	2: LX
3: LX with Side Airbag	3: LX with Side Airbag
6: EX, EX-L	6: EX, EX-L
7: EX-L	

e. Check Digit

f. Model Year
3: 2003

g. Factory Code
A:Marysville, Ohio Factory in U.S.A.

h. Serial Number
000001—: U.S. model
800001—: Canada model

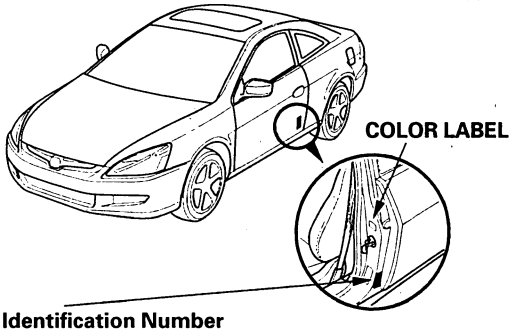

Vehicle Identification Number and Federal Motor Vehicle Safety Standard Certification.

Vehicle Identification Number and Canadian Motor Vehicle Safety Standard Certification.

Engine Number

K24A4 - 1000001

a b

a. Engine Type
K24A4: 2.4 L DOHC i-VTEC Sequential Multiport Fuel-injected engine

b. Serial Number

Transmission Number

APG6 - 1500001

a b

a. Transmission Type
APG6: 5-speed Manual (1000001—, 1500001—)
MCLA: 5-speed Automatic (1000001—)

b. Serial Number

Paint Code

Code	Color	U.S.	Canada
B-92P	Nighthawk Black Pearl	○	○
G-508P	Noble Green Pearl	○	
B-517P	Sapphire Blue Pearl	○	○
NH-578	Taffeta White	○	
NH-623M	Satin Silver Metallic	○	○
NH-658P	Graphite Pearl	○	
R-94P	San Marino Red	○	
R-522P	Redondo Red Pearl		○
YR-538M	Desert Mist Metallic	○	○

Protected by AR

Chassis and Paint Codes (cont'd)

2004 4-door Model

Vehicle Identification Number

1HG CM5 5 1 * 4 A 000001
a b c d e f g h

a. Manufacturer, Make and Type of Vehicle
1HG: HONDA OF AMERICA MFG., INC., U.S.A.
HONDA passenger vehicle
3HG: HONDA DE MEXICO S.A.DE.C.V.
HONDA passenger vehicle
JHM: HONDA MOTOR CO., LTD.
HONDA passenger vehicle

b. Line, Body and Engine Type
CM5: ACCORD/K24A4

c. Body Type and Transmission Type
5: 4-door Sedan/5-speed Manual
6: 4-door Sedan/5-speed Automatic

d. Vehicle Grade (Series)

U.S. model	Canada model
1: DX	1: DX
3: LX, LX-SULEV	3: LX
4: LX with Side Airbag, LX-SULEV with Side Airbag	4: LX with Side Airbag
6: EX, EX-SULEV	6: EX, EX-L
7: EX with Side Curtain Airbag, EX-L with Navigation, EX-SULEV with Side Curtain Airbag, EX-L-SULEV with Navigation	
8: EX-L, EX-L-SULEV	

e. Check Digit

f. Model Year
4: 2004

g. Factory Code
A:Marysville, Ohio Factory in U.S.A.
C:Saitama Factory in Japan
G:El Salto Factory in Mexico

h. Serial Number
000001—: U.S. model
700001—: U.S. model
800001—: Canada model

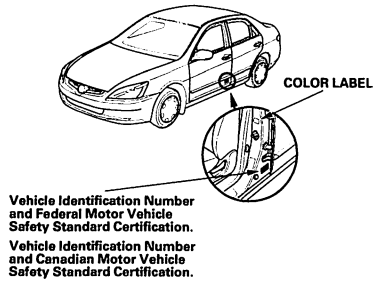

Engine Number

K24A4 - 2000001
a b

a. Engine Type
K24A4: 2.4 L DOHC i-VTEC Sequential Multiport Fuel-injected engine

b. Serial Number
1HG: 2000001—, SULEV: 2300001—
3HG: 2400001—
JHM: 2500001—

Transmission Number

APG6 - 2500001
a b

a. Transmission Type
APG6: 5-speed Manual (2000001—, 2500001—)
MCLA: 5-speed Automatic (2000001—)
BCLA: 5-speed Automatic (6000001—)

b. Serial Number

Paint Code

Code	Color	U.S.	Canada
B-92P	Nighthawk Black Pearl	○	○
B-96P	Eternal Blue Pearl	○	○
G-516P	Deep Green Pearl	○	○
NH-578	Taffeta White	○	
NH-623M	Satin Silver Metallic	○	○
NH-658P	Graphite Pearl	○	○
R-522P	Redondo Red Pearl	○	○
YR-538M	Desert Mist Metallic	○	○

BACK

Protected by AR

2004 2-door Model

Vehicle Identification Number

1HG CM7 1 2 * 4 A 000001

a b c d e f g h

a. Manufacturer, Make and Type of Vehicle
1HG: HONDA OF AMERICA MFG., INC., U.S.A.
HONDA passenger vehicle
b. Line, Body and Engine Type
CM7: ACCORD COUPE/K24A4
c. Body Type and Transmission Type
1: 2-door Coupe/5-speed Manual
2: 2-door Coupe/5-speed Automatic
d. Vehicle Grade (Series)

U.S. model	Canada model
2: LX	2: LX
3: LX with Side Airbag	3: LX with Side Airbag
5: EX with Side Airbag	6: EX, EX-L
6: EX-L	
7: EX with Side Curtain Airbag, EX-L with Navigation	

e. Check Digit
f. Model Year
4: 2004
g. Factory Code
A:Marysville, Ohio Factory in U.S.A.
h. Serial Number
000001—: U.S. model
800001—: Canada model

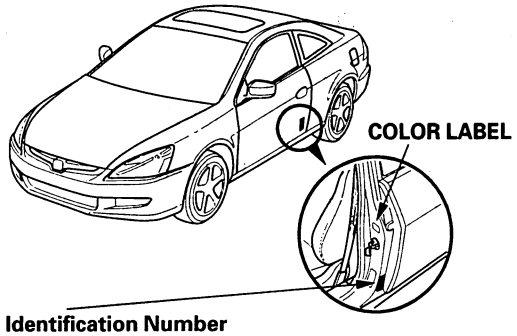

Vehicle Identification Number and Federal Motor Vehicle Safety Standard Certification.

Vehicle Identification Number and Canadian Motor Vehicle Safety Standard Certification.

Engine Number

K24A4 - 2000001

a b

a. Engine Type
K24A4: 2.4 L DOHC i-VTEC Sequential Multiport Fuel-injected engine
b. Serial Number

Transmission Number

APG6 - 2500001

a b

a. Transmission Type
APG6: 5-speed Manual (2500001—)
BCLA: 5-speed Automatic (6000001—)
b. Serial Number

Paint Code

Code	Color	U.S.	Canada
B-92P	Nighthawk Black Pearl	○	○
G-516P	Deep Green Pearl	○	
B-517P	Sapphire Blue Pearl	○	○
NH-578	Taffeta White	○	
NH-623M	Satin Silver Metallic	○	○
NH-658P	Graphite Pearl	○	○
R-94P	San Marino Red	○	
R-522P	Redondo Red Pearl		○
YR-538M	Desert Mist Metallic	○	

Protected by AR

Chassis and Paint Codes (cont'd)

2005 4-door Model

Vehicle Identification Number

1HG CM5 5 1 * 5 A 000001
a b c d e f g h

a. Manufacturer, Make and Type of Vehicle
1HG: HONDA OF AMERICA MFG., INC., U.S.A.
HONDA passenger vehicle
3HG: HONDA DE MEXICO S.A.DE.C.V.
HONDA passenger vehicle
JHM: HONDA MOTOR CO., LTD.
HONDA passenger vehicle

b. Line, Body and Engine Type
CM5: ACCORD/K24A4

c. Body Type and Transmission Type
5: 4-door Sedan/5-speed Manual
6: 4-door Sedan/5-speed Automatic

d. Vehicle Grade (Series)

U.S. model	Canada model
1: DX	1: DX
4: LX, LX-P, LX-SULEV	4: LX
6: EX, EX-SULEV, EX-L	6: EX, EX-L
7: EX, EX-L with Navigation, EX-SULEV, EX-L SULEV with Navigation	
8: EX-L, EX-L-SULEV	

e. Check Digit

f. Model Year
5: 2005

g. Factory Code
A:Marysville, Ohio Factory in U.S.A.
C:Saitama Factory in Japan
G:El Salto Factory in Mexico

h. Serial Number
000001—: U.S. model
700001—: U.S. model
800001—: Canada model

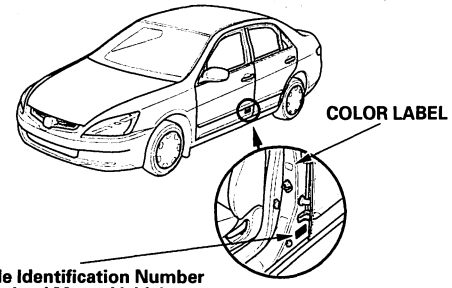

Vehicle Identification Number and Federal Motor Vehicle Safety Standard Certification.

Vehicle Identification Number and Canadian Motor Vehicle Safety Standard Certification.

Engine Number

K24A4 - 3500001
a b

a. Engine Type
K24A4: 2.4 L DOHC i-VTEC Sequential Multiport Fuel-injected engine

b. Serial Number
1HG: 3000001—, SULEV: 3300001—
3HG: 3400001—
JHM: 3500001—, SULEV: 3700001—

Transmission Number

APG6 - 3000001
a b

a. Transmission Type
APG6: 5-speed Manual (3000001—, 8400001—)
MCLA: 5-speed Automatic (3000001—)
BCLA: 5-speed Automatic (7000001—)

b. Serial Number

Paint Code

Code	Color	U.S.	Canada
B-92P	Nighthawk Black Pearl	○	○
B-96P	Eternal Blue Pearl	○	○
G-516P	Deep Green Pearl	○	○
NH-578	Taffeta White	○	
NH-623M	Satin Silver Metallic	○	○
NH-658P	Graphite Pearl	○	○
R-522P	Redondo Red Pearl	○	○
YR-538M	Desert Mist Metallic	○	○

BACK

Protected by AR

2005 2-door Model

Vehicle Identification Number

1HG CM7 1 3 * 5 A 000001
a b c d e f g h

a. Manufacturer, Make and Type of Vehicle
1HG: HONDA OF AMERICA MFG., INC., U.S.A.
HONDA passenger vehicle
b. Line, Body and Engine Type
CM7: ACCORD COUPE/K24A4
c. Body Type and Transmission Type
1: 2-door Coupe/5-speed Manual
2: 2-door Coupe/5-speed Automatic
d. Vehicle Grade (Series)

U.S. model	Canada model
3: LX, LX-SULEV	3: LX
6: EX-L, EX-L-SULEV	6: EX, EX-L
7: EX, EX-SULEV	

e. Check Digit
f. Model Year
5: 2005
g. Factory Code
A:Marysville, Ohio Factory in U.S.A.
h. Serial Number
000001—: U.S. model
800001—: Canada model

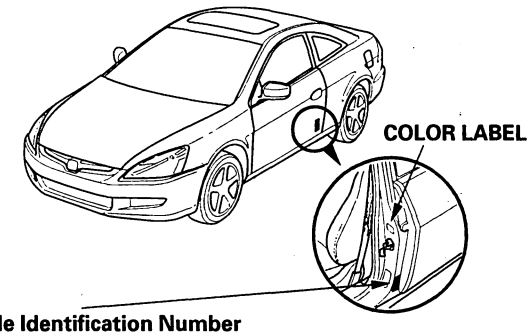

Vehicle Identification Number and Federal Motor Vehicle Safety Standard Certification.

Vehicle Identification Number and Canadian Motor Vehicle Safety Standard Certification.

Engine Number

K24A4 - 3000001
a b

a. Engine Type
K24A4: 2.4 L DOHC i-VTEC Sequential Multiport Fuel-injected engine
b. Serial Number

Transmission Number

APG6 - 8400001
a b

a. Transmission Type
APG6: 5-speed Manual (8400001—)
BCLA: 5-speed Automatic (7000001—)
b. Serial Number

Paint Code

Code	Color	U.S.	Canada
B-92P	Nighthawk Black Pearl	○	○
G-516P	Deep Green Pearl	○	
B-517P	Sapphire Blue Pearl	○	○
NH-578	Taffeta White	○	
NH-623M	Satin Silver Metallic	○	○
NH-658P	Graphite Pearl	○	○
R-94P	San Marino Red	○	
R-522P	Redondo Red Pearl		○
YR-538M	Desert Mist Metallic	○	

Protected by AR

Chassis and Paint Codes (cont'd)

2006 4-door Model

Vehicle Identification Number

1HG CM5 5 1 * 6 A 000001
a b c d e f g h

a. Manufacturer, Make and Type of Vehicle
1HG: HONDA OF AMERICA MFG., INC., U.S.A.
HONDA passenger vehicle
3HG: HONDA DE MEXICO S.A.DE.C.V.
HONDA passenger vehicle
JHM: HONDA MOTOR CO., LTD.
HONDA passenger vehicle

b. Line, Body and Engine Type
CM5: ACCORD/K24A8

c. Body Type and Transmission Type
5: 4-door Sedan/5-speed Manual
6: 4-door Sedan/5-speed Automatic

d. Vehicle Grade (Series)

U.S. model	Canada model
1: VP	1: DX
3: SE	3: SE
4: LX, LX-P, LX-SULEV	7: EX, EX-L with Navigation
7: EX, EX-L with Navigation, EX-L SULEV with Navigation	8: EX-L
8: EX-L, EX-L-SULEV	

e. Check Digit

f. Model Year
6: 2006

g. Factory Code
A:Marysville, Ohio Factory in U.S.A.
C:Saitama Factory in Japan
G:El Salto Factory in Mexico

h. Serial Number
000001—: U.S. model
700001—: U.S. model
800001—: Canada model

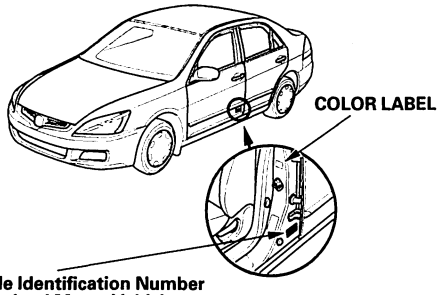

Vehicle Identification Number and Federal Motor Vehicle Safety Standard Certification.

Vehicle Identification Number and Canadian Motor Vehicle Safety Standard Certification.

Engine Number

K24A8 - 1000001
a b

a. Engine Type
K24A8: 2.4 L DOHC i-VTEC Sequential Multiport Fuel-injected engine

b. Serial Number
1HG: 1000001—, SULEV: 1300001—
3HG: 1400001—
JHM: 1500001—, SULEV: 1700001—

Transmission Number

APG6 - 4000001
a b

a. Transmission Type
APG6: 5-speed Manual (4000001—, 8600001—)
APG7: 5-speed Manual (8600001—)
MCLA: 5-speed Automatic (4000001—)
BCLA: 5-speed Automatic (8000001—)

b. Serial Number

Paint Code

Code	Color	U.S.	Canada
B-92P	Nighthawk Black Pearl	○	○
B-517P	Sapphire Blue Pearl	○	○
B-536P	Royal Blue Pearl	○	○
NH-578	Taffeta White	○	
NH-658P	Graphite Pearl	○	○
NH-700M	Alabaster Silver Metallic	○	○
R-522P	Redondo Red Pearl	○	○
YR-538M	Desert Mist Metallic	○	○
YR-562P	Carbon Bronze Pearl	○	○

BACK

Protected by AR

2006 2-door Model

Vehicle Identification Number

1HG CM7 1 3 * 6 A 000001

a b c d e f g h

a. Manufacturer, Make and Type of Vehicle
1HG: HONDA OF AMERICA MFG., INC., U.S.A.
HONDA passenger vehicle

b. Line, Body and Engine Type
CM7: ACCORD COUPE/K24A8

c. Body Type and Transmission Type
1: 2-door Coupe/5-speed Manual
2: 2-door Coupe/5-speed Automatic

d. Vehicle Grade (Series)

U.S. model	Canada model
3: LX, LX-SULEV	3: LX
6: EX-L, EX-L-SULEV	6: EX, EX-L
7: EX, EX-SULEV EX-L with Navigation, EX-L -SULEV with Navigation	7: EX-L with Navigation

e. Check Digit

f. Model Year
6: 2006

g. Factory Code
A:Marysville, Ohio Factory in U.S.A.

h. Serial Number
000001—: U.S. model
800001—: Canada model

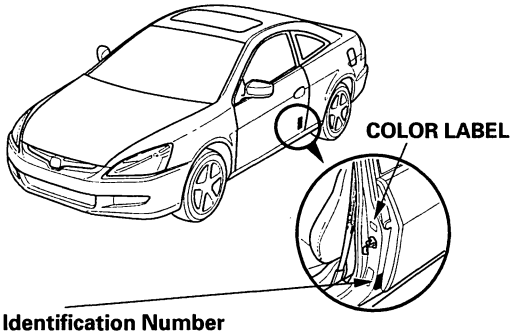

Vehicle Identification Number and Federal Motor Vehicle Safety Standard Certification.

Vehicle Identification Number and Canadian Motor Vehicle Safety Standard Certification.

Engine Number

K24A8 - 1000001

a b

a. Engine Type
K24A8: 2.4 L DOHC i-VTEC Sequential Multiport Fuel-injected engine

b. Serial Number
IHG: 1000001—, SULEV: 1300001—

Transmission Number

APG6 - 8400001

a b

a. Transmission Type
APG6: 5-speed Manual (8600001—)
BCLA: 5-speed Automatic (8000001—)

b. Serial Number

Paint Code

Code	Color	U.S.	Canada
B-92P	Nighthawk Black Pearl	○	○
B-517P	Sapphire Blue Pearl	○	○
B-542M	Cool Blue Metallic	○	○
NH-578	Taffeta White	○	
NH-658P	Graphite Pearl	○	○
NH-700M	Alabaster Silver Metallic	○	○
R-94	San Marino Red	○	○
YR-538M	Desert Mist Metallic	○	

Protected by AR

Identification Number Locations

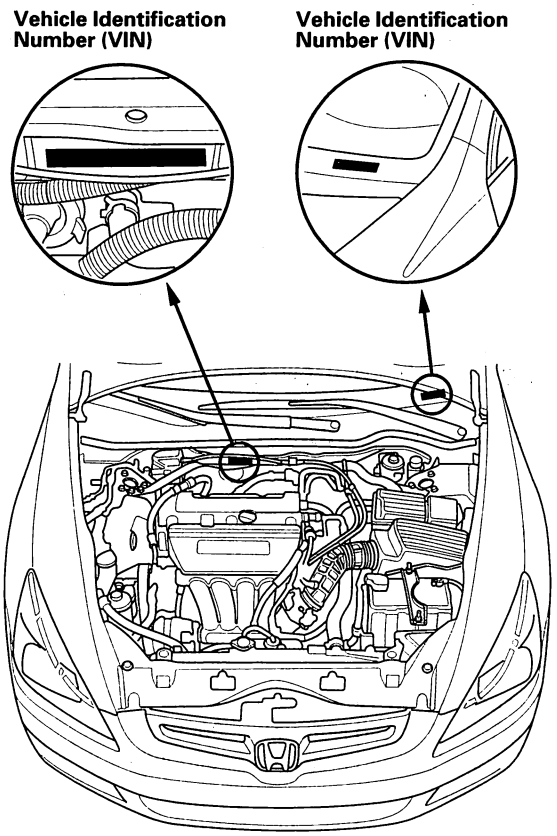

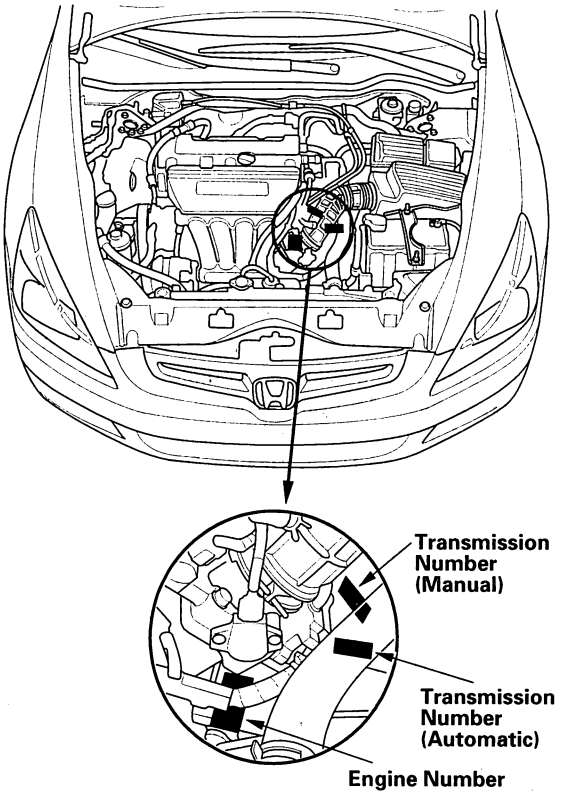

BACK

Protected by AR

Danger/Warning/Caution Label Locations

NOTE: FRONT PASSENGER (CHILD SEAT) AIRBAG WARNING TAG is installed on the glove box on the U.S. model.

Passenger's Compartment:

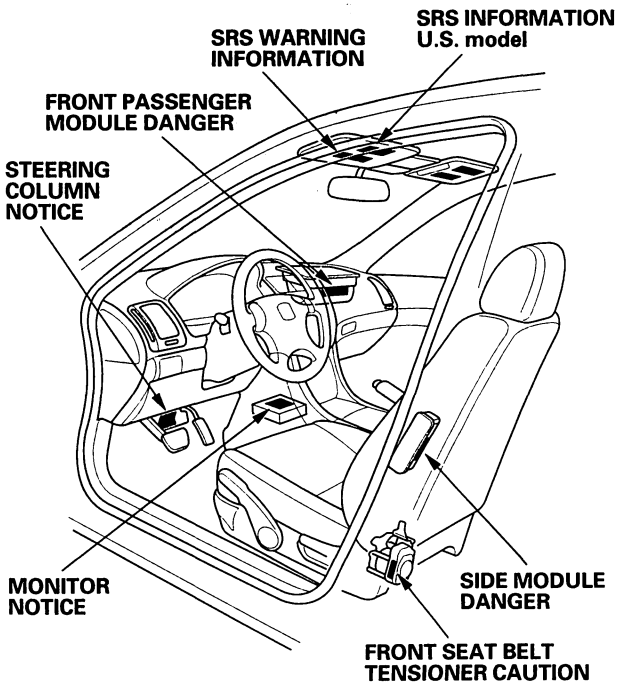

Steering Wheel:

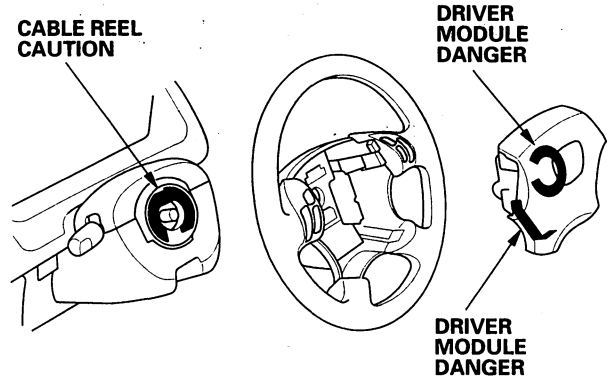

Rear Compartment:

NOTE: The illustration shows the 4-door Sedan model.

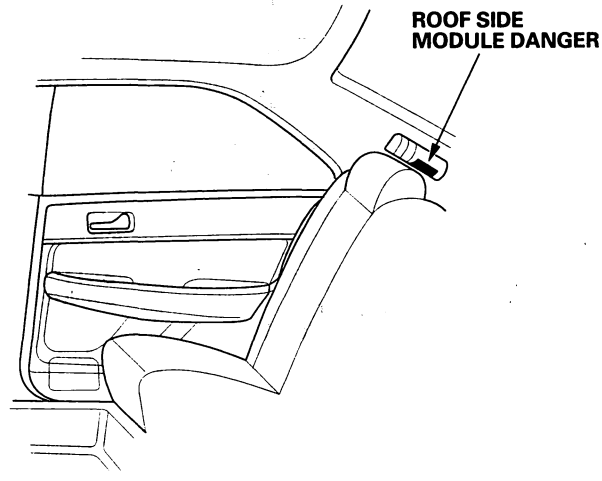

(cont'd)

Protected by AR

Danger/Warning/Caution Label Locations (cont'd)

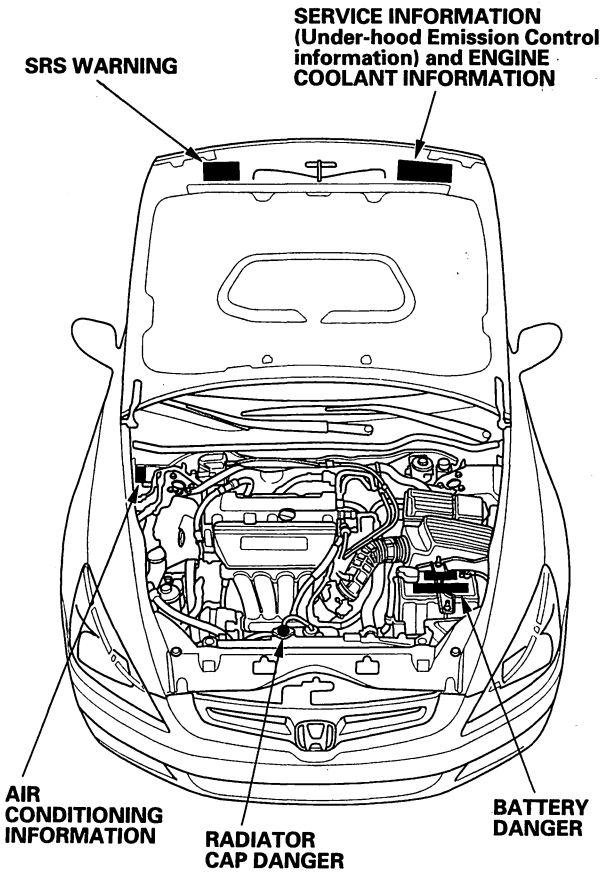

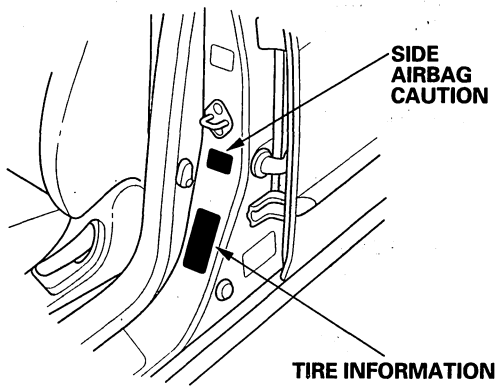

BACK

Protected by AR

Under-hood Emission Control Label

Emission Group Identification

Example:

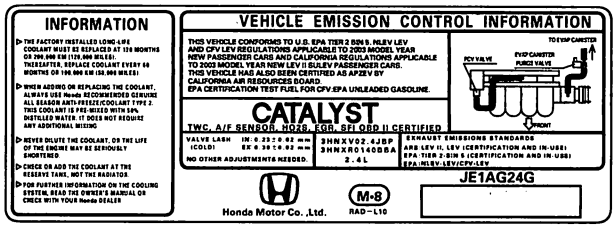

2003 Model

- KA (Federal)
  THIS VEHICLE CONFORMS TO U.S. EPA TIER 2 BIN 5 NLEV LEV AND CLEAN-FUEL VEHICLE REGULATIONS APPLICABLE TO 2003 MODEL YEAR NEW PASSENGER CARS AND CALIFORNIA REGULATIONS APPLICABLE TO 2003 MODEL YEAR NEW LEV II LEV PASSENGER CARS.

- KL (California)
  THIS VEHICLE CONFORMS TO U.S. EPA TIER 2 BIN 5 NLEV LEV AND CFV LEV REGULATIONS APPLICABLE TO 2003 MODEL YEAR NEW PASSENGER CARS AND CALIFORNIA REGULATIONS APPLICABLE TO 2003 MODEL YEAR NEW LEV II SULEV PASSENGER CARS. THIS VEHICLE HAS ALSO BEEN CERTIFIED AS A PZEV BY CALIFORNIA AIR RESOURCES BOARD.

2004 Model

- KA (Federal)
  THIS VEHICLE CONFORMS TO U.S. EPA TIER 2 BIN 5 AND CFV LEV REGULATIONS APPLICABLE TO 2004 MODEL YEAR NEW PASSENGER CARS AND CALIFORNIA REGULATIONS APPLICABLE TO 2004 MODEL YEAR NEW LEV II LEV PASSENGER CARS. EPA CERTIFICATION TEST FUEL FOR CFV: EPA UNLEADED GASOLINE.

- KL (California)
  THIS VEHICLE CONFORMS TO U.S. EPA TIER 2 BIN 5 AND CFV LEV REGULATIONS APPLICABLE TO 2004 MODEL YEAR NEW PASSENGER CARS AND CALIFORNIA REGULATIONS APPLICABLE TO 2004 MODEL YEAR NEW LEV II SULEV PASSENGER CARS. THIS VEHICLE HAS ALSO BEEN CERTIFIED AS A PZEV BY CALIFORNIA AIR RESOURCES BOARD. EPA CERTIFICATION TEST FUEL FOR CFV: EPA UNLEADED GASOLINE.

2005 Model

- KA (Federal)
  THIS VEHICLE CONFORMS TO U.S. EPA TIER 2 BIN 5 AND CFV LEV REGULATIONS APPLICABLE TO 2005 MODEL YEAR NEW PASSENGER CARS AND CALIFORNIA REGULATIONS APPLICABLE TO 2005 MODEL YEAR NEW LEV II LEV PASSENGER CARS. EPA CERTIFICATION TEST FUEL FOR CFV: EPA UNLEADED GASOLINE.

- KL (California)
  THIS VEHICLE CONFORMS TO U.S. EPA TIER 2 BIN 2 AND CFV LEV REGULATIONS APPLICABLE TO 2005 MODEL YEAR NEW PASSENGER CARS AND CALIFORNIA REGULATIONS APPLICABLE TO 2005 MODEL YEAR NEW LEV II SULEV PASSENGER CARS. THIS VEHICLE HAS ALSO BEEN CERTIFIED AS A PZEV BY CALIFORNIA AIR RESOURCES BOARD. EPA CERTIFICATION TEST FUEL FOR CFV: EPA UNLEADED GASOLINE.

2006 Model

- KA (Federal)
  THIS VEHICLE CONFORMS TO U.S. EPA TIER 2 BIN 5 REGULATIONS APPLICABLE TO 2006 MODEL YEAR NEW PASSENGER CARS AND CALIFORNIA REGULATIONS APPLICABLE TO 2006 MODEL YEAR NEW LEV II LEV PASSENGER CARS.

- KL (California)
  THIS VEHICLE CONFORMS TO U.S. EPA TIER 2 BIN 2 REGULATIONS APPLICABLE TO 2006 MODEL YEAR NEW PASSENGER CARS AND CALIFORNIA REGULATIONS APPLICABLE TO 2006 MODEL YEAR NEW LEV II SULEV PASSENGER CARS. THIS VEHICLE HAS ALSO BEEN CERTIFIED AS A PZEV BY CALIFORNIA AIR RESOUR BOARD.

(cont'd)

Protected by AR

Under-hood Emission Control Label (cont'd)

Test Group and Evaporative Family

Test Group:

6 HNX V 02.4 KKC
a b c d e

a. **Model Year**
   3: 2003
   4: 2004
   5: 2005
   6: 2006
b. **Manufacturer Subcode**
   HNX: HONDA
c. **Family Type**
   V: LDV
d. **Displacement Group**
e. **Sequence Characters**
   JBP: 2003 KA (Federal) Model
   LBP: 2004 KA (Federal) Model
   KCV: 2003 and 2004 KL (California) Model
   VBP: 2005 KA (Federal) Model
   ECV: 2005 KL (California) Model
   KKC: 2006 KA (Federal) Model
   CMC: 2006 KL (California) Model

Evaporative Family:

6 HNX R 0140 BBA
a b c d e

a. **Model Year**
   3: 2003
   4: 2004
   5: 2005
   6: 2006
b. **Manufacturer Subcode**
   HNX: HONDA
c. **Family Type**
   R: EVAP/ORVR
d. **Canister Work Capacity**
   0140: KA (Federal)
   0135: KL (California)
e. **Sequence Characters**
   BBA: KA (Federal)
   BCA: KL (California)

Lift and Support Points

NOTE: If you are going to remove heavy components such as suspension or the fuel tank from the rear of the vehicle, first support the front of the vehicle with tall safety stands. When substantial weight is removed from the rear of the vehicle, the center of gravity can change and cause the vehicle to tip forward on the hoist.

Frame Hoist

1. Position the hoist lift blocks (A), under the vehicle's front support points (B) and rear support points (C).

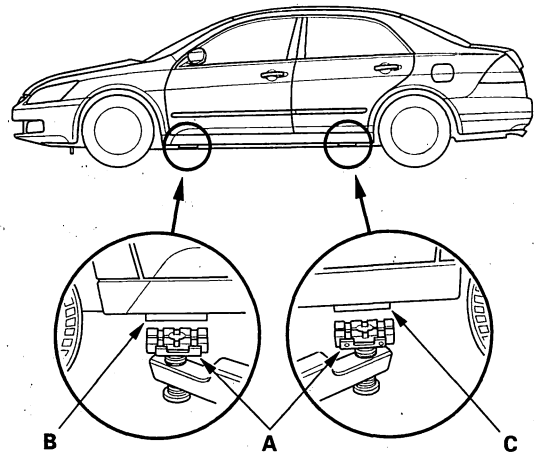

2. Raise the hoist a few inches, and rock the vehicle gently to be sure it is firmly supported.

3. Raise the hoist to full height, and inspect the lift points for solid contact with the lift blocks.

Safety Stands

To support the vehicle on safety stands, use the same support points (B and C) as for a frame hoist. Always use safety stands when working on or under any vehicle that is supported only by a jack.

BACK

Protected by AR

Floor Jack

1. When lifting the front of the vehicle, set the parking brake. When lifting the rear of the vehicle, put the gearshift lever in reverse for manual transmission, or in the P position for automatic transmission.

2. Block the wheels that are not being lifted.

3. Position the floor jack under the front jacking bracket (A) or rear jacking bracket (B), center the jacking bracket in the jack lift platform (C), and jack up the vehicle high enough to fit the safety stands under it.

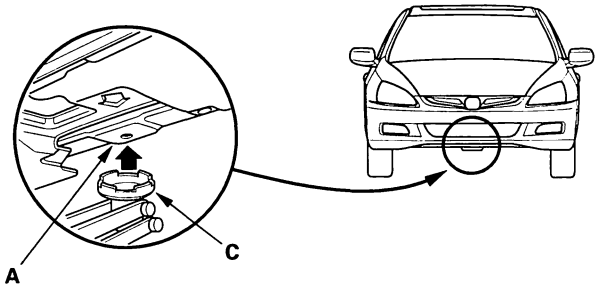

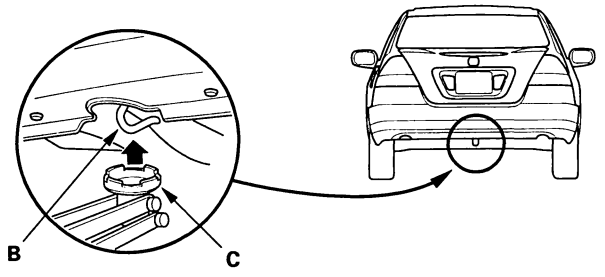

4. Position the safety stands under the support points and adjust them so the vehicle is level.

5. Lower the vehicle onto the stands.

Towing

If the vehicle needs to be towed, call a professional towing service. Never tow the vehicle behind another vehicle with just a rope or chain. It is very dangerous.

Emergency Towing
There are three popular methods of towing a vehicle.

Flat-bed Equipment — The operator loads the vehicle on the back of a truck. This is the best way of transporting the vehicle.

To accommodate flat-bed equipment, the vehicle is equipped with towing hooks (A) and tie down hook slots (B).

The towing hook can be used with a winch to pull the vehicle onto the truck, and the tie down hook slots can be used to secure the vehicle to the truck.

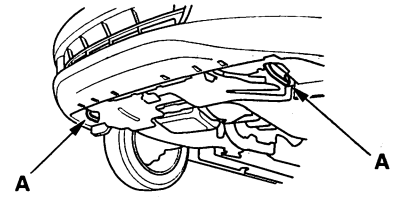

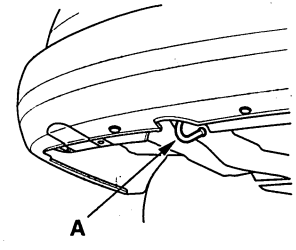

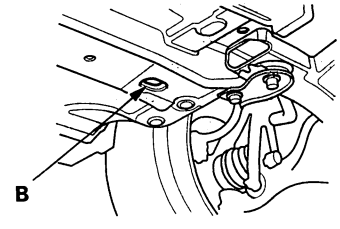

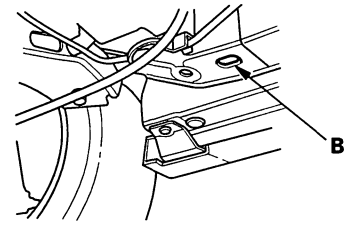

(cont'd)

Protected by AR

Towing (cont'd)

Wheel Lift Equipment — The tow truck uses two pivoting arms that go under the tires (front or rear) and lifts them off the ground. The other two wheels remain on the ground. This is an acceptable way of towing the vehicle.

Sling-type Equipment — The tow truck uses metal cables with hooks on the ends. These hooks go around parts of the frame or suspension and the cables lift that end of the vehicle off the ground. The vehicle's suspension and body can be seriously damaged if this method of towing is attempted.

If the vehicle cannot be transported by flat-bed, it should be towed with the front wheels off the ground. If due to damage, the vehicle must be towed with the front wheels on the ground, do the following:

Manual Transmission
- Release the parking brake.
- Shift the transmission in Neutral.

Automatic Transmission
- Release the parking brake.
- Start the engine.
- Shift to D position, then to the N position.
- Turn off the engine.

It is best to tow the vehicle no farther than 50 miles (80 km), and keep the speed below 35 mph (55 km/h).

NOTICE
- Improper towing preparation will damage the transmission. Follow the above procedure exactly. If you cannot shift the transmission or start the engine (automatic transmission), the vehicle must be transported on a flat-bed.
- Trying to lift or tow the vehicle by the bumpers will cause serious damage. The bumpers are not designed to support the vehicle's weight.

Parts Marking

To deter vehicle theft, certain major components are marked with the vehicle identification number (VIN). Original parts have self-adhesive labels. Replacement body parts have generic self-adhesive labels. These labels should not be removed. The original engine or transmission VIN plates are not transferable to the replacement engine or transmission.

NOTE: Be careful not to damage the parts marking labels during body repair. Mask the labels before repairing the part.

BACK

Protected by AR

specs

Specifications

Standards and Service Limits

Engine Electrical 2-2
Engine Assembly 2-2
Cylinder Head 2-3
Engine Block 2-4
Engine Lubrication 2-5
Cooling 2-5
Fuel and Emissions 2-6
Clutch 2-6
Manual Transmission and M/T Differential 2-7
Automatic Transmission and A/T Differential 2-9
Steering 2-15
Suspension 2-15
Brakes 2-16
Air Conditioning 2-16

Design Specifications

Dimensions 2-17
Weight (U.S.A.) 2-17
Weight (CANADA) 2-17
Engine 2-17
Starter 2-17
Clutch 2-17
Manual Transmission 2-18
Automatic Transmission 2-18
Steering 2-18
Suspension 2-18
Tires 2-18
Wheel Alignment 2-18
Brakes 2-19
Air Conditioning 2-19
Electrical Ratings 2-20

Body Specifications

Illustration 2-21

Protected by AR

Standards and Service Limits

Engine Electrical

Item	Measurement	Qualification	Standard or New	Service Limit
Ignition coil	Rated voltage		12 V	
	Firing order		1—3—4—2	
Spark plug	Type	Except LX-SULEV, EX-SULEV, EX-L-SULEV	NGK: IZFR6K11 DENSO: SKJ20DR-M11	
		LX-SULEV, EX-SULEV, EX-L-SULEV	NGK: IZFR6K13 DENSO: SKJ20DR-M13	
	Gap	Except LX-SULEV, EX-SULEV, EX-L-SULEV	1.0—1.1 mm (0.039—0.043 in.)	———
		LX-SULEV, EX-SULEV, EX-L-SULEV	1.2—1.3 mm (0.047—0.051 in.)	———
Ignition timing	At idle Check the *red* mark	M/T (in neutral)	8±2° BTDC	
		A/T (in N or P position)	8±2° BTDC	
Drive belt	Tension		Auto tensioner	
Alternator	Output	At 13.5 V and normal engine temperature	105A	
	Coil (rotor) resistance	At 68°F (20°C)	2.5 Ω	
	Slip ring O.D.		14.4 mm (0.57 in.)	14.0 mm (0.55 in.)
	Brush length		10.5 mm (0.41 in.)	1.5 mm (0.06 in.)
	Brush spring tension		3.2 N (0.33 kgf, 0.7 lbf)	
Starter (MITSUBISHI)	Output		1.7 kW	
	Commutator mica depth		0.4—0.6 mm (0.016—0.024 in.)	0.2 mm (0.008 in.)
	Commutator runout		0.05 mm (0.002 in.) max.	0.1 mm (0.004 in.)
	Commutator O.D.		29.3—29.5 mm (1.154—1.161 in.)	28.8 mm (1.134 in.)
	Brush length		7.7—8.0 mm (0.30—0.31 in.)	0.9 mm (0.04 in.)
Starter (MITSUBA)	Output		1.6 kW	
	Commutator mica depth		0.4—0.5 mm (0.016—0.020 in.)	0.15 mm (0.006 in.)
	Commutator runout		0.02 mm (0.001 in.) max.	0.05 mm (0.002 in.)
	Commutator O.D.		28.0—28.1 mm (1.102—1.106 in.)	27.5 mm (1.083 in.)
	Brush length		11.1—11.5 mm (0.44—0.45 in.)	4.3 mm (0.17 in.)

Engine Assembly

Item	Measurement	Qualification	Standard or New	Service Limit
Compression	Pressure Check the engine with the starter cranking	Minimum	930 kPa (9.5 kgf/cm², 135 psi)	———
		Maximum variation	200 kPa (2.0 kgf/cm², 28 psi)	———

BACK

Protected by AR

Cylinder Head

Item	Measurement	Qualification	Standard or New	Service Limit
Head	Warpage		———	0.05 mm (0.002 in.)
	Height		103.95—104.05 mm (4.093—4.096 in.)	———
Camshaft	End play		0.05—0.20 mm (0.002—0.008 in.)	0.4 mm (0.02 in.)
	Camshaft-to-holder oil clearance	No. 1 journal	0.030—0.069 mm (0.001—0.003 in.)	0.15 mm (0.006 in.)
		No. 2, 3, 4, 5 journals	0.060—0.099 mm (0.002—0.004 in.)	0.15 mm (0.006 in.)
	Total runout		0.03 mm (0.001 in.) max.	0.04 mm (0.002 in.)
	Cam lobe height	Intake, primary	33.925 mm (1.3356 in.)	———
		Intake, secondary	29.638 mm (1.1668 in.)	———
		Exhaust	34.092 mm (1.3422 in.)	———
Valve	Clearance (cold)	Intake	0.21—0.25 mm (0.008—0.010 in.)	———
		Exhaust	0.28—0.32 mm (0.011—0.013 in.)	———
	Stem O.D.	Intake	5.475—5.485 mm (0.2156—0.2159 in.)	5.445 mm (0.214 in.)
		Exhaust	5.450—5.460 mm (0.2146—0.2150 in.)	5.42 mm (0.213 in.)
	Stem-to-guide clearance	Intake	0.030—0.055 mm (0.0012—0.0022 in.)	0.08 mm (0.003 in.)
		Exhaust	0.055—0.080 mm (0.0022—0.0031 in.)	0.11 mm (0.004 in.)
Valve seat	Width	Intake	1.25—1.55 mm (0.049—0.061 in.)	2.00 mm (0.079 in.)
		Exhaust	1.25—1.55 mm (0.049—0.061 in.)	2.00 mm (0.079 in.)
	Stem installed height	Intake	44.0—44.5 mm (1.73—1.75 in.)	44.7 mm (1.76 in.)
		Exhaust	44.1—44.6 mm (1.74—1.76 in.)	44.8 mm (1.76 in.)
Valve spring	Free length	Intake	47.61 mm (1.874 in.)	———
		Exhaust	49.64 mm (1.954 in.)	———
Valve guide	I.D.	Intake	5.515—5.530 mm (0.2171—0.2177 in.)	5.55 mm (0.219 in.)
		Exhaust	5.515—5.530 mm (0.2171—0.2177 in.)	5.55 mm (0.219 in.)
	Installed height	Intake	15.2—16.2 mm (0.598—0.638 in.)	———
		Exhaust	15.5—16.5 mm (0.610—0.650 in.)	———
Rocker arm	Arm-to-shaft clearance	Intake	0.025—0.052 mm (0.0010—0.0020 in.)	0.08 mm (0.003 in.)
		Exhaust	0.018—0.056 mm (0.0007—0.0022 in.)	0.08 mm (0.003 in.)

BACK

Protected by AR

Standards and Service Limits

Engine Block

Item	Measurement	Qualification	Standard or New	Service Limit
Block	Warpage of deck		0.07 mm (0.003 in.) max.	0.10 mm (0.004 in.)
	Bore diameter	A or I	87.010—87.020 mm (3.4256—3.4260 in.)	87.070 mm (3.4279 in.)
		B or II	87.000—87.010 mm (3.4252—3.4256 in.)	87.070 mm (3.4279 in.)
	Bore taper		———	0.05 mm (0.002 in.)
	Reboring limit		———	0.25 mm (0.01 in.)
Piston	Skirt O.D. at 13 mm (0.5 in.) from bottom of skirt	No letter or A	86.980—86.990 mm (3.4244—3.4248 in.)	86.930 mm (3.4224 in.)
		Letter B	86.970—86.980 mm (3.4240—3.4244 in.)	86.920 mm (3.4220 in.)
	Clearance in cylinder		0.020—0.040 mm (0.0008—0.0016 in.)	0.05 mm (0.002 in.)
	Ring groove width	Top	1.230—1.240 mm (0.0484—0.0488 in.)	1.26 mm (0.0450 in.)
		Second	1.240—1.250 mm (0.0488—0.0492 in.)	1.270 mm (0.050 in.)
		Oil	2.005—2.025 mm (0.0789—0.0797 in.)	2.05 mm (0.081 in.)
Piston ring	Ring-to-groove clearance	Top	0.045—0.070 mm (0.0018—0.0028 in.)	0.13 mm (0.005 in.)
		Second	0.050—0.075 mm (0.0020—0.0030 in.)	0.13 mm (0.005 in.)
	Ring end gap	Top	0.20—0.35 mm (0.008—0.014 in.)	0.60 mm (0.024 in.)
		Second	0.40—0.55 mm (0.016—0.022 in.)	0.70 mm (0.028 in.)
		Oil	0.20—0.70 mm (0.008—0.028 in.)	0.80 mm (0.031 in.)
Piston pin	O.D.		21.961—21.965 mm (0.8646—0.8648 in.)	21.953 mm (0.8643 in.)
	Pin-to-piston clearance		−0.005 to +0.002 mm (−0.00020 to +0.00008 in.)	0.005 mm (0.0002 in.)
Connecting rod	Pin-to-rod clearance		0.005—0.015 mm (0.0002—0.0006 in.)	0.02 mm (0.0008 in.)
	Small-end bore diameter		21.970—21.976 mm (0.8650—0.8652 in.)	———
	Large-end bore diameter (Normal)		51.0 mm (2.01 in.)	———
	End play installed on crankshaft		0.15—0.35 mm (0.006—0.014 in.)	0.40 mm (0.016 in.)
Crankshaft	Main journal diameter	No. 1 journal No. 2 journal No. 4 journal No. 5 journal	54.984—55.008 mm (2.1648—2.1657 in.)	———
		No. 3 journal	54.976—55.000 mm (2.1644—2.1654 in.)	———
	Rod journal diameter		47.976—48.000 mm (1.8888—1.8898 in.)	———
	Rod/main journal taper		0.005 mm (0.0002 in.) max.	0.010 mm (0.0004 in.)
	Rod/main journal out-of-round		0.005 mm (0.0002 in.) max.	0.010 mm (0.0004 in.)
	End play		0.10—0.35 mm (0.004—0.014 in.)	0.45 mm (0.018 in.)
	Runout		0.03 mm (0.0012 in.) max.	0.04 mm (0.0016 in.)
Crankshaft bearing	Main bearing-to-journal oil clearance	No. 1 journal No. 2 journal No. 4 journal No. 5 journal	0.017—0.041 mm (0.0007—0.0016 in.)	0.050 mm (0.0020 in.)
		No. 3 journal	0.025—0.049 mm (0.0010—0.0019 in.)	0.055 mm (0.0022 in.)
	Rod bearing clearance		0.020—0.050 mm (0.0008—0.0020 in.)	0.060 mm (0.0024 in.)

BACK

Protected by AR

Engine Lubrication

Item	Measurement	Qualification	Standard or New	Service Limit
Engine oil	Capacity	Engine overhaul	5.3 L (5.6 US qt)	
		Oil change, including filter	4.2 L (4.4 US qt)	
		Oil change, without filter	4.0 L (4.2 US qt)	
Oil pump	Inner-to-outer rotor clearance		0.06—0.16 mm (0.002—0.006 in.)	0.20 mm (0.008 in.)
	Pump housing-to-outer rotor clearance		0.15—0.21 mm (0.006—0.008 in.)	0.23 mm (0.009 in.)
	Pump housing-to-rotor axial clearance		0.035—0.070 mm (0.0014—0.0028 in.)	0.12 mm (0.005 in.)
	Balancer shafts, journal diameter	No. 1 journal, front shaft	19.938—19.950 mm (0.7850—0.7854 in.)	19.92 mm (0.784 in.)
		No. 1 journal, rear shaft	23.938—23.950 mm (0.9424—0.9429 in.)	23.92 mm (0.942 in.)
		No. 2 journal, front and rear shaft	32.949—32.961 mm (1.2972—1.2977 in.)	32.93 mm (1.296 in.)
	Balancer shafts, journal taper		0.005 mm (0.0002 in.) max.	———
	Balancer shafts, end play	Front	0.063—0.108 mm (0.0025—0.0043 in.)	0.14 mm (0.0055 in.)
		Rear	0.063—0.108 mm (0.0025—0.0043 in.)	0.14 mm (0.0055 in.)
	Balancer shafts, shaft-to-bearing clearance	No. 1 journal, front shaft	0.050—0.082 mm (0.0020—0.0032 in.)	0.10 mm (0.004 in.)
		No. 1 journal, rear shaft	0.050—0.082 mm (0.0020—0.0032 in.)	0.10 mm (0.004 in.)
		No. 2 journal, front and rear shaft	0.060—0.120 mm (0.0024—0.0047 in.)	0.15 mm (0.006 in.)
	Balancer shaft bearings, I.D.	No. 1 journal, front shaft	20.000—20.020 mm (0.7874—0.7882 in.)	20.03 mm (0.789 in.)
		No. 1 journal, rear shaft	24.000—24.020 mm (0.9449—0.9457 in.)	24.03 mm (0.946 in.)
		No. 2 journal, front and rear shaft	33.021—33.069 mm (1.3000—1.3019 in.)	33.09 mm (1.303 in.)
	Relief valve, oil pressure with oil temperature at 176°F (80°C)	At idle	70 kPa (0.7 kgf/cm², 10 psi) min.	
		At 3,000 rpm	300 kPa (3.1 kgf/cm², 44 psi) min.	

Cooling

Item	Measurement	Qualification	Standard or New
Radiator	Coolant capacity (includes engine, heater, hoses, and reservoir) Use Honda All Season Antifreeze/ Coolant Type 2	M/T at engine overhaul	7.2 L (1.90 US gal)
		M/T at coolant change	5.1 L (1.35 US gal)
		A/T at engine overhaul	7.1 L (1.88 US gal)
		A/T at coolant change	5.0 L (1.32 US gal)
Reservoir	Coolant capacity		0.6 L (0.16 US gal)
Radiator cap	Opening pressure		93—123 kPa (0.95—1.25 kgf/cm², 14—18 psi)
Thermostat	Opening temperature	Begins to open	169—176°F (76—80°C)
		Fully open	194°F (90°C)
	Valve lift at fully open		8.0 mm (0.31 in.) min.
Radiator fan switch (2003-2004 models)	Switching temperature	Turns ON	196—203°F (91—95°C)
		Turns OFF	Subtract 5—15°F (3—8°C) from actual ON temperature

Protected by AR

Standards and Service Limits

Fuel and Emissions

Item	Measurement	Qualification	Standard or New
Fuel pressure regulator	Pressure with fuel pressure gauge connected	2003-2004 (except SULEV) models, 2005 model, and 2006 SULEV model	330—380 kPa (3.4—3.9 kgf/cm², 48—55 psi)
		2003-2004 SULEV model and 2006 (except SULEV) model	320—370 kPa (3.3—3.8 kgf/cm², 47—54 psi)
Fuel tank	Capacity		64.7 L (17.1 US gal)
Engine idle (2003-2004 models)	Idle speed without load	SULEV and M/T models (A/T in P or N position, M/T in neutral)	700±50 rpm
		A/T (except SULEV) models (in P or N position)	800±50 rpm
	Idle speed with high electric load (A/C switch ON, temperature set to Max Cool, blower fan on High, rear window defogger ON, and headlights on high beam)	SULEV and M/T models (A/T in P or N position, M/T in neutral)	720±50 rpm
		A/T (except SULEV) models (in P or N position	800±50 rpm
Engine idle (2005-2006 models)	Idle speed with no load	M/T models (in neutral)	720±50 rpm
		A/T models (in P or N position)	800±50 rpm
	Idle speed with high electric load (A/C switch ON, temperature set to Max Cool, blower fan on High, rear window defogger ON, and headlights on high beam)	M/T models (in neutral)	720±50 rpm
		A/T models (in P or N position)	800±50 rpm

Clutch

Item	Measurement	Qualification	Standard or New	Service Limit
Clutch pedal	Height from floor		191 mm (7.52 in.)	———
	Stroke		130—140 mm (5.12—5.51 in.)	———
	Play		10—18 mm (0.39—0.71 in.)	———
	Disengagement height from floor		95 mm (3.74 in.) min.	———
Flywheel	Runout on clutch mating surface		0.05 mm (0.002 in.) max.	0.15 mm (0.006 in.)
Clutch disc	Rivet head depth		1.65—2.25 mm (0.065—0.089 in.)	0.7 mm (0.03 in.)
	Thickness		8.6—9.2 mm (0.34—0.36 in.)	6.0 mm (0.24 in.)
Pressure plate	Warpage		0.03 mm (0.001 in.) max.	0.15 mm (0.006 in.)
	Height of diaphragm spring fingers measured with special tool and feeler gauge		0.6 mm (0.02 in.) max.	0.8 mm (0.03 in.)

BACK

Protected by AR

Manual Transmission and M/T Differential

Item	Measurement	Qualification	Standard or New	Service Limit
Transmission fluid	Capacity	Fluid change	1.9 L (2.0 US qt)	
	Use Honda MTF	Overhaul	2.1 L (2.2 US qt)	
Mainshaft	End play		0.11—0.17 mm (0.004—0.007 in.)	Adjust
	Diameter of bushing surface		20.80—20.85 mm (0.8189—0.8209 in.)	20.75 mm (0.817 in.)
	Diameter of distance collar		31.984—32.000 mm (1.2594—1.2598 in.)	31.93 mm (1.257 in.)
	Diameter of ball bearing contact area (clutch housing side)		27.977—27.990 mm (1.1015—1.1020 in.)	27.94 mm (1.100 in.)
	Diameter of needle bearing contact area		38.984—39.000 mm (1.5348—1.5354 in.)	38.93 mm (1.533 in.)
	Diameter of ball bearing contact area (transmission housing side)		27.987—28.000 mm (1.1019—1.1024 in.)	27.94 mm (1.100 in.)
	Runout		0.02 mm (0.001 in.) max.	0.05 mm (0.002 in.)
Mainshaft 3rd, 4th, and 5th gears	I.D.		44.009—44.025 mm (1.7326—1.7333 in.)	44.08 mm (1.735 in.)
	End play		0.06—0.16 mm (0.002—0.006 in.)	0.25 mm (0.010 in.)
	Thickness		23.92—23.97 mm (0.941—0.944 in.)	23.80 mm (0.937 in.)
Countershaft	Diameter of needle bearing contact area (clutch housing side)		40.000—40.015 mm (1.5748—1.5754 in.)	39.95 mm (1.573 in.)
	Diameter of distance collar contact area		39.937—39.950 mm (1.5723—1.5728 in.)	39.88 mm (1.570 in.)
	Diameter of ball bearing contact area (transmission housing side)		30.020—30.033 mm (1.1819—1.1824 in.)	29.97 mm (1.180 in.)
	Runout		0.02 mm (0.001 in.) max.	0.05 mm (0.002 in.)
	35 mm shim-to-bearing inner race clearance		0.04—0.10 mm (0.0016—0.0039 in.)	Adjust
Countershaft 1st gear	I.D.		52.010—52.029 mm (2.0476—2.0484 in.)	52.08 mm (2.050 in.)
	End play		0.06—0.16 mm (0.002—0.006 in.)	0.25 mm (0.010 in.)
	Thickness		22.92—22.97 mm (0.902—0.904 in.)	22.87 mm (0.900 in.)
Countershaft 2nd gear	I.D.		52.010—52.029 mm (2.0476—2.0484 in.)	52.08 mm (2.050 in.)
	End play		0.06—0.16 mm (0.002—0.006 in.)	0.25 mm (0.010 in.)
	Thickness		27.92—27.97 mm (1.099—1.101 in.)	27.87 mm (1.097 in.)
Countershaft 1st gear distance collar	I.D.		39.95—39.96 mm (1.5728—1.5732 in.)	39.97 mm (1.574 in.)
	O.D.		46.989—47.000 mm (1.8499—1.8504 in.)	46.94 mm (1.848 in.)
	Length		23.03—23.08 mm (0.907—0.909 in.)	———
Countershaft 2nd gear distance collar	I.D.		39.95—39.96 mm (1.5728—1.5732 in.)	39.97 mm (1.574 in.)
	O.D.		46.989—47.000 mm (1.8499—1.8504 in.)	46.94 mm (1.848 in.)
	Length		28.03—28.08 mm (1.104—1.106 in.)	———
Mainshaft 4th and 5th gears distance collar	I.D.		32.00—32.01 mm (1.2598—1.2602 in.)	32.02 mm (1.261 in.)
	O.D.		38.989—39.000 mm (1.5350—1.5354 in.)	38.94 mm (1.533 in.)
	Length	A	51.95—52.05 mm (2.045—2.049 in.)	———
	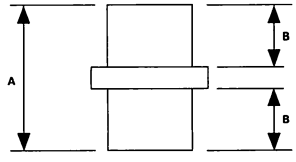	B	24.03—24.08 mm (0.946—0.947 in.)	———
MBS distance collar	I.D.		28.00—28.01 mm (1.102—1.103 in.)	28.02 mm (1.103 in.)
	Length		23.95—24.05 mm (0.943—0.947 in.)	———

(cont'd)

Protected by AR

Standards and Service Limits

Manual Transmission and M/T Differential (cont'd)

Item	Measurement	Qualification	Standard or New	Service Limit
Reverse idler gear	I.D.		20.016—20.043 mm (0.7880—0.7891 in.)	20.90 mm (0.832 in.)
	Gear-to-reverse gear shaft clearance		0.036—0.084 mm (0.0014—0.0033 in.)	0.16 mm (0.006 in.)
Synchro ring	Ring-to-gear clearance	Ring pushed against gear	0.70—1.49 mm (0.028—0.059 in.)	0.4 mm (0.016 in.)
Double cone synchro	Outer synchro ring-to-synchro cone clearance	Ring pushed against gear	0.70—1.19 mm (0.028—0.047 in.)	0.3 mm (0.012 in.)
	Synchro cone-to-gear clearance	Ring pushed against gear	0.50—1.04 mm (0.020—0.041 in.)	0.3 mm (0.012 in.)
	Outer synchro ring-to-gear cone clearance	Ring pushed against gear	0.95—1.68 mm (0.037—0.066 in.)	0.6 mm (0.024 in.)
Triple cone synchro	Outer synchro ring-to-synchro cone clearance	Ring pushed against gear	0.70—1.19 mm (0.028—0.047 in.)	0.3 mm (0.012 in.)
	Synchro cone-to-gear clearance	Ring pushed against gear	0.50—1.04 mm (0.020—0.041 in.)	0.3 mm (0.012 in.)
	Outer synchro ring-to-gear cone clearance	Ring pushed against gear	0.95—1.68 mm (0.037—0.066 in.)	0.6 mm (0.024 in.)
Shift fork	Finger thickness		7.4—7.6 mm (0.29—0.30 in.)	———
	Fork-to-synchro sleeve clearance		0.35—0.65 mm (0.014—0.026 in.)	1.0 mm (0.039 in.)
Reverse shift fork	Finger thickness		13.4—13.7 mm (0.527—0.539 in.)	———
	Fork-to-reverse idler gear clearance		0.20—0.59 mm (0.007—0.024 in.)	1.2 mm (0.047 in.)
Shift arm	I.D.		13.973—14.000 mm (0.5501—0.5512 in.)	———
	Shift fork diameter at contact area		16.9—17.0 mm (0.665—0.669 in.)	———
	Shift arm-to-shift lever clearance		0.2—0.5 mm (0.008—0.020 in.)	0.6 mm (0.024 in.)
Select lever	Finger width		14.85—14.95 mm (0.585—0.589 in.)	———
Change lever	Change-to-select lever clearance		0.05—0.25 mm (0.002—0.010 in.)	0.5 mm (0.020 in.)
	Groove (to select lever)		15.00—15.10 mm (0.591—0.594 in.)	———
	Shaft-to-shift arm clearance		0.013—0.07 mm (0.0005—0.003 in.)	0.1 mm (0.004 in.)
M/T differential carrier	Pinion shaft contact area I.D.		18.010—18.028 mm (0.7091—0.7098 in.)	———
	Carrier-to-pinion shaft clearance		0.027—0.057 mm (0.0011—0.0022 in.)	0.1 mm (0.004 in.)
	Driveshaft contact area I.D.		28.025—28.045 mm (1.1033—1.1041 in.)	———
M/T differential pinion gear	Backlash		0.05—0.15 mm (0.002—0.006 in.)	———
	I.D.		18.042—18.066 mm (0.7103—0.7113 in.)	———
	Pinion gear-to-pinion shaft clearance		0.059—0.095 mm (0.0023—0.0037 in.)	0.15 mm (0.006 in.)
80 mm shim	80 mm shim-to-bearing outer race clearance in transmission housing		0—0.10 mm (0—0.0039 in.)	Adjust

BACK

Protected by AR

Automatic Transmission and A/T Differential

Item	Measurement	Qualification	Standard or New	Service Limit
ATF (Automatic Transmission Fluid)	Capacity Use Honda ATF-Z1	Fluid change	2.9 L (3.0 US qt)	
		Overhaul	6.5 L (6.9 US qt)	
ATF pressure	Line pressure	At 2,000 rpm in N or P position	900—960 kPa (9.2—9.8 kgf/cm², 130—140 psi)	850 kPa (8.7 kgf/cm², 120 psi)
	1st clutch pressure	At 2,000 rpm in 1 position	890—970 kPa (9.1—9.9 kgf/cm², 130—140 psi)	840 kPa (8.6 kgf/cm², 120 psi)
	2nd clutch pressure	At 2,000 rpm in 2 position	890—970 kPa (9.1—9.9 kgf/cm², 130—140 psi)	840 kPa (8.6 kgf/cm², 120 psi)
	3rd clutch pressure	At 2,000 rpm in 3rd gear in D3 position	890—970 kPa (9.1—9.9 kgf/cm², 130—140 psi)	840 kPa (8.6 kgf/cm², 120 psi)
	4th clutch pressure	At 2,000 rpm in 4th gear in D position	890—970 kPa (9.1—9.9 kgf/cm², 130—140 psi)	840 kPa (8.6 kgf/cm², 120 psi)
	5th clutch pressure	At 2,000 rpm in 5th gear in D position	890—970 kPa (9.1—9.9 kgf/cm², 130—140 psi)	840 kPa (8.6 kgf/cm², 120 psi)
Torque converter	Stall speed Check with vehicle on level ground		2,400 rpm	2,250—2,550 rpm
Clutch	Clutch end plate-to-top disc clearance	1st (2003-2005 models)	———	1.28—1.48 mm (0.050—0.058 in.)
		1st (2006 model)	———	1.38—1.58 mm (0.054—0.062 in.)
		2nd (2003-2005 models)	———	0.88—1.08 mm (0.035—0.043 in.)
		2nd (2006 model)	———	1.18—1.38 mm (0.046—0.054 in.)
		3rd (2003-2005 models)	———	0.93—1.13 mm (0.037—0.044 in.)
		3rd (2006 model)	———	1.23—1.43 mm (0.048—0.056 in.)
		4th and 5th (2003-2004 models)	———	0.73—0.93 mm (0.029—0.037 in.)
		4th and 5th (2005-2006 models)	———	0.93—1.13 mm (0.037—0.044 in.)
	Clutch return spring free length	1st, 2nd, and 3rd	50.8 mm (2.00 in.)	48.8 mm (1.92 in.)
		4th and 5th	33.5 mm (1.32 in.)	31.5 mm (1.24 in.)
	Clutch disc thickness		1.94 mm (0.076 in.)	———
	Clutch plate thickness	1st and 3rd	1.6 mm (0.063 in.)	When discolored
		2nd	2.0 mm (0.079 in.)	When discolored
			4.0 mm (0.157 in.)	When discolored
		4th and 5th (2003-2004 models)	2.3 mm (0.091 in.)	When discolored
		4th and 5th (2005-2006 models)	2.0 mm (0.079 in.)	When discolored
	Clutch waved-plate phase difference	1st	0.15—0.25 mm (0.006—0.010 in.)	———
		2nd, 3rd, 4th, and 5th	0.1—0.2 mm (0.004—0.008 in.)	———

(cont'd)

Protected by AR

Standards and Service Limits

Automatic Transmission and A/T Differential (cont'd)

Item	Measurement	Qualification	Standard or New	Service Limit
Clutch (cont'd)	1st, 2nd, and 3rd clutch end plate thickness (2003-2005 models)	Mark 1	2.6 mm (0.102 in.)	When discolored
		Mark 2	2.7 mm (0.106 in.)	When discolored
		Mark 3	2.8 mm (0.110 in.)	When discolored
		Mark 4	2.9 mm (0.114 in.)	When discolored
		Mark 5	3.0 mm (0.118 in.)	When discolored
		Mark 6	3.1 mm (0.122 in.)	When discolored
		Mark 7	3.2 mm (0.126 in.)	When discolored
		Mark 8	3.3 mm (0.130 in.)	When discolored
		Mark 9	3.4 mm (0.134 in.)	When discolored
	1st and 2nd clutch end plate thickness (2006 model)	Mark 1	2.6 mm (0.102 in.)	When discolored
		Mark 2	2.7 mm (0.106 in.)	When discolored
		Mark 3	2.8 mm (0.110 in.)	When discolored
		Mark 4	2.9 mm (0.114 in.)	When discolored
		Mark 5	3.0 mm (0.118 in.)	When discolored
		Mark 6	3.1 mm (0.122 in.)	When discolored
		Mark 7	3.2 mm (0.126 in.)	When discolored
		Mark 8	3.3 mm (0.130 in.)	When discolored
		Mark 9	3.4 mm (0.134 in.)	When discolored
	3rd clutch end plate thickness (2006 model)	Mark 1	2.1 mm (0.083 in.)	When discolored
		Mark 2	2.2 mm (0.087 in.)	When discolored
		Mark 3	2.3 mm (0.091 in.)	When discolored
		Mark 4	2.4 mm (0.094 in.)	When discolored
		Mark 5	2.5 mm (0.098 in.)	When discolored
		Mark 6	2.6 mm (0.102 in.)	When discolored
		Mark 7	2.7 mm (0.106 in.)	When discolored
		Mark 8	2.8 mm (0.110 in.)	When discolored
		Mark 9	2.9 mm (0.114 in.)	When discolored
	4th and 5th clutch end plate thickness	Mark 1	2.1 mm (0.083 in.)	When discolored
		Mark 2	2.2 mm (0.087 in.)	When discolored
		Mark 3	2.3 mm (0.091 in.)	When discolored
		Mark 4	2.4 mm (0.095 in.)	When discolored
		Mark 5	2.5 mm (0.098 in.)	When discolored
		Mark 6	2.6 mm (0.102 in.)	When discolored
		Mark 7	2.7 mm (0.106 in.)	When discolored
		Mark 8	2.8 mm (0.110 in.)	When discolored
		Mark 9	2.9 mm (0.114 in.)	When discolored

BACK

Protected by AR

Item	Measurement	Qualification	Standard or New	Service Limit
Mainshaft	Diameter of needle bearing contact area	At stator shaft	22.984—23.000 mm (0.905—0.906 in.)	When worn or damaged
		At 5th gear	51.975—51.991 mm (2.046—2.047 in.)	When worn or damaged
		4th gear collar	33.975—33.991 mm (1.3376—1.3382 in.)	When worn or damaged
	I.D. of gears	5th gear	57.000—57.019 mm (2.2441—2.2448 in.)	When worn or damaged
		4th gear	40.000—40.016 mm (1.5748—1.5754 in.)	When worn or damaged
	End play of gears	5th gear	0.03—0.11 mm (0.001—0.004 in.)	———
		4th gear	0.1—0.22 mm (0.004—0.009 in.)	———
	41 x 68 mm thrust washer thickness	No. 1	6.35 mm (0.250 in.)	When worn or damaged
		No. 2	6.40 mm (0.252 in.)	When worn or damaged
		No. 3	6.45 mm (0.254 in.)	When worn or damaged
		No. 4	6.50 mm (0.256 in.)	When worn or damaged
		No. 5	6.55 mm (0.258 in.)	When worn or damaged
		No. 6	6.60 mm (0.260 in.)	When worn or damaged
	4th gear collar length		66.3—66.4 mm (2.610—2.614 in.)	———
	Length of 4th gear collar flange from end		19.15—19.30 mm (0.754—0.760 in.)	When worn or damaged
	Sealing ring thickness		1.91—1.97 mm (0.0752—0.0776 in.)	1.86 mm (0.0732 in.)
	Width of sealing ring groove		2.025—2.060 mm (0.0797—0.0811 in.)	2.080 mm (0.0819 in.)
	Clutch feed pipe O.D.		7.97—7.98 mm (0.3138—0.3142 in.)	7.95 mm (0.313 in.)
	Clutch feed pipe bushing I.D.		8.000—8.015 mm (0.3150—0.3156 in.)	8.030 mm (0.3161 in.)
Countershaft	Diameter of needle bearing contact area	At torque converter housing	36.005—36.015 mm (1.4175—1.4179 in.)	When worn or damaged
		At 4th gear	34.982—34.998 mm (1.3772—1.3779 in.)	When worn or damaged
		At reverse gear	39.979—40.000 mm (1.5740—1.5748 in.)	When worn or damaged
	I.D. of gears	4th gear	41.000—41.016 mm (1.6142—1.6148 in.)	When worn or damaged
		Reverse gear	46.000—46.016 mm (1.8110—1.8116 in.)	When worn or damaged
	End play of gears	5th gear	0.00—0.48 mm (0.000—0.019 in.)	———
		4th gear	0.04—0.27 mm (0.002—0.011 in.)	———
		Reverse gear	0.10—0.25 mm (0.004—0.010 in.)	———
	Collar, 35 x 47 x 7.8 mm thickness		7.8 mm (0.31 in.)	———
	Collar, 37 x 41 x 57.8 mm length		57.75—57.80 mm (2.274—2.276 in.)	———
	Reverse selector hub width		25.45—25.65 mm (1.002—1.010 in.)	———
	Reverse selector hub O.D.		55.87—55.90 mm (2.200—2.201 in.)	When worn or damaged

(cont'd)

Protected by AR

Standards and Service Limits

Automatic Transmission and A/T Differential (cont'd)

Item	Measurement	Qualification	Standard or New	Service Limit
Secondary shaft	Diameter of needle bearing contact area	At 1st gear	39.986—39.999 mm (1.5742—1.5748 in.)	When worn or damaged
		At 2nd gear	39.986—39.999 mm (1.5742—1.5748 in.)	When worn or damaged
		3rd gear collar	36.975—36.991 mm (1.4557—1.4563 in.)	When worn or damaged
	I.D. of gears	1st gear	47.000—47.016 mm (1.8504—1.8510 in.)	When worn or damaged
		2nd gear	46.000—46.016 mm (1.8110—1.8116 in.)	When worn or damaged
		3rd gear	43.000—43.016 mm (1.6929—1.6935 in.)	When worn or damaged
	End play of gears	1st gear	0.04—0.12 mm (0.002—0.005 in.)	———
		2nd gear	0.04—0.12 mm (0.002—0.005 in.)	———
		3rd gear	0.10—0.22 mm (0.004—0.009 in.)	———
	37 x 58 mm thrust washer thickness	No. 1	3.900 mm (0.154 in.)	When worn or damaged
		No. 2	3.925 mm (0.155 in.)	When worn or damaged
		No. 3	3.950 mm (0.156 in.)	When worn or damaged
		No. 4	3.975 mm (0.156 in.)	When worn or damaged
		No. 5	4.000 mm (0.157 in.)	When worn or damaged
		No. 6	4.025 mm (0.158 in.)	When worn or damaged
		No. 7	4.050 mm (0.159 in.)	When worn or damaged
		No. 8	4.075 mm (0.160 in.)	When worn or damaged
		No. 9	4.100 mm (0.161 in.)	When worn or damaged
		No. 10	4.125 mm (0.162 in.)	When worn or damaged
		No. 11	4.150 mm (0.163 in.)	When worn or damaged
		No. 12	4.175 mm (0.164 in.)	When worn or damaged
		No. 13	4.200 mm (0.165 in.)	When worn or damaged
		No. 14	4.225 mm (0.166 in.)	When worn or damaged
		No. 15	4.250 mm (0.167 in.)	When worn or damaged
		No. 16	4.275 mm (0.168 in.)	When worn or damaged
		No. 17	4.300 mm (0.169 in.)	When worn or damaged
		No. 18	4.325 mm (0.170 in.)	When worn or damaged
		No. 19	4.350 mm (0.171 in.)	When worn or damaged
		No. 20	4.375 mm (0.172 in.)	When worn or damaged
	40 x 51.5 mm thrust washer thickness	No. 1	4.80 mm (0.189 in.)	When worn or damaged
		No. 2	4.85 mm (0.191 in.)	When worn or damaged
		No. 3	4.90 mm (0.193 in.)	When worn or damaged
		No. 4	4.95 mm (0.195 in.)	When worn or damaged
		No. 5	5.00 mm (0.197 in.)	When worn or damaged
		No. 6	5.05 mm (0.199 in.)	When worn or damaged
	3rd gear collar length		43.9—44.0 mm (1.728—1.732 in.)	———
	Length of 3rd gear collar flange from end		5.25—5.40 mm (0.207—0.213 in.)	When worn or damaged
	Sealing ring thickness		1.91—1.97 mm (0.0752—0.0776 in.)	1.86 mm (0.0732 in.)
	Width of sealing ring groove		2.025—2.060 mm (0.0797—0.0811 in.)	2.080 mm (0.0819 in.)
	Clutch feed pipe O.D.	3rd clutch feed pipe	11.47—11.48 mm (0.4516—0.4520 in.)	11.45 mm (0.4508 in.)
		1st clutch feed pipe	6.97—6.98 mm (0.2744—0.2748 in.)	6.95 mm (0.2736 in.)
	Clutch feed pipe bushing O.D.	3rd clutch feed pipe	11.500—11.518 mm (0.4528—0.4553 in.)	11.530 mm (0.4539 in.)
		1st clutch feed pipe	7.018—7.030 mm (0.2763—0.2768 in.)	7.045 mm (0.2774 in.)
	ATF guide collar of sealing ring contact I.D.		29.000—29.021 mm (1.1417—1.1426 in.)	29.05 mm (1.144 in.)

BACK

Protected by AR

Item	Measurement	Qualification	Standard or New	Service Limit
Idler gear shaft	Diameter of needle bearing contact area	End cover side	32.003—32.013 mm (1.2600—1.2604 in.)	When worn or damaged
	Thickness of cotters		1.39—1.42 mm (0.0547—0.0559 in.)	———
Reverse idler gear	Reverse idler gear shaft diameter at needle bearing contact area		14.99—15.00 mm (0.5902—0.5906 in.)	When worn or damaged
	I.D.		20.007—20.020 mm (0.7877—0.7882 in.)	When worn or damaged
	I.D. of reverse idler gear shaft contact area on transmission housing		14.800—14.818 mm (0.5827—0.5834 in.)	———
	I.D. of reverse idler gear shaft holder		14.800—14.824 mm (0.5827—0.5836 in.)	When worn or damaged
ATF pump	ATF pump thrust clearance		0.03—0.05 mm (0.001—0.002 in.)	0.07 mm (0.003 in.)
	ATF pump gear-to-body clearance	Drive gear	0.210—0.265 mm (0.008—0.010 in.)	———
		Driven gear	0.070—0.125 mm (0.003—0.005 in.)	———
	ATF pump driven gear I.D.		14.016—14.034 mm (0.5518—0.5525 in.)	When worn or damaged
	ATF pump driven gear shaft O.D.		13.980—13.990 mm (0.5504—0.5508 in.)	When worn or damaged
Stator shaft	Needle bearing contact I.D.	Torque converter side	27.000—27.021 mm (1.063—1.064 in.)	When worn or damaged
		ATF pump side	29.000—29.021 mm (1.1417—1.1426 in.)	———
	Sealing ring contact area I.D.		29.000—29.021 mm (1.1417—1.1426 in.)	29.05 mm (1.144 in.)
Reverse shift fork	Fork finger thickness		5.90—6.00 mm (0.232—0.236 in.)	5.40 mm (0.213 in.)
Park gear and pawl			———	When worn or damaged
Servo body	Shift fork shaft bore I.D.		14.000—14.010 mm (0.5512—0.5516 in.)	———
	Shift fork shaft valve bore I.D.		37.000—37.039 mm (1.4567—1.4582 in.)	37.045 mm (1.4585 in.)
Regulator valve body	Sealing ring contact I.D.		29.000—29.021 mm (1.1417—1.1426 in.)	29.05 mm (1.144 in.)

Item	Measurement	Qualification	Standard or New			
			Wire Diameter	O.D.	Free Length	No. of Coil
Main valve body spring (see page 14-278)	Shift valve A spring		0.8 mm (0.031 in.)	5.6 mm (0.220 in.)	28.1 mm (1.106 in.)	15.9
	Shift valve B spring		0.8 mm (0.031 in.)	5.6 mm (0.220 in.)	28.1 mm (1.106 in.)	15.9
	Shift valve C spring		0.8 mm (0.031 in.)	5.6 mm (0.220 in.)	28.1 mm (1.106 in.)	15.9
	Relief valve spring		1.0 mm (0.039 in.)	9.6 mm (0.378 in.)	34.1 mm (1.343 in.)	10.2
	Lock-up control valve spring		0.65 mm (0.026 in.)	7.1 mm (0.280 in.)	23.1 mm (0.909 in.)	12.7
	Cooler check valve spring	2003-2004 models	0.9 mm (0.035 in.)	6.6 mm (0.260 in.)	26.5 mm (1.043 in.)	12.6
		2005-2006 models	0.85 mm (0.034 in.)	6.6 mm (0.260 in.)	27.0 mm (1.063 in.)	11.3
	Servo control valve spring		0.7 mm (0.028 in.)	6.6 mm (0.260 in.)	35.7 mm (1.406 in.)	17.2
	Shift valve E spring		0.8 mm (0.031 in.)	5.6 mm (0.220 in.)	28.1 mm (1.106 in.)	15.9

(cont'd)

Protected by AR

Standards and Service Limits

Automatic Transmission and A/T Differential (cont'd)

Item	Measurement	Qualification	Standard or New			
			Wire Diameter	O.D.	Free Length	No. of Coil
Regulator valve body spring 2003-2004 models (see page 14-280), 2005-2006 models (see page 14-281)	Stator reaction spring		4.5 mm (0.177 in.)	35.4 mm (1.394 in.)	30.3 mm (1.193 in.)	1.92
	Regulator valve spring A		1.9 mm (0.075 in.)	14.7 mm (0.579 in.)	80.6 mm (3.173 in.)	16.1
	Regulator valve spring B		1.6 mm (0.063 in.)	9.2 mm (0.362 in.)	44.0 mm (1.732 in.)	12.5
	Torque converter check valve spring		1.2 mm (0.047 in.)	8.6 mm (0.339 in.)	33.8 mm (1.331 in.)	12.2
	Lock-up shift valve spring		1.0 mm (0.039 in.)	6.6 mm (0.260 in.)	35.5 mm (1.398 in.)	18.2
	3rd accumulator spring		2.5 mm (0.098 in.)	14.6 mm (0.575 in.)	29.9 mm (1.177 in.)	4.9
	1st accumulator spring A		2.4 mm (0.094 in.)	18.6 mm (0.732 in.)	49.0 mm (1.929 in.)	7.1
	1st accumulator spring B		2.3 mm (0.091 in.)	12.2 mm (0.480 in.)	31.5 mm (1.240 in.)	6.6
Servo body spring (see page 14-282)	Shift valve D spring		0.8 mm (0.031 in.)	5.6 mm (0.220 in.)	28.1 mm (1.106 in.)	15.9
	4th accumulator spring B		2.3 mm (0.091 in.)	12.2 mm (0.480 in.)	31.5 mm (1.240 in.)	6.6
	4th accumulator spring A		2.4 mm (0.094 in.)	18.6 mm (0.732 in.)	49.0 mm (1.929 in.)	7.1
	2nd accumulator spring B		2.0 mm (0.079 in.)	10.6 mm (0.417 in.)	34.0 mm (1.339 in.)	8.0
	2nd accumulator spring A		2.2 mm (0.087 in.)	16.6 mm (0.654 in.)	48.2 mm (1.898 in.)	8.5
	5th accumulator spring		2.5 mm (0.098 in.)	14.6 mm (0.575 in.)	29.9 mm (1.177 in.)	4.9

Item	Measurement	Qualification	Standard or New	Service Limit
A/T differential carrier	Pinion shaft contact area I.D.		18.000—18.025 mm (0.709—0.719 in.)	———
	Carrier-to-pinion shaft clearance		0.013—0.054 mm (0.001—0.002 in.)	0.1 mm (0.004 in.)
	Driveshaft contact area I.D.		28.015—28.045 mm (1.103—1.104 in.)	———
	Carrier-to-driveshaft clearance		0.035—0.086 mm (0.002—0.003 in.)	0.12 mm (0.005 in.)
	Carrier bearing starting torque (preload)	For new bearing	2.7—3.9 N·m (28—40 kgf·cm, 24—35 lbf·in.)	Adjust
		For bearing reused	2.5—3.6 N·m (25—37 kgf·cm, 22—32 lbf·in.)	Adjust
	Final driven gear backlash	(References)	0.085—0.144 mm (0.003—0.006 in.)	0.2 mm (0.008 in.)
A/T differential pinion gear	Backlash		0.05—0.15 mm (0.002—0.006 in.)	———
	I.D.		18.042—18.066 mm (0.7103—0.7113 in.)	———
	Pinion gear-to-pinion shaft clearance		0.055—0.095 mm (0.0022—0.0037 in.)	0.12 mm (0.005 in.)

BACK

Protected by AR

Steering

Item	Measurement	Qualification	Standard or New
Steering wheel	Rotational play measured at outside edge with engine running		0—10 mm (0—0.39 in.)
	Starting load measured at outside edge with engine running		29 N (3.0 kgf, 6.6 lbf)
Gearbox	Angle of rack guide screw loosened from locked position		10°—20° max.
Pump	Output pressure with shut-off valve closed		7,160—7,850 kPa (73—80 kgf/cm², 1,040—1,140 psi)
Power steering fluid	Capacity	Fluid change	0.4 L (0.42 US qt)
	Use Honda Power Steering Fluid	System overhaul	1.1 L (1.16 US qt)
Drive belt	Tension		Auto tensioner

Suspension

Item	Measurement	Qualification	Standard or New	Service Limit
Wheel alignment: DX (2003-2005 models), VP	Camber	Front	0°03′±45′	
		Rear	−0°50′±30′	
	Caster	Front	3°10′±45′	
	Total Toe-in	Front	0±2 mm (0±1/16 in.)	
		Rear	2±2 mm (1/16±1/16 in.)	
	Front wheel turning angle	Inside wheel	39°00′±2°	
		Outside wheel	31°50′ (Reference)	
Wheel alignment: DX (2006 model), LX, LX-P, SE, EX, EX-L	Camber	Front	0°00′±45′	
		Rear	−1°00′±30′	
	Caster	Front	3°15′±45′	
	Total Toe-in	Front	0±2 mm (0±1/16 in.)	
		Rear	2±2 mm (1/16±1/16 in.)	
	Front wheel turning angle	Inside wheel	38°50′±2°	
		Outside wheel	31°40′ (Reference)	
Wheel	Aluminum wheel runout	Axial	0—0.7 mm (0—0.03 in.)	2.0 mm (0.08 in.)
		Radial	0—0.7 mm (0—0.03 in.)	1.5 mm (0.06 in.)
	Steel wheel runout	Axial	0—1.0 mm (0—0.04 in.)	2.0 mm (0.08 in.)
		Radial	0—1.0 mm (0—0.04 in.)	1.5 mm (0.06 in.)
Wheel bearing	End play	Front	0—0.05 mm (0—0.002 in.)	
		Rear	0—0.05 mm (0—0.002 in.)	

Protected by AR

Standards and Service Limits

Brakes

Item	Measurement	Qualification	Standard or New	Service Limit
Parking brake lever	Distance traveled when lever pulled with 196 N (20 kgf, 44 lbf) of force	Disc brake	6 to 9 clicks	
		Drum brake	4 to 7 clicks	
Brake pedal	Pedal height (carpet removed)	M/T	167 mm (6 9/16 in.)	
		A/T	172 mm (6 13/16 in.)	
	Free play		1—5 mm (1/16—3/16 in.)	
Brake disc	Thickness	Front	22.9—23.1 mm (0.90—0.91 in.)	21.0 mm (0.83 in.)
		Rear	8.9—9.1 mm (0.35—0.36 in.)	8.0 mm (0.31 in.)
	Runout	Front	———	0.10 mm (0.004 in.)
		Rear	———	0.10 mm (0.004 in.)
	Parallelism	Front and rear	———	0.015 mm (0.0006 in.)
Brake pad	Thickness	Front	10.5—11.5 mm (0.41—0.45 in.)	1.6 mm (0.06 in.)
		Rear	8.9—9.1 mm (0.350—0.358 in.)	1.6 mm (0.06 in.)
Brake drum	I.D.		219.9—220.0 mm (8.657—8.661 in.)	221 mm (8.701 in.)
Brake shoe	Lining thickness		4.5 mm (0.18 in.)	2.0 mm (0.08 in.)

Air Conditioning

Item	Measurement	Qualification	Standard or New
Refrigerant	Type		HFC-134a (R-134a)
	Capacity of system		500—550 g (17.6—19.4 oz)
Refrigerant oil	Type		DENSO: ND-OIL 8 (P/N 38897-PR7-A01AH or 38899-PR7-A01)
	Capacity of components	Condenser	25 mL (5/6 fl oz)
		Evaporator	45 mL (1 1/2 fl oz)
		Each line and hose	10 mL (1/3 fl oz)
		Receiver	10 mL (1/3 fl oz)
		Compressor	160—175 mL (5 1/3—5 2/3 fl oz)
Compressor	Starter coil resistance	At 68°F (20°C)	3.9—4.3 Ω
	Pulley-to-pressure plate clearance		0.35—0.60 mm (0.014—0.024 in.)
Drive belt	Tension		Auto tensioner

BACK

Protected by AR

Design Specifications

Item	Measurement	Qualification	Specification
DIMENSIONS 4-door	Overall length	2003-2005 models	4,813 mm (189.5 in.)
		2006 model	4,854 mm (191.1 in.)
	Overall width		1,820 mm (71.7 in.)
	Overall height	DX, LX (2003-2005 models)	1,453 mm (57.2 in.)
		EX, EX-L (2003-2005 models)	1,456 mm (57.3 in.)
		2006 model	1,453 mm (57.2 in.)
	Wheelbase		2,740 mm (107.9 in.)
	Track	Front	1,553 mm (61.1 in.)
		Rear	1,554 mm (61.2 in.)
	Seating capacity		five (5)
DIMENSIONS 2-door	Overall length	2003-2005 models	4,766 mm (187.6 in.)
		2006 model	4,770 mm (187.8 in.)
	Overall width		1,810 mm (71.3 in.)
	Overall height		1,415 mm (55.7 in.)
	Wheelbase		2,670 mm (105.1 in.)
	Track	Front	1,553 mm (61.1 in.)
		Rear	1,554 mm (61.2 in.)
	Seating capacity		five (5)
WEIGHT (U.S.A.)	Gross Vehicle Weight Rating (GVWR)	DX, VP (2006 model), LX	4,080 lbs
		SE (2006 model), EX, EX-L	4,145 lbs
WEIGHT (CANADA)	Gross Vehicle Weight Rating (GVWR)	DX (2003-2005 models), LX	1,850 kg
		DX (2006 model), SE (2006 model), EX, EX-L	1,880 kg
ENGINE	Type		Water cooled, 4-stroke DOHC i- VTEC engine
	Cylinder arrangement		Inline 4-cylinder, transverse
	Bore and stroke		87 x 99 mm (3.43 x 3.90 in.)
	Displacement		2,354 cm^3 (144 cu in.)
	Compression ratio		9.7
	Valve train		Chain drive, DOHC i-VTEC 4 valves per cylinder
	Lubrication system		Forced, wet sump, with trochoid pump
	Oil pump displacement	At 6,000 rpm	52.8 L (55.8 US qt)/minute
	Water pump displacement	At 6,000 rpm	95.5 L (101 US qt)/minute
	Fuel required		Regular UNLEADED gasoline with 87 pump octane number or higher
STARTER	Type		Gear reduction
	Normal output	M/T (2003-2005 models)	1.7 kW
		A/T, M/T (2006 model)	1.6 kW
	Normal voltage		12 V
	Hour rating		30 seconds
	Rotation of direction		Clockwise as viewed from gear end
CLUTCH	Clutch type	M/T	Single plate dry, diaphragm spring
		A/T	3-element torque converter with lock-up clutch
	Clutch friction material surface area	M/T	221 cm^2 (34.22 sq in.)

(cont'd)

Protected by AR

Design Specifications

(cont'd)

Item	Measurement	Qualification	Specification
MANUAL TRANSMISSION	Type	APG6	Synchronized, 5-speed forward, 1 reverse
	Primary reduction		Direct 1:1
	Gear ratio	1st	3.267
		2nd	1.769
		3rd	1.147
		4th	0.872
		5th	0.659
		Reverse	3.583
		Final	4.389
	Final reduction	Type	Single helical gear
AUTOMATIC TRANSMISSION	Type	MCLA	Electronically controlled automatic, 5-speed forward, 1 reverse
	Primary reduction		Direct 1:1
	Gear ratio	1st	2.652
		2nd	1.517
		3rd	1.037
		4th	0.738
		5th	0.566
		Reverse	2.000
	Final reduction	Type	Single helical gear
		Gear ratio	4.438
STEERING	Type		Power-assisted rack and pinion
	Overall ratio		15.21
	Turns, lock-to-lock		2.98
	Steering wheel diameter		380 mm (15.0 in.)
SUSPENSION	Type	Front	Independent double wishbone, coil spring, with stabilizer
		Rear	Independent double wishbone, coil spring, with stabilizer
	Shock absorber	Front	Telescopic, hydraulic, nitrogen gas-filled
		Rear	Telescopic, hydraulic, nitrogen gas-filled
TIRES	Size of front and rear tires	DX (2003-2005 models), VP	P195/65R15 89H M+S
		LX (2003-2005 models), LX (2006 model 4-door), LX-P	P205/65R15 92H M+S
		DX (2006 model), LX (2006 model 2-door), SE, EX, EX-L	P205/60R16 91V M+S
	Size of spare tire		T135/80D16
WHEEL ALIGNMENT	Camber (2003-2005 models), VP (2006 model)	Front: DX (2003-2005 models), VP	0°03′
		Front: DX (2006 model), LX, LX-P, SE (2006 model), EX, EX-L	0°00′
		Rear: DX (2003-2005 models), VP	−0°50′
		Rear: DX (2006 model) LX, LX-P, SE (2006 model), EX, EX-L	−1°00′
	Caster	Front: DX (2003-2005 models), VP	3°10′
		Front: DX (2006 model), LX, LX-P, SE (2006 model), EX, EX-L	3°15′
	Total Toe-in	Front	0 mm (0 in.)
		Rear	2 mm (1/16 in.)

BACK

Protected by AR

Item	Measurement	Qualification	Specification
BRAKES	Type of service brake	Front	Power-assisted self-adjusting ventilated disc
		Rear: DX, VP (2006 model), LX, LX-P	Power-assisted self-adjusting drum
		Rear: SE (2006 model), EX, EX-L	Power-assisted self-adjusting solid disc
	Type of parking brake		Mechanical actuating, rear wheels
	Pad friction surface area	Front: US model	56 cm^2 (8.7 sq in.) x 2
		Front: Canada model	57 cm^2 (8.8 sq in.) x 2
		Rear	28 cm^2 (4.3 sq in.) x 2
	Shoe friction surface area	Rear	74 cm^2 (11.5 sq in.) x 2
AIR CONDITIONING	Compressor	Type	Swash plate
		Capacity	188 mL (11.47 cu in.)/rev.
		Maximum speed	7,922 rpm
		Lubricant capacity	160 mL (5 1/3 fl oz)
		Lubricant type	DENSO ND-OIL 8
	Condenser	Type	Corrugated fin
	Evaporator	Type	Corrugated fin
	Blower	Type	Radial
		Motor type	210 W/12 V
		Speed control	Infinite variable
		Maximum capacity	505 m^3/h (17,805 cu ft/h)
	Temperature control		Air-mix type
	Compressor clutch	Type	Dry, single plate, poly V-belt drive
		Electrical power consumption at 68°F (20°C)	35 W maximum at 12 V
	Refrigerant	Type	HFC-134a (R-134a)
		Capacity	500—550 g (17.6—19.4 oz)

(cont'd)

Protected by AR

Design Specifications

(cont'd)

Item	Measurement	Qualification	Specification
ELECTRICAL RATINGS	Battery		12 V—36 AH/5 hours
	Starter	M/T	12 V—1.7 kW
		A/T	12 V—1.6 kW
	Alternator		12 V—105A
	Fuses	Under-hood fuse/ relay box	100A, 50A, 40A, 30A, 20A, 15A, 10A, 7.5A
		Under-dash fuse/relay box	30A, 20A, 15A, 10A, 7.5A
	Light bulbs	Headlight high beam	12 V—60 W
		Headlight low beam	12 V—51 W
		Front turn signal/front side marker lights	12 V—21/5 W (two filaments) Amber color
		Rear turn signal lights	12 V—21 W Amber color
		Brake/taillights (2003-2005 models)	12 V—21/5 W (two filaments)
		Brake/taillights (2006 model)	LED
		Inner/taillights	12 V—5 W
		High mount brake light (2003-2005 models)	12 V—21 W
		High mount brake light (2006 model)	LED
		Back-up lights: 4-door	12 V—21 W
		Back-up lights: 2-door	12 V—16 W
		License plate light	12 V—5 W
		Ceiling light	12 V—8 W
		Spotlights	12 V—8 W
		Trunk light	12 V—5 W
		Door courtesy lights	12 V—3.8 W
		Glove box light	12 V—3.8 W
		Vanity mirror lights	12 V—1.1 W
		Gauge lights	12 V—LED (non-replaceable)
		Indicator, panel, ambient light	12 V—LED, 14 V—0.56 W, 0.84 W

BACK

Protected by AR

Body Specifications

2003-2005 models 4-door:

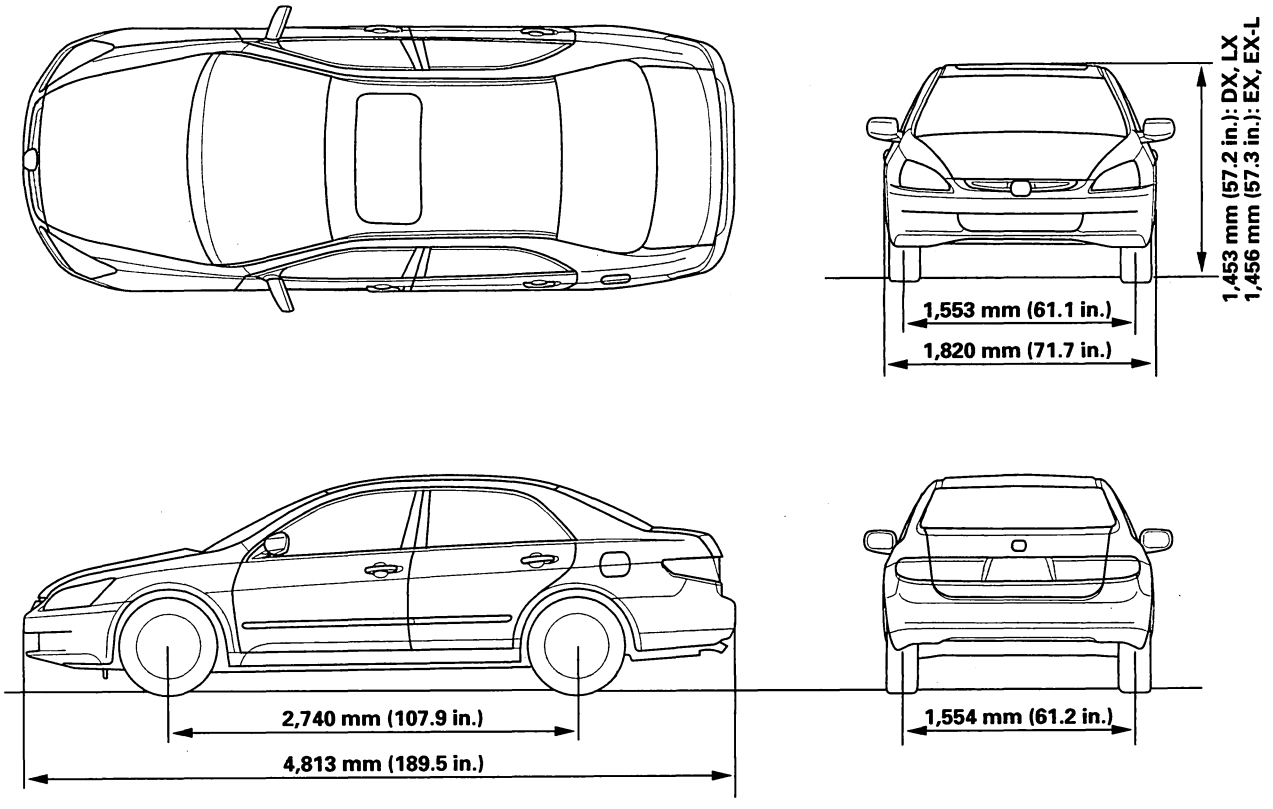

Protected by AR

Body Specifications

2003-2005 models 2-door:

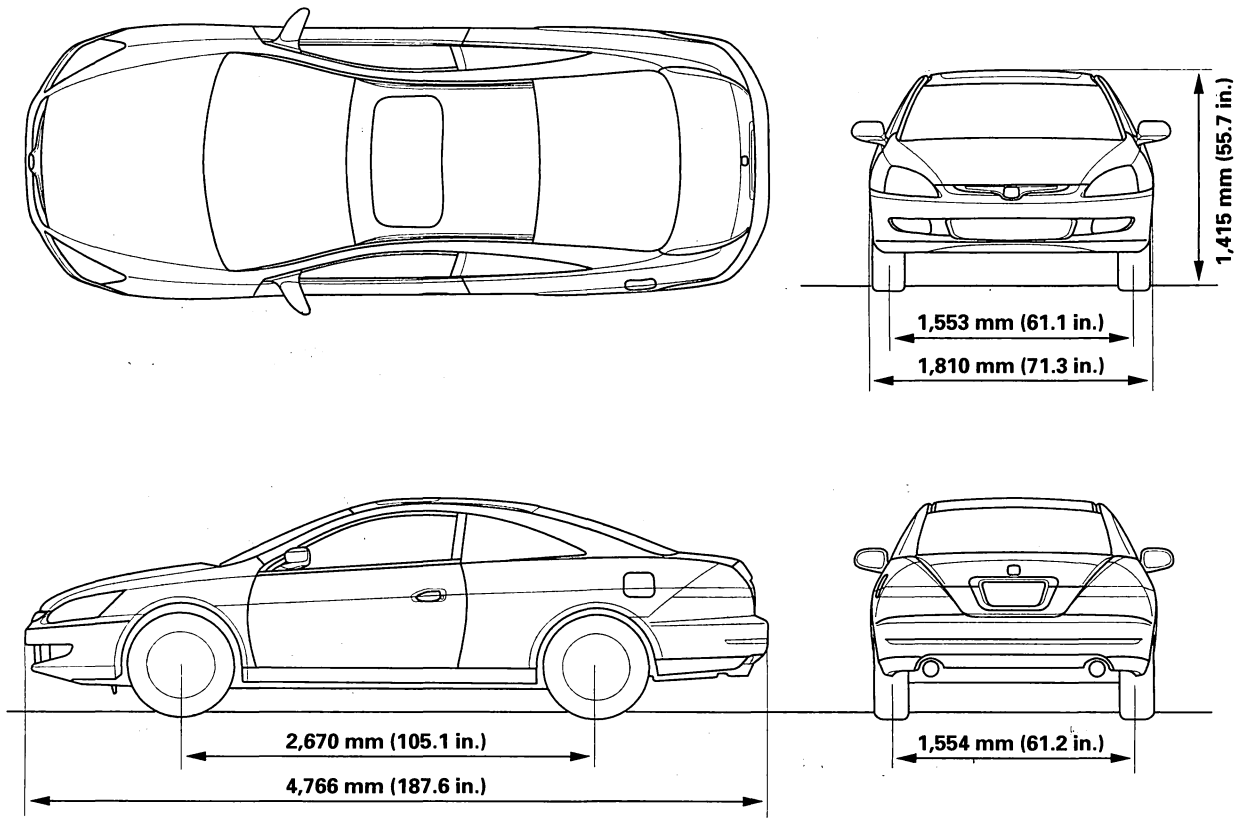

BACK

Protected by AR

2006 model 4-door:

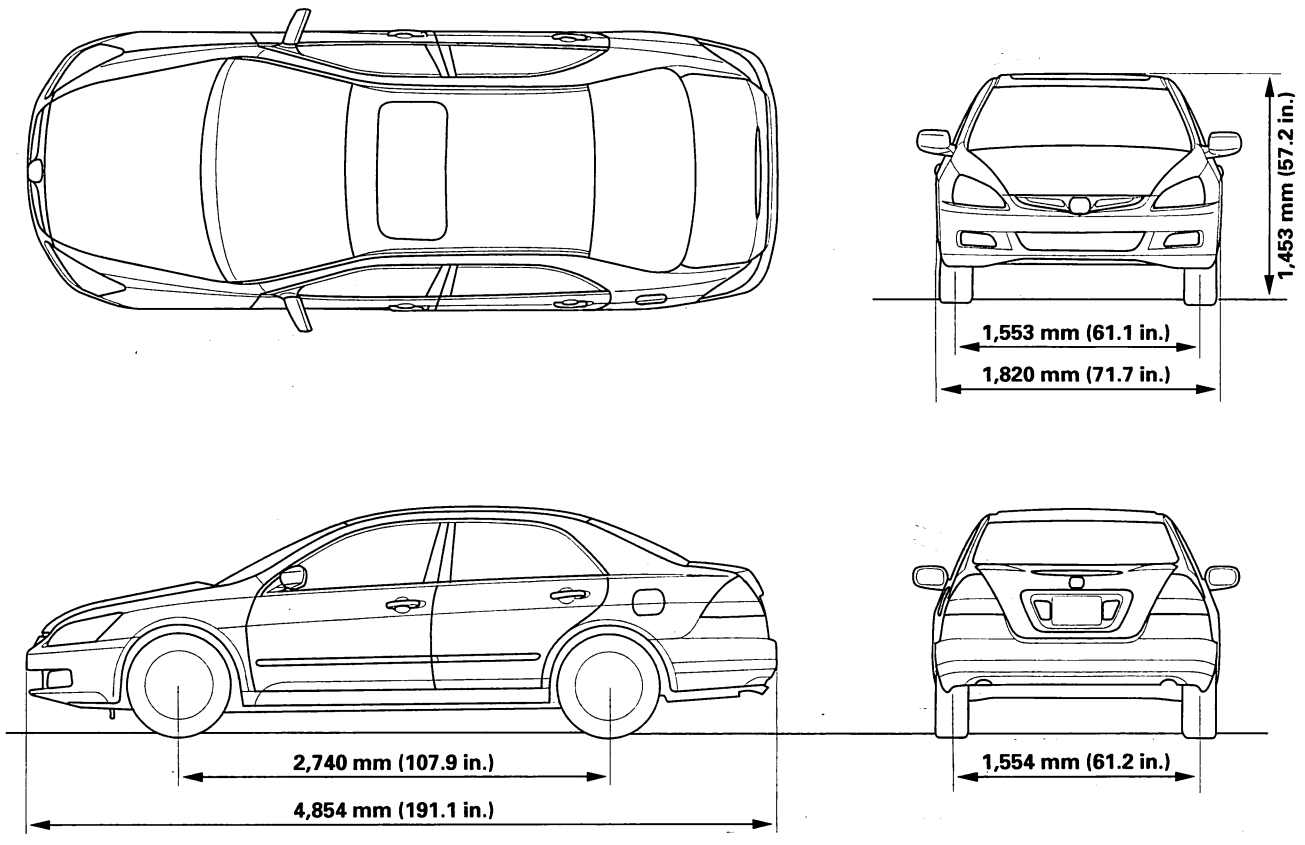

Protected by AR

Body Specifications

2006 model 2-door:

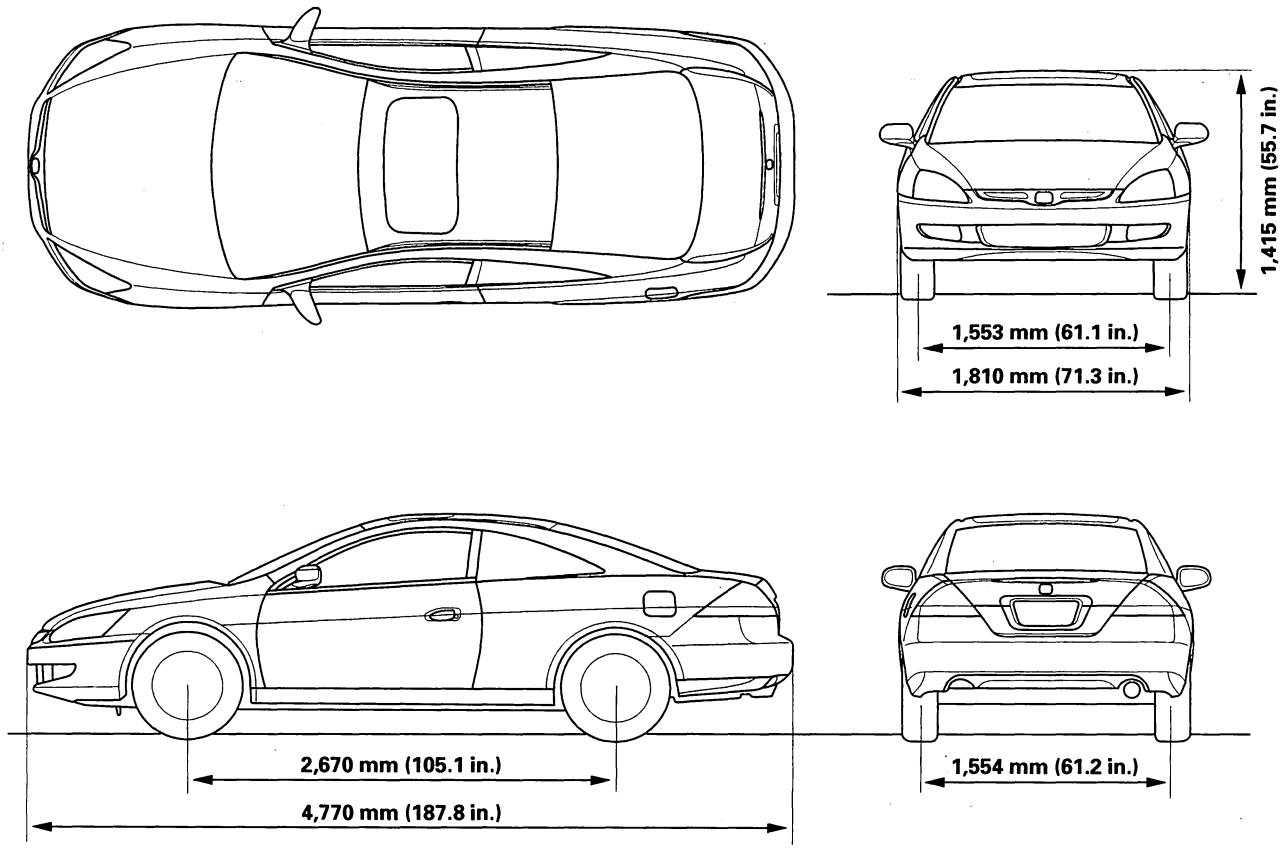

BACK

Protected by AR

Maintenance

Lubricants and Fluids 3-2

Maintenance Schedule
Listed by Distance/Time
for Normal Conditions
2003-2005 Models 3-4
Listed by Distance/Time
for Severe Conditions
2003-2005 Models 3-6

Maintenance Minder
Maintenance Display
2006 Model 3-9
Engine Oil Life Indicator
2006 Model 3-10
Resetting the Engine Oil Life Indicator
2006 Model 3-11
Maintenance Main Items
2006 Model 3-12
Maintenance Sub Items
2006 Model 3-13

Protected by AR

Lubricants and Fluids

For details of lubrication points and type of lubricants to be applied, refer to the illustrated index and various work procedures (such as Assembly/Reassembly, Replacement, Overhaul, Installation, etc.) contained in each section.

Lubrication Points		Lubricant
A	Engine	Honda Motor Oil: P/N 08798-9023 (5W-20) Look for the API certification seal on the oil container as shown below. Make sure it says "For Gasoline Engines." SAE Viscosity 5W-20.
B	Manual Transmission	Honda Manual Transmission Fluid (MTF): P/N 08798-9016 Always use Honda MTF. Using motor oil can cause stiffer shifting because it does not contain the proper additives.
	Automatic Transmission	Honda Automatic Transmission Fluid (ATF)-Z1: P/N 08200-9001 Always use Honda ATF-Z1. Using a non-Honda ATF can Affect shift quality.
C	Brake system (includes ABS)	Honda DOT 3 Brake Fluid : P/N 08798-9008
D	Clutch line	Honda DOT 3 Brake Fluid : P/N 08798-9008 Always use Honda DOT 3 Brake Fluid. Using a non-Honda brake fluid can cause corrosion and decrease the life of the system.
E F G H	Shift lever (manual transmission) Release fork (manual transmission) Shift and select cable ends Throttle cable end (throttle link)*	Super High Temp Grease: P/N 08798-9002
I J	Throttle cable end (below dashboard) Caliper piston boot, caliper pins, and boots	Honda Silicone Grease: P/N 08C30-B0234M
K	Rear brake shoe linkage	MolyKote Grease 44MA
L M N O P Q R S T	Brake booster clevis Clutch master cylinder clevis Battery terminals Pedal linkage Fuel fill door Hood hinges and hood latch Door hinges: upper and lower Trunk hinges Power steering gearbox	Multipurpose Grease
U	Power steering system	Honda Power Steering Fluid: P/N 088206-9002 Always use Honda Power Steering Fluid. Using any other type of power steering fluid or automatic transmission fluid can cause increased wear and poor steering in cold weather.
V	Air conditioning compressor	Compressor oil: DENSO ND-OIL 8 (P/N 38897-PR7-A01AH or 38899-PR7-A01) for refrigerant HFC-134a (R-134a)

*:2003-2005 Models

API CERTIFICATION SEAL



Recommended Engine Oil
Engine oil viscosity for ambient temperature ranges

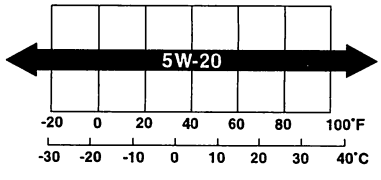

BACK

Protected by AR

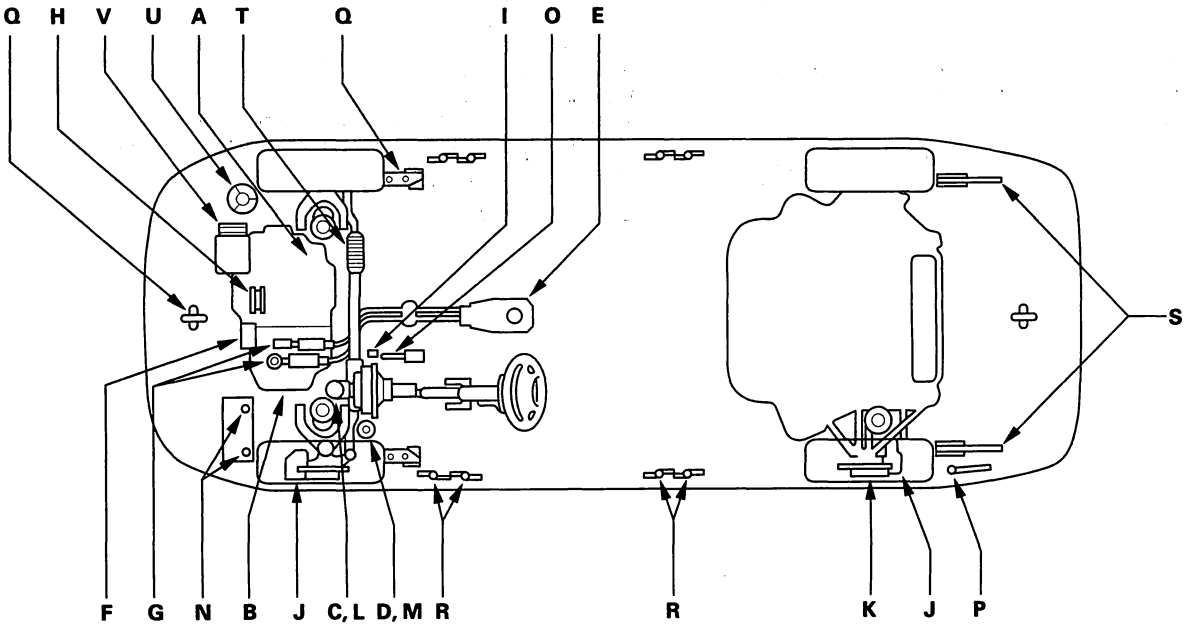

Protected by AR

Maintenance Schedule

Listed by Distance/Time for Normal Conditions

2003-2005 Models

Follow the Normal Schedule if the severe driving conditions specified in the Maintenance Schedule for Severe Conditions do not apply, and if only OCCASIONALLY driven in severe driving conditions. Follow the Severe Conditions schedule if the vehicle is driven MAINLY in Canada.

Distance		Time	Maintenance Items
10,000 miles	16,000 km	———	Do items in A.
20,000 miles	32,000 km	1 year	Do items in A and B.
30,000 miles	48,000 km	———	Do items in A and C.
40,000 miles	64,000 km	2 years	Do items in A, B, and C.
50,000 miles	80,000 km	———	Do items in A.
60,000 miles	96,000 km	3 years	Do items in A, B, and C.
———	———	3 years	Replace brake fluid (see page 19-9). Use Honda DOT 3 Brake Fluid.
70,000 miles	112,000 km	———	Do items in A.
80,000 miles	128,000 km	4 years	Do items in A, B, and C.
90,000 miles	144,000 km	———	Do items in A and C.
100,000 miles	160,000 km	5 years	Do items in A and B.
110,000 miles	176,000 km	———	Do items in A and D.
120,000 miles	192,000 km	6 years	Do items in A, B, C, E, F, and G.
———	———	6 years	Replace brake fluid (see page 19-9). Use Honda DOT 3 Brake Fluid.
130,000 miles	208,000 km	———	Do items in A.
140,000 miles	224,000 km	7 years	Do items in A and B.
150,000 miles	240,000 km	———	Do items in A and C.
160,000 miles	256,000 km	———	Inspect idle speed (see page 11-315) every 160,000 miles (256,000 km). Idle speed: M/T 700±50 rpm, A/T 800±50 rpm in N or P position.
160,000 miles	256,000 km	8 years	Do items in A and B.
———	———	9 years	Replace brake fluid (see page 19-9). Use Honda DOT 3 Brake Fluid.

BACK

Protected by AR

Do the items in parts A, B, C, D, E, F, and G as required for the mileage/time interval listed.

Part	Maintenance Items
A	Replace engine oil (see page 8-6) every 10,000 miles (16,000 km) or 1 year. Engine oil capacity without oil filter: 4.0 L (4.2 US qt).
	Rotate tires, and check tire inflation and condition every 10,000 miles (16,000 km). Follow the pattern shown in the Owner's Manual.
B	Replace engine oil filter (see page 8-7) every 20,000 miles (32,000 km) or 1 year. Engine oil capacity with oil filter: 4.2 L (4.4 US qt).
	Check front and rear brakes (see page 19-3) every 20,000 miles (32,000 km) or 1 year. • Check pads and discs for wear (thickness), damage, and cracks. • Check calipers for damage, leaks, and tightness of mount bolts. • Check wheel cylinders for leaks. • Check brake linings for cracking, glazing, wear, or contamination.
	Check parking brake adjustment (see page 19-8) every 20,000 miles (32,000 km) or 1 year. • Check the number of clicks when the parking brake lever is pulled with 196 N (20 kgf, 44 lbf) of force. With rear discs: 6 to 9 clicks. With rear drums: 4 to 7 clicks.
	Inspect tie rod ends, steering gearbox, and gearbox boots (see page 17-3) every 20,000 miles (32,000 km) or 1 year. • Check rack grease and steering linkage. • Check boots for damage and leaking grease. • Check fluid lines for damage and leaks.
	Inspect suspension components (see page 18-3) every 20,000 miles (32,000 km) or 1 year. • Check bolts for tightness. • Check condition of ball joint boots for deterioration and damage.
	Inspect driveshaft boots (see page 16-4) every 20,000 miles (32,000 km) or 1 year. Check boots for cracks and boot bands for tightness.
	Inspect brake hoses and lines including ABS (see page 19-31) every 20,000 miles (32,000 km) or 1 year. Check the master cylinder and ABS modulator-control unit for damage and leakage.
	Inspect all fluid levels and condition of fluids, every 20,000 miles (32,000 km) or 1 year. • Manual transmission fluid (MTF) (see page 13-3). • Automatic transmission fluid (ATF-Z1) (see page 14-207). • Power steering fluid (see page 17-12). • Brake fluid (see page 19-9). • Clutch Fluid • Windshield washer fluid. • Engine coolant (see page 10-6).
	Inspect exhaust system 2003-2005 models (see page 9-15)*, 2006 model (see page 9-16)* every 20,000 miles (32,000 km) or 1 year. Check catalytic converter heat shield, exhaust pipe, and muffler for damage, leaks, and tightness.
	Inspect fuel lines and connections (see page 11-334)* every 20,000 miles (32,000 km) or 1 year. Check loose connections, cracks, and deterioration; retighten loose connections and replace damaged parts.
C	Inspect drive belts (see page 4-37) every 30,000 miles (48,000 km) or 2 years. Look for cracks and damage, then check the position of the drive belt auto-tensioner indicator (see page 4-38).
	Replace dust and pollen filter (see page 21-51) every 30,000 miles (48,000 km) or 2 years. • Replace the filter as often (at 15,000 miles/24,000 km intervals) if the vehicle is driven mostly in urban areas that have high concentrations of soot in the air from industry and diesel-powered vehicles. • Replace the filter whenever airflow from the heating and cooling/climate control system is less than normal.
	Replace air cleaner element (see page 11-361) every 30,000 miles (48,000 km) (independent of time).
D	Inspect the valve clearance (see page 6-9) every 110,000 miles (176,000 km) otherwise adjust only if noisy. Intake: 0.21—0.25 mm (0.008—0.010 in.), Exhaust: 0.28—0.32 mm (0.011—0.013 in.).
	Replace spark plugs (see page 4-27) every 110,000 miles (176,000 km). • Use IZFR6K11 (NGK) or SKJ20DR-M11 (DENSO). • Use IZFR6K13 (NGK) or SKJ20DR-M13 (DENSO) for SULEV model (4-door model only).
E	Replace manual transmission fluid (see page 13-3) every 120,000 miles (192,000 km) or 6 years. Capacity: 1.9 L (2.0 US qt); use Honda MTF.
F	Replace automatic transmission fluid (see page 14-208) at 120,000 miles (192,000 km) or 6 years, then replace every 90,000 miles (144,000 km) or 5 years. Capacity: 2.8 L (3.0 US qt); use Honda ATF-Z1.
G	Replace engine coolant (see page 10-6) at 120,000 miles (192,000 km) or 10 years, then every 60,000 miles (96,000 km) or 5 years. Capacity: M/T 5.1 L (1.35 US gal), A/T 5.0 L (1.32 US gal); use Honda Long Life Antifreeze/coolant Type 2.

NOTE: According to state and federal regulations, failure to do the maintenance items marked with an asterisk (*) will not void the customer's emissions warranties. However, Honda recommends that all maintenance services be done at the recommended intervals to ensure long-term reliability.

Protected by AR

Maintenance Schedule

Listed by Distance/Time for Severe Conditions

2003-2005 Models

Use the Severe Conditions schedule if the vehicle is driven MAINLY in Canada or in any of the following conditions; if only OCCASIONALLY driven in these conditions, use the Normal Conditions schedule.

Severe Driving Conditions
- Driving less than 5 miles (8 km) per trip or, in freezing temperatures, driving less than 10 miles (16 km) per trip.
- Driving in extremely hot over 90°F (32°C) conditions.
- Extensive idling, or long periods of stop-and-go driving, such as a taxi or a commercial delivery vehicle.
- Trailer towing, driving with a loaded roof rack, or driving in mountainous conditions.
- Driving on muddy, dusty, or de-iced roads.

Distance		Time	Maintenance Items
5,000 miles	8,000 km	———	Do item in A.
10,000 miles	16,000 km	———	Do items in A and B.
15,000 miles	24,000 km	———	Do items in A and C.
20,000 miles	32,000 km	1 year	Do items in A, B, and D.
25,000 miles	40,000 km	———	Do item in A.
30,000 miles	48,000 km	———	Do items in A, B, C, and E.
35,000 miles	56,000 km	———	Do item in A.
40,000 miles	64,000 km	2 years	Do items in A, B, and D.
45,000 miles	72,000 km	———	Do items in A and C.
50,000 miles	80,000 km	———	Do items in A and B.
55,000 miles	88,000 km	———	Do item in A.
60,000 miles	96,000 km	3 years	Do items in A, B, C, D, E, F, and G.
———	———	3 years	Replace brake fluid (see page 19-9). Use Honda DOT 3 Brake Fluid.
65,000 miles	104,000 km	———	Do item in A.
70,000 miles	112,000 km	———	Do items in A and B.
75,000 miles	120,000 km	———	Do items in A and C.
80,000 miles	128,000 km	4 years	Do items in A, B, and D.
85,000 miles	136,000 km	———	Do item in A.
90,000 miles	144,000 km	———	Do items in A, B, C, E, and G.
95,000 miles	152,000 km	———	Do item in A.
100,000 miles	160,000 km	5 years	Do items in A, B, and D.
105,000 miles	168,000 km	———	Do items in A and C.
110,000 miles	176,000 km	———	Do items A, B, and H.
115,000 miles	184,000 km	———	Do item in A.
120,000 miles	192,000 km	6 years	Do items in A, B, C, D, E, F, G, and I.
———	———	6 years	Replace brake fluid (see page 19-9). Use Honda DOT 3 Brake Fluid.
125,000 miles	200,000 km	———	Do item in A.
130,000 miles	208,000 km	———	Do items in A and B.
135,000 miles	216,000 km	———	Do items in A and C.
140,000 miles	224,000 km	7 years	Do items in A, B, and D.
145,000 miles	232,000 km	———	Do item in A.
150,000 miles	240,000 km	———	Do items in A, B, C, E, and G.
155,000 miles	248,000 km	———	Do item in A.
160,000 miles	256,000 km	———	Inspect idle speed (see page 11-315) every 160,000 miles (256,000 km). Idle speed: M/T 700±50 rpm, A/T 800±50 rpm in N or P position.
160,000 miles	256,000 km	8 years	Do items in A, B, and D.
———	———	9 years	Replace brake fluid (see page 19-9). Use Honda DOT 3 Brake Fluid.

BACK

Protected by AR

Do the items in parts A, B, C, D, E, F, G, H, and I as required for the mileage/time interval listed.

Part	Maintenance Items
A	Replace engine oil (see page 8-6) every 5,000 miles (8,000 km). Engine oil capacity without oil filter: 4.0 L (4.2 US qt).
B	Replace engine oil filter (see page 8-7) every 10,000 miles (16,000 km) or 1 year. Engine oil capacity with oil filter: 4.2 L (4.4 US qt).
	Check front and rear brakes (see page 19-3) every 10,000 miles (16,000 km) or 1 year. • Check pads and discs for wear (thickness), damage, and cracks. • Check calipers for damage, leaks, and tightness of mount bolts. • Check wheel cylinders for leaks. • Check brake linings for cracking, glazing, wear, or contamination.
	Lubricate all hinges, locks, and latches every 10,000 miles (16,000 km) or 1 year.
	Rotate tires, and check tire inflation and condition every 10,000 miles (16,000 km). Follow the pattern shown in the Owner's Manual.
	Inspect tie rod ends, steering gearbox, and gearbox boots (see page 17-3) every 10,000 miles (16,000 km) or 1 year. • Check rack grease and steering linkage. • Check boots for damage and leaking grease. • Check fluid lines for damage and leaks.
	Inspect suspension components (see page 18-3) every 10,000 miles (16,000 km) or 1 year. • Check bolts for tightness. • Check condition of ball joint boots for deterioration and damage.
	Inspect driveshaft boots (see page 16-4) every 10,000 miles (16,000 km) or 1 year. Check boots for cracks and boot bands for tightness.
C	Replace air cleaner element when driving in dusty conditions (see page 11-361) every 15,000 miles (24,000 km) (independent of time).
D	Check the parking brake adjustment (see page 19-8) every 20,000 miles (32,000 km) or 1 year. • Check the number of clicks when parking brake lever is pulled with 196 N (20 kgf, 44 lbf) of force. With rear discs: 6 to 9 clicks. With rear drums: 4 to 7 clicks.
	Inspect brake hoses and lines including ABS (see page 19-31) every 20,000 miles (32,000 km) or 1 year. Check the master cylinder and ABS modulator-control unit for damage and leakage.
	Inspect all fluid levels and condition of fluids, every 20,000 miles (32,000 km) or 1 year. • Manual transmission fluid (MTF) (see page 13-3). • Automatic transmission fluid (ATF-Z1) (see page 14-207). • Power steering fluid (see page 17-12). • Brake fluid (see page 19-9). • Clutch Fluid. • Windshield washer fluid • Engine coolant (see page 10-6).
	Inspect exhaust system 2003-2005 models (see page 9-15)*, 2006 model (see page 9-16)* every 20,000 miles (32,000 km) or 1 year. Check catalytic converter heat shield, exhaust pipe, and muffler for damage, leaks, and tightness.
	Inspect fuel lines and connections (see page 11-334)* every 20,000 miles (32,000 km) or 1 year. Check for loose connections, cracks, and deterioration; retighten loose connections and replace damaged parts.
	Check lights and controls, every 20,000 miles (32,000 km) or 1 year. Check function of interior and exterior lights (see page 22-222), and position of the headlights (see page 22-196).
	Inspect vehicle underbody, every 20,000 miles (32,000 km) or 1 year. Check the paint for damage, scratches, stone chipping, and dents.
E	Replace dust and pollen filter (see page 21-51) every 30,000 miles (48,000 km) or 2 years. • Replace the filter as often (at 15,000 miles/24,000 km intervals) if the vehicle is driven mostly in urban areas that have high concentrations of soot in the air from industry and diesel-powered vehicles. • Replace the filter whenever airflow from the heating and cooling/climate control system is less than normal.
	Inspect drive belts (see page 4-37) every 30,000 miles (48,000 km) or 2 years. Look for cracks and damage, then check the position of the drive belt auto-tensioner indicator (see page 4-38).

NOTE: According to state and federal regulations, failure to do the maintenance items marked with an asterisk (*) will not void the customer's emissions warranties. However, Honda recommends that all maintenance services be done at the recommended intervals to ensure long-term reliability.

(cont'd)

Protected by AR

Maintenance Schedule

Listed by Distance/Time for Severe Conditions (cont'd)

2003-2005 Models

Use the Severe Conditions schedule if the vehicle is driven MAINLY in Canada or in any of the following conditions; if only OCCASIONALLY driven in these conditions, use the Normal Conditions schedule.

Severe Driving Conditions
- Driving less than 5 miles (8 km) per trip or, in freezing temperatures, driving less than 10 miles (16 km) per trip.
- Driving in extremely hot over 90°F (32°C) conditions.
- Extensive idling, or long periods of stop-and-go driving, such as a taxi or a commercial delivery vehicle.
- Trailer towing, driving with a loaded roof rack, or driving in mountainous conditions.
- Driving on muddy, dusty, or de-iced roads.

Do the items in parts A, B, C, D, E, F, G, H, and I as required for the mileage/time interval listed.

Part	Maintenance Items
F	Replace manual transmission fluid (see page 13-3) every 60,000 miles (96,000 km) or 3 years. Capacity: 1.9 L (2.0 US qt); use Honda MTF.
G	Replace automatic transmission fluid (see page 14-208) at 60,000 miles (96,000 km) or 3 years, then replace every 30,000 miles (48,000 km) or 2 years. Capacity: 2.8 L (3.0 US qt); use Honda ATF-Z1.
H	Inspect the valve clearance (see page 6-9) every 110,000 miles (176,000 km), otherwise adjust only if noisy. Intake: 0.21—0.25 mm (0.008—0.010 in.), Exhaust: 0.28—0.32 mm (0.011—0.013 in.).
	Replace spark plugs (see page 4-27) every 110,000 miles (176,000 km). • Use IZFR6K-11 (NGK) or SKJ20DR-M11 (DENSO). • Use IZFR6K-13 (NGK) or SKJ20DR-M13 (DENSO) for SULEV model (4-door model only).
I	Replace engine coolant (see page 10-6) at 120,000 miles (192,000 km) or 10 years, then every 60,000 miles (96,000 km) or 5 years. Capacity: M/T 5.1 L (1.35 US gal), A/T 5.0 L (1.32 US gal); use Honda Long Life Antifreeze/coolant Type 2.

BACK

Protected by AR

Maintenance Minder

Maintenance Display

2006 Model

The Maintenance Minder is an important feature of the information display. Based on engine operating conditions and accumulated engine revolutions, the Accord's onboard computer (ECM/PCM) calculates the remaining engine oil life. The system also displays the code for other scheduled maintenance items needing service.

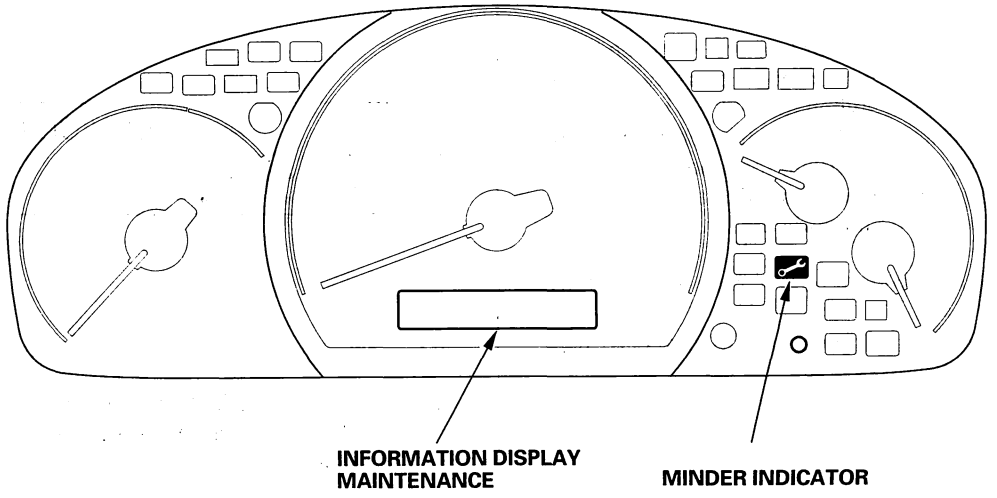

Protected by AR

Engine Oil Life Indicator

2006 Model

1. To see the current engine oil life, turn the ignition switch to ON (II), and push and release the trip meter select/reset knob instrument panel repeatedly until the engine oil life indicator is displayed.

2. If the oil life is 15 percent or less, you will see the oil life indicator (A) for several seconds every time you turn the ignition switch to ON (II). The maintenance minder indicator also comes on, and the maintenance item code(s) for other maintenance items needing service are displayed next to the engine oil life indicator.

   - Complete list of maintenance main items "A" (B) (see page 3-12).
   - Complete list of maintenance sub items "B" (C) (see page 3-13).

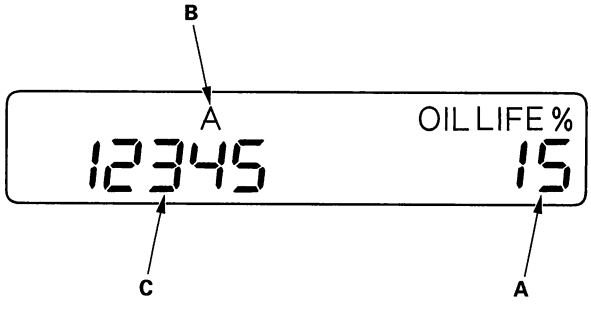

3. When the remaining engine oil life is less then 5 percent, you will see "SERVICE OIL LIFE" message in the smart maintenance display along with the same maintenance item code(s) every time you turn the ignition switch to ON (II).

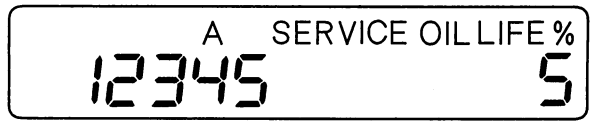

4. When the oil life is 0 percent, the remaining oil life indicator blinks when the ignition switch is in the ON (II) position.

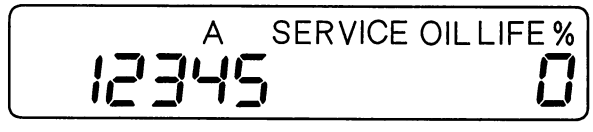

BACK

Protected by AR

5. If you still do not perform the indicated maintenance, you will see a negative mileage, for example "—10," blinking in the display. This negative mileage means that you should have performed the indicated maintenance 10 miles ago.

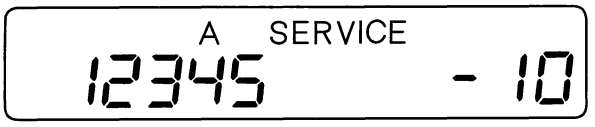

Resetting the Engine Oil Life Indicator

2006 Model

1. Turn the ignition switch ON (II).
2. Press the trip meter select/reset knob on the instrument panel repeatedly until the engine oil life indicator is displayed.
3. Press and hold the trip meter select/reset knob for about 10 seconds until the engine oil life and maintenance item code(s) blink, then release the knob.

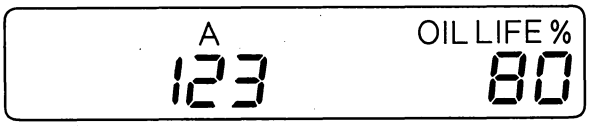

4. Press and hold the trip meter select/reset knob again for about 5 seconds. The maintenance item code(s) disappear and the engine oil life resets to "100," then release the knob.

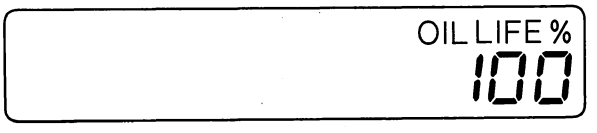

Protected by AR

Maintenance Minder

Maintenance Main Items

2006 Model

If you do not see the maintenance minder indicator or the maintenance schedule display more than 12 months after the display is reset, change the engine oil every year.

NOTE:
- Independent of the maintenance messages in the smart maintenance display, replace the brake fluid every 3 years.
- Inspect idle speed every 160,000 miles (256,000 km).
- Adjust the valves during services A, B, 1, 2 or 3 if they are noisy.

Symbol	Maintenance Main Items
A	Replace engine oil (see page 8-6). Engine oil capacity without oil filter: 4.0 L (4.2 US qt).
B	Replace engine oil and oil filter (see page 8-6). Engine oil capacity with oil filter: 4.2 L (4.4 US qt).
	Check front and rear brakes (see page 19-3). • Check pads and discs for wear (thickness), damage, and cracks. • Check calipers for damage, leaks, and tightness of mounting bolts. • Check wheel cylinders for leaks. • Check brake linings for cracking, glazing, wear, or contamination.
	Check parking brake adjustment (see page 19-8). Check the number of clicks when the parking brake lever is pulled with 196 N (20 kgf, 44 lbf) of force. With rear discs: 6 to 9 clicks With rear drums: 4 to 7 clicks
	Inspect tie-rod ends, steering gearbox, and gearbox boots (see page 17-3). • Check rack grease and steering linkage. • Check boots for damage and leaking grease. • Check fluid lines for damage or leaks.
	Inspect suspension components (see page 18-3). • Check bolts for tightness. • Check condition of ball joint boots for deterioration and damage.
	Inspect driveshaft boots (see page 16-4). Check boots for cracks and boot bands for tightness.
	Inspect brake hoses and lines including ABS (see page 19-31). Check the master cylinder and ABS modulator for damage and leakage.
	Inspect all fluid levels and condition of fluids. • Manual transmission fluid (MTF) (see page 13-3). • Automatic transmission fluid (ATF-Z1) (see page 14-207). • Power steering fluid (see page 17-12). • Brake fluid (see page 19-9). • Clutch fluid. • Windshield washer fluid. • Engine coolant (see page 10-6).
	Inspect exhaust system 2003-2005 models (see page 9-15)*, 2006 model (see page 9-16)*. Check catalytic converter heat shields, exhaust pipes, and muffler for damage, leaks, and tightness.
	Inspect fuel lines and connections (see page 11-334)*. Check for loose connections, cracks, and deterioration; retighten loose connections and replace damaged parts.

NOTE: According to state and federal regulations, failure to do the maintenance items marked with an asterisk (*) will not void the customer's emissions warranties. However, Honda recommends that all maintenance services be done at the recommended interval, to ensure long-term reliability.

BACK

Protected by AR

Maintenance Sub Items

2006 Model

Number	Maintenance Sub Items
1	Rotate tires, and check tire inflation and condition. Follow the pattern shown in the Owner's Manual.
2	Replace air cleaner element (see page 11-361). If you drive primarily in dusty conditions, replace every 15,000 miles (24,000 km).
	Replace dust and pollen filter (see page 21-51). • Replace the filter at 15,000 miles (24,000 km) intervals if the vehicle is driven mostly in urban areas that have high concentrations of soot in the air from industry and diesel-powered vehicles. • Replace the filter whenever airflow from the heating and cooling/climate control system is less than normal.
	Inspect drive belt (see page 4-37). Look for cracks and damage, and inspect auto tensioner; no adjustment is needed.
3	Replace transmission fluid (see page 13-3). • Driving in mountainous areas at very low vehicle speed or trailer towing results in higher transmission temperatures. This requires transmission fluid changes more frequently than recommended by the Maintenance Minder. If the vehicle is regularly driven in these conditions, have the transmission fluid, changed at 60,000 miles (96,000 km) or 3 years, then every 30,000 miles (48,000 km) or 2 years. • Capacity: M/T: 1.9 L (2.0 US qt), use Honda MTF. A/T: 3.1 L (3.3 US qt), use Honda ATF-Z1.
4	Replace spark plugs (see page 4-27). • Use IZFR6K-11 (NGK) or SKJ20DR-M11 (DENSO). • Use IZFR6K-13 (NGK) or SKJ20DR-M13 (DENSO) for SULEV model (4-door model only).
	Inspect the valve clearance (cold) (see page 6-9). • Otherwise, adjust only if noisy. • Intake: 0.21—0.25 mm (0.008—0.010 in.), Exhaust: 0.28—0.32 mm (0.011—0.013 in.).
5	Replace engine coolant (see page 10-6). Capacity (including the reserve tank): M/T 5.1 L (1.35 US gal), A/T 5.0 L (1.32 US gal); use Honda Long Life Antifreeze/Coolant Type 2.

Protected by AR

SUPPLEMENTAL RESTRAINT SYSTEM (SRS) (If engine electrical maintenance is required)

The Accord SRS includes a driver's airbag in the steering wheel hub, a passenger's airbag in the dashboard above the glove box, seat belt tensioners in the front seat belt retractors, side curtain airbags in the sides of the roof, and side airbags in the front seat-backs. Information necessary to safely service the SRS is included in this Service Manual. Items marked with an asterisk (*) on the contents page include or are located near SRS components. Servicing, disassembling, or replacing these items require special precautions and tools, and should be done only by an authorized Honda dealer.

- To avoid rendering the SRS inoperative, which could lead to personal injury or death in the event of a severe frontal or side collision, all SRS service work must be performed by an authorized Honda dealer.
- Improper service procedures, including incorrect removal and installation of the SRS, could lead to personal injury caused by unintentional deployment of the airbags and/or side airbags.
- Do not bump or impact the SRS unit, front impact sensors, or side impact sensors when the ignition switch is ON (II), or for at least 3 minutes after the ignition switch is turned OFF; otherwise, the system may fail in a collision, or the airbags may deploy.
- SRS electrical connectors are identified by yellow color coding. Related components are located in the steering column, front console, dashboard, dashboard lower panel, in the dashboard above the glove box, in the front seats, in the roof side, and around the floor. Do not use electrical test equipment on these circuits.

BACK

Protected by AR

Engine Electrical

Engine Electrical
Special Tools 4-2

Starting System
Component Location Index 4-3
Symptom Troubleshooting Index 4-4
Circuit Diagram 4-5
Starter Circuit Troubleshooting 4-6
Clutch Interlock Switch Test ... 4-8
Starter Solenoid Test 4-8
Starter Performance Test 4-9
Starter Removal and Installation 4-11
Starter Overhaul 4-12

Ignition System
Component Location Index 4-22
Circuit Diagram 4-23
Ignition Timing Inspection 4-24
Ignition Coil Removal/ Installation 4-25
Ignition Coil Relay Circuit Troubleshooting 4-25
Spark Plug Inspection 4-27

Charging System
Component Location Index 4-28
Symptom Troubleshooting Index 4-29
Circuit Diagram 4-30
Charging System Indicator Circuit Troubleshooting 4-31
Alternator and Regulator Circuit Troubleshooting 4-34
Alternator Control Circuit Troubleshooting 4-35
Drive Belt Inspection 4-37
Drive Belt Replacement 4-37
Drive Belt Auto-tensioner Inspection 4-38
Drive Belt Auto-tensioner Replacement 4-39
Tensioner Pulley Replacement 4-39
Alternator Removal and Installation 4-40
Alternator Overhaul 4-41

Cruise Control
Component Location Index 4-46
Symptom Troubleshooting Index 4-48
Circuit Diagram 4-52
Cruise Control Communication Circuit Troubleshooting (A/T) 4-54
* Cruise Control Unit Input Test 4-55
* Cruise Control Combination Switch Test/Replacement 4-60
Cruise Control Actuator Test 4-61
Cruise Control Actuator/ Cable Replacement 4-62
Cruise Control Actuator Cable Adjustment 4-63
Clutch Pedal Position Switch Test 4-63

Engine Mount Control System
Component Location Index 4-64
Circuit Diagram 4-65
Troubleshooting 4-66

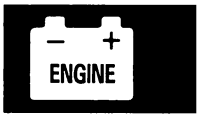

Protected by AR

Special Tools

Ref. No.	Tool Number	Description	Qty
①	07746-0010300	Attachment, 42 x 47 mm	1
②	07749-0010000	Driver	1

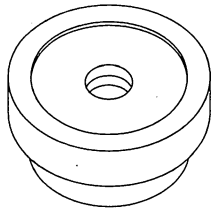

①

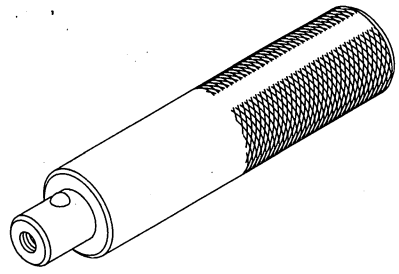

②

BACK

Protected by AR

Starting System

Component Location Index

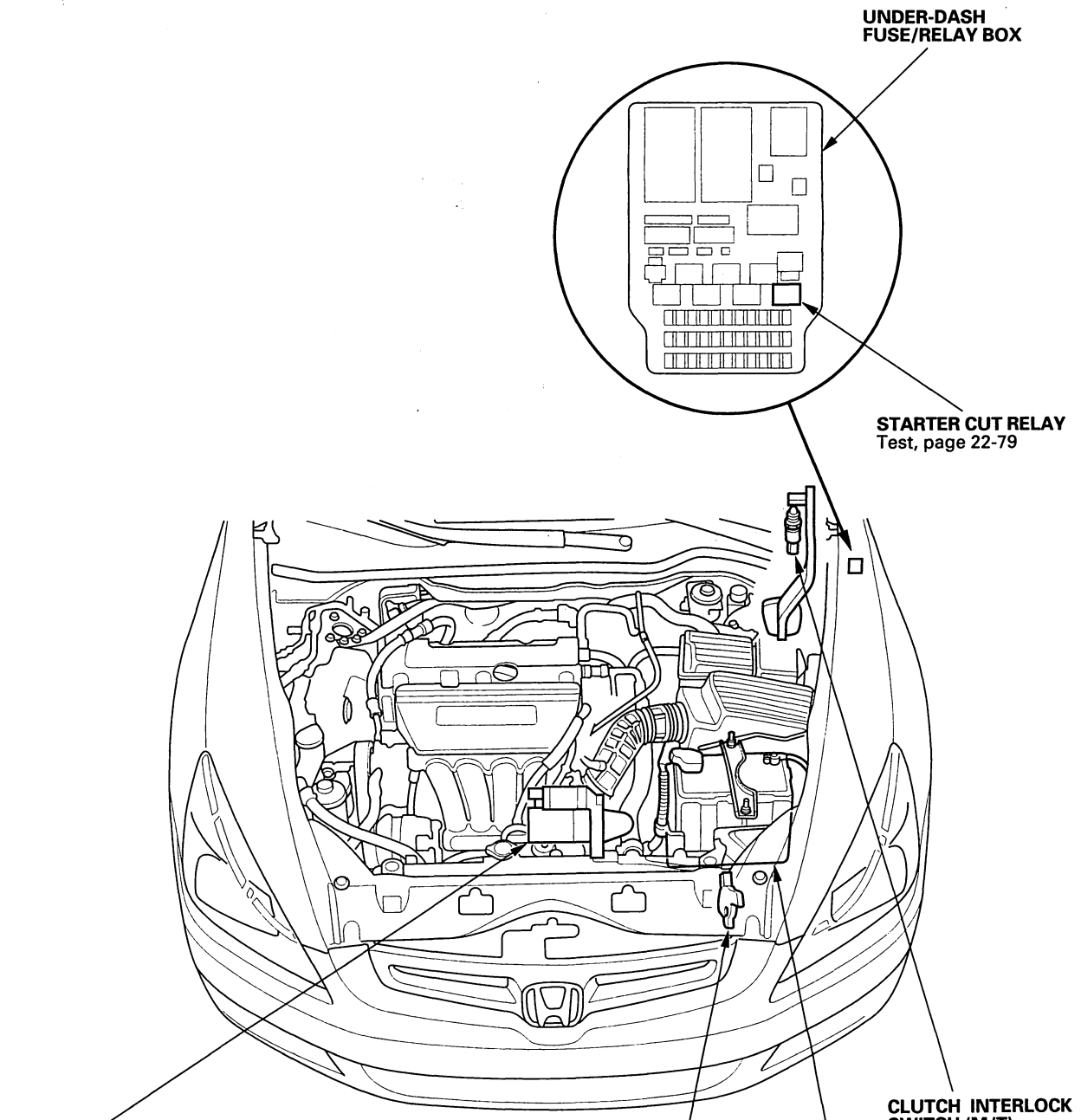

Protected by AR

Symptom Troubleshooting Index

Symptom	Diagnostic procedure	Also check for
Engine does not start (does not crank)	1. Check for loose battery terminals or connections. 2. Test the battery for a low charge (see page 22-78). 3. Check the starter (see page 4-6). 4. Check the starter cut relay (see page 22-79). 5. Check the transmission range switch (A/T) (see page 14-247). 6. Check the clutch interlock switch (M/T) (see page 4-8). 7. Check the ignition switch or wire (see page 22-81).	Poor ground at G101 (A/T) or G501 (M/T)
Engine cranks, but does not start	1. Check for PGM-FI DTCs. 2. Check the fuel pressure (see page 11-332). 3. Check for a plugged or damaged fuel line (see page 11-334). 4. Check for a plugged fuel filter (see page 11-344). 5. Check the throttle body (see page 11-356). 6. Check for low engine compression (see page 6-6). 7. Check for a damaged or broken cam chain.	
Engine is hard to start	1. Check for PGM-FI DTCs. 2. Check the fuel pressure (see page 11-332). 3. Check for a plugged or damaged fuel line (see page 11-334). 4. Check for a plugged fuel filter (see page 11-344).	
Engine cranks slowly	1. Check for loose battery terminals or connections. 2. Test the battery for a low charge (see page 22-78). 3. Check the starter for binding (see page 4-6). 4. Check for excessive drag in the engine.	

BACK

Protected by AR

Circuit Diagram

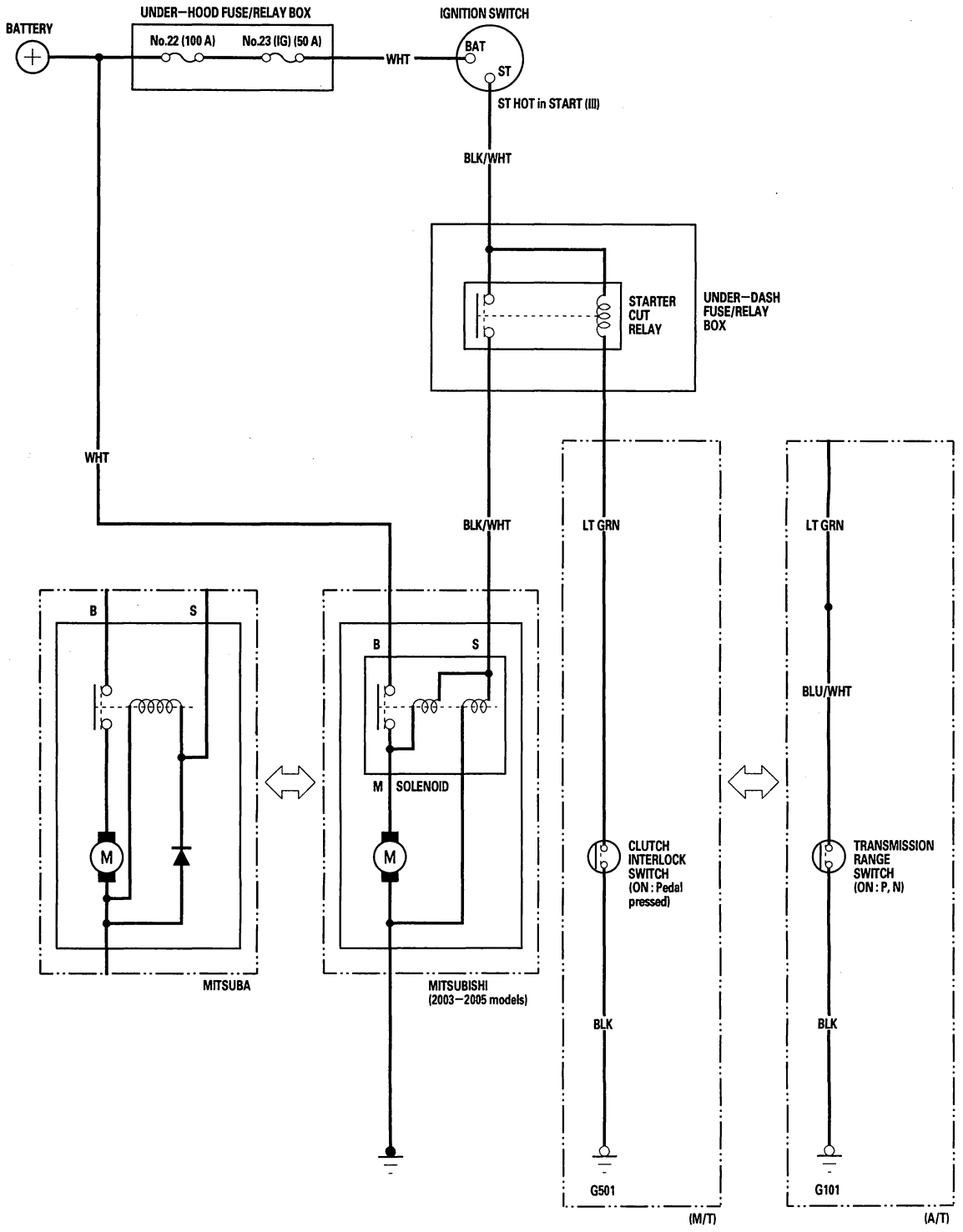

Protected by AR

Starter Circuit Troubleshooting

NOTE:
- Air temperature must be between 59 and 100°F (15 and 38°C) during this procedure.
- After this inspection, you must select engine control module (ECM)/powertrain control module (PCM) reset using the Honda Diagnostic System (HDS) (see page 11-4), otherwise the ECM/PCM continues to stop the fuel injectors.
- The battery must be in good condition and fully charged.

Recommended Procedure:
- Use a starter system tester.
- Connect and operate the equipment in accordance with the manufacturer's instructions.

Alternate Procedure

1. Hook up the following equipment:
   - Ammeter, 0—400 A
   - Voltmeter, 0—20 V (accurate within 0.1 V)

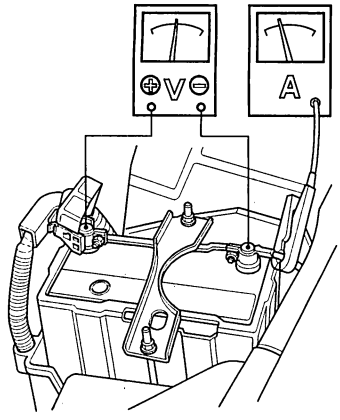

2. Connect the HDS to the data link connector (DLC) (see page 11-3).

3. Turn the ignition switch ON (II), then select PGM-FI, INSPECTION, then ALL INJECTORS OFF on the HDS.

4. With the shift lever in N or P (A/T) or the clutch pedal pressed (M/T), turn the ignition switch to START (III).

   Did the starter crank the engine normally?

   YES—The starting system is OK. Go to step 10.

   NO—Go to step 5.

5. Check the battery condition. Check electrical connections at the battery, the negative battery cable to body, the engine ground cables, and the starter for looseness and corrosion. Then try cranking the engine again.

   Did the starter crank the engine?

   YES—Repairing the loose connection corrected the problem. The starting system is OK. Go to step 10.

   NO—Check the following:

   - If the starter will not crank the engine at all, go to step 6.
   - If it cranks the engine erratically or too slowly, go to step 7.
   - If it does not disengage from the flywheel or torque converter ring gear when you release the key, check the following:
     - Solenoid plunger and switch malfunction
     - Dirty drive gear or damaged overrunning clutch

BACK

Protected by AR

6. Make sure the transmission is in Neutral, then disconnect the BLK/WHT wire from the starter solenoid S terminal. Connect a jumper wire from the battery positive terminal to the solenoid terminal.

M/T (2003-2005 Models)

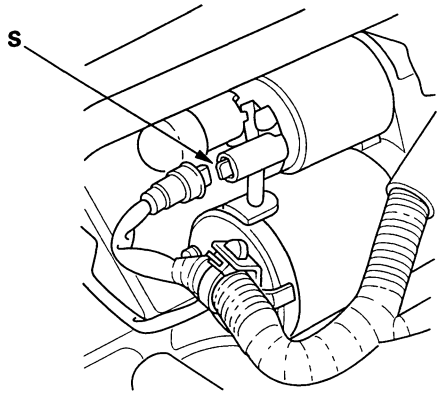

A/T, M/T (2006 Model)

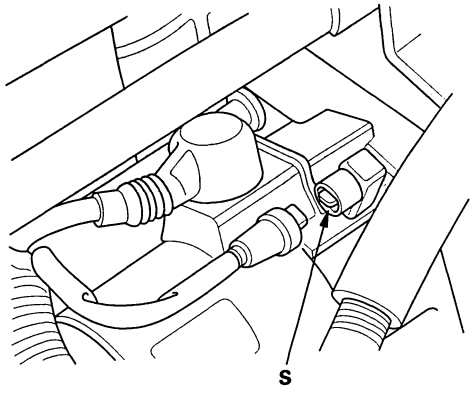

Did the starter crank the engine?

YES—Check the following items in the order listed until you find the open circuit:■

- The BLK/WHT wire and connectors between the under-dash fuse/relay box and the ignition switch, and between the under-dash fuse/relay box and the starter.
- The ignition switch (see page 22-81).
- The transmission range switch and connector (A/T) or the clutch interlock switch and connector (M/T).
- The starter cut relay (see page 22-79).

NO—Remove the starter, and repair or replace as necessary.■

7. While cranking the engine, check the cranking voltage and current draw.

Is cranking voltage greater than or equal to 7.7 V (M/T 2003-2005 Models)/8.5 V (A/T, M/T 2006 Model) and current draw less than or equal to 400A (M/T 2003-2005 Models)/380A (A/T, M/T 2006 Model)?

YES—Go to step 9.

NO—Replace the starter, or remove and disassemble it, and check for the following until you find the cause:■

- Drag in the starter armature
- Shorted armature winding
- Excessive drag in the engine

8. Check the engine speed while cranking the engine.

Is the engine speed above 100 rpm?

YES—Go to step 9.

NO—Replace the starter, or remove and disassemble it, and check for the following:■

- Open circuit in starter armature commutator segments
- Excessively worn starter brushes
- Open circuit in commutator brushes
- Dirty or damaged helical splines or drive gear
- Faulty drive gear clutch

9. Remove the starter, and inspect its drive gear and the flywheel or torque converter ring gear for damage. Replace any damaged parts.

10. Select ECM/PCM reset (see page 11-4) to cancel the ALL INJECTORS OFF function on the HDS.

Protected by AR

Clutch Interlock Switch Test

1. Disconnect the clutch interlock switch 2P connector (A).

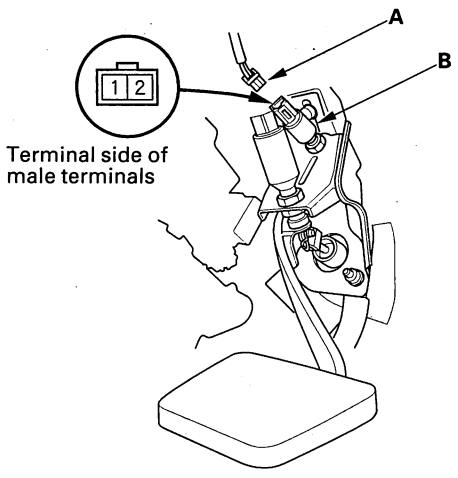

2. Remove the clutch interlock switch (B).

3. Check for continuity between the terminals according to the table.

   - If the continuity is not as specified, replace the clutch interlock switch.
   - If OK, install the clutch interlock switch and adjust the pedal height (see page 12-4).

Terminal / Clutch Interlock Switch	1	2
PRESSED	○	○
RELEASED		

Starter Solenoid Test

M/T (2003-2005 Models)

1. Check the hold-in coil for continuity between the S terminal and the armature housing (ground). There should be continuity.

   - If there is continuity, go to step 2.
   - If there is no continuity, replace the solenoid.

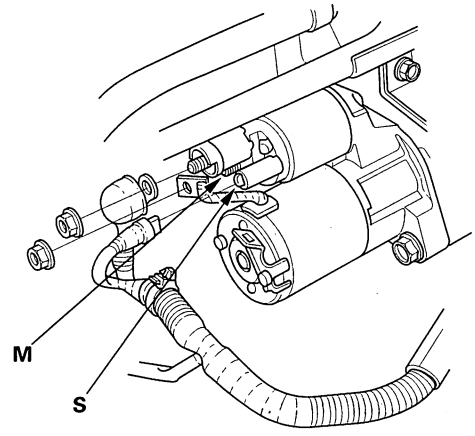

2. Check the pull-in coil for continuity between the S terminal and the M terminal. There should be continuity.

   - If there is continuity, the solenoid is OK.
   - If there is no continuity, replace the solenoid.

BACK

Protected by AR

Starter Performance Test

M/T (2003-2005 Models)

1. Disconnect the wires from the M terminal.
2. Make the connections as shown using as heavy a wire as possible (preferably equivalent to the wire used for the vehicle). To avoid damaging the starter, never leave the battery connected for more than 10 seconds.
3. Connect the battery as shown. Be sure to disconnect the starter motor wire from the solenoid. If the starter pinion moves out, it is working properly.

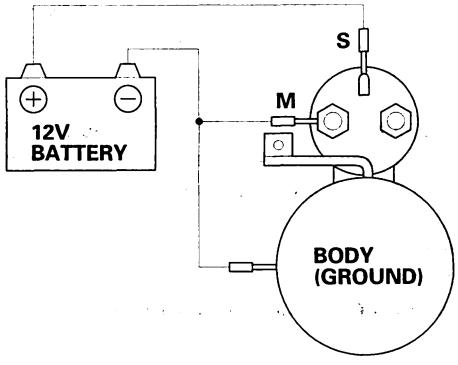

4. Disconnect the negative battery terminal from the M terminal. If the pinion does not retract, the hold-in coil of the solenoid is working properly.

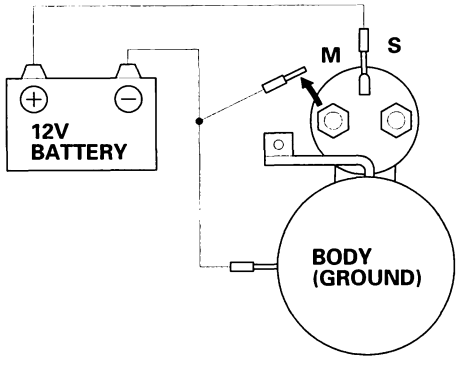

5. Disconnect the battery from the starter body. If the pinion retracts immediately, it is working properly.

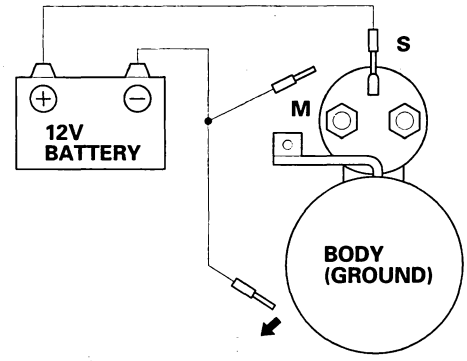

6. Firmly clamp the starter in a vise.
7. Reconnect the wire to the M terminal.
8. Connect the starter to the battery as shown, and check that the motor turns and keeps rotating.

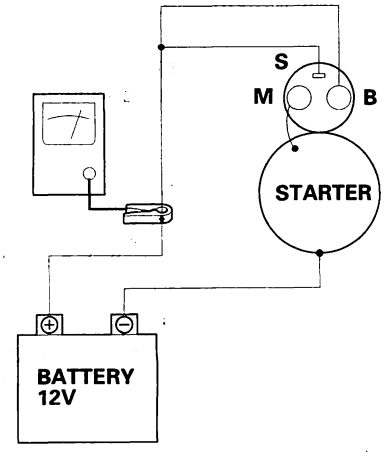

9. If the electric current and motor speed meet the specifications when the battery voltage is at 11 V, the starter is working properly.

Specifications
Electric current: 90 A or less
Motor speed: 2,000 rpm or more

Protected by AR

Starter Performance Test (cont'd)

A/T, M/T (2006 Model)

1. Connect the battery to the starter as shown using as heavy a wire as possible (preferably equivalent to the wire used for the vehicle). To avoid damaging the starter, never leave the battery connected for more than 10 seconds.

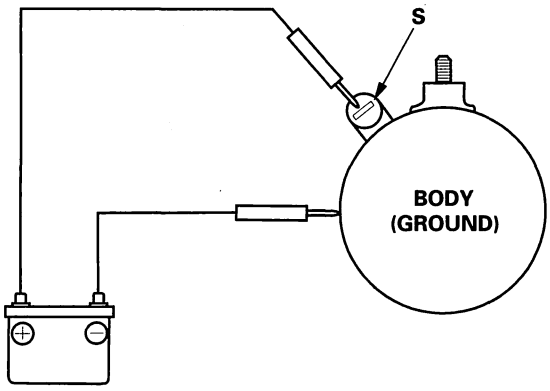

2. Connect the battery as shown. If the starter pinion moves out, it is working properly.

3. Disconnect the negative battery terminal from the body as shown. If the pinion retracts immediately, it is working properly.

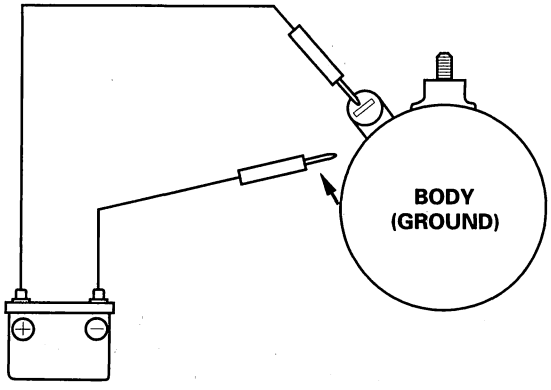

4. Firmly clamp the starter in a vise.

5. Connect the starter to the battery as shown, and check that the motor turns and keeps rotating.

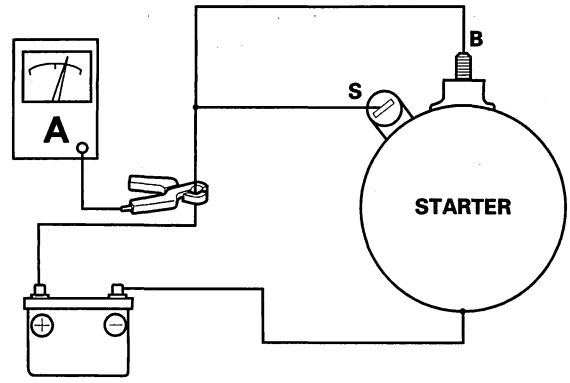

6. If the electric current and motor speed meet the specifications when the battery voltage is at 11.5 V, the starter is working properly.

Specifications
Electric current: 80 A or less
Motor speed: 2,300 rpm or more

BACK

Protected by AR

Starter Removal and Installation

Removal

1. Make sure you have the anti-theft codes for the radio, and the navigation system, then write down the customer's radio station and XM radio channel presets.
2. Disconnect the negative cable from the battery first, then disconnect the positive cable.
3. Remove the intake manifold (see page 9-4).
4. Disconnect the starter cable (A) from the B terminal, then disconnect the BLK/WHT wire (B) from the S terminal.

M/T (2003-2005 Models)

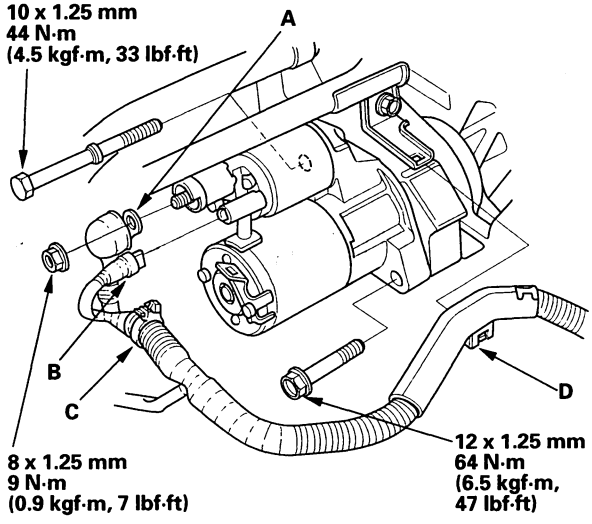

A/T, M/T (2006 Model)

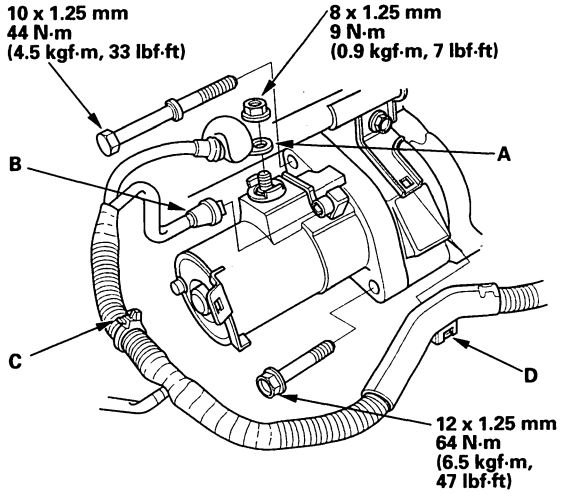

5. Remove the harness clamp (C).
6. Remove the harness holder (D).
7. Remove the two bolts holding the starter, then remove the starter.

Installation

1. Install in the reverse order of removal. Make sure the crimped side of the ring terminal (A) is facing out.

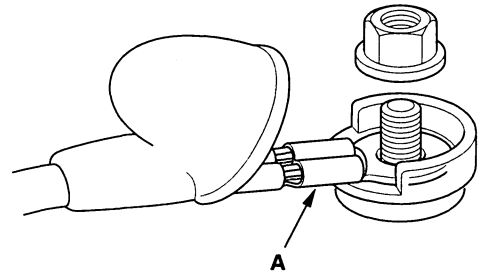

2. Connect the battery positive cable to the battery first, then connect the negative cable.
3. Start the engine to make sure the starter works properly.
4. Enter the anti-theft codes for the radio and the navigation system, then enter the customer's radio station and XM radio channel presets.
5. Do the power window control unit reset procedure (see page 22-232).
6. Set the clock.

Protected by AR

Starter Overhaul

MITSUBISHI M/T (2003-2005 Models)

Disassembly/Reassembly

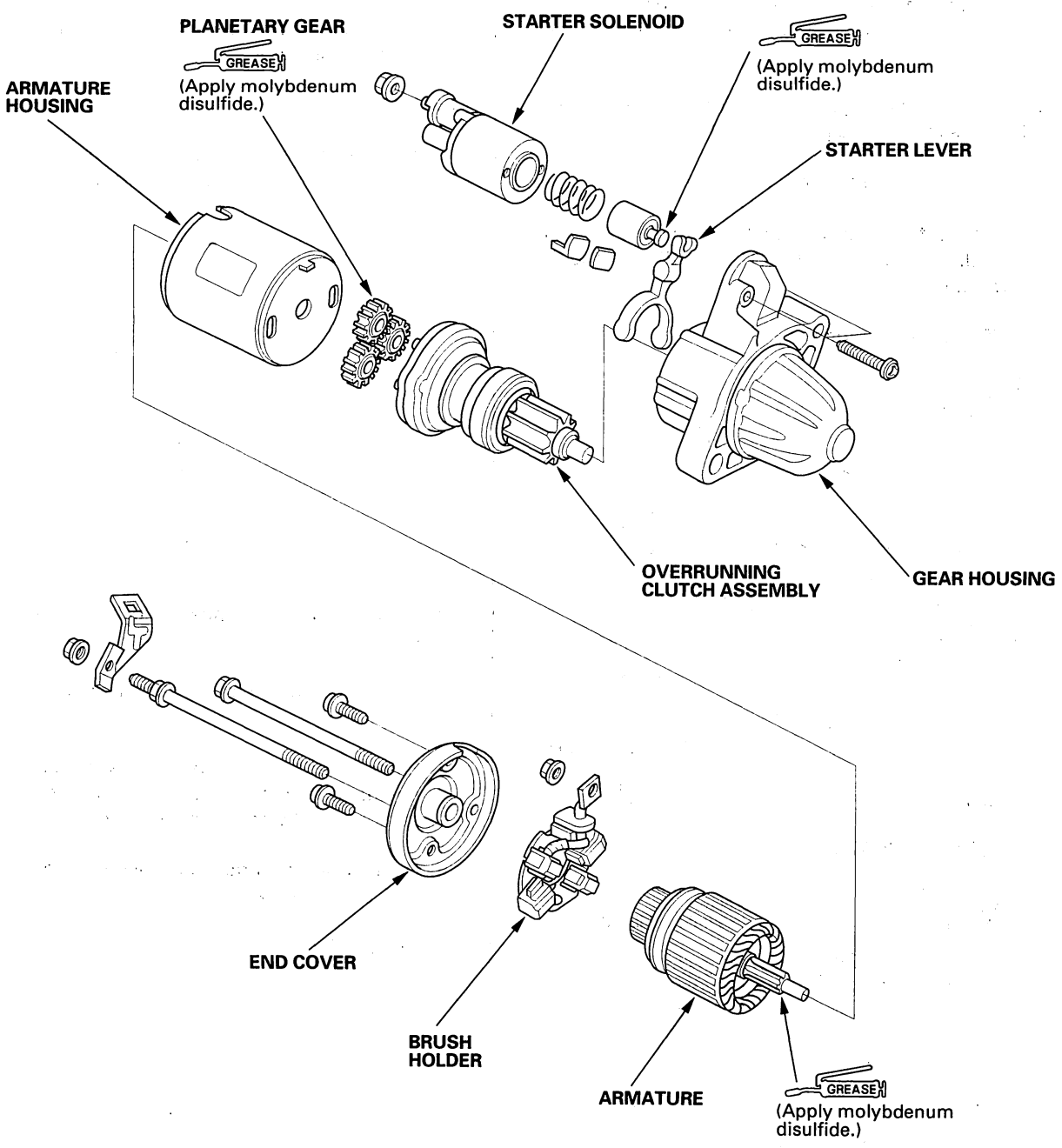

BACK

Protected by AR

Brush Holder Removal

1. Remove the starter (see page 4-11).
2. Disconnect the wire from the M terminal, and remove the end cover.
3. Place a 29.4 mm (1.16 in.) outside diameter plastic pipe on the armature.

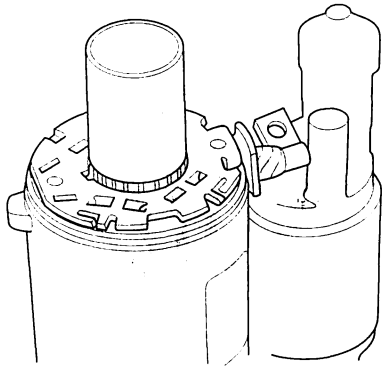

4. Move the brush holder (A) up to the pipe (B) while holding the pipe so the brushes do not pop out from the holder.

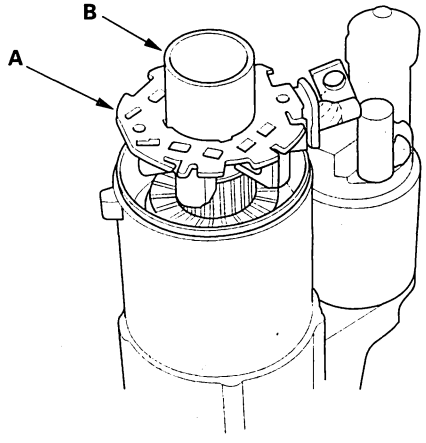

Armature Inspection and Test

5. Disassemble the starter as shown at the beginning of this procedure.
6. Inspect the armature for wear or damage from contact with the permanent magnet. If there is wear or damage, replace the armature.

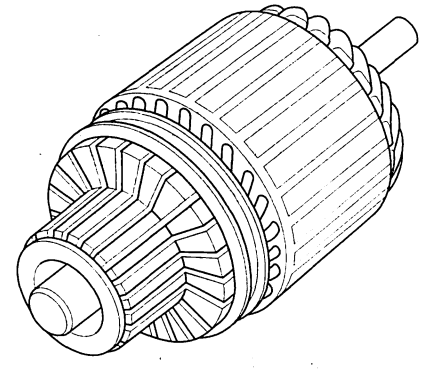

7. Check the commutator (A) surface. If the surface is dirty or burnt, resurface with emery cloth or a lathe within the following specifications, or recondition with #500 or #600 sandpaper (B).

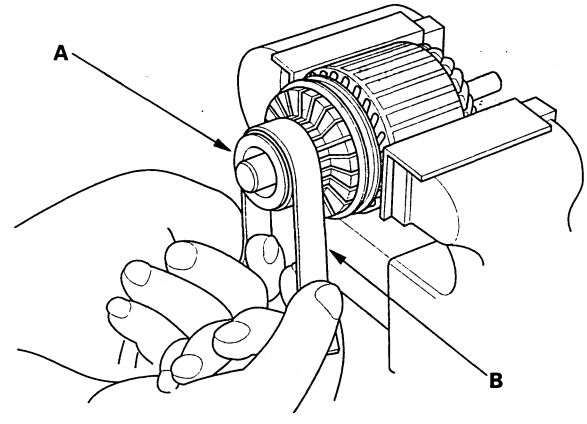

(cont'd)

Protected by AR

Starter Overhaul (cont'd)

8. Check the commutator diameter. If the diameter is below the service limit, replace the armature.

Commutator Diameter
Standard (New): 29.3—29.5 mm (1.154—1.161 in.)
Service Limit: 28.8 mm (1.134 in.)

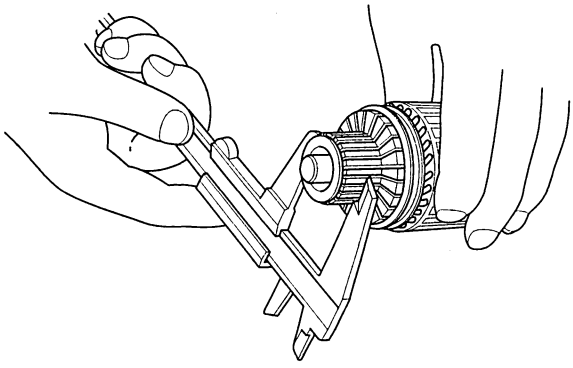

9. Measure the commutator (A) runout.

- If the commutator runout is within the service limit, check the commutator for carbon dust or brass chips between the segments.
- If the commutator runout is not within the service limit, replace the armature.

Commutator Runout
Standard (New): 0.05 mm (0.002 in.) max.
Service Limit: 0.1 mm (0.004 in.)

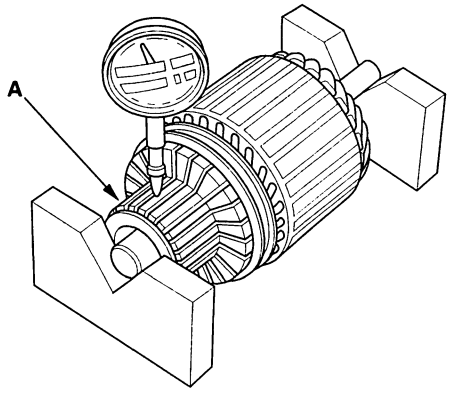

10. Check the mica depth (A). If the mica is too high (B), undercut the mica with a hacksaw blade to the proper depth. Cut away all the mica (C) between the commutator segments. The undercut should not be too shallow, too narrow, or V-shaped (D).

Commutator Mica Depth
Standard (New): 0.40—0.60 mm (0.016—0.024 in.)
Service Limit: 0.20 mm (0.008 in.)

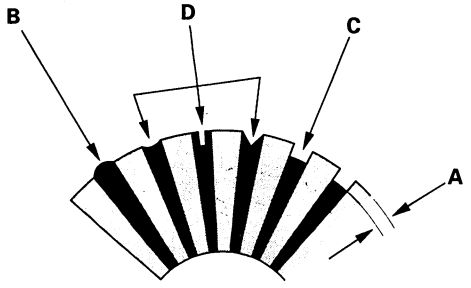

11. Check for continuity between the segments of the commutator. If there is an open circuit between any segments, replace the armature.

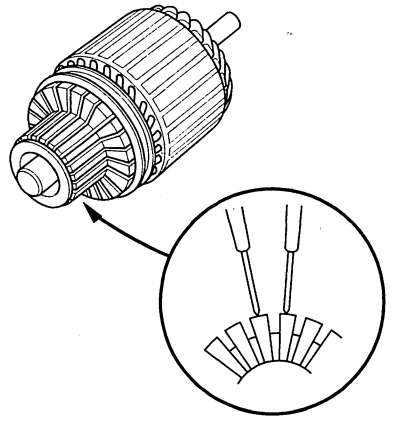

BACK

Protected by AR

12. Place the armature (A) on an armature tester (B). Hold a hacksaw blade (C) on the armature core. If the blade is attached to the core or vibrates while the core is turned, the armature is shorted. Replace the armature.

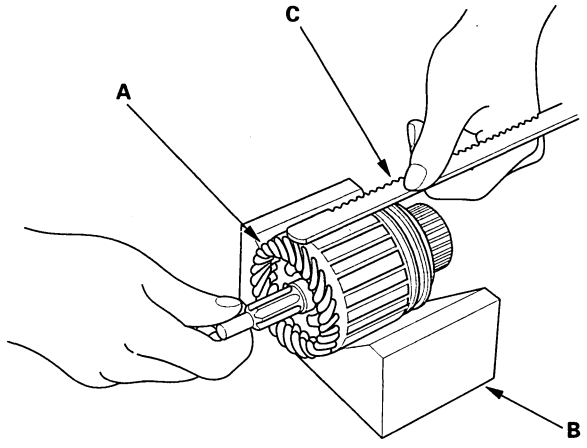

13. Check with an ohmmeter for continuity between the commutator (A) and armature coil core (B), and between the commutator and armature shaft (C). If there is continuity, replace the armature.

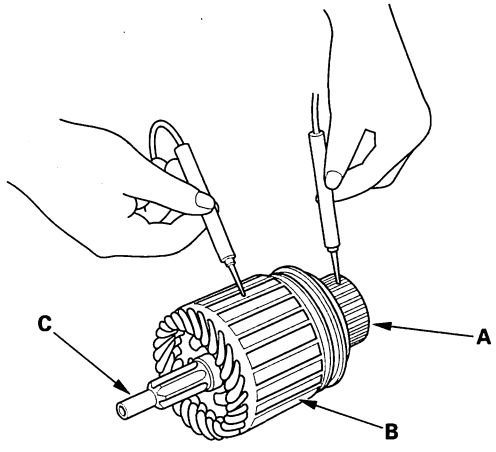

Starter Brush Inspection

14. Measure the brush length (A). If it is shorter than the service limit, replace the brush holder assembly.

Brush Length
Standard (New): 7.7—8.0 mm (0.30—0.31 in.)
Service Limit: 0.9 mm (0.04 in.)

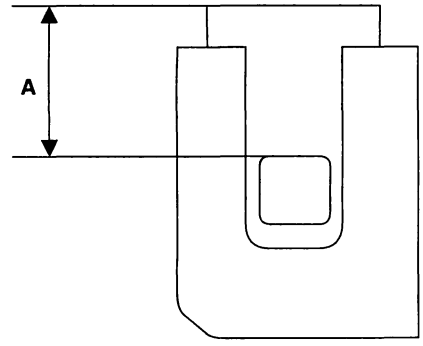

Starter Brush Holder Test

15. Check for continuity between the (+) brush (A) and (—) brush (B). If there is continuity, replace the brush holder assembly.

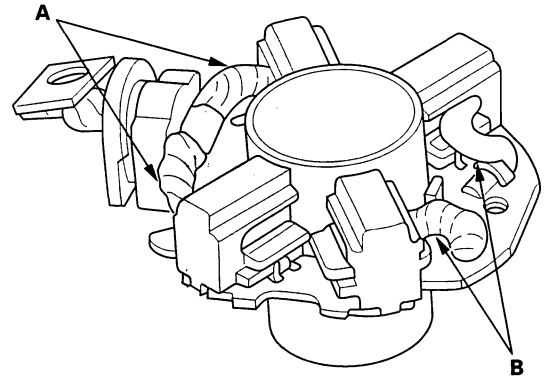

(cont'd)

Protected by AR

Starter Overhaul (cont'd)

Planetary Gear Inspection

16. Check the planetary gears (A) and ring gear (B). Replace them if they are worn or damaged.

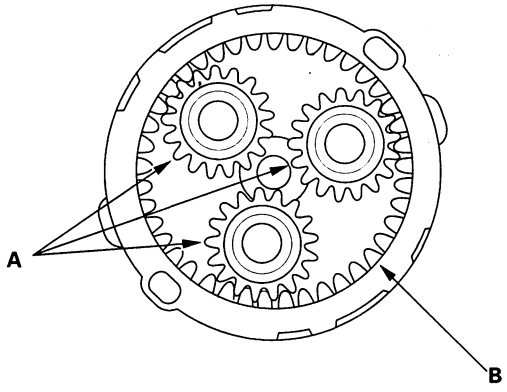

Overrunning Clutch Inspection

17. Slide the overrunning clutch along the shaft. Replace it, if it does not slide smoothly.

18. Hold the drive gear (A), and turn the overruning clutch in the direction shown to be sure it turns freely. Also make sure the overrunig clutch locks in the opposite direction. If it does not lock in either direction or it locks in both directions, replace it.

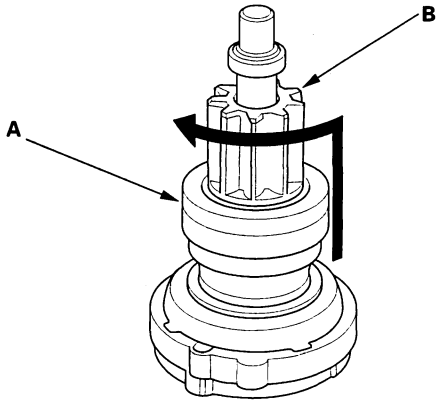

19. If the starter drive gear (B) is worn or damaged, replace the overrunning clutch assembly; the gear is not available separately. Check the condition of the flywheel ring gear to see, if the starter drive gear teeth are damaged.

Starter Reassembly

20. Install the armature into the housing.

21. Place the brush holder assembly on the armature, then move the brush holder (A) down to the armature.

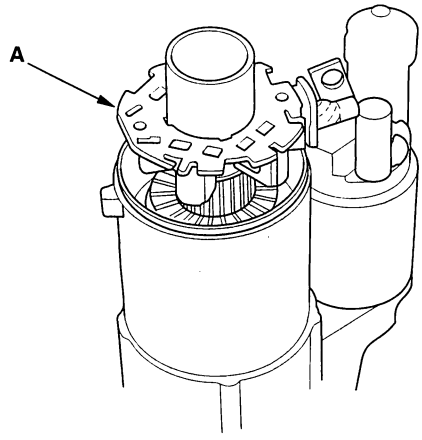

22. Install the end cover to retain the brush holder.

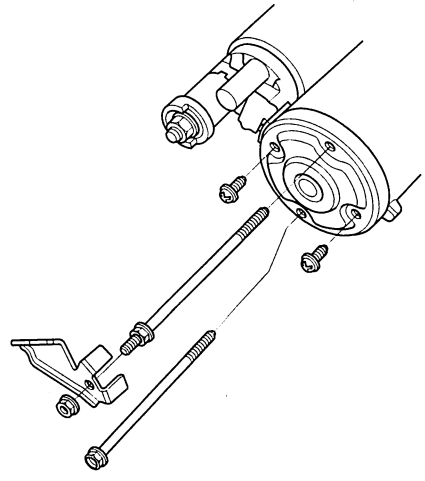

BACK

Protected by AR

MITSUBA A/T, M/T (2006 Model)

Disassembly/Reassembly

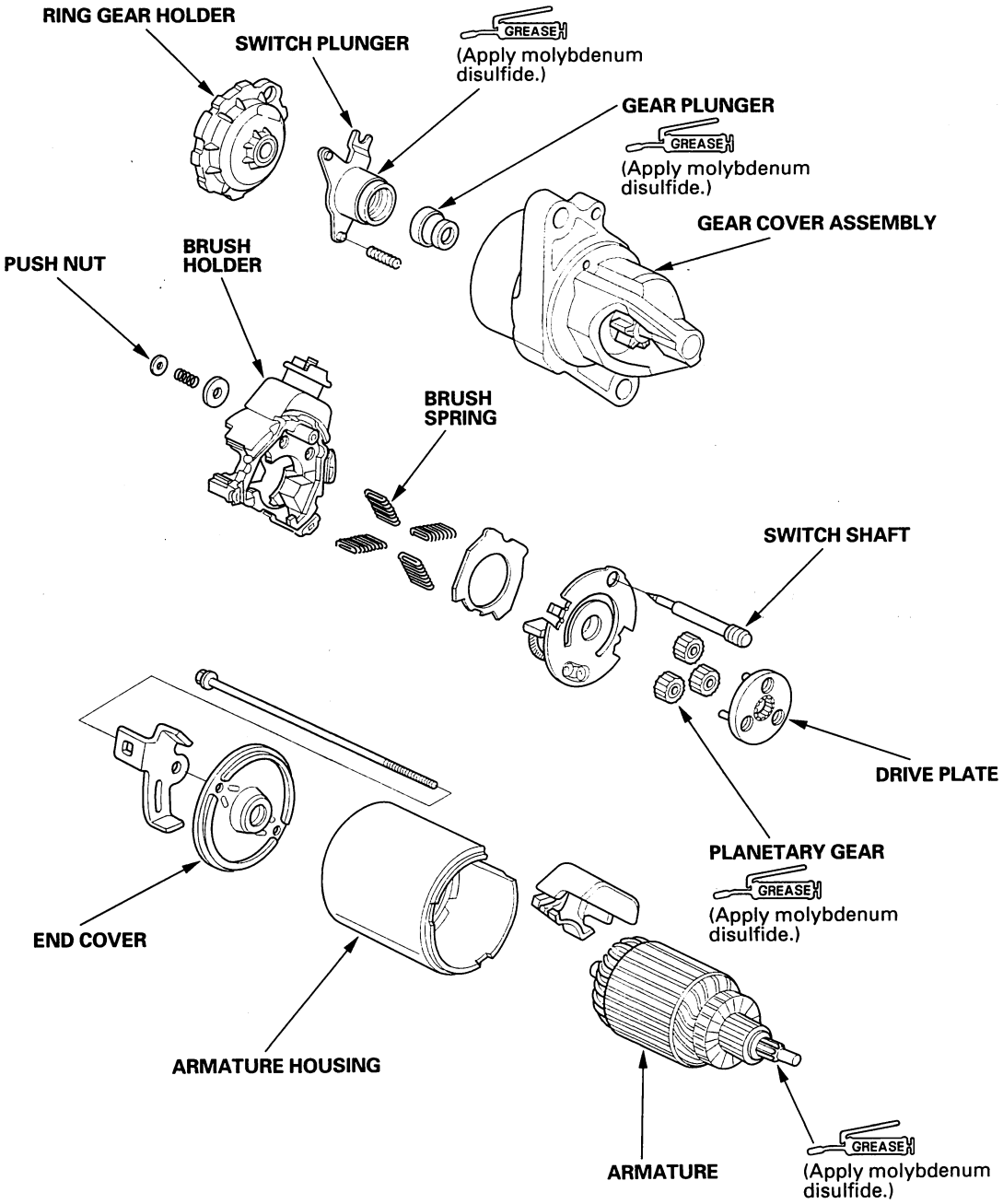

(cont'd)

Protected by AR

Starter Overhaul (cont'd)

Armature Inspection and Test

1. Remove the starter (see page 4-11).
2. Disassemble the starter as shown at the beginning of this procedure.
3. Inspect the armature for wear or damage from contact with the permanent magnet. If there is wear or damage, replace the armature.

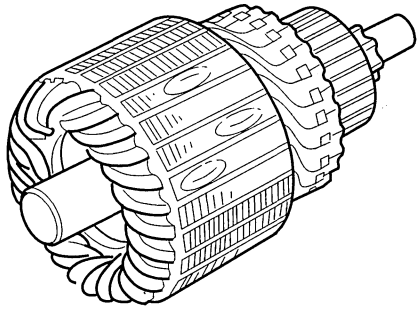

4. Check the commutator (A) surface. If the surface is dirty or burnt, resurface with emery cloth or a lathe within the following specifications, or recondition with #500 or #600 sandpaper (B).

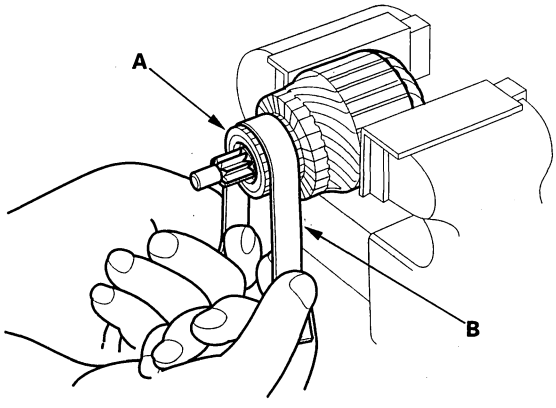

5. Check the commutator diameter. If the diameter is below the service limit, replace the armature.

Commutator Diameter
Standard (New): 28.0—28.1 mm (1.102—1.106 in.)
Service Limit: 27.5 mm (1.083 in.)

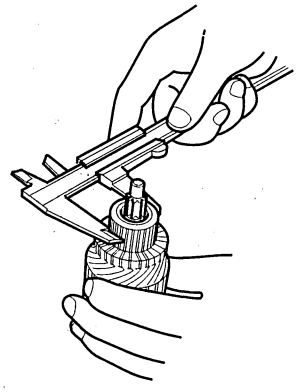

6. Measure the commutator (A) runout.

- If the commutator runout is within the service limit, check the commutator for carbon dust or brass chips between the segments.
- If the commutator runout is not within the service limit, replace the armature.

Commutator Runout
Standard (New): 0.02 mm (0.001 in.) max.
Service Limit: 0.05 mm (0.002 in.)

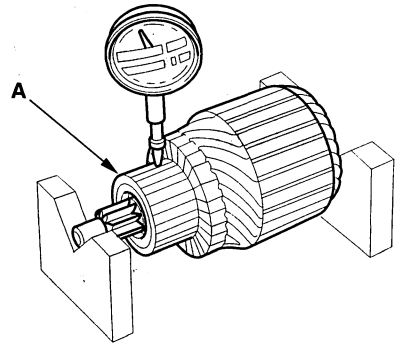

BACK

Protected by AR

7. Check the mica depth (A). If the mica is too high (B), undercut the mica with a hacksaw blade to the proper depth. Cut away all the mica (C) between the commutator segments. The undercut should not be too shallow, too narrow, or V-shaped (D).

Commutator Mica Depth
Standard (New): 0.40—0.50 mm (0.016—0.020 in.)
Service Limit: 0.15 mm (0.006 in.)

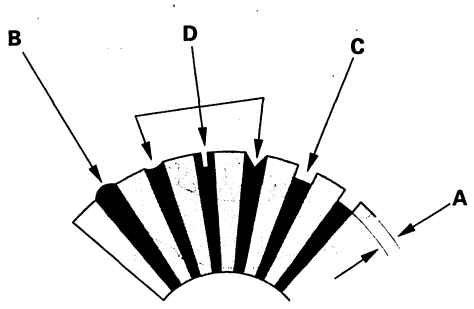

8. Check for continuity between the segments of the commutator. If there is an open circuit between any segments, replace the armature.

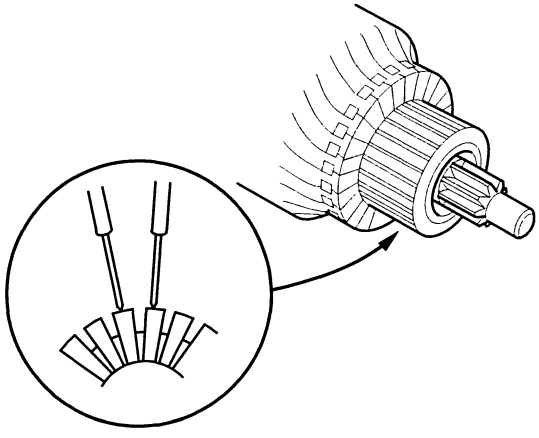

9. Place the armature (A) on an armature tester (B). Hold a hacksaw blade (C) on the armature core. If the blade is attracted to the core or vibrates while the core is turned, the armature is shorted. Replace the armature.

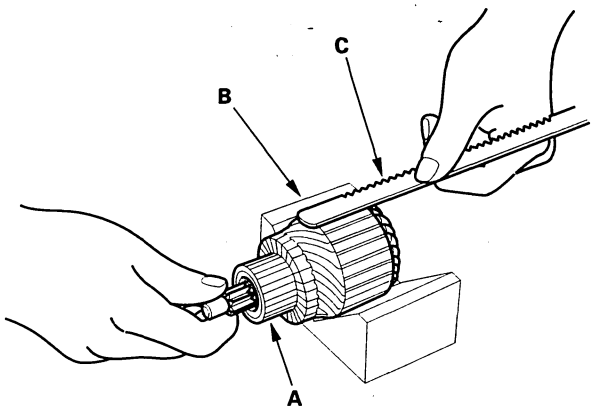

10. Check with an ohmmeter for continuity between the commutator (A) and armature coil core (B), and between the commutator and armature shaft (C). If there is continuity, replace the armature.

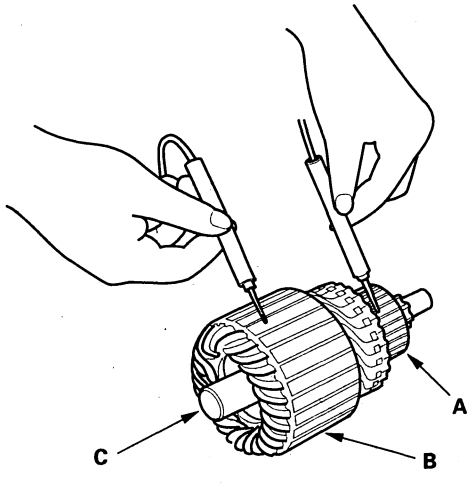

(cont'd)

Protected by AR

Starter Overhaul (cont'd)

Starter Brush Inspection

11. Measure the brush length. If it is shorter than the service limit, replace the brush holder assembly.

Brush Length
Standard (New): 11.1—11.5 mm (0.44—0.45 in.)
Service Limit: 4.3 mm (0.17 in.)

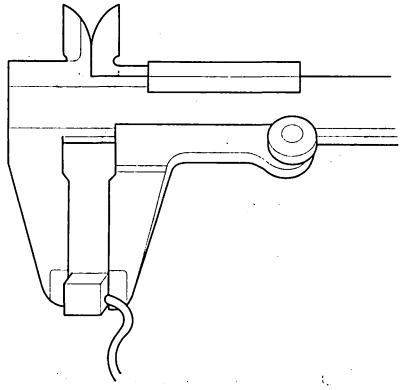

Starter Brush Holder Test

12. Check for continuity between the (+) brush (A) and (—) brush (B). If there is continuity, replace the brush holder assembly.

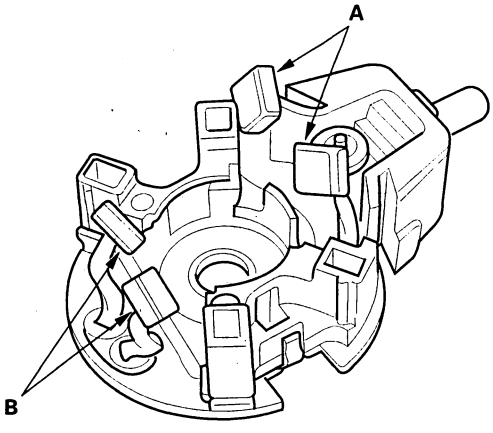

Planetary Gear Inspection

13. Check the planetary gears (A) and ring gear (B). Replace them if they are worn or damaged.

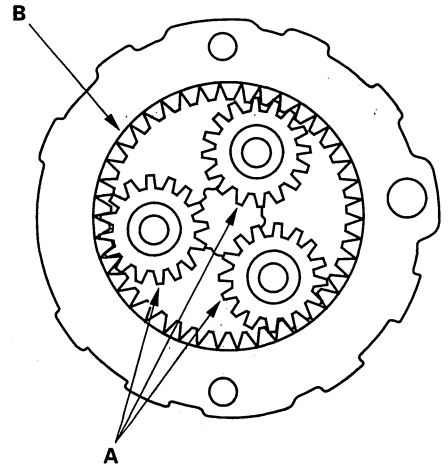

BACK

Protected by AR

Overrunning Clutch Inspection

14. While holding the drive gear (A), turn the gear shaft (B) clockwise. Check that the drive gear comes out to the other end. If the drive gear does not move smoothly, replace the gear cover assembly.

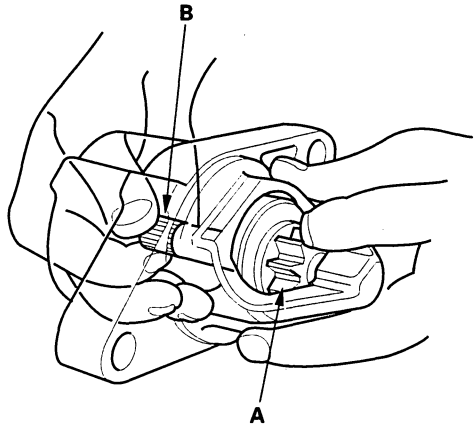

15. While holding the drive gear, turn the gear shaft counterclockwise. The gear shaft should rotate freely. If the gear shaft does not rotate smoothly, replace the gear cover assembly.

16. If the starter drive gear is worn or damaged, replace the overrunning clutch assembly; the gear is not available separately.
Check the condition of the torque converter ring gear to see if the starter drive gear teeth are damaged.

Starter Reassembly

17. Install the brush into the brush holder, and set the armature (A) in the brush holder (B).

NOTE: To seat the new brushes, slip a strip of #500 or #600 sandpaper, with the grit side up, between the commutator and each brush, and smoothly rotate the armature. The contact surface of the brushes will be sanded to the same contour as the commutator.

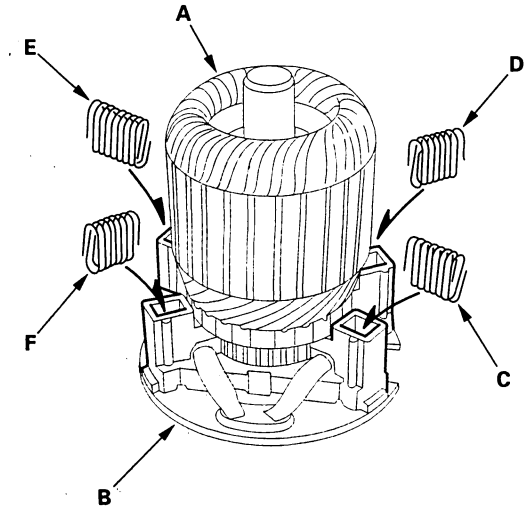

18. While squeezing a spring (C), insert it in the hole on the brush holder, and push it until it bottoms. Repeat this for the other three springs (D, E, and F).

19. Install the armature and brush holder assembly into the housing.

NOTE: Make sure the armature stays in the holder.

Protected by AR

Component Location Index

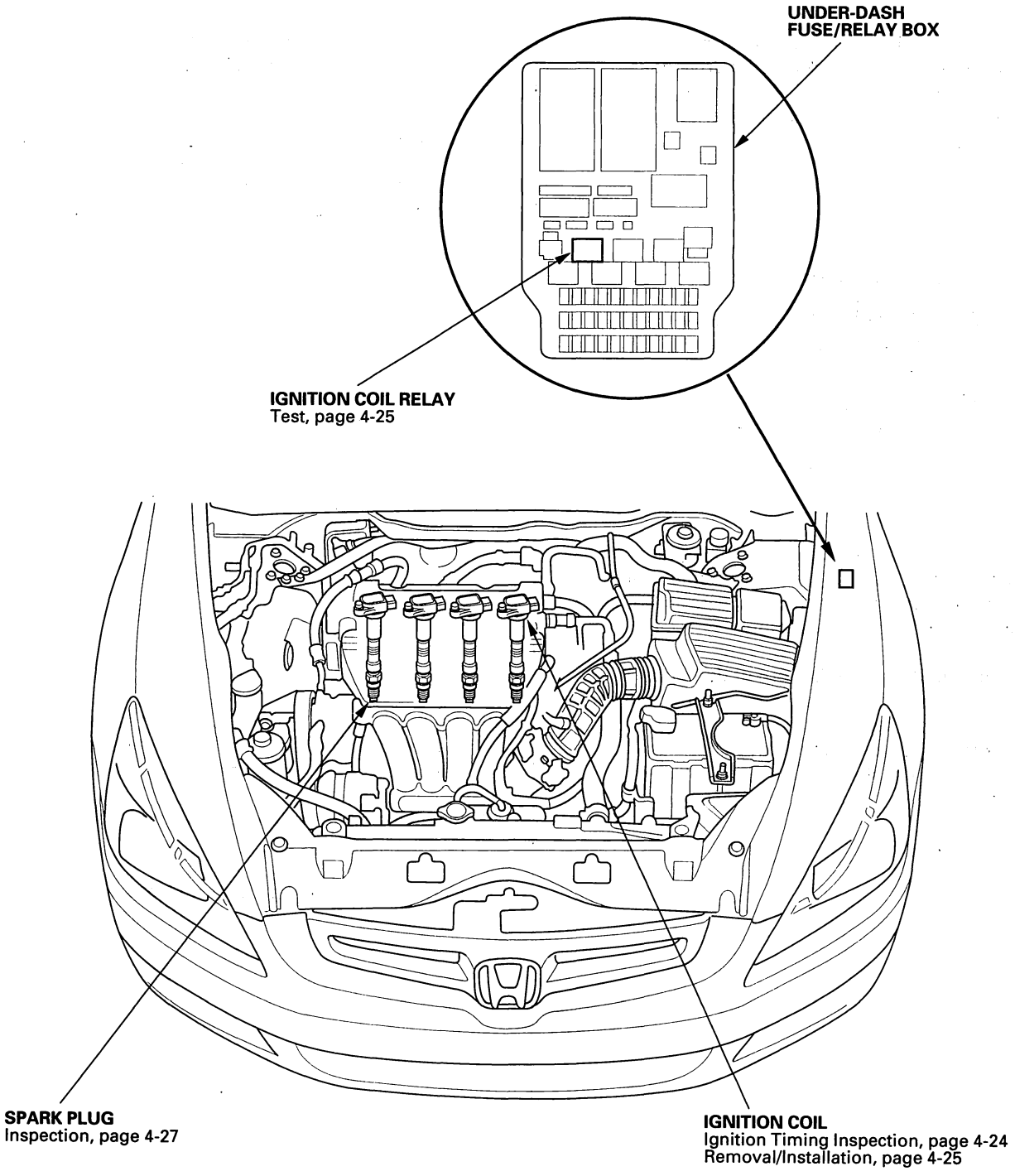

BACK

Protected by AR

Circuit Diagram

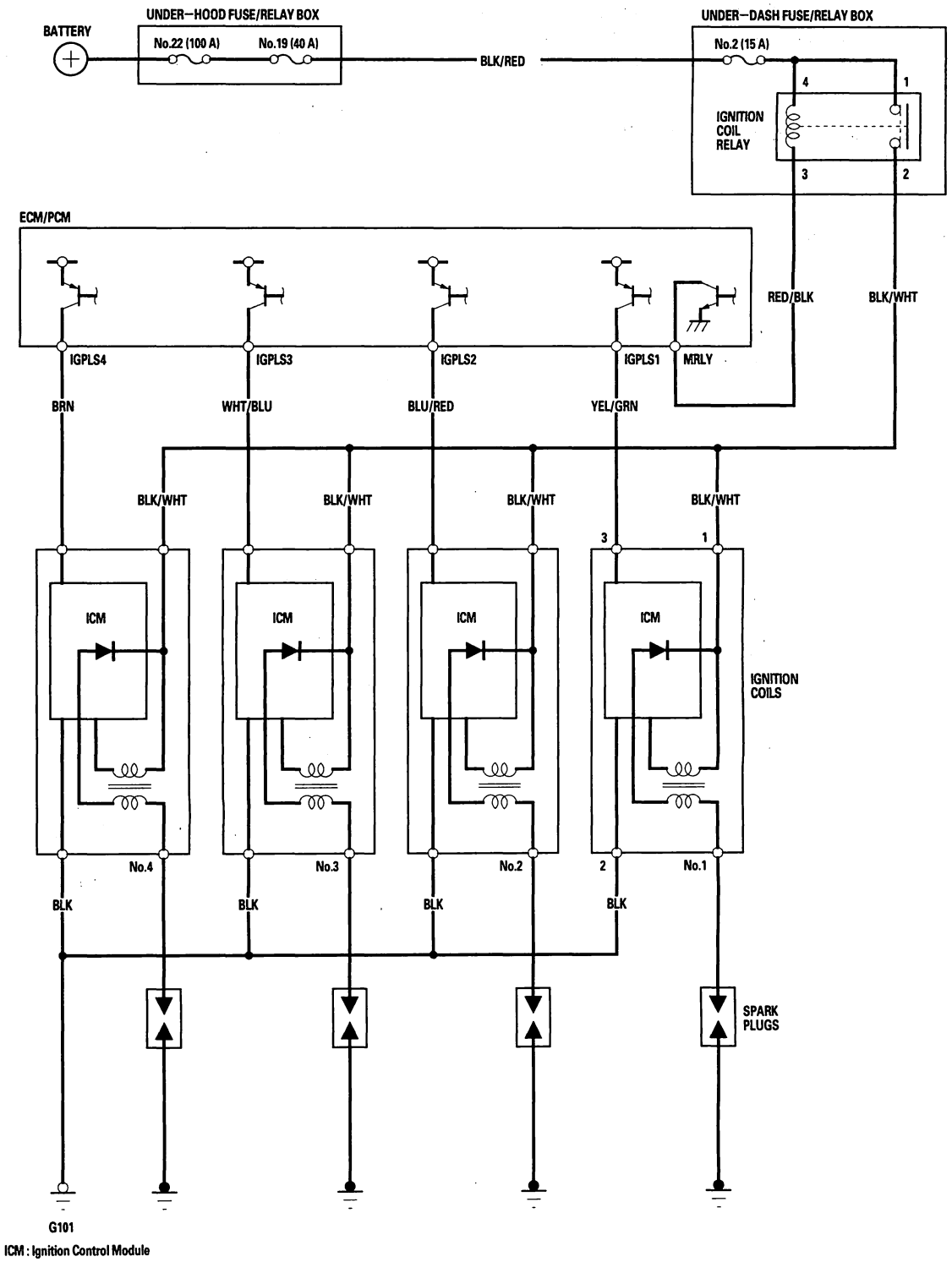

Protected by AR

Ignition Timing Inspection

1. Connect the Honda Diagnostic System (HDS) to the data link connector (DLC) (see step 2 on page 11-3), and check for DTCs. If a DTC is present, diagnose and repair the cause before inspecting the ignition timing.
2. Start the engine. Hold the engine at 3,000 rpm with no load (in Neutral) until the radiator fan comes on, then let it idle.
3. Check the idle speed (see page 11-315).
4. Select "SCS" mode using the HDS.
5. Free the service loop from the wire harness, then connect the timing light to the service loop.

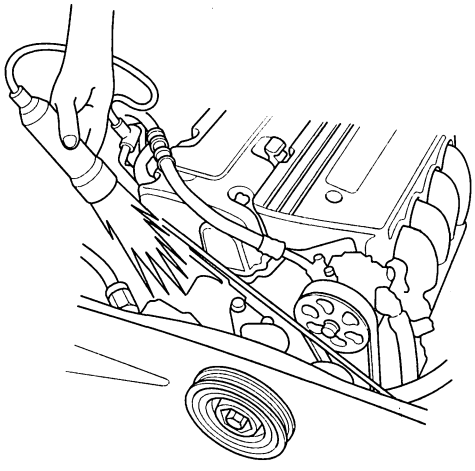

6. Aim the light toward the pointer (A) on the cam chain case. Check the ignition timing under a no load condition (headlights, blower fan, rear window defogger, and air conditioner are turned off).

Ignition Timing
M/T: 8°±2° BTDC (RED mark (B)) at idle in Neutral
A/T: 8°±2° BTDC (RED mark (B)) at idle in Park or Neutral

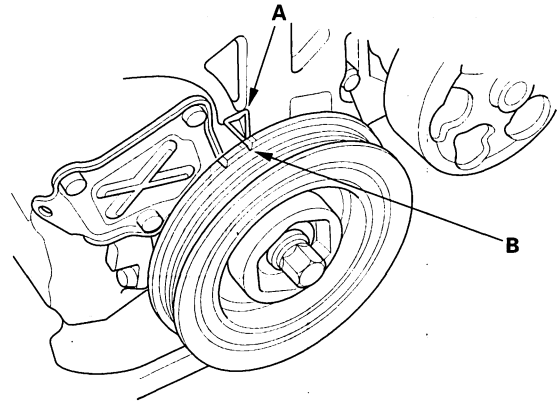

7. If the ignition timing differs from the specification, check the cam timing. If the cam timing is OK, update the engine control module (ECM)/ powertrain control module (PCM) if it does not have the latest software (see page 11-6), or substitute a known-good ECM/PCM (see page 11-7), then recheck. If the system works properly, and the ECM/PCM was substituted, replace the original ECM/PCM (see page 11-227).
8. Disconnect the HDS and the timing light.
9. Secure the service loop to the wire harness with wire ties.

BACK

Protected by AR

Ignition Coil Removal/Installation

1. Remove the ignition coil cover (A), disconnect the ignition coil connectors (B), then remove the ignition coils (C).

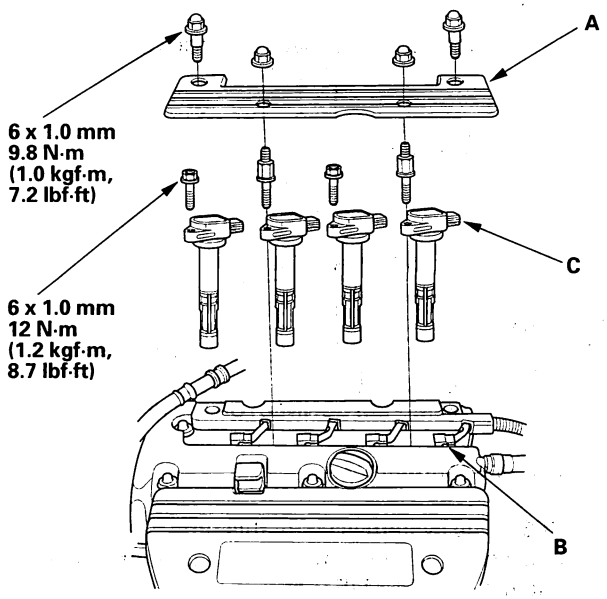

2. Install the ignition coils in the reverse order of removal.

Ignition Coil Relay Circuit Troubleshooting

1. Check the No. 2 (15A) fuse in the under-dash fuse/relay box.

   Is the fuse OK?

   YES—Go to step 2.

   NO—Replace the fuse. ■

2. Remove the ignition coil relay from the under-dash fuse/relay box, and test it (see page 22-79).

   Is the relay OK?

   YES—Go to step 3.

   NO—Replace the ignition coil relay. ■

3. Measure the voltage between ignition coil relay 4P socket terminal No. 1 and body ground, then terminal No. 4 and body ground.

IGNITION COIL RELAY 4P SOCKET

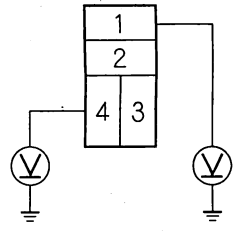

Terminal side of female terminals

Is there battery voltage?

YES—Go to step 4.

NO—Replace the under-dash fuse/relay box. ■

(cont'd)

Protected by AR

Ignition Coil Relay Circuit Troubleshooting (cont'd)

4. Check for continuity between ignition coil relay 4P socket terminal No. 2 and the No. 1 ignition coil 3P connector terminal No. 3.

IGNITION COIL RELAY 4P SOCKET

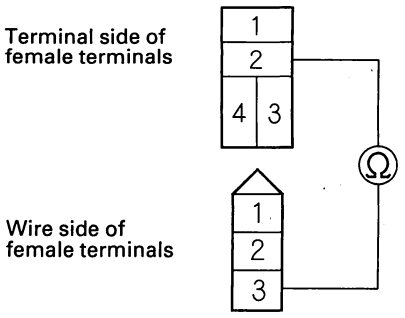

No.1 IGNITION COIL 3P CONNECTOR

Is there continuity?

YES—Go to step 5.

NO—Repair an open in the wire between ignition coil relay 4P socket terminal No. 2 and ignition coil 3P connector terminal No. 3.■

5. Check for continuity between ignition coil relay 4P socket terminal No. 3 and body ground.

IGNITION COIL RELAY 4P SOCKET

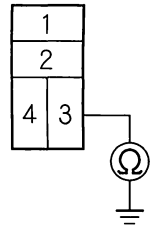

Terminal side of female terminals

Is there continuity?

YES—Repair a short in the wire between ignition coil relay 4P socket terminal No. 3 and the ECM/PCM (E7).■

NO—Go to step 6.

6. Check for continuity between ignition coil relay 4P socket terminal No. 3 and engine control module (ECM)/powertrain contorl module (PCM) connector terminal E7.

IGNITION COIL RELAY 4P SOCKET

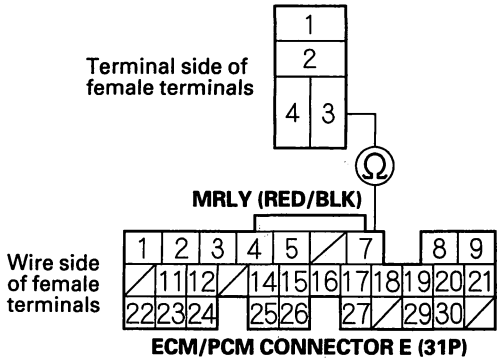

ECM/PCM CONNECTOR E (31P)

Is there continuity?

YES—The system is OK at this time. Check for loose or poor connections at the ignition coil relay and the ECM/PCM (E7).■

NO—Repair an open in the wire between ignition coil relay 4P socket terminal No. 3 and the ECM/PCM (E7).■

BACK

Protected by AR

Spark Plug Inspection

1. Inspect the electrodes and ceramic insulator.

   - Burned or worn electrodes may be caused by:
     - Advanced ignition timing
     - Loose spark plug
     - Plug heat range too hot
     - Insufficient cooling

   - Fouled plug may be caused by:
     - Retarded ignition timing
     - Oil in combustion chamber
     - Incorrect spark plug gap
     - Plug heat range too cold
     - Excessive idling/low speed running
     - Clogged air cleaner element
     - Deteriorated ignition coils

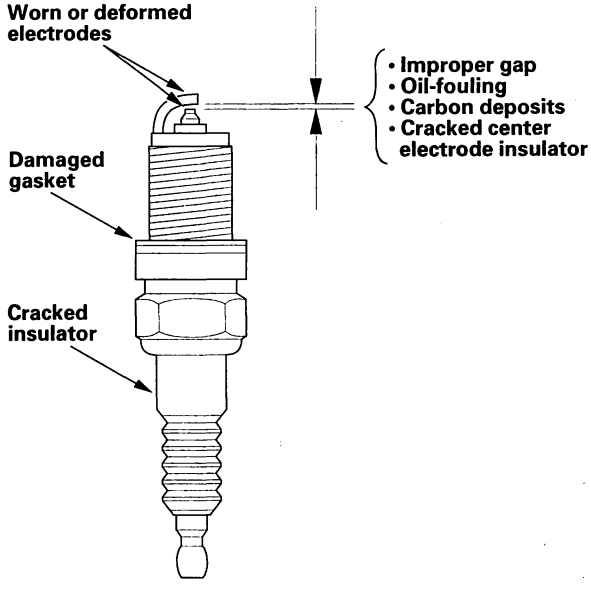

2. Do not adjust the gap (A) of iridium tip plugs; replace the spark plug if the gap is out of specification.

   Electrode Gap
   Except LX-SULEV, EX-SULEV, EX-L-SULEV:
   Standard (New): 1.0—1.1 mm (0.039—0.043 in.)
   LX-SULEV, EX-SULEV, EX-L-SULEV:
   Standard (New): 1.2—1.3 mm (0.047—0.051 in.)

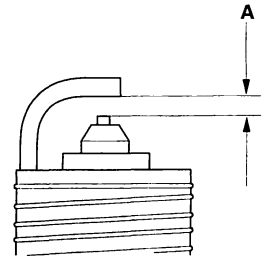

3. Replace the plug at the specified interval or if the center electrode is rounded (A). Use only the spark plugs listed.

   Spark Plugs
   Except LX-SULEV, EX-SULEV, EX-L-SULEV:
   IZFR6K11 (NGK)
   SKJ20DR-M11 (DENSO)
   LX-SULEV, EX-SULEV, EX-L-SULEV:
   IZFR6K13 (NGK)
   SKJ20DR-M13 (DENSO)

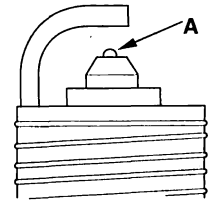

4. Apply a small amount of anti-seize compound to the plug threads, and screw the plugs into the cylinder head, finger-tight. Then torque them to 18 N·m (1.8 kgf·m, 13 lbf·ft).

Protected by AR

Charging System

Component Location Index

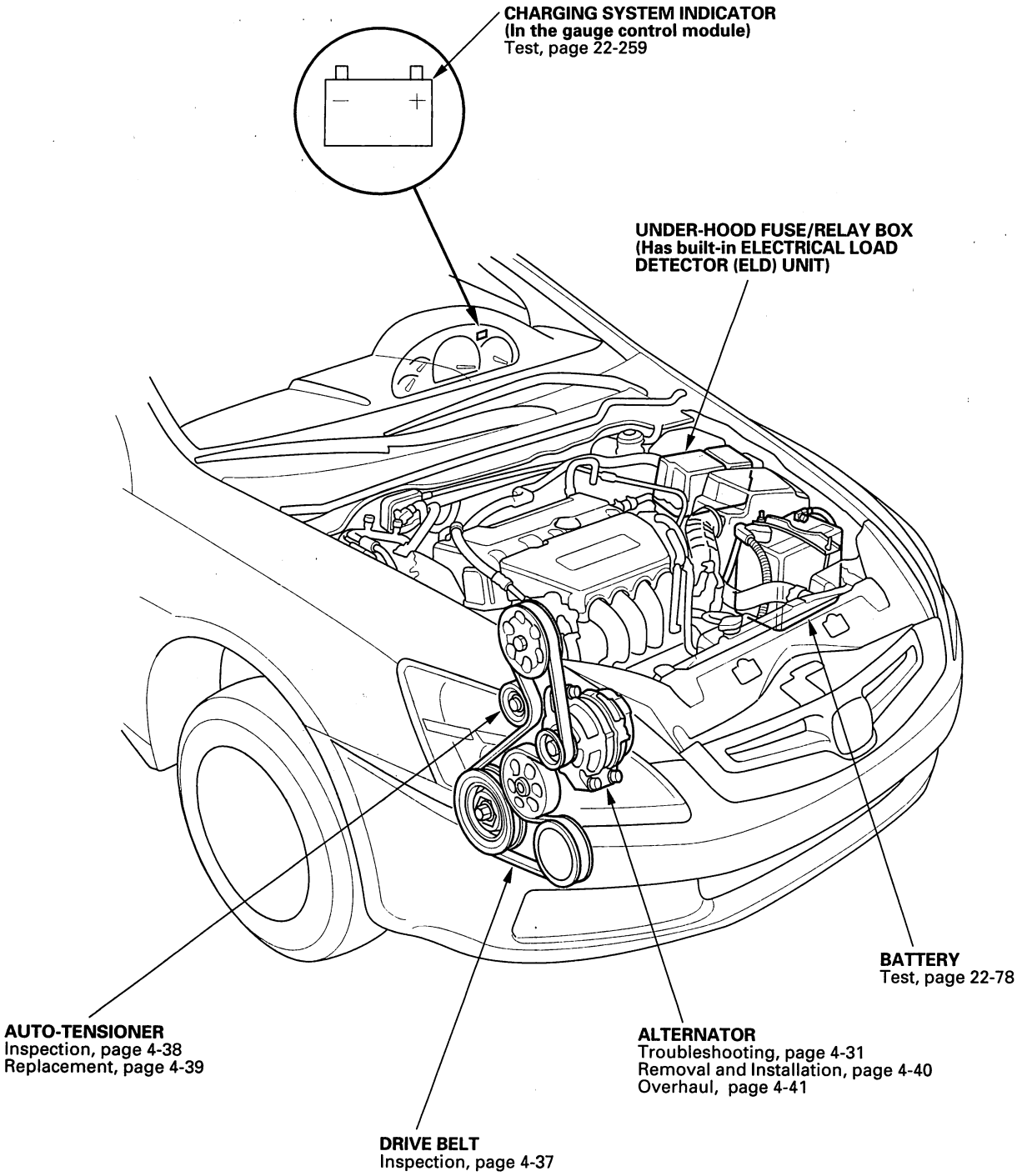

BACK

Protected by AR

Symptom Troubleshooting Index

2003-2004 Models

Symptom	Diagnostic procedure	Also check for
Charging system indicator does not come on with the ignition switch ON (II)	Troubleshoot the charging system indicator circuit (see page 4-31).	
Charging system indicator stays on	1. Troubleshoot the charging system indicator circuit (see page 4-31). 2. Check for a broken drive belt (see page 4-37). 3. Check the drive belt auto-tensioner (see page 4-38).	
Battery discharged	1. Check for a poor connection and for open or shorted wire(s) in charging system. 2. Check for parasitic electrical current draw. 3. Check for a broken drive belt (see page 4-37). 4. Check the drive belt auto-tensioner (see page 4-38). 5. Troubleshoot the alternator and regulator circuit (see page 4-34). 6. Check for a poor connection at the battery terminal. 7. Test the battery (see page 22-78).	
Battery overcharged	1. Troubleshoot the alternator and regulator circuit (see page 4-34). 2. Test the battery (see page 22-78).	

2005-2006 Models

Symptom	Diagnostic procedure	Also check for
Charging system indicator does not come on with the ignition switch ON (II)	Troubleshoot the charging system indicator circuit (see page 4-32).	
Charging system indicator stays on	1. Check for PGM-FI DTCs (see page 11-3). 2. Troubleshoot the charging system indicator circuit (see page 4-32). 3. Check for a broken drive belt (see page 4-37). 4. Check the drive belt auto-tensioner (see page 4-38).	
Battery discharged	1. Check for parasitic electrical current draw. 2. Check for a broken drive belt (see page 4-37). 3. Check the drive belt auto-tensioner (see page 4-38). 4. Troubleshoot the alternator and regulator circuit (see page 4-34). 5. Check for a poor connection at the battery terminal. 6. Test the battery (see page 22-78).	
Battery overcharged	1. Troubleshoot the alternator and regulator circuit (see page 4-32). 2. Test the battery (see page 22-78).	

Protected by AR

Charging System

Circuit Diagram

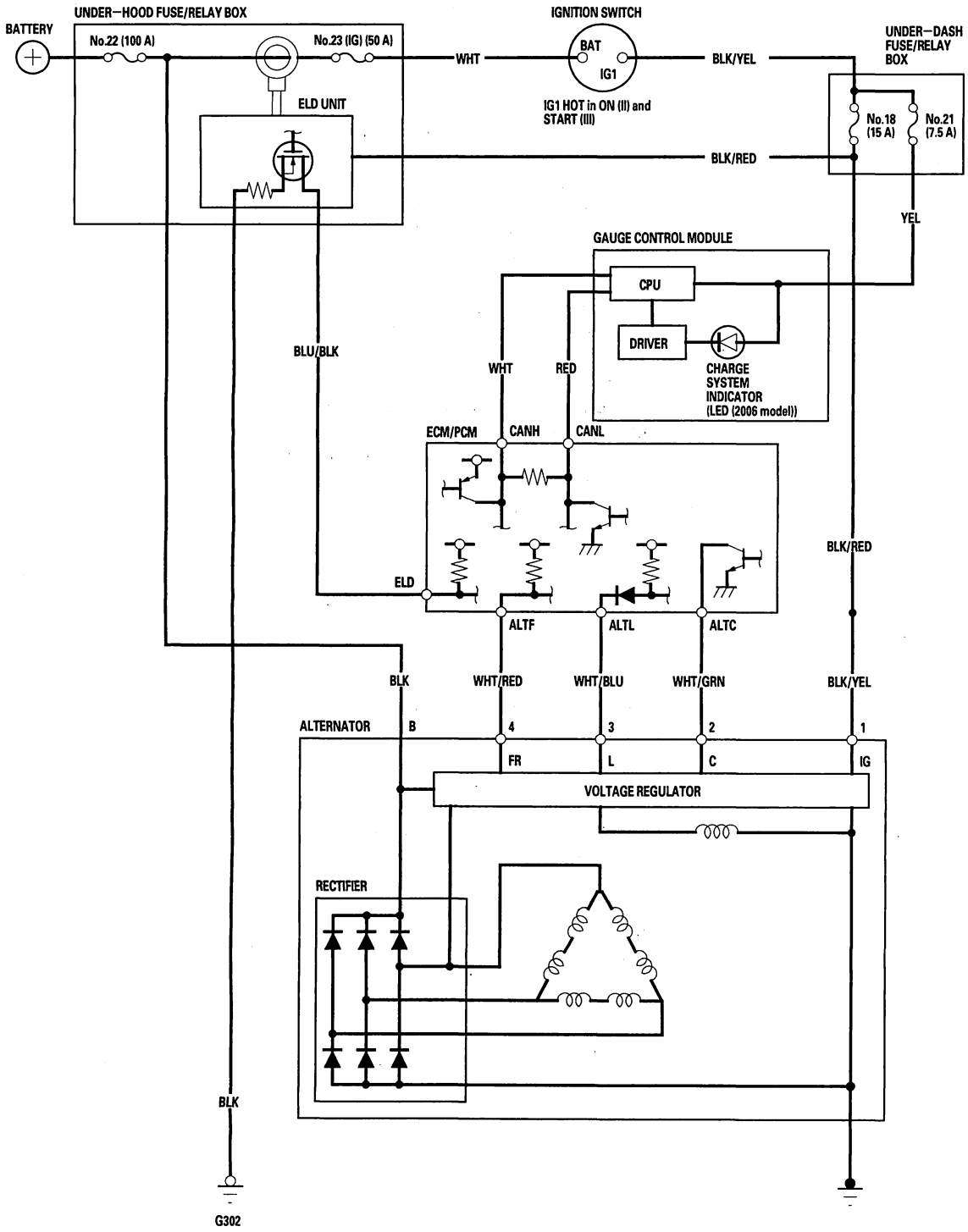

BACK

Protected by AR

Charging System Indicator Circuit Troubleshooting

2003-2004 Models

1. Turn the ignition switch ON (II).

   Does the charging system indicator come on?

   YES—Go to step 2.

   NO—Go to step 3.

2. Start the engine.

   Does the charging system indicator go off?

   YES—Charging system indicator circuit is OK. Go to the alternator and regulator circuit troubleshooting (see page 4-34). ■

   NO—Go to step 3.

3. Do the gauge control module self-test procedure (see page 22-259).

   Does the charging system indicator flash?

   YES—Go to step 4.

   NO—Replace the gauge control module (see page 22-276). ■

4. Turn the ignition switch OFF.

5. Disconnect the alternator 4P connector.

6. Turn the ignition switch ON (II).

7. Measure the voltage between alternator 4P connector terminal No. 1 and body ground.

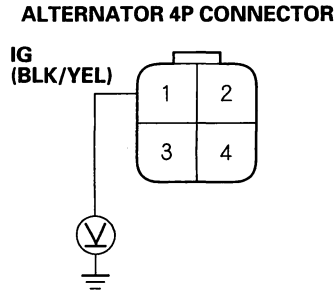

Wire side of female terminals

   Is there battery voltage?

   YES—Go to step 8.

   NO—Check for a blown No. 18 (15A) fuse in the under-dash fuse/relay box. If the fuse is OK, repair open in the wire between the alternator and under-dash fuse/relay box. ■

8. Turn the ignition switch OFF.

9. Connect the Honda Diagnostic System (HDS) to the data link connecter (DLC) (see step 2 on page 11-3). Turn the ignition switch ON (II), and jump the SCS line with the HDS, then turn the ignition switch OFF.

   NOTE: This step must be done to protect the engine control module (ECM)/powertrain control module (PCM) from damage.

10. Disconnect ECM/PCM connector B (24P).

(cont'd)

Protected by AR

Charging System Indicator Circuit Troubleshooting (cont'd)

11. Check for continuity between ECM/PCM connector terminal B10 and alternator 4P connector terminal No. 3.

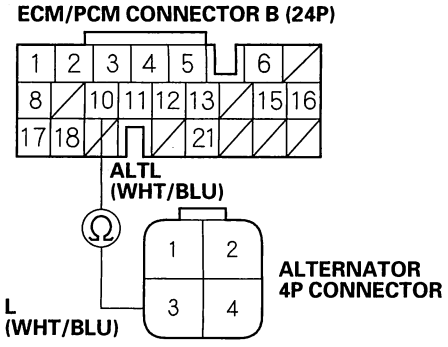

Wire side of female terminals

Is there continuity?

YES—Go to step 12.

NO—Repair an open in the wire between the alternator and the ECM/PCM. ■

12. Check for continuity between ECM/PCM connector terminal B10 and body ground.

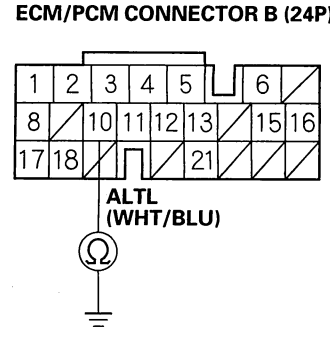

Wire side of female terminals

Is there continuity?

YES—Repair a short in the wire between the alternator and the ECM/PCM. ■

NO—Go to the alternator and regulator circuit troubleshooting (see page 4-34). ■

2005-2006 Models

1. Turn the ignition switch ON (II).

   Does the charging system indicator come on?

   YES—Go to step 2.

   NO—Go to step 11.

2. Shift to Park or Neutral, and start the engine. Hold the engine speed at 2,000 rpm for 1 minute.

   Does the charging system indicator go off?

   YES—Charging system indicator circuit is OK. Go to the alternator and regulator circuit troubleshooting (see page 4-34). ■

   NO—Go to step 3.

3. Do the gauge control module self-test procedure (see page 22-259).

   Does the charging system indicator flash?

   YES—Go to step 4.

   NO—Replace the gauge control module (see page 22-276). ■

4. Turn the ignition switch OFF.

5. Disconnect the alternator 4P connector.

6. Turn the ignition switch ON (II).

   Does the charging system indicator go off?

   YES—Replace the alternator (see page 4-40) or repair the alternator (see page 4-41). ■

   NO—Go to step 7.

BACK

Protected by AR

7. Turn the ignition switch OFF.

8. Connect the Honda Diagnostic System (HDS) to the data link connecter (DLC) (see step 2 on page 11-3). Turn the ignition switch ON (II), and jump the SCS line with the HDS, then turn the ignition switch OFF.

   NOTE: This step must be done to protect the engine control module (ECM)/powertrain control module (PCM) from damage.

9. Disconnect ECM/PCM connector B (24P).

10. Check for continuity between ECM/PCM connector terminal B10 and body ground.

ECM/PCM CONNECTOR B (24P)

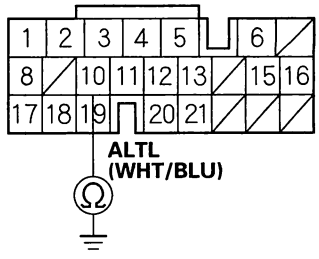

Wire side of female terminals

Is there continuity?

YES—Repair a short in the wire between the alternator and the ECM/PCM. ■

NO—Update the ECM/PCM if it does not have the latest software (see page 11-6), or substitute a known-good ECM/PCM (see page 11-7), then recheck. If the symptom/indication goes away with a known-good ECM/PCM, replace the original ECM/PCM (see page 11-227). ■

11. Do the gauge control module self-test procedure (see page 22-259).

    Does the charging system indicator flash?

    YES—Go to step 12.

    NO—Replace the gauge control module (see page 22-276). ■

12. Turn the ignition switch OFF.

13. Disconnect the alternator 4P connector.

ALTERNATOR 4P CONNECTOR

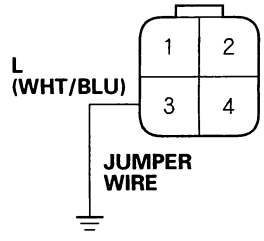

Wire side of female terminals

14. Connect alternator 4P connector terminal No. 3 and body ground with a jumper wire.

15. Turn the ignition switch ON (II).

    Does the charging system indicator come on?

    YES—Replace the alternator (see page 4-40) or repair the alternator (see page 4-41). ■

    NO—Go to step 16.

(cont'd)

Protected by AR

Charging System Indicator Circuit Troubleshooting (cont'd)

16. Turn the ignition switch OFF.

17. Connect the HDS to the DLC (see step 2 on page 11-3). Turn the ignition switch ON (II), and jump the SCS line with the HDS, then turn the ignition switch OFF.

    NOTE: This step must be done to protect the ECM/PCM from damage.

18. Disconnect ECM/PCM connector B (24P).

19. Check for continuity between ECM/PCM connector terminal B10 and body ground.

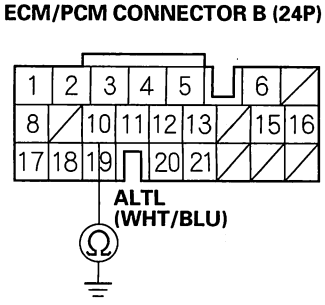

Wire side of female terminals

Is there continuity?

YES—Update the ECM/PCM if it does not have the latest software (see page 11-6), or substitute a known-good ECM/PCM (see page 11-7), then recheck. If the symptom/indication goes away with a known-good ECM/PCM, replace the original ECM/PCM (see page 11-227).■

NO—Repair an open in the wire between the alternator and the ECM/PCM.■

Alternator and Regulator Circuit Troubleshooting

1. Make sure the battery connections are good and the battery is sufficiently charged (see page 22-78).

2. Connect a VAT-40 (or equivalent tester), and turn the selector switch to position 1 (starting).

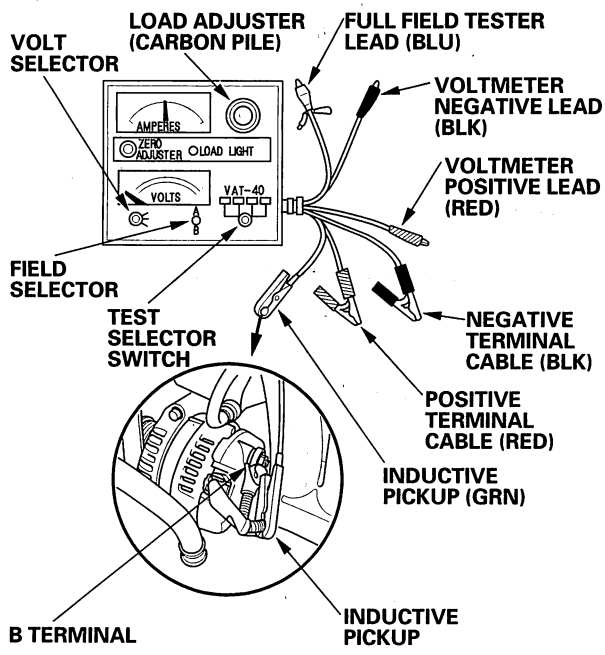

3. Shift to Park or Neutral, and start the engine. Hold the engine at 3,000 rpm, with no load until the radiator fan comes on, then let it idle.

4. Raise the engine speed to 2,000 rpm, and hold it there.

   Is the voltage over 15.1 V?

   YES—Replace the alternator or the rear housing assembly.■

   NO—Go to step 5.

BACK

Protected by AR

5. Release the accelerator pedal, and let the engine idle.
6. Make sure all accessories are turned off. Turn the selector switch to position 2 (charging).
7. Remove the inductive pickup, and zero the ammeter.
8. Place the inductive pickup over the B terminal wire of the alternator so that the arrow points away from the alternator.
9. Raise the engine speed to 2,000 rpm, and hold it there.

   Is the voltage less than 13.5 V?

   YES—Go to Alternator Control Circuit Troubleshooting (see page 4-35).■

   NO—Go to step 10.

10. Apply a load with the VAT-40 until the battery voltage reads between 12—13.5 V.

    Is the amperage 60A or more?

    YES—The charging system is OK.■

    NOTE: If the charging system indicator is still on, replace the alternator or the rear housing assembly.

    NO—Replace the alternator (see page 4-40) or repair the alternator (see page 4-41).■

Alternator Control Circuit Troubleshooting

1. Check for proper operation of the electrical load detector (ELD) by checking the malfunction indicator lamp (MIL) (see page 11-3).
2. Connect the Honda Diagnostic System (HDS) to the data link connector (DLC) (see step 2 on page 11-3), and check for DTCs. If a DTC is present, diagnose and repair the cause before continuing with this test.
3. Disconnect the alternator 4P connector from the alternator.
4. Start the engine, and turn on the headlights to high beam.
5. Measure the voltage between alternator 4P connector terminal No. 2 and the positive terminal of the battery.

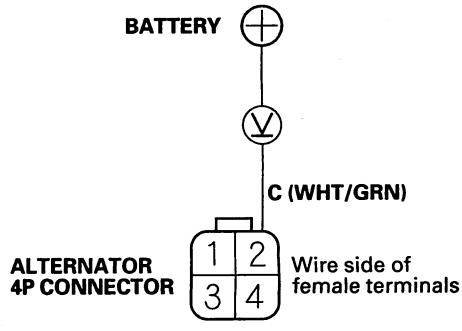

   Is there 1 V or less?

   YES—Go to step 6.

   NO—Go to step 9.

6. Jump the SCS line with the HDS, then turn the ignition switch OFF.

   NOTE: This step must be done to protect the engine control module (ECM)/powertrain control module (PCM) from damage.

7. Disconnect engine control module ECM/PCM connector B (24P).

(cont'd)

Protected by AR

Alternator Control Circuit Troubleshooting (cont'd)

8. Check for continuity between ECM/PCM connector terminal B18 and body ground.

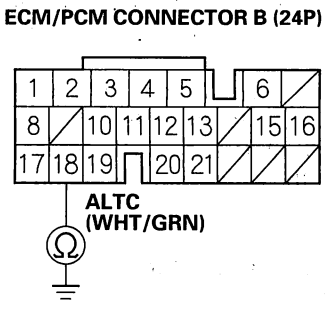

Wire side of female terminals

Is there continuity?

YES—Repair a short in the wire between the alternator and the ECM/PCM. ■

NO—Update the ECM/PCM if it does not have the latest software (see page 11-6), or substitute a known-good ECM/PCM (see page 11-7), then recheck. If the symptom/indication goes away with a known-good ECM/PCM, replace the original ECM/PCM (see page 11-227). ■

9. Jump the SCS line with the HDS, then turn the ignition switch OFF.

   NOTE: This step must be done to protect the engine control module (ECM)/powertrain control module (PCM) for damage.

10. Disconnect ECM/PCM connector B (24P).

11. Check for continuity between ECM/PCM connector terminal B18 and alternator 4P connector terminal No. 2.

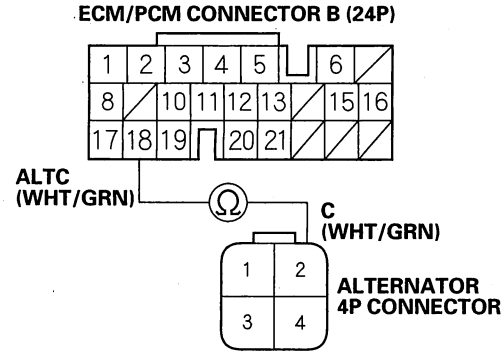

Wire side of female terminals

Is there continuity?

YES—Replace the alternator (see page 4-40) or repair the alternator (see page 4-41). ■

NO—Repair an open in the wire between the alternator and the ECM/PCM. ■

BACK

Protected by AR

Drive Belt Inspection

1. Inspect the belt for cracks and damage. If the belt is cracked or damaged, replace it.

2. Check that the auto-tensioner indicator (A) is within the standard range (B) as shown. If it is out of the standard range, replace the drive belt (see page 4-37).

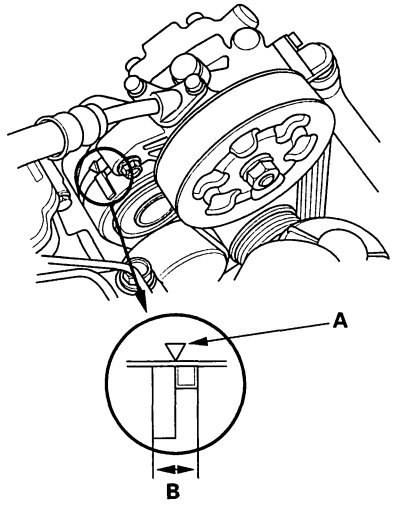

Drive Belt Replacement

Special Tools Required
Belt tension release tool Snap-on YA9317 or equivalent, commercially available

1. Move the auto-tensioner (A) with the belt tension release tool to relieve tension from the drive belt (B), and remove the drive belt.

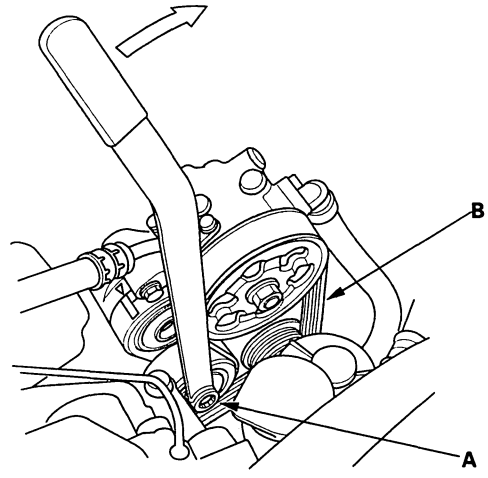

2. Install the new belt in the reverse order of removal.

Protected by AR

Drive Belt Auto-tensioner Inspection

Special Tools Required
Belt tension release tool Snap-on YA9317 or equivalent, commercially available

1. Check whether there is a change in the position of the auto-tensioner indicator before starting the engine and after starting the engine. If there is a change in the position, replace the auto-tensioner.

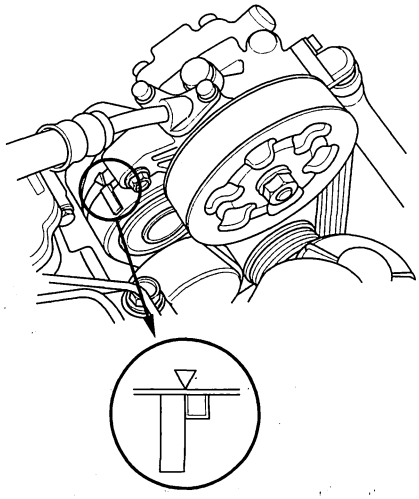

2. Check for abnormal noise from the tensioner pulley. If you hear abnormal noise, replace the tensioner pulley.

3. Remove the drive belt (see page 4-37).

4. Move the auto-tensioner within its limit with the belt tension release tool in the direction shown. Check that the tensioner moves smoothly and without any abnormal noise. If the tensioner does not move smoothly or you hear abnormal noise, replace the auto-tensioner.

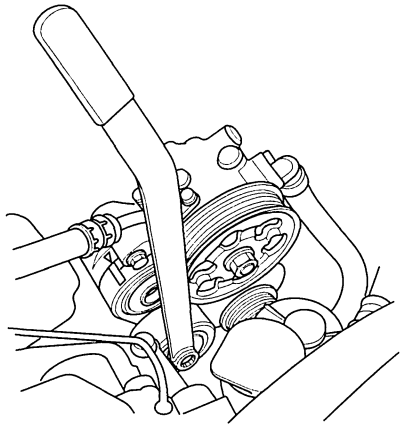

5. Remove the auto-tensioner (see page 4-39).

6. Clamp the auto-tensioner (A) by using two 8 mm bolts (B) and a vise (C) as shown. Do not clamp the auto-tensioner itself.

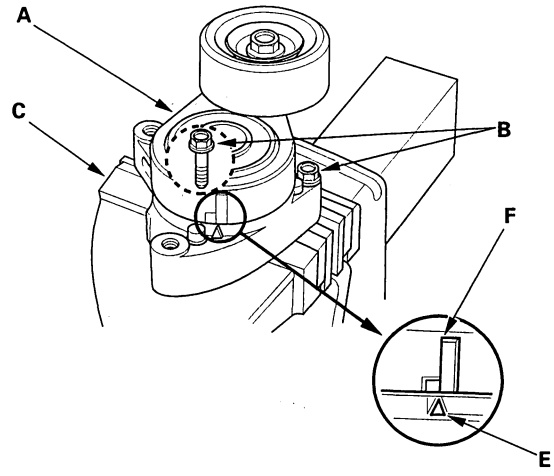

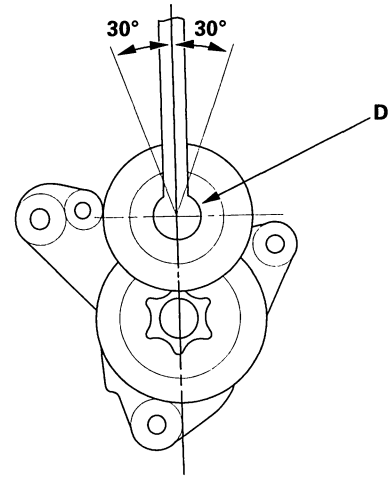

7. Set the torque wrench (D) in the pulley bolt in the direction shown.

8. Align the indicator (E) on the tensioner base with center mark on the tensioner arm by using the torque wrench, and measure the torque. If the torque value is out of specification, replace the auto-tensioner.

   NOTE: If the indicator exceeds the center mark, recheck the torque.

   Auto-tensioner Spring Torque:
   32.5—39.7 N·m (3.31—4.05 kgf·m, 23.9—29.3 lbf·ft)

BACK

Protected by AR

Drive Belt Auto-tensioner Replacement

1. Remove the drive belt (see page 4-37).
2. Remove the power steering (P/S) pump without disconnecting the P/S hoses.

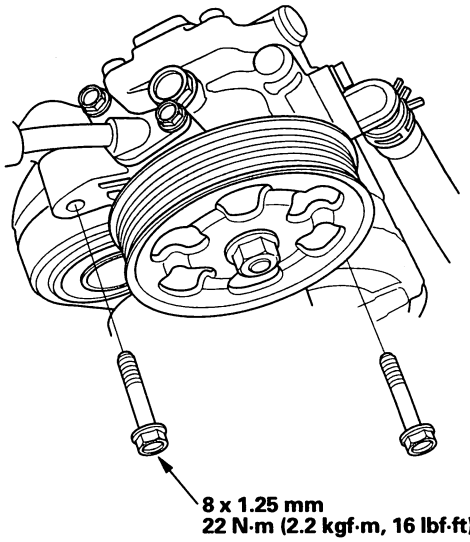

3. Remove the auto-tensioner.

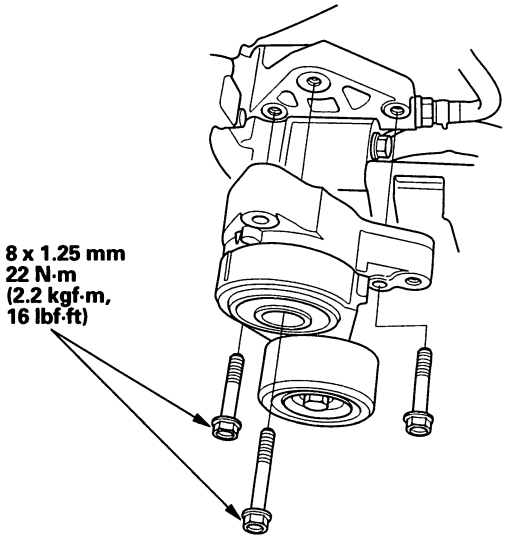

4. Install the auto-tensioner in the reverse order of removal.

Tensioner Pulley Replacement

1. Remove the drive belt (see page 4-37).
2. Remove the pulley bolt (A), and remove the tensioner pulley (B).

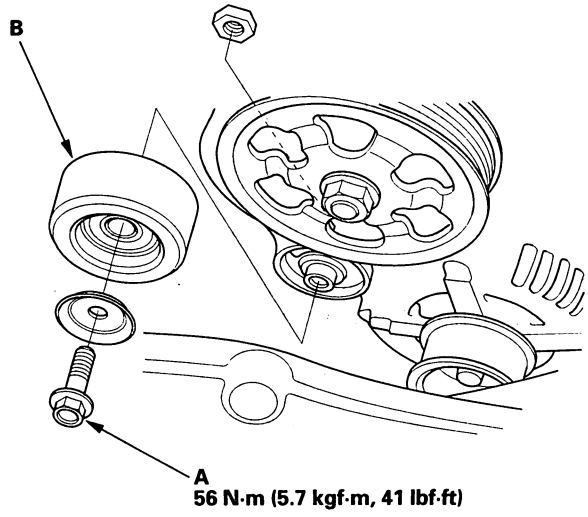

3. Install the tensioner pulley in the reverse order of removal.

Protected by AR

Alternator Removal and Installation

Removal

1. Make sure you have the anti-theft codes for the radio, and the navigation system, then write down the customer's radio station and XM radio channel presets.
2. Disconnect the negative cable from the battery first, then disconnect the positive cable.
3. Remove the drive belt (see page 4-37).
4. Remove the auto-tensioner (see page 4-39).
5. Disconnect the alternator connector (A) and BLK wire (B) from the alternator.

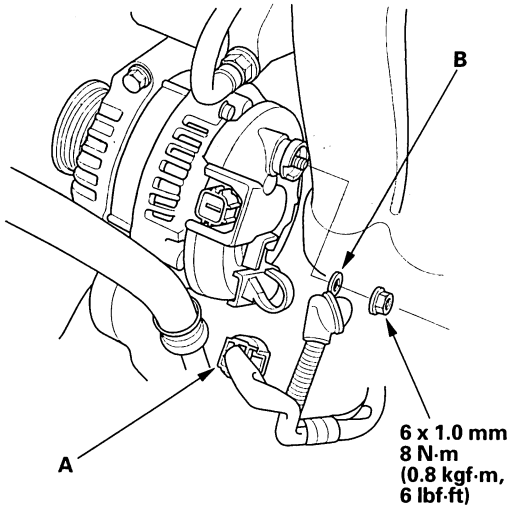

6. Remove the three bolts securing the alternator.

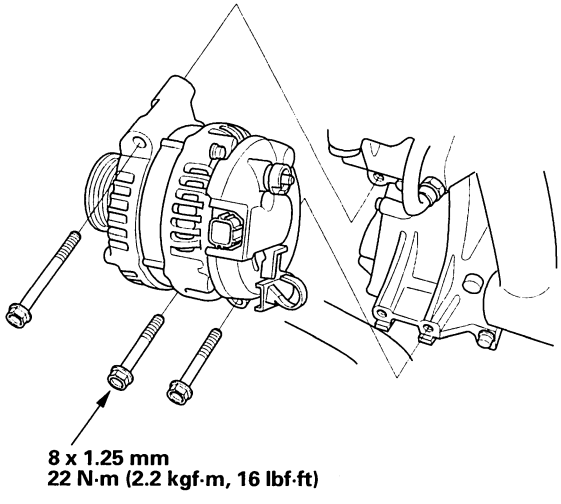

Installation

1. Install the alternator and drive belt in the reverse order of removal.
2. Connect the positive cable to the battery first, and then connect the negative cable.
3. Enter the anti-theft codes for the radio and the navigation system, then enter the customer's radio station and XM radio channel presets.
4. Do the power window control unit reset procedure (see page 22-232).
5. Set the clock.

BACK

Protected by AR

Alternator Overhaul

Exploded View

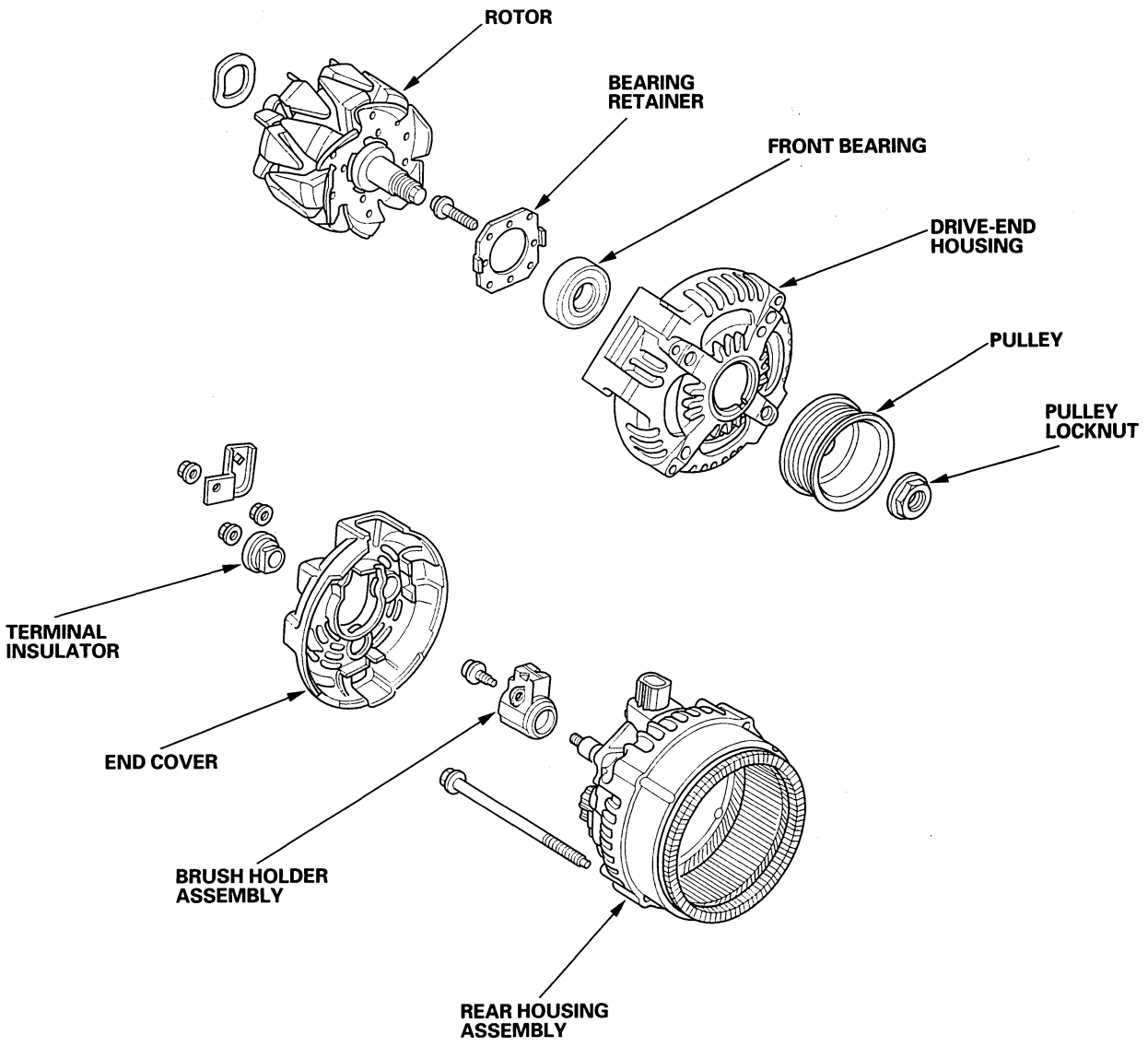

(cont'd)

Protected by AR

Alternator Overhaul (cont'd)

Special Tools Required
- Driver 07749-0010000
- Attachment, 42 x 47 mm 07746-0010300

NOTE: Refer to the Exploded View as needed during this procedure.

Alternator Disassembly

1. Test the alternator and regulator before you remove them (see page 4-31).
2. Remove the alternator (see page 4-40).
3. If the front bearing needs replacing, remove the pulley locknut with a 10 mm wrench (A) and a 22 mm wrench (B). If necessary, use an impact wrench.

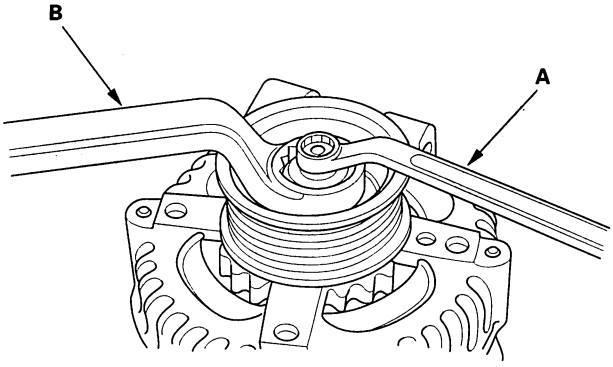

4. Remove the harness stay and the three flange nuts from the alternator.

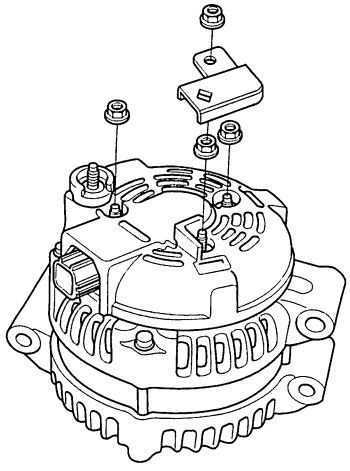

5. Remove the end cover.

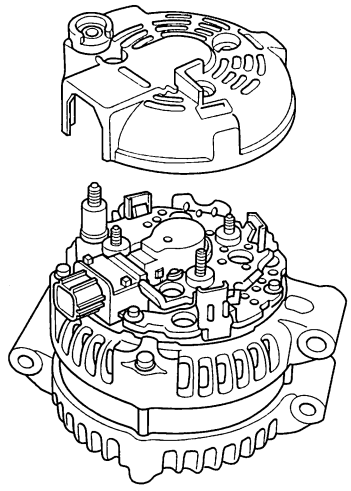

6. Remove the brush holder.

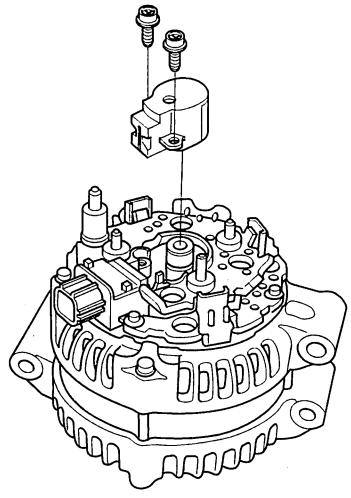

BACK

Protected by AR

7. Remove the four bolts, then remove the rear housing assembly (A), and washer (B).

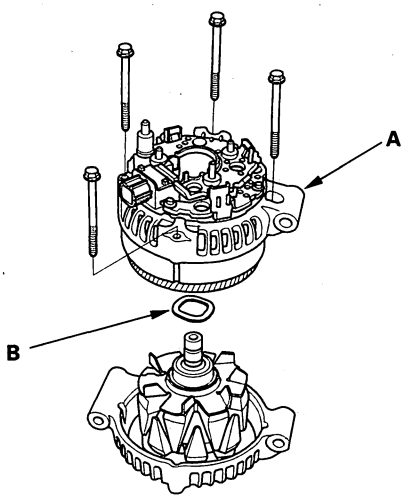

8. If you are not replacing the front bearing, go to step 13. Remove the rotor from the drive end housing.

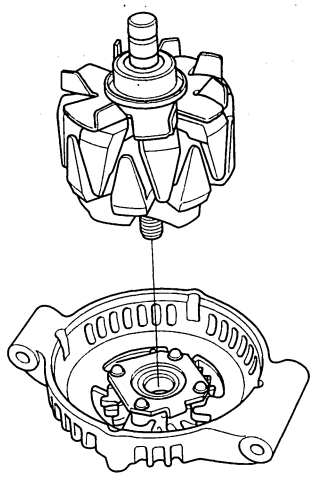

9. Inspect the rotor shaft for scoring, and inspect the bearing journal surface in the drive end housing for seizure marks.

   - If the rotor is damaged, replace the rotor assembly.
   - If the rotor is OK, go to step 10.

10. Remove the front bearing retainer plate.

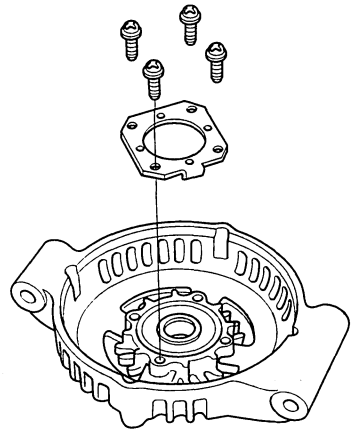

11. Drive out the front bearing with a brass drift and hammer.

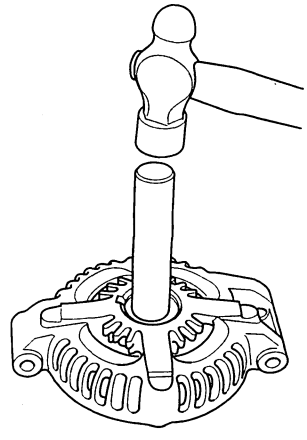

(cont'd)

Protected by AR

Alternator Overhaul (cont'd)

12. With a hammer and special tools, install a new front bearing in the drive end housing.

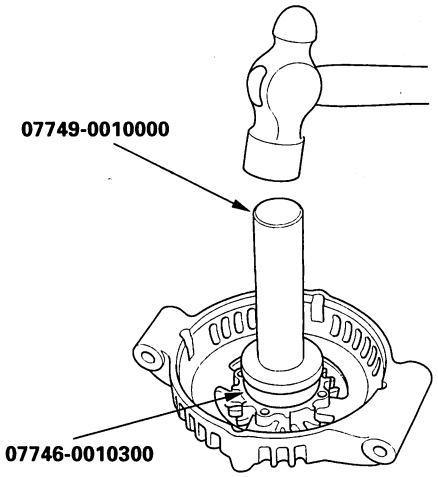

Alternator Brush Inspection

13. Measure the length of both brushes (A) with vernier calipers (B).

- If either brush is shorter than the service limit, replace the brush holder assembly.
- If the brush length is OK, go to step 14.

Alternator Brush Length
Standard (New): 10.5 mm (0.41 in.)
Service Limit: 1.5 mm (0.06 in.)

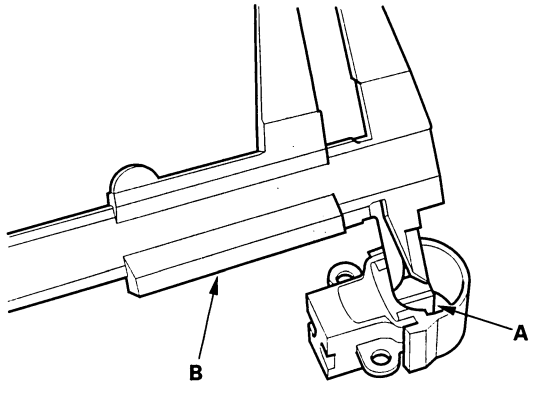

Rotor Slip Ring Test

14. Check for continuity between the slip rings (A).

- If there is continuity, go to step 15.
- If there is no continuity, replace the rotor assembly.

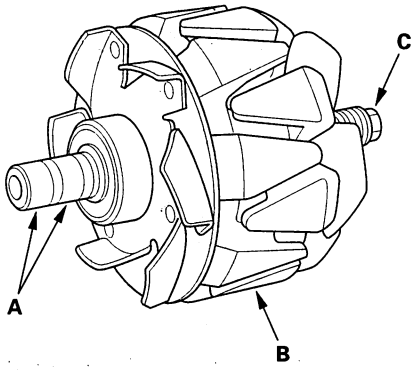

15. Check for continuity between each slip ring and the rotor (B) and the rotor shaft (C).

- If there is no continuity, replace the rear housing assembly, and go to step 16.
- If there is continuity, replace the rotor assembly.

BACK

Protected by AR

Alternator Reassembly

16. If you removed the pulley, put the rotor in the drive-end housing, then tighten its locknut to 110 N·m (11.2 kgf·m, 81.0 lbf·ft).

17. Remove any grease or oil from the slip rings.

18. Put the rear housing assembly and drive-end housing/rotor assembly together, then tighten the four through bolts.

19. Push the brushes (A) in, then insert a pin or drill bit (B) (about 1.6 mm (0.06 in.) diameter) to hold them there.

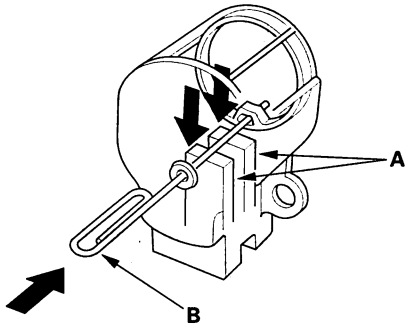

20. Install the brush holder, and pull out the pin.

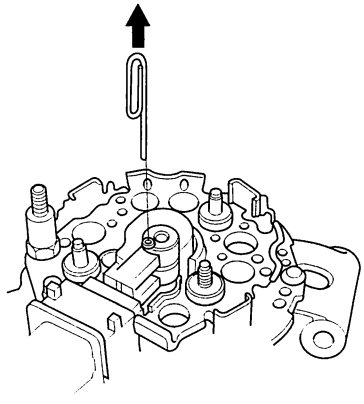

21. Install the end cover.

22. After assembling the alternator, turn the pulley by hand to make sure the rotor rotates smoothly and without noise.

23. Install the alternator and drive belt (see page 4-40).

Protected by AR

Component Location Index

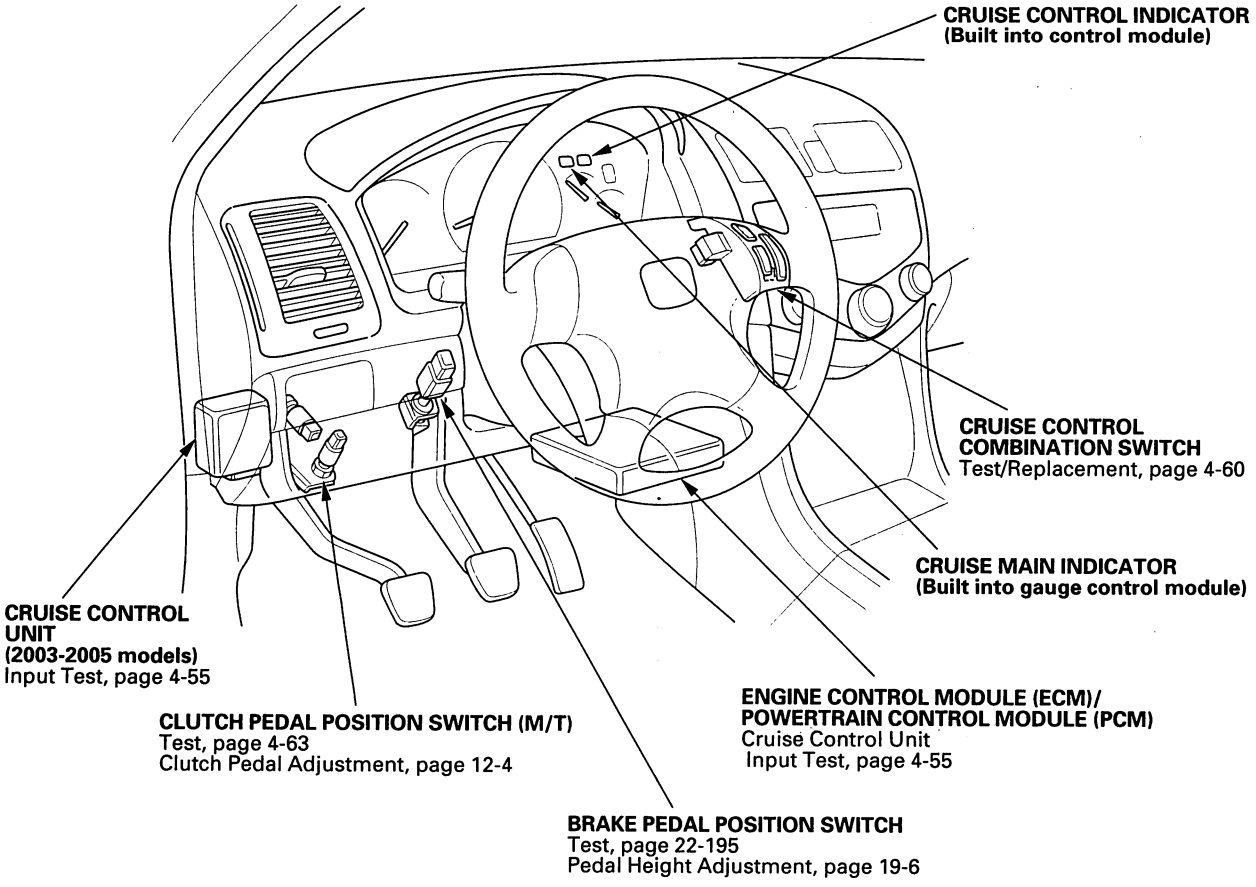

BACK

Protected by AR

2003-2005 Models

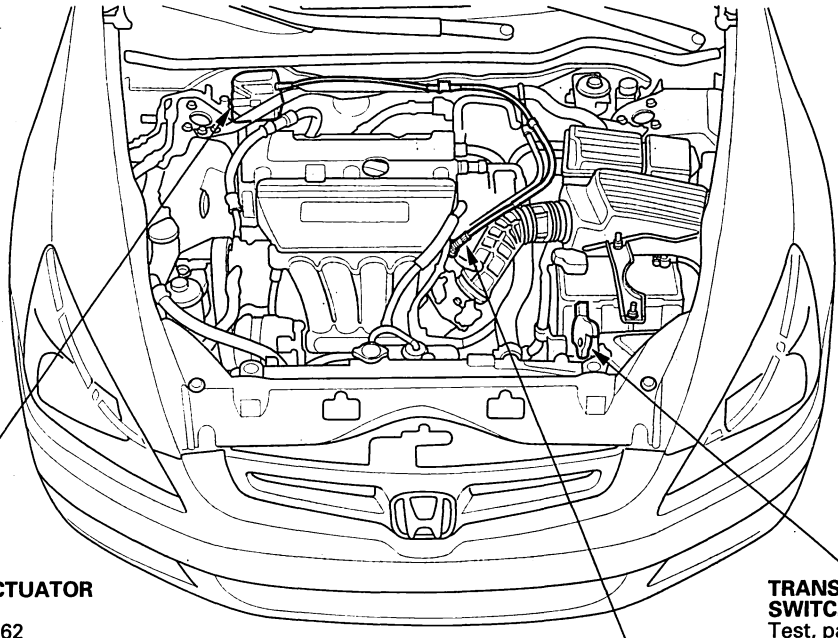

CRUISE CONTROL ACTUATOR
Test, page 4-61
Replacement, page 4-62

TRANSMISSION RANGE SWITCH (A/T)
Test, page 14-247
Replacement, page 14-249

ACTUATOR CABLE
Adjustment, page 4-63

2006 Model

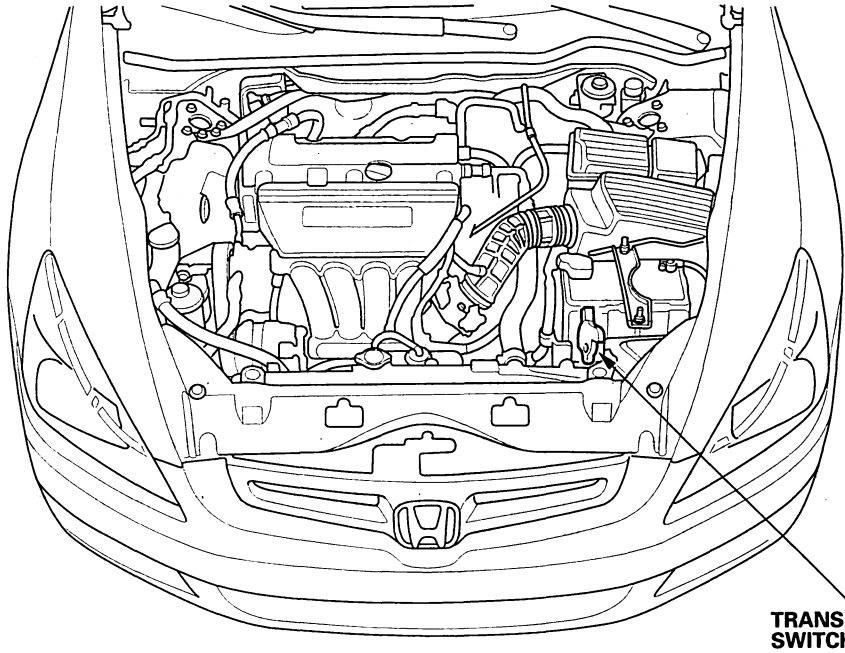

TRANSMISSION RANGE SWITCH (A/T)
Test, page 14-247
Replacement, page 14-249

Protected by AR

Symptom Troubleshooting Index

2003-2005 Models

Symptom	Diagnostic procedure	Also check for
Cruise control cannot be set	1. Check for PGM-FI and body DTCs. 2. Check horn operation. 3. Check the cruise control combination switch (see page 4-60). 4. Test the brake pedal position switch (see page 19-4), and check its adjustment (see page 19-6). 5. Test the clutch pedal position switch (see page 4-63), and check its adjustment (M/T) (see page 12-4). 6. Do the cruise control unit input test (see page 4-55). 7. Check for continuity between engine control module (ECM)/powertrain control module (PCM) connector terminal E26 and cruise control unit 14P connector terminal No. 12. • If there is continuity, replace the ECM/PCM (see page 11-227). • If there is no continuity, repair open or short in the wire.	• Blown No. 13 (20A) fuse in the under-hood fuse/relay box • Blown No. 18 (15A) fuse in the under-dash fuse/relay box • Poor ground: G202, G501 • Faulty horn relay • Faulty ECM/PCM • Open circuit, loose or disconnected terminals: GRN/YEL, LT GRN, PNK, LT GRN/BLK, GRY/RED, LT BLU (M/T), PNK (A/T)
Cruise control can be set, but the cruise main indicator does not come on	Do the gauge control module self-diagnostic function (see page 22-259).	• Faulty gauge control module • Open circuit, loose or disconnected terminals: LT GRN
Cruise control can be set, but the cruise control indicator does not come on	1. Do the gauge control module self-diagnostic function (see page 22-259). 2. Do the cruise control unit input test on terminal No. 10 (see page 4-55).	• Faulty gauge control module • Open circuit, loose or disconnected terminals: BLU/YEL • Poor ground: G501
Cruise speed is noticeably higher or lower than what was set	1. Check the cruise control actuator (see page 4-61). 2. Adjust the cruise control actuator cable (see page 4-63). 3. Do the cruise control unit input test on terminal No. 12 (see page 4-55).	
Excessive overshooting or undershooting when trying to set speed	1. Check the cruise control actuator (see page 4-61). 2. Adjust the cruise control actuator cable (see page 4-63). 3. Do the cruise control unit input test on terminal No. 12 (see page 4-55).	
Speed fluctuates on a flat road with the cruise control set	1. Check the cruise control actuator (see page 4-61). 2. Adjust the cruise control actuator cable (see page 4-63). 3. Do the cruise control unit input test on terminal No. 12 (see page 4-55).	
Vehicle does not decelerate or accelerate accordingly when the set/decel, resume/accel, or cancel switch is pressed	1. Check the cruise control combination switch (see page 4-60). 2. Do the cruise control unit input test on terminals No. 6 and No. 7 (see page 4-55).	Open circuit, loose or disconnected terminals: GRN/RED, LT GRN/BLK

BACK

Protected by AR

Symptom	Diagnostic procedure	Also check for
Set speed does not cancel (engine rpm stays high) when the clutch pedal is pressed (M/T)	1. Do the cruise control unit input test on terminal No. 14 (see page 4-55). 2. Test the clutch pedal position switch (see page 4-63), and check its adjustment (see page 12-4).	• Short to ground in the LT BLU wire • Faulty clutch pedal position switch
Set speed does not cancel (engine rpm stays high) when the shift lever is moved to N (A/T)	Do the cruise control unit input test on terminal No. 14 (see page 4-55).	• Short to ground in the PNK wire • Faulty transmission range switch
Set speed does not cancel when the brake pedal is pressed	1. Do the cruise control unit input test on terminals No. 1 and No. 5 (see page 4-55). 2. Test the brake pedal position switch (see page 19-4), and check its adjustment (see page 19-6).	• Short to power on BRN/BLK wire • Open circuit, loose or disconnected terminals: WHT/BLK • Faulty brake pedal position switch
Set speed does not cancel when the cruise control main switch is pressed	1. Check the cruise control combination switch (see page 4-60). 2. Do the cruise control unit input test on terminal No. 2 (see page 4-55).	Short to power on PNK wire
Set speed does not cancel when the cancel switch is pressed	1. Check the cruise control combination switch (see page 4-60). 2. Do the cruise control unit input test on terminals No. 6 and No. 7 (see page 4-55).	Open circuit, loose or disconnected terminals: LT GRN/BLK or GRY/RED
Set speed will not resume when the resume/accel switch is pressed (with the cruise control main switch turned on, and set speed temporarily canceled by pressing the brake pedal)	1. Check the cruise control combination switch (see page 4-60). 2. Do the cruise control unit input test on terminals No. 1, No. 5 and No. 7 (see page 4-55).	Open circuit, loose or disconnected terminals: BRN/BLK, WHT/BLK, LT GRN/BLK
The transmission shifts down slower than normal when going uphill with the cruise control on (A/T)	Troubleshoot the cruise control communication circuit (see page 4-54).	Open circuit, loose or disconnected terminals: BLU/BLK

(cont'd)

Protected by AR

Symptom Troubleshooting Index (cont'd)

2006 Model

Symptom	Diagnostic procedure	Also check for
Cruise control cannot be set	1. Check for PGM-FI and body DTCs. 2. Check the No. 13 (20 A) fuse in the under-hood fuse/relay box, and the No. 18 (15 A) fuse in the under-dash fuse/relay box. 3. Do the cruise control input test (see page 4-58). 4. Do the cruise control combination switch test (see page 4-60).	Poor ground G501
Cruise control can be set, but the cruise main indicator does not come on	1. Check for PGM-FI and body DTCs. 2. Do the gauge control module self-diagnostic function procedure (see page 22-259). 3. Do the cruise control input test (see page 4-58). Test the cruise control master button signal input.	Faulty gauge control module
Cruise control can be set, but the cruise control indicator does not come on	1. Check for PGM-FI and body DTCs. 2. Do the gauge control module self-diagnostic function procedure (see page 22-259). 3. Do the cruise control input test (see page 4-58). Test the cruise control indicator signal input.	Faulty gauge control module
Vehicle does not decelerate or accelerate accordingly when the set/decel or resume/accel switch is pressed	1. Check for PGM-FI and body DTCs. 2. Do the cruise control input test (see page 4-58). Test the cruise control Set/decel and Resume/accel switch signal inputs. 3. Do the cruise control combination switch test (see page 4-60).	Open circuit, loose or disconnected terminals: LT GRN/BLK or GRY/RED wire
Set speed does not cancel when the brake pedal is pressed	1. Check for PGM-FI and body DTCs. 2. Check the No. 13 (20 A) fuse in the under-hood fuse/relay box, and No. 18 (15 A) fuse in the under-dash fuse/relay box. 3. Do the cruise control input test (see page 4-58). Test the brake pedal position switch signal input. 4. Do the brake pedal position switch test (see page 19-4).	• Short in the BRN/BLK wire • Faulty brake pedal position switch
Set speed does not cancel (engine rpm stays high) when the clutch pedal is pressed (M/T)	1. Check for PGM-FI and body DTCs. 2. Do the cruise control input test (see page 4-58). Test the clutch pedal position switch signal input. 3. Do the clutch pedal position switch test (see page 4-60).	• Short in the LT BLU wire • Faulty clutch pedal position switch
Set speed does not cancel when the cruise control main switch is turned off	1. Check for PGM-FI and body DTCs. 2. Do the cruise control input test (see page 4-58). Test the cruise control main switch signal input. 3. Do the cruise control combination switch test (see page 4-60).	Short to ground in the LT GRN wire
Set speed does not cancel when the cancel switch is pressed	1. Check for PGM-FI and body DTCs. 2. Check the No. 13 (20 A) fuse in the under-hood fuse/relay box. 3. Do the cruise control input test (see page 4-58). Test the cruise control Cancel switch signal input. 4. Do the cruise control combination switch test (see page 4-60).	Open circuit, loose or disconnected terminals: LT GRN/BLK or GRY/RED wire

BACK

Protected by AR

Symptom	Diagnostic procedure	Also check for
Set speed will not resume when the resume/accel switch is pressed (with the cruise control main switch turned on, and set speed temporarily canceled by pressing the brake pedal)	1. Check for PGM-FI and body DTCs. 2. Check the brake pedal position switch adjustment (see page 19-5). 3. Check the No. 13 (20 A) fuse in the under-hood fuse/relay box, and No. 18 (15 A) fuse in the under-dash fuse/relay box. 4. Do the cruise control input test (see page 4-58). Test the cruise control Resume/accel switch signal input. Test the brake pedal position switch signal input. 5. Do the cruise control combination switch test (see page 4-60).	• Open circuit, loose or disconnected terminals: LT GRN/BLK, GRY/RED wire • Faulty brake pedal position switch
Set speed will not resume when the resume/accel switch is pressed (with the cruise control main switch turned on, and set speed temporarily canceled by pressing the clutch pedal) (M/T)	1. Check for PGM-FI and body DTCs. 2. Check the clutch pedal position switch adjustment (see page 12-4). 3. Do the cruise control input test (see page 4-58). Test the cruise control Resume/accel switch signal input. Test the clutch pedal position switch signal input. 4. Do the cruise control combination switch test (see page 4-60).	• Open circuit, loose or disconnected terminals: LT GRN/BLK wire • Faulty clutch pedal position switch

Protected by AR

Cruise Control

Circuit Diagram

2003-2005 Models

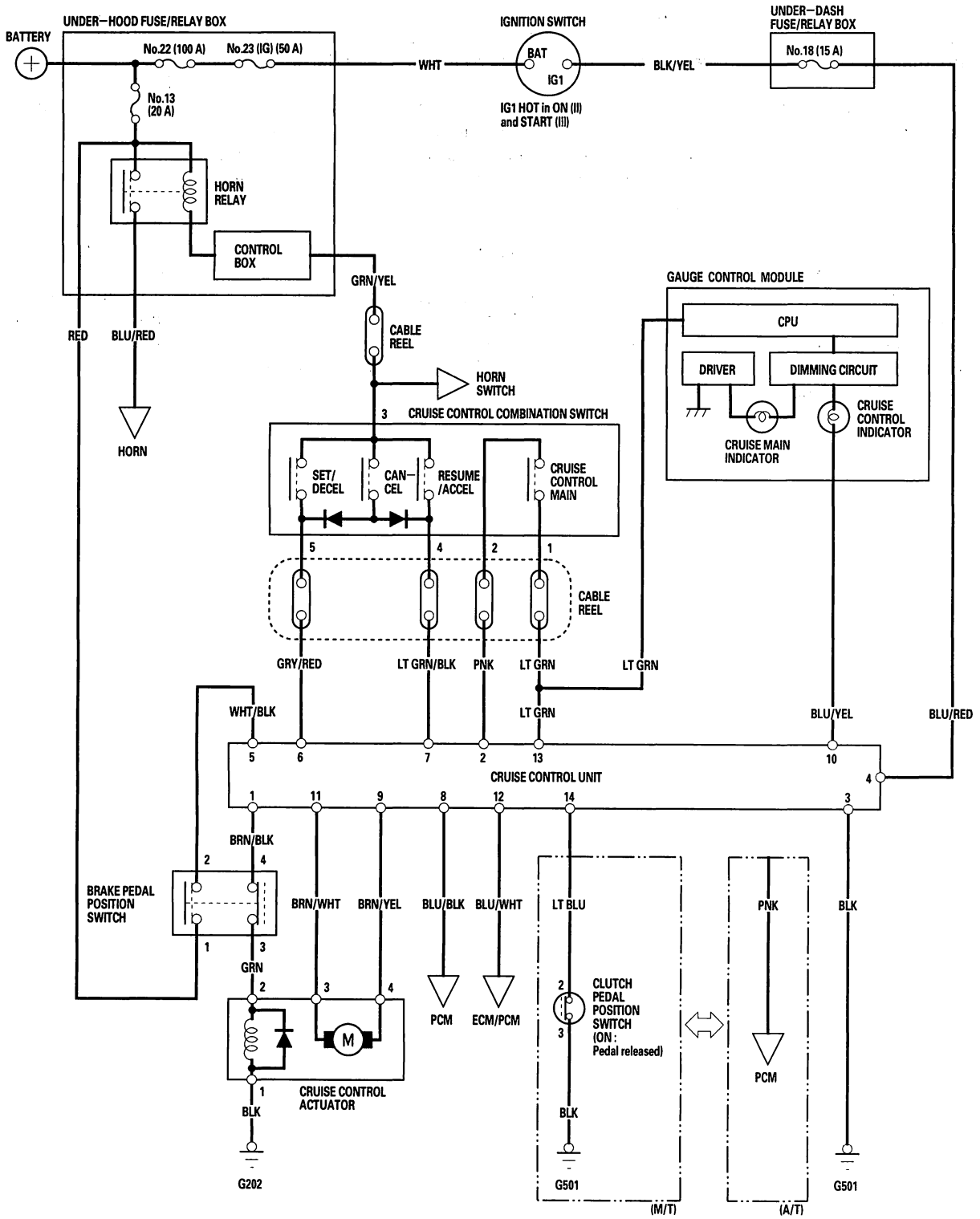

BACK

Protected by AR

2006 Model

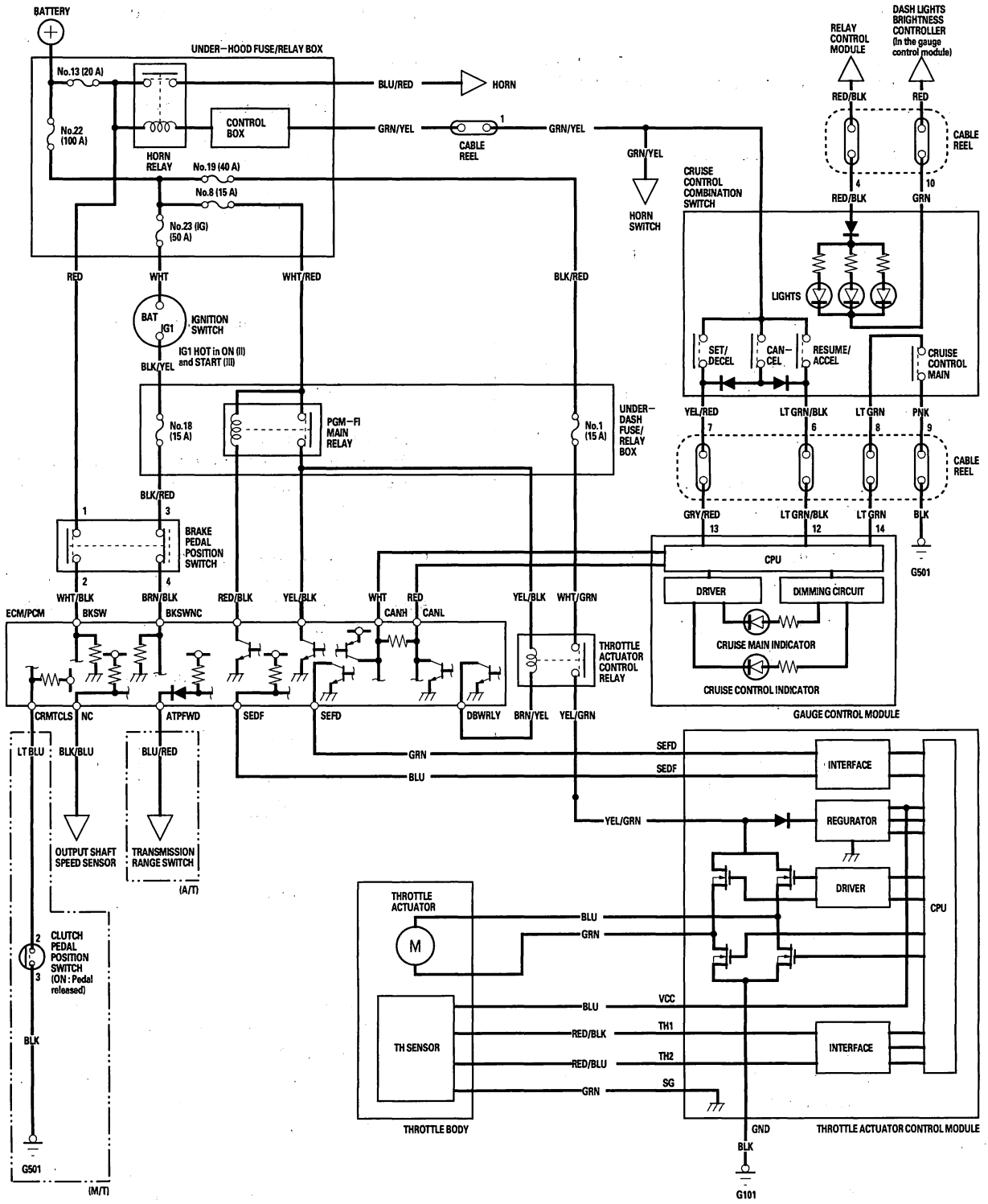

BACK

Protected by AR

Cruise Control Communication Circuit Troubleshooting

A/T (2003-2005 Models)

1. Start the engine.
2. Turn on the cruise control main switch, then drive the vehicle at speeds over 25 mph (40 km/h) with the cruise control.

   Does the cruise control operate?

   YES—Go to step 3.

   NO—Check the cruise control unit (see page 4-55) or cruise control actuator. ■
3. Turn the ignition switch OFF.
4. Connect the Honda Diagnostic System (HDS) to the data link connector (DLC) (see step 2 on page 11-3). Turn the ignition switch ON (II), and jump the SCS line with the HDS, then turn the ignition switch OFF.

   NOTE: This step must be done to protect the powertrain control module (PCM) from damage.
5. Disconnect PCM connector D (17P) and cruise control unit 14P connector.
6. Check for continuity between PCM connector terminal D12 and body ground.

PCM CONNECTOR D (17P)

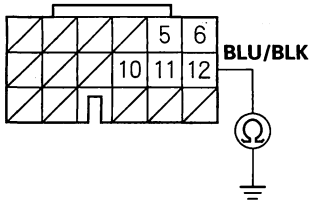

Wire side of female terminals

Is there continuity?

YES—Repair a short to ground in the wire between PCM connector terminal D12 and the cruise control unit 14P connector terminal No. 8. ■

NO—Go to step 7.

7. Reconnect PCM connector D (17P) and the cruise control unit 14P connector.
8. Connect a voltmeter between cruise control unit 14P connector terminal No. 8 and body ground. Test-drive the vehicle at speeds over 25 mph (40 km/h) with the cruise control set, and watch the voltmeter.

CRUISE CONTROL UNIT 14P CONNECTOR

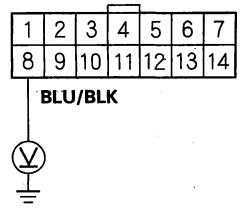

Wire side of female terminals

Is there about 1 V?

YES—Go to step 9.
NO—Substitute a known-good cruise control unit. If the system works properly, replace the cruise control unit. ■

9. Connect a voltmeter between PCM connector terminal D12 and body ground. Drive the vehicle at speeds over 25 mph (40 km/h) with the cruise control set, and watch the voltmeter.

PCM CONNECTOR D (17P)

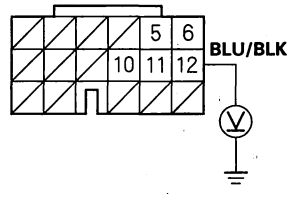

Wire side of female terminals

Is there about 1 V?

YES—Check for a loose connector or wire between the cruise control unit and the PCM. If the wire is OK, update the PCM. If it does not have the latest software (see page 11-6), substitute a known-good PCM (see page 11-7), and recheck. If the system works properly, replace the original PCM (see page 11-227). ■
NO—Repair an open in the wire between PCM connector terminal D12 and the control unit 14P connector terminal No. 8. ■

BACK

Protected by AR

Cruise Control Unit Input Test

2003-2005 Models

SRS components are located in this area. Review the SRS component locations (see page 23-17) and precautions and procedures (see page 23-19), before doing repairs or service.

1. Disconnect the 14P connector from the control unit.
2. Inspect the connector and socket terminals to make sure they are all making good contact.
   - If the terminals are bent, loose, or corroded, repair them as necessary, and recheck the system.
   - If the terminals look OK, go to step 3.

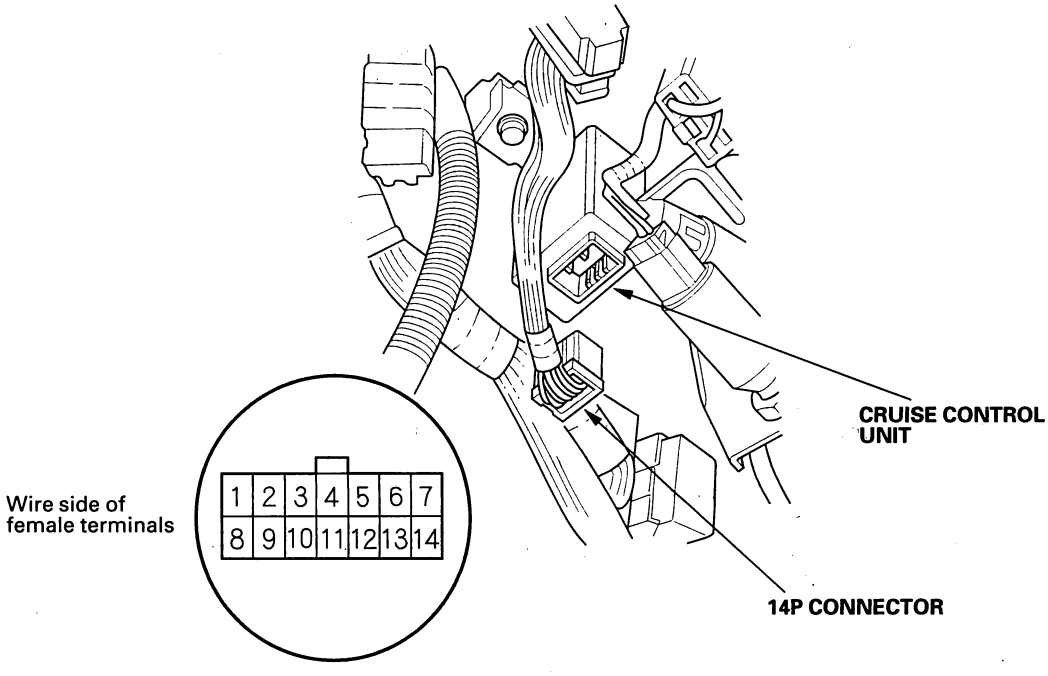

3. With the 14P connector disconnected, do these input tests.
   - If test indicates a problem, find and correct the cause, then recheck the system.
   - If all the input tests prove OK, the cruise control unit may by faulty. Substitute a known-good cruise control unit, and retest. If the system works properly, replace the cruise control unit.

Cavity	Wire	Test condition	Test: Desired result	Possible cause if result is not obtained
1	BRN/BLK	Connect battery power	Check the operation of the magnetic clutch: Clutch should click and output link should be locked.	• Faulty brake pedal position switch • Faulty actuator • Poor ground (G202) • An open in the wire • Short to ground

(cont'd)

Protected by AR

Cruise Control Unit Input Test (cont'd)

Cavity	Wire	Test condition	Test: Desired result	Possible cause if result is not obtained
3	BLK	Under all conditions	Check for continuity to ground: There should be continuity.	• Poor ground (G501) • An open in the wire
4	BLK/RED	Ignition switch ON (II)	Check for voltage to ground: There should be battery voltage.	• Blown No. 18 (15A) fuse in the under-dash fuse/relay box • An open in the wire
5	WHT/BLK	Brake pedal pressed, then released	Check for voltage to ground: There should be battery voltage with the pedal pressed, and 0 V with the pedal released.	• Blown No. 13 (20A) fuse in the under-hood fuse/relay box • Faulty brake pedal position switch • An open in the wire
6	GRY/RED	Set/decel switch pressed	Check for voltage to ground: There should be battery voltage. When testing terminal No. 6, there should be no voltage on terminal No. 7.	• Blown No. 13 (20A) fuse in the under-hood fuse/relay box • Faulty horn relay • Faulty cruise control combination switch • Faulty cable reel • An open in the wire
7	LT GRN/ BLK	Resume/accel switch pressed	Check for voltage to ground: There should be battery voltage. When testing terminal No. 7, there should be no voltage on terminal No. 6.	
9 11	BRN/YEL BRN/WHT	Connect battery power to the BRN/ YEL terminal and ground to the BRN/ WHT terminal	Check the operation of the actuator motor: You should hear the motor.	• Faulty actuator • An open in the wire
10	BLU/YEL	Ignition switch ON (II)	Attach to ground: CRUISE CONTROL indicator in the gauge assembly should comes on.	• Blown bulb • Faulty gauge control module • An open in the wire
12	BLU/WHT	Ignition switch ON (II) and cruise control main switch ON; raise the front of the vehicle, and rotate one wheel slowly while holding the other wheel NOTE: This input test must be done with the 14P connector reconnected.	Check for voltage between the BLU/WHT (+) and BLK (—) terminal: There should be 0—5 V or more repeatedly.	• Faulty ECM/PCM • An open in the wire • Short to ground

BACK

Protected by AR

Cavity	Wire	Test condition	Test: Desired result	Possible cause if result is not obtained
13	LT GRN	Cruise control main switch ON, then OFF	Check for continuity between No. 2 terminal and No. 13 terminal: There should be continuity with the cruise control main switch ON and no continuity with the cruise control main switch OFF.	• Faulty cruise control combination switch • Faulty cable reel • An open in the wire
14	M/T: LT BLU	Clutch pedal released	Check for continuity to ground: There should be continuity. NOTE: There should be no continuity when the clutch pedal is pressed.	• Faulty clutch pedal position switch • Poor ground (G501) • An open in the wire
	A/T: PNK	Shift lever in D, D3	Check for continuity to ground: There should be continuity. NOTE: There should be no continuity when shift lever is in other positions.	• Faulty ECM/PCM • An open in the wire
2	PNK	Reconnect the cruise control unit 14P connector, turn the ignition switch ON (II), and cruise control main switch ON	Check for voltage to ground: There should be battery voltage.	• Blown No. 18 (15A) fuse in the under-dash fuse/relay box • Faulty cruise control unit • Short to ground
8	BLU/BLK	Reconnect the cruise control unit 14P connector, start the engine, press the cruise control main switch ON, and drive the vehicle at speeds over 25 mph (40 km/h) with the cruise control set	Check for voltage to ground: There should be about 1V	• Blown No. 18 (15A) fuse in the under-hood fuse/relay box • Faulty cruise control unit • Short to ground • Cruise control communication circuit problem (see page 4-54)

Protected by AR

Cruise Control Input Test

2006 Model

1. Connect the Honda Diagnostic System (HDS) to the data link connector (DLC).
2. Go to B-CAN System Diagnosis Test Mode A, and check for DTCs.
3. Go to PGM-FI, and check for DTCs.
4. Turn the ignition switch ON (II).
5. Do the following tests while monitoring parameters in the PGM-FI DATA LIST with the HDS.

Signal to be tested	Test condition	Parameter: Desired result	Possible cause if result is not obtained
Brake switch signal	Brake pedal pressed, then released	CRUISE BRAKE SW should indicate OFF when the brake pedal is pressed and ON when the brake pedal is released.	• Faulty brake pedal position switch • Blown No.18 (15 A) fuse in the under-dash fuse/relay box • An open in the wire between the ECM/PCM and the brake pedal position switch • A wire shorted to ground between the ECM/PCM and the brake pedal position switch
Clutch pedal position switch signal (M/T)	Clutch pedal pressed, then released	SHIFT/CLUTCH SW should indicate OFF when the clutch pedal is pressed and ON when the clutch pedal is released.	• Faulty clutch pedal position switch • An open in the wire between the ECM and the clutch pedal position switch • A wire shorted to ground between the ECM and the clutch pedal position switch • Poor ground G501
Transmission range switch signal (A/T)	Shift lever in D, or D3 position	SHIFT/TRANS RANGE SW should indicate OFF in P, R, and N position and ON in D, and D3 position.	• Faulty transmission range switch • An open in the wire between the PCM and the transmission range switch • A wire shorted to ground between the PCM and the transmission range switch • Poor ground G101
Cruise control main switch signal	Cruise control main switch ON and OFF	CRUISE MASTER SW should indicate ON when the cruise control main switch is turned ON and OFF when the cruise control main switch is turned OFF.	• Faulty cruise control combination switch • An open in the wire between the gauge assembly and the cruise control combination switch • A wire shorted to ground between the gauge assembly and the cruise control combination switch • An open in the wire between the cruise control combination switch and the ground
Set switch signal	Set/decel switch pressed and released	CRUISE SET SW should indicate ON when the Set/decel switch is pressed and OFF when the Set/decel switch is released.	• Faulty cruise control combination switch • An open in the wire between the gauge assembly and the cruise control combination switch • A wire shorted to ground between the gauge assembly and the cruise control combination switch

BACK

Protected by AR

Signal to be tested	Test condition	Parameter: Desired result	Possible cause if result is not obtained
Resume switch signal	Resume/accel pressed and released	CRUISE RESUME SW should indicate ON when the Resume/ accel is pressed and OFF when the Resume/ accel is released.	• Faulty cruise control combination switch • An open in the wire between the gauge assembly and the cruise control combination switch • A wire shorted to ground between the gauge assembly and the cruise control combination switch
Cancel switch signal	Cancel switch pressed and released	CRUISE CANCEL SW should indicate ON when the Cancel switch is pressed and OFF when the Cancel switch is released.	• Faulty cruise control combination switch

Protected by AR

Cruise Control Combination Switch Test/Replacement

SRS components are located in this area. Review the SRS component locations (see page 23-17), and the precautions and procedures (see page 23-19), before doing repairs or service.

1. Remove the driver's airbag (see page 23-197).
2. Remove the two screws, then disconnect the connector, and remove the switch.

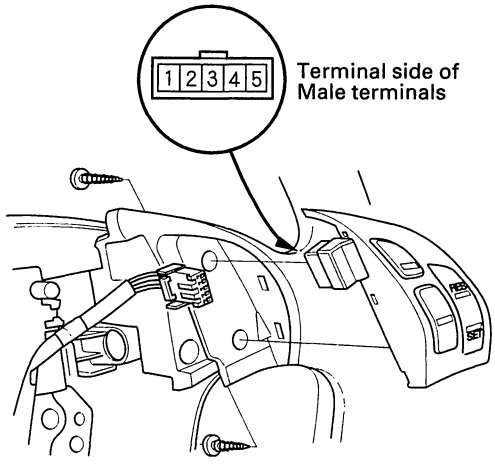

3. Check for continuity between the terminals in each switch position according to the table.
   - If there is continuity, and it matches the table, but switch failure occurred on the cruise control unit input test, check and repair the wire harness on the switch circuit.
   - If there is no continuity in one or both positions, replace the switch.

Terminal / Position	1	2	3		4	5
Cruise control main switch (ON)	○	○				
Cruise control main switch (OFF)						
Set/decel (PRESSED)			○			○
Resume/accel (PRESSED)			○		○	
Cancel (PRESSED)			○	▶		○
				▶	○	

BACK

Protected by AR

Cruise Control Actuator Test

2003-2005 Models

1. Disconnect the 4P connector (A) from the actuator (B).

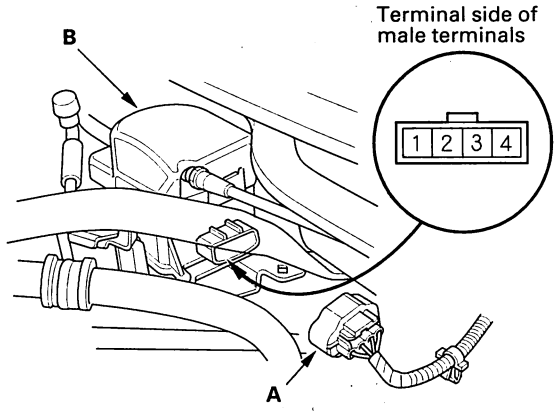

2. Remove the cover (A), and check the output linkage (B) for smooth movement.

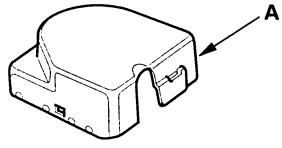

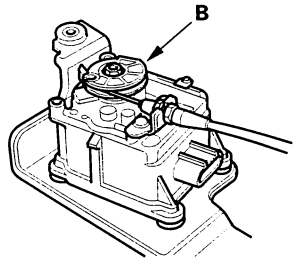

3. Connect battery power to the No. 2 terminal and ground to the No. 1 terminal.

4. Check for a clicking sound from the magnetic clutch. The output linkage should be locked. If the output linkage is not locked, replace the actuator assembly.

5. Check the operation of the actuator motor in each output linkage position according to the table. You should hear the motor.

Battery power polarities		Output linkage position		
(+)	(−)	FULL CLOSE	MIDDLE POSITION	FULL OPEN
No. 4 Terminal	No. 3 Terminal	The motor runs.	The motor runs.	The motor stops.
No. 3 Terminal	No. 4 Terminal	The motor stops.	The motor runs.	The motor runs.

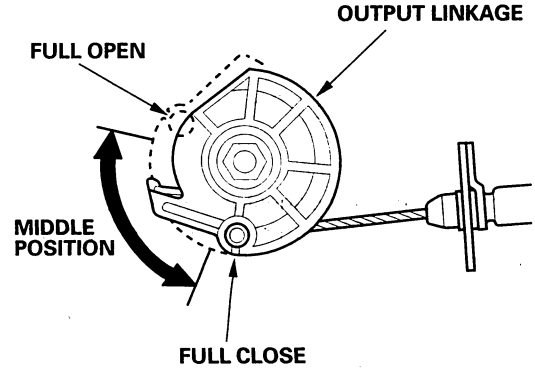

6. If the actuator motor does not operate as specified, replace the actuator assembly.

Protected by AR

Cruise Control Actuator/Cable Replacement

2003-2005 Models

1. Loosen the locknut (A), then remove the cruise control cable (B) from the throttle linkage.

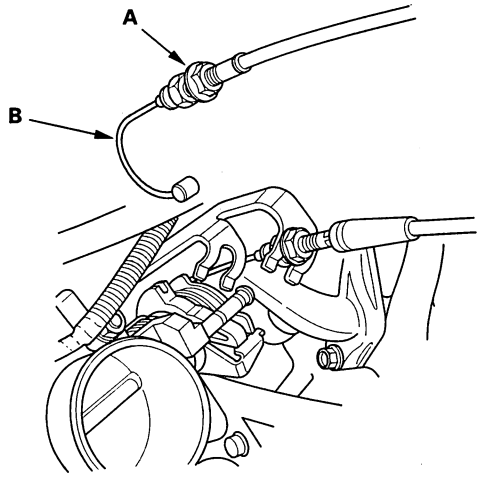

2. Disconnect the 4P connector (A), and remove the actuator cover (B), then remove the bolts securing the actuator.

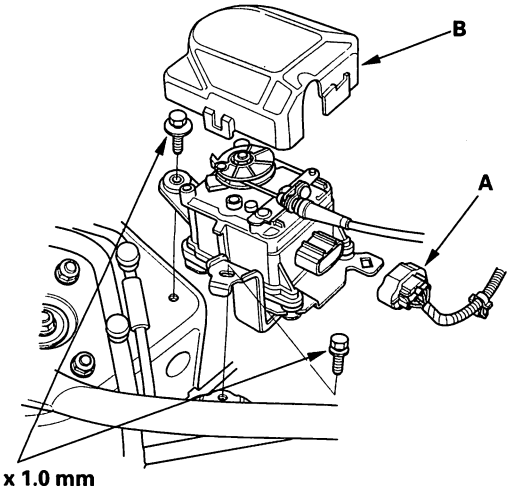

6 x 1.0 mm
9.8 N·m (1.0 kgf·m, 7.2 lbf·ft)

3. Remove the actuator cable from the actuator.

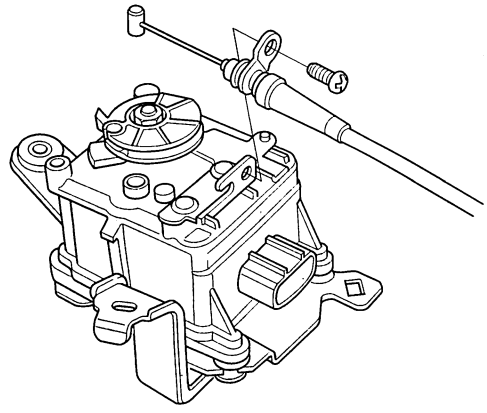

4. Install in the reverse order of removal, and adjust the free play at the throttle linkage after connecting the cruise control cable.

BACK

Protected by AR

Cruise Control Actuator Cable Adjustment

2003-2005 Models

1. Check that the actuator cable (A) moves smoothly with no binding or sticking.

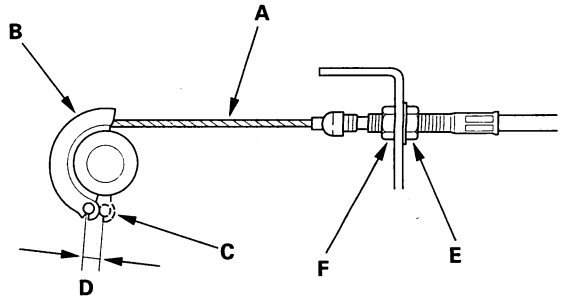

2. Measure the amount of movement of the output linkage (B) until the engine speed starts to increase. At first, the output linkage should be located at the fully closed position (C). The free play (D) should be 3.75±0.5 mm (0.15±0.02 in.).

3. If the free play is not within specs, loosen the locknut (E), and turn the adjusting nut (F) until the free play is as specified, then retighten the locknut.

Clutch Pedal Position Switch Test

1. Disconnect the 3P connector from the clutch pedal position switch.

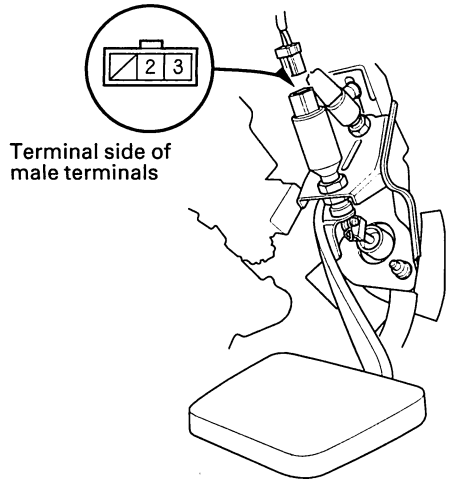

2. Check for continuity between the terminals according to the table.

   - If the continuity is not as specified, replace the clutch pedal position switch.
   - If OK, install the clutch pedal position switch, and adjust the pedal height (see page 12-4).

Terminal / Clutch Pedal Position Switch	1	2	3
PRESSED			
RELEASED		○——	——○

Protected by AR

Engine Mount Control System

Component Location Index

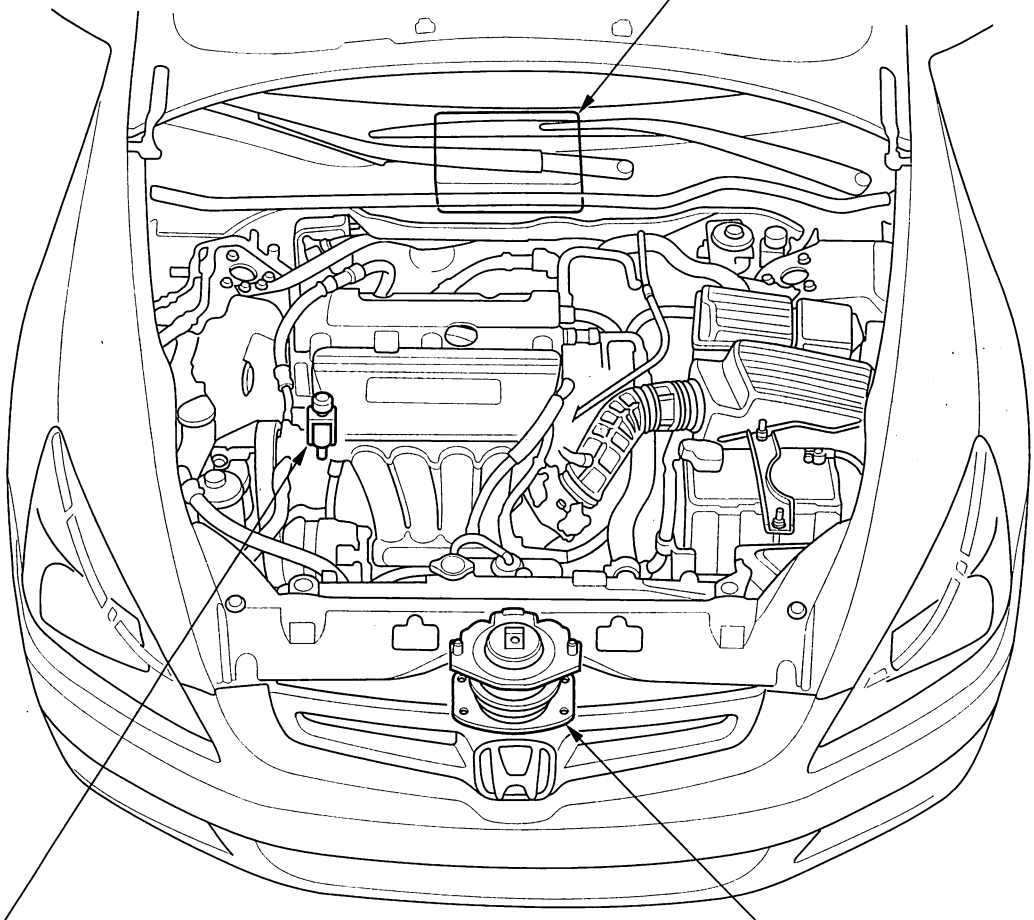

BACK

Protected by AR

Circuit Diagram

A/T

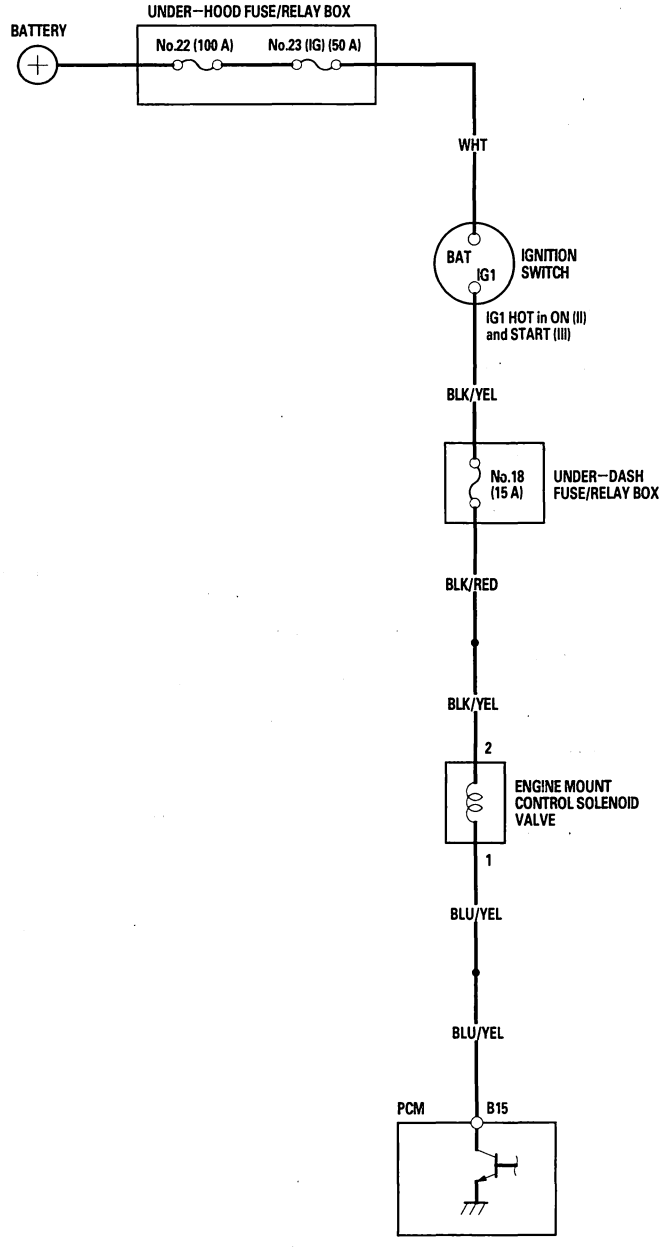

Protected by AR

Engine Mount Control System

Troubleshooting

Special Tools Required
Vacuum pump/gauge, 0—30 in.Hg
Snap-on YA4000A or equivalent, commercially available

NOTE: Check the vacuum hoses and lines for damage and proper connections before troubleshooting.

Follow this procedure if the engine vibrates excessively when idling.

1. Check the idle speed (see page 11-315).
2. Raise the engine speed from idling to 2,000 rpm.
3. Check the MOUNT CTRL SOL in the PGM-FI DATA LIST with the Honda Diagnostic System (HDS).

   Is ON indicated at idling and OFF indicated at 2,000 rpm?

   YES—Go to step 4.

   NO—Update the powertrain control module (PCM) if it does not have the latest software (see page 11-6), or substitute a known-good PCM (see page 11-7), then recheck. If the engine mount control system works properly, and the PCM was updated, the troubleshooting is complete. If the PCM was substituted, replace the original PCM (see page 11-5).■
4. A/T model: Shift to P or N.
5. Disconnect the engine mount control solenoid valve 2P connector from the engine mount control solenoid valve.
6. Measure voltage between engine mount control solenoid valve 2P connector terminal No. 2 and body ground.

ENGINE MOUNT CONTROL SOLENOID VALVE 2P CONNECTOR

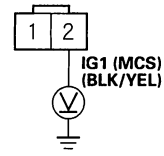

Wire side of female terminals

Is there battery voltage?

YES—Go to step 7.

NO—Repair an open in the wire between the engine mount control solenoid valve 2P connector terminal No. 2 and No. 18 (15A) fuse in the under-dash fuse/relay box.■

7. Measure voltage between engine mount control solenoid valve 2P connector terminals No. 1 and No. 2.

ENGINE MOUNT CONTROL SOLENOID VALVE 2P CONNECTOR

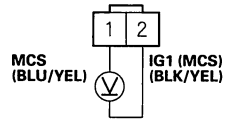

Wire side of female terminals

Is there battery voltage?

YES—Go to step 8.

NO—Repair an open in the wire between PCM (B15) and the engine mount control solenoid valve 2P connector. If the wire is OK, update the PCM if it does not have the latest software (see page 11-6), or substitute a known-good PCM (see page 11-7), and recheck. If the engine mount control system works properly, and the PCM was updated, the troubleshooting is complete. If the PCM was substituted, replace the original PCM (see page 11-227).■

BACK

Protected by AR

8. Raise the engine speed above 1,000 rpm.

9. Measure voltage between engine mount control solenoid valve 2P connector terminals No. 1 and No. 2.

ENGINE MOUNT CONTROL SOLENOID VALVE 2P CONNECTOR

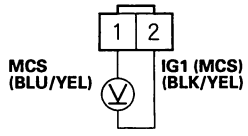

Wire side of female terminals

Is there battery voltage?

YES—Repair a short to body ground in the wire between PCM (B15) and the engine mount control solenoid valve. If the wire is OK, update the PCM if it does not have the latest software (see page 11-6), or substitute a known-good PCM (see page 11-7), and recheck. If the engine mount control system works properly, and the PCM was updated, the troubleshooting is complete. If the PCM was substituted, replace the original PCM (see page 11-227).■

NO—Go to step 10.

10. Disconnect the upper vacuum hose (A) from the engine mount control solenoid valve (B), and connect a vacuum pump/gauge, 0—30 in. Hg, to the hose. Apply about 20 in.Hg of vacuum, and wait 20 seconds.

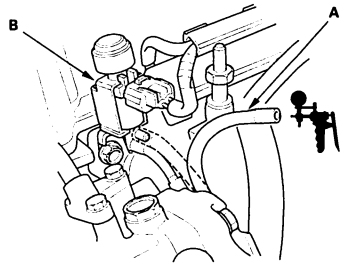

Does the engine mount hold vacuum?

YES—Go to step 11.

NO—Either the vacuum hose or the engine mount has a vacuum leak. Repair as needed.■

11. Release the vacuum, then apply vacuum again.

Is there a noticeable change in idle smoothness with and without vacuum applied?

YES—Go to step 12.

NO—Replace the front engine mount.■

12. Connect a vacuum pump/gauge, 0—30 in. Hg, to the engine mount control solenoid valve (A).

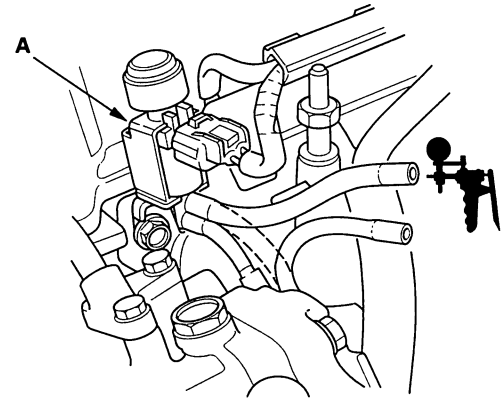

Is there manifold vacuum at idle, and a decrease in manifold vacuum when you raise the engine speed above 1,000 rpm?

YES—The system is OK.■

NO—Replace the engine mount control solenoid valve.■

Protected by AR

BACK

Protected by AR

Engine Mechanical



Engine Assembly
Engine Removal 5-2
Engine Installation 5-10

Cylinder Head **6-1**

Engine Block **7-1**

Engine Lubrication **8-1**

Intake Manifold and Exhaust System **9-1**

Protected by AR

Engine Assembly

Engine Removal

NOTE:
- Use fender covers to avoid damaging painted surfaces.
- To avoid damaging the wire and terminals, unplug the wiring connectors carefully while holding the connector portion.
- Mark all wiring and hoses to avoid misconnection. Also, be sure that they do not contact other wiring or hoses, or interfere with other parts.

1. Secure the hood in the wide open position (support rod in the lower hole).
2. Make sure you have the anti-theft codes for the radio and navigation system, then write down the customer's audio presets . Make sure the ignition switch is OFF.
3. Relieve the fuel pressure (see page 11-330).
4. Disconnect the negative cable from the battery first, then disconnect the positive cable.
5. Remove the battery.
6. Disconnect the intake air temperature (IAT) sensor connector (A).

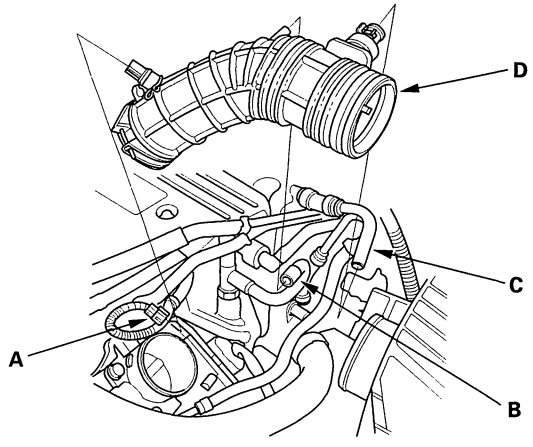

7. Remove the vacuum hose (B) and breather pipe (C), then remove the intake air duct (D).
8. Remove the air cleaner housing (see page 11-361).
9. Remove the harness clamp (A).

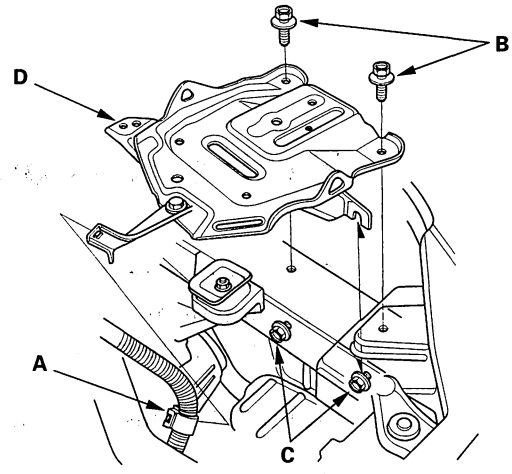

10. Remove the two bolts (B), and loosen the two bolts (C) securing the battery base, then remove the battery base (D).
11. Remove the battery cables (A) from the under-hood fuse/relay box, then disconnect the harness connector (B).

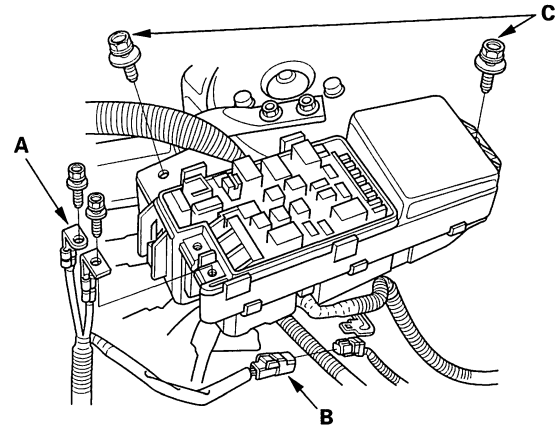

12. Remove the two bolts (C) securing the under-hood fuse/relay box.

BACK

Protected by AR

13. 2003-2005 models: Remove the throttle cable (A) and cruise control actuator cable (B) by loosening the locknuts (C), then slipping the cable ends out of the accelerator linkage. Take care not to bend the cables when removing them. Always replace any kinked cable with a new one.

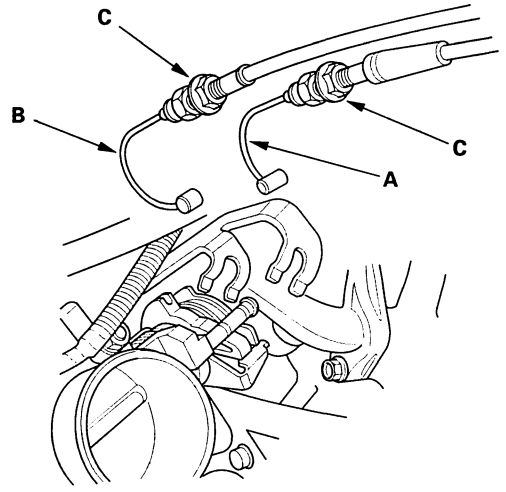

14. 2006 model: Remove the harness clamp (A) and bolt (B), then remove the strut brace (C).

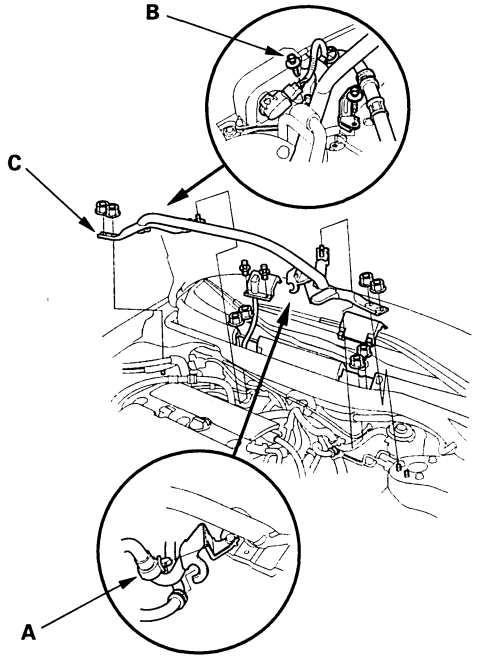

15. Remove the quick-connect fitting cover (A), then disconnect the fuel feed hose (see page 11-338).

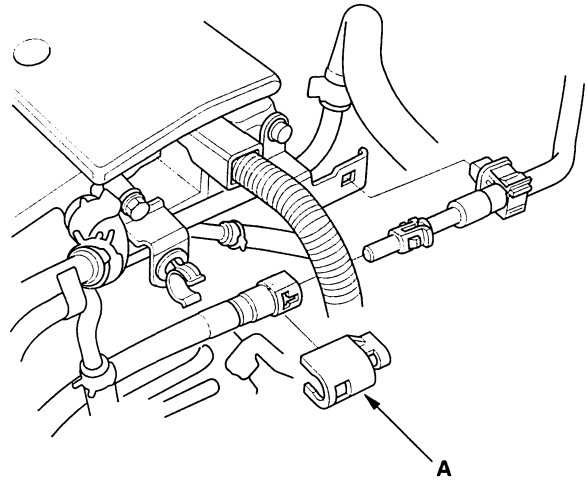

16. Remove the evaporative emission (EVAP) canister hose (A) and brake booster vacuum hose (B).

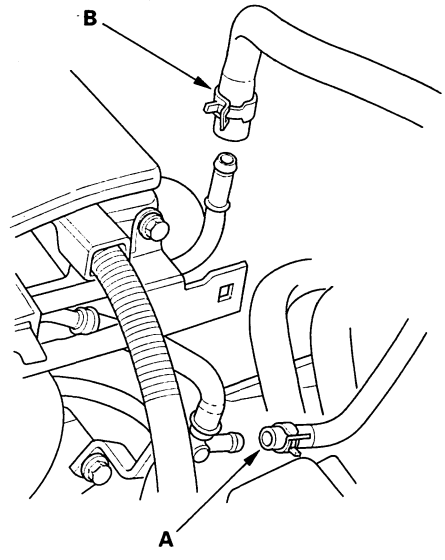

(cont'd)

Protected by AR

Engine Removal (cont'd)

17. 2003-2005 models: Remove the harness clamp (A), then disconnect the engine wire harness connectors (B) on the left side of the engine compartment.

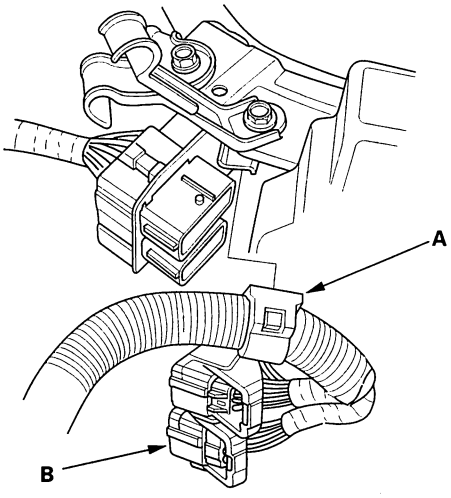

18. 2006 model: Disconnect the engine control module (ECM)/powertrain control module (PCM) connectors (A) and the main wire harness connectors (B).

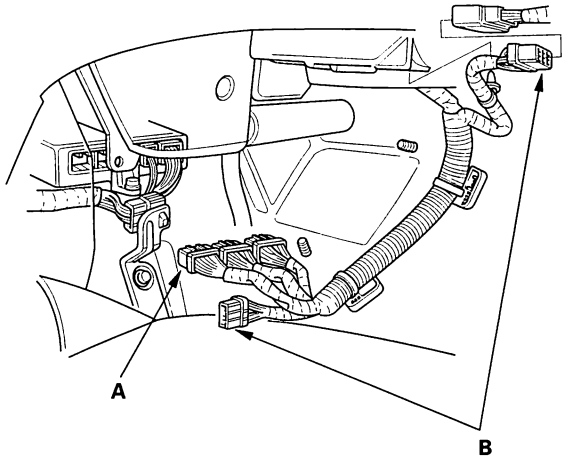

19. 2006 model: Disconnect the accelerator pedal position (APP) sensor connector (A).

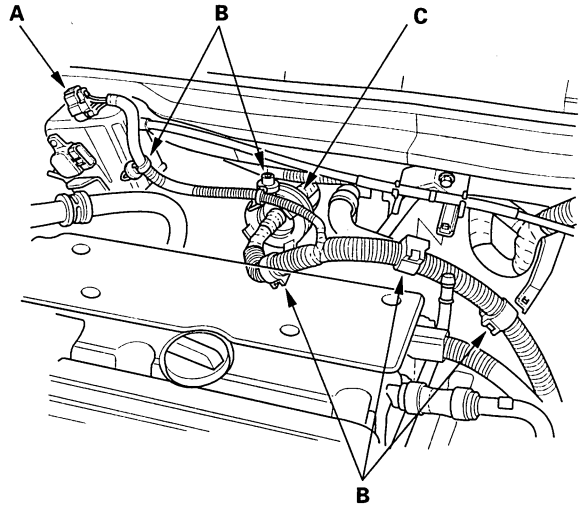

20. 2006 model: Remove the harness clamps (B) and grommet (C), then pull the engine wire harness through the bulkhead.

21. M/T model: Remove the clutch slave cylinder (A), and clutch line bracket mounting bolt (B).

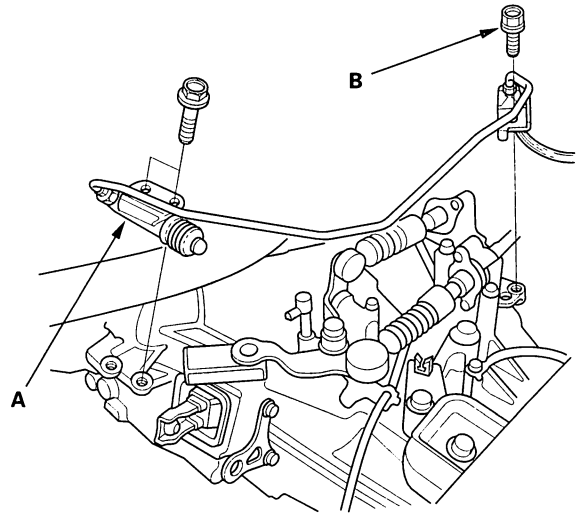

BACK

Protected by AR

22. M/T model: Remove the shift cable (A) and select cable (B).

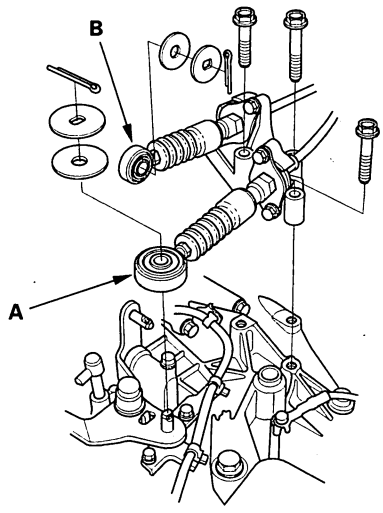

23. Disconnect the air fuel ratio (A/F) sensor connector.

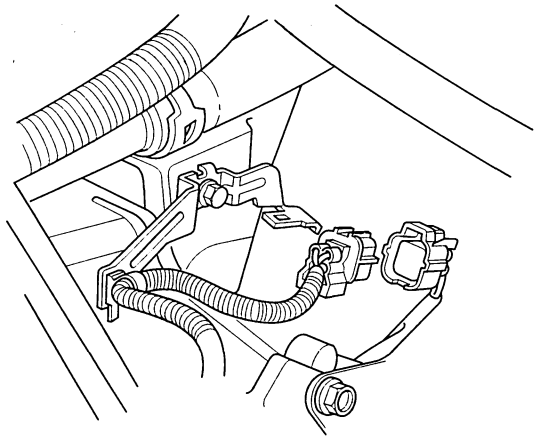

24. Remove the drive belt (see page 4-37).

25. Remove the power steering (P/S) pump (A), and the P/S hose clamp (B). Do not disconnect the P/S hoses from the pump.

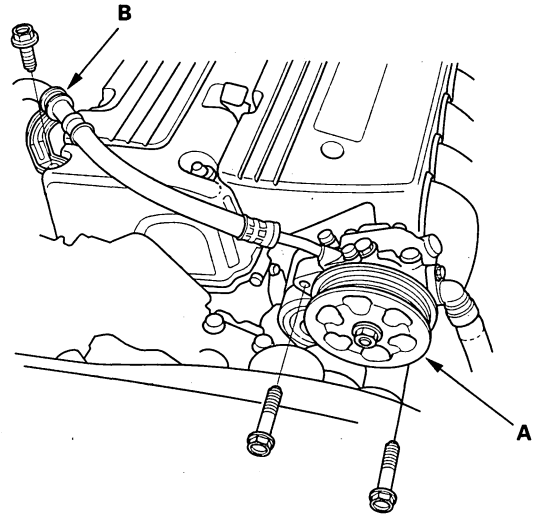

26. Remove the A/C compressor without disconnecting the A/C hoses.

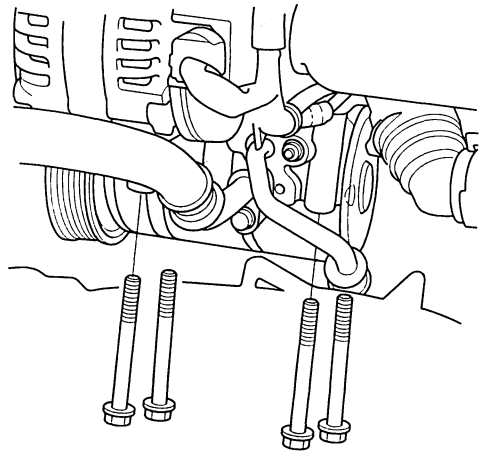

(cont'd)

Protected by AR

Engine Removal (cont'd)

27. Remove the radiator cap.

28. Raise the vehicle on the hoist to full height.

29. Remove the front wheels.

30. Loosen the drain plug in the radiator and drain the engine coolant (see page 10-6).

31. Drain the transmission fluid:

    - Manual transmission (see page 13-3)
    - Automatic transmission (see page 14-208)

32. Drain the engine oil (see page 8-6).

33. Disconnect the stabilizer links (see page 18-22).

34. Remove the damper fork (see step 3 on page 18-25).

35. Separate the knuckles from the lower arm ball joints (see step 6 on page 18-21).

36. Remove the driveshafts (see step 12 on page 16-6). Coat all precision-finished surfaces with clean engine oil. Tie plastic bags over the driveshaft ends.

37. Remove exhaust pipe A.

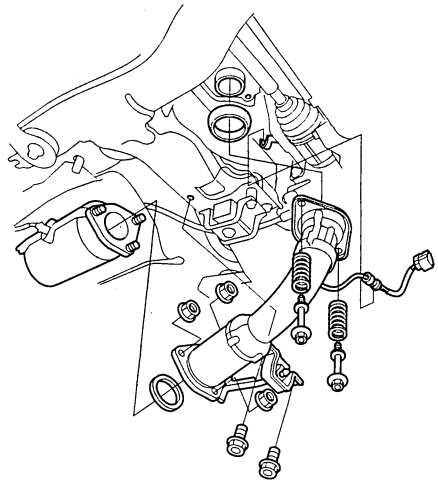

38. A/T model: Remove the three bolts securing the shift cable holder (A), then remove the shift cable cover (B).

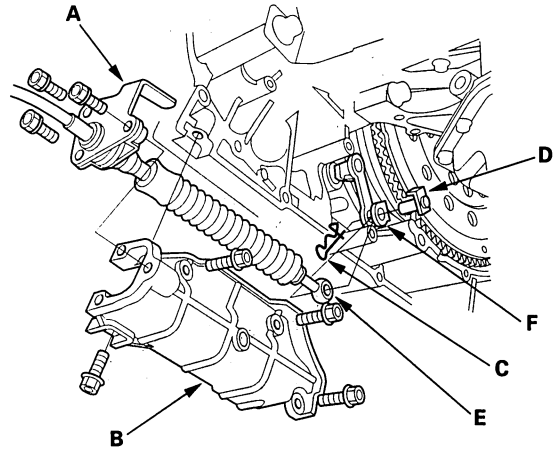

39. A/T model: Remove the spring clip (C) and control pin (D), then separate the shift cable (E) from the control lever (F). Do not bend the cable excessively.

40. Remove the nuts securing the transmission lower front mount and transmission lower rear mount.

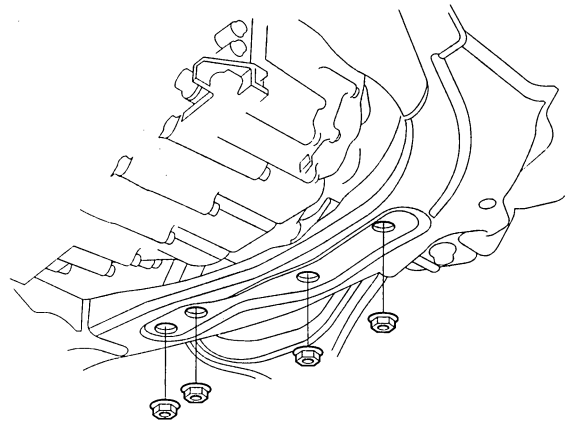

BACK

Protected by AR

41. Lower the vehicle on the hoist.

42. A/T model: Remove the automatic transmission fluid (ATF) cooler hoses.

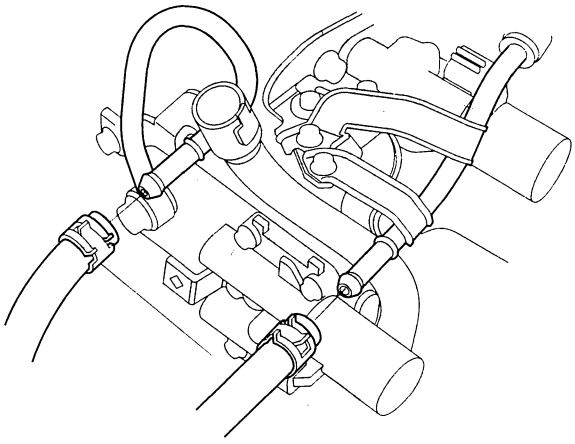

43. Remove the upper radiator hose (A) and heater hoses (B).

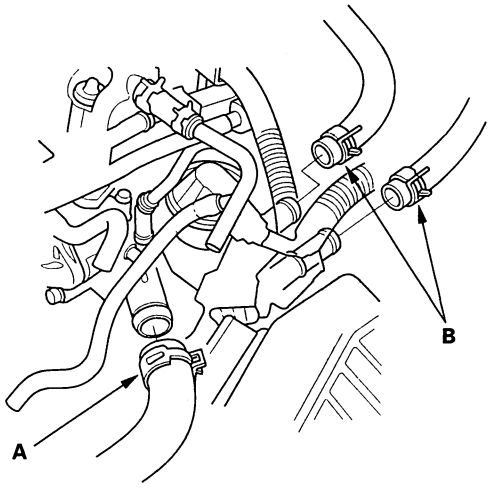

44. Clean any dirt off the quick connector (A), thermostat cover, and lower radiator hose.

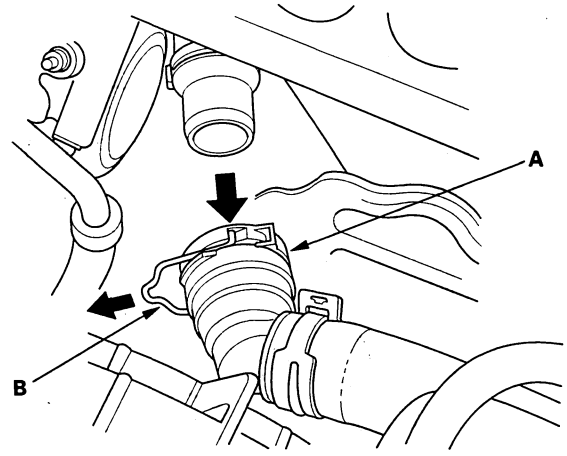

45. Pull out the lock (B) by hand, then wiggle the quick connector loose, and remove it from the thermostat cover. Do not use any tools to remove the quick connector.

46. Remove the ground cable (A), then remove the upper bracket (B).

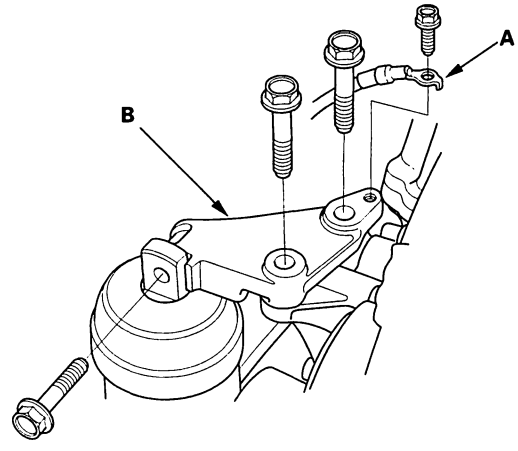

(cont'd)

Protected by AR

Engine Removal (cont'd)

47. Attach the chain hoist to the engine as shown.

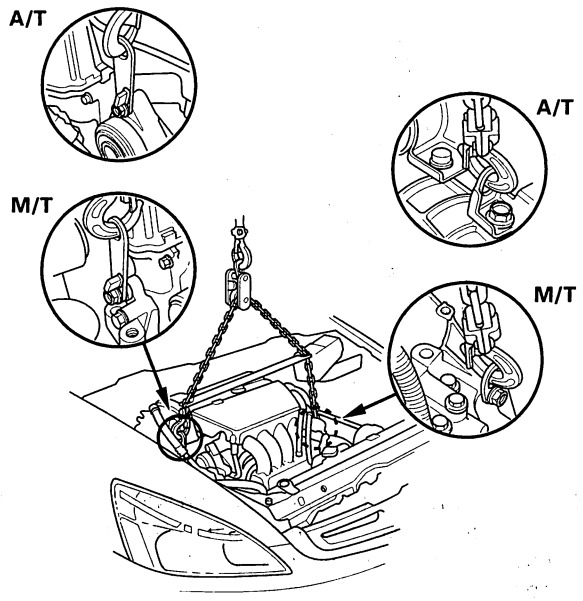

48. M/T model: Remove the ground cable (A), then remove the transmission upper mount/bracket assembly (B) and clutch line clamp bracket (C).

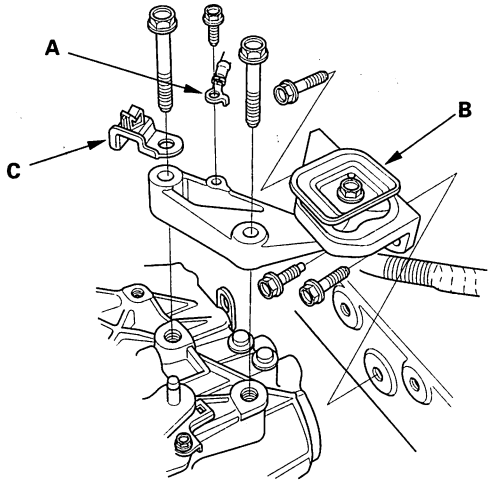

49. A/T model: Remove the ground cable (A), then remove the transmission upper mount/bracket assembly (B).

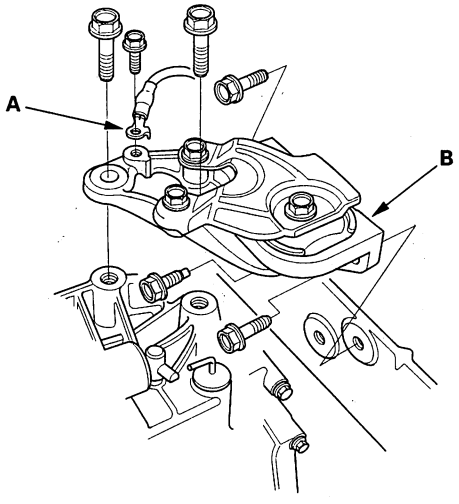

BACK

Protected by AR

50. M/T model: Remove the front mount stop (A), then remove the front mount bolt (B).

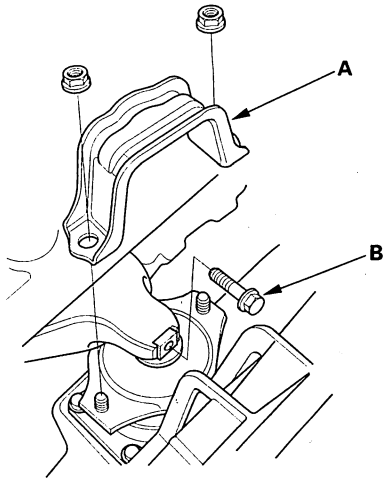

51. A/T model: Remove the vacuum hose (A) from the vacuum line. Remove the front mount stop (B) and vacuum hose clamp bracket (C), then remove the front mount bolt (D).

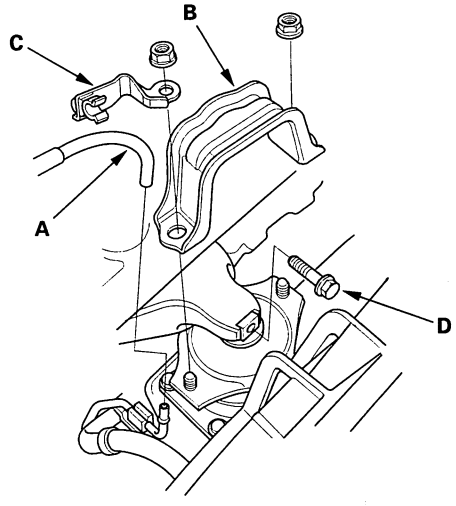

52. Remove the rear mount stop (A), then remove the rear mount bolt (B).

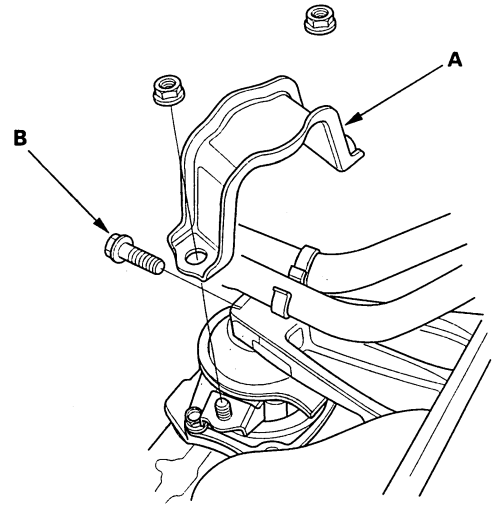

53. Check that the engine/transmission is completely free of vacuum hoses, fuel and coolant hoses, and electrical wiring.

54. Slowly lower the engine/transmission assembly about 150 mm (6 in.). Check once again that all hoses and wires are disconnected from the engine/transmission.

55. Raise the engine/transmission assembly from under the vehicle.

Protected by AR

Engine Assembly

Engine Installation

1. Install the accessory brackets and tighten their bolts to the specified torques.

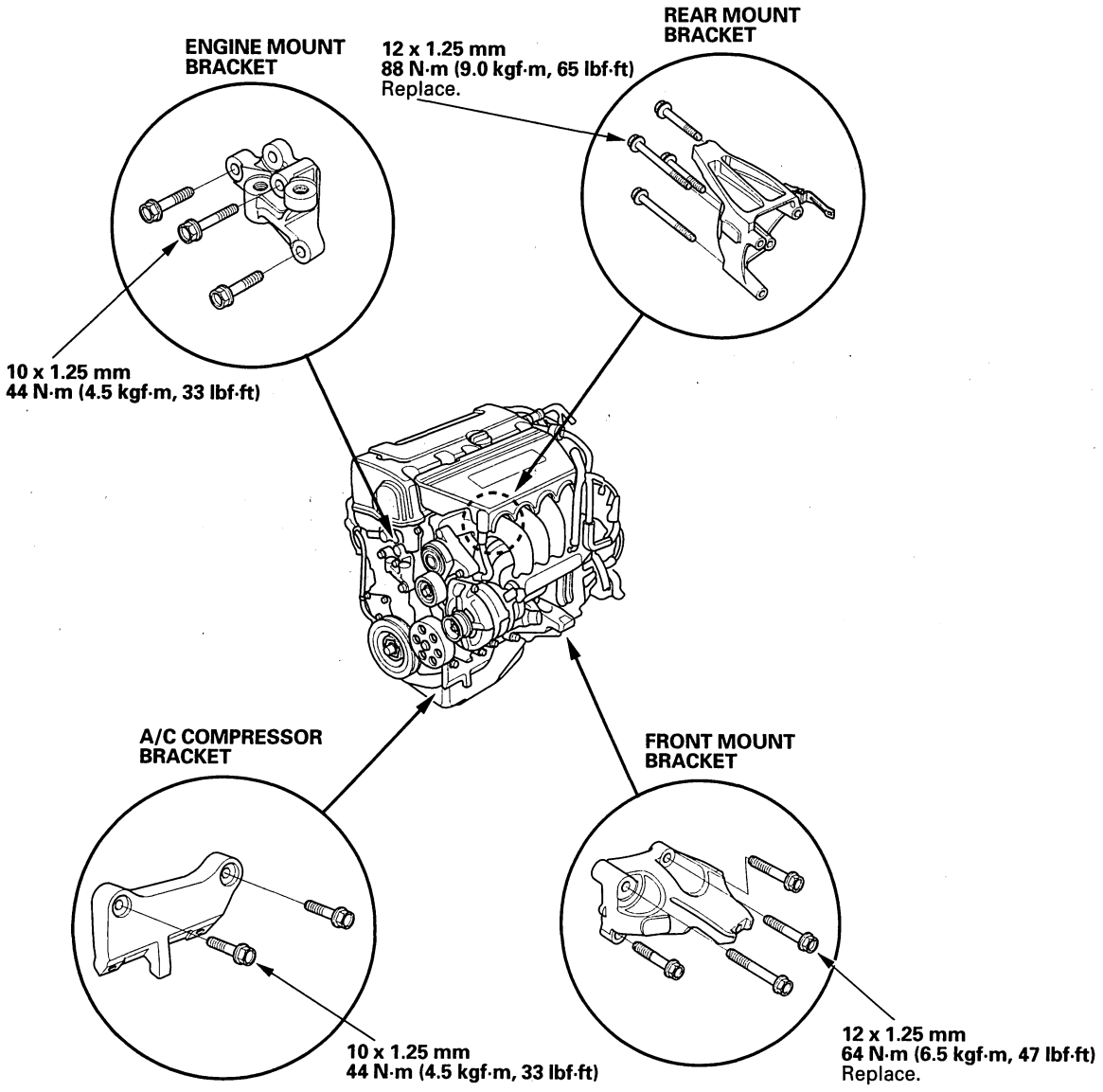

BACK

Protected by AR

2. Install the engine/transmission assembly into position in the vehicle, then remove the chain hoist from the engine.

   NOTE: Reinstall the mounting bolts/support nuts in the sequence given. Failure to follow this sequence may cause excessive noise and vibration, and reduce bushing life.

3. M/T model: Tighten the front mount bolt (A), then install the front mount stop (B).

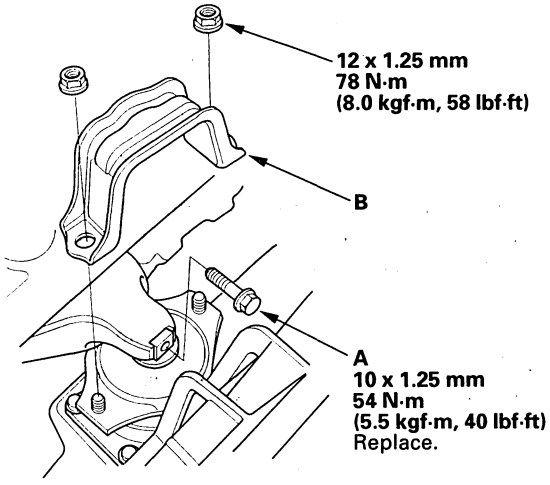

4. A/T model: Tighten the front mount bolt (A), then install the front mount stop (B) and vacuum hose clamp bracket (C). Install vacuum hose (D).

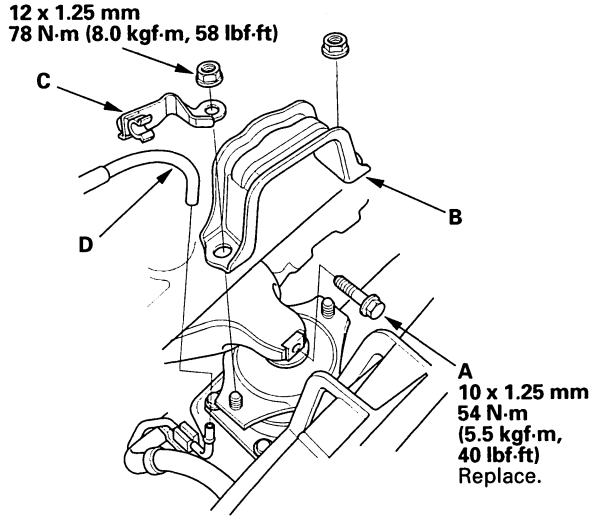

5. Tighten the rear mount bolt (A), then install the rear mount stop (B).

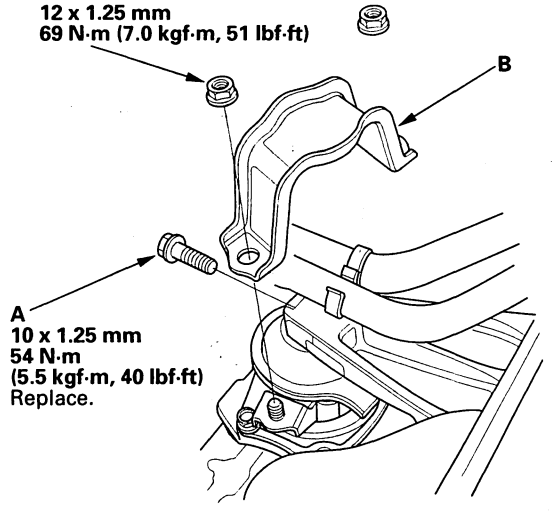

6. Install the upper bracket (A), then tighten the bolts in the numbered sequence shown.

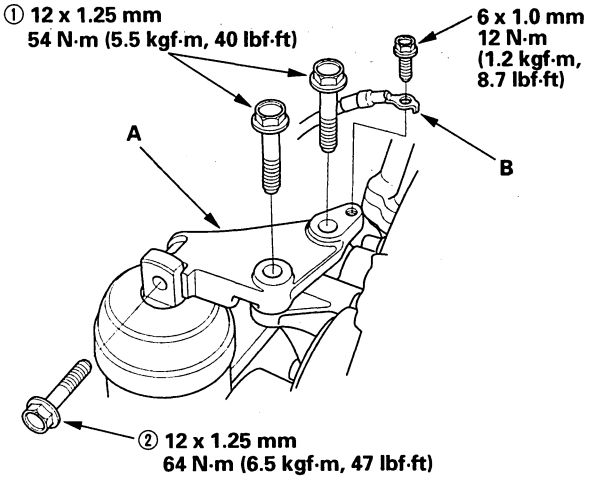

7. Install the ground cable (B).

(cont'd)

Protected by AR

Engine Installation (cont'd)

8. M/T model: Loosen the mount bolt (A), then install the transmission upper mount/bracket assembly (B), clutch line clamp bracket (C), and ground cable (D).

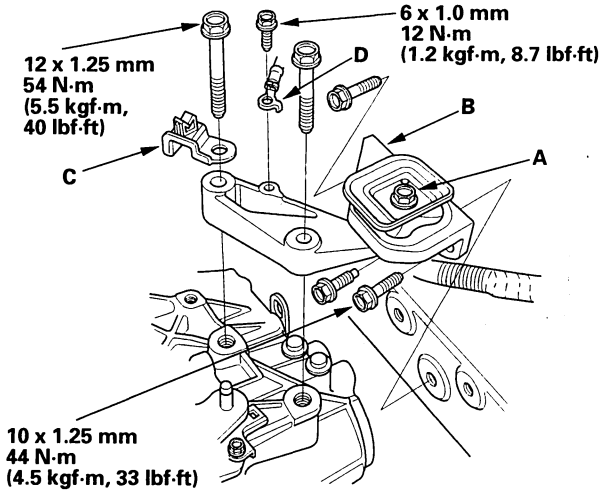

9. A/T model: Loosen the mount bolt (A) and bracket plate mounting bolts (B), then install the transmission upper mount/bracket assembly (C), and ground cable (D).

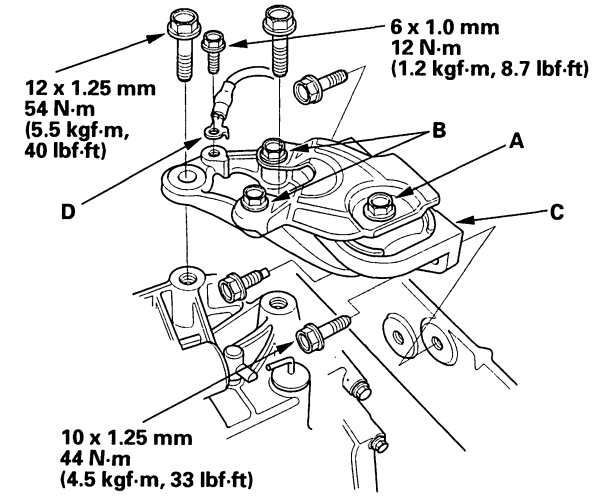

10. M/T model: Tighten the transmission upper mount bolt.

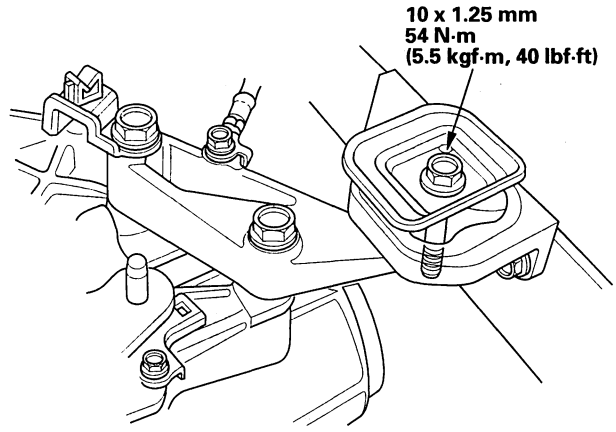

11. A/T model: Tighten the transmission upper mount bracket plate mounting bolts (A), then tighten the transmission upper mount bolt (B).

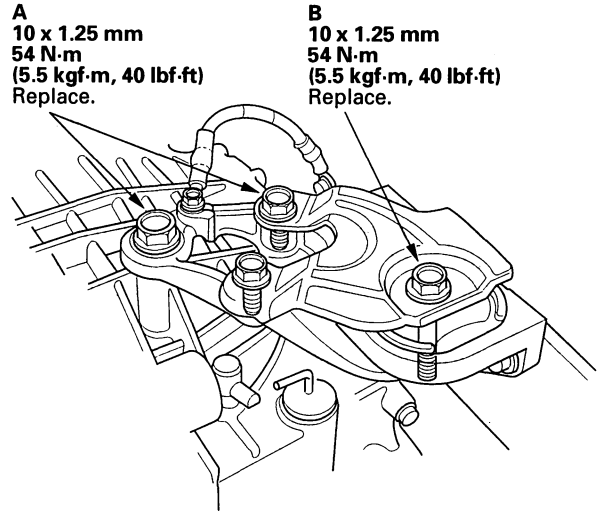

BACK

Protected by AR

12. Raise the hoist to full height.

13. Tighten the nuts securing the transmission lower front mount and transmission lower rear mount.

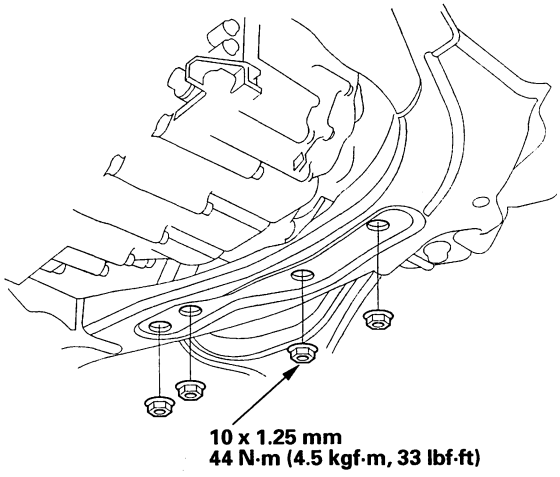

14. A/T model: Install the shift control cable (A).

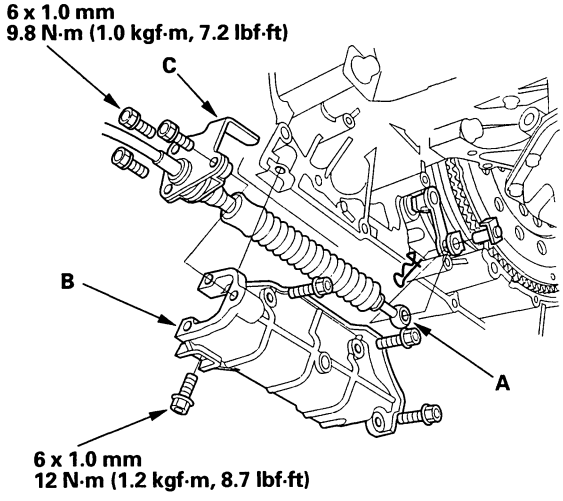

15. A/T model: Install the shift cable cover (B), then install the shift cable holder (C).

16. Install exhaust pipe A. Use new gaskets (B) and new self locking nuts (C).

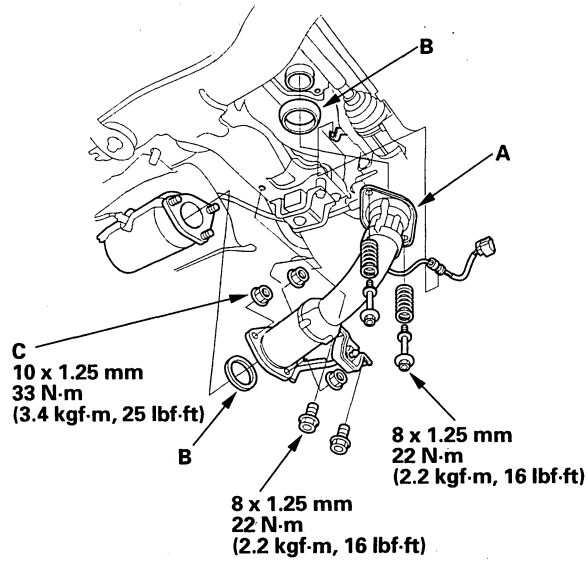

17. Install a new set ring on the end of each driveshaft, then install the driveshafts. Make sure each ring "clicks" into place in the differential and intermediate shaft.

18. Connect the suspension lower arm ball joints (see step 8 on page 18-21).

19. Install the damper fork (see step 2 on page 18-27).

20. Connect the stabilizer links (see page 18-22).

(cont'd)

Protected by AR

Engine Installation (cont'd)

21. Lower the hoist.

22. Check the quick connector (A) and set ring (B) for cracks or damage. If the connector and/or set ring are cracked or damaged, replace the connector.

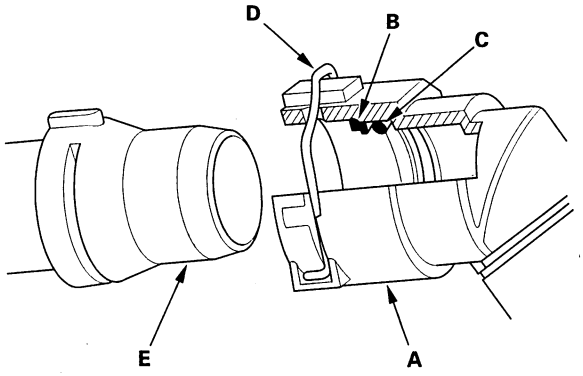

23. Make sure the set ring is in place inside the quick connector. If the set ring is off the connector, replace the quick connector.

24. Replace the O-ring (C) in the quick connector.

25. Check the lock (D). If the lock is damaged or deformed, replace it. When installing the new lock on the connector, press it straight down along the groove.

26. Clean the connecting surface of the thermostat cover (E), then apply clean engine coolant around the connecting surface.

27. Push down the lock (A), then push the quick connector (B) onto the thermostat cover until you hear it click.

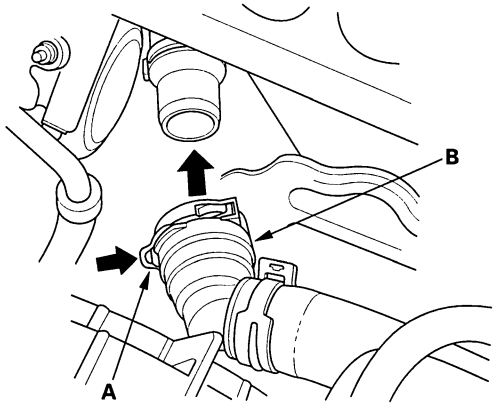

28. Install the upper radiator hose (A) and heater hoses (B).

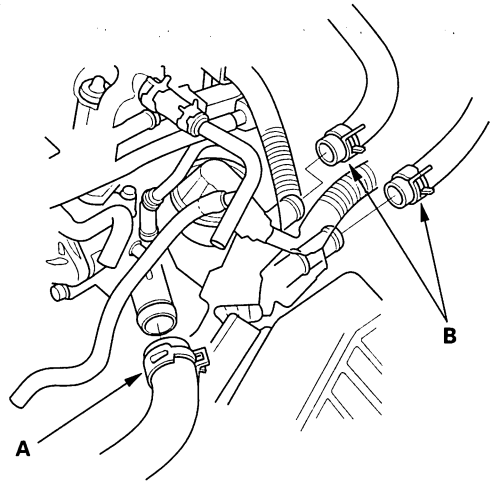

29. A/T model: Install the automatic transmission fluid (ATF) cooler hoses.

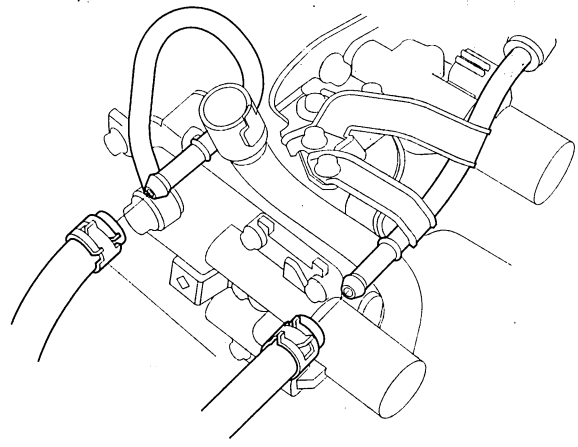

BACK

Protected by AR

30. Install the A/C compressor.

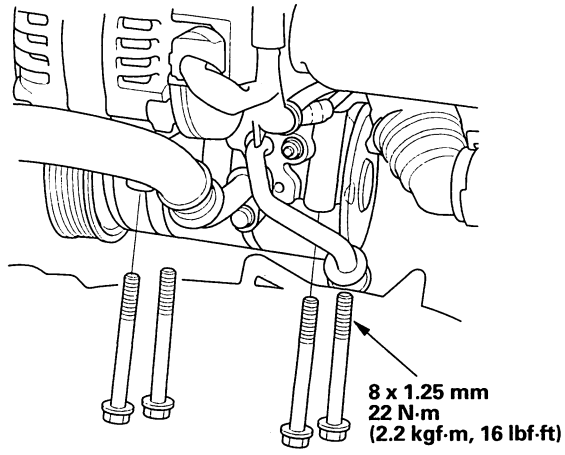

31. Install the power steering (P/S) pump (A), and the P/S hose clamp (B).

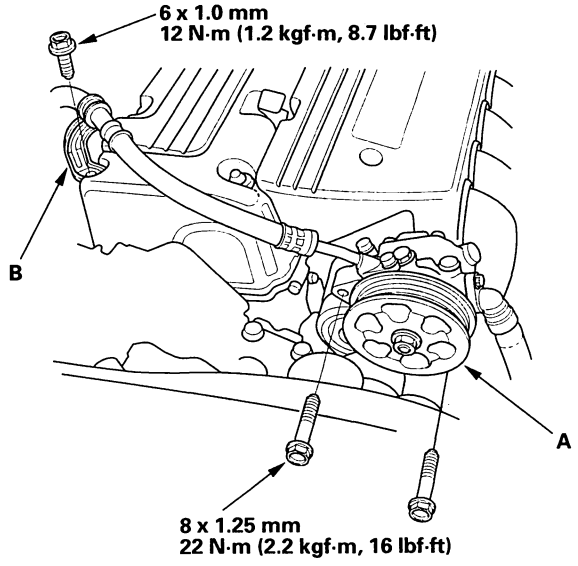

32. Install the drive belt.

33. Connect the air fuel ratio (A/F) sensor connector.

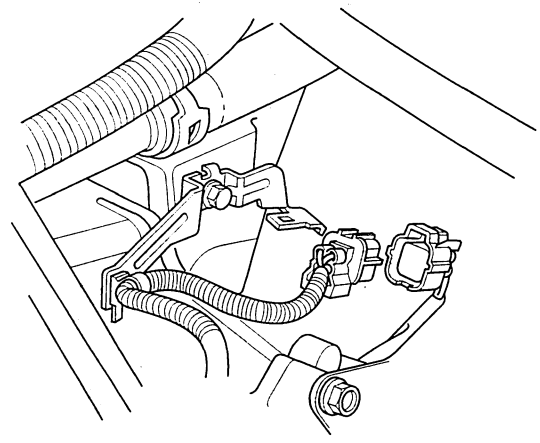

34. M/T model: Install the select cable (A) and shift cable (B) with the plastic washers (C), washers (D), and new cotter pins (E).

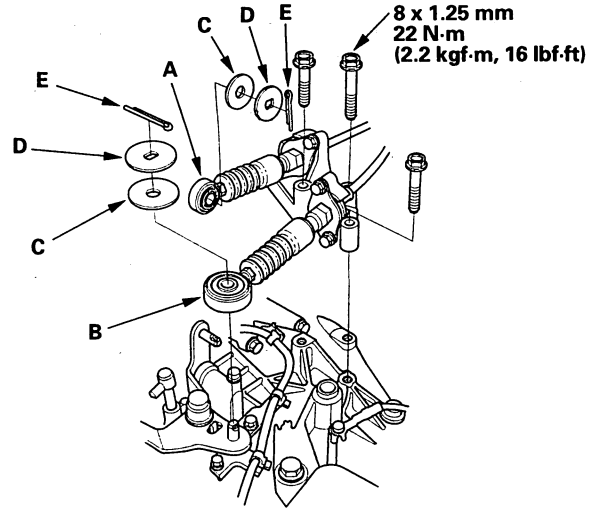

(cont'd)

BACK

Protected by AR

Engine Installation (cont'd)

35. M/T model: Install the clutch slave cylinder (A) and clutch line bracket mounting bolt (B).

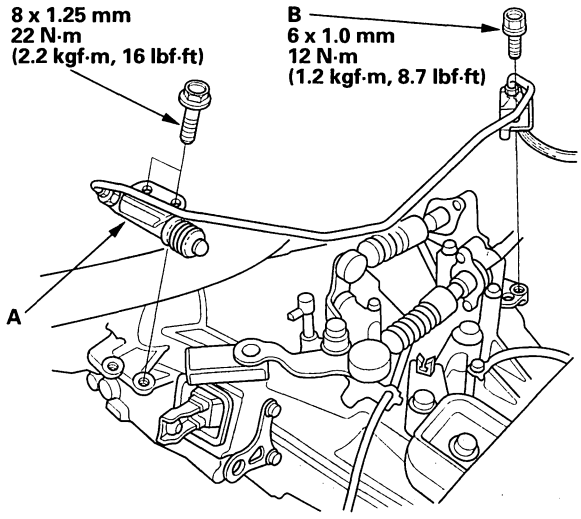

36. 2006 model: Push the engine control module (ECM)/powertrain control module (PCM) connectors through the bulkhead, then install the grommet (A) and harness clamps (B).

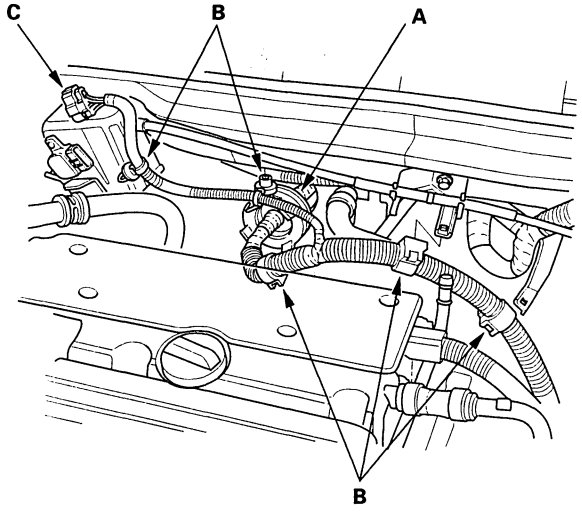

37. Connect the accelerator pedal position (APP) sensor connector (C).

38. 2003-2005 models: Connect the engine wire harness connectors (A), then install the harness clamp (B).

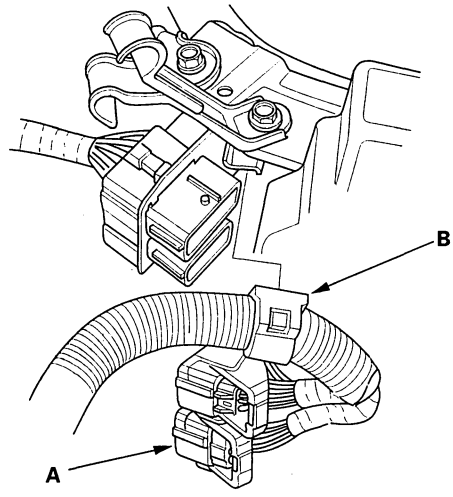

39. 2006 model: Connect the ECM/PCM connectors (A) and main wire harness connectors (B).

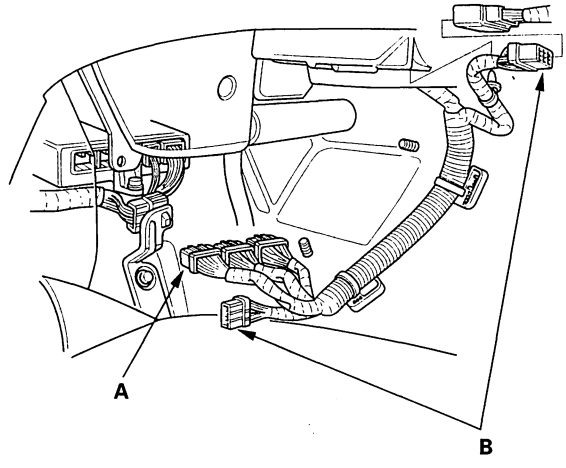

BACK

Protected by AR

40. Install the evaporative emission (EVAP) canister hose (A) and brake booster vacuum hose (B).

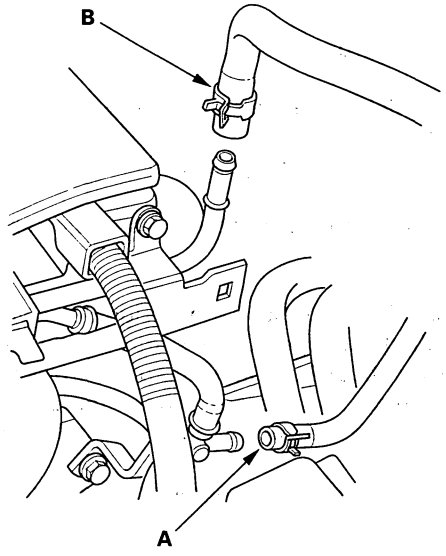

41. Connect the fuel feed hose (see page 11-340), then install the quick-connect fitting cover (A). Make sure the connector engages fully.

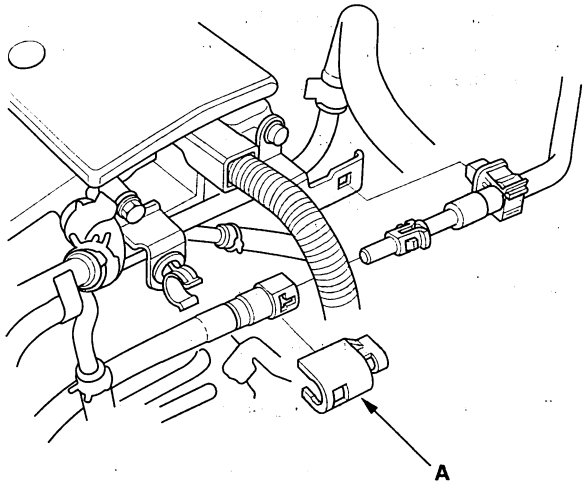

42. 2003-2005 models: Install the throttle cable (see page 11-365), then adjust the cable (see page 11-362).

43. 2003-2005 models: Install the cruise control actuator cable (see page 4-62), then adjust it (see page 4-63).

44. 2006 model: Install the strut brace (A), then install the harness clamp (B) and bolt (C).

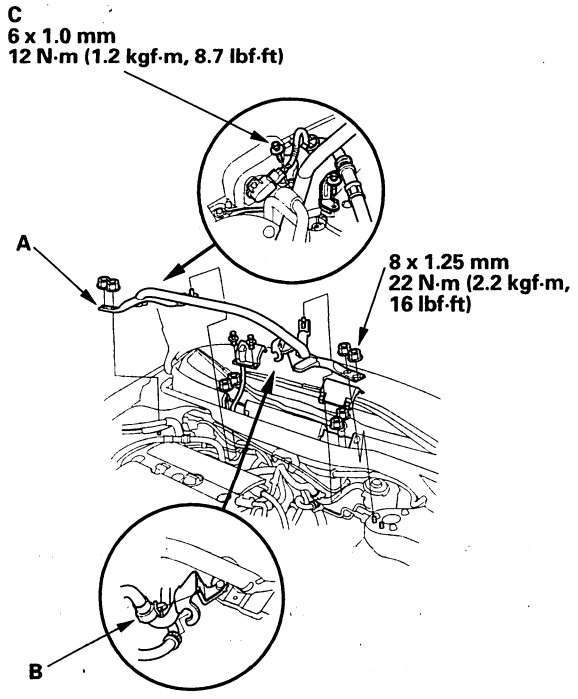

45. Connect the harness connector (A).

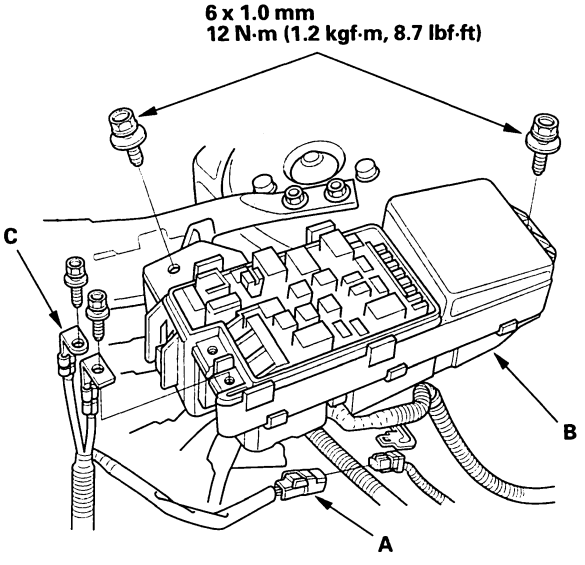

46. Install the under-hood fuse/relay box (B), then install the battery cables (C).

(cont'd)

Protected by AR

Engine Installation (cont'd)

47. Install the battery base (A), then install the harness clamp (B).

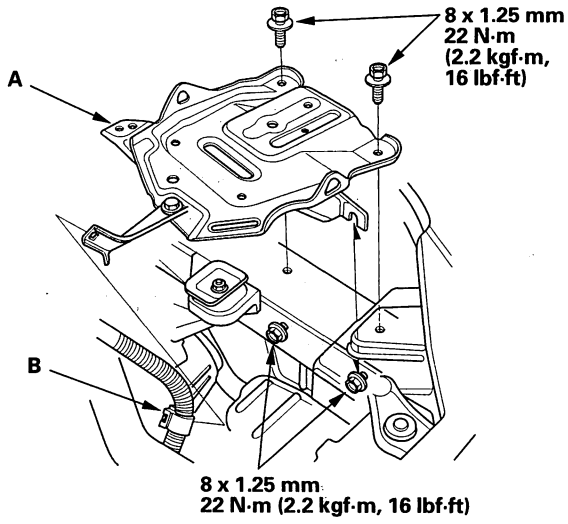

48. Install the air cleaner housing (see page 11-361).

49. Install the intake air duct (A), then connect the intake air temperature (IAT) sensor connector (B), and install the vacuum hose (C) and breather pipe (D).

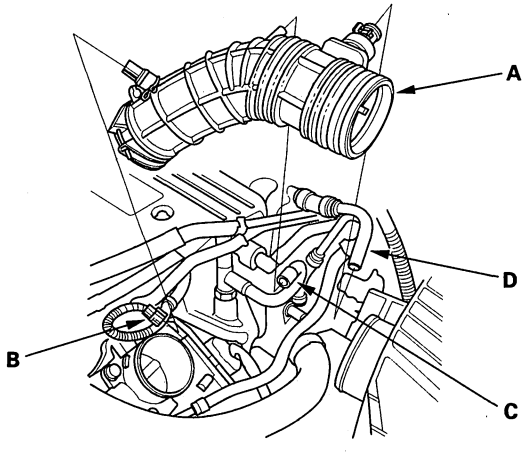

50. Install the battery. Clean the battery posts and cable terminals with sandpaper, then assemble them and apply grease to prevent corrosion.

51. Install the front wheels.

52. A/T model: Move the shift lever to each gear, and verify that the A/T gear position indicator follows the transmission range switch.

53. M/T model: Check that the transmission shift into gear smoothly.

54. Inspect for fuel leaks. Turn the ignition switch to ON (II) (do not operate the starter) so the fuel pump runs for about 2 seconds and pressurizes the fuel line. Repeat this operation two or three times, then check for fuel leakage at any point in the fuel line.

55. Refill the engine with engine oil (see step 4 on page 8-6).

56. Refill the transmission with fluid:

    - Manual transmission (see page 13-3)
    - Automatic transmission (see page 14-208)

57. Refill the radiator with engine coolant, and bleed air from the cooling system with the heater valve open (see step 7 on page 10-7).

58. Do the PCM reset procedure (see page 11-4).

59. Do the crankshaft position (CPK) pattern clear/CPK pattern learn procedure (see page 11-4).

60. Do the PCM idle learn procedure (see page 11-316).

61. Inspect the idle speed (see page 11-315).

62. Inspect the ignition timing (see page 4-24).

63. Check the wheel alignment (see page 18-6).

64. Enter the anti-theft codes for the radio and the navigation system, then enter the customer's audio presets.

65. Do the power window control unit reset procedure (see page 22-232).

66. Set the clock.

BACK

Protected by AR

Engine Mechanical

Cylinder Head

Special Tools 6-2
Component Location Index 6-3
Engine Compression Inspection 6-6
VTEC Rocker Arm Test 6-7
VTC Actuator Inspection 6-8
Valve Clearance Adjustment 6-9
Crankshaft Pulley Removal and Installation 6-11
Cam Chain Removal 6-12
Cam Chain Installation 6-15
Auto-tensioner Removal and Installation 6-19
Chain Case Oil Seal Installation 6-21
Cam Chain Inspection 6-22
CKP Pulse Plate Replacement 6-23
Cylinder Head Cover Removal 6-25
Cylinder Head Cover Installation 6-26
Cylinder Head Removal 6-28
CMP Pulse Plate A Replacement 6-30
CMP Pulse Plate B Replacement 6-31
VTC Actuator, Exhaust Camshaft Sprocket Removal and Installation 6-31
Cylinder Head Inspection for Warpage 6-32
Rocker Arm Assembly Removal 6-33
Rocker Arm and Shaft Disassembly/Reassembly 6-34
Rocker Arm and Shaft Inspection 6-35
Camshaft Inspection 6-36
Valve, Spring, and Valve Seal Removal 6-38
Valve Inspection 6-39
Valve Stem-to-Guide Clearance Inspection 6-39
Valve Guide Replacement 6-40
Valve Seat Reconditioning 6-42
Valve, Spring, and Valve Seal Installation 6-44
Rocker Arm Assembly Installation 6-45
Cylinder Head Installation 6-46



BACK

Protected by AR

Cylinder Head

Special Tools

Ref. No.	Tool Number	Description	Qty
①	07AAJ-PNAA100	Air Pressure Regulator	1
②	07HAH-PJ7A100	Valve Guide Reamer, 5.5 mm	1
③	07JAA-001020A	Socket, 19 mm	1
④	07JAB-001020A	Holder Handle	1
⑤	07MAA-PR70100	Tappet Adjust Wrench Set	1
⑥	07NAB-001040A	Holder Attachment, 50 mm	1
⑦	07PAD-0010000	Stem Seal Driver	1
⑧	07ZAJ-PNAA100	VTEC Air Adapter	2
⑨	07ZAJ-PNAA200	VTEC Air Stopper	1
⑩	07ZAJ-PNAA300	Air Joint Adapter	1
⑪	07742-0010100	Valve Guide Driver, 5.5 mm	1
⑫	07746-0010400	Attachment, 52 x 55 mm	1
⑬	07749-0010000	Driver	1
⑭	07757-PJ1010A	Valve Spring Compressor Attachment	1

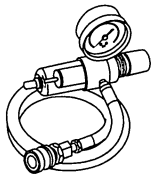
①

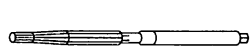
②

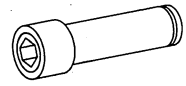
③

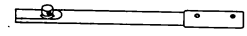
④

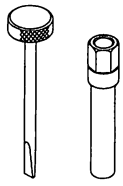
⑤

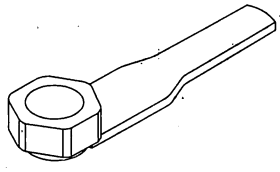
⑥

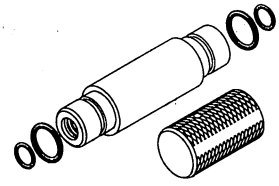
⑦

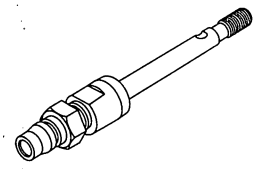
⑧

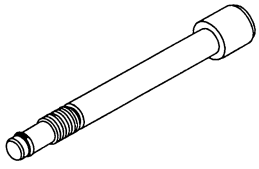
⑨

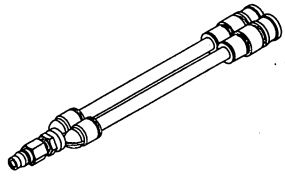
⑩

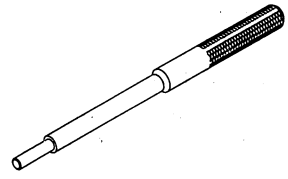
⑪

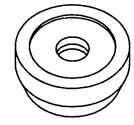
⑫

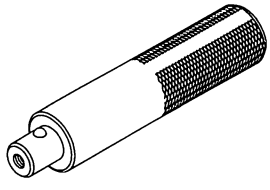
⑬

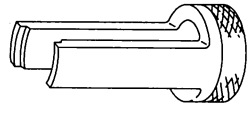
⑭

BACK

Protected by AR

Component Location Index

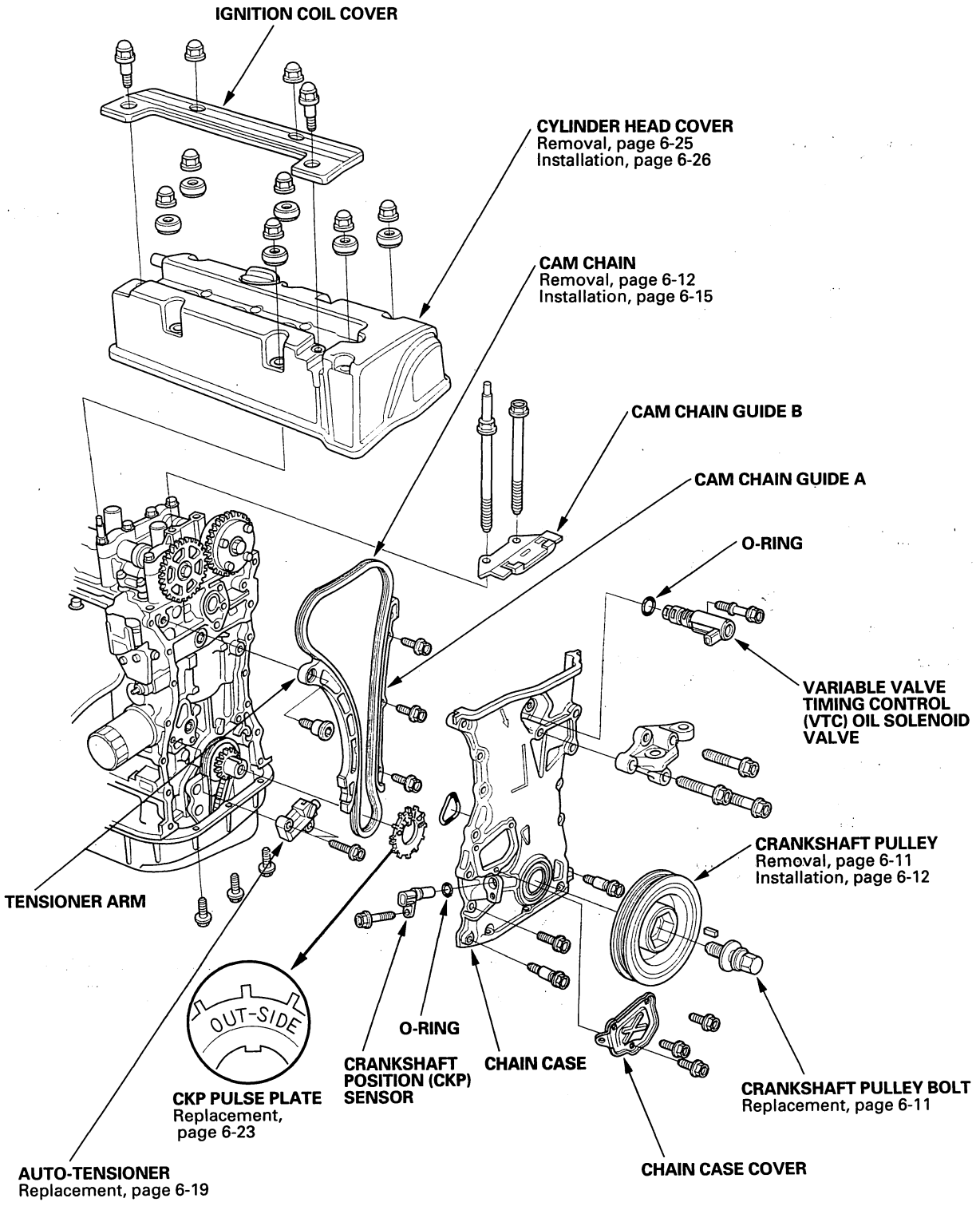

(cont'd)

Protected by AR

Component Location Index (cont'd)

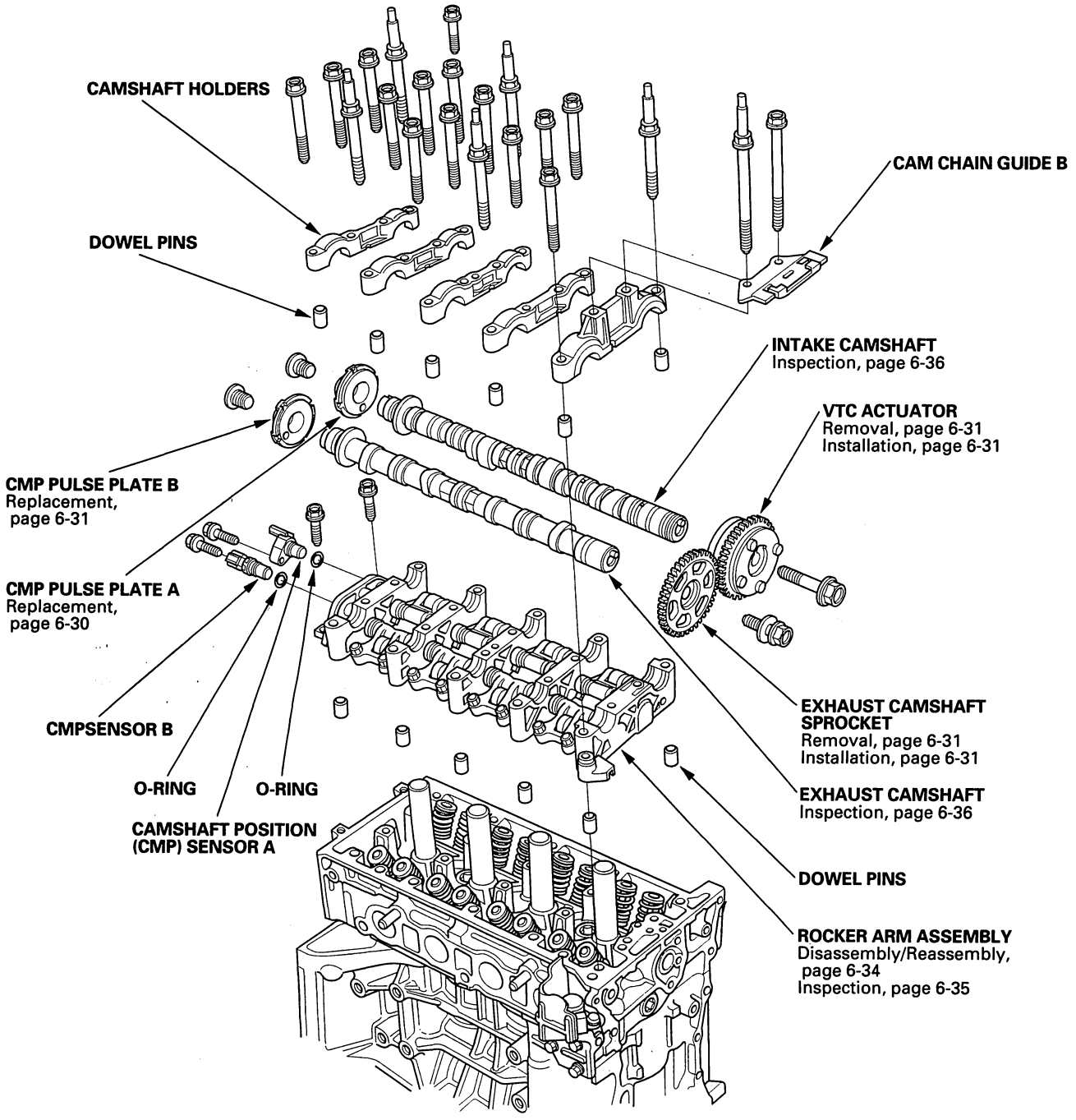

BACK

Protected by AR

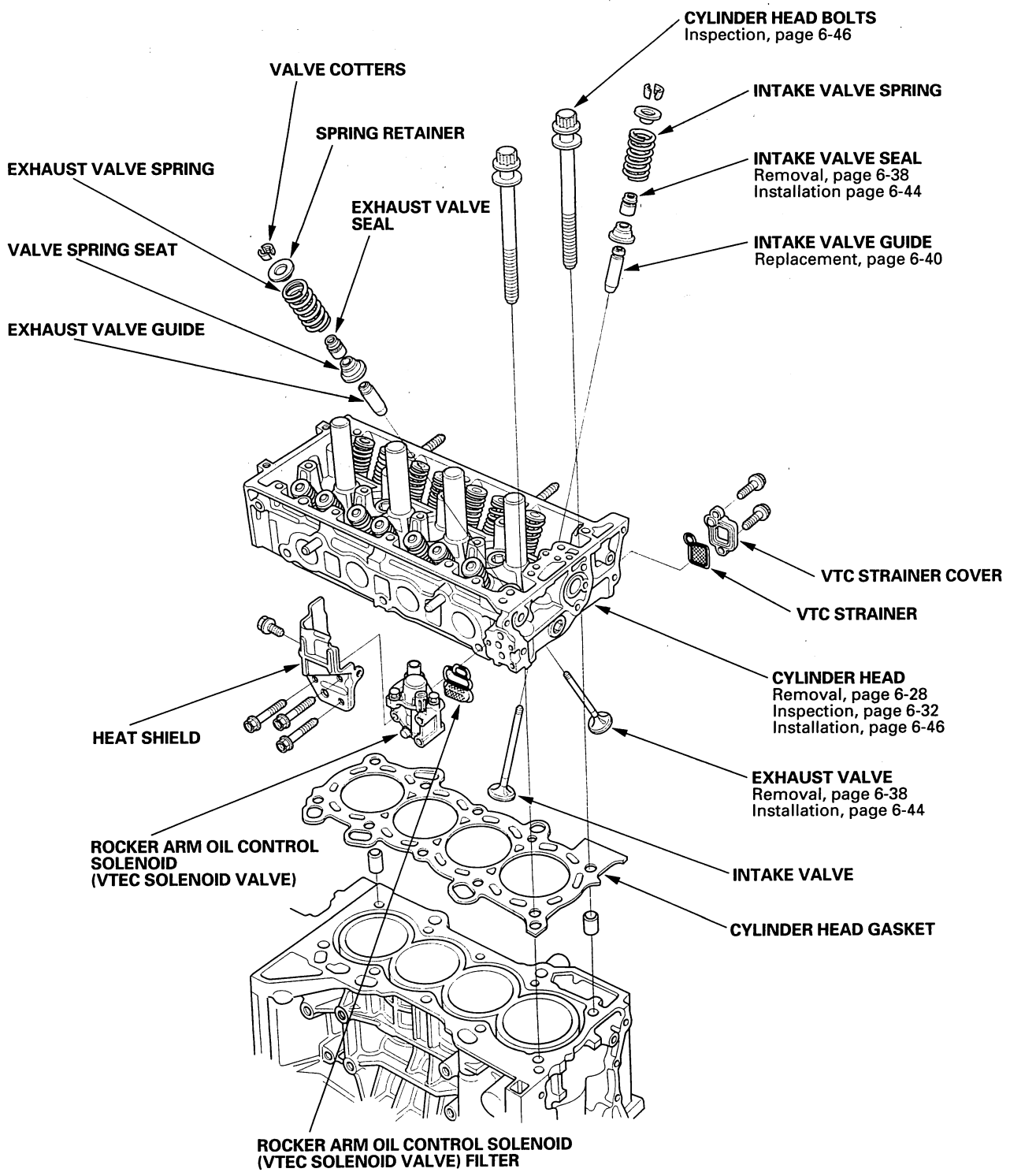

BACK

Protected by AR

Engine Compression Inspection

After this inspection, you must reset the engine control module (ECM)/the powertrain control module (PCM) will continue to stop the injectors from functioning. Select ECM/PCM reset using the Honda Diagnostic System (HDS) (see page 11-4).

1. Warm up the engine to normal operating temperature (cooling fan comes on).
2. Turn the ignition switch OFF.
3. Connect the HDS to the data link connector (DLC) (see step 2 on page 11-3).
4. Turn the ignition switch ON (II), select PGM-FI, INSPECTION, then ALL INJECTORS OFF on the HDS.
5. Remove the four ignition coils (see page 4-25).
6. Remove the four spark plugs.
7. Attach the compression gauge to the spark plug hole.

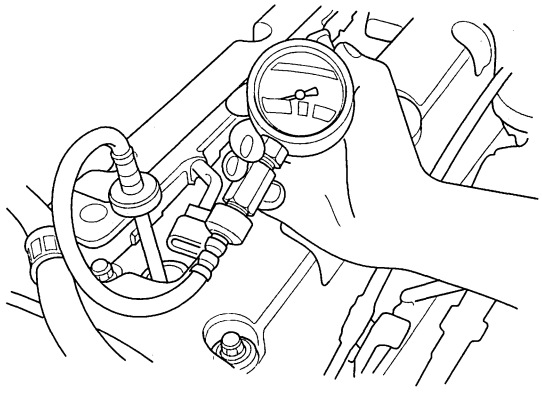

8. Open the throttle fully, then crank the engine with the starter motor and measure the compression.

   Compression Pressure:
   Above 930 kPa (9.5 kgf/cm², 135 psi)

9. Measure the compression on the remaining cylinders.

   Maximum Variation:
   Within 200 kPa (2.0 kgf/cm², 28 psi)

10. If the compression is not within specifications, check the following items, then remeasure the compression.

    - Damaged or worn valves and seats
    - Damaged cylinder head gasket
    - Damaged or worn piston rings
    - Damaged or worn piston and cylinder bore

11. Select ECM/PCM reset (see page 11-4) to cancel the ALL INJECTORS OFF function on the HDS.

BACK

Protected by AR

VTEC Rocker Arm Test

Special Tools Required
- Air pressure regulator 07AAJ-PNAA100
- VTEC air adapter 07ZAJ-PNAA100
- VTEC air stopper 07ZAJ-PNAA200
- Air joint adapter 07ZAJ-PNAA300

1. Start the engine and let it run for 5 minutes, then turn the ignition switch OFF.
2. Remove the cylinder head cover (see page 6-25).
3. Set the No. 1 piston at top dead center (TDC) (see step 1 on page 6-12).
4. Verify that the intake primary rocker arm (A) moves independently of the intake secondary rocker arm (B).
   - If the intake primary rocker arm does not move, remove the primary and secondary rocker arms as an assembly, then check that the pistons in the secondary and primary rocker arms move smoothly. If any rocker arm needs replacing, replace the primary and secondary rocker arms as an assembly, and test.
   - If the intake primary rocker arm moves freely, go to step 4.

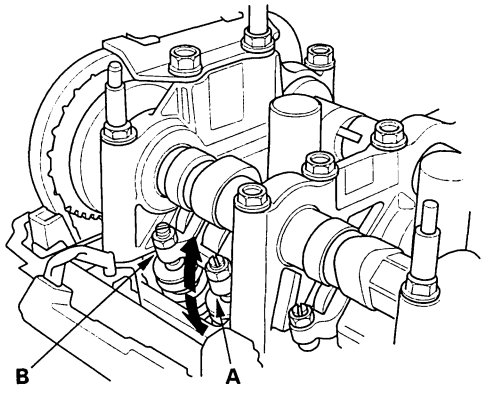

5. Repeat step 3 on the remaining intake primary rocker arms with each piston at TDC. When all the primary rocker arms pass the test, go to step 5.
6. Check that the air pressure on the shop air compressor gauge indicates over 400 kPa (4 kgf/cm², 57 psi).
7. Inspect the valve clearance (see page 6-9).
8. Remove the sealing bolt (A) from the relief hole, and install the VTEC air stopper (B).

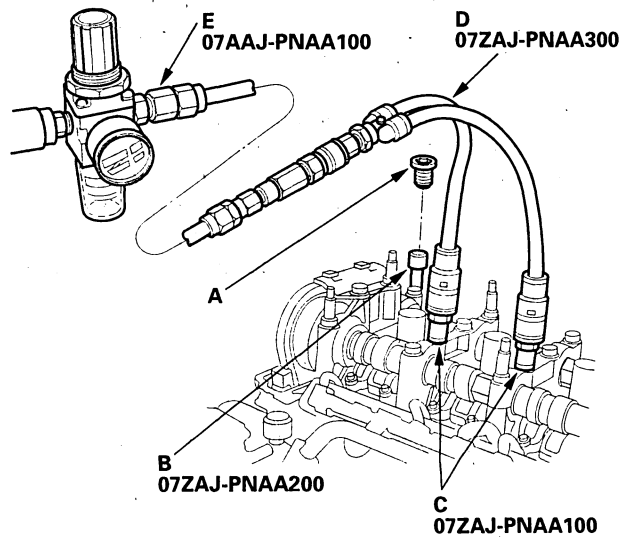

9. Remove the No. 2 and No. 3 camshaft holder bolts, and install the VTEC air adapters (C) finger-tight.
10. Connect the air joint adapter (D) and air pressure regulator (E).

(cont'd)

Protected by AR

VTEC Rocker Arm Test (cont'd)

11. Loosen the valve on the regulator, and apply the specified air pressure.

    Specified air pressure:
    290 kPa (3.0 kgf/cm², 42 psi)

    NOTE: If the synchronizing piston does not move after applying air pressure, move the primary or secondary rocker arm up and down manually by rotating the crankshaft clockwise.

12. With the specified air pressure applied, move the intake primary rocker arm (A) for the No. 1 cylinder. The primary rocker arm and secondary rocker arm (B) should move together.

    If the intake secondary rocker arm does not move, remove the primary and secondary rocker arms as an assembly, and check that the pistons in the primary and secondary rocker arms move smoothly. If any rocker arm needs replacing, replace the primary and secondary rocker arms as an assembly, and test.

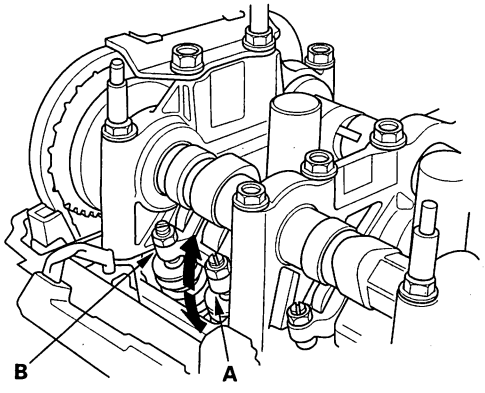

13. Remove the special tools.

14. Tighten the camshaft holder mounting bolts to 22 N·m (2.2 kgf·m, 16 lbf·ft).

15. Tighten the sealing bolt to 20 N·m (2.0 kgf·m, 14 lbf·ft).

16. Install the cylinder head cover (see page 6-26).

VTC Actuator Inspection

1. Remove the cam chain (see page 6-12).

2. Loosen the rocker arm adjusting screws (see step 2 on page 6-33).

3. Remove the camshaft holder (see step 3 on page 6-33).

4. Remove the intake camshaft.

5. Check that the variable valve timing control (VTC) actuator is locked by turning the VTC actuator clockwise and counterclockwise. If the VTC actuator is not locked, replace the VTC actuator.

6. Seal the advance holes (A) and retard holes (B) in the No. 1 camshaft journal with tape.

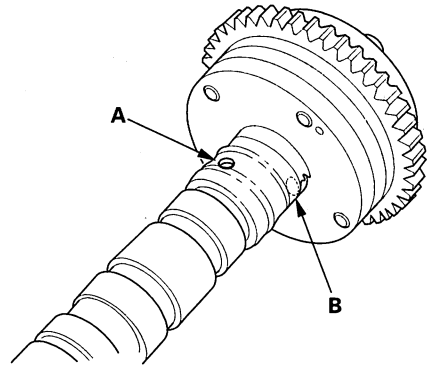

7. Punch a hole in the tape over one of the advance holes.

BACK

Protected by AR

8. Apply air to the advance hole to release the lock.

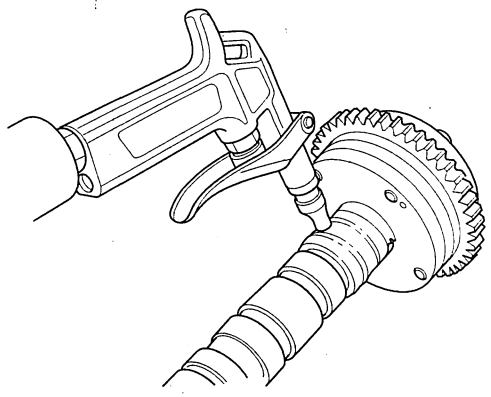

9. Check that the VTC actuator moves smoothly. If the VTC actuator does not move smoothly, replace the VTC actuator.

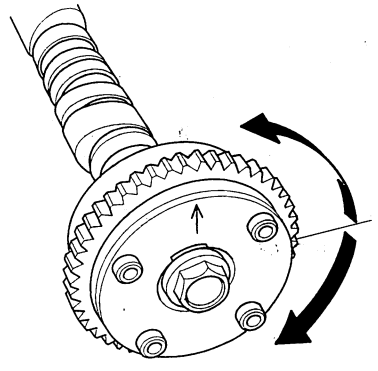

10. Make sure the punch marks on the VTC actuator and exhaust camshaft sprocket are facing up, then set the camshafts in the rocker shaft holder (see step 6 on page 6-45).

11. Set the camshaft holders and chain guide B in place (see step 7 on page 6-45).

12. Tighten the camshaft holder bolts to the specified torque (see step 8 on page 6-45).

13. Check that the variable valve timing control (VTC) actuator is locked by turning the VTC actuator counterclockwise. If not locked, turn the VTC actuator clockwise until it stops, then recheck it. If it is still not locked, replace the VTC actuator.

14. Install the cam chain (see page 6-15).

15. Adjust the valve clearance (see page 6-9).

Valve Clearance Adjustment

Special Tools Required
Tappet adjust wrench set 07MAA-PR70100

NOTE: Adjust the valves only when the cylinder head temperature is less than 100 °F (38 °C).

1. Remove the cylinder head cover (see page 6-25).

2. Set the No. 1 piston at top dead center (TDC). The punch mark (A) on the variable valve timing control (VTC) actuator and the punch mark (B) on the exhaust camshaft sprocket should be at the top. Align the TDC marks (C) on the VTC actuator and exhaust camshaft sprocket.

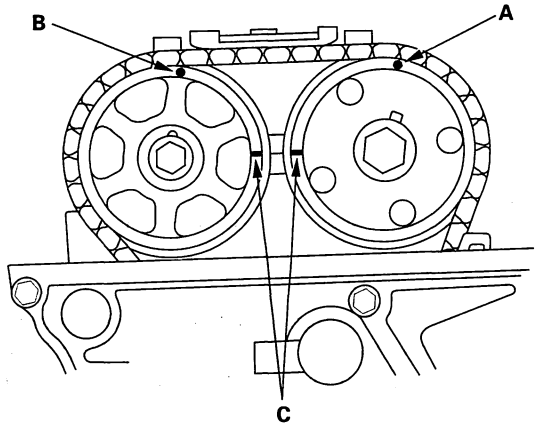

(cont'd)

Protected by AR

Valve Clearance Adjustment (cont'd)

3. Select the correct thickness feeler gauge for the valves you're going to check.

Valve Clearance
Intake: 0.21—0.25 mm (0.008—0.010 in.)
Exhaust: 0.28—0.32 mm (0.011—0.013 in.)

Adjusting screw locations:

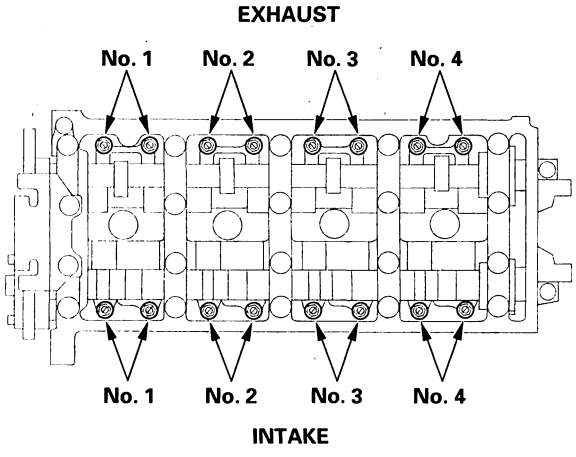

4. Insert the feeler gauge (A) between the adjusting screw (B) and the end of the valve stem, and slide it back and forth; you should feel a slight amount of drag.

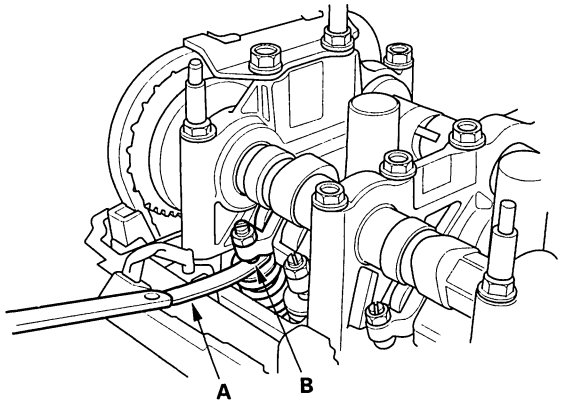

5. If you feel too much or too little drag, loosen the locknut with the special tools, and turn the adjusting screw until the drag on the feeler gauge is correct.

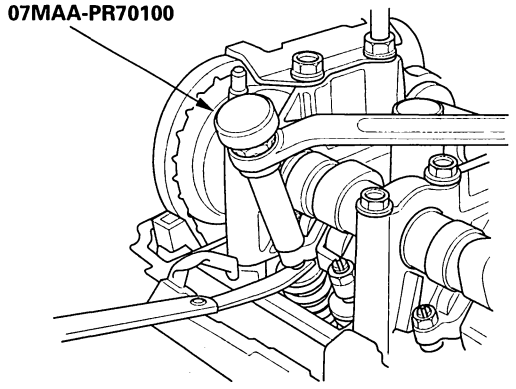

6. Tighten the locknut.

Specified torque
Intake: 20 N·m (2.0 kgf·m, 14 lbf·ft)
Apply engine oil to the nut threads.
Exhaust: 14 N·m (1.4 kgf·m, 10 lbf·ft)
Apply engine oil to the nut threads.

7. Recheck the valve clearance. Repeat the adjustment if necessary.

8. Rotate the crankshaft 180 ° clockwise (camshaft pulley turns 90 °).

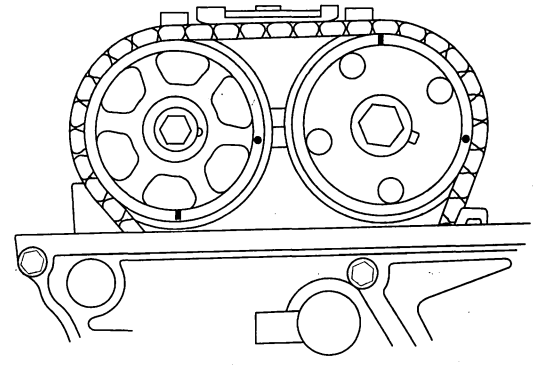

9. Check and, if necessary, adjust the valve clearance on No. 3 cylinder.

BACK

Protected by AR

10. Rotate the crankshaft 180 ° clockwise (camshaft pulley turns 90 °).

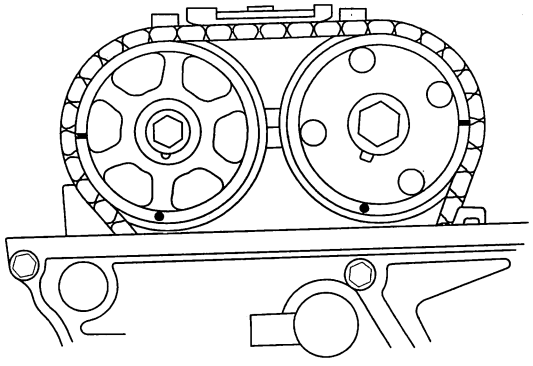

11. Check and, if necessary, adjust the valve clearance on No. 4 cylinder.

12. Rotate the crankshaft 180 ° clockwise (camshaft pulley turns 90 °).

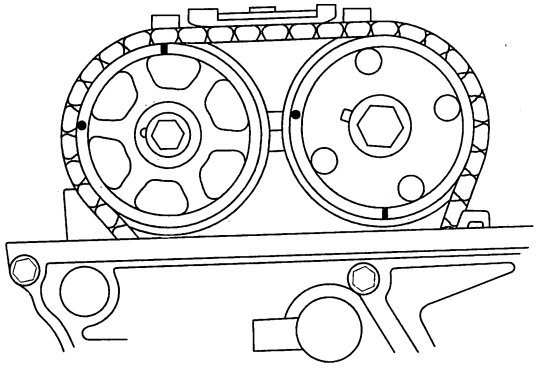

13. Check and, if necessary, adjust the valve clearance on No. 2 cylinder.

14. Install the cylinder head cover (see page 6-26).

Crankshaft Pulley Removal and Installation

Special Tools Required
- Holder handle 07JAB-001020A
- Holder attachment, 50 mm 07NAB-001040A
- Socket, 19 mm 07JAA-001020A or a commercially available 19 mm socket

Removal

1. Remove the front tires/wheels.

2. Remove the splash shield (see step 25 on page 13-7).

3. Remove the drive belt (see page 4-37).

4. Hold the pulley with holder handle (A) and holder attachment (B).

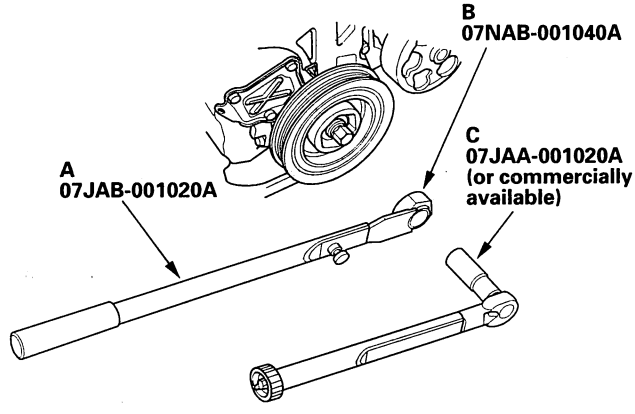

5. Remove the bolt with a 19 mm socket (C) and breaker bar.

(cont'd)

Protected by AR

Crankshaft Pulley Removal and Installation (cont'd)

Installation

1. Clean the crankshaft pulley (A), crankshaft (B), bolt (C), and washer (D). Lubricate new engine oil as shown.

   ○: **Clean**
   ●: **Lubricate**

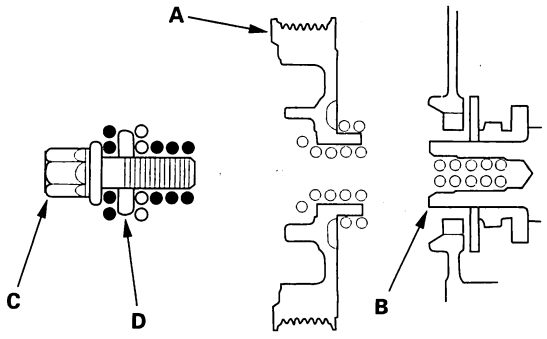

2. Install the crankshaft pulley, and hold the pulley with holder handle (A) and holder attachment (B).

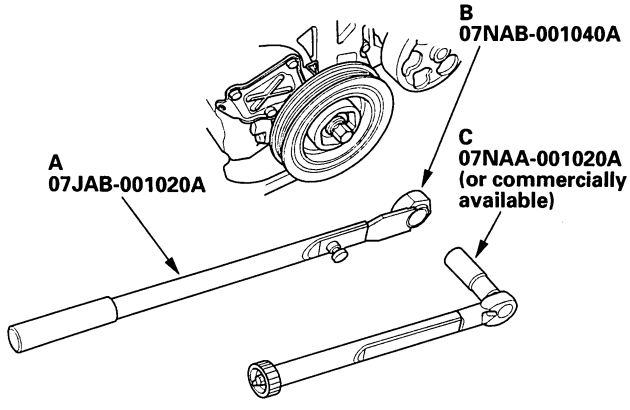

3. Tighten the bolt to 49 N·m (5.0 kgf·m, 36 lbf·ft) with a torque wrench and 19 mm socket (C). Do not use an impact wrench.
4. Tighten the pulley bolt on additional 90 °.
5. Install the drive belt (see page 4-37).
6. Install the splash shield (see step 25 on page 13-15).
7. Install the front tires/wheels.

Cam Chain Removal

NOTE: Keep the cam chain away from magnetic fields.

1. Turn the crankshaft pulley so its top dead center (TDC) mark (A) lines up with the pointer (B).

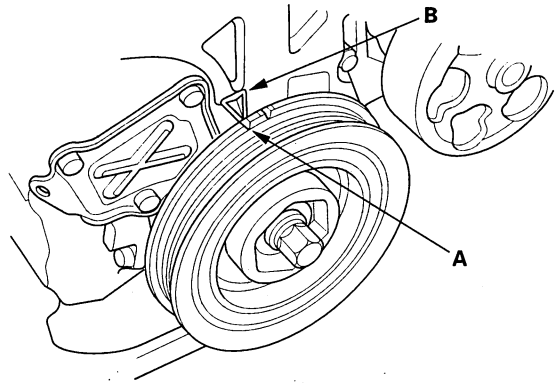

2. Remove the front tires/wheels.
3. Remove the splash shield (see step 25 on page 13-7).
4. Remove the drive belt (see page 4-37).
5. Remove the cylinder head cover (see page 6-25).
6. Check that the No. 1 piston TDC marks (A) on the variable valve timing control (VTC) actuator and exhaust camshaft sprocket are aligned.

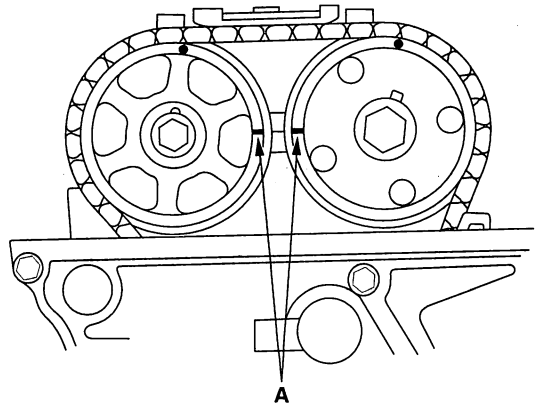

7. Remove the crankshaft pulley (see step 4 on page 6-11).

BACK

Protected by AR

8. Disconnect the crankshaft position (CKP) sensor connector (A) and variable valve timing control (VTC) oil control solenoid valve connector (B).

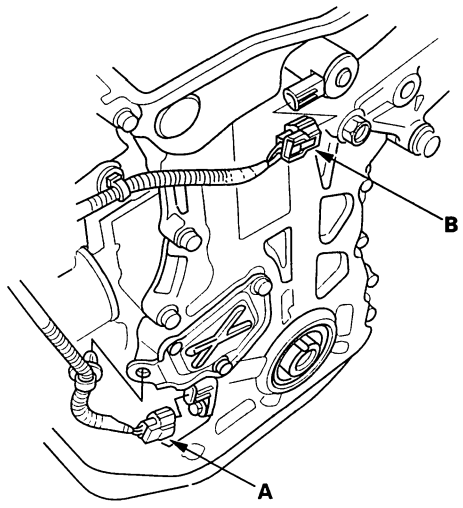

9. Remove the VTC oil control solenoid valve (see page 11-295).

10. Support the engine with a jack and wood block under the oil pan.

11. Remove the ground cable (A), and remove the upper bracket (B).

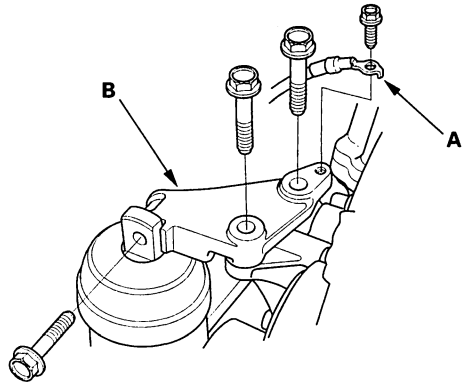

12. Remove the side engine mount bracket.

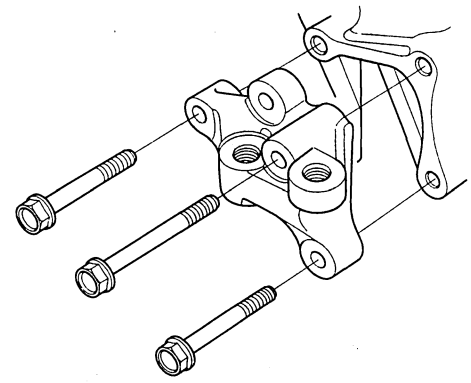

13. Remove the chain case.

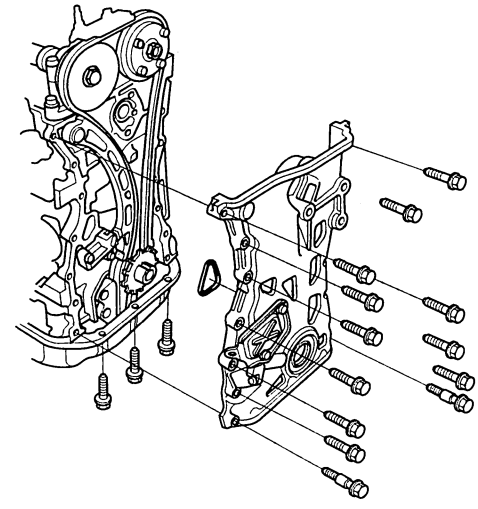

(cont'd)

Protected by AR

Cam Chain Removal (cont'd)

14. Loosely install the crankshaft pulley.

15. Turn the crankshaft counterclockwise to compress the auto-tensioner.

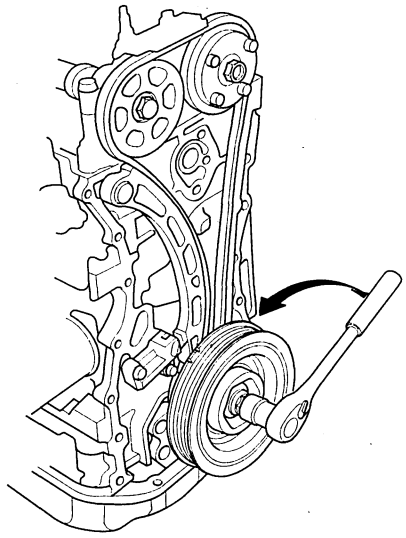

16. Align the holes on the lock (A) and the auto-tensioner (B), then insert a 1.2 mm (0.05 in.) diameter pin or lock pin (P/N 14511-PNA-003) (C) into the holes. Turn the crankshaft clockwise to secure the pin.

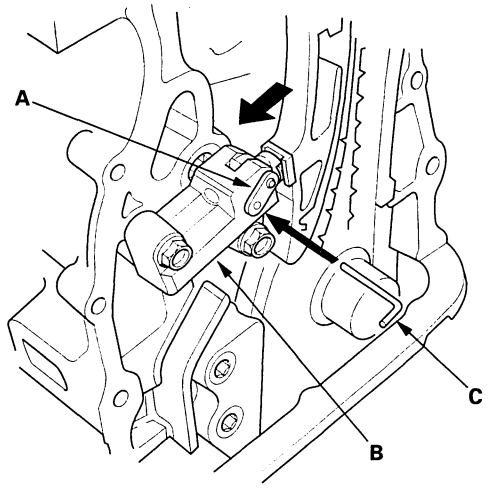

17. Remove the auto-tensioner.

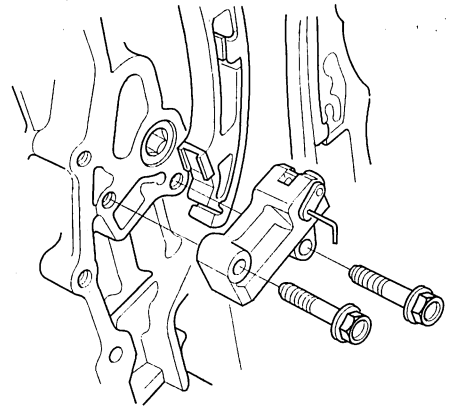

18. Remove the cam chain guide B.

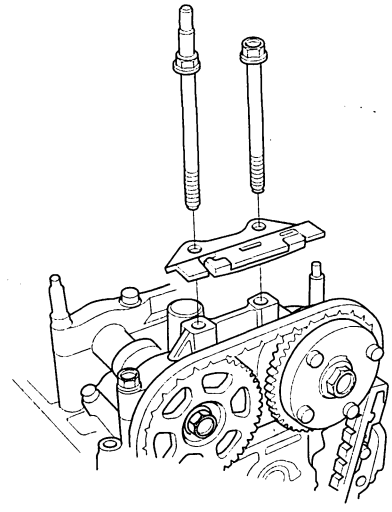

BACK

Protected by AR

19. Remove the cam chain guide A and tensioner arm (B).

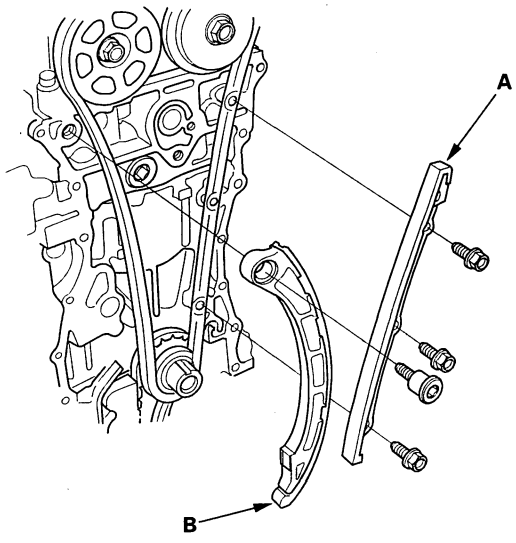

20. Remove the cam chain.

Cam Chain Installation

NOTE:
- Keep the cam chain away from magnetic fields.
- Before this procedure, check that the variable valve timing control (VTC) actuator is locked by turning the VTC actuator counterclockwise. If not locked, turn the VTC actuator clockwise until it stops, then recheck it. If it is still not locked, replace the VTC actuator.

1. Set the crankshaft to top dead center (TDC). Align the TDC mark (A) on the crankshaft sprocket with the pointer (B) on the engine block.

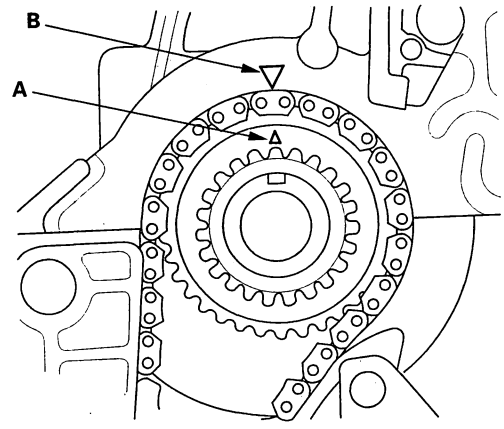

2. Set the camshafts to TDC. The punch mark (A) on the variable valve timing control (VTC) actuator and the punch mark (B) on the exhaust camshaft sprocket should be at the top. Align the TDC marks (C) on the VTC actuator and exhaust camshaft sprocket.

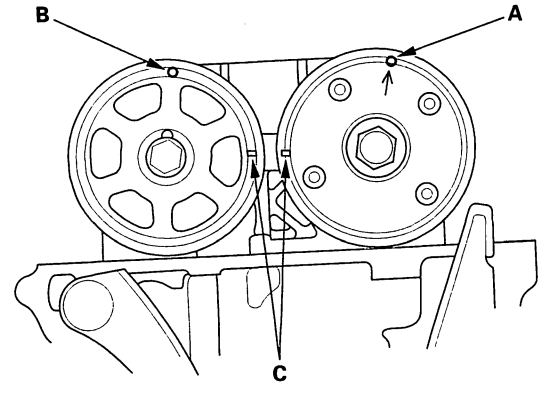

(cont'd)

Protected by AR

Cam Chain Installation (cont'd)

3. Install the cam chain on the crankshaft sprocket with the colored piece (A) aligned with the mark (B) on the crankshaft sprocket.

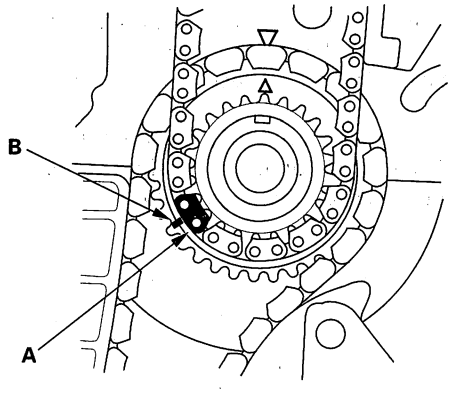

4. Install the cam chain on the VTC actuator and the exhaust camshaft sprocket with the punch marks (A) aligned with the center of the two colored pieces (B).

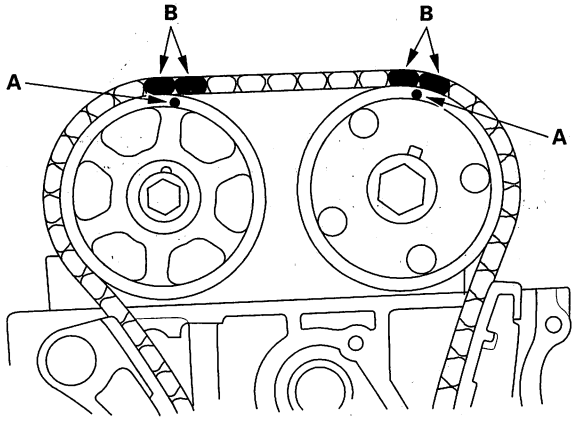

5. Install the cam chain guide A and tensioner arm (B).

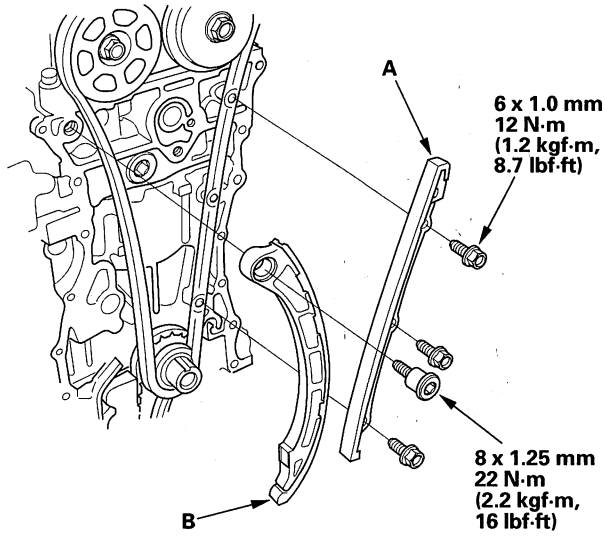

6. Install the auto-tensioner.

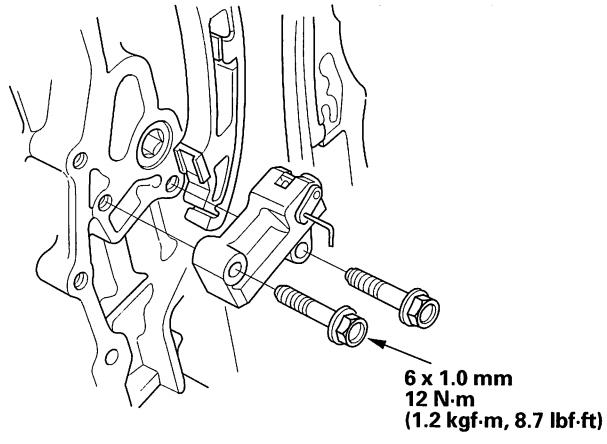

BACK

Protected by AR

7. Install the cam chain guide B.

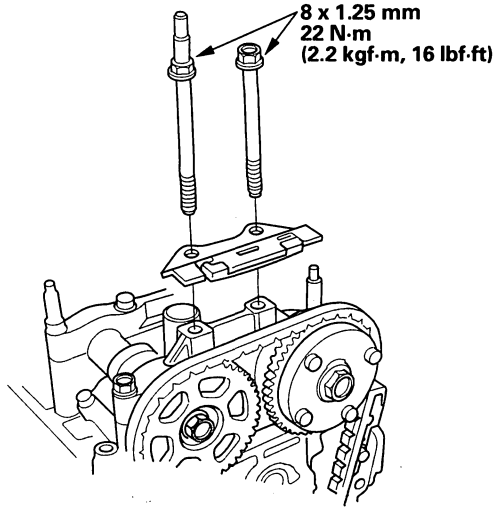

8. Remove the pin or lock pin (P/N 14511-PNA-003) from the auto-tensioner.

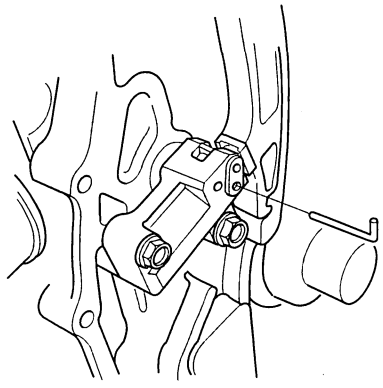

9. Check the chain case oil seal for damage. If the oil seal is damaged, replace the chain case oil seal (see page 6-21).

10. Remove all of the old liquid gasket from the chain case mating surfaces, bolts, and bolt holes.

11. Clean and dry the chain case mating surfaces.

12. Apply liquid gasket, P/N 08717-0004, 08718-0001, 08718-0002, 08718-0003, or 08718-0009, evenly to the engine block mating surface of the chain case.

NOTE: Do not install components if too much time has passed after applying the liquid gasket (for P/N 08718-0002, no more than 4 minutes, for all others, no more than 5 minutes). Instead, remove the old residue and reapply the liquid gasket.

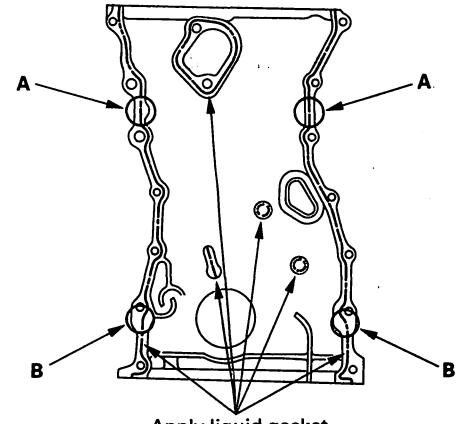

13. Apply liquid gasket to the engine block upper surface contact areas (A) on the chain case and lower block upper surface contact areas (B) on the chain case.

14. Apply liquid gasket, P/N 08718-0001, 08718-0002, or 08718-0009, evenly to the oil pan mating surface of the chain case.

NOTE: Do not install components if too much time has passed after applying the liquid gasket (for P/N 08718-0002, no more than 4 minutes, for all others, no more than 5 minutes). Instead, remove the old residue and reapply the liquid gasket.

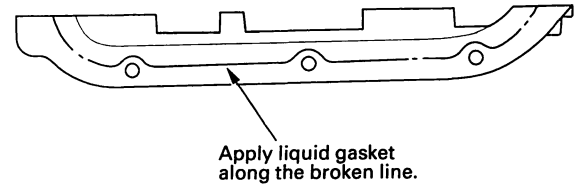

(cont'd)

Protected by AR

Cam Chain Installation (cont'd)

15. Install the new O-ring (A) on the chain case. Set the edge of the chain case (B) to the edge of the oil pan (C), then install the chain case on the engine block (D). Wipe off all of the excess liquid gasket on the oil pan and chain case mating area.

NOTE:
- When installing the chain case, do not slide the bottom surface on the oil pan mounting surface.
- Wait at least 30 minutes before filling the engine with oil.
- Do not run the engine within 3 hours after installing the chain case.

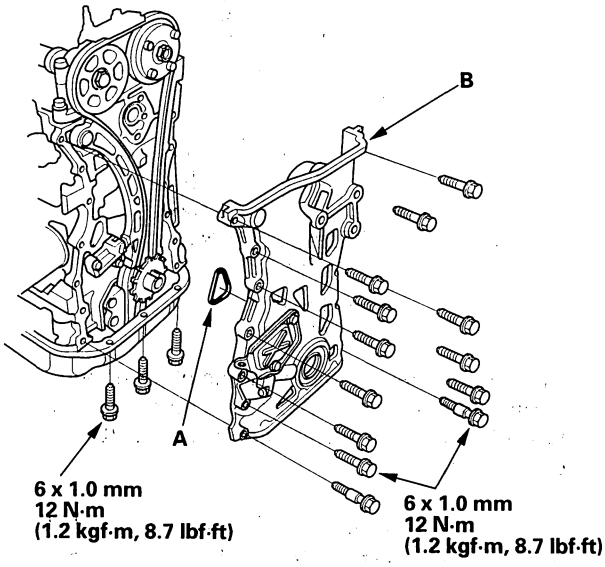

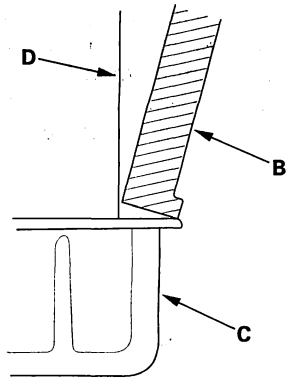

16. Install the side engine mount bracket.

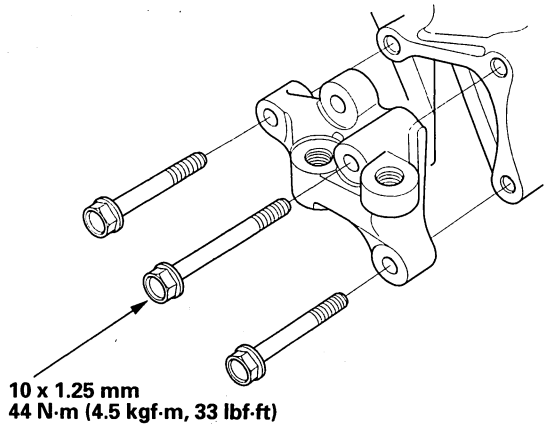

17. Install the upper bracket (A), then tighten the bolt in the numbered sequence shown.

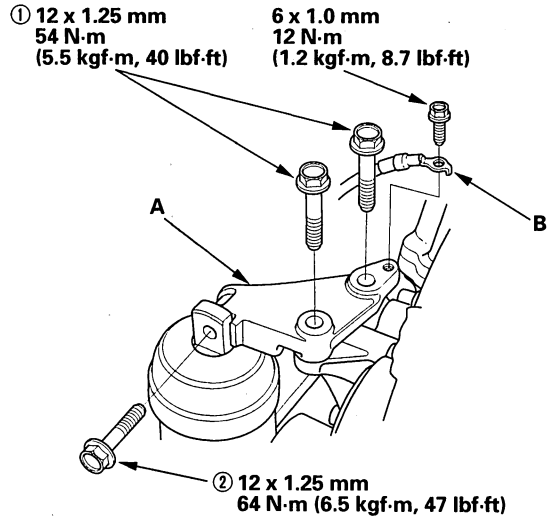

18. Install the ground cable (B).

BACK

Protected by AR

19. Install the variable valve timing control (VTC) oil control solenoid valve (see page 11-295).

20. Connect the crankshaft position (CKP) sensor connector (A) and VTC oil control solenoid valve connector (B).

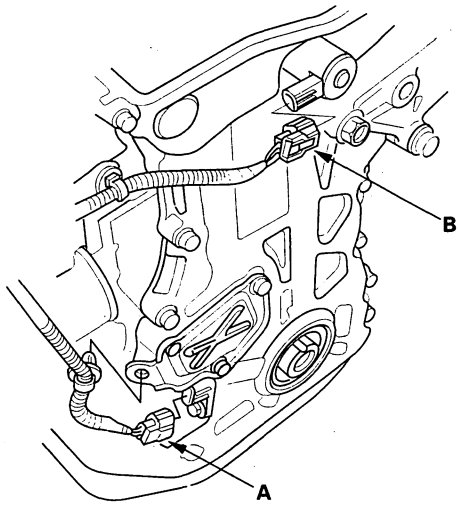

21. Install the crankshaft pulley (see page 6-12).

22. Install the cylinder head cover (see page 6-26).

23. Install the drive belt.

24. Install the splash shield (see step 25 on page 13-15).

25. Do the CKP pattern clear/CKP learn procedure (see page 11-4).

Auto-tensioner Removal and Installation

Removal

1. Remove the chain case cover.

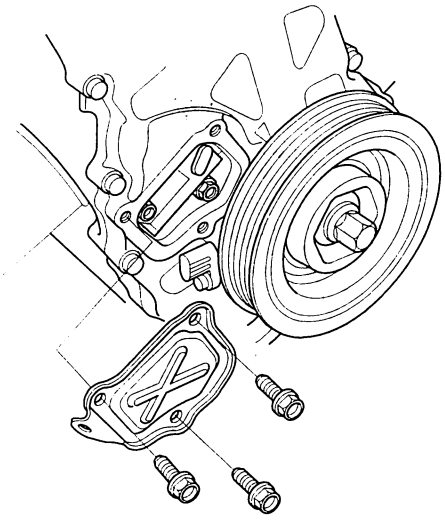

2. Turn the crankshaft counterclockwise to compress the auto-tensioner.

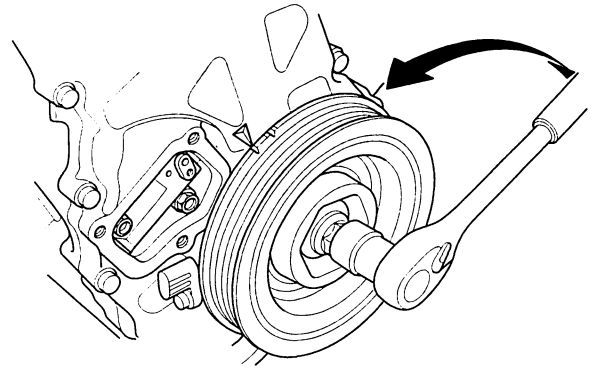

(cont'd)

Protected by AR

Auto-tensioner Removal and Installation (cont'd)

3. Align the holes on the lock (A) and the auto-tensioner (B), then insert a 1.2 mm (0.05 in.) diameter pin or lock pin (P/N 14511-PNA-003) (C) into the holes. Turn the crankshaft clockwise to secure the pin.

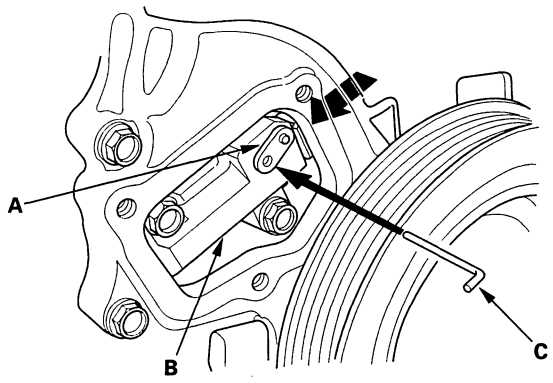

4. Remove the auto-tensioner.

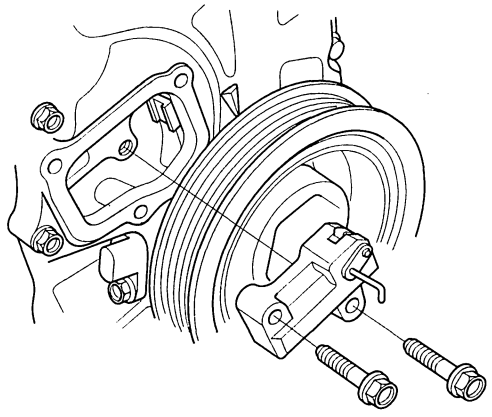

Installation

1. Install the auto-tensioner.

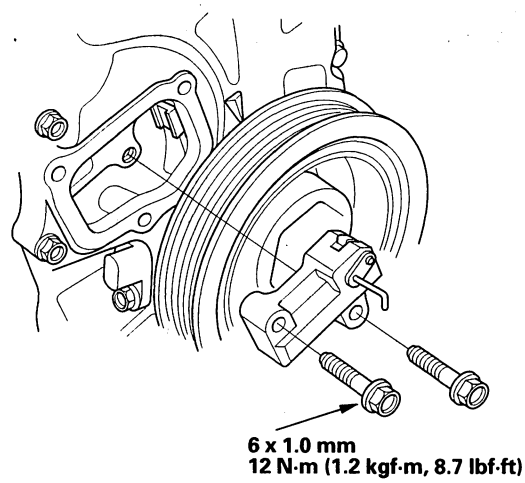

2. Remove the pin or lock pin (P/N 14511-PNA-003) from the auto-tensioner.

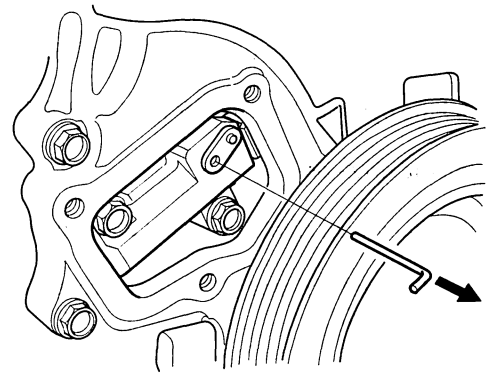

BACK

Protected by AR

3. Remove old liquid gasket from the chain case cover mating surfaces, bolts, and bolt holes.

4. Clean and dry the chain case cover mating surfaces.

5. Apply liquid gasket, P/N 08717-0004, 08718-0001, 08718-0002, 08718-0003, or 08718-0009, evenly to the chain case mating surface of the chain case cover.

   NOTE: Do not install components if too much time has passed after applying the liquid gasket (for P/N 08718-0002, no more than 4 minutes, for all others, no more than 5 minutes). Instead, remove the old residue and reapply the liquid gasket.

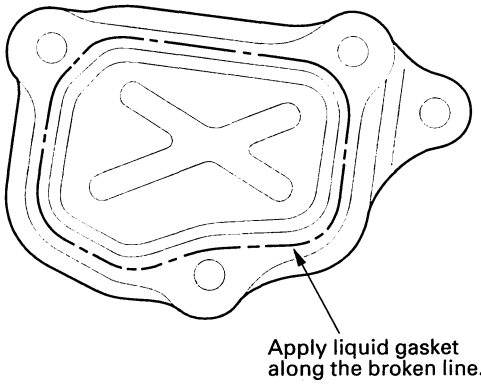

6. Install the chain case cover.

   NOTE:
   - Wait at least 30 minutes before filling the engine with oil.
   - Do not run the engine within 3 hours after installing the chain case cover.

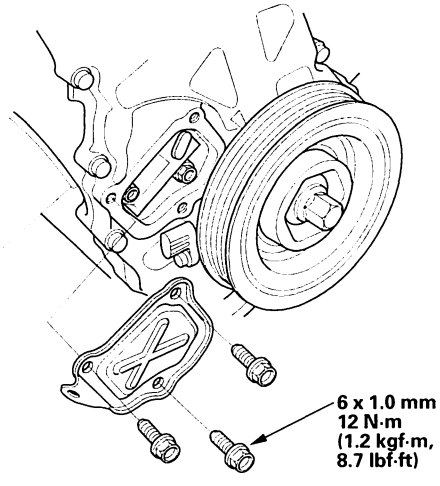

Chain Case Oil Seal Installation

Special Tools Required
- Driver 07749-0010000
- Attachment, 52 x 55 mm 07746-0010400

1. Use the special tools to drive a new oil seal squarely into the chain case to the specified installed height.

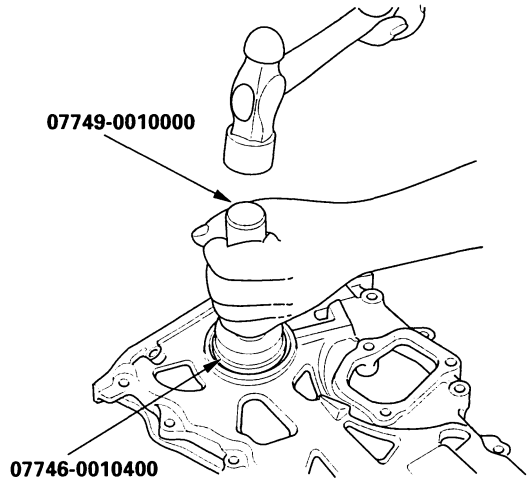

2. Measure the distance between the chain case surface (A) and oil seal (B).

   Oil Seal Installed Height:
   33.0—33.7 mm (1.30—1.33 in.)

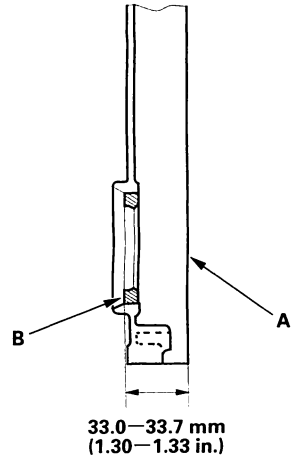

Protected by AR

Cam Chain Inspection

1. Remove the front wheels.
2. Remove the splash shield.
3. Remove the drive belt (see page 4-37).
4. Remove the cylinder head cover (see page 6-25).
5. Remove the crankshaft pulley (see page 6-11).
6. Disconnect the crankshaft position (CKP) sensor connector and variable valve timing control (VTC) oil control solenoid valve connector (see step 8 on page 6-13).
7. Remove the VTC oil control solenoid valve (see page 11-295).
8. Support the engine with a jack and wood block under the oil pan.
9. Remove the ground cable, and remove the upper bracket (see step 11 on page 6-13).
10. Remove the side engine mount bracket (see step 12 on page 6-13).
11. Remove the chain case (see step 13 on page 6-13).
12. Measure the tensioner rod length between the tensioner body and bottom of the flat surface section on the tensioner rod. If the length is over the tolerance, replace the cam chain and oil pump chain.

    Tensioner Rod Length
    Service Limit: 13.5 mm (0.53 in.)

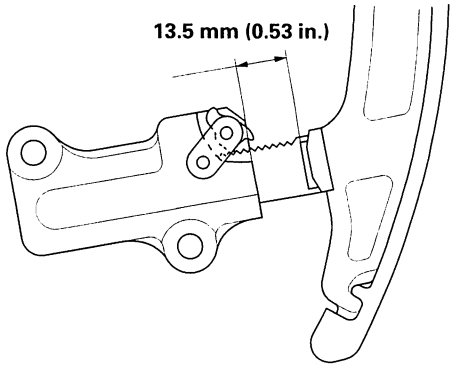

13. Check the chain case oil seal for damage. If the oil seal is damaged, replace the chain case oil seal (see page 6-21).
14. Remove all of the old liquid gasket from the chain case mating surfaces, bolt, and bolt holes.
15. Clean and dry the chain case mating surfaces.
16. Apply liquid gasket, P/N 08717-0004, 08718-0001, 08718-0002, 08718-0003, or 08718-0009, evenly to the engine block mating surface of the chain case (see step 12 on page 6-17).
17. Apply liquid gasket to the engine block upper surface contact areas on the chain case and lower block upper surface contact areas on the chain case (see step 13 on page 6-17).
18. Apply liquid gasket, P/N 08717-0004, 08718-0001, 08718-0002, 08718-0003, or 08718-0009, evenly to the oil pan mating surface of the chain case (see step 14 on page 6-17).

    NOTE: Do not install components if too much time has passed after applying the liquid gasket (for P/N 08718-0002, no more than 4 minutes, for all others, no more than 5 minutes). Instead, remove the old residue and reapply the liquid gasket.
19. Install the new O-ring on the chain case. Set the edge of the chain case to the edge of the oil pan, then install the chain case on the engine block (see step 15 on page 6-18). Wipe off the excess liquid gasket on the oil pan and chain case mating area.

    NOTE:
    - When installing the chain case, do not slide the bottom surface on the oil pan mounting surface.
    - Wait at least 30 minutes before filling the engine with oil.
    - Do not run the engine for at least 3 hours after installing the chain case.
20. Install the side engine mount bracket (see step 16 on page 6-18).
21. Install the upper bracket and the ground cable (see step 17 on page 6-18).

BACK

Protected by AR

22. Install the VTC oil control solenoid valve (see page 11-295).
23. Connect the CKP sensor connector and VTC oil control solenoid valve connector (see step 20 on page 6-19).
24. Install the crankshaft pulley (see page 6-12).
25. Install the cylinder head cover (see page 6-26).
26. Install the drive belt (see page 4-37).
27. Install the splash shield.
28. Install the front wheels.
29. Do the CKP pattern clear/CKP learn procedure (see page 11-4).

CKP Pulse Plate Replacement

1. Remove the front tires/wheels.
2. Remove the splash shield (see step 25 on page 13-7).
3. Remove the drive belt (see page 4-37).
4. Remove the cylinder head cover (see page 6-25).
5. Remove the crankshaft pulley (see page 6-11).
6. Disconnect the crankshaft position (CKP) sensor connector and variable valve timing control (VTC) oil control solenoid valve connector (see step 8 on page 6-13).
7. Remove the VTC oil control solenoid valve (see page 11-295).
8. Support the engine with a jack and wood block under the oil pan.
9. Remove the ground cable, and remove the upper bracket (see step 11 on page 6-13).
10. Remove the side engine mount bracket (see step 12 on page 6-13).
11. Remove the chain case (see step 13 on page 6-13).
12. Remove the CKP pulse plate.

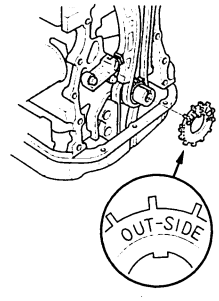

13. Install the CKP pulse plate.
14. Check the chain case oil seal for damage. If the oil seal is damaged, replace the chain case oil seal (see page 6-21).

(cont'd)

Protected by AR

CKP Pulse Plate Replacement (cont'd)

15. Remove all of the old liquid gasket from the chain case mating surfaces, bolts, and bolt holes.

16. Clean and dry the chain case mating surfaces.

17. Apply liquid gasket, P/N 08717-0004, 08718-0001, 08717-0002, 08718-0003, or 08718-0009, evenly to the engine block mating surface of the chain case (see step 12 on page 6-17).

    NOTE: Do not install components if too much time has passed after applying the liquid gasket (for P/N 08718-0002, no more than 4 minutes, for all others, no more than 5 minutes). Instead, remove the old residue and reapply the liquid gasket.

18. Apply liquid gasket to the engine block upper surface contact areas on the chain case and lower block upper surface contact areas on the chain case (see step 13 on page 6-17).

19. Apply liquid gasket, P/N 08717-0004, 08718-0001, 08718-0002, 08718-0003, or 08718-0009, evenly to the oil pan mating surface of the chain case (see step 14 on page 6-17).

    NOTE: Do not install components if too much time has passed after applying the liquid gasket (for P/N 08718-0002, no more than 4 minutes, for all others, no more than 5 minutes). Instead, remove the old residue and reapply the liquid gasket.

20. Install the new O-ring on the chain case. Set the edge of the chain case to the edge of the oil pan, then install the chain case on the engine block (see step 15 on page 6-18). Wipe off the excess liquid gasket on the oil pan and chain case mating area.

    NOTE:
    - When installing the chain case, do not slide the bottom surface on the oil pan mounting surface.
    - Wait at least 30 minutes before filling the engine with oil.
    - Do not run the engine within 3 hours after installing the chain case.

21. Install the side engine mount bracket (see step 16 on page 6-18).

22. Install the upper bracket and the ground cable (see step 17 on page 6-18).

23. Install the VTC oil control solenoid valve (see page 11-295).

24. Connect the CKP sensor connector and VTC oil control solenoid valve connector (see step 20 on page 6-19).

25. Install the crankshaft pulley (see page 6-12).

26. Install the cylinder head cover (see page 6-26).

27. Install the drive belt.

28. Install the splash shield (see step 25 on page 13-15).

29. Install the front tires/wheels.

30. Do the CKP pattern clear/CKP learn procedure (see page 11-4).

BACK

Protected by AR

Cylinder Head Cover Removal

1. Remove the intake manifold cover.

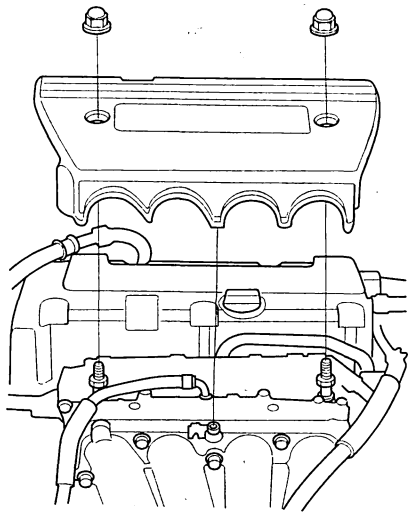

2. Remove the four ignition coils (see page 4-25).

3. Remove the two bolts (A) securing the vacuum line.

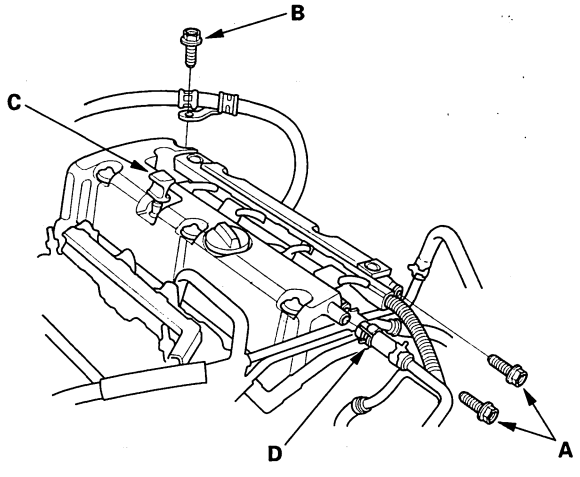

4. Remove the bolt (B) securing the power steering hose bracket.

5. Remove the dipstick (C) and breather hose (D).

6. Remove the cylinder head cover.

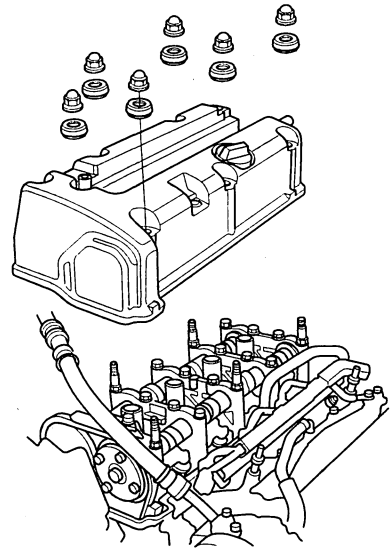

Protected by AR

Cylinder Head Cover Installation

1. Thoroughly clean the head cover gasket and the groove.
2. Install the head cover gasket (A) in the groove of the cylinder head cover (B).

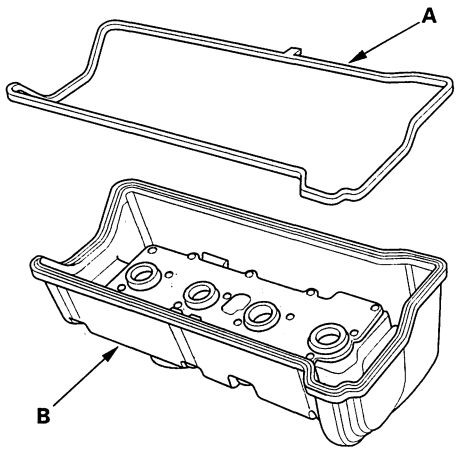

3. Check that the mating surfaces are clean and dry.
4. Apply liquid gasket, P/N 08717-0004, 08718-0001, 08718-0002, 08718-0003, or 08718-0009, on the chain case and the No. 5 rocker shaft holder mating areas.

   NOTE: Do not install components if too much time has passed after applying the liquid gasket (for P/N 08718-0002, no more than 4 minutes, for all others, no more than 5 minutes). Instead, remove the old residue and reapply the liquid gasket.

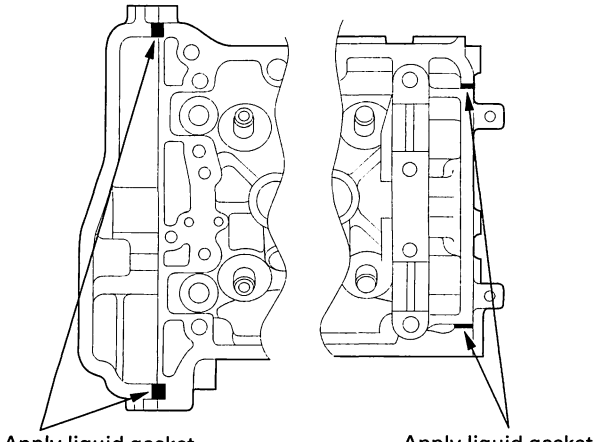

Apply liquid gasket to these points.

Apply liquid gasket to these points.

5. Set the spark plug seals (A) on the spark plug tubes. Place the cylinder head cover (B) on the cylinder head, then slide the cover slightly back and forth to seat the head cover gasket.

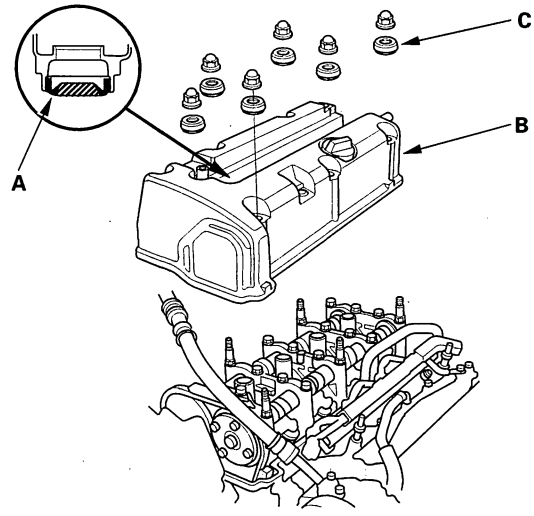

6. Inspect the cover washers (C). Replace any washer that is damaged or deteriorated.
7. Tighten the bolts in two or three steps. In the final step tighten all bolts, in sequence, to 12 N·m (1.2 kgf·m, 8.7 lbf·ft).

   NOTE:
   - Wait at least 30 minutes before filling the engine with oil.
   - Do not run the engine for at least 3 hours after installing the head cover.

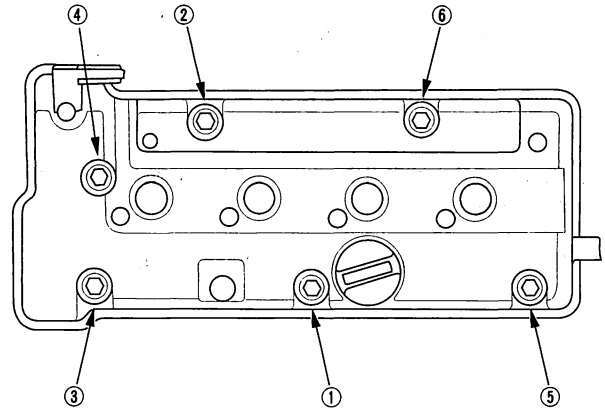

BACK

Protected by AR

8. Install the dipstick (A) and breather hose (B).

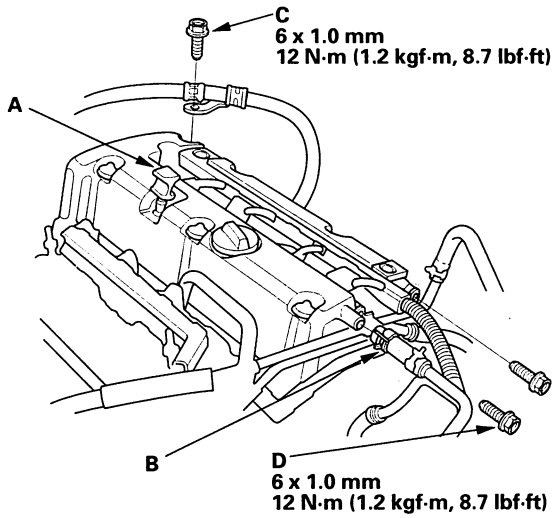

9. Tighten the bolt (C) securing the power steering hose bracket.
10. Tighten the two bolts (D) securing the vacuum line.
11. Install the four ignition coils (see page 4-25).
12. Check that all tubes, hoses, and connectors are installed correctly.
13. Install the intake manifold cover.

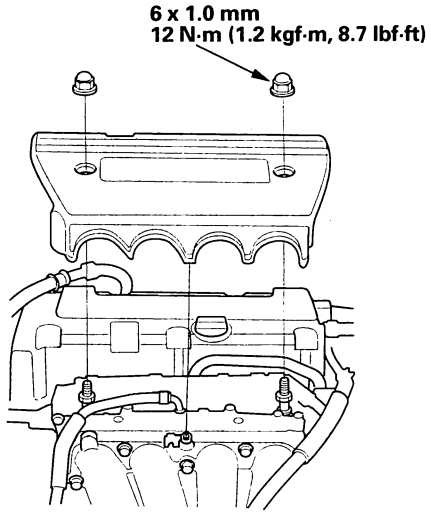

Protected by AR

Cylinder Head Removal

NOTE:
- Use fender covers to avoid damaging painted surfaces.
- To avoid damaging the wires and terminals, unplug the wiring connectors carefully while holding the connector portion.
- To avoid damaging the cylinder head, wait until the engine coolant temperature drops below 100 °F (38 °C) before loosening the cylinder head bolts.
- Mark all wiring and hoses to avoid misconnection. Also, be sure that they do not contact other wiring or hoses, or interfere with other parts.

1. Relieve fuel pressure (see page 11-330).
2. Drain the engine coolant (see page 10-6).
3. Remove the drive belt (see page 4-37).
4. Disconnect the intake air temperature (IAT) sensor connector (A).

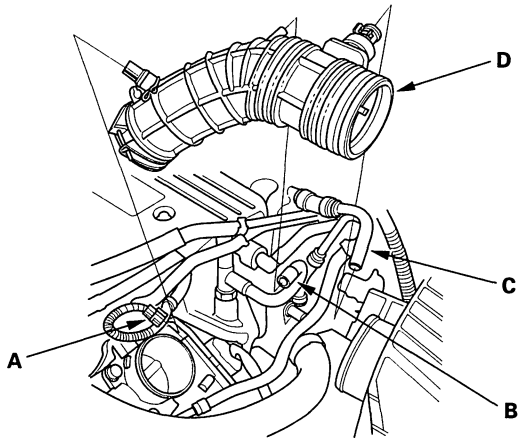

5. Remove the vacuum hose (B) and breather pipe (C), then remove the intake air duct (D).
6. Remove the quick-connect fitting cover (A), then disconnect the fuel feed hose (see page 11-338).

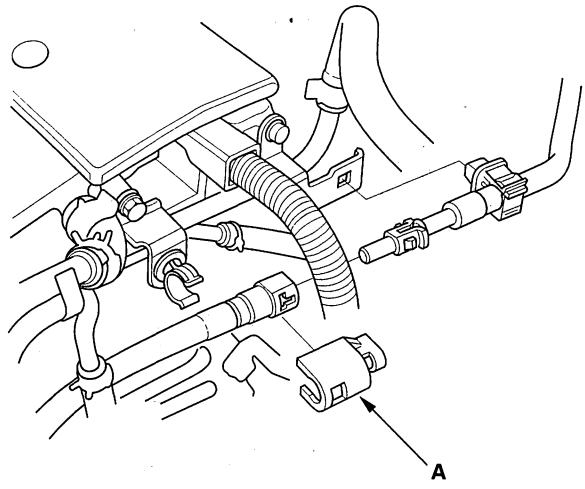

7. Remove the intake manifold:
   - 2003-2005 models (see page 9-4)
   - 2006 model (see page 9-9)
8. Remove the exhaust manifold (see page 9-14).
9. Remove the bolt (A) securing the connecting pipe.

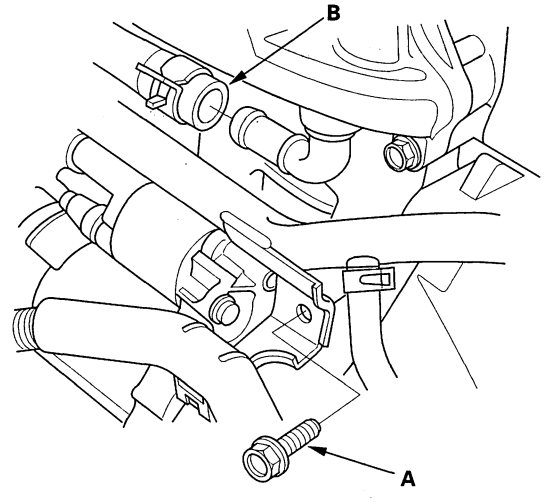

10. Remove the water bypass hose (B).

BACK

Protected by AR

11. Remove the evaporative emission (EVAP) canister hose (A) and brake booster vacuum hose (B).

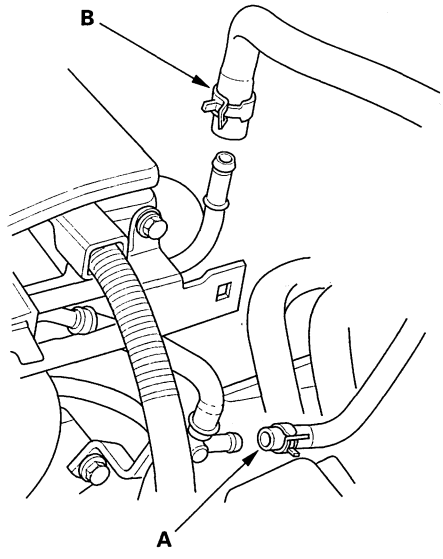

12. Remove the positive crankcase ventilation (PCV) hose (A) and ground cable (B).

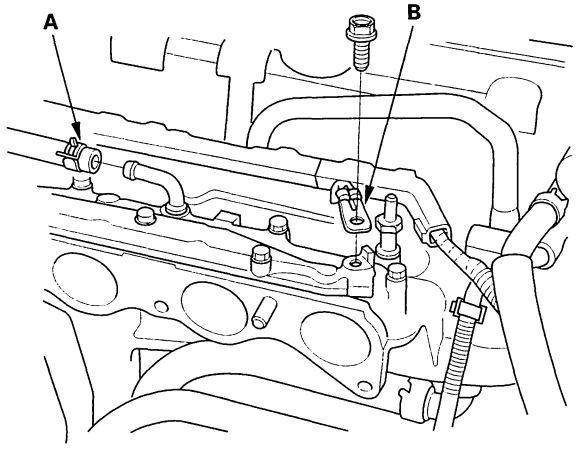

13. Remove the upper radiator hose (A) and heater hoses (B).

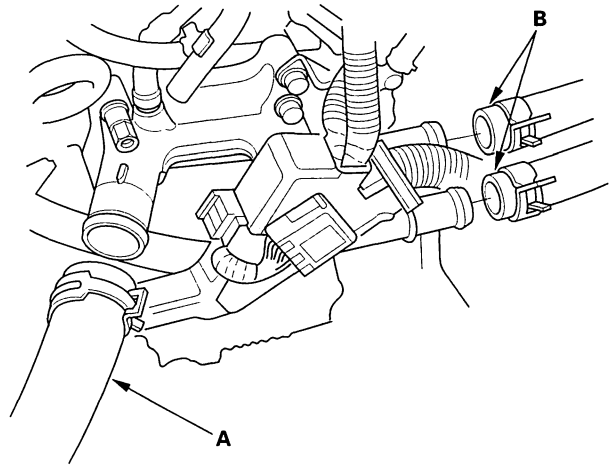

14. Remove the engine wire harness connectors and wire harness clamps from the cylinder head.

- Four injector connectors
- Engine coolant temperature (ECT) sensor connector
- Camshaft position (CMP) sensor A/B connectors
- Exhaust gas recirculation (EGR) valve connector
- Rocker arm oil control solenoid (VTEC solenoid valve) connector
- Engine oil pressure (EOP) sensor connector

(cont'd)

Protected by AR

Cylinder Head Removal (cont'd)

15. Remove the two bolts (A) securing the EVAP canister purge valve bracket and remove the bolt (B) securing the harness bracket.

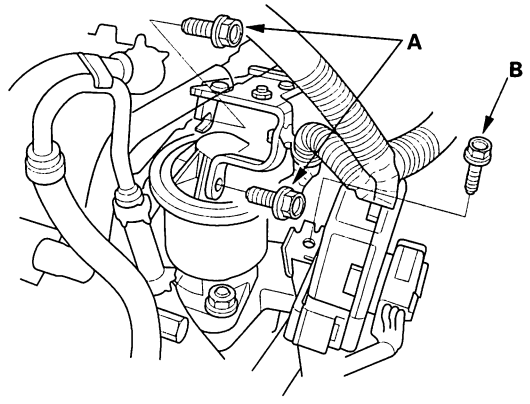

16. Remove the cam chain (see page 6-12).

17. Remove the rocker arm assembly (see page 6-33).

18. Remove the cylinder head bolts. To prevent warpage, unscrew the bolts in sequence 1/3 turn at a time; repeat the sequence until all bolts are loosened.

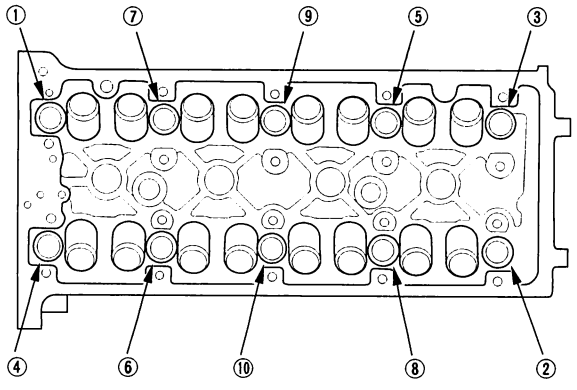

19. Remove the cylinder head.

CMP Pulse Plate A Replacement

1. Remove the cylinder head cover (see page 6-25).

2. Hold the camshaft with an open-end wrench, then loosen the bolt.

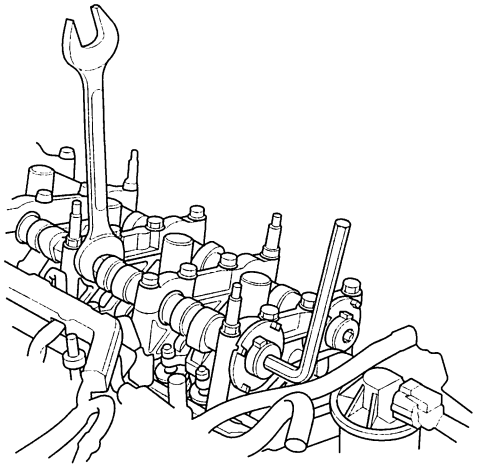

3. Remove the camshaft position (CMP) pulse plate A.

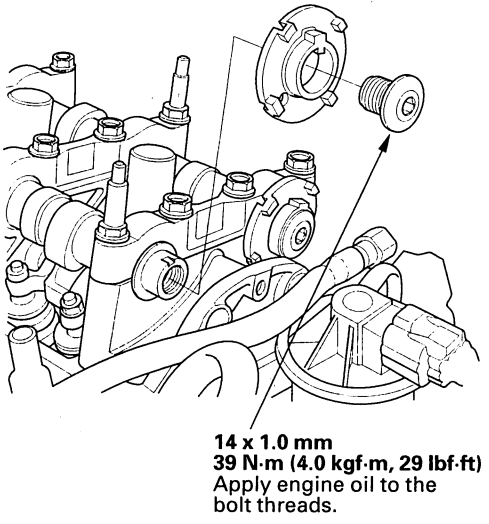

14 x 1.0 mm
39 N·m (4.0 kgf·m, 29 lbf·ft)
Apply engine oil to the bolt threads.

4. Install the CMP pulse plate A in the reverse order of removal.

BACK

Protected by AR

CMP Pulse Plate B Replacement

1. Remove the cylinder head cover (see page 6-25).
2. Hold the camshaft with an open-end wrench, then loosen the bolt.

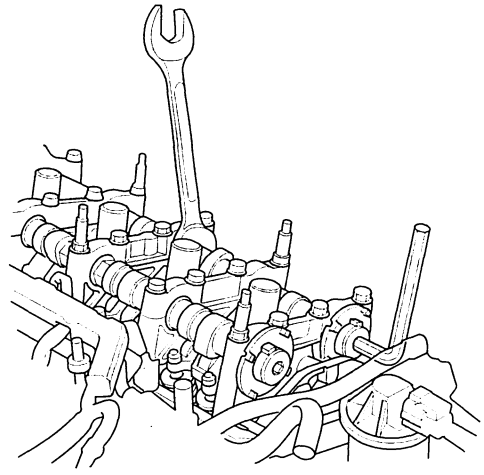

3. Remove the camshaft position (CMP) pulse plate B.

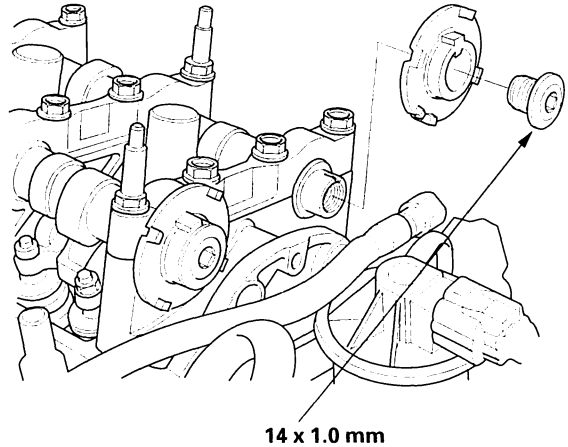

14 x 1.0 mm
39 N·m (4.0 kgf·m, 29 lbf·ft)
Apply engine oil to the bolt threads.

4. Install the CMP pulse plate B in the reverse order of removal.

VTC Actuator, Exhaust Camshaft Sprocket Removal and Installation

Removal

1. Remove the cam chain (see page 6-12).
2. Hold the camshaft with an open-end wrench, then loosen the variable valve timing control (VTC) actuator mounting bolt and exhaust camshaft sprocket mounting bolt.

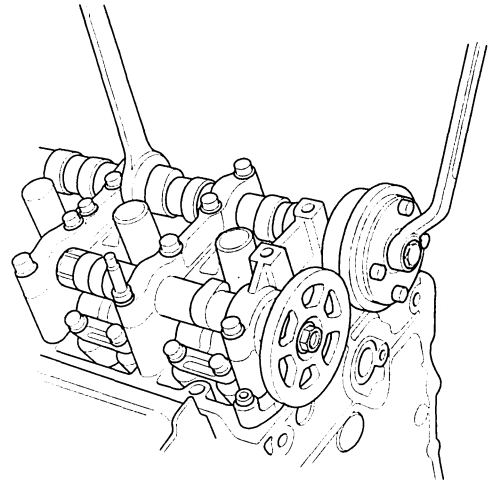

3. If the VTC actuator is reused, do the following steps.
   - –1 Remove the intake camshaft, and seal the advance holes and retard holes in the No. 1 camshaft journal with tape (see step 6 on page 6-8).
   - –2 Punch a hole in the tape over one of the advance holes (see step 7 on page 6-8).
   - –3 Apply air to the advance hole to release the lock (see step 8 on page 6-9).
   - –4 Remove the tape from the No. 1 camshaft journal.
4. Remove the VTC actuator and exhaust camshaft sprocket.

(cont'd)

Protected by AR

VTC Actuator, Exhaust Camshaft Sprocket Removal and Installation (cont'd)

Installation

1. Install the VTC actuator and exhaust camshaft sprocket.

   NOTE: Installing the VTC actuator to unlock position.

2. Apply engine oil to the threads of the VTC actuator mounting bolt and exhaust camshaft mounting bolt, then install them.

3. Hold the camshaft with an open-end wrench, then tighten the bolts.

   Specified torque
   VTC actuator mounting bolt:
   113 N·m (11.5 kgf·m, 83 lbf·ft)
   Exhaust camshaft sprocket mounting bolt:
   72 N·m (7.3 kgf·m, 53 lbf·ft)

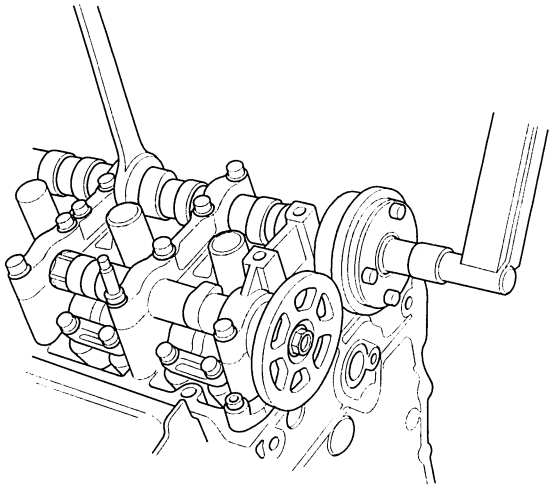

4. Hold the camshaft, and turn the VTC actuator clockwise until you hear it click.

5. Install the cam chain (see page 6-15).

Cylinder Head Inspection for Warpage

1. Remove the cylinder head (see page 6-28).

2. Inspect the camshaft (see page 6-36).

3. Check the cylinder head for warpage. Measure along the edges, and three ways across the center.

   - If warpage is less than 0.05 mm (0.002 in.) cylinder head resurfacing is not required.
   - If warpage is between 0.05 mm (0.002 in.) and 0.2 mm (0.008 in.), resurface the cylinder head.
   - Maximum resurface limit is 0.2 mm (0.008 in.) based on a height of 104 mm (4.09 in.).

   Cylinder Head Height
   Standard (New): 103.95—104.05 mm (4.093—4.096 in.)

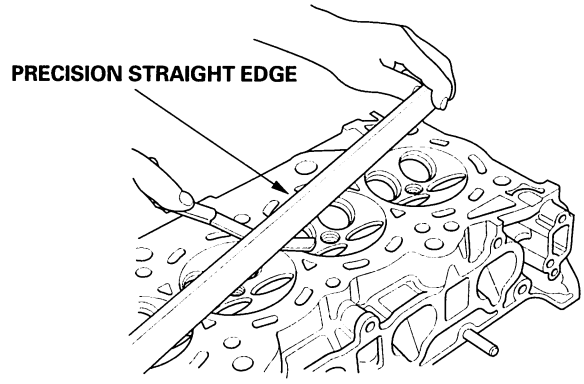

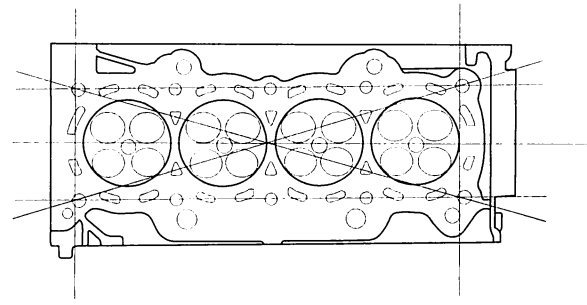

BACK

Protected by AR

Rocker Arm Assembly Removal

1. Remove the cam chain (see page 6-12).
2. Loosen the rocker arm adjusting screws (A).

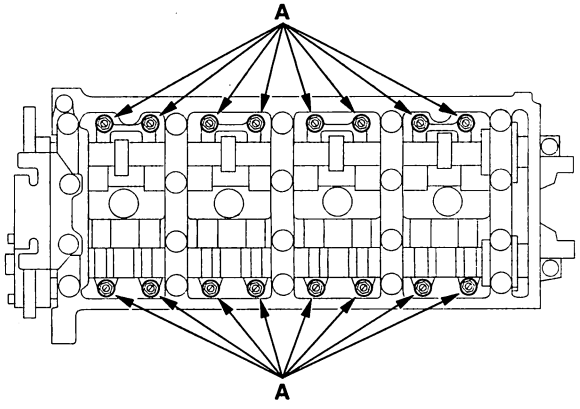

3. Remove the camshaft holder bolts. To prevent damaging the camshafts, unscrew the bolts two turns at a time, in a crisscross pattern.

   NOTE: Bolt ① is not on all engines.

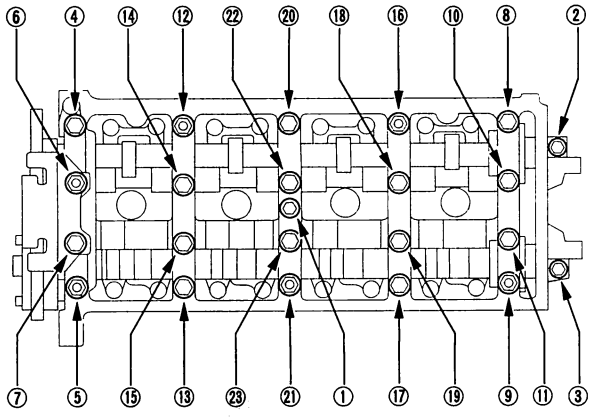

4. Remove the cam chain guide B, camshaft holders, and camshafts.
5. Insert the bolts (A) into the rocker shaft holder, then remove the rocker arm assembly (B).

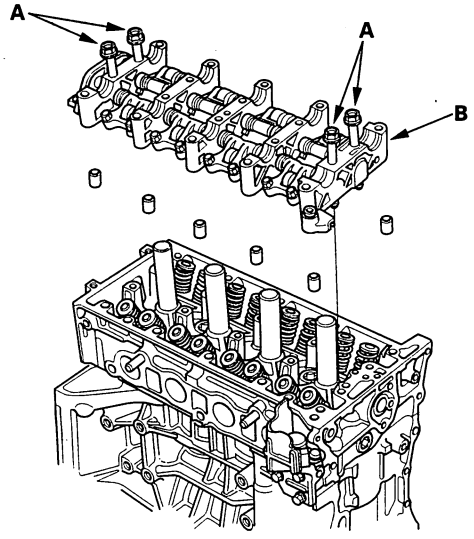

Protected by AR

Rocker Arm and Shaft Disassembly/Reassembly

NOTE:
- Identify parts as they are removed to ensure reinstallation in original location.
- Inspect the rocker arm shaft and rocker arms (see page 6-35).
- The rocker arms must be installed in the same positions if reused.
- When removing or installing the rocker arm assembly, do not remove the camshaft holder bolts. The bolts will keep the holders and rocker arms on the shaft.
- Prior to reassembling, clean all the parts in solvent, dry them, and apply lubricant to any contact points.
- Bundle the intake rocker arms with rubber bands to keep them together as a set.
- When replacing the intake rocker arm assembly, remove the fastening hardware from the new intake rocker arm assembly.

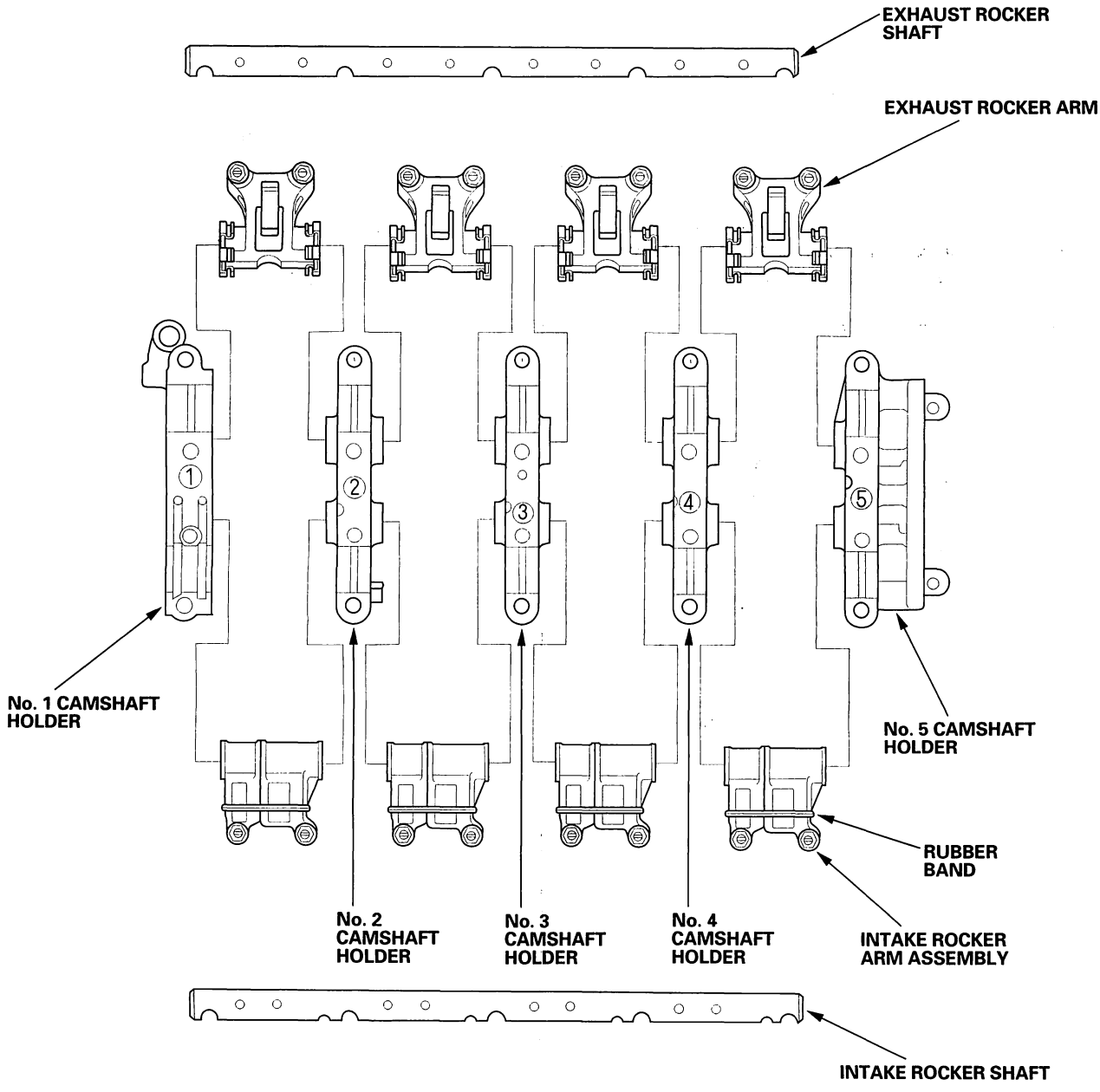

BACK

Protected by AR

Rocker Arm and Shaft Inspection

1. Remove the rocker arm assembly (see page 6-33), then disassemble the rocker arm assembly (see page 6-34).

2. Measure the diameter of the shaft at the first rocker location.

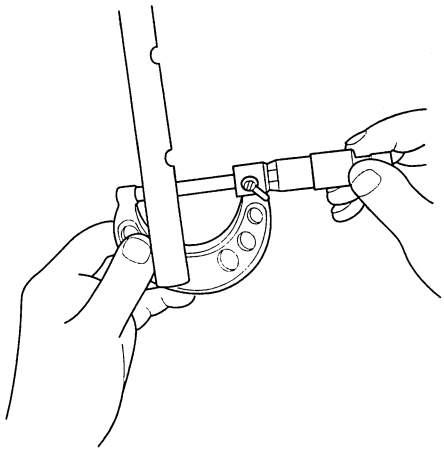

3. Zero the gauge (A) to the shaft diameter.

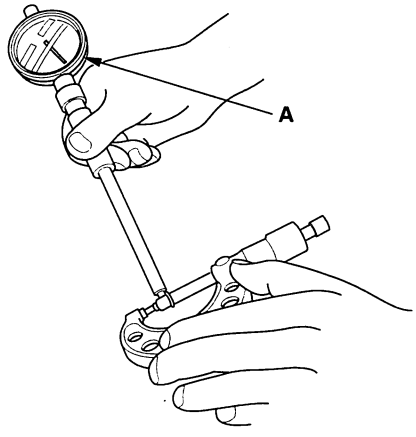

4. Measure the inside diameter of the rocker arm, and check it for an out-of-round condition.

Rocker Arm-to-Shaft Clearance
Standard (New):

Intake:	**0.025—0.052 mm (0.0010—0.0020 in.)**
Exhaust:	**0.018—0.056 mm (0.0007—0.0022 in.)**
Service Limit:	**0.08 mm (0.003 in.)**

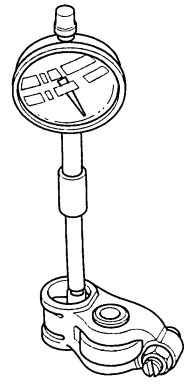

5. Repeat for all rocker arms and both shafts. If the clearance is over the limit, replace the rocker shaft and all overtolerance rocker arms. If any VTEC rocker arm needs replacement, replace the rocker arms (primary and secondary) as a set.

6. Inspect the rocker arm pistons (A). Push each piston manually. If it does not move smoothly, replace the rocker arm set.

   NOTE: Apply oil to the pistons when reassembling.

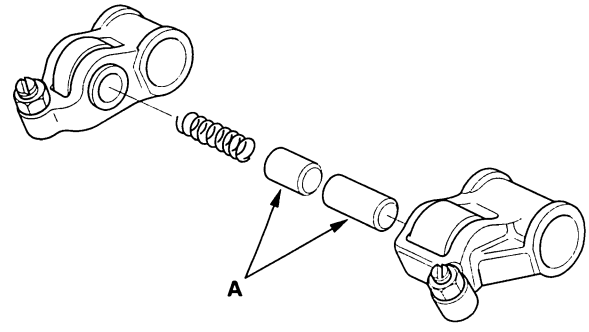

7. Install the rocker arm assembly (see page 6-45).

Protected by AR

Camshaft Inspection

NOTE: Do not rotate the camshaft during inspection.

1. Remove the rocker arm assembly (see page 6-33).

2. Put the rocker shaft holders, camshaft and camshaft holders on the cylinder head, then tighten the bolts to the specified torque.

   NOTE: If the engine does not have bolt ㉑, skip it and continue the torque sequence.

   Specified torque
   8 mm bolts: 22 N·m (2.2 kgf·m, 16 lbf·ft)
   6 mm bolts: 12 N·m (1.2 kgf·m, 8.7 lbf·ft)
   6 mm bolts: ㉑, ㉒, ㉓

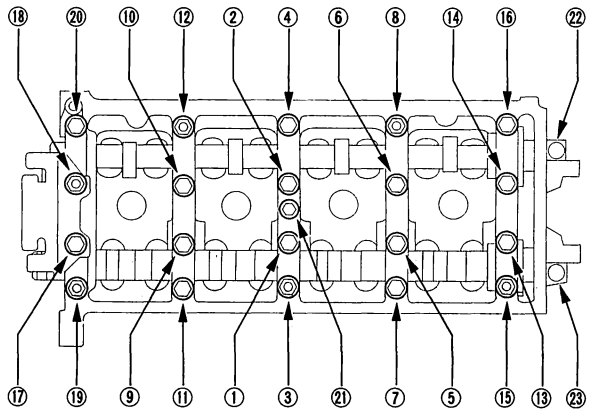

3. Seat the camshaft by pushing it away from the camshaft pulley end of the cylinder head.

4. Zero the dial indicator against the end of the camshaft, then push the camshaft back and forth and read the end play. If the end play is beyond the service limit, replace the cylinder head and recheck. If it is still beyond the service limit, replace the camshaft.

   Camshaft End Play
   Standard (New): 0.05—0.20 mm (0.002—0.008 in.)
   Service Limit: 0.4 mm (0.02 in.)

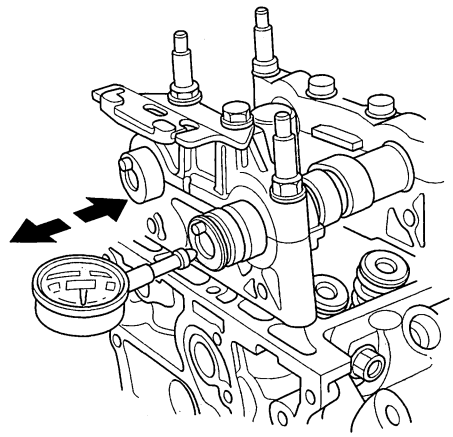

BACK

Protected by AR

5. Unscrew the camshaft holder bolts two turns at a time, in a crisscross pattern. Then remove the camshaft holders from the cylinder head.

6. Lift the camshafts out of the cylinder head, wipe them clean, then inspect the lift ramps. Replace the camshaft if any lobes are pitted, scored, or excessively worn.

7. Clean the camshaft journal surfaces in the cylinder head, then set the camshafts back in place. Place a plastigage strip across each journal.

8. Install the camshaft holders, then tighten the bolts to the specified torque as shown in step 2.

9. Remove the camshaft holders. Measure the widest portion of plastigage on each journal.

   - If the camshaft-to-holder clearance is within limits, go to step 11.
   - If the camshaft-to-holder clearance is beyond the service limit and the camshaft has been replaced, replace the cylinder head.
   - If the camshaft-to-holder clearance is beyond the service limit and the camshaft has not been replaced, go to step 10.

Camshaft-to-Holder Oil Clearance
Standard (New):

No. 1 Journal:	**0.030—0.069 mm (0.001—0.003 in.)**
No. 2, 3, 4, 5 Journals:	**0.060—0.099 mm (0.002—0.004 in.)**
Service Limit:	**0.15 mm (0.006 in.)**

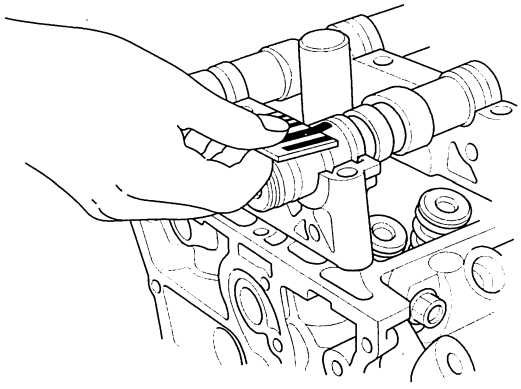

10. Check the total runout with the camshaft supported on V-blocks.

    - If the total runout of the camshaft is within the service limit, replace the cylinder head.
    - If the total runout is beyond the service limit, replace the camshaft and recheck the camshaft-to-holder oil clearance. If the oil clearance is still beyond the service limit, replace the cylinder head.

Camshaft Total Runout
Standard (New): 0.03 mm (0.001 in.) max.
Service Limit: 0.04 mm (0.002 in.)

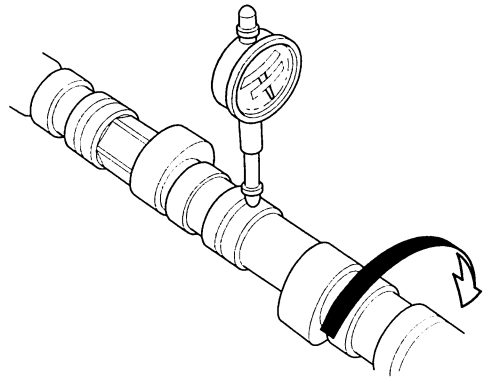

11. Measure cam lobe height.

Cam Lobe Height Standard (New):

	INTAKE	EXHAUST
PRI	33.925 mm (1.3356 in.)	34.092 mm (1.3422 in.)
SEC	29.638 mm (1.1668 in.)	

PRI: Primary SEC: Secondary C/C: Cam Chain

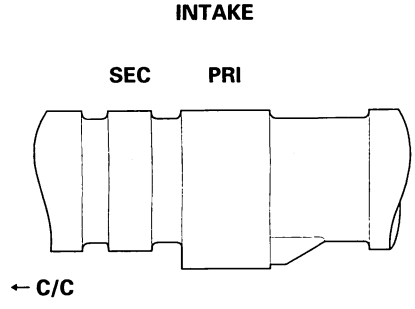

Protected by AR

Valve, Spring, and Valve Seal Removal

Special Tools Required
Valve spring compressor attachment 07757-PJ1010A

Identify the valves and valve springs as they are removed so that each item can be reinstalled in its original position.

1. Remove the cylinder head (see page 6-28).
2. Using an appropriate-sized socket (A) and plastic mallet (B), lightly tap the valve retainer to loosen the valve cotters.

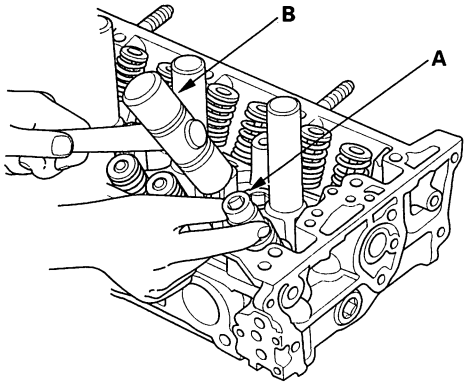

3. Install the spring compressor. Compress the spring, and remove the valve cotters.

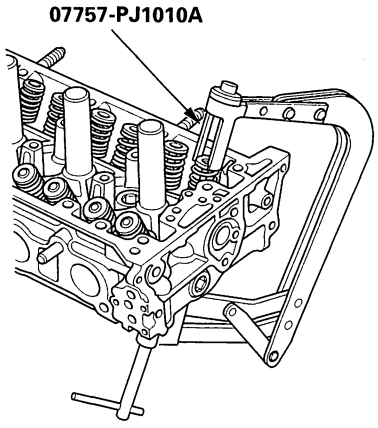

4. Remove the special tool, then remove the valve retainer and valve spring.
5. Install the valve guide seal remover.

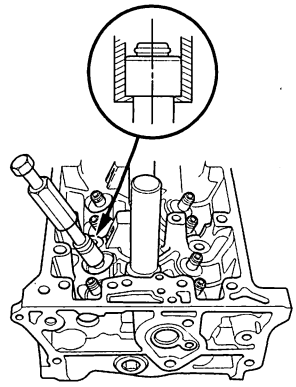

6. Remove the valve seal.

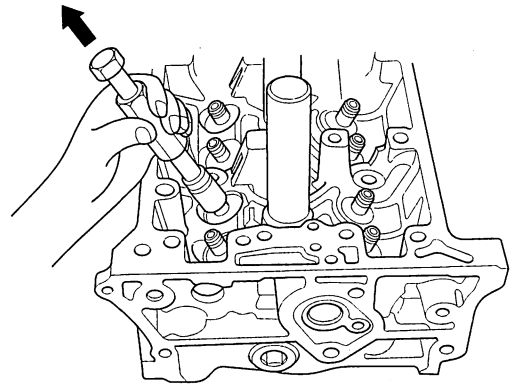

BACK

Protected by AR

Valve Inspection

1. Remove the valves (see page 6-38).

2. Measure the valve in these areas.

Intake Valve Dimensions
A Standard (New): 34.85—35.15 mm (1.372—1.384 in.)
B Standard (New): 108.7—109.5 mm (4.280—4.311 in.)
C Standard (New): 5.475—5.485 mm (0.2156—0.2159 in.)
C Service Limit: 5.445 mm (0.214 in.)

Exhaust Valve Dimensions
A Standard (New): 29.85—30.15 mm (1.175—1.187 in.)
B Standard (New): 108.3—109.1 mm (4.264—4.295 in.)
C Standard (New): 5.450—5.460 mm (0.2146—0.2150 in.)
C Service Limit: 5.42 mm (0.213 in.)

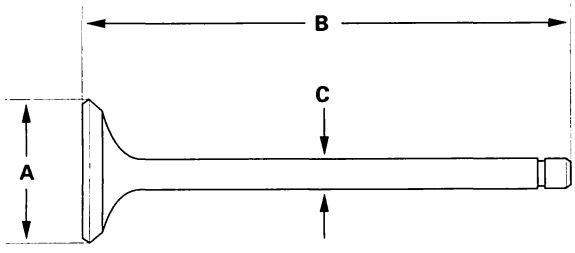

Valve Stem-to-Guide Clearance Inspection

1. Remove the valves (see page 6-38).

2. Slide the valve out of its guide about 10 mm (0.39 in.), then measure the guide-to-stem clearance with a dial indicator while rocking the stem in the direction of normal thrust (wobble method).
   - If the measurement exceeds the service limit, recheck it using a new valve.
   - If the measurement is now within the service limit, reassemble using a new valve.
   - If the measurement with a new valve still exceeds the service limit, go to step 3.

Intake Valve Stem-to-Guide Clearance
Standard (New): 0.06—0.11 mm (0.002—0.004 in.)
Service Limit: 0.16 mm (0.006 in.)

Exhaust Valve Stem-to-Guide Clearance
Standard (New): 0.11—0.16 mm (0.004—0.006 in.)
Service Limit: 0.22 mm (0.009 in.)

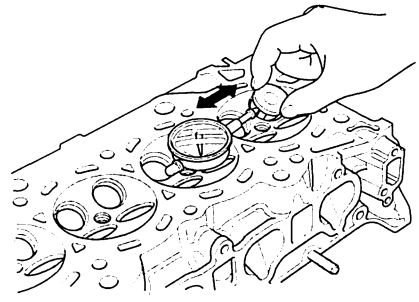

3. Subtract the O.D. of the valve stem, measured with a micrometer, from the I.D. of the valve guide, measured with an inside micrometer or ball gauge. Take the measurements in three places along the valve stem and three places inside the valve guide. The difference between the largest guide measurement and the smallest stem measurement should not exceed the service limit.

Intake Valve Stem-to-Guide Clearance
Standard (New): 0.030—0.055 mm (0.0012—0.0022 in.)
Service Limit: 0.08 mm (0.003 in.)

Exhaust Valve Stem-to-Guide Clearance
Standard (New): 0.055—0.080 mm (0.0022—0.0031 in.)
Service Limit: 0.11 mm (0.004 in.)

Protected by AR

Valve Guide Replacement

Special Tools Required
- Valve guide driver, 5.5 mm 07742-0010100
- Valve guide reamer, 5.5 mm 07HAH-PJ7010B

1. Inspect valve stem-to-guide clearance (see page 6-39).

2. As illustrated, use a commercially available air-impact valve guide driver (A) modified to fit the diameter of the valve guides. In most cases, the same procedure can be done using the special tool and a conventional hammer.

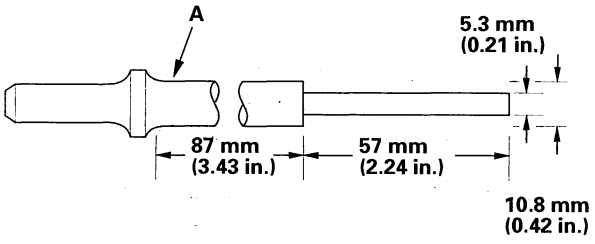

3. Select the proper replacement guides, and chill them in the freezer section of a refrigerator for about an hour.

4. Use a hot plate or oven to evenly heat the cylinder head to 300 °F (150 °C). Monitor the temperature with a cooking thermometer. Do not get the head hotter than 300 °F (150 °C); excessive heat may loosen the valve seats.

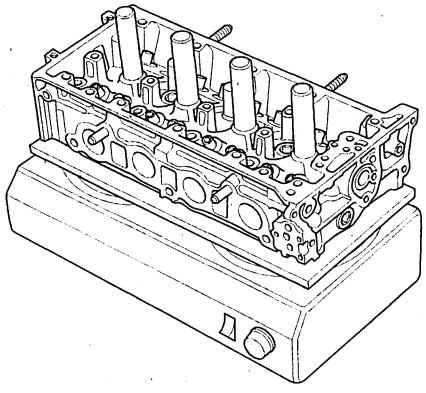

5. Working from the camshaft side, use the driver and an air hammer to drive the guide about 2 mm (0.1 in.) towards the combustion chamber. This will knock off some of the carbon and make removal easier. Hold the air hammer directly in line with the valve guide to prevent damaging the driver. Wear safety goggles or a face shield.

6. Turn the head over, and drive the guide out toward the camshaft side of the head.



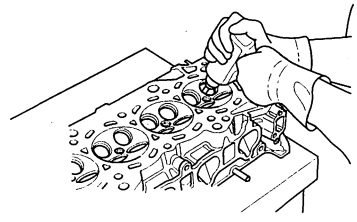

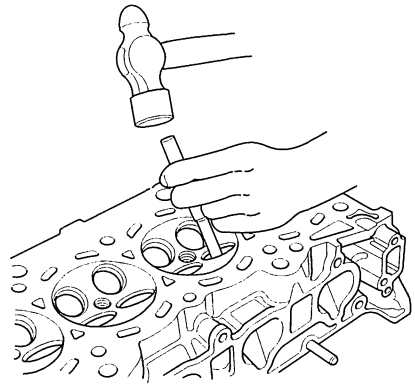

7. If a valve guide won't move, drill it out with a 8 mm (5/16 in.) bit, then try again. Drill guides only in extreme cases; you could damage the cylinder head if the guide breaks.

8. Take out the new guide(s) from the freezer, one at a time, as you need them.

BACK

Protected by AR

9. Apply a thin coat of clean engine oil to the outside of the new valve guide. Install the guide from the camshaft side of the head; use the special tool to drive the guide in to the specified installed height (A) of the guide (B). If you have all 16 guides to do, you may have to reheat the head.

Valve Guide Installed Height
Intake: 15.2—16.2 mm (0.598—0.638 in.)
Exhaust: 15.5—16.5 mm (0.610—0.650 in.)

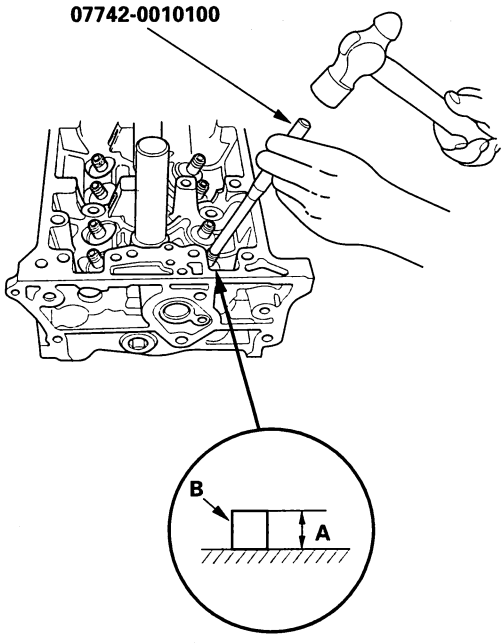

10. Coat both reamer and valve guide with cutting oil.

11. Rotate the reamer clockwise the full length of the valve guide bore.

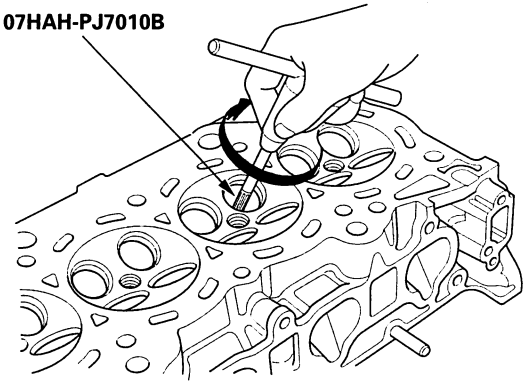

12. Continue to rotate the reamer clockwise while removing it from the bore.

13. Thoroughly wash the guide in detergent and water to remove any cutting residue.

14. Check the clearances with a valve (see page 6-39). Verify that a valve slides in the intake and exhaust valve guides without exerting pressure.

15. Inspect the valve seating, if necessary renew the valve seat using a valve seat cutter (see page 6-42).

Protected by AR

Valve Seat Reconditioning

1. Inspect valve stem-to-guide clearance (see page 6-39). If the valve guides are worn, replace them (see page 6-40) before cutting the valve seats.

2. Renew the valve seats in the cylinder head using a valve seat cutter.

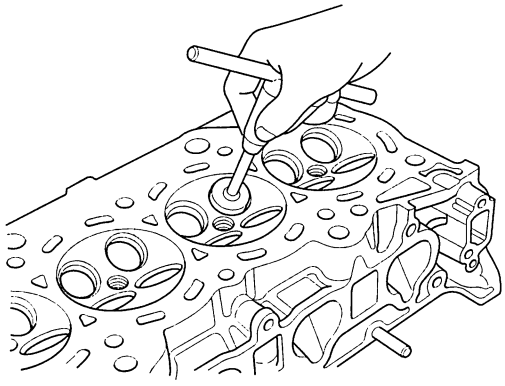

3. Carefully cut a 45 ° seat, removing only enough material to ensure a smooth and concentric seat.

4. Bevel the upper and lower edges at the angles shown in the illustration. Check the width of the seat and adjust accordingly.

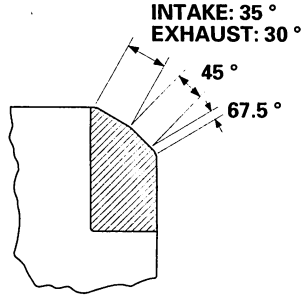

5. Make one more very light pass with the 45 ° cutter to remove any possible burrs caused by the other cutters.

Valve Seat Width
Standard (New): 1.25—1.55 mm (0.049—0.061 in.)
Service Limit: 2.00 mm (0.079 in.)

6. After resurfacing the seat, inspect for even valve seating. Apply Prussian Blue compound (A) to the valve face. Insert the valve in its original location in the head, then lift it and snap it closed against the seat several times.

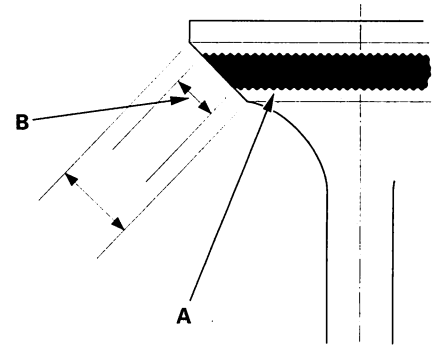

7. The actual valve seating surface (B), as shown by the blue compound, should be centered on the seat.

   - If it is too high (closer to the valve stem), you must make a second cut with the 67.5 ° cutter to move it down, then one more cut with the 45 ° cutter to restore seat width.
   - If it is too low (close to the valve edge), you must make a second cut with the 35 ° cutter (intake side) or the 30 ° cutter (exhaust side) to move it up, then make one more cut with the 45 ° cutter to restore seat width.

   NOTE: The final cut should always be made with the 45 ° cutter.

BACK

Protected by AR

8. Insert the intake and exhaust valves in the head, and measure valve stem installed height (A).

Intake Valve Stem Installed Height
Standard (New): 44.0—44.5 mm (1.73—1.75 in.)
Service Limit: 44.7 mm (1.76 in.)

Exhaust Valve Stem Installed Height
Standard (New): 44.1—44.6 mm (1.74—1.76 in.)
Service Limit: 44.8 mm (1.76 in.)

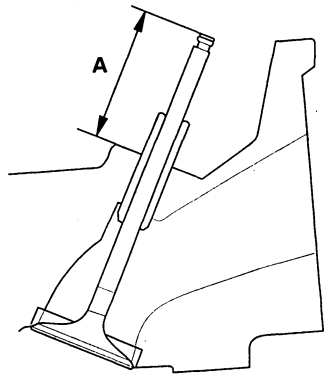

9. If valve stem installed height is over the service limit, replace the valve and recheck. If it is still over the service limit, replace the cylinder head; the valve seat in the head is too deep.

Protected by AR

Valve, Spring, and Valve Seal Installation

Special Tools Required
- Stem seal driver 07PAD-0010000
- Valve spring compressor attachment 07757-PJ1010A

1. Coat the valve stems with new engine oil. Install the valves in the valve guides.
2. Check that the valves move up and down smoothly.
3. Install the spring seats on the cylinder head.
4. Install the new valve seals (A) using the stem seal driver (B).

   NOTE: The exhaust valve seal (C) has a black spring (D), and the intake valve seal (E) has a white spring (F). They are not interchangeable.

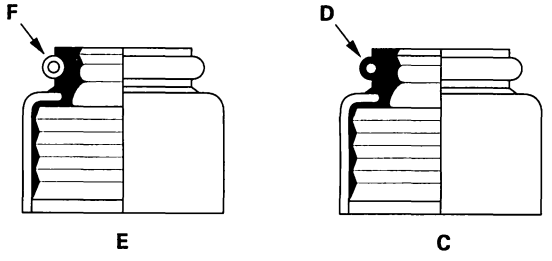

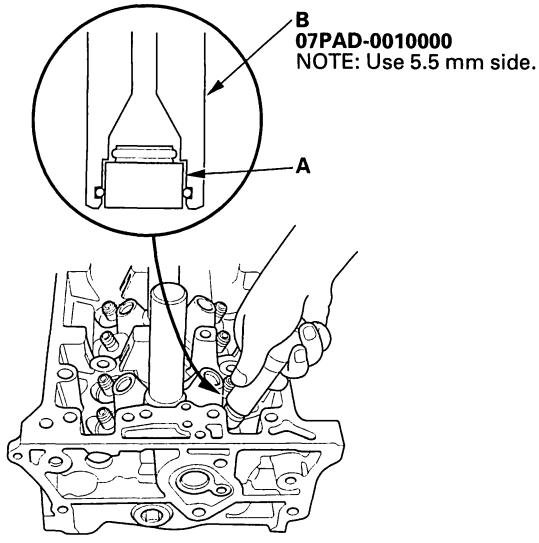

5. Install the valve spring. Place the end of the valve spring with closely wound coils toward the cylinder head.
6. Install the valve retainer.
7. Install the valve spring compressor. Compress the spring, and install the valve cotters.

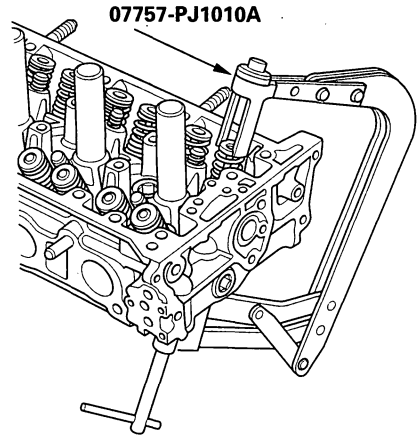

8. Lightly tap the end of each valve stem two or three times with a plastic mallet (A) to ensure proper seating of the valve and valve cotters. Tap the valve stem only along its axis so you do not bend the stem.

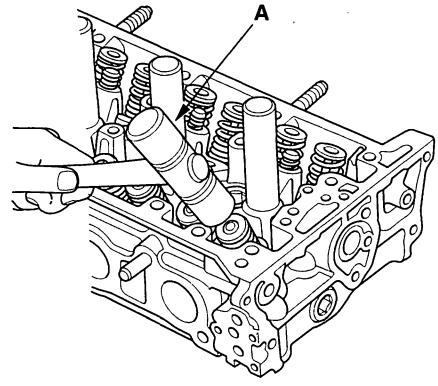

BACK

Protected by AR

Rocker Arm Assembly Installation

1. Reassemble the rocker arm assembly (see page 6-34).

2. Clean and dry the No. 5 rocker shaft holder mating surface.

3. Apply liquid gasket, P/N 08717-0004, 08718-0001, 08718-0002, 08718-0003, or 08718-0009, evenly to the cylinder head mating surface of the No. 5 rocker shaft holder.

   NOTE: Do not install components if too much time has passed after applying the liquid gasket (for P/N 08718-0002, no more than 4 minutes, for all others, no more than 5 minutes). Instead, remove the old residue and reapply the liquid gasket.

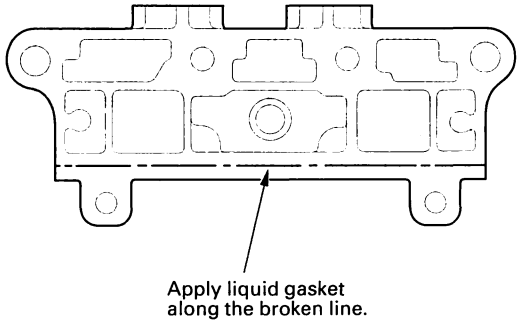

4. Insert the bolts (A) into the rocker shaft holder, then install the rocker arm assembly (B) on the cylinder head.

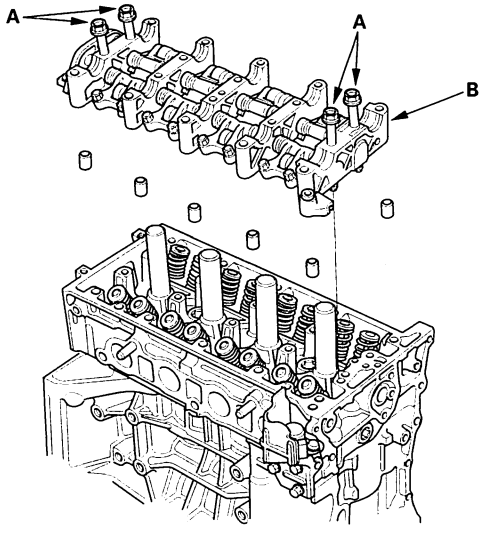

5. Remove the bolts from the rocker shaft holder.

6. Make sure the punch marks on the variable valve timing control (VTC) actuator and exhaust camshaft sprocket are facing up, then set the camshafts (A) in the holder.

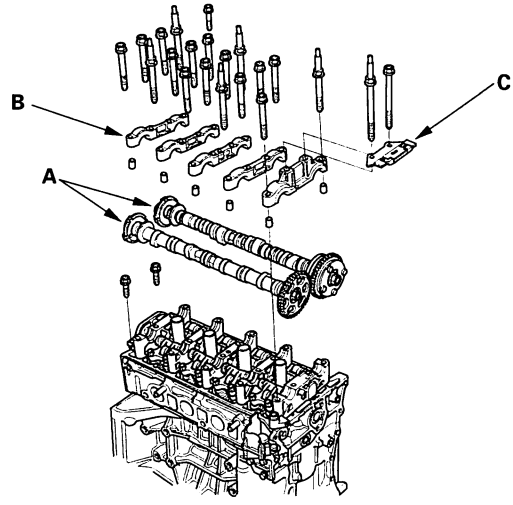

7. Set the camshaft holders (B) and cam chain guide B (C) in place.

8. Tighten the bolts in sequence to the specified torque.

   NOTE: If the engine does not have bolt ㉑, skip it and continue the torque sequence.

   Specified torque
   8 mm bolts: 22 N·m (2.2 kgf·m, 16 lbf·ft)
   6 mm bolts: 12 N·m (1.2 kgf·m, 8.7 lbf·ft)
   6 mm bolts: ㉑, ㉒, ㉓

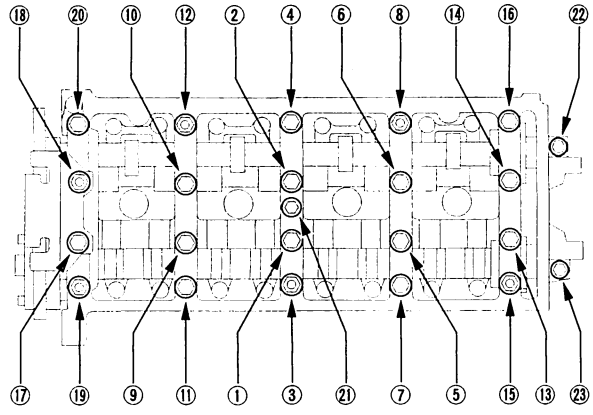

9. Install the cam chain (see page 6-15), and adjust the valve clearance (see page 6-9).

Protected by AR

Cylinder Head Installation

Install the cylinder head in the reverse order of removal.

1. Install the new coolant separator in the engine block, when replacing the engine block.

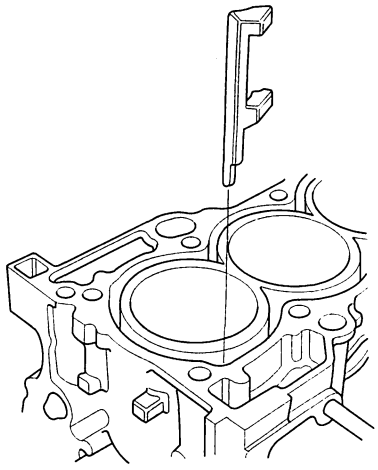

2. Clean the cylinder head and engine block surface.
3. Install the new cylinder head gasket (A) and dowel pins (B) on the engine block. Always use a new cylinder head gasket.

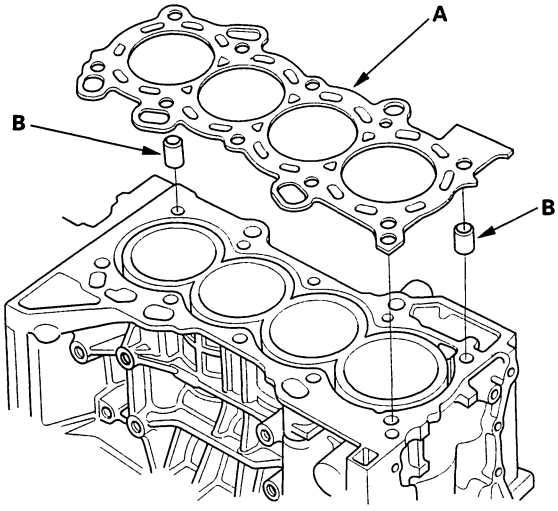

4. Set the crankshaft to top dead center (TDC). Align the TDC mark (A) on the crankshaft sprocket with the pointer (B) on the engine block.

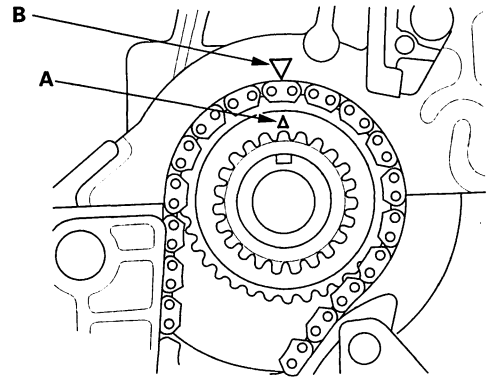

5. Install the cylinder head on the engine block.
6. Measure the diameter of each cylinder head bolt at point A and point B.

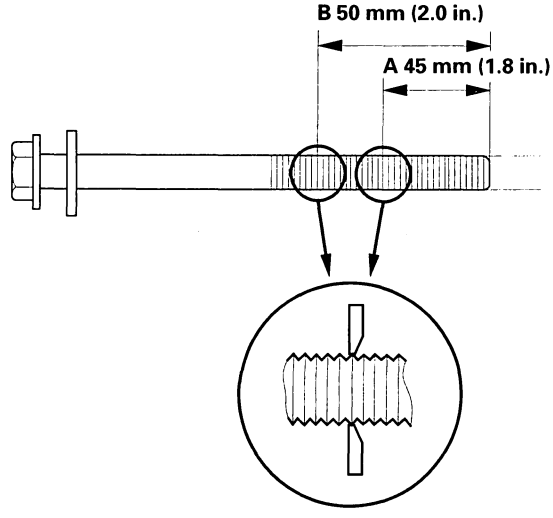

7. If either diameter is less than 10.6 mm (0.42 in.), replace the cylinder head bolt.

BACK

Protected by AR

8. Apply new engine oil to the threads and flange of all cylinder head bolts.

9. Tighten the cylinder head bolts in sequence to 39 N·m (4.0 kgf·m, 29 lbf·ft). Use a beam-type torque wrench. When using a preset-type torque wrench, be sure to tighten slowly and do not overtighten. If a bolt makes any noise while you are torquing it, loosen the bolt and retighten it from the first step.

Specified Toque: 39 N·m (4.0 kgf·m, 29 lbf·ft)

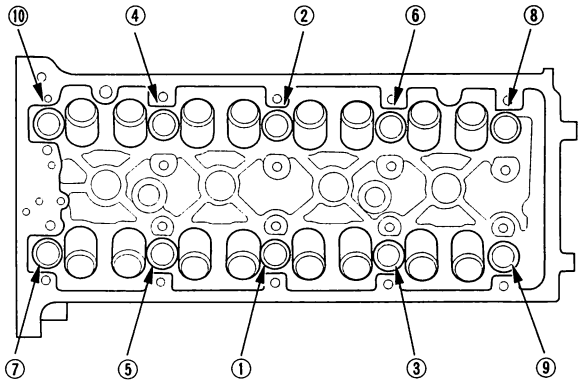

10. After torquing, tighten all cylinder head bolts in two steps (90 ° per step). If you are using a new cylinder head bolt, tighten the bolt an extra 90 °.

NOTE: Remove the cylinder head bolt if you tightened it beyond the specified angel, and go back to step 6 of the procedure. Do not loosen it back to the specified angel.

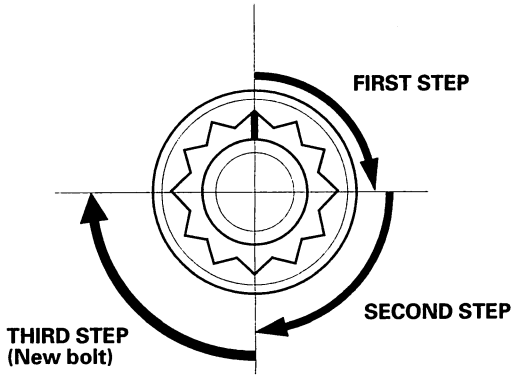

11. Install the rocker arm assembly (see page 6-45).

12. Install the cam chain (see page 6-15).

13. Tighten the two bolts (A) securing the evaporative emission (EVAP) canister purge valve bracket and tighten the bolt (B) securing the harness brackets.

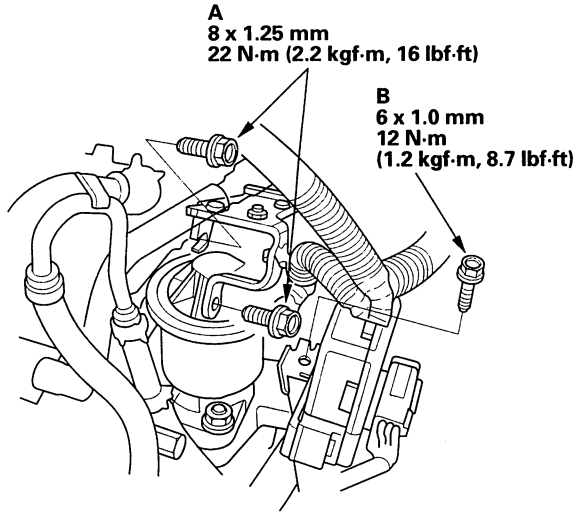

14. Install the upper radiator hose (A) and heater hoses (B).

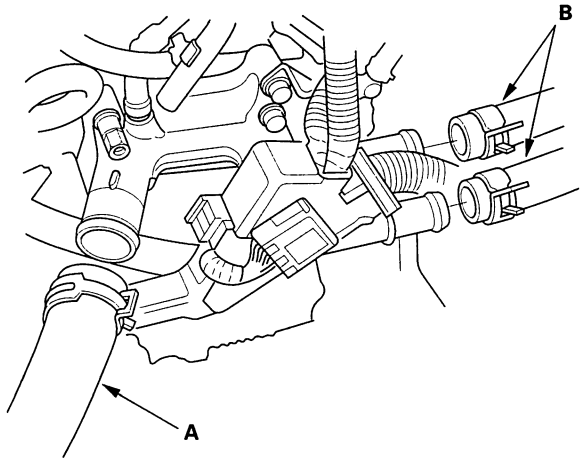

(cont'd)

Protected by AR

Cylinder Head Installation (cont'd)

15. Install the positive crankcase ventilation (PCV) hose (A) and ground cable (B).

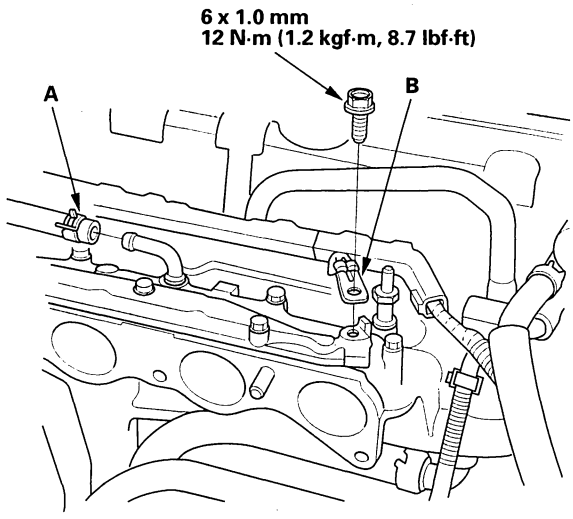

16. Install the water bypass hose (A).

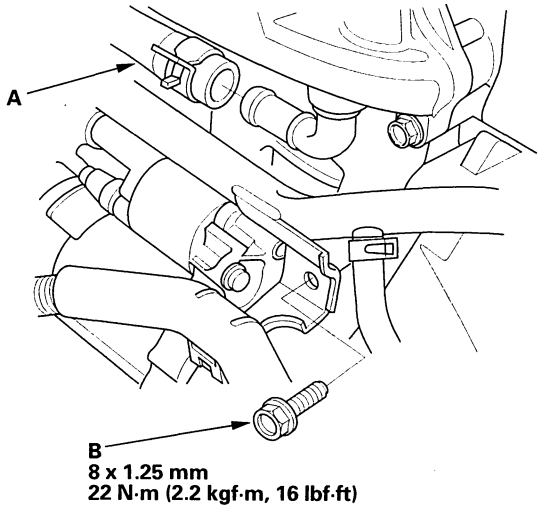

17. Tighten the bolt (B) securing the connecting pipe.

18. Install the exhaust manifold (see page 9-14).

19. Install the intake manifold (see page 9-11).

20. Install the evaporative emission (EVAP) canister hose (A) and brake booster vacuum hose (B).

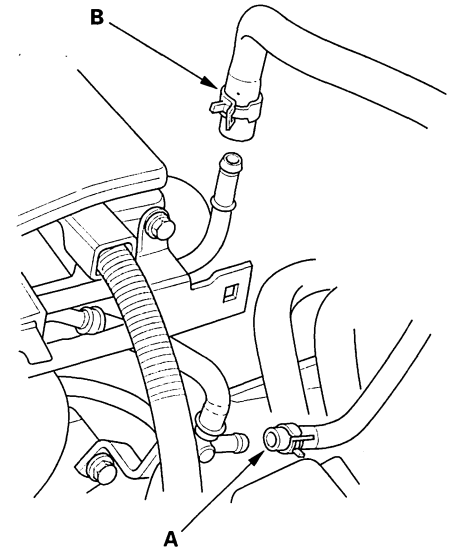

21. Connect the fuel feed hose (see page 11-340), then install the quick-connect fitting cover (A). Make sure the connector engages fully.

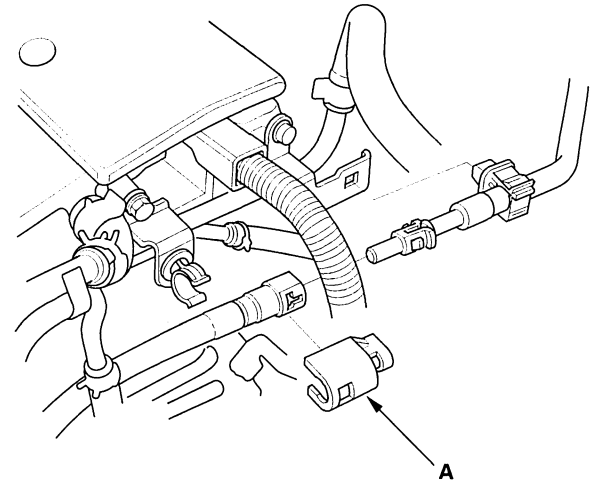

BACK

Protected by AR

22. Install the intake air duct (A), then connect the intake air temperature (IAT) sensor connector (B), and install the vacuum hose (C) and breather pipe (D).

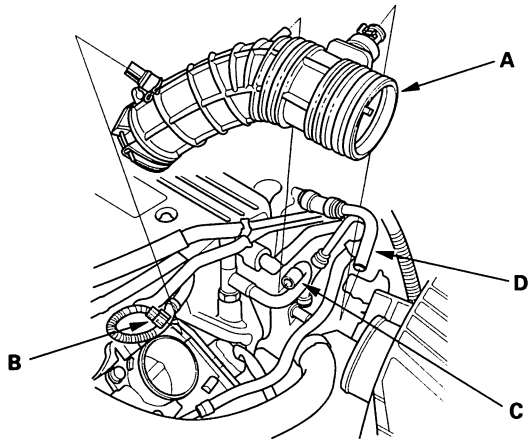

23. After installation, check that all tubes, hoses, and connectors are installed correctly.

24. Inspect for fuel leaks. Turn the ignition switch ON (II) (do not operate the starter) so that the fuel pump runs for about 2 seconds and pressurizes the fuel line. Repeat this operation two or three times, then check for fuel leakage at any point in the fuel line.

25. Refill the radiator with engine coolant, and bleed air from the cooling system with the heater valve open (see page 10-6).

26. Do the power window control unit reset procedure (see page 22-232).

27. Inspect the idle speed (see page 11-315).

28. Inspect the ignition timing (see page 4-24).

29. Set the clock.

Protected by AR

BACK

Protected by AR

Engine Mechanical

Engine Block

Special Tools 7-2
Component Location Index 7-3
Connecting Rod and Crankshaft End Play Inspection 7-5
Crankshaft Main Bearing Replacement 7-6
Connecting Rod Bearing Replacement 7-8
Oil Pan Removal 7-11
Crankshaft and Piston Removal 7-13
Crankshaft Inspection 7-15
Block and Piston Inspection 7-16
Cylinder Bore Honing 7-18
Piston, Pin, and Connecting Rod Replacement 7-19
Piston Ring Replacement 7-22
Piston Installation 7-24
Connecting Rod Bolt Inspection 7-25
Crankshaft Installation 7-26
Oil Pan Installation 7-29
Transmission End Crankshaft Oil Seal Installation - In Car 7-31



BACK

Protected by AR

Engine Block

Special Tools

Ref. No.	Tool Number	Description	Qty
①	07ZAD-PNAA100	Oil Seal Driver Attachment 96	1
②	07746-0010700	Attachment, 24 x 26 mm	1
③	07749-0010000	Driver	1

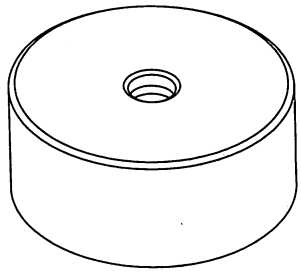

①

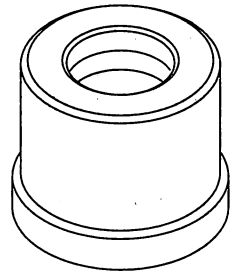

②

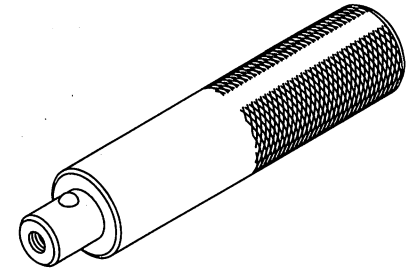

③

BACK

Protected by AR

Component Location Index

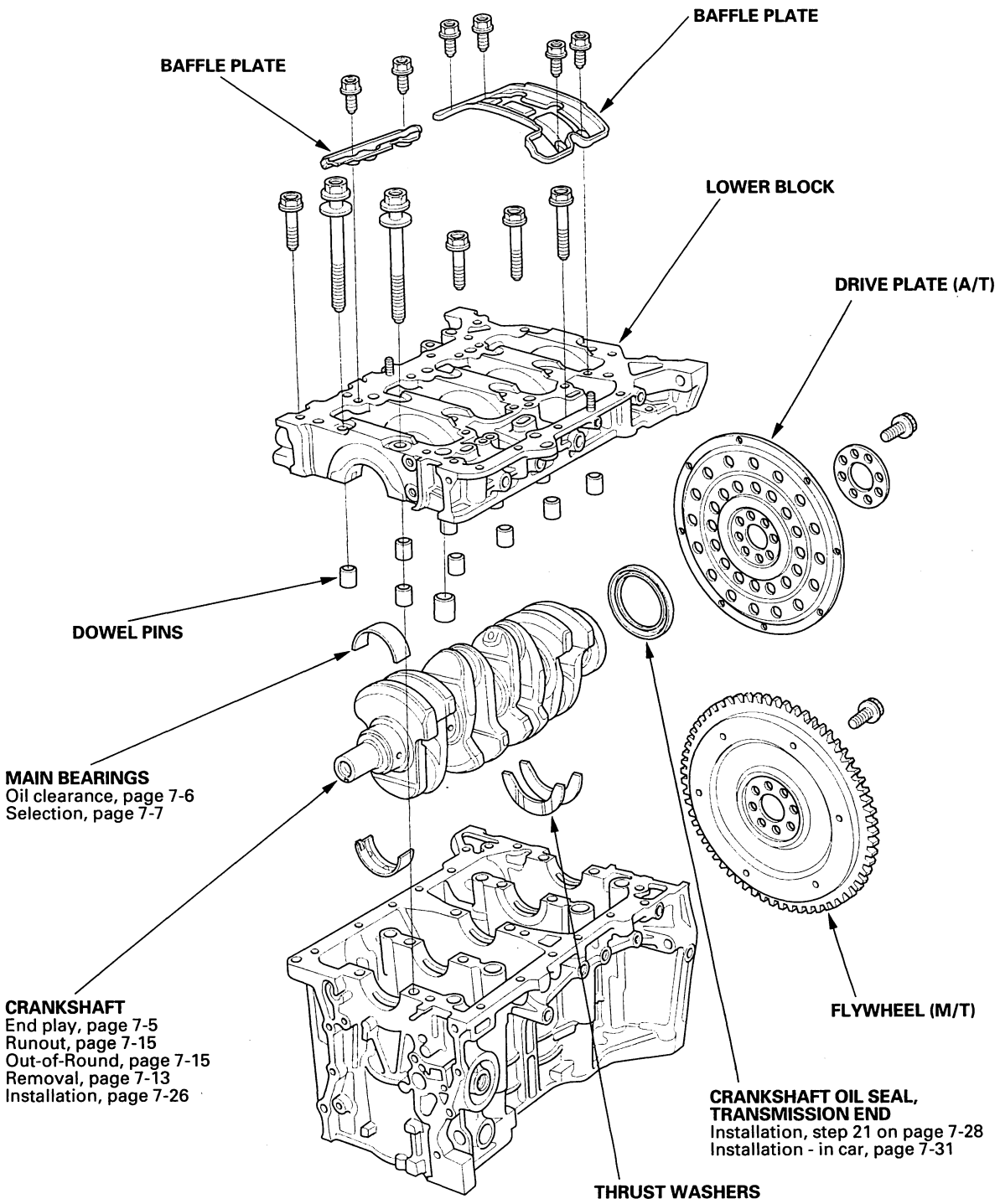

(cont'd)

Protected by AR

Component Location Index (cont'd)

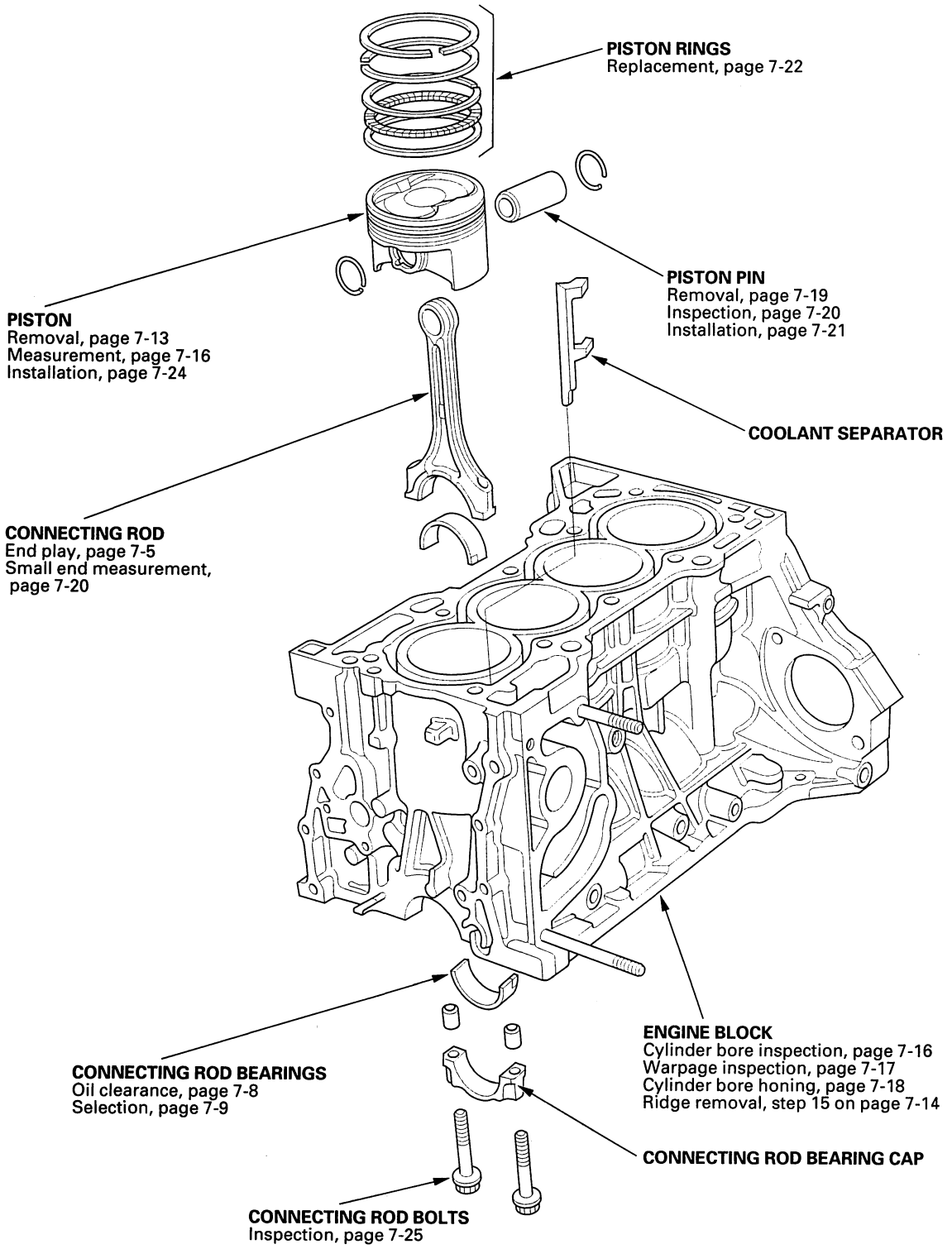

BACK

Protected by AR

Connecting Rod and Crankshaft End Play Inspection

1. Remove the oil pump (see page 8-10).
2. Remove the baffle plates (see step 8 on page 7-13).
3. Measure the connecting rod end play with a feeler gauge between the connecting rod and crankshaft.

   Connecting Rod End Play
   Standard (New): 0.15—0.35 mm (0.006—0.014 in.)
   Service Limit: 0.40 mm (0.016 in.)

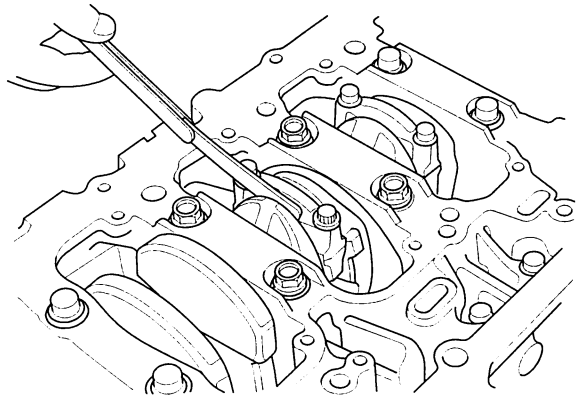

4. If the connecting rod end play is out-of-tolerance, install a new connecting rod, and recheck. If it is still out-of-tolerance; replace the crankshaft (see step 9 on page 7-13).
5. Push the crankshaft firmly away from the dial indicator, and zero the dial against the end of the crankshaft. Then pull the crankshaft firmly back toward the indicator; the dial reading should not exceed the service limit.

   Crankshaft End Play
   Standard (New): 0.10—0.35 mm (0.004—0.014 in.)
   Service Limit: 0.45 mm (0.018 in.)

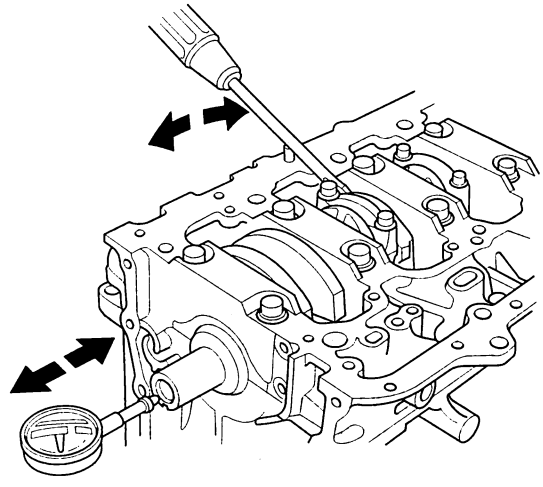

6. If the end play is out-of-tolerance, replace the thrust washers and recheck, if it is still out-of-tolerance, replace the crankshaft (see step 9 on page 7-13).

Protected by AR

Crankshaft Main Bearing Replacement

Main Bearing Clearance Inspection

1. To check main bearing-to-journal oil clearance, remove the lower block and bearing halves (see page 7-13).

2. Clean each main journal and bearing half with a clean shop towel.

3. Place one strip of plastigage across each main journal.

4. Reinstall the bearing half and lower block, then torque the bolts to 29 N·m (3.0 kgf·m, 22 lbf·ft) + 56 ° in the proper sequence (see step 18 on page 7-27).

   NOTE: Do not rotate the crankshaft during inspection.

5. Remove the lower block and bearing half again, and measure the widest part of the plastigage.

   Main Bearing-to-Journal Oil Clearance
   No. 1, 2, 4, 5 Journals:
   Standard (New): 0.017 — 0.041 mm (0.0007 — 0.0016 in.)
   Service Limit: 0.050 mm (0.0020 in.)
   No. 3 Journal:
   Standard (New): 0.025 — 0.049 mm (0.0010 — 0.0019 in.)
   Service Limit: 0.055 mm (0.0022 in.)

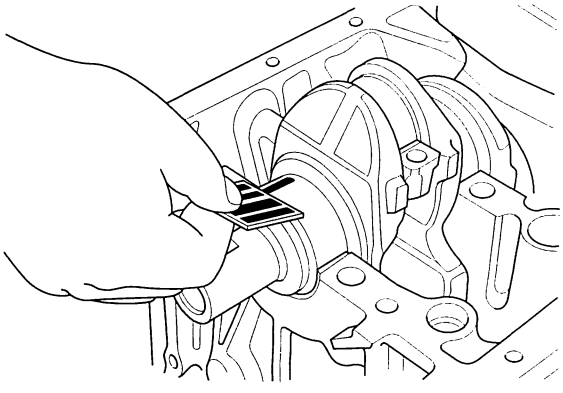

6. If the plastigage measures too wide or too narrow, remove the crankshaft, and remove the upper half of the bearing. Install a new, complete bearing with the same color code(s), and recheck the clearance. Do not file, shim, or scrape the bearings or the caps to adjust clearance.

7. If the plastigage shows the clearance is still incorrect, try the next larger or smaller bearing (the color listed above or below that one), and check again. If the proper clearance cannot be obtained by using the appropriate larger or smaller bearings, replace the crankshaft and start over.

BACK

Protected by AR

Main Bearing Selection

Crankshaft Bore Code Location

1. Numbers or letters or bars have been stamped on the end of the block as a code for the size of each of the five main journal bores. Write down the crank bore codes.
   If you can't read the codes because of accumulated dirt and dust, do not scrub them with a wire brush or scraper. Clean them only with solvent or detergent.

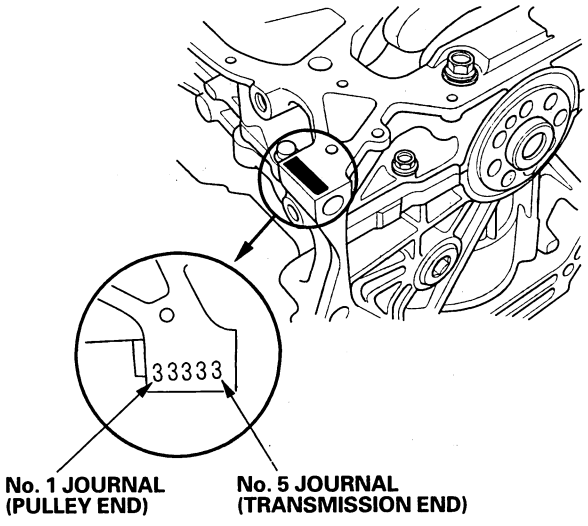

Main Journal Code Location

2. The main journal codes are stamped on the crankshaft.

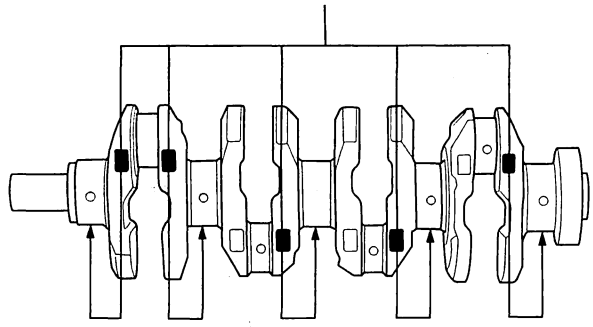

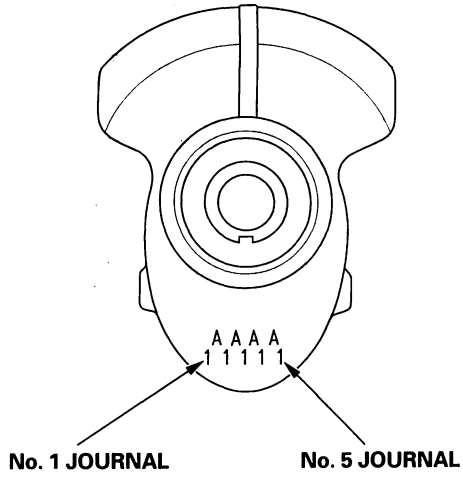

(cont'd)

Protected by AR

Crankshaft Main Bearing Replacement (cont'd)

3. Use the crank bore codes and crank journal codes to select the appropriate replacement bearings from the following table.

   NOTE:
   - Color code is on the edge of the bearing.
   - When using bearing halves of different colors, it does not matter which color is used in the top or bottom.

Main journal code	Crank bore code: 1 or A or I	2 or B or II	3 or C or III	4 or D or IIII
	← Larger crank bore			
1	Pink	Pink/ Yellow	Yellow	Green
2	Pink/ Yellow	Yellow	Green	Green/ Brown
3	Yellow	Green	Green/ Brown	Brown
4	Green	Green/ Brown	Brown	Black
5	Green/ Brown	Brown	Black	Black/ Blue
6	Brown	Black	Black/ Blue	Blue
	→ Smaller bearing (Thicker)			

Smaller main journal

Smaller bearing (Thicker)

Connecting Rod Bearing Replacement

Rod Bearing Clearance Inspection

1. Remove the oil pump (see page 8-10).
2. Remove the baffle plates (see step 8 on page 7-13).
3. Remove the connecting rod cap and bearing half.
4. Clean the crankshaft rod journal and bearing half with a clean shop towel.
5. Place plastigage across the rod journal.
6. Reinstall the bearing half and cap, and torque the bolts to 20 N·m (2.0 kgf·m, 14 lbf·ft) + 90 °.

   NOTE: Do not rotate the crankshaft during inspection.
7. Remove the rod cap and bearing half, and measure the widest part of the plastigage.

Connecting Rod Bearing-to-Journal Oil Clearance
Standard (New): 0.020—0.050 mm (0.0008—0.0020 in.)
Service Limit: 0.060 mm (0.0024 in.)

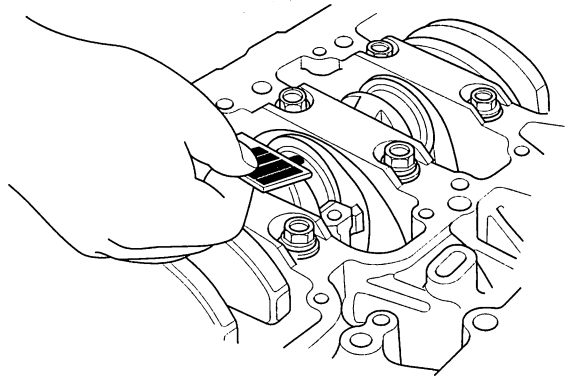

BACK

Protected by AR

8. If the plastigage measures too wide or too narrow, remove the upper half of the bearing, install a new, complete bearing with the same color code(s), and recheck the clearance. Do not file, shim, or scrape the bearings or the caps to adjust clearance.

9. If the plastigage shows the clearance is still incorrect, try the next larger or smaller bearing (the color listed above or below that one), and check clearance again. If the proper clearance cannot be obtained by using the appropriate larger or smaller bearing, replace the crankshaft and start over.

Rod Bearing Selection

1. Inspect each connecting rod for cracks and heat damage.

Connecting Rod Big End Bore Code Locations

2. Each rod has a tolerance range from 0 to 0.024 mm (0.0009 in.), in 0.006 mm (0.0002 in.) increments, depending on the size of its big end bore. It's then stamped with a number or bar (1, 2, 3 or 4/I, II, III, or IIII) indicating the range. You may find any combination of numbers and bars in any engine. (Half the number or bar is stamped on the bearing cap, the other half is on the rod.)
If you can't read the code because of an accumulation of oil and varnish, do not scrub it with a wire brush or scraper. Clean it only with solvent or detergent.

Normal Bore Size: 51.0 mm (2.01 in.)

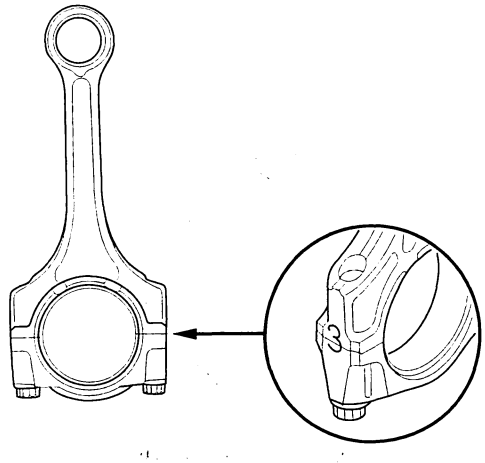

(cont'd)

Protected by AR

Connecting Rod Bearing Replacement (cont'd)

Connecting Rod Journal Code Location

3. The connecting rod journal codes are stamped on the crankshaft.

Connecting Rod Journal Code Location (Letters or Bars)

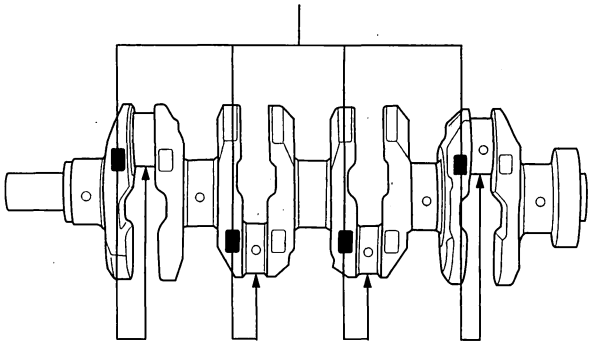

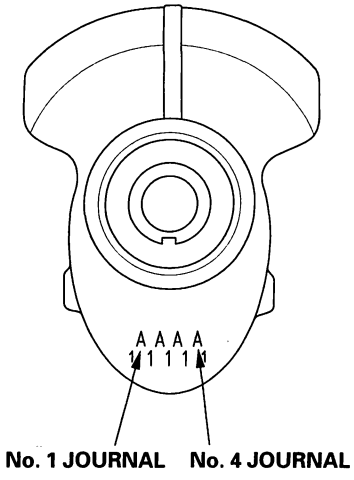

4. Use the big end bore codes and rod journal codes to select appropriate replacement bearings from the following table.

NOTE:
- The color code is on the edge of the bearing.
- When using bearing halves of different colors, it does not matter which color is used in the top or bottom.

Rod journal code (Smaller rod journal)	Big end bore code → Larger big end bore: 1 or I	2 or II	3 or III	4 or IIII
	→ Smaller bearing (Thicker)			
A	Pink	Pink/ Yellow	Yellow/ Green	Green
B	Yellow	Yellow/ Green	Green/ Brown	Brown
C	Green	Green/ Brown	Brown/ Black	Black
D	Brown	Brown/ Black	Black/ Blue	Blue

Smaller bearing (Thicker)

BACK

Protected by AR

Oil Pan Removal

1. If the engine is out of the vehicle, go to step 19.
2. Drain the engine oil (see page 8-6).
3. Make sure you have the anti-theft codes for the radio and navigation system, then write down the frequencies for the radio's preset buttons.
4. Disconnect the negative cable from the battery first, then disconnect the positive cable. Remove the battery.
5. Remove the air cleaner housing (see page 11-361).
6. Remove the harness clamp. Remove the two bolts, and loosen the two bolts securing the battery base, then remove the battery base (see step 9 on page 5-2).
7. Remove the clutch slave cylinder, and clutch line bracket mounting bolt (M/T) (see step 21 on page 5-4).
8. Remove the ground cable, then remove the transmission upper mount/bracket assembly:
   - Manual transmission (see step 48 on page 5-8)
   - Automatic transmission (see step 49 on page 5-8)
9. Remove the front mount stop, then remove the front mount bolt (see step 50 on page 5-9).
10. Remove the rear mount stop, then remove the rear mount bolt (see step 52 on page 5-9).
11. Raise the vehicle on the hoist to full height.
12. Remove the front tires/wheels.
13. Disconnect the stabilizer links (see page 18-22).
14. Remove the left side damper fork (see page 18-25).
15. Disconnect the left side suspension lower arm ball joint (see page 18-20).
16. Remove the left side driveshaft (see step 12 on page 16-6). Coat all precision-finished surfaces with clean engine oil. Tie plastic bag over the driveshaft end.
17. Remove the nuts securing the transmission lower front mount and transmission lower rear mount (see step 40 on page 5-6).
18. Use a transmission jack to lift the transmission 40—55 mm (1.6—2.2 in.).

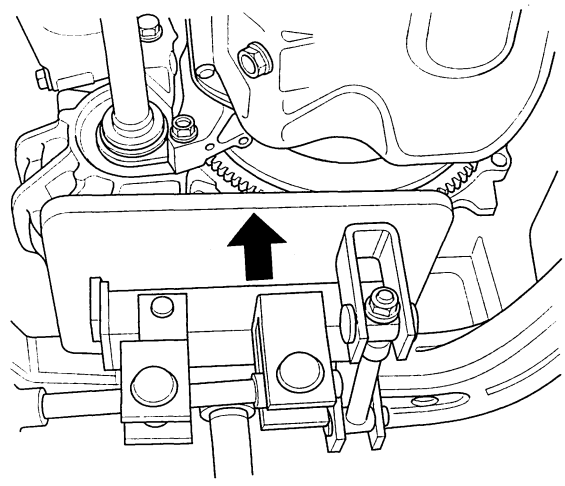

19. Remove the stiffener.

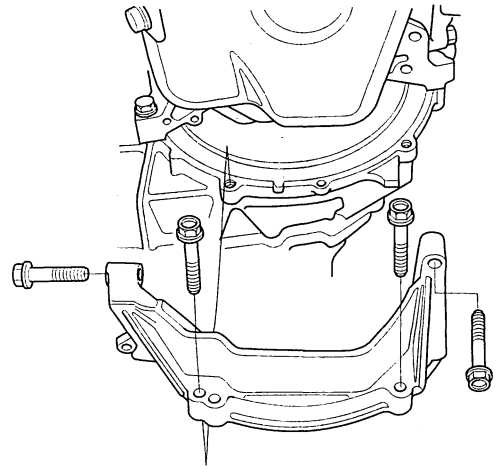

(cont'd)

Protected by AR

Oil Pan Removal (cont'd)

20. Remove the bolts/nuts securing the oil pan.

21. Drive an oil pan seal cutter between the oil pan and engine block.

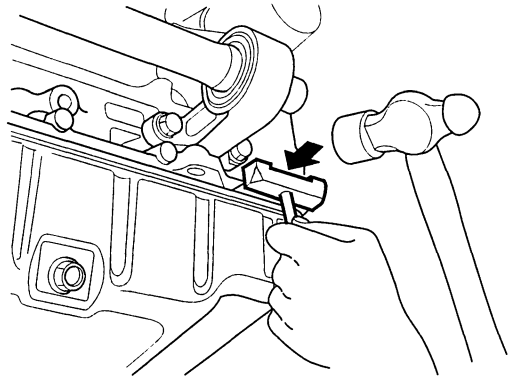

22. Cut the oil pan seal by striking the side of the cutter to slide the cutter along the oil pan.

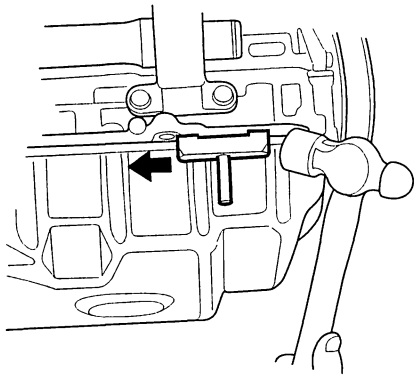

23. Remove the oil pan.

BACK

Protected by AR

Crankshaft and Piston Removal

1. Remove the engine assembly (see page 5-2).
2. Remove the transmission:
   - Manual transmission (see page 13-4)
   - Automatic transmission (see page 14-209)
3. M/T model: Remove the pressure plate (see page 12-10), clutch disc (see page 12-10), and flywheel (see page 12-12).
4. A/T model: Remove the drive plate (see page 14-218).
5. Remove the oil pan (see page 7-11).
6. Remove the oil pump (see page 8-10).
7. Remove the cylinder head (see page 6-28).
8. Remove the baffle plates.

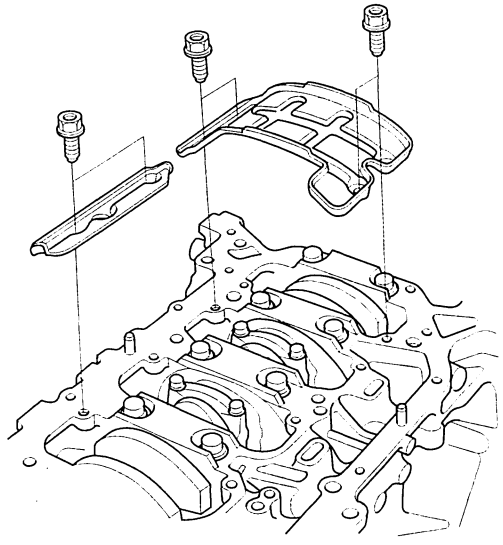

9. Remove the 8 mm bolts.

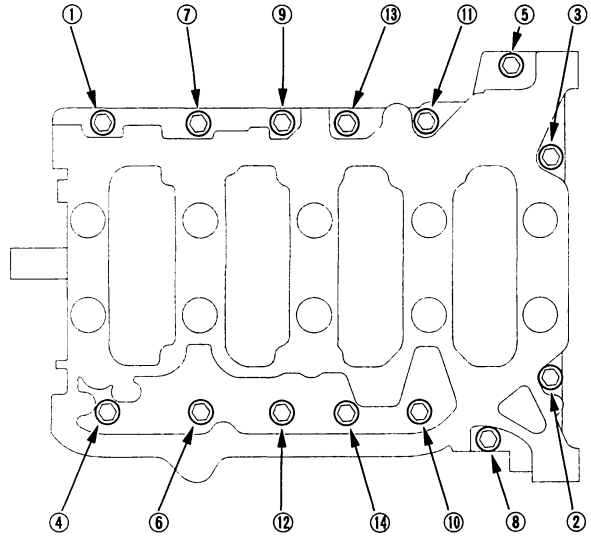

10. Remove the bearing cap bolts. To prevent warpage, unscrew the bolts in sequence 1/3 turn at a time: repeat the sequence until all bolts are loosened.

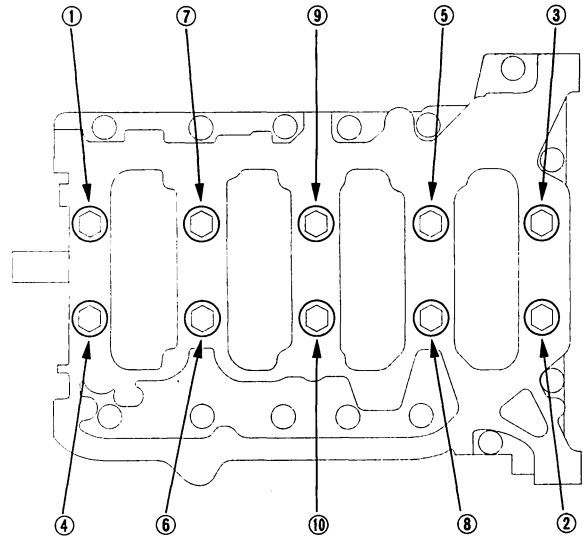

(cont'd)

Protected by AR

Crankshaft and Piston Removal (cont'd)

11. Remove the lower block and bearings. Keep all bearings in order.

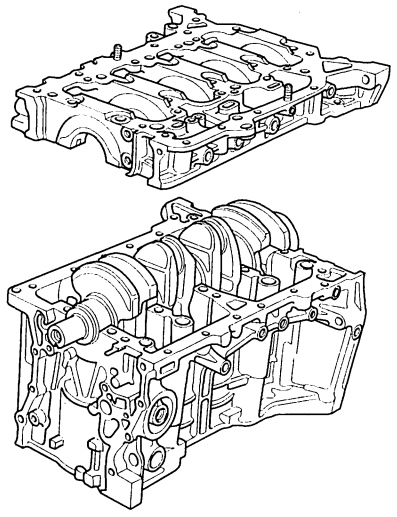

12. Remove the rod caps/bearings. Keep all caps/bearings in order.

13. Lift the crankshaft out of the engine, being careful not to damage the journals.

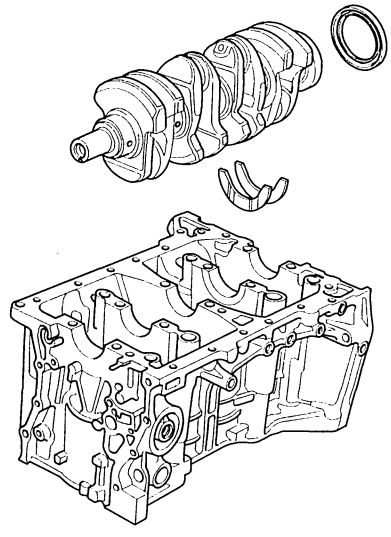

14. Remove the upper bearing halves from the connecting rods, and set them aside with their respective caps.

15. If you can feel a ridge of metal or hard carbon around the top of each cylinder, remove it with a ridge reamer (A). Follow the reamer manufacturer's instructions. If the ridge is not removed, it may damage the pistons as they are pushed out.

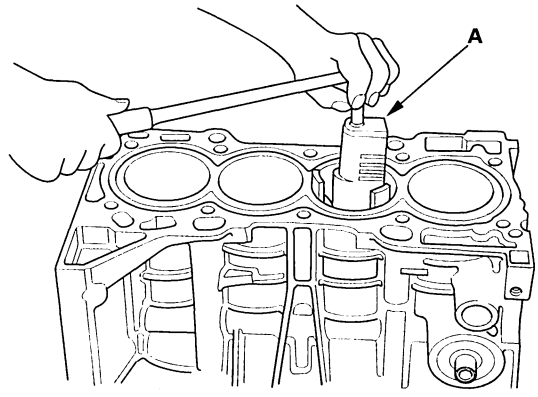

16. Use the wooden handle of a hammer (A) to drive out the pistons (B).

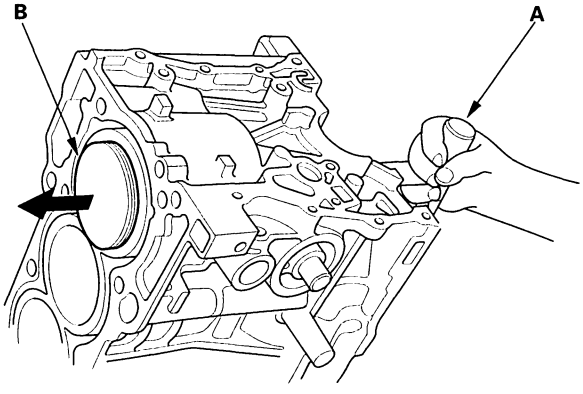

17. To avoid mixup on reassembly, mark each piston/connecting rod assembly with its cylinder number.

    NOTE: The existing number on the connecting rod does not indicate its position in the engine, it indicates the rod bore size.

18. Reinstall the connecting rod bearings and caps after removing each piston/connecting rod assembly.

19. Reinstall the lower block and bearings on the engine in the proper order.

BACK

Protected by AR

Crankshaft Inspection

Out-of-Round and Taper

1. Remove the crankshaft from the engine block (see page 7-13).
2. Clean the crankshaft oil passages with pipe cleaners or a suitable brush.
3. Clean the keyway and threads.
4. Measure out-of round at the middle of each rod and main journal in two places. The difference between measurements on each journal must not be more than the service limit.

   Journal Out-of-Round
   Standard (New): 0.005 mm (0.0002 in.) max.
   Service Limit: 0.010 mm (0.0004 in.)

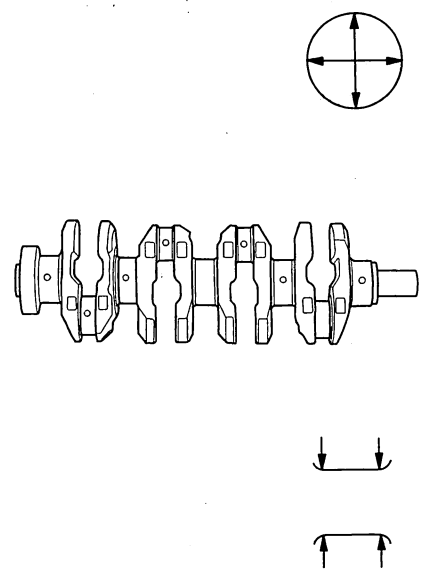

5. Measure taper at the edges of each rod and main journal. The difference between measurements on each journal must not be more than the service limit.

   Journal Taper
   Standard (New): 0.005 mm (0.0002 in.) max.
   Service Limit: 0.010 mm (0.0004 in.)

Straightness

6. Place the engine block on the surface plate.
7. Clean and install the bearings on the No. 1 and No. 5 journals of the engine block.
8. Lower the crankshaft into the block.
9. Measure the runout on all of the main journals. Rotate the crankshaft two complete revolutions. The difference between measurements on each journal must not be more than the service limit.

   Crankshaft Total Runout
   Standard (New): 0.03 mm (0.0012 in.) max.
   Service Limit: 0.04 mm (0.0016 in.)

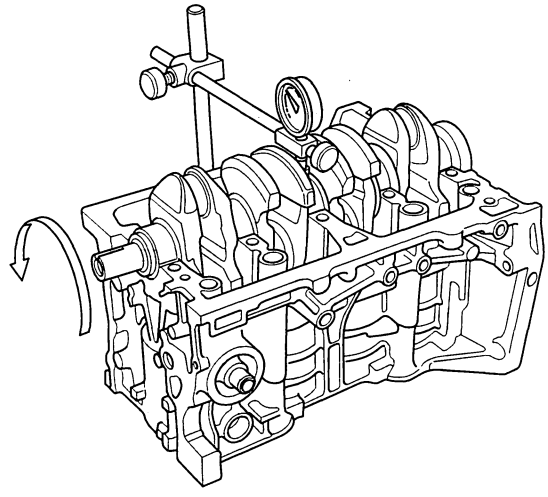

Protected by AR

Block and Piston Inspection

1. Remove the crankshaft and pistons (see page 7-13).
2. Check the piston for distortion or cracks.
3. Measure the piston diameter at a point 13 mm (0.5 in.) from the bottom of the skirt. There are two standard-size pistons (No Letter or A, and B). The letter is stamped on the top of the piston. Letters are also stamped on the block as cylinder bore sizes.

Piston Diameter
Standard (New):
No Letter (or A): 86.980—86.990 mm (3.4244—3.4248 in.)
B: 86.970—86.980 mm (3.4240—3.4244 in.)
Service Limit:
No Letter (or A): 86.930 mm (3.4224 in.)
B: 86.920 mm (3.4220 in.)

Oversize Piston Diameter
0.25: 87.230—87.240 mm (3.4342—3.4346 in.)

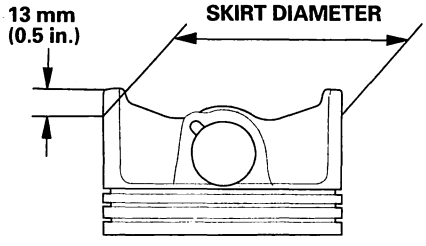

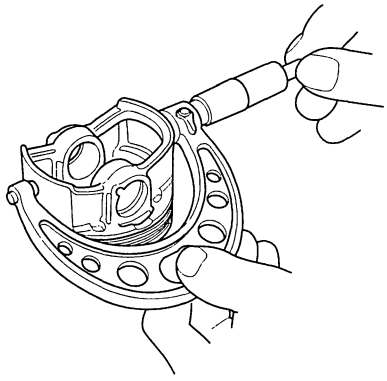

4. Measure wear and taper in direction X and Y at three levels in each cylinder as shown. If measurements in any cylinder are beyond the Oversize Bore Service Limit, replace the block. If the block is to be rebored, refer to step 7 after reboring.

Cylinder Bore Size
Standard (New):
A or I: 87.010—87.020 mm (3.4256—3.4260 in.)
B or II: 87.000—87.010 mm (3.4252—3.4256 in.)
Service Limit: 87.070 mm (3.4279 in.)

Oversize
0.25: 87.250—87.260 mm (3.4350—3.4354 in.)

Reboring limit: 0.25 mm (0.01 in.) max.

Bore Taper
Limit: (Difference between first and third measurement) 0.05 mm (0.002 in.)

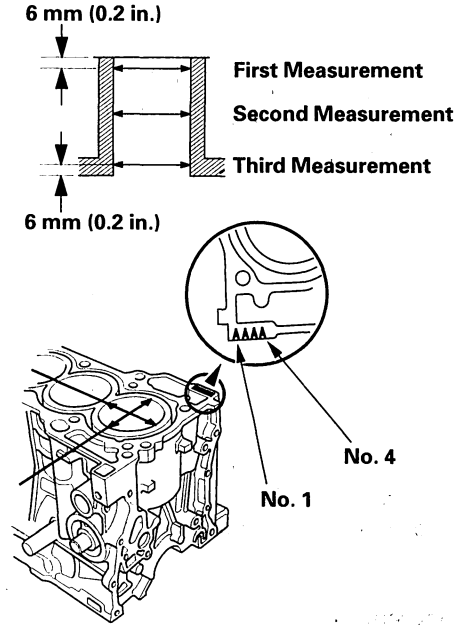

BACK

Protected by AR

5. Scored or scratched cylinder bores must be honed.

6. Check the top of the block for warpage. Measure along the edges and across the center as shown.

Engine Block Warpage
Standard (New): 0.07 mm (0.003 in.) max.
Service Limit: 0.10 mm (0.004 in.)

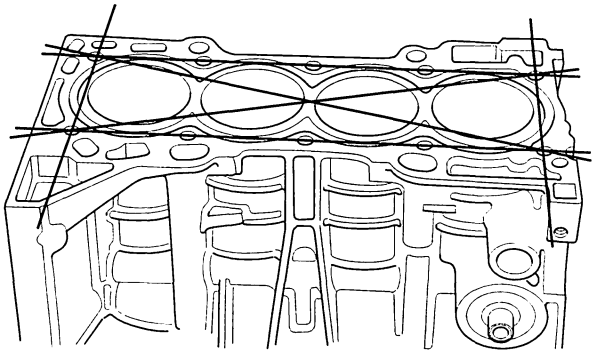

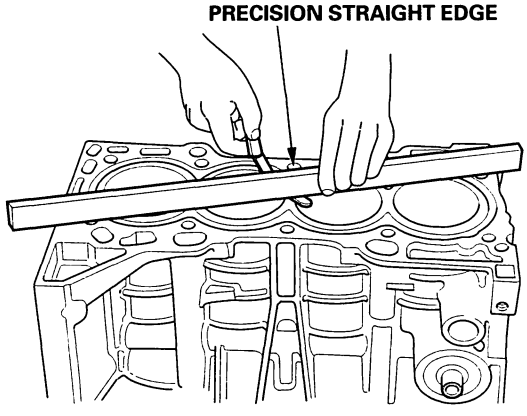

7. Calculate the difference between the cylinder bore diameter and the piston diameter. If the clearance is near or exceeds the service limit, inspect the piston and engine block for excessive wear.

Piston-to-Cylinder Bore Clearance
Standard (New): 0.020—0.040 mm (0.0008—0.0016 in.)
Service Limit: 0.05 mm (0.002 in.)

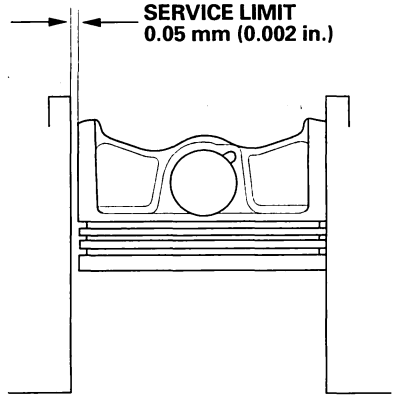

Protected by AR

Cylinder Bore Honing

Only a scored or scratched cylinder bore must be honed.

1. Measure the cylinder bores (see step 4 on page 7-16).
   If the block is to be reused, hone the cylinders and remeasure the bores. Only scored or scratched cylinder bores must be honed.

2. Hone the cylinder bores with honing oil and a fine (400 grit) stone in a 60 degree cross-hatch pattern (A).

   NOTE:
   - Use only a rigid hone with 400 grit or finer stone such as Sunnen, Ammco, or equivalent.
   - Do not use stones that are worn or broken.

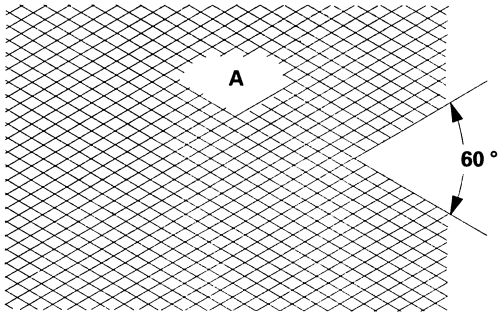

3. When honing is complete, thoroughly clean the engine block of all metal particles. Wash the cylinder bores with hot soapy water, then dry and oil them immediately to prevent rusting. Never use solvent, it will only redistribute the grit on the cylinder walls.

4. If scoring or scratches are still present in the cylinder bores after honing to the service limit, rebore the engine block. Some light vertical scoring and scratching is acceptable if it is not deep enough to catch your fingernail and does not run the full length of the bore.

BACK

Protected by AR

Piston, Pin, and Connecting Rod Replacement

Disassembly

1. Remove the piston from the engine block (see page 7-13).

2. Apply new engine oil to the piston pin snap rings (A), and turn them in the ring grooves until the end gaps are lined up with the cutouts in the piston pin bores (B).

   NOTE: Take care not to damage the ring grooves.

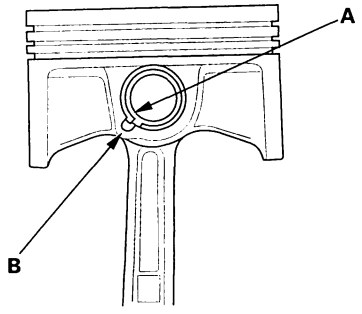

3. Remove both snap rings (A). Start at the cutout in the piston pin bore. Remove the snap rings carefully so they do not go flying or get lost. Wear eye protection.

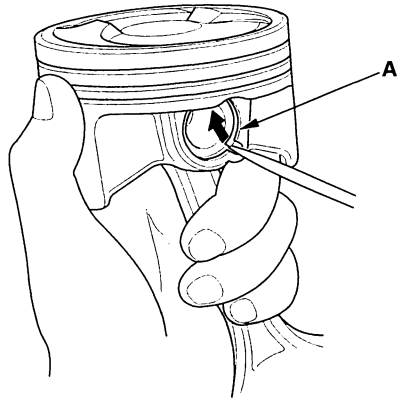

4. Heat the piston and connecting rod assembly to about 158 °F (70 °C), then remove the piston pin.

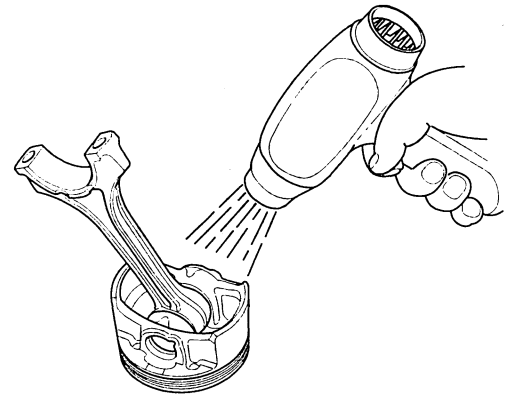

(cont'd)

Protected by AR

Piston, Pin, and Connecting Rod Replacement (cont'd)

Inspection

NOTE: Inspect the piston, piston pin, and connecting rod when they are at room temperature.

1. Measure the diameter of the piston pin.

Piston Pin Diameter
Standard (New): 21.961—21.965 mm (0.8646—0.8648 in.)
Service Limit: 21.953 mm (0.8643 in.)

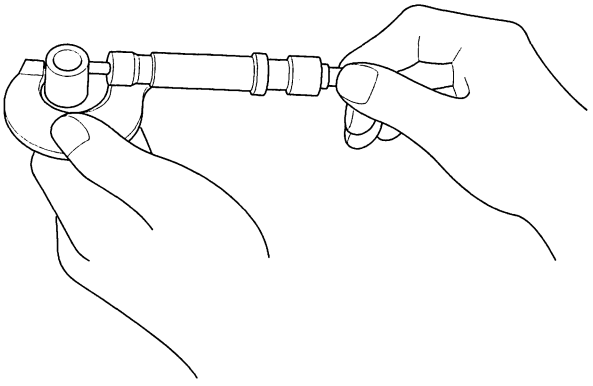

2. Zero the dial indicator to the piston pin diameter.

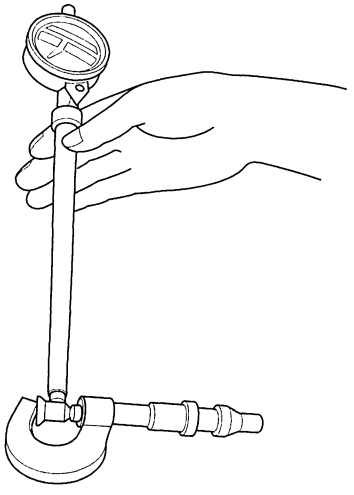

3. Check the difference between the piston pin diameter and piston pin hole diameter in the piston.

Piston Pin-to-Piston Clearance
Standard (New): —0.005 to +0.002 mm (—0.00020 to +0.00008 in.)
Service Limit: 0.005 mm (0.0002 in.)

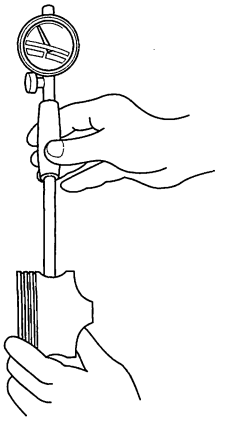

4. Measure the piston pin-to-connecting rod clearance.

Piston Pin-to-Connecting Rod Clearance
Standard (New): 0.005—0.015 mm (0.0002—0.0006 in.)
Service Limit: 0.02 mm (0.0008 in.)

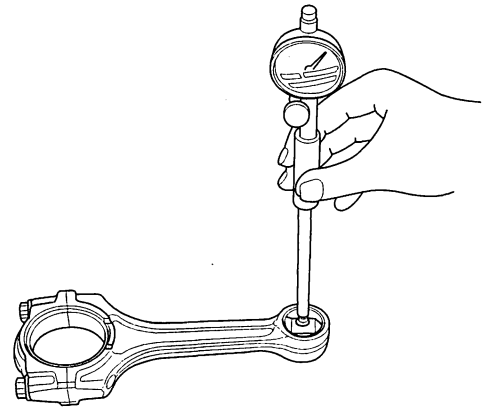

BACK

Protected by AR

Reassembly

1. Install a piston pin snap ring (A) only on one side.

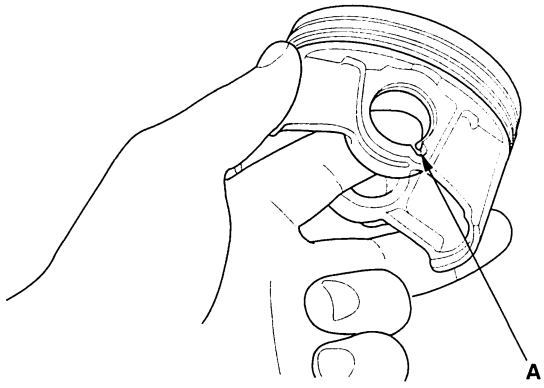

2. Coat the piston pin bore in the piston, the bore in the connecting rod, and the piston pin with new engine oil.

3. Heat the piston to about 158 °F (70 °C).

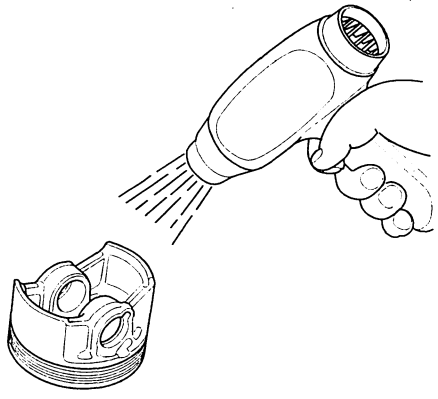

4. Install the piston pin (A). Assemble the piston (B) and connecting rod (C) with the arrow (D) and the embossed mark (E) on the same side.

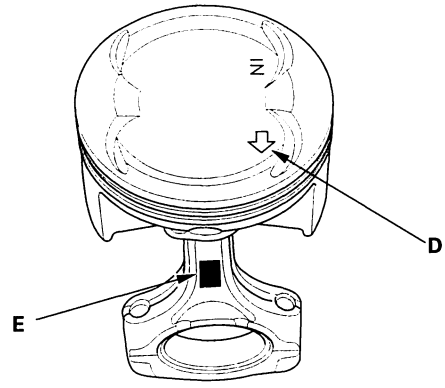

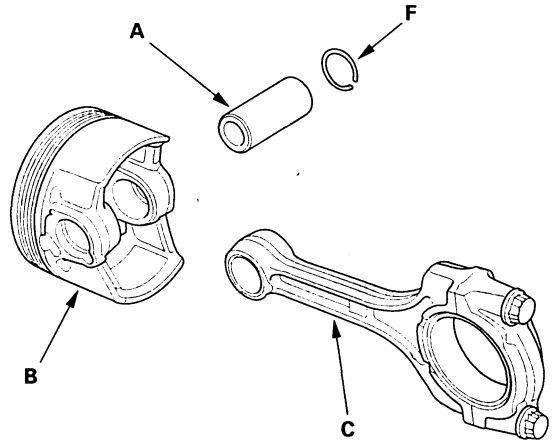

5. Install the remaining snap ring (F).

6. Turn the snap rings in the ring grooves until the end gaps are positioned at the bottom of the piston.

Protected by AR

Piston Ring Replacement

1. Remove the piston from the engine block (see page 7-13).

2. Using a ring expander (A), remove the old piston rings (B).

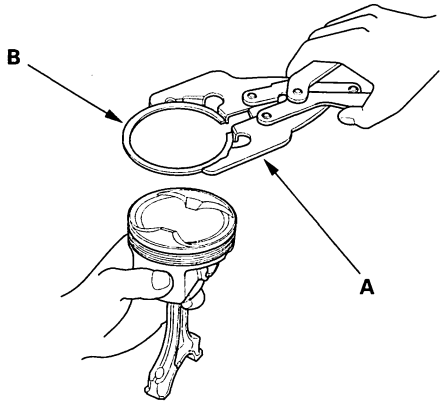

3. Clean all ring grooves thoroughly with a squared-off broken ring or ring groove cleaner with a blade to fit the piston grooves.
The top and 2nd ring grooves are 1.2 mm (0.05 in.) wide. The oil ring groove is 2.0 mm (0.08 in.) wide. File down a blade if necessary.
Do not use a wire brush to clean the ring grooves, or cut the ring grooves deeper with the cleaning tools.

   NOTE: If the piston is to be separated from the connecting rod, do not install new rings yet.

4. Using a piston, push a new ring (A) into the cylinder bore 15—20 mm (0.6—0.8 in.) from the bottom.

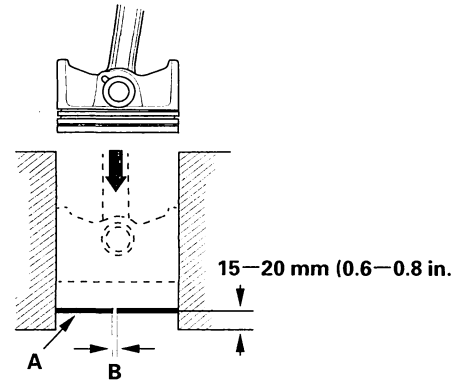

5. Measure the piston ring end-gap (B) with a feeler gauge:

   - If the gap is too small, check to see if you have the proper rings for your engine.
   - If the gap is too large, recheck the cylinder bore diameter against the wear limits (see page 7-16). If the bore is over the service limit, the engine block must be rebored.

Piston Ring End-Gap
Top Ring:
Standard (New): 0.20—0.35 mm (0.008—0.014 in.)
Service Limit: 0.60 mm (0.024 in.)
Second Ring:
Standard (New): 0.40—0.55 mm (0.016—0.022 in.)
Service Limit: 0.70 mm (0.028 in.)
Oil Ring:
Standard (New): 0.20—0.70 mm (0.008—0.028 in.)
Service Limit: 0.80 mm (0.031 in.)

BACK

Protected by AR

6. Install the top ring and second ring as shown. The top ring (A) has a T, 1A, or 1R mark and the second ring (B) has a 2T, 2A, or 2R mark. The manufacturing marks (C) must be facing upward.

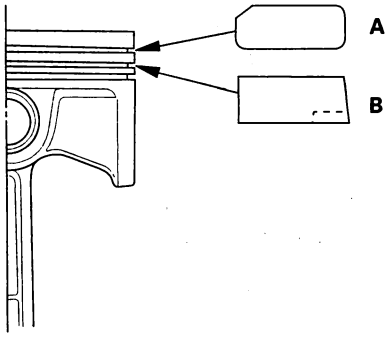

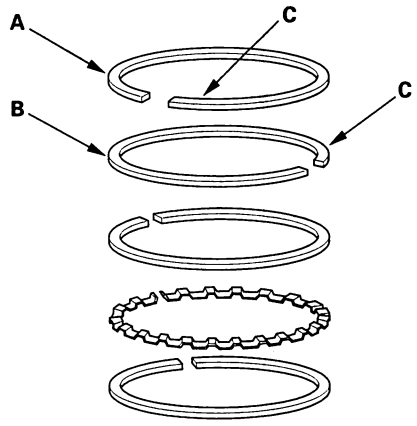

Piston Ring Dimensions:

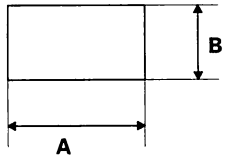

Top Ring (Standard):
A: 3.1 mm (0.12 in.)
B: 1.2 mm (0.05 in.)

Second Ring (Standard):
A: 3.4 mm (0.13 in.)
B: 1.2 mm (0.05 in.)

7. Rotate the rings in their grooves to make sure they do not bind.

8. Position the ring end gaps as shown:

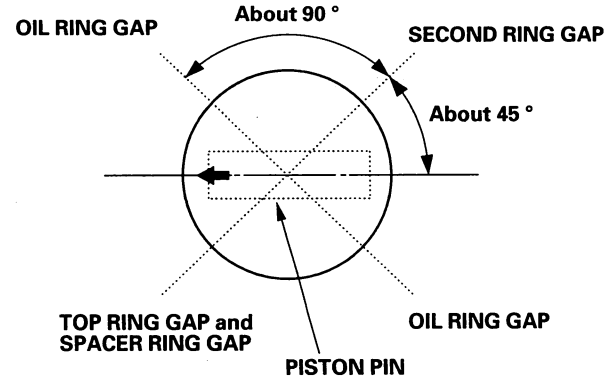

9. After installing a new set of rings, measure the ring-to-groove clearances:

Top Ring Clearance
Standard (New): 0.045—0.070 mm (0.0018—0.0028 in.)
Service Limit: 0.13 mm (0.005 in.)

Second Ring Clearance
Standard (New): 0.050—0.075 mm (0.0020—0.0030 in.)
Service Limit: 0.13 mm (0.005 in.)

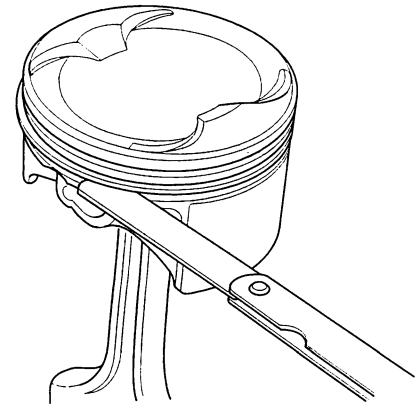

Protected by AR

Piston Installation

If the Crankshaft is Already Installed

1. Set the crankshaft to bottom dead center (BDC) for each cylinder.
2. Remove the connecting rod caps, then install the ring compressor. Check that the bearing is securely in place.
3. Position the mark (A) to face the cam chain side of the engine.

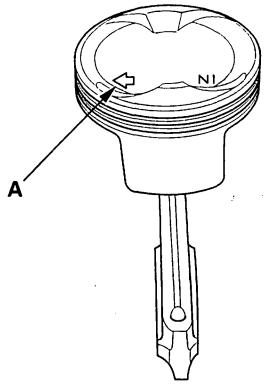

4. Position the piston in the cylinder, and tap it in using the wooden handle of a hammer (A). Maintain downward force on the ring compressor (B) to prevent the rings from expanding before entering the cylinder bore.

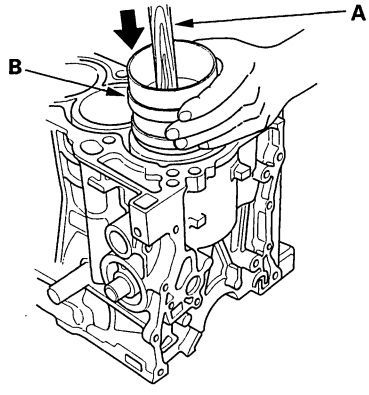

5. Stop after the ring compressor pops free, and check the connecting rod-to-crank journal alignment before pushing the piston into place.
6. Check the connecting rod bearing clearance with plastigage (see page 7-8).
7. Inspect the connecting rod bolts (see page 7-25).
8. Apply new engine oil to the bolt threads, then install the rod caps with bearings. Torque the bolts to 20 N·m (2.0 kgf·m, 14 lbf·ft).
9. Tighten the connecting rod bolts an additional 90 °.

   NOTE: Remove the connecting rod bolt if you tightened it beyond the specified angle, and go back to step 7 of the procedure. Do not loosen it back to the specified angle.

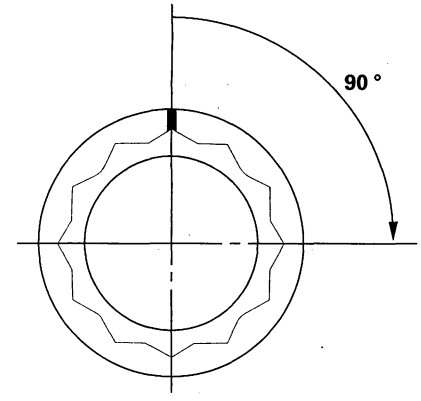

BACK

Protected by AR

If the Crankshaft is Not Installed

1. Remove the connecting rod caps, then install the ring compressor, and check that the bearing is securely in place.
2. Position the mark (A) to face the cam chain side of the engine.

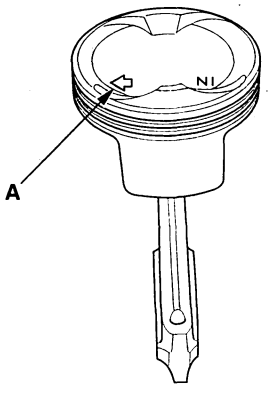

3. Position the piston in the cylinder, and tap it in using the wooden handle of a hammer (A). Maintain downward force on the ring compressor (B) to prevent the rings from expanding before entering the cylinder bore.

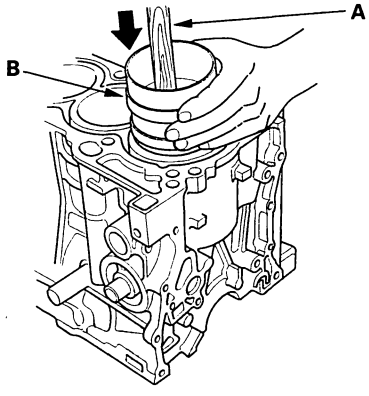

4. Position all pistons at top dead center (TDC).

Connecting Rod Bolt Inspection

1. Measure the diameter of each connecting rod bolt at point A and point B.

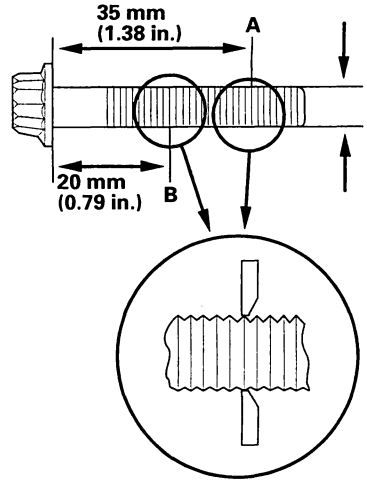

2. Calculate the difference in diameter between point A and point B.

   Point A—Point B = Difference in Diameter

   Difference in Diameter:
   Specification: 0—0.1 mm (0—0.004 in.)

3. If the difference in diameter is out of tolerance, replace the connecting rod bolt.

Protected by AR

Crankshaft Installation

Special Tools Required
- Driver 07749-0010000
- Attachment, 24 x 26 mm 07746-0010700
- Oil seal driver attachment 96 07ZAD-PNAA100

1. With a manual transmission, install the crankshaft end bushing when replacing the crankshaft. Using the special tools, drive in the crankshaft end bushing until the special tools bottom against the crankshaft.

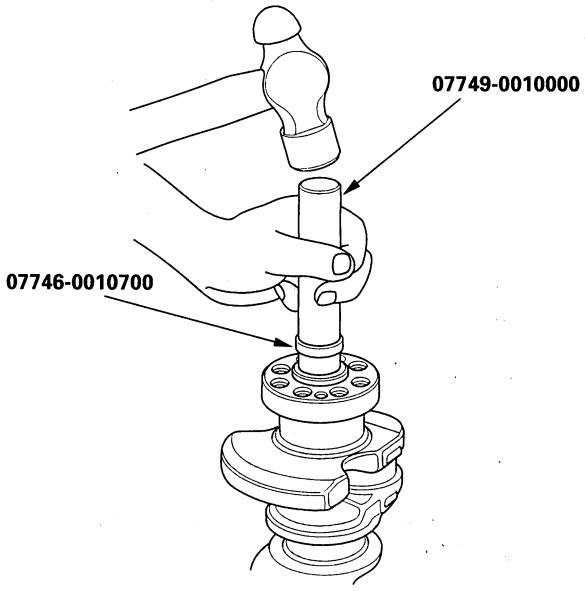

2. Check the connecting rod bearing clearance with plastigage (see page 7-8).

3. Check the main bearing clearance with plastigage (see page 7-6).

4. Install the bearing halves in the engine block and connecting rods.

5. Apply a coat of new engine oil to the main bearings and rod bearings.

6. Hold the crankshaft so rod journal No. 2 and rod journal No. 3 are straight up, and lower the crankshaft into the block.

7. Apply new engine oil to the thrust washer surfaces. Install the thrust washers (A) in the No. 4 journal of the engine block.

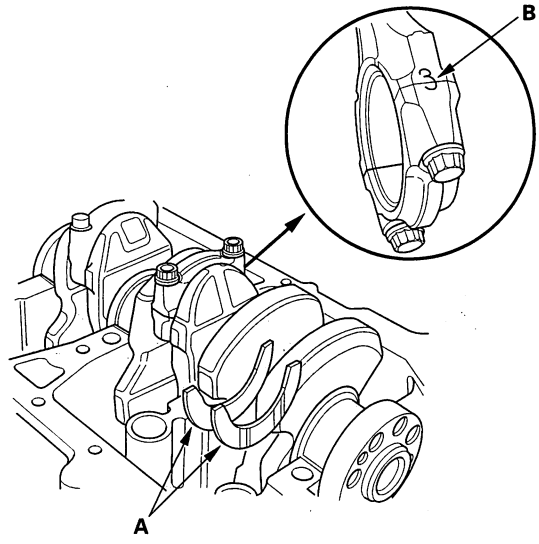

8. Inspect the connecting rod bolts (see page 7-25).

9. Apply new engine oil to the threads of the connecting rod bolts.

10. Seat the rod journals into connecting rod No. 1 and connecting rod No. 4. Line up the mark (B) on the connecting rod and cap, then install the caps and bolts finger-tight.

11. Rotate the crankshaft clockwise, and seat the journals into connecting rod No. 2 and connecting rod No. 3. Line up the mark on the connecting rod and cap, then install the caps and bolts finger-tight.

BACK

Protected by AR

12. Tighten the connecting rod bolts to 20 N·m (2.0 kgf·m, 14 lbf·ft).

13. Tighten the connecting rod bolts an additional 90 °.

    NOTE: Remove the connecting rod bolt if you tightened it beyond the specified angle, and go back to step 8 of the procedure. Do not loosen it back to the specified angle.

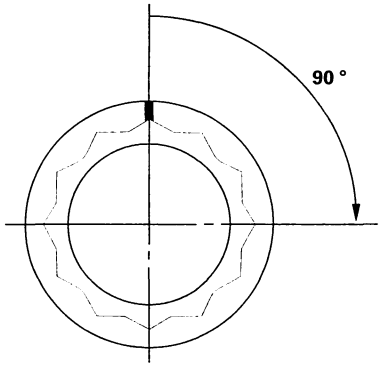

14. Remove all of the old liquid gasket from the lower block mating surfaces, bolts, and bolt holes.

15. Clean and dry the lower block mating surfaces.

16. Apply liquid gasket, P/N 08717-0004, 08718-0001, 08718-0002, 08718-0003, or 08718-0009, evenly to the engine block mating surface of the lower block and to the inner threads of the bolt holes.

    NOTE: Do not install components if too much time has passed after applying the liquid gasket (for P/N 08718-0002, no more than 4 minutes, for all others, no more than 5 minutes). Instead,remove the old residue and reapply the liquid gasket.

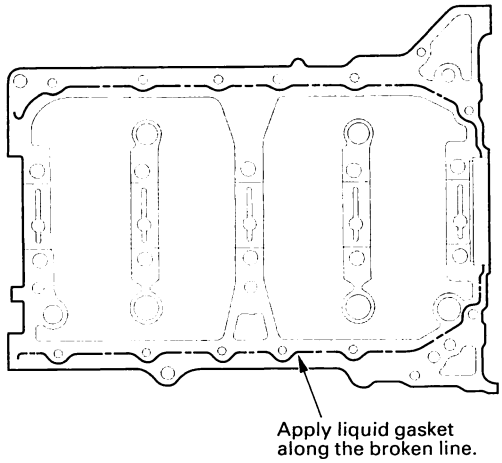

17. Put the lower block on the engine block.

18. Tighten the bearing cap bolts in sequence to 29 N·m (3.0 kgf·m, 22 lbf·ft).

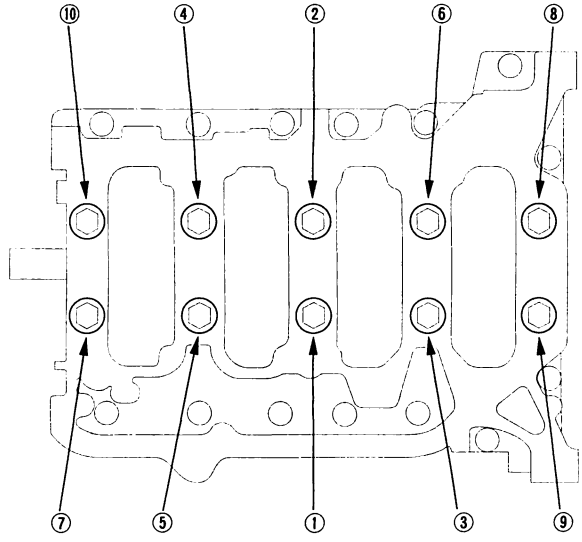

19. Tighten the bearing cap bolts an additional 56 °.

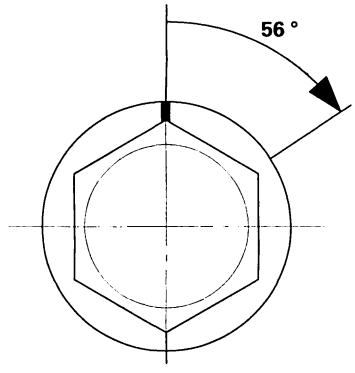

(cont'd)

Protected by AR

Crankshaft Installation (cont'd)

20. Tighten the 8 mm bolts in sequence to 22 N·m (2.2 kgf·m, 16 lbf·ft).

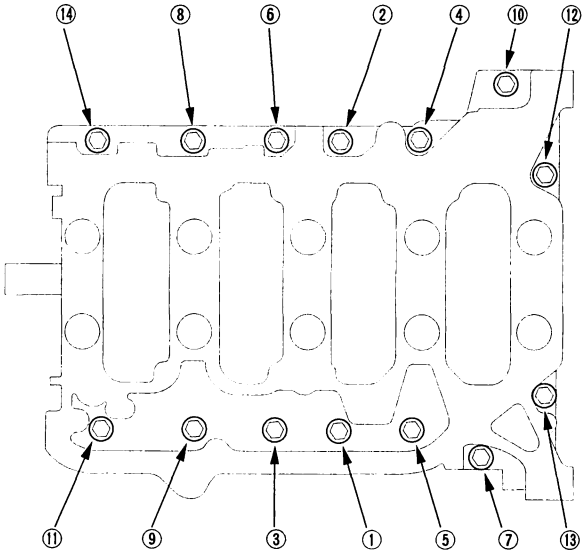

21. Use the special tools to drive a new oil seal squarely into the block to the specified installed height.

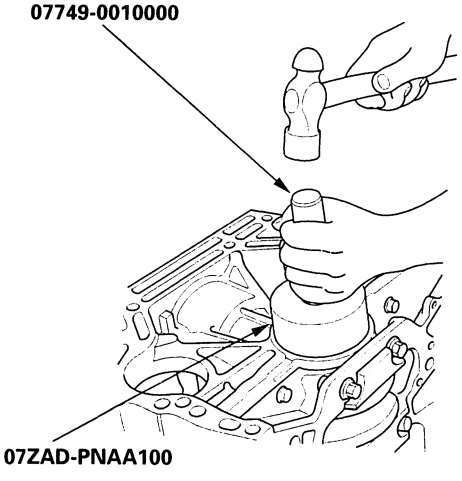

22. Measure the distance between the engine block (A) and oil seal (B).

Oil Seal Installed Height: 0.2—1.2 mm (0.001—0.047 in.)

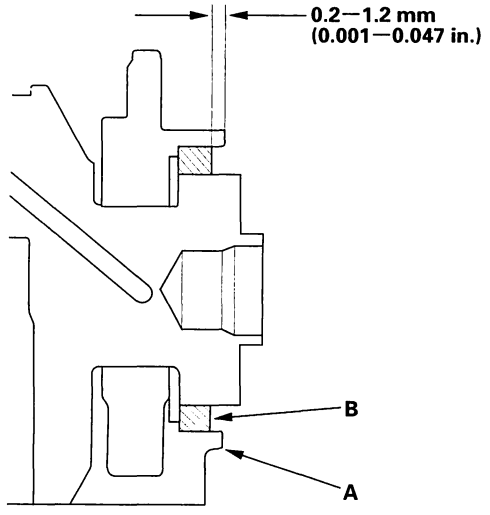

23. Install the baffle plates.

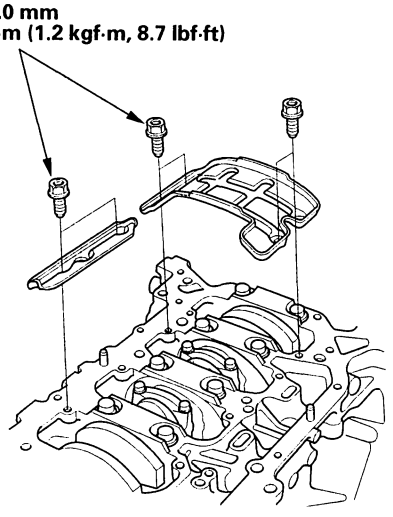

BACK

Protected by AR

24. Install the oil pump (see page 8-15).

25. Install the oil pan (see page 7-29).

26. Install the cylinder head (see page 6-46).

27. M/T model: Install the flywheel (see page 12-12), clutch disc (see page 12-13), and pressure plate (see page 12-13),

28. A/T model: Install the drive plate (see page 14-218).

29. Install the transmission:

    - Manual transmission (see page 13-11)
    - Automatic transmission (see page 14-219)

30. Install the engine assembly (see page 5-10).

    NOTE: Whenever any crankshaft or connecting rod bearing is replaced, it is necessary after reassembly to run the engine at idling speed until it reaches normal operating temperature, then continue to run it for about 15 minutes.

Oil Pan Installation

1. Remove all of the old liquid gasket from the oil pan mating surfaces, bolts, and bolt holes.

2. Clean and dry the oil pan mating surfaces.

3. Apply liquid gasket, P/N 08718-0001, 08718-0002, 08718-0009, evenly to the engine block mating surface of the oil pan and to the inner threads of the bolt holes.

   NOTE: Do not install components if too much time has passed after applying the liquid gasket (for P/N 08718-0002, no more than 4 minutes, for all others, no more than 5 minutes). Instead, remove the old residue and reapply the liquid gasket.

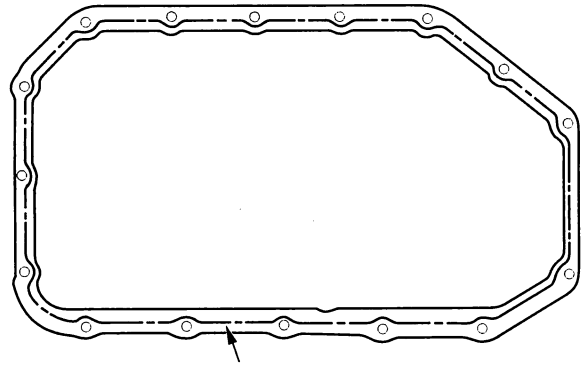

Apply liquid gasket along the broken line.

4. Install the oil pan.

(cont'd)

Protected by AR

Oil Pan Installation (cont'd)

5. Tighten the bolts in two or three steps. In the final step, tighten all bolts, in sequence, to 12 N·m (1.2 kgf·m, 8.7 lbf·ft). Wipe off the excess liquid gasket on the each side of crankshaft pulley and flywheel/drive plate.

   NOTE:
   - Wait at least 30 minutes before filling the engine with oil.
   - Do not run the engine for at least 3 hours after installing the oil pan.

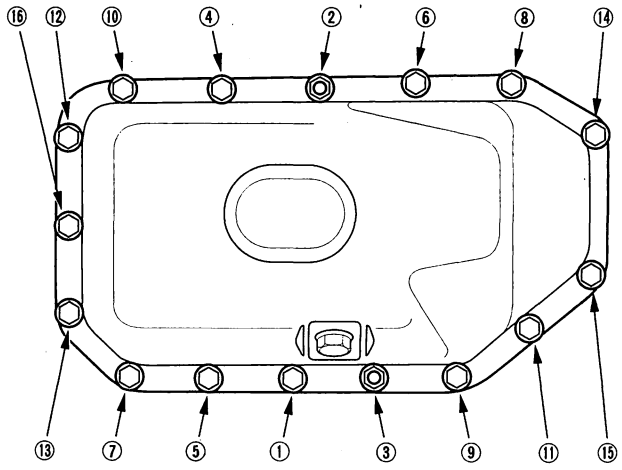

6. Install the stiffener.

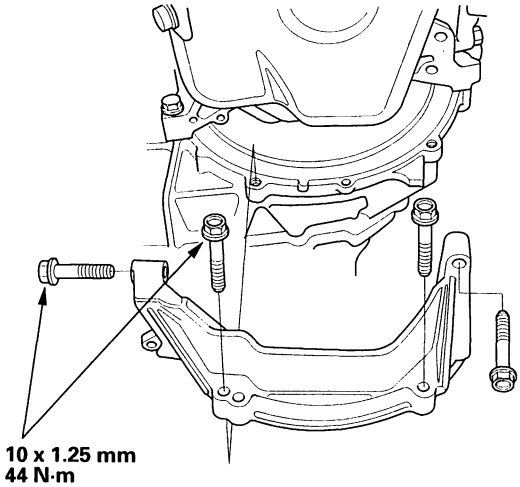

7. If the engine is still in the vehicle, do the following steps.

8. Tighten the nuts securing the transmission lower front mount and transmission lower rear mount (see step 13 on page 5-13).

9. Install a new set ring on the end of the left side driveshaft, then install the driveshaft. Make sure each ring "clicks" into place in the differential.

10. Connect the left side suspension lower arm ball joint (see step 8 on page 18-21).

11. Install the left side damper fork (see step 2 on page 18-27).

12. Connect the stabilizer links (see page 18-22).

13. Lower the hoist.

14. Tighten the front mount bolt, then install the front mount stop (see step 3 on page 5-11).

15. Tighten the rear mount bolt, then install the rear mount stop (see step 5 on page 5-11).

16. Loosen the mount bolt, then install the transmission upper mount/bracket assembly, clutch line clamp bracket and ground cable (M/T) (see step 8 on page 5-12).

17. Loosen the mount bolt and bracket plate mounting bolts, then install the transmission upper mount/bracket assembly, and ground cable (A/T) (see step 9 on page 5-12).

18. Tighten the transmission upper mount bolt (M/T) (see step 10 on page 5-12).

19. Tighten the transmission upper mount bracket plate mounting bolts, then tighten the transmission upper mount bolt (A/T) (see step 11 on page 5-12).

BACK

Protected by AR

20. Install the clutch slave cylinder and clutch line bracket mounting bolt (M/T) (see step 35 on page 5-16).

21. Install the battery base, then install the harness clamp (see step 47 on page 5-18).

22. Install the air cleaner housing (see page 11-361).

23. Install the battery. Clean the battery posts and cable terminals with sandpaper, then assemble them and apply grease to prevent corrosion.

24. Perform the power window control unit reset procedure (see page 22-232).

25. Enter the anti-theft codes for the radio and the navigation system, then enter the customer's radio station presets.

26. Set the clock.

Transmission End Crankshaft Oil Seal Installation - In Car

Special Tools Required
- Driver 07749-0010000
- Oil seal driver attachment 96 07ZAD-PNAA100

1. Remove the transmission:
   - Manual transmission (see page 13-4)
   - Automatic transmission (see page 14-209)

2. M/T model: Remove the pressure plate (see page 12-10), clutch disc (see page 12-10), and flywheel (see page 12-12).

3. A/T model: Remove the drive plate (see page 14-218).

4. Clean and dry the crankshaft oil seal housing.

5. Use the special tools to drive a new oil seal squarely into the block to the specified installed height.

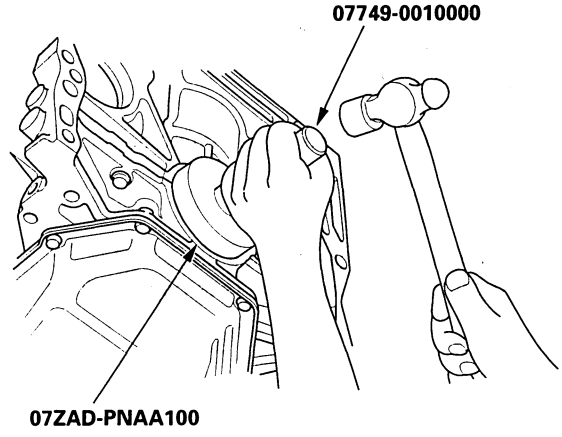

(cont'd)

Protected by AR

Transmission End Crankshaft Oil Seal Installation - In Car (cont'd)

6. Measure the distance between the engine block (A) and oil seal (B).

   Oil Seal Installed Height: 0.2—1.2 mm (0.001—0.047 in.)

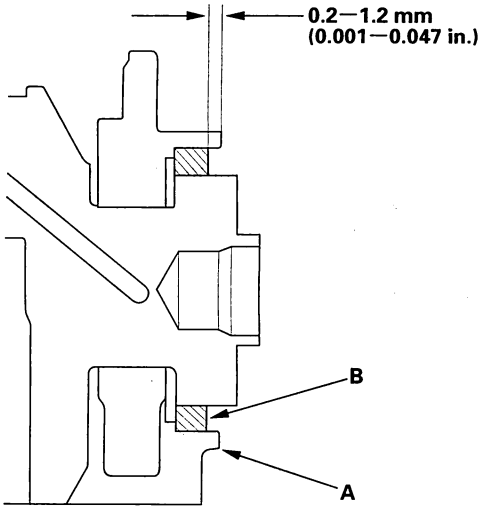

7. M/T model: Install the flywheel (see page 12-12), clutch disc (see page 12-13), and pressure plate (see page 12-13).

8. A/T model: Install the drive plate (see page 14-218).

9. Install the transmission:

   - Manual transmission (see page 13-11)
   - Automatic transmission (see page 14-219)

BACK

Protected by AR

Engine Mechanical



Engine Lubrication

Special Tools 8-2
Component Location Index 8-3
Symptom Troubleshooting Index 8-4
Oil Pressure Switch Test 8-5
Oil Pressure Switch Replacement 8-5
Oil Pressure Test 8-6
Engine Oil Replacement 8-6
Engine Oil Filter Replacement 8-7
Oil Filter Feed Pipe Replacement 8-8
Oil Pump Overhaul 8-9

BACK

Protected by AR

Engine Lubrication

Special Tools

Ref. No.	Tool Number	Description	Qty
①	07HAA-PJ70100	Oil Filter Wrench	1

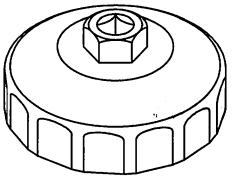

①

BACK

Protected by AR

Component Location Index

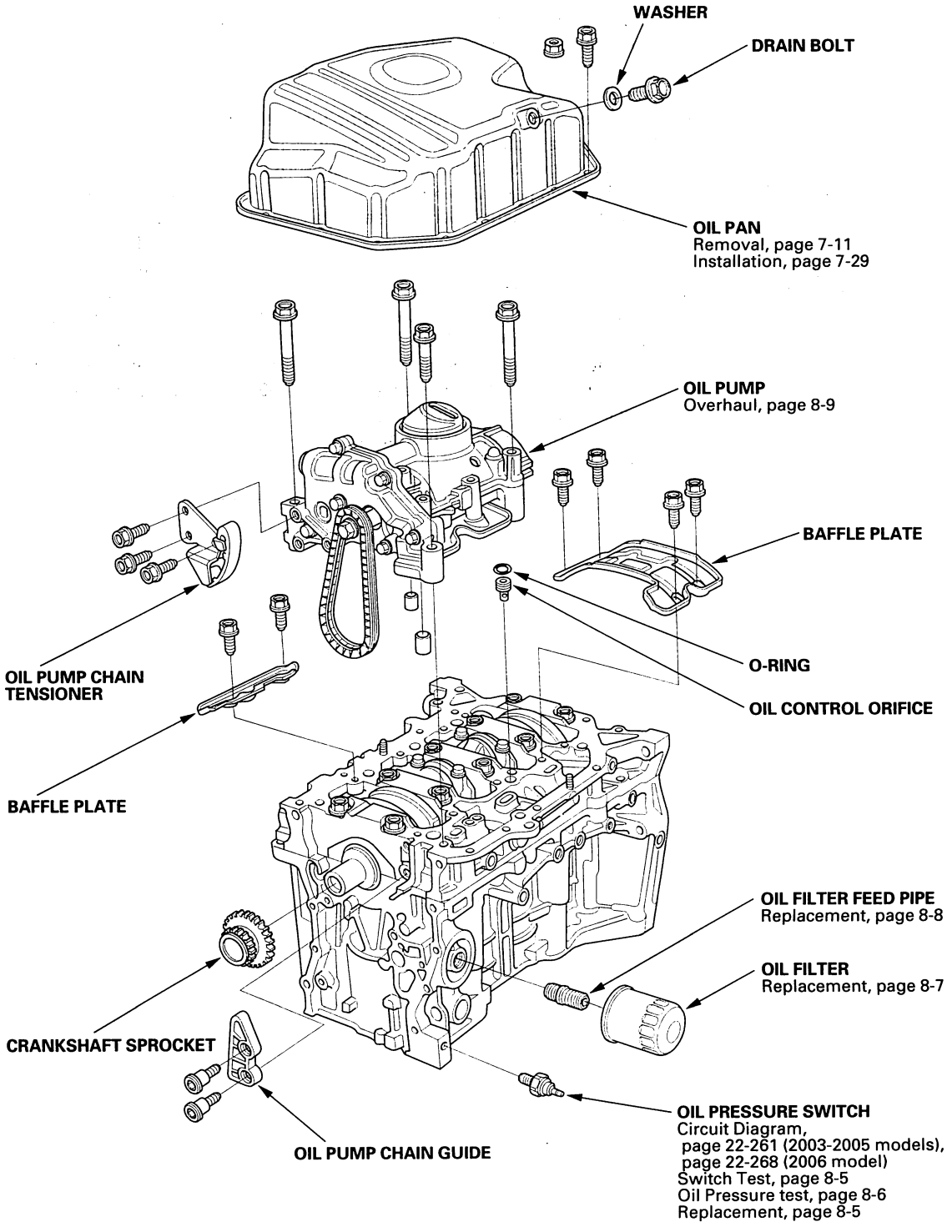

BACK

Protected by AR

Engine Lubrication

Symptom Troubleshooting Index

Symptom	Diagnostic procedure	Also check for
Excessive engine oil consumption	1. Check the loose of the engine oil fill cap, oil drain bolt, and oil filter. 2. Check for oil leaks. 3. Check for worn valve guide(s) (see page 6-39) or worn valve stem seal(s) (see page 6-39). 4. Check for damaged or worn piston ring(s) (see page 7-22). 5. Check for damaged or worn engine internal parts (cylinder wall, pistons, etc.) (see page 7-16).	
Low oil pressure indicator does not come on with the ignition switch ON (II)	1. Do the gauge control module self-diagnostic function (see page 22-259). 2. Test the oil pressure switch (see page 8-5).	An open in the wire between the gauge control module and the oil pressure switch
Low oil pressure indicator stays on	1. Check the engine oil level. 2. Do the gauge control module self-diagnostic function (see page 22-259). 3. Test the oil pressure switch (see page 8-5). 4. Check the engine oil pressure (see page 8-6). 5. Check the oil filter for clogging. 6. Check the oil screen for clogging. 7. Check the relief valve. 8. Test the oil pump (see page 8-11).	A wire shorted to ground between the gauge control module and the oil pressure switch

BACK

Protected by AR

Oil Pressure Switch Test

1. Remove the YEL/RED wire (A) from the engine oil pressure switch (B).

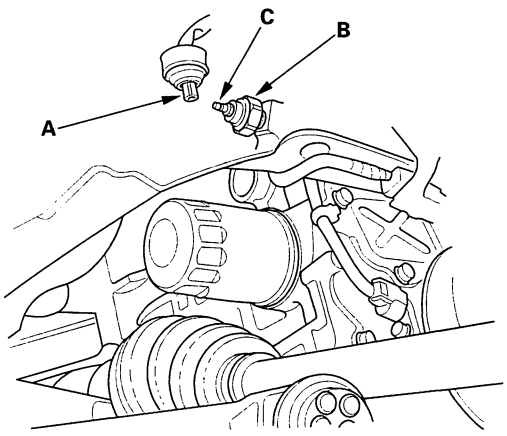

2. Check for continuity between the positive terminal (C) and the engine (ground). There should be continuity with the engine stopped. There should be no continuity with the engine running.

3. If the switch fails to operate, check the engine oil level. If the engine oil level is OK, check the engine oil pressure. If the oil pressure is OK, replace the oil pressure switch (see page 8-5).

Oil Pressure Switch Replacement

1. Disconnect the oil pressure switch connector, then remove the oil pressure switch.

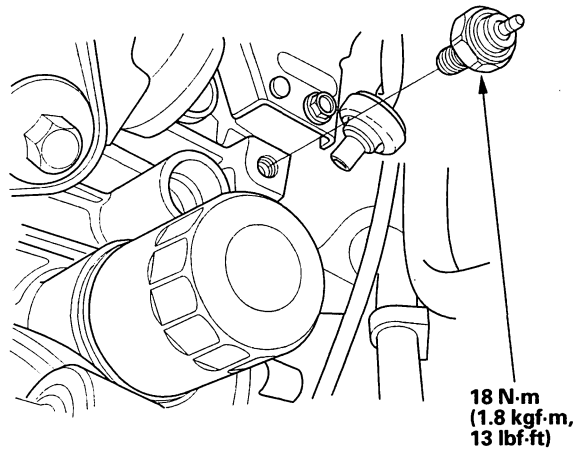

2. Remove all of the old liquid gasket from the switch and switch mounting hole.

3. Apply liquid gasket to the new oil pressure switch threads, then install the oil pressure switch.

   NOTE: Using too much liquid gasket may cause liquid gasket to enter the oil passage or the end of the new oil pressure switch.

Protected by AR

Engine Lubrication

Oil Pressure Test

If the oil pressure warning light stays on with the engine running, check the engine oil level. If the oil level is correct:

1. Remove the engine oil pressure switch, and install an oil pressure gauge (A).

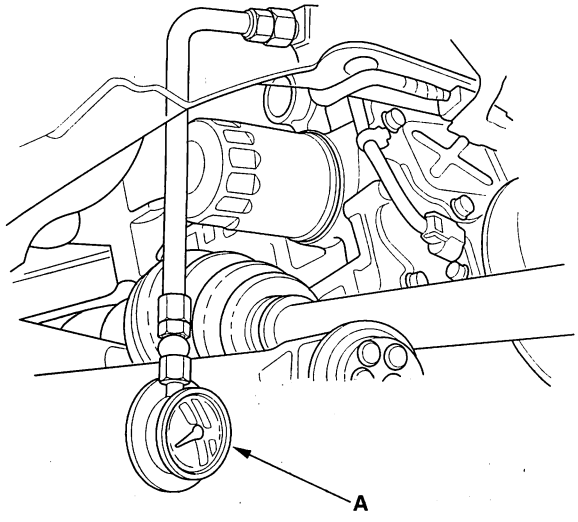

2. Start the engine. Shut it off immediately if the gauge registers no oil pressure. Repair the problem before continuing.

3. Allow the engine to reach operating temperature (fan comes on at least twice). The pressure should be:

   Engine Oil Temperature: 176 °F (80 °C)
   Engine Oil Pressure:
   At Idle: 70 kPa (0.7 kgf/cm², 10 psi) min.
   At 3,000 rpm: 300 kPa (3.1 kgf/cm², 44 psi) min.

4. If the oil pressure is NOT within specifications, inspect these items:

   - Check the oil screen for clogging.
   - Inspect the oil pump (see page 8-11).

Engine Oil Replacement

1. Warm up the engine.

2. Remove the drain bolt (A), and drain the engine oil.

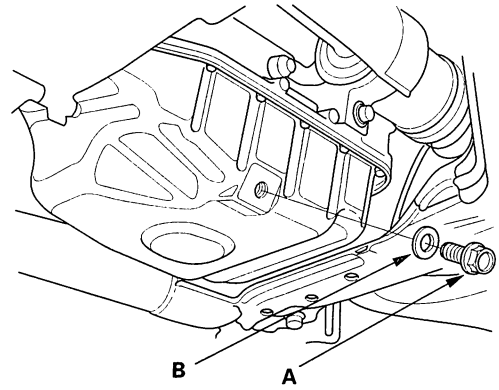

44 N·m (4.5 kgf·m, 33 lbf·ft)
Do not overtighten.

3. Reinstall the drain bolt with a new washer (B).

4. Refill with the recommended oil (see page 3-2).

   Capacity
   At Oil Change:
   4.0 L (4.2 US qt)
   At Oil Change Including Filter:
   4.2 L (4.4 US qt)
   After Engine Overhaul:
   5.3 L (5.6 US qt)

5. Run the engine for more than 3 minutes, then check for oil leakage.

6. 2006 model: Reset the engine oil life indicator (see page 3-11).

BACK

Protected by AR

Engine Oil Filter Replacement

Special Tools Required
Oil filter wrench 07HAA-PJ70100

1. Remove the oil filter with the special tool.

2. Inspect the threads (A) and rubber seal (B) on the new filter. Clean the seat on the engine block, then apply a light coat of new engine oil to the filter rubber seal. Use only filters with a built-in bypass system.

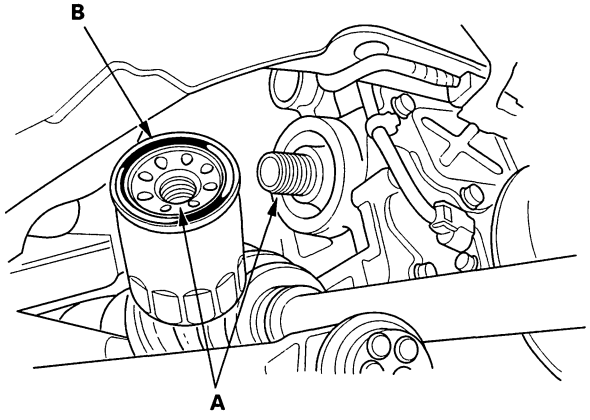

3. Install the oil filter by hand.

4. After the rubber seal seats, tighten the oil filter clockwise with the special tool.

Tighten: **3/4 Turn Clockwise**
Tightening torque: **12 N·m (1.2 kgf·m, 8.7 lbf·ft)**

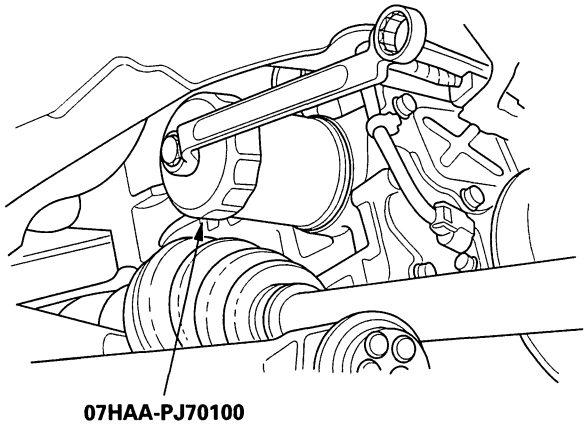

5. If four numbers or marks (1 to 4 or ▼ to ▼▼▼▼) are printed around the outside of the filter, use the following procedure to tighten the filter.

   - Spin the filter on until its seal lightly seats against the block, and note which number or mark is at the bottom.
   - Tighten the filter by turning it clockwise three numbers or marks from the one you noted. For example, if number 2 is at the bottom when the seal is seated, tighten the filter until the number 1 comes around the bottom.

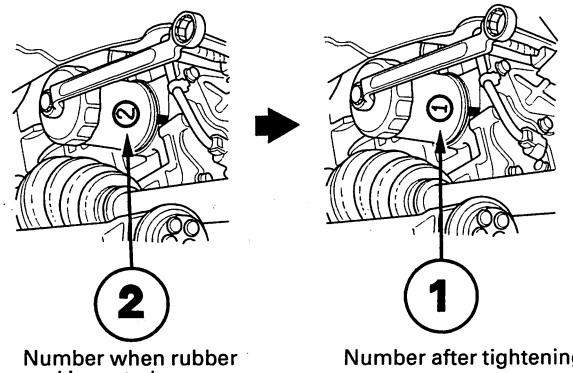

Number when rubber seal is seated.

Number after tightening.

Number or Mark when rubber seal is seated	1 or ▼	2 or ▼▼	3 or ▼▼▼	4 or ▼▼▼▼
Number or Mark after tightening	4 or ▼▼▼▼	1 or ▼	2 or ▼▼	3 or ▼▼▼

6. After installation, fill the engine with oil up to the specified level, run the engine for more than 3 minutes, then check for oil leakage.

7. 2006 model: Reset the engine oil life indicator (see page 3-11).

Protected by AR

Oil Filter Feed Pipe Replacement

1. Remove the oil filter (see page 8-7).
2. Remove the oil filter feed pipe.

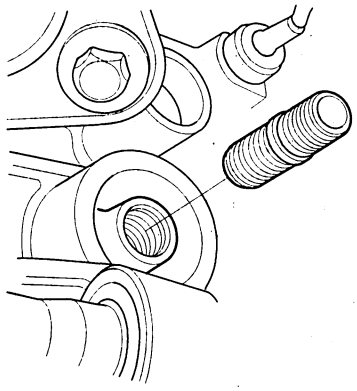

3. Install the two 20 x 1.5 mm nuts (A) onto the new oil filter feed pipe. Hold one nut with a wrench, then tighten the other nut.

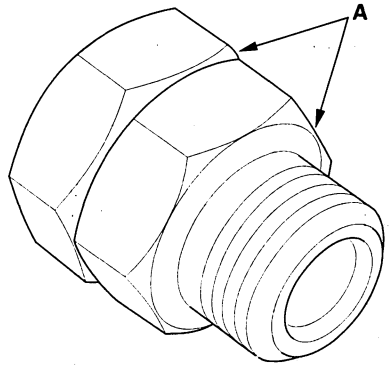

4. Tighten the oil filter feed pipe to the block to 49 N·m (5.0 kgf·m, 36 lbf·ft), then remove the nuts from the oil filter feed pipe.

BACK

Protected by AR

Oil Pump Overhaul

Exploded View

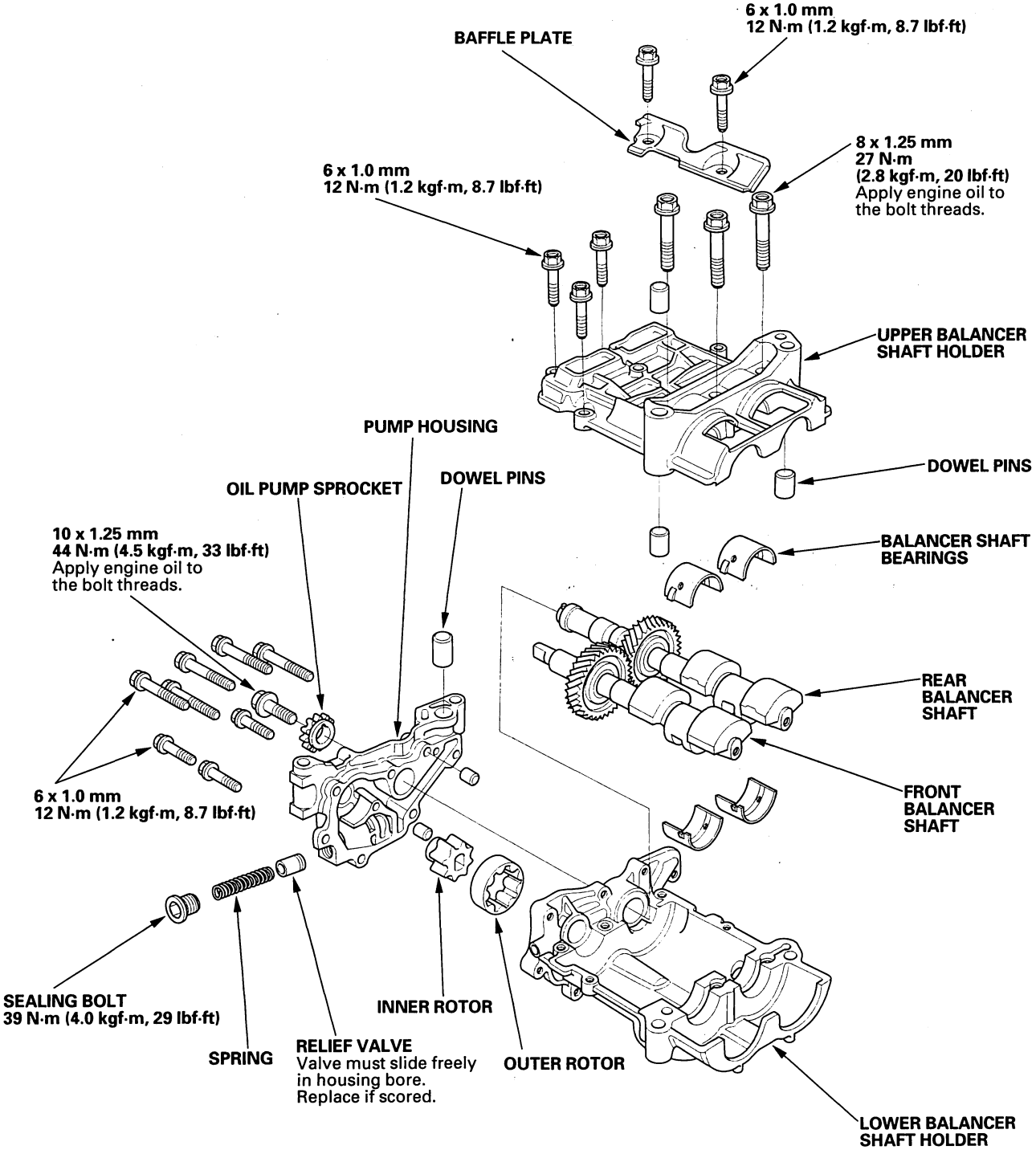

(cont'd)

BACK

Protected by AR

Oil Pump Overhaul (cont'd)

Oil Pump Removal

1. Turn the crankshaft pulley so its top dead center (TDC) mark lines up with the pointer (see step 1 on page 6-12).
2. Remove the oil pan (see page 7-11).
3. Remove and discard the oil pump chain tensioner.

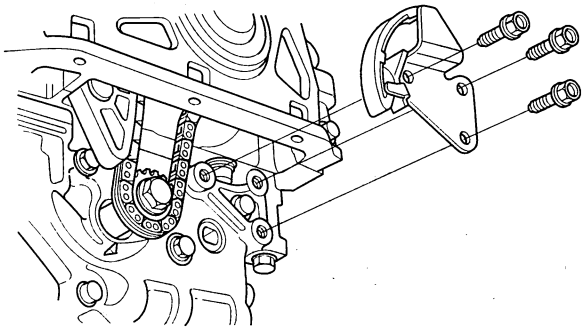

4. To hold the rear balancer shaft, insert a 6 mm pin driver (A) into the maintenance hole in the lower balancer shaft holder and through the rear balancer shaft.

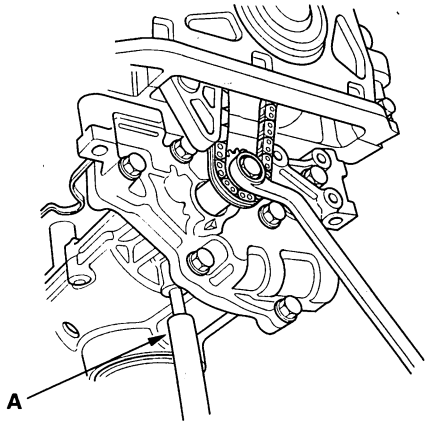

5. Loosen the oil pump sprocket mounting bolt.
6. Remove the oil pump sprocket (A), then remove the oil pump (B).

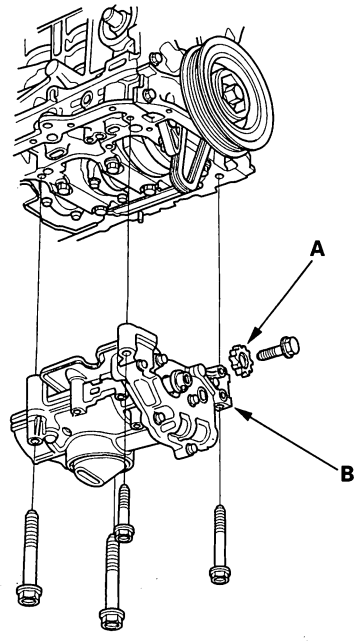

BACK

Protected by AR

Oil Pump Inspection

1. Remove the pump housing.

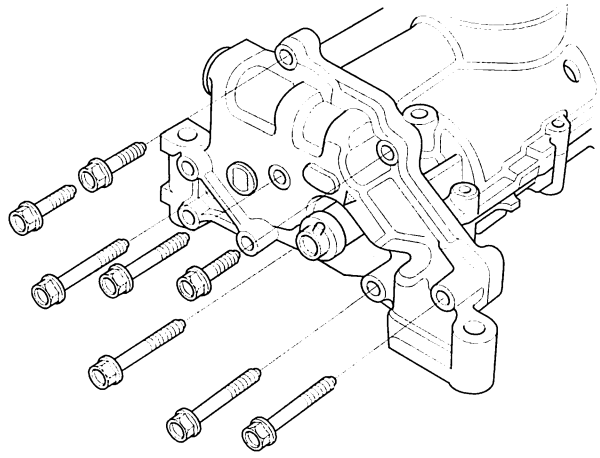

2. Check the inner-to-outer rotor radial clearance between the inner rotor (A) and outer rotor (B). If the inner-to-outer rotor radial clearance exceeds the service limit, replace the oil pump.

Inner Rotor-to-Outer Rotor Radial Clearance
Standard (New): 0.06—0.16 mm (0.002—0.006 in.)
Service Limit: 0.20 mm (0.008 in.)

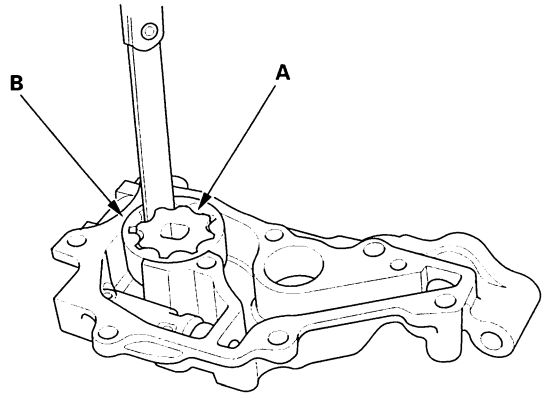

3. Check the housing-to-rotor axial clearance between the rotor (A) and pump housing (B). If the housing-to-rotor axial clearance exceeds the service limit, replace the oil pump.

Housing-to-Rotor Axial Clearance
Standard (New): 0.035—0.070 mm (0.0014—0.0028 in.)
Service Limit: 0.12 mm (0.005 in.)

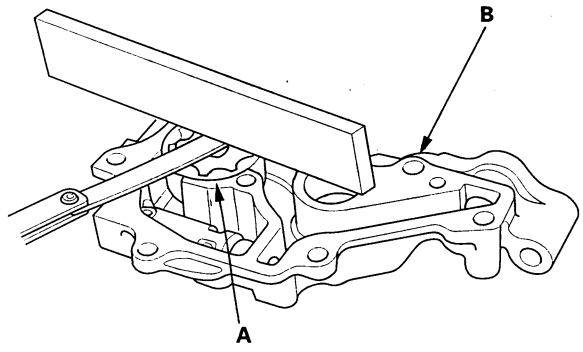

4. Check the housing-to-outer rotor radial clearance between the outer rotor (A) and pump housing (B). If the housing-to-outer rotor radial clearance exceeds the service limit, replace the oil pump.

Housing-to-Outer Rotor Radial Clearance
Standard (New): 0.15—0.21 mm (0.006—0.008 in.)
Service Limit: 0.23 mm (0.009 in.)

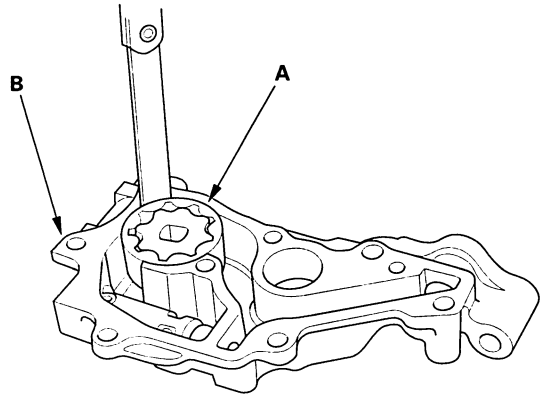

5. Inspect both rotors and the pump housing for scoring or other damage. Replace parts if necessary.

(cont'd)

Protected by AR

Oil Pump Overhaul (cont'd)

Balancer Shaft Inspection

1. Seat the balancer shaft by pushing it away from the oil pump sprocket end of the oil pump.

2. Zero the dial indicator against the end of the balancer shaft, then push the balancer shaft back and forth and read the end play.

Balancer Shaft End Play
Front Balancer Shaft:
Standard (New): 0.063—0.108 mm (0.0025—0.0043 in.)
Service Limit: 0.14 mm (0.0055 in.)
Rear Balancer Shaft:
Standard (New): 0.063—0.108 mm (0.0025—0.0043 in.)
Service Limit: 0.14 mm (0.0055 in.)

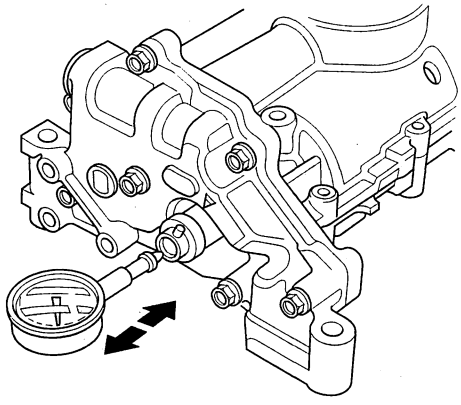

3. Remove the baffle plate (A) and upper balancer shaft holder (with bearings) (B), then remove the front balancer shaft (C) and rear balancer shaft (D).

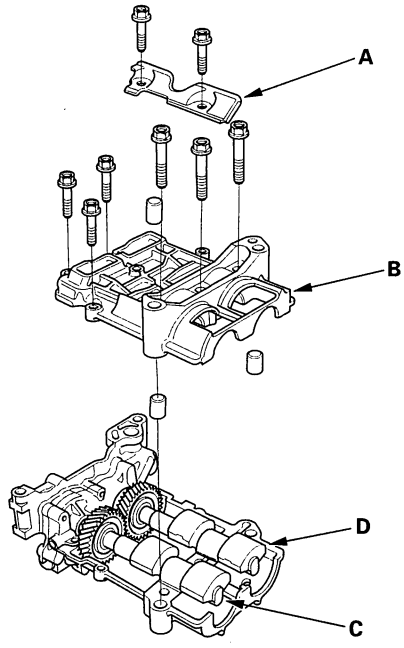

BACK

Protected by AR

4. Measure the inner diameter of the No. 1 bearing for the front balancer shaft hole and the rear balancer shaft hole.

Bearing Inner Diameter
Front:
Standard (New): 20.000—20.020 mm (0.7874—0.7882 in.)
Service Limit: 20.03 mm (0.789 in.)
Rear:
Standard (New): 24.000—24.020 mm (0.9449—0.9457 in.)
Service Limit: 24.03 mm (0.946 in.)

Front:

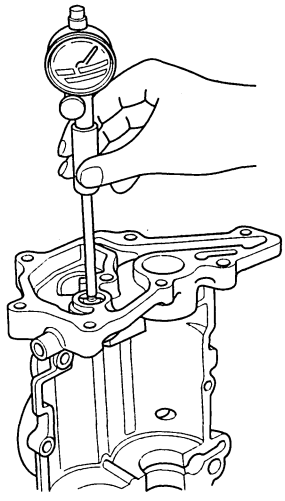

Rear:

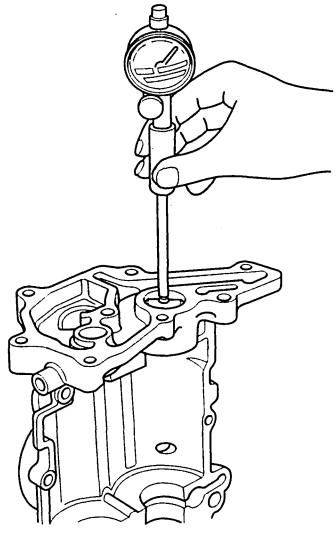

5. Measure the diameters of the No. 1 journals on the front balancer shaft and rear balancer shaft.

Journal Diameter
Front:
Standard (New): 19.938—19.950 mm (0.7850—0.7854 in.)
Service Limit: 19.92 mm (0.784 in.)
Rear:
Standard (New): 23.938—23.950 mm (0.9424—0.9429 in.)
Service Limit: 23.92 mm (0.942 in.)

Front:

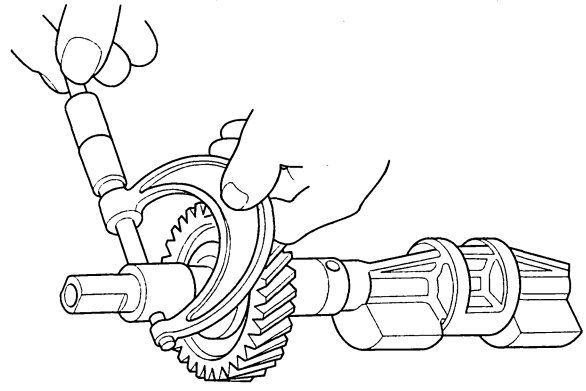

Rear:

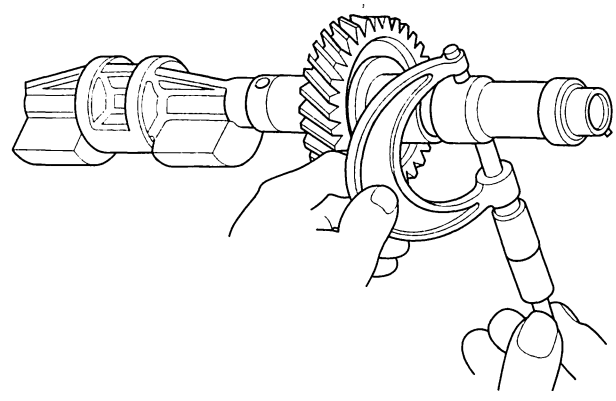

(cont'd)

Protected by AR

Oil Pump Overhaul (cont'd)

6. Clean both balancer shaft No. 2 journals and bearing halves with a clean shop towel.

7. Place one strip of plastigage across each No. 2 journal.

8. Reinstall the bearings and upper balancer shaft holder, then torque the bolts.

   NOTE: Do not rotate the balancer shafts during inspection.

9. Remove the upper balancer shaft holder and bearings again, and measure the widest part with the plastigage. If the balancer shaft No. 2 journal oil clearance is out-of-tolerance, install new bearings, and recheck. If it is still out-of-tolerance, replace the balancer shafts.

   No. 2 Journal Oil Clearance
   Standard (New): 0.060—0.120 mm (0.0024—0.0047 in.)
   Service Limit: 0.15 mm (0.006 in.)

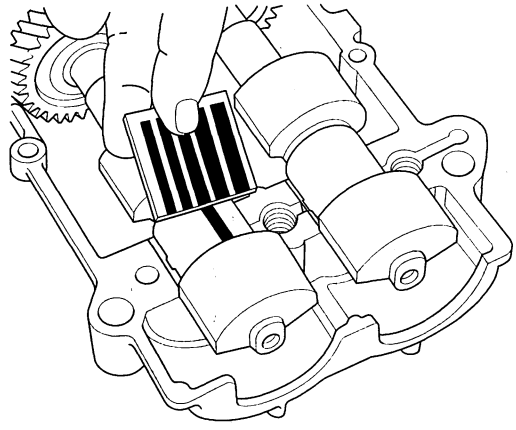

10. Align the punch mark on the rear balancer shaft in the center of the two punch marks on the front balancer shaft, then install the balancer shafts on the lower balancer shaft holder.

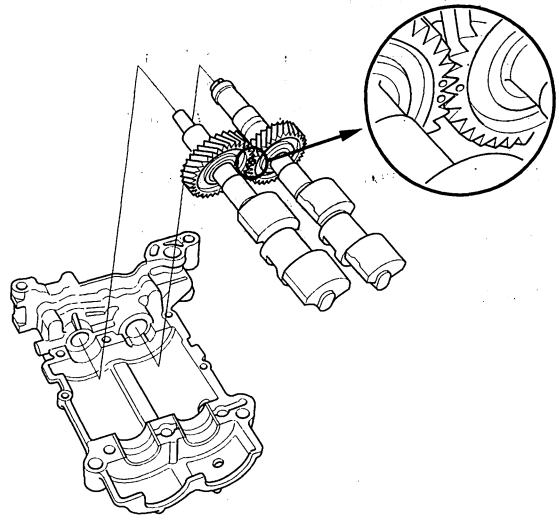

11. Apply new engine oil to the threads of the 8 mm bolts (A).

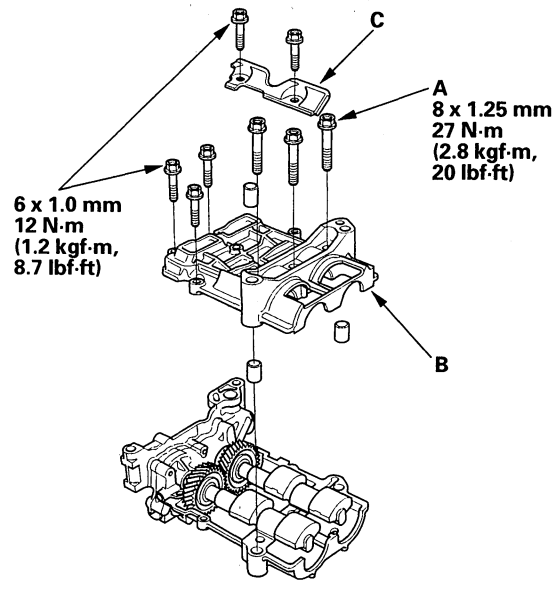

12. Install the upper balancer shaft holder (B) and baffle plate (C).

BACK

Protected by AR

13. Install the pump housing.

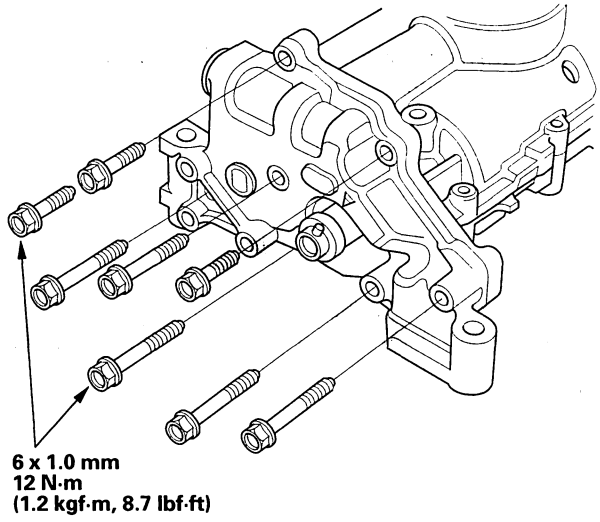

Oil Pump Installation

1. Make sure the No. 1 piston is at TDC (see step 1 on page 6-12).

2. Align the dowel pin (A) on the rear balancer shaft with the mark (B) on the oil pump.

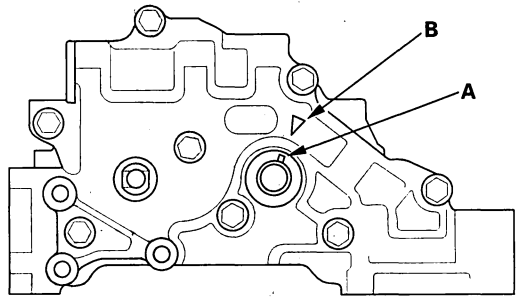

3. To hold the rear balancer shaft, insert a 6 mm pin driver (A) into the maintenance hole in the lower balancer shaft holder and through the rear balancer shaft.

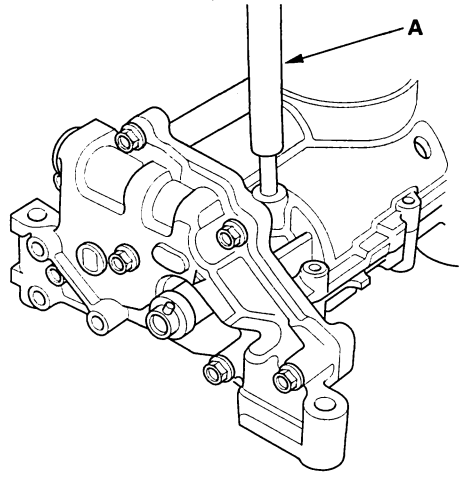

(cont'd)

Protected by AR

Oil Pump Overhaul (cont'd)

4. Apply new engine oil to the threads of the oil pump sprocket mounting bolt (A).

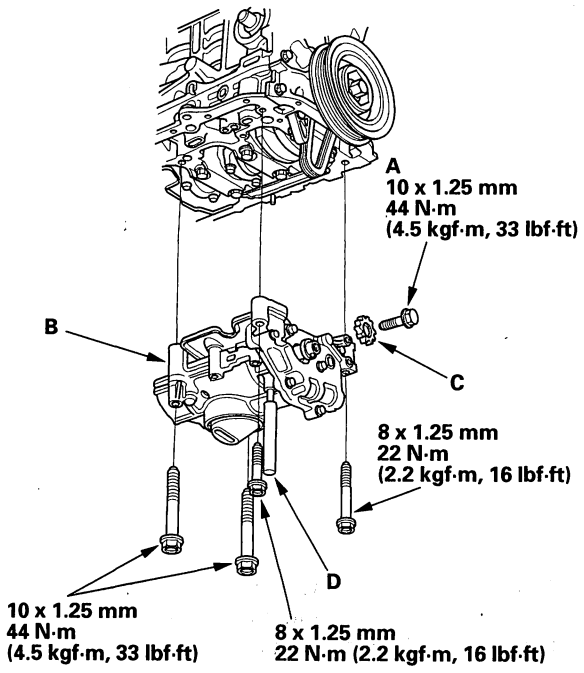

5. Loosely install the oil pump (B), then install the oil pump sprocket (C).

6. Remove the pin driver (D).

7. Tighten the oil pump mounting bolts.

8. Squeeze the new oil pump chain tensioner (A), then install the set clip (B) on it as shown.

   NOTE: The set clip is supplied with the oil pump chain tensioner.

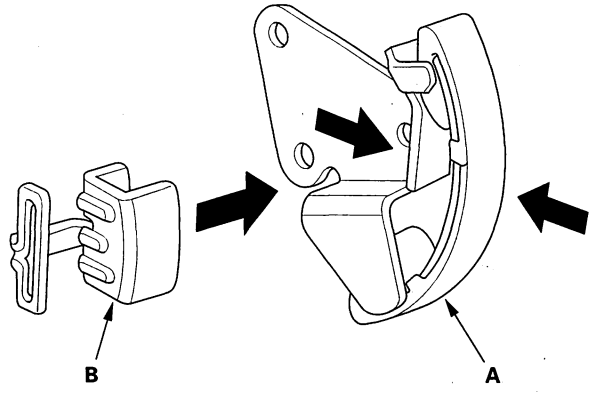

9. Install the new oil pump chain tensioner.

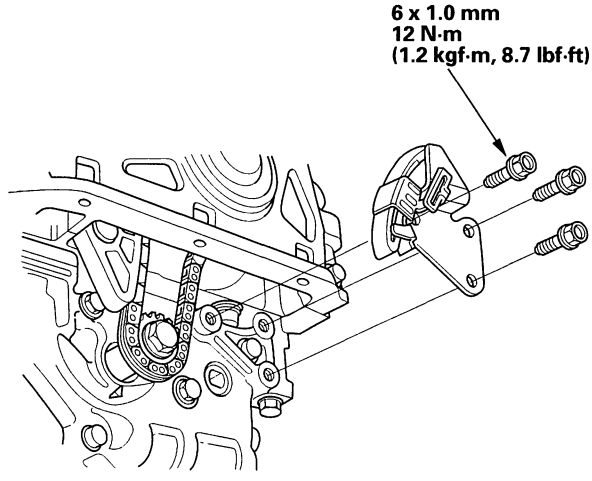

BACK

Protected by AR

10. Remove the set clip from the oil pump chain tensioner.

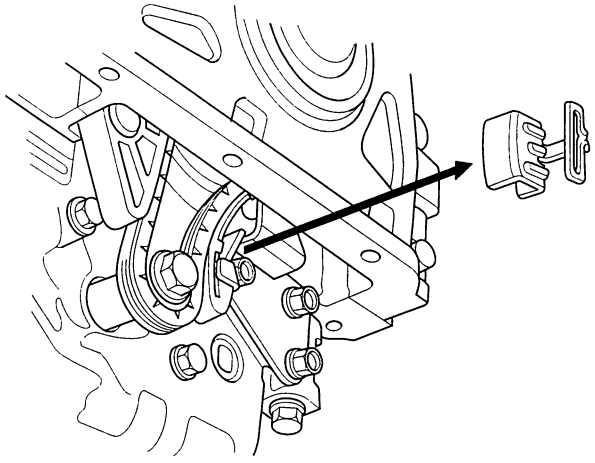

11. Install the oil pan (see page 7-29).

Protected by AR

BACK

Protected by AR

Engine Mechanical



Intake Manifold and Exhaust System

Intake Manifold Removal and Installation 9-2
Exhaust Manifold Removal and Installation 9-14
Exhaust Pipe and Muffler Replacement 9-15

BACK

Protected by AR

Intake Manifold and Exhaust System

Intake Manifold Removal and Installation

Exploded View

2003-2005 Models

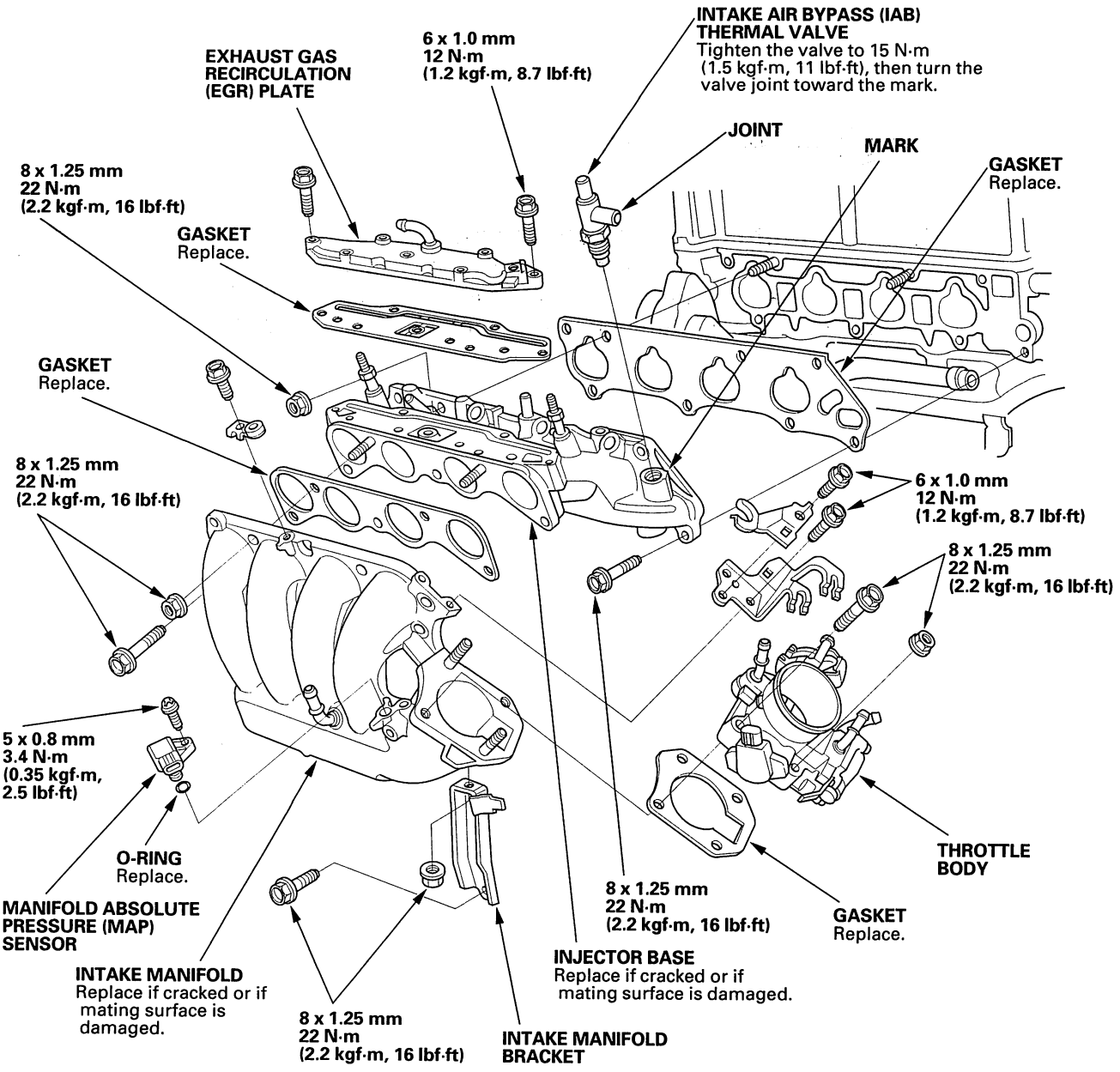

BACK

Protected by AR

Exploded View

2006 Model

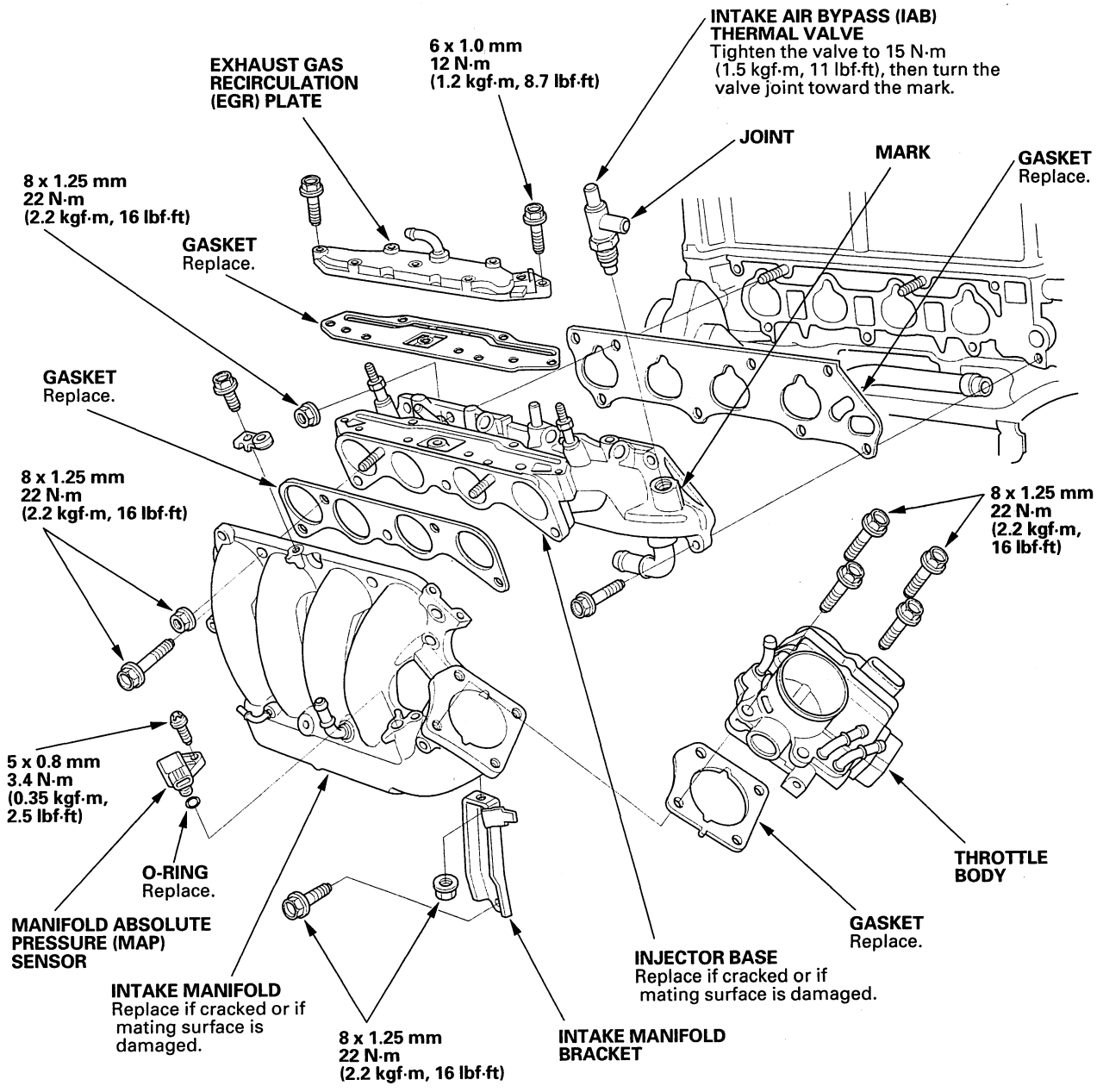

(cont'd)

Protected by AR

Intake Manifold Removal and Installation (cont'd)

Removal (2003-2005 Models)

1. Disconnect the intake air temperature (IAT) sensor connector (A).

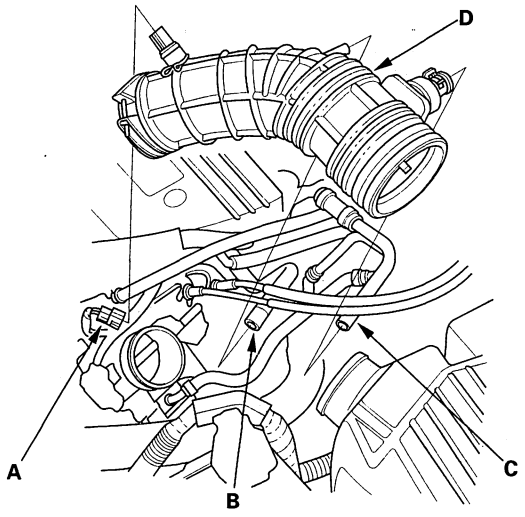

2. Remove the vacuum hose (B) and breather pipe (C), then remove the intake air duct (D).

3. Remove the intake manifold cover.

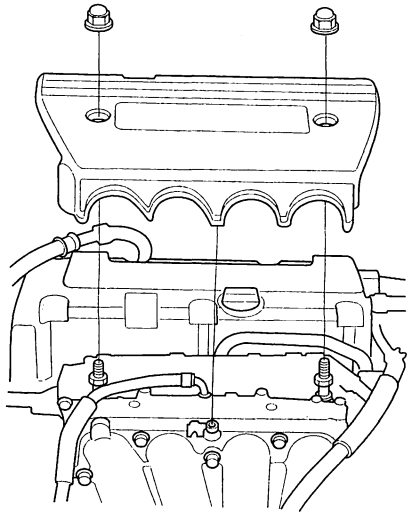

4. Remove the throttle cable (A) and cruise control actuator cable (B) by loosening the locknuts (C), then slipping the cable ends out of the accelerator linkage. Take care not to bend the cables when removing them. Always replace any kinked cable with a new one.

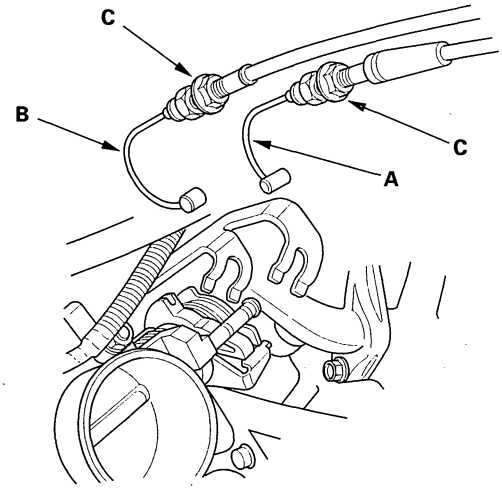

5. Remove the evaporative emission (EVAP) canister hose (A) and brake booster vacuum hose (B).

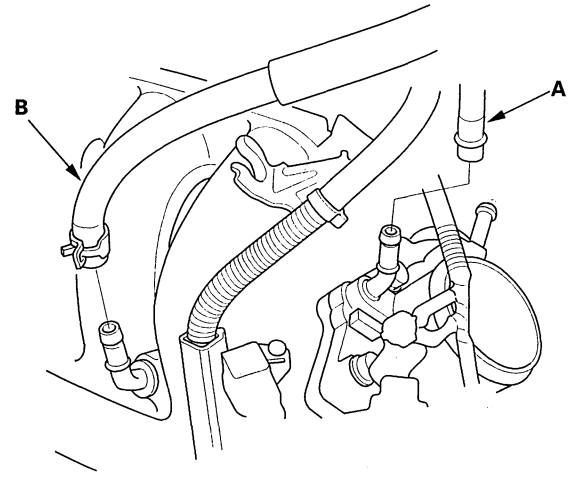

BACK

Protected by AR

6. Remove the engine wire harness connectors and wire harness clamps from the intake manifold.

   - Idle air control (IAC) valve connector
   - Throttle position sensor connector
   - Manifold absolute pressure (MAP) sensor connector

7. Remove the bolt (A) securing the harness holder, and remove the harness clamps (B).

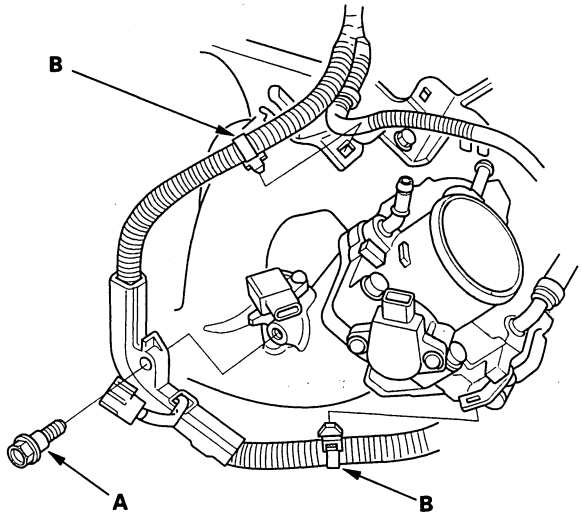

8. Remove and plug the water bypass hoses.

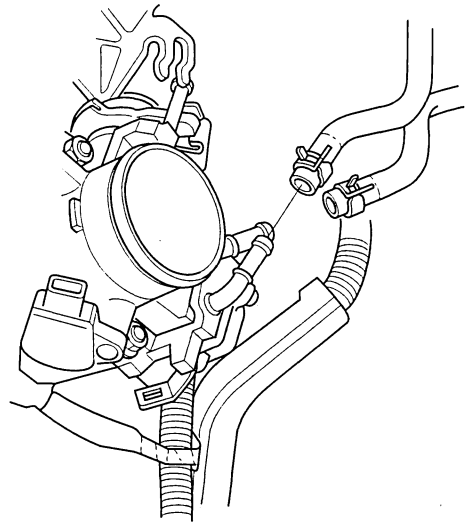

9. Remove the harness clamp (A), and the harness connector (B) from the intake manifold bracket, then remove the intake manifold bracket (C).

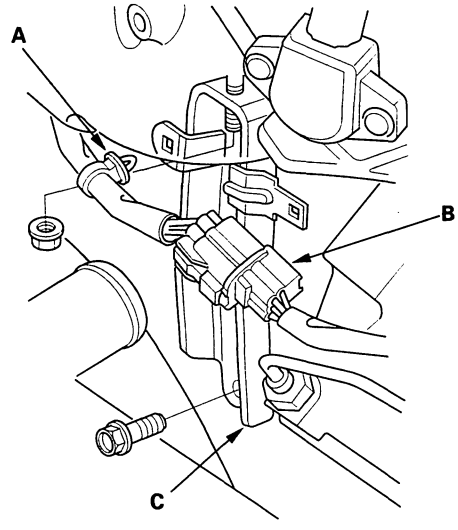

(cont'd)

Protected by AR

Intake Manifold Removal and Installation (cont'd)

10. Remove the vacuum hose (A/T).

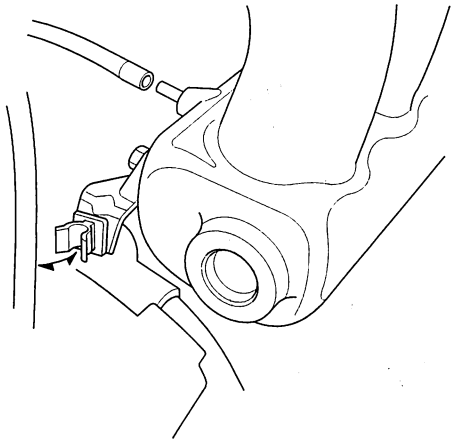

11. Remove the intake manifold.

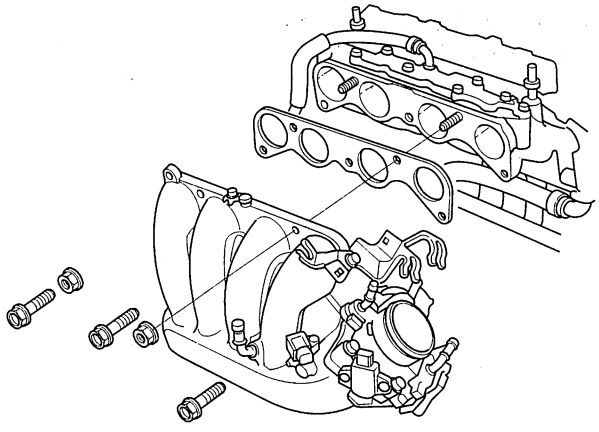

Installation (2003-2005 Models)

1. Install the intake manifold (A) with a new gasket (B), and tighten the bolts/nuts in a crisscross pattern in two or three steps, beginning with the inner bolt.

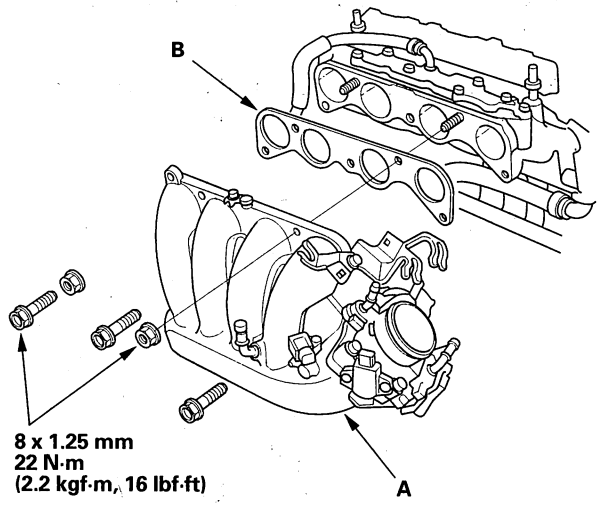

2. Install the vacuum hose (A/T).

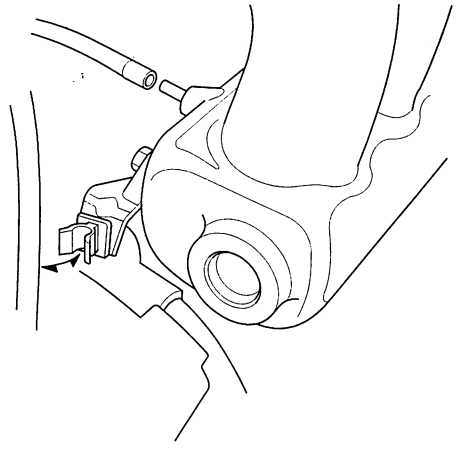

BACK

Protected by AR

3. Install the intake manifold bracket (A), then install the harness clamp (B), and harness connector (C) to the intake manifold bracket.

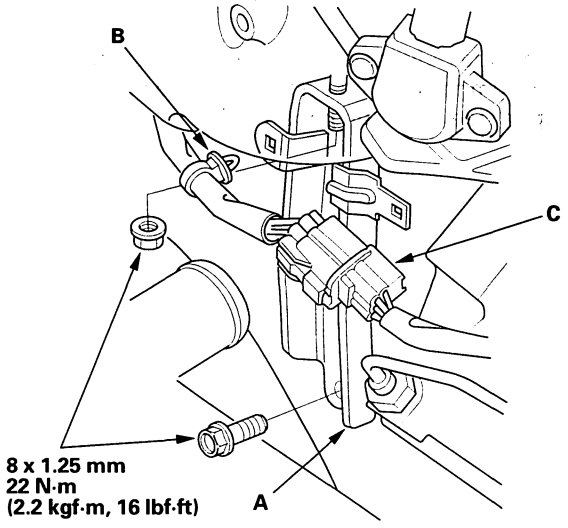

4. Install the water bypass hoses.

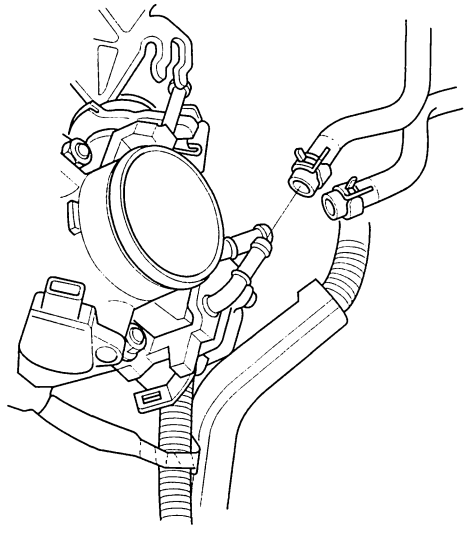

5. Tighten the bolt (A) securing the harness holder, and install the harness clamps (B).

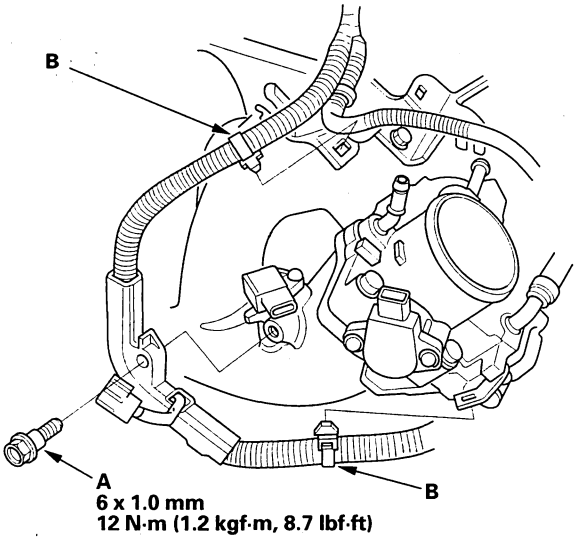

6. Install the evaporative emission (EVAP) canister hose (A) and brake booster vacuum hose (B).

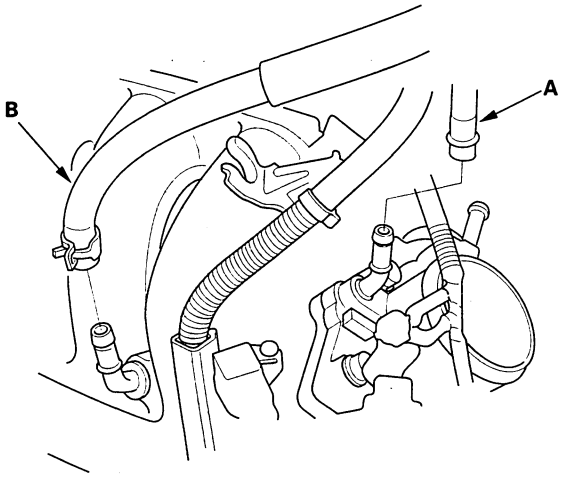

7. Install the throttle cable (see page 11-364), then adjust the cable (see page 11-362).

8. Install the cruise control actuator cable (see page 4-62), then adjust the cable (see page 4-63).

(cont'd)

Protected by AR

Intake Manifold Removal and Installation (cont'd)

9. Install the intake manifold cover.

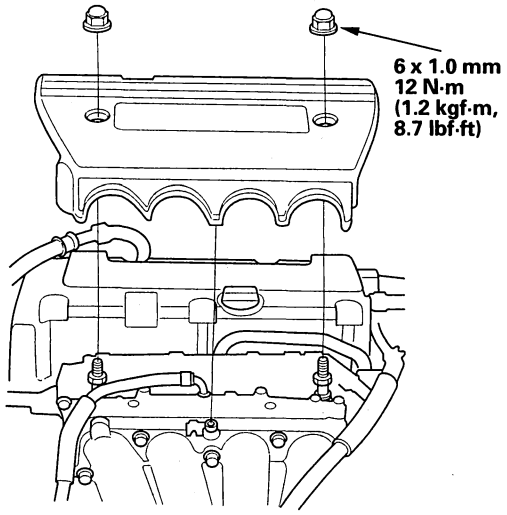

10. Install the intake air duct (A), then connect the intake air temperature (IAT) sensor connector (B), and install the vacuum hose (C) and breather pipe (D).

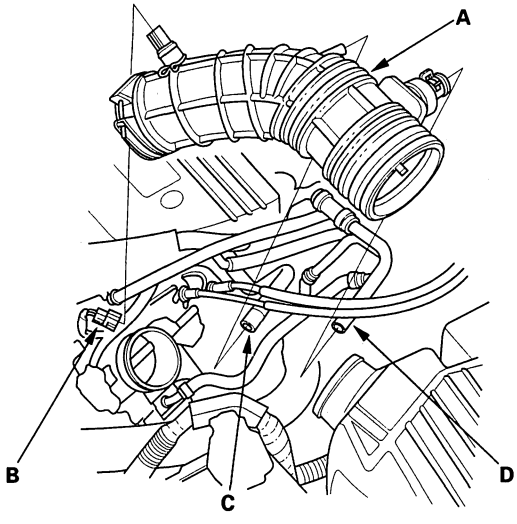

11. Clean up any spilled engine coolant.

12. After installation, check that all tubes, hoses, and connectors are installed correctly.

13. Refill the radiator with engine coolant, and bleed air from the cooling system with the heater valve open (see step 7 on page 10-7).

BACK

Protected by AR

Removal (2006 Model)

1. Disconnect the intake air temperature (IAT) sensor connector (A).

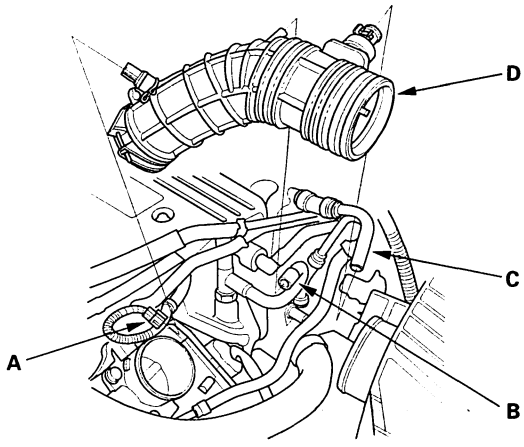

2. Remove the vacuum hose (B) and breather pipe (C), then remove the intake air duct (D).

3. Remove the intake manifold cover.

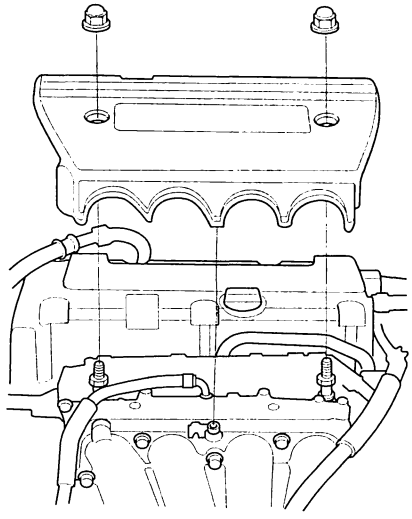

4. Remove the evaporative emission (EVAP) canister hose (A) and brake booster vacuum hose (B).

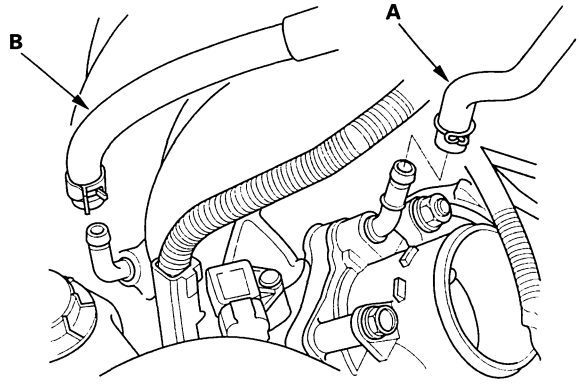

(cont'd)

Protected by AR

Intake Manifold Removal and Installation (cont'd)

5. Remove the engine wire harness connectors and wire harness clamps from the intake manifold.

   - Throttle actuator connector
   - Manifold absolute pressure (MAP) sensor connector

6. Remove the harness holder (A), and remove the harness clamp (B).

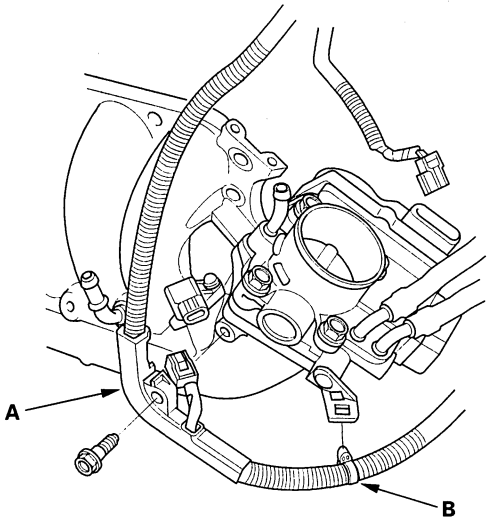

7. Remove and plug the water bypass hoses.

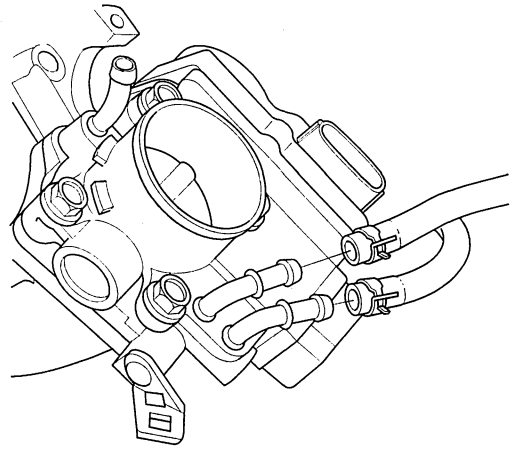

8. Remove the harness clamp (A) and the harness connector (B) from the intake manifold bracket, then remove the intake manifold bracket (C).

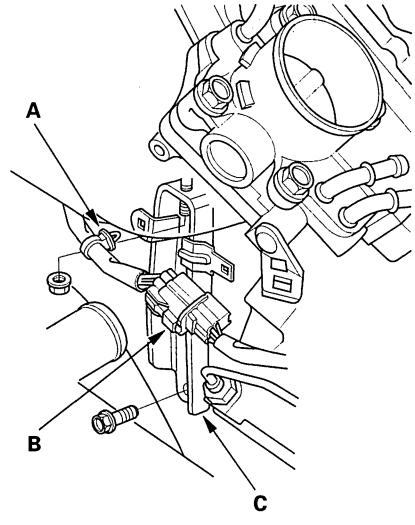

BACK

Protected by AR

9. Remove the vacuum hose.

A/T model:

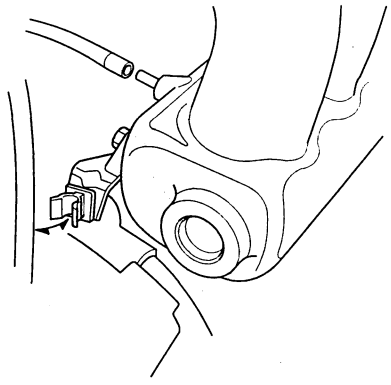

M/T model:

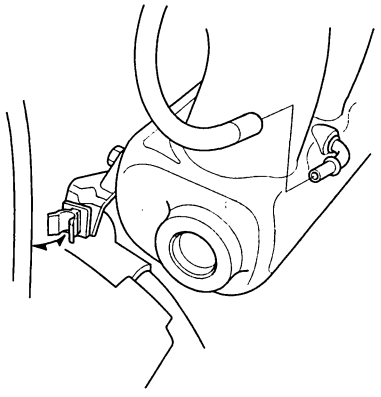

10. Remove the intake manifold.

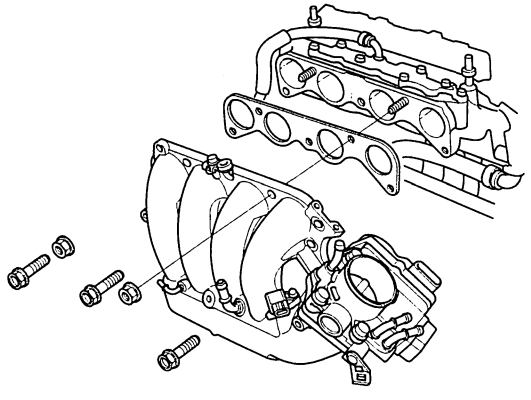

Installation (2006 Model)

1. Install the intake manifold (A) with a new gasket (B), and tighten the bolts/nuts in a crisscross pattern in two or three steps, beginning with the inner bolt.

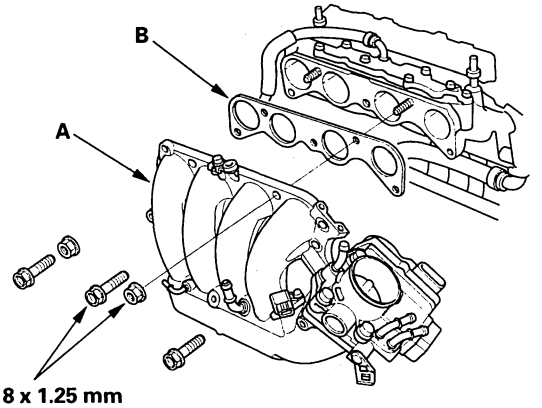

8 x 1.25 mm
22 N·m
(2.2 kgf·m, 16 lbf·ft)

2. Install the vacuum hose.

A/T model:

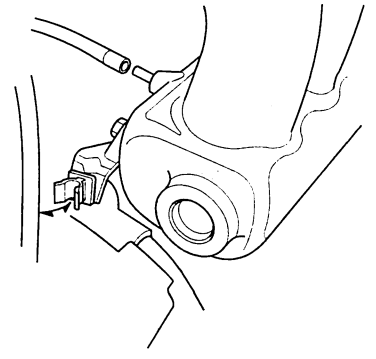

M/T model:

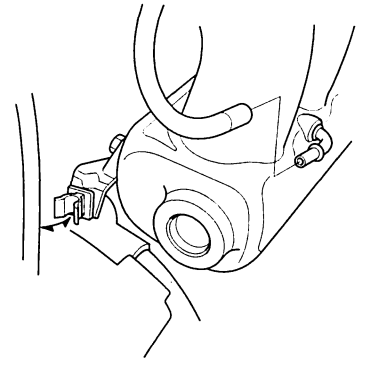

(cont'd)

Protected by AR

Intake Manifold Removal and Installation (cont'd)

3. Install the intake manifold bracket (A), then install the harness clamp (B), and harness connector (C) to the intake manifold bracket.

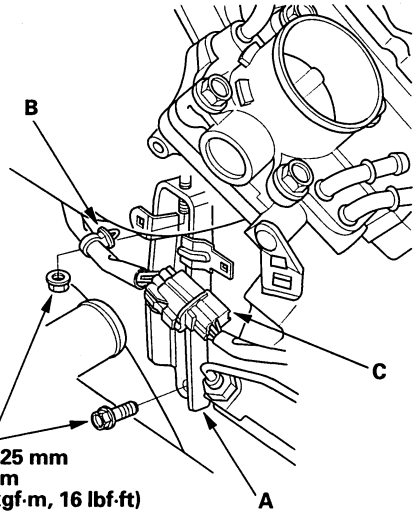

4. Install the water bypass hoses.

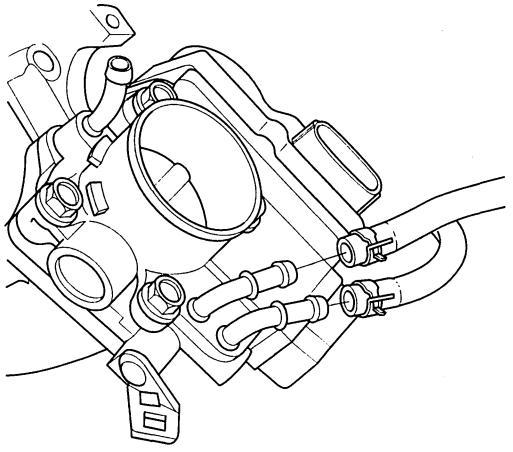

5. Install the harness holder (A), and install the harness clamp (B).

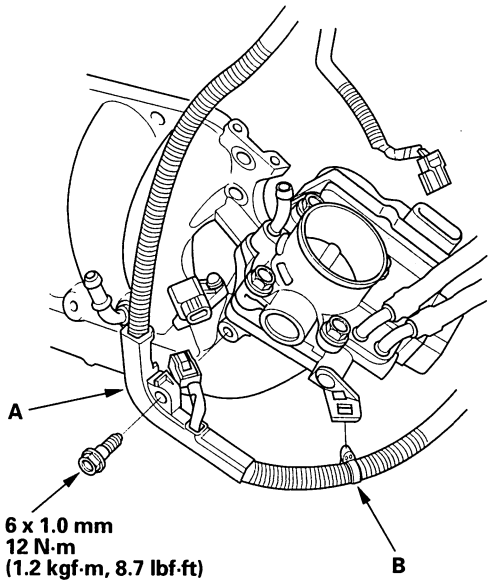

6. Reconnect the MAP sensor and throttle actuator connectors.

7. Install the EVAP canister hose (A) and brake booster vacuum hose (B).

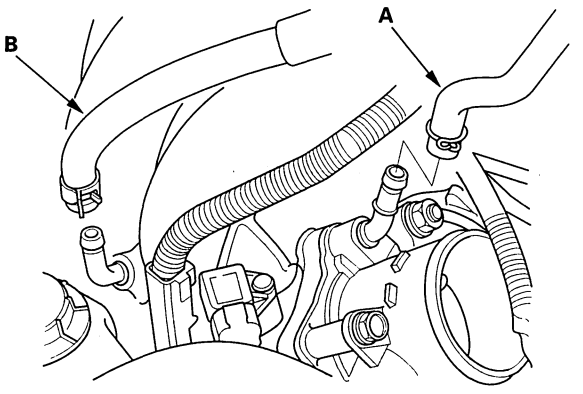

BACK

Protected by AR

8. Install the intake manifold cover.

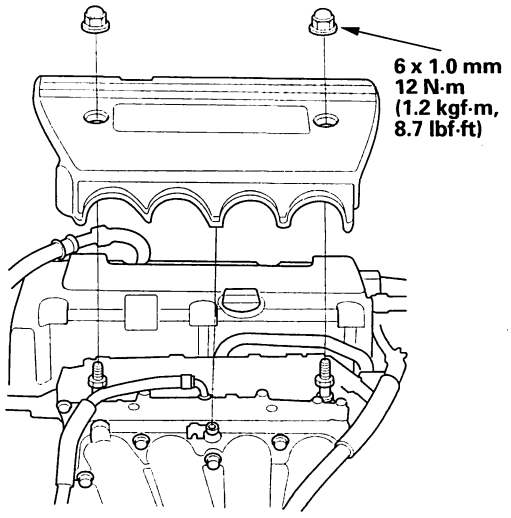

9. Install the intake air duct (A), then connect the IAT sensor connector (B), and install the vacuum hose (C) and breather pipe (D).

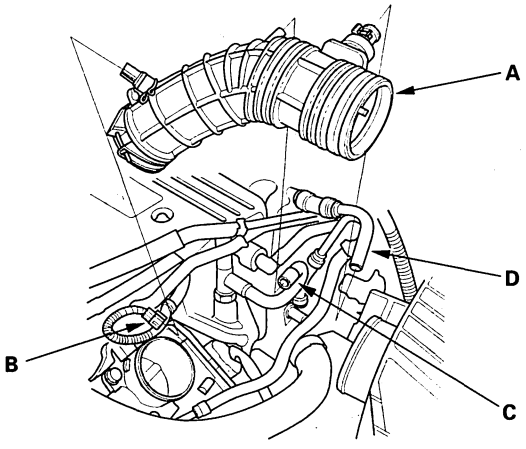

10. Clean up any spilled engine coolant.

11. After installation, check that all tubes, hoses, and connectors are installed correctly.

12. Refill the radiator with engine coolant, and bleed air from the cooling system with the heater valve open (see step 7 on page 10-7).

Protected by AR

Exhaust Manifold Removal and Installation

1. Remove the rocker arm oil control solenoid (VTEC solenoid valve) (see page 11-297).
2. Remove the driveshafts heat shield (A/T) (see step 11 on page 16-5).
3. Remove the cover and exhaust manifold bracket, then remove the exhaust manifold.

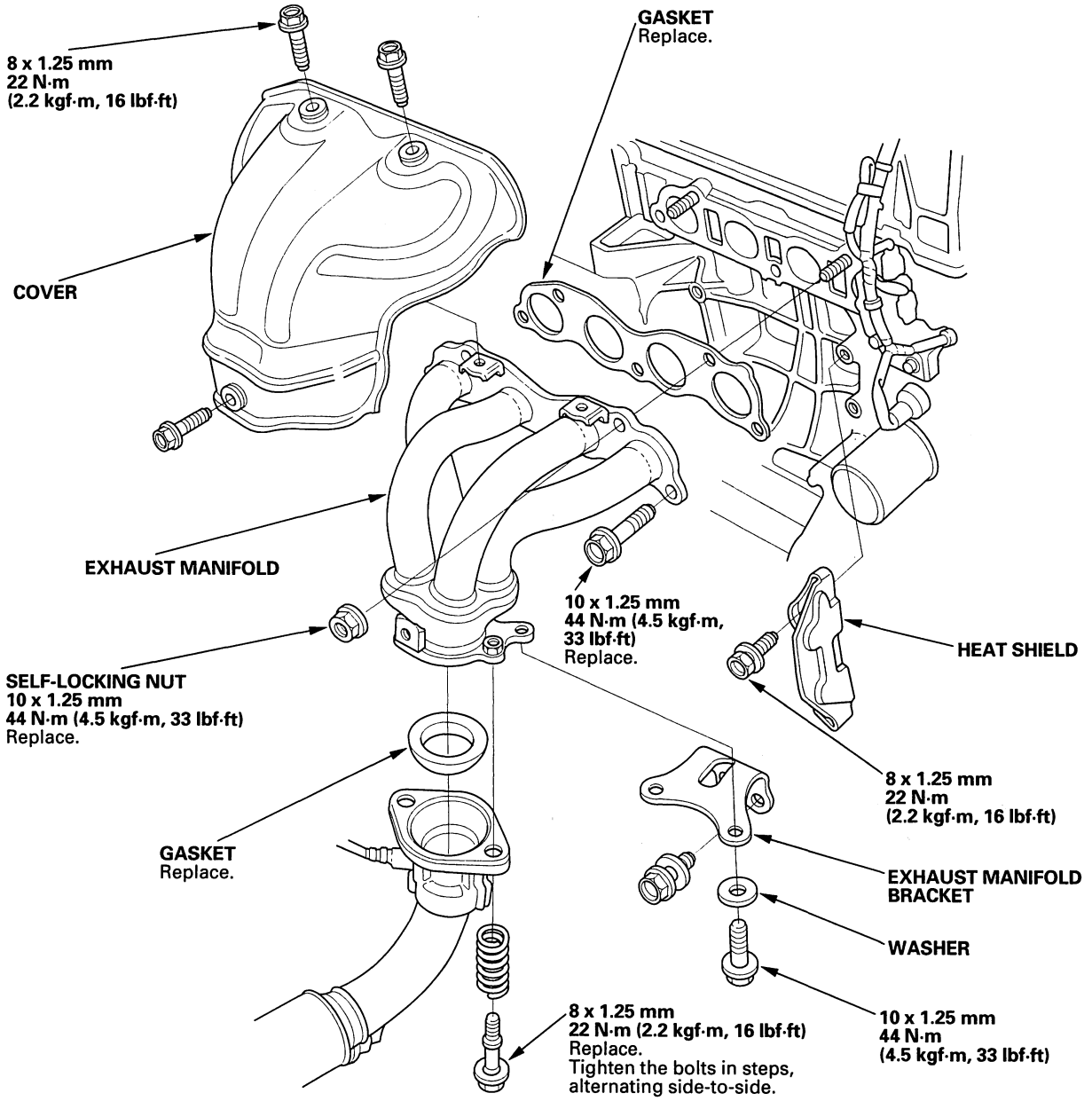

4. Install the exhaust manifold and tighten the bolts/nuts in a crisscross pattern in two or three steps, beginning with the inner nut.
5. Install the other parts in the reverse order of removal.

BACK

Protected by AR

Exhaust Pipe and Muffler Replacement

NOTE: Use new gaskets and self-locking nuts when reassembling.

2003-2005 models

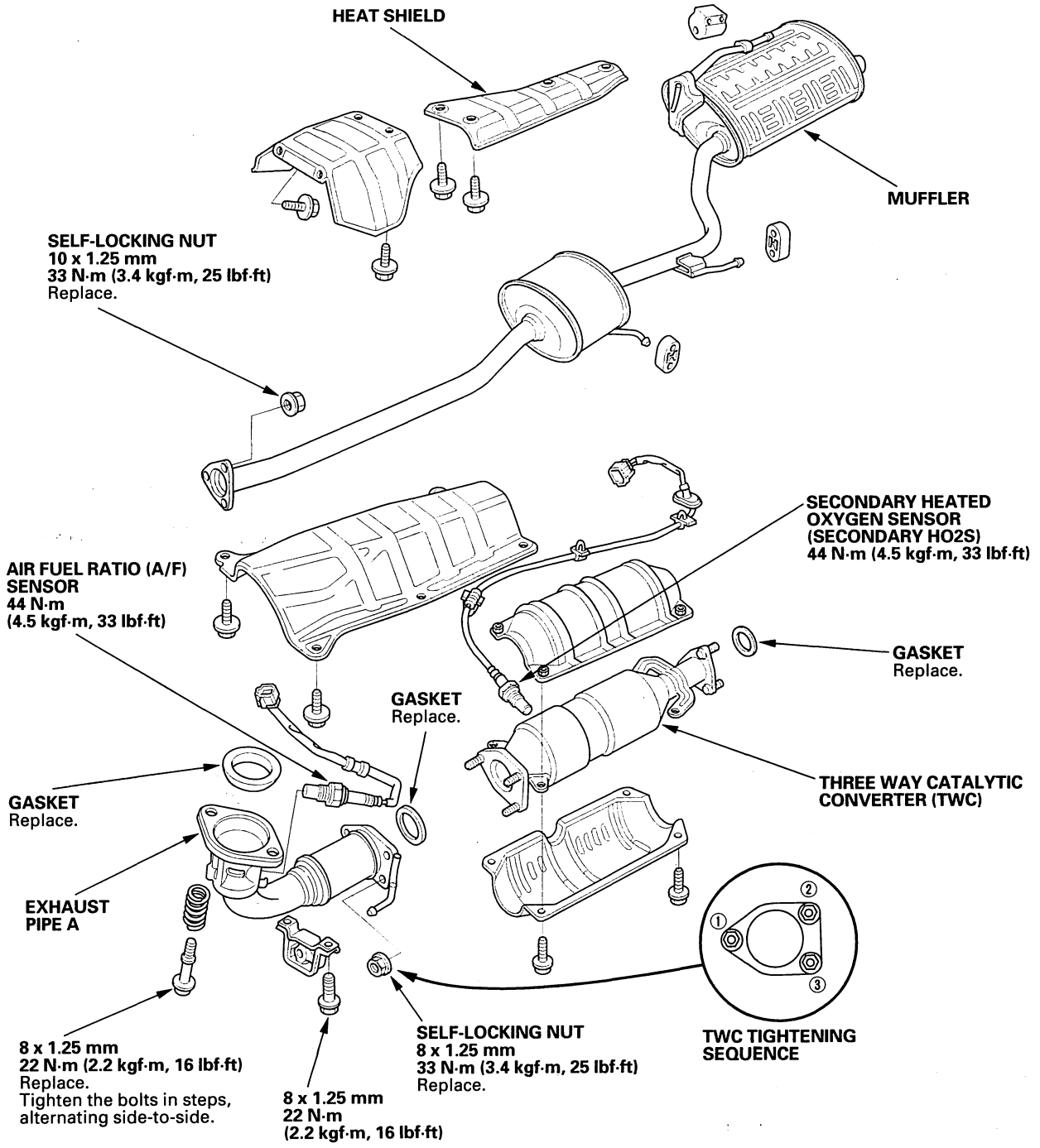

Protected by AR

Intake Manifold and Exhaust System

Exhaust Pipe and Muffler Replacement (cont'd)

NOTE: Use new gaskets and self-locking nuts when reassembling.

2006 model

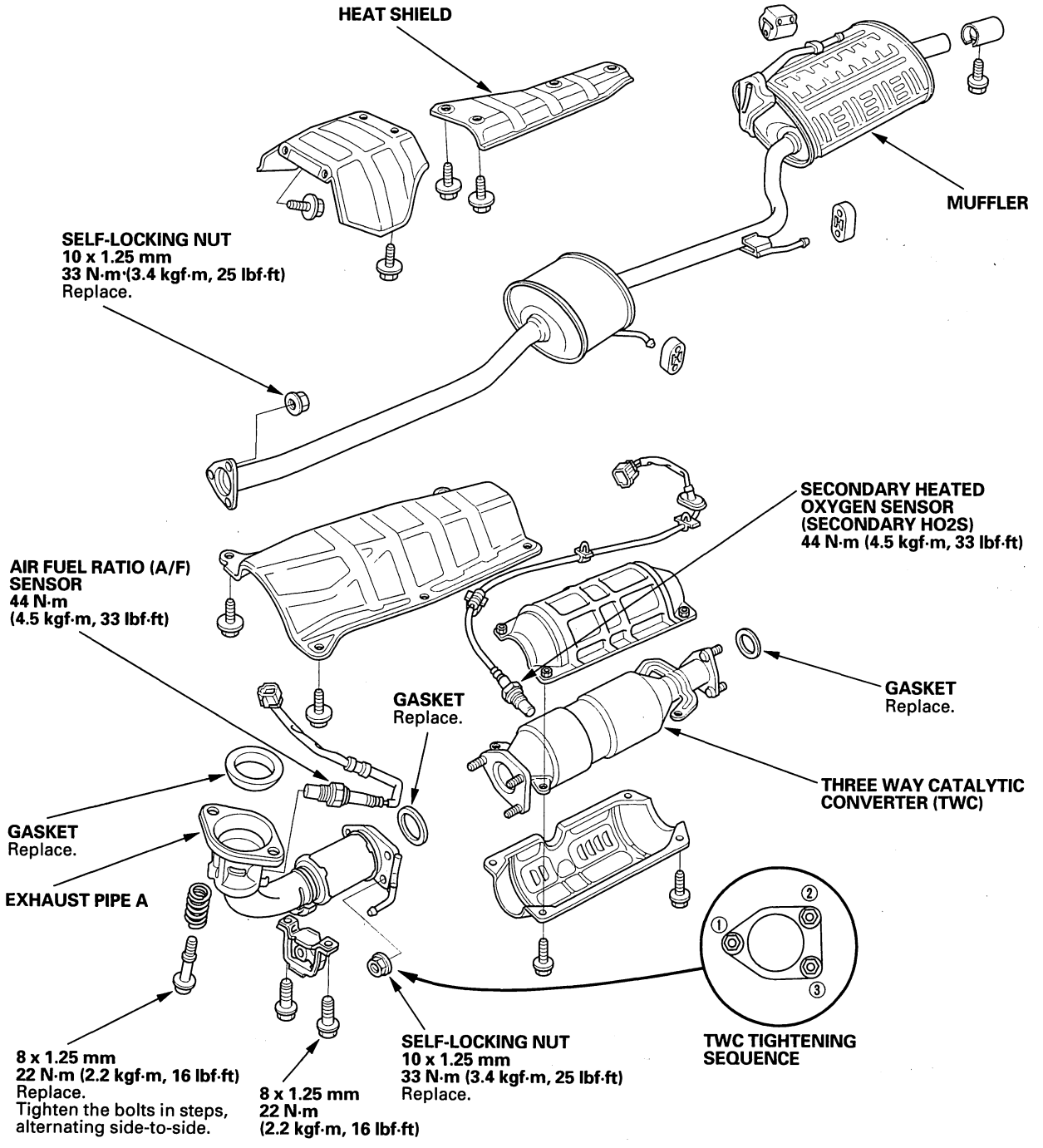

BACK

Protected by AR

Engine Cooling

Cooling System

Component Location Index 10-2
Radiator Cap Test 10-3
Radiator Test 10-3
Fan Motor Test 10-4
Thermostat Test 10-4
Water Pump Inspection 10-5
Water Pump Replacement 10-5
Coolant Check 10-6
Coolant Replacement 10-6
Thermostat Replacement 10-8
Water Passage Replacement 10-9
EGR Passage Replacement 10-12
Radiator and Fan Replacement 10-13

Fan Controls

Component Location Index 10-14
Symptom Troubleshooting Index 10-15
Circuit Diagram 10-17
Radiator Fan Circuit Troubleshooting 10-18
Radiator Fan Switch Circuit Troubleshooting (Open) 10-22
Radiator Fan Switch Circuit Troubleshooting (Short) 10-22
Radiator Fan Switch Test 10-23
Radiator Fan Switch Replacement 10-23



BACK

Protected by AR

Cooling System

Component Location Index

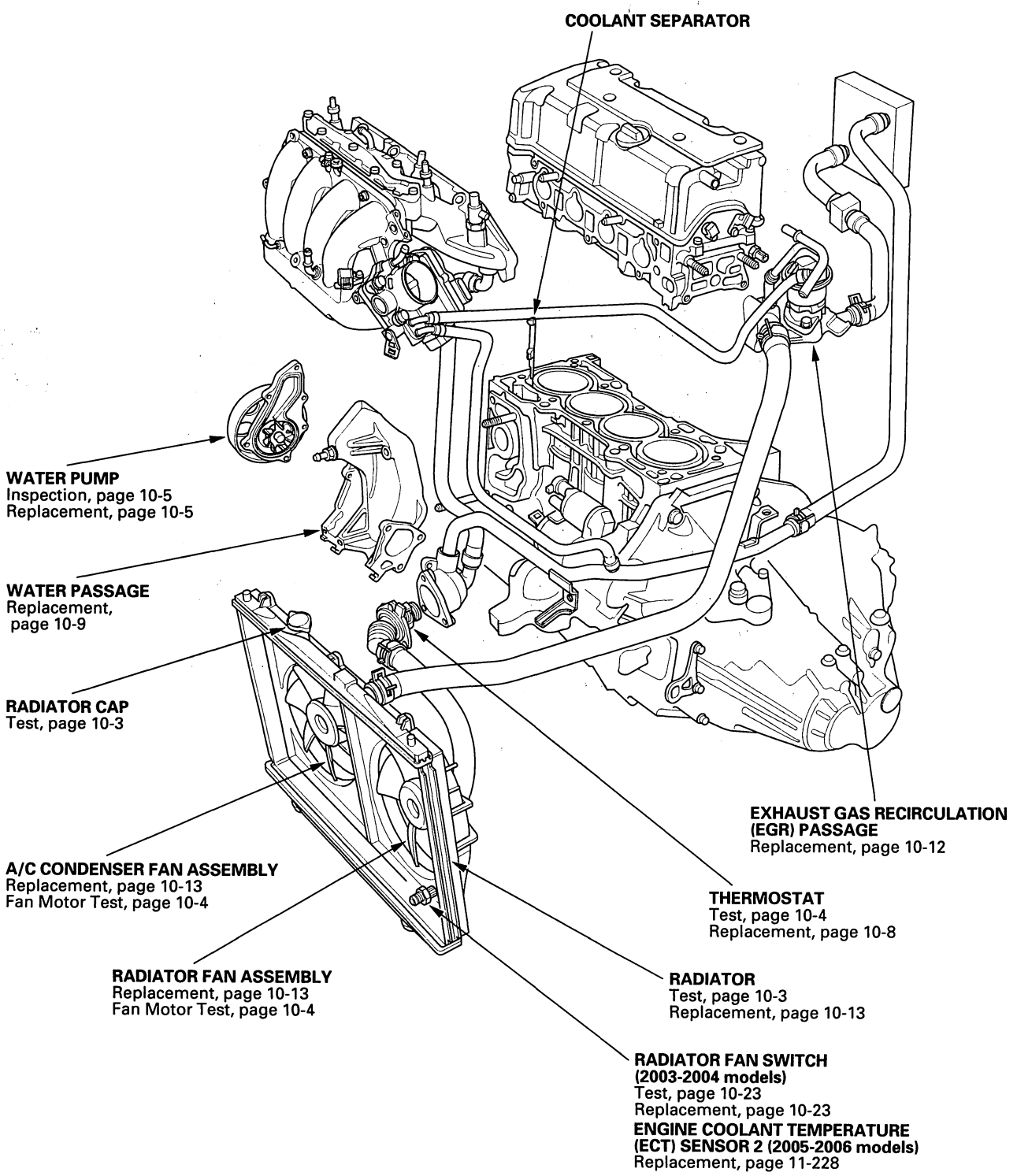

BACK

Protected by AR

Radiator Cap Test

1. Remove the radiator cap (A), wet its seal with engine coolant, then install it on the pressure tester (B) (commercially available).

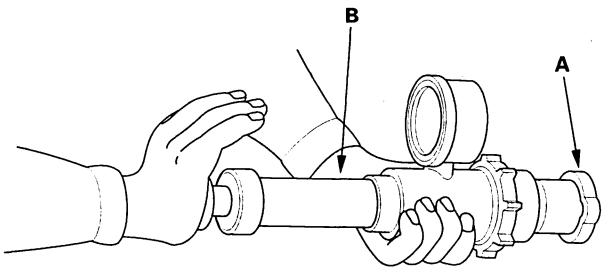

2. Apply a pressure of 93—123 kPa (0.95—1.25 kgf/cm², 14—18 psi).
3. Check for a drop in pressure.
4. If the pressure drops, replace the cap.

Radiator Test

1. Wait until the engine is cool, then carefully remove the radiator cap and fill the radiator with engine coolant to the top of the filler neck.
2. Attach the pressure tester (A) (commercially available) to the radiator.

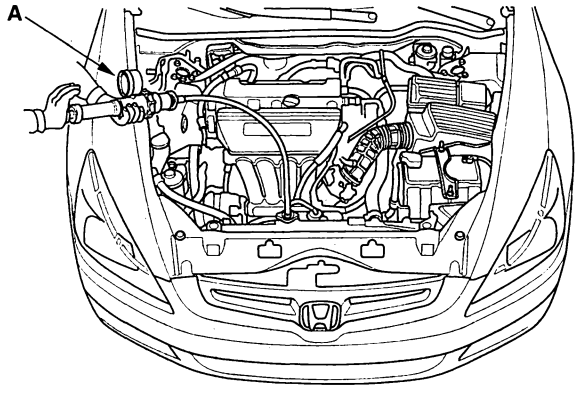

3. Apply a pressure of 93—123 kPa (0.95—1.25 kgf/cm², 14—18 psi).
4. Inspect for engine coolant leaks and a drop in pressure.
5. Remove the tester, and reinstall the radiator cap.
6. Check for engine oil in the coolant and/or coolant in the engine oil.

Protected by AR

Fan Motor Test

1. Disconnect the 2P connectors from the radiator fan motor and condenser fan motor.

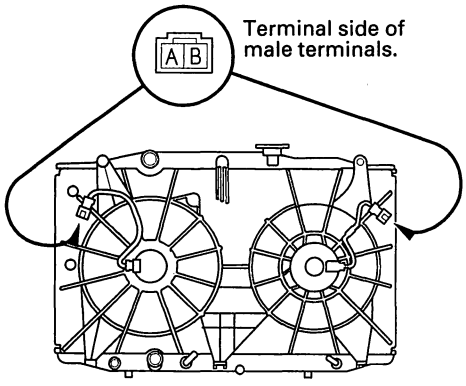

2. Test the motor by connecting battery power to the B terminal and ground to the A terminal.

3. If the motor fails to run or does not run smoothly, replace it (see page 10-13).

Thermostat Test

Replace the thermostat if it is open at room temperature.

To test a closed thermostat:

1. Suspend the thermostat (A) in a container of water. Do not let the thermometer (B) touch the bottom of the hot container.

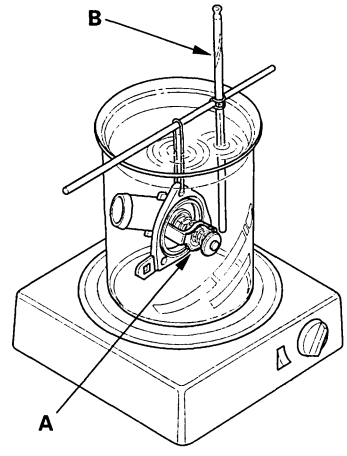

2. Heat the water, and check the temperature with a thermometer. Check the temperature at which the thermostat first opens, and at which it is fully open.

3. Measure the lift height of the thermostat when it is fully open.

Standard Thermostat

Lift Height:	**above 8.0 mm (0.31 in.)**
Starts Opening:	**169—176 °F (76—80 °C)**
Fully Open:	**194 °F (90 °C)**

BACK

Protected by AR

Water Pump Inspection

1. Remove the drive belt (see page 4-37).
2. Turn the water pump pulley counterclockwise. Check that it turns freely. If it doesn't turn smoothly, replace the water pump (see page 10-5).

   NOTE: When you check the water pump pulley, you may see a small amount of "weeping" from the bleed holes (A). This is normal.

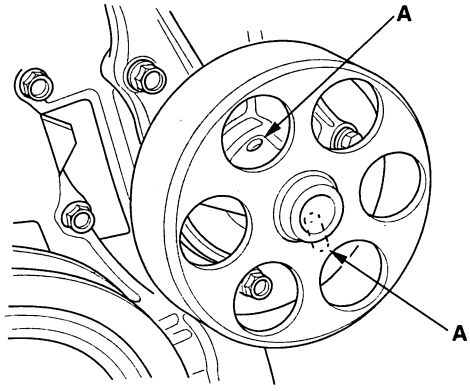

3. Install the drive belt (see page 4-37).

Water Pump Replacement

1. Remove the drive belt (see page 4-37).
2. Drain the engine coolant (see page 10-6).
3. Remove the *drive belt auto-tensioner* (see page 4-39).
4. Remove the six bolts securing the water pump, then remove the water pump (A).

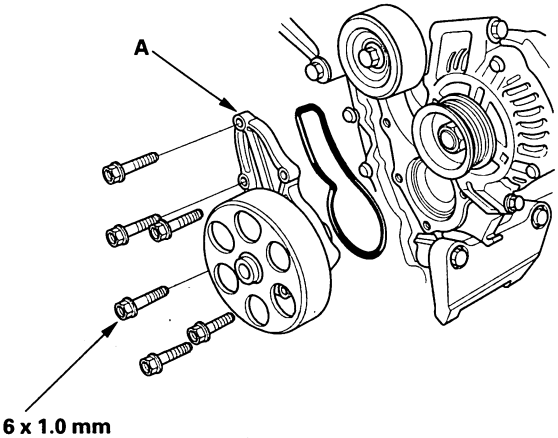

6 x 1.0 mm
12 N·m (1.2 kgf·m, 8.7 lbf·ft)

5. Inspect and clean the O-ring groove and mating surface with the water passage.
6. Install the water pump with new O-rings in the reverse order of removal.
7. Clean up any spilled engine coolant.
8. Install the drive belt auto-tensioner (see page 4-39).
9. Refill the radiator with engine coolant, and bleed air from the cooling system with the heater valve open (see step 6 on page 10-7).

Protected by AR

Coolant Check

1. Look at the coolant level in the reserve tank. Make sure it is between the MAX mark (A) and MIN mark (B).

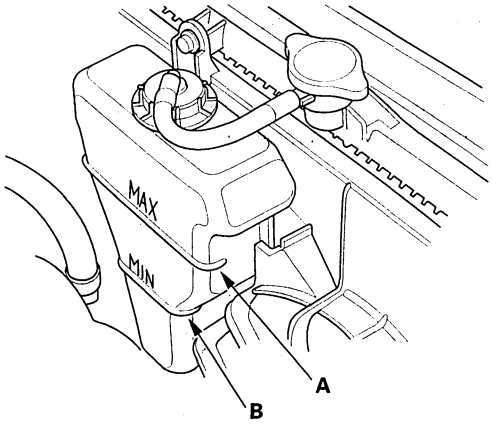

2. If the coolant level in the reserve tank is at or below the MIN mark, add coolant to bring it up to the MAX mark, and inspect the cooling system for leaks.

Coolant Replacement

1. Start the engine. Set the heater temperature control dial to maximum heat, or climate control system to HI, then turn off the ignition switch. Make sure the engine and radiator are cool to the touch.
2. Remove the radiator cap.
3. Loosen the drain plug (A), and drain the coolant.

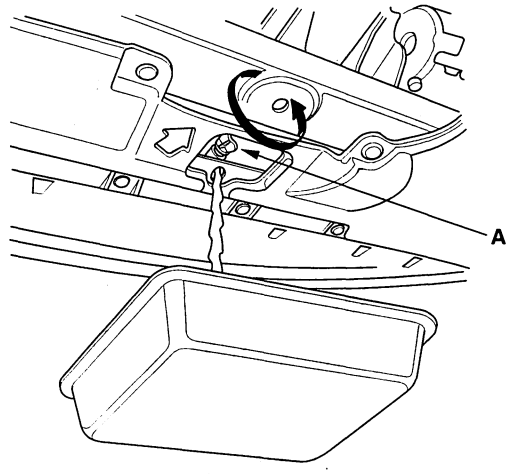

4. After the coolant has drained, tighten the radiator drain plug.

BACK

Protected by AR

5. Remove, drain and reinstall the reverse tank.

6. Fill the reserve tank to the MAX mark (A) with Honda Antifreeze/Coolant Type 2 (P/N OL999-9001).

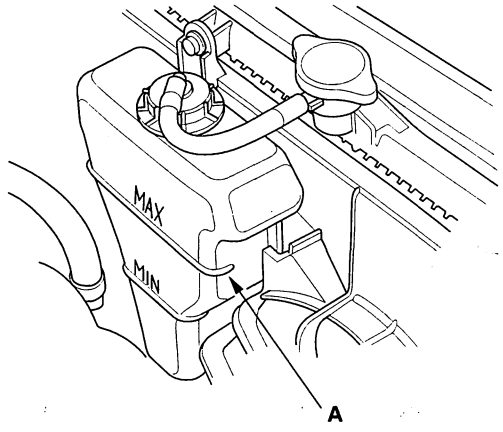

7. Pour Honda Antifreeze/Coolant Type 2 into the radiator up to the base of the filler neck.

   NOTE:
   - Always use Honda Antifreeze/Coolant Type 2 (P/N OL999-9001). Using a non-Honda coolant can result in corrosion, causing the cooling system to malfunction or fail.
   - Honda Antifreeze/Coolant Type 2 is a mixture of 50 % antifreeze and 50 % water. Do not add water.

   Engine Coolant Capacities (including the reserve tank capacity of 0.6 L (0.16 US gal))
   After Coolant Change:
   M/T: 5.1 L (1.35 US gal)
   A/T: 5.0 L (1.32 US gal)
   After Engine Overhaul:
   M/T: 7.2 L (1.90 US gal)
   A/T: 7.1 L (1.88 US gal)

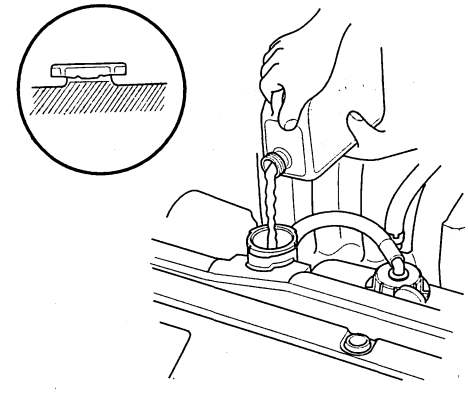

8. Install the radiator cap loosely.

9. Start the engine, and let it run until it warms up (the radiator fan comes on at least twice).

10. Turn off the engine. Check the level in the radiator and add Honda Antifreeze/Coolant Type 2 if needed.

11. Put the radiator cap on tightly, then run the engine again and check for leaks.

Protected by AR

Thermostat Replacement

1. Drain the engine coolant (see page 10-6).
2. Clean any dirt off the quick connector (A), thermostat cover, and lower radiator hose.

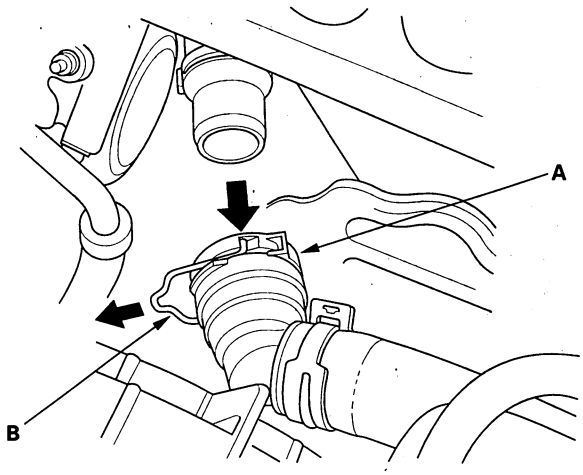

3. Pull out lock (B) by hand, then wiggle the quick connector loose, and remove it from the thermostat cover. Do not use any tools to remove the quick connector.
4. Remove the thermostat (A).

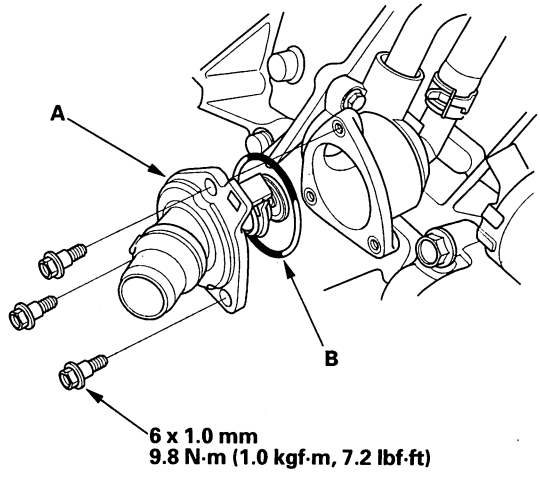

5. Install the thermostat with a new O-ring (B).
6. Check the quick connector (A) and set ring (B) for cracks or damage. If the connector and/or set ring are cracked or damaged, replace the connector.

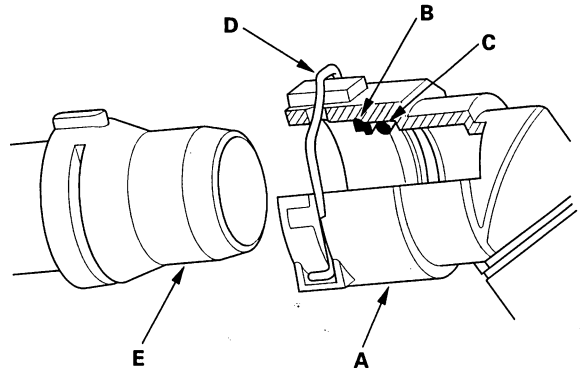

7. Make sure the set ring is in place inside the quick connector. If the set ring is off the connector, replace the quick connector.
8. Replace the O-ring (C) in the quick connector.
9. Check the lock (D). If the lock is damaged or deformed, replace it. When installing the new lock on the connector, press it straight down along the groove.
10. Clean the connecting surface of the thermostat cover (E), then apply clean engine coolant around the connecting surface.
11. Push down the lock (A), then push the quick connector (B) onto the thermostat cover until you hear it click.

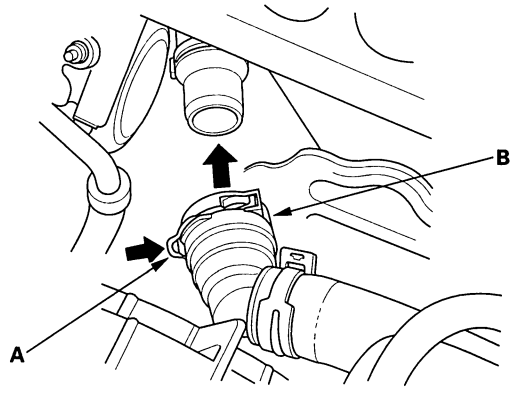

12. Refill the radiator with engine coolant, and bleed air from the cooling system with the heater valve open (see step 6 on page 10-7).

BACK

Protected by AR

Water Passage Replacement

1. Drain the engine coolant (see page 10-6).
2. Clean any dirt off the quick connector (A), thermostat cover, and lower radiator hose.

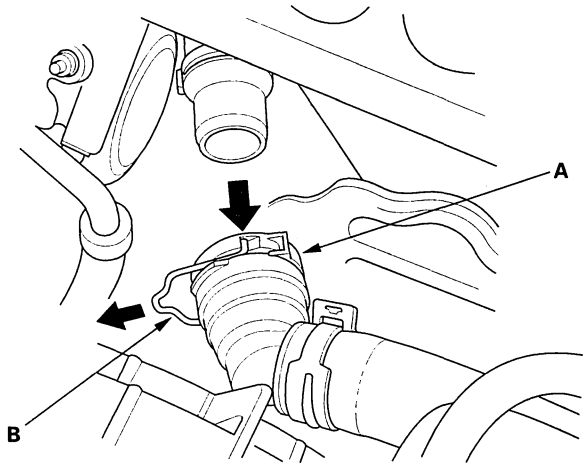

3. Pull out the lock (B) by hand, then wiggle the quick connector loose, and remove it from the thermostat cover. Do not use any tools to remove the quick connector.
4. Remove the alternator (see page 4-40).
5. Remove the splash shield (see step 25 on page 13-7).
6. Remove the A/C compressor without disconnecting the A/C hoses (see step 26 on page 5-5).
7. Remove the intake manifold (see page 9-3).
8. Remove a bolt (A) securing the connecting pipe.

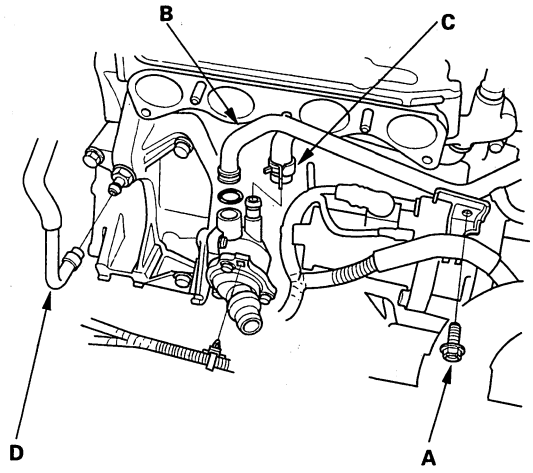

9. Remove the connecting pipe (B), water bypass hose (C), and positive crankcase ventilation (PCV) hose (D).
10. Remove the water passage (A).

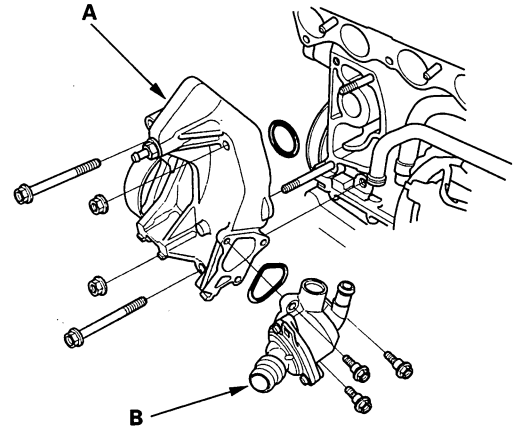

11. Remove the thermostat housing (B).
12. Remove the water pump (see page 10-5).

(cont'd)

Protected by AR

Water Passage Replacement (cont'd)

13. Clean and dry the water passage mating surfaces.

14. Apply liquid gasket, P/N 08717-0004, 08718-0001, 08718-0002, 08718-0003, or 08718-0009, evenly to the cylinder block mating surface of the water passage and to the inner threads of the bolt holes.

    NOTE:
    - Do not install components if too much time has passed after applying the liquid gasket (for P/N 08718-0002, no more than 4 minutes, for all others, no more than 5 minutes). Instead, remove the old residue and reapply the liquid gasket.
    - Do not run the engine for at least 3 hours after installing the water passage.

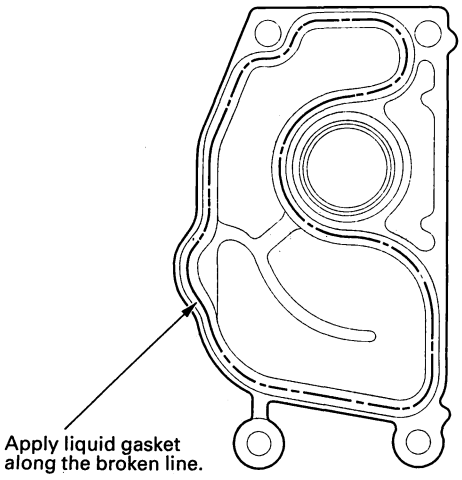

15. Install the water pump (see page 10-5).

16. Install the thermostat housing (A) with a new O-ring (B).

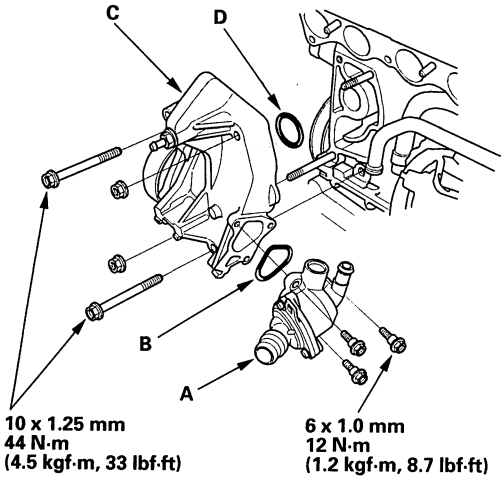

17. Install the water passage (C) with a new O-ring (D).

18. Install the connecting pipe (A) with a new O-ring (B).

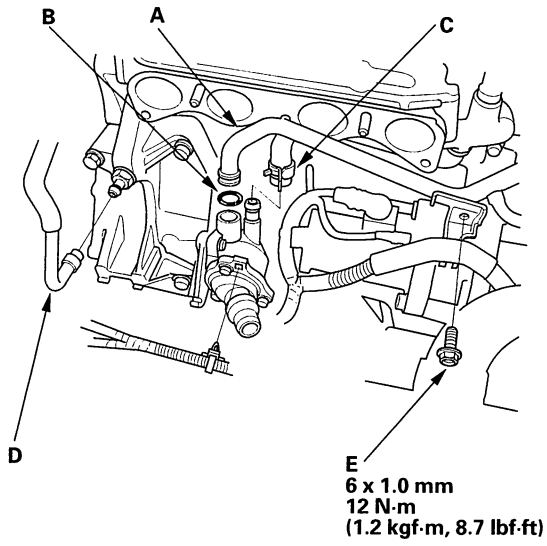

19. Install the water bypass hose (C), and PCV hose (D), then tighten a bolt (E) securing the connecting pipe.

20. Install the intake manifold (see page 9-11).

21. Install the A/C compressor (see step 30 on page 5-15).

22. Install the splash shield (see step 25 on page 13-15).

23. Install the alternator (see page 4-40).

BACK

Protected by AR

24. Check the quick connector (A) and set ring (B) for cracks or damage. If the connector and/or set ring are cracked or damaged, replace the connector.

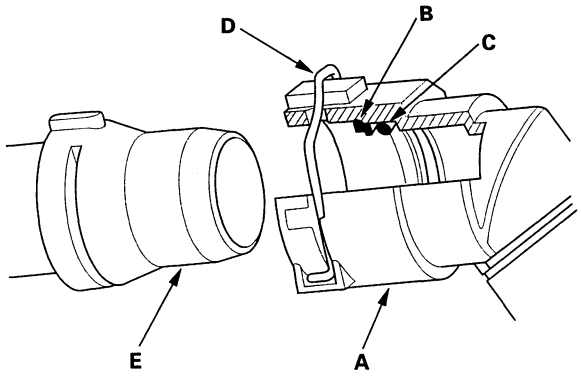

25. Make sure the set ring is in place inside the quick connector. If the set ring is off the connector, replace the quick connector.

26. Replace the O-ring (C) in the quick connector.

27. Check the lock (D). If the lock is damaged or deformed, replace it. When installing the new lock on the connector, press it straight down along the groove.

28. Clean the connecting surface of the thermostat cover (E), then apply clean engine coolant around the connecting surface.

29. Push down the lock (A), then push the quick connector (B) onto the thermostat cover until you here it click.

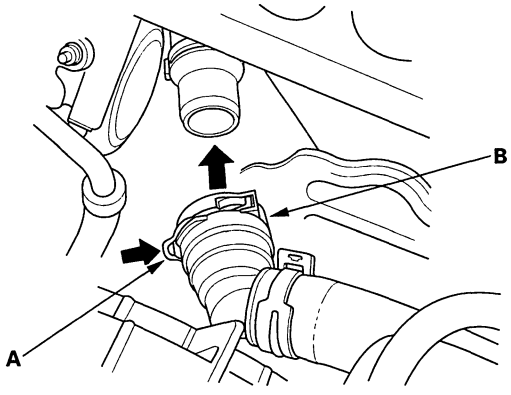

30. After assembly, wait at least 30 minutes before filling the engine with coolant or oil.

Protected by AR

EGR Passage Replacement

1. Drain the engine coolant (see page 10-6).
2. Remove the two bolts (A) securing the EVAP canister purge valve bracket and remove the bolt (B) securing the harness bracket.

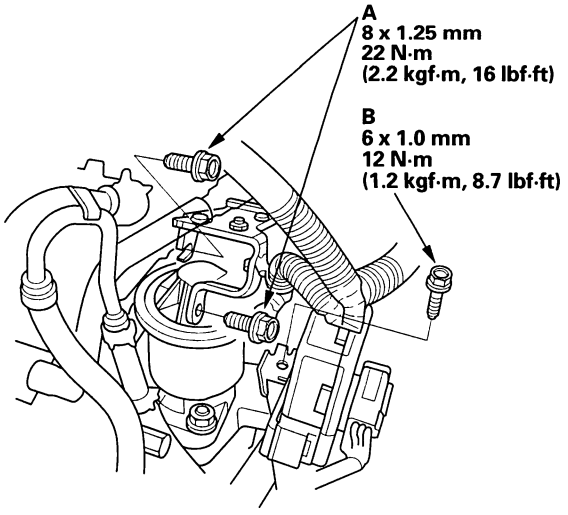

3. Remove the upper radiator hose (A), heater hose (B), water bypass hose (C), and connecting pipe mounting bolt (D).

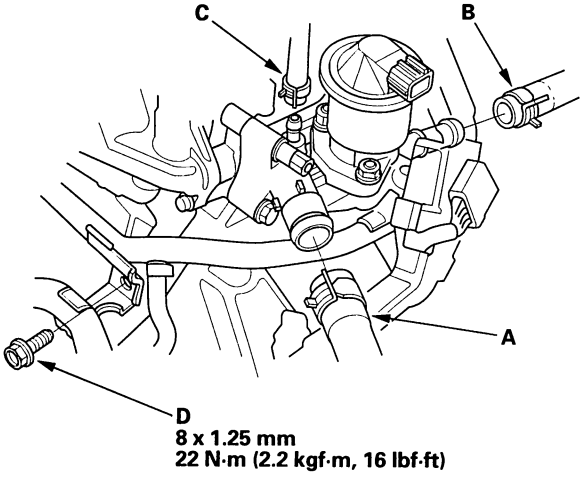

4. Disconnect the exhaust gas recirculation (EGR) valve connector.
5. Remove the EGR passage (A).

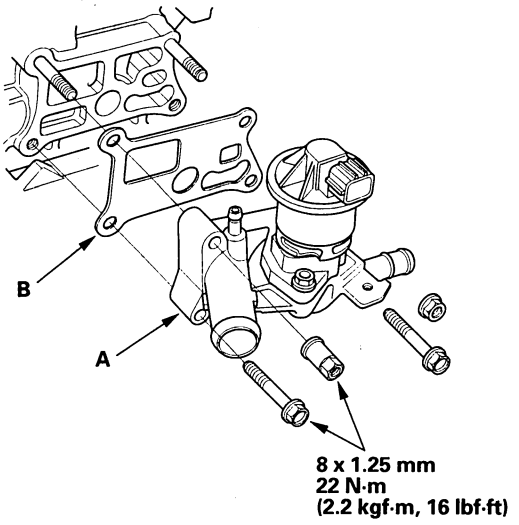

6. Install the EGR passage with a new gasket (B).
7. Install the other parts in the reverse order of removal.
8. Refill the radiator with engine coolant, and bleed air from the cooling system with the heater valve open (see step 6 on page 10-7).

BACK

Protected by AR

Radiator and Fan Replacement

1. Drain the engine coolant (see page 10-6).
2. Remove the front bulkhead cover:
   - 2-door (see page 20-184)
   - 4-door (see page 20-185)
3. Remove the automatic transmission fluid (ATF) cooler hoses (A/T). Plug the ATF cooler hoses and lines.

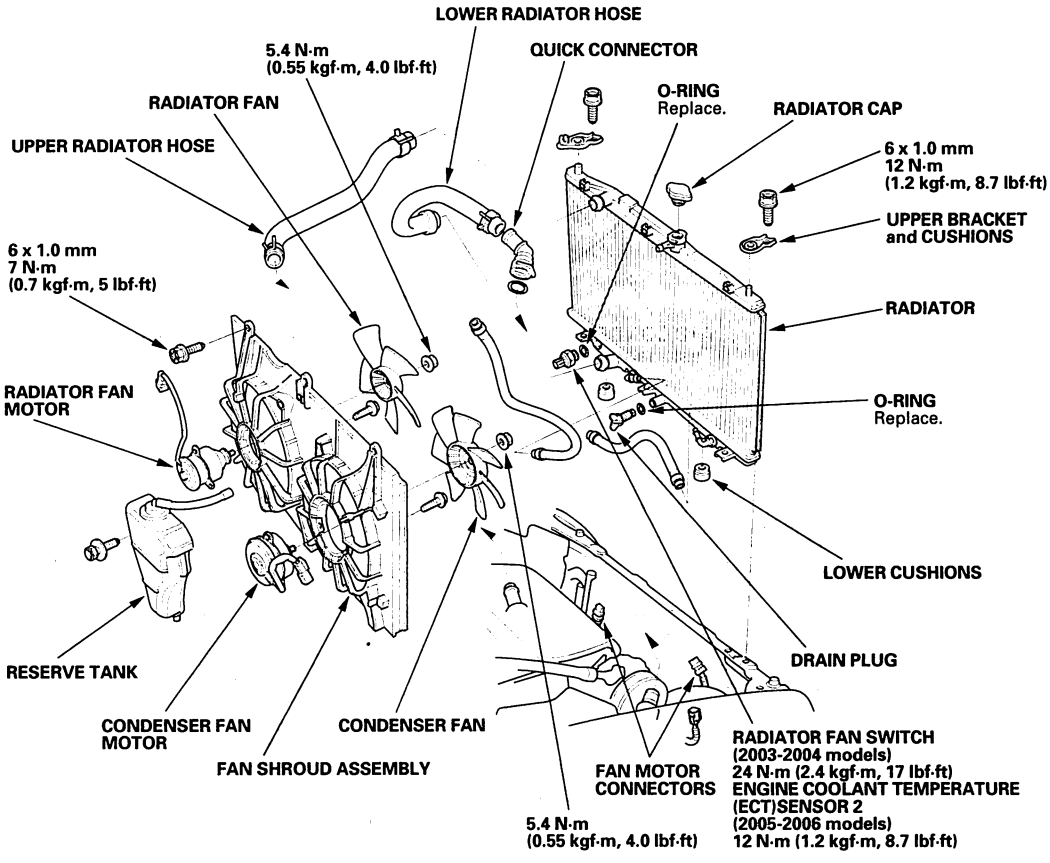

4. Remove the upper radiator hose and lower radiator hose from the radiator.
5. Disconnect the fan motor connectors and radiator fan switch connector (2003-2004 models)/engine coolant temperture (ECT) sensor 2 connector (2005-2006 models).
6. Remove the A/C compressor clutch connector.
7. Remove the upper bracket and cushions, then pull up the radiator.
8. Remove the fan shroud assemblies and other parts from the radiator.
9. Install the radiator in the reverse order of removal. Make sure the upper and lower cushions are set securely.
10. Fill the radiator with engine coolant, then bleed air from the cooling system (see step 7 on page 10-7).
11. Check the ATF level in the automatic transmission (A/T) (see page 14-207).

Protected by AR

Fan Controls

Component Location Index

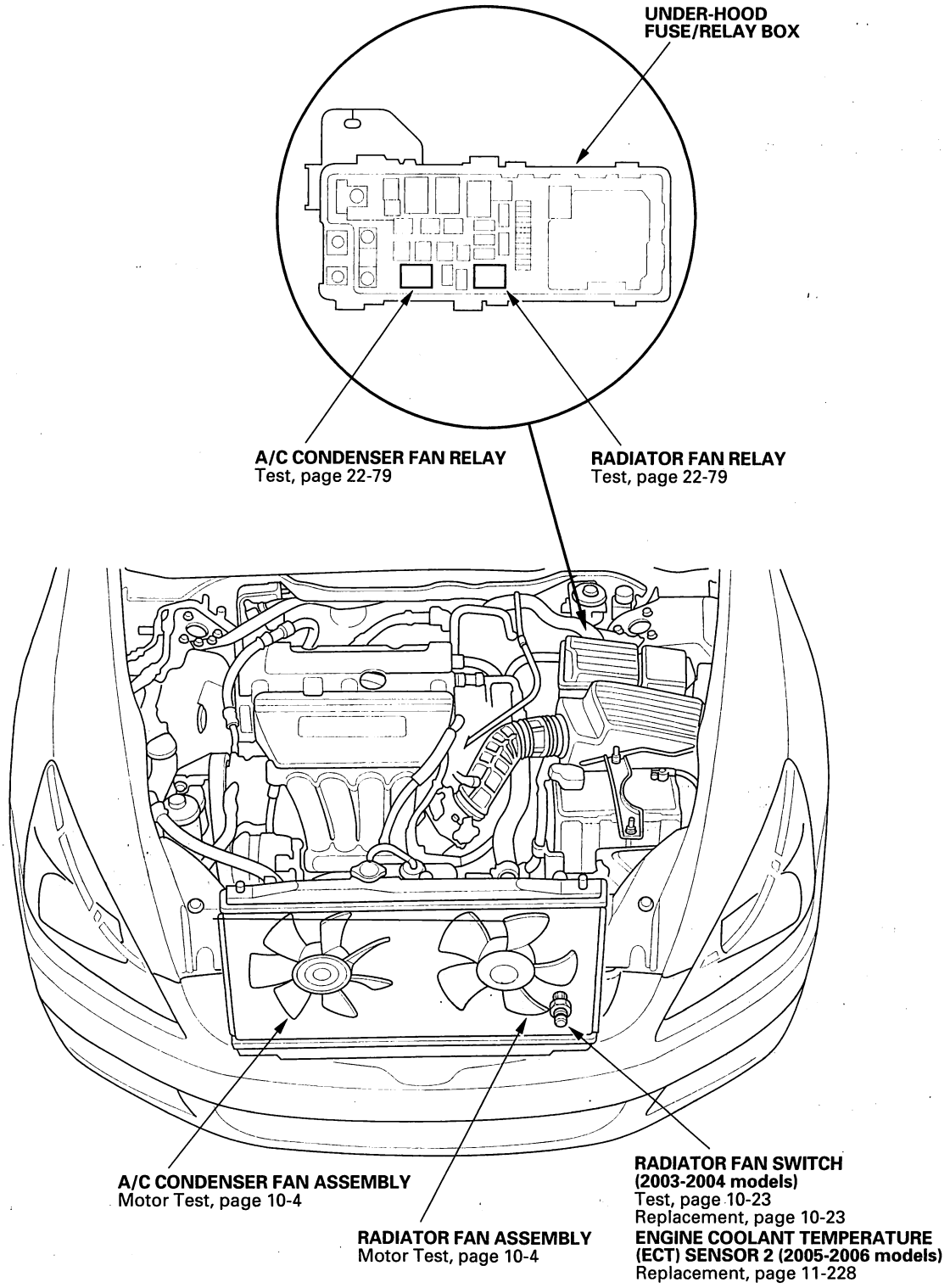

BACK

Protected by AR

Symptom Troubleshooting Index

2003-2004 Models

Symptom	Diagnostic procedure	Also check for
Engine overheats	1. Inspect the water pump (see page 10-5). 2. Check for a broken drive belt (see page 4-37). 3. Check the drive belt auto-tensioner (see page 4-38). 4. Check the thermostat (see page 10-4). 5. Check for the coolant leakage (from gaskets, hoses, O-rings, etc.). 6. Check for dirt, leaves, or insects on radiator and condenser. 7. Check for damaged or deformed fan shroud. 8. Check for plugged or deteriorated radiator hoses. 9. Check the radiator cap (see page 10-3). 10. Inspect the fan motors or fan relays. 11. Check for plugged heater core or hose(s). 12. Check the coolant level. 13. Check for deteriorated coolant. 14. Check for a damaged cylinder head gasket.	
The radiator fan does not run at all	Radiator fan circuit troubleshooting (see page 10-18).	Cleanliness and tightness of all connectors
The radiator fan does not run for engine cooling, but it runs with the A/C on	Radiator fan switch circuit troubleshooting (Open) (see page 10-22).	Cleanliness and tightness of all connectors
The radiator fan runs with the ignition switch ON (II), the A/C off, and the engine coolant temperature below 199 °F (93 °C)	Radiator fan switch circuit troubleshooting (Short) (see page 10-22).	Cleanliness and tightness of all connectors
The A/C condenser fan does not run at all (but the radiator fan runs with the A/C on)	A/C condenser fan circuit troubleshooting (see page 21-36).	• HVAC DTCs (see page 21-11) • Cleanliness and tightness of all connectors
Both the radiator fan and the A/C condenser fan do not run with the A/C on (but the A/C compressor runs with the A/C on)	Radiator and A/C condenser fan common circuit troubleshooting (see page 21-37).	• HVAC DTCs (see page 21-11) • Cleanliness and tightness of all connectors
The A/C compressor clutch does not engage (but both the radiator fan and the A/C condenser fan run with the A/C on)	A/C compressor clutch circuit troubleshooting (see page 21-38).	• HVAC DTCs (see page 21-11) • Cleanliness and tightness of all connectors

Protected by AR

Symptom Troubleshooting Index (cont'd)

2005-2006 Models

Symptom	Diagnostic procedure	Also check for
Engine overheats	1. Inspect the water pump (see page 10-5). 2. Check for a broken drive belt (see page 4-37). 3. Check the drive belt auto-tensioner (see page 4-38). 4. Check the thermostat (see page 10-4). 5. Check for the coolant leakage (from gaskets, hoses, O-rings, etc.). 6. Check for dirt, leaves, or insects on radiator and condenser. 7. Check for damaged or deformed fan shroud. 8. Check for plugged or deteriorated radiator hoses. 9. Check the radiator cap (see page 10-3). 10. Inspect the fan motors or fan relays. 11. Check for plugged heater core or hose(s). 12. Check the coolant level. 13. Check for deteriorated coolant. 14. Check for a damaged cylinder head gasket.	
The radiator fan does not run at all	Radiator fan circuit troubleshooting (see page 10-20).	Cleanliness and tightness of all connectors
Both the radiator fan and the A/C condenser fan run with the ignition switch ON (II), the A/C off, and the engine coolant temperature below 199 °F (93 °C)	Remove the radiator fan relay, and test. • If the relay is faulty, replace it. • If the relay is OK, repair a short in the wire between radiator fan relay 4P socket terminal No. 4 and ECM/PCM connector terminal E12.	Cleanliness and tightness of all connectors
The A/C condenser fan does not run at all (but the radiator fan runs with the A/C on)	A/C condenser fan circuit troubleshooting (see page 21-36).	• HVAC DTCs (see page 21-11) • Cleanliness and tightness of all connectors
Both the radiator fan and the A/C condenser fan do not run with the A/C on (but the A/C compressor runs with the A/C on)	Radiator and A/C condenser fan common circuit troubleshooting (see page 21-37).	• HVAC DTCs (see page 21-11) • Cleanliness and tightness of all connectors
The A/C compressor clutch does not engage (but both the radiator fan and the A/C condenser fan run with the A/C on)	A/C compressor clutch circuit troubleshooting (see page 21-38).	• HVAC DTCs (see page 21-11) • Cleanliness and tightness of all connectors

BACK

Protected by AR

Circuit Diagram

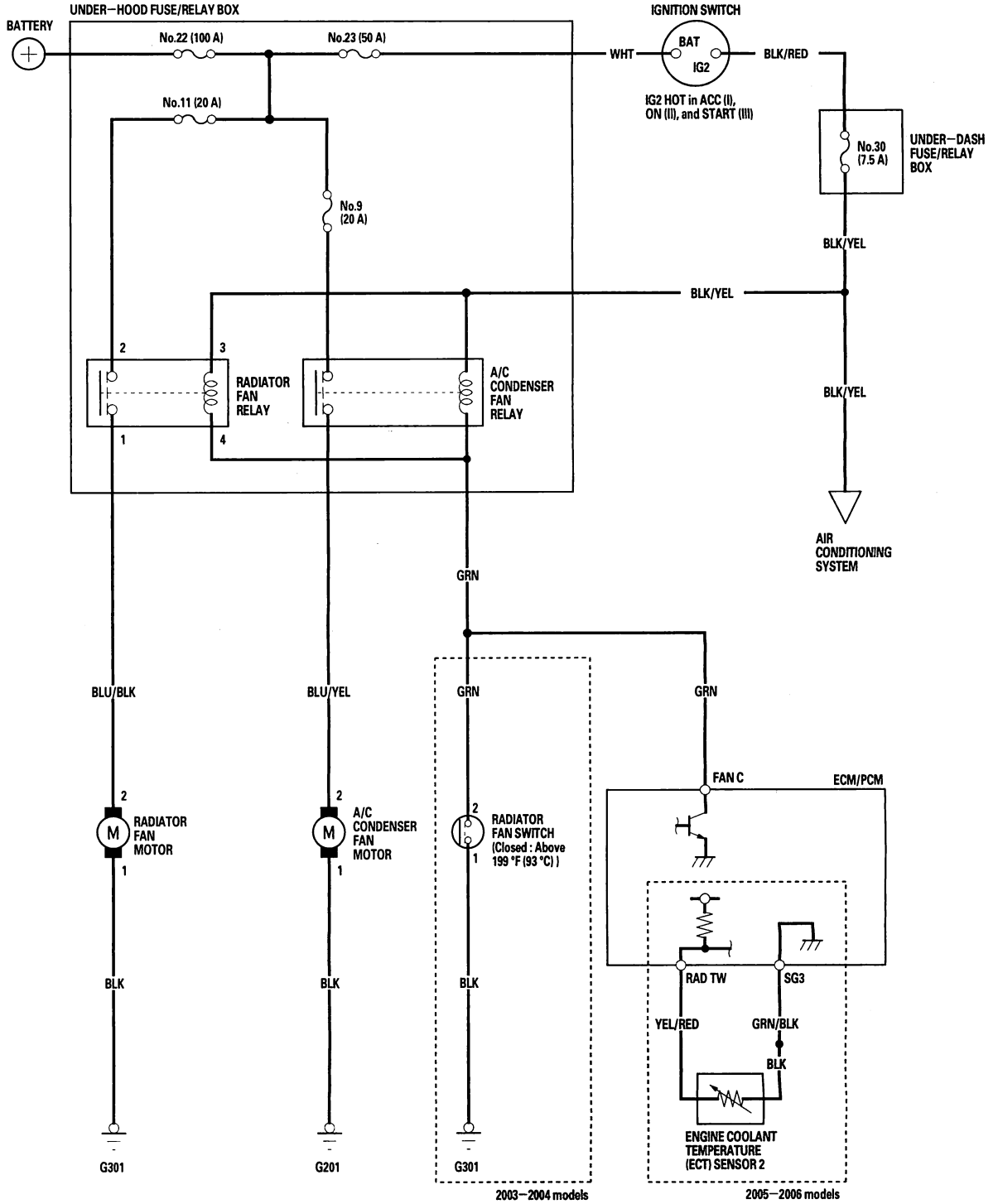

Protected by AR

Radiator Fan Circuit Troubleshooting

2003-2004 Models

NOTE: Before beginning this troubleshooting procedure, refer to the symptom troubleshooting index.

1. Check the No. 11 (30 A) fuse in the under-hood fuse/relay box, and the No. 30 (7.5 A) fuse in the under-dash fuse/relay box.

   Are the fuses OK?

   YES—Go to step 2.

   NO—Replace the fuse(s) and recheck. ■

2. Remove the radiator fan relay from the under-hood fuse/relay box, and test it (see page 22-75).

   Is the relay OK?

   YES—Go to step 3.

   NO—Replace the radiator fan relay. ■

3. Measure the voltage between radiator fan relay 4P socket terminal No. 2 and body ground.

   RADIATOR FAN RELAY 4P SOCKET

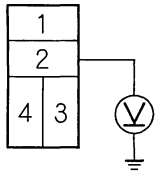

   Terminal side of female terminals

   Is there battery voltage?

   YES—Go to step 4.

   NO—Replace the under-hood fuse/relay box. ■

4. Connect radiator fan relay 4P socket terminal No. 1 and No. 2 with a jumper wire.

   RADIATOR FAN RELAY 4P SOCKET

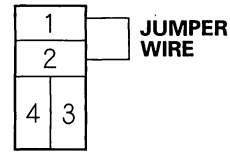

   Terminal side of female terminals

   Does the radiator fan run?

   YES—Go to step 5.

   NO—Go to step 6.

5. Disconnect the jumper, and turn the ignition switch ON (II). Check for voltage between radiator fan relay 4P socket terminal No. 3 and body ground.

   RADIATOR FAN RELAY 4P SOCKET

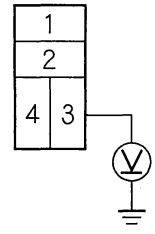

   Terminal side of female terminals

   Is there battery voltage?

   YES—Go to step 9.

   NO—Repair an open in the wire between the under-hood fuse/relay box and under-dash fuse/relay box. ■

BACK

Protected by AR

6. Disconnect the radiator fan motor 2P connector.

7. Check for continuity between radiator fan relay 4P socket terminal No. 1 and radiator fan motor 2P connector terminal No. 2.

RADIATOR FAN RELAY 4P SOCKET

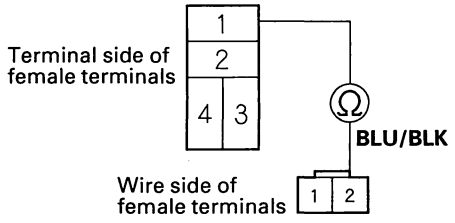

RADIATOR FAN MOTOR 2P CONNECTOR

Is there continuity?

YES—Go to step 8.

NO—Repair an open in the wire between the under-hood fuse/relay box and radiator fan motor 2P connector terminal No. 2. ■

8. Check for continuity between radiator fan motor 2P connector terminal No. 1 and body ground.

RADIATOR FAN MOTOR 2P CONNECTOR

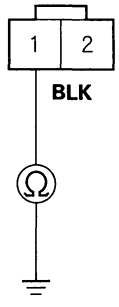

Wire side of female terminals

Is there continuity?

YES—Replace the radiator fan motor (see page 10-13). ■

NO—Repair an open in the wire between radiator fan motor 2P connector terminal No. 1 and body ground. If the wire is OK, check for a poor ground at G301. ■

9. Reinstall the radiator fan relay.

10. Disconnect the radiator fan switch 2P connector.

11. Connect radiator fan switch 2P connector terminal No. 1 and No. 2 with a jumper wire.

RADIATOR FAN SWITCH 2P CONNECTOR

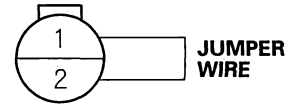

Wire side of female terminals

Does the radiator fan run?

YES—Replace the radiator fan switch (see page 10-23). ■

NO—Go to step 12.

12. Remove the jumper wire, and measure the voltage between radiator fan switch 2P connector terminal No. 2 and body ground.

RADIATOR FAN SWITCH 2P CONNECTOR

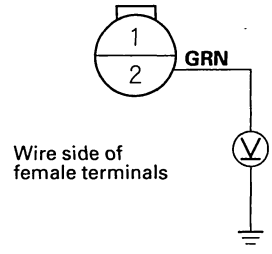

Is there battery voltage?

YES—Repair an open in the wire between radiator fan switch 2P connector terminal No. 1 and body ground. If the wire is OK, check for a poor ground at G301. ■

NO—Repair open in the wire between radiator fan switch 2P connector terminal No. 2 and the under-hood fuse/relay box. ■

Protected by AR

Radiator Fan Circuit Troubleshooting (cont'd)

2005-2006 Models

NOTE: Before beginning this troubleshooting procedure, refer to the symptom troubleshooting index.

1. Check the No. 11 (30 A) fuse in the under-hood fuse/relay box, and the No. 30 (7.5 A) fuse in the under-dash fuse/relay box.

   Are the fuses OK?

   YES—Go to step 2.

   NO—Replace the fuse(s) and recheck. ■

2. Remove the radiator fan relay from the under-hood fuse/relay box, and test it (see page 22-75).

   Is the relay OK?

   YES—Go to step 3.

   NO—Replace the radiator fan relay. ■

3. Measure the voltage between radiator fan relay 4P socket terminal No. 2 and body ground.

RADIATOR FAN RELAY 4P SOCKET

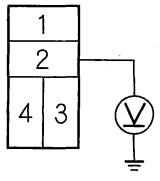

Terminal side of female terminals

Is there battery voltage?

YES—Go to step 4.

NO—Replace the under-hood fuse/relay box. ■

4. Connect radiator fan relay 4P socket terminal No. 1 and No. 2 with a jumper wire.

RADIATOR FAN RELAY 4P SOCKET

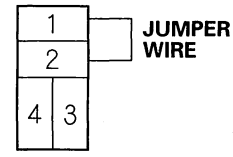

Terminal side of female terminals

Does the radiator fan run?

YES—Go to step 5.

NO—Go to step 6.

5. Disconnect the jumper, and turn the ignition switch ON (II). Check for voltage between radiator fan relay 4P socket terminal No. 3 and body ground.

RADIATOR FAN RELAY 4P SOCKET

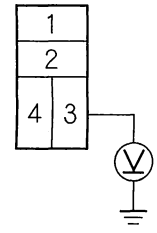

Terminal side of female terminals

Is there battery voltage?

YES—Go to step 9.

NO—Repair an open in the wire between the under-hood fuse/relay box and under-dash fuse/relay box. ■

BACK

Protected by AR

6. Disconnect the radiator fan motor 2P connector.

7. Check for continuity between radiator fan relay 4P socket terminal No. 1 and radiator fan motor 2P connector terminal No. 2.

RADIATOR FAN RELAY 4P SOCKET

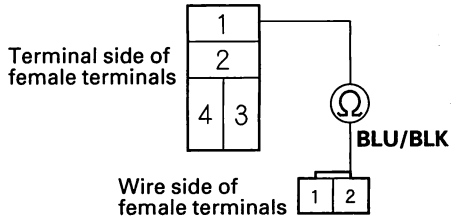

RADIATOR FAN MOTOR 2P CONNECTOR

Is there continuity?

YES—Go to step 8.

NO—Repair an open in the wire between the under-hood fuse/relay box and radiator fan motor 2P connector terminal No. 2.■

8. Check for continuity between radiator fan motor 2P connector terminal No. 1 and body ground.

RADIATOR FAN MOTOR 2P CONNECTOR

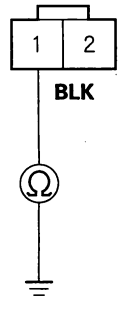

Wire side of female terminals

Is there continuity?

YES—Replace the radiator fan motor (see page 10-13).■

NO—Repair an open in the wire between radiator fan motor 2P connector terminal No. 1 and body ground. If the wire is OK, check for a poor ground at G301.■

9. Connect the Honda Diagnostic System (HDS) to the data link connector (DLC) (see step 2 on page 11-3). Turn the ignition switch ON (II), and jump the SCS line with the HDS, then turn the ignition switch OFF.

NOTE: This step must be done to protect the engine control module (ECM)/powertrain control module (PCM) from damage.

10. Disconnect ECM/PCM connector E (31P).

11. Check for continuity between ECM/PCM connector terminal E12 and body ground.

ECM/PCM CONNECTOR E (31P)

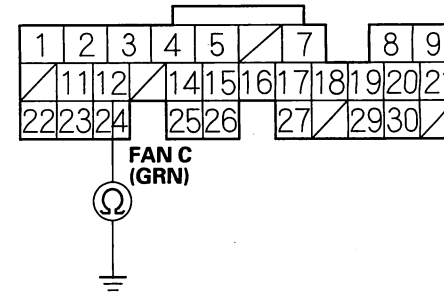

Wire side of female terminals

Is there continuity?

YES—Repair a short in the wire between the under-hood fuse/relay box and the ECM/PCM.■

NO—Repair an open in the wire between the under-hood fuse/relay box and the ECM/PCM.■

BACK

Protected by AR

Radiator Fan Switch Circuit Troubleshooting (Open)

2003-2004 Models

NOTE: Before beginning this troubleshooting procedure, refer to the symptom troubleshooting index.

1. Disconnect the radiator fan switch 2P connector.
2. Turn the ignition switch ON (II).
3. Measure voltage between radiator fan switch 2P connector terminal No. 2 and body ground.

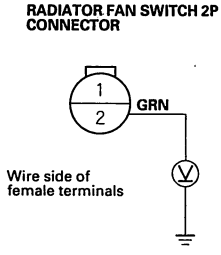

Is there battery voltage?

YES—Go to step 4.

NO—Repair an open in the wire between radiator fan switch 2P connector terminal No. 2 and under-hood fuse/relay box. ■

4. Turn the ignition switch OFF, and check for continuity between radiator fan switch 2P connector terminal No. 1 and body ground.

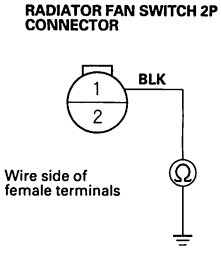

Is there continuity?

YES—Replace the radiator fan switch (see page 10-23). ■

NO—Repair an open in the wire between radiator fan switch 2P connector terminal No. 1 and body ground. If the wire is OK, check for a poor ground at G301. ■

Radiator Fan Switch Circuit Troubleshooting (Short)

2003-2004 Models

NOTE: Before beginning this troubleshooting procedure, refer to the symptom troubleshooting index.

1. Remove the radiator fan relay from the under-hood fuse/relay box, and test it (see page 22-75).

Is the relay OK?

YES—Go to step 2.

NO—Replace the radiator fan relay. ■

2. Remove the radiator fan switch, and test it (see page 10-23).

Is the radiator fan switch OK?

YES—Go to step 3.

NO—Replace the radiator fan switch (see page 10-23). ■

3. Disconnect the under-hood fuse relay box 20P connector.
4. Check for continuity between radiator fan switch 2P connector terminal No. 2 and body ground.

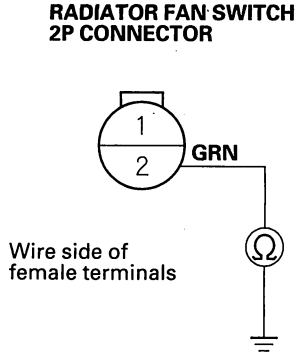

Is there continuity?

YES—Repair a short in the wire between radiator fan switch 2P connector terminal No. 2 and under-hood fuse/relay box. ■

NO—Replace the under-hood fuse/relay box. ■

BACK

Protected by AR

Radiator Fan Switch Test

2003-2004 Models

NOTE: Bleed air from the cooling system after installing the radiator fan switch (see page 10-6).

1. Remove the radiator fan switch from the radiator (see page 10-13).
2. Suspend the radiator fan switch (A) in a container of water as shown.

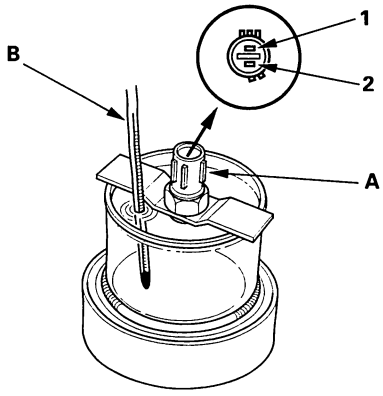

3. Heat the water, and check the temperature with a thermometer. Do not let the thermometer (B) touch the bottom of the hot container.
4. Measure the continuity between terminal No. 1 and terminal No. 2 according to the table.

Operation		Temperature	Terminal 1	Terminal 2
SWITCH	ON	196—203 °F (91—95 °C)	○—○	
	OFF	5—15 °F (3—8 °C) lower than the temperature when it goes on		

Radiator Fan Switch Replacement

2003-2004 Models

1. Drain the engine coolant (see page 10-6).
2. Remove the splash shield.
3. Disconnect the radiator fan switch connector (A), then remove the radiator fan switch (B).

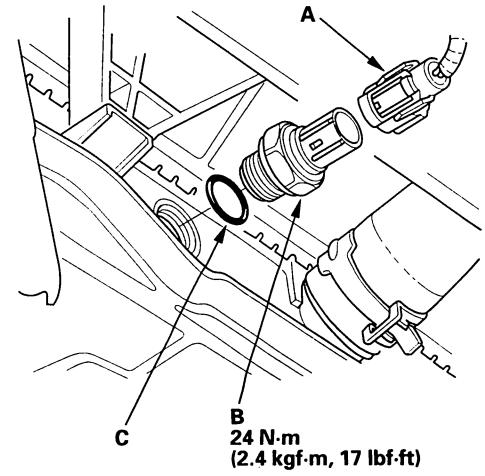

4. Install the radiator fan switch with a new O-ring (C).
5. Refill the radiator with engine coolant, and bleed air from the cooling system with the heater valve open (see step 6 on page 10-7).

Protected by AR

BACK

Protected by AR

Fuel and Emissions

Fuel and Emissions Systems
Special Tools 11-2
General Troubleshooting Information 11-3
DTC Troubleshooting Index 11-8
Symptom Troubleshooting Index 11-12
System Description 11-14
How to Set Readiness Codes 11-59

PGM-FI System
Component Location Index 11-62
DTC Troubleshooting 11-64
MIL Circuit Troubleshooting 11-205
DLC Circuit Troubleshooting 11-218
Injector Replacement 11-220
A/F Sensor Replacement 11-222
Secondary HO2S Replacement 11-222
ECT Sensor/ECT Sensor 1 Replacement 11-223
CMP Sensor B Replacement 11-223
IAT Sensor Replacement 11-224
Knock Sensor Replacement 11-224
CKP Sensor Replacement 11-225
Output Shaft (Countershaft) Speed Sensor Replacement 11-225
MAP Sensor Replacement 11-226
MAF Sensor/IAT Sensor Replacement 11-226
ECM/PCM Replacement 11-227
ECT Sensor 2 Replacement 11-228

Electronic Throttle Control System
Component Location Index 11-229
DTC Troubleshooting 11-230
APP Sensor Signal Inspection 11-273
APP Sensor Replacement 11-274
Throttle Actuator Control Module Replacement 11-274

VTEC/VTC
Component Location Index 11-275
DTC Troubleshooting 11-276
VTC Oil Control Solenoid Valve Removal/Test/Installation 11-295
Rocker Arm Oil Control Solenoid (VTEC Solenoid Valve) Inspection 11-296
CMP Sensor A Replacement 11-297
Rocker Arm Oil Control Solenoid (VTEC Solenoid Valve) Assembly Removal/Installation 11-297
Rocker Arm Oil Pressure Switch (VTEC Oil Pressure Switch) Removal/Installation 11-298

Idle Control System
Component Location Index 11-299
DTC Troubleshooting 11-300
A/C Signal Circuit Troubleshooting 11-308
Alternator FR Signal Circuit Troubleshooting 11-309
PSP Switch Signal Circuit Troubleshooting 11-312
Brake Pedal Position Switch Signal Circuit Troubleshooting 11-314
Idle Speed Inspection 11-315
ECM/PCM Idle Learn Procedure 11-316

Fuel Supply System
Component Location Index 11-317
DTC Troubleshooting 11-319
Fuel Pump Circuit Troubleshooting 11-326
Fuel Pressure Relieving 11-330
Fuel Pressure Test 11-332
Fuel Tank Draining 11-333
Fuel Line Inspection 11-334
Fuel Line/Quick-Connect Fitting Precautions 11-337
Fuel Line/Quick-Connect Fitting Removal 11-338
Fuel Line/Quick-Connect Fitting Installation 11-340
Fuel Pressure Regulator Replacement 11-343
Fuel Filter Replacement 11-344
Fuel Pump/Fuel Gauge Sending Unit Replacement 11-345
Fuel Tank Replacement 11-347
Fuel Gauge Sending Unit Test 11-351
Low Fuel Indicator Test 11-354

Intake Air System
Component Location Index 11-355
Throttle Body Test 11-356
Throttle Body Cleaning 11-357
Throttle Position Sensor Signal Inspection 11-358
Intake Air Bypass Control Thermal Valve Test 11-359
Intake Air Bypass Control Thermal Valve Replacement 11-360
Air Cleaner Removal/Installation 11-361
Air Cleaner Element Inspection/Replacement 11-361
Resonator Removal/Installation 11-362
Throttle Cable Adjustment 11-362
Throttle Cable Removal/Installation 11-364
Throttle Body Removal/Installation 11-366
Throttle Body Disassembly/Reassembly 11-368
Accelerator Pedal Replacement 11-369

Catalytic Converter System
DTC Troubleshooting 11-370

EGR System
Component Location Index 11-374
DTC Troubleshooting 11-375
EGR Valve Replacement 11-386

PCV System
DTC Troubleshooting 11-387
PCV Valve Inspection 11-388
PCV Valve Replacement 11-388

EVAP System
Component Location Index 11-389
DTC Troubleshooting 11-391
EVAP Canister Replacement 11-421
FTP Sensor Replacement 11-422
EVAP Canister Purge Valve Replacement 11-423
EVAP Canister Vent Shut Valve Replacement 11-423



Protected by AR

Special Tools

Ref. No.	Tool Number	Description	Qty
①	07AAA-S0XA100	Fuel Sender Wrench	1
②	07AAJ-S6MA150	Fuel Pressure Gauge Attachment Set	1
③	07JAZ-001000B	Vacuum/Pressure Gauge, 0—4 in.Hg	1
④	07SAZ-001000A	Backprobe Set	2
⑤	07NAJ-P07010A	Pressure Gauge Adapter	1
⑥	07ZAJ-S5A0200	Oil Pressure Hose	1
⑦-1	07406-0020201	A/T Pressure Hose	1
⑦-2	07406-0070300	A/T Low Pressure Gauge W/Panel	1
⑦-3	07MAJ-PY4011A	A/T Pressure Hose, 2,210 mm	1
⑦-4	07MAJ-PY40120	A/T Pressure Hose, Adapter	1
⑧	07406-004000A	Fuel Pressure Gauge	1

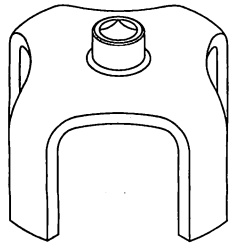

①

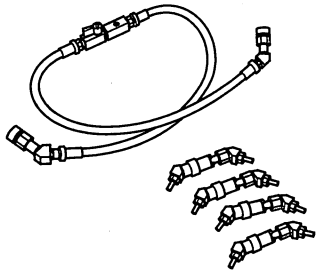

②

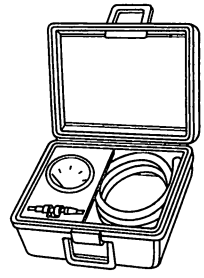

③

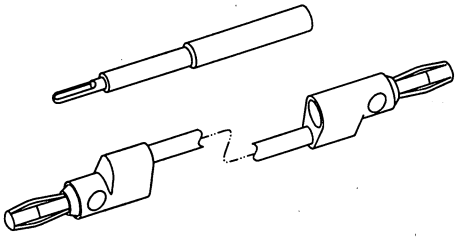

④

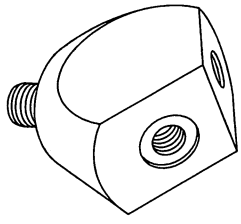

⑤

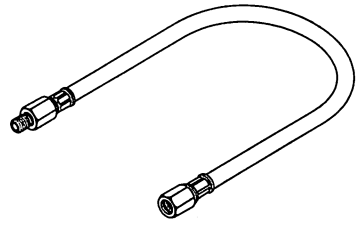

⑥

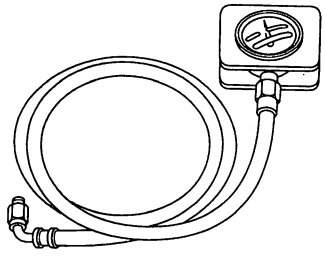

⑦-1, ⑦-2, ⑦-3, ⑦-4

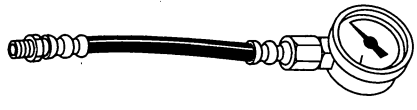

⑧

BACK

Protected by AR

General Troubleshooting Information

Intermittent Failures

The term "intermittent failure" means a system may have had a failure, but it checks OK now. If the malfunction indicator lamp (MIL) on the dash does not come on, check for poor connections or loose pins at all connectors related to the circuit that you are troubleshooting. If the MIL was on, but then went out, the original problem may have been intermittent.

Opens and Shorts

"Open" and "Short" are common electrical terms. An open is a break in a wire or at a connection. A short is an accidental connection of a wire to ground or to another wire. In simple electronics, this usually means something won't work at all. With complex electronics (such as ECMs and PCMs) this can sometimes mean something works, but not the way it's supposed to.

How to Use the HDS (Honda Diagnostic System)

If the MIL (Malfunction Indicator Lamp) has come on

1. Start the engine, and check the MIL (A).

   NOTE: If the ignition switch is turned ON (II), and the engine is not started, the MIL will stay on for 15—20 seconds (see page 11-59).

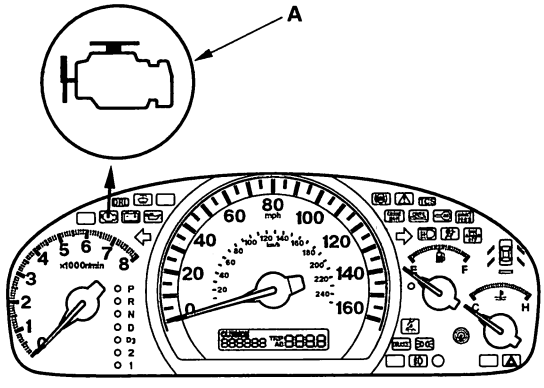

2. If the MIL stays on, connect the HDS to the data link connector (DLC) (A) located under the driver's side of the dashboard.

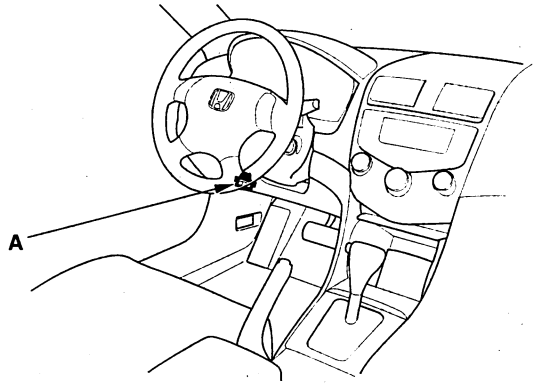

3. Turn the ignition switch ON (II).

4. Check the diagnostic trouble code (DTC) and note it. Also check the freeze data. Refer to the DTC troubleshooting and begin the appropriate troubleshooting procedure.

   NOTE:
   - Freeze data indicates the engine conditions when the first malfunction, misfire, or fuel trim malfunction was detected.
   - The HDS can read the DTC, freeze data, current data, and other engine control module (ECM)/ powertrain control module (PCM) data.
   - For specific operations, refer to the user's manual that came with the HDS.

5. If no DTCs are found, go to MIL troubleshooting (see page 11-205).

If the MIL did not stay on
If the MIL did not stay on but there is a driveability problem, do the symptom troubleshooting.

If you can't duplicate the DTC
Some of the troubleshooting requires you to reset the ECM/PCM and try to duplicate the DTC. If the problem is intermittent and you can't duplicate the code, do not continue through the procedure. To do so will only result in confusion and possibly, a needlessly replaced ECM/PCM.

(cont'd)

Protected by AR

General Troubleshooting Information (cont'd)

HDS Clear Command

The ECM/PCM stores various specific data to correct the system even if there is no electrical power such as when the battery negative terminal or No. 8 FI ECU (ECM/PCM) (15 A) fuse are disconnected. Stored data based on failed parts should be cleared by using the "CLEAR COMMAND" of the HDS, if parts are replaced.

The HDS has three kinds of clear commands to meet this purpose. They are DTC clear, ECM/PCM reset, and CKP pattern clear. DTC clear command erases all stored DTC codes, freeze data, readiness codes, and on-board snapshot. This must be done with the HDS after reproducing the DTC during troubleshooting.
The ECM/PCM reset command erases all stored DTC codes, freeze data, readiness codes, on-board snapshot, and all specific data to correct the system except CKP pattern. If the CKP pattern data in the ECM/PCM was cleared, you must do the CKP pattern learn procedure. The CKP pattern clear command erases only CKP pattern data. This command is for repair of a misfire or the CKP sensor.

Scan Tool Clear Command

If you are using a generic scan tool to clear commands, be aware that there is only one setting for clearing the ECM/PCM, and it clears all commands at the same time (CKP pattern learn, idle learn, readiness codes, freeze data, on-board snapshot, and DTCs). After you clear all commands, you then need to do these procedures, in this order: ECM/PCM idle learn procedure (see page 11-316); CKP pattern learn procedure; Test-drive to set readiness codes to complete (see page 11-59).

DTC Clear

1. Clear the DTC with the HDS while the engine is stopped.
2. Turn the ignition switch OFF.
3. Turn the ignition switch ON (II). Wait 30 seconds.
4. Turn the ignition switch OFF, and disconnect the HDS from the DLC.

ECM/PCM Reset

This command clears stored specific data from each vehicle such as DTCs, freeze data, and readiness codes. It does not clear CKP PATTERN data.

1. Reset the ECM/PCM with the HDS while the engine is stopped.
2. Turn the ignition switch OFF.
3. Turn the ignition switch ON (II), and wait 30 seconds.
4. Turn the ignition switch OFF, and disconnect the HDS from the DLC.
5. Do the ECM/PCM idle learn procedure (see page 11-316).

CKP Pattern Clear/CKP Pattern Learn

NOTE: The ECT needs to be at 176 °F (80 °C) or higher.

1. Clear the CKP pattern while the engine is stopped.
2. Turn the ignition switch OFF.
3. Turn the ignition switch ON (II), and wait 30 seconds.
4. Test-drive the vehicle on a level road: decelerate (with the throttle fully closed) from an engine speed of 2,500 rpm to 1,000 rpm with the A/T in 2 position, or M/T in 1st gear.
5. Stop the vehicle, but keep the engine running.
6. Check PULSER F/B LEARN in the DATA LIST with the HDS. If it is NOT COMPLETED, go to step 4. If it is COMPLETED, go to step 7.
7. Turn the ignition switch OFF.
8. Turn the ignition switch ON (II), and wait for 30 seconds. The CKP learning procedure is completed.

BACK

Protected by AR

How to End a Troubleshooting Session (required after any troubleshooting)

1. Reset the ECM/PCM with the HDS.
2. Do the ECM/PCM idle learn procedure (see page 11-316).
3. Turn the ignition switch OFF.
4. Disconnect the HDS from the DLC.

   NOTE: The ECM/PCM is part of the immobilizer system. If you replace the ECM/PCM, it will have a different immobilizer code. In order for the engine to start, you must rewrite the immobilizer code with the HDS.

How to Remove the ECM/PCM Connectors for Testing

If DTC troubleshooting requires voltage or resistance checks at the ECM/PCM connectors, remove the ECM/PCM connectors and test it:

1. Jump the SCS line with the HDS.
2. Remove the center lower cover (A).

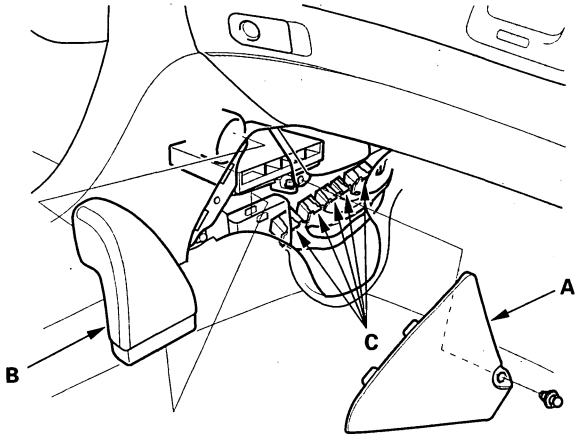

3. Remove the duct (B).
4. Disconnect ECM/PCM connectors (C).
5. Open the SCS line with the HDS.

How to Troubleshoot Circuits at the ECM/PCM

Special Tools Required
- Digital multimeter KS-AHM-32-003 (1) or a commercially available digital multimeter
- Backprobe set 07SAZ-001000A (2)

1. Connect the backprobe adapters (A) to the stacking patch cords (B), and connect the cords to a digital multimeter.

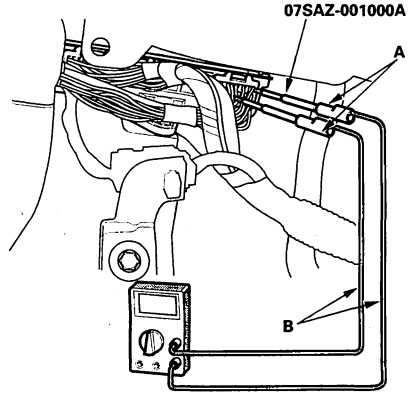

2. Using the wire insulation as a guide for the contoured tip of the backprobe adapter, gently slide the tip into the connector from the wire side until it touches the end of the wire terminal.
3. If you cannot get to the wire side of the connector or the wire side is sealed (A), disconnect the connector and probe the terminals (B) from the terminal side. Do not force the probe into the connector.

NOTICE

Do not puncture the insulation on a wire. Punctures can cause poor or intermittent electrical connections.

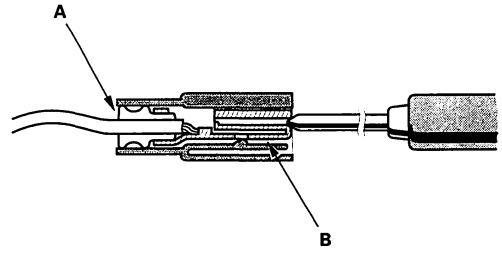

(cont'd)

Protected by AR

General Troubleshooting Information (cont'd)

ECM/PCM Updating and Substitution for Testing

Special Tools Required
Honda interface module (HIM) EQS05A35570

Use this procedure when you have to substitute a known-good ECM/PCM in a troubleshooting procedure. Update the ECM/PCM only if the ECM/PCM does not have the latest software loaded.

NOTE: Do not turn the ignition switch OFF while updating the ECM/PCM. If you turn the ignition switch OFF before completion, the ECM/PCM can be damaged.

How to Update the ECM/PCM

NOTE:
- To ensure the latest program is installed, do an ECM/PCM update whenever the ECM/PCM is substituted or replaced.
- You can not update an ECM/PCM with the program it already has. It will only accept a new program.
- Before you update the ECM/PCM, make sure the vehicle's battery is fully charged.
- To prevent ECM/PCM damage, do not operate anything electrical (audio system, brakes, A/C, power windows, moonroof, door locks, etc.) during the update.
- If you need to diagnose the Honda interface module (HIM) because the HIM's red (#3) light came on or was flashing during the update, leave the ignition switch in the ON (II) position when you disconnect the HIM from the data link connector (DLC). This will prevent ECM/PCM damage.

1. Turn the ignition switch ON (II). Do not start the engine.
2. Connect the HDS or the Honda interface module (HIM) to the data link connector (DLC) (A) located under the driver's side of the dashboard.

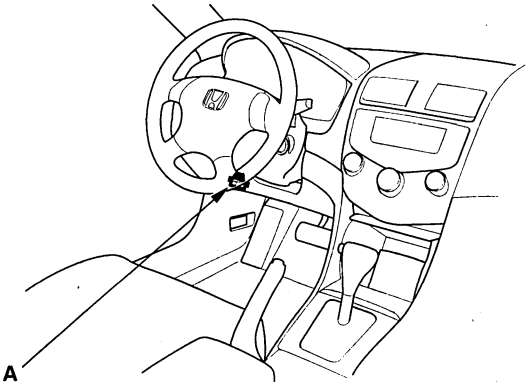

3. Select the INSPECTION MENU with the HDS.
4. Do the TP POSITION CHECK in the ETCS TEST.
5. If the HDS does not have the update function, disconnect the HDS from the vehicle and connect the Honda interface module (HIM).
6. If the software in the ECM/PCM is the latest, disconnect the HDS or the HIM from the DLC and go back to the procedure that you were doing.
   If the software in the ECM/PCM is not the latest, do the ECM/PCM update procedure as described on the HIM label or in the ECM/PCM update system.

   NOTE: If the ECM/PCM update system requires you to cool the ECM/PCM, follow what is shown in the screen.
7. Do the ECM/PCM idle learn procedure (see page 11-316).
8. Do the CKP pattern clear/pattern learn procedure with the HDS.

BACK

Protected by AR

How to Substitute the ECM/PCM

1. Connect the HDS to the data link connector (DLC) (A) located under the driver's side of the dashboard.

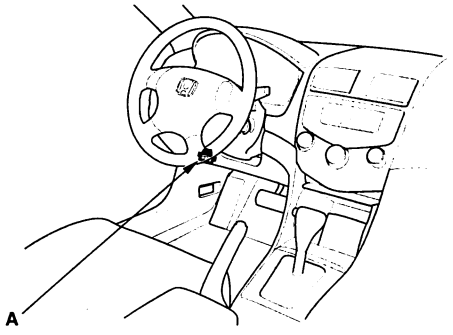

2. Make sure the HDS communicates with the ECM/PCM. If it doesn't, skip steps 3 to 5 and clean the throttle body (2006 model only) (see page 11-357) after this procedure.
3. Turn the ignition switch ON (II).
4. 2006 model: Select the INSPECTION MENU with the HDS.
5. 2006 model: Do the TP POSITION CHECK in the ETCS TEST.
6. Turn the ignition switch OFF.
7. Jump the SCS line with the HDS.
8. Remove the center lower covers (A).

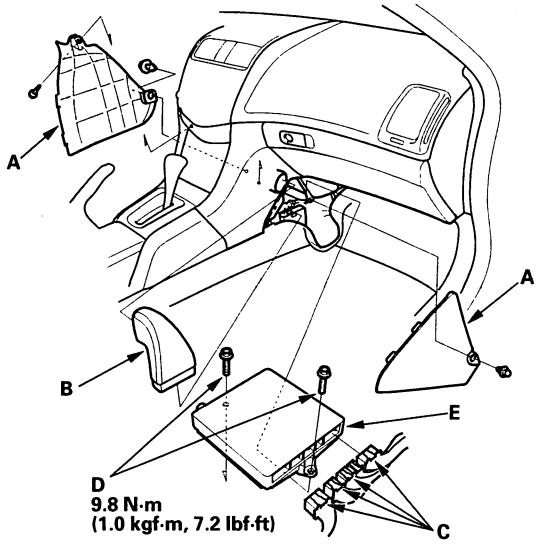

9. Remove the duct (B).
10. Disconnect ECM/PCM connectors (C).
11. Remove the bolts (D), then remove the ECM/PCM (E).
12. Install the ECM/PCM in the reverse order of removal.
13. Open the SCS line with the HDS.
14. Turn the ignition switch ON (II).

    NOTE: DTC P0630 "VIN Not Programmed or Mismatch" may be stored because VIN has not been programmed into the ECM/PCM; ignore it, and continue this procedure.

15. Input the VIN to the ECM/PCM with the HDS.
16. Rewrite the immobilizer code with the ECM/PCM replacement procedure in the HDS; it allows you to start the engine.
17. Reset the ECM/PCM with the HDS.
18. Do the ECM/PCM idle learn procedure (see page 11-316).
19. Do the CKP pattern clear/pattern learn procedure with the HDS.

OBD Status

The OBD status shows the current system status of each DTC and all of the parameters. This function is used to see if the technician's repair was successfully finished. The results of diagnostic tests for the DTC are displayed as:

- PASSED: On board diagnosis is successfully finished.
- FAILED: On board diagnosis has finished but failed.
- EXECUTING: The vehicle is in enable criteria conditions for the DTC and the on board diagnosis is running.
- NOT COMPLETED: The on board diagnosis was running but is out of the enable conditions of the DTC.
- OUT OF CONDITION: The vehicle has stayed out of the enable conditions of the DTC.

Protected by AR

DTC Troubleshooting Index

DTC (MIL indication *1)	Two Drive Cycle Detection	Detection Item	MIL	Note
P0010 (56)	—	Variable Valve Timing Control (VTC) Oil Control Solenoid Valve Malfunction	ON	(see page 11-276)
P0011 (56)	○	Variable Valve Timing Control (VTC) System Malfunction	ON	(see page 11-279)
P0101 (50) *2	○	Mass Air Flow (MAF) Sensor Range/Performance Problem	ON	(see page 11-64)
P0102 (50) *2	—	Mass Air Flow (MAF) Sensor Circuit Low Voltage	ON	(see page 11-66)
P0103 (50) *2	—	Mass Air Flow (MAF) Sensor Circuit High Voltage	ON	(see page 11-69)
P0107 (3) *9	—	Manifold Absolute Pressure (MAP) Sensor Circuit Low Voltage	ON	(see page 11-71)
P0107 (3) *8	—	Manifold Absolute Pressure (MAP) Sensor Circuit Low Voltage	ON	(see page 11-74)
P0108 (3)	—	Manifold Absolute Pressure (MAP) Sensor Circuit High Voltage	ON	(see page 11-76)
P0111 (10) *8	○	Intake Air Temperature (IAT) Sensor Circuit Range/Performance Problem	ON	(see page 11-79)
P0112 (10) *3	—	Intake Air Temperature (IAT) Sensor Circuit Low Voltage	ON	(see page 11-80)
P0112 (10) *2	—	Intake Air Temperature (IAT) Sensor Circuit Low Voltage	ON	(see page 11-81)
P0113 (10) *3	—	Intake Air Temperature (IAT) Sensor Circuit High Voltage	ON	(see page 11-82)
P0113 (10) *2	—	Intake Air Temperature (IAT) Sensor Circuit High Voltage	ON	(see page 11-84)
P0116 (86) *9	○	Engine Coolant Temperature (ECT) Sensor Range/Performance Problem	ON	(see page 11-86)
P0116 (86) *8	○	Engine Coolant Temperature (ECT) Sensor 1 Range/Performance Problem	ON	(see page 11-87)
P0117 (6)	—	Engine Coolant Temperature (ECT) Sensor/Engine Coolant Temperature (ECT) Sensor 1 Circuit Low Voltage	ON	(see page 11-88)
P0118 (6)	—	Engine Coolant Temperature (ECT) Sensor/Engine Coolant Temperature (ECT) Sensor 1 Circuit High Voltage	ON	(see page 11-89)
P0122 (7) *9	—	Throttle Position (TP) Sensor Circuit Low Voltage	ON	(see page 11-91)
P0122 (7) *15	—	Throttle Position (TP) Sensor Circuit Low Voltage	ON	(see page 11-95)
P0122 (7) *13	—	Throttle Position (TP) Sensor A Circuit Low Voltage	ON	(see page 11-230)
P0123 (7) *12	—	Throttle Position (TP) Sensor Circuit High Voltage	ON	(see page 11-98)
P0123 (7) *13	—	Throttle Position (TP) Sensor A Circuit High Voltage	ON	(see page 11-233)
P0125 (86) *9	○	Engine Coolant Temperature (ECT) Sensor Malfunction/Slow Responce	ON	(see page 11-100)
P0125 (86) *8	○	Engine Coolant Temperature (ECT) Sensor 1 Malfunction/Slow Responce	ON	(see page 11-101)
P0128 (87) *9	○	Cooling System Malfunction	ON	(see page 11-102)
P0128 (87) *8	○	Cooling System Malfunction	ON	(see page 11-104)
P0133 (61) *9	○	Air Fuel Ratio (A/F) Sensor (Sensor 1) Response Malfunction	ON	(see page 11-106)
P0133 (61) *8	○	Air Fuel Ratio (A/F) Sensor (Sensor 1) Response Malfunction	ON	(see page 11-107)
P0134 (41)	○	Air Fuel Ratio (A/F) Sensor (Sensor 1) Heater System Malfunction	ON	(see page 11-108)
P0135 (41)	—	Air Fuel Ratio (A/F) Sensor (Sensor 1) Heater Circuit Malfunction	ON	(see page 11-109)
P0137 (63) *9	○	Secondary Heated Oxygen Sensor (Secondary HO2S (Sensor 2)) Circuit Low Voltage	ON	(see page 11-113)
P0137 (63) *8	○	Secondary Heated Oxygen Sensor (Secondary HO2S (Sensor 2)) Circuit Low Voltage	ON	(see page 11-115)
P0138 (63) *9	○	Secondary Heated Oxygen Sensor (Secondary HO2S (Sensor 2)) Circuit High Voltage	ON	(see page 11-117)
P0138 (63) *8	○	Secondary Heated Oxygen Sensor (Secondary HO2S (Sensor 2)) Circuit High Voltage	ON	(see page 11-120)
P0139 (63) *9	○	Secondary Heated Oxygen Sensor (Secondary HO2S (Sensor 2)) Slow Response	ON	(see page 11-123)
P0139 (63) *8	○	Secondary Heated Oxygen Sensor (Secondary HO2S (Sensor 2)) Slow Response	ON	(see page 11-124)
P0141 (65)	—	Secondary Heated Oxygen Sensor (Secondary HO2S (Sensor 2)) Heater Circuit Malfunction	ON	(see page 11-125)
P0171 (45)	○	Fuel System Too Lean	ON	(see page 11-128)
P0172 (45)	○	Fuel System Too Rich	ON	(see page 11-128)

NOTE: These DTCs are indicated when the PGM-FI system is selected in the HDS.
Some automatic transmission DTCs cause the MIL to come on. If the MIL is on and no DTCs are indicated in the PGM-FI system, select the A/T system, and check for automatic transmission DTCs.

* 1: These DTCs are indicated by a blinking MIL when the SCS line is jumped with the HDS.
* 2: 2003-2004 SULEV, LX-P models and 2005-2006 models
* 3: except 2003-2004 SULEV, LX-P models
* 8: 2005-2006 models
* 9: 2003-2004 models
* 12: 2003-2005 models
* 13: 2006 model
* 15: 2005 model

BACK

Protected by AR

DTC (MIL indication *1)	Two Drive Cycle Detection	Detection Item	MIL	Note
P0222 (7) *13	—	Throttle Position (TP) Sensor B Circuit Low Voltage	ON	(see page 11-236)
P0223 (7) *13	—	Throttle Position (TP) Sensor B Circuit High Voltage	ON	(see page 11-239)
P0300 (75) any combination of the following P0301 (71) P0302 (72) P0303 (73) P0304 (74)	○	Random Misfire Detected	ON	(see page 11-130)
P0301 (71)	○	No. 1 Cylinder Misfire Detected	ON	(see page 11-133)
P0302 (72)	○	No. 2 Cylinder Misfire Detected	ON	(see page 11-133)
P0303 (73)	○	No. 3 Cylinder Misfire Detected	ON	(see page 11-133)
P0304 (74)	○	No. 4 Cylinder Misfire Detected	ON	(see page 11-133)
P0325 (23)	—	Knock Sensor Circuit Malfunction	ON	(see page 11-140)
P0335 (4)	—	Crankshaft Position (CKP) Sensor No Signal	ON	(see page 11-142)
P0339 (4)	—	Crankshaft Position (CKP) Sensor Intermittent Interruption	ON	(see page 11-144)
P0340 (57)	—	Camshaft Position (CMP) Sensor A No Signal	ON	(see page 11-281)
P0341 (57)	—	Camshaft Position (CMP) Sensor and Crankshaft Position (CKP) Sensor Incorrect Phase Detected	ON	(see page 11-283)
P0344 (57)	—	Camshaft Position (CMP) Sensor A Intermittent Interruption	ON	(see page 11-285)
P0365 (8)	—	Camshaft Position (CMP) Sensor B No Signal	ON	(see page 11-145)
P0369 (8)	—	Camshaft Position (CMP) Sensor B Intermittent Interruption	ON	(see page 11-147)
P0401 (80)	○	Exhaust Gas Recirculation (EGR) Insufficient Flow	ON	(see page 11-375)
P0404 (12)	○	Exhaust Gas Recirculation (EGR) Valve Circuit Range/Performance Problem	ON	(see page 11-377)
P0406 (12)	—	Exhaust Gas Recirculation (EGR) Valve Position Sensor Circuit High Voltage	ON	(see page 11-380)
P0420 (67) *9	○	Catalyst System Efficiency Below Threshold	ON	(see page 11-370)
P0420 (67) *8	○	Catalyst System Efficiency Below Threshold	ON	(see page 11-372)
P0442 (90) *9	○	Evaporative Emission (EVAP) System Small Leak Detected	ON	(see page 11-391)
P0443 (92)	—	Evaporative Emission (EVAP) Canister Purge Valve Circuit Malfunction	ON	(see page 11-394)
P0451 (91)	○	Fuel Tank Pressure (FTP) Sensor Range/Performance Problem	ON	(see page 11-398)
P0452 (91) *9	○	Fuel Tank Pressure (FTP) Sensor Circuit Low Voltage	ON	(see page 11-399)
P0452 (91) *8	○	Fuel Tank Pressure (FTP) Sensor Circuit Low Voltage	ON	(see page 11-402)
P0453 (91)	○	Fuel Tank Pressure (FTP) Sensor Circuit High Voltage	ON	(see page 11-405)
P0455 (90) *8	○	Evaporative Emission (EVAP) System Large Leak Detected	ON	(see page 11-391)
P0456 (90)	○	Evaporative Emission (EVAP) System Very Small Leak Detected	ON	(see page 11-391)
P0457 (90)	○	Evaporative Emission (EVAP) System Leak Detected/Fuel Cap Loose or Missing	ON	(see page 11-408)
P0461 (121) *8	○	Fuel Level Sensor (Fuel Gauge Sending Unit) Range/Performance Problem	OFF	(see page 11-319)
P0462 (121) *8	—	Fuel Level Sensor (Fuel Gauge Sending Unit) Circuit Low Voltage	OFF	(see page 11-320)
P0463 (121) *8	—	Fuel Level Sensor (Fuel Gauge Sending Unit) Circuit High Voltage	OFF	(see page 11-322)
P0496 (92)	○	Evaporative Emission (EVAP) System High Purge Flow	ON	(see page 11-410)
P0497 (90)	○	Evaporative Emission (EVAP) System Low Purge Flow	ON	(see page 11-411)
P0498 (117)	—	Evaporative Emission (EVAP) Canister Vent Shut Valve Circuit Low Voltage	ON	(see page 11-414)
P0499 (117)	—	Evaporative Emission (EVAP) Canister Vent Shut Valve Circuit High Voltage	ON	(see page 11-416)
P0506 (14) *12	○	Idle Control System RPM Lower Than Expected	ON	(see page 11-300)
P0506 (14) *13	○	Idle Control System RPM Lower Than Expected	ON	(see page 11-301)
P0507 (14) *12	○	Idle Control System RPM Higher Than Expected	ON	(see page 11-303)
P0507 (14) *13	○	Idle Control System RPM Higher Than Expected	ON	(see page 11-304)
P0511 (14) *12	—	Idle Air Control (IAC) Valve Circuit Malfunction	ON	(see page 11-305)
P0562 (34) *8	—	Charging System Low Voltage	OFF	(see page 11-148)
P0563 (34)	—	Engine Control Module (ECM)/Powertrain Control Module (PCM) Power Source Circuit Unexpected Voltage	OFF	(see page 11-149)

NOTE: These DTCs are indicated when the PGM-FI system is selected in the HDS.
Some automatic transmission DTCs cause the MIL to come on. If the MIL is on and no DTCs are indicated in the PGM-FI system, select the A/T system, and check for automatic transmission DTCs.

* 1: These DTCs are indicated by a blinking MIL when the SCS line is jumped with the HDS.
* 8: 2005-2006 models
* 9: 2003-2004 models
* 12: 2003-2005 models
* 13: 2006 model

(cont'd)

Protected by AR

DTC Troubleshooting Index (cont'd)

DTC (MIL indication *1)	Two Drive Cycle Detection	Detection Item	MIL	NOTE
P050A (167) *13	○	Cold Start Idle Air Control System Performance	ON	(see page 11-152)
P050B (167) *13	○	Cold Start Ignition Timing Performance	ON	(see page 11-154)
P0602 (196) *8	———	Engine Control Module (ECM)/Powertrain Control Module (PCM) Programming Error	OFF	(see page 11-157)
P0603 (131)	———	Engine Control Module (ECM)/Powertrain Control Module (PCM) Internal Control Module Keep Alive Memory (KAM) Error	ON	(see page 11-157)
P0606 (0)	———	Engine Control Module (ECM)/Powertrain Control Module (PCM) Processor Malfunction	ON	(see page 11-158)
P0630 (139) *8	———	VIN Not Programmed or Mismatch	ON	(see page 11-158)
P0685 (135)	———	Engine Control Module (ECM)/Powertrain Control Module (PCM) Power Control Circuit/Internal Circuit Malfunction	ON	(see page 11-159)
P0700 (70) *16	———	Automatic Transaxle Control System Malfunction	ON	(see page 11-160)
P0700 (70)	———	Automatic Transaxle Control System Malfunction	OFF	(see page 11-160)
P0720 (122) *4	———	Output Shaft (Countershaft) Speed Sensor Circuit Malfunction	ON	(see page 11-160)
P1009 (56)	○	Variable Valve Timing Control (VTC) Advance Malfunction	ON	(see page 11-286)
P1109 (13) *8	———	Barometric Pressure (BARO) Sensor Circuit Out of Range High	ON	(see page 11-163)
P1116 (86) *8	○	Engine Coolant Temperature (ECT) Sensor 1 Performance Problem	ON	(see page 11-164)
P1121 (7) *12	○	Throttle Position (TP) Sensor Signal Lower Than Expected	ON	(see page 11-166)
P1122 (7) *12	○	Throttle Position (TP) Sensor Signal Higher Than Expected	ON	(see page 11-167)
P1128 (5)	○	Manifold Absolute Pressure (MAP) Sensor Signal Lower Than Expected	ON	(see page 11-168)
P1129 (5)	○	Manifold Absolute Pressure (MAP) Sensor Signal Higher Than Expected	ON	(see page 11-169)
P1157 (48)	———	Air Fuel Ratio (A/F) Sensor (Sensor 1) AFS Line High Voltage	ON	(see page 11-170)
P1172 (61) *8	○	Air Fuel Ratio (A/F) Sensor (Sensor 1) Circuit Out of Range High	ON	(see page 11-172)
P1297 (20)	———	Electrical Load Detector (ELD) Circuit Low Voltage	OFF	(see page 11-173)
P1298 (20)	———	Electrical Load Detector (ELD) Circuit High Voltage	OFF	(see page 11-175)
P1454 (91)	○	Fuel Tank Pressure (FTP) Sensor Range/Performance Problem	ON	(see page 11-418)
P1549 (34) *8	———	Charging System High Voltage	OFF	(see page 11-177)
P1683 (40) *13	———	Throttle Valve Default Position Spring Performance Problem	ON	(see page 11-242)
P1684 (40) *13	———	Throttle Valve Return Spring Performance Problem	ON	(see page 11-243)
P16BB (116) *8	———	Alternator B Terminal Circuit Low Voltage	OFF	(see page 11-178)
P16BC (116) *8	———	Alternator FR Terminal Circuit/IGP Circuit Low Voltage	OFF	(see page 11-179)
P2101 (40) *13	———	Throttle Actuator System Malfunstion	ON	(see page 11-244)
P2108 (40) *13	———	Throttle Actuator Control Module Problem	ON	(see page 11-246)
P2118 (40) *13	———	Throttle Actuator Current Range/Performance Problem	ON	(see page 11-247)
P2122 (37) *13	———	Accelerator Pedal Position (APP) Sensor A (Throttle Position (TP) Sensor D) Circuit Low Voltage	ON	(see page 11-248)
P2123 (37) *13	———	Accelerator Pedal Position (APP) Sensor A (Throttle Position (TP) Sensor D) Circuit High Voltage	ON	(see page 11-251)
P2127 (37) *13	———	Accelerator Pedal Position (APP) Sensor B (Throttle Position (TP) Sensor E) Circuit Low Voltage	ON	(see page 11-253)
P2128 (37) *13	———	Accelerator Pedal Position (APP) Sensor B (Throttle Position (TP) Sensor E) Circuit High Voltage	ON	(see page 11-256)
P2135 (7) *13	———	Throttle Position (TP) Sensor A/B Incorrect Voltage Correlation	ON	(see page 11-258)
P2138 (37) *13	———	Accelerator Pedal Position (APP) Sensor A/B (Throttle Position (TP) Sensor D/E) Incorrect Voltage Correlation	ON	(see page 11-260)
P2176 (40) *13	———	Throttle Actuator Control System Idle Position Not Learned	ON	(see page 11-262)
P2183 (192) *8	○	Engine Coolant Temperature (ECT) Sensor 2 Range/Performance Problem	ON	(see page 11-182)
P2184 (192) *8	———	Engine Coolant Temperature (ECT) Sensor 2 Circuit Low Voltage	ON	(see page 11-184)
P2185 (192) *8	———	Engine Coolant Temperature (ECT) Sensor 2 Circuit High Voltage	ON	(see page 11-185)
P2195 (48)	○	Air Fuel Ratio (A/F) Sensor (Sensor 1) Signal Stuck Lean	ON	(see page 11-187)
P2227 (13)	○	Barometric Pressure (BARO) Sensor Range/Performance Problem	ON	(see page 11-188)
P2228 (13)	———	Barometric Pressure (BARO) Sensor Circuit Low Voltage	ON	(see page 11-189)
P2229 (13)	———	Barometric Pressure (BARO) Sensor Circuit High Voltage	ON	(see page 11-189)
P2238 (48)	———	Air Fuel Ratio (A/F) Sensor (Sensor 1) AFS+ Line Low Voltage	ON	(see page 11-190)
P2252 (48)	———	Air Fuel Ratio (A/F) Sensor (Sensor 1) AFS− Line Low Voltage	ON	(see page 11-191)

* 1: These DTCs are indicated by a blinking MIL when the SCS line is jumped with the HDS.
* 4: M/T
* 8: 2005-2006 models
* 12: 2003-2005 models
* 13: 2006 model
* 16: The D indicator and the MIL may come on at the same time (A/T)

BACK

Protected by AR

DTC (MIL indication *1)	Two Drive Cycle Detection	Detection Item	MIL	NOTE
P2270 (63) *8	○	Secondary Heated Oxygen Sensor (Secondary HO2S (Sensor 2)) Circuit Signal Stuck Lean	ON	(see page 11-192)
P2271 (63) *8	○	Secondary Heated Oxygen Sensor (Secondary HO2S (Sensor 2)) Circuit Signal Stuck Rich	ON	(see page 11-192)
P2279 (109) *7	○	Intake Air System Leak Detected	ON	(see page 11-387)
P2413 (12)	○	Exhaust Gas Recirculation (EGR) System Malfunction	ON	(see page 11-381)
P2422 (117)	○	Evaporative Emission (EVAP) Canister Vent Shut Valve Stuck Closed Malfunction	ON	(see page 11-418)
P2522 (40) *13	———	Throttle Actuator Control Module Relay Malfunction	ON	(see page 11-264)
P2610 (132) *8	———	Engine Control Module (ECM)/Powertrain Control Module (PCM) Ignition Off Internal Timer Performance Problem	ON	(see page 11-193)
P2646 (22)	○	Rocker Arm Oil Pressure Switch (VTEC Oil Pressure Switch) Circuit Low Voltage	ON	(see page 11-287)
P2647 (22)	○	Rocker Arm Oil Pressure Switch (VTEC Oil Pressure Switch) Circuit High Voltage	ON	(see page 11-289)
P2648 (21)	———	Rocker Arm Oil Control Solenoid (VTEC Solenoid Valve Circuit) Low Voltage	ON	(see page 11-291)
P2649 (21)	———	Rocker Arm Oil Control Solenoid (VTEC Solenoid Valve Circuit) High Voltage	ON	(see page 11-293)
P2A00 (61)	○	Air Fuel Ratio (A/F) Sensor (Sensor 1) Range/Performance Problem	ON	(see page 11-194)
U0073 (126) *5	———	F-CAN Malfunction (Bus-Off)	OFF	(see page 11-195)
U0073 (126) *6	———	F-CAN Malfunction (Bus-Off)	OFF	(see page 11-197)
U0107 (30) *13	———	Lost Communication With Throttle Actuator Control Module	ON	(see page 11-266)
U0155 (126) *5	———	F-CAN Malfunction (Gauge Control Module-Engine Control Module (ECM)/Powertrain Control Module (PCM))	OFF	(see page 11-195)
U0155 (126) *6	———	F-CAN Malfunction (Gauge Control Module-Engine Control Module (ECM)/Powertrain Control Module (PCM))	OFF	(see page 11-197)
U0155 (126) *13	———	F-CAN Malfunction (Gauge Control Module-Engine Control Module (ECM)/Powertrain Control Module (PCM))	ON	(see page 11-199)
U0155 (126) *14	———	F-CAN Malfunction (Gauge Control Module-Engine Control Module (ECM)/Powertrain Control Module (PCM))	ON	(see page 11-202)
U1102 (126) *10	———	F-CAN Malfunction (Bus-Off)	OFF	(see page 11-195)
U1102 (126) *11	———	F-CAN Malfunction (Bus-Off)	OFF	(see page 11-197)
U1102 (126) *13	———	F-CAN Malfunction (Bus-Off)	ON	(see page 11-199)
U1102 (126) *14	———	F-CAN Malfunction (Bus-Off)	ON	(see page 11-202)

NOTE: These DTCs are indicated when the PGM-FI system is selected in the HDS.
Some automatic transmission DTCs cause the MIL to come on. If the MIL is on and no DTCs are indicated in the PGM-FI system, select the A/T system, and check for automatic transmission DTCs.

* 1: These DTCs are indicated by a blinking MIL when the SCS line is jumped with the HDS.
* 5: 2003-2005 with Navigation System models
* 6: 2003-2005 without Navigation System models
* 7: 2003-2004 except SULEV, LX-P models
* 8: 2005-2006 models
* 10: 2005 with Navigation System model
* 11: 2005 without Navigation System model
* 13: 2006 model with Navigation System model
* 14: 2006 model without Navigation System model

Protected by AR

Symptom Troubleshooting Index

When the vehicle has one of these symptoms, check for a diagnostic trouble code (DTC) with the HDS. If there is no DTC, do the diagnostic procedure for the symptom, in the sequence listed, until you find the cause.

Symptom	Diagnostic procedure	Also check for
Engine will not start (MIL works OK, no DTCs set)	1. Test the battery (see page 22-78). 2. Test the starter solenoid (see page 4-9). 3. Check the fuel pressure (see page 11-332). 4. Troubleshoot the fuel pump circuit (see page 11-326).	• Low compression • No ignition spark • Intake air leaks • Locked up engine • Broken cam chain • Contaminated fuel
Engine will not start (MIL comes on and stays on, or never comes on at all, no DTCs set)	Troubleshoot the MIL circuit (see page 11-205).	
Engine will not start (immobilizer indicator stays on or flashes)	Troubleshoot the immobilizer system (see page 22-407).	
Engine starts but stalls immediately (MIL works OK, no DTCs set)	Troubleshoot the immobilizer system (see page 22-407).	
Engine is hard to start (MIL works OK, no DTCs set)	1. Test the battery (see page 22-78). 2. Check the fuel pressure (see page 11-332). 3. 2006 model: Clean the throttle body (see page 11-357).	• Low compression • Intake air leaks • Contaminated fuel • Weak spark
Cold fast idle too low (MIL works OK, no DTCs set)	1. Do the ECM/PCM idle learn procedure (see page 11-316). 2. Check the idle speed (see page 11-315). 3. 2006 model: Clean the throttle body (see page 11-357).	
Cold fast idle too high (MIL works OK, no DTCs set)	1. Do the ECM/PCM idle learn procedure (see page 11-316). 2. Check the idle speed (see page 11-315). 3. Inspect/adjust the throttle cable; 2003-2005 models (see page 11-362), 2006 model (see page 11-363). 4. 2003-2005 models: Test the throttle body (see page 11-356). 5. 2006 model: Do the throttle position learning check (see page 11-356).	
Idle speed fluctuates (MIL works OK, no DTCs set)	1. Do the ECM/PCM idle learn procedure (see page 11-316). 2. Check the idle speed (see page 11-315). 3. Inspect/adjust the throttle cable; 2003-2005 models (see page 11-362), 2006 model (see page 11-363). 4. 2003-2005 models: Test the throttle body (see page 11-356). 5. 2006 model: Do the carbon accumulation check (see page 11-356).	Intake vacuum leaks

BACK

Protected by AR

Symptom	Diagnostic procedure	Also check for
After warming up, idle speed is below specification without load (MIL works OK, no DTCs set)	1. 2003-2004 models: Troubleshoot the alternator FR signal circuit (see page 11-309). 2. 2005-2006 models: Troubleshoot the alternator FR signal circuit (see page 11-311). 3. 2003-2005 models: Test the throttle body (see page 11-356). 4. 2006 model: Do the carbon accumulation check (see page 11-356).	
After warming up, idle speed is above specification without load (MIL works OK, no DTCs set)	1. Inspect/adjust the throttle cable; 2003-2005 models (see page 11-362), 2006 model (see page 11-363). 2. 2003-2004 models: Troubleshoot the alternator FR signal circuit (see page 11-309). 3. 2005-2006 models: Troubleshoot the alternator FR signal circuit (see page 11-311). 4. 2006 model: Inspect the APP sensor (see page 11-273). 5. 2003-2005 models: Inspect the TP sensor (see page 11-358).	
Low power (MIL works OK, no DTCs set)	1. Check the fuel pressure (see page 11-332). 2. 2003-2005 models: Test the throttle body (see page 11-356). 3. Inspect/adjust the throttle cable; 2003-2005 models (see page 11-362), 2006 model (see page 11-363).	• Low compression • Incorrect camshaft timing • Incorrect engine oil level
Engine stalls (MIL works OK, no DTCs set)	1. Do the ECM/PCM idle learn procedure (see page 11-316). 2. Check the fuel pressure (see page 11-332). 3. Check the idle speed (see page 11-315). 4. Troubleshoot the brake pedal position switch signal circuit (see page 11-314).	• Intake air leaks • Faulty harness and sensor connections
Difficult to refuel (MIL works OK, no DTCs set)	1. Check the fuel vent tube between the EVAP canister and the fuel tank. 2. Check the fuel tank vapor recirculation tube between the fuel pipe and the fuel tank. 3. Check the fuel tank signal tube between the fuel pipe and the fuel tank (SULEV and LX-P models). 4. Replace the fuel tank (see page 11-347).	Malfunctioning gas station filling nozzle.
Fuel overflows during refueling (No DTCs set)	Replace the fuel tank (see page 11-347).	Malfunctioning gas station filling nozzle.

Protected by AR

System Description

Electronic Control System

The functions of the fuel and emission control systems are managed by the engine control module (ECM) on vehicles with manual transmission, or the powertrain control module (PCM) on vehicles with automatic transmissions.

Self-diagnosis
The ECM/PCM detects a failure of a signal from a sensor or from another control unit and stores a Temporary DTC or a DTC. Depending on the failure, a DTC is stored in the either first or the second drive cycle. When a DTC is stored, the ECM/PCM turns on the malfunction indicator lamp (MIL) by supplying ground to the MIL circuit.

- **One Drive Cycle Detection Method**
  When an abnormality occurs in the signal from a sensor or from another control unit, the ECM/PCM stores a DTC and turns on the MIL.

- **Two Drive Cycle Detection Method**
  When an abnormality occurs in the signal from a sensor or from another control unit in the first drive cycle, the ECM/PCM stores a Temporary DTC. The MIL does not come on at this time. If the failure continues in the second drive cycle, the ECM/PCM stores a DTC and turns on the MIL.

Fail-safe Function
When an abnormality occurs in the signal from a sensor or from another control unit, the ECM/PCM ignores that signal, stores a DTC and turns on the MIL. The ECM/PCM will use a pre-programmed value for that sensor which allows the engine to continue running. This causes a DTC to be stored and the MIL to comes on.

MIL Bulb Check and Readiness Code Condition
When the ignition switch is turned ON (II), the ECM/PCM supplies ground to the MIL circuit for about 15 to 20 seconds to check the bulb condition. If any readiness codes are not set to complete, the MIL flashes five times. If all readiness codes are set to complete, the MIL goes out.

Self Shut Down (SSD) Mode
After the ignition switch is turned OFF, the ECM/PCM stays on (up to 15 minutes). If the ECM/PCM connector is disconnected during this time, the ECM/PCM may be damaged. To cancel this mode, disconnect the negative cable from the battery or jump the SCS line with the HDS after the ignition switch is turned OFF.

BACK

Protected by AR

ECM/PCM Electrical Connections

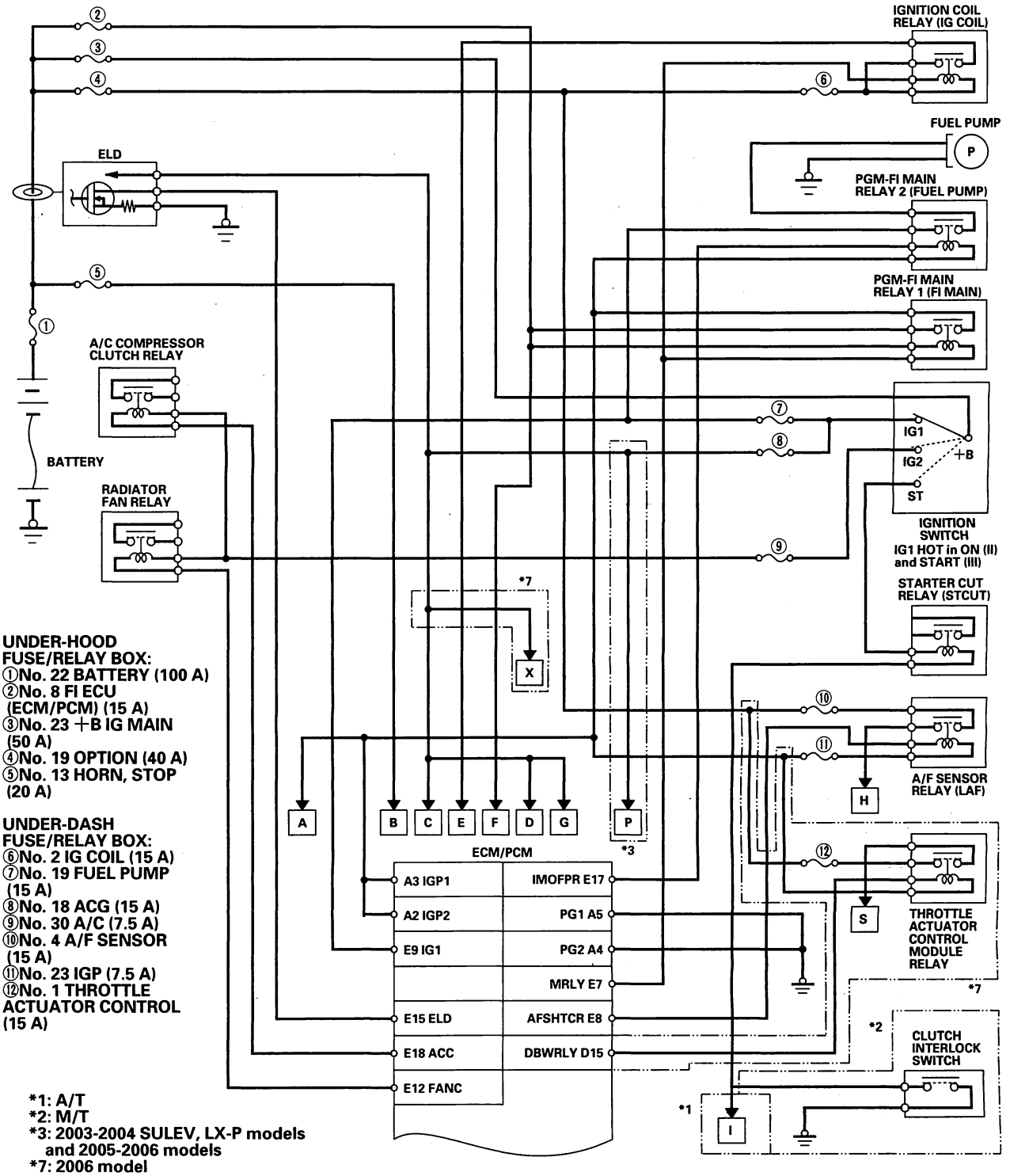

(cont'd)

BACK

Protected by AR

System Description (cont'd)

ECM/PCM Electrical Connections (cont'd)

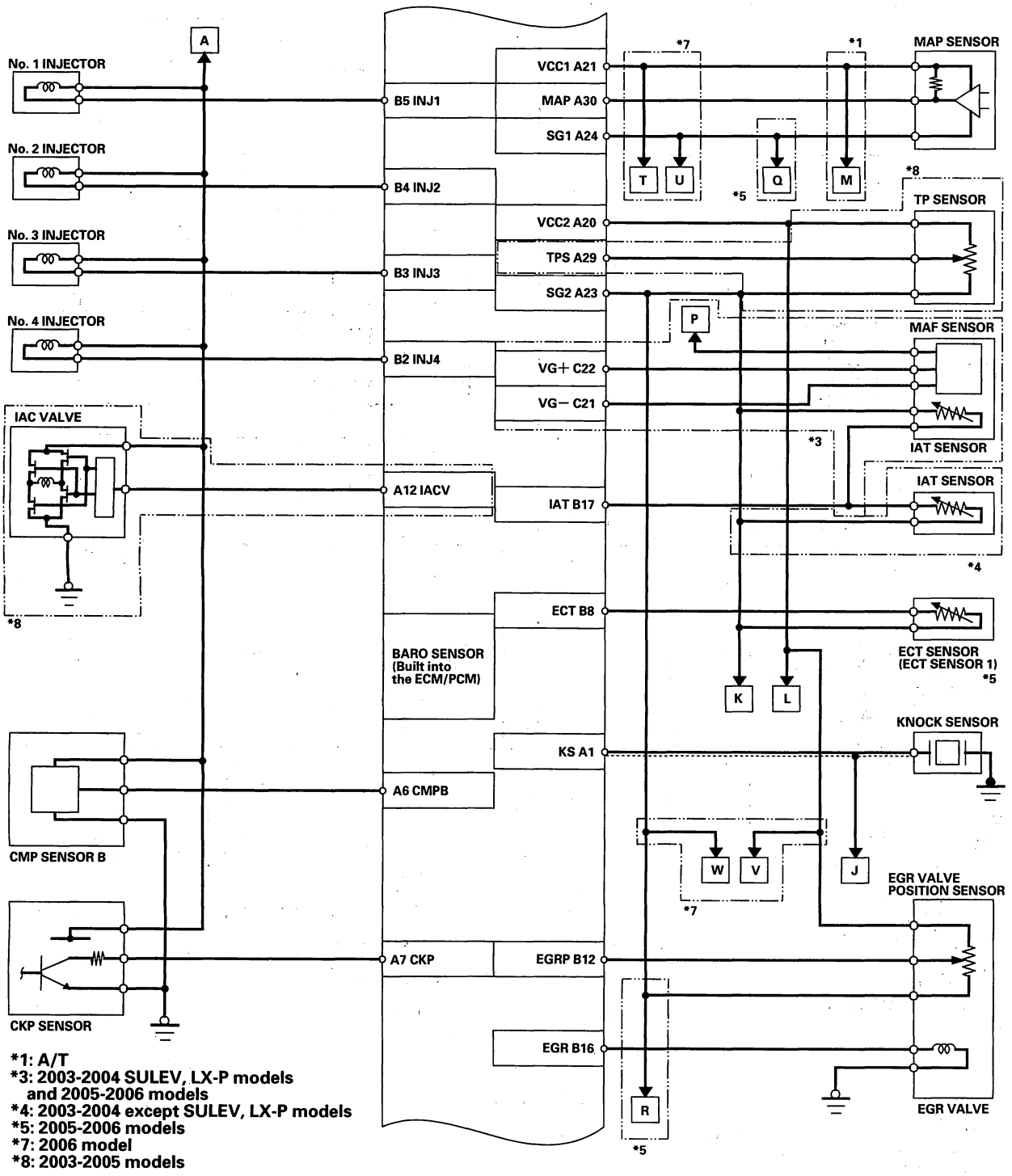

*1: A/T
*3: 2003-2004 SULEV, LX-P models and 2005-2006 models
*4: 2003-2004 except SULEV, LX-P models
*5: 2005-2006 models
*7: 2006 model
*8: 2003-2005 models

BACK

Protected by AR

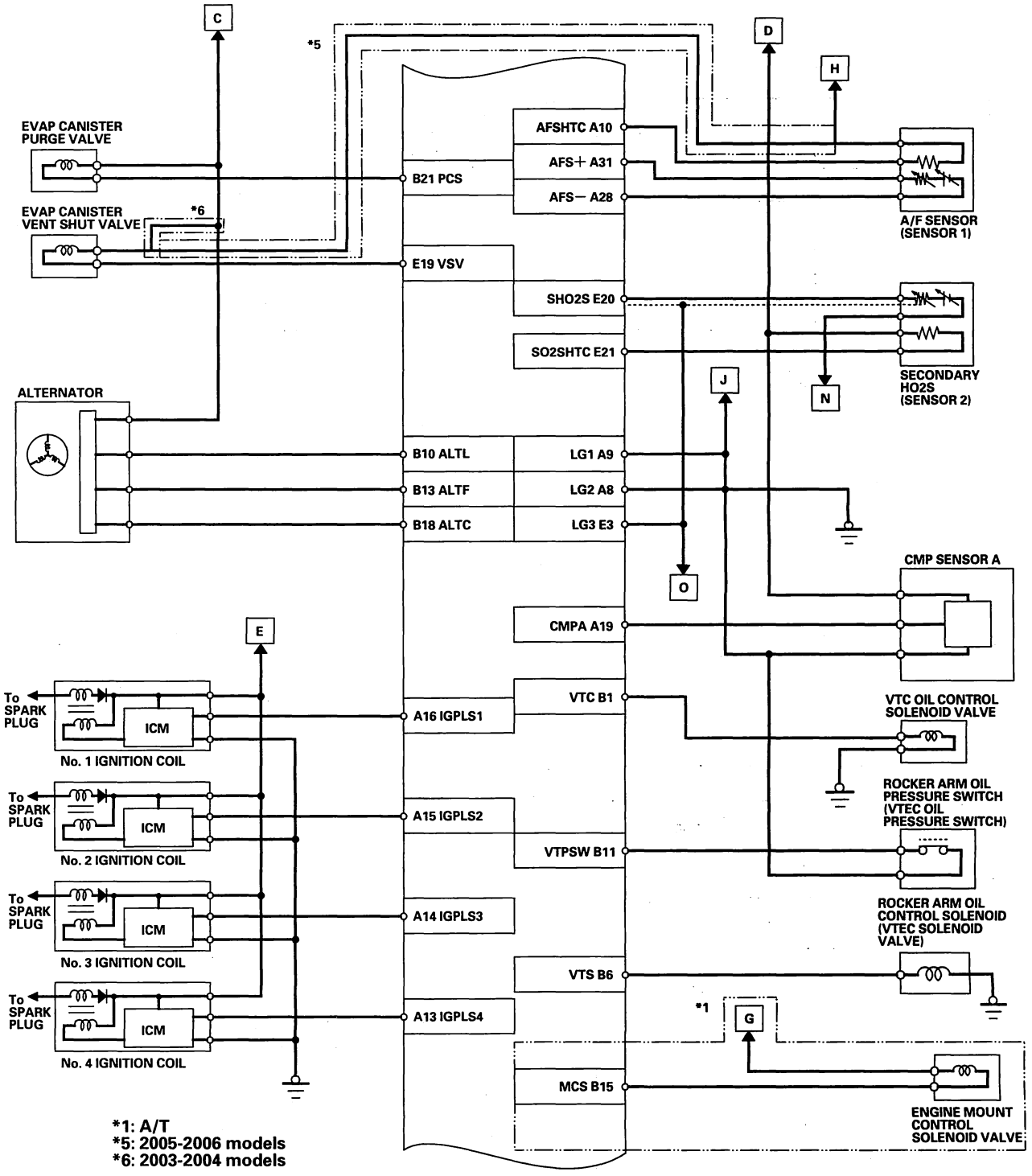

(cont'd)

Protected by AR

System Description (cont'd)

ECM/PCM Electrical Connections (cont'd)

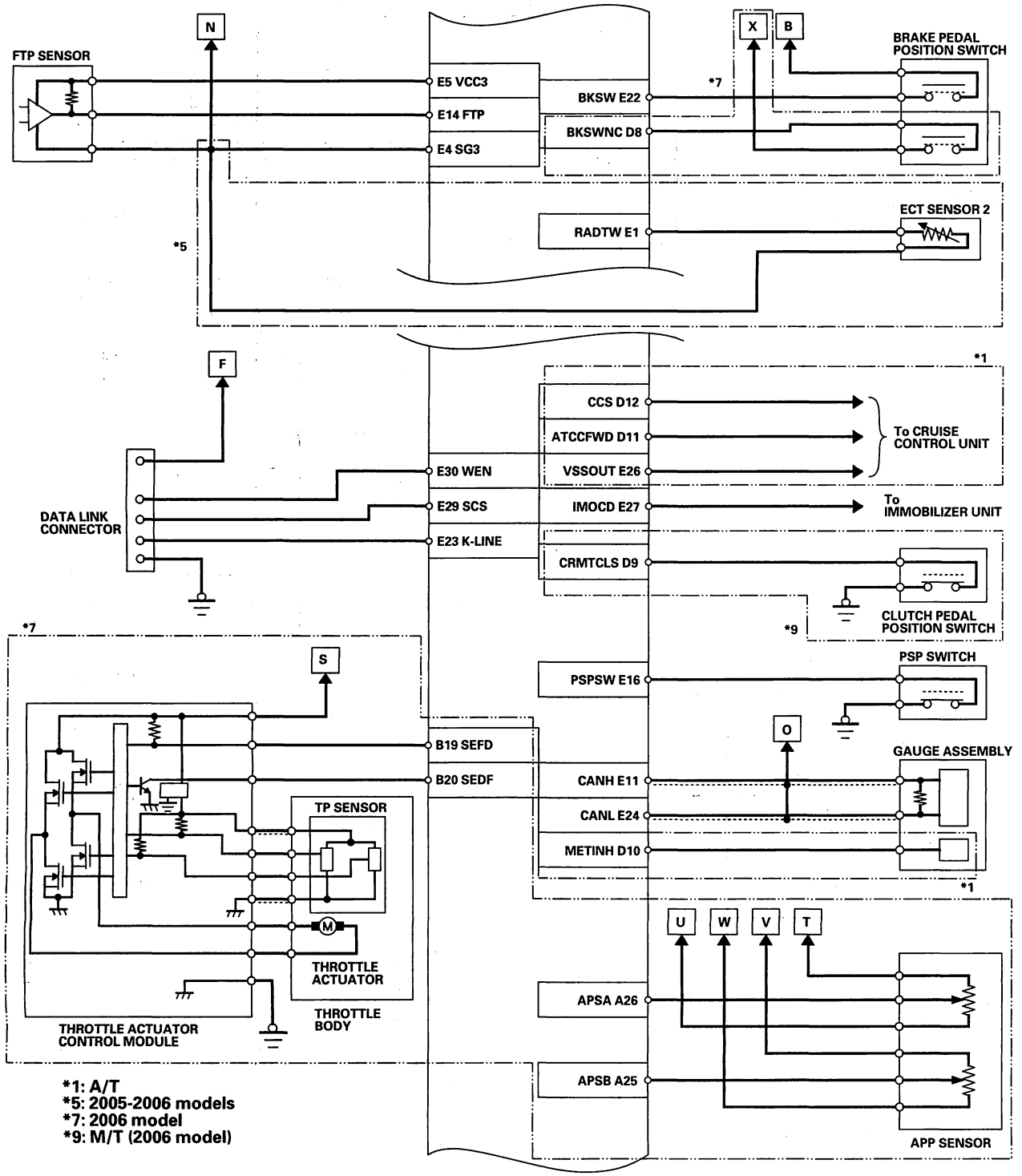

BACK

Protected by AR

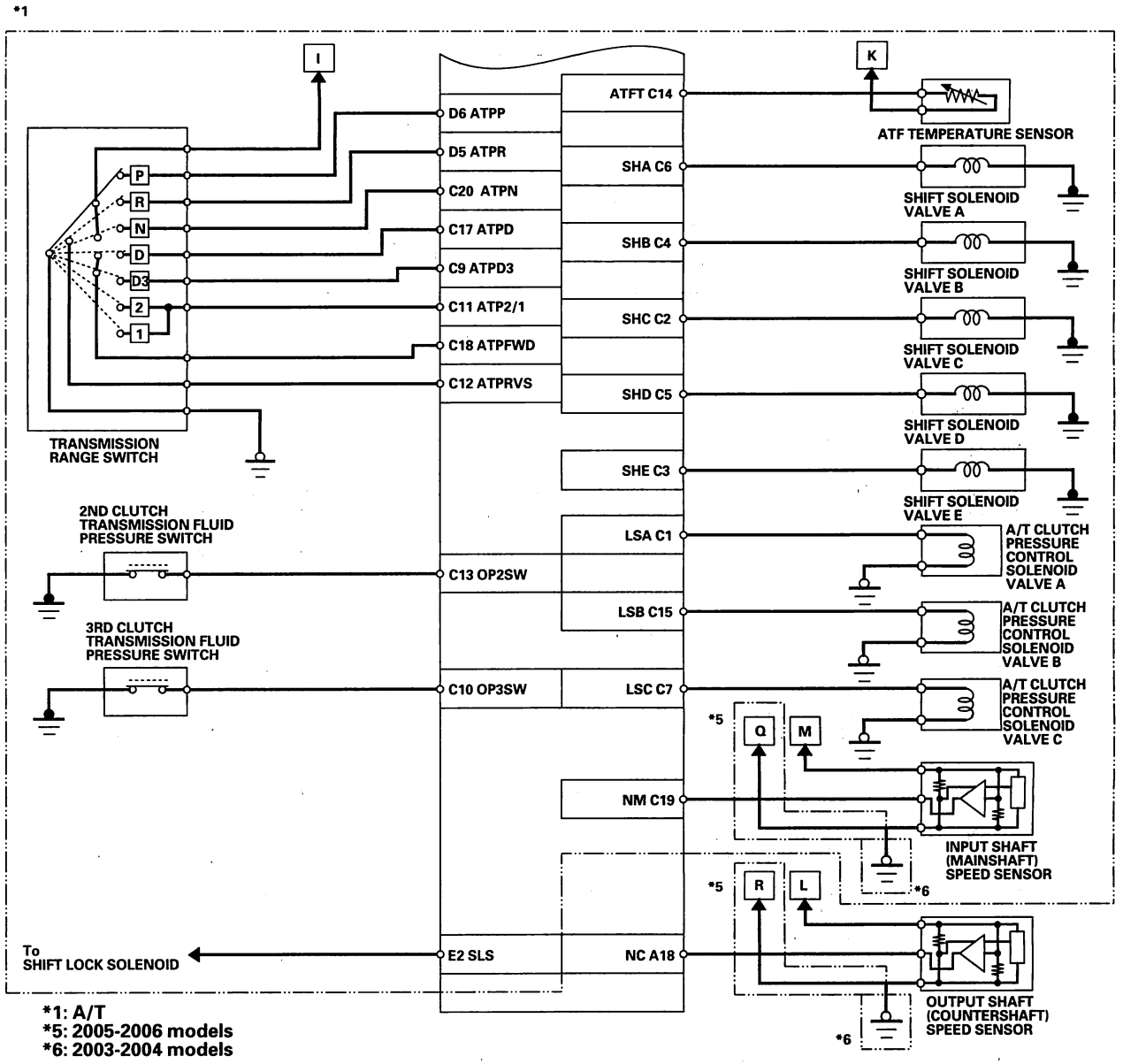

*1: A/T
*5: 2005-2006 models
*6: 2003-2004 models

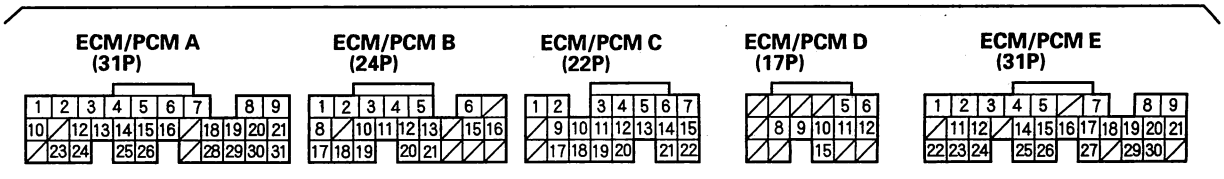

TERMINAL LOCATIONS

(cont'd)

BACK

Protected by AR

System Description (cont'd)

ECM/PCM Inputs and Outputs at Connector A (31P)

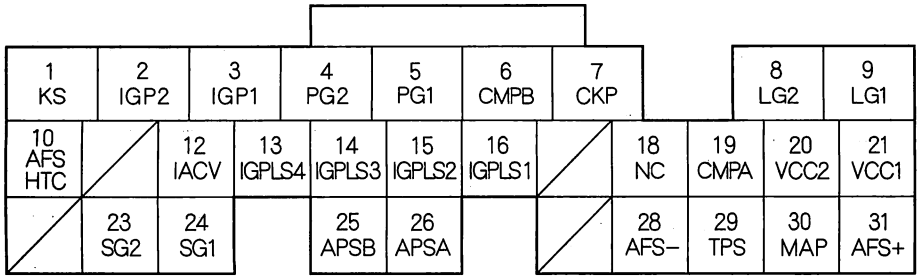

Wire side of female terminals

NOTE: Standard battery voltage is 12 V.

Terminal number	Wire color	Terminal name	Description	Signal
1	RED/BLU	KS (KNOCK SENSOR)	Detects knock sensor signal	With engine knocking: pulses
2	YEL/BLK	IGP2 (POWER SOURCE)	Power source for ECM/PCM circuit	With ignition switch ON (II): battery voltage With ignition switch OFF: about 0 V
3	YEL/BLK	IGP1 (POWER SOURCE)	Power source for ECM/PCM circuit	With ignition switch ON (II): battery voltage With ignition switch OFF: about 0 V
4	BLK	PG2 (POWER GROUND)	Ground circuit for ECM/ PCM	Less than 1.0 V at all times
5	BLK	PG1 (POWER GROUND)	Ground circuit for ECM/ PCM	Less than 1.0 V at all times
6	GRN	CMPB (CAMSHAFT POSITION SENSOR B)	Detects CMP sensor B signal	With engine running: pulses With the ignition switch ON (II): about 5.0 V
7	BLU	CKP (CRANKSHAFT POSITION SENSOR)	Detects CKP sensor signal	With engine running: pulses With the ignition switch ON (II): about 5.0 V
8	BRN/YEL	LG2 (LOGIC GROUND)	Ground circuit for ECM/ PCM	Less than 1.0 V at all times
9	BRN/YEL	LG1 (LOGIC GROUND)	Ground circuit for ECM/ PCM	Less than 1.0 V at all times
10	GRN	AFSHTC (AIR FUEL RATIO (A/F) SENSOR HEATER CONTROL)	Drives A/F sensor heater	With ignition switch ON (II): battery voltage With fully warmed up engine running: about 0 V
12*6	BLK/RED	IACV (IDLE AIR CONTROL (IAC) VALVE)	Drives IAC valve	With engine running: duty controlled
13	BRN	IGPLS4 (No. 4 IGNITION COIL PULSE)	Drives No. 4 ignition coil	With ignition switch ON (II): about 0 V With engine running: pulses
14	WHT/BLU	IGPLS3 (No. 3 IGNITION COIL PULSE)	Drives No. 3 ignition coil	
15	BLU/RED	IGPLS2 (No. 2 IGNITION COIL PULSE)	Drives No. 2 ignition coil	
16	YEL/GRN	IGPLS1 (No. 1 IGNITION COIL PULSE)	Drives No. 1 ignition coil	
18	BLK/BLU	NC (OUTPUT SHAFT (COUNTERSHAFT) SPEED SENSOR)	Detects output shaft (countershaft) speed sensor signal	With ignition switch ON (II): about 0 V or about 5.0 V While driving: about 2.5 V
19	BLU/WHT	CMPA (CAMSHAFT POSITION SENSOR A)	Detects CMP sensor A signal	With engine running: pulses With ignition switch ON (II): about 5.0 V

* 6: 2003-2005 models

BACK

Protected by AR

ECM/PCM Inputs and Outputs at Connector A (31P)

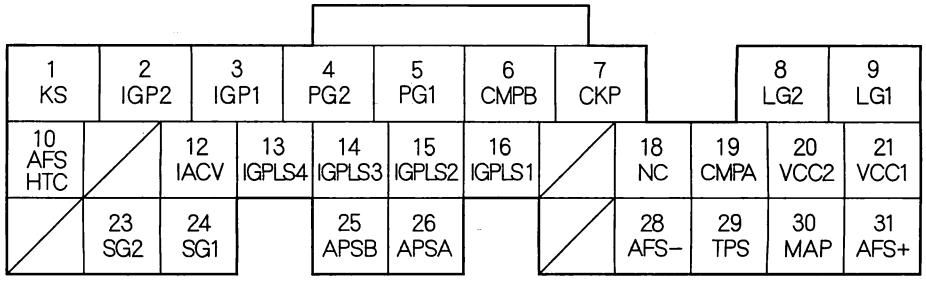

Wire side of female terminals

NOTE: Standard battery voltage is 12 V.

Terminal number	Wire color	Terminal name	Description	Signal
20	YEL/BLU	VCC2 (SENSOR VOLTAGE)	Provides sensor voltage	With ignition switch ON (II): about 5.0 V With ignition switch OFF: about 0 V
21	YEL/RED	VCC1 (SENSOR VOLTAGE)	Provides sensor voltage	With ignition switch ON (II): about 5.0 V With ignition switch OFF: about 0 V
23	GRN/YEL	SG2 (SENSOR GROUND)	Sensor ground	Less than 1.0 V at all times
24	GRN/WHT	SG1 (SENSOR GROUND)	Sensor ground	Less than 1.0 V at all times
25*7	RED/YEL	APSB (ACCELERATOR PEDAL POSITION (APP) SENSOR B)	Detects APP sensor B signal	With ignition switch ON (II) and accelerator pedal pressed: about 2.3 V With ignition switch ON (II) and accelerator pedal released: about 0.2 V
26*7	RED/BLU	APSA (ACCELERATOR PEDAL POSITION (APP) SENSOR A)	Detects APP sensor A signal	With ignition switch ON (II) and accelerator pedal pressed: about 4.5 V With ignition switch ON (II) and accelerator pedal released: about 0.5 V
28	RED/YEL	AFS− (AIR FUEL RATIO (A/F) SENSOR, SENSOR 1 −SIDE)	Detects A/F sensor (sensor 1) signal	
29*6	RED/BLK	TPS (THROTTLE POSITION SENSOR)	Detects TP sensor signal	With throttle fully open: about 4.5 V With throttle fully closed: about 0.5 V
30	GRN/RED	MAP (MANIFOLD ABSOLUTE PRESSURE SENSOR)	Detects MAP sensor signal	With ignition switch ON (II): about 3.0 V At idle: about 1.0 V (depending on engine speed)
31	RED	AFS+ (AIR FUEL RATIO (A/F) SENSOR, SENSOR 1 +SIDE)	Detects A/F sensor (sensor 1) signal	

* 6: 2003-2005 models
* 7: 2006 model

(cont'd)

BACK

Protected by AR

System Description (cont'd)

ECM/PCM Inputs and Outputs at Connector B (24P)

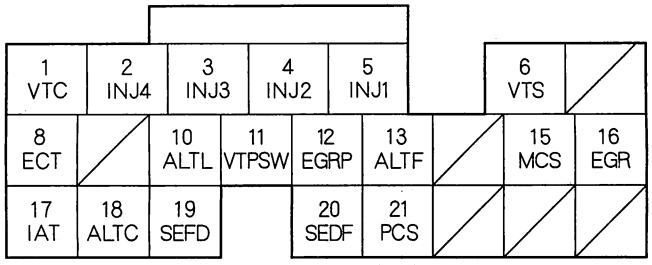

Wire side of female terminals

NOTE: Standard battery voltage is 12 V.

Terminal number	Wire color	Terminal name	Description	Signal
1	BLU/WHT	VTC (VTC OIL CONTROL SOLENOID VALVE)	Drives VTC oil control solenoid valve	With ignition switch ON (II): 0 V
2	YEL	INJ4 (No. 4 INJECTOR)	Drives No. 4 injector	At idle: duty controlled With ignition switch ON (II): battery voltage
3	BLU	INJ3 (No. 3 INJECTOR)	Drives No. 3 injector	
4	RED	INJ2 (No. 2 INJECTOR)	Drives No. 2 injector	
5	BRN	INJ1 (No. 1 INJECTOR)	Drives No. 1 injector	
6	GRN/YEL	VTS (ROCKER ARM OIL CONTROL SOLENOID (VTEC SOLENOID VALVE))	Drives rocker arm oil control solenoid (VTEC solenoid valve)	At idle: about 0 V
8	RED/WHT	ECT (ENGINE COOLANT TEMPERATURE SENSOR (ENGINE COOLANT TEMPERATURE SENSOR 1)*4)	Detects ECT sensor (ECT sensor 1)*4 signal	With ignition switch ON (II): about 0.1—4.8 V (depending on engine coolant temperature) With fully warmed up engine: about 0.5—0.7 V
10	WHT/BLU	ALTL (ALTERNATOR L SIGNAL)	Detects alternator signal	With ignition switch ON (II): about 0 V With engine running: battery voltage
11	BLU/BLK	VTPSW (ROCKER ARM OIL PRESSURE SWITCH (VTEC OIL PRESSURE SWITCH))	Detects rocker arm oil pressure switch (VTEC oil pressure switch) signal	With engine at low speed: about 0 V With engine at high speed: battery voltage
12	WHT/BLK	EGRP (EXHAUST GAS RECIRCULATION (EGR) VALVE POSITION SENSOR)	Detects EGR valve position sensor signal	With engine running: 1.2—3.0 V (depending on EGR valve lift)
13	WHT/RED	ALTF (ALTERNATOR FR SIGNAL)	Detects alternator FR signal	With engine running: about 0—5.0 V (depending on electrical load)
15*2	BLU/YEL	MCS (ENGINE MOUNT CONTROL SOLENOID VALVE)	Drives engine mount control solenoid valve	At idle: about 0 V Above idle: battery voltage With ignition switch ON (II): battery voltage
16	BLU/RED	EGR (EXHAUST GAS RECIRCULATION (EGR) VALVE)	Drives EGR valve	With EGR operating: duty controlled With EGR not operating: about 0 V
17	RED/YEL	IAT (INTAKE AIR TEMPERATURE SENSOR)	Detects IAT sensor signal	With ignition switch ON (II): about 0.1—4.8 V (depending on intake air temperature)
18	WHT/GRN	ALTC (ALTERNATOR CONTROL)	Sends alternator control signal	With engine running and fully warmed up: about 8.0 V
19*7	GRN	SEFD (THROTTLE ACTUATOR CONTROL SERIAL SIGNAL)	Sends throttle actuator control serial signal	
20*7	BLU	SEFD (THROTTLE ACTUATOR CONTROL SERIAL SIGNAL)	Detects throttle actuator control serial signal	
21	YEL/BLU	PCS (EVAPORATIVE EMISSION CANISTER PURGE VALVE)	Drives EVAP canister purge valve	With engine running, engine coolant below 131° F (55 °C): battery voltage With engine running, engine coolant above 131 °F (55 °C): duty controlled

* 2: A/T
* 4: 2005-2006 models
* 7: 2006 model

BACK

Protected by AR

ECM/PCM Inputs and Outputs at Connector C (22P)

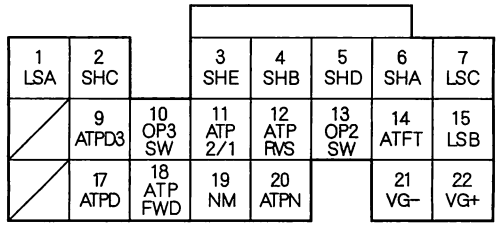

Wire side of female terminals

NOTE: Standard battery voltage is 12 V.

Terminal number	Wire color	Terminal name	Description	Signal
1*2	RED/BLK	LSA (A/T CLUTCH PRESSURE CONTROL SOLENOID VALVE A)	Drives A/T clutch pressure control solenoid valve A	With ignition switch ON (II): duty controlled
2*2	GRN	SHC (SHIFT SOLENOID VALVE C)	Drives shift solenoid valve C	With engine running in Neutral and 1, or in D or D3 (in 1st, 3rd and 5th gears): battery voltage With engine running in Park, R, 2, or D or D3 (in 2nd, 4th gears): about 0 V
2*3	BLU/WHT			
3*2	YEL	SHE (SHIFT SOLENOID VALVE E)	Drives shift solenoid valve E	With engine running in Park, R: battery voltage With engine running in Neutral, or in D, D3, 2, and 1: about 0 V
3*3	RED/BLK			
4*2	GRN/WHT	SHB (SHIFT SOLENOID VALVE B)	Drives shift solenoid valve B	With engine running in Park, R, Neutral, 2, and 1, or D, D3 (in 1st, 2nd gears): battery voltage With engine running in D, D3 (in 3rd, 4th, 5th gears): about 0 V
4*3	RED			
5*2	GRN/RED	SHD (SHIFT SOLENOID VALVE D)	Drives shift solenoid valve D	With engine running in 2 or D, D3 (in 2nd, 5th gears): battery voltage With engine running in Park, R, Neutral, 1, or D, D3 position (in 1st, 3rd, 4th, gears): about 0 V
5*3	GRN/RED			
6*2	BLU/BLK	SHA (SHIFT SOLENOID VALVE A)	Drives shift solenoid valve A	With engine running in R and 1, or D, D3 (in 1st, 4th, 5th gears): battery voltage With engine running in Park, Neutral and 2, or D, D3 (in 2nd, 3rd gears): about 0 V
7*2	BLU/YEL	LSC (A/T CLUTCH PRESSURE CONTROL SOLENOID VALVE C)	Drives A/T clutch pressure control solenoid valve C	With ignition switch ON (II): duty controlled
9*2	RED	ATPD3 (TRANSMISSION RANGE SWITCH D3)	Detects transmission range switch D3 signal input	In D3: about 0 V In any other position: battery voltage
10*2	BLU/WHT	OP3SW (3RD CLUTCH TRANSMISSION FLUID PRESSURE SWITCH)	Detects 3rd clutch transmission fluid pressure switch signal output	With ignition switch ON (II): about 5.0 V With 3rd clutch pressure: about 0 V
11*2	GRN/RED	ATP2/1 (TRANSMISSION RANGE SWITCH 2ND/1ST)	Detects transmission range switch 2/1 signal input	In 2/1: about 0 V In any other position: battery voltage
12*2	RED/WHT	ATPRVS (TRANSMISSION RANGE SWITCH R)	Detects transmission range switch R signal input	In R: about 0 V In any other position: battery voltage
13*2	BLU/RED	OP2SW (2ND CLUTCH TRANSMISSION FLUID PRESSURE SWITCH)	Detects 2nd clutch transmission fluid pressure switch signal input	With ignition switch ON (II): about 5.0 V With 2nd clutch pressure: about 0 V
14*2	RED/YEL	ATFT (ATF TEMPERATURE SENSOR)	Detects ATF temperature sensor signal input	With ignition switch ON (II): about 0.2—4.8 V (depending on ATF temperature)

* 2: A/T
* 3: M/T (2005-2006 models)

(cont'd)

Protected by AR

System Description (cont'd)

ECM/PCM Inputs and Outputs at Connector C (22P)

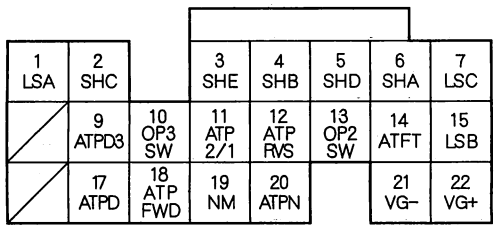

Wire side of female terminals

NOTE: Standard battery voltage is 12 V.

Terminal number	Wire color	Terminal name	Description	Signal
15*2	BRN/WHT	LSB (A/T CLUTCH PRESSURE CONTROL SOLENOID VALVE B)	Drives A/T clutch pressure control solenoid valve B	With ignition switch ON (II): duty controlled
15*3	RED/WHT			
17*2	YEL/GRN	ATPD (TRANSMISSION RANGE SWITCH D)	Detects transmission range switch D signal	In D: about 0 V In any other position: battery voltage
18*2	BLU/YEL	ATPFWD (TRANSMISSION RANGE SWITCH D, D3, 2)	Detects transmission range switch D, D3, 2 signal	In D, D3, and 2: about 0 V In any other position: battery voltage
19*2	WHT/RED	NM (INPUT SHAFT (MAINSHAFT) SPEED SENSOR)	Detects input shaft (mainshaft) speed sensor signal	With ignition switch ON (II): about 0 V or about 5.0 V With engine running in Neutral: about 2.5 V
20*2	RED/BLK	ATPN (TRANSMISSION RANGE SWITCH NEUTRAL)	Detects transmission range switch Neutral signal	In Neutral: about 0 V In any other position: battery voltage
21*1	BLK/RED	VG− (MASS AIR FLOW (MAF) SENSOR −SIDE)	Ground for MAF sensor signal	
22*1	RED/GRN	VG+ (MASS AIR FLOW (MAF) SENSOR +SIDE)	Detects MAF sensor signal	At idle: 1.1−1.6 V

* 1: 2003-2004 SULEV, LX-P models and 2005-2006 models
* 2: A/T
* 3: M/T (2005-2006 models)

BACK

Protected by AR

ECM/PCM Inputs and Outputs at Connector D (17P)

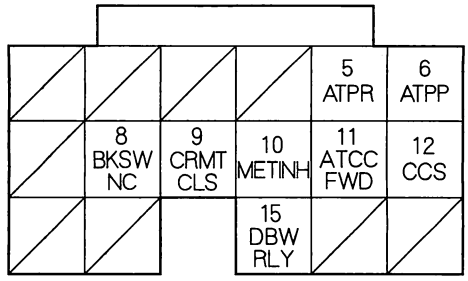

Wire side of female terminals

NOTE: Standard battery voltage is 12 V.

Terminal number	Wire color	Terminal name	Description	Signal
5*2	WHT	ATPR (TRANSMISSION RANGE SWITCH R)	Detects transmission range switch R signal	In R: about 0 V In any other position: battery voltage
6*2	BLU/RED	ATPP (TRANSMISSION RANGE SWITCH PARK)	Detects transmission range switch Park signal	In Park: about 0 V In any other position: battery voltage
8*7	BRN/BLK	BKSWNC (BRAKE PEDAL POSITION SWITCH)	Detects brake pedal position switch signal	With ignition switch ON (II) and brake pedal released: battery voltage With ignition switch ON (II) and brake pedal pressed: about 0 V
9*8	LT BLU	CRMTCLS (CRUISE CLUTCH PEDAL POSITION SIGNAL)	Detects cruise clutch pedal position switch signal	With ignition switch ON (II) and clutch pedal released: about 0 V With ignition switch ON (II) and clutch pedal pressed: battery voltage
10*2	GRN	METINH (METER DISPLAY INHIBIT SIGNAL)	Sends inhibit signal	With ignition switch ON (II): battery voltage
11*2	PNK	ATCCFWD (TRANSMISSION RANGE SWITCH CRUISE CONTROL FWD SIGNAL)	Sends Park and D3 transmission range switch signal to cruise control unit	In D, D3: about 0 V In any other than D, D3: battery voltage
12*2	BLU/BLK	CCS (CRUISE CONTROL SIGNAL)	Detects cruise control signal	With cruise control on: pulses
15*7	BRN/YEL	DBWRLY (THROTTLE ACTUATOR CONTROL MODULE RELAY)	Drives throttle actuator control module relay	With ignition switch ON (II): about 0 V

* 2: A/T
* 7: 2006 model
* 8: M/T (2006 model)

(cont'd)

Protected by AR

System Description (cont'd)

ECM/PCM Inputs and Outputs at Connector E (31P)

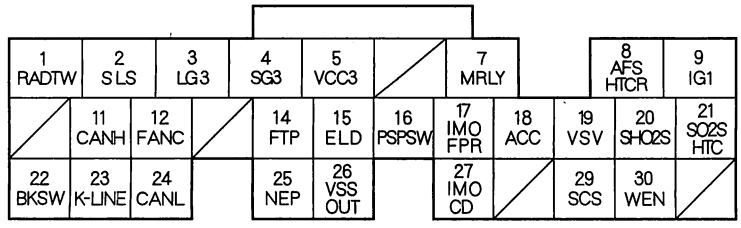

Wire side of female terminals

NOTE: Standard battery voltage is 12 V.

Terminal number	Wire color	Terminal name	Description	Signal
1*4	YEL/RED	RADTW (RADIATOR FAN CONTROL)	Detects ECT sensor 2 signal	With ignition switch ON (II): 0.1—4.9 V (depending on engine coolant temperature)
2*2	YEL/BLK	SLS (SHIFT LOCK SOLENOID)	Drives shift lock solenoid	With ignition switch ON (II), in the Park position, brake pedal pressed, and accelerator released: about 0 V
3	BRN/YEL	LG3 (LOGIC GROUND)	Ground for ECM/PCM control circuit	Less than 1.0 V at all times
4	GRN/BLK	SG3 (SENSOR GROUND)	Sensor ground	Less than 1.0 V at all times
5	YEL/GRN	VCC3 (SENSOR VOLTAGE)	Provides sensor voltage	With ignition switch ON (II): about 5.0 V With ignition switch OFF: about 0 V
7	RED/BLK	MRLY (PGM-FI MAIN RELAY)	Drives PGM-FI main relay 1 (FI MAIN) Power source for DTC memory	With ignition switch ON (II): about 0 V With ignition switch OFF: battery voltage
8	PNK	AFSHTCR (AIR FUEL RATIO (A/F) SENSOR HEATER CONTROL RELAY)	Drives A/F sensor heater relay	With ignition switch ON (II): about 0 V
9	BLK/YEL	IG1 (IGNITION SIGNAL)	Detects ignition signal	With ignition switch ON (II): battery voltage With ignition switch OFF: about 0 V
11	WHT	CANH (CAN COMMUNICATION SIGNAL HIGH)	Sends communication signal	With ignition switch ON (II): pulses
12	GRN	FANC (RADIATOR FAN CONTROL)	Drives radiator fan relay	With radiator fan running: about 0 V With radiator fan stopped: battery voltage
14	LT GRN	FTP (FUEL TANK PRESSURE (FTP) SENSOR)	Detects FTP sensor signal	With ignition switch ON (II) and fuel fill cap off: about 2.5 V
15	BLU/BLK	ELD (ELECTRICAL LOAD DETECTOR)	Detects ELD signal	With ignition switch ON (II): about 0.1—4.8 V (depending on electrical load)
16	BLU/YEL	PSPSW (POWER STEERING PRESSURE SWITCH SIGNAL)	Detects PSP switch signal	At idle with steering wheel straight ahead: about 0 V At idle with steering wheel at full lock: battery voltage
17	GRN/YEL	IMOFPR (IMMOBILIZER FUEL PUMP RELAY)	Drives PGM-FI main relay 2 (FUEL PUMP)	0 V for 2 seconds after turning ignition switch ON (II), then battery voltage
18	RED	ACC (A/C CLUTCH RELAY)	Drives A/C clutch relay	With compressor ON: about 0 V With compressor OFF: battery voltage
19	LT GRN/RED	VSV (EVAPORATIVE EMISSION (EVAP) CANISTER VENT SHUT VALVE)	Drives EVAP canister vent shut valve	With ignition switch ON (II): battery voltage
20	WHT/RED	SHO2S (SECONDARY HEATED OXYGEN SENSOR (SECONDAY HO2S) SENSOR 2)	Detects secondary HO2S (sensor 2) signal	With throttle fully closed at idle and fully warmed up engine: above 0.6 V With throttle quickly closed: below 0.4 V

* 2: A/T
* 4: 2005-2006 models

BACK

Protected by AR

ECM/PCM Inputs and Outputs at Connector E (31P)

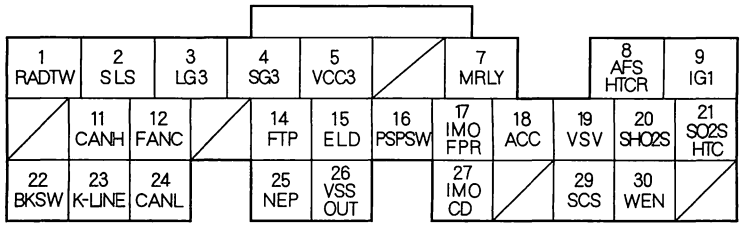

Wire side of female terminals

NOTE: Standard battery voltage is 12 V.

Terminal number	Wire color	Terminal name	Description	Signal
21	BLK/WHT	SO2SHTC (SECONDARY HEATED OXYGEN SENSOR (SECONDAY HO2S) HEATER CONTROL)	Drives secondary HO2S heater	With ignition switch ON (II): battery voltage With fully warmed up engine running: duty controlled
22	WHT/BLK	BKSW (BRAKE PEDAL POSITION SWITCH)	Detects brake pedal position switch signal	With brake pedal released: about 0 V With brake pedal pressed: battery voltage
23	BLU	K-LINE	Sends and receives HDS signals	With ignition switch ON (II) and the HDS disconnected: pulses or battery voltage
24	RED	CANL (CAN COMMUNICATION SIGNAL LOW)	Sends the communication signal	With ignition switch ON (II): pulses
25	BLU/RED	NEP	Not used	
26	BLU/WHT	VSSOUT (VEHICLE SPEED SENSOR OUTPUT SIGNAL)	Sends vehicle speed sensor signal	Depending on vehicle speed: pulses With ignition switch ON (II): battery voltage
27	RED/BLU	IMOCD (IMMOBILIZER CODE)	Detects immobilizer signal	
29	BRN	SCS (SERVICE CHECK SIGNAL)	Detects service check signal	With the service check signal shorted using HDS: about 0 V With the service check signal open: about 5.0 V
30	RED/WHT	WEN (WRITE ENABLE SIGNAL)	Detects write enable signal	With ignition switch ON (II): about 0 V

(cont'd)

Protected by AR

System Description (cont'd)

Vacuum Hose Routing

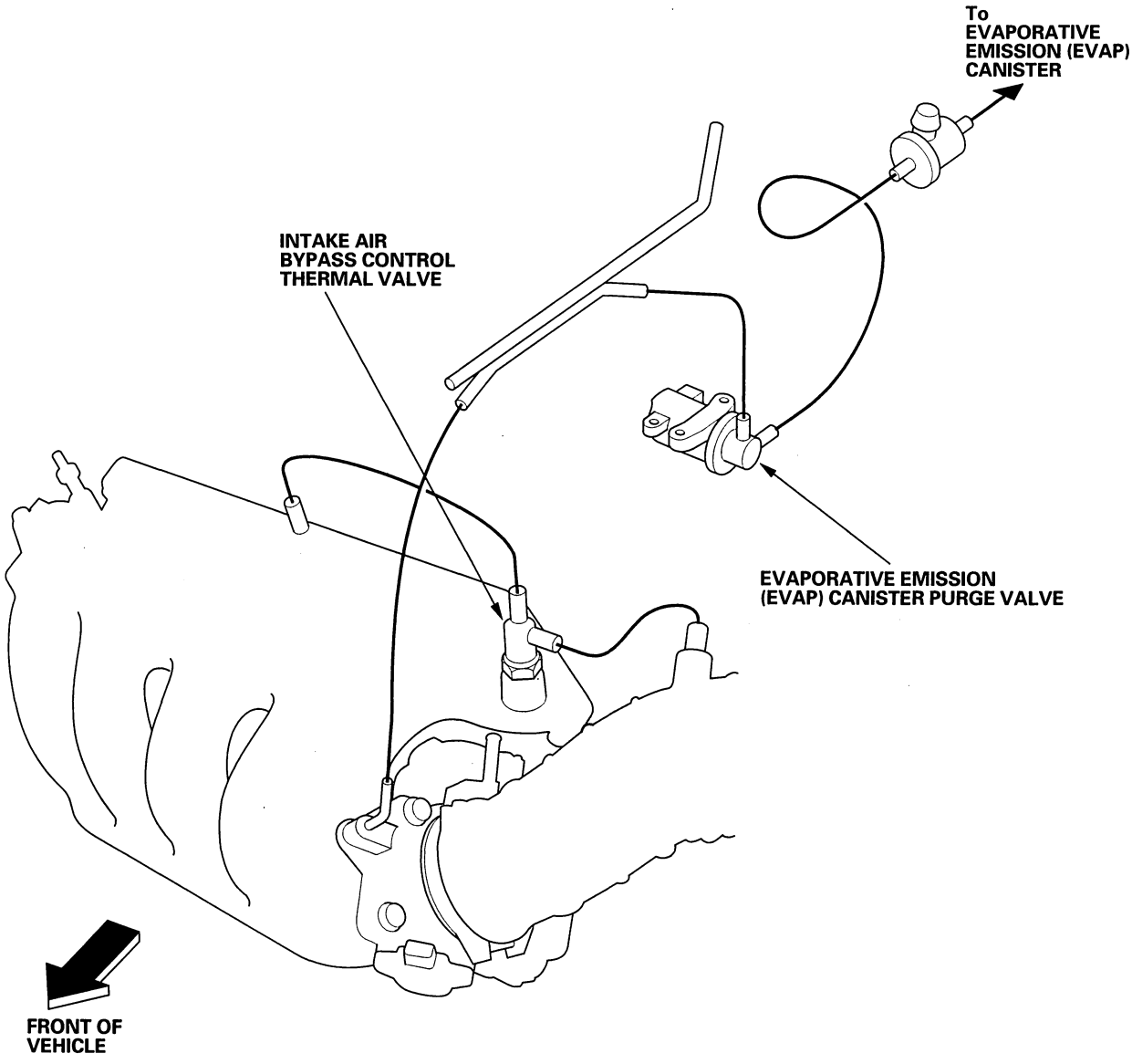

*: This illustration shows 2003-2005 models.

BACK

Protected by AR

Vacuum Distribution

Non-SULEV model (2003-2005 models)

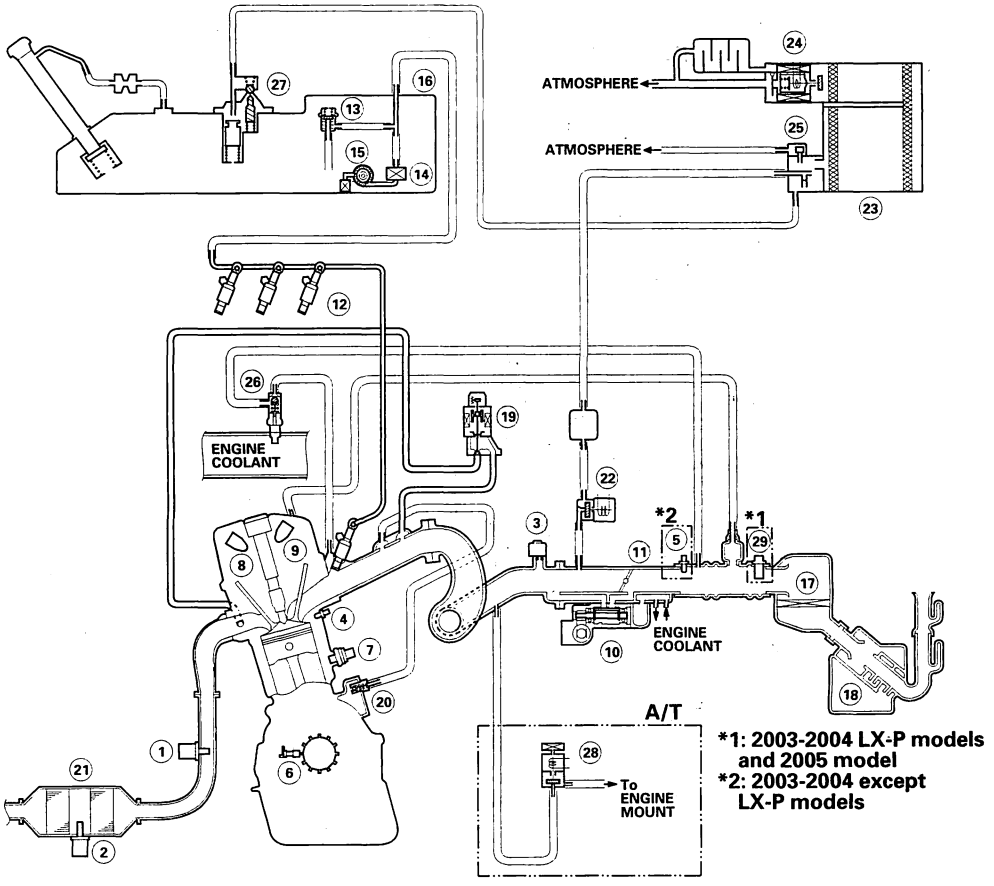

① AIR FUEL RATIO (A/F) SENSOR (SENSOR 1)
② SECONDARY HEATED OXYGEN SENSOR (SECONDARY HO2S) (SENSOR 2)
③ MANIFOLD ABSOLUTE PRESSURE (MAP) SENSOR
④ ENGINE COOLANT TEMPERATURE (ECT) SENSOR (2005 model: ENGINE COOLANT TEMPERATURE (ECT) SENSOR 1)
⑤ INTAKE AIR TEMPERATURE (IAT) SENSOR
⑥ CRANKSHAFT POSITION (CKP) SENSOR
⑦ KNOCK SENSOR
⑧ CAMSHAFT POSITION (CMP) SENSOR B
⑨ CAMSHAFT POSITION (CMP) SENSOR A
⑩ IDLE AIR CONTROL (IAC) VALVE
⑪ THROTTLE BODY
⑫ INJECTOR
⑬ FUEL PRESSURE REGULATOR
⑭ FUEL FILTER
⑮ FUEL PUMP
⑯ FUEL TANK
⑰ AIR CLEANER
⑱ RESONATOR
⑲ EXHAUST GAS RECIRCULATION (EGR) VALVE and POSITION SENSOR
⑳ POSITIVE CRANKCASE VENTILATION (PCV) VALVE
㉑ THREE WAY CATALYTIC CONVERTER
㉒ EVAPORATIVE EMISSION (EVAP) CANISTER PURGE VALVE
㉓ EVAPORATIVE EMISSION (EVAP) CANISTER
㉔ EVAPORATIVE EMISSION (EVAP) CANISTER VENT SHUT VALVE
㉕ FUEL TANK PRESSURE (FTP) SENSOR
㉖ INTAKE AIR BYPASS CONTROL THERMAL VALVE
㉗ FUEL TANK VAPOR CONTROL VALVE
㉘ ENGINE MOUNT CONTROL SOLENOID VALVE
㉙ MASS AIR FLOW (MAF) SENSOR and INTAKE AIR TEMPERATURE (IAT) SENSOR

(cont'd)

Protected by AR

System Description (cont'd)

Non-SULEV model (2006 model)

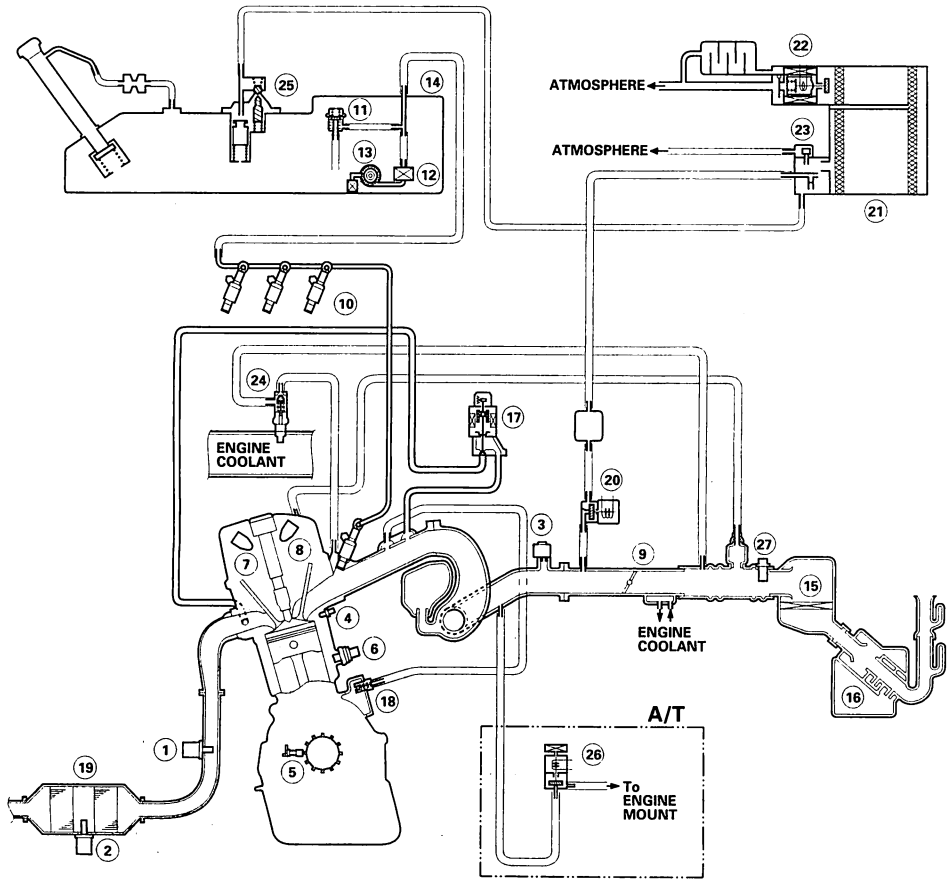

① AIR FUEL RATIO (A/F) SENSOR (SENSOR 1)
② SECONDARY HEATED OXYGEN SENSOR (SECONDARY HO2S) (SENSOR 2)
③ MANIFOLD ABSOLUTE PRESSURE (MAP) SENSOR
④ ENGINE COOLANT TEMPERATURE (ECT) SENSOR 1
⑤ CRANKSHAFT POSITION (CKP) SENSOR
⑥ KNOCK SENSOR
⑦ CAMSHAFT POSITION (CMP) SENSOR B
⑧ CAMSHAFT POSITION (CMP) SENSOR A
⑨ THROTTLE BODY
⑩ INJECTOR
⑪ FUEL PRESSURE REGULATOR
⑫ FUEL FILTER
⑬ FUEL PUMP
⑭ FUEL TANK
⑮ AIR CLEANER
⑯ RESONATOR
⑰ EXHAUST GAS RECIRCULATION (EGR) VALVE and POSITION SENSOR
⑱ POSITIVE CRANKCASE VENTILATION (PCV) VALVE
⑲ THREE WAY CATALYTIC CONVERTER
⑳ EVAPORATIVE EMISSION (EVAP) CANISTER PURGE VALVE
㉑ EVAPORATIVE EMISSION (EVAP) CANISTER
㉒ EVAPORATIVE EMISSION (EVAP) CANISTER VENT SHUT VALVE
㉓ FUEL TANK PRESSURE (FTP) SENSOR
㉔ INTAKE AIR BYPASS CONTROL THERMAL VALVE
㉕ FUEL TANK VAPOR CONTROL VALVE
㉖ ENGINE MOUNT CONTROL SOLENOID VALVE
㉗ MASS AIR FLOW (MAF) SENSOR and INTAKE AIR TEMPERATURE (IAT) SENSOR

BACK

Protected by AR

SULEV model (2003-2005 models)

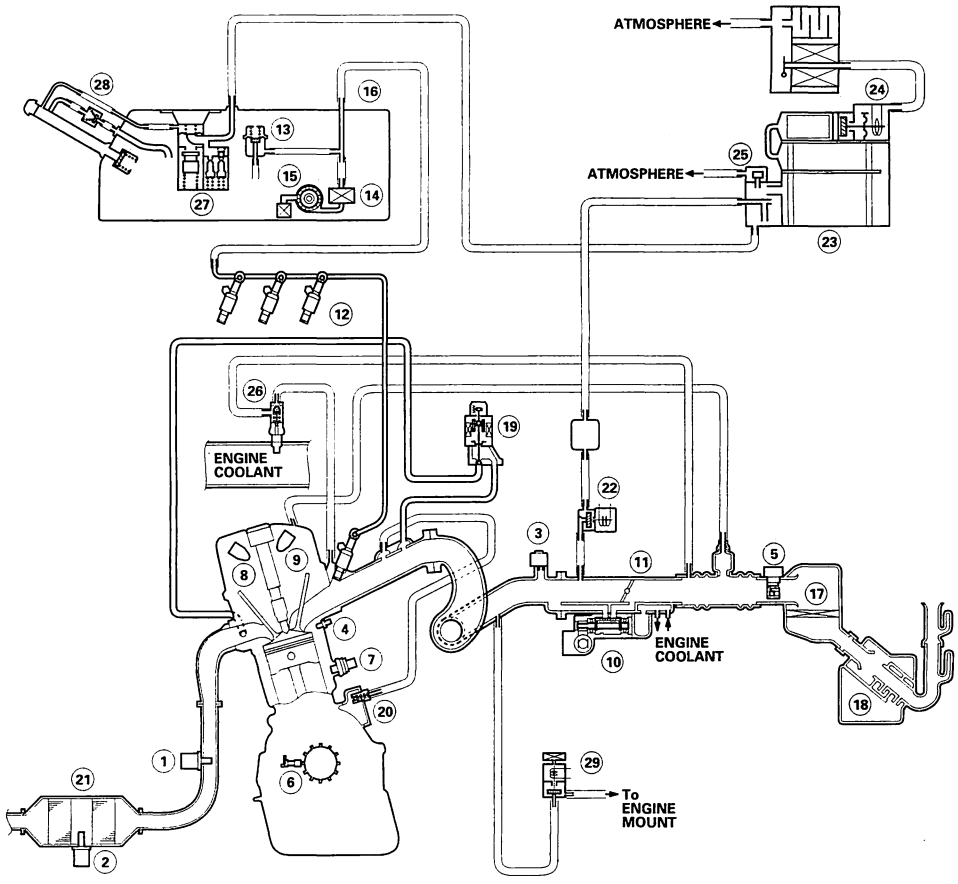

① AIR FUEL RATIO (A/F) SENSOR (SENSOR 1)
② SECONDARY HEATED OXYGEN SENSOR (SECONDARY HO2S) (SENSOR 2)
③ MANIFOLD ABSOLUTE PRESSURE (MAP) SENSOR
④ ENGINE COOLANT TEMPERATURE (ECT) SENSOR (2005 model: ENGINE COOLANT TEMPERATURE (ECT) SENSOR 1)
⑤ MASS AIR FLOW (MAF) SENSOR and INTAKE AIR TEMPERATURE (IAT) SENSOR
⑥ CRANKSHAFT POSITION (CKP) SENSOR
⑦ KNOCK SENSOR
⑧ CAMSHAFT POSITION (CMP) SENSOR B
⑨ CAMSHAFT POSITION (CMP) SENSOR A
⑩ IDLE AIR CONTROL (IAC) VALVE
⑪ THROTTLE BODY
⑫ INJECTOR
⑬ FUEL PRESSURE REGULATOR
⑭ FUEL FILTER
⑮ FUEL PUMP
⑯ FUEL TANK
⑰ AIR CLEANER
⑱ RESONATOR
⑲ EXHAUST GAS RECIRCULATION (EGR) VALVE and POSITION SENSOR
⑳ POSITIVE CRANKCASE VENTILATION (PCV) VALVE
㉑ THREE WAY CATALYTIC CONVERTER
㉒ EVAPORATIVE EMISSION (EVAP) CANISTER PURGE VALVE
㉓ EVAPORATIVE EMISSION (EVAP) CANISTER
㉔ EVAPORATIVE EMISSION (EVAP) CANISTER VENT SHUT VALVE
㉕ FUEL TANK PRESSURE (FTP) SENSOR
㉖ INTAKE AIR BYPASS CONTROL THERMAL VALVE
㉗ FUEL TANK VAPOR CONTROL VALVE
㉘ FUEL TANK VAPOR RECIRCULATION VALVE
㉙ ENGINE MOUNT CONTROL SOLENOID VALVE

(cont'd)

Protected by AR

System Description (cont'd)

SULEV model (2006 model)

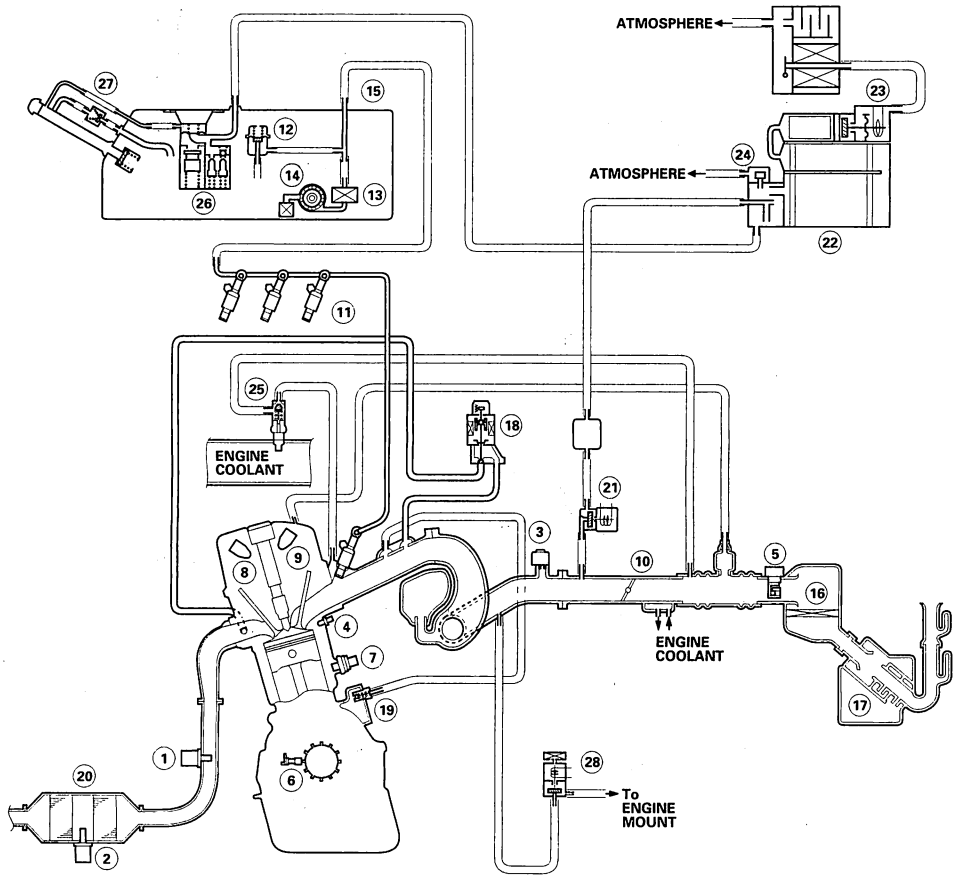

① AIR FUEL RATIO (A/F) SENSOR (SENSOR 1)
② SECONDARY HEATED OXYGEN SENSOR (SECONDARY HO2S) (SENSOR 2)
③ MANIFOLD ABSOLUTE PRESSURE (MAP) SENSOR
④ ENGINE COOLANT TEMPERATURE (ECT) SENSOR 1
⑤ MASS AIR FLOW (MAF) SENSOR and INTAKE AIR TEMPERATURE (IAT) SENSOR
⑥ CRANKSHAFT POSITION (CKP) SENSOR
⑦ KNOCK SENSOR
⑧ CAMSHAFT POSITION (CMP) SENSOR B
⑨ CAMSHAFT POSITION (CMP) SENSOR A
⑩ THROTTLE BODY
⑪ INJECTOR
⑫ FUEL PRESSURE REGULATOR
⑬ FUEL FILTER
⑭ FUEL PUMP
⑮ FUEL TANK
⑯ AIR CLEANER
⑰ RESONATOR
⑱ EXHAUST GAS RECIRCULATION (EGR) VALVE and POSITION SENSOR
⑲ POSITIVE CRANKCASE VENTILATION (PCV) VALVE
⑳ THREE WAY CATALYTIC CONVERTER
㉑ EVAPORATIVE EMISSION (EVAP) CANISTER PURGE VALVE
㉒ EVAPORATIVE EMISSION (EVAP) CANISTER
㉓ EVAPORATIVE EMISSION (EVAP) CANISTER VENT SHUT VALVE
㉔ FUEL TANK PRESSURE (FTP) SENSOR
㉕ INTAKE AIR BYPASS CONTROL THERMAL VALVE
㉖ FUEL TANK VAPOR CONTROL VALVE
㉗ FUEL TANK VAPOR RECIRCULATION VALVE
㉘ ENGINE MOUNT CONTROL SOLENOID VALVE

BACK

Protected by AR

PGM-FI System

The programmed fuel injection (PGM-FI) system is a sequential multiport fuel injection system.

Air Conditioning (A/C) Compressor Clutch Relay
When the ECM/PCM receives a demand for cooling from the A/C system, it delays the compressor from being energized and enriches the mixture to assure smooth transition to the A/C mode.

Air Fuel Ratio (A/F) Sensor
The A/F sensor operates over a wide air/fuel range. The A/F sensor is installed upstream of the TWC, and sends signals to the ECM/PCM which varies the duration of fuel injection accordingly.

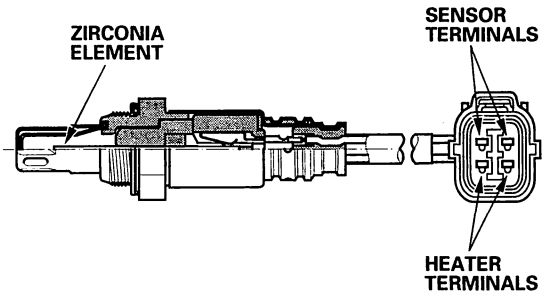

Barometric Pressure (BARO) Sensor
The BARO sensor is inside the ECM/PCM. It converts atmospheric pressure into a voltage signal that the ECM/PCM uses to modify the basic duration of the fuel injection discharge.

Camshaft Position (CMP) Sensor B
CMP sensor B detects the position of the No. 1 cylinder as a reference for sequential fuel injection to each cylinder.

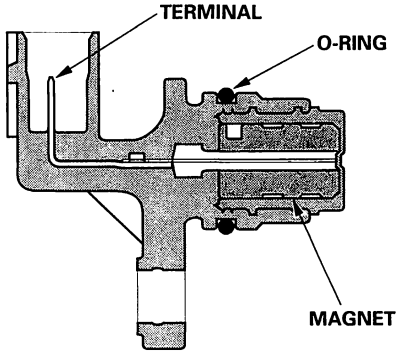

Crankshaft Position (CKP) Sensor
The CKP sensor detects crankshaft speed and is used by the ECM/PCM to determine ignition timing and timing for fuel injection of each cylinder, as well as detecting engine misfire.

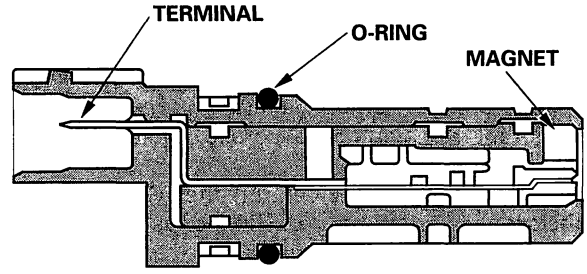

Engine Coolant Temperature (ECT) Sensor (2005-2006 models: Engine Coolant Temperature (ECT) Sensor 1)
The ECT sensor (2005-2006 models: ECT sensor 1) is a temperature dependent resistor (thermistor). The resistance of the thermistor decreases as the engine coolant temperature increases.

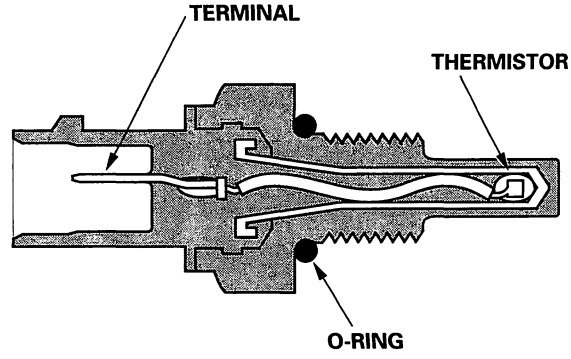

(cont'd)

Protected by AR

System Description (cont'd)

Ignition Timing Control
The ECM/PCM contains the memory for basic ignition timing at various engine speeds and manifold absolute pressures. It also adjusts the timing according to engine coolant temperature and intake air temperature.

Injector Timing and Duration
The ECM/PCM contains the memory for basic discharge duration at various engine speeds and manifold pressures. The basic discharge duration, after being read out from the memory, is further modified by signals sent from various sensors to obtain the final discharge duration.
By monitoring long term fuel trim, the ECM/PCM detects long term malfunctions in the fuel system and sets a diagnostic trouble code (DTC).

Intake Air Temperature (IAT) Sensor (except 2003-2004 SULEV, LX-P models, and 2005-2006 models)
The IAT sensor is a temperature dependent resistor (thermistor). The resistance of the thermistor decreases as the intake air temperature increases.

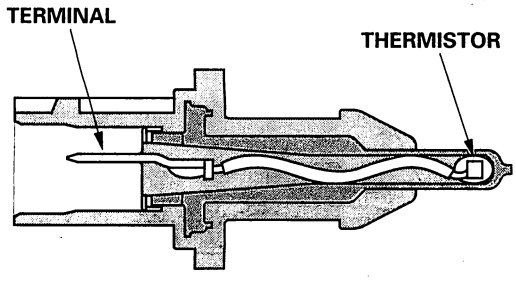

Knock Sensor
The knock control system adjusts the ignition timing to minimize knock.

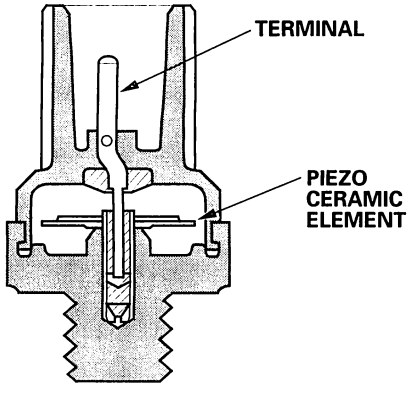

Malfunction Indicator Lamp (MIL) Indication (In relation to Readiness Codes)
The vehicle has certain "readiness codes" that are part of the on-board diagnostics for the emissions systems. If the vehicle's battery has been disconnected or gone dead, if the DTCs have been cleared, or if the ECM/PCM has been reset, these codes are reset. In some states, part of the emissions testing is to make sure these codes are set to complete. If all of them are not set to complete, the vehicle may fail the test, or the test cannot be finished.

To check if the readiness codes are set to complete, turn the ignition switch ON (II), but do not start the engine. The MIL will come on for 15—20 seconds. If it then goes off, the readiness codes are complete. If it flashies five times, one or more readiness codes are not complete. To set each code, drive the vehicle or run the engine as described in the procedures (see page 11-59).

Manifold Absolute Pressure (MAP) Sensor
The MAP sensor converts manifold absolute pressure into electrical signals to the ECM/PCM.

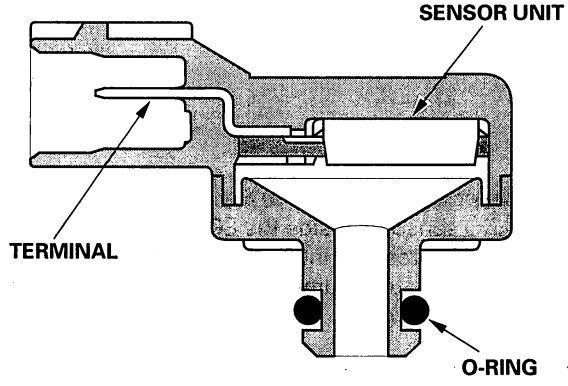

BACK

Protected by AR

Mass Air Flow (MAF) Sensor/Intake Air Temperature (IAT) Sensor (2003-2004 SULEV, LX-P models, and 2005-2006 models)
The mass air flow/intake air temperature (MAF/IAT) sensor contains a hot wire and a thermistor. It is located in the intake air passage. The resistance of the hot wire and thermistor change due to intake air temperature and air flow. The control circuit in the MAF sensor controls the current to keep the hot wire at a set temperature. The current is converted to voltage in the control circuit, then output to the ECM/PCM.

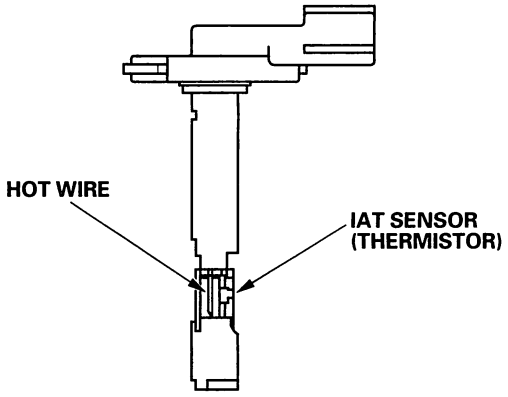

Output Shaft (Countershaft) Speed Sensor (M/T)
This sensor detects countershaft speed.

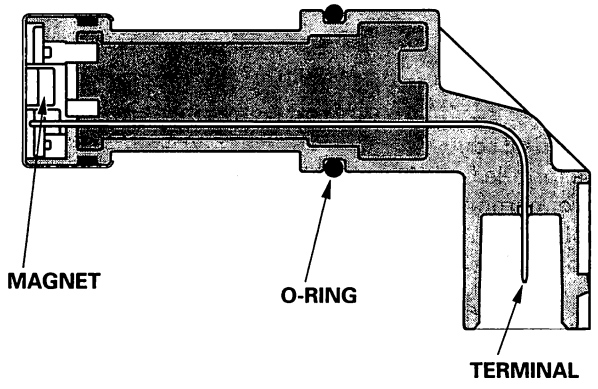

Secondary Heated Oxygen Sensor (Secondary HO2S)
The secondary HO2S detects the oxygen content in the exhaust gas downstream of the three way catalytic converter (TWC), and sends signals to the ECM/PCM which varies the duration of fuel injection accordingly. To stabilize its output, the sensor has an internal heater. The ECM/PCM compares the HO2S output with the A/F sensor output to determine catalyst efficiency. The secondary HO2S is on the TWC.

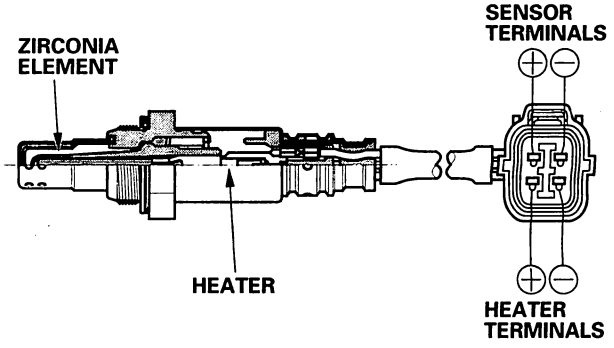

Throttle Position (TP) Sensor (2003-2005 models)
The TP sensor is a potentiometer connected to the throttle valve shaft. As the throttle position changes, the sensor varies the signal voltage to the ECM/PCM. The TP sensor is not available separately from the throttle body.

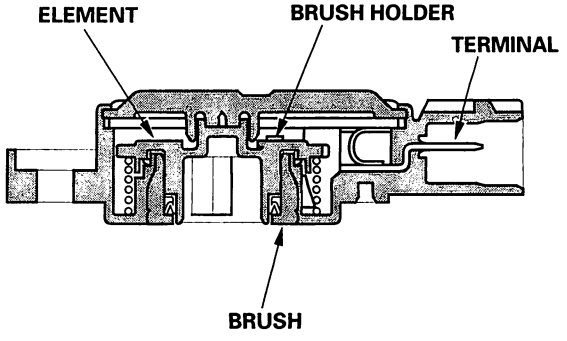

(cont'd)

Protected by AR

System Description (cont'd)

Electronic Throttle Control System (2006 model)

The throttle is electronically controlled by the electronic throttle control system. Refer to the system diagram to see a functional layout of the system.

Idle control: When the engine is idling, the ECM/PCM controls the throttle actuator to maintain the proper idle speed according to engine loads.

Acceleration control: When the accelerator pedal is pressed, the ECM/PCM opens the throttle valve depending on the accelerator pedal position (APP) sensor signal.

Cruise control: The ECM/PCM controls the throttle actuator to maintain set speed when the cruise control is operating. The throttle actuator takes the place of the cruise control actuator.

Accelerator Pedal Position (APP) Sensor
As the accelerator pedal position changes, the sensor varies the signal voltage to the ECM/PCM.

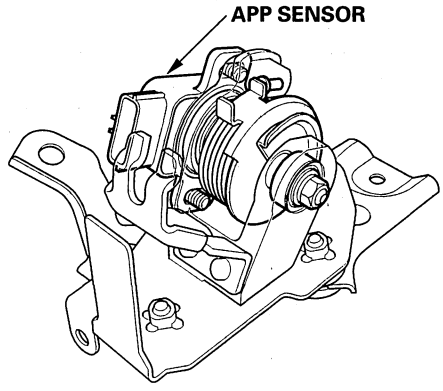

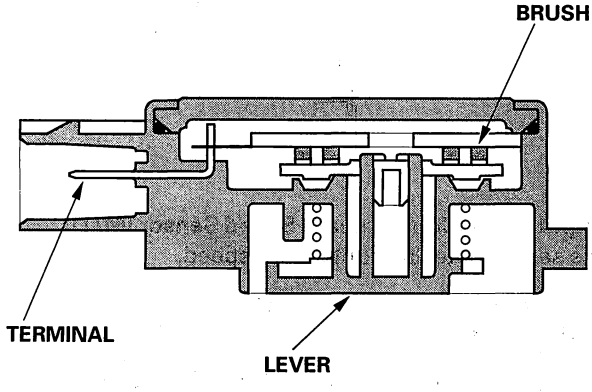

Throttle Body
The throttle body is a single-barrel side draft type. The lower portion of the throttle valve is heated by engine coolant from the cylinder head to prevent icing of the throttle plate.

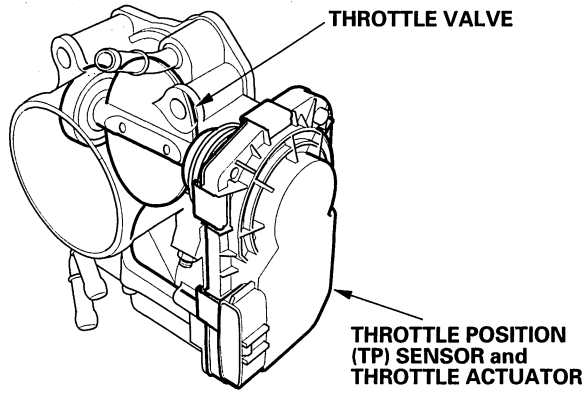

BACK

Protected by AR

VTEC/VTC

- The i-VTEC has a VTC (Variable Valve Timing Control) mechanism on the intake camshaft in addition to the usual VTEC.
  This mechanism improves fuel efficiency and reduces exhaust emissions at all levels of engine speed, vehicle speed, and engine load.
- The VTEC mechanism changes the valve lift and timing by using more than one cam profile.
- The VTC changes the phase of the intake camshaft via oil pressure. It changes the intake valve timing continuously.

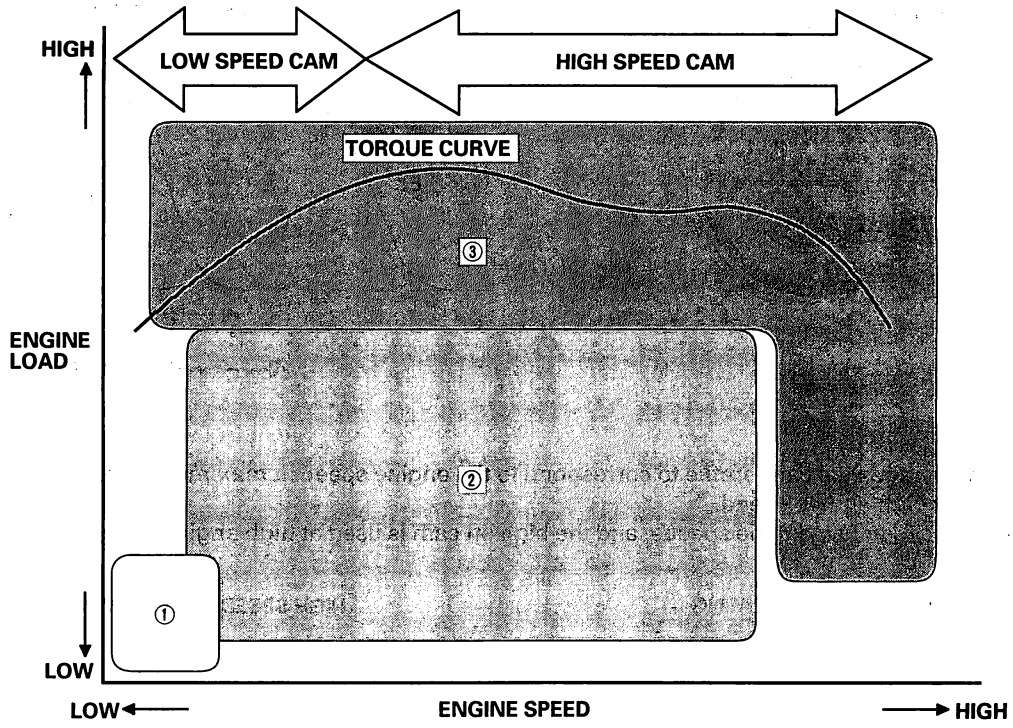

Driving Condition	VTC Control	Description
① Light-load	Base Position	Cam angle is retarded to reduce the entry of exhaust gas into the intake port.
② Medium/high-load	Advance Control	To reduce pumping loss, the intake valve is closed quickly to help reduce the entry of air/fuel mixture into the intake port and improve the charging effect.
③ High speed	Advance-Base Position	Cam phase angle is controlled for optimum valve timing and maximum engine power.

(cont'd)

Protected by AR

System Description (cont'd)

VTC System

- The VTC system makes continuous intake valve timing changes based on operating conditions.
- Intake valve timing is optimized to allow the engine to produce maximum power.
- Cam angle is advanced to obtain the EGR effect and reduce pumping loss. The intake valve is closed quickly to reduce the entry of the air/fuel mixture into the intake port and improve the charging effect.
- The system reduces the cam advance at idle, stabilizes combustion, and reduces engine speed.
- If a malfunction occurs, the VTC system control is disabled and the valve timing is fixed at the fully retarded position.

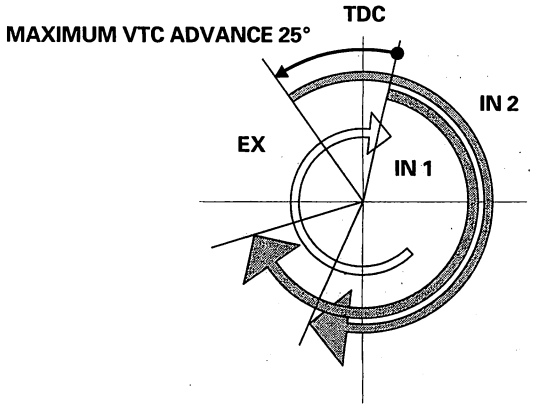

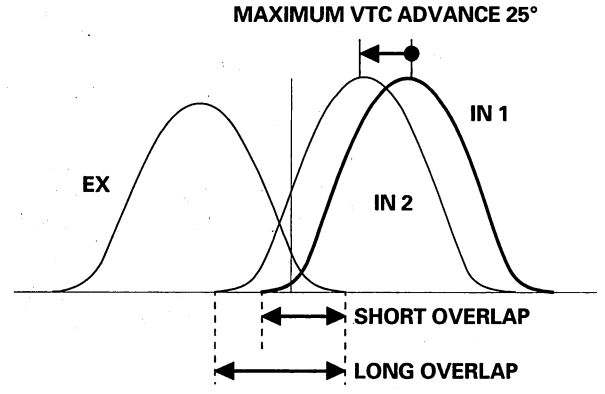

VTEC System

- The VTEC system changes the cam profile to correspond to the engine speed. It maximizes torque at low engine speed and output at high engine speed.
- The low lift cam is used at low engine speeds, and the high lift cam is used at high engine speeds.

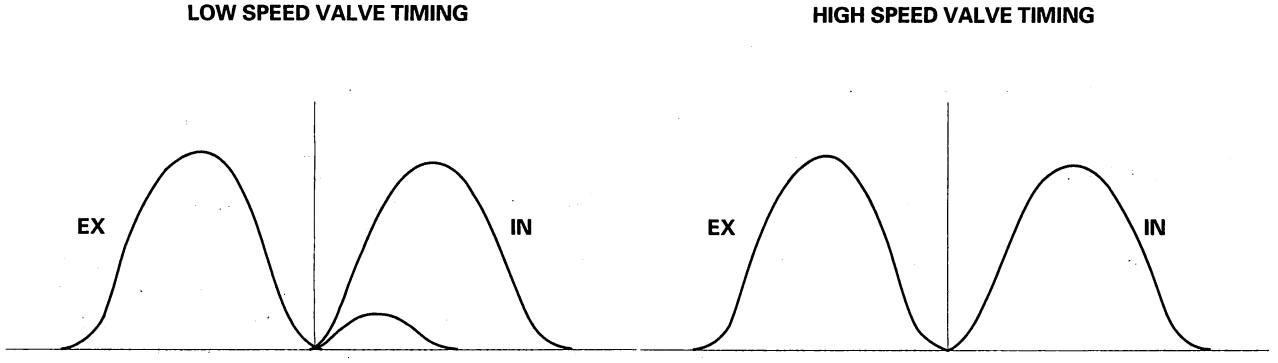

BACK

Protected by AR

VTEC/VTC

System Diagram

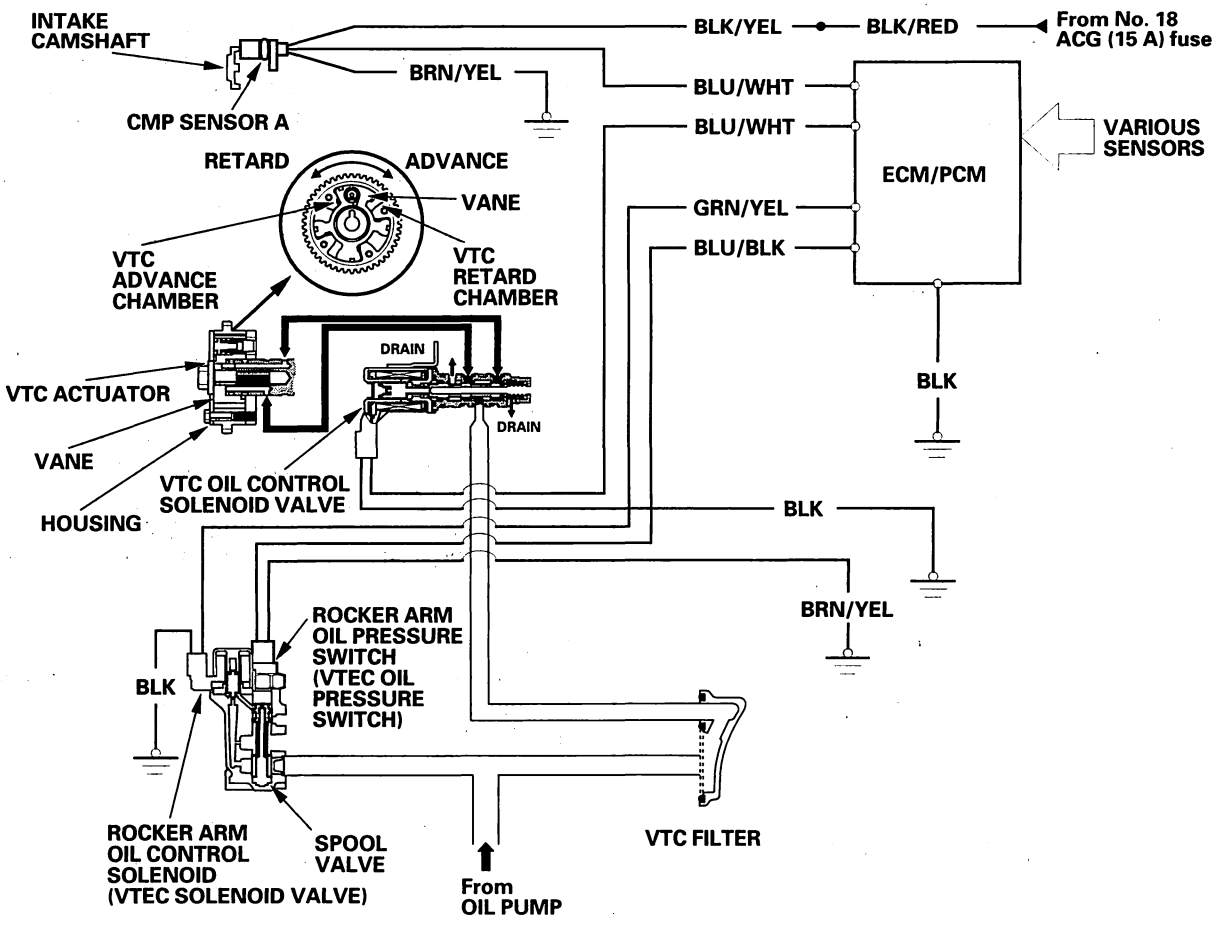

Camshaft Position (CMP) Sensor A

CMP sensor A detects camshaft angle position for the VTC system.

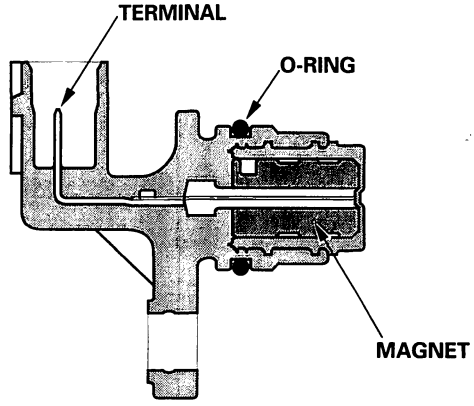

(cont'd)

Protected by AR

System Description (cont'd)

Idle Control System

2003-2005 models
When the engine is cold, the A/C compressor is on, the transmission is in gear, the brake pedal is pressed, the power steering load is high, or the alternator is charging, the ECM/PCM controls current to the idle air control (IAC) valve to maintain the correct idle speed. Refer to the system diagram to see the functional layout of the system.

2006 model
When the engine is cold, the A/C compressor is on, the transmission is in gear, the brake pedal is pressed, the power steering load is high, or the alternator is charging, the ECM/PCM controls current to the throttle actuator to maintain the correct idle speed.

Brake Pedal Position Switch
The brake pedal position switch signals the ECM/PCM when the brake pedal is pressed.

Idle Air Control (IAC) Valve (2003-2005 models)
To maintain proper idle speed, the IAC valve changes the amount of air bypassing the throttle body in response to an electrical signal from the ECM/PCM.

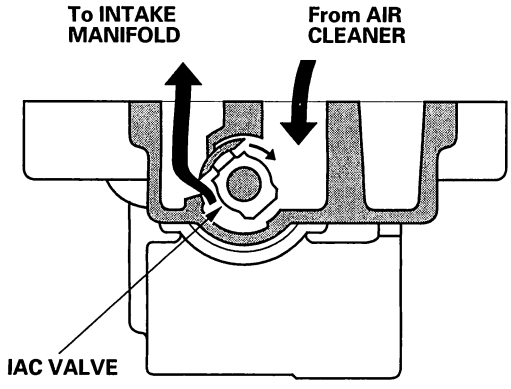

Power Steering Pressure (PSP) Switch
The PSP switch signals the ECM/PCM when the power steering load is high.

Fuel Supply System

Fuel Cutoff Control
During deceleration with the throttle valve closed, current to the injectors is cut off to improve fuel economy at engine speeds over 1,000 rpm (A/T (2006 model): 1,200 rpm). Fuel cutoff control also occurs when the engine speed exceeds 6,700 rpm, regardless of the position of the throttle valve, to protect the engine from over-revving. When the vehicle is stopped, the ECM/PCM cuts the fuel at engine speeds over 5,000 rpm (M/T (2003-2005 models: 4,200 rpm)). The engine speed of fuel cut is lower on a cold engine.

Fuel Pump Control
When the ignition is turned on, the ECM/PCM grounds PGM-FI main relay 2 (FUEL PUMP) which feeds current to the fuel pump for 2 seconds to pressurize the fuel system. With the engine running, the ECM/PCM grounds PGM-FI main relay 2 (FUEL PUMP) and feeds current to the fuel pump. When the engine is not running and the ignition is on, the ECM/PCM cuts ground to PGM-FI main relay 2 (FUEL PUMP) which cuts current to the fuel pump.

PGM-FI Main Relay 1 and 2
PGM-FI main relay 1 (FI MAIN) is energized whenever the ignition switch is ON (II) to supply battery voltage to the ECM/PCM, power to the injectors, and power for PGM-FI main relay 2 (FUEL PUMP). PGM-FI main relay 2 (FUEL PUMP) is energized to supply power to the fuel pump for 2 seconds when the ignition switch is turned ON (II), and when the engine is cranking or running.

BACK

Protected by AR

Intake Air System

Refer to the system diagram to see a functional layout of the system.

Intake Air Bypass Control Thermal Valve
When the engine is cold, the intake air bypass control thermal valve sends air to the injector.
The amount of air is regulated by engine coolant temperature.
Once the engine is hot, the intake air bypass thermal valve closes, stopping air to the injector.

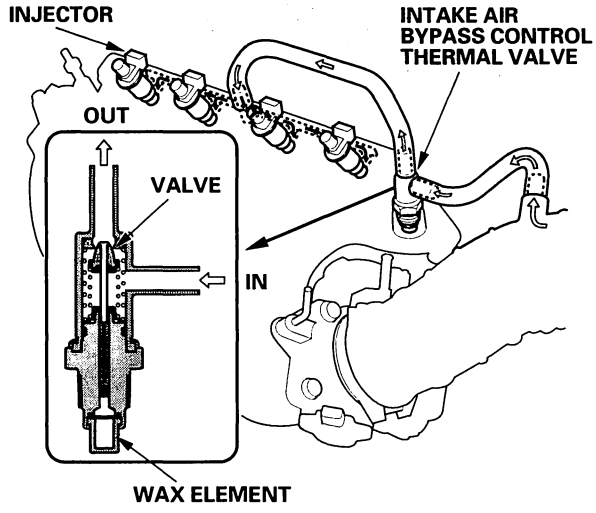

*: This illustration shows 2003-2005 models.

Throttle Body (2003-2005 models)
The throttle body is a single-barrel side draft type. The lower portion of the idle air control (IAC) valve is heated by engine coolant from the cylinder head to prevent icing of the throttle plate.

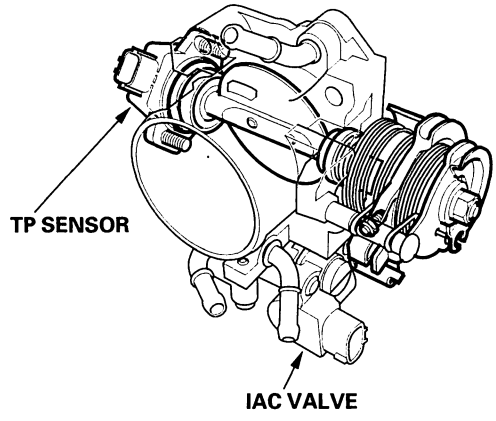

Catalytic Converter System

Three Way Catalytic Converter (TWC)
The TWC converts hydrocarbons (HC), carbon monoxide (CO), and oxides of nitrogen (NOx) in the exhaust gas to carbon dioxide (CO_2), nitrogen (N_2), and water vapor.

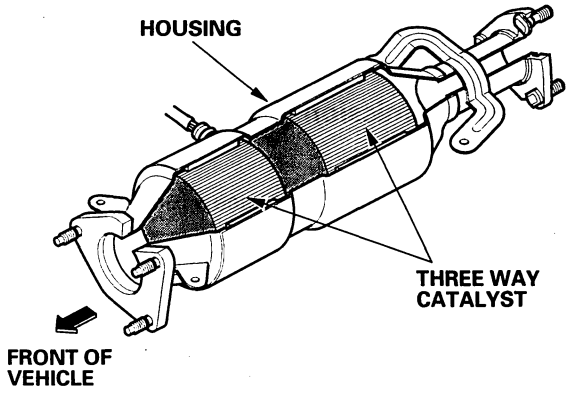

Positive Crankcase Ventilation (PCV) System

The PCV valve prevents blow-by gasses from escaping into the atmosphere by venting them into the intake manifold.

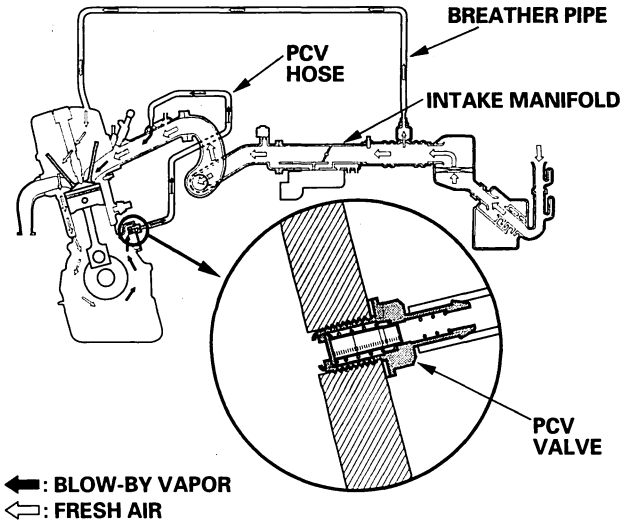

*: This illustration shows 2003-2005 models.

(cont'd)

Protected by AR

System Description (cont'd)

Exhaust Gas Recirculation (EGR) System

Refer to the system diagram to see a functional layout of the system.

EGR Valve
The EGR valve lowers peak combustion temperatures and reduces oxides of nitrogen emissions (NOx) by recirculating exhaust gas through the intake manifold and into the combustion chambers.

Evaporative Emission (EVAP) Control System

Refer to the system diagram to see a functional layout of the system.

EVAP Canister
The EVAP canister temporarily stores fuel vapor from the fuel tank until it can be purged from the EVAP canister into the engine and burned.

EVAP Canister Purge Valve
When the engine coolant temperature is below 131 °F (55 °C), the ECM/PCM turns off the EVAP canister purge valve which cuts vacuum to the EVAP canister.

Fuel Tank Pressure (FTP) Sensor
The FTP sensor converts fuel tank absolute pressure into an electrical input to the ECM/PCM.

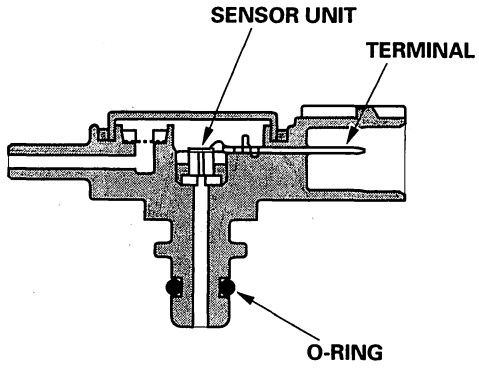

EVAP Canister Vent Shut Valve
The EVAP canister vent shut valve is on the EVAP canister.
The EVAP canister vent shut valve controls the venting of the EVAP canister.

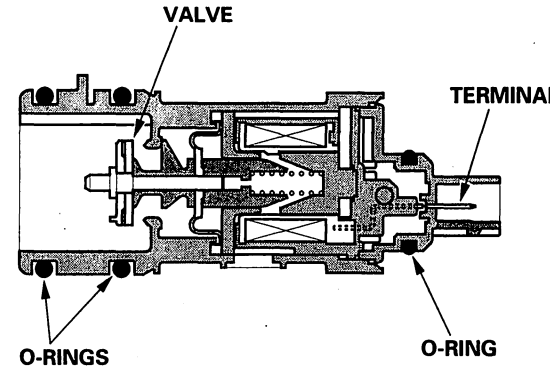

BACK

Protected by AR

Fuel Cap Warning Message (2005-2006 models)

The ECM/PCM detects whether the fuel fill cap is loose or missing under certain conditions and alerts the driver by showing the information in the odometer/outside temperature display. If the ECM/PCM detects a small volume leak, the MIL may come on during the second drive cycle and store a DTC.

First drive cycle
During the first drive cycle after a cold start, the ECM/PCM alerts the driver to check the fuel fill cap by showing a "CHECK FUEL CAP" message in the odometer/outside temperature display (A), and it stores Temporary DTC P0457 "Evaporative Emission (EVAP) System Leak Detected/Fuel Cap Loose or Missing". Tightening the fuel cap does not make the message go off immediately.

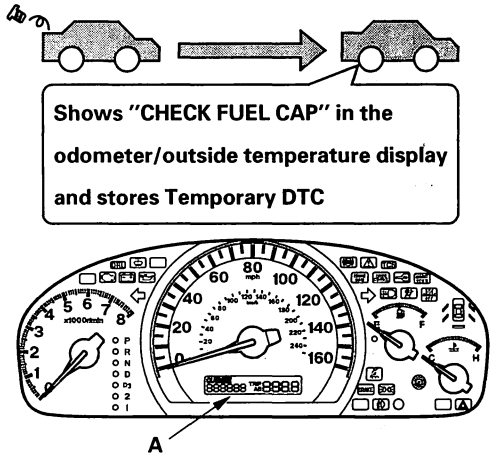

To make the message go off
Tighten the fuel fill cap properly, and do this procedure several times.

1. Turn the ignition switch OFF.
2. Start the engine, and drive at a steady speed over 28 mph (45 km/h), without moving the accelerator pedal, for about 1 minute.

Second drive cycle
During the second drive cycle after a cold start, if the fuel fill cap is still loose or missing, the ECM/PCM alerts the driver to check the fuel fill cap by showing a "CHECK FUEL CAP" message in the odometer/outside temperature display as same as the first drive cycle. Tightening the fuel cap does not make the message go off immediately.

Third drive cycle
During the third drive cycle after a cold start, if the fuel fill cap is still loose or missing, the ECM/PCM stores DTC P0457 "Evaporative Emission (EVAP) System Leak Detected/Fuel Cap Loose or Missing". The malfunction indicator lamp (MIL) (A) comes on, and the "CHECK FUEL CAP" message goes off.

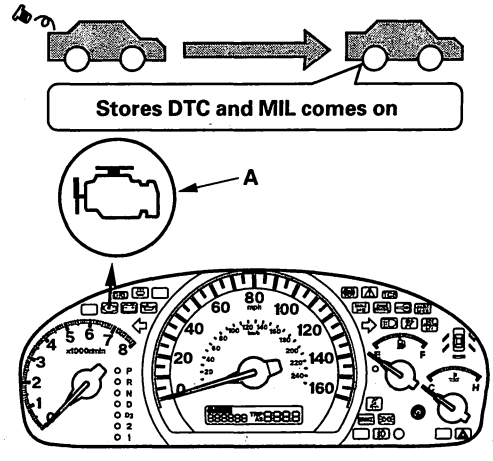

(cont'd)

Protected by AR

System Description (cont'd)

Idle Control System Diagram (2003-2005 models)

The engine idle speed is controlled by the idle air control (IAC) valve:

- After the engine starts, the IAC valve opens for a certain amount of time. The amount of air is increased to raise the idle speed.
- When the engine coolant temperature is low, the IAC valve is opened to obtain the proper fast idle speed. The amount of bypassed air is controlled in relation to engine coolant temperature.

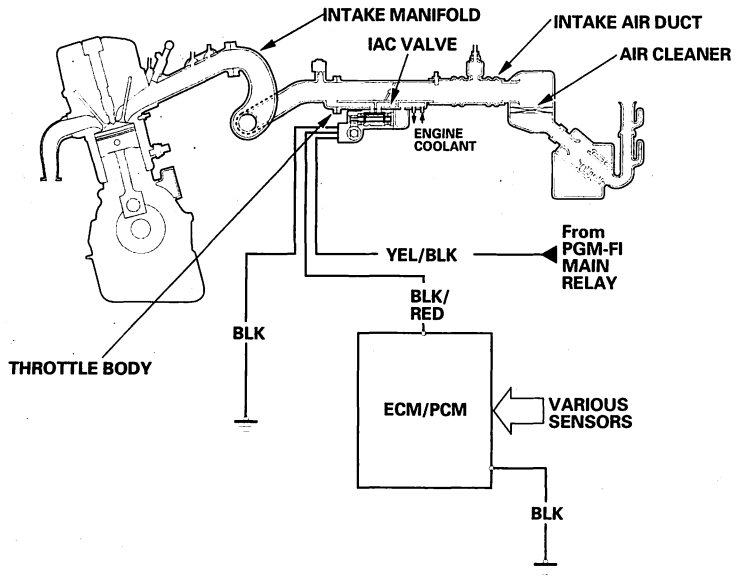

Intake Air System Diagram

This system supplies air for engine needs. A resonator in the intake air duct provides additional silencing as air is drawn into the system.

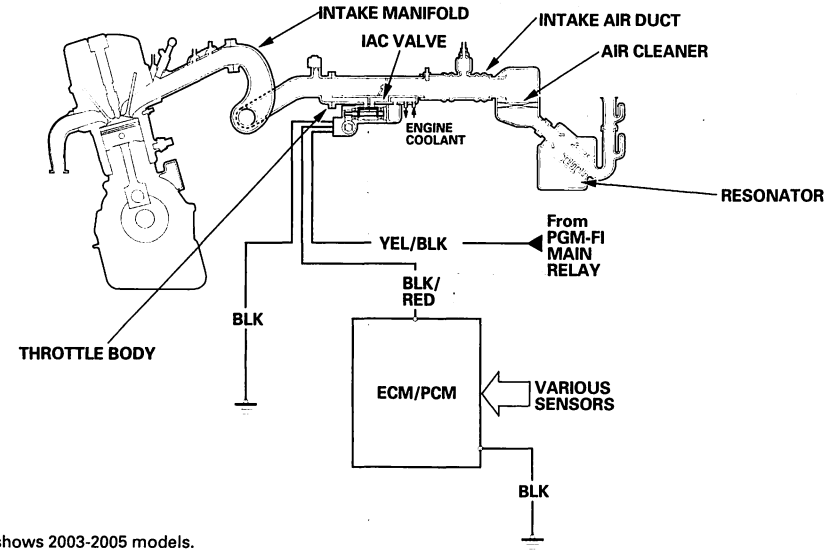

*: This illustration shows 2003-2005 models.

BACK

Protected by AR

Electronic Throttle Control System Diagram (2006 model)

The electronic throttle control system consists of the throttle actuator, throttle position (TP) sensor, accelerator pedal position (APP) sensor, throttle actuator control module, and the ECM/PCM. The throttle is electronically controlled by this system.

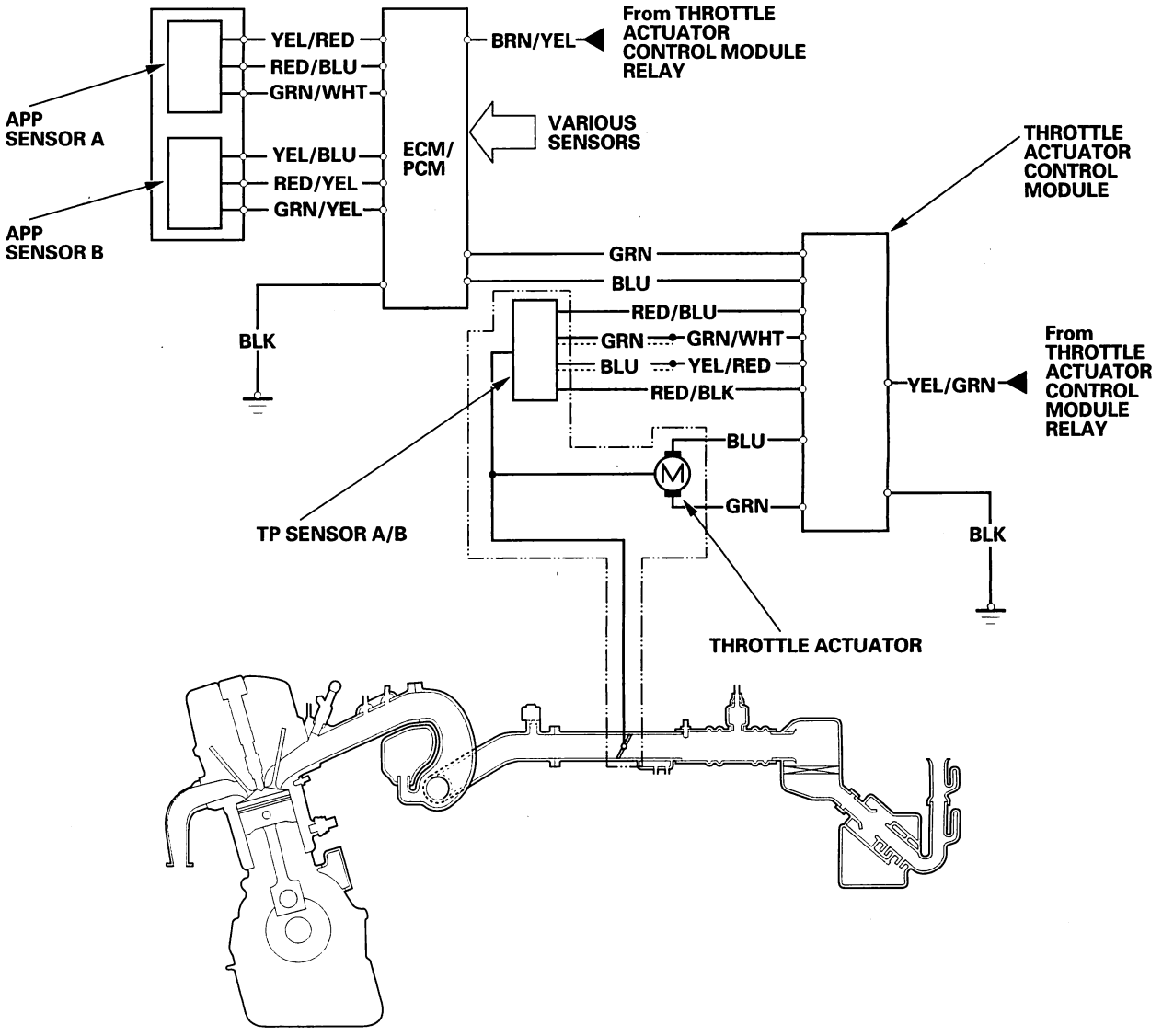

(cont'd)

Protected by AR

System Description (cont'd)

Exhaust Gas Recirculation (EGR) System Diagram

The EGR system reduces oxides of nitrogen (NOx) emissions by recirculating exhaust gas through the EGR valve and the intake manifold into the combustion chambers. The ECM/PCM memory includes the ideal EGR valve position for varying operating conditions.

The EGR valve position sensor detects the amount of EGR valve lift and sends it to the ECM/PCM. The ECM/PCM then compares it with the ideal lift in its memory (based on signals sent from other sensors). If there is any difference between the two, the ECM/PCM cuts current to the EGR valve.

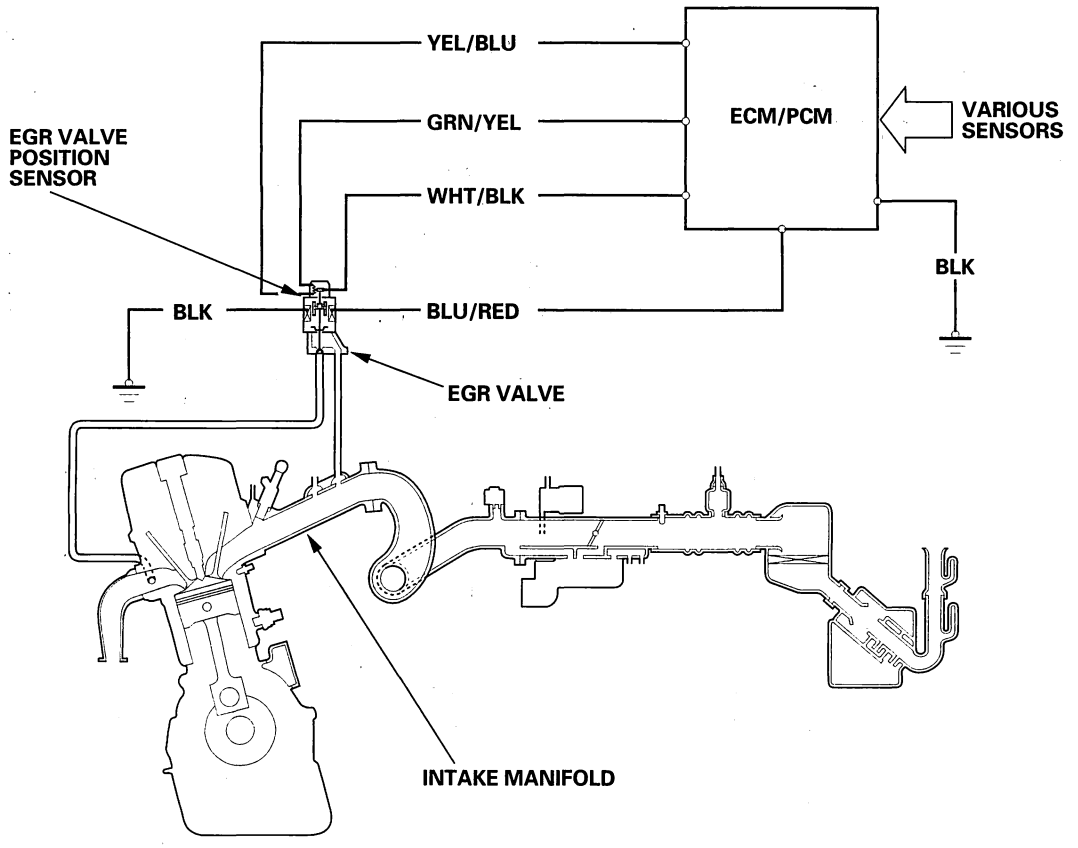

*: This illustration shows 2003-2005 models.

BACK

Protected by AR

Evaporative Emission (EVAP) Control Diagram

The EVAP controls minimize the amount of fuel vapor escaping to the atmosphere. Vapor from the fuel tank is temporarily stored in the EVAP canister until it can be purged from the canister into the engine and burned.

- The EVAP canister is purged by drawing fresh air through it and into a port on the intake manifold. The purging vacuum is controlled by the EVAP canister purge valve, which operates whenever engine coolant temperature is above 131 °F (55 °C).
- During refueling, the fuel tank vapor control valve opens with the pressure in the fuel tank, and feeds the fuel vapor to the EVAP canister (SULEV model).

Except SULEV model:

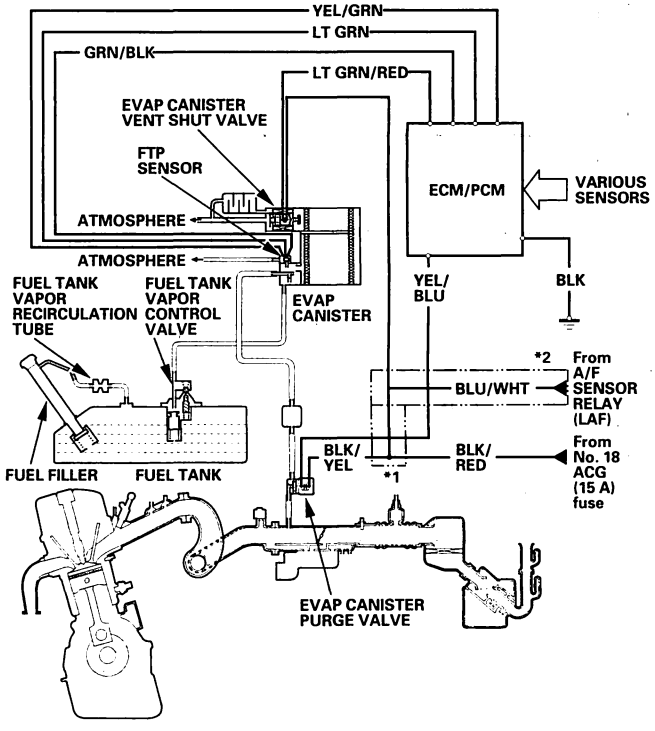

SULEV model:

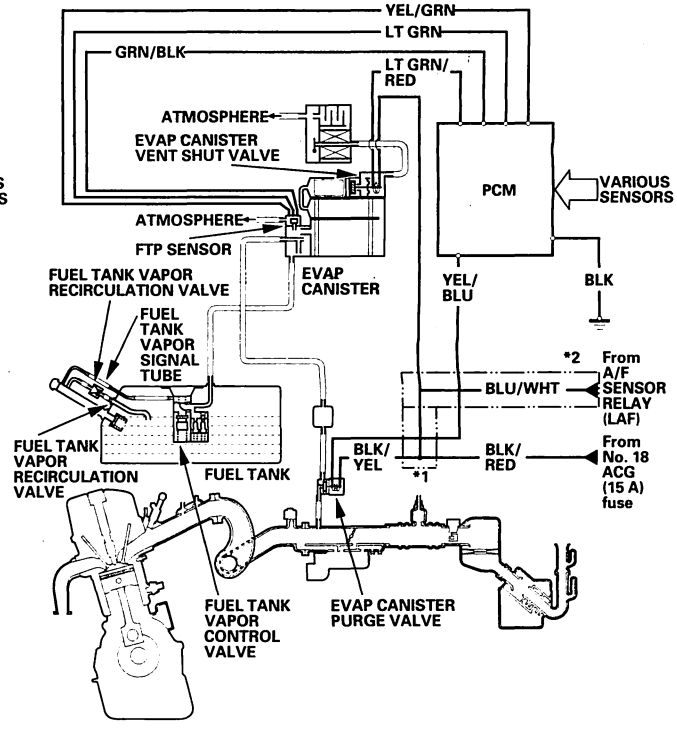

***1: 2003-2004 models**
***2: 2005-2006 models**

*: This illustration shows 2003-2005 models.

*: This illustration shows 2003-2005 models.

(cont'd)

Protected by AR

System Description (cont'd)

ECM/PCM Circuit Diagram

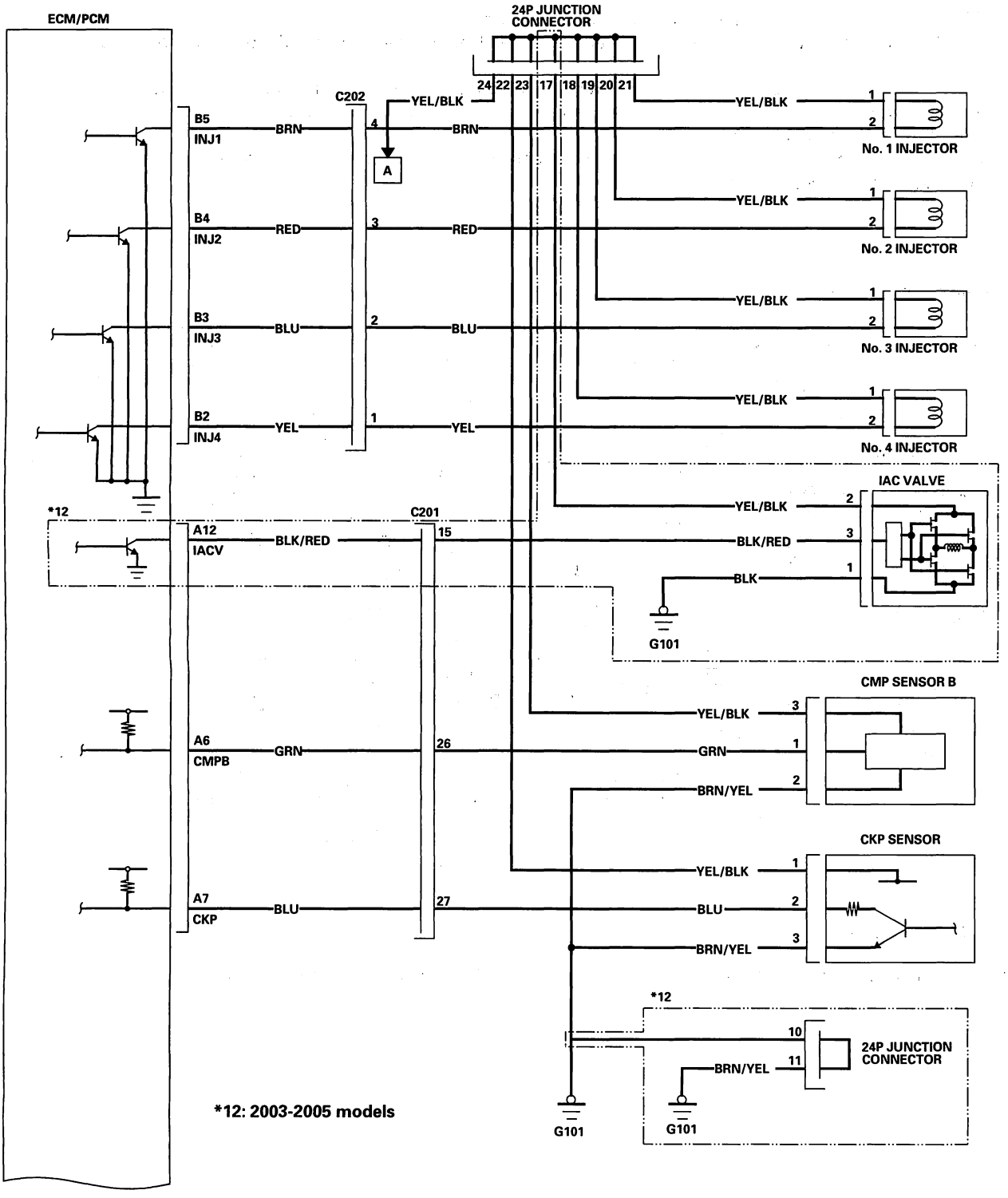

BACK

Protected by AR

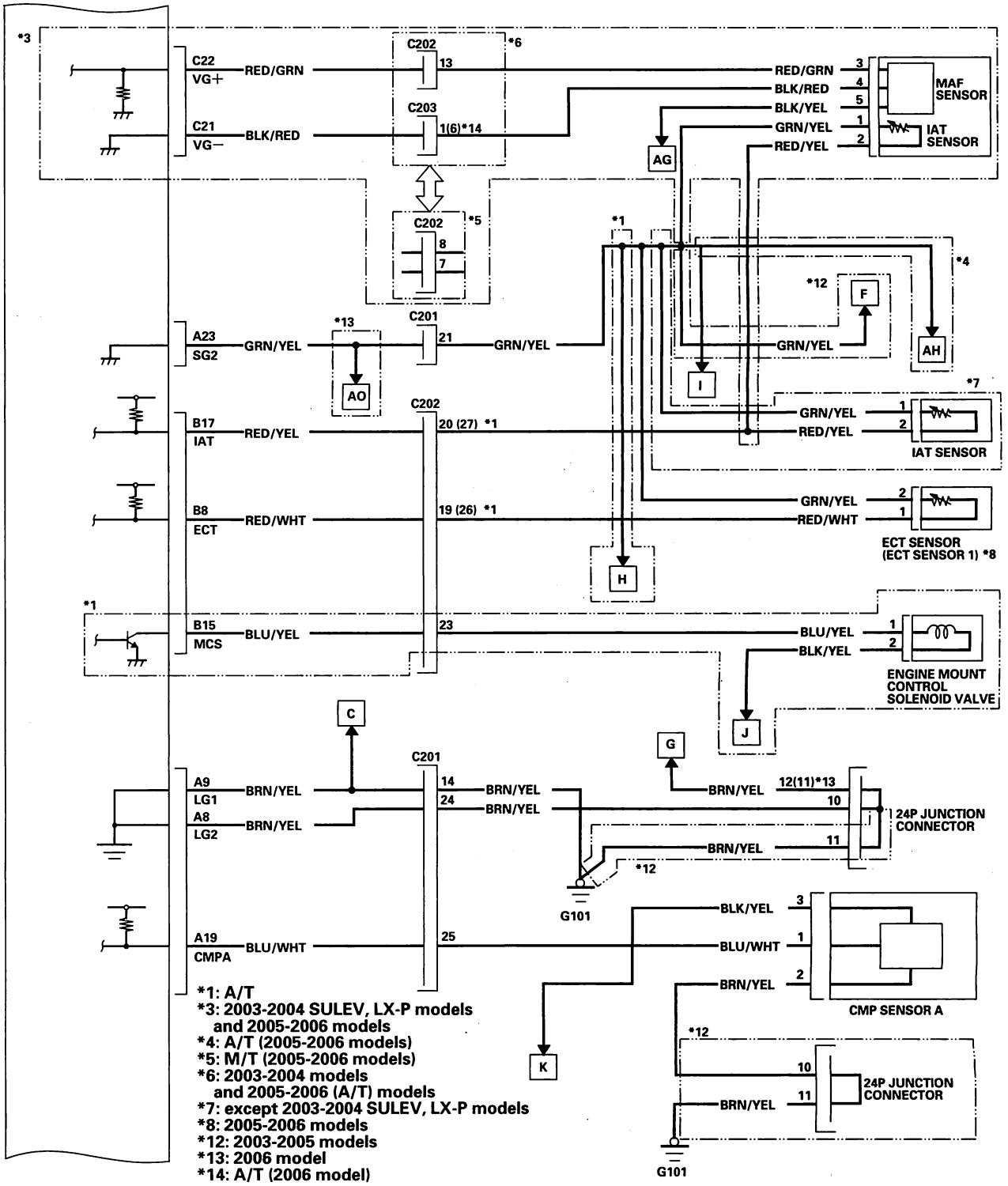

(cont'd)

BACK

Protected by AR

System Description (cont'd)

ECM/PCM Circuit Diagram (cont'd)

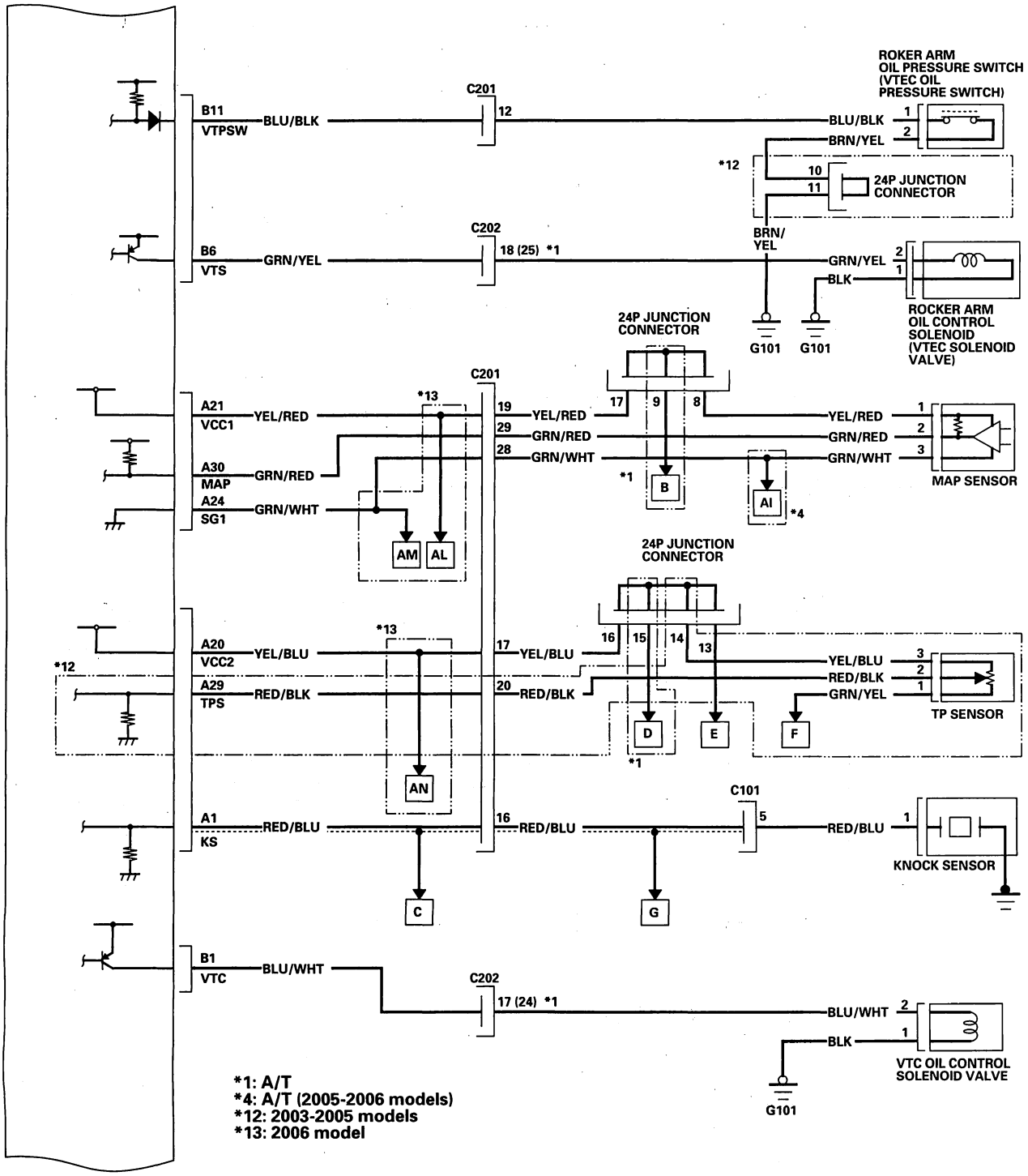

BACK

Protected by AR

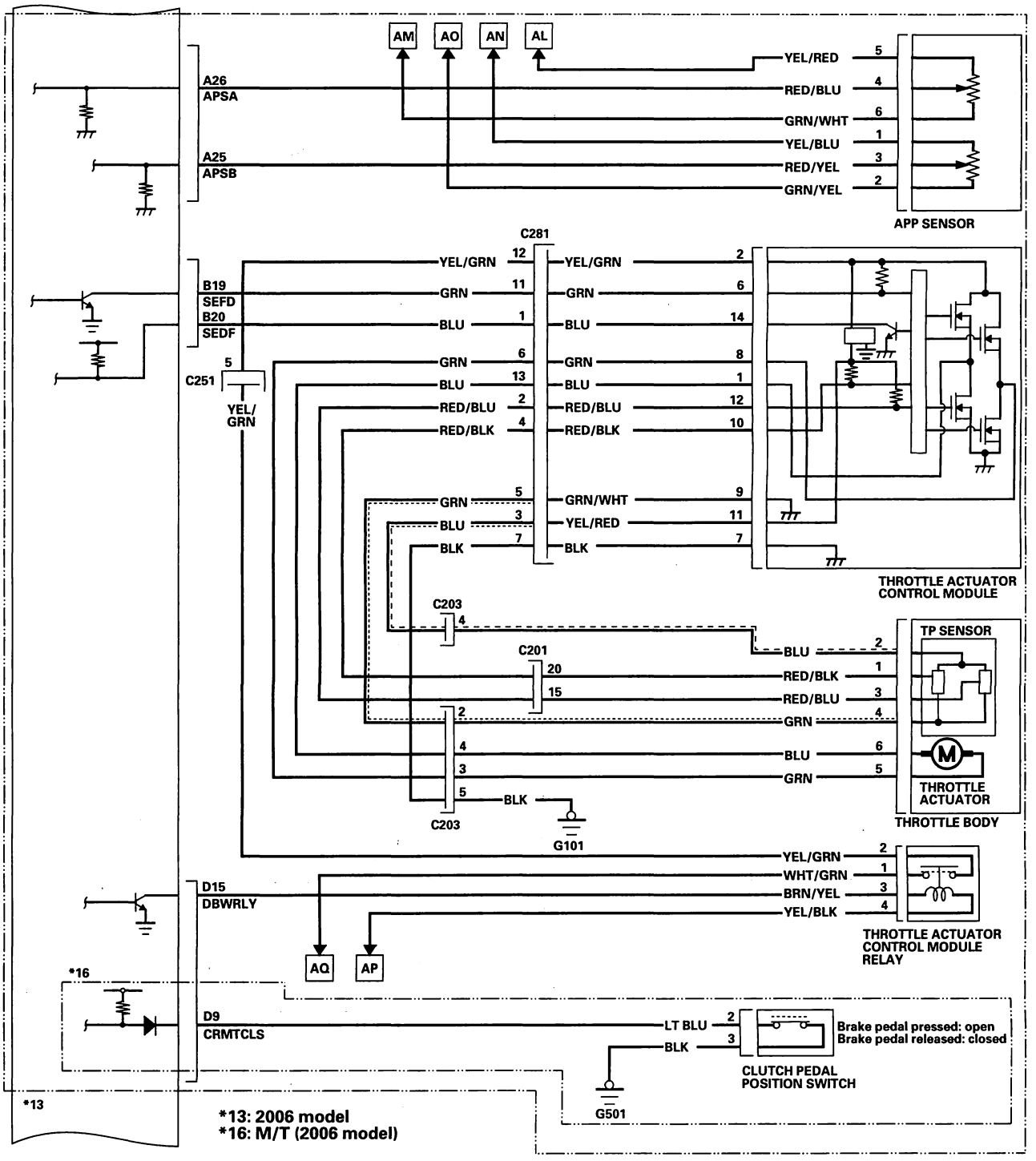

(cont'd)

BACK

Protected by AR

System Description (cont'd)

ECM/PCM Circuit Diagram (cont'd)

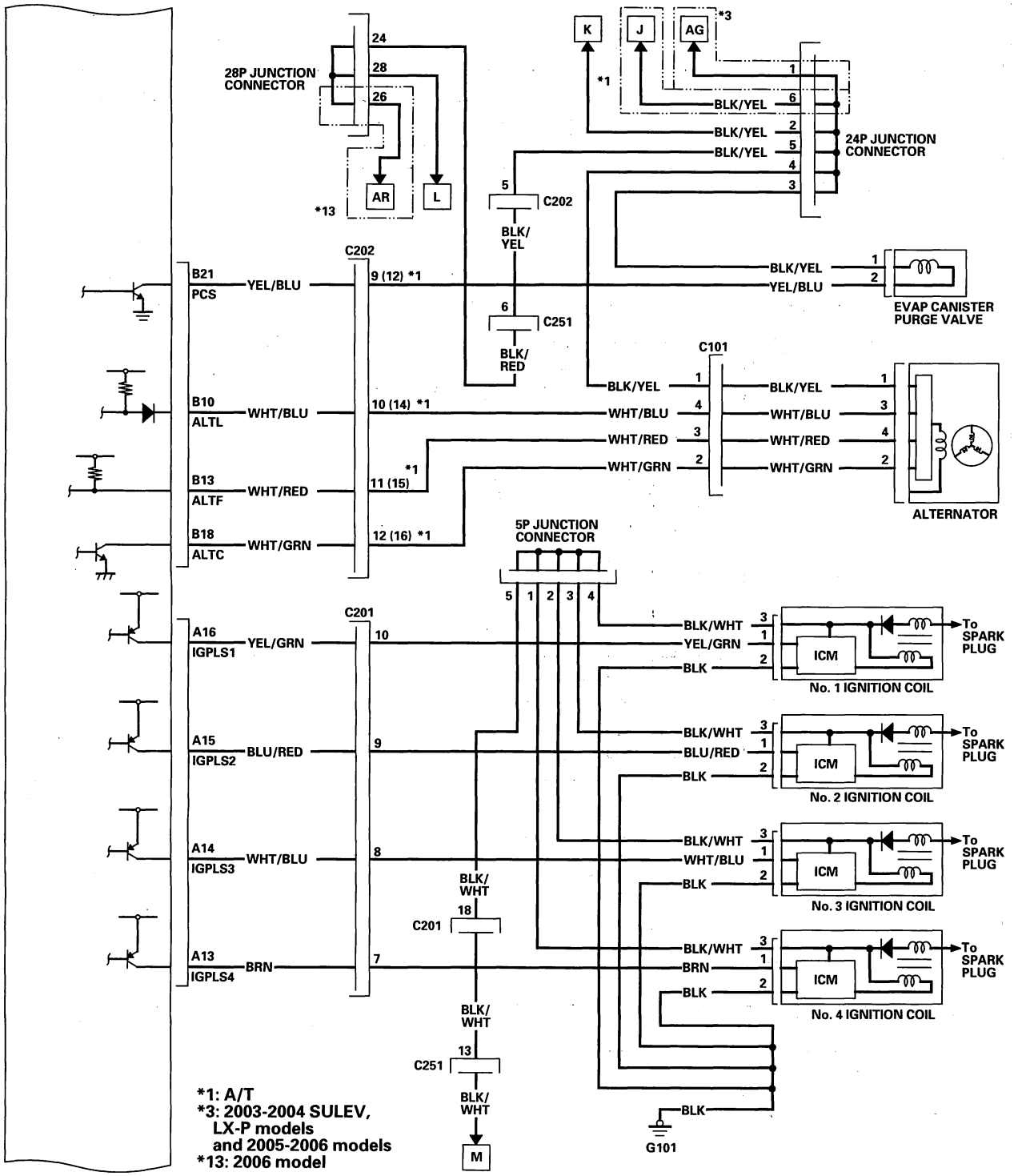

BACK

Protected by AR

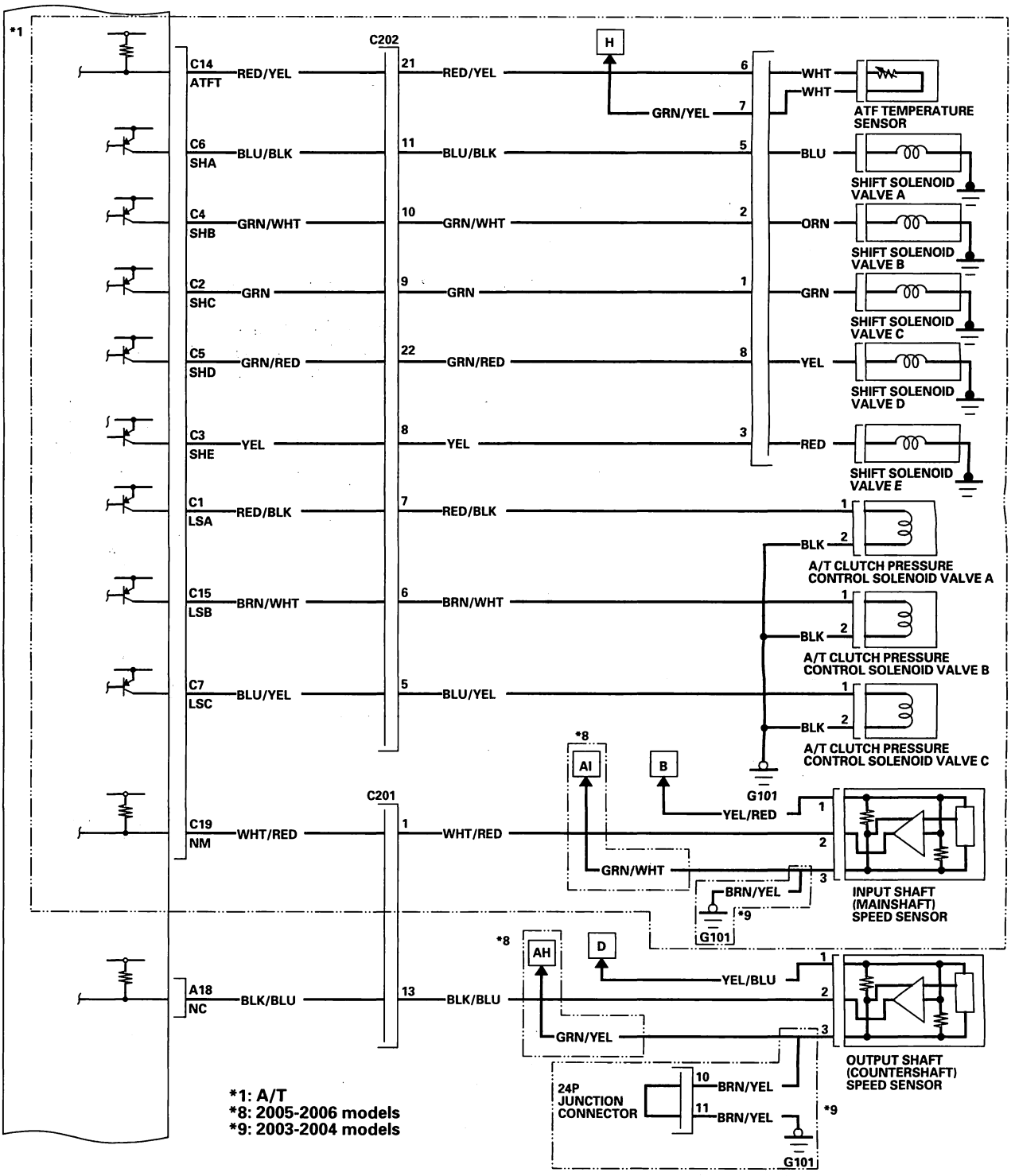

(cont'd)

BACK

Protected by AR

System Description (cont'd)

ECM/PCM Circuit Diagram (cont'd)

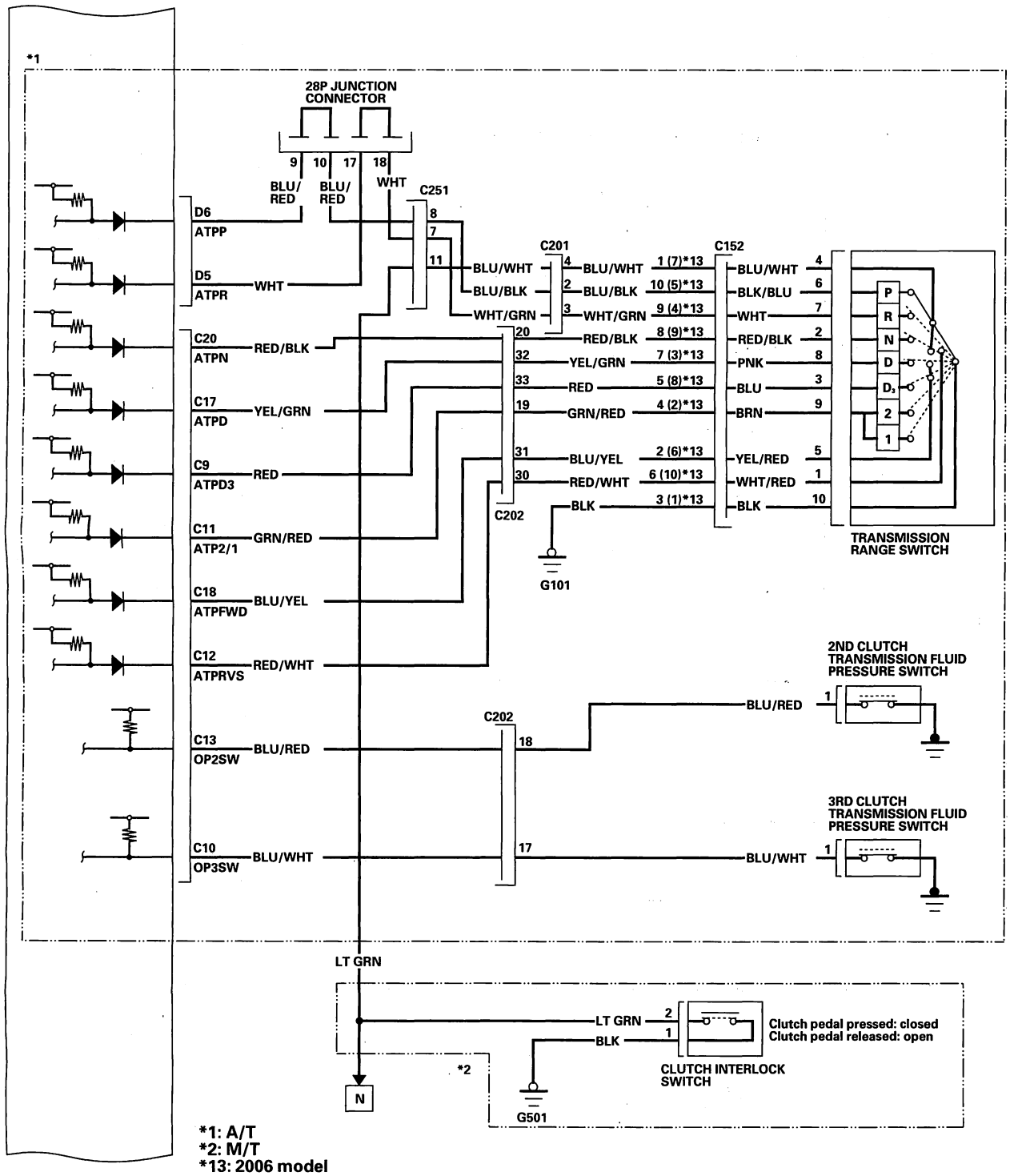

*1: A/T
*2: M/T
*13: 2006 model

BACK

Protected by AR

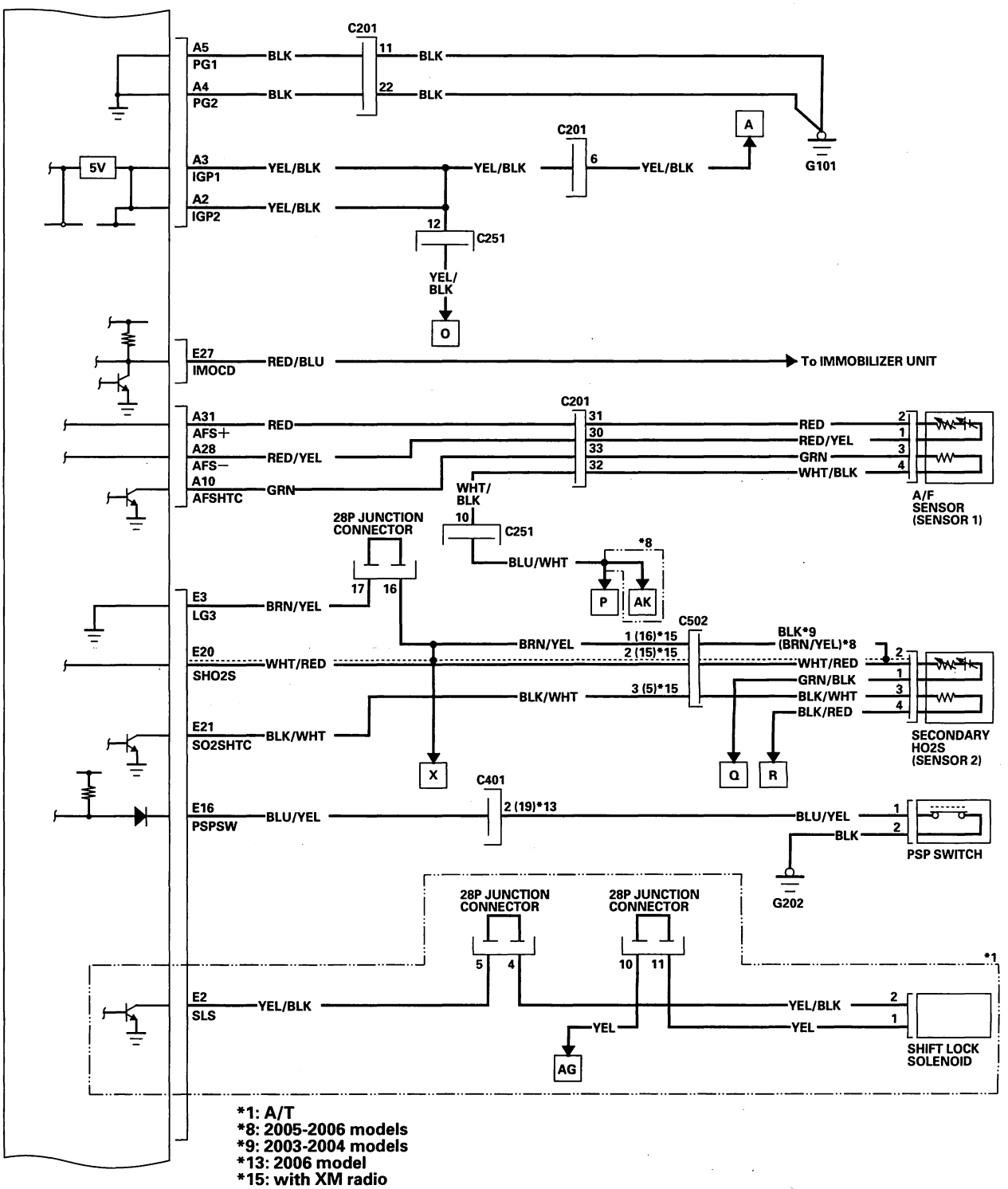

*1: A/T
*8: 2005-2006 models
*9: 2003-2004 models
*13: 2006 model
*15: with XM radio

(cont'd)

Protected by AR

System Description (cont'd)

ECM/PCM Circuit Diagram (cont'd)

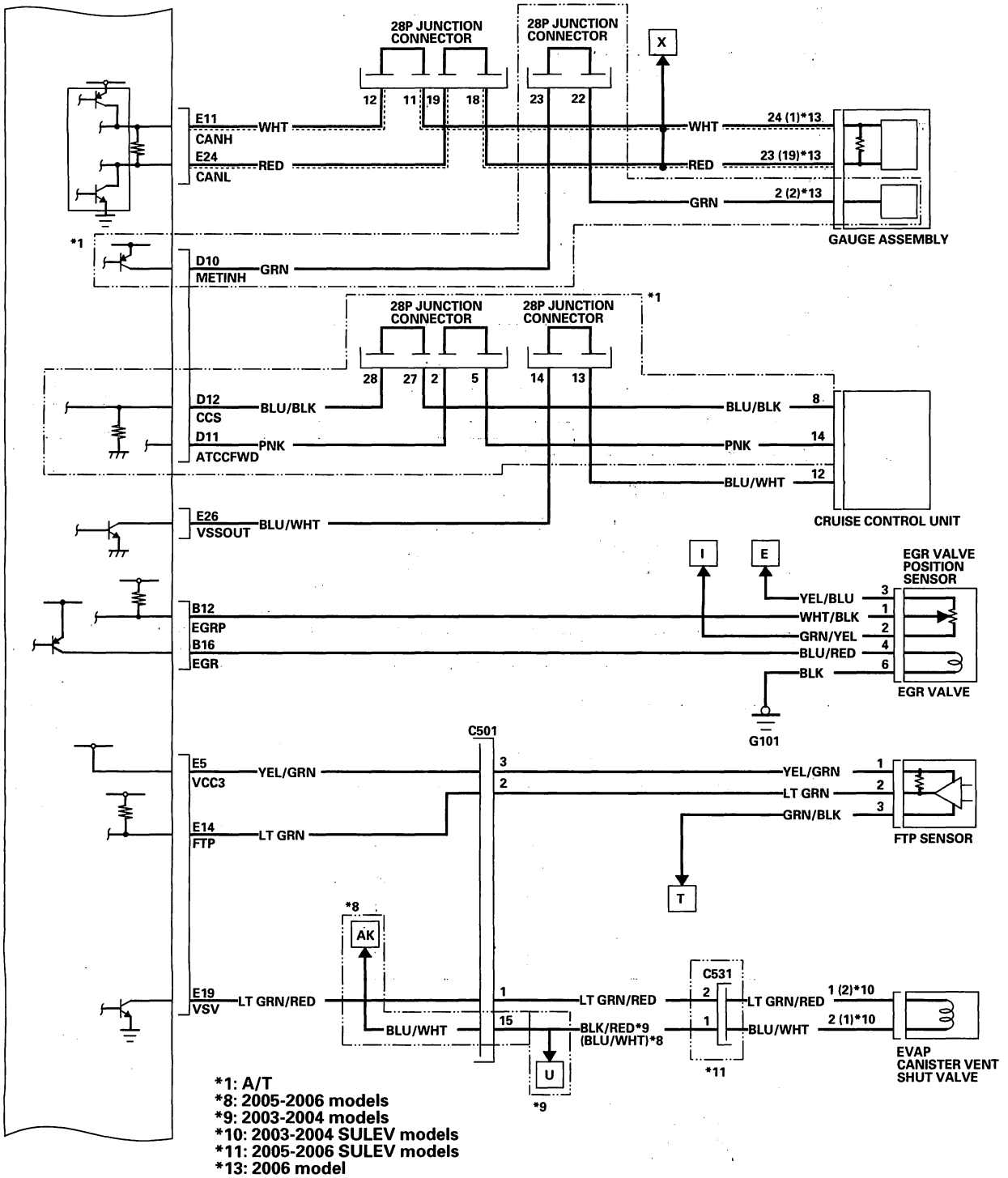

BACK

Protected by AR

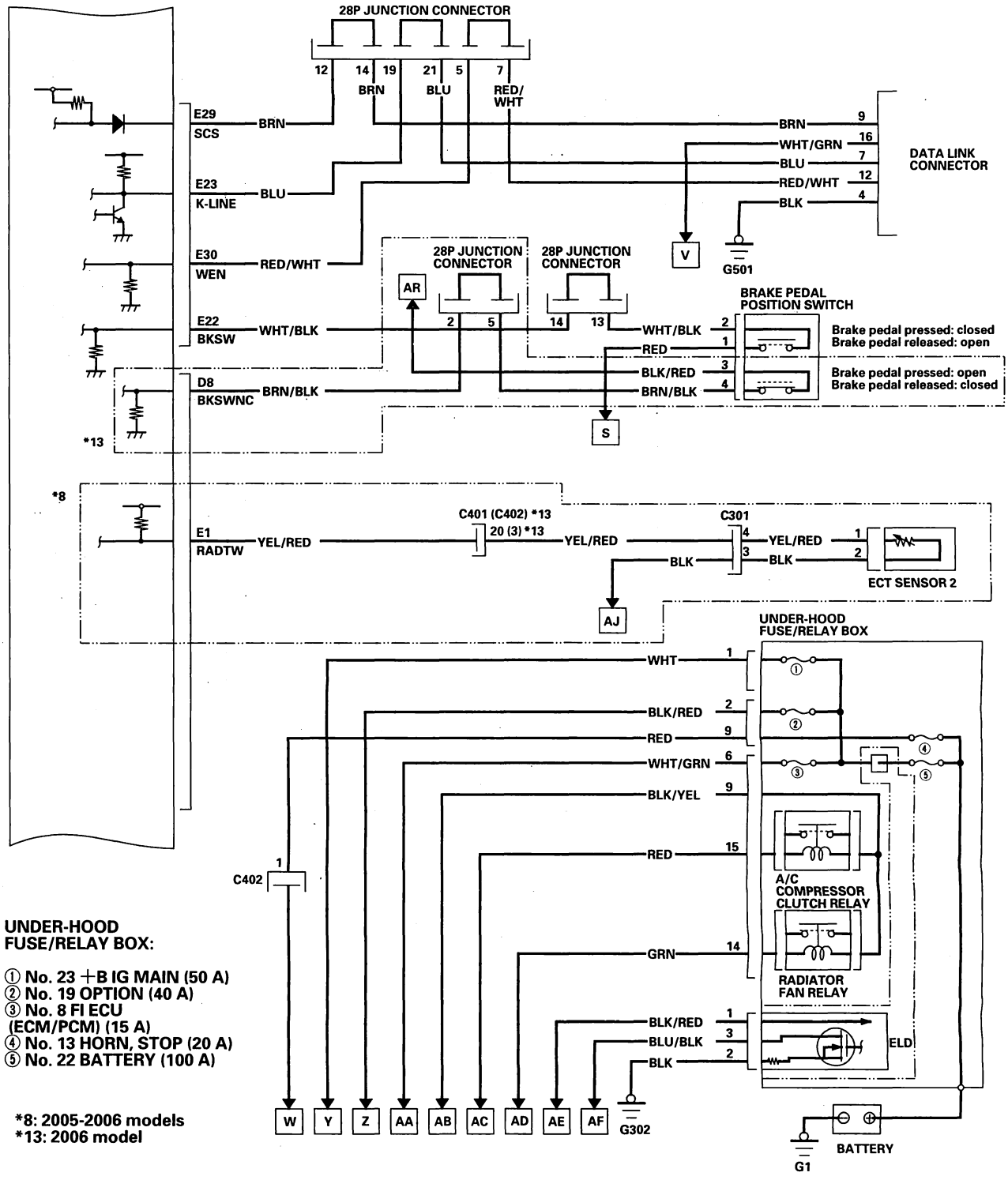

UNDER-HOOD FUSE/RELAY BOX:

① No. 23 +B IG MAIN (50 A)
② No. 19 OPTION (40 A)
③ No. 8 FI ECU (ECM/PCM) (15 A)
④ No. 13 HORN, STOP (20 A)
⑤ No. 22 BATTERY (100 A)

*8: 2005-2006 models
*13: 2006 model

(cont'd)

BACK

Protected by AR

System Description (cont'd)

ECM/PCM Circuit Diagram (cont'd)

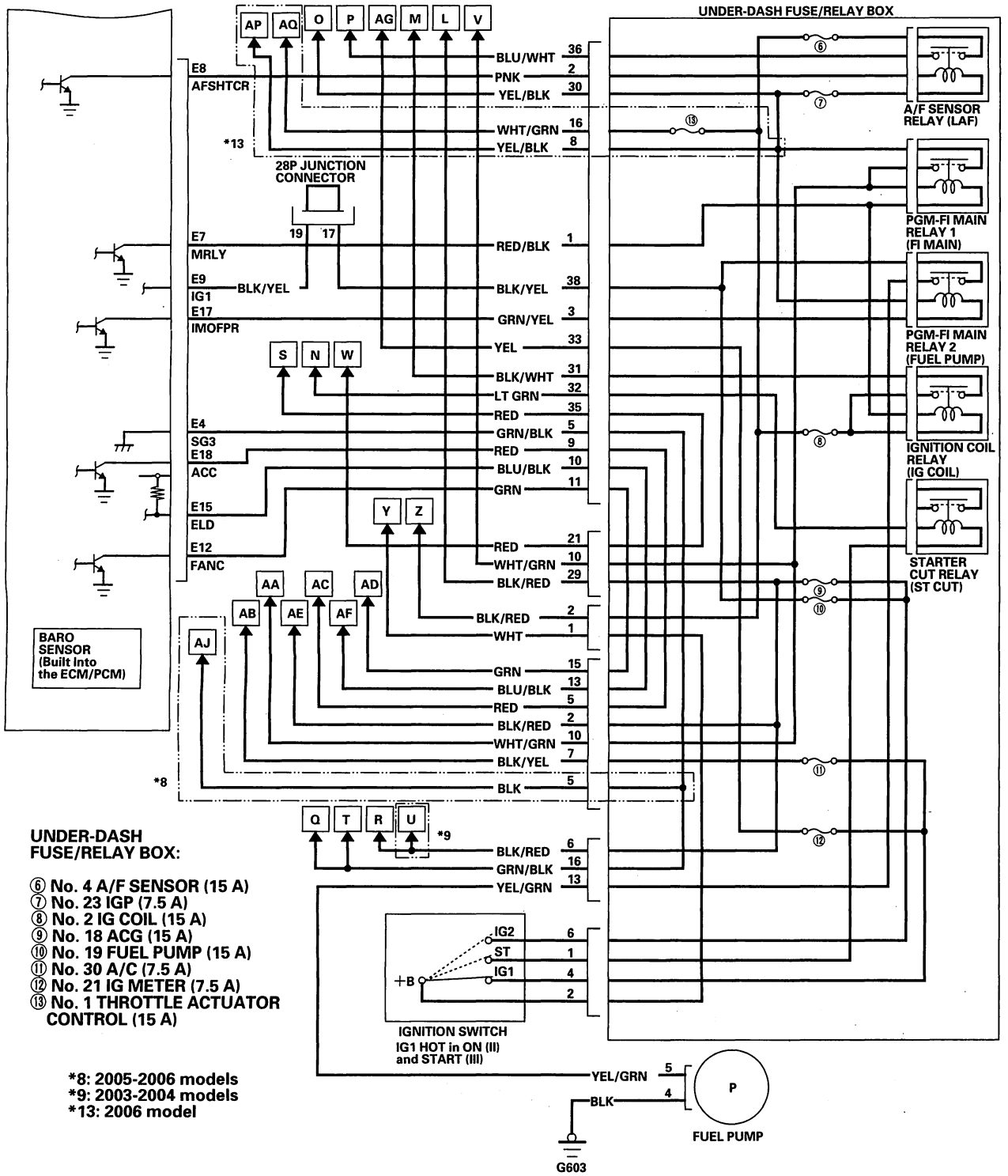

UNDER-DASH FUSE/RELAY BOX:

⑥ No. 4 A/F SENSOR (15 A)
⑦ No. 23 IGP (7.5 A)
⑧ No. 2 IG COIL (15 A)
⑨ No. 18 ACG (15 A)
⑩ No. 19 FUEL PUMP (15 A)
⑪ No. 30 A/C (7.5 A)
⑫ No. 21 IG METER (7.5 A)
⑬ No. 1 THROTTLE ACTUATOR CONTROL (15 A)

*8: 2005-2006 models
*9: 2003-2004 models
*13: 2006 model

BACK

Protected by AR

How to Set Readiness Codes

Malfunction Indicator Lamp (MIL) Indication (In Relation to Readiness Codes)

The vehicle has certain "readiness codes" that are part of the on-board diagnostics for the emissions systems. If the vehicle's battery has been disconnected or gone dead, if the DTCs have been cleared, or if the ECM/PCM has been reset, these readiness codes are reset. In some states, part of the emissions testing is to make sure these codes are set to complete. If all of them are not set to complete, the vehicle may fail the emission test, or the test cannot be finished.

To check if the readiness codes are set to complete, turn the ignition switch ON (II), but do not start the engine. The MIL will come on for 15—20 seconds. If it then goes off, the readiness codes are complete. If it flashes five times, one or more readiness codes are not set to complete. To set readiness codes from incomplete to complete, do the procedure for the appropriate code.

To check the status of a specific DTC system, check the OBD status in the DTC MENU with the HDS (see page 11-7). This screen displays the code, the current data list of the enable criteria, and the status of the readiness testing.

Catalytic Converter Monitor and Readiness Code

NOTE:
- Do not turn the ignition switch off during the procedure.
- All readiness codes are cleared when the battery is disconnected or when the ECM/PCM is cleared with the HDS.
- Low ambient temperatures or excessive stop-and-go traffic may increase the drive time needed to switch the readiness code from incomplete to complete.
- The readiness code will not switch to complete until all the enable criteria are met.
- If a fault in the secondary HO2S system caused the MIL to come on, the readiness code cannot be set to complete until you correct the fault.

Enable Criteria

- ECT at 158 °F (70 °C) or higher.
- Intake air temperature (IAT) at —13 °F (—25 °C) or higher.
- Vehicle speed sensor (VSS) reads more than 3 mph (5 km/h).

Procedure

1. Connect the HDS to the vehicle's data link connector (DLC), and bring up the READINESS CODEs screen for Catalyst in the DTCs MENU.
2. Start the engine.
3. Test-drive the vehicle under stop-and-go conditions with short periods of steady cruise. After about 5 miles (8 km), the readiness code should switch to completed.
4. If the readiness code is still not set to complete, check for a Temporary DTC with the HDS. If there is no DTC, one or more of the enable criteria were probably not met; repeat the procedure.

(cont'd)

Protected by AR

How to Set Readiness Codes (cont'd)

Evaporative Emission (EVAP) Control System Monitor and Readiness Code

NOTE: All readiness codes are cleared when the battery is disconnected or when the ECM/PCM is cleared with the HDS.

Enable Criteria

- Battery voltage is higher than 10.5 V.
- Engine at idle.
- ECT sensor between 176 °F (80 °C) and 212 °F (100 °C).
- MAP sensor less than 46.6 kPa (14 in.Hg, 350 mmHg).
- Vehicle speed 0 mph (0 km/h).
- IAT sensor between 32 °F (0 °C) and 212 °F (100 °C).

Procedure

1. Connect the HDS to the vehicle's data link connector (DLC).
2. Start the engine.
3. Select EVAP TEST in the INSPECTION MENU with the HDS, then select the FUNCTION TEST in the EVAP TEST MENU.
   - If the functions are normal, readiness is complete.
   - If the functions are not normal, go to the next step.
4. If the readiness code is still not set to complete, check for a temporary DTC. If there is no DTC, one or more of the enable criteria were probably not met; repeat the procedure.

Air Fuel Ratio (A/F) Sensor Monitor and Readiness Code

NOTE:
- Do not turn the ignition switch off during the procedure.
- All readiness codes are cleared when the battery is disconnected or when the ECM/PCM is cleared with the HDS.

Enable Criteria

ECT at 158 °F (70 °C) or higher.

Procedure

1. Start the engine.
2. Test-drive the vehicle under stop-and-go conditions with short periods of steady cruise. During the drive, decelerate (with the throttle fully closed) for 5 seconds. After about 3.5 miles (5.6 km), the readiness code should switch from incomplete to complete.
3. Check the readiness codes screen for the Air Fuel Ratio (A/F) Sensor in the DTCs MENU with the HDS.
   - If the screen shows complete, readiness is complete.
   - If the screen shows not complete, go to the next step.
4. Check for a Temporary DTC. If there is no DTC, the enable criteria was probably not met. Select the DATA LIST Menu. Check the ECT in the ALL DATA LIST with the HDS. If the ECT is lower than 158 °F (70 °C), run the engine until it is higher than 158 °F (70 °C), then repeat the procedure.

BACK

Protected by AR

Air Fuel Ratio (A/F) Sensor Heater Monitor Readiness Code

NOTE: All readiness codes are cleared when the battery is disconnected or when the ECM/PCM is cleared with the HDS.

Procedure

1. Start the engine, and let it idle for 1 minute. The readiness code should switch from incomplete to complete.

2. If the readiness code is still not set to complete, check for a temporary DTC. If there is no DTC, repeat the procedure.

Misfire Monitor and Readiness Code

- This readiness code is always set to available because misfiring is continuously monitored.
- Monitoring pauses, and the misfire counter resets, if the vehicle is driven over a rough road.
- Monitoring also pauses, and the misfire counter holds at its current value, if the throttle position changes more than a predetermined value, or if driving conditions fall outside the range of any related enable criteria.

Fuel System Monitor and Readiness Code

- This readiness code is always set to available because the fuel system is continuously monitored during closed loop operation.
- Monitoring pauses when the catalytic converter, EVAP control system, and A/F sensor monitors are active.
- Monitoring also pauses when any related enable criteria are not being met. Monitoring resumes when the enable criteria is again being met.

Comprehensive Component Monitor and Readiness Code

This readiness code is always set to available because the comprehensive component monitor is continuously running whenever the engine is cranking or running.

EGR Monitor and Readiness Code

NOTE:
- Do not turn the ignition switch off during the procedure.
- All readiness codes are cleared when the battery is disconnected or when the ECM/PCM is cleared with the HDS.

Enable Criteria

ECT at 176 °F (80 °C) or higher.

Procedure

1. Connect the HDS to the vehicle's data link connector (DLC).

2. Start the engine.

3. Drive at a steady speed with the A/T in D or M/T in 4th gear, 50—62 mph (80—100 km/h) or above for more than 10 seconds.

4. With the A/T in D or M/T in 4th gear, decelerate from 62 mph (100 km/h) or above by completely releasing the throttle for at least 5 seconds. If the engine is stopped during this procedure, go to step 2 and do the procedure again.

5. Check the OBD status screen for DTC P0401 in the DTC's MENU with the HDS.

   - If it is passed, readiness is complete.
   - If it is not passed, go to step 3 and retest.

Protected by AR

Component Location Index

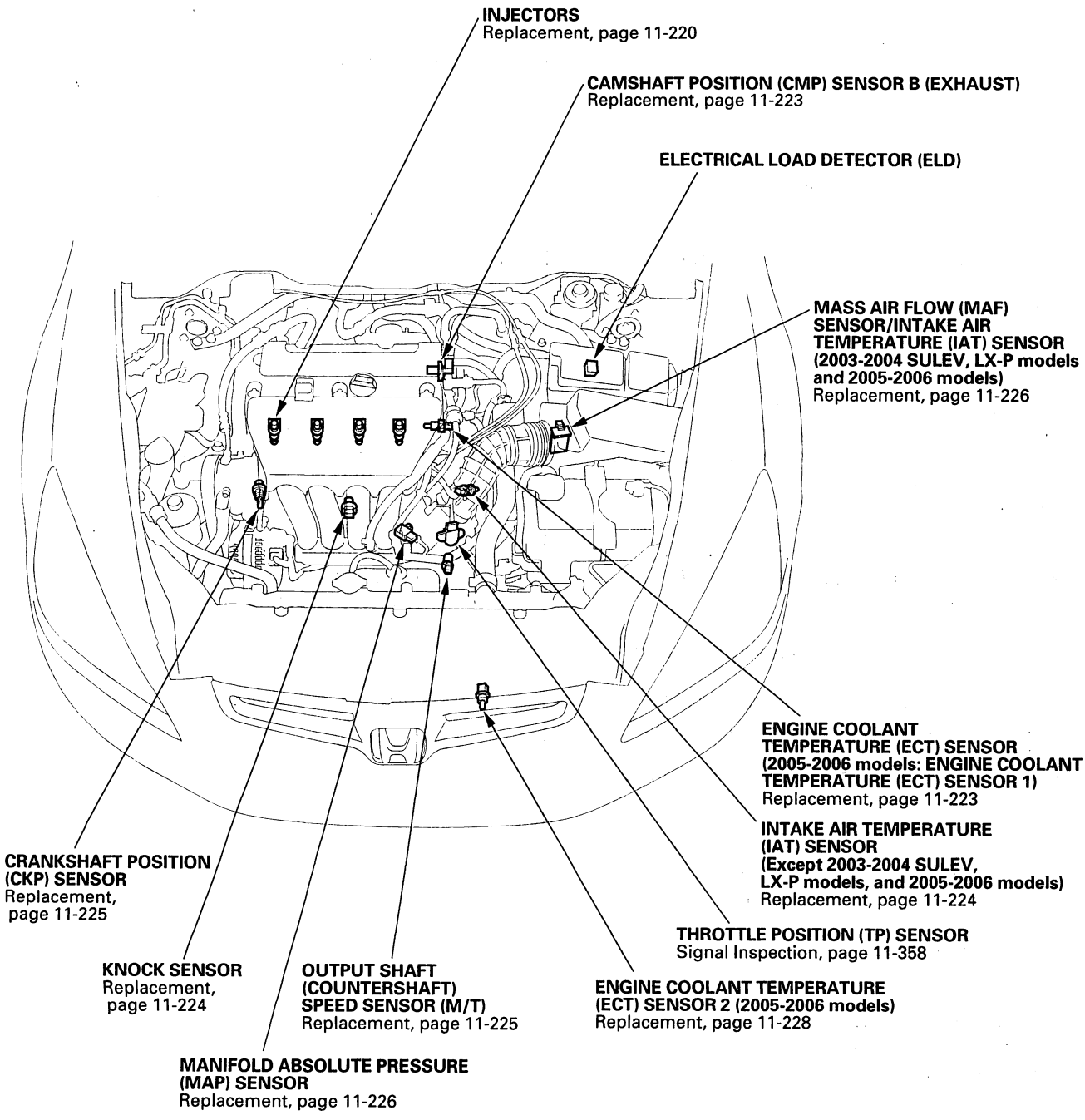

*: This illustration shows 2003-2005 models.

BACK

Protected by AR

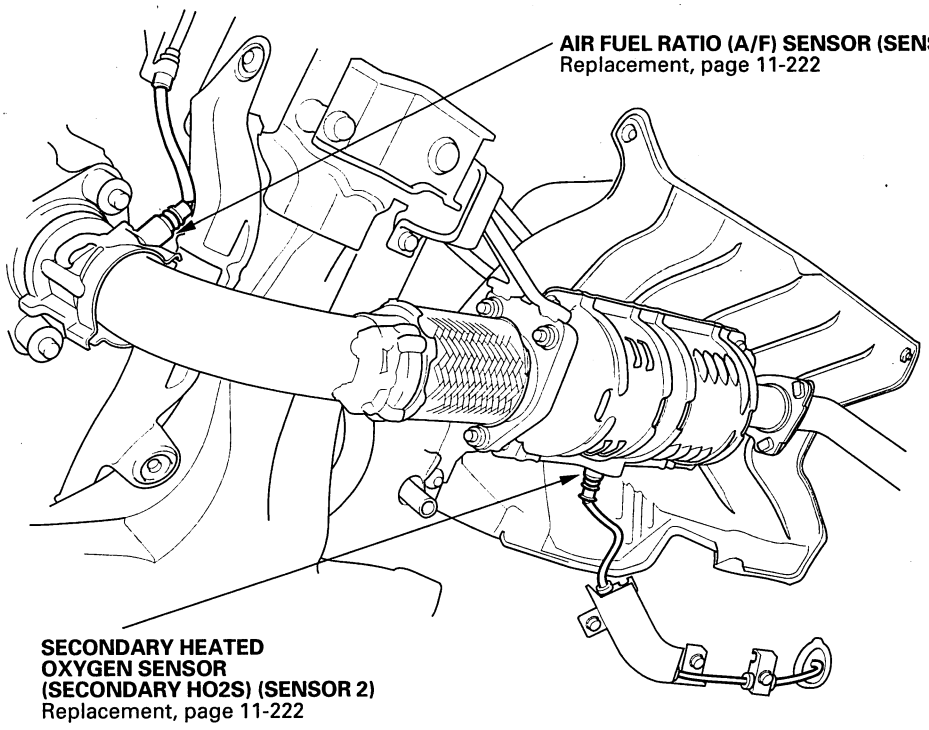

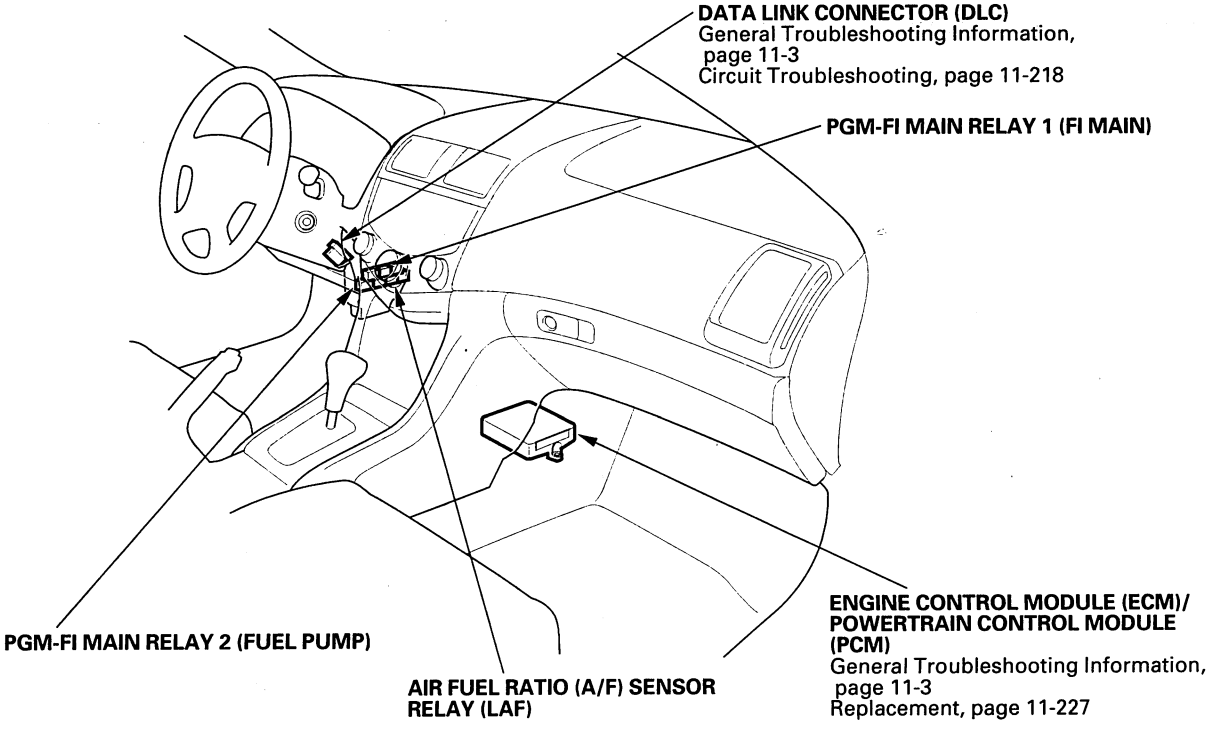

Protected by AR

DTC Troubleshooting

DTC P0101: MAF sensor Range/Performance Problem (2003-2004 SULEV, LX-P models and 2005-2006 models)

NOTE: If DTC P1128, P1129, P2228, and/or P2229 are stored at the same time as DTC P0101, troubleshoot those DTCs first, then recheck for DTC P0101.

1. Record all freeze data and any on-board snapshot with the HDS.
2. Check for poor connections or damage to these parts:
   - PCV hose
   - Intake air tube
   - Air cleaner
   - Purge (PCS) line
   - Brake booster hose

   Are the parts OK?

   YES—Go to step 3.

   NO—Repair or replace the damaged parts, then go to step 18.
3. Check for damage or looseness at the air tube in the air cleaner.

   Is it OK?

   YES—Go to step 4.

   NO—Reconnect or replace the air tube in the air cleaner, then go to step 16.
4. Check for a dirty air cleaner.

   Is it dirty?

   YES—Replace the air cleaner element (see page 11-361), then go to step 16.

   NO—Go to step 5.
5. Turn the ignition switch OFF.
6. Turn the ignition switch ON (II).
7. Check the MAF SENSOR in the DATA LIST with the HDS.

   Is there about 0.2 gm/s or 0.5 V?

   YES—Go to step 8.

   NO—Go to step 14.
8. Start the engine.
9. Vary the engine speed between 2,000 rpm and 3,000 rpm.
10. Check the MAF SENSOR in the DATA LIST with the HDS.

    Does the reading change?

    YES—Go to step 11.

    NO—Go to step 14.
11. Hold the engine speed at 3,000 rpm without load (in Park or neutral) until the radiator fan comes on, then let it idle.
12. Test-drive the vehicle for several minutes in the range of these recorded freeze data parameters:
    - Engine speed
    - Vehicle speed
    - MAP sensor
    - MAF sensor
13. Monitor the OBD STATUS for DTC P0101 in the DTCs MENU with the HDS.

    Does the screen indicate FAILED?

    YES—Go to step 14.

    NO—If the screen indicates PASSED, intermittent failure, system is OK at this time. Check the poor connections or loose terminals at the MAF sensor and the ECM/PCM. If the screen indicates NOT COMPLETED, go to step 12 and recheck.

BACK

Protected by AR

14. Turn the ignition switch OFF.

15. Replace the MAF sensor/IAT sensor (see page 11-226).

16. Turn the ignition switch ON (II).

17. Reset the ECM/PCM with the HDS.

18. Do the ECM/PCM idle learn procedure (see page 11-316).

19. Test-drive the vehicle for several minutes in the range of these recorded freeze data parameters:

    - Engine speed
    - Vehicle speed
    - MAP sensor
    - MAF sensor

20. Check for Temporary DTCs or DTCs with the HDS.

    Are any Temporary DTCs or DTCs indicated?

    YES—If DTC P0101 is indicated, check for poor connections or loose terminals at the MAF sensor and the ECM/PCM, then go to step 1. If any other Temporary DTCs or DTCs are indicated, go to the indicated DTC's troubleshooting.

    NO—Go to step 21.

21. Monitor the OBD STATUS for DTC P0101 in the DTCs MENU with the HDS.

    Does the screen indicate PASSED?

    YES—Troubleshooting is complete. ■

    NO—If the screen indicates FAILED, check for poor connections or loose terminals at the MAF sensor and the ECM/PCM, then go to step 1. If the screen indicates NOT COMPLETED, go to step 19 and recheck.

Protected by AR

DTC Troubleshooting (cont'd)

DTC P0102: MAF Sensor Circuit Low Voltage (2003-2004 SULEV, LX-P models and 2005-2006 models)

1. Turn the ignition switch ON (II), and wait 2 seconds.
2. Check the MAF SENSOR in the DATA LIST with the HDS.

   Is about 0 gm/s or 0.1 V or less indicated?

   YES—Go to step 3.

   NO—Intermittent failure, system is OK at this time. Check for poor connections or loose terminals at the MAF sensor and the ECM/PCM. ■
3. Check the No. 18 ACG (15 A) fuse in the under-dash fuse/relay box.

   Is the fuse OK?

   YES—Go to step 4.

   NO—Repair short in the wire between the MAF sensor and the No. 18 ACG (15 A) fuse. Also replace the No. 18 ACG (15 A) fuse, then go to step 20.
4. Turn the ignition switch OFF.
5. Disconnect the MAF sensor/IAT sensor 5P connector.
6. Turn the ignition switch ON (II).
7. Measure voltage between MAF sensor/IAT sensor 5P connector terminal No. 5 and body ground.

MAF SENSOR/IAT SENSOR 5P CONNECTOR

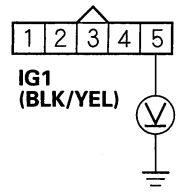

Wire side of female terminals

Is there battery voltage?

YES—Go to step 8.

NO—Repair open in the wire between the No. 18 ACG (15 A) fuse and the MAF sensor, then go to step 20.

8. Turn the ignition switch OFF.
9. Measure resistance between MAF sensor/IAT sensor 5P connector terminal No. 3 and body ground.

MAF SENSOR/IAT SENSOR 5P CONNECTOR

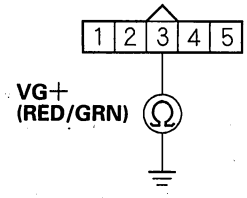

Wire side of female terminals

Is there 190—210 kΩ?

YES—Go to step 15.

NO—Go to step 10.

BACK

Protected by AR

10. Jump the SCS line with the HDS.
11. Disconnect ECM/PCM connector C (22P).
12. Check for continuity between ECM/PCM connector terminal C22 and body ground.

ECM/PCM CONNECTOR C (22P)

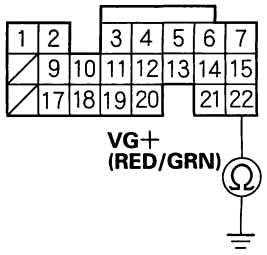

Wire side of female terminals

Is there continuity?

YES—Repair short in the wire between the ECM/PCM (C22) and the MAF sensor, then go to step 20.

NO—Go to step 13.

13. Connect MAF sensor/IAT sensor 5P connector terminal No. 3 to body ground with a jumper wire.

MAF SENSOR/IAT SENSOR 5P CONNECTOR

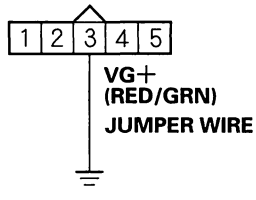

Wire side of female terminals

14. Check for continuity between ECM/PCM connector terminal C22 and body ground.

ECM/PCM CONNECTOR C (22P)

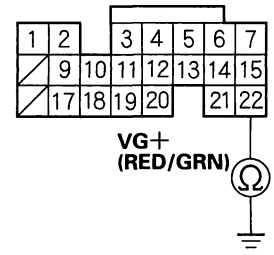

Wire side of female terminals

Is there continuity?

YES—Go to step 25.

NO—Repair open in the wire between the ECM/PCM (C22) and the MAF sensor, then go to step 20.

15. Reconnect the MAF sensor/IAT sensor 5P connector.
16. Start the engine. Hold the engine speed at 2,000 rpm without load (in Park or neutral).
17. Measure voltage between ECM/PCM connector terminal C22 and body ground.

ECM/PCM CONNECTOR C (22P)

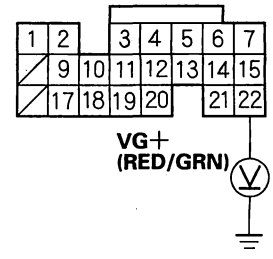

Wire side of female terminals

Is there about 1.5 V?

YES—Go to step 25.

NO—Go to step 18.

(cont'd)

Protected by AR

DTC Troubleshooting (cont'd)

18. Turn the ignition switch OFF.
19. Replace the MAF sensor/IAT sensor (see page 11-226).
20. Reconnect all connectors.
21. Turn the ignition switch ON (II).
22. Reset the ECM/PCM with the HDS.
23. Do the ECM/PCM idle learn procedure (see page 11-316).
24. Check for Temporary DTCs or DTCs with the HDS.

    Are any Temporary DTCs or DTCs indicated?

    YES—If DTC P0102 is indicated, check for poor connections or loose terminals at the MAF sensor and the ECM/PCM, then go to step 1. If any other Temporary DTCs or DTCs are indicated, go to the indicated DTC's troubleshooting.

    NO—Troubleshooting is complete. ■
25. Update the ECM/PCM if it does not have the latest software, or substitute a known-good ECM/PCM (see page 11-6).
26. Check for Temporary DTCs or DTCs with the HDS.

    Are any Temporary DTCs or DTCs indicated?

    YES—If DTC P0102 is indicated, check for poor connections or loose terminals at the MAF sensor and the ECM/PCM, then go to step 1. If any other Temporary DTCs or DTCs are indicated, go to the indicated DTC's troubleshooting.

    NO—If the ECM/PCM was updated, troubleshooting is complete. If the ECM/PCM was substituted, replace the original ECM/PCM (see page 11-227). ■

BACK

Protected by AR

DTC P0103: MAF Sensor Circuit High Voltage (2003-2004 SULEV, LX-P models and 2005-2006 models)

1. Turn the ignition switch ON (II), and wait 2 seconds.
2. Check the MAF SENSOR in the DATA LIST with the HDS.

   Is about 202 gm/s or 4.89 V or more indicated?

   YES—Go to step 3.

   NO—Intermittent failure, system is OK at this time. Check for poor connections or loose terminals at the MAF sensor and the ECM/PCM. ■
3. Turn the ignition switch OFF.
4. Jump the SCS line with the HDS.
5. Disconnect the MAF sensor/IAT sensor 5P connector.
6. Disconnect ECM/PCM connector C (22P).
7. Connect MAF sensor/IAT sensor 5P connector terminal No. 4 to body ground with a jumper wire.

MAF SENSOR/IAT SENSOR 5P CONNECTOR

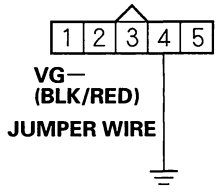

Wire side of female terminals

8. Check for continuity between ECM/PCM connector terminal C21 and body ground.

ECM/PCM CONNECTOR C (22P)

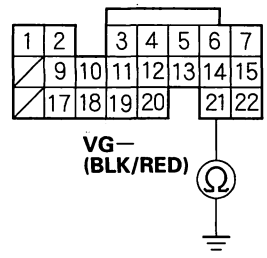

Wire side of female terminals

Is there continuity?

YES—Go to step 9.

NO—Repair open in the wire between the ECM/PCM (C21) and the MAF sensor, then go to step 15.

9. Reconnect ECM/PCM connector C (22P).
10. Reconnect the MAF sensor/IAT sensor 5P connector.
11. Start the engine. Hold the engine speed at 2,000 rpm without load (in Park or neutral).
12. Measure voltage between ECM/PCM connector terminal C22 and body ground.

ECM/PCM CONNECTOR C (22P)

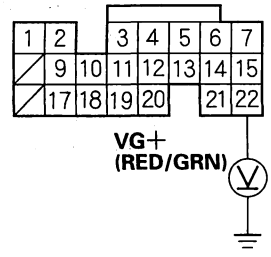

Wire side of female terminals

Is there about 1.5 V?

YES—Go to step 20.

NO—Go to step 13.

(cont'd)

Protected by AR

DTC Troubleshooting (cont'd)

13. Turn the ignition switch OFF.
14. Replace the MAF sensor/IAT sensor (see page 11-226).
15. Reconnect all connectors.
16. Turn the ignition switch ON (II).
17. Reset the ECM/PCM with the HDS.
18. Do the ECM/PCM idle learn procedure (see page 11-316).
19. Check for Temporary DTCs or DTCs with the HDS.

    Are any Temporary DTCs or DTCs indicated?

    YES—If DTC P0103 is indicated, check for poor connections or loose terminals at the MAF sensor and the ECM/PCM, then go to step 1. If any other Temporary DTCs or DTCs are indicated, go to the indicated DTC's troubleshooting.

    NO—Troubleshooting is complete. ■
20. Update the ECM/PCM if it does not have the latest software, or substitute a known-good ECM/PCM (see page 11-6).
21. Check for Temporary DTCs or DTCs with the HDS.

    Are any Temporary DTCs or DTCs indicated?

    YES—If DTC P0103 is indicated, check for poor connections or loose terminals at the MAF sensor and the ECM/PCM, then go to step 1. If any other Temporary DTCs or DTCs are indicated, go to the indicated DTC's troubleshooting.

    NO—If the ECM/PCM was updated, troubleshooting is complete. If the ECM/PCM was substituted, replace the original ECM/PCM (see page 11-227). ■

BACK

Protected by AR

DTC P0107: MAP Sensor Circuit Low Voltage (2003-2004 models)

1. Turn the ignition switch ON (II).
2. Clear the DTC with the HDS.
3. Turn the ignition switch OFF.
4. Turn the ignition switch ON (II).
5. Check for Temporary DTCs or DTCs with the HDS.

   Are DTC P0107, P0122, and P0452 indicated at the same time?

   YES—Go to step 17.

   NO—Go to step 6.
6. Check the MAP SENSOR in the DATA LIST with the HDS.

   Is about 3 kPa (1.0 in.Hg, 26 mmHg), or 0.23 V or less indicated?

   YES—Go to step 7.

   NO—Intermittent failure, system is OK at this time. Check for poor connections or loose terminals at the MAP sensor and the ECM/PCM. ■
7. Turn the ignition switch OFF.
8. Disconnect the MAP sensor 3P connector.
9. Turn the ignition switch ON (II).
10. Check the MAP SENSOR in the DATA LIST with the HDS.

    Is about 3 kPa (1.0 in.Hg, 26 mmHg), or 0.23 V or less indicated?

    YES—Go to step 13.

    NO—Go to step 11.
11. Measure voltage between MAP sensor 3P connector terminals No. 1 and No. 3.

MAP SENSOR 3P CONNECTOR

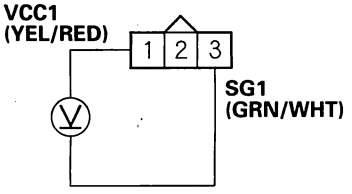

Wire side of female terminals

Is there about 5 V?

YES—Go to step 26.

NO—Go to step 12.

12. Measure voltage between ECM/PCM connector terminals A21 and A24.

ECM/PCM CONNECTOR A (31P)

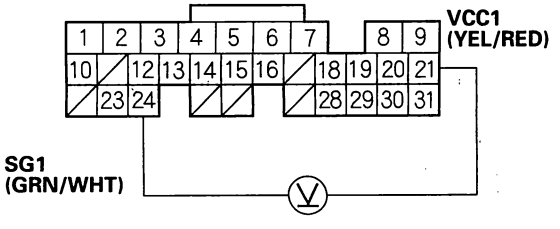

Wire side of female terminals

Is there about 5 V?

YES—Repair open in the wire between the ECM/PCM (A21) and the MAP sensor, then go to step 29.

NO—Go to step 33.

13. Turn the ignition switch OFF.
14. Jump the SCS line with the HDS.
15. Disconnect ECM/PCM connector A (31P).

(cont'd)

Protected by AR

DTC Troubleshooting (cont'd)

16. Check for continuity between MAP sensor 3P connector terminal No. 2 and body ground.

MAP SENSOR 3P CONNECTOR

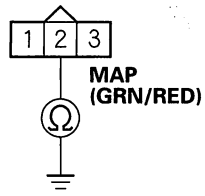

Wire side of female terminals

Is there continuity?

YES—Repair short in the wire between the ECM/PCM (A30) and the MAP sensor, then go to step 28.

NO—Go to step 33.

17. Turn the ignition switch OFF.

18. Jump the SCS line with the HDS.

19. Disconnect ECM/PCM connectors A (31P) and E (31P).

20. Disconnect the connectors from these parts:

- MAP sensor
- TP sensor
- FTP sensor
- EGR valve
- Input shaft (mainshaft) speed sensor
- Output shaft (countershaft) speed sensor

21. Check for continuity between body ground and ECM/PCM connector terminals A20, A21, and E5 individually.

ECM/PCM CONNECTORS

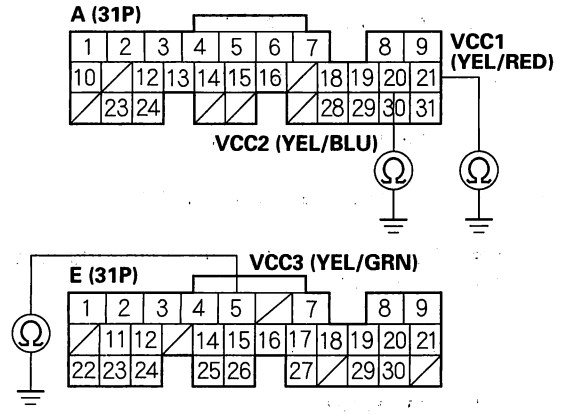

Wire side of female terminals

Is there continuity?

YES—Repair short in the wire between the ECM/PCM (A20, A21, or E5) and each disconnected part, then go to step 28.

NO—Go to step 22.

BACK

Protected by AR

22. Reconnect ECM/PCM connectors A (31P) and E (31P).

23. Turn the ignition switch ON (II).

24. Measure voltage between ECM/PCM connector terminal A21 and body ground.

ECM/PCM CONNECTOR A (31P)

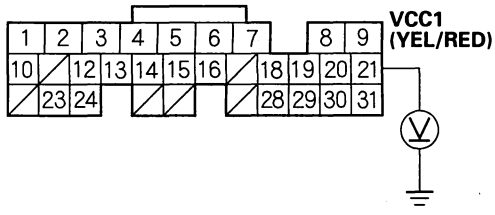

Wire side of female terminals

Is there about 5 V?

YES—Go to step 25.

NO—Go to step 33.

25. Continue to monitor voltage at the ECM/PCM connector terminal A21 while reconnecting these parts, one at a time:

- MAP sensor
- TP sensor
- FTP sensor
- EGR valve
- Input shaft (mainshaft) speed sensor
- Output shaft (countershaft) speed sensor

Did the voltage drop to about 0 V?

YES—Replace the part that caused the voltage to drop, then go to step 29.

NO—Go to step 33.

26. Turn the ignition switch OFF.

27. Replace the MAP sensor (see page 11-226).

28. Reconnect all connectors.

29. Turn the ignition switch ON (II).

30. Reset the ECM/PCM with the HDS.

31. Do the ECM/PCM idle learn procedure (see page 11-316).

32. Check for Temporary DTCs or DTCs with the HDS.

Are any Temporary DTCs or DTCs indicated?

YES—If DTC P0107 is indicated, check for poor connections or loose terminals at the MAP sensor and the ECM/PCM, then go to step 1. If any other Temporary DTCs or DTCs are indicated, go to the indicated DTC's troubleshooting.

NO—Troubleshooting is complete. ■

33. Update the ECM/PCM if it does not have the latest software, or substitute a known-good ECM/PCM (see page 11-6).

34. Check for Temporary DTCs or DTCs with the HDS.

Are any Temporary DTCs or DTCs indicated?

YES—If DTC P0107 is indicated, check for poor connections or loose terminals at the MAP sensor and the ECM/PCM, then go to step 1. If any other Temporary DTCs or DTCs are indicated, go to the indicated DTC's troubleshooting.

NO—If the ECM/PCM was updated, troubleshooting is complete. If the ECM/PCM was substituted, replace the original ECM/PCM (see page 11-227). ■

Protected by AR

DTC Troubleshooting (cont'd)

DTC P0107: MAP Sensor Circuit Low Voltage (2005-2006 models)

1. Turn the ignition switch ON (II).
2. Check the MAP SENSOR in the DATA LIST with the HDS.

   Is about 3 kPa (1.0 in.Hg, 26 mmHg), or 0.23 V or less indicated?

   YES—Go to step 3.

   NO—Intermittent failure, system is OK at this time. Check for poor connections or loose terminals at the MAP sensor and the ECM/PCM. ■
3. Turn the ignition switch OFF.
4. Disconnect the MAP sensor 3P connector.
5. Turn the ignition switch ON (II).
6. Check the MAP SENSOR in the DATA LIST with the HDS.

   Is about 3 kPa (1.0 in.Hg, 26 mmHg), or 0.23 V or less indicated?

   YES—Go to step 9.

   NO—Go to step 7.
7. Measure voltage between MAP sensor 3P connector terminals No. 1 and No. 3.

MAP SENSOR 3P CONNECTOR

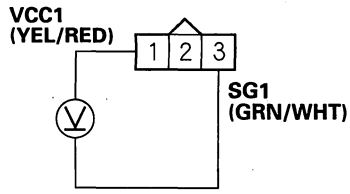

Wire side of female terminals

Is there about 5 V?

YES—Go to step 13.

NO—Go to step 8.

8. Measure voltage between ECM/PCM connector terminals A21 and A24.

ECM/PCM CONNECTOR A (31P)

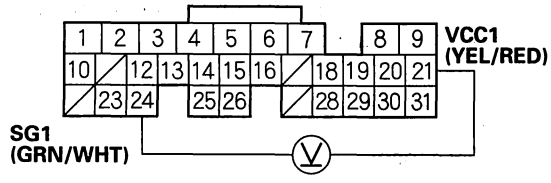

Wire side of female terminals

Is there about 5 V?

YES—Repair open in the wire between the ECM/PCM (A21) and the MAP sensor, then go to step 15.

NO—Go to step 20.

BACK

Protected by AR

9. Turn the ignition switch OFF.
10. Jump the SCS line with the HDS.
11. Disconnect ECM/PCM connector A (31P).
12. Check for continuity between MAP sensor 3P connector terminal No. 2 and body ground.

MAP SENSOR 3P CONNECTOR

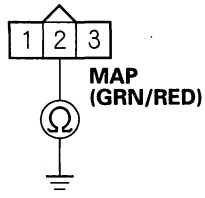

Wire side of female terminals

Is there continuity?

YES—Repair short in the wire between the ECM/PCM (A30) and the MAP sensor, then go to step 15.

NO—Go to step 20.

13. Turn the ignition switch OFF.
14. Replace the MAP sensor (see page 11-226).
15. Reconnect all connectors.
16. Turn the ignition switch ON (II).
17. Reset the ECM/PCM with the HDS.
18. Do the ECM/PCM idle learn procedure (see page 11-316).
19. Check for Temporary DTCs or DTCs with the HDS.

Are any Temporary DTCs or DTCs indicated?

YES—If DTC P0107 is indicated, check for poor connections or loose terminals at the MAP sensor and the ECM/PCM, then go to step 1. If any other Temporary DTCs or DTC's are indicated, go to the indicated DTC's troubleshooting.

NO—Troubleshooting is complete. ■

20. Update the ECM/PCM if it does not have the latest software, or substitute a known-good ECM/PCM (see page 11-6).
21. Check for Temporary DTCs or DTCs with the HDS.

Are any Temporary DTCs or DTCs indicated?

YES—If DTC P0107 is indicated, check for poor connections or loose terminals at the MAP sensor and the ECM/PCM, then go to step 1. If any other Temporary DTCs or DTC's are indicated, go to the indicated DTC's troubleshooting.

NO—If the ECM/PCM was updated, troubleshooting is complete. If the ECM/PCM was substituted, replace the original ECM/PCM (see page 11-227). ■

Protected by AR

DTC Troubleshooting (cont'd)

DTC P0108: MAP Sensor Circuit High Voltage

1. Turn the ignition switch ON (II).
2. Check the MAP SENSOR in the DATA LIST with the HDS.

   Is 160 kPa (47.1 in.Hg, 1,197 mmHg), or 4.49 V or more indicated?

   YES—Go to step 3.

   NO—Intermittent failure, system is OK at this time. Check for poor connections or loose terminals at the MAP sensor and the ECM/PCM. ■
3. Turn the ignition switch OFF.
4. Disconnect the MAP sensor 3P connector.
5. Connect MAP sensor 3P connector terminals No. 2 and No. 3 with a jumper wire.

MAP SENSOR 3P CONNECTOR

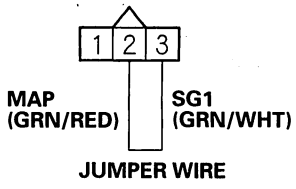

Wire side of female terminals

6. Turn the ignition switch ON (II).
7. Check the MAP SENSOR in the DATA LIST with the HDS.

   Is 160 kPa (47.1 in.Hg, 1,197 mmHg), or 4.49 V or more indicated?

   YES—Go to step 8.

   NO—Go to step 19.
8. Remove the jumper wire from the MAP sensor 3P connector.
9. Measure voltage between MAP sensor 3P connector terminals No. 1 and No. 3.

MAP SENSOR 3P CONNECTOR

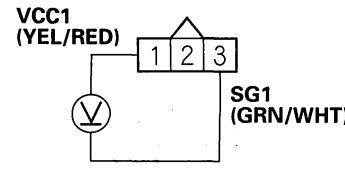

Wire side of female terminals

Is there about 5 V?

YES—Go to step 15.

NO—Go to step 10.

10. Turn the ignition switch OFF.
11. Jump the SCS line with the HDS.
12. Disconnect ECM/PCM connector A (31P).
13. Connect MAP sensor 3P connector terminal No. 3 to body ground with a jumper wire.

MAP SENSOR 3P CONNECTOR

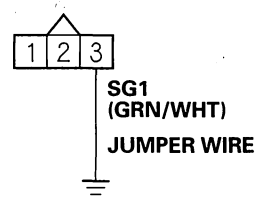

Wire side of female terminals

BACK

Protected by AR

14. Check for continuity between ECM/PCM connector terminal A24 and body ground.

ECM/PCM CONNECTOR A (31P)

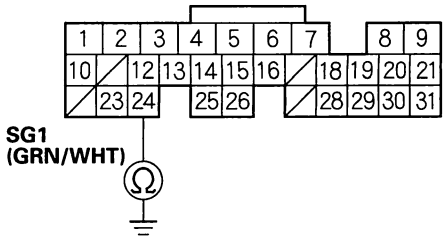

Wire side of female terminals

Is there continuity?

YES—Go to step 26.

NO—Repair open in the wire between the ECM/PCM (A24) and the MAP sensor, then go to step 21.

15. Turn the ignition switch OFF.

16. Connect ECM/PCM connector terminals A24 and A30 with a jumper wire.

ECM/PCM CONNECTOR A (31P)

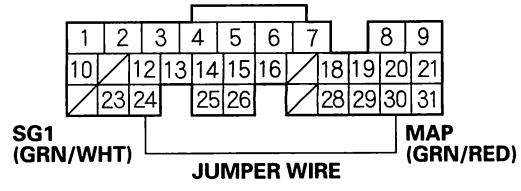

Wire side of female terminals

17. Turn the ignition switch ON (II).

18. Check the MAP SENSOR in the DATA LIST with the HDS.

Is 160 kPa (47.1 in.Hg, 1,197 mmHg), or 4.49 V or more indicated?

YES—Go to step 26.

NO—Repair open in the wire between the ECM/PCM (A30) and the MAP sensor, then go to step 21.

19. Turn the ignition switch OFF.

20. Replace the MAP sensor (see page 11-226).

21. Reconnect all connectors.

22. Turn the ignition switch ON (II).

23. Reset the ECM/PCM with the HDS.

24. Do the ECM/PCM idle learn procedure (see page 11-316).

25. Check for Temporary DTCs or DTCs with the HDS.

Are any Temporary DTCs or DTCs indicated?

YES—If DTC P0108 is indicated, check for poor connections or loose terminals at the MAP sensor and the ECM/PCM, then go to step 1. If any other Temporary DTCs or DTCs are indicated, go to the indicated DTC's troubleshooting.

NO—Troubleshooting is complete. ■

(cont'd)

Protected by AR

DTC Troubleshooting (cont'd)

26. Update the ECM/PCM if it does not have the latest software, or substitute a known-good ECM/PCM (see page 11-6).

27. Check for Temporary DTCs or DTCs with the HDS.

    Are any Temporary DTCs or DTCs indicated?

    YES—If DTC P0108 is indicated, check for poor connections or loose terminals at the MAP sensor and the ECM/PCM, then go to step 1. If any other Temporary DTCs or DTCs are indicated, go to the indicated DTC's troubleshooting.

    NO—If the ECM/PCM was updated, troubleshooting is complete. If the ECM/PCM was substituted, replace the original ECM/PCM (see page 11-227). ■

BACK

Protected by AR

DTC P0111: IAT Sensor Circuit Range/ Performance Problem (2005-2006 models)

1. Check for poor connections or loose terminals at the ECT sensor and the IAT sensor.

   Are the connections and terminals OK?

   YES—Go to step 2.

   NO—Repair the connectors or terminals, then go to step 15.

2. Replace the MAF sensor/IAT sensor (see page 11-226).

3. Allow IAT sensor to cool to 77° F (25 °C).

4. Note the ambient temperature.

5. Connect the MAF sensor/IAT sensor to the 5P connector, but do not install the sensor to the air cleaner.

6. Turn the ignition switch ON (II).

7. Note the value of the IAT SENSOR quickly in the DATA LIST with the HDS.

8. Compare the value of IAT SENSOR and the ambient temperature.

   Does the value of IAT SENSOR differ 5.4 °F (3 °C) or more?

   YES—Go to step 13.

   NO—Go to step 9.

9. Disconnect the MAF sensor/IAT sensor from the 5P connector.

10. Using a heat gun, blow hot air on the MAF sensor/ IAT sensor for a few seconds. Do not apply the heat longer than a few seconds or you will damage the sensor.

11. Connect MAF sensor/IAT sensor to the 5P connector, but do not install the sensor to the air cleaner.

12. Check the IAT SENSOR in the DATA LIST with the HDS.

    Does the IAT SENSOR change 58 °F (32 °C) or more?

    YES—Intermittent failure, system is OK at this time. Check for poor connections or loose terminals at the IAT sensor and the ECM/PCM. ■

    NO—Go to step 13.

13. Turn the ignition switch OFF.

14. Replace the MAF sensor/IAT sensor (see page 11-226).

15. Turn the ignition switch ON (II).

16. Reset the ECM/PCM with the HDS.

17. Do the ECM/PCM idle learn procedure (see page 11-316).

18. Check for Temporary DTCs or DTCs with the HDS.

    Are any Temporary DTCs or DTCs indicated?

    YES—If DTC P0111 is indicated, check for poor connections or loose terminals at the IAT sensor and the ECM/PCM, then go to step 1. If any other Temporary DTCs or DTCs are indicated, go to the indicated DTC's troubleshooting.

    NO—Troubleshooting is complete. ■

Protected by AR

DTC Troubleshooting (cont'd)

DTC P0112: IAT Sensor Circuit Low Voltage (2003-2004 except SULEV, LX-P models)

1. Turn the ignition switch ON (II).
2. Check the IAT SENSOR in the DATA LIST with the HDS.

   Is about 356 °F (180 °C) or more, or 0.08 V or less indicated?

   YES—Go to step 3.

   NO—Intermittent failure, system is OK at this time. Check for poor connections or loose terminals at the IAT sensor and the ECM/PCM. ■
3. Turn the ignition switch OFF.
4. Disconnect the IAT sensor 2P connector.
5. Turn the ignition switch ON (II).
6. Check the IAT SENSOR in the DATA LIST with the HDS.

   Is about 356 °F (180 °C) or more, or 0.08 V or less indicated?

   YES—Go to step 7.

   NO—Go to step 11.
7. Turn the ignition switch OFF.
8. Jump the SCS line with the HDS.
9. Disconnect ECM/PCM connector B (24P).
10. Check for continuity between IAT sensor 2P connector terminal No. 2 and body ground.

IAT SENSOR 2P CONNECTOR

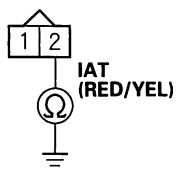

Wire side of female terminals

Is there continuity?

YES—Repair short in the wire between the IAT sensor and the ECM/PCM (B17), then go to step 13.

NO—Go to step 18.

11. Turn the ignition switch OFF.
12. Replace the IAT sensor (see page 11-226).
13. Reconnect all connectors.
14. Turn the ignition switch ON (II).
15. Reset the ECM/PCM with the HDS.
16. Do the ECM/PCM idle learn procedure (see page 11-316).
17. Check for Temporary DTCs or DTCs with the HDS.

    Are any Temporary DTCs or DTCs indicated?

    YES—If DTC P0112 is indicated, check for poor connections or loose terminals at the IAT sensor and the ECM/PCM, then go to step 1. If any other Temporary DTCs or DTCs are indicated, go to the indicated DTC's troubleshooting.

    NO—Troubleshooting is complete. ■
18. Update the ECM/PCM if it does not have the latest software, or substitute a known-good ECM/PCM (see page 11-6).
19. Check for Temporary DTCs or DTCs with the HDS.

    Are any Temporary DTCs or DTCs indicated?

    YES—If DTC P0112 is indicated, check for poor connections or loose terminals at the IAT sensor and the ECM/PCM, then go to step 1. If any other Temporary DTCs or DTCs are indicated, go to the indicated DTC's troubleshooting.

    NO—If the ECM/PCM was updated, troubleshooting is complete. If the ECM/PCM was substituted, replace the original ECM/PCM (see page 11-227). ■

BACK

Protected by AR

DTC P0112: IAT Sensor Circuit Low Voltage (2003-2004 SULEV, LX-P models and 2005-2006 models)

1. Turn the ignition switch ON (II).
2. Check the IAT SENSOR in the DATA LIST with the HDS.

   Is about 356 °F (180 °C) or more, or 0.08 V or less indicated?

   YES—Go to step 3.

   NO—Intermittent failure, system is OK at this time. Check for poor connections or loose terminals at the IAT sensor and the ECM/PCM. ■
3. Turn the ignition switch OFF.
4. Disconnect the MAF sensor/IAT sensor 5P connector.
5. Turn the ignition switch ON (II).
6. Check the IAT SENSOR in the DATA LIST with the HDS.

   Is about 356 °F (180 °C) or more, or 0.08 V or less indicated?

   YES—Go to step 7.

   NO—Go to step 11.
7. Turn the ignition switch OFF.
8. Jump the SCS line with the HDS.
9. Disconnect ECM/PCM connector B (24P).
10. Check for continuity between MAF sensor/IAT sensor 5P connector terminal No. 2 and body ground.

MAF SENSOR/IAT SENSOR 5P CONNECTOR

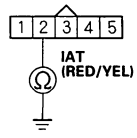

Wire side of female terminals

Is there continuity?

YES—Repair short in the wire between the IAT sensor and the ECM/PCM (B17), then go to step 13.

NO—Go to step 18.

11. Turn the ignition switch OFF.
12. Replace the MAF sensor/IAT sensor (see page 11-226).
13. Reconnect all connectors.
14. Turn the ignition switch ON (II).
15. Reset the ECM/PCM with the HDS.
16. Do the ECM/PCM idle learn procedure (see page 11-316).
17. Check for Temporary DTCs or DTCs with the HDS.

    Are any Temporary DTCs or DTCs indicated?

    YES—If DTC P0112 is indicated, check for poor connections or loose terminals at the IAT sensor and the ECM/PCM, then go to step 1. If any other Temporary DTCs or DTCs are indicated, go to the indicated DTC's troubleshooting.

    NO—Troubleshooting is complete. ■
18. Update the ECM/PCM if it does not have the latest software, or substitute a known-good ECM/PCM (see page 11-6).
19. Check for Temporary DTCs or DTCs with the HDS.

    Are any Temporary DTCs or DTCs indicated?

    YES—If DTC P0112 is indicated, check for poor connections or loose terminals at the IAT sensor and the ECM/PCM, then go to step 1. If any other Temporary DTCs or DTCs are indicated, go to the indicated DTC's troubleshooting.

    NO—If the ECM/PCM was updated, troubleshooting is complete. If the ECM/PCM was substituted, replace the original ECM/PCM (see page 11-227). ■

Protected by AR

DTC Troubleshooting (cont'd)

DTC P0113: IAT Sensor Circuit High Voltage (2003-2004 except SULEV, LX-P models)

1. Turn the ignition switch ON (II).
2. Check the IAT SENSOR in the DATA LIST with the HDS.

   Is about −40 °F (−40 °C) or less, or 4.90 V or more indicated?

   YES—Go to step 3.

   NO—Intermittent failure, system is OK at this time. Check for poor connections or loose terminals at the IAT sensor and the ECM/PCM. ■
3. Turn the ignition switch OFF.
4. Disconnect the IAT sensor 2P connector.
5. Connect IAT sensor 2P connector terminals No. 1 and No. 2 with a jumper wire.

IAT SENSOR 2P CONNECTOR

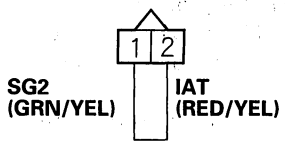

Wire side of female terminals

6. Turn the ignition switch ON (II).
7. Check the IAT SENSOR in the DATA LIST with the HDS.

   Is about −40 °F (−40 °C) or less, or 4.90 V or more indicated?

   YES—Go to step 8.

   NO—Go to step 18.
8. Turn the ignition switch OFF.
9. Remove the jumper wire from the IAT sensor 2P connector.
10. Turn the ignition switch ON (II).
11. Measure voltage between IAT sensor 2P connector terminal No. 2 and body ground.

IAT SENSOR 2P CONNECTOR

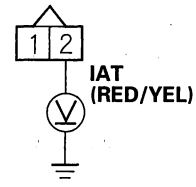

Wire side of female terminals

Is there about 5 V?

YES—Go to step 12.

NO—Go to step 17.

12. Turn the ignition switch OFF.
13. Jump the SCS line with the HDS.
14. Disconnect ECM/PCM connector A (31P).
15. Connect IAT sensor 2P connector terminal No. 1 to body ground with a jumper wire.

IAT SENSOR 2P CONNECTOR

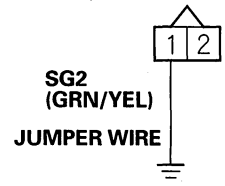

Wire side of female terminals

BACK

Protected by AR

16. Check for continuity between ECM/PCM connector terminal A23 and body ground.

ECM/PCM CONNECTOR A (31P)

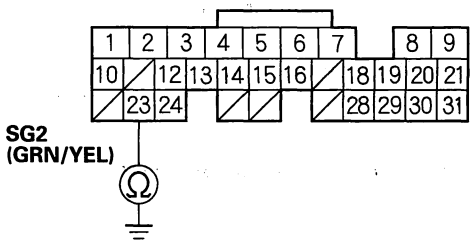

Wire side of female terminals

Is there continuity?

YES—Go to step 25.

NO—Repair open in the wire between the ECM/PCM (A23) and the IAT sensor, then go to step 20.

17. Measure voltage between ECM/PCM connector terminal B17 and body ground.

ECM/PCM CONNECTOR B (24P)

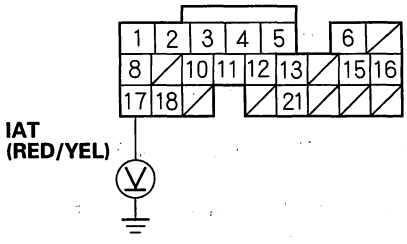

Wire side of female terminals

Is there about 5 V?

YES—Repair open in the wire between the ECM/PCM (B17) and the IAT sensor, then go to step 20.

NO—Go to step 25.

18. Turn the ignition switch OFF.

19. Replace the IAT sensor (see page 11-226).

20. Reconnect all connectors.

21. Turn the ignition switch ON (II).

22. Reset the ECM/PCM with the HDS.

23. Do the ECM/PCM idle learn procedure (see page 11-316).

24. Check for Temporary DTCs or DTCs with the HDS.

Are any Temporary DTCs or DTCs indicated?

YES—If DTC P0113 is indicated, check for poor connections or loose terminals at the IAT sensor and the ECM/PCM, then go to step 1. If any other Temporary DTCs or DTCs are indicated, go to the indicated DTC's troubleshooting.

NO—Troubleshooting is complete. ■

25. Update the ECM/PCM if it does not have the latest software, or substitute a known-good ECM/PCM (see page 11-6).

26. Check for Temporary DTCs or DTCs with the HDS.

Are any Temporary DTCs or DTCs indicated?

YES—If DTC P0113 is indicated, check for poor connections or loose terminals at the IAT sensor and the ECM/PCM, then go to step 1. If any other Temporary DTCs or DTCs are indicated, go to the indicated DTC's troubleshooting.

NO—If the ECM/PCM was updated, troubleshooting is complete. If the ECM/PCM was substituted, replace the original ECM/PCM (see page 11-227). ■

Protected by AR

DTC Troubleshooting (cont'd)

DTC P0113: IAT Sensor Circuit High Voltage (2003-2004 SULEV, LX-P models and 2005-2006 models)

1. Turn the ignition switch ON (II).
2. Check the IAT SENSOR in the DATA LIST with the HDS.

   Is about −40 °F (−40 °C) or less, or 4.90 V or more indicated?

   YES—Go to step 3.

   NO—Intermittent failure, system is OK at this time. Check for poor connections or loose terminals at the IAT sensor and the ECM/PCM. ■
3. Turn the ignition switch OFF.
4. Disconnect the MAF sensor/IAT sensor 5P connector.
5. Connect MAF sensor/IAT sensor 5P connector terminals No. 1 and No. 2 with a jumper wire.

MAF SENSOR/IAT SENSOR 5P CONNECTOR

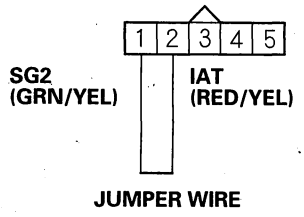

Wire side of female terminals

6. Turn the ignition switch ON (II).
7. Check the IAT SENSOR in the DATA LIST with the HDS.

   Is about −40 °F (−40 °C) or less, or 4.90 V or more indicated?

   YES—Go to step 8.

   NO—Go to step 18.
8. Turn the ignition switch OFF.
9. Remove the jumper wire from the IAT sensor 5P connector.
10. Turn the ignition switch ON (II).
11. Measure voltage between MAF sensor/IAT sensor 5P connector terminal No. 2 and body ground.

MAF SENSOR/IAT SENSOR 5P CONNECTOR

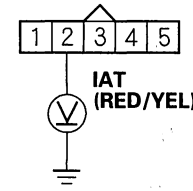

Wire side of female terminals

Is there about 5 V?

YES—Go to step 12.

NO—Go to step 17.

12. Turn the ignition switch OFF.
13. Jump the SCS line with the HDS.
14. Disconnect ECM/PCM connector A (31P).
15. Connect MAF sensor/IAT sensor 5P connector terminal No. 1 to body ground with a jumper wire.

MAF SENSOR/IAT SENSOR 5P CONNECTOR

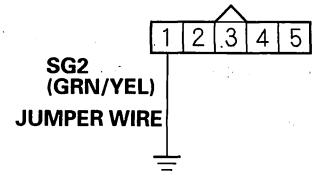

Wire side of female terminals

BACK

Protected by AR

16. Check for continuity between ECM/PCM connector terminal A23 and body ground.

ECM/PCM CONNECTOR A (31P)

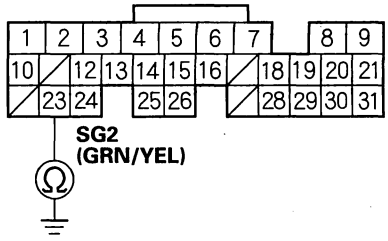

Wire side of female terminals

Is there continuity?

YES—Go to step 25.

NO—Repair open in the wire between the ECM/PCM (A23) and the IAT sensor, then go to step 20.

17. Measure voltage between ECM/PCM connector terminal B17 and body ground.

ECM/PCM CONNECTOR B (24P)

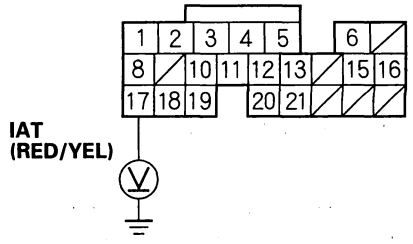

Wire side of female terminals

Is there about 5 V?

YES—Repair open in the wire between the ECM/PCM (B17) and the IAT sensor, then go to step 20.

NO—Go to step 25.

18. Turn the ignition switch OFF.

19. Replace the MAF sensor/IAT sensor (see page 11-226).

20. Reconnect all connectors.

21. Turn the ignition switch ON (II).

22. Reset the ECM/PCM with the HDS.

23. Do the ECM/PCM idle learn procedure (see page 11-316).

24. Check for Temporary DTCs or DTCs with the HDS.

Are any Temporary DTCs or DTCs indicated?

YES—If DTC P0113 is indicated, check for poor connections or loose terminals at the IAT sensor and the ECM/PCM, then go to step 1. If any other Temporary DTCs or DTCs are indicated, go to the indicated DTC's troubleshooting.

NO—Troubleshooting is complete. ■

25. Update the ECM/PCM if it does not have the latest software, or substitute a known-good ECM/PCM (see page 11-6).

26. Check for Temporary DTCs or DTCs with the HDS.

Are any Temporary DTCs or DTCs indicated?

YES—If DTC P0113 is indicated, check for poor connections or loose terminals at the IAT sensor and the ECM/PCM, then go to step 1. If any other Temporary DTCs or DTCs are indicated, go to the indicated DTC's troubleshooting.

NO—If the ECM/PCM was updated, troubleshooting is complete. If the ECM/PCM was substituted, replace the original ECM/PCM (see page 11-227). ■

Protected by AR

DTC Troubleshooting (cont'd)

DTC P0116: ECT Sensor Circuit Range/ Performance Problem (2003-2004 models)

1. Turn the ignition switch ON (II).
2. Check the ECT SENSOR in the DATA LIST with the HDS.

   Is about 176 °F (80 °C) or more, or 0.86 V or less indicated?

   YES—Go to step 3.

   NO—Go to step 7.
3. Note the coolant temperature from step 2.
4. Turn the ignition switch OFF.
5. Let the engine cool for 1 hour.
6. Check the ECT SENSOR in the DATA LIST with the HDS.

   Did the ECT change 3.6 °F (2 °C) or more?

   YES—Intermittent failure, system is OK at this time. Check the thermostat and the cooling system. ■

   NO—Go to step 10.
7. Note the coolant temperature.
8. Start the engine. Hold the engine speed at 3,000 rpm without load (in Park or neutral) until the radiator fan comes on, then let it idle.
9. Check the ECT SENSOR in the DATA LIST with the HDS.

   Does the ECT change 3.6 °F (2 °C) or more?

   YES—Intermittent failure, system is OK at this time. Check the thermostat and the cooling system. ■

   NO—Go to step 10.
10. Turn the ignition switch OFF.
11. Replace the ECT sensor (see page 11-223).
12. Turn the ignition switch ON (II).
13. Reset the ECM/PCM with the HDS.
14. Do the ECM/PCM idle learn procedure (see page 11-316).
15. Allow the engine to cool to between 23 °F (—5 °C) and 77 °F (25 °C).
16. Start the engine, and let it idle 20 minutes.
17. Check for Temporary DTCs or DTCs with the HDS.

    Are any Temporary DTCs or DTCs indicated?

    YES—If DTC P0116 is indicated, check for poor connections or loose terminals at the ECT sensor and the ECM/PCM, then go to step 1. If any other Temporary DTCs or DTCs are indicated, go to the indicated DTC's troubleshooting.

    NO—Go to step 18.
18. Monitor the OBD STATUS for DTC P0116 in the DTCs MENU with the HDS.

    Does the screen indicates PASSED?

    YES—Troubleshooting is complete. ■

    NO—If the screen indicates FAILED, check for poor connections or loose terminals at the ECT sensor and the ECM/PCM, then go to step 1. If the screen indicates NOT COMPLETED, go to step 15 and recheck.

BACK

Protected by AR

DTC P0116: ECT Sensor 1 Range/ Performance Problem (2005-2006 models)

1. Turn the ignition switch ON (II).
2. Check ECT SENSOR 1 in the DATA LIST with the HDS.

   Is about 176 °F (80 °C) or more, or 0.78 V or less indicated?

   YES—Go to step 6.

   NO—Go to step 3.
3. Note the value of ECT SENSOR 1 in the DATA LIST with the HDS.
4. Start the engine. Hold the engine speed at 3,000 rpm without load (in Park or neutral) until the radiator fan comes on, then let it idle.
5. Check ECT SENSOR 1 in the DATA LIST with the HDS.

   Does ECT SENSOR 1 change 18 °F (10 °C) or more?

   YES—Intermittent failure, system is OK at this time. Check for poor connections or loose terminals at ECT sensor 1 and the ECM/PCM. ■

   NO—Go to step 11.
6. Note the value of ECT SENSOR 1 in the DATA LIST with the HDS.
7. Turn the ignition switch OFF.
8. Open the hood, and let the engine cool for 3 hours.
9. Turn the ignition switch ON (II).
10. Check ECT SENSOR 1 in the DATA LIST with the HDS.

    Does ECT SENSOR 1 change 18 °F (10 °C) or more?

    YES—Intermittent failure, system is OK at this time. Check for poor connections or loose terminals at ECT sensor 1 and the ECM/PCM. ■

    NO—Go to step 11.
11. Turn the ignition switch OFF.
12. Replace ECT sensor 1 (see page 11-223).
13. Turn the ignition switch ON (II).
14. Reset the ECM/PCM with the HDS.
15. Do the ECM/PCM idle learn procedure (see page 11-316).
16. Check for Temporary DTCs or DTCs with the HDS.

    Are any Temporary DTCs or DTCs indicated?

    YES—If DTC P0116 is indicated, check for poor connections or loose terminals at ECT sensor 1 and the ECM/PCM, then go to step 1. If any other Temporary DTCs or DTCs are indicated, go to the indicated DTC's troubleshooting.

    NO—Troubleshooting is complete. ■

Protected by AR

DTC Troubleshooting (cont'd)

DTC P0117: ECT Sensor/ECT Sensor 1 Circuit Low Voltage

1. Turn the ignition switch ON (II).
2. Check the ECT SENSOR (1) in the DATA LIST with the HDS.

   Is about 356 °F (180 °C) or more, or 0.08 V or less indicated?

   YES—Go to step 3.

   NO—Intermittent failure, system is OK at this time. Check for poor connections or loose terminals at the ECT sensor/ECT sensor 1 and the ECM/PCM. ■
3. Turn the ignition switch OFF.
4. Disconnect the ECT sensor/ECT sensor 1 2P connector.
5. Turn the ignition switch ON (II).
6. Check the ECT SENSOR (1) in the DATA LIST with the HDS.

   Is about 356 °F (180 °C) or more, or 0.08 V or less indicated?

   YES—Go to step 7.

   NO—Go to step 11.
7. Turn the ignition switch OFF.
8. Jump the SCS line with the HDS.
9. Disconnect ECM/PCM connector B (24P).
10. Check for continuity between ECT sensor/ECT sensor 1 2P connector terminal No. 1 and body ground.

ECT SENSOR/ECT SENSOR 1 2P CONNECTOR

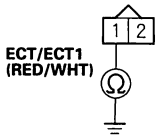

Wire side of female terminals

Is there continuity?

YES—Repair short in the wire between the ECT sensor/ECT sensor 1 and the ECM/PCM (B8), then go to step 13.

NO—Go to step 18.

11. Turn the ignition switch OFF.
12. Replace the ECT sensor/ECT sensor 1 (see page 11-223).
13. Reconnect all connectors.
14. Turn the ignition switch ON (II).
15. Reset the ECM/PCM with the HDS.
16. Do the ECM/PCM idle learn procedure (see page 11-316).
17. Check for Temporary DTCs or DTCs with the HDS.

    Are any Temporary DTCs or DTCs indicated?

    YES—If DTC P0117 is indicated, check for poor connections or loose terminals at the ECT sensor/ECT sensor 1 and the ECM/PCM, then go to step 1. If any other Temporary DTCs or DTCs are indicated, go to the indicated DTC's troubleshooting.

    NO—Troubleshooting is complete. ■
18. Update the ECM/PCM if it does not have the latest software, or substitute a known-good ECM/PCM (see page 11-6).
19. Check for Temporary DTCs or DTCs with the HDS.

    Are any Temporary DTCs or DTCs indicated?

    YES—If DTC P0117 is indicated, check for poor connections or loose terminals at the ECT sensor/ECT sensor 1 and the ECM/PCM, then go to step 1. If any other Temporary DTCs or DTCs are indicated, go to the indicated DTC's troubleshooting.

    NO—If the ECM/PCM was updated, troubleshooting is complete. If the ECM/PCM was substituted, replace the original ECM/PCM (see page 11-227). ■

BACK

Protected by AR

DTC P0118: ECT Sensor/ECT Sensor 1 Circuit High Voltage

1. Turn the ignition switch ON (II).
2. Check the ECT SENSOR (1) in the DATA LIST with the HDS.

   Is about −40 °F (−40 °C) or less, or 4.90 V or more indicated?

   YES—Go to step 3.

   NO—Intermittent failure, system is OK at this time. Check for poor connections or loose terminals at the ECT sensor/ECT sensor 1 and the ECM/PCM. ■
3. Turn the ignition switch OFF.
4. Disconnect the ECT sensor/ECT sensor 1 2P connector.
5. Connect ECT sensor/ECT sensor 1 2P connector terminals No. 1 and No. 2 with a jumper wire.

ECT SENSOR/ECT SENSOR 1 2P CONNECTOR

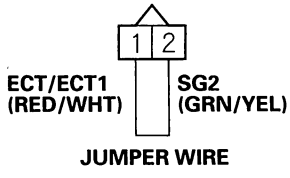

Wire side of female terminals

6. Turn the ignition switch ON (II).
7. Check the ECT SENSOR (1) in the DATA LIST with the HDS.

   Is about −40 °F (−40 °C) or less, or 4.90 V or more indicated?

   YES—Go to step 8.

   NO—Go to step 18.
8. Turn the ignition switch OFF.
9. Remove the jumper wire from the ECT sensor/ECT sensor 1 2P connector.
10. Turn the ignition switch ON (II).
11. Measure voltage between ECT sensor/ECT sensor 1 2P connector terminal No. 1 and body ground.

ECT SENSOR/ECT SENSOR 1 2P CONNECTOR

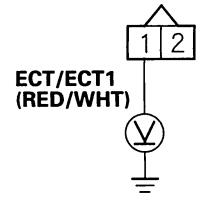

Wire side of female terminals

Is there about 5 V?

YES—Go to step 12.

NO—Go to step 17.

12. Turn the ignition switch OFF.
13. Jump the SCS line with the HDS.
14. Disconnect ECM/PCM connector A (31P).
15. Connect ECT sensor/ECT sensor 1 2P connector terminal No. 2 to body ground with a jumper wire.

ECT SENSOR/ECT SENSOR 1 2P CONNECTOR

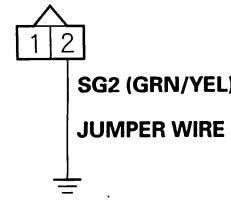

Wire side of female terminals

(cont'd)

Protected by AR

DTC Troubleshooting (cont'd)

16. Check for continuity between ECM/PCM connector terminal A23 and body ground.

ECM/PCM CONNECTOR A (31P)

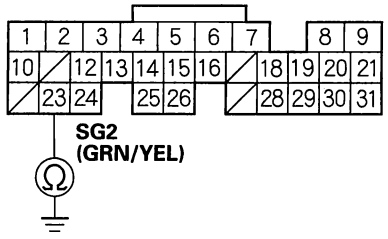

Wire side of female terminals

Is there continuity?

YES—Go to step 25.

NO—Repair open in the wire between the ECM/PCM (A23) and the ECT sensor/ECT sensor 1, then go to step 20.

17. Measure voltage between ECM/PCM connector terminal B8 and body ground.

ECM/PCM CONNECTOR B (24P)

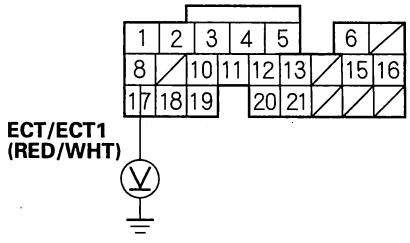

Wire side of female terminals

Is there about 5 V?

YES—Repair open in the wire between the ECM/PCM (B8) and the ECT sensor/ECT sensor 1, then go to step 20.

NO—Go to step 25.

18. Turn the ignition switch OFF.

19. Replace the ECT sensor/ECT sensor 1 (see page 11-223).

20. Reconnect all connectors.

21. Turn the ignition switch ON (II).

22. Reset the ECM/PCM with the HDS.

23. Do the ECM/PCM idle learn procedure (see page 11-316).

24. Check for Temporary DTCs or DTCs with the HDS.

Are any Temporary DTCs or DTCs indicated?

YES—If DTC P0118 is indicated, check for poor connections or loose terminals at the ECT sensor/ECT sensor 1 and the ECM/PCM, then go to step 1. If any other Temporary DTCs or DTCs are indicated, go to the indicated DTC's troubleshooting.

NO—Troubleshooting is complete.■

25. Update the ECM/PCM if it does not have the latest software, or substitute a known-good ECM/PCM (see page 11-6).

26. Check for Temporary DTCs or DTCs with the HDS.

Are any Temporary DTCs or DTCs indicated?

YES—If DTC P0118 is indicated, check for poor connections or loose terminals at the ECT sensor/ECT sensor 1 and the ECM/PCM, then go to step 1. If any other Temporary DTCs or DTCs are indicated, go to the indicated DTC's troubleshooting.

NO—If the ECM/PCM was updated, troubleshooting is complete. If the ECM/PCM was substituted, replace the original ECM/PCM (see page 11-227).■

BACK

Protected by AR

DTC P0122: TP Sensor Circuit Low Voltage (2003-2004 models)

1. Turn the ignition switch ON (II).
2. Clear the DTC with the HDS.
3. Turn the ignition switch OFF.
4. Turn the ignition switch ON (II).
5. Check for Temporary DTCs or DTCs with the HDS.

   Are DTC P0107, P0122, and P0452 indicated at the same time?

   YES—Go to step 20.

   NO—Go to step 6.

6. Check the TP SENSOR in the DATA LIST with the HDS.

   Is there about 0.5 V when the throttle is fully closed, and about 4.5 V when the throttle is fully opened?

   YES—Intermittent failure, system is OK at this time. Check for poor connections or loose terminals at the TP sensor and the ECM/PCM. ■

   NO—Go to step 7.

7. Turn the ignition switch OFF.
8. Disconnect the TP sensor 3P connector.
9. Turn the ignition switch ON (II).
10. On the wire harness side, measure voltage between TP sensor 3P connector terminals No. 1 and No. 3.

TP SENSOR 3P CONNECTOR

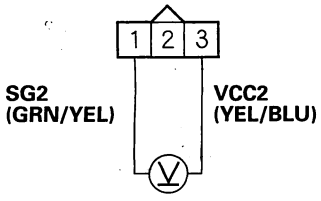

Wire side of female terminals

Is there about 5 V?

YES—Go to step 11.

NO—Go to step 19.

11. Turn the ignition switch OFF.
12. On the sensor side, measure resistance between TP sensor 3P connector terminals No. 1 and No. 2 with the throttle fully closed.

TP SENSOR 3P CONNECTOR

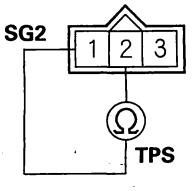

Terminal side of male terminals

Is there about 0.5—0.9 kΩ ?

YES—Go to step 13.

NO—Go to step 29.

(cont'd)

Protected by AR

DTC Troubleshooting (cont'd)

13. On the sensor side, measure resistance between TP sensor 3P connector terminals No. 2 and No. 3 with the throttle fully closed.

TP SENSOR 3P CONNECTOR

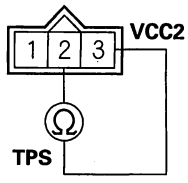

Terminal side of male terminals

Is there about 5.0 kΩ ?

YES—Go to step 14.

NO—Go to step 29.

14. Jump the SCS line with the HDS.

15. Disconnect ECM/PCM connector A (31P).

16. On the wire harness side, check for continuity between TP sensor 3P connector terminal No. 2 and body ground.

TP SENSOR 3P CONNECTOR

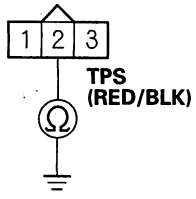

Wire side of female terminals

Is there continuity?

YES—Repair short in the wire between the TP sensor and the ECM/PCM (A29), then go to step 30.

NO—Go to step 17.

17. Connect ECM/PCM connector terminal A29 to body ground with a jumper wire.

ECM/PCM CONNECTOR A (31P)

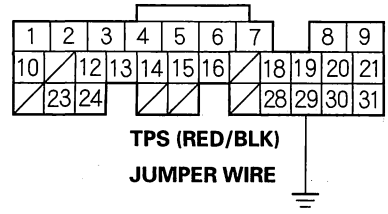

Wire side of female terminals

18. On the wire harness side, check for continuity between TP sensor 3P connector terminal No. 2 and body ground.

TP SENSOR 3P CONNECTOR

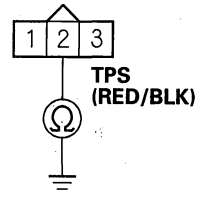

Wire side of female terminals

Is there continuity?

YES—Go to step 35.

NO—Repair open in the wire between the TP sensor and the ECM/PCM (A29), then go to step 30.

BACK

Protected by AR

19. Measure voltage between ECM/PCM connector terminals A20 and A23.

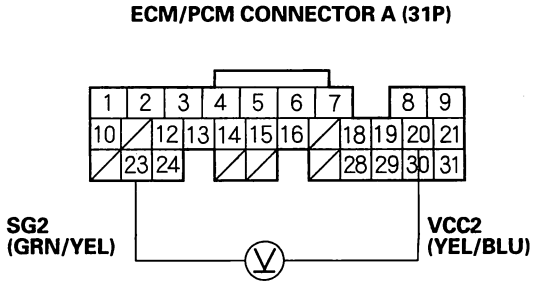

Wire side of female terminals

Is there about 5 V?

YES—Repair open in the wire between the ECM/PCM (A20) and the TP sensor, then go to step 30.

NO—Go to step 35.

20. Turn the ignition switch OFF.

21. Jump the SCS line with the HDS.

22. Disconnect ECM/PCM connectors A (31P) and E (31P).

23. Disconnect the connectors from these parts:

- MAP sensor
- TP sensor
- FTP sensor
- EGR valve
- Input shaft (mainshaft) speed sensor
- Output shaft (countershaft) speed sensor

24. Check for continuity between body ground and ECM/PCM connector terminals A20, A21, and E5 individually.

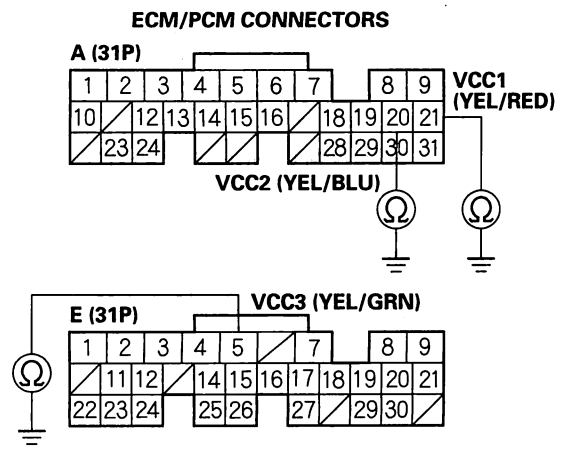

Wire side of female terminals

Is there continuity?

YES—Repair short in the wire between the ECM/PCM (A20, A21, or E5) and each disconnected part, then go to step 30.

NO—Go to step 25.

(cont'd)

Protected by AR

DTC Troubleshooting (cont'd)

25. Reconnect ECM/PCM connectors A (31P) and E (31P).

26. Turn the ignition switch ON (II).

27. Measure voltage between ECM/PCM connector terminal A21 and body ground.

ECM/PCM CONNECTOR A (31P)

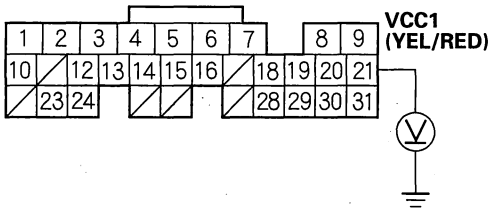

Wire side of female terminals

Is there about 5 V?

YES—Go to step 28.

NO—Go to step 35.

28. Continue to monitor voltage at ECM/PCM connector terminal A21 while reconnecting these parts, one at a time:

- MAP sensor
- TP sensor
- FTP sensor
- EGR valve
- Input shaft (mainshaft) speed sensor
- Output shaft (countershaft) speed sensor

Did the voltage drop to about 0 V?

YES—Replace the part that caused the voltage to drop, then go to step 30.

NO—Go to step 35.

29. Replace the throttle body (see page 11-366).

30. Reconnect all connectors.

31. Turn the ignition switch ON (II).

32. Reset the ECM/PCM with the HDS.

33. Do the ECM/PCM idle learn procedure (see page 11-316).

34. Check for Temporary DTCs or DTCs with the HDS.

Are any Temporary DTCs or DTCs indicated?

YES—If DTC P0122 is indicated, check for poor connections or loose terminals at the TP sensor and the ECM/PCM, then go to step 1. If any other Temporary DTCs or DTCs are indicated, go to the indicated DTC's troubleshooting.

NO—Troubleshooting is complete. ■

35. Update the ECM/PCM if it does not have the latest software, or substitute a known-good ECM/PCM (see page 11-6).

36. Check for Temporary DTCs or DTCs with the HDS.

Are any Temporary DTCs or DTCs indicated?

YES—If DTC P0122 is indicated, check for poor connections or loose terminals at the TP sensor and the ECM/PCM, then go to step 1. If any other Temporary DTCs or DTCs are indicated, go to the indicated DTC's troubleshooting.

NO—If the ECM/PCM was updated, troubleshooting is complete. If the ECM/PCM was substituted, replace the original ECM/PCM (see page 11-227). ■

BACK

Protected by AR

DTC P0122: TP Sensor Circuit Low Voltage (2005 model)

1. Turn the ignition switch ON (II).
2. Check the TP SENSOR in the DATA LIST with the HDS.

   Is there about 0.5 V when the throttle is fully closed, and about 4.5 V when the throttle is fully opened?

   YES—Intermittent failure, system is OK at this time. Check for poor connections or loose terminals at the TP sensor and the ECM/PCM. ■

   NO—Go to step 3.
3. Turn the ignition switch OFF.
4. Disconnect the TP sensor 3P connector.
5. Turn the ignition switch ON (II).
6. On the wire harness side, measure voltage between TP sensor 3P connector terminals No. 1 and No. 3.

TP SENSOR 3P CONNECTOR

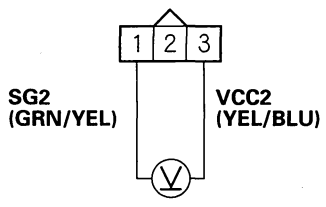

Wire side of female terminals

Is there about 5 V?

YES—Go to step 7.

NO—Go to step 15.

7. Turn the ignition switch OFF.
8. On the sensor side, measure resistance between TP sensor 3P connector terminals No. 1 and No. 2 with the throttle fully closed.

TP SENSOR 3P CONNECTOR

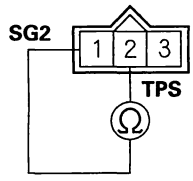

Terminal side of male terminals

Is there about 0.5—0.9 kΩ ?

YES—Go to step 9.

NO—Go to step 16.

(cont'd)

Protected by AR

DTC Troubleshooting (cont'd)

9. On the sensor side, measure resistance between TP sensor 3P connector terminals No. 2 and No. 3 with the throttle fully closed.

TP SENSOR 3P CONNECTOR

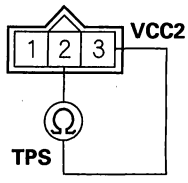

Terminal side of male terminals

Is there about 5.0 kΩ ?

YES—Go to step 10.

NO—Go to step 16.

10. Jump the SCS line with the HDS.
11. Disconnect ECM/PCM connector A (31P).
12. On the wire harness side, check for continuity between TP sensor 3P connector terminal No. 2 and body ground.

TP SENSOR 3P CONNECTOR

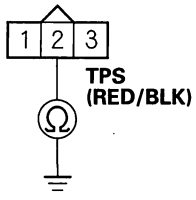

Wire side of female terminals

Is there continuity?

YES—Repair short in the wire between the TP sensor and the ECM/PCM (A29), then go to step 17.

NO—Go to step 13.

13. Connect ECM/PCM connector terminal A29 to body ground with a jumper wire.

ECM/PCM CONNECTOR A (31P)

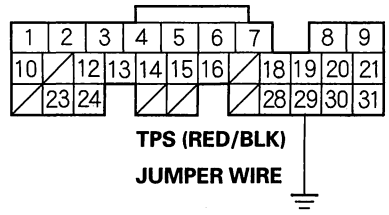

Wire side of female terminals

14. On the wire harness side, check for continuity between TP sensor 3P connector terminal No. 2 and body ground.

TP SENSOR 3P CONNECTOR

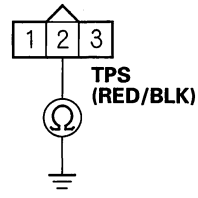

Wire side of female terminals

Is there continuity?

YES—Go to step 22.

NO—Repair open in the wire between the TP sensor and the ECM/PCM (A29), then go to step 17.

BACK

Protected by AR

15. Measure voltage between ECM/PCM connector terminals A20 and A23.

ECM/PCM CONNECTOR A (31P)

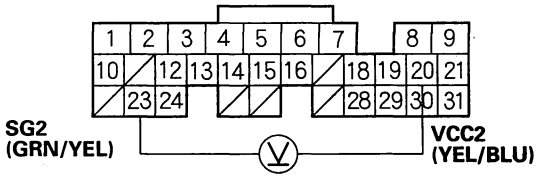

Wire side of female terminals

Is there about 5 V?

YES—Repair open in the wire between the ECM/PCM (A20) and the TP sensor, then go to step 17.

NO—Go to step 22.

16. Replace the throttle body (see page 11-366).

17. Reconnect all connectors.

18. Turn the ignition switch ON (II).

19. Reset the ECM/PCM with the HDS.

20. Do the ECM/PCM idle learn procedure (see page 11-316).

21. Check for Temporary DTCs or DTCs with the HDS.

Are any Temporary DTCs or DTCs indicated?

YES—If DTC P0122 is indicated, check for poor connections or loose terminals at the TP sensor and the ECM/PCM, then go to step 1. If any other Temporary DTCs or DTCs are indicated, go to the indicated DTC's troubleshooting.

NO—Troubleshooting is complete.■

22. Update the ECM/PCM if it does not have the latest software, or substitute a known-good ECM/PCM (see page 11-6).

23. Check for Temporary DTCs or DTCs with the HDS.

Are any Temporary DTCs or DTCs indicated?

YES—If DTC P0122 is indicated, check for poor connections or loose terminals at the TP sensor and the ECM/PCM, then go to step 1. If any other Temporary DTCs or DTCs are indicated, go to the indicated DTC's troubleshooting.

NO—If the ECM/PCM was updated, troubleshooting is complete. If the ECM/PCM was substituted, replace the original ECM/PCM (see page 11-227).■

Protected by AR

DTC Troubleshooting (cont'd)

DTC P0123: TP Sensor Circuit High Voltage (2003-2005 models)

1. Turn the ignition switch ON (II).
2. Check the TP SENSOR in the DATA LIST with the HDS.

   Is there about 0.5 V when the throttle is fully closed, and about 4.5 V when the throttle is fully opened?

   YES—Intermittent failure, system is OK at this time. Check for poor connections or loose terminals at the TP sensor and the ECM/PCM. ■

   NO—Go to step 3.
3. Turn the ignition switch OFF.
4. Disconnect the TP sensor 3P connector.
5. Turn the ignition switch ON (II).
6. At the wire harness side, measure voltage between TP sensor 3P connector terminals No. 1 and No. 3.

TP SENSOR 3P CONNECTOR

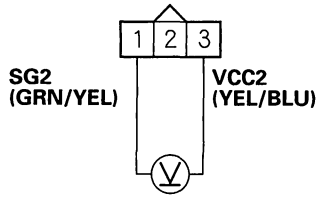

Wire side of female terminals

Is there about 5 V?

YES—Go to step 8.

NO—Go to step 7.

7. Measure voltage between ECM/PCM connector terminals A20 and A23.

ECM/PCM CONNECTOR A (31P)

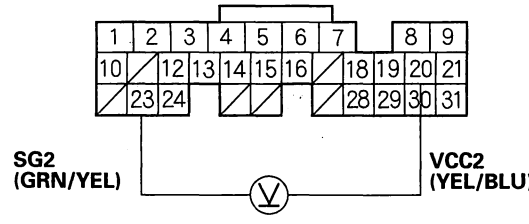

Wire side of female terminals

Is there about 5 V?

YES—Repair open in the wire between the ECM/PCM (A23) and the TP sensor, then go to step 10.

NO—Go to step 15.

8. Turn the ignition switch OFF.
9. Replace the throttle body (see page 11-366).
10. Reconnect all connectors.
11. Turn the ignition switch ON (II).
12. Reset ECM/PCM with the HDS.
13. Do the ECM/PCM idle learn procedure (see page 11-316).
14. Check for Temporary DTCs or DTCs with the HDS.

    Are any Temporary DTCs or DTCs indicated?

    YES—If DTC P0123 is indicated, check for poor connections or loose terminals at the TP sensor and the ECM/PCM, then go to step 1. If any other Temporary DTCs or DTCs are indicated, go to the indicated DTC's troubleshooting.

    NO—Troubleshooting is complete. ■

BACK

Protected by AR

15. Update the ECM/PCM if it does not have the latest software, or substitute a known-good ECM/PCM (see page 11-6).

16. Check for Temporary DTCs or DTCs with the HDS.

    Are any Temporary DTCs or DTCs indicated?

    YES—If DTC P0123 is indicated, check for poor connections or loose terminals at the TP sensor and the ECM/PCM, then go to step 1. If any other Temporary DTCs or DTCs are indicated, go to the indicated DTC's troubleshooting.

    NO—If the ECM/PCM was updated, troubleshooting is complete. If the ECM/PCM was substituted, replace the original ECM/PCM (see page 11-227). ■

Protected by AR

DTC Troubleshooting (cont'd)

DTC P0125: ECT Sensor Malfunction/Slow Response
(2003-2004 models)

1. Start the engine, and let it idle.
2. Check the ECT SENSOR in the DATA LIST with the HDS.

   Is about 86 °F (30 °C) or less, or 2.61 V or more indicated?

   YES—Go to step 3.

   NO—Intermittent failure, system is OK at this time. Check the thermostat and the cooling system. ■
3. Let the engine idle for 6 minutes.
4. Check the ECT SENSOR in the DATA LIST with the HDS.

   Is about 86 °F (30 °C) or less, or 2.61 V or more indicated?

   YES—Go to step 5.

   NO—Intermittent failure, system is OK at this time. Check the thermostat (see page 10-4) and the cooling system. ■
5. Turn the ignition switch OFF.
6. Replace the ECT sensor (see page 11-223).
7. Turn the ignition switch ON (II).
8. Reset the ECM/PCM with the HDS.
9. Do the ECM/PCM idle learn procedure (see page 11-316).
10. Allow the engine to cool to between 23 °F (—5 °C) and 77 °F (25 °C).
11. Start the engine, and let it idle 20 minutes.
12. Check for Temporary DTCs or DTCs with the HDS.

    Are any Temporary DTCs or DTCs indicated?

    YES—If DTC P0125 is indicated, check for poor connections or loose terminals at the ECT sensor and the ECM/PCM, then go to step 1. If any other Temporary DTCs or DTCs are indicated, go to the indicated DTC's troubleshooting.

    NO—Go to step 13.
13. Monitor the OBD STATUS for DTC P0125 in the DTCs MENU with the HDS.

    Does the screen indicate PASSED?

    YES—Troubleshooting is complete. ■

    NO—If the screen indicates FAILED, check for poor connections or loose terminals at the ECT sensor and the ECM/PCM, then go to step 1. If the screen indicates NOT COMPLETED, go to step 10 and recheck.

BACK

Protected by AR

DTC P0125: ECT Sensor 1 Malfunction/Slow Response
(2005-2006 models)

1. Start the engine, and let it idle 5 minutes or more.
2. Check ECT SENSOR 1 in the DATA LIST with the HDS.

   Is about 10 °F (−12 °C) or less, or 4.45 V or more indicated?

   YES—Go to step 9.

   NO—Go to step 3.
3. Allow the engine to cool to 104 °F (40 °C) or less.
4. Note the value of ECT SENSOR 1 and ECT SENSOR 2 in the DATA LIST with the HDS.
5. Start the engine, and let it idle.
6. Let the engine idle until ECT SENSOR 1 goes up 49 °F (27 °C) or more from the recorded temperature.
7. Note the value of ECT SENSOR 2 in the DATA LIST with the HDS.
8. Compare ECT SENSOR 2 and the recorded temperature.

   Did ECT SENSOR 2 change 17 °F (9.5 °C) or more?

   YES—Intermittent failure, system is OK at this time. Check for poor connections or loose terminals at ECT sensor 1, ECT sensor 2 and the ECM/PCM. ■

   NO—Check the thermostat (see page 10-4), then go to step 9.
9. Turn the ignition switch OFF.
10. Replace ECT sensor 1 (see page 11-223).
11. Turn the ignition switch ON (II).
12. Reset the ECM/PCM with the HDS.
13. Do the ECM/PCM idle learn procedure (see page 11-316).
14. Allow the engine to cool to ambient temperature.
15. Start the engine, and let it idle 20 minutes.
16. Check for Temporary DTCs or DTCs with the HDS.

    Are any Temporary DTCs or DTCs indicated?

    YES—If DTC P0125 is indicated, check for poor connections or loose terminals at ECT sensor 1, ECT sensor 2, and the ECM/PCM, then go to step 1. If any other Temporary DTCs or DTCs are indicated, go to the indicated DTC's troubleshooting.

    NO—Go to step 17.
17. Monitor the OBD STATUS for DTC P0125 in the DTCs MENU with the HDS.

    Does the screen indicate PASSED?

    YES—Troubleshooting is complete. ■

    NO—If the screen indicates FAILED, check for poor connections or loose terminals at ECT sensor 1, ECT sensor 2, and the ECM/PCM, then go to step 1. If the screen indicates NOT COMPLETED, go to step 14 and recheck.

Protected by AR

DTC Troubleshooting (cont'd)

DTC P0128: Cooling System Malfunction (2003-2004 models)

NOTE: If the DTCs listed below are stored at the same time as DTC P0128, troubleshoot them first, then recheck for P0128.

P0112, P0113: Intake air temperature (IAT) sensor
P0116, P0117, P0118, P0125: Engine coolant temperature (ECT) sensor
P0300: Random misfire
P0301, P0302, P0303, P0304: No. 1, No. 2, No. 3, or No. 4 cylinder misfire
P0335, P0339: Crankshaft position (CKP) sensor
P2227, P2228, P2229: Barometric pressure (BARO) sensor
P2646, P2647, P2648, P2649: VTEC system
P0506, P0507: Idle control system malfunction
P0511: Idle air control (IAC) valve

DTC P0128 can occasionally set when the hood is opened while the engine is running.

1. Turn the ignition switch ON (II).
2. Clear the DTC with the HDS.
3. Turn the blower switch OFF.
4. Turn the A/C switch OFF.
5. Check the FAN CTRL in the DATA LIST with the HDS.

   Is it OFF?

   YES—Go to step 6.

   NO—Wait until the FAN CTRL is off, then go to step 6.
6. Check the ECT SENSOR in the DATA LIST with the HDS, then check the radiator fan operation.

   Does the radiator fan keep running when the engine coolant temperature is less than 158 °F (70 °C)?

   YES—Check the radiator fan circuit (see page 10-18), the radiator fan switch circuit for open (see page 10-22), the radiator fan switch circuit for short (see page 10-22), and the radiator fan switch (see page 10-23). If the circuits and the switch are OK, go to step 21.

   NO—Go to step 7.
7. Start the engine. Hold the engine speed at 3,000 rpm without load (in Park or neutral) until the radiator fan comes on, then let it idle.
8. Turn the ignition switch OFF.
9. Turn the ignition switch ON (II).
10. Do the RADIATOR FAN TEST in the INSPECTION MENU with the HDS for 20 minutes.
11. Check the ECT SENSOR in the DATA LIST with the HDS.

    Is about 151 °F (66 °C) or less, or 1.25 V or more indicated?

    YES—Intermittent failure, system is OK at this time. ■

    NO—Go to step 12.
12. Turn the ignition switch OFF.
13. Let the engine cool until the coolant temperature is between 23 °F (—5 °C) and 95 °F (35 °C).
14. Replace the thermostat (see page 10-8).
15. Turn the ignition switch ON (II).
16. Reset the ECM/PCM with the HDS.
17. Do the ECM/PCM idle learn procedure (see page 11-316).

BACK

Protected by AR

18. Start the engine. Hold the engine speed at 3,000 rpm without load (in Park or neutral) until the radiator fan comes on, then let it idle.

19. Check for Temporary DTCs or DTCs with the HDS.

    Are any Temporary DTCs or DTCs indicated?

    YES—If DTC P0128 is indicated, check the cooling system, then go to step 1. If any other Temporary DTCs or DTCs are indicated, go to the indicated DTC's troubleshooting. ■

    NO—Go to step 20.

20. Monitor the OBD STATUS for DTC P0128 in the DTCs MENU with the HDS.

    Does the screen indicate PASSED?

    YES—Troubleshooting is complete. ■

    NO—If the screen indicates FAILED, check the cooling system, then go to step 1. If the screen indicates NOT COMPLETED, go to step 18 and recheck.

21. Update the ECM/PCM if it does not have the latest software, or substitute a known-good ECM/PCM (see page 11-6).

22. Let the engine cool until the coolant temperature is between 23 °F (—5 °C) and 95 °F (35 °C).

23. Start the engine. Hold the engine speed at 3,000 rpm without load (in Park or neutral) until the radiator fan comes on, then let it idle.

24. Check for Temporary DTCs or DTCs with the HDS.

    Are any Temporary DTCs or DTCs indicated?

    YES—If DTC P0128 is indicated, check for poor connections or loose terminals at the ECT sensor and the ECM/PCM, then go to step 1. If any other Temporary DTCs or DTCs are indicated, go to the indicated DTC's troubleshooting.

    NO—If the ECM/PCM was updated, troubleshooting is complete. If the ECM/PCM was substituted, replace the original ECM/PCM (see page 11-227). ■

Protected by AR

DTC Troubleshooting (cont'd)

DTC P0128: Cooling System Malfunction (2005-2006 models)

1. Turn the ignition switch ON (II).
2. Clear the DTC with the HDS.
3. Turn the blower switch OFF.
4. Turn the A/C switch OFF.
5. Check the FAN CTRL in the DATA LIST with the HDS.

   Is it OFF?

   YES—Go to step 6.

   NO—Wait until the FAN CTRL is off, then go to step 6.
6. Check the radiator fan operation.

   Does the radiator fan keep running?

   YES—Check the radiator fan circuit (see page 10-20), the radiator fan switch circuit for open (see page 10-22), the radiator fan switch circuit for short (see page 10-22), and the radiator fan switch (see page 10-23). If the circuits and the switch are OK, go to step 20.

   NO—Go to step 7.
7. Let the engine cool until the coolant temperature is 104 °F (40 °C) or less.
8. Note the value of ECT SENSOR 1 and ECT SENSOR 2 in the DATA LIST with the HDS.
9. Start the engine, and let it idle.
10. Let the engine idle until ECT SENSOR 1 goes up 49 °F (27 °C) or more from the recorded temperature.
11. Check ECT SENSOR 2 in the DATA LIST with the HDS.
12. Compare the value of recorded ECT SENSOR 2 and the value of present ECT SENSOR 2.

    Did temperature rise 17 °F (9.5 °C) or more?

    YES—Intermittent failure, system is OK at this time. Check for poor connections or loose terminals at ECT sensor 1, ECT sensor 2, and the ECM/PCM. ■

    NO—Test the thermostat (see page 10-4), then go to step 13.
13. Turn the ignition switch ON (II).
14. Reset the ECM/PCM with the HDS.
15. Let the engine cool until the coolant temperature is between 21 °F (—6 °C) and 104 °F (40 °C).
16. Do the ECM/PCM idle learn procedure (see page 11-316).
17. Test-drive at a steady speed between 15—75 mph (24—120 km/h) for 10 minutes.
18. Check for Temporary DTCs or DTCs with the HDS.

    Are any Temporary DTCs or DTCs indicated?

    YES—If DTC P0128 is indicated, check the cooling system, then go to step 1. If any other Temporary DTCs or DTCs are indicated, go to the indicated DTC's troubleshooting.

    NO—Go to step 19.
19. Monitor the OBD STATUS for DTC P0128 in the DTCs MENU with the HDS.

    Does the screen indicate PASSED?

    YES—Troubleshooting is complete. ■

    NO—If the screen indicates FAILED, check the cooling system, then go to step 1. If the screen indicates NOT COMPLETED, go to step 15 and recheck.

BACK

Protected by AR

20. Update the ECM/PCM if it does not have the latest software, or substitute a known-good ECM/PCM (see page 11-6).

21. Let the engine cool until the coolant temperature is between 21 °F (—6 °C) and 104 °F (40 °C).

22. Start the engine. Hold the engine speed at 3,000 rpm without load (in Park or neutral) until the radiator fan comes on, then let it idle.

23. Test-drive at a steady speed between 15—75 mph (24—120 km/h) for 10 minutes.

24. Check for Temporary DTCs or DTCs with the HDS.

    Are any Temporary DTCs or DTCs indicated?

    YES—If DTC P0128 is indicated, check for poor connections or loose terminals at ECT sensor 1, ECT sensor 2, and the ECM/PCM, then go to step 1. If any other Temporary DTCs or DTCs are indicated, go to the indicated DTC's troubleshooting.

    NO—If the ECM/PCM was updated, troubleshooting is complete. If the ECM/PCM was substituted, replace the original ECM/PCM (see page 11-227).■

Protected by AR

DTC Troubleshooting (cont'd)

DTC P0133: A/F Sensor (Sensor 1) Response Malfunction (2003-2004 models)

NOTE: If DTC P0139 is stored at the same time as DTC P0133, troubleshoot DTC P0139 first, then recheck for DTC P0133.

1. Turn the ignition switch ON (II).
2. Clear the DTC with the HDS.
3. Start the engine. Hold the engine speed at 3,000 rpm without load (in Park or neutral) until the radiator fan comes on, then let it idle.
4. Test-drive under these conditions:
   - Engine coolant temperature above 158 °F (70 °C)
   - A/T in D position (M/T in 5th gear)
   - Vehicle speed at 30 mph (48 km/h) or more, and engine speed between 1,000 and 3,000 rpm
5. Monitor the OBD STATUS for DTC P0133 in the DTCs MENU with the HDS.

   Does the screen indicate FAILED?

   YES—Go to step 6.

   NO—If the screen indicates PASSED, intermittent failure, system is OK at this time. Check for poor connections or loose terminals at the A/F sensor (Sensor 1) and the ECM/PCM. If the screen indicates EXECUTING, keep driving until a result comes on. If the screen indicates OUT OF CONDITION, go to step 3 and recheck.
6. Turn the ignition switch OFF.
7. Replace the A/F sensor (Sensor 1) (see page 11-222).
8. Turn the ignition switch ON (II).
9. Reset the ECM/PCM with the HDS.
10. Do the ECM/PCM idle learn procedure (see page 11-316).
11. Test-drive under these conditions:
    - Engine coolant temperature above 158 °F (70 °C)
    - A/T in D position (M/T in 5th gear)
    - Vehicle speed at 30 mph (48 km/h) or more, and engine speed between 1,000 and 3,000 rpm
12. Check for Temporary DTCs or DTCs with the HDS.

    Are any Temporary DTCs or DTCs indicated?

    YES—If DTC P0133 is indicated, check for poor connections or loose terminals at the A/F sensor (Sensor 1) and the ECM/PCM, then go to step 1. If any other Temporary DTCs or DTCs are indicated, go to the indicated DTC's troubleshooting.

    NO—Go to step 13.
13. Monitor the OBD STATUS for DTC P0133 in the DTCs MENU with the HDS.

    Does the screen indicate PASSED?

    YES—Troubleshooting is complete.■

    NO—If the screen indicates FAILED, check for poor connections or loose terminals at the A/F sensor (Sensor 1) and the ECM/PCM, then go to step 1. If the screen indicates EXECUTING, keep driving until a result comes on. If the screen indicates OUT OF CONDITION, go to step 10 and recheck.

BACK

Protected by AR

DTC P0133: A/F Sensor (Sensor 1) Response Malfunction (2005-2006 models)

NOTE: If DTC P0139 is stored at the same time as DTC P0133, troubleshoot DTC P0139 first, then recheck for DTC P0133.

1. Turn the ignition switch ON (II).
2. Clear the DTC with the HDS.
3. Start the engine. Hold the engine speed at 3,000 rpm without load (in Park or neutral) until the radiator fan comes on, then let it idle.
4. Test-drive under these conditions:
   - Engine coolant temperature above 176 °F (80 °C)
   - A/T in D position (M/T in 3rd or 4th gear)
   - Drive the vehicle at 25 mph (40 km/h) or less for 5 minutes, then drive at a steady speed between 26—81 mph (41—130 km/h)
5. Monitor the OBD STATUS for DTC P0133 in the DTCs MENU with the HDS.

   Does the screen indicate FAILED?

   YES—Go to step 6.

   NO—If the screen indicates PASSED, intermittent failure, system is OK at this time. Check for poor connections or loose terminals at the A/F sensor (Sensor 1) and the ECM/PCM. If the screen indicates EXECUTING, keep driving until a result comes on. If the screen indicates OUT OF CONDITION, go to step 3 and recheck.
6. Turn the ignition switch OFF.
7. Replace the A/F sensor (Sensor 1) (see page 11-222).
8. Turn the ignition switch ON (II).
9. Reset the ECM/PCM with the HDS.
10. Do the ECM/PCM idle learn procedure (see page 11-316).
11. Start the engine. Hold the engine speed at 3,000 rpm with no load (in Park or neutral) until the radiator fan comes on, then let it idle.
12. Test-drive under these conditions:
    - Engine coolant temperature above 176 °F (80 °C)
    - A/T in D position (M/T in 3rd or 4th gear)
    - Drive the vehicle at 25 mph (40 km/h) or less for 5 minutes, then drive at a steady speed between 26—81 mph (41—130 km/h)
13. Check for Temporary DTCs or DTCs with the HDS.

    Are any Temporary DTCs or DTCs indicated?

    YES—If DTC P0133 is indicated, check for poor connections or loose terminals at the A/F sensor (Sensor 1) and the ECM/PCM, then go to step 1. If any other Temporary DTCs or DTCs are indicated, go to the indicated DTC's troubleshooting.

    NO—Go to step 14.
14. Monitor the OBD STATUS for DTC P0133 in the DTCs MENU with the HDS.

    Does the screen indicate PASSED?

    YES—Troubleshooting is complete.■

    NO—If the screen indicates FAILED, check for poor connections or loose terminals at the A/F sensor (Sensor 1) and the ECM/PCM, then go to step 1. If the screen indicates EXECUTING, keep driving until a result comes on. If the screen indicates OUT OF CONDITION, go to step 11 and recheck.

Protected by AR

DTC Troubleshooting (cont'd)

DTC P0134: A/F Sensor (Sensor 1) Heater System Malfunction

NOTE: If DTC P0135 is stored at the same time as DTC P0134, troubleshoot DTC P0135 first, then recheck for DTC P0134.

1. Turn the ignition switch ON (II).
2. Clear the DTC with the HDS.
3. Start the engine without load (in Park or neutral) until the radiator fan comes on, then let it idle.
4. Check for Temporary DTCs or DTCs with the HDS.

   Is DTC P0134 indicated?

   YES—Go to step 5.

   NO—Intermittent failure, system is OK at this time. Check for poor connections or loose terminals at the A/F sensor (Sensor 1), the A/F sensor relay and the ECM/PCM. ■
5. Turn the ignition switch OFF.
6. Replace the A/F sensor (Sensor 1) (see page 11-222).
7. Turn the ignition switch ON (II).
8. Reset the ECM/PCM with the HDS.
9. Do the ECM/PCM idle learn procedure (see page 11-316).
10. Check for Temporary DTCs or DTCs with the HDS.

    Are any Temporary DTCs or DTCs indicated?

    YES—If DTC P0134 is indicated, check for poor connections or loose terminals at the A/F sensor (Sensor 1), the A/F sensor relay and the ECM/PCM, then go to step 1. If any other Temporary DTCs or DTCs are indicated, go to the indicated DTC's troubleshooting.

    NO—Go to step 11.
11. Monitor the OBD STATUS for DTC P0134 in the DTCs MENU with the HDS.

    Does the screen indicate PASSED?

    YES—Troubleshooting is complete. ■

    NO—If the screen indicates FAILED, check for poor connections or loose terminals at the A/F sensor (Sensor 1), the A/F sensor relay and the ECM/PCM, then go to step 1. If the screen indicates NOT COMPLETED, go to step 8 and recheck.

BACK

Protected by AR

DTC P0135: A/F Sensor (Sensor 1) Heater Circuit Malfunction

1. Turn the ignition switch ON (II).
2. Clear the DTC with the HDS.
3. Start the engine. Hold the engine speed at 3,000 rpm without load (in Park or neutral) until the radiator fan comes on, then let it idle.
4. Check for Temporary DTCs or DTCs with the HDS.

   Is DTC P0135 indicated?

   YES—Go to step 5.

   NO—Intermittent failure, system is OK at this time. Check for poor connections or loose terminals at the A/F sensor (Sensor 1), the A/F sensor relay and the ECM/PCM. ■
5. Turn the ignition switch OFF.
6. Check these fuses:
   - No. 19 OPTION (40 A) fuse in the under-hood fuse/relay box.
   - No. 4 A/F SENSOR (15 A) fuse in the under-dash fuse/relay box.
   - No. 23 IGP (7.5 A) fuse in the under-dash fuse/relay box.

   Are any of the fuses blown?

   YES—Repair short in the wire between the A/F sensor relay and the fuses. Also replace the blown fuse, then go to step 22.

   NO—Go to step 7.
7. Disconnect the A/F sensor (Sensor 1) 4P connector.
8. Measure resistance between A/F sensor (Sensor 1) 4P connector terminals No. 3 and No. 4.

A/F SENSOR (SENSOR 1) 4P CONNECTOR

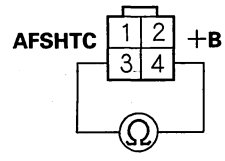

Wire side of female terminals

Is there 2.1—2.9 Ω at room temperature?

YES—Go to step 9.

NO—Go to step 21.

9. Check for continuity between A/F sensor (Sensor 1) 4P connector terminals No. 1 and No. 3, and between terminals No. 1 and No. 4 individually.

A/F SENSOR (SENSOR 1) 4P CONNECTOR

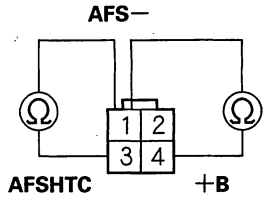

Wire side of female terminals

Is there continuity?

YES—Go to step 21.

NO—Go to step 10.

(cont'd)

Protected by AR

DTC Troubleshooting (cont'd)

10. Jump the SCS line with the HDS.
11. Disconnect ECM/PCM connector A (31P).
12. Check for continuity between ECM/PCM connector terminal A10 and body ground.

ECM/PCM CONNECTOR A (31P)

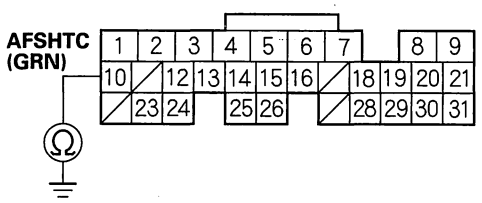

Wire side of female terminals

Is there continuity?

YES—Repair short in the wire between the ECM/PCM (A10) and the A/F sensor (Sensor 1), then go to step 22.

NO—Go to step 13.

13. Connect A/F sensor (Sensor 1) 4P connector terminal No. 3 to body ground with a jumper wire.

A/F SENSOR (SENSOR 1) 4P CONNECTOR

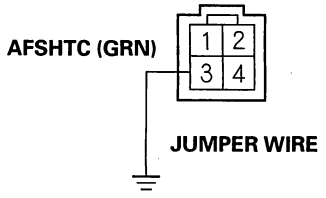

Terminal side of male terminals

14. Check for continuity between ECM/PCM connector terminal A10 and body ground.

ECM/PCM CONNECTOR A (31P)

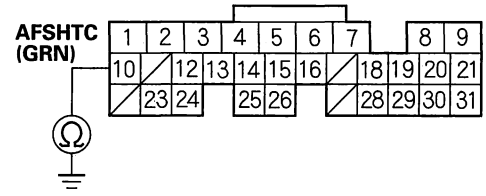

Wire side of female terminals

Is there continuity?

YES—Go to step 15.

NO—Repair open in the wire between the ECM/PCM (A10) and the A/F sensor (Sensor 1), then go to step 22.

15. Remove the A/F sensor relay (A).

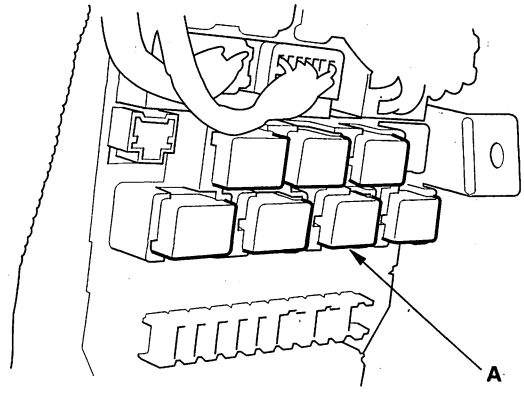

BACK

Protected by AR

16. Connect A/F sensor (Sensor 1) 4P connector terminal No. 4 to body ground with a jumper wire.

A/F SENSOR (SENSOR 1) 4P CONNECTOR

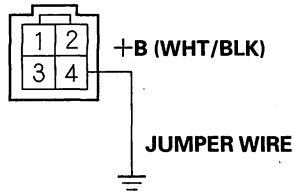

Terminal side of male terminals

17. Check for continuity between A/F sensor relay 4P connector terminal No. 2 and body ground.

A/F SENSOR RELAY 4P CONNECTOR

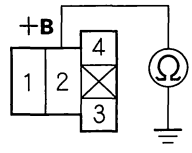

Terminal side of female terminals

Is there continuity?

YES—Go to step 18.

NO—Repair open in the wire between the A/F sensor (Sensor 1) and the A/F sensor relay, then go to step 22.

18. Disconnect ECM/PCM connector E (31P).

19. Check for continuity between ECM/PCM connector terminal E8 and A/F sensor relay 4P connector terminal No. 4.

ECM/PCM CONNECTOR E (31P)

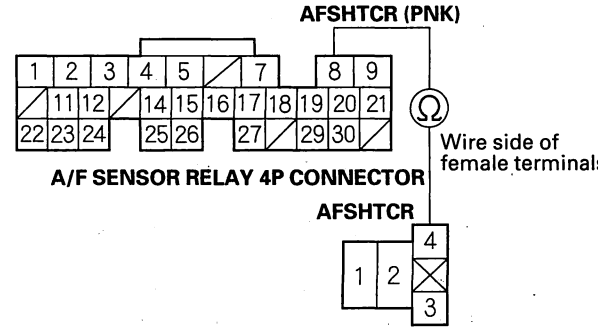

Terminal side of female terminals

Is there continuity?

YES—Go to step 20.

NO—Repair open in the wire between the ECM/PCM (E8) and the A/F sensor relay, then go to step 22.

20. Check the A/F sensor relay (see page 22-79).

Is the A/F sensor relay OK?

YES—Go to step 28.

NO—Replace the A/F sensor relay, then go to step 22.

(cont'd)

Protected by AR

DTC Troubleshooting (cont'd)

21. Replace the A/F sensor (Sensor 1) (see page 11-222).

22. Reconnect all connectors.

23. Turn the ignition switch ON (II).

24. Reset the ECM/PCM with the HDS.

25. Do the ECM/PCM idle learn procedure (see page 11-316).

26. Check for Temporary DTCs or DTCs with the HDS.

    Are any Temporary DTCs or DTCs indicated?

    YES—If DTC P0135 is indicated, check for poor connections or loose terminals at the A/F sensor (Sensor 1), the A/F sensor relay, and the ECM/PCM, then go to step 1. If any other Temporary DTCs or DTCs are indicated, go to the indicated DTC's troubleshooting.

    NO—Go to step 27.

27. Monitor the OBD STATUS for DTC P0135 in the DTCs MENU with the HDS.

    Does the screen indicate PASSED?

    YES—Troubleshooting is complete. ■

    NO—If the screen indicates FAILED, check for poor connections or loose terminals at the A/F sensor (Sensor 1), the A/F sensor relay, and the ECM/PCM, then go to step 1. If the screen indicates NOT COMPLETED, go to step 24 and recheck.

28. Update the ECM/PCM if it does not have the latest software, or substitute a known-good ECM/PCM (see page 11-6).

29. Check for Temporary DTCs or DTCs with the HDS.

    Are any Temporary DTCs or DTCs indicated?

    YES—If DTC P0135 is indicated, check for poor connections or loose terminals at the A/F sensor (Sensor 1), the A/F sensor relay, and the ECM/PCM, then go to step 1. If any other Temporary DTCs or DTCs are indicated, go to the indicated DTC's troubleshooting.

    NO—If the ECM/PCM was updated, troubleshooting is complete. If the ECM/PCM was substituted, replace the original ECM/PCM (see page 11-227). ■

BACK

Protected by AR

DTC P0137: Secondary HO2S (Sensor 2) Circuit Low Voltage (2003-2004 models)

1. Turn the ignition switch ON (II).
2. Clear the DTC with the HDS.
3. Start the engine. Hold the engine speed at 3,000 rpm without load (in Park or neutral) until the radiator fan comes on, then let it idle.
4. Check the HO2S S2 in the DATA LIST with the HDS.

   Does the voltage stay at 0.29 V or less?

   YES—Go to step 5.

   NO—Go to step 9.
5. Turn the ignition switch OFF.
6. Disconnect the secondary HO2S (Sensor 2) 4P connector (see page 11-222).
7. Turn the ignition switch ON (II).
8. Check the HO2S S2 in the DATA LIST with the HDS.

   Does the voltage stay at 0.29 V or less?

   YES—Go to step 11.

   NO—Go to step 15.
9. Test-drive under these conditions:

   - Engine coolant temperature above 158 °F (70 °C)
   - A/T in D position (M/T in 4th gear)
   - Engine speed at 2,000—3,000 rpm
   - Drive about 10 minutes, then decelerate (with the throttle fully closed) for 5 seconds
10. Monitor the OBD STATUS for DTC P0137 in the DTCs MENU with the HDS.

    Does the screen indicate FAILED?

    YES—Go to step 16.

    NO—If the screen indicates PASSED, intermittent failure, system is OK at this time. Check for poor connections or loose terminals at the secondary HO2S (Sensor 2) and the ECM/PCM. If the screen indicates EXECUTING, keep driving until a result comes on. If the screen indicates OUT OF CONDITION, go to step 9 and recheck.
11. Turn the ignition switch OFF.
12. Jump the SCS line with the HDS.
13. Disconnect ECM/PCM connector E (31P).
14. Check for continuity between secondary HO2S (Sensor 2) 4P connector terminal No. 2 and body ground.

SECONDARY HO2S (SENSOR 2) 4P CONNECTOR

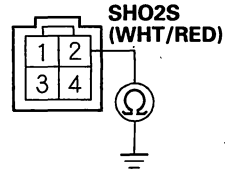

Terminal side of male terminals

Is there continuity?

YES—Repair short in the wire between the ECM/PCM (E20) and the secondary HO2S (Sensor 2), then go to step 17.

NO—Go to step 25.

(cont'd)

Protected by AR

DTC Troubleshooting (cont'd)

15. Turn the ignition switch OFF.
16. Replace the secondary HO2S (Sensor 2) (see page 11-222).
17. Reconnect all connectors.
18. Turn the ignition switch ON (II).
19. Reset the ECM/PCM with the HDS.
20. Do the ECM/PCM idle learn procedure (see page 11-316).
21. Start the engine. Hold the engine speed at 3,000 rpm without load (in Park or neutral) until the radiator fan comes on, then let it idle.
22. Test-drive under these conditions:
    - Engine coolant temperature above 158 °F (70 °C)
    - A/T in D position (M/T in 4th gear)
    - Engine speed at 2,000—3,000 rpm
    - Drive about 10 minutes, then decelerate (with the throttle fully closed) for 5 seconds
23. Check for Temporary DTCs or DTCs with the HDS.

    Are any Temporary DTCs or DTCs indicated?

    YES—If DTC P0137 is indicated, check for poor connections or loose terminals at the secondary HO2S (Sensor 2) and the ECM/PCM, then go to step 1. If any other Temporary DTCs or DTCs are indicated, go to the indicated DTC's troubleshooting.

    NO—Go to step 24.
24. Monitor the OBD STATUS for DTC P0137 in the DTCs MENU with the HDS.

    Does the screen indicate PASSED?

    YES—Troubleshooting is complete.■

    NO—If the screen indicates FAILED, check for poor connections or loose terminals at the secondary HO2S (Sensor 2) and the ECM/PCM, then go to step 1. If the screen indicates EXECUTING, keep driving until a result comes on. If the screen indicates OUT OF CONDITION, go to step 21 and recheck.
25. Update the ECM/PCM if it does not have the latest software, or substitute a known-good ECM/PCM (see page 11-6).
26. Start the engine. Hold the engine speed at 3,000 rpm without load (in Park or neutral) until the radiator fan comes on, then let it idle.
27. Test-drive under these conditions:
    - Engine coolant temperature above 158 °F (70 °C)
    - A/T in D position (M/T in 4th gear)
    - Engine speed at 2,000—3,000 rpm
    - Drive about 10 minutes, then decelerate (with the throttle fully closed) for 5 seconds
28. Check for Temporary DTCs or DTCs with the HDS.

    Are any Temporary DTCs or DTCs indicated?

    YES—If DTC P0137 is indicated, check for poor connections or loose terminals at the secondary HO2S (Sensor 2) and the ECM/PCM, then go step 1. If any other Temporary DTCs or DTCs are indicated, go to the indicated DTC's troubleshooting.

    NO—If the ECM/PCM was updated, troubleshooting is complete. If the ECM/PCM was substituted, replace the original ECM/PCM (see page 11-227).■

BACK

Protected by AR

DTC P0137: Secondary HO2S (Sensor 2) Circuit Low Voltage (2005-2006 models)

1. Turn the ignition switch ON (II).
2. Clear the DTC with the HDS.
3. Start the engine. Hold the engine speed at 3,000 rpm without load (in Park or neutral) until the radiator fan comes on, then let it idle.
4. Check the HO2S S2 in the DATA LIST with the HDS.

   Does the voltage stay at 0.29 V or less?

   YES—Go to step 5.

   NO—Intermittent failure, system is OK at this time. Check for poor connections or loose terminals at the secondary HO2S (Sensor 2) and the ECM/PCM. ■
5. Turn the ignition switch OFF.
6. Disconnect the secondary HO2S (Sensor 2) 4P connector.
7. Turn the ignition switch ON (II).
8. Check the HO2S S2 in the DATA LIST with the HDS.

   Does the voltage stay at 0.29 V or less?

   YES—Go to step 9.

   NO—Go to step 13.
9. Turn the ignition switch OFF.
10. Jump the SCS line with the HDS.
11. Disconnect ECM/PCM connector E (31P).
12. Check for continuity between secondary HO2S (Sensor 2) 4P connector terminal No. 2 and body ground.

SECONDARY HO2S (SENSOR 2) 4P CONNECTOR

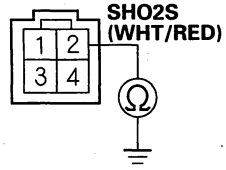

Terminal side of male terminals

Is there continuity?

YES—Repair short in the wire between the ECM/PCM (E20) and the secondary HO2S (Sensor 2), then go to step 15.

NO—Go to step 23.

13. Turn the ignition switch OFF.
14. Replace the secondary HO2S (Sensor 2) (see page 11-222).
15. Reconnect all connectors.
16. Turn the ignition switch ON (II).
17. Reset the ECM/PCM with the HDS.
18. Do the ECM/PCM idle learn procedure (see page 11-316).
19. Start the engine. Hold the engine speed at 3,000 rpm without load (in Park or neutral) until the radiator fan comes on, then let it idle.

(cont'd)

Protected by AR

DTC Troubleshooting (cont'd)

20. Test-drive under these conditions:

    - Engine coolant temperature above 176 °F (80 °C)
    - A/T in D position (M/T in 4th gear)
    - Engine speed at 1,500—3,000 rpm
    - Drive about 1 minute or more

21. Check for Temporary DTCs or DTCs with the HDS.

    Are any Temporary DTCs or DTCs indicated?

    YES—If DTC P0137 is indicated, check for poor connections or loose terminals at the secondary HO2S (Sensor 2) and the ECM/PCM, then go to step 1. If any other Temporary DTCs or DTCs are indicated, go to the indicated DTC's troubleshooting.

    NO—Go to step 22.

22. Monitor the OBD STATUS for DTC P0137 in the DTCs MENU with the HDS.

    Does the screen indicate PASSED?

    YES—Troubleshooting is complete. ■

    NO—If the screen indicates FAILED, check for poor connections or loose terminals at the secondary HO2S (Sensor 2) and the ECM/PCM, then go to step 1. If the screen indicates EXECUTING, keep driving until a result comes on. If the screen indicates OUT OF CONDITION, go to step 19 and recheck.

23. Update the ECM/PCM if it does not have the latest software, or substitute a known-good ECM/PCM (see page 11-6).

24. Start the engine. Hold the engine speed at 3,000 rpm without load (in Park or neutral) until the radiator fan comes on, then let it idle.

25. Test-drive under these conditions:

    - Engine coolant temperature above 176 °F (80 °C)
    - A/T in D position (M/T in 4th gear)
    - Engine speed at 1,500—3,000 rpm
    - Drive 1 minute or more

26. Check for Temporary DTCs or DTCs with the HDS.

    Are any Temporary DTCs or DTCs indicated?

    YES—If DTC P0137 is indicated, check for poor connections or loose terminals at the secondary HO2S (Sensor 2) and the ECM/PCM, then go to step 1. If any other Temporary DTCs or DTCs are indicated, go to the indicated DTC's troubleshooting.

    NO—If the ECM/PCM was updated, troubleshooting is complete. If the ECM/PCM was substituted, replace the original ECM/PCM (see page 11-227). ■

BACK

Protected by AR

DTC P0138: Secondary HO2S (Sensor 2) Circuit High Voltage (2003-2004 models)

1. Turn the ignition switch ON (II).
2. Clear the DTC with the HDS.
3. Start the engine. Hold the engine speed at 3,000 rpm without load (in Park or neutral) until the radiator fan comes on, then let it idle.
4. Check the HO2S S2 in the DATA LIST with the HDS.

   Does the voltage stay at 0.75 V or more?

   YES—Go to step 7.

   NO—Go to step 5.
5. Test-drive under these conditions:

   - Engine coolant temperature above 158 °F (70 °C)
   - A/T in D position (M/T in 4th gear)
   - Engine speed at 2,000—3,000 rpm
   - Drive about 10 minutes, then decelerate (with the throttle fully closed) for 5 seconds
6. Monitor the OBD STATUS for DTC P0138 in the DTCs MENU with the HDS.

   Does the screen indicate FAILED?

   YES—Go to step 19.

   NO—If the screen indicates PASSED, intermittent failure, system is OK at this time. Check for poor connections or loose terminals at the secondary HO2S (Sensor 2) and the ECM/PCM. If the screen indicates EXECUTING, keep driving until a result comes on. If the screen indicates OUT OF CONDITION, go to step 5 and recheck.
7. Turn the ignition switch OFF.
8. Disconnect the secondary HO2S (Sensor 2) 4P connector (see page 11-222).
9. Connect secondary HO2S (Sensor 2) 4P connector terminals No. 1 and No. 2 with a jumper wire.

SECONDARY HO2S (SENSOR 2) 4P CONNECTOR

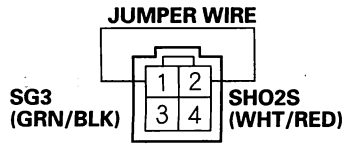

Terminal side of male terminals

10. Turn the ignition switch ON (II).
11. Check the HO2S S2 in the DATA LIST with the HDS.

    Does the voltage stay at 0.75 V or more?

    YES—Go to step 12.

    NO—Go to step 19.
12. Turn the ignition switch OFF.
13. Jump the SCS line with the HDS.
14. Disconnect ECM/PCM connector E (31P).

(cont'd)

Protected by AR

DTC Troubleshooting (cont'd)

15. Check for continuity between ECM/PCM connector terminals E4 and E20.

ECM/PCM CONNECTOR E (31P)

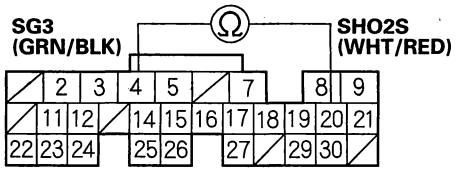

Wire side of female terminals

Is there continuity?

YES—Go to step 29.

NO—Go to step 16.

16. Remove the jumper wire from the secondary HO2S (Sensor 2) 4P connector.

17. Connect secondary HO2S (Sensor 2) 4P connector terminal No. 2 to body ground with a jumper wire.

SECONDARY HO2S (SENSOR 2) 4P CONNECTOR

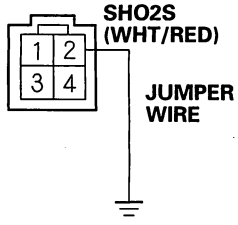

Terminal side of male terminals

18. Check for continuity between ECM/PCM connector terminal E20 and body ground.

ECM/PCM CONNECTOR E (31P)

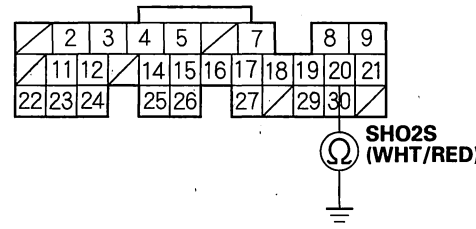

Wire side of female terminals

Is there continuity?

YES—Repair open in the wire between the ECM/PCM (E4) and the secondary HO2S (Sensor 2), then go to step 21.

NO— Repair open in the wire between the ECM/PCM (E20) and the secondary HO2S (Sensor 2), then go to step 21.

19. Turn the ignition switch OFF.

20. Replace the secondary HO2S (Sensor 2) (see page 11-222).

21. Reconnect all connectors.

22. Turn the ignition switch ON (II).

23. Reset the ECM/PCM with the HDS.

24. Do the ECM/PCM idle learn procedure (see page 11-316).

25. Start the engine. Hold the engine speed at 3,000 rpm without load (in Park or neutral) until the radiator fan comes on, then let it idle.

26. Test-drive under these conditions:

- Engine coolant temperature above 158 °F (70 °C)
- A/T in D position (M/T in 4th gear)
- Engine speed at 2,000—3,000 rpm
- Drive about 10 minutes, then decelerate (with the throttle fully closed) for 5 seconds

BACK

Protected by AR

27. Check for Temporary DTCs or DTCs with the HDS.

    Are any Temporary DTCs or DTCs indicated?

    YES—If DTC P0138 is indicated, check for poor connections or loose terminals at the secondary HO2S (Sensor 2) and the ECM/PCM, then go to step 1. If any other Temporary DTCs or DTCs are indicated, go to the indicated DTC's troubleshooting.

    NO—Go to step 28.

28. Monitor the OBD STATUS for DTC P0138 in the DTCs MENU with the HDS.

    Does the screen indicate PASSED?

    YES—Troubleshooting is complete. ■

    NO—If the screen indicates FAILED, check for poor connections or loose terminals at the secondary HO2S (Sensor 2) and the ECM/PCM, then go to step 1. If the screen indicates EXECUTING, keep driving until a result comes on. If the screen indicates OUT OF CONDITION, go to step 25 and recheck.

29. Update the ECM/PCM if it does not have the latest software, or substitute a known-good ECM/PCM (see page 11-6).

30. Start the engine. Hold the engine speed at 3,000 rpm without load (in Park or neutral) until the radiator fan comes on, then let it idle.

31. Test-drive under these conditions:

    - Engine coolant temperature above 158 °F (70 °C)
    - A/T in D position (M/T in 4th gear)
    - Engine speed at 2,000—3,000 rpm
    - Drive about 10 minutes, then decelerate (with the throttle fully closed) for 5 seconds

32. Check for Temporary DTCs or DTCs with the HDS.

    Are any Temporary DTCs or DTCs indicated?

    YES—If DTC P0138 is indicated, check for poor connections or loose terminals at the secondary HO2S (Sensor 2) and the ECM/PCM, then go to step 1. If any other Temporary DTCs or DTCs are indicated, go to the indicated DTC's troubleshooting.

    NO—If the ECM/PCM was updated, troubleshooting is complete. If the ECM/PCM was substituted, replace the original ECM/PCM (see page 11-227). ■

Protected by AR

DTC Troubleshooting (cont'd)

DTC P0138: Secondary HO2S (Sensor 2) Circuit High Voltage (2005-2006 models)

1. Turn the ignition switch ON (II).
2. Clear the DTC with the HDS.
3. Start the engine. Hold the engine speed at 3,000 rpm without load (in Park or neutral) until the radiator fan comes on, then let it idle.
4. Check the HO2S S2 in the DATA LIST with the HDS.

   Does the voltage stay at 1.25 V or more?

   YES—Go to step 5.

   NO—Intermittent failure, system is OK at this time. Check for poor connections or loose terminals at the secondary HO2S (Sensor 2) and the ECM/PCM. ■
5. Turn the ignition switch OFF.
6. Disconnect the secondary HO2S (Sensor 2) 4P connector.
7. Connect secondary HO2S (Sensor 2) 4P connector terminals No. 1 and No. 2 with a jumper wire.

SECONDARY HO2S (SENSOR 2) 4P CONNECTOR

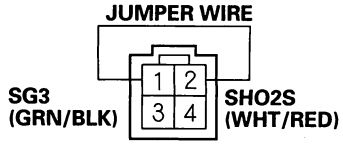

Terminal side of male terminals

8. Turn the ignition switch ON (II).
9. Check the HO2S S2 in the DATA LIST with the HDS.

   Does the voltage stay at 1.25 V or more?

   YES—Go to step 10.

   NO—Go to step 19.
10. Turn the ignition switch OFF.
11. Remove the jumper wire from the secondary HO2S (Sensor 2) 4P connector.
12. Connect secondary HO2S (Sensor 2) 4P connector terminal No. 2 to body ground with a jumper wire.

SECONDARY HO2S (SENSOR 2) 4P CONNECTOR

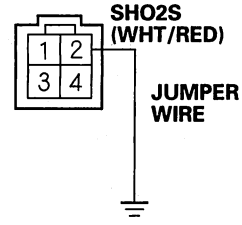

Terminal side of male terminals

13. Turn the ignition switch ON (II).
14. Check the HO2S S2 in the DATA LIST with the HDS.

    Does the voltage stay at 1.25 V or more?

    YES—Go to step 15.

    NO—Repair open in the wire between the ECM/PCM (E4) and the secondary HO2S (Sensor 2), then go to step 21.

BACK

Protected by AR

15. Turn the ignition switch OFF.

16. Jump the SCS line with the HDS.

17. Disconnect ECM/PCM connector E (31P).

18. Check for continuity between ECM/PCM connector terminal E20 and body ground.

ECM/PCM CONNECTOR E (31P)

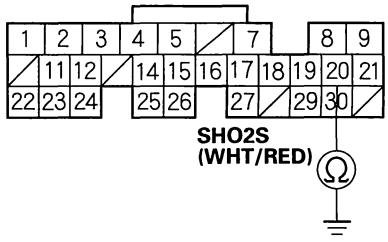

Wire side of female terminals

Is there continuity?

YES—Go to step 29.

NO—Repair open in the wire between the ECM/PCM (E20) and the secondary HO2S (Sensor 2), then go to step 21.

19. Turn the ignition switch OFF.

20. Replace the secondary HO2S (Sensor 2) (see page 11-222).

21. Reconnect all connectors.

22. Turn the ignition switch ON (II).

23. Reset the ECM/PCM with the HDS.

24. Do the ECM/PCM idle learn procedure (see page 11-316).

25. Start the engine. Hold the engine speed at 3,000 rpm without load (in Park or neutral) until the radiator fan comes on, then let it idle.

26. Test-drive under these conditions:

- Engine coolant temperature above 176 °F (80 °C)
- A/T in D position (M/T in 4th gear)
- Engine speed at 1,500—3,000 rpm
- Drive 1 minute or more

27. Check for Temporary DTCs or DTCs with the HDS.

Are any Temporary DTCs or DTCs indicated?

YES—If DTC P0138 is indicated, check for poor connections or loose terminals at the secondary HO2S (Sensor 2) and the ECM/PCM, then go to step 1. If any other Temporary DTCs or DTCs are indicated, go to the indicated DTC's troubleshooting.

NO—Go to step 28.

28. Monitor the OBD STATUS for DTC P0138 in the DTCs MENU with the HDS.

Does the screen indicate PASSED?

YES—Troubleshooting is complete. ■

NO—If the screen indicates FAILED, check for poor connections or loose terminals at the secondary HO2S (Sensor 2) and the ECM/PCM, then go to step 1. If the screen indicates EXECUTING, keep driving until a result comes on. If the screen indicates OUT OF CONDITION, go to step 25 and recheck.

(cont'd)

Protected by AR

DTC Troubleshooting (cont'd)

29. Update the ECM/PCM if it does not have the latest software, or substitute a known-good ECM/PCM (see page 11-6).

30. Start the engine. Hold the engine speed at 3,000 rpm without load (in Park or neutral) until the radiator fan comes on, then let it idle.

31. Test-drive under these conditions:

    - Engine coolant temperature above 176 °F (80 °C)
    - A/T in D position (M/T in 4th gear)
    - Engine speed at 1,500—3,000 rpm
    - Drive 1 minute or more

32. Check for Temporary DTCs or DTCs with the HDS.

    Are any Temporary DTCs or DTCs indicated?

    YES—If DTC P0138 is indicated, check for poor connections or loose terminals at the secondary HO2S (Sensor 2) and the ECM/PCM, then go to step 1. If any other Temporary DTCs or DTCs are indicated, go to the indicated DTC's troubleshooting.

    NO—If the ECM/PCM was updated, troubleshooting is complete. If the ECM/PCM was substituted, replace the original ECM/PCM (see page 11-227). ■

BACK

Protected by AR

DTC P0139: Secondary HO2S (Sensor 2) Slow Response
(2003-2004 models)

1. Turn the ignition switch ON (II).
2. Clear the DTC with the HDS.
3. Start the engine. Hold the engine speed at 3,000 rpm without load (in Park or neutral) until the radiator fan comes on, then let it idle.
4. Test-drive under these conditions:
   - Engine coolant temperature above 158 °F (70 °C)
   - A/T in D position (M/T in 4th gear)
   - Engine speed at 2,000—3,000 rpm
   - Drive about 10 minutes, then decelerate (with the throttle fully closed) for 5 seconds
5. Monitor the OBD STATUS for DTC P0139 in the DTCs MENU with the HDS.

   Does the screen indicate FAILED?

   YES—Go to step 6.

   NO—If the screen indicates PASSED, intermittent failure, system is OK at this time. Check for poor connections or loose terminals at the secondary HO2S (Sensor 2) and the ECM/PCM. If the screen indicates EXECUTING, keep driving until a result comes on. If the screen indicates OUT OF CONDITION, go to step 3 and recheck.
6. Turn the ignition switch OFF.
7. Replace the secondary HO2S (Sensor 2) (see page 11-222).
8. Turn the ignition switch ON (II).
9. Reset the ECM/PCM with the HDS.
10. Do the ECM/PCM idle learn procedure (see page 11-316).
11. Start the engine. Hold the engine speed at 3,000 rpm without load (in Park or neutral) until the radiator fan comes on, then let it idle.
12. Test-drive under these conditions:
    - Engine coolant temperature above 158 °F (70 °C)
    - A/T in D position (M/T in 4th gear)
    - Engine speed at 2,000—3,000 rpm
    - Drive about 10 minutes, then decelerate (with the throttle fully closed) for 5 seconds
13. Check for Temporary DTCs or DTCs with the HDS.

    Are any Temporary DTCs or DTCs indicated?

    YES—If DTC P0139 is indicated, check for poor connections or loose terminals at the secondary HO2S (Sensor 2) and the ECM/PCM, then go to step 1. If any other Temporary DTCs or DTCs are indicated, go to the indicated DTC's troubleshooting.

    NO—Go to step 14.
14. Monitor the OBD STATUS for DTC P0139 in the DTCs MENU with the HDS.

    Does the screen indicate PASSED?

    YES—Troubleshooting is complete. ■

    NO—If the screen indicates FAILED, check for poor connections or loose terminals at the secondary HO2S (Sensor 2) and the ECM/PCM, then go to step 1. If the screen indicates EXECUTING, keep driving until a result comes on. If the screen indicates OUT OF CONDITION, go to step 11 and recheck.

Protected by AR

DTC Troubleshooting (cont'd)

DTC P0139: Secondary HO2S (Sensor 2) Slow Response
(2005-2006 models)

1. Turn the ignition switch ON (II).
2. Clear the DTC with the HDS.
3. Start the engine. Hold the engine speed at 3,000 rpm without load (in Park or neutral) until the radiator fan comes on, then let it idle.
4. Test-drive under these conditions:
   - Engine coolant temperature above 176 °F (80 °C)
   - A/T in D position (M/T in 4th gear)
   - Vehicle speed between 35—55 mph (56—88 km/h)
   - Drive 5 minutes or more
5. Monitor the OBD STATUS for DTC P0139 in the DTCs MENU with the HDS.

   Does the screen indicate FAILED?

   YES—Go to step 6.

   NO—If the screen indicates PASSED, intermittent failure, system is OK at this time. Check for poor connections or loose terminals at the secondary HO2S (Sensor 2) and the ECM/PCM. If the screen indicates EXECUTING, keep driving until a result comes on. If the screen indicates OUT OF CONDITION, go to step 3 and recheck.
6. Turn the ignition switch OFF.
7. Replace the secondary HO2S (Sensor 2) (see page 11-222).
8. Turn the ignition switch ON (II).
9. Reset the ECM/PCM with the HDS.
10. Do the ECM/PCM idle learn procedure (see page 11-316).
11. Start the engine. Hold the engine speed at 3,000 rpm without load (in Park or neutral) until the radiator fan comes on, then let it idle.
12. Test-drive under these conditions:
    - Engine coolant temperature above 176 °F (80 °C)
    - A/T in D position (M/T in 4th gear)
    - Vehicle speed between 35—55 mph (56—88 km/h)
    - Drive 5 minutes or more
13. Check for Temporary DTCs or DTCs with the HDS.

    Are any Temporary DTCs or DTCs indicated?

    YES—If DTC P0139 is indicated, check for poor connections or loose terminals at the secondary HO2S (Sensor 2) and the ECM/PCM, then go to step 1. If any other Temporary DTCs or DTCs are indicated, go to the indicated DTC's troubleshooting.

    NO—Go to step 14.
14. Monitor the OBD STATUS for DTC P0139 in the DTCs MENU with the HDS.

    Does the screen indicate PASSED?

    YES—Troubleshooting is complete. ■

    NO—If the screen indicates FAILED, check for poor connections or loose terminals at the secondary HO2S (Sensor 2) and the ECM/PCM, then go to step 1. If the screen indicates EXECUTING, keep driving until a result comes on. If the screen indicates OUT OF CONDITION, go to step 11 and recheck.

BACK

Protected by AR

DTC P0141: Secondary HO2S (Sensor 2) Heater Circuit Malfunction

1. Turn the ignition switch ON (II).
2. Clear the DTC with the HDS.
3. Start the engine.
4. Check for Temporary DTCs or DTCs with the HDS.

   Is DTC P0141 indicated?

   YES—Go to step 5.

   NO—Intermittent failure, system is OK at this time. Check for poor connections or loose terminals at the secondary HO2S (Sensor 2) and the ECM/PCM. ■
5. Check the No. 18 ACG (15 A) fuse in the under-dash fuse/relay box.

   Is the fuse OK?

   YES—Go to step 6.

   NO—Repair short in the wire between the secondary HO2S (Sensor 2) and the No. 18 ACG (15 A) fuse, then go to step 24.
6. Turn the ignition switch OFF.
7. Disconnect the secondary HO2S (Sensor 2) 4P connector (see page 11-222).
8. At the secondary HO2S (Sensor 2), measure resistance between secondary HO2S (Sensor 2) 4P connector terminals No. 3 and No. 4.

SECONDARY HO2S (SENSOR 2) 4P CONNECTOR

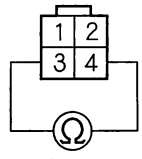

Wire side of female terminals

Is there 5.0—6.4 Ω at room temperature?

YES—Go to step 9.

NO—Go to step 23.

9. At the secondary HO2S (Sensor 2), check for continuity between body ground and secondary HO2S (Sensor 2) 4P connector terminals No. 3 and No. 4 individually.

SECONDARY HO2S (SENSOR 2) 4P CONNECTOR

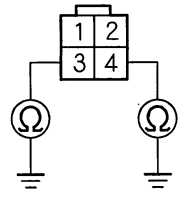

Wire side of female terminals

Is there continuity?

YES—Go to step 23.

NO—Go to step 10.

(cont'd)

Protected by AR

DTC Troubleshooting (cont'd)

10. Turn the ignition switch ON (II).

11. On the harness side, measure voltage between secondary HO2S (Sensor 2) 4P connector terminals No. 3 and No. 4.

SECONDARY HO2S (SENSOR 2) 4P CONNECTOR

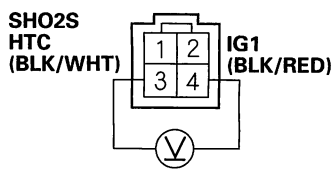

Terminal side of male terminals

Is there battery voltage?

YES—Go to step 12.

NO—Go to step 16.

12. Turn the ignition switch OFF.

13. Jump the SCS line with the HDS.

14. Disconnect ECM/PCM connector E (31P).

15. Check for continuity between ECM/PCM connector terminal E21 and body ground.

ECM/PCM CONNECTOR E (31P)

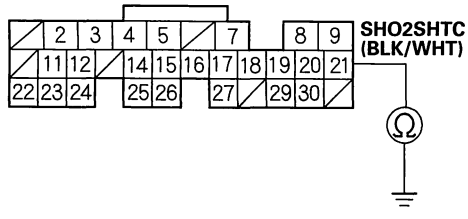

Wire side of female terminals

Is there continuity?

YES—Repair short in the wire between the ECM/PCM (E21) and the secondary HO2S (Sensor 2), then go to step 24.

NO—Go to step 30.

16. Measure voltage between secondary HO2S (Sensor 2) 4P connector terminal No. 4 and body ground.

SECONDARY HO2S (SENSOR 2) 4P CONNECTOR

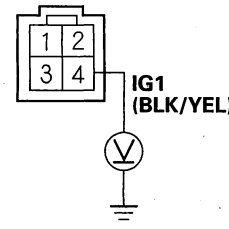

Terminal side of male terminals

Is there battery voltage?

YES—Go to step 17.

NO—Check the No. 18 ACG (15 A) fuse in the under-dash fuse/relay box. If the fuse is OK, repair open in the wire between the secondary HO2S (Sensor 2) and the No. 18 ACG (15 A) fuse, then go to step 24.

17. Turn the ignition switch OFF.

18. Jump the SCS line with the HDS.

19. Reconnect the secondary HO2S (Sensor 2) 4P connector.

20. Disconnect ECM/PCM connector E (31P).

21. Turn the ignition switch ON (II).

BACK

Protected by AR

22. Measure voltage between ECM/PCM connector terminals A5 and E21.

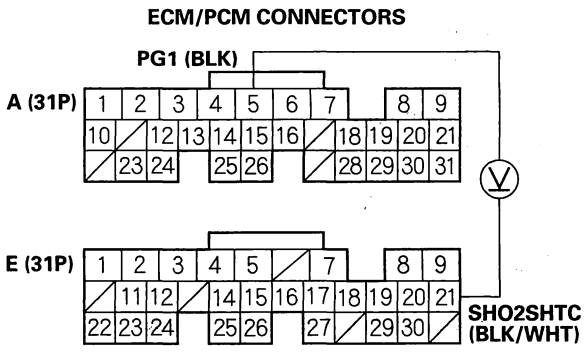

Wire side of female terminals

Is there 0.1 V or less?

YES—Repair open in the wire between the ECM/PCM (E21) and the secondary HO2S (Sensor 2), then go to step 25.

NO—Go to step 30.

23. Replace the secondary HO2S (Sensor 2) (see page 11-222).

24. Reconnect all connectors.

25. Turn the ignition switch ON (II).

26. Reset the ECM/PCM with the HDS.

27. Do the ECM/PCM idle learn procedure (see page 11-316).

28. Check for Temporary DTCs or DTCs with the HDS.

Are any Temporary DTCs or DTCs indicated?

YES—If DTC P0141 is indicated, check for poor connections or loose terminals at the secondary HO2S (Sensor 2) and the ECM/PCM, then go to step 1. If any other Temporary DTCs or DTCs are indicated, go to the indicated DTC's troubleshooting.

NO—Go to step 29.

29. Monitor the OBD STATUS for DTC P0141 in the DTCs MENU with the HDS.

Does the screen indicate PASSED?

YES—Troubleshooting is complete.■

NO—If the screen indicates FAILED, check for poor connections or loose terminals at the secondary HO2S (Sensor 2) and the ECM/PCM, then go to step 1. If the screen indicates NOT COMPLETED, go to step 26 and recheck.

30. Update the ECM/PCM if it does not have the latest software, or substitute a known-good ECM/PCM (see page 11-6).

31. Check for Temporary DTCs or DTCs with the HDS.

Are any Temporary DTCs or DTCs indicated?

YES—If DTC P0141 is indicated, check for poor connections or loose terminals at the secondary HO2S (Sensor 2) and the ECM/PCM, then go to step 1. If any other Temporary DTCs or DTCs are indicated, go to the indicated DTC's troubleshooting.

NO—If the ECM/PCM was updated, troubleshooting is complete. If the ECM/PCM was substituted, replace the original ECM/PCM (see page 11-227).■

Protected by AR

DTC Troubleshooting (cont'd)

DTC P0171: Fuel System Too Lean

DTC P0172: Fuel System Too Rich

NOTE: If some of the DTCs listed below are indicated at the same time as DTC P0171 and/or P0172, troubleshoot those DTCs first, then recheck for P0171 and/or P0172.

P0101, P0102, P0103: Mass air flow (MAF) sensor (2003-2004 SULEV, LX-P models and 2005-2006 models)
P0107, P0108, P1128, P1129: Manifold absolute pressure (MAP) sensor
P0133, P1172 (2005-2006 models), P1157, P2195, P2238, P2252, P2A00: Air fuel ratio (A/F) sensor (Sensor 1)
P0134, P0135: Air fuel ratio (A/F) sensor (Sensor 1) heater
P0137, P0138, P0139, P2270 (2005-2006 models), P2271 (2005-2006 models): Secondary HO2S (Sensor 2)
P0141: Secondary HO2S (Sensor 2) heater
P2646, P2647, P2648, P2649: VTEC system
P0401, P0404, P0406, P2413: Exhaust gas recirculation (EGR) system
P2279: Intake air leakage (2003-2004 except SULEV, LX-P models)
P0443, P0496: EVAP canister purge valve (2003-2004 SULEV, LX-P models and 2005-2006 models)

1. Check the fuel pressure (see page 11-332).

   Is the fuel pressure OK?

   YES—
   - 2003-2004 SULEV, LX-P models and 2005-2006 models: Go to step 2.
   - 2003-2004 except SULEV, LX-P models: Check the engine valve clearances and adjust if necessary (see page 6-9). If the valve clearances are OK, replace the injectors (see page 11-220), then go to step 7.

   NO—
   - If the pressure is too high, replace the fuel pressure regulator; SULEV model (see page 11-343), Non-SULEV model (see page 11-343), then go to step 7.
   - If the pressure is too low, check the fuel pump and the fuel feed line. Then go to step 7.

2. Check these parts for vacuum leaks:

   - PCV valve
   - PCV hose
   - EVAP canister purge valve
   - Throttle body
   - Intake manifold
   - Brake booster hose

   Are the parts OK?

   YES—Go to step 3.

   NO—Repair or replace parts with leaks, then go to step 7.

3. Start the engine. Hold the engine speed at 3,000 rpm without load (in Park or neutral) until the radiator fan comes on, then let it idle.

4. Check for these conditions:

   - Engine coolant temperature above 176 °F (80 °C)
   - M/T in neutral (A/T in Park or neutral)
   - All electric load off

5. Monitor the ENG SPD in the DATA LIST with the HDS, and hold the engine speed at 4,500 rpm. Once the engine speed is met, hold the accelerator pedal steady for more than 10 seconds.

   Did the engine speed vary more than 100 rpm from 4,500 rpm?

   YES—Repeat step 5.

   NO—Go to step 6.

6. While holding the engine speed at 4,500 rpm, check the MAF SENSOR in the DATA LIST with the HDS.

   Is there about 14—20 gm/s?

   YES—Check the engine valve clearances and adjust if necessary (see page 6-9). If the valve clearances are OK, replace the injectors (see page 11-220), then go to step 7.

   NO—Replace the MAF sensor/IAT sensor (see page 11-226), then go to step 7.

BACK

Protected by AR

7. Turn the ignition switch ON (II).
8. Reset the ECM/PCM with the HDS.
9. Do the ECM/PCM idle learn procedure (see page 11-316).
10. Start the engine. Hold the engine speed at 3,000 rpm without load (in Park or neutral) until the radiator fan comes on, then let it idle.
11. Test-drive under these conditions:

    - Engine coolant temperature above 176 °F (80 °C)
    - M/T in neutral (A/T in Park or neutral)
    - All electric loads off

    NOTE: DTC P0171 and/or P0172 may take up to 80 minutes of test driving to set. Using the HDS, monitor the long term fuel trim (LT FUEL TRIM) or the air fuel feed back average (AF FB AVE). If the long term fuel trim/air fuel feed back average stays within 0.80—1.20, there is no problem at this time.
12. Check for Temporary DTCs or DTCs with the HDS.

    Are any Temporary DTCs or DTCs indicated?

    YES—If DTC P0171 or P0172 is indicated, go to step 1. If any other Temporary DTCs or DTCs are indicated, go to the indicated DTC's troubleshooting.

    NO—Troubleshooting is complete.■

Protected by AR

DTC Troubleshooting (cont'd)

DTC P0300: Random Misfire and Any Combination of the Following:

DTC P0301: No. 1 Cylinder Misfire Detected

DTC P0302: No. 2 Cylinder Misfire Detected

DTC P0303: No. 3 Cylinder Misfire Detected

DTC P0304: No. 4 Cylinder Misfire Detected

Special Tools Required
- Pressure gauge adapter 07NAJ-P07010A
- A/T low pressure gauge w/panel 07406-0070300
- A/T pressure hose 07406-0020201
- A/T pressure hose, 2,210 mm 07MAJ-PY4011A
- A/T pressure adapter 07MAJ-PY40120
- Oil pressure hose 07ZAJ-S5A0200

NOTE:
- If the misfire is frequent enough to trigger detection of increased emissions during two consecutive driving cycles, the MIL will come on, and DTC P0300 (and some of the combination of P0301 through P0304) will be stored.
- If the misfire is frequent enough to damage the catalyst, the MIL will flash whenever the misfire occurs, and DTC P0300 (and some of the combination of P0301 through P0304) will be stored. When the misfire stops, the MIL will remain on.
- Troubleshoot the following DTCs first, if any of them were stored along with the random misfire DTC(s):

P0101, P0102, P0103: Mass air flow (MAF) sensor (2003-2004 SULEV, LX-P models and 2005-2006 models)
P0107, P0108, P1128, P1129: Manifold absolute pressure (MAP) sensor
P0171, P0172: Fuel system
P0335, P0339: Crankshaft position (CKP) sensor
P0365, P0369: Camshaft position (CMP) sensor B
P2646, P2647, P2648, P2649: VTEC system
P0506, P507: Idle control system
P0511: Idle air control (IAC) valve (2003-2005 models)
P0401, P0404, P0416, P2413: Exhaust gas recirculation (EGR) system

1. Record all freeze data and any on-board snapshot with the HDS.
2. Clear the DTC with the HDS.
3. Start the engine without load (in Park or neutral), then let it idle.
4. Monitor the OBD STATUS for DTC P0301, P0302, P0303, or P0304 in the DTCs MENU with the HDS.

   Does the screen indicate FAILED?

   YES—Go to step 9.

   NO—If the screen indicates PASSED, go to step 5. If the screen indicates EXECUTING, keep driving until a result comes on. If the screen indicates OUT OF CONDITION, wait for several minutes, then recheck.
5. Check the CYL1 MISFIRE, CYL2 MISFIRE, CYL3 MISFIRE, and/or CYL4 MISFIRE in the DATA LIST for 10 minutes with the HDS.

   Does CYL1 MISFIRE, CYL2 MISFIRE, CYL3 MISFIRE, and/or CYL4 MISFIRE show misfire counts?

   YES—Go to step 9.

   NO—Go to step 6.
6. Test-drive the vehicle for several minutes in the range of these recorded freeze data parameters:
   - Engine speed
   - Vehicle speed
   - Throttle position
   - CLV (calculated load value)
7. Monitor the OBD STATUS for DTC P0301, P0302, P0303, or P0304 in the DTCs MENU with the HDS.

   Does the screen indicate FAILED?

   YES—Go to step 9.

   NO—If the screen indicates PASSED, go to step 8. If the screen indicates EXECUTING, keep driving until a result comes on. if the screen indicates OUT OF CONDITION, go to step 6 and recheck.

BACK

Protected by AR

8. Check the CYL1 MISFIRE, CYL2 MISFIRE, CYL3 MISFIRE, and/or CYL4 MISFIRE in the DATA LIST for 10 minutes with the HDS.

   Does CYL1 MISFIRE, CYL2 MISFIRE, CYL3 MISFIRE, and/or CYL4 MISFIRE show misfire counts?

   YES—Go to step 9.

   NO—Intermittent failure, system is OK at this time. ■

9. Turn the ignition switch OFF.

10. Check the fuel quality.

    Is the quality good?

    YES—Go to step 11.

    NO—Drain the tank and fill with a known-good fuel, then go to step 24.

11. Inspect the spark plugs (see page 4-27). If the spark plugs are fouled or worn, replace them.

12. Test-drive the vehicle for several minutes in the range of these recorded freeze data parameters:

    - Engine speed
    - Vehicle speed
    - Throttle position
    - CLV (calculated load value)

13. Check the CYL1 MISFIRE, CYL2 MISFIRE, CYL3 MISFIRE, and/or CYL4 MISFIRE in the DATA LIST for 10 minutes with the HDS.

    Does CYL1 MISFIRE, CYL2 MISFIRE, CYL3 MISFIRE, and/or CYL4 MISFIRE show misfire counts?

    YES—Go to step 14.

    NO—Go to step 24.

14. Check the fuel pressure (see page 11-332).

    Is the fuel pressure OK?

    YES—
    - 2003-2004 SULEV, LX-P models and 2005-2006 models: Go to step 15.
    - 2003-2004 except SULEV, LX-P models: Go to step 19.

    NO—
    - If the fuel pressure is too high, replace the fuel pressure regulator; SULEV model (see page 11-343), Non-SULEV model (see page 11-343), then go to step 24.
    - If the fuel pressure is too low, check the fuel pump, the fuel feed pipe, and the fuel filter. If they are OK, replace the fuel pressure regulator; SULEV model (see page 11-343), Non-SULEV model (see page 11-343), then go to step 24.

15. Start the engine. Hold the engine speed at 3,000 rpm without load (in Park or neutral) until the radiator fan comes on, then let it idle.

16. Check for these conditions:

    - Engine coolant temperature above 176 °F (80 °C)
    - M/T in neutral (A/T in Park or neutral)
    - All electric load off

17. Monitor the ENG SPD in the DATA LIST with the HDS, and hold the engine speed at 4,500 rpm. Once the engine speed is met, hold the accelerator pedal steady for more than 10 seconds.

    Did the engine speed vary more than 100 rpm from 4,500 rpm?

    YES—Repeat step 17.

    NO—Go to step 18.

18. While holding the engine speed at 4,500 rpm, check the MAF SENSOR in the DATA LIST with the HDS.

    Is there about 14—20 gm/s?

    YES—Go to step 19.

    NO—Replace the MAF sensor/IAT sensor (see page 11-226), then go to step 24.

(cont'd)

Protected by AR

DTC Troubleshooting (cont'd)

19. Turn the ignition switch OFF.

20. Remove the rocker arm oil pressure switch (VTEC oil pressure switch) (A), and install the special tools as shown, then install the rocker arm oil pressure switch (VTEC oil pressure switch) in the pressure gauge adapter (B).

    NOTE: Install the switch in the reverse order of removal with a new O-ring.

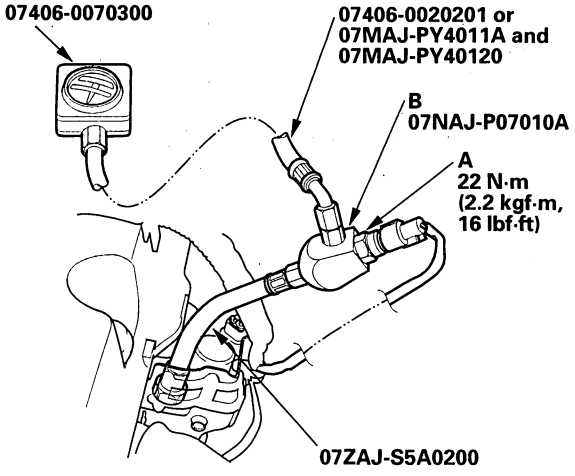

21. Reconnect the rocker arm oil pressure switch (VTEC oil pressure switch) 2P connector.

22. Start the engine. Hold the engine speed at 3,000 rpm without load (in Park or neutral) until the radiator fan comes on, then let it idle.

23. Check the oil pressure at engine speeds of 1,000 rpm and 2,000 rpm. Keep the test time as short as possible (less than 1 minute) because the engine is running without load.

    Is the oil pressure below 49 kPa (7 psi, 0.5 kgf/cm²)?

    YES—Check for air in the fuel line, then go to step 24.

    NO—Inspect the VTEC system, then go to step 24.

24. Turn the ignition switch ON (II).

25. Reset the ECM/PCM with the HDS.

26. Clear the CKP pattern with the HDS.

27. Do the ECM/PCM idle learn procedure (see page 11-316).

28. Do the CKP pattern learn procedure (see page 11-4).

29. Test-drive the vehicle for several minutes in the range of these recorded freeze data parameters:

    - Engine speed
    - Vehicle speed
    - Throttle position
    - CLV (calculated load value)

30. Check for Temporary DTCs or DTCs with the HDS.

    Are any Temporary DTCs or DTCs indicated?

    YES—If DTC P0300, P0301, P0302, P0303, or P0304 are indicated, check for a poor connection or loose terminals at the ignition coil, the injector, and the ECM/PCM, then go to troubleshooting DTC P0301, P0302, P0303, or P0304 (see page 11-133). If any other Temporary DTCs or DTCs are indicated, go to the indicated DTC's troubleshooting.

    NO—Go to step 31.

31. Monitor the OBD STATUS for DTC P0301, P0302, P0303, or P0304 in the DTCs MENU with the HDS.

    Does the screen indicate PASSED?

    YES—Troubleshooting is complete.■

    NO—If the screen indicates FAILED, go to step 1 and recheck. If the screen indicates EXECUTING, keep driving until a result comes on. If the screen indicates OUT OF CONDITION, go to step 29 and recheck.

BACK

Protected by AR

DTC P0301: No. 1 Cylinder Misfire Detected

DTC P0302: No. 2 Cylinder Misfire Detected

DTC P0303: No. 3 Cylinder Misfire Detected

DTC P0304: No. 4 Cylinder Misfire Detected

1. Record all freeze data and any on-board snapshot with the HDS.
2. Clear the DTC with the HDS.
3. Start the engine without load (in Park or neutral), then let it idle.
4. Monitor the OBD STATUS for DTC P0301, P0302, P0303, or P0304 in the DTCs MENU with the HDS.

   Does the screen indicate FAILED?

   YES—Go to step 9.

   NO—If the screen indicates PASSED, go to step 5. If the screen indicates EXECUTING, keep driving until a result comes on. If the screen indicates OUT OF CONDITION, wait for several minutes, and recheck.
5. Check the CYL1 MISFIRE, CYL2 MISFIRE, CYL3 MISFIRE, and/or CYL4 MISFIRE in the DATA LIST for 10 minutes with the HDS.

   Does CYL1 MISFIRE, CYL2 MISFIRE, CYL3 MISFIRE, and/or CYL4 MISFIRE show misfire counts?

   YES—Go to step 9.

   NO—Go to step 6.
6. Test-drive the vehicle for several minutes in the range of these recorded freeze data parameters:

   - Engine speed
   - Vehicle speed
   - Throttle position
   - CLV (calculated load value)
7. Monitor the OBD STATUS for DTC P0301, P0302, P0303, or P0304 in the DTCs MENU with the HDS.

   Does the screen indicate FAILED?

   YES—Go to step 9.

   NO—If the screen indicates PASSED, go to step 8. If the screen indicates EXECUTING, keep driving until a result comes on. If the screen indicates OUT OF CONDITION, go to step 6 and recheck.
8. Check the CYL1 MISFIRE, CYL2 MISFIRE, CYL3 MISFIRE, and/or CYL4 MISFIRE in the DATA LIST for 10 minutes with the HDS.

   Does CYL1 MISFIRE, CYL2 MISFIRE, CYL3 MISFIRE, and/or CYL4 MISFIRE show misfire counts?

   YES—Go to step 9.

   NO—Intermittent failure, system is OK at this time. ■
9. Turn the ignition switch OFF.
10. Remove the intake manifold cover; 2003-2005 models (see step 3 on page 9-4), 2006 model (see step 3 on page 9-9).
11. Start the engine, and listen for a clicking sound at the injector of the problem cylinder.

    Does the injector click?

    YES—Go to step 12.

    NO—Go to step 43.
12. Turn the ignition switch OFF.

(cont'd)

Protected by AR

DTC Troubleshooting (cont'd)

13. Exchange the ignition coil from the problem cylinder with one from another cylinder.

14. Test-drive the vehicle for several minutes in the range of these recorded freeze data parameters:

    - Engine speed
    - Vehicle speed
    - Throttle position
    - CLV (calculated load value)

15. Check the CYL1 MISFIRE, CYL2 MISFIRE, CYL3 MISFIRE, and/or CYL4 MISFIRE in the DATA LIST for 10 minutes with the HDS.

    Does CYL1 MISFIRE, CYL2 MISFIRE, CYL3 MISFIRE, and/or CYL4 MISFIRE show misfire counts?

    YES—Go to step 16.

    NO—Intermittent misfire due to poor contact at the ignition coil connector (no misfire at this time). Make sure the coil connections are secure. ■

16. Determine which cylinder had the misfire.

    Does the misfire occur in the cylinder where the ignition coil was moved?

    YES—Replace the faulty ignition coil (see page 4-25), then go to step 62.

    NO—Go to step 17.

17. Turn the ignition switch OFF.

18. Exchange the spark plug from the problem cylinder with one from another cylinder.

19. Test-drive the vehicle for several minutes in the range of these recorded freeze data parameters:

    - Engine speed
    - Vehicle speed
    - Throttle position
    - CLV (calculated load value)

20. Check the CYL1 MISFIRE, CYL2 MISFIRE, CYL3 MISFIRE, and/or CYL4 MISFIRE in the DATA LIST for 10 minutes with the HDS.

    Does CYL1 MISFIRE, CYL2 MISFIRE, CYL3 MISFIRE, and/or CYL4 MISFIRE show misfire counts?

    YES—Go to step 21.

    NO—Intermittent misfire due to spark plug fouling (no misfire at this time). ■

21. Determine which cylinder had the misfire.

    Does the misfire occur in the cylinder where the spark plug was moved?

    YES—Replace the faulty spark plug, then go to step 62.

    NO—Go to step 22.

22. Turn the ignition switch OFF.

23. Exchange the injector from the problem cylinder with one from another cylinder.

24. Start the engine, and let it idle 2 minutes.

25. Test-drive the vehicle for several minutes in the range of these recorded freeze data parameters:

    - Engine speed
    - Vehicle speed
    - Throttle position
    - CLV (calculated load value)

26. Check the CYL1 MISFIRE, CYL2 MISFIRE, CYL3 MISFIRE, and/or CYL4 MISFIRE in the DATA LIST for 10 minutes with the HDS.

    Does CYL1 MISFIRE, CYL2 MISFIRE, CYL3 MISFIRE, and/or CYL4 MISFIRE show misfire counts?

    YES—Go to step 27.

    NO—Intermittent misfire due to bad contact in the injector connector (no misfire at this time). Check for poor connections or loose terminals at the injector. ■

BACK

Protected by AR

27. Determine which cylinder had the misfire.

    Does the misfire occur in the cylinder where the injector was moved?

    YES—Replace the faulty injector (see page 11-220), then go to step 62.

    NO—Go to step 28.

28. Turn the ignition switch OFF.

29. Disconnect the ignition coil 3P connector from the problem cylinder.

30. Turn the ignition switch ON (II).

31. Measure voltage between ignition coil 3P connector terminal No. 3 and body ground.

IGNITION COIL 3P CONNECTOR

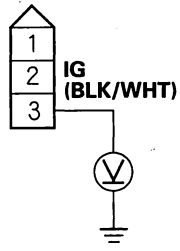

Wire side of female terminals

Is there battery voltage?

YES—Go to step 32.

NO—Repair open in the wire between the ignition coil and the ignition coil relay, then go to step 62.

32. Turn the ignition switch OFF.

33. Check for continuity between ignition coil 3P connector terminal No. 2 and body ground.

IGNITION COIL 3P CONNECTOR

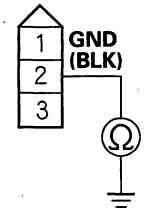

Wire side of female terminals

Is there continuity?

YES—Go to step 34.

NO—Repair open in the wire between the ignition coil and G101, then go to step 62.

34. Turn the ignition switch OFF.

35. Jump the SCS line with the HDS.

36. Disconnect ECM/PCM connector A (31P).

(cont'd)

Protected by AR

DTC Troubleshooting (cont'd)

37. Check for continuity between body ground and the appropriate ECM/PCM connector terminal (see table).

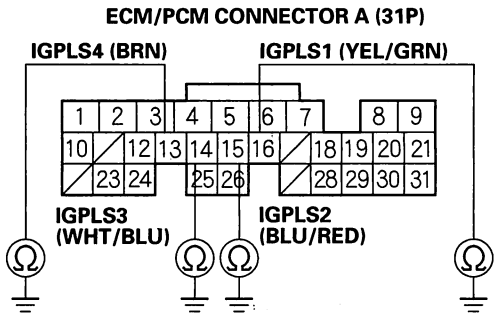

Wire side of female terminals

PROBLEM CYLINDER	DTC	ECM/PCM TERMINAL	WIRE COLOR
No. 1	P0301	A16	YEL/GRN
No. 2	P0302	A15	BLU/RED
No. 3	P0303	A14	WHT/BLU
No. 4	P0304	A13	BRN

Is there continuity?

YES—Repair short in the wire between the ECM/PCM and the ignition coil, then go to step 62.

NO—Go to step 38.

38. Connect appropriate ignition coil 3P connector terminal No. 1 to body ground with a jumper wire (see table).

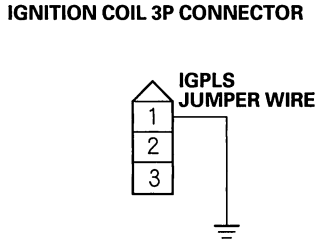

Wire side of female terminals

PROBLEM CYLINDER	DTC	WIRE COLOR
No. 1	P0301	YEL/GRN
No. 2	P0302	BLU/RED
No. 3	P0303	WHT/BLU
No. 4	P0304	BRN

39. Check for continuity between body ground and the appropriate ECM/PCM connector terminal (see table).

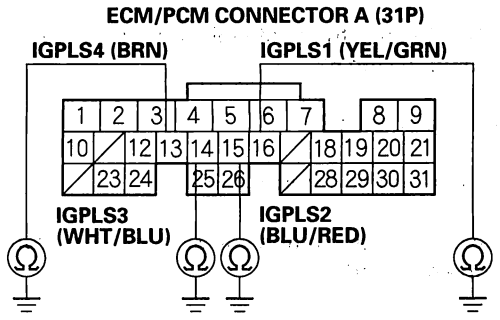

Wire side of female terminals

PROBLEM CYLINDER	DTC	ECM/PCM TERMINAL	WIRE COLOR
No. 1	P0301	A16	YEL/GRN
No. 2	P0302	A15	BLU/RED
No. 3	P0303	A14	WHT/BLU
No. 4	P0304	A13	BRN

Is there continuity?

YES—Go to step 40.

NO—Repair open in the wire between the ECM/PCM and the ignition coil, then go to step 62.

40. Reconnect the ignition coil 3P connector and ECM/PCM connector A (31P).

41. Do an engine compression and a cylinder leakdown test.

Did the engine pass both tests?

YES—Go to step 42.

NO—Repair the engine, then go to step 62.

42. Do the VTEC rocker arm test (see page 6-7).

Did the VTEC rocker arm pass the test?

YES—Go to step 71.

NO—Repair as necessary, then go to step 62.

BACK

Protected by AR

43. Turn the ignition switch OFF.
44. Jump the SCS line with the HDS.
45. Disconnect ECM/PCM connector B (24P).
46. Turn the ignition switch ON (II).
47. Measure voltage between body ground and the appropriate ECM/PCM connector terminal (see table).

ECM/PCM CONNECTOR B (24P)

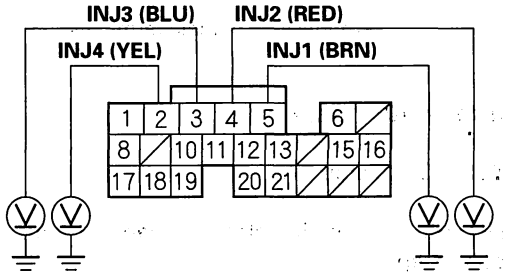

Wire side of female terminals

PROBLEM CYLINDER	DTC	ECM/PCM TERMINAL	WIRE COLOR
No. 1	P0301	B5	BRN
No. 2	P0302	B4	RED
No. 3	P0303	B3	BLU
No. 4	P0304	B2	YEL

Is there battery voltage?

YES—Go to step 56.

NO—Go to step 48.

48. Turn the ignition switch OFF.
49. Disconnect the injector 2P connector from the problem cylinder.
50. Turn the ignition switch ON (II).
51. Measure voltage between injector 2P connector terminal No. 1 and body ground.

INJECTOR 2P CONNECTOR

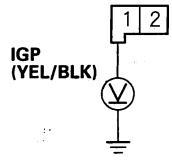

Wire side of female terminals

Is there battery voltage?

YES—Go to step 52.

NO—Repair open in the wire between the injector and PGM-FI main relay 1 (FI MAIN), then go to step 62.

52. Turn the ignition switch OFF.
53. Check for continuity between body ground and the appropriate ECM/PCM connector terminal (see table).

ECM/PCM CONNECTOR B (24P)

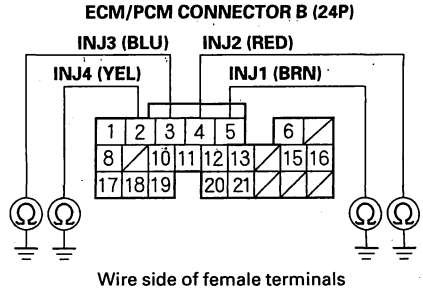

Wire side of female terminals

PROBLEM CYLINDER	DTC	ECM/PCM TERMINAL	WIRE COLOR
No. 1	P0301	B5	BRN
No. 2	P0302	B4	RED
No. 3	P0303	B3	BLU
No. 4	P0304	B2	YEL

Is there continuity?

YES—Repair short in the wire between the ECM/PCM and the injector, then go to step 62.

NO—Go to step 54.

(cont'd)

Protected by AR

DTC Troubleshooting (cont'd)

54. Connect appropriate injector 2P connector terminal No. 2 to body ground with a jumper wire (see table).

INJECTOR 2P CONNECTOR

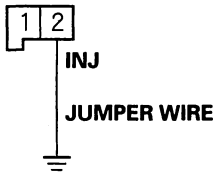

Wire side of female terminals

PROBLEM CYLINDER	DTC	WIRE COLOR
No. 1	P0301	BRN
No. 2	P0302	RED
No. 3	P0303	BLU
No. 4	P0304	YEL

55. Check for continuity between body ground and the appropriate ECM/PCM connector terminal (see table).

ECM/PCM CONNECTOR B (24P)

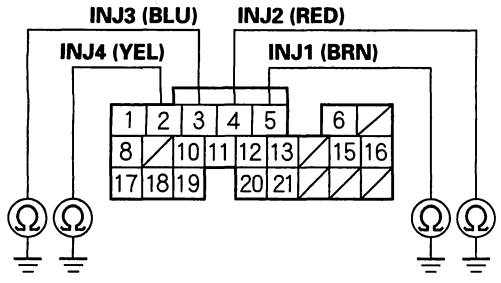

Wire side of female terminals

PROBLEM CYLINDER	DTC	ECM/PCM TERMINAL	WIRE COLOR
No. 1	P0301	B5	BRN
No. 2	P0302	B4	RED
No. 3	P0303	B3	BLU
No. 4	P0304	B2	YEL

Is there continuity?

YES—Go to step 56.

NO—Repair open in the wire between the ECM/PCM and the injector, then go to step 62.

56. Measure resistance between injector 2P connector terminals No. 1 and No. 2.

INJECTOR 2P CONNECTOR

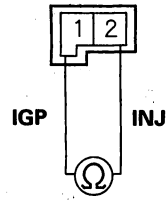

Terminal side of male terminals

Is there 10— 13 Ω ?

YES—Go to step 57.

NO—Replace the injector (see page 11-220), then go to step 62.

57. Substitute a known-good injector from another cylinder to the problem cylinder.

58. Reconnect ECM/PCM connector B (24P).

59. Start the engine, and let it idle 2 minutes.

60. Test-drive the vehicle for several minutes in the range of these recorded freeze data parameters:

- Engine speed
- Vehicle speed
- Throttle position
- CLV (calculated load value)

61. Check the CYL1 MISFIRE, CYL2 MISFIRE, CYL3 MISFIRE, and/or CYL4 MISFIRE in the DATA LIST for 10 minutes with the HDS.

Does CYL1 MISFIRE, CYL2 MISFIRE, CYL3 MISFIRE, and/or CYL4 MISFIRE show misfire counts?

YES—Go to step 71.

NO—Replace the original injector (see page 11-220), then go to step 62.

BACK

Protected by AR

62. Reconnect all connectors.

63. Turn the ignition switch ON (II).

64. Reset the ECM/PCM with the HDS.

65. Clear the CKP pattern with the HDS.

66. Do the ECM/PCM idle learn procedure (see page 11-316).

67. Do the CKP pattern learn procedure (see page 11-4).

68. Test-drive the vehicle for several minutes in the range of these recorded freeze data parameters:

    - Engine speed
    - Vehicle speed
    - Throttle position
    - CLV (calculated load value)

69. Check for Temporary DTCs or DTCs with the HDS.

    Are any Temporary DTCs or DTCs indicated?

    YES—If DTC P0301, P0302, P0303, or P0304 are indicated, check for poor connections or loose terminals at the ignition coil, the injector, and the ECM/PCM, then go to troubleshooting DTC P0300, P0301, P0302, P0303, or P0304 (see page 11-130). If any other Temporary DTCs or DTCs are indicated, go to the indicated DTC's troubleshooting.

    NO—Go to step 70.

70. Monitor the OBD STATUS for DTC P0301, P0302, P0303, or P0304 in the DTCs MENU with the HDS.

    Does the screen indicate PASSED?

    YES—Troubleshooting is complete. ■

    NO—If the screen indicates FAILED, go to step 1 and recheck. If the screen indicates EXECUTING, keep driving until a result comes on. If the screen indicates OUT OF CONDITION, go to step 68 and recheck.

71. Update the ECM/PCM if it does not have the latest software, or substitute a known-good ECM/PCM (see page 11-6).

72. Test-drive the vehicle for several minutes in the range of these recorded freeze data parameters:

    - Engine speed
    - Vehicle speed
    - Throttle position
    - CLV (calculated load value)

73. Check for Temporary DTCs or DTCs with the HDS.

    Are any Temporary DTCs or DTCs indicated?

    YES—If DTC P0301, P0302, P0303, or P0304 are indicated, check for poor connections or loose terminals at the injector, the ignition coil, and the ECM/PCM, then go to step 1. If any other Temporary DTCs or DTCs are indicated, go to the indicated DTC's troubleshooting.

    NO—If the ECM/PCM was updated, troubleshooting is complete. If the ECM/PCM was substituted, replace the original ECM/PCM (see page 11-227). ■

Protected by AR

DTC Troubleshooting (cont'd)

DTC P0325: Knock Sensor Circuit Malfunction

1. Turn the ignition switch ON (II).
2. Clear the DTC with the HDS.
3. Start the engine. Hold the engine speed at 3,000 rpm without load (in Park or neutral) until the radiator fan comes on, then let it idle.
4. Hold the engine speed at 3,000—4,000 rpm for at least 10 seconds.
5. Check for Temporary DTCs or DTCs with the HDS.

   Is DTC P0325 indicated?

   YES—Go to step 6.

   NO—Intermittent failure, system is OK at this time. Check for poor connections or loose terminals at the knock sensor and the ECM/PCM. ■
6. Turn the ignition switch OFF.
7. Jump the SCS line with the HDS.
8. Disconnect the knock sensor 1P connector.
9. Disconnect ECM/PCM connector A (31P).
10. Check for continuity between ECM/PCM connector terminal A1 and body ground.

ECM/PCM CONNECTOR A (31P)

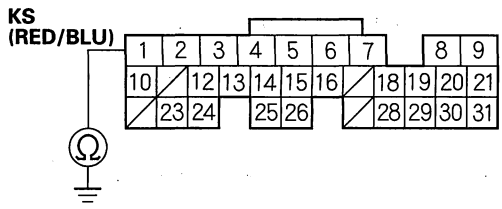

Wire side of female terminals

Is there continuity?

YES—Repair short in the wire between the ECM/PCM (A1) and the knock sensor, then go to step 14.

NO—Go to step 11.

11. Connect the knock sensor 1P connector terminal to body ground with a jumper wire.

KNOCK SENSOR 1P CONNECTOR

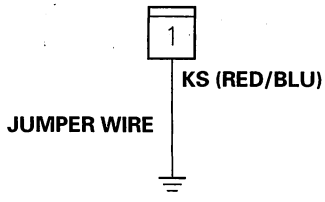

Wire side of female terminals

BACK

Protected by AR

12. Check for continuity between ECM/PCM connector terminal A1 and body ground.

ECM/PCM CONNECTOR A (31P)

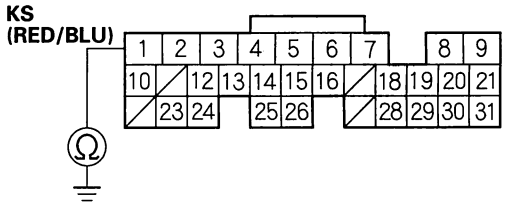

Wire side of female terminals

Is there continuity?

YES—Go to step 13.

NO—Repair open in the wire between the ECM/PCM (A1) and the knock sensor, then go to step 14.

13. Replace the knock sensor (see page 11-224).

14. Reconnect all connectors.

15. Turn the ignition switch ON (II).

16. Reset the ECM/PCM with the HDS.

17. Do the ECM/PCM idle learn procedure (see page 11-316).

18. Hold the engine speed at 3,000—4,000 rpm for at least 10 seconds.

19. Check for Temporary DTCs or DTCs with the HDS.

Are any Temporary DTCs or DTCs indicated?

YES—Go to step 21.

NO—Go to step 20.

20. Monitor the OBD STATUS for DTC P0325 in the DTCs MENU with the HDS.

Does the screen indicate PASSED?

YES—Troubleshooting is complete.■

NO—If the screen indicates FAILED, go to step 1 and recheck. If the screen indicates NOT COMPLETED, go to step 17 and recheck.

21. Update the ECM/PCM if it does not have the latest software, or substitute a known-good ECM/PCM (see page 11-6).

22. Hold the engine speed at 3,000—4,000 rpm for at least 10 seconds.

23. Check for Temporary DTCs or DTCs with the HDS.

Are any Temporary DTCs or DTCs indicated?

YES—If DTC P0325 is indicated, check for poor connections or loose terminals at the knock sensor and the ECM/PCM, then go to step 1. If any other Temporary DTCs or DTCs are indicated, go to the indicated DTC's troubleshooting.

NO—If the ECM/PCM was updated, troubleshooting is complete. If the ECM/PCM was substituted, replace the original ECM/PCM (see page 11-227).■

Protected by AR

DTC Troubleshooting (cont'd)

DTC P0335: CKP Sensor No Signal

1. Turn the ignition switch ON (II).
2. Clear the DTC with the HDS.
3. Start the engine.
4. Check for Temporary DTCs or DTCs with the HDS.

   Is DTC P0335 indicated?

   YES—Go to step 5.

   NO—Intermittent failure, system is OK at this time. Check for poor connections or loose terminals at the CKP sensor and the ECM/PCM. ■
5. Turn the ignition switch OFF.
6. Disconnect the CKP sensor 3P connector.
7. Turn the ignition switch ON (II).
8. Measure voltage between CKP sensor 3P connector terminal No. 1 and body ground.

CKP SENSOR 3P CONNECTOR

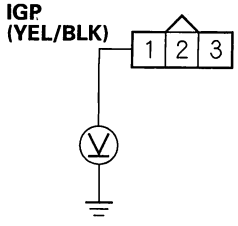

Wire side of female terminals

Is there battery voltage?

YES—Go to step 9.

NO—Repair open in the wire between the CKP sensor and PGM-FI main relay 1, then go to step 18.

9. Measure voltage between CKP sensor 3P connector terminal No. 2 and body ground.

CKP SENSOR 3P CONNECTOR

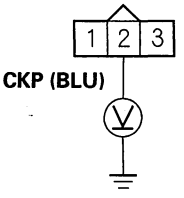

Wire side of female terminals

Is there about 5 V?

YES—Go to step 10.

NO—Go to step 11.

10. Measure voltage between CKP sensor 3P connector terminals No. 1 and No. 3.

CKP SENSOR 3P CONNECTOR

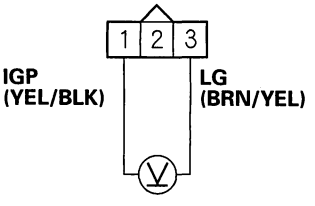

Wire side of female terminals

Is there battery voltage?

YES—Go to step 16.

NO—Repair open in the wire between the CKP sensor and G101, then go to step 18.

BACK

Protected by AR

11. Measure voltage between ECM/PCM connector terminal A7 and body ground.

ECM/PCM CONNECTOR A (31P)

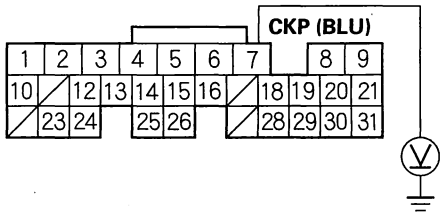

Wire side of female terminals

Is there about 5 V?

YES—Repair open in the wire between the ECM/PCM (A7) and the CKP sensor, then go to step 18.

NO—Go to step 12.

12. Turn the ignition switch OFF.
13. Jump the SCS line with the HDS.
14. Disconnect ECM/PCM connector A (31P).
15. Check for continuity between ECM/PCM connector terminal A7 and body ground.

ECM/PCM CONNECTOR A (31P)

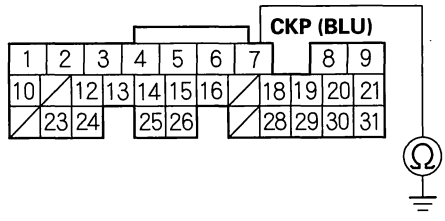

Wire side of female terminals

Is there continuity?

YES—Repair short in the wire between the ECM/PCM (A7) and the CKP sensor, then go to step 18.

NO—Go to step 25.

16. Turn the ignition switch OFF.
17. Replace the CKP sensor (see page 11-225).
18. Reconnect all connectors.
19. Turn the ignition switch ON (II).
20. Reset the ECM/PCM with the HDS.
21. Clear the CKP pattern with the HDS.
22. Do the ECM/PCM idle learn procedure (see page 11-316).
23. Do the CKP pattern learn procedure (see page 11-4).
24. Check for Temporary DTCs or DTCs with the HDS.

    Are any Temporary DTCs or DTCs indicated?

    YES—If DTC P0335 is indicated, check for poor connections or loose terminals at the CKP sensor and the ECM/PCM, then go to step 1. If any other Temporary DTCs or DTCs are indicated, go to the indicated DTC's troubleshooting.

    NO—Troubleshooting is complete. ■

25. Update the ECM/PCM if it does not have the latest software, or substitute a known-good ECM/PCM (see page 11-6).
26. Check for Temporary DTCs or DTCs with the HDS.

    Are any Temporary DTCs or DTCs indicated?

    YES—If DTC P0335 is indicated, check for poor connections or loose terminals at the CKP sensor and the ECM/PCM, then go to step 1. If any other Temporary DTCs or DTCs are indicated, go to the indicated DTC's troubleshooting.

    NO—If the ECM/PCM was updated, troubleshooting is complete. If the ECM/PCM was substituted, replace the original ECM/PCM (see page 11-227). ■

Protected by AR

DTC Troubleshooting (cont'd)

DTC P0339: CKP Sensor Intermittent Interruption

1. Record all freeze data and any on-board snapshot with the HDS.
2. Clear the DTC with the HDS.
3. Start the engine, and let it idle 10 seconds.
4. Check the CKP NOISE COUNT in the DATA LIST with the HDS.

   Are 0 counts indicated?

   YES—Go to step 7.

   NO—Go to step 5.
5. Test-drive the vehicle for several minutes in the range of these recorded freeze data parameters:

   - Engine speed
   - Vehicle speed
6. Check the CKP NOISE COUNT in the DATA LIST with the HDS.

   Are 0 counts indicated?

   YES—Go to step 7.

   NO—Intermittent failure, system is OK at this time. Check for poor connections or loose terminals at the CKP sensor and the ECM/PCM. ■
7. Check for poor or loose connections and terminals at these locations:

   - CKP sensor
   - ECM/PCM
   - Engine ground
   - Body ground

   Are the connections and terminals OK?

   YES—Go to step 8.

   NO—Repair the connectors or terminals, then go to step 11.
8. Remove the cam chain case (see page 6-12), and check for damage on the CKP sensor pulse plate.

   Is the pulse plate damaged?

   YES—Replace the CKP sensor pulse plate, then go to step 11.

   NO—Go to step 9.
9. Turn the ignition switch OFF.
10. Replace the CKP sensor (see page 11-225).
11. Turn the ignition switch ON (II).
12. Reset the ECM/PCM with the HDS.
13. Clear the CKP pattern with the HDS.
14. Do the ECM/PCM idle learn procedure (see page 11-316).
15. Do the CKP pattern learn procedure (see page 11-4).
16. Start the engine, and let it idle 10 seconds.
17. Check for Temporary DTCs or DTCs with the HDS.

    Are any Temporary DTCs or DTCs indicated?

    YES—If DTC P0339 is indicated, check for poor connections or loose terminals at the CKP sensor and the ECM/PCM, then go to step 1. If any other Temporary DTCs or DTCs are indicated, go to the indicated DTC's troubleshooting.

    NO—Troubleshooting is complete. ■

BACK

Protected by AR

DTC P0365: CMP Sensor B No Signal

1. Turn the ignition switch ON (II).
2. Clear the DTC with the HDS.
3. Start the engine.
4. Check for Temporary DTCs or DTCs with the HDS.

   Is DTC P0365 indicated?

   YES—Go to step 5.

   NO—Intermittent failure, system is OK at this time. Check for poor connections or loose terminals at CMP sensor B and the ECM/PCM. ■
5. Turn the ignition switch OFF.
6. Disconnect the CMP sensor B 3P connector.
7. Turn the ignition switch ON (II).
8. Measure voltage between CMP sensor B 3P connector terminal No. 3 and body ground.

CMP SENSOR B 3P CONNECTOR

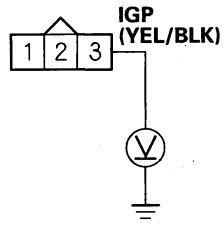

Wire side of female terminals

Is there battery voltage?

YES—Go to step 9.

NO—Repair open in the wire between CMP sensor B and PGM-FI main relay 1, then go to step 18.

9. Measure voltage between CMP sensor B 3P connector terminal No. 1 and body ground.

CMP SENSOR B 3P CONNECTOR

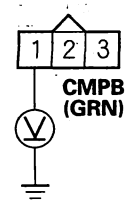

Wire side of female terminals

Is there about 5 V?

YES—Go to step 10.

NO—Go to step 11.

10. Measure voltage between CMP sensor B 3P connector terminals No. 2 and No. 3.

CMP SENSOR B 3P CONNECTOR

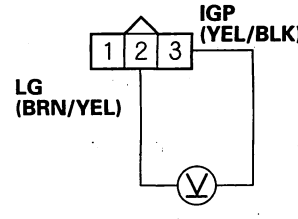

Wire side of female terminals

Is there battery voltage?

YES—Go to step 16.

NO—Repair open in the wire between CMP sensor B and G101, then go to step 18.

(cont'd)

Protected by AR

DTC Troubleshooting (cont'd)

11. Measure voltage between ECM/PCM connector terminal A6 and body ground.

ECM/PCM CONNECTOR A (31P)

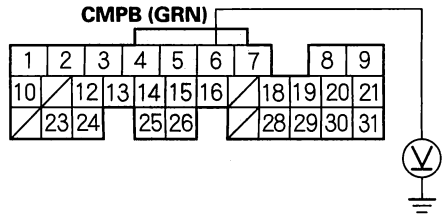

Wire side of female terminals

Is there about 5 V?

YES— Repair open in the wire between the ECM/PCM (A6) and CMP sensor B, then go to step 18.

NO—Go to step 12.

12. Turn the ignition switch OFF.
13. Jump the SCS line with the HDS.
14. Disconnect ECM/PCM connector A (31P).
15. Check for continuity between ECM/PCM connector terminal A6 and body ground.

ECM/PCM CONNECTOR A (31P)

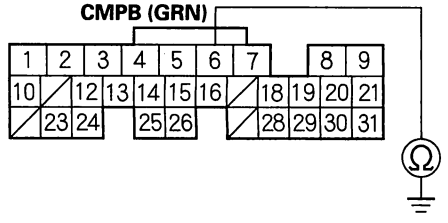

Wire side of female terminals

Is there continuity?

YES—Repair short in the wire between the ECM/PCM (A6) and CMP sensor B, then go to step 18.

NO—Go to step 23.

16. Turn the ignition switch OFF.
17. Replace CMP sensor B (see page 11-223).
18. Reconnect all connectors.
19. Turn the ignition switch ON (II).
20. Reset the ECM/PCM with the HDS.
21. Do the ECM/PCM idle learn procedure (see page 11-316).
22. Check for Temporary DTCs or DTCs with the HDS.

    Are any Temporary DTCs or DTCs indicated?

    YES—If DTC P0365 is indicated, check for poor connections or loose terminals at CMP sensor B and the ECM/PCM, then go to step 1. If any other Temporary DTCs or DTCs are indicated, go to the indicated DTC's troubleshooting.

    NO—Troubleshooting is complete.■

23. Update the ECM/PCM if it does not have the latest software, or substitute a known-good ECM/PCM (see page 11-6).
24. Check for Temporary DTCs or DTCs with the HDS.

    Are any Temporary DTCs or DTCs indicated?

    YES—If DTC P0365 is indicated, check for poor connections or loose terminals at CMP sensor B and the ECM/PCM, then go to step 1. If any other Temporary DTCs or DTCs are indicated, go to the indicated DTC's troubleshooting.

    NO—If the ECM/PCM was updated, troubleshooting is complete. If the ECM/PCM was substituted, replace the original ECM/PCM (see page 11-227).■

BACK

Protected by AR

DTC P0369: CMP Sensor B Intermittent Interruption

1. Record all freeze data and any on-board snapshot with the HDS.
2. Clear the DTC with the HDS.
3. Start the engine, and let it idle 10 seconds.
4. Check the CMP NOISE B COUNT in the DATA LIST with the HDS.

   Are 0 counts indicated?

   YES—Go to step 7.

   NO—Go to step 5.
5. Test-drive the vehicle for several minutes in the range of these recorded freeze data parameters:

   • Engine speed
   • Vehicle speed
6. Check the CMP NOISE B COUNT in the DATA LIST with the HDS.

   Are 0 counts indicated?

   YES—Go to step 7.

   NO—Intermittent failure, system is OK at this time. Check for poor connections or loose terminals at CMP sensor B and the ECM/PCM. ■
7. Check for poor or loose connections and terminals at these locations:

   • CMP sensor B
   • ECM/PCM
   • Engine ground
   • Body ground

   Are the connections and terminals OK?

   YES—Go to step 8.

   NO—Repair the connectors or terminals, then go to step 11.
8. Check for damage on the CMP sensor B pulse plate (see page 6-31).

   Is the pulse plate damaged?

   YES—Replace the CMP sensor B pulse plate (see page 6-31), then go to step 11.

   NO—Go to step 9.
9. Turn the ignition switch OFF.
10. Replace CMP sensor B (see page 11-223).
11. Turn the ignition switch ON (II).
12. Reset the ECM/PCM with the HDS.
13. Do the ECM/PCM idle learn procedure (see page 11-316).
14. Start the engine, and let it idle 10 seconds.
15. Check for Temporary DTCs or DTCs with the HDS.

    Are any Temporary DTCs or DTCs indicated?

    YES—If DTC P0369 is indicated, check for poor connections or loose terminals at CMP sensor B and the ECM/PCM, then go to step 1. If any other Temporary DTCs or DTCs are indicated, go to the indicated DTC's troubleshooting.

    NO—Troubleshooting is complete. ■

Protected by AR

DTC Troubleshooting (cont'd)

DTC P0562: Charging System Low Voltage (2005-2006 models)

NOTE:
- If any high current load accessories are installed, this DTC can be set.
- If DTC P16BB and/or P16BC is stored at the same time as DTC P0562, troubleshoot DTC P16BB and/or P16BC first, then recheck for DTC P0562.

1. Turn the ignition switch ON (II).
2. Clear the DTC with the HDS.
3. Start the engine.
4. Check under these conditions:
   - A/C on
   - Temperature control at maximum cool
   - Blower fan at maximum speed
   - Rear window defogger on
   - Headlights on high beam
5. Hold the engine speed at 2,000 rpm (in Park or neutral) for 1 minute.
6. Check for Temporary DTCs or DTCs with the HDS.

   Is DTC P0562 indicated?

   YES—Replace the alternator (see page 4-40), then go to step 7.

   NO—Intermittent failure, system is OK at this time. Check for poor connections or loose terminals at the alternator and the under-hood fuse/relay box, and check the battery performance (see page 22-78). ■
7. Turn the ignition switch ON (II).
8. Reset the ECM/PCM with the HDS.
9. Do the ECM/PCM idle learn procedure (see page 11-316).
10. Start the engine.
11. Check under these coditions:
    - A/C on
    - Temperature control at maximum cool
    - Blower fan at maximum speed
    - Rear window defogger on
    - Headlights on high beam
12. Hold the engine speed at 2,000 rpm (in Park or neutral) for 1 minute.
13. Check for Temporary DTCs or DTCs with the HDS.

    Are any Temporary DTCs or DTCs indicated?

    YES—If DTC P0562 is indicated, check for poor connections or loose terminals at the alternator and the under-hood fuse/relay box, then go to step 1. If any other Temporary DTCs or DTCs are indicated, go to the indicated DTC's troubleshooting.

    NO—Troubleshooting is complete. ■

BACK

Protected by AR

DTC P0563: ECM/PCM Power Source Circuit Unexpected Voltage

1. Turn the ignition switch ON (II).
2. Clear the DTC with the HDS.
3. Turn the ignition switch OFF.
4. Wait 10 seconds.
5. Turn the ignition switch ON (II).
6. Check for Temporary DTCs or DTCs with the HDS.

   Is DTC P0563 indicated?

   YES—Go to step 7.

   NO—Intermittent failure, system is OK at this time. Check for poor connections or loose terminals at the No. 8 ECU (ECM/PCM) (15 A) fuse in the under-hood fuse/relay box, PGM-FI main relay 1, and the ECM/PCM. ■

7. Turn the ignition switch OFF.
8. Jump the SCS line with the HDS.
9. Disconnect ECM/PCM connector E (31P).
10. Measure voltage between ECM/PCM connector terminal E7 and body ground.

ECM/PCM CONNECTOR E (31P)

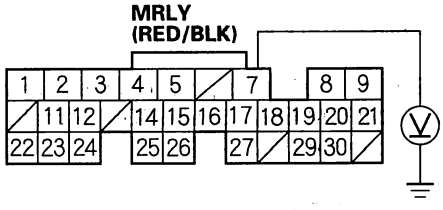

Wire side of female terminals

Is there battery voltage?

YES—Go to step 13.

NO—Go to step 11.

11. Remove the left kick panel; 2-door (see page 20-90), 4-door (see page 20-91), then remove PGM-FI main relay 1 (FI MAIN) (A) from the under-dash fuse/relay box.

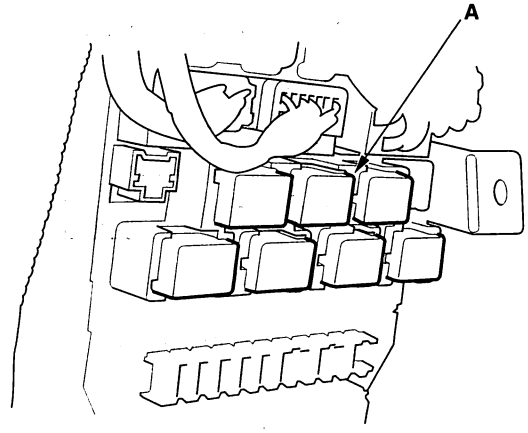

12. Check for continuity between ECM/PCM connector terminal E7 and body ground.

ECM/PCM CONNECTOR E (31P)

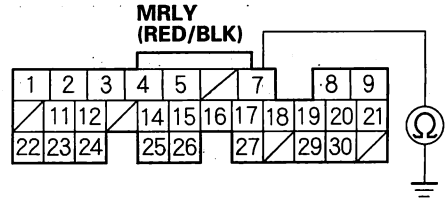

Wire side of female terminals

Is there continuity?

YES—Repair short in the wire between the ECM/PCM (E7) and PGM-FI main relay 1, then go to step 20.

NO—Go to step 19.

(cont'd)

Protected by AR

DTC Troubleshooting (cont'd)

13. Reconnect ECM/PCM connector E (31P).

14. Measure voltage between ECM/PCM connector terminal E7 and body ground.

ECM/PCM CONNECTOR E (31P)

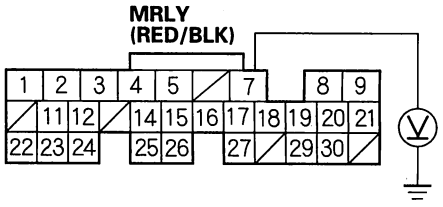

Wire side of female terminals

Is there battery voltage?

YES—Go to step 15.

NO—Go to step 27.

15. Disconnect ECM/PCM connector A (31P).

16. Measure voltage between body ground and ECM/PCM connector terminals A3 and A2 individually.

ECM/PCM CONNECTOR A (31P)

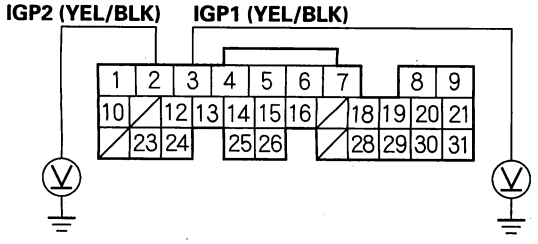

Wire side of female terminals

Is there battery voltage?

YES—Go to step 17.

NO—Go to step 27.

17. Remove the left kick panel; 2-door (see page 20-90), 4-door (see page 20-91), then remove PGM-FI main relay 1 (FI MAIN) (A) from the under-dash fuse/relay box.

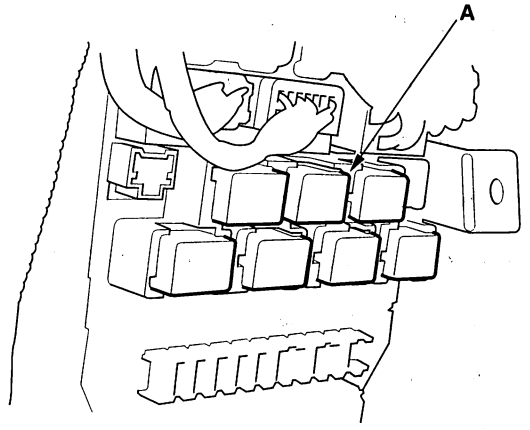

18. Measure voltage between body ground and ECM/PCM connector terminals A3 and A2 individually.

ECM/PCM CONNECTOR A (31P)

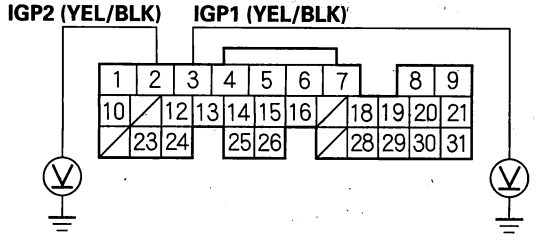

Wire side of female terminals

Is there battery voltage?

YES—Repair short to power in the wire between the ECM/PCM (A2, A3) and PGM-FI main relay 1, then go to step 20.

NO—Go to step 19.

BACK

Protected by AR

19. Replace PGM-FI main relay 1 (A).

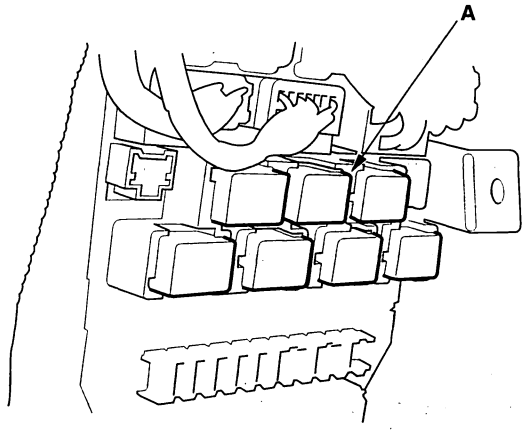

20. Reconnect all connectors.
21. Turn the ignition switch ON (II).
22. Reset the ECM/PCM with the HDS.
23. Turn the ignition switch OFF.
24. Wait 10 seconds.
25. Do the ECM/PCM idle learn procedure (see page 11-316).
26. Check for Temporary DTCs or DTCs with the HDS.

    Are any Temporary DTCs or DTCs indicated?

    YES—If DTC P0563 is indicated, check for poor connections or loose terminals at PGM-FI main relay 1 and the ECM/PCM, then go to step 1. If any other Temporary DTCs or DTCs are indicated, go to the indicated DTC's troubleshooting.

    NO—Troubleshooting is complete. ■

27. Update the ECM/PCM if it does not have the latest software, or substitute a known-good ECM/PCM (see page 11-6).
28. Check for Temporary DTCs or DTCs with the HDS.

    Are any Temporary DTCs or DTCs indicated?

    YES—If DTC P0563 is indicated, check for poor connections or loose terminals at PGM-FI main relay 1 and the ECM/PCM, then go to step 1. If any other Temporary DTCs or DTCs are indicated, go to the indicated DTC's troubleshooting.

    NO—If the ECM/PCM was updated, troubleshooting is complete. If the ECM/PCM was substituted, replace the original ECM/PCM (see page 11-227). ■

Protected by AR

DTC Troubleshooting (cont'd)

DTC P050A: Cold Start Idle Air Control System Performance (2006 model)

1. Turn the ignition switch ON (II).
2. Check for Temporary DTCs or DTCs with the HDS.

   Are any Temporary DTCs or DTCs (except P050A) indicated?

   YES—Go to the indicated DTC's troubleshooting. ■

   NO—Go to step 3.
3. Check for poor connections or blockage at the intake air duct.

   Is it OK?

   YES—Go to step 4.

   NO—Reconnect or repair the intake air duct, then go to step 19.
4. Check for damage at the air cleaner.

   Is it OK?

   YES—Go to step 5.

   NO—Replace the air cleaner (see page 11-361), then go to step 19.
5. Check for dirt at the air cleaner.

   Is it dirty?

   YES—Replace the air cleaner element (see page 11-361), then go to step 19.

   NO—Go to step 6.
6. Let the engine cool until the value of ECT SENSOR 1 is 122 °F (50 °C) or less.
7. Clear the DTC with the HDS.
8. Start the engine, and let it idle 10 seconds or more.
9. Monitor the OBD STATUS for DTC P050A in the DTCs MENU with the HDS.

   Does the screen indicate FAILED?

   YES—Go to step 10.

   NO—If the screen indicates PASSED, intermittent failure, system is OK at this time. If the screen indicates EXECUTING, let the engine idle until a result comes on. If the screen indicates OUT OF CONDITION, go to step 6 and recheck.
10. Do the ETCS TEST in the INSPECTION MENU with the HDS.

    Is the THROTTLE ACTUATOR CONTROL VALVE normal?

    YES—Go to step 11.

    NO—Replace the throttle body (see page 11-367), then go to step 19.
11. Start the engine. Hold the engine speed at 3,000 rpm without load (in Park or neutral) until the radiator fan comes on, then let it idle.

BACK

Protected by AR

12. Monitor the ENG SPD in the DATA LIST with the HDS, and hold the engine speed at 2,500 rpm for at least 30 seconds.

13. While holding the engine speed at 2,500 rpm, check the MAF SENSOR in the DATA LIST with the HDS.

    Is there about 7.70– 11.09 g/s (A/T model), 6.72– 9.67 g/s (M/T model)?

    YES—Go to step 14.

    NO—Replace the MAF sensor/IAT sensor (see page 11-226), then go to step 19.

14. Turn the ignition switch OFF.

15. Allow the engine to cool to ambient temperature.

16. Note the ambient temperature.

17. Note the value of the IAT SENSOR quickly in the DATA LIST with the HDS.

18. Compare the value of the IAT SENSOR and the ambient temperature.

    Does the value of the IAT SENSOR differ 5.4 °F (3 °C) or more?

    YES—Replace the MAF sensor/IAT sensor (see page 11-226), then go to step 19.

    NO—Check for dirt, carbon, or damage in the throttle bore. If there is dirt or carbon, clean the throttle body (see page 11-357), then go to step 19. If there is damage in the throttle bore, replace the throttle body (see page 11-367), then go to step 19.

19. Turn the ignition switch ON (II).

20. Reset the ECM/PCM with the HDS.

21. Let the engine cool until the value of ECT SENSOR 1 is 122 °F (50 °C) or less.

22. Do the ECM/PCM idle learn procedure (see page 11-316).

23. Check for Temporary DTCs or DTCs with the HDS.

    Are any Temporary DTCs or DTCs indicated?

    YES—If DTC P050A is indicated, check for poor connections or loose terminals at the throttle body, the MAF sensor/IAT sensor, and the ECM/PCM, then go to step 1. If any other Temporary DTCs or DTCs are indicated, go to the indicated DTC's troubleshooting.

    NO—Go to step 24.

24. Monitor the OBD STATUS for DTC P050A in the DTCs MENU with the HDS.

    Does the screen indicate PASSED?

    YES—Troubleshooting is complete. ■

    NO—If the screen indicates FAILED, check for poor connections or loose terminals at the throttle body, the MAF sensor/IAT sensor, and the ECM/PCM, then go to step 1. If the screen indicates EXECUTING, let the engine idle until a result comes on. If the screen indicates OUT OF CONDITION, go to step 20 and recheck.

Protected by AR

DTC Troubleshooting (cont'd)

DTC P050B: Cold Start Ignition Timing Performance
(2006 model)

1. Turn the ignition switch ON (II).
2. Check for Temporary DTCs or DTCs with the HDS.

   Are any Temporary DTCs or DTCs (except P050B) indicated?

   YES—Go to the indicated DTC's troubleshooting. ■

   NO—Go to step 3.
3. Check for poor connections or blockage at the intake air duct.

   Is it OK?

   YES—Go to step 4.

   NO—Reconnect or repair the intake air duct, then go to step 20.
4. Check for damage at the air cleaner.

   Is it OK?

   YES—Go to step 5.

   NO—Replace the air cleaner (see page 11-361), then go to step 24.
5. Check for dirt in the air cleaner element.

   Is it dirty?

   YES—Replace the air cleaner element (see page 11-361), then go to step 24.

   NO—Go to step 6.
6. Let the engine cool until the value of ECT SENSOR 1 is 122 °F (50 °C) or less.
7. Clear the DTC with the HDS.
8. Start the engine, and let it idle 10 seconds or more.
9. Monitor the OBD STATUS for DTC P050B in the DTCs MENU with the HDS.

   Does the screen indicate FAILED?

   YES—Go to step 10.

   NO—If the screen indicates PASSED, intermittent failure, system is OK at this time. If the screen indicates EXECUTING, let the engine idle until a result comes on. If the screen indicates OUT OF CONDITION, go to step 6 and recheck.
10. Inspect the ignition timing (see page 4-24).

    Is the ignition timing OK?

    YES—Go to step 12.

    NO—Go to step 11.
11. Check for damage at the CKP sensor (see page 11-225) and the CKP sensor pulse plate (see page 6-23).

    Is the CKP sensor and/or the CKP sensor pulse plate damaged?

    YES—Replace the CKP sensor (see page 11-225) and/or the CKP sensor pulse plate (see page 6-23), then go to step 24.

    NO—Go to step 30.

BACK

Protected by AR

12. Do the ETCS TEST in the INSPECTION MENU with the HDS.

    Is the THROTTLE ACTUATOR CONTROL VALVE normal?

    YES—Go to step 13.

    NO—Replace the throttle body (see page 11-367), then go to step 24.

13. Start the engine. Hold the engine speed at 3,000 rpm without load (in Park or neutral) until the radiator fan comes on, then let it idle.

14. Monitor the ENG SPD in the DATA LIST with the HDS, and hold the engine speed at 2,500 rpm for at least 30 seconds.

15. While holding the engine speed at 2,500 rpm, check the MAF SENSOR in the DATA LIST with the HDS.

    Is there about 7.70— 11.09 g/s (A/T model), 6.72— 9.67 g/s (M/T model)?

    YES—Go to step 16.

    NO—Replace the MAF sensor/IAT sensor (see page 11-226), then go to step 24.

16. Turn the ignition switch OFF.

17. Drain the coolant (see page 10-6).

18. Remove ECT sensor 1 (see page 11-223), and ECT sensor 2 (see page 11-228).

19. Allow the sensors to cool to the ambient temperature.

20. Note the ambient temperature.

21. Connect ECT sensor 1 to its 2P connector, and ECT sensor 2 to its 2P connector, but do not install them on the engine.

22. Note the value of ECT SENSOR 1 and ECT SENSOR 2 quickly in the DATA LIST with the HDS.

23. Compare the value of ECT SENSOR 1 and the ambient temperature, and the value of ECT SENSOR 2 and the ambient temperature individually.

    Does either sensor differ more than 5.4 °F (3 °C) from the ambient temperature?

    YES—Replace the sensor that differed more than 5.4 °F (3 °C) from the ambient temperature, then go to step 24.

    NO—Check and repair any problems with these items, then go to step 24.

    - Engine compression and cylinder leakdown
    - VTEC system
    - Engine oil
    - A/C system
    - Power steering

24. Turn the ignition switch ON (II).

25. Reset the ECM/PCM with the HDS.

(cont'd)

Protected by AR

DTC Troubleshooting (cont'd)

26. Let the engine cool until the value of ECT SENSOR 1 is 122 °F (50 °C) or less.

27. Do the ECM/PCM idle learn procedure (see page 11-316).

28. Check for Temporary DTCs or DTCs with the HDS.

    Are any Temporary DTCs or DTCs indicated?

    YES—If DTC P050B is indicated, check for poor connections or loose terminals at the CKP sensor, the throttle body, the MAF sensor/IAT sensor, ECT sensor 1, ECT sensor 2, and the ECM/PCM, then go to step 1. If any other Temporary DTCs or DTCs are indicated, go to the indicated DTC's troubleshooting.

    NO—Go to step 29.

29. Monitor the OBD STATUS for DTC P050B in the DTCs MENU with the HDS.

    Does the screen indicate PASSED?

    YES—Troubleshooting is complete.■

    NO—If the screen indicates FAILED, check for poor connections or loose terminals at the CKP sensor, the throttle body, the MAF sensor/IAT sensor, ECT sensor 1, ECT sensor 2, and the ECM/PCM, then go to step 1. If the screen indicates EXECUTING, let the engine idle until a result comes on. If the screen indicates OUT OF CONDITION, go to step 26 and recheck.

30. Update the ECM/PCM if it does not have the latest software, or substitute a known-good ECM/PCM (see page 11-6).

31. Let the engine cool until the value of ECT SENSOR 1 is 122 °F (50 °C) or less.

32. Do the ECM/PCM idle learn procedure (see page 11-316).

33. Check for Temporary DTCs or DTCs with the HDS.

    Are any Temporary DTCs or DTCs indicated?

    YES—If DTC P050B is indicated, check for poor connections or loose terminals at the CKP sensor, the throttle body, the MAF sensor/IAT sensor, ECT sensor 1, ECT sensor 2, and the ECM/PCM, then go to step 1. If any other Temporary DTCs or DTCs are indicated, go to the indicated DTC's troubleshooting.

    NO—If the ECM/PCM was updated, troubleshooting is complete. If the ECM/PCM was substituted, replace the original ECM/PCM (see page 11-227).■

BACK

Protected by AR

DTC P0602: ECM/PCM Programming Error (2005-2006 models)

NOTE:
- This DTC is indicated when the ECM/PCM update is not completed.
- Do not turn the ignition switch OFF while updating the ECM/PCM. If you turn the ignition switch OFF before completion, the ECM/PCM can be damaged.

1. Do the ECM/PCM update procedure (see page 11-6).
2. Check for Temporary DTCs or DTCs with the HDS.

   Is DTC P0602 indicated?

   YES—Replace the original ECM/PCM (see page 11-227). ■

   NO—Updating is complete. ■

DTC P0603: ECM/PCM Internal Control Module Keep Alive Memory (KAM) Error

1. Turn the ignition switch ON (II).
2. Clear the DTC with the HDS.
3. Check for Temporary DTCs or DTCs with the HDS.

   Are any Temporary DTCs or DTCs indicated?

   YES—Update the ECM/PCM if it does not have the latest software, or substitute a known-good ECM/PCM (see page 11-6), then recheck. If the symptom/indication goes away with a known-good ECM/PCM, replace the original ECM/PCM (see page 11-227). ■

   NO—Intermittent failure, system is OK at this time. ■

Protected by AR

DTC Troubleshooting (cont'd)

DTC P0606: ECM/PCM Processer Malfunction

1. Turn the ignition switch ON (II).
2. Clear the DTC with the HDS.
3. Turn the ignition switch OFF.
4. Turn the ignition switch ON (II).
5. Wait 40 seconds.
6. Check for Temporary DTCs or DTCs with the HDS.

   Is DTC P0606 indicated?

   YES—Update the ECM/PCM if it does not have the latest software, or substitute a known-good ECM/PCM (see page 11-6), then recheck. If the symptom/indication goes away with a known-good ECM/PCM, replace the original ECM/PCM (see page 11-227). ■

   NO—Intermittent failure, system is OK at this time. ■

DTC P0630: VIN Not Programmed or Mismatch (2005-2006 models)

NOTE: This DTC is stored only when the ECM/PCM does not have the VIN information of the vehicle. Use the HDS to input the missing VIN information.

1. Turn the ignition switch ON (II).
2. Check the VIN with the HDS.

   Does the HDS show the vehicle's VIN?

   YES—Go to step 5.

   NO—Go to step 3.
3. Input the VIN to the ECM/PCM with the HDS.

   Does the screen show COMPLETE?

   YES—Go to step 5.

   NO—Go to step 4.
4. Check for DTCs with the HDS.

   Is DTC P0603 indicated?

   YES—Go to the DTC P0603 troubleshooting. ■

   NO—Update the ECM/PCM if it does not have the latest software, or substitute a known-good ECM/PCM (see page 11-6), then recheck. If the symptom/indication goes away with a known-good ECM/PCM, replace the original ECM/PCM (see page 11-227). ■
5. Clear the DTC with the HDS.
6. Turn the ignition switch OFF.
7. Turn the ignition switch ON (II), and wait 5 seconds.

BACK

Protected by AR

8. Check for Temporary DTCs or DTCs with the HDS.

   Are any Temporary DTCs or DTCs indicated?

   YES—If DTC P0630 is indicated, update the ECM/PCM if it does not have the latest software, or substitute a known-good ECM/PCM (see page 11-6), then recheck. If any other Temporary DTCs or DTCs are indicated, go to the indicated DTC's troubleshooting. ■

   NO—Intermittent failure, system is OK at this time. ■

DTC P0685: ECM/PCM Power Control Circuit/ Internal Circuit Malfunction

NOTE: If the problem doesn't return after you clear the DTC, or if this DTC is stored intermittently, check for loose terminals at the IGP line connectors before replacing the ECM/PCM.

1. Turn the ignition switch ON (II).
2. Clear the DTC with the HDS.
3. Start the engine, then let it idle 30 seconds.
4. Turn the ignition switch OFF.
5. Start the engine, then let it idle 30 seconds.
6. Turn the ignition switch OFF.
7. Turn the ignition switch ON (II).
8. Check for Temporary DTCs or DTCs with the HDS.

   Is DTC P0685 indicated?

   YES—Update the ECM/PCM if it does not have the latest software, or substitute a known-good ECM/PCM (see page 11-6), then recheck. If the symptom/indication goes away with a known-good ECM/PCM, replace the original ECM/PCM (see page 11-227). ■

   NO—Intermittent failure, system is OK at this time. ■

Protected by AR

DTC Troubleshooting (cont'd)

DTC P0700: A/T Control System Malfunction

NOTE: This DTC is stored when there is a problem in the A/T control system. Check for A/T DTCs with the HDS, and go to the indicated DTC's troubleshooting.

DTC P0720: Output Shaft (Countershaft) Speed Sensor Circuit Malfunction

NOTE: This DTC only occurs on M/T vehicles.

1. Start the engine. Hold the engine speed at 3,000 rpm without load (in neutral) until the radiator fan comes on, then let it idle.
2. Test-drive several miles.
3. Check the C SHAFT SPD in the DATA LIST with the HDS.

   Is any vehicle speed indicated?

   YES—Intermittent failure, system is OK at this time. Check for poor connections or loose terminals at the output shaft (countershaft) speed sensor and the ECM. ■

   NO—Go to step 4.
4. Turn the ignition switch OFF.
5. Disconnect the output shaft (countershaft) speed sensor 3P connector.
6. Turn the ignition switch ON (II).
7. Measure voltage between output shaft (countershaft) speed sensor 3P connector terminal No. 1 and body ground.

OUTPUT SHAFT (COUNTERSHAFT) SPEED SENSOR 3P CONNECTOR

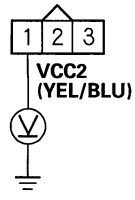

Wire side of female terminals

Is there about 5 V?

YES—Go to step 8.

NO—Repair open in the wire between the ECM (A20) and the output shaft (countershaft) speed sensor, then go to step 17.

BACK

Protected by AR

8. Measure voltage between output shaft (countershaft) speed sensor 3P connector terminal No. 2 and body ground.

OUTPUT SHAFT (COUNTERSHAFT) SPEED SENSOR 3P CONNECTOR

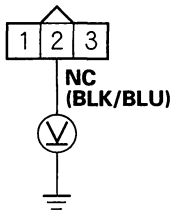

Wire side of female terminals

Is there about 5 V?

YES—Go to step 9.

NO—Go to step 10.

9. Measure voltage between output shaft (countershaft) speed sensor 3P connector terminals No. 1 and No. 3.

OUTPUT SHAFT (COUNTERSHAFT) SPEED SENSOR 3P CONNECTOR

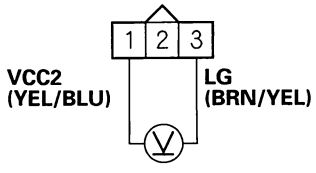

Wire side of female terminals

Is there about 5 V?

YES—Go to step 15.

NO—Repair open in the wire between the output shaft (countershaft) speed sensor and G101, then go to step 17.

10. Measure voltage between ECM connector terminal A18 and body ground.

ECM CONNECTOR A (31P)

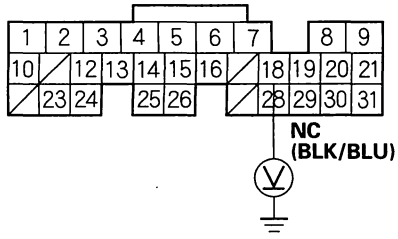

Wire side of female terminals

Is there about 5 V?

YES—Repair open in the wire between the ECM (A18) and the output shaft (countershaft) speed sensor, then go to step 17.

NO—Go to step 11.

11. Turn the ignition switch OFF.

12. Jump the SCS line with the HDS.

13. Disconnect ECM connector A (31P).

14. Check for continuity between ECM connector terminal A18 and body ground.

ECM CONNECTOR A (31P)

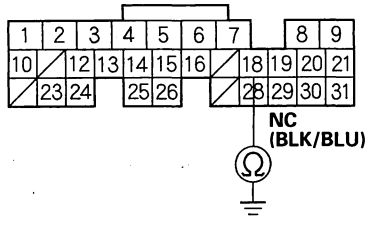

Wire side of female terminals

Is there continuity?

YES—Repair short in the wire between the ECM (A18) and the output shaft (countershaft) speed sensor, then go to step 17.

NO—Go to step 24.

(cont'd)

Protected by AR

DTC Troubleshooting (cont'd)

15. Turn the ignition switch OFF.

16. Replace the output shaft (countershaft) speed sensor (see page 11-225).

17. Reconnect all connectors.

18. Turn the ignition switch ON (II).

19. Reset the ECM with the HDS.

20. Do the ECM idle learn procedure (see page 11-316).

21. Test-drive under these conditions:

    - Engine coolant temperature above 158 °F (70 °C)
    - Transmission in 5th gear
    - Engine speed at 2,000—3,000 rpm
    - Drive for several minutes, then decelerate (with the throttle fully closed) for 8 seconds

22. Check for Temporary DTCs or DTCs with the HDS.

    Are any Temporary DTCs or DTCs indicated?

    YES—If DTC P0720 is indicated, check for poor connections or loose terminals at the output shaft (countershaft) speed sensor and the ECM, then go to step 1. If any other Temporary DTCs or DTCs are indicated, go to the indicated DTC's troubleshooting.

    NO—Go to step 23.

23. Monitor the OBD STATUS for DTC P0720 in the DTCs MENU with the HDS.

    Does the screen indicate PASSED?

    YES—Troubleshooting is complete.■

    NO—If the screen indicates FAILED, go to step 1 and recheck. If the screen indicates NOT COMPLETED, go to step 21 and recheck.

24. Update the ECM if it does not have the latest software, or substitute a known-good ECM (see page 11-6).

25. Test-drive under these conditions:

    - Engine coolant temperature above 158 °F (70 °C)
    - Transmission in 5th gear
    - Engine speed at 2,000—3,000 rpm
    - Drive for several minutes, then decelerate (with the throttle fully closed) for 8 seconds

26. Check for Temporary DTCs or DTCs with the HDS.

    Are any Temporary DTCs or DTCs indicated?

    YES—If DTC P0720 is indicated, check for poor connections or loose terminals at the output shaft (countershaft) speed sensor and the ECM, then go to step 1. If any other Temporary DTCs or DTCs are indicated, go to the indicated DTC's troubleshooting.

    NO—If the ECM was updated, troubleshooting is complete. If the ECM was substituted, replace the original ECM (see page 11-227).■

BACK

Protected by AR

DTC P1109: BARO Sensor Circuit Out of Range High
(2005-2006 models)

1. Reset the ECM/PCM with the HDS.
2. Start the engine.
3. Check for Temporary DTCs or DTCs with the HDS.

   Is DTC P1109 indicated?

   YES—Update the ECM/PCM if it does not have the latest software, or substitute a known-good ECM/PCM (see page 11-6), then recheck. If the symptom/indication goes away with a known-good ECM/PCM, replace the original ECM/PCM (see page 11-227). ■

   NO—Intermittent failure, system is OK at this time. ■

Protected by AR

DTC Troubleshooting (cont'd)

DTC P1116: ECT Sensor 1 Performance Problem (2005-2006 models)

NOTE: If DTC P0111 is stored at the same time as DTC P1116, troubleshoot DTC P0111 first, then recheck for DTC P1116.

1. Check for poor connections or loose terminals at ECT sensor 1 and ECT sensor 2.

   Are the connections and terminals OK?

   YES—Go to step 2.

   NO—Repair the connectors or terminals, then go to step 27.

2. Turn the ignition switch ON (II).

3. Check for Temporary DTCs or DTCs with the HDS.

   Are DTC P1116 and P2183 indicated at the same time?

   YES—Go to step 15.

   NO—Go to step 4.

4. Start the engine, and let it idle 10 minutes.

5. Check ECT SENSOR 1 in the DATA LIST with the HDS.

   Is about 129 °F (54 °C) or less, or 1.54 V or more indicated?

   YES—Replace ECT sensor 1 (see page 11-223), then go to step 27.

   NO—Go to step 6.

6. Turn the ignition switch OFF.

7. Drain the coolant (see page 10-6).

8. Remove ECT sensor 1 (see page 11-223).

9. Allow ECT sensor 1 to cool to 77 °F (25 °C).

10. Note the ambient temperature.

11. Connect ECT sensor 1 to the 2P connector, but do not install sensor on the engine.

12. Turn the ignition switch ON (II).

13. Note the value of ECT SENSOR 1 quickly in the DATA LIST with the HDS.

14. Compare the value of ECT SENSOR 1 and the ambient temperature.

    Does the value of ECT SENSOR 1 differ 5.4 °F (3 °C) or more?

    YES—Replace ECT sensor 1 (see page 11-223), then go to step 27.

    NO—Intermittent failure, system is OK at this time. Check for poor connections or loose terminals at ECT sensor 1, ECT sensor 2, and the ECM/PCM. ■

15. Start the engine, and let it idle 10 minutes.

16. Check ECT SENSOR 1 in the DATA LIST with the HDS.

    Is about 118 °F (48 °C) or less, or 1.75 V or more indicated?

    YES—Replace ECT sensor 1 (see page 11-223), then go to step 27.

    NO—Go to step 17.

17. Let the engine idle 10 minutes.

18. Check ECT SENSOR 2 in the DATA LIST with the HDS.

    Is about 131 °F (55 °C) or less, or 1.50 V or more indicated?

    YES—Replace ECT sensor 2 (see page 11-228), then go to step 27.

    NO—Go to step 19.

BACK

Protected by AR

19. Turn the ignition switch OFF.
20. Drain the coolant (see page 10-6).
21. Remove ECT sensor 1 (see page 11-223) and the ECT sensor 2 (see page 11-228).
22. Allow the sensors to cool to 77 °F (25 °C).
23. Note the ambient temperature.
24. Connect ECT sensor 1 to the 2P connector, and ECT sensor 2 to the 2P connector, but do not install them on the engine.
25. Note the value of ECT SENSOR 1 and ECT SENSOR 2 quickly in the DATA LIST with the HDS.
26. Compare the value of ECT SENSOR 1 and the ambient temperature, and the value of ECT SENSOR 2 and the ambient temperature individually.

    Does one of the sensors differ more than 5.4 °F (3 °C) from the ambient temperature?

    YES—Replace the sensor that differed more than 5.4 °F (3 °C) from the ambient temperature, then go to step 27.

    NO—Intermittent failure, system is OK at this time. Check for poor connections or loose terminals at ECT sensor 1, ECT sensor 2, and the ECM/PCM. ■

27. Turn the ignition switch ON (II).
28. Reset the ECM/PCM with the HDS.
29. Do the ECM/PCM idle learn procedure (see page 11-316).
30. Check for Temporary DTCs or DTCs with the HDS.

    Are any Temporary DTCs or DTCs indicated?

    YES—If DTC P1116 is indicated, check for poor connections or loose terminals at ECT sensor 1, ECT sensor 2, and the ECM/PCM, then go to step 1. If any other Temporary DTCs or DTCs are indicated, go to the indicated DTC's troubleshooting.

    NO—Troubleshooting is complete. ■

Protected by AR

DTC Troubleshooting (cont'd)

DTC P1121: TP Sensor Signal Lower Than Expected
(2003-2005 models)

1. Turn the ignition switch ON (II).
2. Clear the DTC with the HDS.
3. Open the throttle fully.
4. Check the TP SENSOR in the DATA LIST with the HDS.

   Is the throttle position less than 4.0 degrees (REL) (14 % (REL)) for 5 seconds?

   YES—Go to step 8.

   NO—Go to step 5.
5. Start the engine. Hold the engine speed at 3,000 rpm without load (in Park or neutral) until the radiator fan comes on, then let it idle.
6. Test-drive the vehicle at 16 mph (25 km/h) or more, and at 1,400 rpm or more.
7. Monitor the OBD STATUS for DTC P1121 in the DTCs MENU with the HDS.

   Does the screen indicate FAILED?

   YES—Go to step 8.

   NO—If the screen indicates PASSED, intermittent failure, system is OK at this time. Check for poor connections or loose terminals at the TP sensor and the ECM/PCM. If the screen indicates NOT COMPLETED, go to step 5 and recheck.
8. Turn the ignition switch OFF.
9. Replace the throttle body (see page 11-366).
10. Reconnect all connectors.
11. Turn the ignition switch ON (II).
12. Reset the ECM/PCM with the HDS.
13. Do the ECM/PCM idle learn procedure (see page 11-316).
14. Start the engine. Hold the engine speed at 3,000 rpm without load (in Park or neutral) until the radiator fan comes on, then let it idle.
15. Test-drive the vehicle at 16 mph (25 km/h) or more, and at 1,400 rpm or more.
16. Check for Temporary DTCs or DTCs with the HDS.

    Are any Temporary DTCs or DTCs indicated?

    YES—If DTC P1121 is indicated, check for poor connections or loose terminals at the TP sensor and the ECM/PCM, then go to step 1. If any other Temporary DTCs or DTCs are indicated, go to the indicated DTC's troubleshooting.

    NO—Go to step 17.
17. Monitor the OBD STATUS for DTC P1121 in the DTCs MENU with the HDS.

    Does the screen indicate PASSED?

    YES—Troubleshooting is complete. ■

    NO—If the screen indicates FAILED, check for poor connections or loose terminals at the TP sensor and the ECM/PCM, then go to step 1. If the screen indicates NOT COMPLETED, go to step 13 and recheck.

BACK

Protected by AR

DTC P1122: TP Sensor Signal Higher Than Expected
(2003-2005 models)

1. Turn the ignition switch ON (II).
2. Clear the DTC with the HDS.
3. Start the engine. Hold the engine speed at 3,000 rpm without load (in Park or neutral) until the radiator fan comes on, then let it idle.
4. Check the TP SENSOR in the DATA LIST with the HDS.

   Is the throttle position more than 6.4 degrees (REL) (16 % (REL)) for 5 seconds?

   YES—Go to step 8.

   NO—Go to step 5.
5. Start the engine. Hold the engine speed at 3,000 rpm without load (in Park or neutral) until the radiator fan comes on, then let it idle.
6. Test-drive the vehicle at 16 mph (25 km/h) or more, and at 1,400 rpm or more.
7. Monitor the OBD STATUS for DTC P1122 in the DTCs MENU with the HDS.

   Does the screen indicate FAILED?

   YES—Go to step 8.

   NO—If the screen indicates PASSED, intermittent failure, system is OK at this time. Check for poor connections or loose terminals at the TP sensor and the ECM/PCM. If the screen indicates NOT COMPLETED, go to step 5 and recheck.
8. Turn the ignition switch OFF.
9. Replace the throttle body (see page 11-366).
10. Reconnect all connectors.
11. Turn the ignition switch ON (II).
12. Reset the ECM/PCM with the HDS.
13. Do the ECM/PCM idle learn procedure (see page 11-316).
14. Start the engine. Hold the engine speed at 3,000 rpm without load (in Park or neutral) until the radiator fan comes on, then let it idle.
15. Test-drive the vehicle at 16 mph (25 km/h) or more, and at 1,400 rpm or more.
16. Check for Temporary DTCs or DTCs with the HDS.

    Are any Temporary DTCs or DTCs indicated?

    YES—If DTC P1122 is indicated, check for poor connections or loose terminals at the TP sensor and the ECM/PCM, then go to step 1. If any other Temporary DTCs or DTCs are indicated, go to the indicated DTC's troubleshooting.

    NO—Go to step 17.
17. Monitor the OBD STATUS for DTC P1122 in the DTCs MENU with the HDS.

    Does the screen indicate PASSED?

    YES—Troubleshooting is complete.■

    NO—If the screen indicates FAILED, check for poor connections or loose terminals at the TP sensor and the ECM/PCM, then go to step 1. If the screen indicates NOT COMPLETED, go to step 13 and recheck.

Protected by AR

DTC Troubleshooting (cont'd)

DTC P1128: MAP Sensor Signal Lower Than Expected

1. Turn the ignition switch ON (II).
2. Check the MAP SENSOR in the DATA LIST with the HDS.

   Is less than 54.1 kPa (16.0 in.Hg, 406 mmHg) or 1.61 V held for more than 5 seconds?

   YES—Go to step 7.

   NO—Go to step 3.
3. Clear the DTC with the HDS.
4. Start the engine. Hold the engine speed at 3,000 rpm without load (in Park or neutral) until the radiator fan comes on, then let it idle.
5. Test-drive under these conditions:

   - Engine coolant temperature above 158 °F (70 °C)
   - Engine speed between 1,400 and 5,700 rpm
   - A/T in D position (M/T in 3rd gear)
   - Vehicle speed accelerated from 16 mph (25 km/h) to 31 mph (50 km/h) under half throttle
6. Monitor the OBD STATUS for DTC P1128 in the DTCs MENU with the HDS.

   Does the screen indicate FAILED?

   YES—Go to step 7.

   NO—If the screen indicates PASSED, intermittent failure, system is OK at this time. Check for poor connections or loose terminals at the MAP sensor and the ECM/PCM. If the screen indicates NOT COMPLETED, go to step 4 and recheck.
7. Turn the ignition switch OFF.
8. Replace the MAP sensor (see page 11-226).
9. Turn the ignition switch ON (II).
10. Reset the ECM/PCM with the HDS.
11. Do the ECM/PCM idle learn procedure (see page 11-316).
12. Start the engine. Hold the engine speed at 3,000 rpm without load (in Park or neutral) until the radiator fan comes on, then let it idle.
13. Test-drive under these conditions:

    - Engine coolant temperature above 158 °F (70 °C)
    - Engine speed between 1,400 and 5,700 rpm
    - A/T in D position (M/T in 3rd gear)
    - Vehicle speed accelerated from 16 mph (25 km/h) to 31 mph (50 km/h) under half throttle
14. Check for Temporary DTCs or DTCs with the HDS.

    Are any Temporary DTCs or DTCs indicated?

    YES—If DTC P1128 is indicated, check for poor connections or loose terminals at the MAP sensor and the ECM/PCM, then go to step 1. If any other Temporary DTCs or DTCs are indicated, go to the indicated DTC's troubleshooting.

    NO—Go to step 15.
15. Monitor the OBD STATUS for DTC P1128 in the DTCs MENU with the HDS.

    Does the screen indicate PASSED?

    YES—Troubleshooting is complete. ■

    NO—If the screen indicates FAILED, check for poor connections or loose terminals at the MAP sensor and the ECM/PCM, then go to step 1. If the screen indicates NOT COMPLETED, go to step 12 and recheck.

BACK

Protected by AR

DTC P1129: MAP Sensor Signal Higher Than Expected

1. Check for vacuum leaks in these parts:

   - PCV valve
   - PCV hose
   - EVAP canister purge valve
   - Throttle body
   - Intake manifold
   - Brake booster hose

   Are there any vacuum leaks?

   YES—Repair or replace parts with vacuum leaks, then go to step 9.
   NO—Go to step 2.

2. Start the engine. Hold the engine speed at 3,000 rpm without load (in Park or neutral) until the radiator fan comes on, then let it idle.

3. Check the MAP SENSOR in the DATA LIST with the HDS.

   Is more than 36.9 kPa (11.0 in.Hg, 277 mmHg) or 1.1 V held for more than for 5 seconds?

   YES—Go to step 7.
   NO—Go to step 4.

4. Clear the DTC with the HDS.

5. Test-drive under these conditions:

   - Engine coolant temperature above 158 °F (70 °C)
   - Engine speed between 1,400 and 5,700 rpm
   - A/T in D position (M/T in 5th gear)
   - Vehicle speed decelerated from more than 50 mph (80 km/h) with the throttle fully closed for at least 5 seconds

6. Monitor the OBD STATUS for DTC P1129 in the DTCs MENU with the HDS.

   Does the screen indicate FAILED?

   YES—Go to step 7.
   NO—If the screen indicates PASSED, intermittent failure, system is OK at this time. Check for poor connections or loose terminals at the MAP sensor and the ECM/PCM. If the screen indicates NOT COMPLETED, go to step 5 and recheck.

7. Turn the ignition switch OFF.

8. Replace the MAP sensor (see page 11-226).

9. Turn the ignition switch ON (II).

10. Reset the ECM/PCM with the HDS.

11. Do the ECM/PCM idle learn procedure (see page 11-316).

12. Start the engine. Hold the engine speed at 3,000 rpm without load (in Park or neutral) until the radiator fan comes on, then let it idle.

13. Test-drive under these conditions:

    - Engine coolant temperature above 158 °F (70 °C)
    - Engine speed between 1,400 and 5,700 rpm
    - A/T in D position (M/T in 5th gear)
    - Vehicle speed decelerated from more than 50 mph (80 km/h) with the throttle fully closed for at least 5 seconds

14. Check for Temporary DTCs or DTCs with the HDS.

    Are any Temporary DTCs or DTCs indicated?

    YES—If DTC P1129 is indicated, check for poor connections or loose terminals at the MAP sensor and the ECM/PCM, then go to step 1. If any other Temporary DTCs or DTCs are indicated, go to the indicated DTC's troubleshooting.

    NO—Go to step 15.

15. Monitor the OBD STATUS for DTC P1129 in the DTCs MENU with the HDS.

    Does the screen indicate PASSED?

    YES—Troubleshooting is complete. ■

    NO—If the screen indicates FAILED, check for poor connections or loose terminals at the MAP sensor and the ECM/PCM, then go to step 1. If the screen indicates NOT COMPLETED, go to step 12 and recheck.

Protected by AR

DTC Troubleshooting (cont'd)

DTC P1157: A/F Sensor (Sensor 1) AFS Line High Voltage

1. Turn the ignition switch ON (II).
2. Clear the DTC with the HDS.
3. Start the engine, and wait 1 minute.
4. Check for Temporary DTCs or DTCs with the HDS.

   Is DTC P1157 indicated?

   YES—Go to step 5.

   NO—Intermittent failure, system is OK at this time. Check for poor connections or loose terminals at the A/F sensor (Sensor 1) and the ECM/PCM. ■
5. Turn the ignition switch OFF.
6. Jump the SCS line with the HDS.
7. Disconnect the A/F sensor (Sensor 1) 4P connector.
8. Disconnect ECM/PCM connector A (31P).
9. Connect A/F sensor (Sensor 1) 4P connector terminals No. 1 and No. 2 with a jumper wire.

A/F SENSOR (SENSOR 1) 4P CONNECTOR

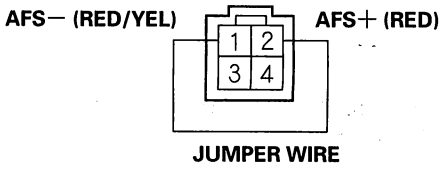

Terminal side of male terminals

10. Check for continuity between ECM/PCM connector terminals A28 and A31.

ECM/PCM CONNECTOR A (31P)

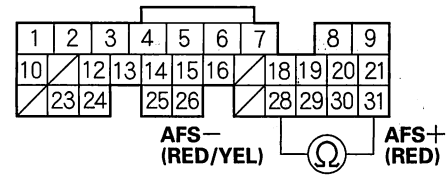

Wire side of female terminals

Is there continuity?

YES—Go to step 14.

NO—Go to step 11.

11. Remove the jumper wire from the A/F sensor (Sensor 1) 4P connector.
12. Connect A/F sensor (Sensor 1) 4P connector terminal No. 2 to body ground with a jumper wire.

A/F SENSOR (SENSOR 1) 4P CONNECTOR

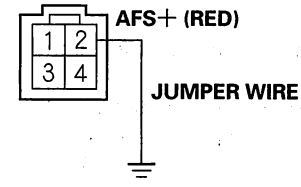

Terminal side of male terminals

BACK

Protected by AR

13. Check for continuity between ECM/PCM connector terminal A31 and body ground.

ECM/PCM CONNECTOR A (31P)

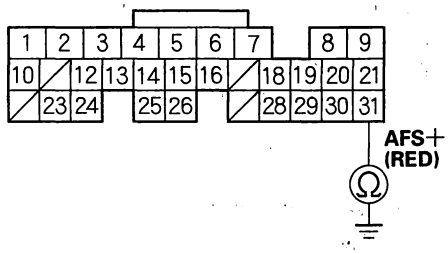

Wire side of female terminals

Is there continuity?

YES—Repair open in the wire between the ECM/PCM (A28) and the A/F sensor (Sensor 1), then go to step 15.

NO—Repair open in the wire between the ECM/PCM (A31) and the A/F sensor (Sensor 1), then go to step 15.

14. Replace the A/F sensor (Sensor 1) (see page 11-222).

15. Reconnect all connectors.

16. Turn the ignition switch ON (II).

17. Reset the ECM/PCM with the HDS.

18. Do the ECM/PCM idle learn procedure (see page 11-316).

19. Check for Temporary DTCs or DTCs with the HDS.

Are any Temporary DTCs or DTCs indicated?

YES—If DTC P1157 is indicated, check for poor connections or loose terminals at the A/F sensor (Sensor 1) and the ECM/PCM, then go to step 1. If the connector and terminal fits are OK, go to step 21. If any other Temporary DTCs or DTCs are indicated, go to the indicated DTC's troubleshooting.

NO—Go to step 20.

20. Monitor the OBD STATUS for DTC P1157 in the DTCs MENU with the HDS.

Does the screen indicate PASSED?

YES—Troubleshooting is complete. ■

NO—If the screen indicates FAILED, check for poor connections or loose terminals at the A/F sensor (Sensor 1) and the ECM/PCM, then go to step 1. If the screen indicates NOT COMPLETED, go to step 18 and recheck.

21. Update the ECM/PCM if it does not have the latest software, or substitute a known-good ECM/PCM (see page 11-6).

22. Check for Temporary DTCs or DTCs with the HDS.

Is DTC P1157 indicated?

YES—Go to step 20 and recheck.

NO—If the ECM/PCM was updated, troubleshooting is complete. If the ECM/PCM was substituted, replace the original ECM/PCM (see page 11-227). ■

Protected by AR

DTC Troubleshooting (cont'd)

DTC P1172: A/F Sensor (Sensor 1) Circuit Out of Range High (2005-2006 models)

1. Turn the ignition switch ON (II).
2. Clear the DTC with the HDS.
3. Start the engine. Hold the engine speed at 3,000 rpm without load (in Park or neutral) until the radiator fan comes on, then let it idle.
4. Monitor the OBD STATUS for DTC P1172 in the DTCs MENU with the HDS.

   Does the screen indicate FAILED?

   YES—Go to step 5.

   NO—If the screen indicates PASSED, intermittent failure, system is OK at this time. Check for poor connections or loose terminals at the A/F sensor (Sensor 1) and the ECM/PCM. If the screen indicates EXECUTING, keep driving until a result comes on. If the screen indicates OUT OF CONDITION, go to step 3 and recheck.
5. Turn the ignition switch OFF.
6. Replace the A/F sensor (Sensor 1) (see page 11-222).
7. Turn the ignition switch ON (II).
8. Reset the ECM/PCM with the HDS.
9. Do the ECM/PCM idle learn procedure (see page 11-316).
10. Start the engine. Hold the engine speed at 3,000 rpm without load (in Park or neutral) until the radiator fan comes on, then let it idle.
11. Check for Temporary DTCs or DTCs with the HDS.

    Are any Temporary DTCs or DTCs indicated?

    YES—If DTC P1172 is indicated, check for poor connections or loose terminals at the A/F sensor (Sensor 1) and the ECM/PCM, then go to step 1. If any other Temporary DTCs or DTCs are indicated, go to the indicated DTC's troubleshooting.

    NO—Go to step 12.
12. Monitor the OBD STATUS for DTC P1172 in the DTCs MENU with the HDS.

    Does the screen indicate PASSED?

    YES—Troubleshooting is complete. ■

    NO—If the screen indicates FAILED, check for poor connections or loose terminals at the A/F sensor (Sensor 1) and the ECM/PCM, then go to step 1. If the screen indicates EXECUTING, keep driving until a result comes on. If the screen indicates OUT OF CONDITION, go to step 10 and recheck.

BACK

Protected by AR

DTC P1297: ELD Circuit Low Voltage

1. Turn the ignition switch ON (II).
2. Check the ELD in the DATA LIST with the HDS.

   Is 72 A or more indicated?

   YES—Go to step 3.

   NO—Intermittent failure, system is OK at this time. Check for poor connections or loose terminals at the ELD and the ECM/PCM. ■
3. Turn the ignition switch OFF.
4. Disconnect the ELD 3P connector.
5. Turn the ignition switch ON (II).
6. Check the ELD in the DATA LIST with the HDS.

   Is 72 A or more indicated?

   YES—Go to step 7.

   NO—Go to step 11.
7. Turn the ignition switch OFF.
8. Jump the SCS line with the HDS.
9. Disconnect ECM/PCM connector E (31P).
10. Check for continuity between ECM/PCM connector terminal E15 and body ground.

ECM/PCM CONNECTOR E (31P)

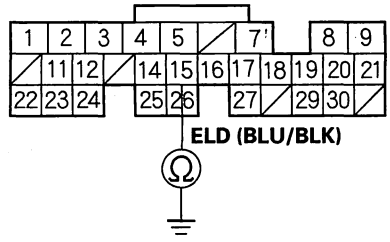

Wire side of female terminals

Is there continuity?

YES—Repair short in the wire between the ECM/PCM (E15) and the ELD, then go to step 13.

NO—Go to step 20.

11. Turn the ignition switch OFF.
12. Replace the under-hood fuse/relay box (see page 22-75).
13. Reconnect all connectors.
14. Turn the ignition switch ON (II).
15. Reset the ECM/PCM with the HDS.
16. Do the ECM/PCM idle learn procedure (see page 11-316).
17. Start the engine.
18. Turn on the headlights.
19. Check for Temporary DTCs or DTCs with the HDS.

    Are any Temporary DTCs or DTCs indicated?

    YES—If DTC P1297 is indicated, check for poor connections or loose terminals at the ELD and the ECM/PCM, then go to step 1. If any other Temporary DTCs or DTCs are indicated, go to the indicated DTC's troubleshooting.

    NO—Troubleshooting is complete. ■

(cont'd)

Protected by AR

DTC Troubleshooting (cont'd)

20. Update the ECM/PCM if it does not have the latest software, or substitute a known-good ECM/PCM (see page 11-6).

21. Start the engine.

22. Turn on the headlights.

23. Check for Temporary DTCs or DTCs with the HDS.

    Are any Temporary DTCs or DTCs indicated?

    YES—If DTC P1297 is indicated, check for poor connections or loose terminals at the ELD and the ECM/PCM, then go to step 1. If any other Temporary DTCs or DTCs are indicated, go to the indicated DTC's troubleshooting.

    NO—If the ECM/PCM was updated, troubleshooting is complete. If the ECM/PCM was substituted, replace the original ECM/PCM (see page 11-227). ■

BACK

Protected by AR

DTC P1298: ELD Circuit High Voltage

1. Start the engine, and let it idle.
2. Check the ELD in the DATA LIST with the HDS.

   Is 0.2 A or less indicated?

   YES—Go to step 3.

   NO—Intermittent failure, system is OK at this time. Check for poor connections or loose terminals at the ELD and the ECM/PCM. ■
3. Turn the ignition switch OFF.
4. Disconnect the ELD 3P connector.
5. Turn the ignition switch ON (II).
6. Measure voltage between ELD 3P connector terminal No. 1 and body ground.

ELD 3P CONNECTOR

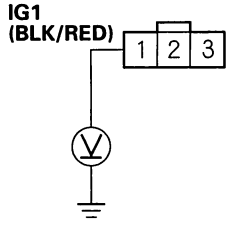

Wire side of female terminals

Is there battery voltage?

YES—Go to step 7.

NO—Repair open in the wire between the No. 18 ACG (15 A) fuse and the ELD, then go to step 14.

7. Turn the ignition switch OFF.
8. Connect ELD 3P connector terminal No. 3 to body ground with a jumper wire.

ELD 3P CONNECTOR

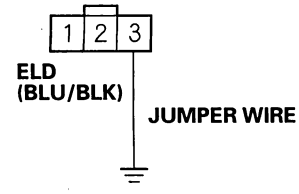

Wire side of female terminals

9. Jump the SCS line with the HDS.
10. Disconnect ECM/PCM connector E (31P).
11. Check for continuity between ECM/PCM connector terminal E15 and body ground.

ECM/PCM CONNECTOR E (31P)

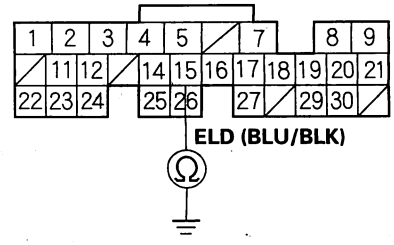

Wire side of female terminals

Is there continuity?

YES—Go to step 12.

NO—Repair open in the wire between the ECM/PCM (E15) and the ELD, then go to step 14.

(cont'd)

Protected by AR

DTC Troubleshooting (cont'd)

12. Check for continuity between ELD 3P connector terminal No. 2 and body ground.

ELD 3P CONNECTOR

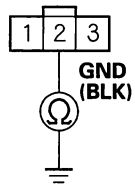

Wire side of female terminals

Is there continuity?

YES—Go to step 13.

NO—Repair open in the wire between the ELD and G302, then go to step 14.

13. Replace the under-hood fuse/relay box (see page 22-75).

14. Reconnect all connectors.

15. Turn the ignition switch ON (II).

16. Reset the ECM/PCM with the HDS.

17. Do the ECM/PCM idle learn procedure (see page 11-316).

18. Check for Temporary DTCs or DTCs with the HDS.

Are any Temporary DTCs or DTCs indicated?

YES—Go to step 19.

NO—Troubleshooting is complete.■

19. Update the ECM/PCM if it does not have the latest software, or substitute a known-good ECM/PCM (see page 11-6).

20. Check for Temporary DTCs or DTCs with the HDS.

Are any Temporary DTCs or DTCs indicated?

YES—If DTC P1298 is indicated, check for poor connections or loose terminals at the ELD and the ECM/PCM, then go to step 1. If any other Temporary DTCs or DTCs are indicated, go to the indicated DTC's troubleshooting.

NO—If the ECM/PCM was updated, troubleshooting is complete. If the ECM/PCM was substituted, replace the original ECM/PCM (see page 11-227).■

BACK

Protected by AR

DTC P1549: Charging System High Voltage (2005-2006 models)

NOTE: If a high voltage battery (24 V, etc.) is connected to the vehicle, this DTC can be stored.

1. Turn the ignition switch ON (II).
2. Clear the DTC with the HDS.
3. Start the engine.
4. Check under these conditions:
   - A/C off
   - Headlights off
   - Rear window defogger off
5. Hold the engine speed at 2,000 rpm (in Park or neutral) for 1 minute.
6. Check for Temporary DTCs or DTCs with the HDS.

   Is DTC P1549 indicated?

   YES—Replace the alternator (see page 4-40), then go to step 7.

   NO—Intermittent failure, system is OK at this time. Check for poor connections or loose terminals at the alternator and the under-hood fuse/relay box. ■
7. Turn the ignition switch ON (II).
8. Reset the ECM/PCM with the HDS.
9. Do the ECM/PCM idle learn procedure (see page 11-316).
10. Start the engine.
11. Check under these conditions:
    - A/C off
    - Headlights off
    - Rear window defogger off
12. Hold the engine speed at 2,000 rpm (in Park or neutral) for 1 minute.
13. Check for Temporary DTCs or DTCs with the HDS.

    Are any Temporary DTCs or DTCs indicated?

    YES— If DTC P1549 is indicated, check for poor connections or loose terminals at the alternator and the under-hood fuse/relay box, then go to step 1. If any other Temporary DTCs or DTCs are indicated, go to the indicated DTC's troubleshooting.

    NO—Troubleshooting is complete. ■

Protected by AR

DTC Troubleshooting (cont'd)

DTC P16BB: Alternator B Terminal Circuit Low Voltage
(2005-2006 models)

1. Turn the ignition switch ON (II).
2. Clear the DTC with HDS.
3. Start the engine.
4. Check under these conditions:
   - A/C on
   - Temperature control at maximum cool
   - Blower fan at maximum speed
   - Rear window defogger on
   - Headlights on high beam
5. Hold the engine speed at 2,000 rpm (in Park or neutral) for 1 minute.
6. Check for Temporary DTCs or DTCs with the HDS.

   Is DTC P16BB indicated?

   YES—Go to step 7.

   NO—Intermittent failure, system is OK at this time. Check for poor connections or loose terminals at the alternator and the under-hood fuse/relay box, and check the battery performance (see page 22-78).■
7. Check for poor connections or loose terminals at the alternator and the under-hood fuse/relay box (+B line).

   Are the connections and terminals OK?

   YES—Go to step 8.

   NO—Repair the connectors or terminals, then go to step 9.
8. Check for an open in the wire between the alternator and under fuse/relay box at the starter subharness.

   Is the harness OK?

   YES—Replace the alternator (see page 4-40), then go to step 9.

   NO—Repair open in the wire between the alternator and the under-hood fuse/relay box, then go to step 9.
9. Turn the ignition switch ON (II).
10. Reset the ECM/PCM with the HDS.
11. Do the ECM/PCM idle learn procedure (see page 11-316).
12. Start the engine.
13. Check under these conditions:
    - A/C on
    - Temperature control at maximum cool
    - Blower fan at maximum speed
    - Rear window defogger on
    - Headlights on high beam
14. Hold the engine speed at 2,000 rpm (in Park or neutral) for 1 minute.
15. Check for Temporary DTCs or DTCs with the HDS.

    Are any Temporary DTCs or DTCs indicated?

    YES—If DTC P16BB is indicated, check for poor connections or loose terminals at the alternator and the under-hood fuse/relay box, then go to step 1. If any other Temporary DTCs or DTCs are indicated, go to the indicated DTC's troubleshooting.

    NO—Troubleshooting is complete.■

BACK

Protected by AR

DTC P16BC: Alternator FR Terminal Circuit/ IGP Circuit Low Voltage (2005-2006 models)

1. Check for poor connections at the alternator 4P connector.

   Are the connectors OK?

   YES—Go to step 2.

   NO—Reconnect the connector, then go to step 18.

2. Turn the ignition switch ON (II).
3. Clear the DTC with the HDS.
4. Start the engine.
5. Check under these conditions:
   - A/C on
   - Temperature control at maximum cool
   - Blower fan at maximum speed
   - Rear window defogger on
   - Headlights on high beam
6. Hold the engine speed at 2,000 rpm (in Park or neutral) for 1 minute.
7. Check for Temporary DTCs or DTCs with the HDS.

   Is DTC P16BC indicated?

   YES—Go to step 8.

   NO—Intermittent failure, system is OK at this time. Check for poor connections or loose terminals at the alternator. ■

8. Turn the ignition switch OFF.
9. Disconnect the alternator 4P connector.
10. Turn the ignition switch ON (II).
11. Measure voltage between alternator 4P connector terminal No. 1 and body ground.

ALTERNATOR 4P CONNECTOR

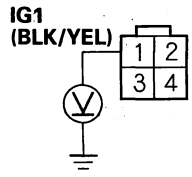

Wire side of female terminals

Is there battery voltage?

YES—Go to step 12.

NO—Repair open in the wire between the alternator (IG1 line) and the No. 18 ACG (15 A) fuse in under-dash fuse/relay box, then go to step 18.

12. Measure voltage between alternator 4P connector terminal No. 4 and body ground.

ALTERNATOR 4P CONNECTOR

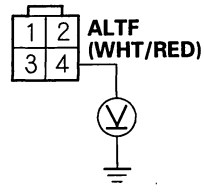

Wire side of female terminals

Is there about 5 V?

YES—Replace the alternator (see page 4-40), then go to step 18.

NO—Go to step 13.

(cont'd)

Protected by AR

DTC Troubleshooting (cont'd)

13. Turn the ignition switch OFF.
14. Jump the SCS line with the HDS.
15. Disconnect ECM/PCM connector B (24P).
16. Connect alternator 4P connector terminal No. 4 to body ground with a jumper wire.

ALTERNATOR 4P CONNECTOR

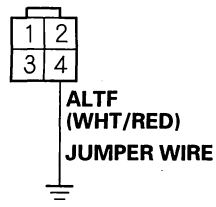

Wire side of female terminals

17. Check for coutinuity between ECM/PCM connector terminal B13 and body ground.

ECM/PCM CONNECTOR B (24P)

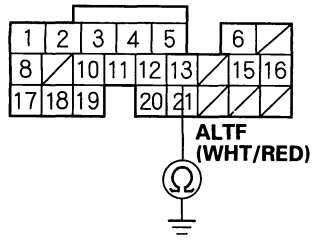

Wire side of female terminals

Is there continuity?

YES—Go to step 26.

NO—Repair open in the wire between the ECM/PCM (B13) and the alternator, then go to step 18.

18. Reconnect all connectors.
19. Turn the ignition switch ON (II).
20. Reset the ECM/PCM with the HDS.
21. Do the ECM/PCM idle learn procedure (see page 11-316).
22. Start the engine.
23. Check under these conditions:
    - A/C on
    - Temperature control at maximum cool
    - Blower fan at maximum speed
    - Rear window defogger on
    - Headlights on high beam
24. Hold the engine speed at 2,000 rpm (in Park or neutral) for 1 minute.
25. Check for Temporary DTCs or DTCs with the HDS.

    Are any Temporary DTCs or DTCs indicated?

    YES—If DTC P16BC is indicated, check for poor connections or loose terminals at the alternator and the ECM/PCM, then go to step 1. If any other Temporary DTCs or DTCs are indicated, go to the indicated DTC's troubleshooting.

    NO—Troubleshooting is complete.■

BACK

Protected by AR

26. Update the ECM/PCM if it does not have the latest software, or substitute a known-good ECM/PCM (see page 11-6).

27. Start the engine.

28. Check under these conditions:

    - A/C on
    - Temperature control at maximum cool
    - Blower fan at maximum speed
    - Rear window defogger on
    - Headlights on high beam

29. Hold the engine speed at 2,000 rpm (in Park or neutral) for 1 minute.

30. Check for Temporary DTCs or DTCs with the HDS.

    Are any Temporary DTCs or DTCs indicated?

    YES—If DTC P16BC is indicated, check for poor connections or loose terminals at the alternator and the ECM/PCM, then go to step 1. If any other Temporary DTCs or DTCs are indicated, go to the indicated DTC's troubleshooting.

    NO—If the ECM/PCM was updated, troubleshooting is complete. If the ECM/PCM was substituted, replace the original ECM/PCM (see page 11-227). ■

Protected by AR

DTC Troubleshooting (cont'd)

DTC P2183: ECT Sensor 2 Range/ Performance Problem (2005-2006 models)

NOTE: If DTC P0111 is stored at the same time as DTC P2183, troubleshoot DTC P0111 first, then recheck for DTC P2183.

1. Check for poor connections or loose terminals at ECT sensor 1 and ECT sensor 2.

   Are the connections and terminals OK?

   YES—Go to step 2.

   NO—Repair the connectors or terminals, then go to step 27.

2. Turn the ignition switch ON (II).
3. Check for Temporary DTCs or DTCs with the HDS.

   Are DTC P1116 and P2183 indicated at the same time?

   YES—Go to step 15.

   NO—Go to step 4.

4. Start the engine, and let it idle 10 minutes.
5. Check ECT SENSOR 2 in the DATA LIST with the HDS.

   Is about 131 °F (55 °C) or less, or 1.50 V or more indicated?

   YES—Replace ECT sensor 2 (see page 11-228), then go to step 27.

   NO—Go to step 6.

6. Turn the ignition switch OFF.
7. Drain the coolant (see page 10-6).
8. Remove ECT sensor 2 (see page 11-228).
9. Allow ECT sensor 2 to cool to 77 °F (25 °C).
10. Note the ambient temperature.
11. Connect ECT sensor 2 to the 2P connector, but do not install it on the engine.
12. Turn the ignition switch ON (II).
13. Note the value of ECT SENSOR 2 quickly in the DATA LIST with the HDS.
14. Compare the value of ECT SENSOR 2 and the ambient temperature.

    Does ECT SENSOR 2 differ 5.4 °F (3 °C) or more?

    YES—Replace ECT sensor 2 (see page 11-228), then go to step 27.

    NO—Intermittent failure, system is OK at this time. Check for poor connections or loose terminals at ECT sensor 1, ECT sensor 2, and the ECM/PCM. ■

15. Start the engine, and let it idle 10 minutes.
16. Check ECT SENSOR 1 in the DATA LIST with the HDS.

    Is about 118 °F (48 °C) or less, or 1.75 V or more indicated?

    YES—Replace ECT sensor 1 (see page 11-223), then go to step 27.

    NO—Go to step 17.

17. Let the engine idle 10 minutes.
18. Check ECT SENSOR 2 in the DATA LIST with the HDS.

    Is about 131 °F (55 °C) or less, or 1.50 V or more indicated?

    YES—Replace ECT sensor 2 (see page 11-228), then go to step 27.

    NO—Go to step 19.

BACK

Protected by AR

19. Turn the ignition switch OFF.
20. Drain the coolant (see page 10-6).
21. Remove ECT sensor 1 (see page 11-223) and ECT sensor 2 (see page 11-228).
22. Allow the sensors to cool to 77 °F (25 °C).
23. Note the ambient temperature.
24. Connect ECT sensor 1 to 2P connector, and ECT sensor 2 to the 2P connector, but do not install them into the engine.
25. Note the value of ECT SENSOR 1 and ECT SENSOR 2 quickly in the DATA LIST with the HDS.
26. Compare the value of ECT SENSOR 1 and the ambient temperature, and the value of ECT SENSOR 2 and the ambient temperature individually.

    Does one of the sensors differ more than 5.4 °F (3 °C) from the ambient temperature?

    YES—Replace the sensor that differed more than 5.4 °F (3 °C) from the ambient temperature, then go to step 27.

    NO—Intermittent failure, system is OK at this time. Check for poor connections or loose terminals at ECT sensor 1, ECT sensor 2, and the ECM/PCM. ■

27. Turn the ignition switch ON (II).
28. Reset the ECM/PCM with the HDS.
29. Do the ECM/PCM idle learn procedure (see page 11-316).
30. Check for Temporary DTCs or DTCs with the HDS.

    Are any Temporary DTCs or DTCs indicated?

    YES—If DTC P2183 is indicated, check for poor connections or loose terminals at ECT sensor 1, ECT sensor 2, and the ECM/PCM, then go to step 1. If any other Temporary DTCs or DTCs are indicated, go to the indicated DTC's troubleshooting.

    NO—Troubleshooting is complete. ■

Protected by AR

DTC Troubleshooting (cont'd)

DTC P2184: ECT Sensor 2 Circuit Low Voltage (2005-2006 models)

1. Turn the ignition switch ON (II).
2. Check ECT SENSOR 2 in the DATA LIST with the HDS.

   Is about 356 °F (180 °C) or more, or 0.08 V or less indicated?

   YES—Go to step 3.

   NO—Intermittent failure, system is OK at this time. Check for poor connections or loose terminals at ECT sensor 2 and the ECM/PCM. ■
3. Turn the ignition switch OFF.
4. Disconnect ECT sensor 2 2P connector.
5. Turn the ignition switch ON (II).
6. Check ECT SENSOR 2 in the DATA LIST with the HDS.

   Is about 356 °F (180 °C) or more, or 0.08 V or less indicated?

   YES—Go to step 7.

   NO—Go to step 11.
7. Turn the ignition switch OFF.
8. Jump the SCS line with the HDS.
9. Disconnect ECM/PCM connector E (31P).
10. Check for continuity between ECT sensor 2 2P connector terminal No. 1 and body ground.

ECT SENSOR 2 2P CONNECTOR

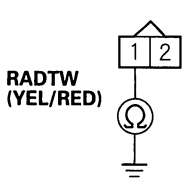

Wire side of female terminals

Is there continuity?

YES—Repair short in the wire between ECT sensor 2 and the ECM/PCM (E1), then go to step 13.

NO—Go to step 18.

11. Turn the ignition switch OFF.
12. Replace ECT sensor 2 (see page 11-228).
13. Reconnect all connectors.
14. Turn the ignition switch ON (II).
15. Reset the ECM/PCM with the HDS.
16. Do the ECM/PCM idle learn procedure (see page 11-316).
17. Check for Temporary DTCs or DTCs with the HDS.

    Are any Temporary DTCs or DTCs indicated?

    YES—If DTC P2184 is indicated, check for poor connections or loose terminals at ECT sensor 2 and the ECM/PCM, then go to step 1. If any other Temporary DTCs or DTCs are indicated, go to the indicated DTC's troubleshooting.

    NO—Troubleshooting is complete. ■
18. Update the ECM/PCM if it does not have the latest software, or substitute a known-good ECM/PCM (see page 11-6).
19. Check for Temporary DTCs or DTCs with the HDS.

    Are any Temporary DTCs or DTCs indicated?

    YES—If DTC P2184 is indicated, check for poor connections or loose terminals at ECT sensor 2 and the ECM/PCM, then go to step 1. If any other Temporary DTCs or DTCs are indicated, go to the indicated DTC's troubleshooting.

    NO—If the ECM/PCM was updated, troubleshooting is complete. If the ECM/PCM was substituted, replace the original ECM/PCM (see page 11-227). ■

BACK

Protected by AR

DTC P2185: ECT Sensor 2 Circuit High Voltage (2005-2006 models)

1. Turn the ignition switch ON (II).
2. Check ECT SENSOR 2 in the DATA LIST with the HDS.

   Is about −40 °F (−40 °C) or less, or 4.90 V or more indicated?

   YES—Go to step 3.

   NO—Intermittent failure, system is OK at this time. Check for poor connections or loose terminals at ECT sensor 2 and the ECM/PCM. ■
3. Turn the ignition switch OFF.
4. Disconnect ECT sensor 2 2P connector.
5. Connect ECT sensor 2 2P connector terminals No. 1 and No. 2 with a jumper wire.

ECT SENSOR 2 2P CONNECTOR

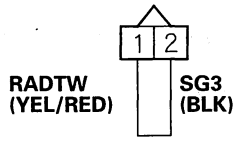

Wire side of female terminals

6. Turn the ignition switch ON (II).
7. Check ECT SENSOR 2 in the DATA LIST with the HDS.

   Is about −40 °F (−40 °C) or less, or 4.90 V or more indicated?

   YES—Go to step 8.

   NO—Go to step 18.
8. Turn the ignition switch OFF.
9. Remove the jumper wire from ECT sensor 2 2P connector.
10. Turn the ignition switch ON (II).
11. Measure voltage between ECT sensor 2 2P connector terminal No. 1 and body ground.

ECT SENSOR 2 2P CONNECTOR

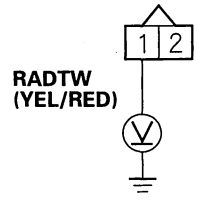

Wire side of female terminals

Is there about 5 V?

YES—Go to step 12.

NO—Go to step 17.

12. Turn the ignition switch OFF.
13. Jump the SCS line with the HDS.
14. Disconnect ECM/PCM connector E (31P).
15. Connect ECT sensor 2 2P connector terminal No. 2 to body ground with a jumper wire.

ECT SENSOR 2 2P CONNECTOR

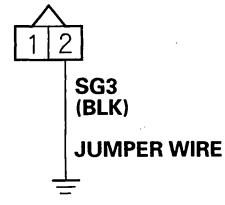

Wire side of female terminals

(cont'd)

Protected by AR

DTC Troubleshooting (cont'd)

16. Check for continuity between ECM/PCM connector terminal E4 and body ground.

ECM/PCM CONNECTOR E (31P)

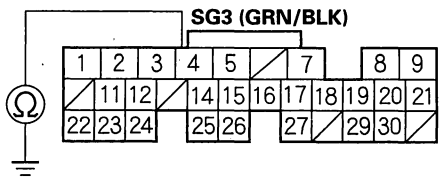

Wire side of female terminals

Is there continuity?

YES—Go to step 25.

NO—Repair open in the wire between the ECM/PCM (E4) and ECT sensor 2, then go to step 20.

17. Measure voltage between ECM/PCM connector terminal E1 and body ground.

ECM/PCM CONNECTOR E (31P)

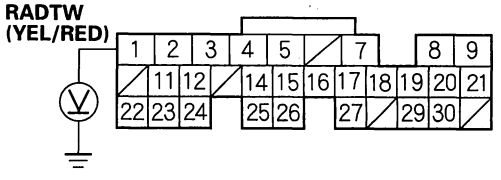

Wire side of female terminals

Is there about 5 V?

YES—Repair open in the wire between the ECM/PCM (E1) and ECT sensor 2, then go to step 20.

NO—Go to step 25.

18. Turn the ignition switch OFF.

19. Replace ECT sensor 2 (see page 11-228).

20. Reconnect all connectors.

21. Turn the ignition switch ON (II).

22. Reset the ECM/PCM with the HDS.

23. Do the ECM/PCM idle learn procedure (see page 11-316).

24. Check for Temporary DTCs or DTCs with the HDS.

Are any Temporary DTCs or DTCs indicated?

YES—If DTC P2185 is indicated, check for poor connections or loose terminals at ECT sensor 2 and the ECM/PCM, then go to step 1. If any other Temporary DTCs or DTCs are indicated, go to the indicated DTC's troubleshooting.

NO—Troubleshooting is complete.■

25. Update the ECM/PCM if it does not have the latest software, or substitute a known-good ECM/PCM (see page 11-6).

26. Check for Temporary DTCs or DTCs with the HDS.

Are any Temporary DTCs or DTCs indicated?

YES—If DTC P2185 is indicated, check for poor connections or loose terminals at ECT sensor 2 and the ECM/PCM, then go to step 1. If any other Temporary DTCs or DTCs are indicated, go to the indicated DTC's troubleshooting.

NO—If the ECM/PCM was updated, troubleshooting is complete. If the ECM/PCM was substituted, replace the original ECM/PCM (see page 11-227).■

BACK

Protected by AR

DTC P2195: A/F Sensor (Sensor 1) Signal Stuck Lean

NOTE:
- If the vehicle was out of fuel and the engine stalled before this DTC was stored, refuel and clear the DTC with the HDS.
- If DTC P2101, P2108, P2118, P2135, P2138, P2176, U0107 or a combination of P2122 and P2127, P2122 and P2138, or P2127 and P2138 is stored at the same time, troubleshoot them first, then recheck for DTC P2195 (2006 model).

1. Inspect the condition of the A/F sensor (Sensor 1).

   Is it loose in the exhaust pipe?

   YES—Go to step 6.

   NO—Go to step 2.

2. Turn the ignition switch ON (II).
3. Clear the DTC with the DTC.
4. Start the engine. Hold the engine speed at 3,000 rpm without load (in Park or neutral) until the radiator fan comes on, then let it idle.
5. Check for Temporary DTCs or DTCs with the HDS.

   Are any Temporary DTCs or DTCs indicated?

   YES—If DTC P2195 is indicated, check for poor connections or loose terminals at the A/F sensor (Sensor 1) and the ECM/PCM, then go to step 1. If any other Temporary DTCs or DTCs are indicated, go to the indicated DTC's troubleshooting.

   NO—Intermittent failure, system is OK at this time. Check for poor connections or loose terminals at the A/F sensor (Sensor 1) and the ECM/PCM. ■
6. Turn the ignition switch OFF.
7. Reinstall the A/F sensor (Sensor 1) (see page 11-222).
8. Turn the ignition switch ON (II).
9. Reset the ECM/PCM with the HDS.
10. Do the ECM/PCM idle learn procedure (see page 11-316).
11. Check for Temporary DTCs or DTCs with the HDS.

    Are any Temporary DTCs or DTCs indicated?

    YES—If DTC P2195 is indicated, check for poor connections or loose terminals at the A/F sensor (Sensor 1) and the ECM/PCM, then go to step 6. If any other Temporary DTCs or DTCs are indicated, go to the indicated DTC's troubleshooting.

    NO—Go to step 12.
12. Monitor the OBD STATUS for DTC P2195 in the DTCs MENU with the HDS.

    Does the screen indicate PASSED?

    YES—Troubleshooting is complete. ■

    NO—If the screen indicates FAILED, check for poor connections or loose terminals at the A/F sensor (Sensor 1) and the ECM/PCM, then go to step 6. If the screen indicates NOT COMPLETED, go to step 5 and recheck.

Protected by AR

DTC Troubleshooting (cont'd)

DTC P2227: BARO Sensor Range/ Performance Problem

NOTE: If DTC P0107, P0108, P1128, and/or P1129 are stored at the same time as DTC P2227, troubleshoot those DTCs first, then recheck for DTC P2227.

1. Turn the ignition switch ON (II), and wait 2 seconds.
2. Check the BARO SENSOR in the DATA LIST with the HDS.

   Is about 101 kPa (29.9 in.Hg, 760 mmHg), or about 2.9 V at sea level indicated?

   YES—Go to step 3.

   NO—Go to step 7.
3. Clear the DTC with the HDS.
4. Start the engine. Hold the engine speed at 3,000 rpm without load (in Park or neutral) until the radiator fan comes on, then let it idle.
5. Test-drive under these conditions, then connect the HDS:

   - Engine coolant temperature above 158 °F (70 °C)
   - A/T in D position (M/T in 4th gear)
   - Throttle position between 12 degrees and 20 degrees for 2 seconds
6. Monitor the OBD STATUS for DTC P2227 in the DTCs MENU with the HDS.

   Does the screen indicate FAILED?

   YES—Go to step 7.

   NO—If the screen indicates PASSED, intermittent failure, system is OK at this time. If the screen indicates NOT COMPLETED, go to step 4 and recheck.
7. Update the ECM/PCM if it does not have the latest software, or substitute a known-good ECM/PCM (see page 11-6).
8. Check for Temporary DTCs or DTCs with the HDS.

   Are any Temporary DTCs or DTCs indicated?

   YES—If DTC P2227 is indicated, check for poor connections or loose terminals at the ECM/PCM, then go to step 1. If any other Temporary DTCs or DTCs are indicated, go to the indicated DTC's troubleshooting.

   NO—If the ECM/PCM was updated, troubleshooting is complete. If the ECM/PCM was substituted, replace the original ECM/PCM (see page 11-227). ■

BACK

Protected by AR

DTC P2228: BARO Sensor Circuit Low Voltage

1. Turn the ignition switch ON (II).
2. Check the BARO SENSOR in the DATA LIST with the HDS.

   Is about 53 kPa (15.6 in.Hg, 397 mmHg), or 1.58 V or less indicated?

   YES—Go to step 3.

   NO—Intermittent failure, system is OK at this time. ■
3. Update the ECM/PCM if it does not have the latest software, or substitute a known-good ECM/PCM (see page 11-6).
4. Check for Temporary DTCs or DTCs with the HDS.

   Are any Temporary DTCs or DTCs indicated?

   YES—If DTC P2228 is indicated, check for poor connections or loose terminals at the ECM/PCM, then go to step 1. If any other Temporary DTCs or DTCs are indicated, go to the indicated DTC's troubleshooting.

   NO—If the ECM/PCM was updated, troubleshooting is complete. If the ECM/PCM was substituted, replace the original ECM/PCM (see page 11-227). ■

DTC P2229: BARO Sensor Circuit High Voltage

1. Turn the ignition switch ON (II).
2. Check the BARO SENSOR in the DATA LIST with the HDS.

   Is about 160 kPa (47.2 in.Hg, 1,200 mmHg), or 4.5 V or higher indicated?

   YES—Go to step 3.

   NO—Intermittent failure, system is OK at this time. ■
3. Update the ECM/PCM if it does not have the latest software, or substitute a known-good ECM/PCM (see page 11-6).
4. Check for Temporary DTCs or DTCs with the HDS.

   Are any Temporary DTCs or DTCs indicated?

   YES—If DTC P2229 is indicated, check for poor connections or loose terminals at the ECM/PCM, then go to step 1. If any other Temporary DTCs or DTCs are indicated, go to the indicated DTC's troubleshooting.

   NO—If the ECM/PCM was updated, troubleshooting is complete. If the ECM/PCM was substituted, replace the original ECM/PCM (see page 11-227). ■

Protected by AR

DTC Troubleshooting (cont'd)

DTC P2238: A/F Sensor (Sensor 1) AFS+ Line Low Voltage

1. Turn the ignition switch ON (II).
2. Clear the DTC with the HDS.
3. Check for Temporary DTCs or DTCs with the HDS.

   Is DTC P2238 indicated?

   YES—Go to step 4.

   NO—Intermittent failure, system is OK at this time. Check for poor connections or loose terminals at the A/F sensor (Sensor 1) and the ECM/PCM. ■
4. Turn the ignition switch OFF.
5. Jump the SCS line with the HDS.
6. Disconnect the A/F sensor (Sensor 1) 4P connector.
7. Disconnect ECM/PCM connector A (31P).
8. Check for continuity between ECM/PCM connector terminal A31 and body ground.

ECM/PCM CONNECTOR A (31P)

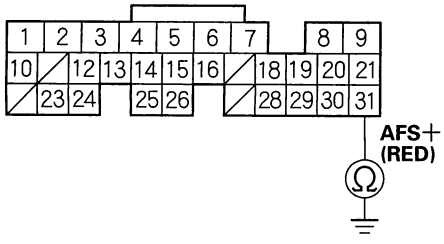

Wire side of female terminals

Is there continuity?

YES—Repair short in the wire between the ECM/PCM (A31) and the A/F sensor (Sensor 1), then go to step 10.

NO—Go to step 9.

9. Replace the A/F sensor (Sensor 1) (see page 11-222).
10. Reconnect all connectors.
11. Turn the ignition switch ON (II).
12. Reset the ECM/PCM with the HDS.
13. Do the ECM/PCM idle learn procedure (see page 11-316).
14. Check for Temporary DTCs or DTCs with the HDS.

    Are any Temporary DTCs or DTCs indicated?

    YES—If DTC P2238 is indicated, check for poor connections or loose terminals at the A/F sensor (Sensor 1) and the ECM/PCM. If the connector and terminal fits are OK, go to step 16. If any other Temporary DTCs or DTCs are indicated, go to the indicated DTC's troubleshooting.

    NO—Go to step 15.
15. Monitor the OBD STATUS for DTC P2238 in the DTCs MENU with the HDS.

    Does the screen indicate PASSED?

    YES—Troubleshooting is complete. ■

    NO—If the screen indicates FAILED, check for poor connections or loose terminals at the A/F sensor (Sensor 1) and the ECM/PCM, then go to step 1. If the screen indicates NOT COMPLETED, go to step 13 and recheck.
16. Update the ECM/PCM if it does not have the latest software, or substitute a known-good ECM/PCM (see page 11-6).
17. Check for Temporary DTCs or DTCs with the HDS.

    Is DTC P2238 indicated?

    YES—Go to step 1 and recheck.

    NO—If the ECM/PCM was updated, troubleshooting is complete. If the ECM/PCM was substituted, replace the original ECM/PCM (see page 11-227). ■

BACK

Protected by AR

DTC P2252: A/F Sensor (Sensor 1) AFS— Line Low Voltage

1. Turn the ignition switch ON (II).
2. Clear the DTC with the HDS.
3. Start the engine.
4. Check for Temporary DTCs or DTCs with the HDS.

   Is DTC P2252 indicated?

   YES—Go to step 5.

   NO—Intermittent failure, system is OK at this time. Check for poor connections or loose terminals at the A/F sensor (Sensor 1) and the ECM/PCM. ■
5. Turn the ignition switch OFF.
6. Jump the SCS line with the HDS.
7. Disconnect the A/F sensor (Sensor 1) 4P connector.
8. Disconnect ECM/PCM connector A (31P).
9. Check for continuity between ECM/PCM connector terminal A28 and body ground.

ECM/PCM CONNECTOR A (31P)

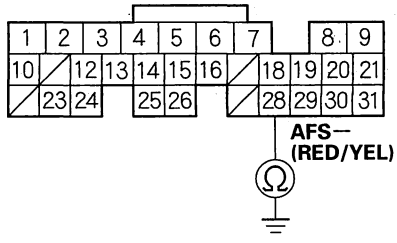

Wire side of female terminals

Is there continuity?

YES—Repair short in the wire between the ECM/PCM (A28) and the A/F sensor (Sensor 1), then go to step 11.

NO—Go to step 10.

10. Replace the A/F sensor (Sensor 1) (see page 11-222).
11. Reconnect all connectors.
12. Turn the ignition switch ON (II).
13. Reset the ECM/PCM with the HDS.
14. Do the ECM/PCM idle learn procedure (see page 11-316).
15. Check for Temporary DTCs or DTCs with the HDS.

    Are any Temporary DTCs or DTCs indicated?

    YES—If DTC P2252 is indicated, check for poor connections or loose terminals at the A/F sensor (Sensor 1) and the ECM/PCM. If the connector and terminal fits are OK, go to step 17. If any other Temporary DTCs or DTCs are indicated, go to the indicated DTC's troubleshooting.

    NO—Go to step 16.
16. Monitor the OBD STATUS for DTC P2252 in the DTCs MENU with the HDS.

    Does the screen indicate PASSED?

    YES—Troubleshooting is complete. ■

    NO—If the screen indicates FAILED, check for poor connections or loose terminals at the A/F sensor (Sensor 1) and the ECM/PCM, then go to step 1. If the screen indicates NOT COMPLETED, go to step 14 and recheck.
17. Update the ECM/PCM if it does not have the latest software, or substitute a known-good ECM/PCM (see page 11-6).
18. Check for Temporary DTCs or DTCs with the HDS.

    Is DTC P2252 indicated?

    YES—Go to step 1 and recheck.

    NO—If the ECM/PCM was updated, troubleshooting is complete. If the ECM/PCM was substituted, replace the original ECM/PCM (see page 11-227). ■

Protected by AR

DTC Troubleshooting (cont'd)

DTC P2270: Secondary HO2S (Sensor 2) Circuit Signal Stuck Lean (2005-2006 models)

DTC P2271: Secondary HO2S (Sensor 2) Circuit Signal Stuck Rich (2005-2006 models)

1. Turn the ignition switch ON (II).
2. Clear the DTC with the HDS.
3. Start the engine. Hold the engine speed at 3,000 rpm without load (in Park or neutral) until the radiator fan comes on, then let it idle.
4. Test-drive under these conditions:
   - Engine coolant temperature above 176 °F (80 °C)
   - Vehicle speed between 35—55 mph (56—88 km/h)
   - Drive 1 minute or more
5. Monitor the OBD STATUS for DTC P2270 or P2271 in the DTCs MENU with the HDS.

   Does the screen indicate FAILED?

   YES—Go to step 6.

   NO—If the screen indicates PASSED, intermittent failure, system is OK at this time. Check for poor connections or loose terminals at the secondary HO2S (Sensor 2) and the ECM/PCM. If the screen indicates EXECUTING, keep driving until a result comes on. If the screen indicates OUT OF CONDITION, go to step 3 and recheck.
6. Turn the ignition switch OFF.
7. Replace the secondary HO2S (Sensor 2) (see page 11-222).
8. Turn the ignition switch ON (II).
9. Reset the ECM/PCM with the HDS.
10. Do the ECM/PCM idle learn procedure (see page 11-316).
11. Start the engine. Hold the engine speed at 3,000 rpm without load (in Park or neutral) until the radiator fan comes on, then let it idle.
12. Test-drive under these conditions:
    - Engine coolant temperature above 176 °F (80 °C)
    - Vehicle speed between 35—55 mph (56—88 km/h)
    - Drive 1 minute or more
13. Check for Temporary DTCs or DTCs with the HDS.

    Are any Temporary DTCs or DTCs indicated?

    YES—If DTC P2270 or P2271 is indicated, check for poor connections or loose terminals at the secondary HO2S (Sensor 2) and the ECM/PCM, then go to step 1. If any other Temporary DTCs or DTCs are indicated, go to the indicated DTC's troubleshooting.

    NO—Go to step 14.
14. Monitor the OBD STATUS for DTC P2270 or P2271 in the DTCs MENU with the HDS.

    Does the screen indicate PASSED?

    YES—Troubleshooting is complete.■

    NO—If the screen indicates FAILED, check for poor connections or loose terminals at the secondary HO2S (Sensor 2) and the ECM/PCM, then go to step 1. If the screen indicates EXECUTING, keep driving until a result comes on. If the screen indicates OUT OF CONDITION, go to step 11 and recheck.

BACK

Protected by AR



DTC P2610: ECM/PCM Ignition Off Internal Timer Performance Problem (2005-2006 models)

1. Turn the ignition switch ON (II).
2. Clear the DTC with the HDS.
3. Check for Temporary DTCs or DTCs with the HDS.

   Is P2610 indicated?

   YES—Update the ECM/PCM if it does not have the latest software, or substitute a known-good ECM/PCM (see page 11-6), then recheck. If the symptom/indication goes away with a known-good ECM/PCM, replace the original ECM/PCM (see page 11-227).■

   NO—Intermittent failure, system is OK at this time.■

Protected by AR

DTC Troubleshooting (cont'd)

DTC P2A00: A/F Sensor (Sensor 1) Range/ Performance Problem

1. Turn the ignition switch ON (II).
2. Clear the DTC with the HDS.
3. Start the engine. Hold the engine speed at 3,000 rpm without load (in Park or neutral) until the radiator fan comes on, then let it idle.
4. Test-drive under these conditions:
   - Engine coolant temperature above 158 °F (70 °C)
   - A/T in D position (M/T in 3rd gear)
   - Vehicle speed at 26 mph (41 km/h) or more, and engine speed at 3,250 rpm or less
   - Drive with the throttle fully opened for 5 seconds from an engine speed of 1,600 rpm, then slow down with the throttle completely closed.
5. Monitor the OBD STATUS for DTC P2A00 in the DTCs MENU with the HDS.

   Does the screen indicate FAILED?

   YES—Go to step 6.

   NO—If the screen indicates PASSED, intermittent failure, system is OK at this time. Check for poor connections or loose terminals at the A/F sensor (Sensor 1) and the ECM/PCM. If the screen indicates EXECUTING, keep driving until a result comes on. If the screen indicates OUT OF CONDITION, go to step 3 and recheck.
6. Turn the ignition switch OFF.
7. Replace the A/F sensor (Sensor 1) (see page 11-222).
8. Turn the ignition switch ON (II).
9. Reset the ECM/PCM with the HDS.
10. Do the ECM/PCM idle learn procedure (see page 11-316).
11. Test-drive under these conditions:
    - Engine coolant temperature above 158 °F (70 °C)
    - A/T in D position (M/T in 3rd gear)
    - Vehicle speed at 26 mph (41 km/h) or more, and engine speed at 3,250 rpm or less
    - Drive with the throttle fully opened for 5 seconds from an engine speed of 1,600 rpm, then slow down with the throttle completely closed.
12. Check for Temporary DTCs or DTCs with the HDS.

    Are any Temporary DTCs or DTCs indicated?

    YES—If DTC P2A00 is indicated, check for poor connections or loose terminals at the A/F sensor (Sensor 1) and the ECM/PCM, then go to step 1. If any other Temporary DTCs or DTCs are indicated, go to the indicated DTC's troubleshooting.

    NO—Go to step 13.
13. Monitor the OBD STATUS for DTC P2A00 in the DTCs MENU with the HDS.

    Does the screen indicate PASSED?

    YES—Troubleshooting is complete.■

    NO—If the screen indicates FAILED, check for poor connections or loose terminals at the A/F sensor (Sensor 1) and the ECM/PCM, then go to step 1. If the screen indicates EXECUTING, keep driving until a result comes on. If the screen indicates OUT OF CONDITION, go to step 10 and recheck.

BACK

Protected by AR

DTC U0073: F-CAN Malfunction (Bus-Off) (2003-2004 models)

DTC U0155: F-CAN Malfunction (Gauge Control Module-ECM/PCM) (2003-2005 models)

DTC U1102: F-CAN Malfunction (Bus-Off) (2005 model)

NOTE:
- Information marked with an asterisk (*) applies to 2003-2004 models.
- Information marked with double asterisk (**) applies to 2005 model.

With Navigation System

1. Turn the ignition switch ON (II).
2. Clear the DTC with the HDS.
3. Check for Temporary DTCs or DTCs with the HDS.

   Is DTC U0073 (U1102)** and/or U0155 indicated?*

   YES—Go to step 4.

   NO—Intermittent failure, system is OK at this time. Check for poor connections or loose terminals at the gauge control module, the navigation unit, and the ECM/PCM.■
4. Check for Body Electrical DTCs in the DTCs MENU with the HDS.

   Is DTC B1168, B1169, and/or B1178 indicated?

   YES—Go to step 5.

   NO—Do the gauge control module input test (see page 22-259).■
5. Turn the ignition switch OFF.
6. Jump the SCS line with the HDS.
7. Remove the gauge control module (see page 22-276).
8. Disconnect the gauge assembly 30P connector.
9. Disconnect the navigation unit 20P connector.
10. Disconnect ECM/PCM connector E (31P).
11. Check for continuity between gauge assembly 30P connector terminals No. 23, No. 24 and body ground individually.

GAUGE ASSEMBLY 30P CONNECTOR

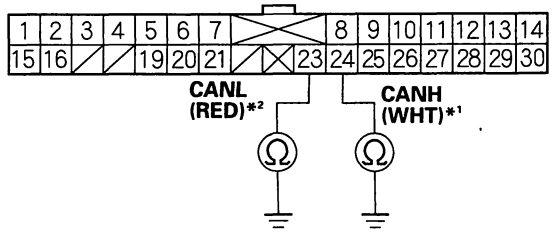

Wire side of female terminals

Is there continuity?

YES—Repair short in the wire between the gauge control module, the navigation unit, and the ECM/PCM (E11*1 (E24)*2), then go to step 18.

NO—Go to step 12.

* 1: CANH line
* 2: CANL line

(cont'd)

Protected by AR

DTC Troubleshooting (cont'd)

12. Check for continuity between gauge assembly 30P connector terminal No. 24 and ECM/PCM connector terminal E11, and between gauge assembly 30P connector terminal No. 23 and ECM/PCM connector terminal E24 individually.

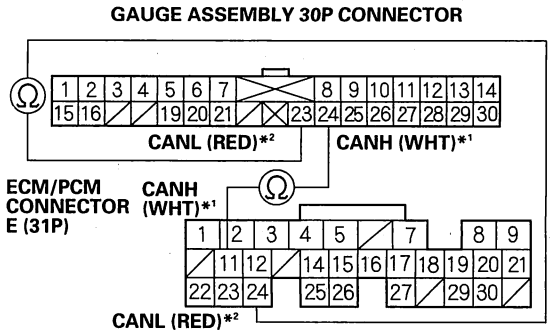

Is there continuity?

YES—Go to step 13.

NO—Repair open in the wire between the gauge control module and the ECM/PCM (E11*1 (E24)*2), then go to step 18.

* 1: CANH line
* 2: CANL line

13. Check for continuity between ECM/PCM connector terminals E11 and E24.

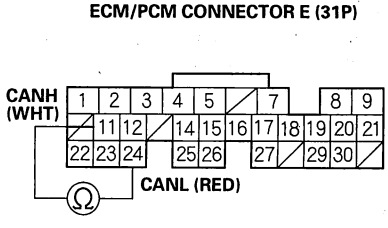

Is there continuity?

YES—Repair short in the wires between ECM/PCM connector terminals E11 and E24, then go to step 18.

NO—Go to step 14.

14. Reconnect ECM/PCM connector E (31P) and the gauge assembly 30P connector.

15. Turn the ignition switch ON (II).

16. Clear the DTC with the HDS.

17. Check for Temporary DTCs or DTCs with the HDS.

Is DTC U0073 (U1102)** and/or U0155 indicated?*

YES—Go to step 23.

NO—Replace the navigation unit (see page 22-481), then go to step 18.

18. Reconnect all connectors.

19. Turn the ignition switch ON (II).

20. Reset the ECM/PCM with the HDS.

21. Do the ECM/PCM idle learn procedure (see page 11-316).

22. Check for Temporary DTCs or DTCs with the HDS.

Are any Temporary DTCs or DTCs indicated?

YES—If DTC U0073* (U1102)** and/or U0155 is indicated, check for poor connections or loose terminals at the gauge assembly, the navigation unit, and the ECM/PCM, then go to step 1. If any other Temporary DTCs or DTCs are indicated, go to the indicated DTC's troubleshooting.

NO—Troubleshooting is complete.■

23. Update the ECM/PCM if it does not have the latest software, or substitute a known-good ECM/PCM (see page 11-6).

24. Check for Temporary DTCs or DTCs with the HDS.

Is DTC U0073 (U1102)** and/or U0155 indicated?*

YES—If DTC U0073* (U1102)** and/or U0155 is indicated, check for poor connections or loose terminals at the gauge assembly, the navigation unit, and the ECM/PCM, then go to step 1. If any other Temporary DTCs or DTCs are indicated, go to the indicated DTC's troubleshooting.

NO—If the ECM/PCM was updated, troubleshooting is complete. If the ECM/PCM was substituted, replace the original ECM/PCM (see page 11-227).■

BACK

Protected by AR

DTC U0073: F-CAN Malfunction (Bus-off) (2003-2004 models)

DTC U0155: F-CAN Malfunction (gauge control module-ECM/PCM) (2003-2005 models)

DTC U1102: F-CAN Malfunction (Bus-Off) (2005 model)

NOTE:
- Information marked with an asterisk (*) applies to 2003-2004 models.
- Information marked with double asterisk (**) applies to 2005 model.

Without Navigation System

1. Turn the ignition switch ON (II).
2. Clear the DTC with the HDS.
3. Check for Temporary DTCs or DTCs with the HDS.

   Is DTC U0073 (U1102)** and/or U0155 indicated?*

   YES—Go to step 4.

   NO—Intermittent failure, system is OK at this time. Check for poor connections or loose terminals at the gauge control module, and the ECM/PCM. ■
4. Check for Body DTCs in the DTCs MENU with the HDS.

   Is DTC B1168, B1169, and/or B1178 indicated?

   YES—Go to step 5.

   NO—Do the gauge control module input test (see page 22-259). ■
5. Turn the ignition switch OFF.
6. Jump the SCS line with the HDS.
7. Remove the gauge control module (see page 22-276).
8. Disconnect the gauge assembly 30P connector.
9. Disconnect ECM/PCM connector E (31P).
10. Check for continuity between gauge assembly 30P connector terminals No. 23, No. 24 and body ground individually.

GAUGE ASSEMBLY 30P CONNECTOR

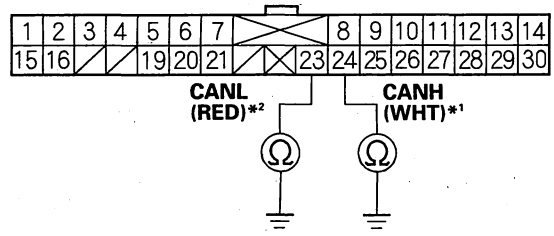

Wire side of female terminals

Is there continuity?

YES—Repair short in the wire between the gauge control module and the ECM/PCM (E11*1 (E24)*2), then go to step 13.

NO—Go to step 11.

* 1: CANH line
* 2: CANL line

(cont'd)

Protected by AR

DTC Troubleshooting (cont'd)

11. Check for continuity between gauge assembly 30P connector terminal No. 24 and ECM/PCM connector terminal E11, and between gauge assembly 30P connector terminal No. 23 and ECM/PCM connector terminal E24 individually.

GAUGE ASSEMBLY 30P CONNECTOR

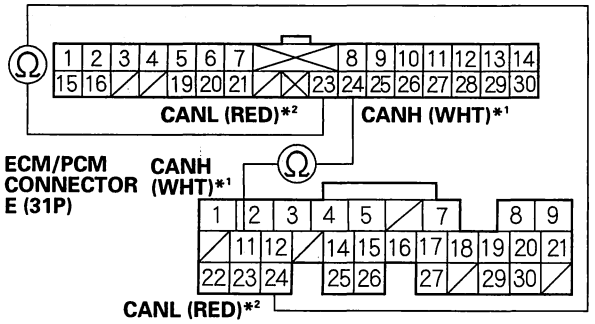

Wire side of female terminals

Is there continuity?

YES—Go to step 12.

NO—Repair open in the wire between the gauge control module and the ECM/PCM (E11*1 (E24)*2), then go to step 13.

* 1: CANH line
* 2: CANL line

12. Check for continuity between ECM/PCM connector terminals E11 and E24.

ECM/PCM CONNECTOR E (31P)

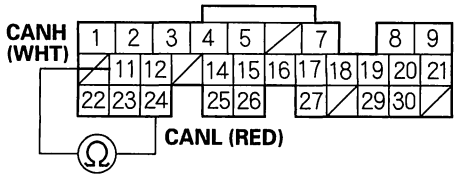

Wire side of female terminals

Is there continuity?

YES—Repair short in the wires between ECM/PCM connector terminals E11 and E24, then go to step 13.

NO—Go to step 18.

13. Reconnect all connectors.

14. Turn the ignition switch ON (II).

15. Reset the ECM/PCM with the HDS.

16. Do the ECM/PCM idle learn procedure (see page 11-316).

17. Check for Temporary DTCs or DTCs with the HDS.

Are any Temporary DTCs or DTCs indicated?

YES—If DTC U0073* (U1102)** and/or U0155 is indicated, check for poor connections or loose terminals at the gauge assembly, and the ECM/PCM, then go to step 1. If any other Temporary DTCs or DTCs are indicated, go to the indicated DTC's troubleshooting.

NO—Troubleshooting is complete.■

18. Update the ECM/PCM if it does not have the latest software, or substitute a known-good ECM/PCM (see page 11-6).

19. Check for Temporary DTCs or DTCs with the HDS.

Are any Temporary DTCs or DTCs indicated?

YES—If DTC U0073* (U1102)** and/or U0155 is indicated, check for poor connections or loose terminals at the gauge assembly, and the ECM/PCM, then go to step 1. If any other Temporary DTCs or DTCs are indicated, go to the indicated DTC's troubleshooting.

NO—If the ECM/PCM was updated, troubleshooting is complete. If the ECM/PCM was substituted, replace the original ECM/PCM (see page 11-227).■

BACK

Protected by AR

DTC U0155: F-CAN Malfunction (Gauge Control Module-ECM/PCM) (2006 model)

DTC U1102: F-CAN Malfunction (Bus-off) (2006 model)

With Navigation System

1. Turn the ignition switch ON (II).
2. Clear the DTC with the HDS.
3. Check for Temporary DTCs or DTCs with the HDS.

   Is DTC U0155 and/or U1102 indicated?

   YES—Go to step 4.

   NO—Intermittent failure, system is OK at this time. Check for poor connections or loose terminals at the gauge control module, the navigation unit, and the ECM/PCM. ■
4. Check for Body Electrical DTCs in the DTCs MENU with the HDS.

   Is DTC B1168, B1169 and/or B1178 indicated?

   YES—Go to step 5.

   NO—Do the gauge control module input test (see page 22-259). ■
5. Turn the ignition switch OFF.
6. Jump the SCS line with the HDS.
7. Remove the gauge control module (see page 22-276).
8. Disconnect the gauge control module 36P connector.
9. Disconnect the navigation unit 20P connector.
10. Disconnect ECM/PCM connector E (31P).
11. Check for continuity between gauge control module 36P connector terminals No. 1, No. 19 and body ground individually.

GAUGE CONTROL MODULE 36P CONNECTOR

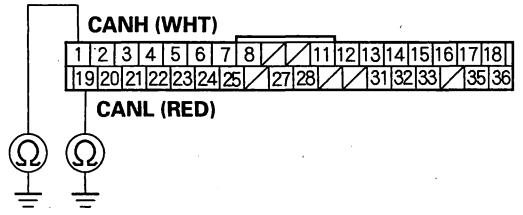

Wire side of female terminals

Is there continuity?

YES—Repair short in the wire between the gauge control module, the navigation unit, and the ECM/PCM (E11 (E24)*), then go to step 18.

NO—Go to step 12.

*: CANL line

(cont'd)

Protected by AR

DTC Troubleshooting (cont'd)

12. Check for continuity between gauge control module 36P connector terminal No. 1 and ECM/PCM connector terminal E11, and between gauge control module 36P connector terminal No. 19 and ECM/PCM connector terminal E24 individually.

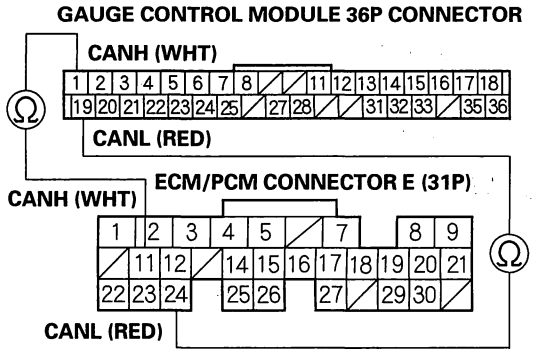

Wire side of female terminals

Is there continuity?

YES—Go to step 13.

NO—Repair open in the wire between the gauge control module and the ECM/PCM (E11 (E24)*), then go to step 18.

*: CANL line

13. Check for continuity between ECM/PCM connector terminals E11 and E24.

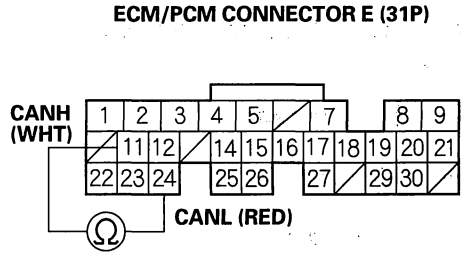

Wire side of female terminals

Is there continuity?

YES—Repair short in the wires between ECM/PCM connector terminals E11 and E24, then go to step 18.

NO—Go to step 14.

14. Reconnect ECM/PCM connector E (31P) and the gauge control module 36P connector.
15. Turn the ignition switch ON (II).
16. Clear the DTC with the HDS.
17. Check for Temporary DTCs or DTCs with the HDS.

Is DTC U0155 and/or U1102 indicated?

YES—Go to step 23.

NO—Replace the navigation unit (see page 22-550), then go to step 18.

BACK

Protected by AR

18. Reconnect all connectors.

19. Turn the ignition switch ON (II).

20. Reset the ECM/PCM with the HDS.

21. Do the ECM/PCM idle learn procedure (see page 11-316).

22. Check for Temporary DTCs or DTCs with the HDS.

    Are any Temporary DTCs or DTCs indicated?

    YES—If DTC U0155 and/or U1102 is indicated, check for poor connections or loose terminals at the gauge control module, the navigation unit, and the ECM/PCM, then go to step 1. If any other Temporary DTCs or DTCs are indicated, go to the indicated DTC's troubleshooting.

    NO—Troubleshooting is complete. ■

23. Update the ECM/PCM if it does not have the latest software, or substitute a known-good ECM/PCM (see page 11-6).

24. Check for Temporary DTCs or DTCs with the HDS.

    Are any Temporary DTCs or DTCs indicated?

    YES—If DTC U0155 and/or U1102 is indicated, check for poor connections or loose terminals at the gauge control module, the navigation unit, and the ECM/PCM, then go to step 1. If any other Temporary DTCs or DTCs are indicated, go to the indicated DTC's troubleshooting.

    NO—If the ECM/PCM was updated, troubleshooting is complete. If the ECM/PCM was substituted, replace the original ECM/PCM (see page 11-227). ■

Protected by AR

DTC Troubleshooting (cont'd)

DTC U0155: F-CAN Malfunction (Gauge Control Module-ECM/PCM) (2006 model)

DTC U1102: F-CAN Malfunction (Bus-off) (2006 model)

Without Navigation System

1. Turn the ignition switch ON (II).
2. Clear the DTC with the HDS.
3. Check for Temporary DTCs or DTCs with the HDS.

   Is DTC U0155 and/or U1102 indicated?

   YES—Go to step 4.

   NO—Intermittent failure, system is OK at this time. Check for poor connections or loose terminals at the gauge control module and the ECM/PCM. ■
4. Check for Body Electrical DTCs in the DTCs MENU with the HDS.

   Is DTC B1168, B1169 and/or B1178 indicated?

   YES—Go to step 5.

   NO—Do the gauge control module input test (see page 22-259). ■
5. Turn the ignition switch OFF.
6. Jump the SCS line with the HDS.
7. Remove the gauge control module (see page 22-276).
8. Disconnect the gauge control module 36P connector.
9. Disconnect ECM/PCM connector E (31P).
10. Check for continuity between gauge control module 36P connector terminals No. 1, No. 19 and body ground individually.

GAUGE CONTROL MODULE 36P CONNECTOR

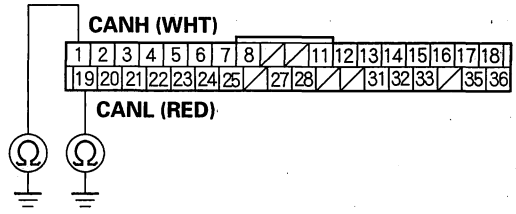

Wire side of female terminals

Is there continuity?

YES—Repair short in the wire between the gauge control module and the ECM/PCM (E11 (E24)*), then go to step 13.

NO—Go to step 11.

*: CANL line

BACK

Protected by AR

11. Check for continuity between gauge control module 36P connector terminal No. 1 and ECM/PCM connector terminal E11, and between gauge control module 36P connector terminal No. 19 and ECM/PCM connector terminal E24 individually.

GAUGE CONTROL MODULE 36P CONNECTOR

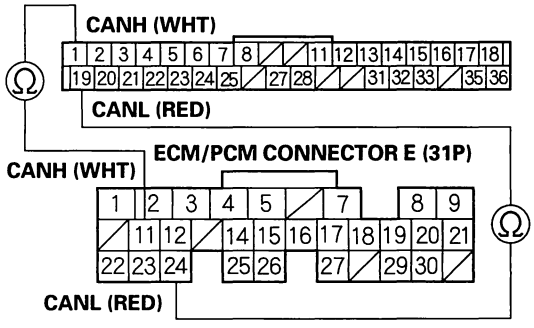

Wire side of female terminals

Is there continuity?

YES—Go to step 12.

NO—Repair open in the wire between the gauge control module and the ECM/PCM (E11 (E24)*), then go to step 13.

*: CANL line

12. Check for continuity between ECM/PCM connector terminals E11 and E24.

ECM/PCM CONNECTOR E (31P)

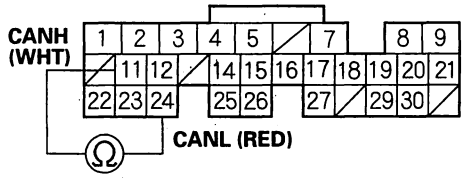

Wire side of female terminals

Is there continuity?

YES—Repair short in the wires between ECM/PCM connector terminals E11 and E24, then go to step 13.

NO—Go to step 18.

13. Reconnect all connectors.

14. Turn the ignition switch ON (II).

15. Reset the ECM/PCM with the HDS.

16. Do the ECM/PCM idle learn procedure (see page 11-316).

17. Check for Temporary DTCs or DTCs with the HDS.

Are any Temporary DTCs or DTCs indicated?

YES—If DTC U0155 and/or U1102 is indicated, check for poor connections or loose terminals at the gauge control module and the ECM/PCM, then go to step 1. If any other Temporary DTCs or DTCs are indicated, go to the indicated DTC's troubleshooting.

NO—Troubleshooting is complete.■

(cont'd)

Protected by AR

DTC Troubleshooting (cont'd)

18. Update the ECM/PCM if it does not have the latest software, or substitute a known-good ECM/PCM (see page 11-6).

19. Check for Temporary DTCs or DTCs with the HDS.

    Are any Temporary DTCs or DTCs indicated?

    YES—If DTC U0155 and/or U1102 is indicated, check for poor connections or loose terminals at the gauge control module and the ECM/PCM, then go to step 1. If any other Temporary DTCs or DTCs are indicated, go to the indicated DTC's troubleshooting.

    NO—If the ECM/PCM was updated, troubleshooting is complete. If the ECM/PCM was substituted, replace the original ECM/PCM (see page 11-227). ■

BACK

Protected by AR

MIL Circuit Troubleshooting

1. Turn the ignition switch ON (II).
2. Do the gauge self-diagnostic procedure (see page 22-259).

   Does the MIL indicator flash?

   YES—Go to step 3.

   NO—Substitute a known-good gauge control module (see page 22-276), and recheck. If the MIL circuit is OK, replace the original gauge control module.■
3. Turn the ignition switch OFF.
4. Turn the ignition switch ON (II), and watch the MIL.

   Does the MIL stay off?

   YES—Go to step 17.

   NO—Go to step 5.
5. Turn the ignition switch OFF.
6. Turn the ignition switch ON (II), wait 20 seconds, and watch the MIL.

   Does the MIL stay on more than 20 seconds or flash more than 5 times?

   YES—Go to step 7.

   NO—The MIL circuit is OK.■
7. Turn the ignition switch OFF.
8. Connect the HDS (see page 11-3).
9. Turn the ignition switch ON (II), and read the HDS.

   Does the HDS communicate with the ECM/PCM?

   YES—Go to step 10.

   NO—Go to "DLC Circuit Troubleshooting" (see page 11-218).■
10. Check for Temporary DTCs or DTCs with the HDS.

    Are any Temporary DTCs or DTCs indicated?

    YES—Go to the indicated DTC's troubleshooting.■

    NO—Go to step 11.
11. Check the MIL in the DATA LIST with the HDS.

    Is ON indicated?

    YES—Go to step 12.

    NO—Substitute a known-good gauge control module (see page 22-276), and recheck. If the MIL circuit is OK, replace the original gauge control module.■

(cont'd)

Protected by AR

MIL Circuit Troubleshooting (cont'd)

12. Check the SCS in the DATA LIST with the HDS.

    Is a short indicated?

    YES—Go to step 13.

    NO—Update the ECM/PCM if it does not have the latest software, or substitute a known-good ECM/PCM (see page 11-6), then recheck. If the symptom/indication goes away with a known-good ECM/PCM, replace the original ECM/PCM (see page 11-227).■

13. Turn the ignition switch OFF.

14. Jump the SCS line with the HDS.

15. Disconnect ECM/PCM connector E (31P).

16. Check for continuity between ECM/PCM connector terminal E29 and body ground.

ECM/PCM CONNECTOR E (31P)

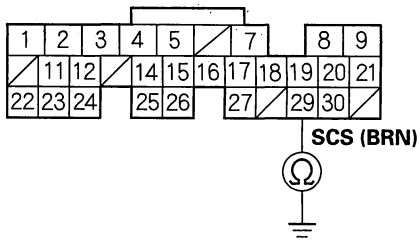

Wire side of female terminals

Is there continuity?

YES—Repair short in the wire between the ECM/PCM (E29) and the DLC.■

NO—Update the ECM/PCM if it does not have the latest software, or substitute a known-good ECM/PCM (see page 11-6), then recheck. If the symptom/indication goes away with a known-good ECM/PCM, replace the original ECM/PCM (see page 11-227).■

17. Try to start the engine.

    Does the engine start and idle smoothly?

    YES—Go to step 18.

    NO—Go to step 22.

18. Turn the ignition switch OFF.

19. Connect the HDS (see page 11-3).

20. Turn the ignition switch ON (II), and read the HDS.

    Does the HDS communicate with the ECM/PCM?

    YES—Go to step 21.

    NO—Go to "DLC Circuit Troubleshooting" (see page 11-218).■

21. Check for Temporary DTCs or DTCs with the HDS.

    Is DTC U0073 and/or U0155 indicated?

    YES—Go to the indicated DTC's troubleshooting.■

    NO—Update the ECM/PCM if it does not have the latest software, or substitute a known-good ECM/PCM (see page 11-6), then recheck. If the symptom/indication goes away with a known-good ECM/PCM, replace the original ECM/PCM (see page 11-227).■

BACK

Protected by AR

22. Turn the ignition switch OFF.

23. Inspect the No. 23 +B IG MAIN (50 A) fuse in the under-hood fuse/relay box.

    Is the fuse OK?

    YES—Repair open in the wire between the No. 23 +B IG MAIN (50 A) fuse and the ignition switch. If the wire is OK, go to step 24.

    NO—Repair short in the wire between No. 23 +B IG MAIN (50 A) fuse and the under-dash fuse/relay box. Also replace the No. 23 +B IG MAIN (50 A) fuse. ■

24. Inspect the No. 8 FI ECU (ECM/PCM) (15 A) fuse in the under-hood fuse/relay box.

    Is the fuse OK?

    YES—Go to step 31.

    NO—Go to step 25.

25. Remove the blown No. 8 FI ECU (ECM/PCM) (15 A) fuse from the under-dash fuse/relay box.

26. Remove the left kick panel; 2-door (see page 20-90), 4-door (see page 20-91), then remove PGM-FI main relay 1 (FI MAIN) (A) from the under-dash fuse/relay box.

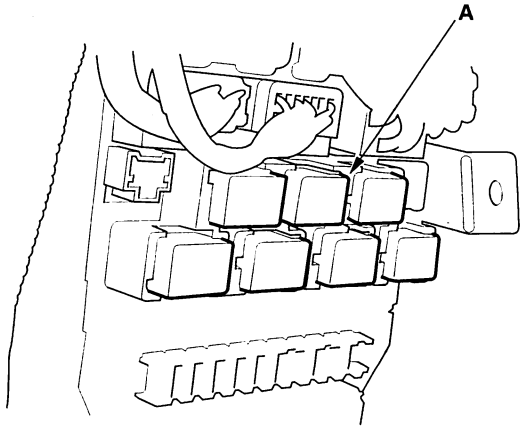

27. Check for continuity between body ground and PGM-FI main relay 1 (FI MAIN) 4P connector terminals No. 2 and No. 3 individually.

PGM-FI MAIN RELAY 1 (FI MAIN) 4P CONNECTOR

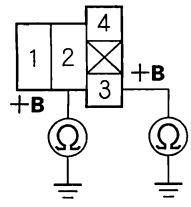

Terminal side of female terminals

Is there continuity?

YES—Repair short in the wire between the No. 8 FI ECU (ECM/PCM) (15 A) fuse and PGM-FI main relay 1 (FI MAIN). Also replace the No. 8 FI ECU (ECM/PCM) (15 A) fuse. ■

NO—Go to step 28.

(cont'd)

Protected by AR

MIL Circuit Troubleshooting (cont'd)

28. Disconnect each of the components or connectors below, one at a time, and check for continuity between PGM-FI main relay 1 (FI MAIN) 4P connector terminal No. 1 and body ground.

    - PGM-FI main relay 2 (FUEL PUMP)
    - A/F sensor relay
    - Throttle actuator control module relay (2006 model)
    - ECM/PCM connector A (31P)
    - Each injector 2P connector
    - Idle air control (IAC) valve 3P connector (2003-2005 models)
    - Camshaft position (CMP) sensor B 3P connector
    - Crankshaft position (CKP) sensor 3P connector

PGM-FI MAIN RELAY 1 (FI MAIN) 4P CONNECTOR

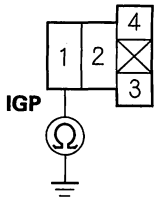

Terminal side of female terminals

Does continuity go away when one of the above components is disconnected?

YES—Replace the component that made the short to body ground go away when disconnected. If the item is the ECM/PCM, update the ECM/PCM if it does not have the latest software, or substitute a known-good ECM/PCM (see page 11-6), then recheck. If the symptom/indication goes away with a known-good ECM/PCM, replace the original ECM/PCM (see page 11-227).■
Also replace the No. 8 FI ECU (ECM/PCM) (15 A) fuse.■

NO—Go to step 29.

29. Disconnect the connectors from these components:

    - PGM-FI main relay 2 (FUEL PUMP)
    - A/F sensor relay
    - Throttle actuator control module relay (2006 model)
    - ECM/PCM connector A (31P)
    - Injectors
    - Idle air control (IAC) valve (2003-2005 models)
    - Camshaft position (CMP) sensor B
    - Crankshaft position (CKP) sensor

30. Check for continuity between PGM-FI main relay 1 (FI MAIN) 4P connector terminal No. 1 and body ground.

PGM-FI MAIN RELAY 1 (FI MAIN) 4P CONNECTOR

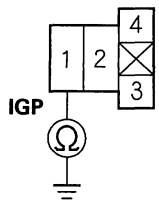

Terminal side of female terminals

Is there continuity?

YES—Repair short in the wire between PGM-FI main relay 1 (FI MAIN) and each component. Also replace the No. 8 FI ECU (ECM/PCM) (15 A) fuse.■

NO—Replace PGM-FI main relay 1 (FI MAIN). Also replace the No. 8 FI ECU (ECM/PCM) (15 A) fuse.■

31. Inspect the No. 19 FUEL PUMP (15 A) fuse in the under-dash fuse/relay box.

Is the fuse OK?

YES—Go to step 44.

NO—Go to step 32.

32. Remove the blown No. 19 FUEL PUMP (15 A) fuse from the under-dash fuse/relay box.

33. Jump the SCS line with the HDS.

34. Disconnect ECM/PCM connector E (31P).

BACK

Protected by AR

35. Check for continuity between ECM/PCM connector terminal E9 and body ground.

ECM/PCM CONNECTOR E (31P)

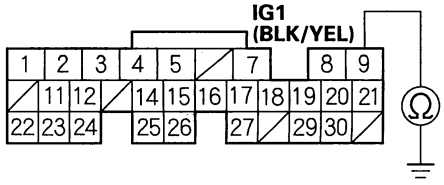

Wire side of female terminals

Is there continuity?

YES—Go to step 36.

NO—Replace the No. 19 FUEL PUMP (15 A) fuse, and update the ECM/PCM if it does not have the latest software, or substitute a known-good ECM/PCM (see page 11-6), then recheck. If the symptom/indication goes away with a known-good ECM/PCM, replace the original ECM/PCM (see page 11-227).■

36. Remove the left kick panel; 2-door (see page 20-90), 4-door (see page 20-91), then remove PGM-FI main relay 2 (FUEL PUMP) (A) from the under-dash fuse/relay box.

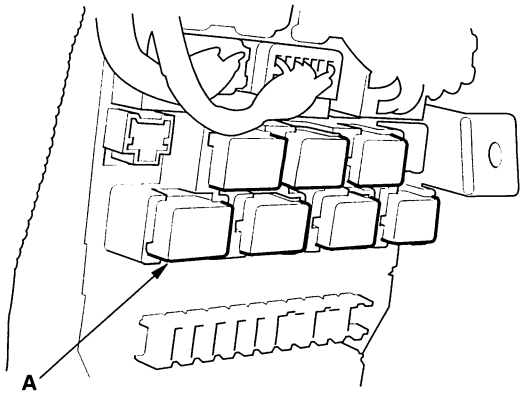

37. Check for continuity between ECM/PCM connector terminal E9 and body ground.

ECM/PCM CONNECTOR E (31P)

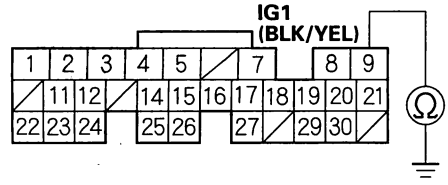

Wire side of female terminals

Is there continuity?

YES—Repair short in the wire between the No. 19 FUEL PUMP (15 A) fuse and the ECM/PCM (E9), or between the No. 19 FUEL PUMP (15 A) fuse and PGM-FI main relay 2 (FUEL PUMP), or between the No. 19 FUEL PUMP (15 A) fuse and the immobilizer control unit. Also replace the No. 19 FUEL PUMP (15 A) fuse.■

NO—Go to step 38.

38. Remove the trunk floor trim panel.

39. Remove the access panel from the floor (see page 11-345).

40. Disconnect the fuel pump 5P connector.

(cont'd)

Protected by AR

MIL Circuit Troubleshooting (cont'd)

41. Check for continuity between fuel pump 5P connector terminal No. 5 and body ground.

FUEL PUMP 5P CONNECTOR

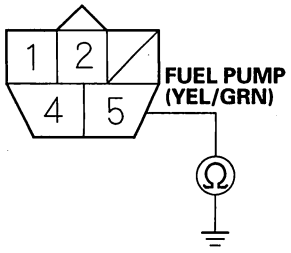

Wire side of female terminals

Is there continuity?

YES—Repair short in the wire between the fuel pump and PGM-FI main relay 2 (FUEL PUMP). Also replace the No. 19 FUEL PUMP (15 A) fuse. ■

NO—Go to step 42.

42. Reinstall PGM-FI main relay 2 (FUEL PUMP) (A).

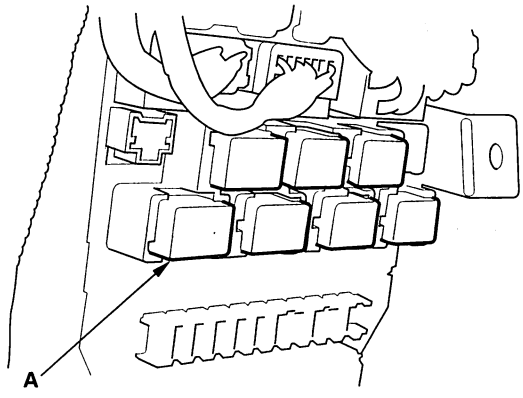

43. Check for continuity between fuel pump 5P connector terminal No. 5 and body ground.

FUEL PUMP 5P CONNECTOR

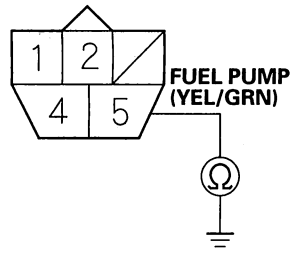

Wire side of female terminals

Is there continuity?

YES—Replace PGM-FI main relay 2 (FUEL PUMP). Also replace the No. 19 FUEL PUMP (15 A) fuse. ■

NO—Check the fuel pump, and replace it if necessary. Also replace the No. 19 FUEL PUMP (15 A) fuse. ■

BACK

Protected by AR

44. Jump the SCS line with the HDS.

45. Disconnect ECM/PCM connector E (31P).

46. Turn the ignition switch ON (II).

47. Measure voltage between ECM/PCM connector terminal E9 and body ground.

ECM/PCM CONNECTOR E (31P)

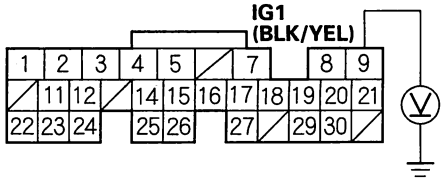

Wire side of female terminals

Is there battery voltage?

YES—Go to step 48.

NO—Repair open in the wire between the No. 19 FUEL PUMP (15 A) fuse and the ECM/PCM (E9).■

48. Measure voltage between ECM/PCM connector terminal E7 and body ground.

ECM/PCM CONNECTOR E (31P)

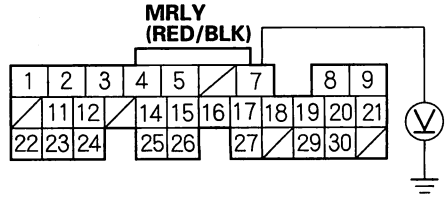

Wire side of female terminals

Is there battery voltage?

YES—Go to step 53.

NO—Go to step 49.

49. Turn the ignition switch OFF.

50. Remove the left kick panel; 2-door (see page 20-90), 4-door (see page 20-91), then remove PGM-FI main relay 1 (FI MAIN) (A) from the under-dash fuse/ relay box.

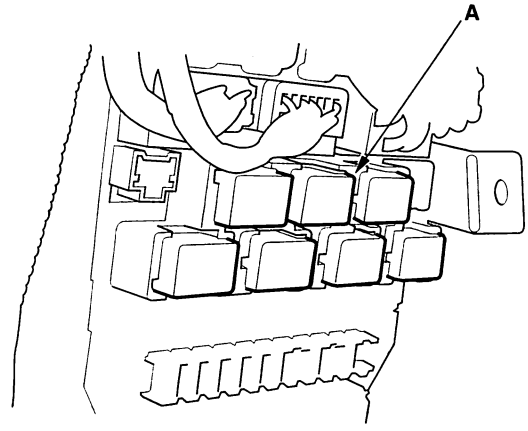

51. Measure voltage between PGM-FI main relay 1 (FI MAIN) 4P connector terminal No. 3 and body ground.

PGM-FI MAIN RELAY 1 (FI MAIN) 4P CONNECTOR

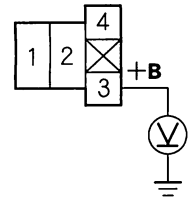

Terminal side of female terminals

Is there battery voltage?

YES—Go to step 52.

NO—Repair open in the wire between the No. 8 FI ECU (ECM/PCM) (15 A) fuse and PGM-FI main relay 1 (FI MAIN).■

(cont'd)

Protected by AR

MIL Circuit Troubleshooting (cont'd)

52. Check for continuity between PGM-FI main relay 1 (FI MAIN) 4P connector terminal No. 4 and ECM/PCM connector terminal E7.

PGM-FI MAIN RELAY 1 (FI MAIN) 4P CONNECTOR

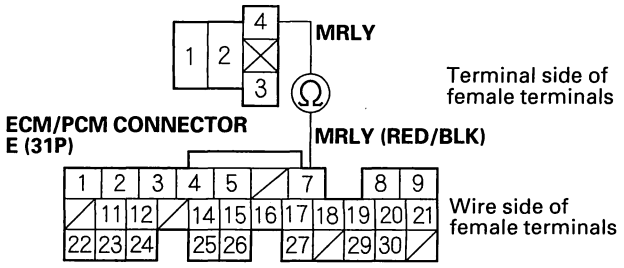

Is there continuity?

YES—Test PGM-FI main relay 1 (FI MAIN) (see page 22-79). If the relay is OK, update the ECM/PCM if it does not have the latest software, or substitute a known-good ECM/PCM (see page 11-6), then recheck. If the symptom/indication goes away with a known-good ECM/PCM, replace the original ECM/PCM (see page 11-227).■

NO—Repair open in the wire between PGM-FI main relay 1 (FI MAIN) and the ECM/PCM (E7).■

53. Reconnect ECM/PCM connector E (31P).

54. Turn the ignition switch ON (II).

55. Measure voltage between body ground and ECM/PCM connector terminals A2 and A3 individually.

ECM/PCM CONNECTOR A (31P)

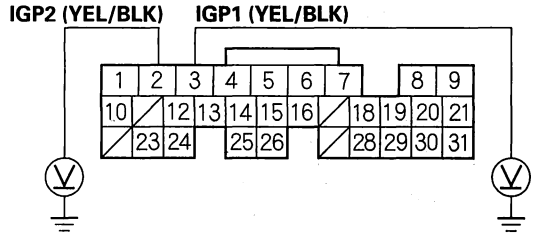

Wire side of female terminals

Is there battery voltage?

YES—Go to step 62.

NO—Go to step 56.

56. Turn the ignition switch OFF.

57. Remove PGM-FI main relay 1 (FI MAIN) (A).

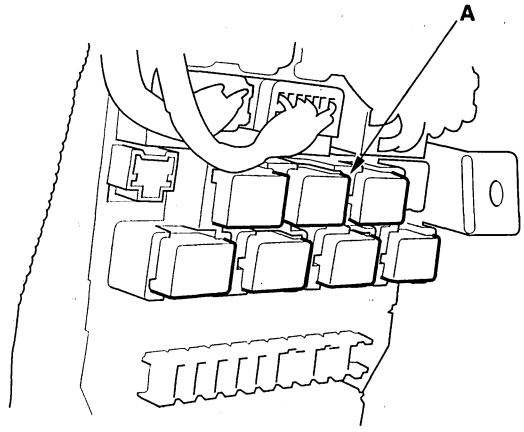

58. Turn the ignition switch ON (II).

BACK

Protected by AR

59. Measure voltage between PGM-FI main relay 1 (FI MAIN) 4P connector terminal No. 2 and body ground.

PGM-FI MAIN RELAY 1 (FI MAIN) 4P CONNECTOR

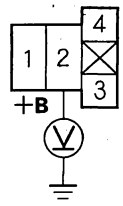

Terminal side of female terminals

Is there battery voltage?

YES—Go to step 60.

NO—Repair open in the wire between the No. 8 FI ECU (ECM/PCM) (15 A) fuse and PGM-FI main relay 1 (FI MAIN).■

60. Turn the ignition switch OFF.

61. Check for continuity between PGM-FI main relay 1 (FI MAIN) 4P connector terminal No. 1 and ECM/PCM connector terminals A2 and A3 individually.

PGM-FI MAIN RELAY 1 (FI MAIN) 4P CONNECTOR

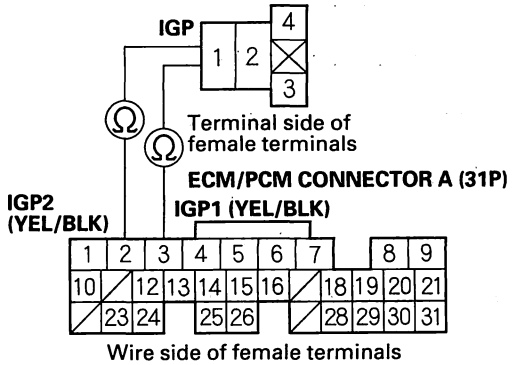

Wire side of female terminals

Is there continuity?

YES—Replace PGM-FI main relay 1 (FI MAIN).■

NO—Repair open in the wire between PGM-FI main relay 1 (FI MAIN) and the ECM/PCM (A2, A3).■

62. Measure voltage between body ground and ECM/PCM connector terminals A4, A5, A8, and A9 individually.

ECM/PCM CONNECTOR A (31P)

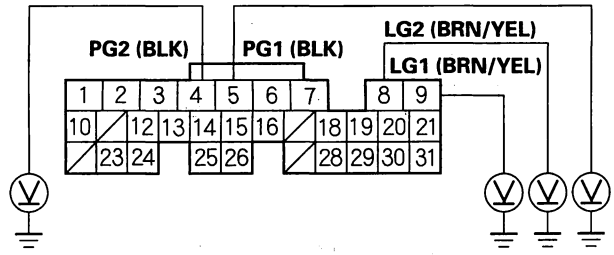

Wire side of female terminals

Is there more than 0.2 V?

YES—Repair open in the wire(s) that had more than 0.2 V between G101 and the ECM/PCM (A4, A5, A8, A9).■

NO—

- 2003-2004 models: Update the ECM/PCM if it does not have the latest software, or substitute a known-good ECM/PCM (see page 11-6), then recheck. If the symptom/indication goes away with a known-good ECM/PCM, replace the original ECM/PCM (see page 11-227).■
- 2005-2006 models: Go to step 63.

(cont'd)

Protected by AR

MIL Circuit Troubleshooting (cont'd)

63. Measure voltage between body ground and ECM/PCM connector terminal A21.

ECM/PCM CONNECTOR A (31P)

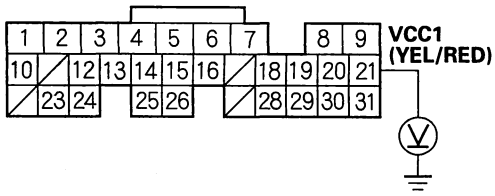

Wire side of female terminals

Is there about 5 V?

YES—Go to step 71.

NO—Go to step 64.

64. Turn the ignition switch OFF.

65. Disconnect the connector from each of these sensors, one at a time, and measure voltage between body ground and ECM/PCM connector terminal A21 with the ignition switch ON (II).

- Manifold absolute pressure (MAP) sensor
- Accelerator pedal position (APP) sensor
- Input shaft (mainshaft) speed sensor (A/T)

ECM/PCM CONNECTOR A (31P)

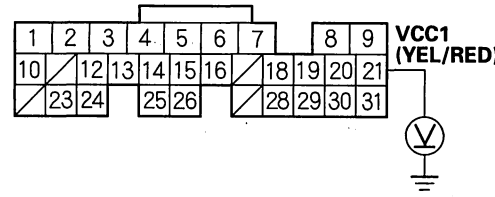

Wire side of female terminals

Is there about 5 V?

YES—Replace the sensor that restored 5 V when disconnected.■

NO—Go to step 66.

66. Turn the ignition switch OFF.

67. Jump the SCS line with the HDS.

68. Disconnect the connectors from these sensors:

- Manifold absolute pressure (MAP) sensor
- Accelerator pedal position (APP) sensor
- Input shaft (mainshaft) speed sensor (A/T)

69. Disconnect ECM/PCM connector A (31P).

BACK

Protected by AR

70. Check for continuity between ECM/PCM connector terminal A21 and body ground.

ECM/PCM CONNECTOR A (31P)

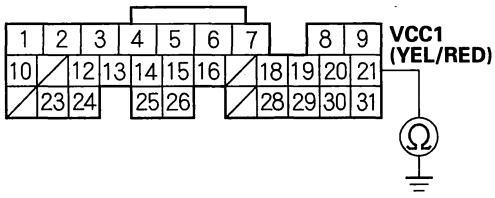

Wire side of female terminals

Is there continuity?

YES—Repair short in the wire between the ECM/PCM (A21) and the MAP sensor, the APP sensor or the input shaft (mainshaft) speed sensor (A/T). ■

NO—Update the ECM/PCM if it does not have the latest software, or substitute a known-good ECM/PCM (see page 11-6), then recheck. If the symptom/indication goes away with a known-good ECM/PCM, replace the original ECM/PCM (see page 11-227). ■

71. Measure voltage between body ground and ECM/PCM connector terminal A20.

ECM/PCM CONNECTOR A (31P)

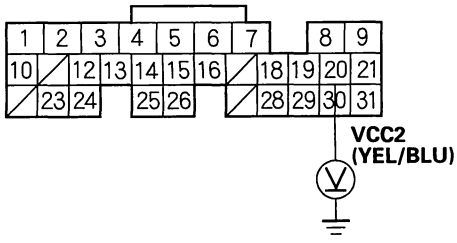

Wire side of female terminals

Is there about 5 V?

YES—Go to step 79.

NO—Go to step 72.

72. Turn the ignition switch OFF.

73. Disconnect the connector from each of these sensors, one at a time, and measure voltage between body ground and ECM/PCM connector terminal A20 with the ignition switch ON (II).

- TP sensor (2005 model)
- Accelerator pedal position (APP) sensor (2006 model)
- Output shaft (countershaft) speed sensor
- EGR valve

ECM/PCM CONNECTOR A (31P)

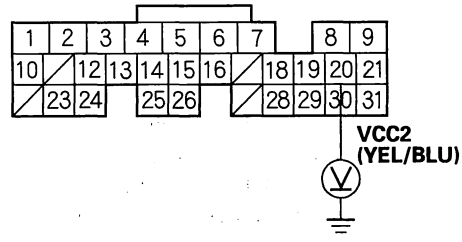

Wire side of female terminals

Is there about 5 V?

YES—Replace the sensor that restored 5 V when disconnected. ■

NO—Go to step 74.

74. Turn the ignition switch OFF.

75. Jump the SCS line with the HDS.

76. Disconnect the connector from these sensors:

- TP sensor (2005 model)
- Accelerator pedal position (APP) sensor (2006 model)
- Output shaft (countershaft) speed sensor
- EGR valve

77. Disconnect ECM/PCM connector A (31P).

(cont'd)

Protected by AR

MIL Circuit Troubleshooting (cont'd)

78. Check for continuity between ECM/PCM connector terminal A20 and body ground.

ECM/PCM CONNECTOR A (31P)

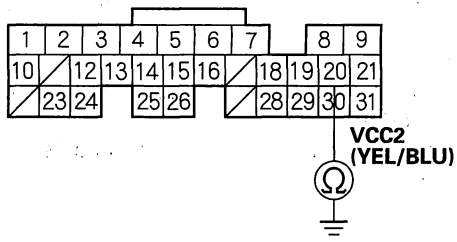

Wire side of female terminals

Is there continuity?

YES—Repair short in the wire between the ECM/PCM (A20) and the TP sensor (2005 model), the APP sensor (2006 model), the output shaft (countershaft) speed sensor or EGR valve. ■

NO—Update the ECM/PCM if it does not have the latest software, or substitute a known-good ECM/PCM (see page 11-6), then recheck. If the symptom/indication goes away with a known-good ECM/PCM, replace the original ECM/PCM (see page 11-227). ■

79. Measure voltage between body ground and ECM/PCM connector terminal E5.

ECM/PCM CONNECTOR E (31P)

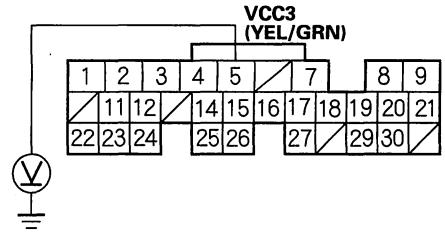

Wire side of female terminals

Is there about 5 V?

YES—Update the ECM/PCM if it does not have the latest software, or substitute a known-good ECM/PCM (see page 11-6), then recheck. If the symptom/indication goes away with a known-good ECM/PCM, replace the original ECM/PCM (see page 11-227). ■

NO—Go to step 80.

80. Turn the ignition switch OFF.

BACK

Protected by AR

81. Disconnect the FTP sensor 3P connector, and measure voltage between body ground and ECM/PCM connector terminal E5 with the ignition switch ON (II).

ECM/PCM CONNECTOR E (31P)

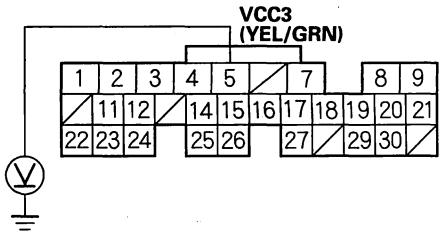

Wire side of female terminals

Is there about 5 V?

YES—Replace the FTP sensor (see page 11-422). ■

NO—Go to step 82.

82. Turn the ignition switch OFF.

83. Jump the SCS line with the HDS.

84. Disconnect the FTP sensor 3P connector.

85. Disconnect ECM/PCM connector E (31P).

86. Check for continuity between ECM/PCM connector terminal E5 and body ground.

ECM/PCM CONNECTOR E (31P)

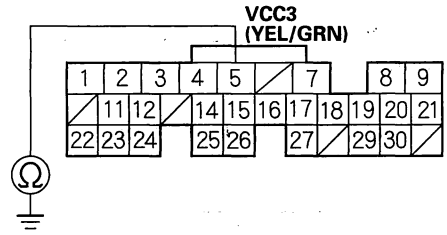

Wire side of female terminals

Is there continuity?

YES—Repair short in the wire between the ECM/PCM (E5) and the FTP sensor. ■

NO—Update the ECM/PCM if it does not have the latest software, or substitute a known-good ECM/PCM (see page 11-6), then recheck. If the symptom/indication goes away with a known-good ECM/PCM, replace the original ECM/PCM (see page 11-227). ■

Protected by AR

DLC Circuit Troubleshooting

NOTE:
- If the ECM/PCM does not communicate with the HDS, do this troubleshooting procedure.
- Check that the MIL circuit is normal, then do this troubleshooting.

1. Measure voltage between DLC terminal No. 16 and body ground.

DATA LINK CONNECTOR (DLC)

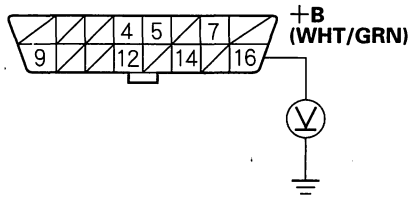

Terminal side of female terminals

Is there battery voltage?

YES—Go to step 2.

NO—Repair open in the wire between DLC terminal No. 16 and the No. 8 FI ECU (15 A) fuse in the under-hood fuse/relay box.■

2. Measure voltage between DLC terminals No. 4 and No. 16.

DATA LINK CONNECTOR (DLC)

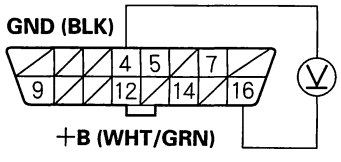

Terminal side of female terminals

Is there battery voltage?

YES—Go to step 3.

NO—Repair open in the wire between DLC terminal No. 4 and body ground (G501).■

3. Measure voltage between DLC terminals No. 5 and No. 16.

DATA LINK CONNECTOR (DLC)

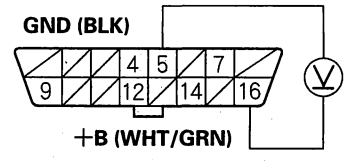

Terminal side of female terminals

Is there battery voltage?

YES—Go to step 4.

NO—Repair open in the wire between DLC terminal No. 5 and body ground (G503).■

4. Turn the ignition switch ON (II).

5. Measure voltage between DLC terminals No. 5 and No. 7.

DATA LINK CONNECTOR (DLC)

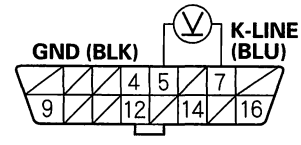

Terminal side of female terminals

Is there 8.5 V or more?

YES—Go to step 11.

NO—Go to step 6.

6. Turn the ignition switch OFF.

7. Jump the SCS line with the HDS.

8. Disconnect ECM/PCM connector E (31P).

BACK

Protected by AR

9. Check for continuity between DLC terminal No. 7 and body ground.

DATA LINK CONNECTOR (DLC)

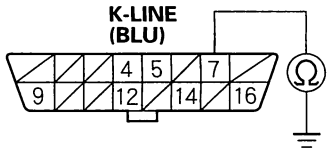

Terminal side of female terminals

Is there continuity?

YES—Repair short to ground in the wire between DLC terminal No. 7 and the ECM/PCM (E23). After repairing the wire, check for a DTC with the HDS, then go to the indicated DTC's troubleshooting. ■

NO—Go to step 10.

10. Check for continuity between DLC terminal No. 7 and ECM/PCM terminal E23.

ECM/PCM CONNECTOR E (31P)

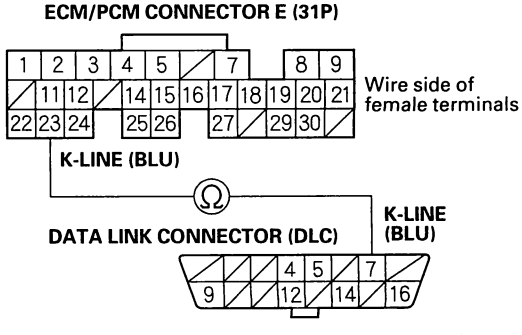

Terminal side of female terminals

Is there continuity?

YES—Update the ECM/PCM if it does not have the latest software, or substitute a known-good ECM/PCM (see page 11-6), then recheck. If the symptom/indication goes away with a known-good ECM/PCM, replace the original ECM/PCM (see page 11-227). ■

NO—Repair open in the wire between DLC terminal No. 7 and the ECM/PCM (E23). After repairing the wire, check for a DTC with the HDS, then go to the indicated DTC's troubleshooting. ■

11. Turn the ignition switch OFF.

12. Jump the SCS line with the HDS.

13. Disconnect ECM/PCM connector E (31P).

14. Turn the ignition switch ON (II).

15. Measure voltage between DLC terminals No. 5 and No. 7.

DATA LINK CONNECTOR (DLC)

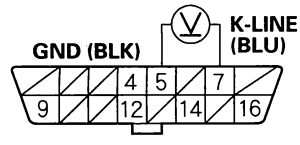

Terminal side of female terminals

Is there 0 V?

YES—Update the ECM/PCM if it does not have the latest software, or substitute a known-good ECM/PCM (see page 11-6), then recheck. If the symptom/indication goes away with a known-good ECM/PCM, replace the original ECM/PCM (see page 11-227). ■

NO—Repair short to power in the wire between DLC terminal No. 7 and the ECM/PCM (E23). After repairing the wire, check for a DTC with the HDS, then go to the indicated DTC's troubleshooting. ■

Protected by AR

Injector Replacement

1. Relieve fuel pressure (see page 11-330).
2. Remove the engine cover.
3. Disconnect the connectors from the injectors (A). On A/T models, disconnect the engine mount control solenoid valve (B).

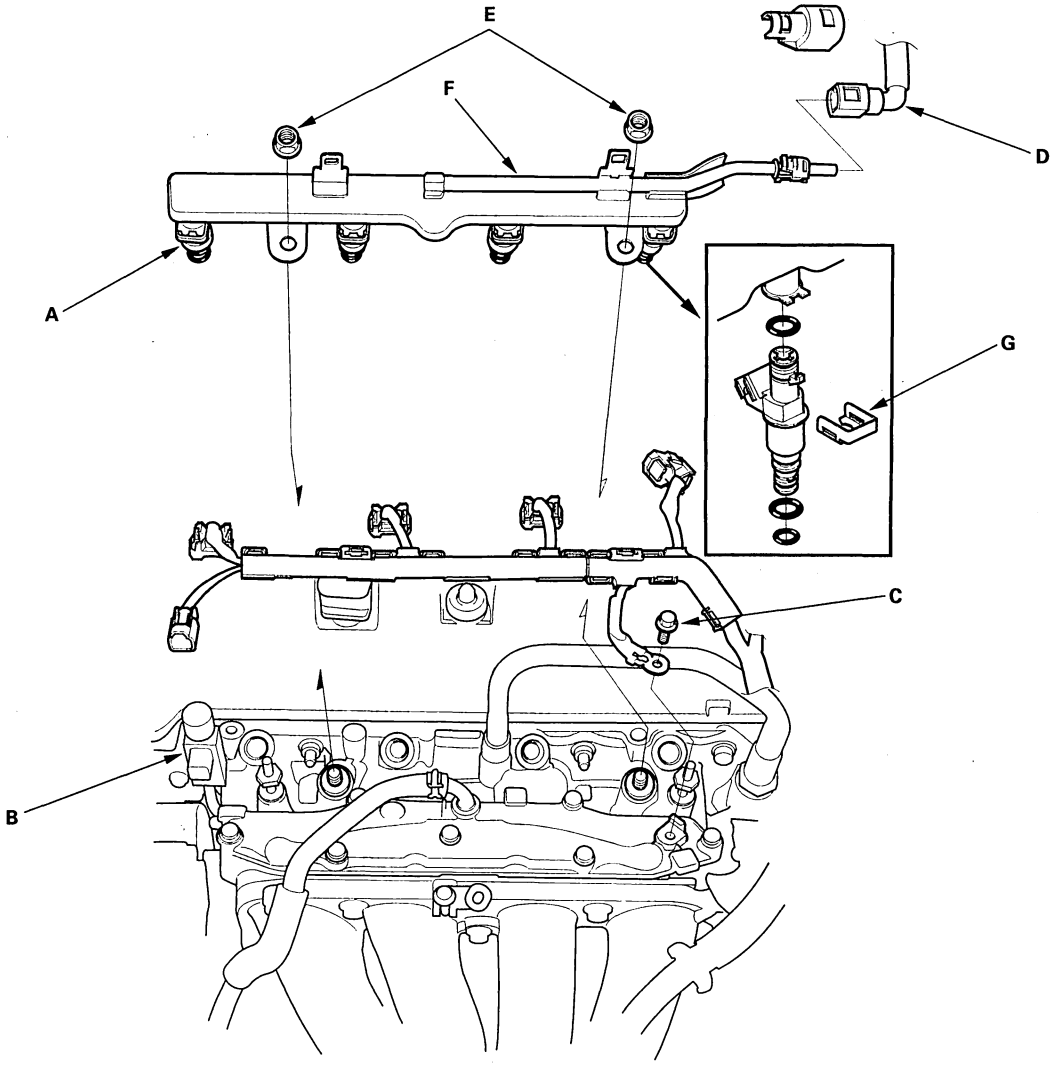

4. Remove the ground cable bolt (G101) (C).
5. Disconnect the quick-connect fittings (D).
6. Remove the fuel rail mounting nuts (E) from the fuel rail (F).
7. Remove the injector clip (G) from the injector.
8. Remove the injector from the fuel rail.

BACK

Protected by AR

9. Coat the new O-rings (A) with clean engine oil, and insert the injectors (B) into the fuel rail (C).

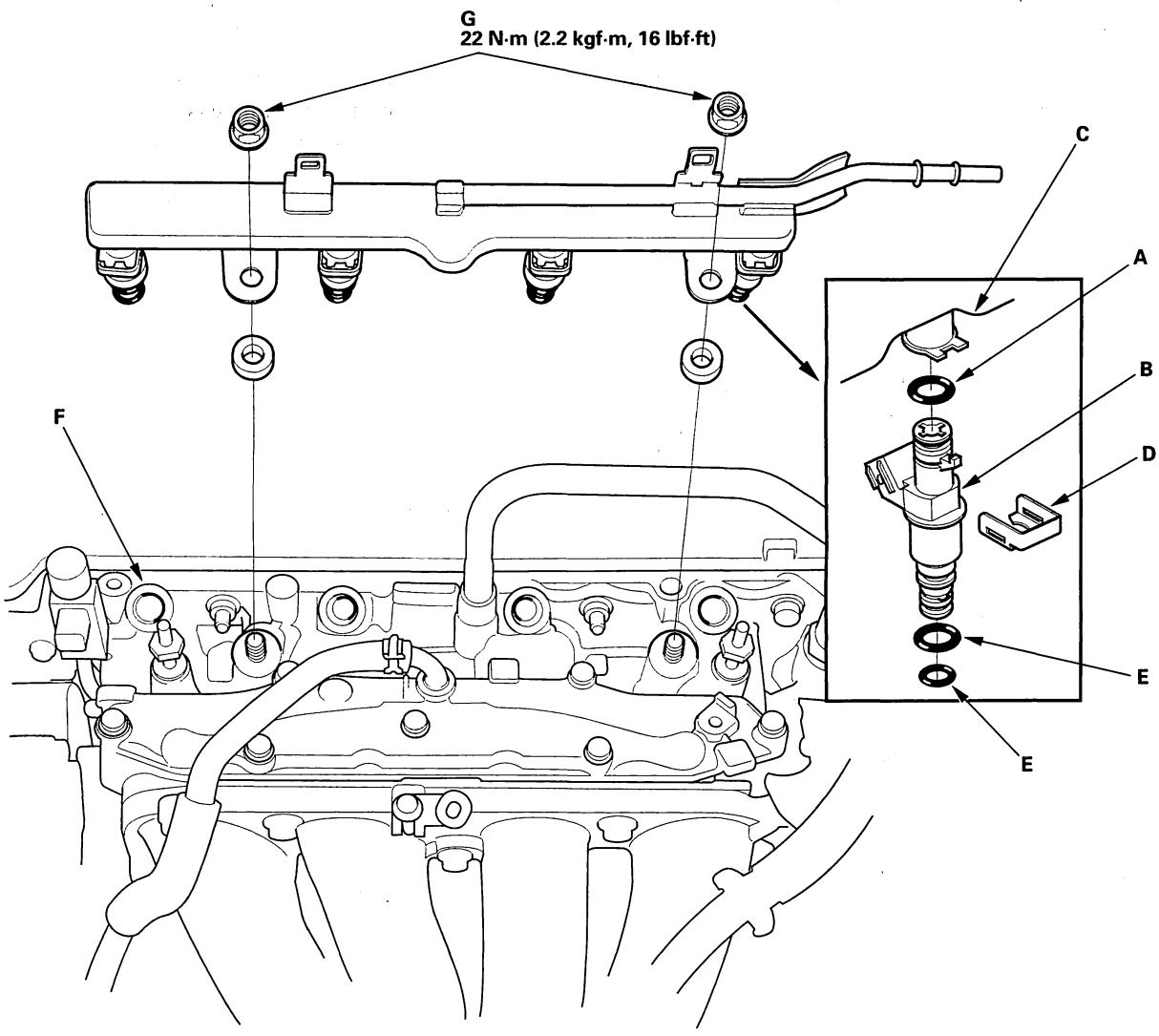

10. Install the injector clip (D).
11. Coat the injector O-rings (E) with clean engine oil.
12. Install the injectors into the injector base (F).
13. Install the fuel rail mounting nuts (G) and the ground cable bolt (G101).
14. Connect the connectors on the injectors. On A/T models, connect the engine mount control solenoid valve.
15. Connect the quick-connect fittings.
16. Turn the ignition switch ON (II), but do not operate the starter. After the fuel pump runs for about 2 seconds, the fuel rail will be pressureized. Repeat this two or three times, then check for fuel leakage.

Protected by AR

A/F Sensor Replacement

Special Tools Required
O2 sensor wrench, Snap-on YA8875, SP Tools 93750, or equivalent, commercially available

1. Disconnect the A/F sensor 4P connector (A), then remove the A/F sensor (B).

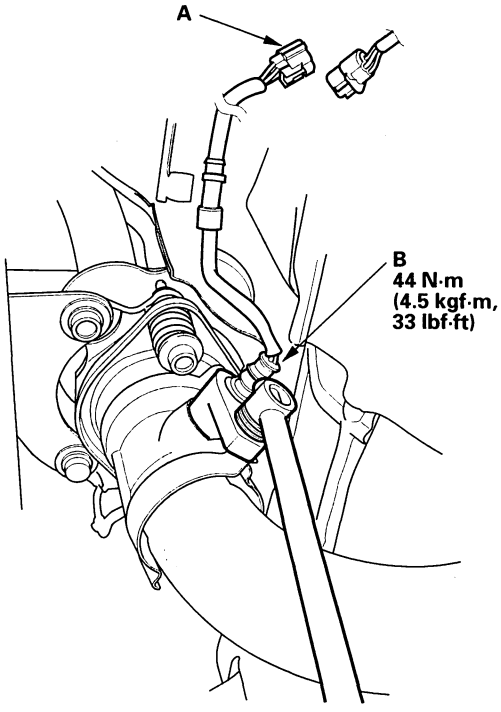

2. Install the A/F sensor in the reverse order of removal.

Secondary HO2S Replacement

Special Tools Required
O2 sensor wrench, Snap-on YA8875, SP Tools 93750, or equivalent, commercially available

1. Pull back the carpet from the floor rail under the front edge of the front passenger seat to expose the secondary HO2S 4P connector.
2. Disconnect the secondary HO2S 4P connector (A).

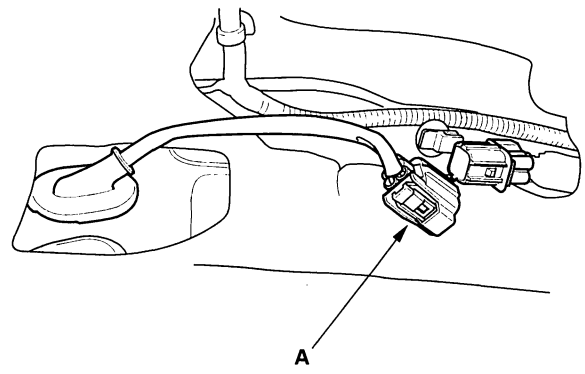

3. Remove the secondary HO2S (A), and the covers (B).

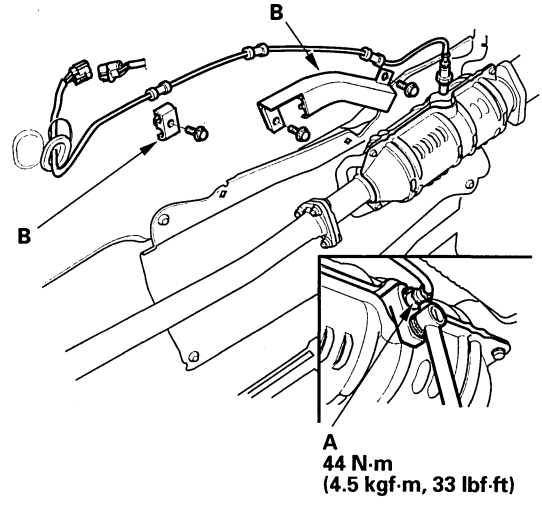

4. Install the secondary HO2S in the reverse order of removal.

BACK

Protected by AR

ECT Sensor/ECT Sensor 1 Replacement

1. Remove the air cleaner (see page 11-361).
2. Remove the EVAP canister purge valve (see page 11-423).
3. Unbolt the under-hood fuse/relay box, and move the box aside.
4. Disconnect the ECT sensor/ECT sensor 1 connector (A).

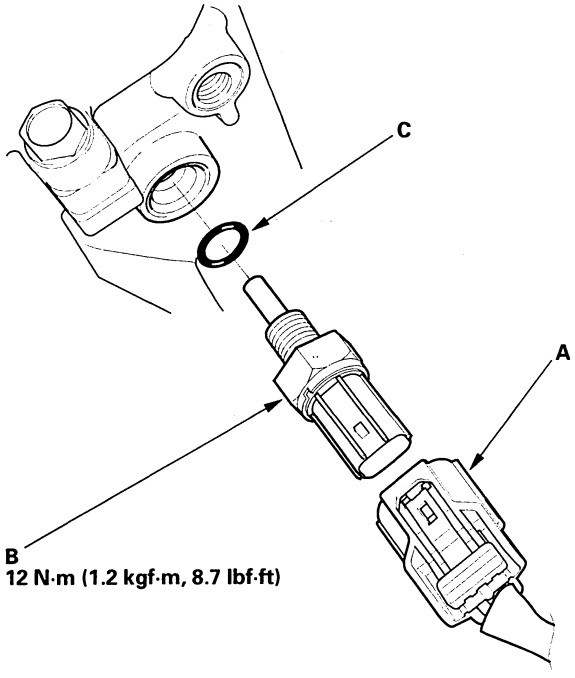

5. Remove the ECT sensor/ECT sensor 1 (B).
6. Install the sensor in the reverse order of removal with a new O-ring (C), then refill the radiator with engine coolant (see page 10-6).

CMP Sensor B Replacement

1. Remove the air cleaner (see page 11-361).
2. Remove the EVAP canister purge valve (see page 11-423).
3. Disconnect the CMP sensor B connector (A).

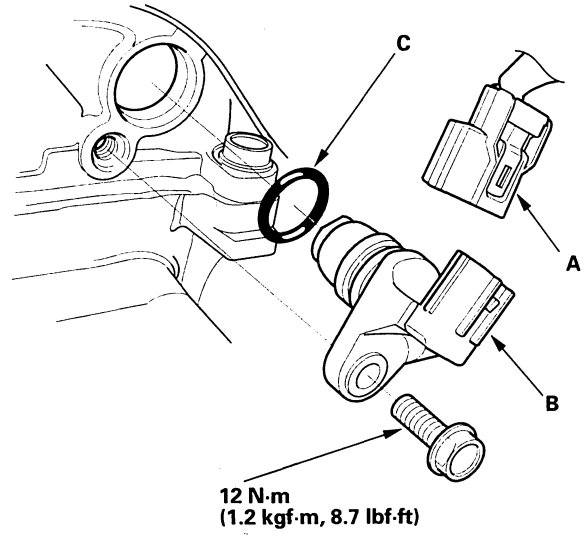

4. Remove CMP sensor B (B) from the exhaust camshaft side of the cylinder head.
5. Install the sensor in the reverse order of removal with a new O-ring (C).

Protected by AR

IAT Sensor Replacement

Except 2003-2004 SULEV, LX-P models

1. Disconnect the IAT sensor connector (A).

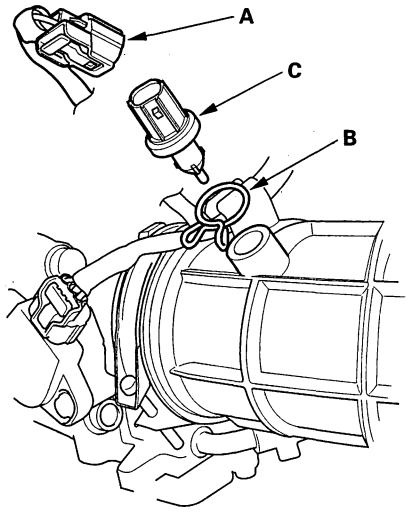

2. Remove the clamp (B) and the IAT sensor (C).
3. Install the sensor in the reverse order of removal.

Knock Sensor Replacement

1. Remove the intake manifold (see page 9-2).
2. Disconnect the knock sensor connector (A).

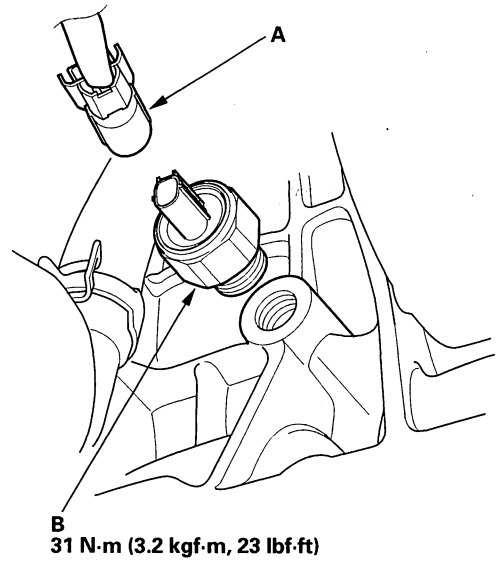

3. Remove the knock sensor (B).
4. Install the sensor in the reverse order of removal.

BACK

Protected by AR

CKP Sensor Replacement

1. Disconnect the CKP sensor connector (A).

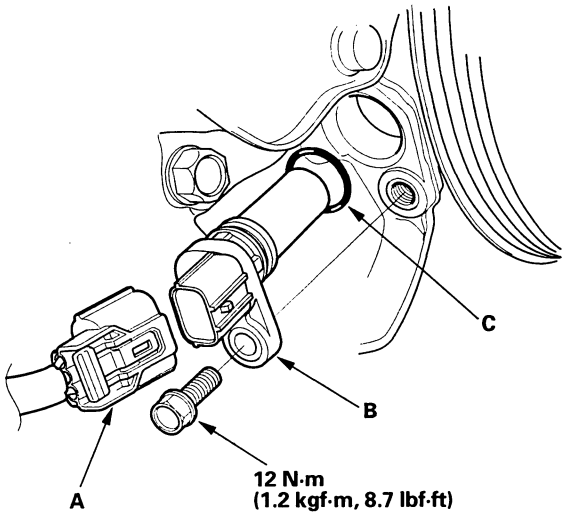

2. Remove the CKP sensor (B).
3. Install the sensor in the reverse order of removal with a new O-ring (C).
4. Do the CKP pattern clear/pattern learn procedure with the HDS (see page 11-4).

Output Shaft (Countershaft) Speed Sensor Replacement

M/T

1. Remove the air cleaner (see page 11-361).
2. Disconnect the output shaft (countershaft) speed sensor connector (A).

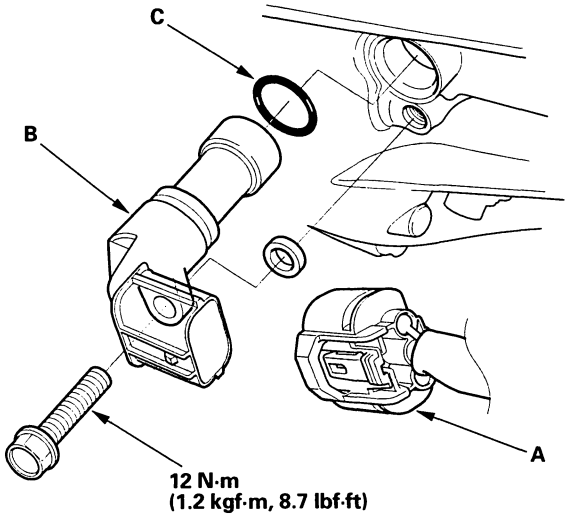

3. Remove the output shaft (countershaft) speed sensor (B).
4. Install the sensor in the reverse order of removal with a new O-ring (C).

Protected by AR

MAP Sensor Replacement

1. Disconnect the MAP sensor connector (A).

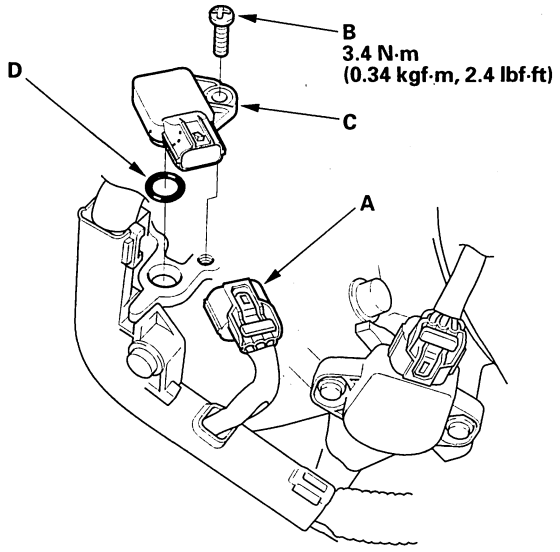

*: This illustration shows 2003-2005 models.

2. Remove the screw (B).
3. Remove the MAP sensor (C).
4. Install the sensor in the reverse order of removal with a new O-ring (D).

MAF Sensor/IAT Sensor Replacement

2003-2004 SULEV, LX-P models and 2005-2006 models

1. Disconnect the MAF sensor/IAT sensor connector (A).

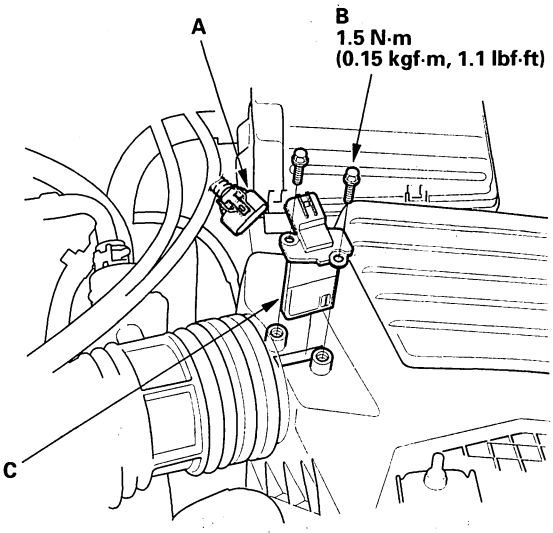

2. Remove the bolts (B).
3. Remove the MAF sensor/IAT sensor (C).
4. Install the sensor in the reverse order of removal.

BACK

Protected by AR

ECM/PCM Replacement

1. Connect the HDS to the data link connector (DLC) (A) located under the driver's side of the dashboard.

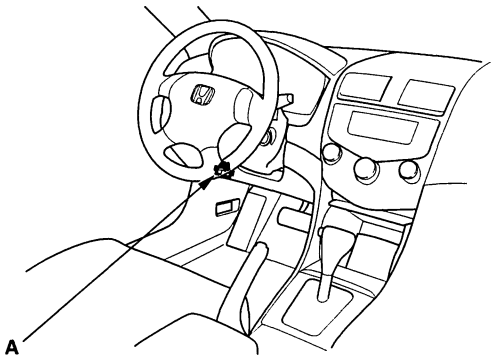

2. Make sure the HDS communicates with the ECM/PCM. If it doesn't, skip steps 3 to 5 and clean the throttle body (2006 model only) (see page 11-357).
3. Turn the ignition switch ON (II).
4. 2006 model: Select the INSPECTION MENU with the HDS.
5. 2006 model: Do the TP POSITION CHECK in the ETCS TEST.
6. Turn the ignition switch OFF.
7. Jump the SCS line with the HDS.
8. Remove the center lower covers (A).

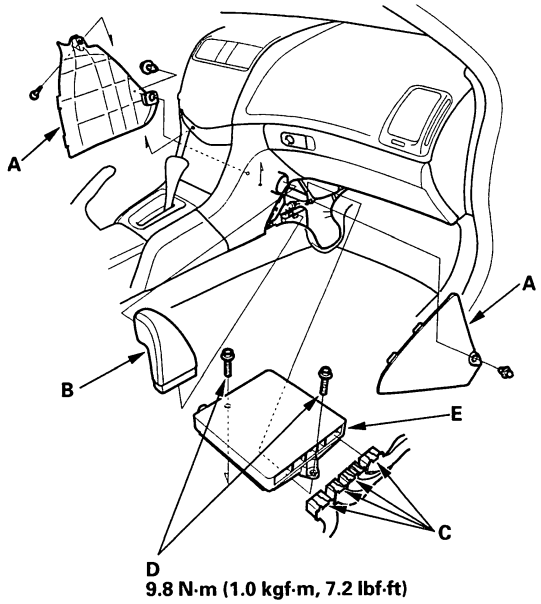

9. Remove the duct (B).
10. Disconnect ECM/PCM connectors (C).
11. Remove the bolts (D), then remove the ECM/PCM (E).
12. Install the ECM/PCM in the reverse order of removal.
13. Open the SCS line with the HDS.
14. Turn the ignition switch ON (II).

    NOTE: DTC P0630 "VIN Not Programmed or Mismatch" may be stored because VIN has not been programmed into the ECM/PCM; ignore it, and continue this procedure.

15. Input the VIN to the ECM/PCM with the HDS.
16. Rewrite the immobilizer code with the ECM/PCM replacement procedure in the HDS; it allows you to start the engine.
17. Reset the ECM/PCM with the HDS.
18. Do the ECM/PCM idle learn procedure (see page 11-316).
19. Do the CKP pattern clear/pattern learn procedure with the HDS (see page 11-4).

Protected by AR

ECT Sensor 2 Replacement

2005-2006 models

1. Drain the engine coolant (see page 10-6).
2. Remove the splash shield.
3. Disconnect the ECT sensor 2 connector (A), then remove ECT sensor 2 (B).

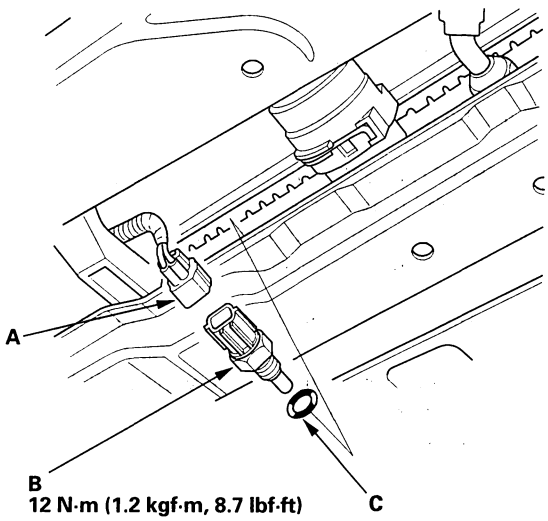

4. Install ECT sensor 2 with a new O-ring (C).
5. Install the splash shield.
6. Refill the radiator with engine coolant (see page 10-6).

BACK

Protected by AR

Component Location Index

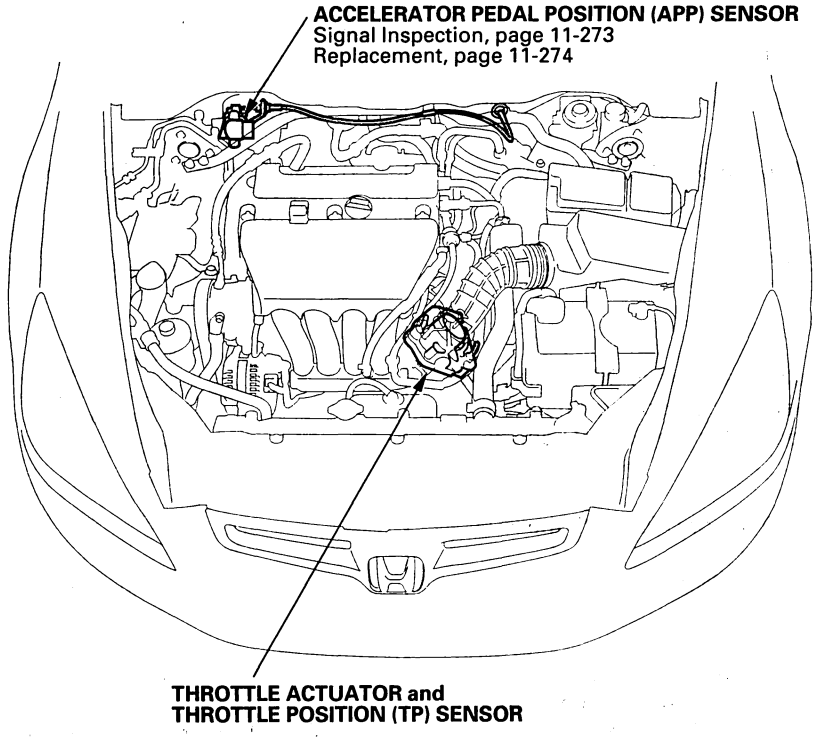

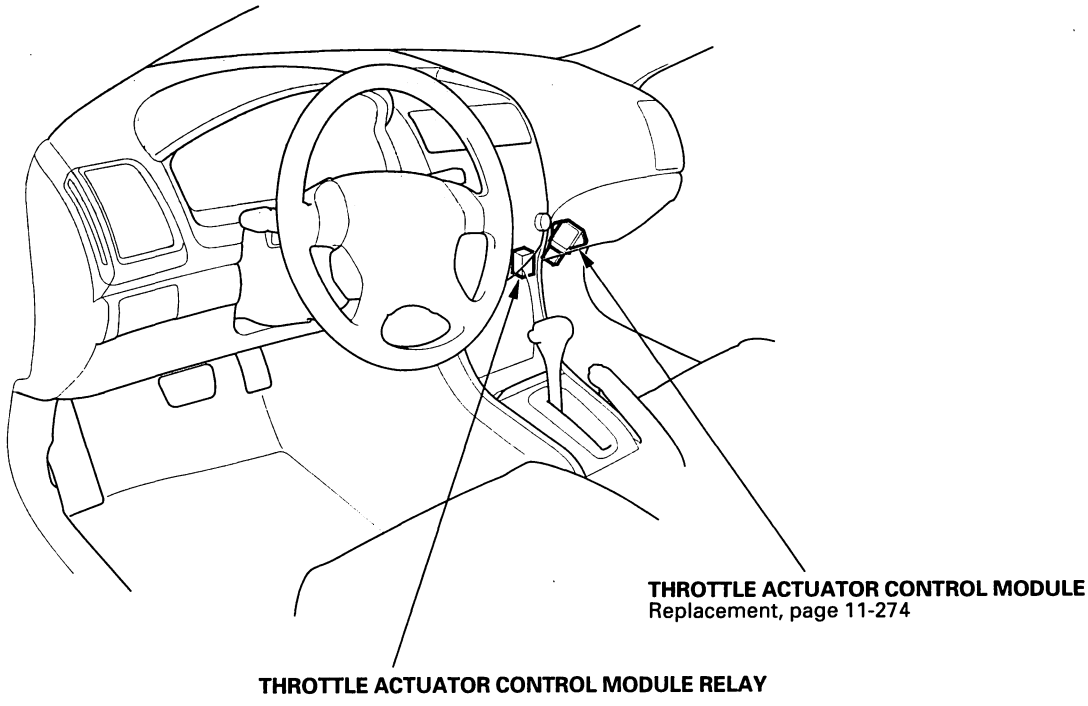

Protected by AR

DTC Troubleshooting

DTC P0122: TP Sensor A Circuit Low Voltage (2006 model)

1. Turn the ignition switch ON (II).
2. Clear the DTC with the HDS.
3. Check TP SENSOR A in the DATA LIST with the HDS.

   Is there about 0.3 V or less?

   YES—Go to step 4.

   NO—Intermittent failure, system is OK at this time. Check for poor connections or loose terminals at the throttle body and the throttle actuator control module.■
4. Check for Temporary DTCs or DTCs with the HDS.

   Are DTC P0122 and P0222 indicated at the same time?

   YES—Check for poor connections or loose terminals at the throttle body, the throttle actuator control module, and at the ECM/PCM, then go to step 18. If the connections are OK, go to step 9.

   NO—Go to step 5.
5. Turn the ignition switch OFF.
6. Disconnect the throttle body 6P connector.
7. Disconnect the throttle actuator control module 16P connector.
8. Check for continuity between throttle body 6P connector terminal No. 1 and body ground.

THROTTLE BODY 6P CONNECTOR

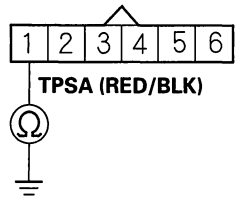

Wire side of female terminals

Is there continuity?

YES—Repair short in the wire between the throttle body and the throttle actuator control module (TPSA line), then go to step 17.

NO—Substitute a known-good throttle actuator control module (see page 11-274), then go to step 17 and recheck. If DTC P0122 is not indicated, replace the original throttle actuator control module (see page 11-274), then go to step 18. If DTC P0122 is indicated, go to step 15.

BACK

Protected by AR

9. Measure voltage between throttle body 6P connector terminal No. 2 and body ground.

THROTTLE BODY 6P CONNECTOR

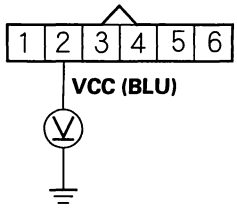

Wire side of female terminals

Is there about 5 V?

YES—Go to step 15.

NO—Go to step 10.

10. Turn the ignition switch OFF.
11. Disconnect the throttle actuator control module 16P connector.
12. Disconnect the throttle body 6P connector.
13. Connect throttle body 6P connector terminal No. 2 to body ground with a jumper wire.

THROTTLE BODY 6P CONNECTOR

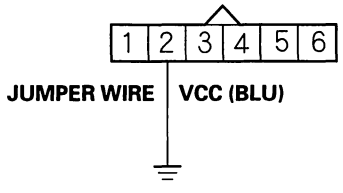

Wire side of female terminals

14. Check for continuity between throttle actuator control module 16P connector terminal No. 11 and body ground.

THROTTLE ACTUATOR CONTROL MODULE 16P CONNECTOR

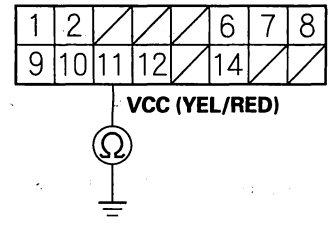

Wire side of female terminals

Is there continuity?

YES—Substitute a known-good throttle actuator control module (see page 11-274), then go to step 17 and recheck. If DTC P0122 is not indicated, replace the original throttle actuator control module (see page 11-274), then go to step 18. If DTC P0122 is indicated, go to step 15.

NO—Repair open in the wire between the throttle body and the throttle actuator control module (VCC line), then go to step 17.

(cont'd)

Protected by AR

DTC Troubleshooting (cont'd)

15. Turn the ignition switch OFF.
16. Replace the throttle body (see page 11-367).
17. Reconnect all connectors.
18. Turn the ignition switch ON (II).
19. Reset the ECM/PCM with the HDS.
20. Do the ECM/PCM idle learn procedure (see page 11-316).
21. Check for Temporary DTCs or DTCs with the HDS.

    Are any Temporary DTCs or DTCs indicated?

    YES—If DTC P0122 is indicated, check for poor connections or loose terminals at the throttle body and the throttle actuator control module, then go to step 1. If any other Temporary DTCs or DTCs are indicated, go to the indicated DTC's troubleshooting.

    NO—Troubleshooting is complete.■

BACK

Protected by AR

DTC P0123: TP Sensor A Circuit High Voltage (2006 model)

1. Turn the ignition switch ON (II).
2. Clear the DTC with the HDS.
3. Check TP SENSOR A in the DATA LIST with the HDS.

   Is there about 4.8 V or more?

   YES—Go to step 4.

   NO—Intermittent failure, system is OK at this time. Check for poor connections or loose terminals at the throttle body and the throttle actuator control module. ■
4. Check for Temporary DTCs or DTCs with the HDS.

   Are DTC P0123 and P0223 indicated at the same time?

   YES—Go to step 11.

   NO—Go to step 5.
5. Measure voltage between throttle body 6P connector terminal No. 1 and body ground.

THROTTLE BODY 6P CONNECTOR

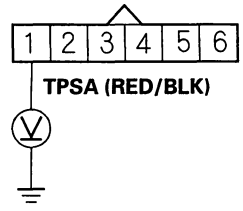

Wire side of female terminals

Is there about 5 V?

YES—Go to step 16.

NO—Go to step 6.

6. Turn the ignition switch OFF.
7. Disconnect the throttle actuator control module 16P connector.
8. Disconnect the throttle body 6P connector.
9. Connect throttle body 6P connector terminal No. 1 to body ground with a jumper wire.

THROTTLE BODY 6P CONNECTOR

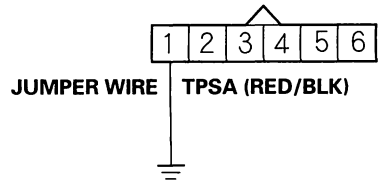

Wire side of female terminals

(cont'd)

Protected by AR

DTC Troubleshooting (cont'd)

10. Check for continuity between throttle actuator control module 16P connector terminal No. 10 and body ground.

THROTTLE ACTUATOR CONTROL MODULE 16P CONNECTOR

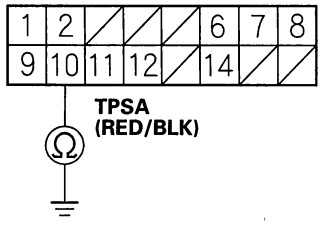

Wire side of female terminals

Is there continuity?

YES—Substitute a known-good throttle actuator control module (see page 11-274), then go to step 18 and recheck. If DTC P0123 is not indicated, replace the original throttle actuator control module (see page 11-274), then go to step 19. If DTC P0123 is indicated, go to step 16.

NO—Repair open in the wire between the throttle body and the throttle actuator control module (TPSA line), then go to step 18.

11. Turn the ignition switch OFF.

12. Disconnect the throttle body 6P connector.

13. Disconnect the throttle actuator control module 16P connector.

14. Connect throttle body 6P connector terminal No. 4 to body ground with a jumper wire.

THROTTLE BODY 6P CONNECTOR

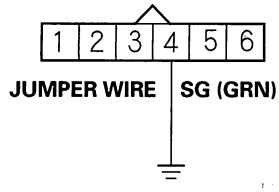

Wire side of female terminals

15. Check for continuity between throttle actuator control module 16P connector terminal No. 9 and body ground.

THROTTLE ACTUATOR CONTROL MODULE 16P CONNECTOR

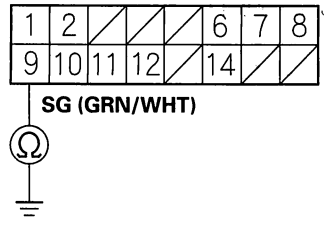

Wire side of female terminals

Is there continuity?

YES—Substitute a known-good throttle actuator control module (see page 11-274), then go to step 18 and recheck. If DTC P0123 is not indicated, replace the original throttle actuator control module (see page 11-274), then go to step 19. If DTC P0123 is indicated, go to step 16.

NO—Repair open in the wire between the throttle body and the throttle actuator control module (SG line), then go to step 18.

BACK

Protected by AR

16. Turn the ignition switch OFF.
17. Replace the throttle body (see page 11-367).
18. Reconnect all connectors.
19. Turn the ignition switch ON (II).
20. Reset the ECM/PCM with the HDS.
21. Do the ECM/PCM idle learn procedure (see page 11-316).
22. Check for Temporary DTCs or DTCs with the HDS.

    Are any Temporary DTCs or DTCs indicated?

    YES—If DTC P0123 is indicated, check for poor connections or loose terminals at the throttle body and the throttle actuator control module, then go to step 1. If any other Temporary DTCs or DTCs are indicated, go to the indicated DTC's troubleshooting.

    NO—Troubleshooting is complete. ■

Protected by AR

DTC Troubleshooting (cont'd)

DTC P0222: TP Sensor B Circuit Low Voltage (2006 model)

1. Turn the ignition switch ON (II).
2. Clear the DTC with the HDS.
3. Check TP SENSOR B in the DATA LIST with the HDS.

   Is there about 0.3 V or less?

   YES—Go to step 4.

   NO—Intermittent failure, system is OK at this time. Check for poor connections or loose terminals at the throttle body and the throttle actuator control module.■
4. Check for Temporary DTCs or DTCs with the HDS.

   Are DTC P0122 and P0222 indicated at the same time?

   YES—Check for poor connections or loose terminals at the throttle body, the throttle actuator control module, and at the ECM/PCM, then go to step 18. If the connections are OK, go to step 9.

   NO—Go to step 5.
5. Turn the ignition switch OFF.
6. Disconnect the throttle body 6P connector.
7. Disconnect the throttle actuator control module 16P connector.
8. Check for continuity between throttle body 6P connector terminal No. 3 and body ground.

THROTTLE BODY 6P CONNECTOR

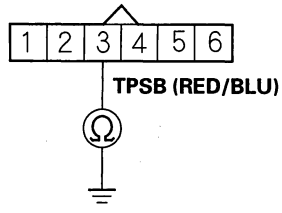

Wire side of female terminals

Is there continuity?

YES—Repair short in the wire between the throttle body and the throttle actuator control module (TPSB line), then go to step 17.

NO—Substitute a known-good throttle actuator control module (see page 11-274), then go to step 17 and recheck. If DTC P0222 is not indicated, replace the original throttle actuator control module (see page 11-274), then go to step 18. If DTC P0222 is indicated, go to step 15.

BACK

Protected by AR

9. Measure voltage between throttle body 6P connector terminal No. 2 and body ground.

THROTTLE BODY 6P CONNECTOR

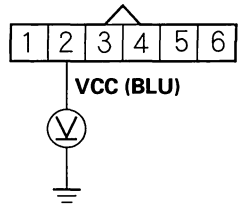

Wire side of female terminals

Is there about 5 V?

YES—Go to step 15.

NO—Go to step 10.

10. Turn the ignition switch OFF.
11. Disconnect the throttle actuator control module 16P connector.
12. Disconnect the throttle body 6P connector.
13. Connect throttle body 6P connector terminal No. 2 to body ground with a jumper wire.

THROTTLE BODY 6P CONNECTOR

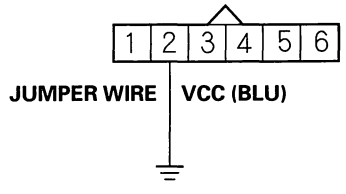

Wire side of female terminals

14. Check for continuity between throttle actuator control module 16P connector terminal No. 11 and body ground.

THROTTLE ACTUATOR CONTROL MODULE 16P CONNECTOR

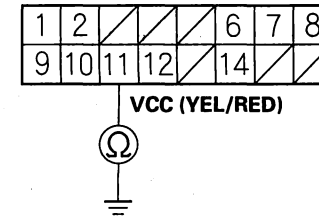

Wire side of female terminals

Is there continuity?

YES—Substitute a known-good throttle actuator control module (see page 11-274), then go to step 17 and recheck. If DTC P0222 is not indicated, replace the original throttle actuator control module (see page 11-274), then go to step 18. If DTC P0222 is indicated, go to step 15.

NO—Repair open in the wire between the throttle body and the throttle actuator control module (VCC line), then go to step 17.

(cont'd)

Protected by AR

DTC Troubleshooting (cont'd)

15. Turn the ignition switch OFF.
16. Replace the throttle body (see page 11-367).
17. Reconnect all connectors.
18. Turn the ignition switch ON (II).
19. Reset the ECM/PCM with the HDS.
20. Do the ECM/PCM idle learn procedure (see page 11-316).
21. Check for Temporary DTCs or DTCs with the HDS.

    Are any Temporary DTCs or DTCs indicated?

    YES—If DTC P0222 is indicated, check for poor connections or loose terminals at the throttle body and the throttle actuator control module, then go to step 1. If any other Temporary DTCs or DTCs are indicated, go to the indicated DTC's troubleshooting.

    NO—Troubleshooting is complete.■

BACK

Protected by AR

DTC P0223: TP Sensor B Circuit High Voltage (2006 model)

1. Turn the ignition switch ON (II).
2. Clear the DTC with the HDS.
3. Check TP SENSOR B in the DATA LIST with the HDS.

   Is there about 4.8 V or more?

   YES—Go to step 4.

   NO—Intermittent failure, system is OK at this time. Check for poor connections or loose terminals at the throttle body and the throttle actuator control module. ■
4. Check for Temporary DTCs or DTCs with the HDS.

   Are DTC P0123 and P0223 indicated at the same time?

   YES—Go to step 11.

   NO—Go to step 5.
5. Measure voltage between throttle body 6P connector terminal No. 3 and body ground.

THROTTLE BODY 6P CONNECTOR

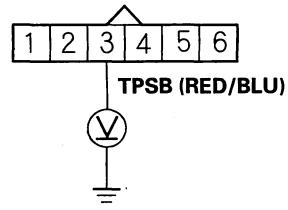

Wire side of female terminals

Is there about 5 V?

YES—Go to step 16.

NO—Go to step 6.

6. Turn the ignition switch OFF.
7. Disconnect the throttle actuator control module 16P connector.
8. Disconnect the throttle body 6P connector.
9. Connect throttle body 6P connector terminal No. 3 to body ground with a jumper wire.

THROTTLE BODY 6P CONNECTOR

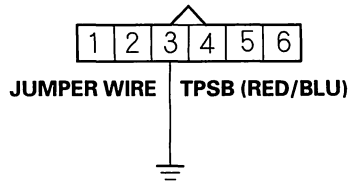

Wire side of female terminals

(cont'd)

Protected by AR

DTC Troubleshooting (cont'd)

10. Check for continuity between throttle actuator control module 16P connector terminal No. 12 and body ground.

THROTTLE ACTUATOR CONTROL MODULE 16P CONNECTOR

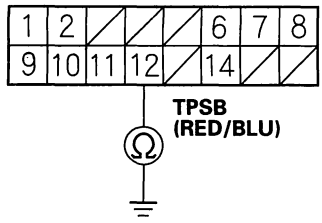

Wire side of female terminals

Is there continuity?

YES—Substitute a known-good throttle actuator control module (see page 11-274), then go to step 18 and recheck. If DTC P0223 is not indicated, replace the original throttle actuator control module (see page 11-274), then go to step 19. If DTC P0223 is indicated, go to step 16.

NO—Repair open in the wire between the throttle body and the throttle actuator control module (TPSB line), then go to step 19.

11. Turn the ignition switch OFF.

12. Disconnect the throttle body 6P connector.

13. Disconnect the throttle actuator control module 16P connector.

14. Connect throttle body 6P connector terminal No. 4 to body ground with a jumper wire.

THROTTLE BODY 6P CONNECTOR

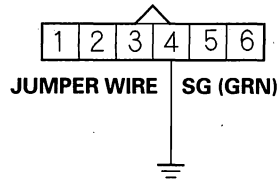

Wire side of female terminals

15. Check for continuity between throttle actuator control module 16P connector terminal No. 9 and body ground.

THROTTLE ACTUATOR CONTROL MODULE 16P CONNECTOR

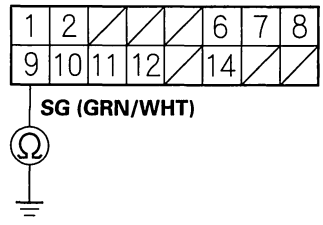

Wire side of female terminals

Is there continuity?

YES—Substitute a known-good throttle actuator control module (see page 11-274), then go to step 18 and recheck. If DTC P0223 is not indicated, replace the original throttle actuator control module (see page 11-274), then go to step 19. If DTC P0223 is indicated, go to step 16.

NO—Repair open in the wire between the throttle body and the throttle actuator control module (SG line), then go to step 19.

BACK

Protected by AR

16. Turn the ignition switch OFF.
17. Replace the throttle body (see page 11-367).
18. Reconnect all connectors.
19. Turn the ignition switch ON (II).
20. Reset the ECM/PCM with the HDS.
21. Do the ECM/PCM idle learn procedure (see page 11-316).
22. Check for Temporary DTCs or DTCs with the HDS.

    Are any Temporary DTCs or DTCs indicated?

    YES—If DTC P0223 is indicated, check for poor connections or loose terminals at the throttle body and the throttle actuator control module, then go to step 1. If any other Temporary DTCs or DTCs are indicated, go to the indicated DTC's troubleshooting.

    NO—Troubleshooting is complete. ■

Protected by AR

DTC Troubleshooting (cont'd)

DTC P1683: Throttle Valve Default Position Spring Performance Problem (2006 model)

⚠CAUTION

Do not insert your fingers into the installed throttle body when you turn the ignition switch ON (II) or while the ignition switch is ON (II). If you do, you will seriously injure your finger if the throttle valve is activated.

1. Turn the ignition switch ON (II).
2. Clear the DTC with the HDS.
3. Start the engine. Hold the engine speed at 3,000 rpm without load (in Park or neutral) until the radiator fan comes on, then let it idle.
4. Turn the ignition switch OFF, and wait 10 seconds.
5. Turn the ignition switch ON (II).
6. Check for Temporary DTCs or DTCs with the HDS.

   Is DTC P1683 indicated?

   YES—Go to step 7.

   NO—Intermittent failure, system is OK at this time. Check for poor connections or loose terminals at the throttle body and the throttle actuator control module.■
7. Turn the ignition switch OFF.
8. Disconnect the intake air duct from the throttle body.
9. Push the throttle valve closed as shown.

   NOTE:
   - Do not operate the ignition switch during the check.
   - Be careful not to pinch your finger during the check.

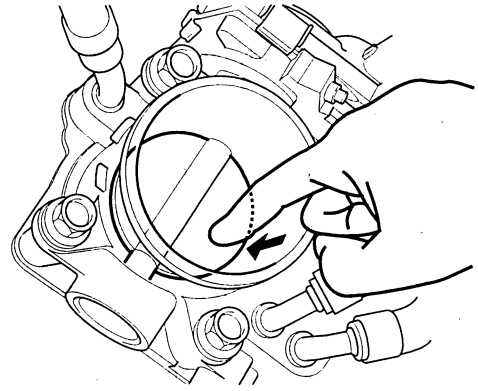

10. Release the throttle valve.

    Does the throttle valve return?

    YES—Clean the throttle body (see page 11-357), then go to step 13.

    NO—Go to step 11.
11. Turn the ignition switch OFF.
12. Replace the throttle body (see page 11-367).
13. Turn the ignition switch ON (II).
14. Reset the ECM/PCM with the HDS.
15. Do the ECM/PCM idle learn procedure (see page 11-316).
16. Turn the ignition switch OFF, and wait 10 seconds.
17. Turn the ignition switch ON (II).
18. Check for Temporary DTCs or DTCs with the HDS.

    Are any Temporary DTCs or DTCs indicated?

    YES—If DTC P1683 is indicated, check for poor connections or loose terminals at the throttle body and the throttle actuator control module, then go to step 1. If any other Temporary DTCs or DTCs are indicated, go to the indicated DTC's troubleshooting.

    NO—Troubleshooting is complete.■

BACK

Protected by AR

DTC P1684: Throttle Valve Return Spring Performance Problem (2006 model)

⚠CAUTION

Do not insert your fingers into the installed throttle body when you turn the ignition switch ON (II) or while the ignition switch is ON (II). If you do, you will seriously injure your finger if the throttle valve is activated.

1. Turn the ignition switch ON (II).
2. Clear the DTC with the HDS.
3. Start the engine. Hold the engine speed at 3,000 rpm without load (in Park or neutral) until the radiator fan comes on, then let it idle.
4. Turn the ignition switch OFF, and wait 10 seconds.
5. Turn the ignition switch ON (II).
6. Check for Temporary DTCs or DTCs with the HDS.

   Is DTC P1684 indicated?

   YES—Go to step 7.

   NO—Intermittent failure, system is OK at this time. Check for poor connections or loose terminals at the throttle body and the throttle actuator control module. ■
7. Turn the ignition switch OFF.
8. Disconnect the intake air duct from the throttle body.
9. Push the throttle valve open as shown.

   NOTE:
   - Do not operate the ignition switch during the check.
   - Be careful not to pinch your finger during the check.

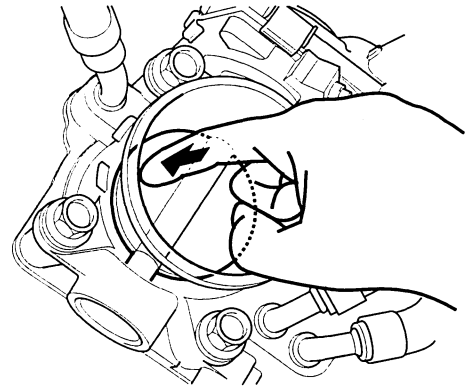

10. Release the throttle valve.

    Does the throttle valve return?

    YES—Clean the throttle body (see page 11-357), then go to step 13.

    NO—Go to step 11.
11. Turn the ignition switch OFF.
12. Replace the throttle body (see page 11-367).
13. Turn the ignition switch ON (II).
14. Reset the ECM/PCM with the HDS.
15. Do the ECM/PCM idle learn procedure (see page 11-316).
16. Turn the ignition switch OFF, and wait 10 seconds.
17. Turn the ignition switch ON (II).
18. Check for Temporary DTCs or DTCs with the HDS.

    Are any Temporary DTCs or DTCs indicated?

    YES—If DTC P1684 is indicated, check for poor connections or loose terminals at the throttle body and the throttle actuator control module, then go to step 1. If any other Temporary DTCs or DTCs are indicated, go to the indicated DTC's troubleshooting.

    NO—Troubleshooting is complete. ■

Protected by AR

DTC Troubleshooting (cont'd)

DTC P2101: Throttle Actuator System Malfunction
(2006 model)

1. Record all freeze data and any on-board snapshot with the HDS.
2. Clear the DTC with the HDS.
3. Do the ETCS TEST in the INSPECTION MENU with the HDS.
4. Check for Temporary DTCs or DTCs with the HDS.

   Is DTC P2101 indicated?

   YES—Go to step 7.

   NO—Go to step 5.
5. Test-drive the vehicle for several minutes in the range of these recorded freeze data parameters:

   - Engine speed
   - Vehicle speed
   - Accelerator position
6. Check for Temporary DTCs or DTCs with the HDS.

   Is DTC P2101 indicated?

   YES—Go to step 7.

   NO—Intermittent failure, system is OK at this time. Check for poor connections or loose terminals at the throttle body and at the throttle actuator control module, then clean the throttle body (see page 11-357). ■
7. Turn the ignition switch OFF.
8. Disconnect the intake air duct from the throttle body.
9. Turn the ignition switch ON (II).
10. Clear the DTC with the HDS.
11. Do the ETCS TEST in the INSPECTION MENU with the HDS.
12. Visually check the throttle valve operation.

    NOTE: Be careful not to pinch your finger during the check.

    Does the throttle valve operate smoothly?

    YES—Clean the throttle body (see page 11-357), then go to step 21 and recheck. If DTC P2101 is indicated, go to step 18.

    NO—Go to step 13.
13. Turn the ignition switch OFF.
14. Disconnect the throttle body 6P connector.
15. Disconnect the throttle actuator control module 16P connector.
16. Connect throttle body 6P connector terminals No. 5 and No. 6 with a jumper wire.

THROTTLE BODY 6P CONNECTOR

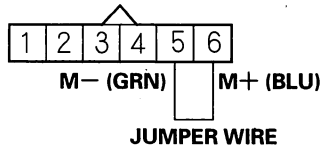

Wire side of female terminals

BACK

Protected by AR

17. Check for continuity between throttle actuator control module 16P connector terminals No. 1 and No. 8.

THROTTLE ACTUATOR CONTROL MODULE 16P CONNECTOR

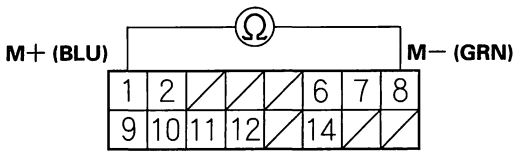

Wire side of female terminals

Is there continuity?

YES—Substitute a known-good throttle actuator control module (see page 11-274), then go to step 20 and recheck. If DTC P2101 is not indicated, replace the original throttle actuator control module (see page 11-274), then go to step 20. If DTC P2101 is indicated, go to step 18.

NO—Repair open in the wires between the throttle body and the throttle actuator control module (motor drive lines), then go to step 20.

18. Turn the ignition switch OFF.
19. Replace the throttle body (see page 11-367).
20. Reconnect all connectors.
21. Turn the ignition switch ON (II).
22. Reset the ECM/PCM with the HDS.
23. Do the ECM/PCM idle learn procedure (see page 11-316).
24. Test-drive the vehicle for several minutes in the range of these recorded freeze data parameters:
    - Engine speed
    - Vehicle speed
    - Accelerator position
25. Check for Temporary DTCs or DTCs with the HDS.

    Are any Temporary DTCs or DTCs indicated?

    YES—If DTC P2101 is indicated, check for poor connections or loose terminals at the throttle body and the throttle actuator control module, then clean the throttle body (see page 11-357), and go to step 1. If any other Temporary DTCs or DTCs are indicated, go to the indicated DTC's troubleshooting.

    NO—Troubleshooting is complete. ■

Protected by AR

DTC Troubleshooting (cont'd)

DTC P2108: Throttle Actuator Control Module Problem
(2006 model)

1. Turn the ignition switch ON (II).
2. Clear the DTC with the HDS.
3. Turn the ignition switch OFF.
4. Turn the ignition switch ON (II).
5. Check for Temporary DTCs or DTCs with the HDS.

   Is DTC P2108 indicated?

   YES—Substitute a known-good throttle actuator control module (see page 11-274), and recheck. If DTC P2108 is not indicated, replace the original throttle actuator control module (see page 11-274). ■

   NO—Intermittent failure, system is OK at this time. Check for poor connections or loose terminals at the throttle body, the throttle actuator control module, and the ECM/PCM. ■

BACK

Protected by AR

DTC P2118: Throttle Actuator Current Range/ Performance Problem (2006 model)

1. Disconnect the throttle actuator control module 16P connector.
2. Measure resistance between throttle actuator control module 16P connector terminals No. 1 and No. 8.

THROTTLE ACTUATOR CONTROL MODULE 16P CONNECTOR

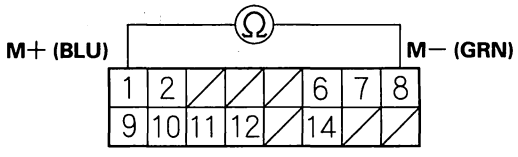

Wire side of female terminals

Is there about 1.0 Ω or less?

YES—Go to step 3.

NO—Substitute a known-good throttle actuator control module (see page 11-274), then go to step 6 and recheck. If DTC P2118 is not indicated, replace the original throttle actuator control module (see page 11-274), then go to step 6.

3. Disconnect the throttle body 6P connector.
4. At the throttle body side, measure resistance between throttle body 6P connector terminals No. 5 and No. 6 with the throttle fully closed.

THROTTLE BODY 6P CONNECTOR

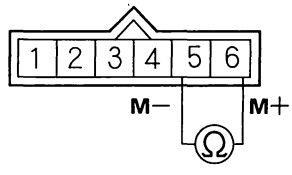

Terminal side of male terminals

Is there about 1.0 Ω or less?

YES—Go to step 5.

NO—Repair short in the wires between the throttle body and throttle actuator control module (motor drive lines), then go to step 6.

5. Replace the throttle body (see page 11-367).
6. Reconnect all connectors.
7. Turn the ignition switch ON (II).
8. Reset the ECM/PCM with the HDS.
9. Do the ECM/PCM idle learn procedure (see page 11-316).
10. Turn the ignition switch OFF.
11. Turn the ignition switch ON (II).
12. Slowly press the accelerator pedal to the floor.
13. Check for Temporary DTCs or DTCs with the HDS.

Are any Temporary DTCs or DTCs indicated?

YES—If DTC P2118 is indicated, check for poor connections or loose terminals at the throttle body and the throttle actuator control module, then go to step 1. If any other Temporary DTCs or DTCs are indicated, go to the indicated DTC's troubleshooting.

NO—Troubleshooting is complete.■

Protected by AR

DTC Troubleshooting (cont'd)

DTC P2122: APP Sensor A (TP Sensor D) Circuit Low Voltage
(2006 model)

1. Turn the ignition switch ON (II).
2. Check APP SENSOR A in the DATA LIST with the HDS.

   Is there about 0.2 V or less?

   YES—Go to step 3.

   NO—Intermittent failure, system is OK at this time. Check for poor connections or loose terminals at APP sensor A and the ECM/PCM. ■
3. Turn the ignition switch OFF.
4. Disconnect APP sensor A/B 6P connector.
5. Turn the ignition switch ON (II).
6. Measure voltage between APP sensor A/B 6P connector terminals No. 5 and No. 6.

APP SENSOR A/B 6P CONNECTOR

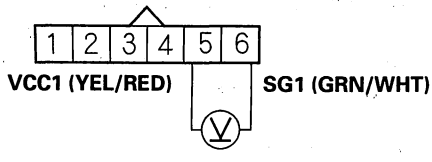

Wire side of female terminals

Is there about 5 V?

YES—Go to step 7.

NO—Go to step 17.

7. Turn the ignition switch OFF.
8. Jump the SCS line with the HDS.
9. Disconnect ECM/PCM connector A (31P).
10. Check for continuity between APP sensor A/B 6P connector terminal No. 4 and body ground.

APP SENSOR A/B 6P CONNECTOR

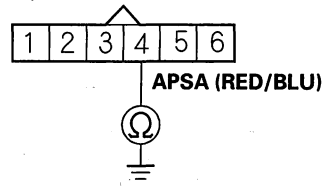

Wire side of female terminals

Is there continuity?

YES—Repair short in the wire between APP sensor A and the ECM/PCM (A26), then go to step 20.

NO—Go to step 11.

11. Connect APP sensor A/B 6P connector terminal No. 4 to body ground with a jumper wire.

APP SENSOR A/B 6P CONNECTOR

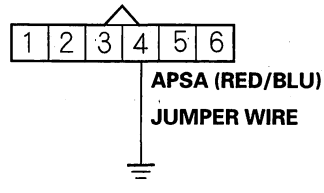

Wire side of female terminals

BACK

Protected by AR

12. Check for continuity between ECM/PCM connector terminal A26 and body ground.

ECM/PCM CONNECTOR A (31P)

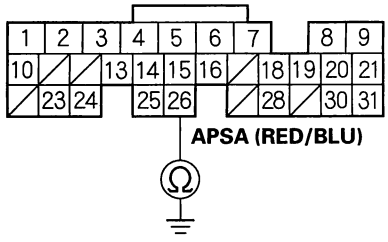

Wire side of female terminals

Is there continuity?

YES—Go to step 13.

NO—Repair open in the wire between APP sensor A and the ECM/PCM (A26), then go to step 20.

13. Reconnect ECM/PCM connector A (31P).

14. Connect APP sensor A/B 6P connector terminals No. 4 and No. 5 with a jumper wire.

APP SENSOR A/B 6P CONNECTOR

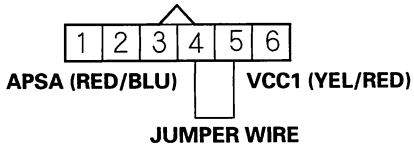

Wire side of female terminals

15. Turn the ignition switch ON (II).

16. Check APP SENSOR A in the DATA LIST with the HDS.

Is there about 0.2 V or less?

YES—Go to step 25.

NO—Go to step 18.

17. Measure voltage between ECM/PCM connector terminals A21and A24.

ECM/PCM CONNECTOR A (31P)

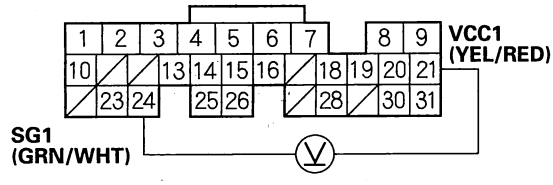

Wire side of female terminals

Is there about 5 V?

YES—Repair open in the wire between APP sensor A and the ECM/PCM (A21), then go to step 20.

NO—Go to step 25.

(cont'd)

Protected by AR

DTC Troubleshooting (cont'd)

18. Turn the ignition switch OFF.
19. Replace APP sensor A/B (see page 11-274).
20. Reconnect all connectors.
21. Turn the ignition switch ON (II).
22. Reset the ECM/PCM with the HDS.
23. Do the ECM/PCM idle learn procedure (see page 11-316).
24. Check for Temporary DTCs or DTCs with the HDS.

    Are any Temporary DTCs or DTCs indicated?

    YES—If DTC P2122 is indicated, check for poor connections or loose terminals at APP sensor A and the ECM/PCM, then go to step 1. If any other Temporary DTCs or DTCs are indicated, go to the indicated DTC's troubleshooting.

    NO—Troubleshooting is complete. ■
25. Update the ECM/PCM if it does not have the latest software, or substitute a known-good ECM/PCM (see page 11-6).
26. Check for Temporary DTCs or DTCs with the HDS.

    Are any Temporary DTCs or DTCs indicated?

    YES—If DTC P2122 is indicated, check for poor connections or loose terminals at APP sensor A and the ECM/PCM, then go to step 1. If any other Temporary DTCs or DTCs are indicated, go to the indicated DTC's troubleshooting.

    NO—If the ECM/PCM was updated, troubleshooting is complete. If the ECM/PCM was substituted, replace the original ECM/PCM (see page 11-227). ■

BACK

Protected by AR

DTC P2123: APP Sensor A (TP Sensor D) Circuit High Voltage (2006 model)

1. Turn the ignition switch ON (II).
2. Check APP SENSOR A in the DATA LIST with the HDS.

   Is there about 4.9 V or more?

   YES—Go to step 3.

   NO—Intermittent failure, system is OK at this time. Check for poor connections or loose terminals at APP sensor A and the ECM/PCM. ■
3. Turn the ignition switch OFF.
4. Disconnect APP sensor A/B 6P connector.
5. Turn the ignition switch ON (II).
6. Measure voltage between APP sensor A/B 6P connector terminals No. 5 and No. 6.

APP SENSOR A/B 6P CONNECTOR

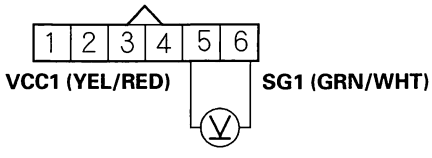

Wire side of female terminals

Is there about 5 V?

YES—Go to step 8.

NO—Go to step 7.

7. Measure voltage between ECM/PCM connector terminals A21 and A24.

ECM/PCM CONNECTOR A (31P)

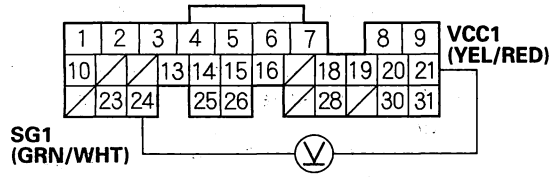

Wire side of female terminals

Is there about 5 V?

YES—Repair open in the wire between APP sensor A and the ECM/PCM (A24), then go to step 10.

NO—Go to step 15.

8. Turn the ignition switch OFF.
9. Replace APP sensor A/B (see page 11-274).
10. Reconnect APP sensor A/B 6P connector.
11. Turn the ignition switch ON (II).
12. Reset the ECM/PCM with the HDS.
13. Do the ECM/PCM idle learn procedure (see page 11-316).
14. Check for Temporary DTCs or DTCs with the HDS.

    Are any Temporary DTCs or DTCs indicated?

    YES—If DTC P2123 is indicated, check for poor connections or loose terminals at APP sensor A and the ECM/PCM, then go to step 1. If any other Temporary DTCs or DTCs are indicated, go to the indicated DTC's troubleshooting.

    NO—Troubleshooting is complete. ■

(cont'd)

Protected by AR

DTC Troubleshooting (cont'd)

15. Update the ECM/PCM if it does not have the latest software, or substitute a known-good ECM/PCM (see page 11-6).

16. Check for Temporary DTCs or DTCs with the HDS.

    Are any Temporary DTCs or DTCs indicated?

    YES—If DTC P2123 is indicated, check for poor connections or loose terminals at APP sensor A and the ECM/PCM, then go to step 1. If any other Temporary DTCs or DTCs are indicated, go to the indicated DTC's troubleshooting.

    NO—If the ECM/PCM was updated, troubleshooting is complete. If the ECM/PCM was substituted, replace the original ECM/PCM (see page 11-227). ■

BACK

Protected by AR

DTC P2127: APP Sensor B (TP Sensor E) Circuit Low Voltage (2006 model)

1. Turn the ignition switch ON (II).
2. Check APP SENSOR B in the DATA LIST with the HDS.

   Is there about 0.2 V or less?

   YES—Go to step 3.

   NO—Intermittent failure, system is OK at this time. Check for poor connections or loose terminals at APP sensor B and the ECM/PCM. ■
3. Turn the ignition switch OFF.
4. Disconnect APP sensor A/B 6P connector.
5. Turn the ignition switch ON (II).
6. Measure voltage between APP sensor A/B 6P connector terminals No. 1 and No. 2.

APP SENSOR A/B 6P CONNECTOR

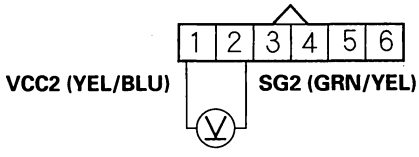

Wire side of female terminals

Is there about 5 V?

YES—Go to step 7.

NO—Go to step 17.

7. Turn the ignition switch OFF.
8. Jump the SCS line with the HDS.
9. Disconnect ECM/PCM connector A (31P).
10. Check for continuity between APP sensor A/B 6P connector terminal No. 3 and body ground.

APP SENSOR A/B 6P CONNECTOR

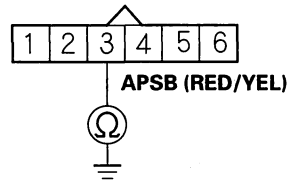

Wire side of female terminals

Is there continuity?

YES—Repair short in the wire between APP sensor B and the ECM/PCM (A25), then go to step 20.

NO—Go to step 11.

11. Connect APP sensor A/B 6P connector terminal No. 3 to body ground with a jumper wire.

APP SENSOR A/B 6P CONNECTOR

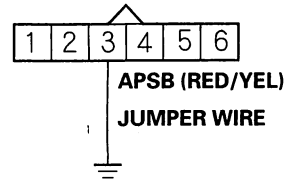

Wire side of female terminals

(cont'd)

Protected by AR

DTC Troubleshooting (cont'd)

12. Check for continuity between ECM/PCM connector terminal A25 and body ground.

ECM/PCM CONNECTOR A (31P)

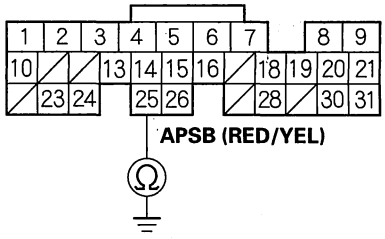

Wire side of female terminals

Is there continuity?

YES—Go to step 13.

NO—Repair open in the wire between APP sensor B and the ECM/PCM (A25), then go to step 20.

13. Reconnect ECM/PCM connector A (31P).

14. Connect APP sensor A/B 6P connector terminals No. 1 and No. 3 with a jumper wire.

APP SENSOR A/B 6P CONNECTOR

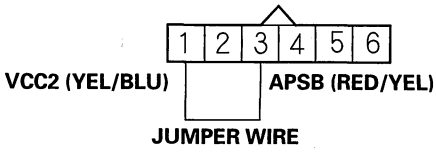

Wire side of female terminals

15. Turn the ignition switch ON (II).

16. Check APP SENSOR B in the DATA LIST with the HDS.

Is there about 0.2 V or less?

YES—Go to step 25.

NO—Go to step 18.

17. Measure voltage between ECM/PCM connector terminals A20 and A23.

ECM/PCM CONNECTOR A (31P)

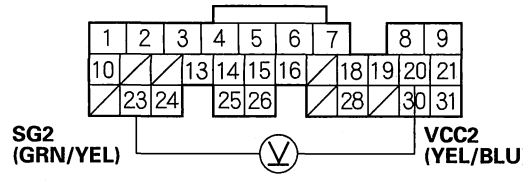

Wire side of female terminals

Is there about 5 V?

YES—Repair open in the wire between APP sensor B and the ECM/PCM (A20), then go to step 20.

NO—Go to step 25.

BACK

Protected by AR

18. Turn the ignition switch OFF.
19. Replace APP sensor A/B (see page 11-274).
20. Reconnect all connectors.
21. Turn the ignition switch ON (II).
22. Reset the ECM/PCM with the HDS.
23. Do the ECM/PCM idle learn procedure (see page 11-316).
24. Check for Temporary DTCs or DTCs with the HDS.

    Are any Temporary DTCs or DTCs indicated?

    YES—If DTC P2127 is indicated, check for poor connections or loose terminals at APP sensor B and the ECM/PCM, then go to step 1. If any other Temporary DTCs or DTCs are indicated, go to the indicated DTC's troubleshooting.

    NO—Troubleshooting is complete. ■
25. Update the ECM/PCM if it does not have the latest software, or substitute a known-good ECM/PCM (see page 11-6).
26. Check for Temporary DTCs or DTCs with the HDS.

    Are any Temporary DTCs or DTCs indicated?

    YES—If DTC P2127 is indicated, check for poor connections or loose terminals at APP sensor B and the ECM/PCM, then go to step 1. If any other Temporary DTCs or DTCs are indicated, go to the indicated DTC's troubleshooting.

    NO—If the ECM/PCM was updated, troubleshooting is complete. If the ECM/PCM was substituted, replace the original ECM/PCM (see page 11-227). ■

Protected by AR

DTC Troubleshooting (cont'd)

DTC P2128: APP Sensor B (TP Sensor E) Circuit High Voltage (2006 model)

1. Turn the ignition switch ON (II).
2. Check APP SENSOR B in the DATA LIST with the HDS.

   Is there about 4.9 V or more?

   YES—Go to step 3.

   NO—Intermittent failure, system is OK at this time. Check for poor connections or loose terminals at APP sensor B and the ECM/PCM. ■
3. Turn the ignition switch OFF.
4. Disconnect APP sensor A/B 6P connector.
5. Turn the ignition switch ON (II).
6. Measure voltage between APP sensor A/B 6P connector terminals No. 1 and No. 2.

APP SENSOR A/B 6P CONNECTOR

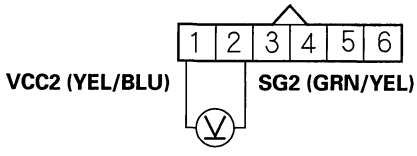

Wire side of female terminals

Is there about 5 V?

YES—Go to step 8.

NO—Go to step 7.

7. Measure voltage between ECM/PCM connector terminals A20 and A23.

ECM/PCM CONNECTOR A (31P)

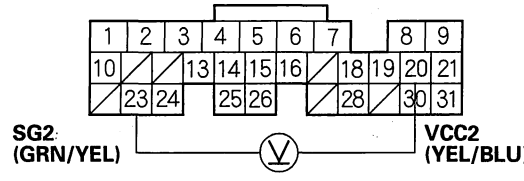

Wire side of female terminals

Is there about 5 V?

YES—Repair open in the wire between APP sensor B and the ECM/PCM (A23), then go to step 10.

NO—Go to step 15.

8. Turn the ignition switch OFF.
9. Replace APP sensor A/B (see page 11-274).
10. Reconnect APP sensor A/B 6P connector.
11. Turn the ignition switch ON (II).
12. Reset the ECM/PCM with the HDS.
13. Do the ECM/PCM idle learn procedure (see page 11-316).
14. Check for Temporary DTCs or DTCs with the HDS.

    Are any Temporary DTCs or DTCs indicated?

    YES—If DTC P2128 is indicated, check for poor connections or loose terminals at APP sensor B and the ECM/PCM, then go to step 1. If any other Temporary DTCs or DTCs are indicated, go to the indicated DTC's troubleshooting.

    NO—Troubleshooting is complete. ■

BACK

Protected by AR

15. Update the ECM/PCM if it does not have the latest software, or substitute a known-good ECM/PCM (see page 11-6).

16. Check for Temporary DTCs or DTCs with the HDS.

    Are any Temporary DTCs or DTCs indicated?

    YES—If DTC P2128 is indicated, check for poor connections or loose terminals at APP sensor B and the ECM/PCM, then go to step 1. If any other Temporary DTCs or DTCs are indicated, go to the indicated DTC's troubleshooting.

    NO—If the ECM/PCM was updated, troubleshooting is complete. If the ECM/PCM was substituted, replace the original ECM/PCM (see page 11-227). ■

Protected by AR

DTC Troubleshooting (cont'd)

DTC P2135: TP Sensor A/B Incorrect Voltage Correlation
(2006 model)

⚠CAUTION

Do not insert your fingers into the installed throttle body when you turn the ignition switch ON (II) or while the ignition switch is ON (II). If you do, you will seriously injure your fingers if the throttle valve is activated.

1. Turn the ignition switch ON (II).
2. Clear the DTC with the HDS.
3. Do the ETCS TEST in the INSPECTION MENU with the HDS.
4. Check for Temporary DTCs or DTCs with the HDS.

   Is DTC P2135 indicated?

   YES—Go to step 5.

   NO—Intermittent failure, system is OK at this time. Check for poor connections or loose terminals at the throttle body and the throttle actuator control module. ■
5. Turn the ignition switch OFF.
6. Disconnect the intake air duct from the throttle body.
7. Turn the ignition switch ON (II).
8. Clear the DTC with the HDS.
9. Visually check the throttle valve operation.

   Does the valve temporarily move to the fully closed position?

   YES—Go to step 15.

   NO—Go to step 10.
10. Turn the ignition switch OFF.
11. Disconnect the throttle actuator control module 16P connector.
12. Check for continuity between throttle actuator control module 16P connector terminals No. 10 and No. 12.

THROTTLE ACTUATOR CONTROL MODULE 16P CONNECTOR

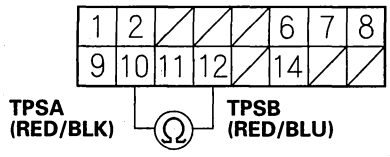

Wire side of female terminals

Is there continuity?

YES—Go to step 13.

NO—Substitute a known-good throttle actuator control module (see page 11-274), then go to step 17 and recheck. If DTC P2135 is not indicated, replace the original throttle actuator control module (see page 11-274), then go to step 18.

BACK

Protected by AR

13. Disconnect the throttle body 6P connector.

14. Check for continuity between throttle actuator control module 16P connector terminals No. 10 and No. 12.

THROTTLE ACTUATOR CONTROL MODULE 16P CONNECTOR

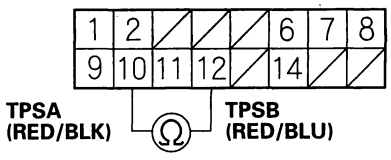

Wire side of female terminals

Is there continuity?

YES—Repair short in the wires between the TPSA line and the TPSB line, then go to step 17.

NO—Go to step 15.

15. Turn the ignition switch OFF.

16. Replace the throttle body (see page 11-367).

17. Reconnect all connectors.

18. Turn the ignition switch ON (II).

19. Reset the ECM/PCM with the HDS.

20. Do the ECM/PCM idle learn procedure (see page 11-316).

21. Check for Temporary DTCs or DTCs with the HDS.

Are any Temporary DTCs or DTCs indicated?

YES—If DTC P2135 is indicated, check for poor connections or loose terminals at the throttle body and the throttle actuator control module, then go to step 1. If any other Temporary DTCs or DTCs are indicated, go to the indicated DTC's troubleshooting.

NO—Troubleshooting is complete.■

Protected by AR

DTC Troubleshooting (cont'd)

DTC P2138: APP Sensor A/B (TP Sensor D/E) Incorrect Voltage Correlation (2006 model)

1. Turn the ignition switch ON (II).
2. Clear the DTC with HDS.
3. Press the accelerator pedal to the floor.
4. Check for Temporary DTCs or DTCs with the HDS.

   Is DTC P2138 indicated?

   YES—Go to step 5.

   NO—Intermittent failure, system is OK at this time. Check for poor connections or loose terminals at APP sensor A/B and the ECM/PCM. ■
5. Check APP SENSOR A and APP SENSOR B in the DATA LIST with the HDS.

   Are they the same voltage?

   YES—Go to step 6.

   NO—Go to step 11.
6. Turn the ignition switch OFF.
7. Jump the SCS line with the HDS.
8. Disconnect APP sensor A/B 6P connector.
9. Disconnect ECM/PCM connector A (31P).
10. Check for continuity between ECM/PCM connector terminals A25 and A26.

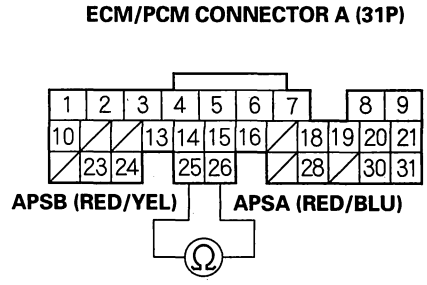

Wire side of female terminals

   Is there continuity?

   YES—Repair short in the wires between the ECM/PCM terminals (A25, A26), then go to step 13.

   NO—Go to step 21.
11. Turn the ignition switch OFF.
12. Replace APP sensor A/B (see page 11-274).
13. Reconnect all connectors.
14. Turn the ignition switch ON (II).
15. Reset the ECM/PCM with the HDS.
16. Do the ECM/PCM idle learn procedure (see page 11-316).
17. Turn the ignition switch OFF.
18. Turn the ignition switch ON (II).
19. Press the accelerator pedal to the floor.

BACK

Protected by AR

20. Check for Temporary DTCs or DTCs with the HDS.

    Are any Temporary DTCs or DTCs indicated?

    YES—If DTC P2138 is indicated, check for poor connections or loose terminals at APP sensor A/B and the ECM/PCM, then go to step 1. If any other Temporary DTCs or DTCs are indicated, go to the indicated DTC's troubleshooting.

    NO—Troubleshooting is complete. ■

21. Update the ECM/PCM if it does not have the latest software, or substitute a known-good ECM/PCM (see page 11-6).

22. Turn the ignition switch OFF.

23. Turn the ignition switch ON (II).

24. Press the accelerator pedal to the floor.

25. Check for Temporary DTCs or DTCs with the HDS.

    Are any Temporary DTCs or DTCs indicated?

    YES—If DTC P2138 is indicated, check for poor connections or loose terminals at APP sensor A/B and the ECM/PCM, then go to step 1. If any other Temporary DTCs or DTCs are indicated, go to the indicated DTC's troubleshooting.

    NO—If the ECM/PCM was updated, troubleshooting is complete. If the ECM/PCM was substituted, replace the original ECM/PCM (see page 11-227). ■

Protected by AR

DTC Troubleshooting (cont'd)

DTC P2176: Throttle Actuator Control System Idle Position Not Learned
(2006 model)

⚠CAUTION

Do not insert your fingers into the installed throttle body when you turn the ignition switch ON (II) or while the ignition switch is ON (II). If you do, you will seriously injure your fingers if the throttle valve is activated.

NOTE: If DTC P2135 is stored at the same time as DTC P2176, troubleshoot DTC P2135 first, then recheck for DTC P2176.

1. Turn the ignition switch ON (II).
2. Clear the DTC with the HDS.
3. Turn the ignition switch OFF.
4. Turn the ignition switch ON (II), and wait 10 seconds.
5. Check for Temporary DTCs or DTCs with the HDS.

   Is DTC P2176 indicated?

   YES—Go to step 6.

   NO—Intermittent failure, system is OK at this time. Check for poor connections or loose terminals at the throttle body and the throttle actuator control module, then clean the throttle body (see page 11-357).■
6. Turn the ignition switch OFF.
7. Disconnect the intake air duct from the throttle body.
8. Turn the ignition switch ON (II).
9. Clear the DTC with the HDS.
10. Do the ETCS TEST in the INSPECTION MENU with the HDS.
11. Visually check the throttle valve operation.

    NOTE: Be careful not to pinch your finger. Keep hands away from the throttle valve.

    Does the throttle valve move to its fully closed position?

    YES—Go to step 12.

    NO—Go to step 13.
12. Check for sludge or carbon on the throttle valve.

    Is there sludge or carbon on the throttle valve?

    YES—Clean the throttle body (see page 11-357), then go to step 21 and recheck.

    NO—Go to step 18.
13. Turn the ignition switch OFF.
14. Disconnect the throttle body 6P connector.
15. Disconnect the throttle actuator control module 16P connector.
16. Connect throttle body 6P connector terminals No. 5 and No. 6 with a jumper wire.

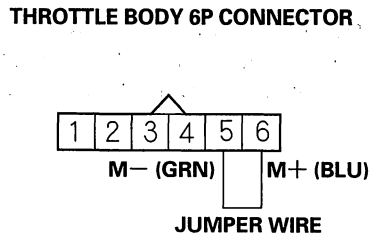

Wire side of female terminals

BACK

Protected by AR

17. Check for continuity between throttle actuator control module 16P connector terminals No. 1 and No. 8.

THROTTLE ACTUATOR CONTROL MODULE 16P CONNECTOR

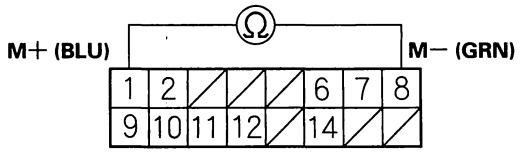

Wire side of female terminals

Is there continuity?

YES—Substitute a known-good throttle actuator control module (see page 11-274), then go to step 20 and recheck. If DTC P2176 is not indicated, replace the original throttle actuator control module (see page 11-274), then go to step 20.

NO—Repair open in the wires between the throttle body and the throttle actuator control module (motor drive lines), then go to step 20.

18. Turn the ignition switch OFF.
19. Replace the throttle body (see page 11-367).
20. Reconnect all connectors.
21. Turn the ignition switch ON (II).
22. Reset the ECM/PCM with the HDS.
23. Do the ECM/PCM idle learn procedure (see page 11-316).
24. Turn the ignition switch OFF.
25. Turn the ignition switch ON (II), and wait 10 seconds.
26. Check for Temporary DTCs or DTCs with the HDS.

Are any Temporary DTCs or DTCs indicated?

YES—If DTC P2176 is indicated, check for poor connections or loose terminals at the throttle body and the throttle actuator control module, then clean the throttle body (see page 11-357), and go to step 1. If any other Temporary DTCs or DTCs are indicated, go to the indicated DTC's troubleshooting.

NO—Troubleshooting is complete.■

Protected by AR

DTC Troubleshooting (cont'd)

DTC P2552: Throttle Actuator Control Module Relay Malfunction
(2006 model)

1. Turn the ignition switch ON (II).
2. Clear the DTC with the HDS.
3. Do the ETCS TEST in the INSPECTION MENU with the HDS.

   Is the RELAY Circuit OK?

   YES—Intermittent failure, system is OK at this time. Check for poor connections or loose terminals at the throttle actuator control module relay, the throttle actuator control module, and the ECM/PCM.■

   NO—Go to step 4.
4. Turn the ignition switch OFF.
5. Jump the SCS line with the HDS.
6. Remove the throttle actuator control module relay (A).

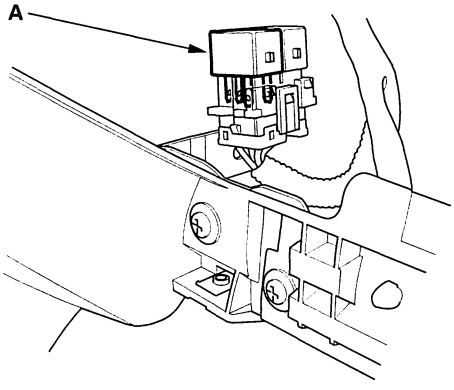

7. Disconnect ECM/PCM connector D (17P).
8. Check for continuity between ECM/PCM connector terminal D15 and body ground.

ECM/PCM CONNECTOR D (17P)

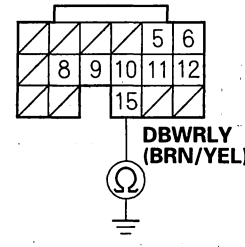

Wire side of female terminals

Is there continuity?

YES—Repair short in the wire between the throttle actuator control module relay and the ECM/PCM (D15), then go to step 10.

NO—Go to step 9.

9. Test the throttle actuator control module relay (see page 22-79).

   Is the relay OK?

   YES—Go to step 17.

   NO—Replace the throttle actuator control module relay, then go to step 10.

BACK

Protected by AR

10. Reconnect ECM/PCM connector D (17P).
11. Turn the ignition switch ON (II).
12. Reset the ECM/PCM with the HDS.
13. Do the ECM/PCM idle learn procedure (see page 11-316).
14. Turn the ignition switch OFF.
15. Turn the ignition switch ON (II), and wait 10 seconds.
16. Check for Temporary DTCs or DTCs with the HDS.

    Are any Temporary DTCs or DTCs indicated?

    YES—If DTC P2552 is indicated, check for poor connections or loose terminals at the throttle actuator control module relay, the throttle actuator control module, and the ECM/PCM, then go to step 1. If any other Temporary DTCs or DTCs are indicated, go to the indicated DTC's troubleshooting.

    NO—Troubleshooting is complete. ■
17. Update the ECM/PCM if it does not have the latest software, or substitute a known-good ECM/PCM (see page 11-6).
18. Check for Temporary DTCs or DTCs with the HDS.

    Are any Temporary DTCs or DTCs indicated?

    YES—If DTC P2552 is indicated, check for poor connections or loose terminals at the throttle actuator control module relay, the throttle actuator control module, and the ECM/PCM, then go to step 1. If any other Temporary DTCs or DTCs are indicated, go to the indicated DTC's troubleshooting.

    NO—If the ECM/PCM was updated, troubleshooting is complete. If the ECM/PCM was substituted, replace the original ECM/PCM (see page 11-227). ■

Protected by AR

DTC Troubleshooting (cont'd)

DTC U0107: Lost Communication With Throttle Actuator Control Module (2006 model)

1. Turn the ignition switch ON (II).
2. Clear the DTC with the HDS.
3. Check for Temporary DTCs or DTCs with the HDS.

   Is DTC U0107 indicated?

   YES—Check for poor connections or loose terminals at the throttle body, the throttle actuator control module, and the ECM/PCM, then go to step 50. If the connections are OK, go to step 6.

   NO—Go to step 4.
4. Start the engine.
5. Check for Temporary DTCs or DTCs with the HDS.

   Is DTC U0107 indicated?

   YES—Go to step 46.

   NO—Intermittent failure, system is OK at this time. Check for poor connections or loose terminals at the throttle body, the throttle actuator control module relay, the throttle actuator control module, and the ECM/PCM. ■
6. Clear the DTC with the HDS.
7. Turn the ignition switch OFF.
8. Disconnect the intake air duct from the throttle body.
9. Press the accelerator pedal to the floor.
10. Turn the ignition switch ON (II).
11. Check the throttle valve operation.

    Does it open after the throttle valve closes?

    YES—Go to step 12.

    NO—Go to step 13.
12. Check the throttle valve again.

    Does the throttle valve open fully?

    YES—Go to step 40.

    NO—Go to step 34.
13. Turn the ignition switch OFF.
14. Disconnect the throttle actuator control module 16P connector.
15. Check for continuity between throttle actuator control module 16P connector terminal No. 7 and body ground.

THROTTLE ACTUATOR CONTROL MODULE 16P CONNECTOR

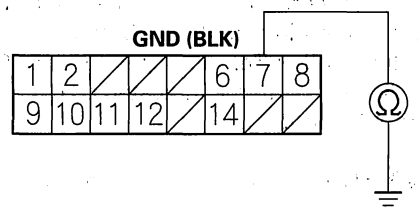

Wire side of female terminals

Is there continuity?

YES—Go to step 16.

NO—Repair open in the wire between the throttle body, the throttle actuator control module, and G101, then go to step 50.

BACK

Protected by AR

16. Remove the throttle actuator control module relay (A).

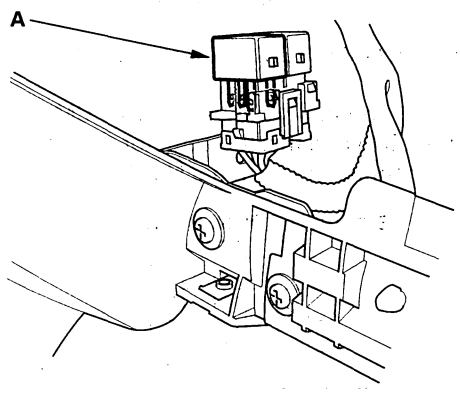

17. Measure voltage between throttle actuator control module relay 4P connector terminal No. 1 and body ground.

THROTTLE ACTUATOR CONTROL MODULE RELAY 4P CONNECTOR

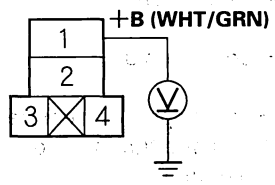

Wire side of female terminals

Is there battery voltage?

YES—Go to step 19.

NO—Go to step 18.

18. Check the No. 1 THROTTLE ACTUATOR CONTROL (15 A) fuse in the under-dash fuse/relay box.

Is the fuse OK?

YES—Repair open in the wire between the throttle actuator control module relay (+B line) and the No. 1 THROTTLE ACTUATOR CONTROL (15 A) fuse, then go to step 50.

NO—Repair short in the wire between the throttle actuator control module relay (+B line) and the No. 1 THROTTLE ACTUATOR CONTROL (15 A) fuse. Also replace the fuse, then go to step 50.

19. Install the throttle actuator control module relay.

20. Measure voltage between throttle actuator control module 16P connector terminal No. 2 and body ground.

21. Turn the ignition switch ON (II).

THROTTLE ACTUATOR CONTROL MODULE 16P CONNECTOR

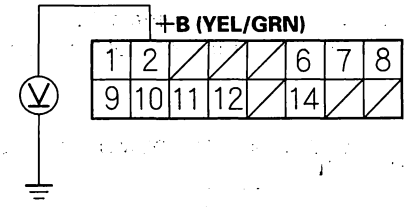

Wire side of female terminals

Is there battery voltage for about 2 seconds?

YES—Substitute a known-good throttle actuator control module (see page 11-274), then go to step 50 and recheck. If DTC U0107 is not indicated, replace the original throttle actuator control module (see page 11-274), then go to step 50.

NO—Go to step 22.

22. Turn the ignition switch OFF.

23. Remove the throttle actuator control module relay (A).

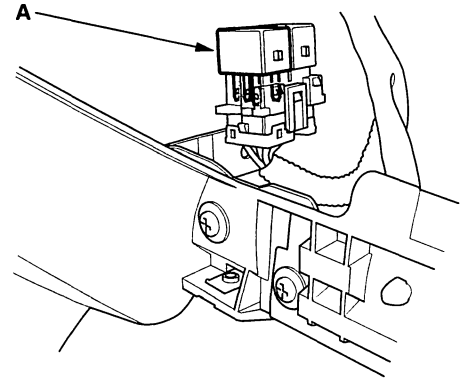

(cont'd)

Protected by AR

DTC Troubleshooting (cont'd)

24. Check the throttle actuator control module relay (see page 22-79).

    Is the throttle actuator control module relay OK?

    YES—Go to step 25.

    NO—Replace the throttle actuator control module relay, then go to step 50.

25. Turn the ignition switch ON (II).

26. Measure voltage between throttle actuator control module relay 4P connector terminal No. 4 and body ground.

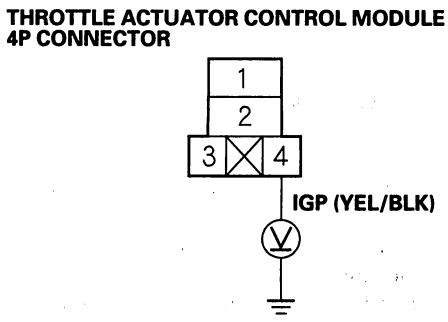

Wire side of female terminals

Is there battery voltage?

YES—Go to step 27.

NO—Repair open in the wire between the throttle actuator control module relay and PGM-FI main relay 1 (FI MAIN), then go to step 50.

27. Turn the ignition switch OFF.

28. Jump the SCS line with the HDS.

29. Disconnect ECM/PCM connector D (17P).

30. Check for continuity between ECM/PCM connector terminal D15 and throttle actuator control module relay 4P connector terminal No. 3.

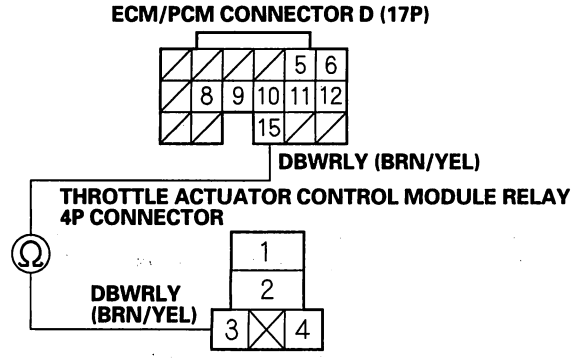

Wire side of female terminals

Is there continuity?

YES—Go to step 31.

NO—Repair open in the wire between the ECM/PCM (D15) and the throttle actuator control module relay, then go to step 50.

BACK

Protected by AR

31. Check for continuity between throttle actuator control module 16P connector terminal No. 2 and body ground.

THROTTLE ACTUATOR CONTROL MODULE 16P CONNECTOR

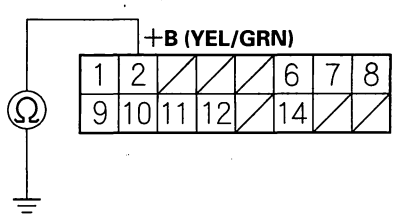

Wire side of female terminals

Is there continuity?

YES—Repair short in the wire between the throttle actuator control module and the throttle actuator control module relay (+B line), then go to step 50.

NO—Go to step 32.

32. Connect throttle actuator control module relay 4P connector terminal No. 2 to body ground with a jumper wire.

THROTTLE ACTUATOR CONTROL MODULE RELAY 4P CONNECTOR

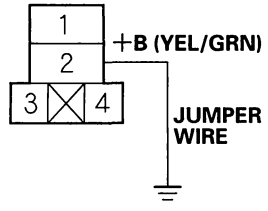

Wire side of female terminals

33. Check for continuity between throttle actuator control module 16P connector terminal No. 2 and body ground.

THROTTLE ACTUATOR CONTROL MODULE 16P CONNECTOR

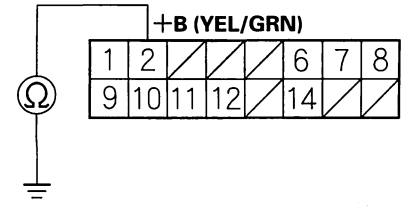

Wire side of female terminals

Is there continuity?

YES—Go to step 56.

NO—Repair open in the wire between the throttle actuator control module and the throttle actuator control module relay (+B line), then go to step 50.

34. Turn the ignition switch OFF.

35. Jump the SCS line with the HDS.

36. Disconnect the throttle actuator control module 16P connector.

37. Disconnect ECM/PCM connector B (24P).

(cont'd)

Protected by AR

DTC Troubleshooting (cont'd)

38. Check for continuity between ECM connector terminal B19 and body ground.

ECM/PCM CONNECTOR B (24P)

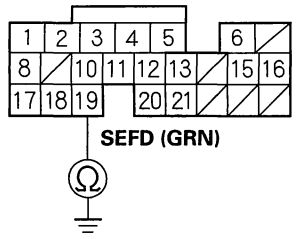

Wire side of female terminals

Is there continuity?

YES—Repair short in the wire between the ECM/PCM (B19) and the throttle actuator control module, then go to step 50.

NO—Go to step 39.

39. Check for continuity between ECM/PCM connector terminal B19 and throttle actuator control module 16P connector terminal No. 6.

ECM/PCM CONNECTOR B (24P)

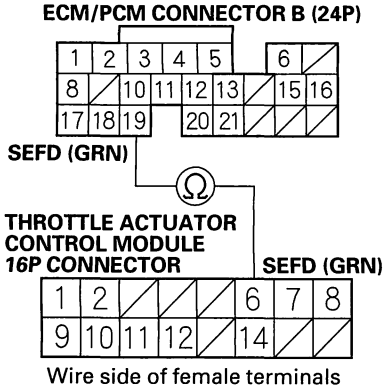

Wire side of female terminals

Is there continuity?

YES—Substitute a known-good throttle actuator control module (see page 11-274), then go to step 50 and recheck. If DTC U0107 is not indicated, replace the original throttle actuator control module (see page 11-274), then go to step 50. If DTC U0107 is indicated, go to step 56.

NO—Repair open in the wire between the ECM/PCM (B19) and the throttle actuator control module, then go to step 50.

40. Turn the ignition switch OFF.

41. Jump the SCS line with the HDS.

42. Disconnect the throttle actuator control module 16P connector.

43. Disconnect ECM/PCM connector B (24P).

44. Check for continuity between ECM/PCM connector terminal B20 and body ground.

ECM/PCM CONNECTOR B (24P)

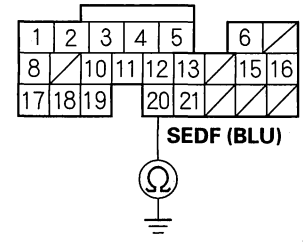

Wire side of female terminals

Is there continuity?

YES—Repair short in the wire between the ECM/PCM (B20) and the throttle actuator control module, then go to step 50.

NO—Go to step 45.

BACK

Protected by AR

45. Check for continuity between ECM/PCM connector terminal B20 and throttle actuator control module 16P connector terminal No. 14.

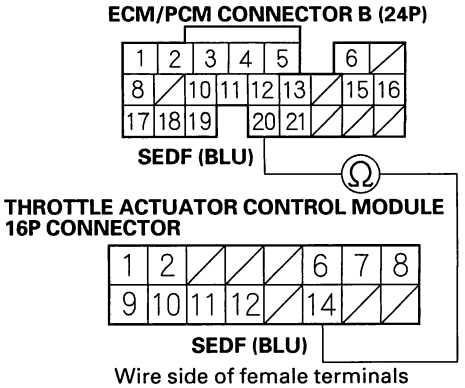

Wire side of female terminals

Is there continuity?

YES—Substitute a known-good throttle actuator control module (see page 11-274), then go to step 50 and recheck. If DTC U0107 is not indicated, replace the original throttle actuator control module (see page 11-274), then go to step 50. If DTC U0107 is indicated, go to step 56.

NO—Repair open in the wire between the ECM/PCM (B20) and the throttle actuator control module, then go to step 50.

46. Turn the ignition switch OFF.

47. Jump the SCS line with the HDS.

48. Disconnect ECM/PCM connector A (31P).

49. Check for continuity between body ground and ECM/PCM connector terminals A8 and A9 individually.

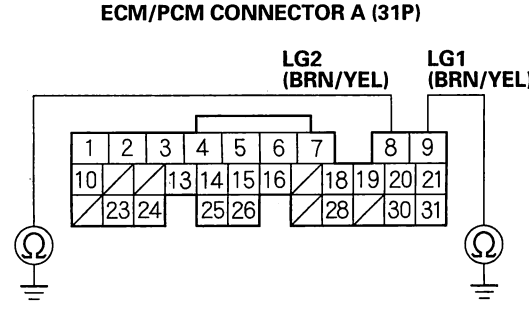

Wire side of female terminals

Is there continuity?

YES—Check for poor connections or loose terminals at the throttle body, the throttle actuator control module relay, the throttle actuator control module, and the ECM/PCM. Then reconnect all connectors, and go to step 6.

NO—Repair open in the wire between the ECM/PCM (A8, A9) and G101, then go to step 50.

(cont'd)

Protected by AR

DTC Troubleshooting (cont'd)

50. Turn the ignition switch OFF.
51. Reconnect all connectors.
52. Turn the ignition switch ON (II).
53. Reset the ECM/PCM with the HDS.
54. Do the ECM/PCM idle learn procedure (see page 11-316).
55. Check for Temporary DTCs or DTCs with the HDS.

    Are any Temporary DTCs or DTCs indicated?

    YES—If DTC U0107 is indicated, check for poor connections or loose terminals at the throttle body, the throttle actuator control module relay, the throttle actuator control module, and the ECM/PCM, then go to step 1. If any other Temporary DTCs or DTCs are indicated, go to the indicated DTC's troubleshooting.

    NO—Troubleshooting is complete. ■
56. Update the ECM/PCM if it does not have the latest software, or substitute a known-good ECM/PCM (see page 11-6).
57. Check for Temporary DTCs or DTCs with the HDS.

    Are any Temporary DTCs or DTCs indicated?

    YES—If DTC U0107 is indicated, check for poor connections or loose terminals at the throttle body, the throttle actuator control module relay, the throttle actuator control module, and the ECM/PCM, then go to step 1. If any other Temporary DTCs or DTCs are indicated, go to the indicated DTC's troubleshooting.

    NO—If the ECM/PCM was updated, troubleshooting is complete. If the ECM/PCM was substituted, replace the original ECM/PCM (see page 11-227). ■

BACK

Protected by AR

APP Sensor Signal Inspection

NOTE:
- Check for Temporary DTCs or DTCs with the HDS before doing this procedure. If any DTCs are indicated, troubleshoot them first, then do this procedure.
- Press the accelerator pedal several times to check its operation. If it does not operate properly, check the pedal, the throttle cable, and the APP sensor individually. If you find a problem in one of them, replace the part(s) that caused the problem.

1. Connect the HDS to the data link connector (DLC) (A) located under the driver's side of the dashboard.

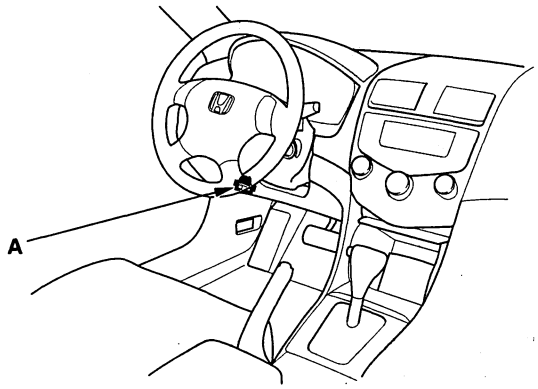

2. Turn the ignition switch ON (II).

3. Make sure the accelerator pedal is not pressed, then check the APP SENSOR in the DATA LIST with the HDS.

   - If it is below 2 %, the APP sensor is OK.
   - If it is above 2 %, adjust the throttle cable (see page 11-365), then go to step 4.

4. Make sure the accelerator pedal is not pressed, then check the APP SENSOR in the DATA LIST with the HDS.

   - If it is below 2 %, the APP sensor is OK.
   - If it is above 2 %, update the ECM/PCM if it does not have the latest software, or substitute a known-good ECM/PCM (see page 11-6), then go to step 5.

5. Make sure the accelerator pedal is not pressed, then check the APP SENSOR in the DATA LIST with the HDS.

   - If it is below 2 %, the APP sensor is OK.
   - If it is above 2 %, replace the APP sensor (see page 11-274), then go to step 1.

Protected by AR

APP Sensor Replacement

1. Remove the throttle cable (see page 11-365).
2. Disconnect the accelerator pedal position (APP) sensor 6P connector (A).

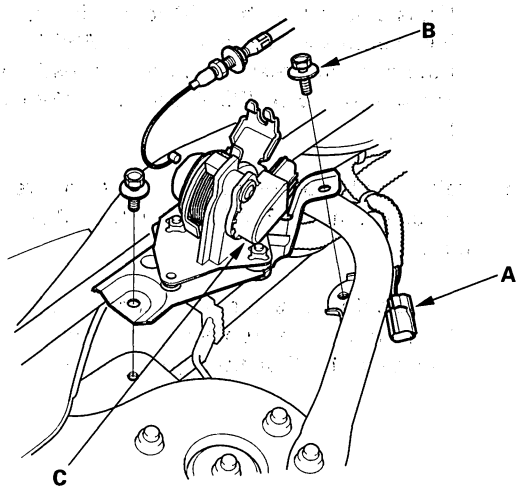

3. Remove the bolts (B) and the APP sensor (C).
4. Install the sensor in the reverse order of removal.

Throttle Actuator Control Module Replacement

1. Remove the right kick panel; 2-door (see page 20-90), 4-door (see page 20-91).
2. Disconnect the throttle actuator control module 16P connector (A).

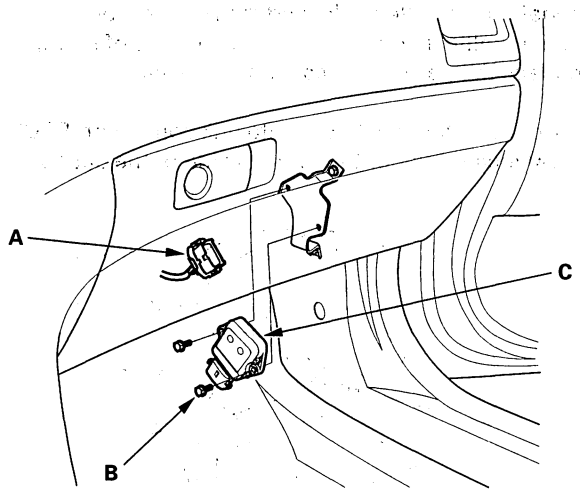

3. Remove the bolts (B) and the throttle actuator control module (C).
4. Install the control module in the reverse order of removal.

BACK

Protected by AR

Component Location Index

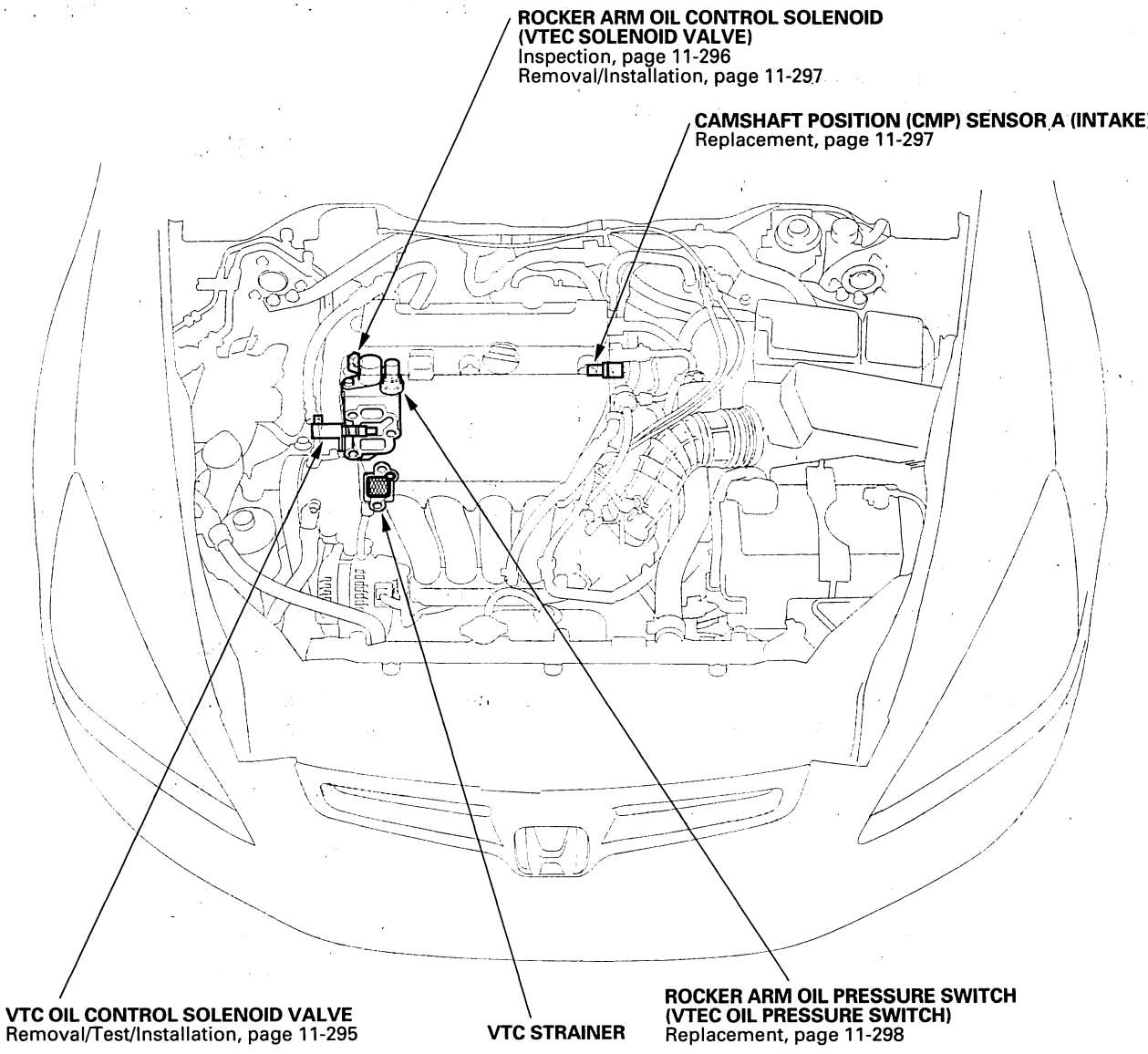

*: This illustration shows 2003-2005 models.

Protected by AR

DTC Troubleshooting

DTC P0010: VTC Oil Control Solenoid Valve Malfunction

1. Turn the ignition switch ON (II).
2. Clear the DTC with the HDS.
3. Start the engine. Hold the engine speed at 3,000 rpm without load (in Park or neutral) until the radiator fan comes on, then let it idle.
4. Do the VTC TEST in the INSPECTION MENU with the HDS.
5. Check for Temporary DTCs or DTCs with the HDS.

   Is DTC P0010 indicated?

   YES—Go to step 6.

   NO—Intermittent failure, system is OK at this time. Check for poor connections or loose terminals at the VTC oil control solenoid valve and the ECM/PCM. ■
6. Turn the ignition switch OFF.
7. Disconnect the VTC oil control solenoid valve 2P connector.
8. Measure resistance between VTC oil control solenoid valve 2P connector terminals No. 1 and No. 2.

VTC OIL CONTROL SOLENOID VALVE 2P CONNECTOR

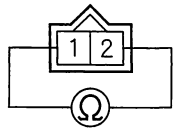

Terminal side of male terminals

Is there 6.75—8.25 Ω at room temperature?

YES—Go to step 9.

NO—Go to step 15.

9. Check for continuity between VTC oil control solenoid valve 2P connector terminal No. 1 and body ground.

VTC OIL CONTROL SOLENOID VALVE 2P CONNECTOR

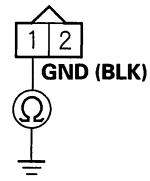

Wire side of female terminals

Is there continuity?

YES—Go to step 10.

NO—Repair open in the wire between the VTC oil control solenoid valve and G101, then go to step 16.

10. Jump the SCS line with the HDS.
11. Disconnect ECM/PCM connector B (24P).
12. Check for continuity between ECM/PCM connector terminal B1 and body ground.

ECM/PCM CONNECTOR B (24P)

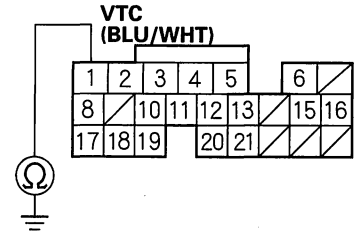

Wire side of female terminals

Is there continuity?

YES—Repair short in the wire between the ECM/PCM (B1) and the VTC oil control solenoid valve, then go to step 16.

NO—Go to step 13.

BACK

Protected by AR

13. Connect VTC oil control solenoid valve 2P connector terminal No. 2 to body ground with a jumper wire.

VTC OIL CONTROL SOLENOID VALVE 2P CONNECTOR

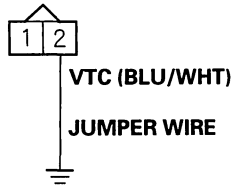

Wire side of female terminals

14. Check for continuity between ECM/PCM connector terminal B1 and body ground.

ECM/PCM CONNECTOR B (24P)

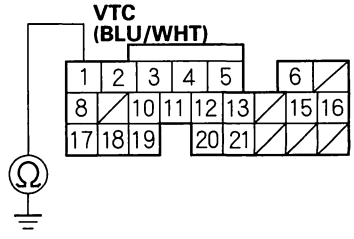

Wire side of female terminals

Is there continuity?

YES—Go to step 23.

NO—Repair open in the wire between the ECM/PCM (B1) and the VTC oil control solenoid valve, then go to step 16.

15. Replace the VTC oil control solenoid valve (see page 11-295).

16. Reconnect all connectors.

17. Turn the ignition switch ON (II).

18. Reset the ECM/PCM with the HDS.

19. Do the ECM/PCM idle learn procedure (see page 11-316).

20. Do the VTC TEST in the INSPECTION MENU with the HDS.

21. Check for Temporary DTCs or DTCs with the HDS.

Are any Temporary DTCs or DTCs indicated?

YES—If DTC P0010 is indicated, check for poor connections or loose terminals at the VTC oil control solenoid valve and the ECM/PCM, then go to step 1. If any other Temporary DTCs or DTCs are indicated, go to the indicated DTC's troubleshooting.

NO—Go to step 22.

(cont'd)

Protected by AR

DTC Troubleshooting (cont'd)

22. Monitor the OBD STATUS for DTC P0010 in the DTCs MENU with the HDS.

    Does the screen indicate PASSED?

    YES—Troubleshooting is complete. ■

    NO—If the screen indicates FAILED, go to step 1 and recheck. If the screen indicates NOT COMPLETED, go to step 20 and recheck.

23. Update the ECM/PCM if it does not have the latest software, or substitute a known-good ECM/PCM (see page 11-6).

24. Do the VTC TEST in the INSPECTION MENU with the HDS.

25. Check for Temporary DTCs or DTCs with the HDS.

    Are any Temporary DTCs or DTCs indicated?

    YES—If DTC P0010 is indicated, check for poor connections or loose terminals at the VTC oil control solenoid valve and the ECM/PCM, then go to step 1. If any other Temporary DTCs or DTCs are indicated, go to the indicated DTC's troubleshooting.

    NO—If the ECM/PCM was updated, troubleshooting is complete. If the ECM/PCM was substituted, replace the original ECM/PCM (see page 11-227). ■

BACK

Protected by AR

DTC P0011: VTC System Malfunction

1. Turn the ignition switch ON (II).
2. Clear the DTC with the HDS.
3. Start the engine.
4. Watch the low oil pressure indicator with the engine running.

   Is the low oil pressure indicator on?

   YES—Check the oil pressure (see page 8-6), then go to step 15.

   NO—Go to step 5.
5. Do the VTC TEST in the INSPECTION MENU with the HDS.

   Is the result OK?

   YES—Go to step 6.

   NO—Go to step 9.
6. Test-drive at a steady speed between 19—38 mph (30—60 km/h) for 10 minutes.
7. Check the VTC STATUS in the DATA LIST with the HDS.

   Does it indicate ON?

   YES—Go to step 8.

   NO—Go to step 6 and recheck.
8. Monitor the OBD STATUS for DTC P0011 in the DTCs MENU with the HDS.

   Does the screen indicate FAILED?

   YES—Go to step 9.

   NO—If the screen indicates PASSED, intermittent failure, system is OK at this time. If the screen indicates NOT COMPLETED, go to step 5 and recheck.
9. Turn the ignition switch OFF.
10. Remove the power steering pump (see page 17-14) and the auto-tensioner (see page 4-38).
11. Remove the VTC strainer (A), and check it for clogging.

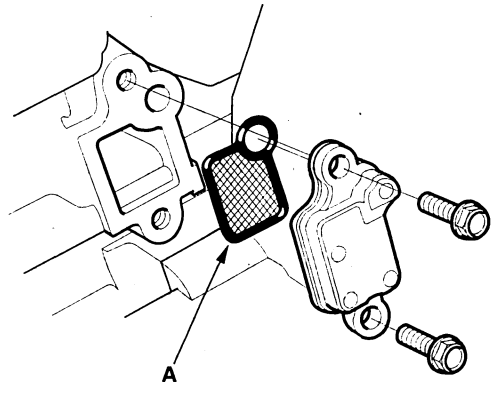

   Is the strainer OK?

   YES—Go to step 12.

   NO—Clean the VTC strainer, replace the engine oil filter and the engine oil, then go to step 14.
12. Test the VTC oil control solenoid valve (see page 11-295).

   Is the VTC oil control solenoid valve OK?

   YES—Go to step 13.

   NO—Replace the VTC oil control solenoid valve (see page 11-295), then go to step 14.

(cont'd)

Protected by AR

DTC Troubleshooting (cont'd)

13. Inspect the VTC actuator (see page 6-8).

    Is the VTC actuator OK?

    YES—Go to step 14.

    NO—Replace the VTC actuator (see page 6-31), then go to step 14.

14. Turn the ignition switch ON (II).

15. Reset the ECM/PCM with the HDS.

16. Clear the CKP pattern with the HDS.

17. Do the ECM/PCM idle learn procedure (see page 11-316).

18. Do the CKP pattern learn procedure (see page 11-4).

19. Do the VTC TEST in the INSPECTION MENU with the HDS.

20. Check for Temporary DTCs or DTCs with the HDS.

    Are any Temporary DTCs or DTCs indicated?

    YES—If DTC P0011 is indicated, check for poor connections or loose terminals at the VTC oil control solenoid valve and the ECM/PCM, then go to step 1. If any other Temporary DTCs or DTCs are indicated, go to the indicated DTC's troubleshooting.

    NO—Go to step 21.

21. Monitor the OBD STATUS for DTC P0011 in the DTCs MENU with the HDS.

    Does the screen indicate PASSED?

    YES—Troubleshooting is complete. ■

    NO—If the screen indicates FAILED, check for poor connections or loose terminals at the VTC oil control solenoid valve and the ECM/PCM, then go to step 1. If the screen indicates NOT COMPLETED, go to step 19 and recheck.

BACK

Protected by AR

DTC P0340: CMP Sensor A No Signal

1. Turn the ignition switch ON (II).
2. Clear the DTC with the HDS.
3. Start the engine.
4. Check for Temporary DTCs or DTCs with the HDS.

   Is DTC P0340 indicated?

   YES—Go to step 5.

   NO—Intermittent failure, system is OK at this time. Check for poor connections or loose terminals at CMP sensor A and the ECM/PCM. ■
5. Turn the ignition switch OFF.
6. Disconnect the CMP sensor A 3P connector.
7. Turn the ignition switch ON (II).
8. Measure voltage between CMP sensor A 3P connector terminal No. 3 and body ground.

CMP SENSOR A 3P CONNECTOR

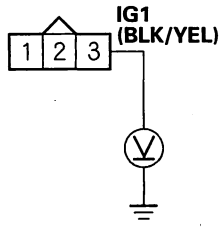

Wire side of female terminals

Is there battery voltage?

YES—Go to step 9.

NO—Repair open in the wire between the No. 18 ACG (15 A) fuse in the under-dash fuse/relay box and CMP sensor A, then go to step 18.

9. Measure voltage between CMP sensor A 3P connector terminal No. 1 and body ground.

CMP SENSOR A 3P CONNECTOR

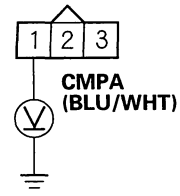

Wire side of female terminals

Is there about 5 V?

YES—Go to step 10.

NO—Go to step 11.

10. Measure voltage between CMP sensor A 3P connector terminals No. 2 and No. 3.

CMP SENSOR A 3P CONNECTOR

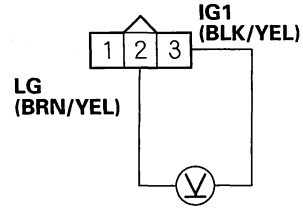

Wire side of female terminals

Is there battery voltage?

YES—Go to step 16.

NO—Repair open in the wire between CMP sensor A and G101, then go to step 18.

(cont'd)

Protected by AR

DTC Troubleshooting (cont'd)

11. Measure voltage between ECM/PCM connector terminal A19 and body ground.

ECM/PCM CONNECTOR A (31P)

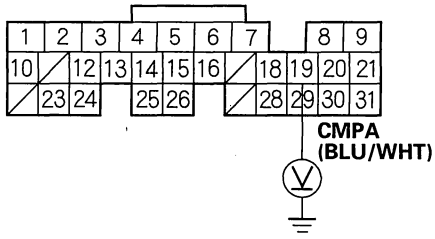

Wire side of female terminals

Is there about 5 V?

YES—Repair open in the wire between the ECM/PCM (A19) and CMP sensor A, then go to step 18.

NO—Go to step 12.

12. Turn the ignition switch OFF.
13. Jump the SCS line with the HDS.
14. Disconnect ECM/PCM connector A (31P).
15. Check for continuity between ECM/PCM connector terminal A19 and body ground.

ECM/PCM CONNECTOR A (31P)

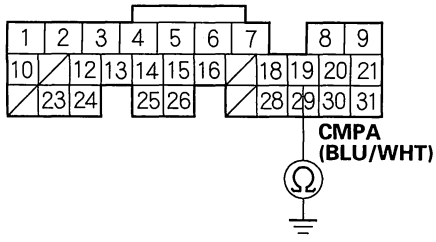

Wire side of female terminals

Is there continuity?

YES—Repair short in the wire between the ECM/PCM (A19) and CMP sensor A, then go to step 18.

NO—Go to step 24.

16. Turn the ignition switch OFF.
17. Replace CMP sensor A (see page 11-297).
18. Reconnect all connectors.
19. Turn the ignition switch ON (II).
20. Reset the ECM/PCM with the HDS.
21. Do the ECM/PCM idle learn procedure (see page 11-316).
22. Start the engine.
23. Check for Temporary DTCs or DTCs with the HDS.

    Are any Temporary DTCs or DTCs indicated?

    YES—If DTC P0340 is indicated, check for poor connections or loose terminals at CMP sensor A and the ECM/PCM, then go to step 1. If any other Temporary DTCs or DTCs are indicated, go to the indicated DTC's troubleshooting.

    NO—Troubleshooting is complete. ■

24. Update the ECM/PCM if it does not have the latest software, or substitute a known-good ECM/PCM (see page 11-6).
25. Check for Temporary DTCs or DTCs with the HDS.

    Are any Temporary DTCs or DTCs indicated?

    YES—If DTC P0340 is indicated, check for poor connections or loose terminals at CMP sensor A and the ECM/PCM, then go to step 1. If any other Temporary DTCs or DTCs are indicated, go to the indicated DTC's troubleshooting.

    NO—If the ECM/PCM was updated, troubleshooting is complete. If the ECM/PCM was substituted, replace the original ECM/PCM (see page 11-227). ■

BACK

Protected by AR

DTC P0341: CMP Sensor and CKP Sensor Incorrect Phase Detected

1. Turn the ignition switch ON (II).
2. Clear the DTC with the HDS.
3. Test-drive at a steady speed between 19—38 mph (30—60 km/h) for 10 minutes.
4. Check for Temporary DTCs or DTCs with the HDS.

   Is DTC P0341 indicated?

   YES—Go to step 9.

   NO—Go to step 5.
5. Do the VTC TEST in the INSPECTION MENU with the HDS.

   Is the result OK?

   YES—Go to step 6.

   NO—Go to step 9.
6. Test-drive at a steady speed between 19—38 mph (30—60 km/h) for 10 minutes.
7. Check the VTC STATUS in the DATA LIST with the HDS.

   Does it indicate ON?

   YES—Go to step 8.

   NO—Go to step 6 and recheck.
8. Monitor the OBD STATUS for DTC P0341 in the DTCs MENU with the HDS.

   Does the screen indicate FAILED?

   YES—Go to step 9.

   NO—If the screen indicates PASSED, intermittent failure, system is OK at this time. Check for poor connections or loose terminals at the VTC oil control solenoid valve and the ECM/PCM. If the screen indicates NOT COMPLETED, go to step 6 and recheck.
9. Turn the ignition switch OFF.
10. Test the VTC oil control solenoid valve (see page 11-295).

    Is the VTC oil control solenoid valve OK?

    YES—Go to step 11.

    NO—Replace the VTC oil control solenoid valve (see page 11-295), then go to step 14.
11. Check the camshaft timing (see step 1 on page 6-15).

    Is the camshaft timing OK?

    YES—Go to step 12.

    NO—Reset the camshaft timing (see page 6-15), then go to step 14.
12. Check for damage or stretch at the cam chain (see page 6-3).

    Is the cam chain damaged?

    YES—Replace the cam chain (see page 6-12), then go to step 14.

    NO—Go to step 13.
13. Inspect the VTC actuator (see page 6-8).

    Is the actuator OK?

    YES—Go to step 14.

    NO—Replace the VTC actuator (see page 6-31), then go to step 14.

(cont'd)

Protected by AR

DTC Troubleshooting (cont'd)

14. Turn the ignition switch ON (II).
15. Reset the ECM/PCM with the HDS.
16. Clear the CKP pattern with the HDS.
17. Do the ECM/PCM idle learn procedure (see page 11-316).
18. Do the CKP pattern learn procedure (see page 11-4).
19. Test-drive at a steady speed between 19—38 mph (30—60 km/h) for 10 minutes.
20. Check for Temporary DTCs or DTCs with the HDS.

    Are any Temporary DTCs or DTCs indicated?

    YES—If DTC P0341 is indicated, check for poor connections or loose terminals at the VTC oil control solenoid valve and the ECM/PCM, then go to step 1. If any other Temporary DTCs or DTCs are indicated, go to the indicated DTC's troubleshooting.

    NO—Go to step 21.
21. Monitor the OBD STATUS for DTC P0341 in the DTCs MENU with the HDS.

    Does the screen indicate PASSED?

    YES—Troubleshooting is complete.■

    NO—If the screen indicates FAILED, check for poor connections or loose terminals at the VTC oil control solenoid valve and the ECM/PCM, then go to step 1. If the screen indicates NOT COMPLETED, go to step 19 and recheck.

BACK

Protected by AR

DTC P0344: CMP Sensor A Intermittent Interruption

1. Record all freeze data and any on-board snapshot with the HDS.
2. Clear the DTC with the HDS.
3. Start the engine, and let it idle 10 seconds.
4. Check the CMP NOISE A COUNT in the DATA LIST with the HDS.

   Are 0 counts indicated?

   YES—Go to step 7.

   NO—Go to step 5.
5. Test-drive the vehicle for several minutes in the range of these recorded freeze data parameters:

   - Engine speed
   - Vehicle speed
6. Check the CMP NOISE A COUNT in the DATA LIST with the HDS.

   Are 0 counts indicated?

   YES—Go to step 7.

   NO—Intermittent failure, system is OK at this time. Check for poor connections or loose terminals at CMP sensor A and the ECM/PCM. ■
7. Check for poor or loose connections and terminals at these locations:

   - CMP sensor A
   - ECM/PCM
   - Engine ground
   - Body ground

   Are the connections and terminals OK?

   YES—Go to step 8.

   NO—Repair the connectors or terminals, then go to step 11.
8. Check for damage on the CMP sensor A pulse plate (see page 6-30).

   Is the pulse plate damaged?

   YES—Replace the CMP sensor A pulse plate (see page 6-30), then go to step 11.

   NO—Go to step 9.
9. Turn the ignition switch OFF.
10. Replace CMP sensor A (see page 11-297).
11. Turn the ignition switch ON (II).
12. Reset the ECM/PCM with the HDS.
13. Do the ECM/PCM idle learn procedure (see page 11-316).
14. Start the engine, and let it idle 10 seconds.
15. Check for Temporary DTCs or DTCs with the HDS.

    Are any Temporary DTCs or DTCs indicated?

    YES—If DTC P0344 is indicated, check for poor connections or loose terminals at CMP sensor A and the ECM/PCM, then go to step 1. If any other Temporary DTCs or DTCs are indicated, go to the indicated DTC's troubleshooting.

    NO—Troubleshooting is complete. ■

Protected by AR

DTC Troubleshooting (cont'd)

DTC P1009: VTC Advance Malfunction

NOTE: If DTC P0341 is stored at the same time as DTC P1009, troubleshoot DTC P1009 first, then recheck for DTC P0341.

1. Turn the ignition switch ON (II).
2. Clear the DTC with the HDS.
3. Start the engine.
4. Check for Temporary DTCs or DTCs with the HDS.

   Is DTC P1009 indicated?

   YES—Go to step 5.

   NO—Intermittent failure, system is OK at this time.■
5. Turn the ignition switch OFF.
6. Remove the power steering pump (see page 17-14) and auto-tensioner (see page 4-38).
7. Remove the VTC strainer (A), and check it for clogging.

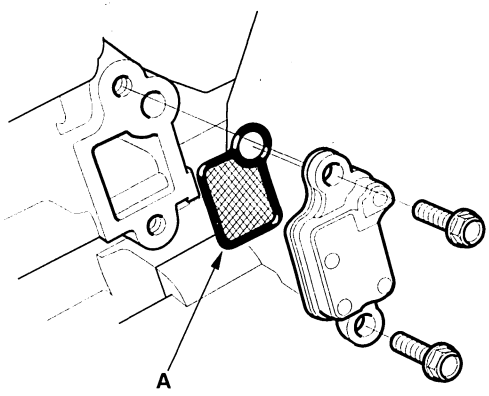

   Is the strainer OK?

   YES—Go to step 8.

   NO—Clean the VTC strainer, replace the engine oil filter and the engine oil, then go to step 10.
8. Test the VTC oil control solenoid valve (see page 11-295).

   Is the valve OK?

   YES—Go to step 9.

   NO—Replace the VTC oil control solenoid valve (see page 11-295), then go to step 10.
9. Inspect the VTC actuator (see page 6-8).

   Is the actuator OK?

   YES—Check the VTC system oil passages, then go to step 10.

   NO—Replace the VTC actuator (see page 6-31), then go to step 10.
10. Turn the ignition switch ON (II).
11. Reset the ECM/PCM with the HDS.
12. Clear the CKP pattern with the HDS.
13. Do the ECM/PCM idle learn procedure (see page 11-316).
14. Do the CKP pattern learn procedure (see page 11-4).
15. Check for Temporary DTCs or DTCs with the HDS.

    Are any Temporary DTCs or DTCs indicated?

    YES—If DTC P1009 is indicated, check the oil passages for at the VTC system, then go to step 1. If any other Temporary DTCs or DTCs are indicated, go to the indicated DTC's troubleshooting.

    NO—Troubleshooting is complete.■

BACK

Protected by AR

DTC P2646: Rocker Arm Oil Pressure Switch (VTEC Oil Pressure Switch) Circuit Low Voltage

Special Tools Required
- Pressure gauge adapter 07NAJ-P07010A
- A/T low pressure gauge w/panel 07406-0070300
- A/T pressure hose 07406-0020201
- A/T pressure hose, 2,210 mm 07MAJ-PY4011A
- A/T pressure adapter 07MAJ-PY40120
- Oil pressure hose 07ZAJ-S5A0200

1. Check the engine oil level.

   Is the level OK?

   YES—Go to step 2.

   NO—Adjust the engine oil to the proper level, then go to step 19.

2. Turn the ignition switch ON (II).

3. Clear the DTC with the HDS.

4. Do the VTEC TEST in the INSPECTION MENU with the HDS.

   Is the result OK?

   YES—Intermittent failure, system is OK at this time. Check for poor connections or loose terminals at the rocker arm oil pressure switch (VTEC oil pressure switch), the rocker arm oil control solenoid (VTEC solenoid valve), and the ECM/PCM.■

   NO—Go to step 5.

5. Turn the ignition switch OFF.

6. Disconnect the rocker arm oil pressure switch (VTEC oil pressure switch) 2P connector.

7. Turn the ignition switch ON (II).

8. Check the VTEC PRES SW in the DATA LIST with the HDS.

   Is SWITCH ON indicated?

   YES—Go to step 14.

   NO—Go to step 9.

9. Turn the ignition switch OFF.

10. Remove the rocker arm oil pressure switch (VTEC oil pressure switch) (A) and install the special tools as shown, then install the rocker arm oil pressure switch (VTEC oil pressure switch) to the oil pressure gauge adapter (B).

    NOTE: Install the switch in the reverse order of removal with a new O-ring.

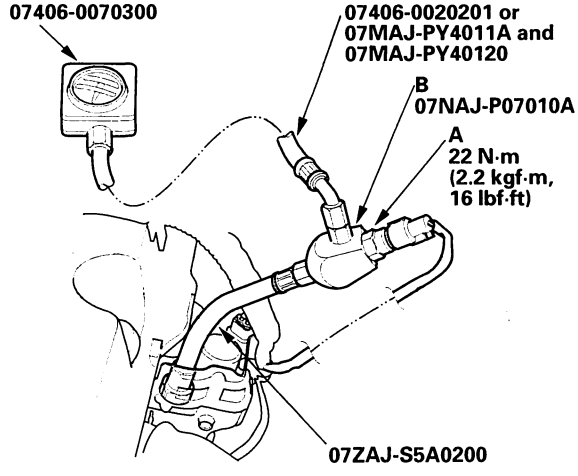

11. Start the engine.

12. Do the VTEC TEST in the INSPECTION MENU with the HDS.

13. Check the oil pressure.

    Does the oil pressure increase to at least 392 kPa (56.9 psi, 4.0 kgf/cm²)?

    YES—Replace the rocker arm oil pressure switch (VTEC oil pressure switch) (see page 11-298), then go to step 18.

    NO—Inspect the VTEC system. If it is OK, replace the rocker arm oil control solenoid (VTEC solenoid valve) (see page 11-297), then go to step 18.

14. Turn the ignition switch OFF.

15. Jump the SCS line with the HDS.

16. Disconnect ECM/PCM connector B (24P).

(cont'd)

Protected by AR

DTC Troubleshooting (cont'd)

17. Check for continuity between ECM/PCM connector terminal B11 and body ground.

ECM/PCM CONNECTOR B (24P)

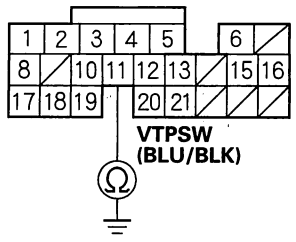

Wire side of female terminals

Is there continuity?

YES—Repair short in the wire between the ECM/PCM (B11) and the rocker arm oil pressure switch (VTEC oil pressure switch), then go to step 18.

NO—Go to step 25.

18. Reconnect all connectors.

19. Turn the ignition switch ON (II).

20. Reset the ECM/PCM with the HDS.

21. Do the ECM/PCM idle learn procedure (see page 11-316).

22. Do the VTEC TEST in the INSPECTION MENU with the HDS.

23. Check for Temporary DTCs or DTCs with the HDS.

Are any Temporary DTCs or DTCs indicated?

YES—If DTC P2646 is indicated, check for poor connections or loose terminals at the rocker arm oil pressure switch (VTEC oil pressure switch), the rocker arm oil control solenoid (VTEC solenoid valve), and the ECM/PCM, then go to step 1. If any other Temporary DTCs or DTCs are indicated, go to the indicated DTC's troubleshooting.

NO—Go to step 24.

24. Monitor the OBD STATUS for DTC P2646 in the DTCs MENU with the HDS.

Does the screen indicate PASSED?

YES—Troubleshooting is complete.■

NO—If the screen indicates FAILED, go to step 1 and recheck. If the screen indicates NOT COMPLETED, go to step 22 and recheck.

25. Update the ECM/PCM if it does not have the latest software, or substitute a known-good ECM/PCM (see page 11-6).

26. Do the VTEC TEST in the INSPECTION MENU with the HDS.

27. Check for Temporary DTCs or DTCs with the HDS.

Are any Temporary DTCs or DTCs indicated?

YES—If DTC P2646 is indicated, check for poor connections or loose terminals at the rocker arm oil pressure switch (VTEC oil pressure switch), the rocker arm oil control solenoid (VTEC solenoid valve), and the ECM/PCM, then go to step 1. If any other Temporary DTCs or DTCs are indicated, go to the indicated DTC's troubleshooting.

NO—If the ECM/PCM was updated, troubleshooting is complete. If the ECM/PCM was substituted, replace the original ECM/PCM (see page 11-227).■

BACK

Protected by AR

DTC P2647: Rocker Arm Oil Pressure Switch (VTEC Oil Pressure Switch) Circuit High Voltage

1. Check the engine oil level.

   Is the level OK?

   YES—Go to step 2.

   NO—Adjust the engine oil to the proper level, then go to step 14.

2. Turn the ignition switch ON (II).

3. Clear the DTC with the HDS.

4. Do the VTEC TEST in the INSPECTION MENU with the HDS.

   Is the result OK?

   YES—Intermittent failure, system is OK at this time. Check for poor connections or loose terminals at the rocker arm oil pressure switch (VTEC oil pressure switch) and the ECM/PCM.■

   NO—Go to step 5.

5. Check the result of step 4.

   - VTEC Switch Failure
   - VTEC Switch Open
   - VTEC Switch SIG Line Open
   - VTEC Switch GND Line Open

   Is the test result any of the above?

   YES—Go to step 6.

   NO—Check for poor connections or loose terminals at the rocker arm oil pressure switch (VTEC oil pressure switch). If it is OK, replace the rocker arm oil control solenoid (VTEC solenoid valve) (see page 11-297), then go to step 14.

6. Turn the ignition switch OFF.

7. Disconnect the rocker arm oil pressure switch (VTEC oil pressure switch) 2P connector.

8. At the rocker arm oil pressure switch (VTEC oil pressure switch), check for continuity between rocker arm oil pressure switch (VTEC oil pressure switch) 2P connector terminals No. 1 and No. 2.

ROCKER ARM OIL PRESSURE SWITCH (VTEC OIL PRESSURE SWITCH) 2P CONNECTOR

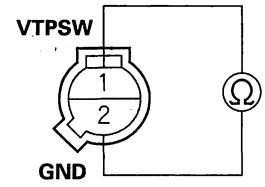

Terminal side of male terminals

Is there continuity?

YES—Go to step 9.

NO—Replace the rocker arm oil pressure switch (VTEC oil pressure switch) (see page 11-298), then go to step 13.

9. Turn the ignition switch ON (II).

10. Measure voltage between rocker arm oil pressure switch (VTEC oil pressure switch) 2P connector terminal No. 1 and body ground.

ROCKER ARM OIL PRESSURE SWITCH (VTEC OIL PRESSURE SWITCH) 2P CONNECTOR

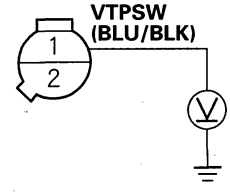

Wire side of female terminals

Is there battery voltage?

YES—Repair open in the wire between the rocker arm oil pressure switch (VTEC oil pressure switch) and G101, then go to step 13.

NO—Go to step 11.

(cont'd)

Protected by AR

DTC Troubleshooting (cont'd)

11. Measure voltage between ECM/PCM connector terminal B11 and body ground.

ECM/PCM CONNECTOR B (24P)

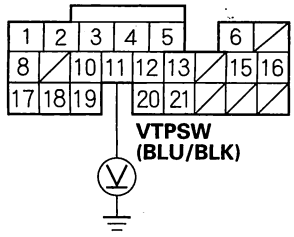

Wire side of female terminals

Is there battery voltage?

YES—Repair open in the wire between the ECM/PCM (B11) and the rocker arm oil pressure switch (VTEC oil pressure switch), then go to step 12.

NO—Go to step 19.

12. Turn the ignition switch OFF.

13. Reconnect the rocker arm oil pressure switch (VTEC oil pressure switch) 2P connector.

14. Turn the ignition switch ON (II).

15. Reset the ECM/PCM with the HDS.

16. Do the ECM/PCM idle learn procedure (see page 11-316).

17. Check for Temporary DTCs or DTCs with the HDS.

Are any Temporary DTCs or DTCs indicated?

YES—If DTC P2647 is indicated, check for poor connections or loose terminals at the rocker arm oil pressure switch (VTEC oil pressure switch) and the ECM/PCM, then go to step 1. If any other Temporary DTCs or DTCs are indicated, go to the indicated DTC's troubleshooting.

NO—Go to step 18.

18. Monitor the OBD STATUS for DTC P2647 in the DTCs MENU with the HDS.

Does the screen indicate PASSED?

YES—Troubleshooting is complete. ■

NO—If the screen indicates FAILED, then go to step 1 and recheck. If the screen indicates NOT COMPLETED, go to step 16 and recheck.

19. Update the ECM/PCM if it does not have the latest software, or substitute a known-good ECM/PCM (see page 11-6).

20. Check for Temporary DTCs or DTCs with the HDS.

Are any Temporary DTCs or DTCs indicated?

YES—If DTC P2647 is indicated, check for poor connections or loose terminals at the rocker arm oil pressure switch (VTEC oil pressure switch) and the ECM/PCM, then go to step 1. If any other Temporary DTCs or DTCs are indicated, go to the indicated DTC's troubleshooting.

NO—If the ECM/PCM was updated, troubleshooting is complete. If the ECM/PCM was substituted, replace the original ECM/PCM (see page 11-227). ■

BACK

Protected by AR

DTC P2648: Rocker Arm Oil Control Solenoid (VTEC Solenoid Valve) Circuit Low Voltage

1. Turn the ignition switch ON (II).
2. Clear the DTC with the HDS.
3. Do the VTEC TEST in the INSPECTION MENU with the HDS.

   Is the result OK?

   YES—Intermittent failure, system is OK at this time. Check for poor connections or loose terminals at the rocker arm oil control solenoid (VTEC solenoid valve) and the ECM/PCM. ■

   NO—Go to step 4.
4. Turn the ignition switch OFF.
5. Disconnect the rocker arm oil control solenoid (VTEC solenoid valve) 2P connector.
6. Measure resistance between rocker arm oil control solenoid (VTEC solenoid valve) 2P connector terminals No. 1 and No. 2.

ROCKER ARM OIL CONTROL SOLENOID (VTEC SOLENOID VALVE) 2P CONNECTOR

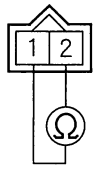

Terminal side of male terminals

Is there 14—30 Ω at room temperature?

YES—Go to step 7.

NO—Go to step 10.

7. Jump the SCS line with the HDS.
8. Disconnect ECM/PCM connector B (24P).
9. Check for continuity between ECM/PCM connector terminal B6 and body ground.

ECM/PCM CONNECTOR B (24P)

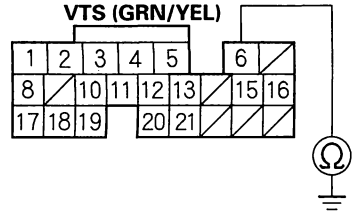

Wire side of female terminals

Is there continuity?

YES—Repair short in the wire between the ECM/PCM (B6) and the rocker arm oil control solenoid (VTEC solenoid valve), then go to step 11.

NO—Go to step 18.

10. Replace the rocker arm oil control solenoid (VTEC solenoid valve) (see page 11-297).
11. Reconnect all connectors.
12. Turn the ignition switch ON (II).
13. Reset the ECM/PCM with the HDS.
14. Do the ECM/PCM idle learn procedure (see page 11-316).
15. Do the VTEC TEST in the INSPECTION MENU with the HDS.
16. Check for Temporary DTCs or DTCs with the HDS.

    Are any Temporary DTCs or DTCs indicated?

    YES—If DTC P2648 is indicated, check for poor connections or loose terminals at the rocker arm oil control solenoid (VTEC solenoid valve) and the ECM/PCM, then go to step 1. If any other Temporary DTCs or DTCs are indicated, go to the indicated DTC's troubleshooting.

    NO—Go to step 17.

(cont'd)

Protected by AR

DTC Troubleshooting (cont'd)

17. Monitor the OBD STATUS for DTC P2648 in the DTCs MENU with the HDS.

    Does the screen indicate PASSED?

    YES—Troubleshooting is complete. ■

    NO—If the screen indicates FAILED, go to step 1 and recheck. If the screen indicates NOT COMPLETED, go to step 15 and recheck.

18. Update the ECM/PCM if it does not have the latest software, or substitute a known-good ECM/PCM (see page 11-6).

19. Do the VTEC TEST in the INSPECTION MENU with the HDS.

20. Check for Temporary DTCs or DTCs with the HDS.

    Are any Temporary DTCs or DTCs indicated?

    YES—If DTC P2648 is indicated, check for poor connections or loose terminals at the rocker arm oil control solenoid (VTEC solenoid valve) and the ECM/PCM, then go to step 1. If any other Temporary DTCs or DTCs are indicated, go to the indicated DTC's troubleshooting.

    NO—If the ECM/PCM was updated, troubleshooting is complete. If the ECM/PCM was substituted, replace the original ECM/PCM (see page 11-227). ■

BACK

Protected by AR

DTC P2649: Rocker Arm Oil Control Solenoid (VTEC Solenoid Valve) Circuit High Voltage

1. Turn the ignition switch ON (II).
2. Clear the DTC with the HDS.
3. Start the engine. Hold the engine speed at 3,000 rpm without load (in Park or neutral) until the radiator fan comes on, then let it idle.
4. Check for Temporary DTCs or DTCs with the HDS.

   Is DTC P2649 indicated?

   YES—Go to step 5.

   NO—Intermittent failure, system is OK at this time. Check for poor connections or loose terminals at the rocker arm oil control solenoid (VTEC solenoid valve) and the ECM/PCM. ■
5. Turn the ignition switch OFF.
6. Disconnect the rocker arm oil control solenoid (VTEC solenoid valve) 2P connector.
7. Measure resistance between rocker arm oil control solenoid (VTEC solenoid valve) 2P connector terminals No. 1 and No. 2.

ROCKER ARM OIL CONTROL SOLENOID (VTEC SOLENOID VALVE) 2P CONNECTOR

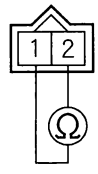

Terminal side of male terminals

Is there 14—30 Ω at room temperature?

YES—Go to step 8.

NO—Go to step 13.

8. Check for continuity between rocker arm oil control solenoid (VTEC solenoid valve) 2P connector terminal No. 2 and body ground.

ROCKER ARM OIL CONTROL SOLENOID (VTEC SOLENOID VALVE) 2P CONNECTOR

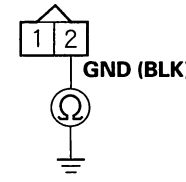

Wire side of female terminals

Is there continuity?

YES—Go to step 9.

NO—Repair open in the wire between the rocker arm oil control solenoid (VTEC solenoid valve) and G101, then go to step 14.

9. Jump the SCS line with the HDS.
10. Disconnect ECM/PCM connector B (24P).
11. Connect rocker arm oil control solenoid (VTEC solenoid valve) 2P connector terminal No. 1 to body ground with a jumper wire.

ROCKER ARM OIL CONTROL SOLENOID (VTEC SOLENOID VALVE) 2P CONNECTOR

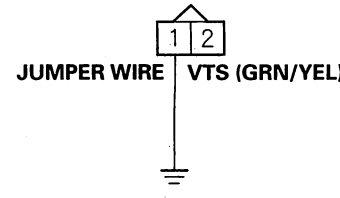

Wire side of female terminals

(cont'd)

Protected by AR

DTC Troubleshooting (cont'd)

12. Check for continuity between ECM/PCM connector terminal B6 and body ground.

ECM/PCM CONNECTOR B (24P)

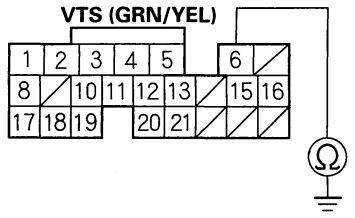

Wire side of female terminals

Is there continuity?

YES—Go to step 20.

NO—Repair open in the wire between the ECM/PCM (B6) and the rocker arm oil control solenoid (VTEC solenoid valve), then go to step 14.

13. Replace the rocker arm oil control solenoid (VTEC solenoid valve) (see page 11-297).

14. Reconnect all connectors.

15. Turn the ignition switch ON (II).

16. Reset the ECM/PCM with the HDS.

17. Do the ECM/PCM idle learn procedure (see page 11-316).

18. Check for Temporary DTCs or DTCs with the HDS.

Are any Temporary DTCs or DTCs indicated?

YES—If DTC P2649 is indicated, check for poor connections or loose terminals at the rocker arm oil control solenoid (VTEC solenoid valve) and the ECM/PCM, then go to step 1. If any other Temporary DTCs or DTCs are indicated, go to the indicated DTC's troubleshooting.

NO—Go to step 19.

19. Monitor the OBD STATUS for DTC P2649 in the DTCs MENU with the HDS.

Does the screen indicate PASSED?

YES—Troubleshooting is complete.■

NO—If the screen indicates FAILED, go to step 1 and recheck. If the screen indicates NOT COMPLETED, go to step 17 and recheck.

20. Update the ECM/PCM if it does not have the latest software, or substitute a known-good ECM/PCM (see page 11-6).

21. Check for Temporary DTCs or DTCs with the HDS.

Are any Temporary DTCs or DTCs indicated?

YES—If DTC P2647 is indicated, check for poor connections or loose terminals at the rocker arm oil control solenoid (VTEC solenoid valve) and the ECM/PCM, then go to step 1. If any other Temporary DTCs or DTCs are indicated, go to the indicated DTC's troubleshooting.

NO—If the ECM/PCM was updated, troubleshooting is complete. If the ECM/PCM was substituted, replace the original ECM/PCM (see page 11-227).■

BACK

Protected by AR

VTC Oil Control Solenoid Valve Removal/Test/Installation

1. Disconnect the VTC oil control solenoid valve connector (A).

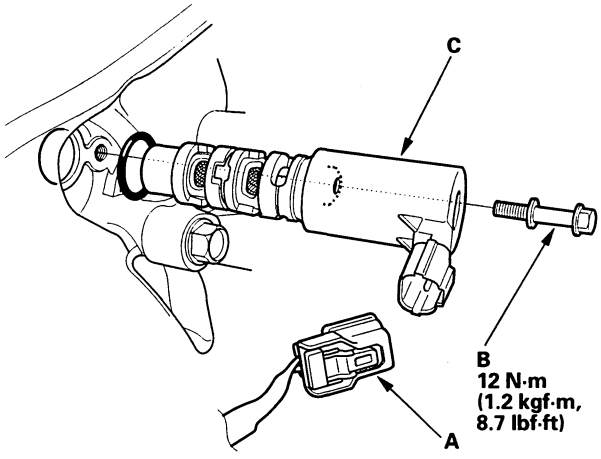

2. Remove the bolt (B) and the VTC oil control solenoid valve (C).

3. Check the VTC oil control solenoid valve for sticking and the solenoid valve filter for clogging. If the valve is stuck or clogged, replace the VTC oil control solenoid valve.

4. Check clearance between the port (advance side) and the valve. Make sure the valve (A) closes fully.

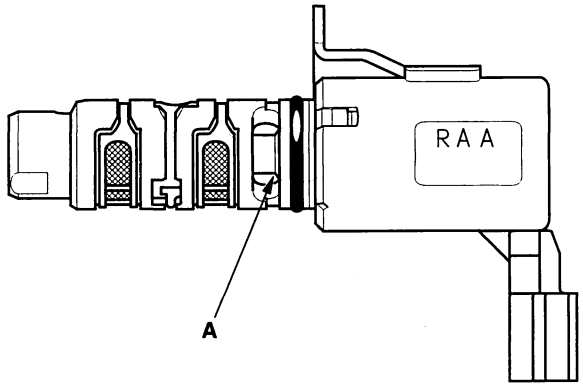

5. Connect the battery positive terminal to VTC oil control solenoid valve 2P connector terminal No. 2.

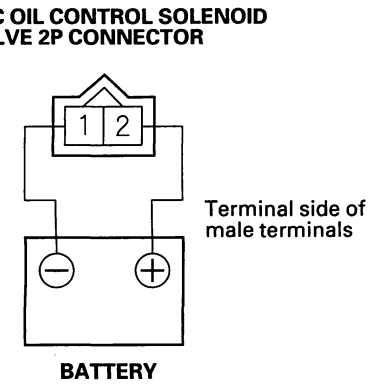

6. Connect the battery negative terminal to VTC oil control solenoid valve 2P connector terminal No. 1. Clearance (A) should be at least 1/16 in. (1.8 mm). If the valve does not open, replace it, then go to step 7.

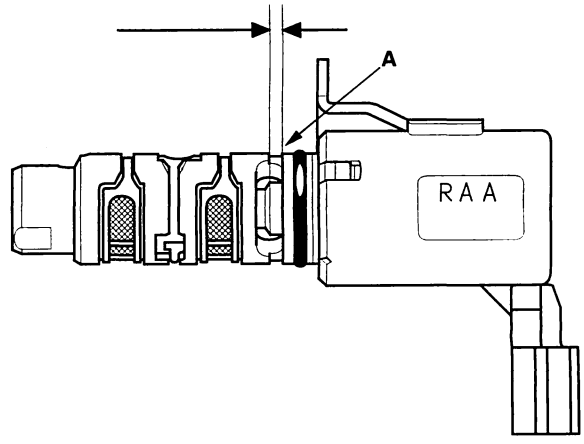

(cont'd)

Protected by AR

VTC Oil Control Solenoid Valve Removal/Test/Installation (cont'd)

7. Replace the VTC valve O-ring (A).

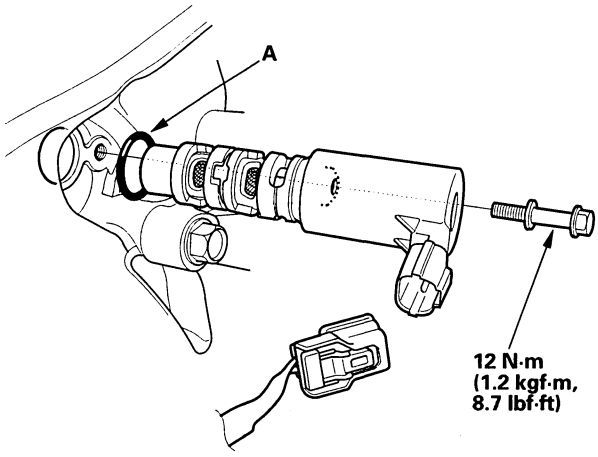

8. Coat a new O-ring with engine oil, then install it.
9. Clean and dry the mating surface of the valve.
10. Install the valve.

NOTE: Do not install the valve while wearing cloth fibrous gloves. Be careful not to contaminate the cylinder head opening.

Rocker Arm Oil Control Solenoid (VTEC Solenoid Valve) Inspection

1. Disconnect the rocker arm oil control solenoid (VTEC solenoid valve) connector.
2. Measure resistance between rocker arm oil control solenoid (VTEC solenoid valve) 2P connector terminals No. 1 and No. 2.

Resistance: 14—30 Ω

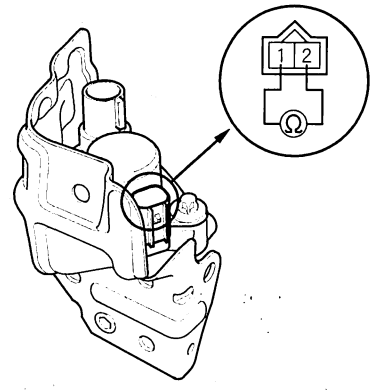

3. If the resistance is within specifications, remove the rocker arm oil pressure switch (VTEC oil pressure switch) connector (A), cover (B), and the rocker arm oil control solenoid (VTEC solenoid valve) (C), then check the rocker arm oil control solenoid (VTEC solenoid valve) filter (D) for clogging. If it is clogged, replace the rocker arm oil control solenoid (VTEC solenoid valve) filter, the engine oil filter, and the engine oil.

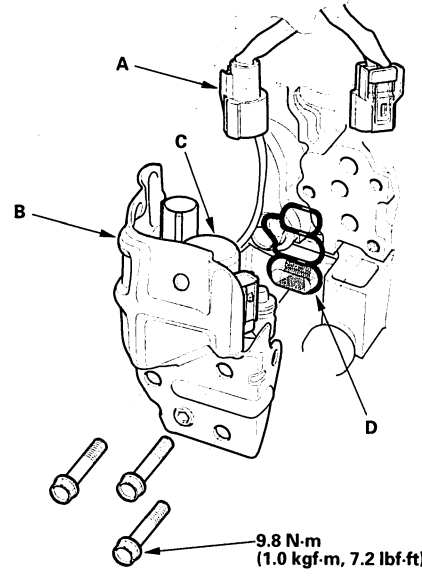

BACK

Protected by AR

CMP Sensor A Replacement

1. Remove the air cleaner (see page 11-361).
2. Remove the EGR valve (see page 11-386).
3. Disconnect the CMP sensor A connector (A).

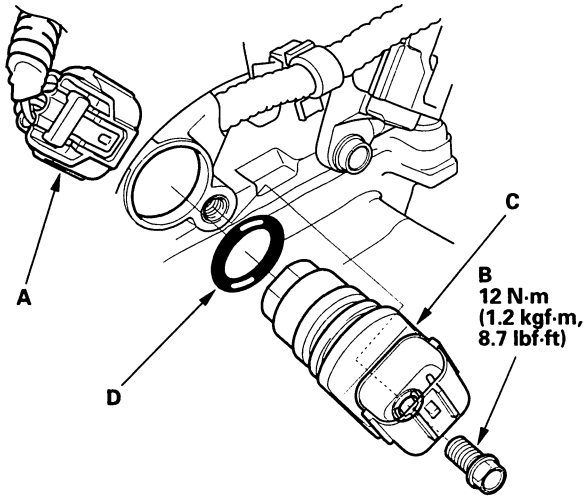

4. Remove the bolt (B).
5. Remove CMP sensor A (C) from the intake camshaft side of the cylinder head.
6. Install the sensor in the reverse order of removal with a new O-ring (D).

Rocker Arm Oil Control Solenoid (VTEC Solenoid Valve) Assembly Removal/Installation

1. Disconnect the rocker arm oil control solenoid (VTEC solenoid valve) connector (A) and the rocker arm oil pressure switch (VTEC oil pressure switch) connector (B).

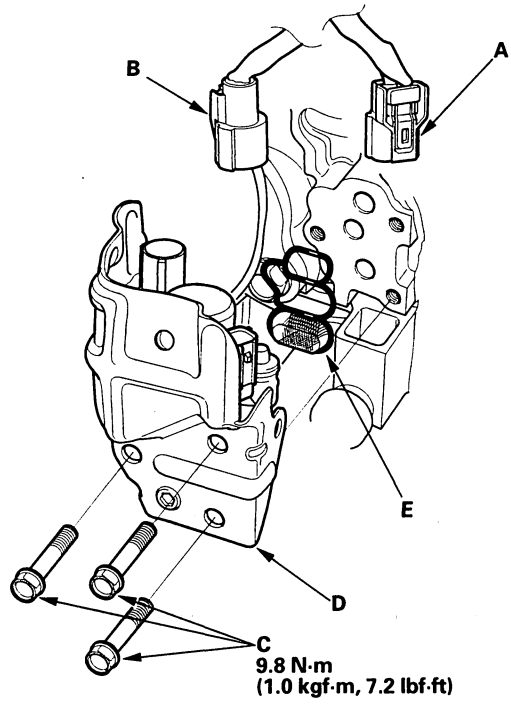

2. Remove the bolts (C).
3. Remove the rocker arm oil control solenoid (VTEC solenoid valve) assembly (D).
4. Install the valve in the reverse order of removal with a new rocker arm oil control solenoid (VTEC solenoid valve) filter (E).

Protected by AR

Rocker Arm Oil Pressure Switch (VTEC Oil Pressure Switch) Removal/ Installation

1. Remove the rocker arm oil control solenoid (VTEC solenoid valve) assembly (see page 11-297).
2. Remove the cover (A).

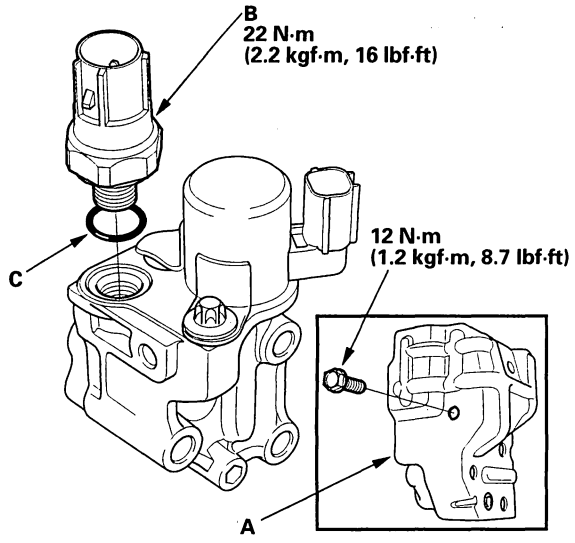

3. Remove the rocker arm oil pressure switch (VTEC oil pressure switch) (B).
4. Install the switch in the reverse order of removal with a new O-ring (C).

BACK

Protected by AR

Component Location Index

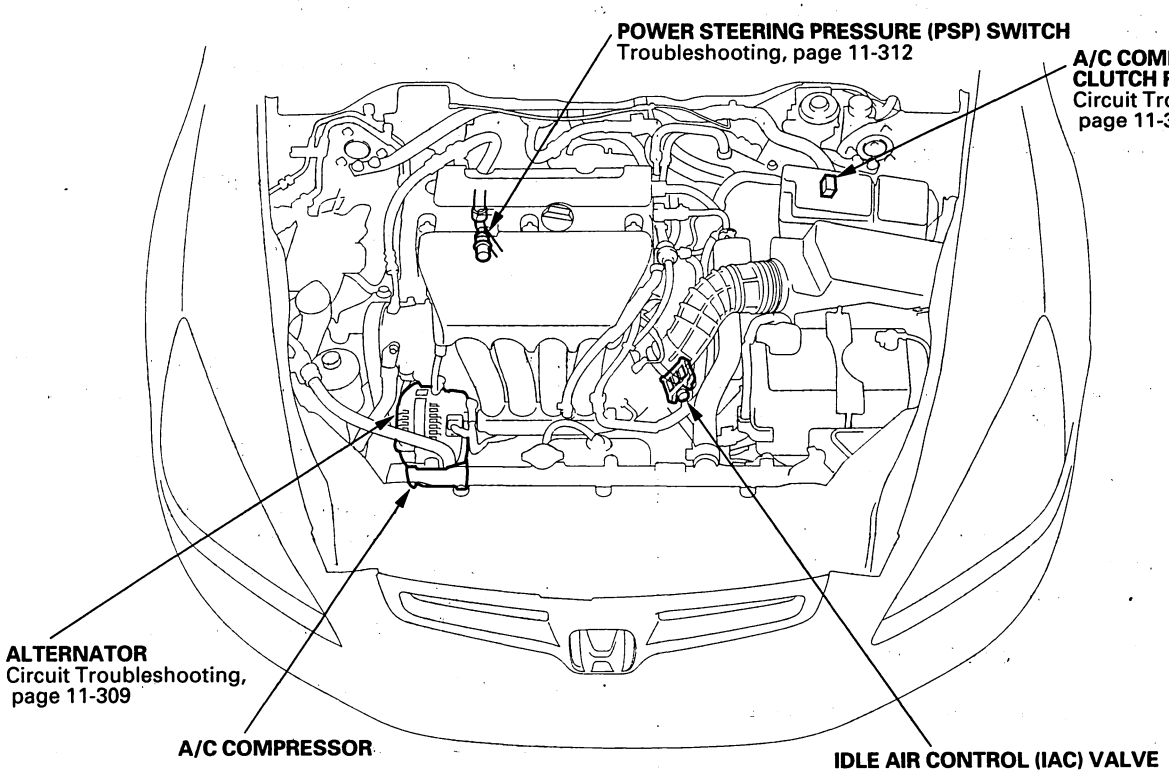

*: This illustration shows 2003-2005 models.

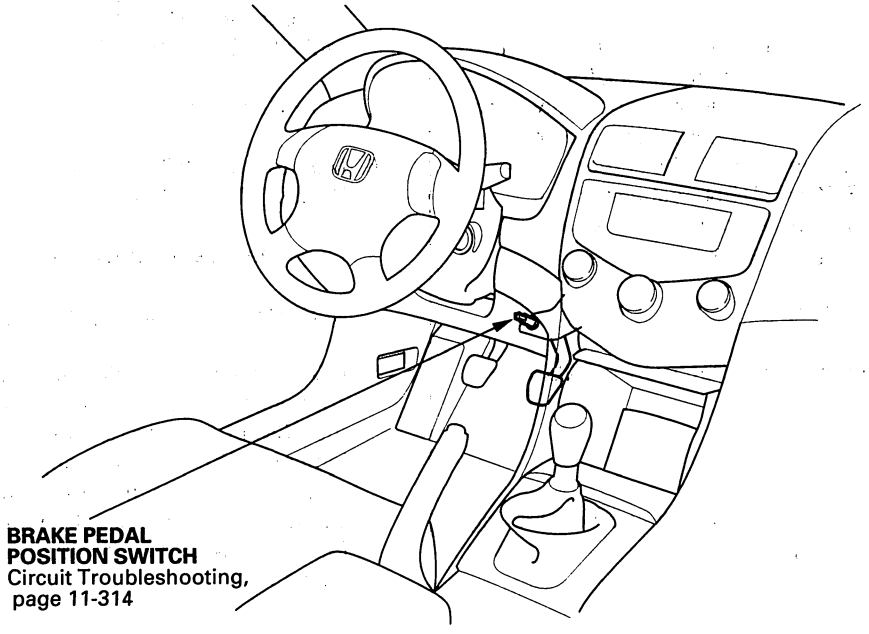

Protected by AR

DTC Troubleshooting

DTC P0506: Idle Control System RPM Lower Than Expected (2003-2005 models)

NOTE: If DTC P0511 is stored at the same time as DTC P0506, troubleshoot DTC P0511 first, then recheck for DTC P0506.

1. Turn the ignition switch ON (II).
2. Clear the DTC with the HDS.
3. Start the engine. Hold the engine speed at 3,000 rpm without load (in Park or neutral) until the radiator fan comes on, then let it idle 20 seconds.
4. Check this data in the DATA LIST with the HDS:
   - Engine coolant temperature above 158 °F (70 °C)
   - Intake air temperature above 18 °F (—7.6 °C)
   - Vehicle speed is 0 mph (0 km/h)
   - FSS is CLOSED
   - ST FUEL TRIM between 0.65 and 1.47
5. Monitor the OBD STATUS for DTC P0506 in the DTCs MENU with the HDS.

   Does the screen indicate FAILED?

   YES—Go to step 6.

   NO—If the screen indicates PASSED, intermittent failure, system is OK at this time. Check for poor connections or loose terminals at the IAC valve and the ECM/PCM. If it is EXECUTING, keep the engine idling until a result comes on. If the screen indicates OUT OF CONDITION, recheck with a different load condition (electrical, A/C, gear position, etc.), then go to step 3.
6. Clear the DTC with the HDS.
7. Do the IACV TEST in the INSPECTION MENU with the HDS.

   Is the result OK?

   YES—Check the A/C system and the power steering system, then go to step 10.

   NO—Go to step 8.
8. Turn the ignition switch OFF.
9. Replace the IAC valve (see page 11-368).
10. Turn the ignition switch ON (II).
11. Reset the ECM/PCM with the HDS.
12. Do the ECM/PCM idle learn procedure (see page 11-316).
13. Start the engine. Hold the engine speed at 3,000 rpm without load (in Park or neutral) until the radiator fan comes on, then let it idle 20 seconds.
14. Check this data in the DATA LIST with the HDS:
    - Engine coolant temperature above 158 °F (70 °C)
    - Intake air temperature above 18 °F (—7.6 °C)
    - Vehicle speed is 0 mph (0 km/h)
    - FSS is CLOSED
    - ST FUEL TRIM between 0.65 and 1.47
15. Check for Temporary DTCs or DTCs with the HDS.

    Are any Temporary DTCs or DTCs indicated?

    YES—If DTC P0506 is indicated, check for poor connections or loose terminals at the IAC valve and the ECM/PCM, then go to step 1. If any other Temporary DTCs or DTCs are indicated, go to the indicated DTC's troubleshooting.

    NO—Go to step 16.
16. Monitor the OBD STATUS for DTC P0506 in the DTCs MENU with the HDS.

    Does the screen indicate PASSED?

    YES—Troubleshooting is complete. ■

    NO—If the screen indicates FAILED, check for poor connections or loose terminals at the IAC valve and the ECM/PCM, then go to step 1. If the screen indicates EXECUTING, keep the engine idling until a result comes on. If the screen indicates OUT OF CONDITION, recheck with a different load condition (electrical, A/C, gear position, etc.), then go to step 13.

BACK

Protected by AR

DTC P0506: Idle Control System RPM Lower Than Expected
(2006 model)

1. Turn the ignition switch ON (II).
2. Clear the DTC with the HDS.
3. Start the engine. Hold the engine speed at 3,000 rpm without load (in Park or neutral) until the radiator fan comes on, then let it idle.
4. Check this data in the DATA LIST with the HDS:
   - Engine coolant temperature above 156 °F (70 °C)
   - Intake air temperature above 32 °F (0 °C)
   - Vehicle speed is 0 mph (0 km/h)
   - ST FUEL TRIM between 0.73 and 1.47
   - FSS is CLOSED
5. Monitor the OBD STATUS for DTC P0506 in the DTCs MENU with the HDS.

   Does the screen indicate FAILED?

   YES—Go to step 6.

   NO—If the screen indicates PASSED, go to step 15. If the screen indicates EXECUTING, let the engine idle until a result comes on. If the screen indicates OUT OF CONDITION, go to step 4 and recheck.
6. Remove the intake air duct from the throttle body.
7. Check for dirt, carbon, or damage in the throttle bore.

   Is there dirt, carbon, or damage in the throttle bore?

   YES—If there is dirt or carbon, clean the throttle body (see page 11-357). Also check for a damage at the air cleaner element (see page 11-361), then go to step 9. If there is damage in the throttle bore, go to step 8.

   NO—Check the A/C system or power steering system, then go to step 17.
8. Replace the throttle body (see page 11-367).
9. Reset the ECM/PCM with the HDS.
10. Do the ECM/PCM idle learn procedure (see page 11-316).
11. Start the engine. Hold the engine speed at 3,000 rpm without load (in Park or neutral) until the radiator fan comes on, then let it idle.
12. Check this data in the DATA LIST with the HDS:
    - Engine coolant temperature above 156 °F (70 °C)
    - Intake air temperature above 32 °F (0 °C)
    - Vehicle speed is 0 mph (0 km/h)
    - ST FUEL TRIM between 0.73 and 1.47
    - FSS is CLOSED

(cont'd)

Protected by AR

DTC Troubleshooting (cont'd)

13. Check for Temporary DTCs or DTCs with the HDS.

    Are any Temporary DTCs or DTCs indicated?

    YES—If DTC P0506 is indicated, go to step 1 and recheck. If any other Temporary DTCs or DTCs are indicated, go to the indicated DTC's troubleshooting.

    NO—Go to step 14.

14. Monitor the OBD STATUS for DTC P0506 in the DTCs MENU with the HDS.

    Does the screen indicate PASSED?

    YES—Troubleshooting is complete.■

    NO—If the screen indicates FAILED, go to step 1 and recheck. If the screen indicates EXECUTING, let the engine idle until a result comes on. If the screen indicates OUT OF CONDITION, go to step 12 and recheck.

15. Remove the intake air duct from the throttle body.

16. Check for dirt, carbon, or damage in the throttle bore.

    Is there dirt, carbon, or damage in the throttle bore?

    YES—If there is dirt or carbon, clean the throttle body (see page 11-357). Also check for a damage at the air cleaner element (see page 11-361), then go to step 9. If there is damage in the throttle bore, go to step 8.

    NO—Go to step 17.

17. Recheck with different load conditions (turn on the headlights, blower motor, rear window defogger and/or/A/C, change the gear position, etc.).

18. Monitor the OBD STATUS for DTC P0506 in the DTCs MENU with the HDS.

    Does the screen indicate PASSED?

    YES—Intermittent failure, system is OK at this time.■

    NO—If the screen indicates FAILED, check the A/C system and/or power steering system, then go to step 1 and recheck. If the screen indicates EXECUTING, let the engine idle until a result comes on. If the screen indicates OUT OF CONDITION, go to step 17 and recheck.

BACK

Protected by AR

DTC P0507: Idle Control System RPM Higher Than Expected (2003-2005 models)

NOTE: If DTC P0511 is stored at the same time as DTC P0507, troubleshoot DTC P0511 first, then recheck for DTC P0507.

1. Turn the ignition switch ON (II).
2. Clear the DTC with the HDS.
3. Start the engine. Hold the engine speed at 3,000 rpm without load (in Park or neutral) until the radiator fan comes on, then let it idle 20 seconds.
4. Monitor the OBD STATUS for DTC P0507 in the DTCs MENU with the HDS.

   Does the screen indicate FAILED?

   YES—Go to step 5.

   NO—If the screen indicates PASSED, intermittent failure, system is OK at this time. Check for poor connections or loose terminals at the IAC valve and the ECM/PCM. If the screen indicates EXECUTING, keep the engine idling until a result comes on. If the screen indicates OUT OF CONDITION, recheck with a different load condition (electrical, A/C, gear position, etc.), then go to step 3.
5. Clear the DTC with the HDS.
6. Do the IACV TEST in the INSPECTION MENU with the HDS.

   Is the result OK?

   YES—Check these parts for vacuum leaks, then go to step 8:

   - PCV valve
   - PCV hose
   - EVAP canister purge valve
   - Throttle body
   - Intake manifold
   - Brake booster hose

   NO—Go to step 7.
7. Turn the ignition switch OFF.
8. Replace the IAC valve (see page 11-368).
9. Turn the ignition switch ON (II).
10. Reset the ECM/PCM with the HDS.
11. Do the ECM/PCM idle learn procedure (see page 11-316).
12. Start the engine. Hold the engine speed at 3,000 rpm without load (in Park or neutral) until the radiator fan comes on, then let it idle 20 seconds.
13. Check for Temporary DTCs or DTCs with the HDS.

    Are any Temporary DTCs or DTCs indicated?

    YES—If DTC P0507 is indicated, check for poor connections or loose terminals at the IAC valve and the ECM/PCM, then go to step 1. If any other Temporary DTCs or DTCs are indicated, go to the indicated DTC's troubleshooting.

    NO—Go to step 14.
14. Monitor the OBD STATUS for DTC P0507 in the DTCs MENU with the HDS.

    Does the screen indicate PASSED?

    YES—Troubleshooting is complete.■

    NO—If the screen indicates FAILED, check for poor connections or loose terminals at the IAC valve and the ECM/PCM, then go to step 1. If the screen indicates EXECUTING, keep the engine idling until a result comes on. If the screen indicates OUT OF CONDITION, recheck with a different load condition (electrical, A/C, gear position, etc.), then go to step 12.

Protected by AR

DTC Troubleshooting (cont'd)

DTC P0507: Idle Control System RPM Higher Than Expected
(2006 model)

1. Turn the ignition switch ON (II).
2. Clear the DTC with the HDS.
3. Start the engine. Hold the engine speed at 3,000 rpm without load (in Park or neutral) until the radiator fan comes on, then let it idle.
4. Monitor the OBD STATUS for DTC P0507 in the DTCs MENU with the HDS.

   Does the screen indicate FAILED?

   YES—Go to step 5.

   NO—If the screen indicates PASSED, intermittent failure, system is OK at this time. If the screen indicates EXECUTING, let the engine idle until a result comes on. If the screen indicates OUT OF CONDITION, recheck with different load conditions (turn on the headlights, blower motor, or A/C; change the gear position, etc.), then go to step 3.
5. Check for vacuum leaks at these parts:

   - PCV valve
   - PCV hose
   - EVAP canister purge valve
   - Throttle body
   - Intake manifold
   - Brake booster hose

   Are there any leaks?

   YES—Repair or replace faulty parts, then go to step 6.

   NO—Go to step 6.
6. Turn the ignition switch ON (II).
7. Reset the ECM/PCM with the HDS.
8. Do the ECM/PCM idle learn procedure (see page 11-316).
9. Start the engine. Hold the engine speed at 3,000 rpm without load (in Park or neutral) until the radiator fan comes on, then let it idle.
10. Check for Temporary DTCs or DTCs with the HDS.

    Are any Temporary DTCs or DTCs indicated?

    YES—If DTC P0507 is indicated, check for poor connections or loose terminals at the throttle body and the ECM/PCM, then go to step 1. If any other Temporary DTCs or DTCs are indicated, go to the indicated DTC's troubleshooting.

    NO—Go to step 11.
11. Monitor the OBD STATUS for DTC P0507 in the DTCs MENU with the HDS.

    Does the screen indicate PASSED?

    YES—Troubleshooting is complete.■

    NO—If the screen indicates FAILED, check for poor connections or loose terminals at the throttle body and the ECM/PCM, then go to step 1. If the screen indicates EXECUTING, let the engine idle until a result comes on. If the screen indicates OUT OF CONDITION, recheck with different load conditions (turn on the headlights, blower motor, or A/C; change the gear position, etc.), then go to step 9.

BACK

Protected by AR

DTC P0511: IAC Valve Circuit Malfunction (2003-2005 models)

1. Turn the ignition switch ON (II).
2. Clear the DTC with the HDS.
3. Check for Temporary DTCs or DTCs with the HDS.

   Is DTC P0511 indicated?

   YES—Go to step 4.

   NO—Intermittent failure, system is OK at this time. Check for poor connections or loose terminals at the IAC valve and the ECM/PCM. ■
4. Turn the ignition switch OFF.
5. Disconnect the IAC valve 3P connector.
6. Turn the ignition switch ON (II).
7. Measure voltage between IAC valve 3P connector terminal No. 2 and body ground.

IAC VALVE 3P CONNECTOR

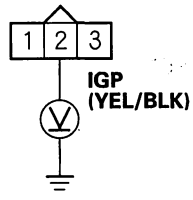

Wire side of female terminals

Is there battery voltage?

YES—Go to step 8.

NO—Repair open in the wire between the IAC valve and PGM-FI main relay 1, then go to step 21.

8. Turn the ignition switch OFF.
9. Check for continuity between body ground and IAC valve 3P connector terminal No. 1.

IAC VALVE 3P CONNECTOR

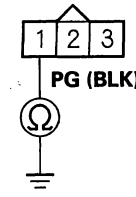

Wire side of female terminals

Is there continuity?

YES—Go to step 10.

NO—Repair open in the wire between the IAC valve and G101, then go to step 21.

10. Turn the ignition switch OFF.
11. Jump the SCS line with the HDS.
12. Disconnect ECM/PCM connector A (31P).
13. Check for continuity between ECM/PCM connector terminal A12 and body ground.

ECM/PCM CONNECTOR A (31P)

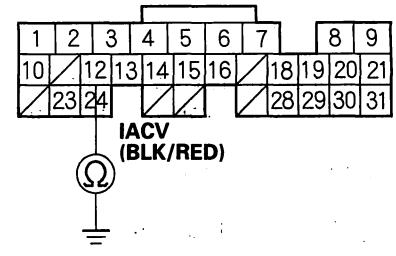

Wire side of female terminals

Is there continuity?

YES—Repair short in the wire between the ECM/PCM (A12) and the IAC valve, then go to step 21.

NO—Go to step 14.

(cont'd)

Protected by AR

DTC Troubleshooting (cont'd)

14. Connect IAC valve 3P connector terminal No. 3 to body ground with a jumper wire.

IAC VALVE 3P CONNECTOR

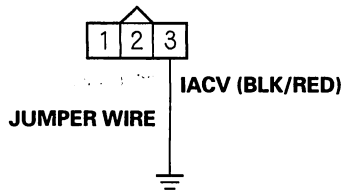

Wire side of female terminals

15. Check for continuity between ECM/PCM connector terminal A12 and body ground.

ECM/PCM CONNECTOR A (31P)

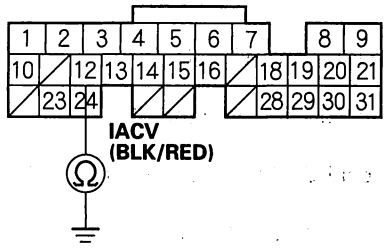

Wire side of female terminals

Is there continuity?

YES—Go to step 16.

NO—Repair open in the wire between the ECM/PCM (A12) and the IAC valve, then go to step 21.

16. Reconnect the IAC valve 3P connector.

17. Turn the ignition switch ON (II).

18. Measure voltage between ECM/PCM connector terminal A12 and body ground.

ECM/PCM CONNECTOR A (31P)

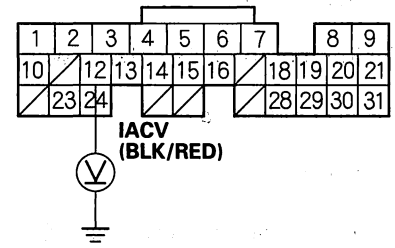

Wire side of female terminals

Is there battery voltage?

YES—Go to step 26.

NO—Go to step 19.

19. Turn the ignition switch OFF.

20. Replace the IAC valve (see page 11-368).

21. Turn the ignition switch ON (II).

22. Reset the ECM/PCM with the HDS.

23. Do the ECM/PCM idle learn procedure (see page 11-316).

24. Check for Temporary DTCs or DTCs with the HDS.

Are any Temporary DTCs or DTCs indicated?

YES—If DTC P0511 is indicated, check for poor connections or loose terminals at the IAC valve and the ECM/PCM, then go to step 1. If any other Temporary DTCs or DTCs are indicated, go to the indicated DTC's troubleshooting.

NO—Go to step 25.

BACK

Protected by AR

25. Monitor the OBD STATUS for DTC P0511 in the DTCs MENU with the HDS.

    Does the screen indicate PASSED?

    YES—Troubleshooting is complete. ■

    NO—If the screen indicates FAILED, go to step 1 and recheck. If the screen indicates NOT COMPLETED, go to step 23 and recheck.

26. Update the ECM/PCM if it does not have the latest software, or substitute a known-good ECM/PCM (see page 11-6).

27. Check for Temporary DTCs or DTCs with the HDS.

    Are any Temporary DTCs or DTCs indicated?

    YES—If DTC P0511 is indicated, check for poor connections or loose terminals at the IAC valve and the ECM/PCM, then go to step 1. If any other Temporary DTCs or DTCs are indicated, go to the indicated DTC's troubleshooting.

    NO—If the ECM/PCM was updated, troubleshooting is complete. If the ECM/PCM was substituted, replace the original ECM/PCM (see page 11-227). ■

Protected by AR

A/C Signal Circuit Troubleshooting

1. Start the engine.
2. Turn the blower switch on.
3. Turn the A/C switch on.
4. Check the A/C CLUTCH in the DATA LIST with the HDS.

   Is it ON?

   YES—Go to step 5.

   NO—Do the A/C pressure switch circuit troubleshooting (see page 21-120). ■
5. Check the A/C system.

   Does the A/C system operate?

   YES—The air conditioning system circuit is OK. ■

   NO—Go to step 6.
6. Turn the ignition switch OFF.
7. Turn the ignition switch ON (II).
8. Activate the A/C CLUTCH in the INSPECTION MENU with the HDS.

   Is there a clicking noise from the A/C compressor clutch?

   YES—Do the A/C system test (see page 21-69). ■

   NO—Go to step 9.
9. Momentarily connect under-hood fuse/relay box 16P connector terminal No. 15 to body ground with a jumper wire several times.

UNDER-HOOD FUSE/RELAY BOX 16P CONNECTOR

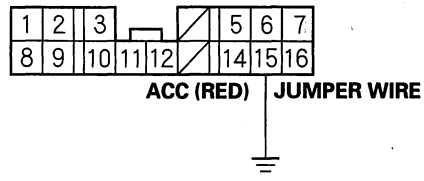

Wire side of female terminals

Is there clicking noise from the A/C compressor clutch?

YES—Repair open in the wire between the ECM/PCM (E18) and the A/C clutch relay. ■

NO—Update the ECM/PCM if it does not have the latest software, or substitute a known-good ECM/PCM (see page 11-6), then recheck. If the symptom/indication goes away with a known-good ECM/PCM, replace the original ECM/PCM (see page 11-227). ■

BACK

Protected by AR

Alternator FR Signal Circuit Troubleshooting

2003-2004 models

1. Start the engine, and let it idle.
2. Monitor the ALTERNATOR in the DATA LIST with the HDS.
3. Check if the indicated percentage varies when the headlight switch is on.

   Does the percentage vary?

   YES—The alternator signal circuit is OK.■

   NO—Go to step 4.
4. Turn the headlight switch and ignition switch OFF.
5. Disconnect the alternator 4P connector.
6. Turn the ignition switch ON (II).
7. Measure voltage between ECM/PCM connector terminals A9 and B13.

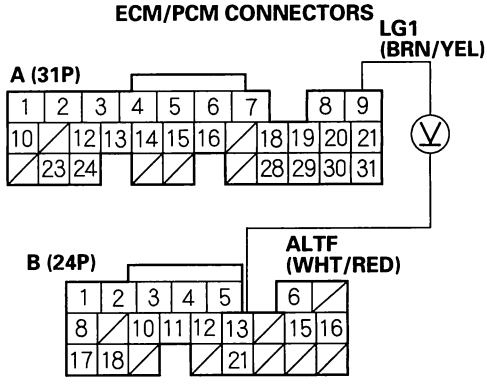

Wire side of female terminals

Is there about 5 V?

YES—Go to step 8.

NO—Go to step 13.

8. Turn the ignition switch OFF.
9. Jump the SCS line with the HDS.
10. Disconnect ECM/PCM connector B (24P).
11. Connect alternator 4P connector terminal No. 4 to body ground with a jumper wire.

ALTERNATOR 4P CONNECTOR

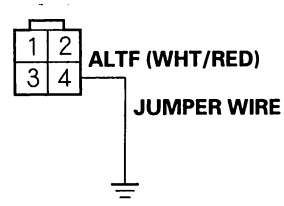

Wire side of female terminals

12. Check for continuity between body ground and ECM/PCM connector terminal B13.

ECM/PCM CONNECTOR B (24P)

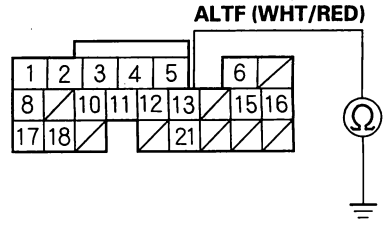

Wire side of female terminals

Is there continuity?

YES—Test the alternator (see page 4-34).■

NO—Repair open in the wire between the ECM/PCM (B13) and the alternator.■

(cont'd)

Protected by AR

Alternator FR Signal Circuit Troubleshooting (cont'd)

13. Turn the ignition switch OFF.
14. Jump the SCS line with the HDS.
15. Disconnect ECM/PCM connector B (24P).
16. Check for continuity between body ground and ECM/PCM connector terminal B13.

ECM/PCM CONNECTOR B (24P)

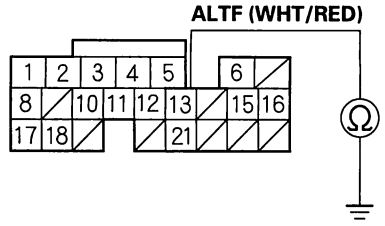

Wire side of female terminals

Is there continuity?

YES—Repair short in the wire between the ECM/PCM (B13) and the alternator. ■

NO—Update the ECM/PCM if it does not have the latest software, or substitute a known-good ECM/PCM (see page 11-6), then recheck. If the symptom/indication goes away with a known-good ECM/PCM, replace the original ECM/PCM (see page 11-227). ■

BACK

Protected by AR

2005-2006 models

1. Start the engine, and let it idle.
2. Monitor the ALTERNATOR in the DATA LIST with the HDS.
3. Check if the indicated percentage varies when the headlight switch is on.

   Does the percentage vary?

   YES—The alternator signal circuit is OK. ■

   NO—Go to step 4.
4. Turn the headlight switch and ignition switch OFF.
5. Jump the SCS line with the HDS.
6. Disconnect the alternator 4P connector.
7. Disconnect ECM/PCM connector B (24P).
8. Check for coutinuity between body ground and ECM/PCM connector terminal B13.

ECM/PCM CONNECTOR B (24P)

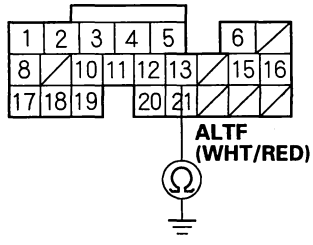

Wire side of female terminals

Is there continuity?

YES—Repair short in the wire between the ECM/PCM (B13) and the alternator. ■

NO—Update the ECM/PCM if it does not have the latest software, or substitute a known-good ECM/PCM (see page 11-6), then recheck. If the symptom/indication goes away with a known-good ECM/PCM, replace the original ECM/PCM (see page 11-227). ■

Protected by AR

PSP Switch Signal Circuit Troubleshooting

1. Start the engine, and let it idle.
2. Align the steering wheel straight ahead.
3. Check the PSP SWITCH in the DATA LIST with the HDS.

   Does it indicate ON?

   YES—Go to step 4.

   NO—Go to step 14.
4. Turn the steering wheel to the full lock position.
5. Check the PSP SWITCH in the DATA LIST with the HDS.

   Does it change to OFF?

   YES—The PSP switch signal circuit is OK. ■

   NO—Go to step 6.
6. Turn the ignition switch OFF.
7. Disconnet the PSP switch 2P connector.
8. Start the engine.
9. Check the PSP SWITCH in the DATA LIST with the HDS.

   Does it change to OFF?

   YES—Replace the PSP switch. ■

   NO—Go to step 10.
10. Turn the ignition switch OFF.
11. Jump the SCS line with the HDS.
12. Disconnect ECM/PCM connector E (31P).
13. Check for continuity between PSP switch 2P connector terminal No. 1 and body ground.

PSP SWITCH 2P CONNECTOR

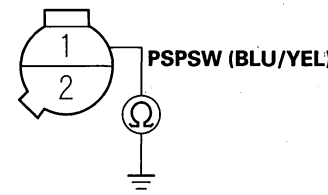

Wire side of female terminals

Is there continuity?

YES—Repair short in the wire between the ECM/PCM (E16) and the PSP switch. ■

NO—Update the ECM/PCM if it does not have the latest software, or substitute a known-good ECM/PCM (see page 11-6), then recheck. If the symptom/indication goes away with a known-good ECM/PCM, replace the original ECM/PCM (see page 11-227). ■

14. Turn the ignition switch OFF.
15. Disconnect the PSP switch 2P connector.
16. Connect PSP switch 2P connector terminals No. 1 and No. 2 with a jumper wire, then start the engine.

PSP SWITCH 2P CONNECTOR

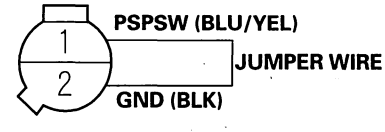

Wire side of female terminals

BACK

Protected by AR

17. Check the PSP SWITCH in the DATA LIST with the HDS.

    Does it change to ON?

    YES—Replace the PSP switch. ■

    NO—Go to step 18.

18. Turn the ignition switch OFF.

19. Remove the jumper wire from the PSP switch 2P connector.

20. Jump the SCS line with the HDS.

21. Disconnect ECM/PCM connector E (31P).

22. Connect PSP switch 2P connector terminal No. 1 to body ground with a jumper wire.

PSP SWITCH 2P CONNECTOR

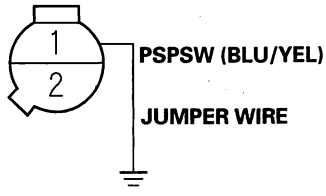

Wire side of female terminals

23. Check for continuity between body ground and ECM/PCM connector terminal E16.

ECM/PCM CONNECTOR E (31P)

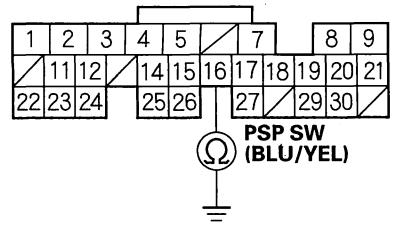

Wire side of female terminals

Is there continuity?

YES—Go to step 24.

NO—Repair open in the wire between the PSP switch and the ECM/PCM (E16). ■

24. Check for continuity between PSP switch 2P connector terminal No. 2 and body ground.

PSP SWITCH 2P CONNECTOR

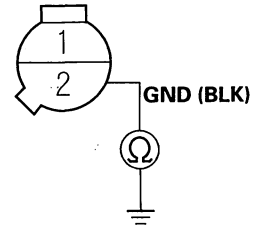

Wire side of female terminals

Is there continuity?

YES—Update the ECM/PCM if it does not have the latest software, or substitute a known-good ECM/PCM (see page 11-6), then recheck. If the symptom/indication goes away with a known-good ECM/PCM, replace the original ECM/PCM (see page 11-227). ■

NO—Repair open in the wire between the PSP switch and G202. ■

Protected by AR

Brake Pedal Position Switch Signal Circuit Troubleshooting

1. Turn the ignition switch ON (II).
2. Check the BRAKE SWITCH in the DATA LIST with the HDS.

   Does it indicate OFF?

   YES—Go to step 3.

   NO—Inspect the brake pedal position switch (see page 19-6).■
3. Press the brake pedal, and check the BRAKE SWITCH in the DATA LIST with the HDS.

   Does it change to ON?

   YES—The brake pedal position switch signal circuit (BKSW line) is OK.■

   NO—Go to step 4.
4. Turn the ignition switch OFF.
5. Jump the SCS line with the HDS.
6. Disconnect the brake pedal position switch 4P connector.
7. Disconnect ECM/PCM connector E (31P).
8. Check for continuity between ECM/PCM connector terminal E22 and body ground.

ECM/PCM CONNECTOR E (31P)

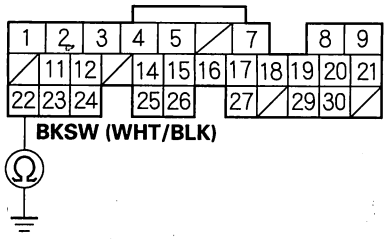

Wire side of female terminals

Is there continuity?

YES—Repair short in the wire between the ECM/PCM (E22) and the No. 13 HORN, STOP (20 A) fuse. Replace the No. 13 HORN, STOP (20 A) fuse.■

NO—Go to step 9.

9. Check for continuity between ECM/PCM connector terminal E22 and brake pedal position switch 4P connector terminal No. 2.

ECM/PCM CONNECTOR E (31P)

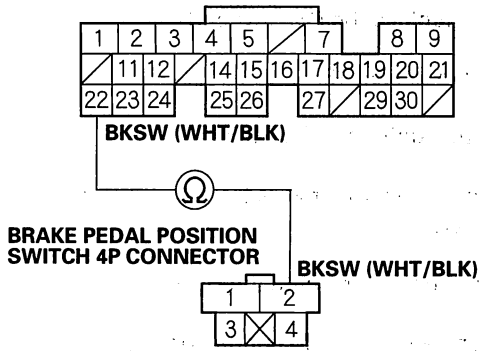

Wire side of female terminals

Is there continuity?

YES—Repair open in the wire between the brake pedal position switch and the No. 13 HORN, STOP (20 A) fuse. Inspect the brake pedal position switch (see page 19-6).■

NO—Repair open in the wire between the ECM/PCM (E22) and the brake pedal position switch.■

BACK

Protected by AR

Idle Speed Inspection

NOTE:
- Leave the idle air control (IAC) valve connected.
- Before checking the idle speed, check these items:
  - The malfunction indicator lamp (MIL) has not been reported on.
  - Ignition timing
  - Spark plugs
  - Air cleaner
  - PCV system
- Pull the parking brake lever up.

1. Disconnect the evaporative emission (EVAP) canister purge valve connector.

2. Connect the HDS to the data link connector (DLC) (A) located under the driver's side of the dashboard.

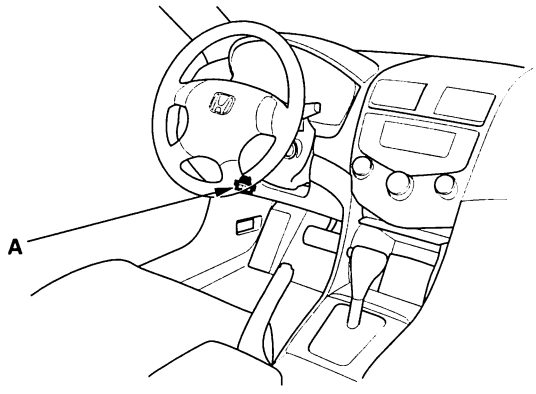

3. Start the engine. Hold the engine speed at 3,000 rpm without load (in Park or neutral) until the radiator fan comes on, then let it idle.

4. Check the idle speed without load conditions: headlights, blower fan, radiator fan, and air conditioner off.

Idle speed should be:
2003-2004 models:
SULEV and M/T models

M/T	**700±50 rpm**
A/T	**700±50 rpm (in Park or neutral)**

A/T (except SULEV) model
800±50 rpm (in Park or neutral)

2005-2006 models:

M/T	**720±50 rpm**
A/T	**800±50 rpm (in Park or neutral)**

5. Let the engine idle for 1 minute with high electric load (A/C switch on, temperature set to max cool, blower fan on High, and headlights on high beam).

Idle speed should be:
2003-2004 models:
SULEV and M/T models

M/T	**720±50 rpm**
A/T	**720±50 rpm (in Park or neutral)**

A/T (except SULEV) model
800±50 rpm (in Park or neutral)

2005-2006 models:

M/T	**720±50 rpm**
A/T	**800±50 rpm (in Park or neutral)**

NOTE: If the idle speed is not within specification, do the ECM/PCM idle learn procedure (see page 11-316). If the idle is still out of specification, go to the symptom troubleshooting.

6. Reconnect the EVAP canister purge valve connector.

Protected by AR

ECM/PCM Idle Learn Procedure

The idle learn procedure must be done so the ECM/PCM can learn the engine idle characteristics.

Do the idle learn procedure whenever you do any of these actions:

- Replace ECM/PCM.
- Reset ECM/PCM.
- Update ECM/PCM.
  NOTE: Erasing DTCs with the HDS does not require you to do the idle learn procedure.
- Replace or clean the throttle body.

Procedure

1. Make sure all electrical items (A/C, audio, rear window defogger, lights, etc.) are off.
2. Reset the ECM/PCM with the HDS.
3. Turn the ignition switch ON (II), and wait 2 seconds.
4. Start the engine. Hold the engine speed at 3,000 rpm without load (in Park or neutral) until the radiator fan comes on, or until the engine coolant temperature reaches 194 °F (90 °C).
5. Let the engine idle for about 5 minutes with the throttle fully closed.

   NOTE: If the radiator fan comes on, do not include its running time in the 5 minutes.

BACK

Protected by AR

Component Location Index

Non-SULEV model

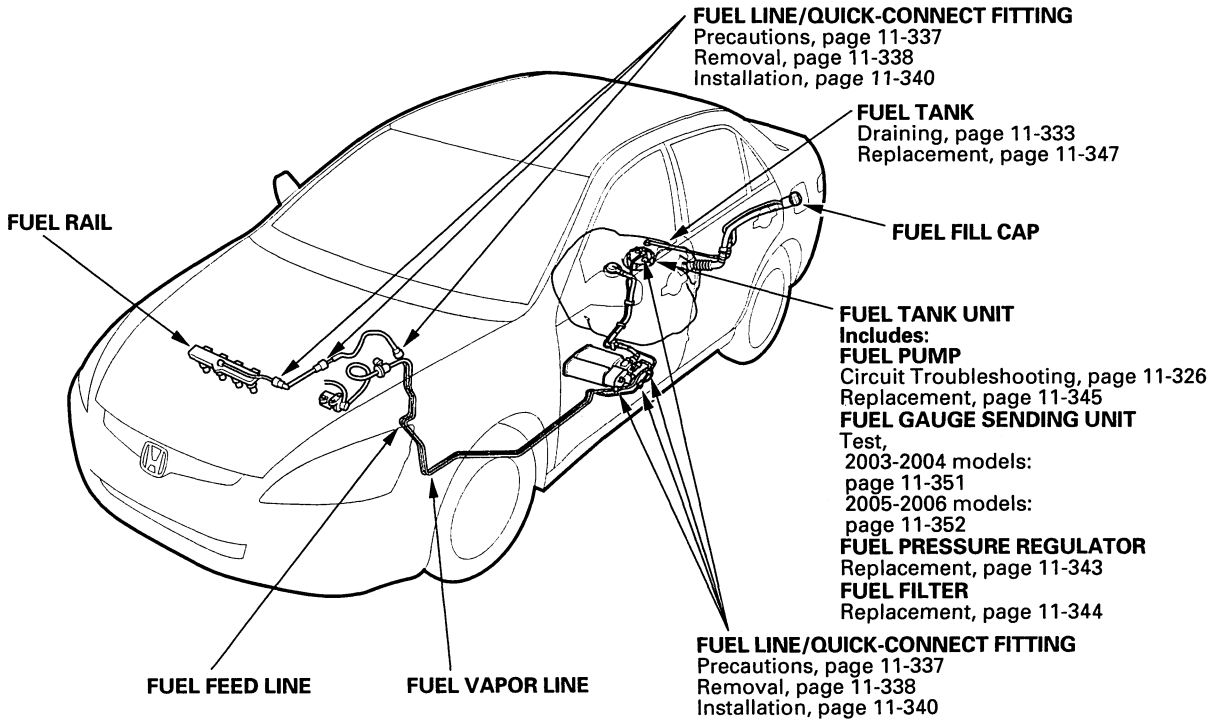

SULEV model

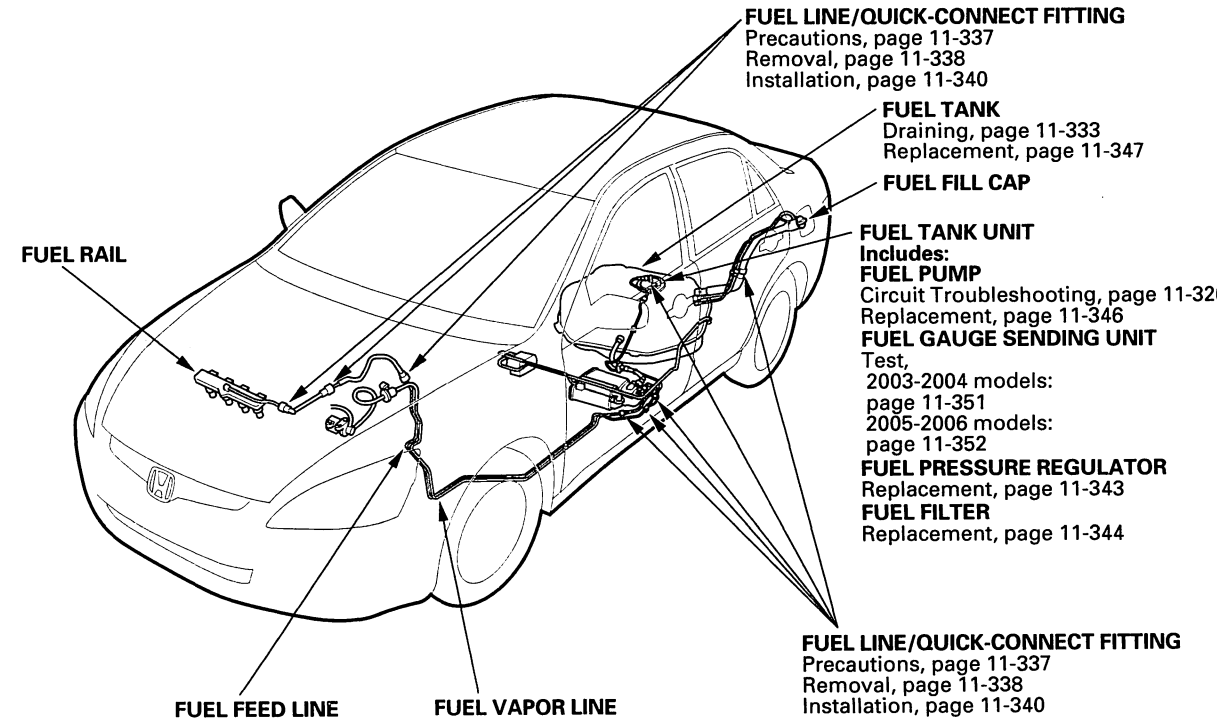

(cont'd)

Protected by AR

Component Location Index (cont'd)

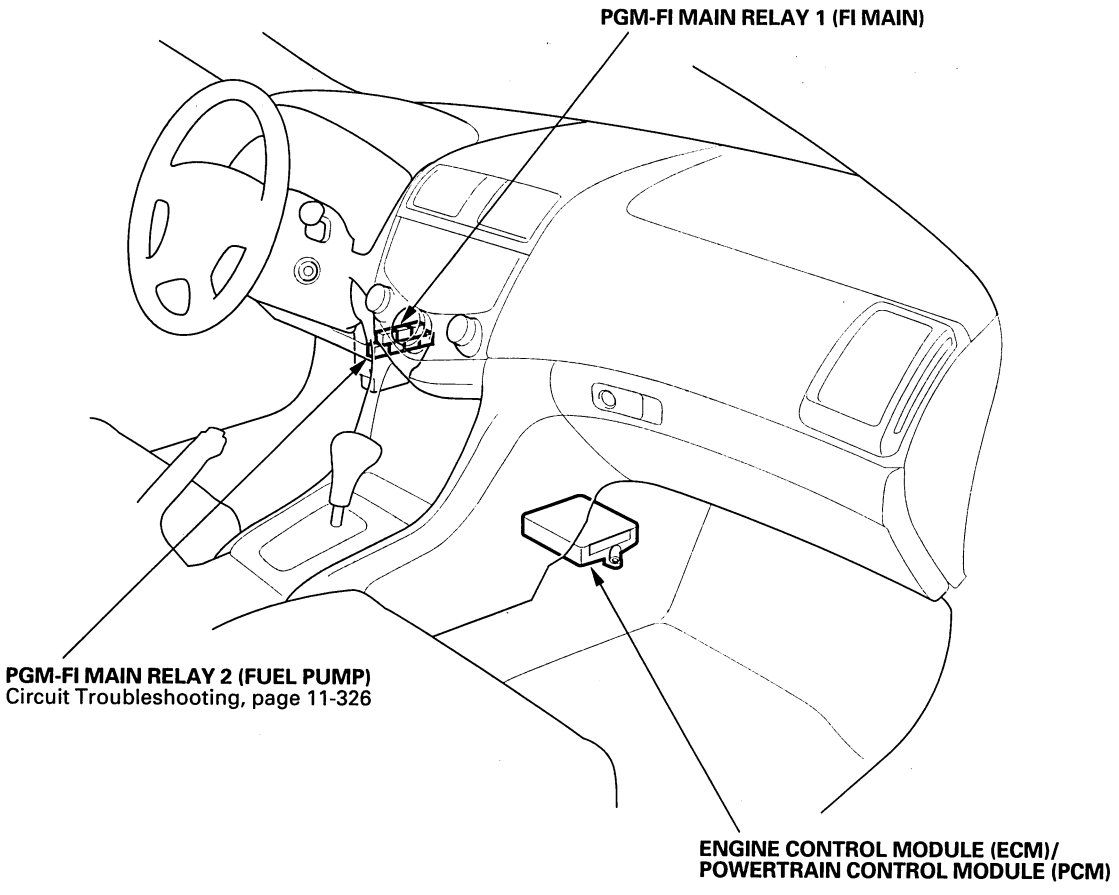

BACK

Protected by AR

DTC Troubleshooting

DTC P0461: Fuel Level Sensor (Fuel Gauge Sending Unit) Range/Performance Problem (2005-2006 models)

NOTE: Because it requires 162 miles (260 km) of driving without refueling to complete this diagnosis, DTC P0461 cannot be duplicated during this troubleshooting.

1. Test the fuel gauge sending unit (see page 11-352).

   Is the fuel gauge sending unit OK?

   YES—Check for poor connections or loose terminals at the fuel gauge sending unit and the gauge assembly. ■

   NO—Replace the fuel gauge sending unit; Non-SULEV model (see page 11-345), SULEV model (see page 11-346), then go to step 2.

2. Turn the ignition switch ON (II).

3. Reset the ECM/PCM with the HDS.

4. Do the ECM/PCM idle learn procedure (see page 11-316).

5. Check for Temporary DTCs or DTCs with the HDS.

   Are any Temporary DTCs or DTCs indicated?

   YES—If DTC P0461 is indicated, check for poor connections or loose terminals at the fuel gauge sending unit and the gauge assembly, then go to step 1. If any other Temporary DTCs or DTCs are indicated, go to the indicated DTC's troubleshooting.

   NO—Troubleshooting is complete. ■

Protected by AR

DTC Troubleshooting (cont'd)

DTC P0462: Fuel Level Sensor (Fuel Gauge Sending Unit) Circuit Low Voltage (2005-2006 models)

NOTE:
- Information marked with an asterisk (*) applies to 2005 model.
- Information marked with double asterisk (**) applies to 2006 model.

1. Turn the ignition switch ON (II).
2. Clear the DTC with the HDS, and wait 5 seconds.
3. Check for Temporary DTCs or DTCs with the HDS.

   Is DTC P0462 indicated?

   YES—Go to step 4.

   NO—Intermittent failure, system is OK at this time. Check for poor connections or loose terminals at the gauge control module and the fuel gauge sending unit. ■
4. Turn the ignition switch OFF.
5. Remove the trunk floor trim panel.
6. Remove the access panel from the floor.
7. Disconnect the fuel tank unit 5P connector.
8. Turn the ignition switch ON (II).
9. Clear the DTC with the HDS, and wait 5 seconds.
10. Check for Temporary DTCs or DTCs with the HDS.

    Is DTC P0463 indicated?

    YES—Go to step 11.

    NO—Replace the fuel gauge sending unit; Non-SULEV model (see page 11-345), SULEV model (see page 11-346), then go to step 22.
11. Turn the ignition switch OFF.
12. Remove the gauge control module (see page 22-276).
13. Disconnect the gauge control module 30P* (36P**) connector.
14. Check for continuity between fuel tank unit 5P connector terminal No. 2 and body ground.

FUEL TANK UNIT 5P CONNECTOR

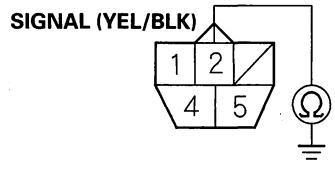

Wire side of female terminals

Is there continuity?

YES—Repair short in the wire between the gauge control module (signal line) and the fuel gauge sending unit, then go to step 23.

NO—Go to step 15.

15. Reconnect the gauge control module 30P* (36P**) connector.
16. Remove the fuel tank unit; Non-SULEV model (see page 11-345), SULEV model (see page 11-346).
17. Connect the fuel tank unit 5P connector.
18. Turn the ignition switch ON (II).
19. Clear the DTC with the HDS.

BACK

Protected by AR

20. Set the float (A) to the E position.

Non-SULEV model

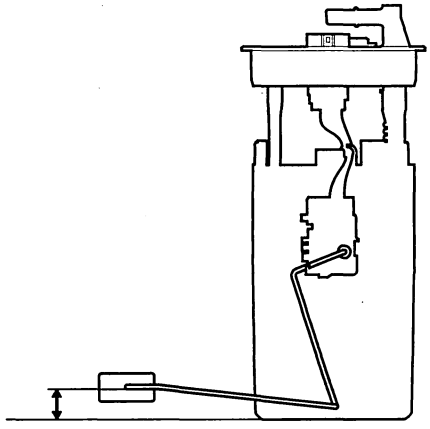

SULEV model

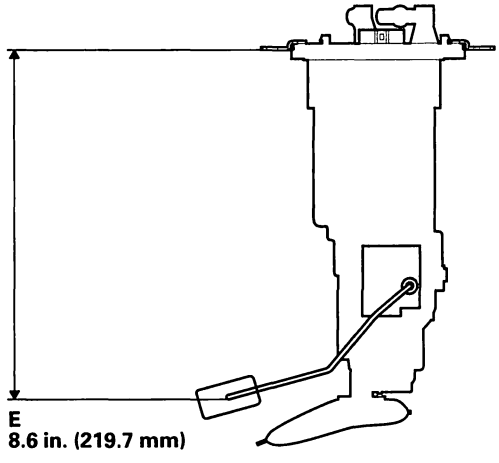

21. Check the fuel gauge.

Does the gauge move to the empty position?

YES—Go to step 29.

NO—Replace the gauge control module (see page 22-276), then go to step 22.

22. Turn the ignition switch OFF.

23. Reconnect all connectors.

24. Install the parts in the reverse order of removal.

25. Turn the ignition switch ON (II).

26. Reset the ECM/PCM with the HDS.

27. Do the ECM/PCM idle learn procedure (see page 11-316).

28. Check for Temporary DTCs or DTCs with the HDS.

Are any Temporary DTCs or DTCs indicated?

YES—If DTC P0462 is indicated, check for poor connections or loose terminals at the gauge control module and the fuel gauge sending unit, then go to step 1. If any other Temporary DTCs or DTCs are indicated, go to the indicated DTC's troubleshooting.

NO—Troubleshooting is complete. ■

29. Update the ECM/PCM if it does not have the latest software, or substitute a known-good ECM/PCM (see page 11-6).

30. Check for Temporary DTCs or DTCs with the HDS.

Are any Temporary DTCs or DTCs indicated?

YES—If DTC P0462 is indicated, check for poor connections or loose terminals at the gauge control module and the fuel gauge sending unit, then go to step 1. If any other Temporary DTCs or DTCs are indicated, go to the indicated DTC's troubleshooting.

NO—If the ECM/PCM was updated, troubleshooting is complete. If the ECM/PCM was substituted, replace the original ECM/PCM (see page 11-227). ■

Protected by AR

DTC Troubleshooting (cont'd)

DTC P0463: Fuel Level Sensor (Fuel Gauge Sending Unit) Circuit High Voltage (2005-2006 models)

NOTE:
- Information marked with an asterisk (*) applies to 2005 model.
- Information marked with double asterisk (**) applies to 2006 model.

1. Turn the ignition switch ON (II).
2. Clear the DTC with the HDS, and wait 5 seconds.
3. Check for Temporary DTCs or DTCs with the HDS.

   Is DTC P0463 indicated?

   YES—Go to step 4.

   NO—Intermittent failure, system is OK at this time. Check for poor connections or loose terminals at the gauge control module and the fuel gauge sending unit. ■
4. Turn the ignition switch OFF.
5. Remove the trunk floor trim panel.
6. Remove the access panel from the floor.
7. Disconnect the fuel tank unit 5P connector.
8. Connect fuel tank unit 5P connector terminal No. 1 to body ground with a jumper wire.

FUEL TANK UNIT 5P CONNECTOR

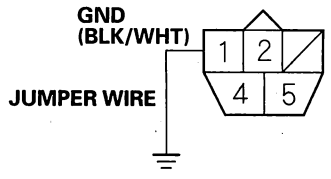

Wire side of female terminals

9. Remove the gauge control module (see page 22-276).
10. Disconnect the gauge control module 30P* (36P**) connector.
11. Check for continuity between gauge control module 30P* (36P**) connector terminal No. 3 and body ground.

GAUGE CONTROL MODULE 30P CONNECTOR*

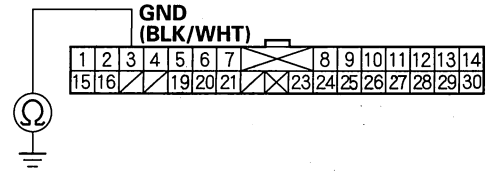

Wire side of female terminals

GAUGE CONTROL MODULE 36P CONNECTOR**

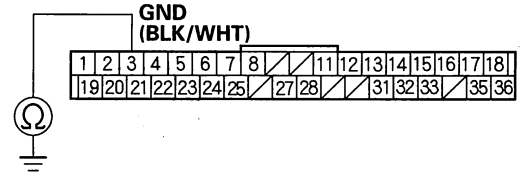

Wire side of female terminals

Is there continuity?

YES—Go to step 12.

NO—Repair open in the wire between the gauge control module (GND line) and the fuel gauge sending unit, then go to step 24.

BACK

Protected by AR

12. Connect fuel tank unit 5P connector terminal No. 2 to body ground with a jumper wire.

FUEL TANK UNIT 5P CONNECTOR

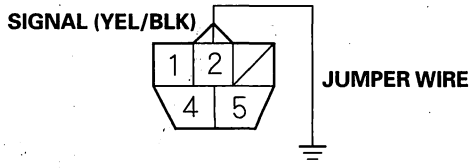

Wire side of female terminals

13. Check for continuity between gauge control module 30P* (36P**) connector terminal No. 4 and body ground.

GAUGE CONTROL MODULE 30P CONNECTOR*

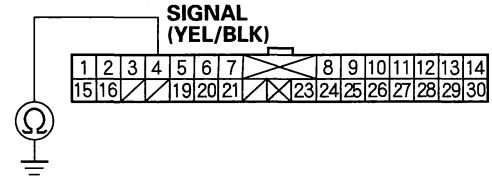

Wire side of female terminals

GAUGE CONTROL MODULE 36P CONNECTOR**

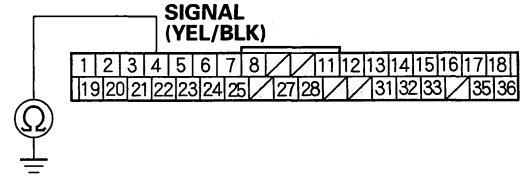

Wire side of female terminals

Is there continuity?

YES—Go to step 14.

NO—Repair open in the wire between the gauge control module (signal line) and the fuel gauge sending unit, then go to step 24.

(cont'd)

Protected by AR

DTC Troubleshooting (cont'd)

14. Remove the jumper wire from the fuel tank unit 5P connector.

15. Remove the fuel tank unit; Non-SULEV model (see page 11-345), SULEV model (see page 11-346).

16. Test the fuel gauge sending unit; Non-SULEV model (see page 11-351), SULEV model (see page 11-352).

    Is the fuel gauge sending unit OK?

    YES—Go to step 17.

    NO—Replace the fuel gauge sending unit; Non-SULEV model (see page 11-345), SULEV model (see page 11-346), then go to step 23.

17. Connect the fuel tank unit 5P connector.

18. Reconnect the gauge control module 30P* (36P**) connector.

19. Turn the ignition switch ON (II).

20. Clear the DTC with the HDS.

21. Set the float (A) to the F position.

Non-SULEV model

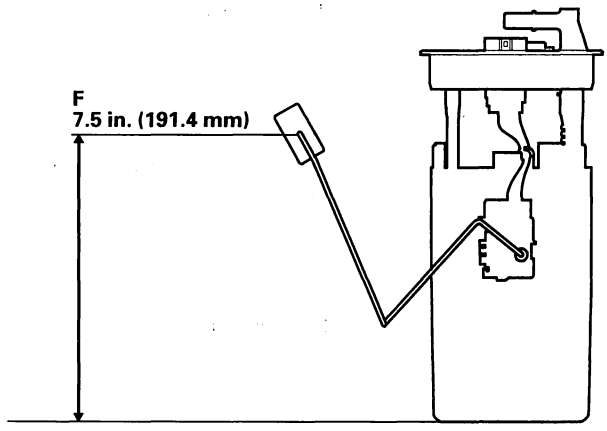

SULEV model

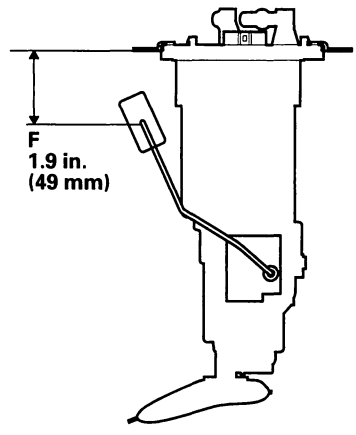

22. Check the fuel gauge.

    Does the gauge move to the full position?

    YES—Go to step 30.

    NO—Replace the gauge control module (see page 22-276), then go to step 23.

BACK

Protected by AR

23. Turn the ignition switch OFF.
24. Reconnect all connectors.
25. Install the parts in the reverse order of removal.
26. Turn the ignition switch ON (II).
27. Reset the ECM/PCM with the HDS.
28. Do the ECM/PCM idle learn procedure (see page 11-316).
29. Check for Temporary DTCs or DTCs with the HDS.

    Are any Temporary DTCs or DTCs indicated?

    YES—If DTC P0463 is indicated, check for poor connections or loose terminals at the gauge control module and the fuel gauge sending unit, then go to step 1. If any other Temporary DTCs or DTCs are indicated, go to the indicated DTC's troubleshooting.

    NO—Troubleshooting is complete. ■

30. Update the ECM/PCM if it does not have the latest software, or substitute a known-good ECM/PCM (see page 11-6).
31. Check for Temporary DTCs or DTCs with the HDS.

    Are any Temporary DTCs or DTCs indicated?

    YES—If DTC P0463 is indicated, check for poor connections or loose terminals at the gauge control module and the fuel gauge sending unit, then go to step 1. If any other Temporary DTCs or DTCs are indicated, go to the indicated DTC's troubleshooting.

    NO—If the ECM/PCM was updated, troubleshooting is complete. If the ECM/PCM was substituted, replace the original ECM/PCM (see page 11-227). ■

Protected by AR

Fuel Pump Circuit Troubleshooting

If you suspect a problem with the fuel pump, check that the fuel pump actually runs; when it is on, you will hear some noise if you listen to the fuel fill port with the fuel fill cap removed. The fuel pump should run for 2 seconds when the ignition switch is first turned on. If the fuel pump does not make noise, check as follows:

1. Turn the ignition switch OFF.
2. Remove the left kick panel; 2-door (see page 20-90), 4-door (see page 20-91), then remove PGM-FI main relay 2 (FUEL PUMP) (A) from the under-dash fuse/relay box.

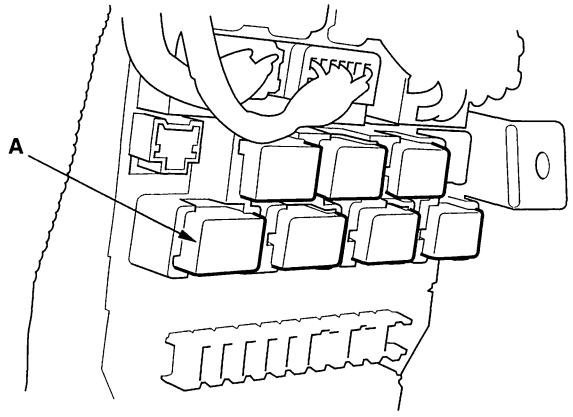

3. Turn the ignition switch ON (II).
4. Measure voltage between PGM-FI main relay 2 (FUEL PUMP) 4P connector terminal No. 3 and body ground.

PGM-FI MAIN RELAY 2 (FUEL PUMP) 4P CONNECTOR

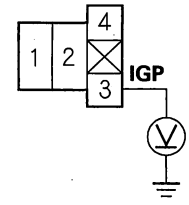

Terminal side of female terminals

Is there battery voltage?

YES—Go to step 5.

NO—
- Replace PGM-FI main relay 1 (FI MAIN). ■
- If needed, replace the under-dash fuse/relay box. ■

5. Measure voltage between PGM-FI main relay 2 (FUEL PUMP) 4P connector terminal No. 1 and body ground.

PGM-FI MAIN RELAY 2 (FUEL PUMP) 4P CONNECTOR

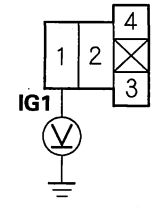

Terminal side of female terminals

Is there battery voltage?

YES—Go to step 6.

NO—
- Replace the No. 19 FUEL PUMP (15 A) fuse in the under-dash fuse/relay box. ■
- If needed, replace the under-dash fuse/relay box. ■

BACK

Protected by AR

6. Turn the ignition switch OFF.
7. Connect PGM-FI main relay 2 (FUEL PUMP) 4P connector terminal No. 4 to body ground with a jumper wire.

PGM-FI MAIN RELAY 2 (FUEL PUMP) 4P CONNECTOR

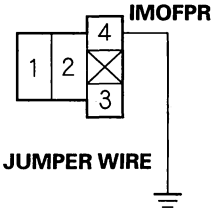

Terminal side of female terminals

8. Turn the ignition switch OFF.
9. Jump the SCS line with the HDS.
10. Disconnect ECM/PCM connector E (31P).
11. Check for continuity between body ground and ECM/PCM connector terminal E17.

ECM/PCM CONNECTOR E (31P)

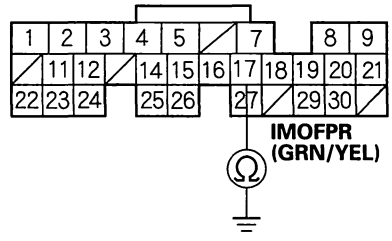

Wire side of female terminals

Is there continuity?

YES—Go to step 12.

NO—Repair open in the wire between PGM-FI main relay 2 (FUEL PUMP) and the ECM/PCM (E17).■

12. Reinstall PGM-FI main relay 2 (FUEL PUMP).
13. Connect ECM/PCM connector terminal E7 to body ground with a jumper wire.

ECM/PCM CONNECTOR E (31P)

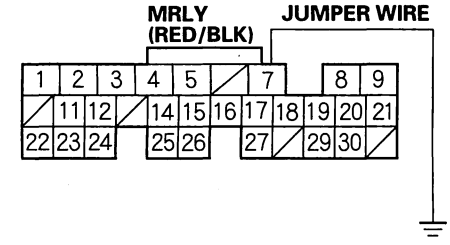

Wire side of female terminals

14. Turn the ignition switch ON (II).
15. Measure voltage between ECM/PCM connector terminal E17 and body ground.

ECM/PCM CONNECTOR E (31P)

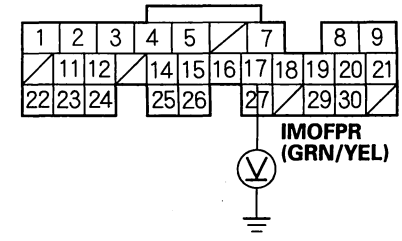

Wire side of female terminals

Is there battery voltage?

YES—Go to step 16.

NO—Replace PGM-FI main relay 2 (FUEL PUMP).■

(cont'd)

Protected by AR

Fuel Pump Circuit Troubleshooting (cont'd)

16. Turn the ignition switch OFF.
17. Reconnect ECM/PCM connector E (31P), and disconnect the jumper wire.
18. Open the SCS line with the HDS.
19. Turn the ignition switch OFF.
20. Turn the ignition switch ON (II), and measure voltage between ECM/PCM connector terminal E17 and body ground within 2 seconds.

ECM/PCM CONNECTOR E (31P)

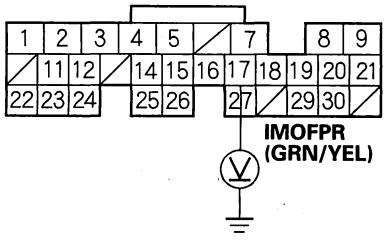

Wire side of female terminals

Is there battery voltage?

YES—Update the ECM/PCM if it does not have the latest software, or substitute a known-good ECM/PCM (see page 11-6), then recheck. If the symptom/indication goes away with a known-good ECM/PCM, replace the original ECM/PCM (see page 11-227), then go to step 21.

NO—If needed, replace the under-dash fuse/relay box, then go to step 21.

21. Turn the ignition switch OFF.
22. Remove the trunk floor.
23. Remove the access panel from the floor; Non-SULEV model (see page 11-345), SULEV model (see page 11-346).
24. Turn the ignition switch ON (II), and measure voltage between fuel pump 5P connector terminal No. 5 and body ground within 2 seconds.

FUEL PUMP 5P CONNECTOR

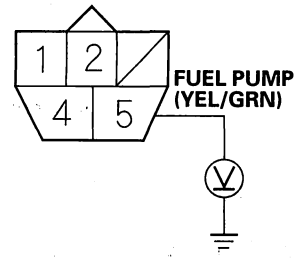

Wire side of female terminals

Is there battery voltage?

YES—Go to step 29.

NO—Go to step 25.

25. Turn the ignition switch OFF.
26. Remove PGM-FI main relay 2 (FUEL PUMP).

BACK

Protected by AR

27. Connect PGM-FI main relay 2 (FUEL PUMP) 4P connector terminals No. 1 and No. 2 with a jumper wire.

PGM-FI MAIN RELAY 2 (FUEL PUMP) 4P CONNECTOR

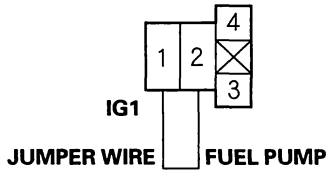

Terminal side of female terminals

28. Turn the ignition switch ON (II), and measure voltage between fuel pump 5P connector terminal No. 5 and body ground.

FUEL PUMP 5P CONNECTOR

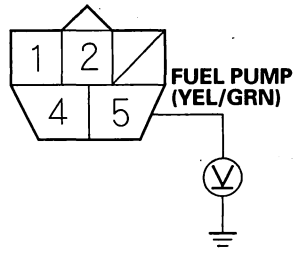

Wire side of female terminals

Is there battery voltage?

YES—Replace PGM-FI main relay 2 (FUEL PUMP). ■

NO—Repair open in the wire between PGM-FI main relay 2 (FUEL PUMP) and the fuel pump 5P connector. ■

29. Turn the ignition switch OFF.

30. Check for continuity between fuel pump 5P connector terminal No. 4 and body ground.

FUEL PUMP 5P CONNECTOR

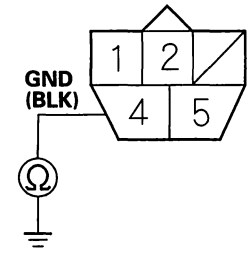

Wire side of female terminals

Is there continuity?

YES—Replace the fuel pump. ■

NO—Repair open in the wire between the fuel pump 5P connector and G603. ■

Protected by AR

Fuel Pressure Relieving

Before disconnecting fuel lines or hoses, relieve pressure from the system by stopping the fuel pump and disconnecting the fuel tube/quick connect fitting in the engine compartment.

With the HDS

1. Remove the fuel fill cap.
2. Turn the ignition switch ON (II).
3. From the INSPECTION MENU of the HDS, select Fuel Pump OFF, then start the engine, and let it idle until it stalls.
4. Turn the ignition switch OFF.

   NOTE:
   - Do not allow the engine to idle above 1,000 rpm or the ECM/PCM will continue to operate the fuel pump.
   - A DTC or a Temporary DTC may be set during this procedure. Check for DTCs, and clear them as needed (see page 11-3).
5. Turn the ignition switch OFF.
6. Make sure you have the anti-theft code for the radio and the navigation system (if equipped), then write down the frequencies for the radio's preset buttons.
7. Disconnect the negative cable from the battery.
8. Remove the quick-connect fitting cover (A).

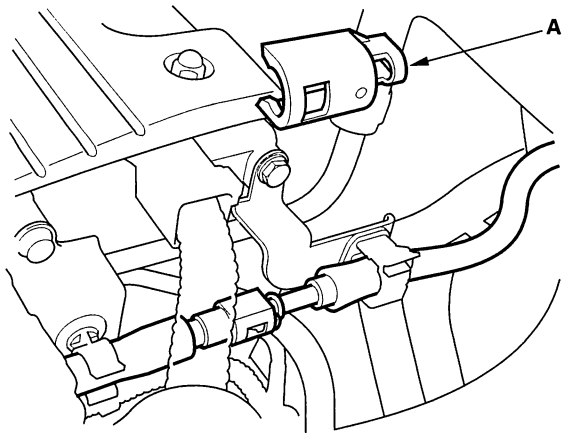

9. Check the fuel quick-connect fitting for dirt, and clean it if needed.
10. Place a rag or shop towel over the quick-connect fitting (A).

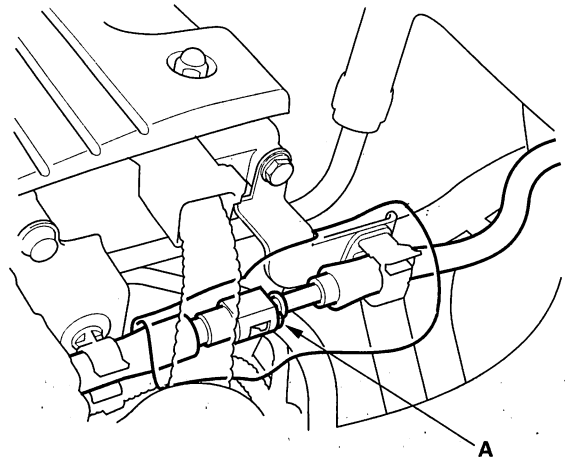

11. Disconnect the quick-connect fitting (A): Hold the connector (B) with one hand, and squeeze the retainer tabs (C) with the other hand to release them from the locking tabs (D). Pull the connector off.

    NOTE:
    - Be careful not to damage the line (E) or other parts.
    - Do not use tools.
    - If the connector does not move, keep the retainer tabs pressed down, and alternately pull and push the connector until it comes off easily.
    - Do not remove the retainer from the line; once removed, the retainer must be replaced with a new one.

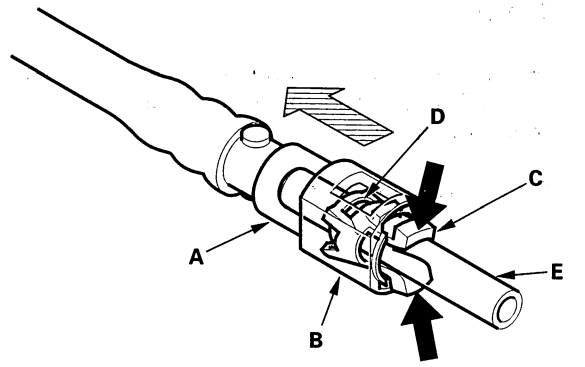

BACK

Protected by AR

12. After disconnecting the quick-connect fitting, check it for dirt or damage (see step 4 on page 11-339).

13. Reconnect the negative cable to the battery, and do these items:

    - Power window control unit reset procedure (see page 22-232).
    - Enter the anti-theft codes for the radio and the navigation system, then enter the customer's radio station presets.
    - Reset the clock.

Without the HDS

1. Make sure you have the anti-theft code for the radio, and the navigation system (if equipped) then write down the frequencies for the radio's preset buttons.

2. Remove the left kick panel; 2-door (see page 20-90), 4-door (see page 20-91), then remove PGM-FI main relay 2 (FUEL PUMP) (A) from the under-dash fuse/relay box.

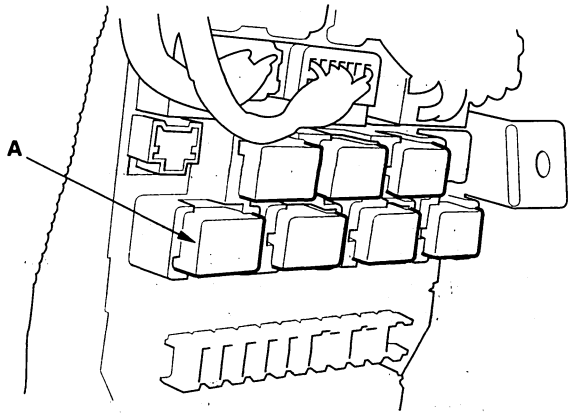

3. Start the engine, and let it idle until it stalls.

   NOTE: If any DTCs are stored, clear and ignore them.

4. Turn the ignition switch OFF.

5. Remove the fuel fill cap.

6. Disconnect the negative cable from the battery.

7. Remove the quick-connect fitting cover (A).

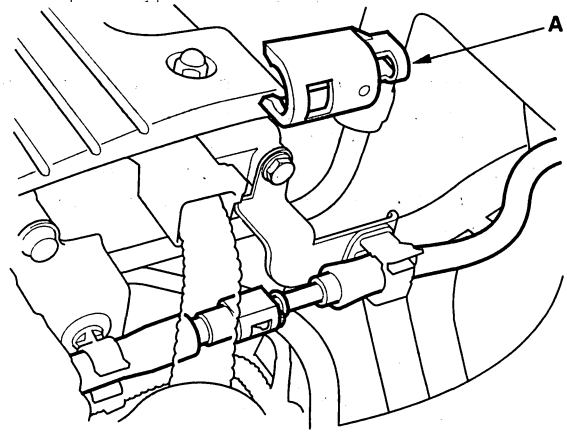

8. Check the fuel quick-connect fitting for dirt, and clean it if needed.

9. Place a rag or shop towel over the quick-connect fitting (A).

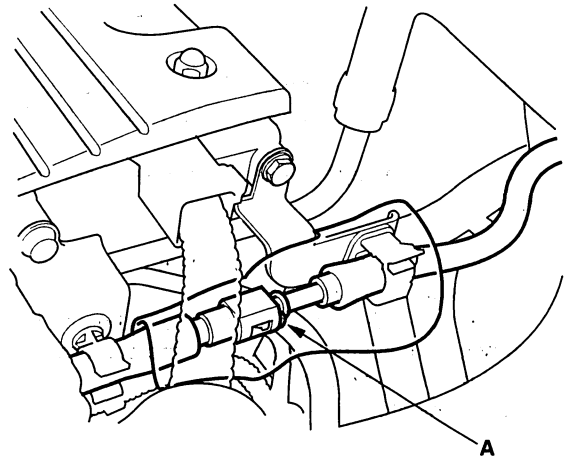

(cont'd)

Protected by AR

Fuel Pressure Relieving (cont'd)

10. Disconnect the quick-connect fitting (A): Hold the connector (B) with one hand, and squeeze the retainer tabs (C) with the other hand to release them from the locking tabs (D). Pull the connector off.

    NOTE:
    - Be careful not to damage the line (E) or other parts.
    - Do not use tools.
    - If the connector does not move, keep the retainer tabs pressed down, and alternately pull and push the connector until it comes off easily.
    - Do not remove the retainer from the line; once removed, the retainer must be replaced with a new one.

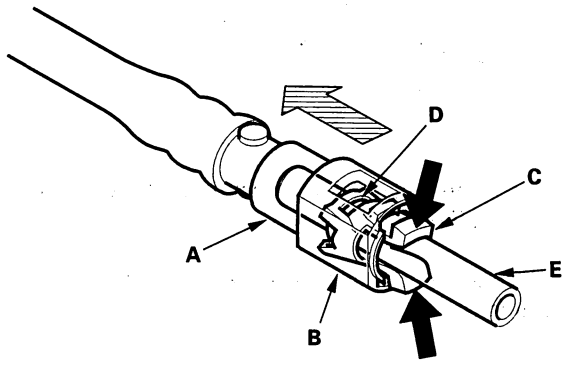

11. After disconnecting the quick-connect fitting, check it for dirt or damage (see step 4 on page 11-339).

12. Reconnect the negative cable to the battery, and do these items:

    - Power window control unit reset procedure (see page 22-232).
    - Enter the anti-theft codes for the radio and the navigation system, then enter the customer's radio station presets.
    - Reset the clock.

Fuel Pressure Test

Special Tools Required
- Fuel pressure gauge 07406-004000A
- Fuel pressure gauge attachment set 07AAJ-S6MA150

1. Relieve the fuel pressure (see page 11-330).

2. Disconnect the quick-connect fitting. Attach the fuel pressure gauge set and the fuel pressure gauge.

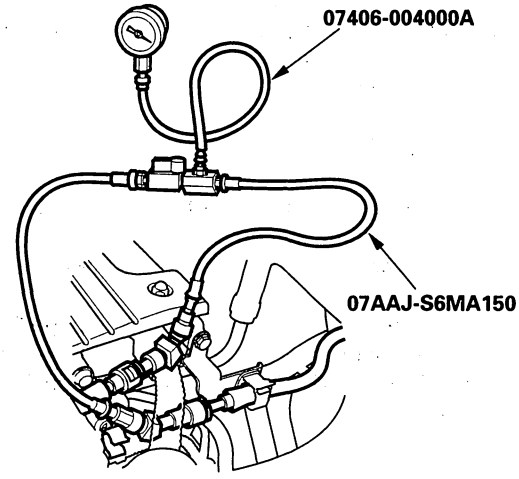

3. Start the engine, and let it idle.

    - If the engine starts, go to step 5.
    - If the engine does not start, go to step 4.

4. Check to see if the fuel pump is running: Listen to the fuel filler port with the fuel fill cap removed. The fuel pump should run for 2 seconds when the ignition switch is first turned on.

    - If the pump runs, go to step 5.
    - If the pump does not run, do the fuel pump circuit troubleshooting (see page 11-326).

BACK

Protected by AR



Fuel Tank Draining

5. Read the fuel pressure gauge. The pressure should be:

   2003-2004 SULEV models and 2006 (except SULEV) model
   320—370 kPa (3.3—3.8 kgf/cm², 47—54 psi)

   2003-2004 (except SULEV) models, 2005 model, and 2006 SULEV model
   330—380 kPa (3.4—3.9 kgf/cm², 48—55 psi)

   - If the pressure is OK, the test is complete.
   - If the pressure is out of specification, replace the fuel pressure regulator; Non-SULEV model (see page 11-343), SULEV model (see page 11-343) and the fuel filter (see page 11-344), then recheck the fuel pressure.

1. Remove the fuel tank unit; Non-SULEV model (see page 11-345), SULEV model (see page 11-346).
2. Using a hand pump, a hose, and a container suitable for fuel, draw the fuel from the fuel tank.
3. Install the fuel tank unit; Non-SULEV model (see page 11-345), SULEV model (see page 11-346).

Protected by AR

Fuel Supply System

Fuel Line Inspection

Check the fuel system lines and hoses for damage, leaks, and deterioration. Replace any damaged parts.

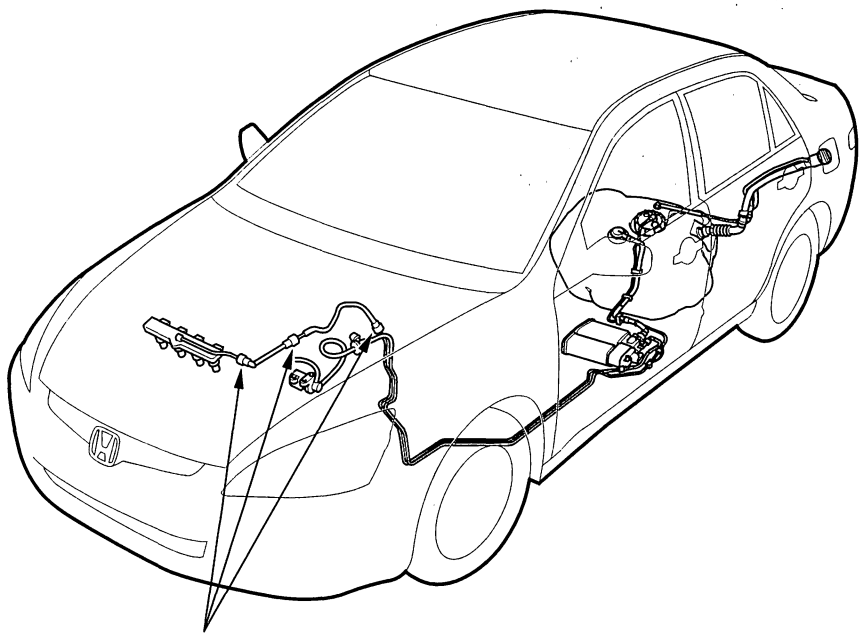

Make sure the connections are secure and the quick-connect fitting covers are firmly locked in place.

*: This illustration shows non-SULEV model.

BACK

Protected by AR

Check all clamps, and retighten any if necessary.

Non-SULEV model

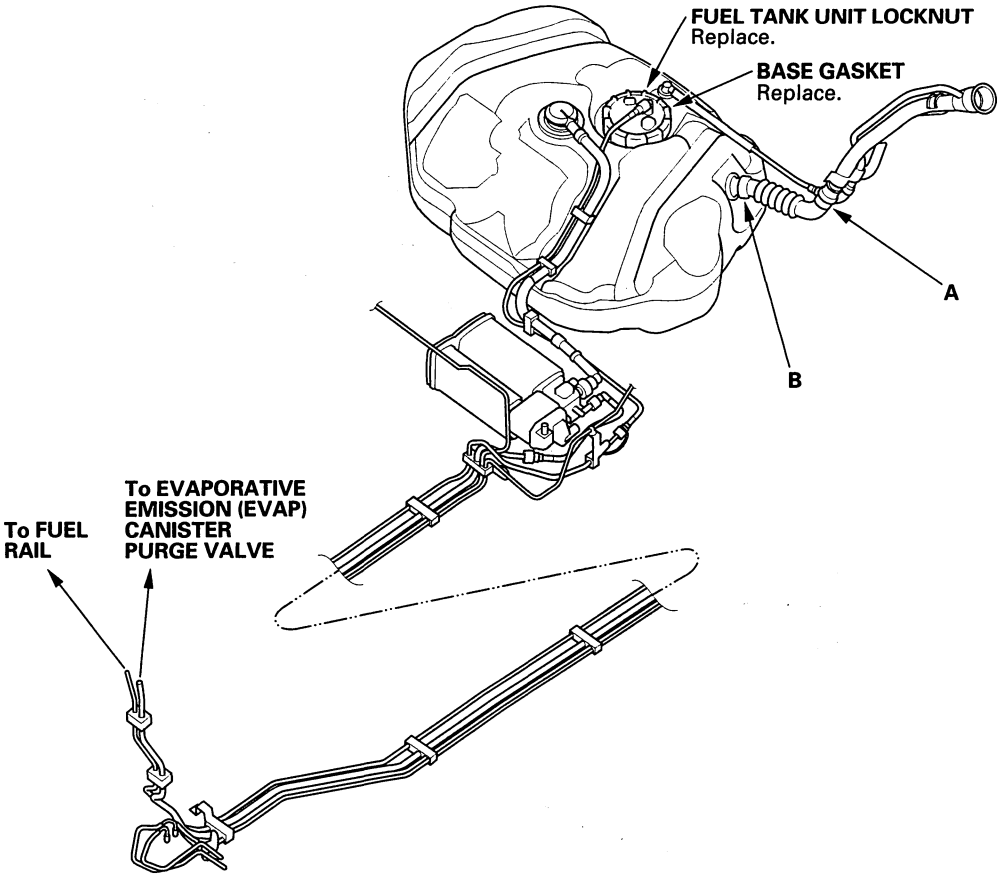

A:

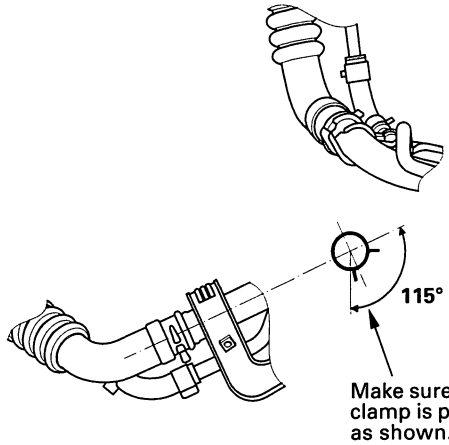

B:

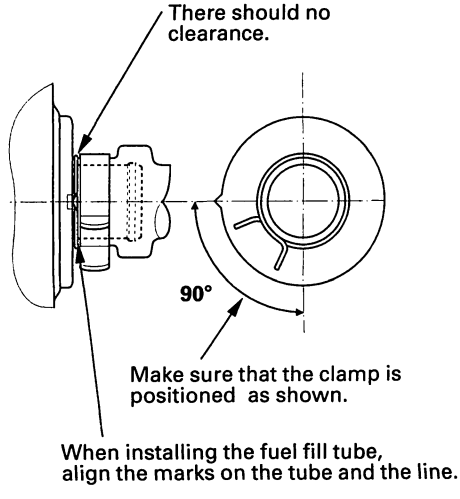

(cont'd)

Protected by AR

Fuel Line Inspection (cont'd)

SULEV model

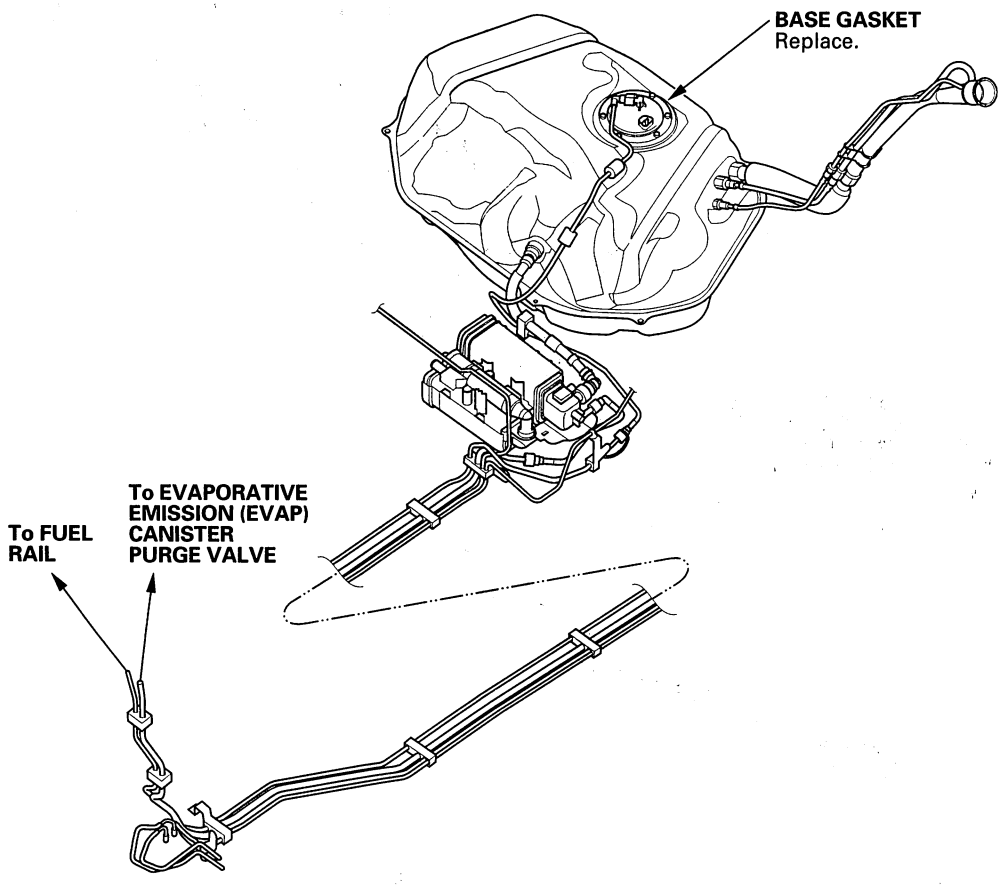

BACK

Protected by AR

Fuel Line/Quick-Connect Fitting Precautions

The fuel line/quick-connect fittings connect the fuel rail (A) to fuel feed hose (B), fuel feed hose to the fuel feed hose (C), the fuel feed hose to the fuel line (D), and the fuel line (E) to the fuel tank unit (F) and the fuel vapor line (G) to the EVAP canister (H) (SULEV model: and fuel fill neck tube (I), fuel tank vapor signal tube (J), fuel tank vapor recirculation tube (K) to the fuel tank). When removing or installing the fuel feed hose, fuel tank unit, or fuel tank, it is necessary to disconnect or connect the quick-connect fittings.
Pay attention to the following:

- The fuel feed hoses, fuel line, and quick-connect fittings are not heat-resistant; be careful not to damage them during welding or other heat-generating procedures.
- The fuel feed hoses, fuel line, and quick-connect fittings are not acid-proof; do not touch them with a shop towel that was used for wiping battery electrolyte. Replace them if they came into contact with electrolyte or something similar.
- When connecting or disconnecting the fuel feed hoses, fuel line, and quick-connect fittings, be careful not to bend or twist them excessively. Replace them if they are damaged.

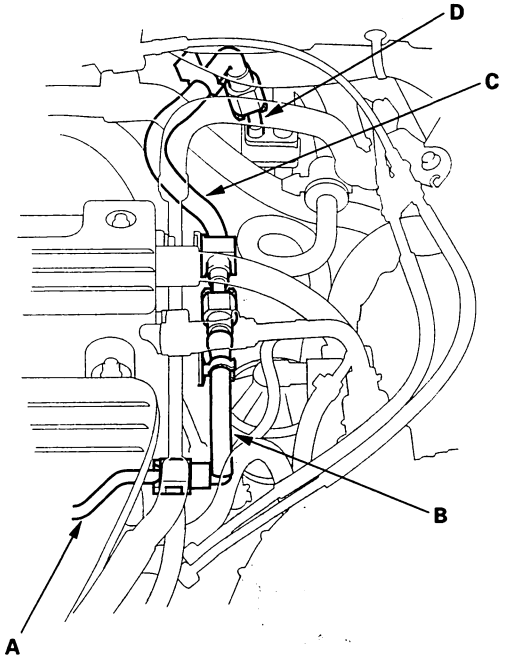

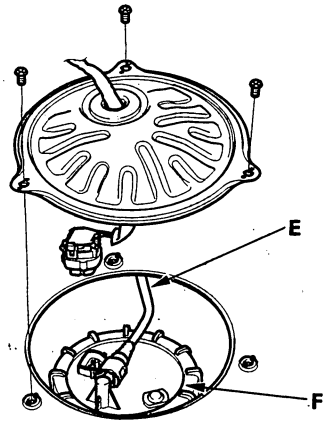

*: This illustration shows the non-SULEV model.

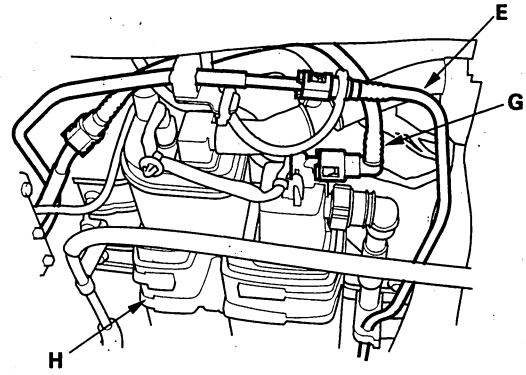

*: This illustration shows the non-SULEV model.

SULEV model

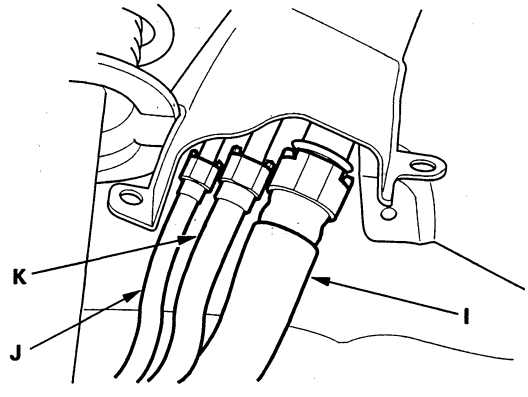

(cont'd)

Protected by AR

Fuel Line/Quick-Connect Fitting Precautions (cont'd)

A disconnected quick-connect fitting can be reconnected, but the retainer on the mating line cannot be reused once it has been removed from the line. Replace the retainer when:

- replacing the fuel rail.
- replacing the fuel line.
- replacing the fuel pump.
- replacing the fuel filter.
- replacing the fuel gauge sending unit.
- replacing the fuel tank (SULEV model).
- it has been removed from the line.
- replacing EVAP purge line.
- replacing EVAP canister.
- it is damaged.

Retainer location	Manufacturer	Retainer color	Piping diameter
Engine compartment fuel feed hose A, fuel rail side	Tokai	Blue/ green	0.3 in. (8 mm)
Engine compartment fuel feed hose A, fuel feed hose B side and fuel hose B	Tokai	Green	0.2 in. (6.3 mm)
Fuel tank unit: Fuel feed line, fuel tank unit side	Tokai	Orange	0.4 in. (9.5 mm)
Fuel tank unit: Fuel feed line, fuel line side	Tokai	Green	0.2 in. (6.3 mm)
EVAP canister: fuel vapor line	Tokai	Orange	0.4 in. (9.5 mm)
Fuel tank unit: Fuel feed neck tube (SULEV model)	Tokai	Grey	1.1 in. (28.55 mm)
Fuel tank unit: Fuel tank vapor recirculation tube (SULEV model)	Tokai	Natural	0.5 in. (11.8 mm)
Fuel tank unit: Fuel feed tank vapor signal tube, fuel tank side (SULEV model)	Tokai	Green	0.2 in. (6.3 mm)
Fuel tank unit: Fuel tank vapor signal tube, fuel fill side (SULEV model)	Tokai	Blue/ green	0.3 in. (8 mm)

Fuel Line/Quick-Connect Fitting Removal

NOTE: Before you work on the fuel lines and fittings, read the "Fuel Line/Quick-Connect Fitting Precautions" (see page 11-337).

1. Relieve the fuel pressure (see page 11-330).
2. Check the fuel quick-connect fitting (A) for dirt, and clean it if needed.

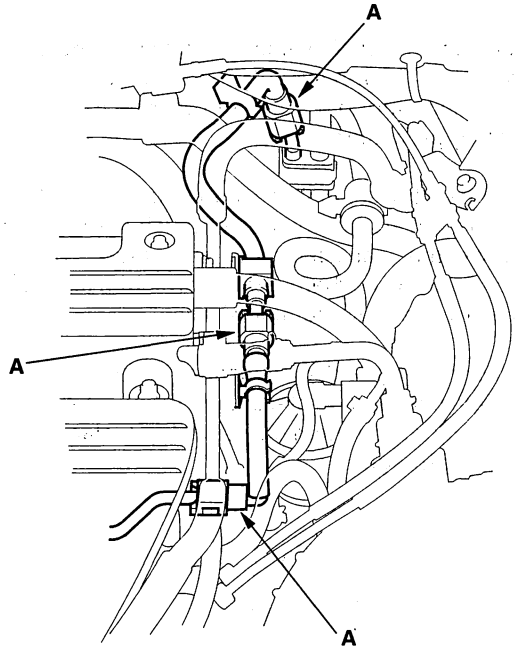

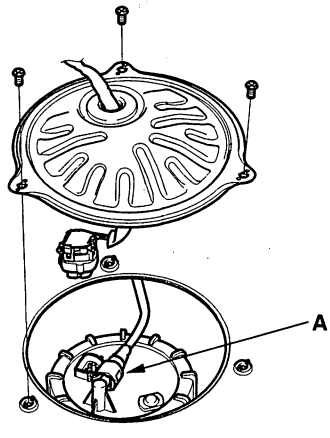

*: This illustration shows the non-SULEV model.

BACK

Protected by AR

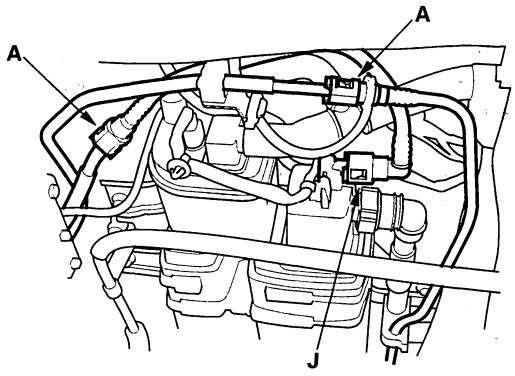

*: This illustration shows the non-SULEV model.

SULEV model

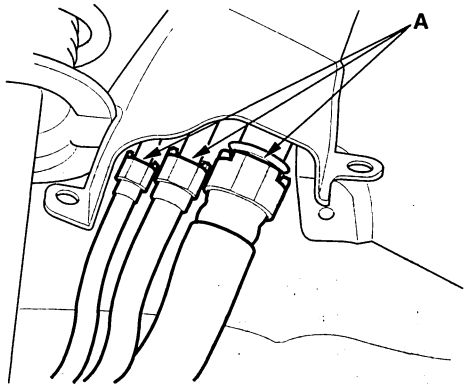

3. Place a rag or shop towel over the quick-connect fitting. Hold the connector (A) with one hand, and squeeze the retainer tabs (B) with the other hand to release them from the locking tabs (C). Pull the connector off.

NOTE:
- Be careful not to damage the line (D) or other parts. Do not use tools.
- If the connector does not move, keep the retainer tabs pressed down, and alternately pull and push the connector until it comes off easily.
- Do not remove the retainer from the line; once removed, the retainer must be replaced with a new one.

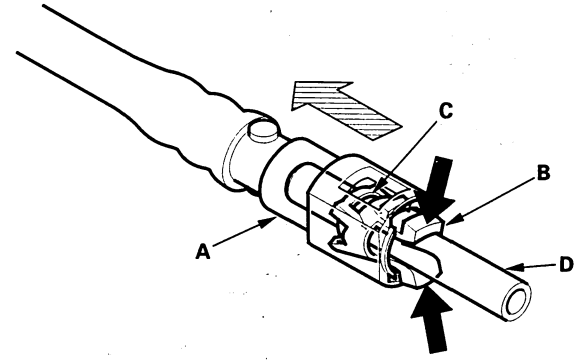

4. Check the contact area (A) of the line (B) for dirt or damage.

- If it is dirty, clean it.
- If it is rusty or damaged, replace the fuel pump, fuel filter, or fuel feed line.

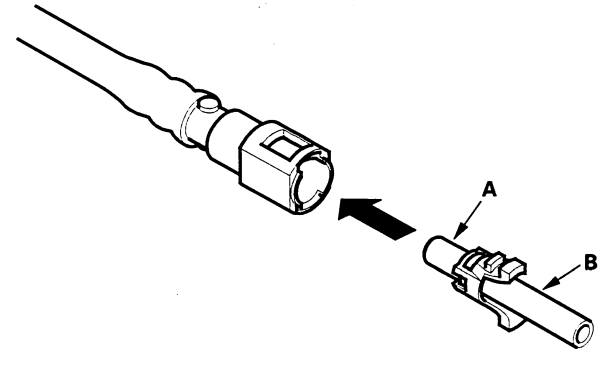

(cont'd)

Protected by AR

Fuel Line/Quick-Connect Fitting Removal (cont'd)

5. To prevent damage and keep foreign matter out, cover the disconnected connector and line ends with plastic bags (A).

   NOTE: The retainer cannot be reused once it has been removed from the line.
   Replace the retainer when:

   - replacing the fuel rail.
   - replacing the fuel feed line.
   - replacing the fuel pump.
   - replacing the fuel filter.
   - replacing the fuel gauge sending unit.
   - it has been removed from the line.
   - replacing EVAP purge line.
   - replacing EVAP canister.
   - it is damaged.

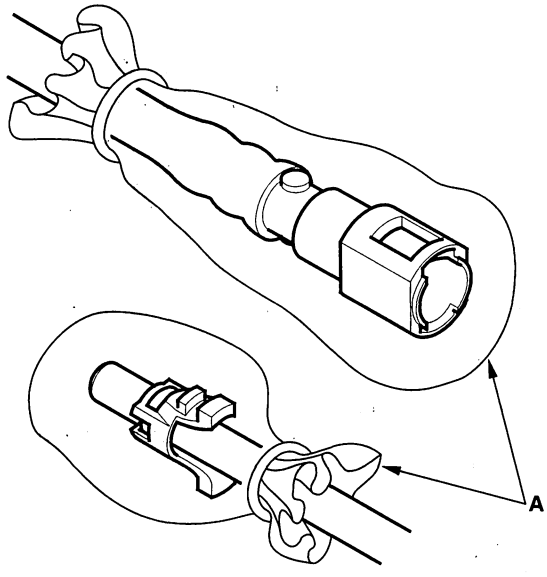

Fuel Line/Quick-Connect Fitting Installation

NOTE: Before you work on the fuel line and fittings, read the "Fuel Line/Quick-Connect Fitting Precautions" (see page 11-337).

1. Check the contact area (A) of the line (B) for dirt or damage, and clean it if needed.

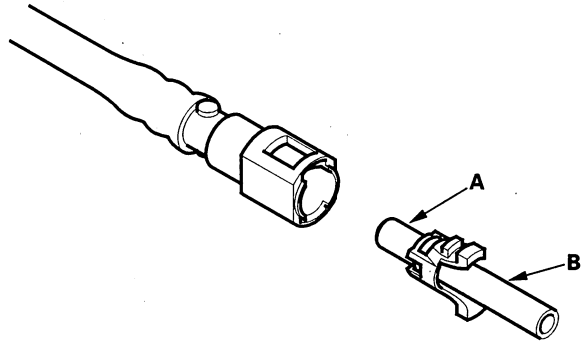

2. Insert a new retainer (A) into the connector (B) if the retainer is damaged, or after:

   - replacing the fuel rail.
   - replacing the fuel feed line.
   - replacing the fuel pump.
   - replacing the fuel filter.
   - replacing the fuel gauge sending unit
   - removing the retainer from the line.
   - replacing EVAP purge line.
   - replacing EVAP canister.

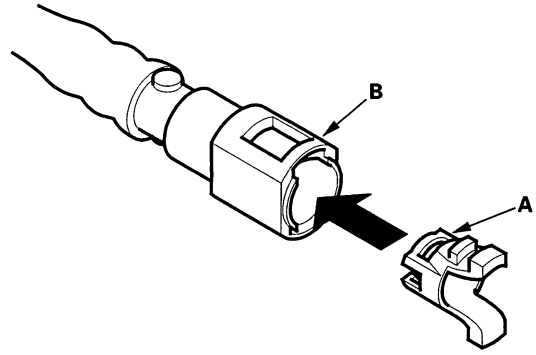

BACK

Protected by AR

3. Before connecting a new fuel tube/quick-connect fitting assembly (A), remove the old retainer from the mating line.

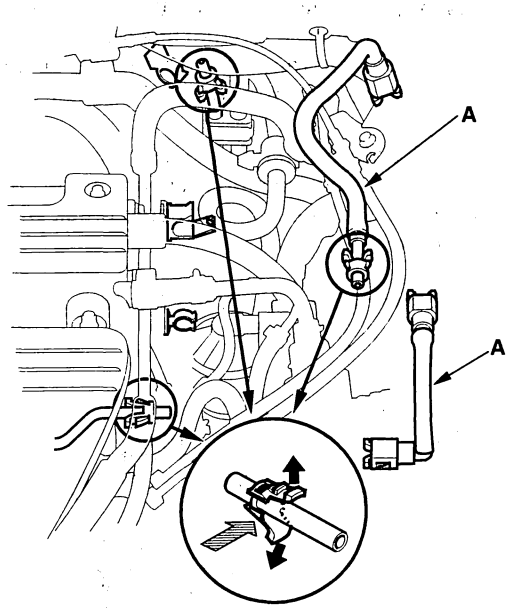

Non-SULEV model

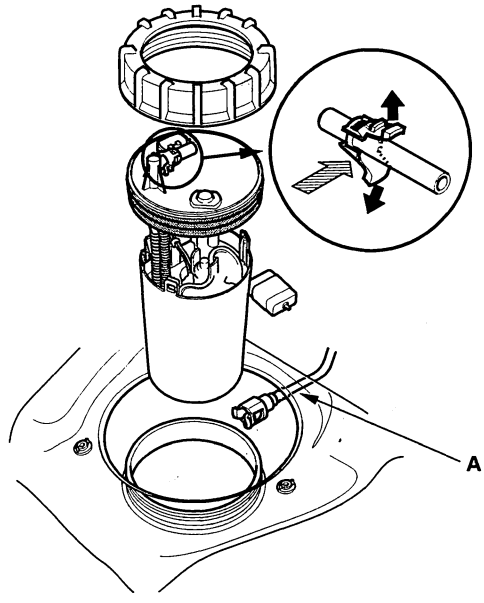

SULEV model

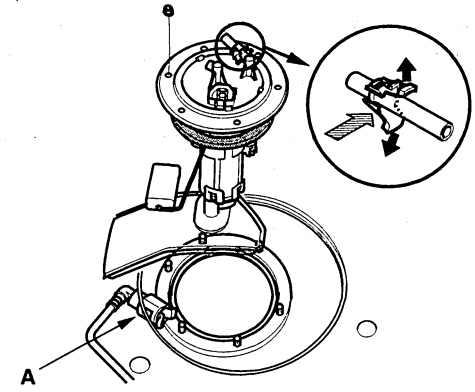

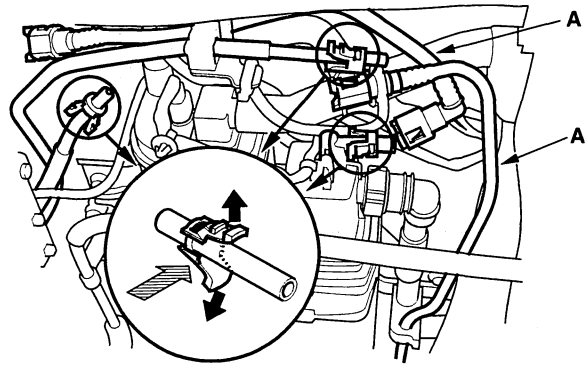

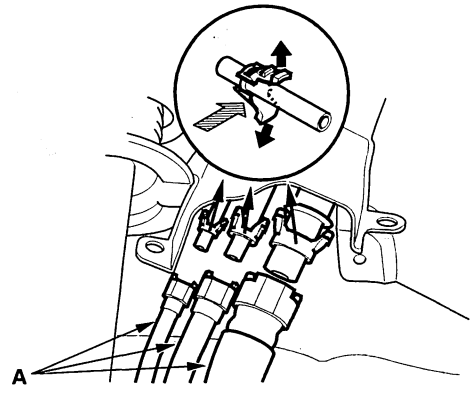

(cont'd)

Protected by AR

Fuel Line/Quick-Connect Fitting Installation (cont'd)

4. Align the quick-connect fittings with the line (A), and align the retainer locking tabs (B) with the connector tabs (C), then press the quick-connect fittings onto the line until both retainer pawls lock with a clicking sound.

   NOTE: If it is hard to connect, put a small amount of new engine oil on the line end.

Connection with new retainer

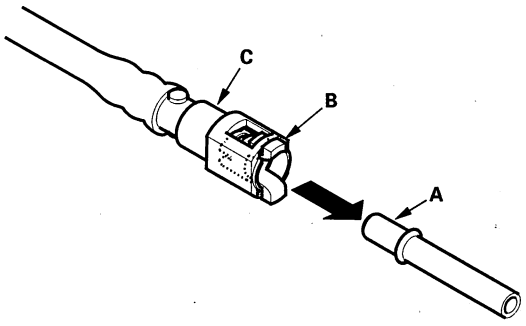

Reconnection to existing retainer

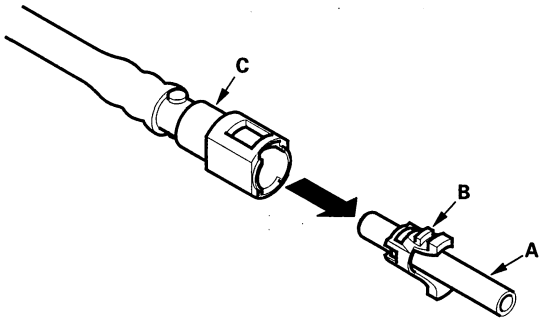

Connection to new fuel line

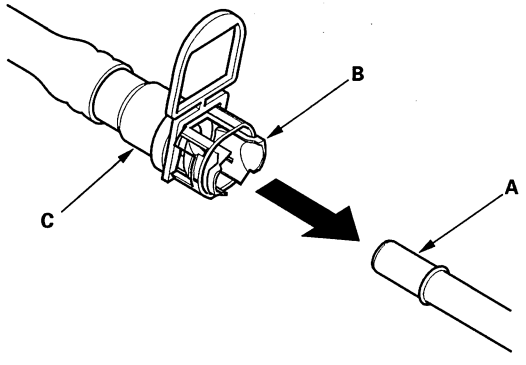

5. When you reconnect the connector with the old retainer, make sure the connection is secure and the tabs (A) are firmly locked into place; check visually and also by pulling the connector (B). When you replace the fuel line with a new one, make sure you remove the ring pull (C) upwards after you confirm the connection is secure.

   NOTE: Before you remove the ring pull, make sure the fuel line connection is secure. If the connection is not secure, the ring pull could break when you try to remove it.

Reconnection to existing retainer

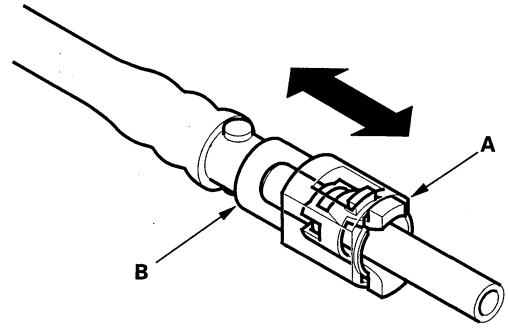

Connection to new fuel line

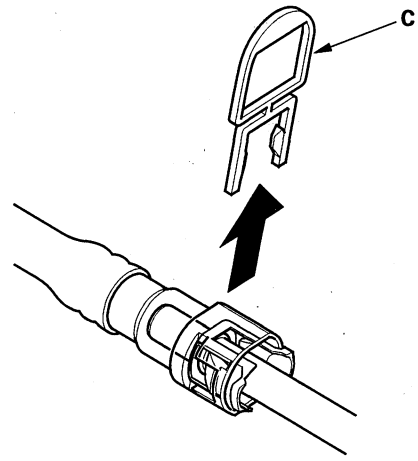

6. Reconnect the negative cable to the battery, and turn the ignition switch ON (II). The fuel pump will run for about 2 seconds, and fuel pressure will rise. Repeat this two or three times, and check that there is no leakage in the fuel supply system.

BACK

Protected by AR

Fuel Pressure Regulator Replacement

Non-SULEV model

1. Remove the fuel tank unit (see page 11-345).
2. Remove the clip (A).

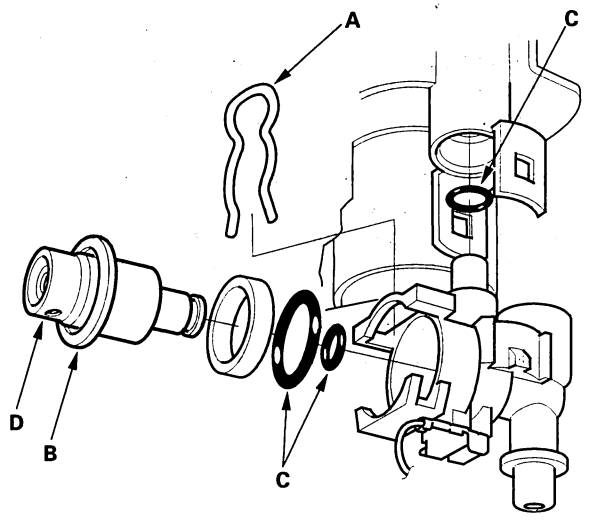

3. Remove the fuel pressure regulator (B).
4. Install the regulator in the reverse order of removal with new O-rings (C).
   Make sure the regulator is installed with the drain hole (D) facing down.

SULEV model

1. Remove the fuel tank unit (see page 11-346).
2. Remove the holder (A).

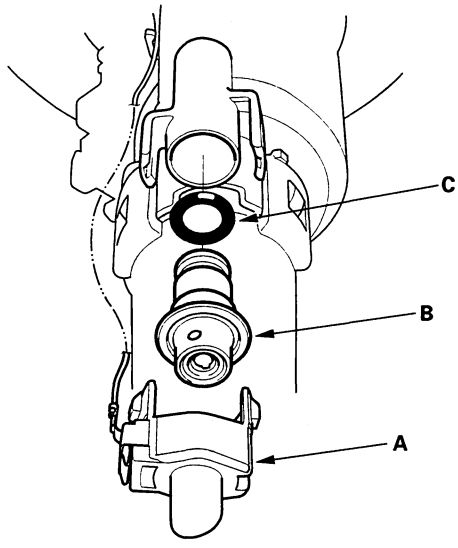

3. Remove the fuel pressure regulator (B).
4. Install the regulator in the reverse order of removal with a new O-ring (C).

   NOTE: Coat the O-ring with clean engine oil.

Protected by AR

Fuel Filter Replacement

The fuel filter should be replaced whenever the fuel pressure drops below the specified value (see page 11-330), after making sure that the fuel pump and the fuel pressure regulator are OK.

1. Remove the fuel tank unit; Non-SULEV model (see page 11-345), SULEV model (see page 11-346).

2. Remove the fuel filter set (A).

Non-SULEV model

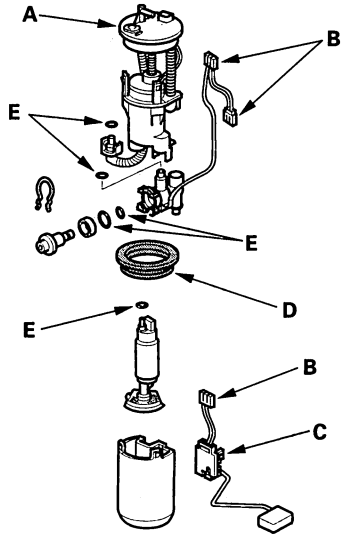

SULEV model

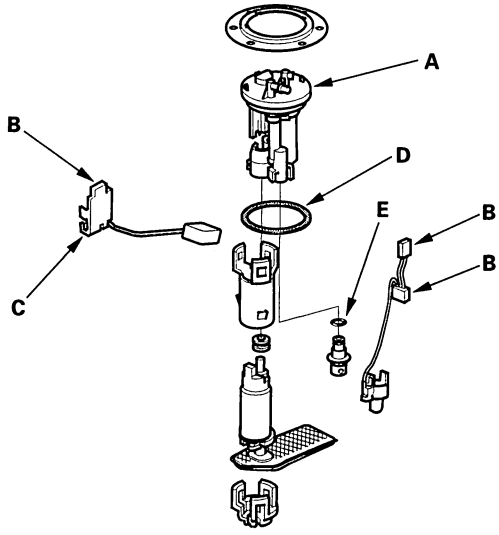

3. Check these items before installing the fuel tank unit:

   - When connecting the wire harness, make sure the connection is secure and the connectors (B) are firmly locked into place.
   - When installing the fuel gauge sending unit (C), make sure the connection is secure and the connector is firmly locked into place. Be careful not to bend or twist it excessively.

4. Install the parts in the reverse order of removal with a new base gasket (D) and new O-rings (E). When installing the fuel tank unit, align the marks on the unit and the fuel tank (see page 11-347).

   NOTE: For non-SULEV models, replace the fuel tank unit locknut and base gasket as a set.

BACK

Protected by AR

Fuel Pump/Fuel Gauge Sending Unit Replacement

Special Tools Required
Fuel sender wrench 07AAA-S0XA100

Non-SULEV model

1. Relieve the fuel pressure (see page 11-330).
2. Remove the fuel fill cap.
3. Remove the trunk floor.
4. Remove the access panel (A) from the floor.

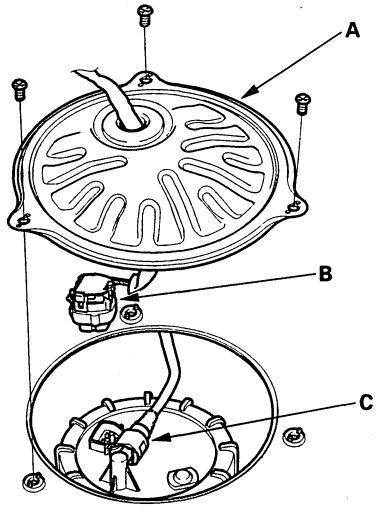

5. Disconnect the fuel pump 5P connector (B).
6. Disconnect the quick-connect fitting (C) from the fuel tank unit.
7. Using the special tool, loosen the fuel tank unit locknut (A).

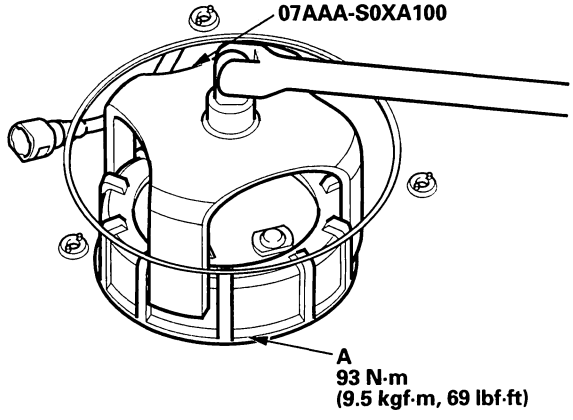

8. Remove the locknut (A) and the fuel tank unit.

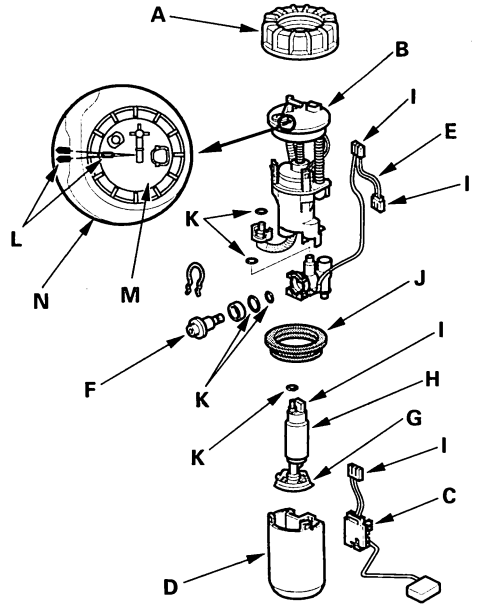

9. Remove the fuel filter (B), the fuel gauge sending unit (C), the case (D), the wire harness (E), and the fuel pressure regulator (F).
10. Check these items before installing the fuel tank unit:
    - Make sure the connection is secure and the suction filter (G) is firmly connected to the fuel pump (H).
    - When connecting the wire harness, make sure the connection is secure and the connectors (I) are firmly locked into place.
    - When installing the fuel gauge sending unit, make sure the connection is secure and the connector is firmly locked into place. Be careful not to bend or twist it excessively.
11. Install the parts in the reverse order of removal with a new base gasket (J), new locknut, and new O-rings (K). When installing the fuel tank unit, align the marks (L) on the unit (M) and the fuel tank (N).

Protected by AR

Fuel Pump/Fuel Gauge Sending Unit Replacement (cont'd)

Special Tools Required
Fuel sender wrench 07AAA-S0XA100

SULEV model

1. Relieve the fuel pressure (see page 11-330).
2. Remove the fuel fill cap.
3. Remove the trunk floor.
4. Remove the access panel (A) from the floor.

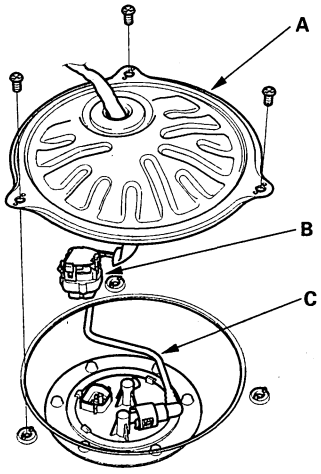

5. Disconnect the fuel pump 5P connector (B).
6. Disconnect the quick-connect fitting (C) from the fuel tank unit.
7. Remove the fuel tank unit (A).

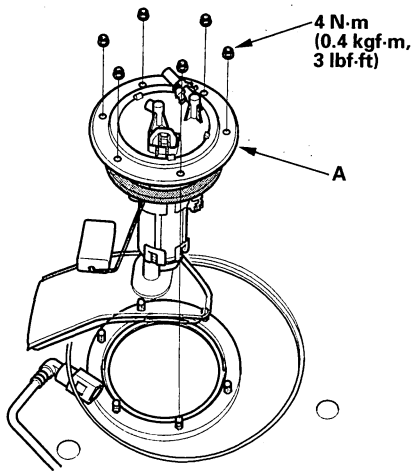

8. Remove the strainer case (A), the fuel gauge sending unit (B), and the wire harness (C).

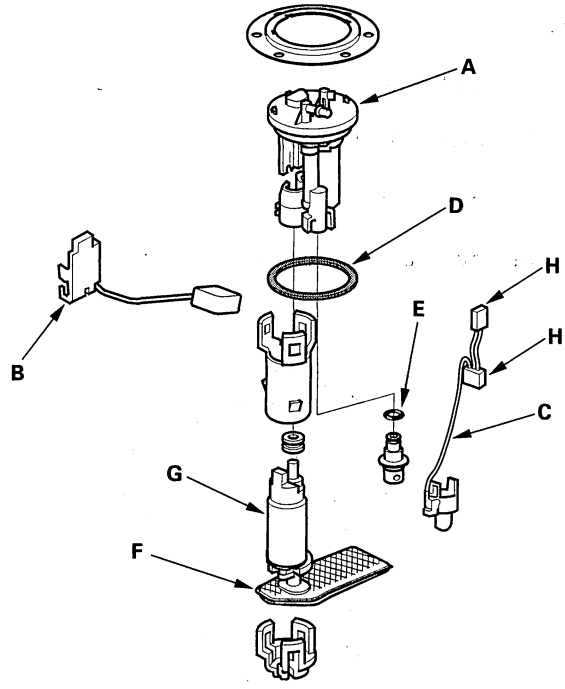

9. Install the part in the revers order of removal with a new base gasket (D) and new O-ring (E), then check these items:
   - Make sure the connection is secure and the suction filter (F) is firmly connected to the fuel pump (G).
   - When connecting the wire harness, make sure the connection is secure and the connectors (H) are firmly locked into place.
   - When installing the fuel gauge sending unit, make sure the connection is secure and the connector is firmly locked into place. Be careful not to bend or twist it excessively.

BACK

Protected by AR

Fuel Tank Replacement

Removal

1. Relieve the fuel pressure (see page 11-330).
2. Drain the fuel tank (see page 11-333).
3. Loosen the rear wheel nuts slightly, then raise the vehicle, and make sure it is securely supported. Remove the rear wheels.
4. Release the parking brake.
5. SULEV model:
   Remove the fuel tank covers (A).

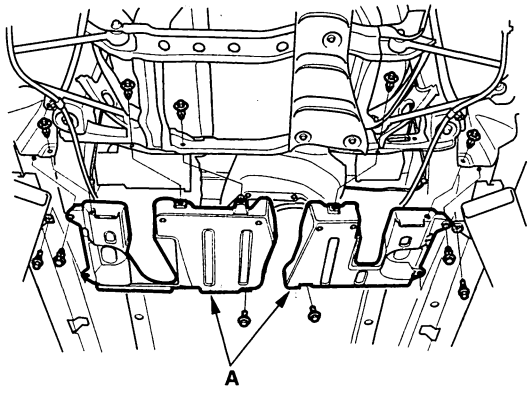

6. Remove the exhaust muffler (see page 9-15).
7. Non-SULEV model:
   Disconnect the fuel fill neck tube (A) and breather hose (B).

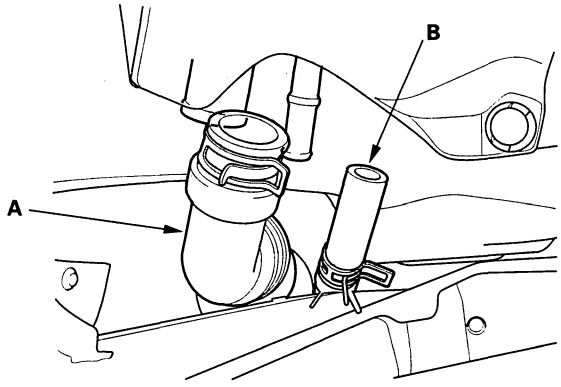

8. SULEV model:
   Disconnect the fuel fill neck tube (A), fuel tank vapor recirculation tube (B), and fuel tank vapor signal tube (C).

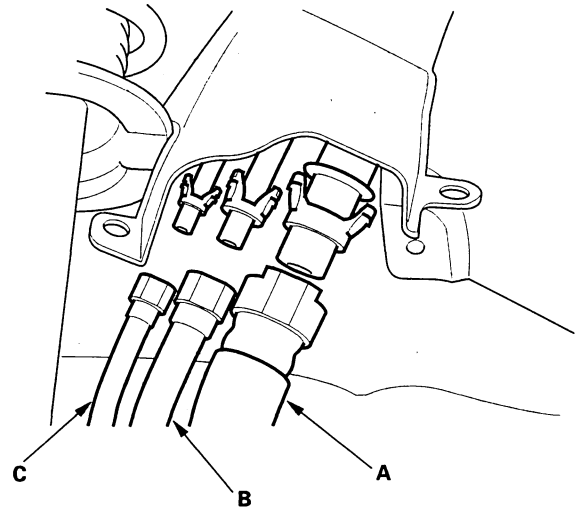

9. Disconnect the vapor line (A) from the EVAP canister (B). Then disconnect the fuel line (C).

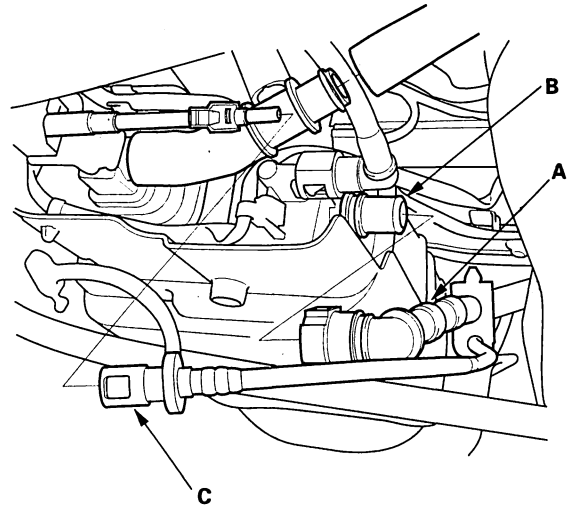

*: This illustration shows the non-SULEV model.

(cont'd)

Protected by AR

Fuel Tank Replacement (cont'd)

10. Disconnect the wheel sensor 2P connector (A).

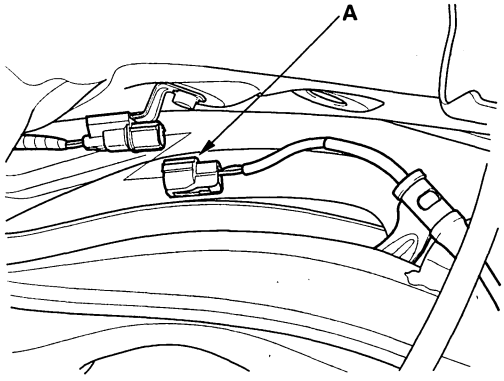

11. If the vehicle has rear drum brakes, go to step 14. If it has rear disc brakes, remove the clip (A), parking brake cable (B), two caliper bolts (C), and caliper body (D).

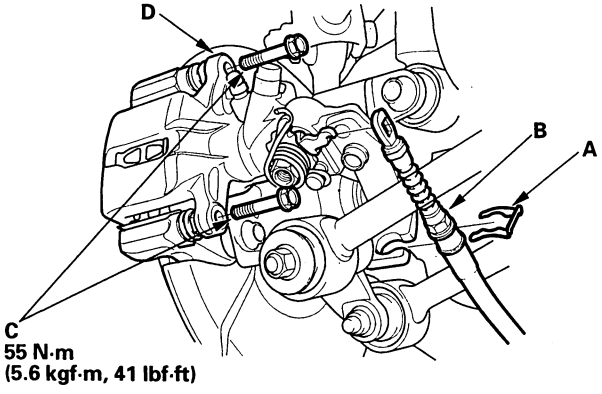

12. Remove the brake hose bracket (A).

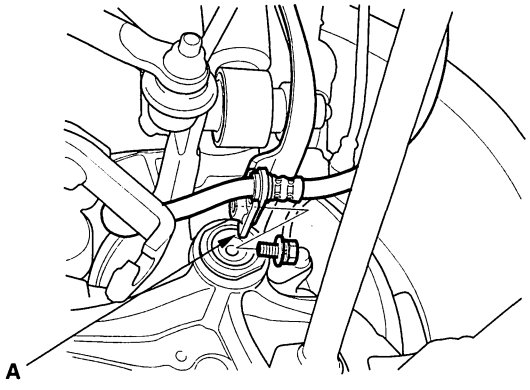

13. Hook the caliper body (A) on the damper spring (B), then go to step 17.

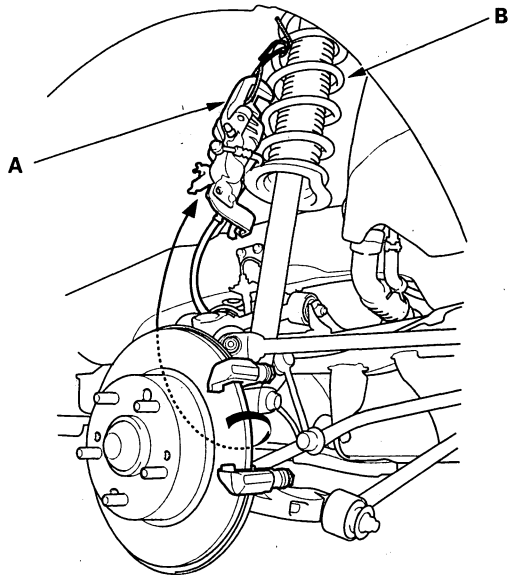

14. Disconnect the brake line (A) and the brake hose clip (B).

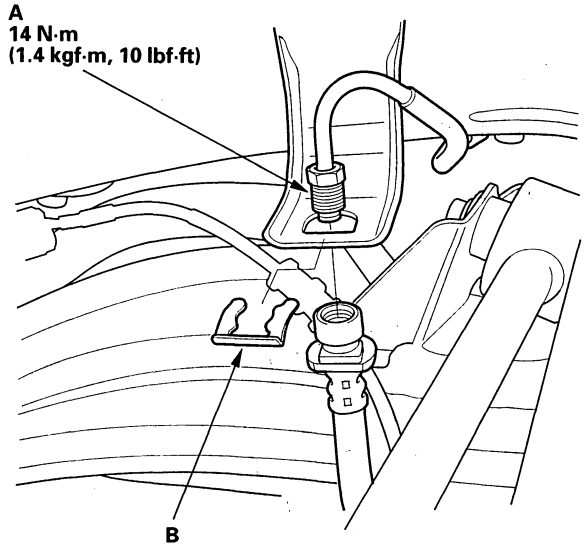

BACK

Protected by AR

15. Remove the bolts (A) from the brake plate (B).

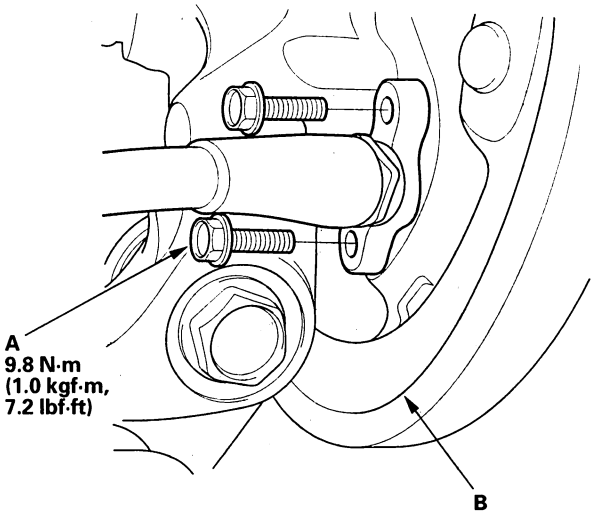

16. Remove the parking brake cable (A).

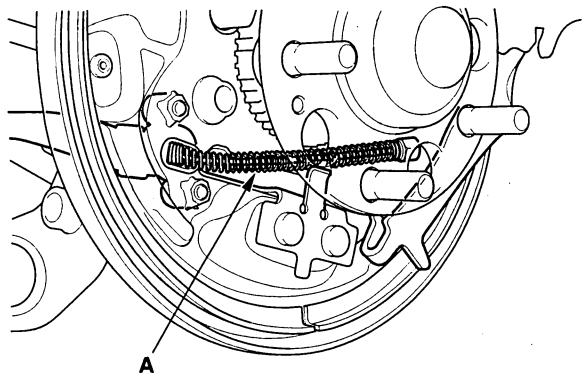

17. Remove the flange bolt (A).

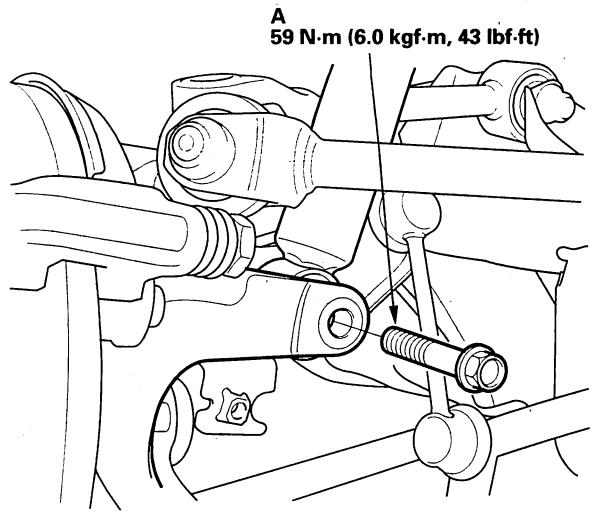

18. Remove the parking brake cable bracket (A).

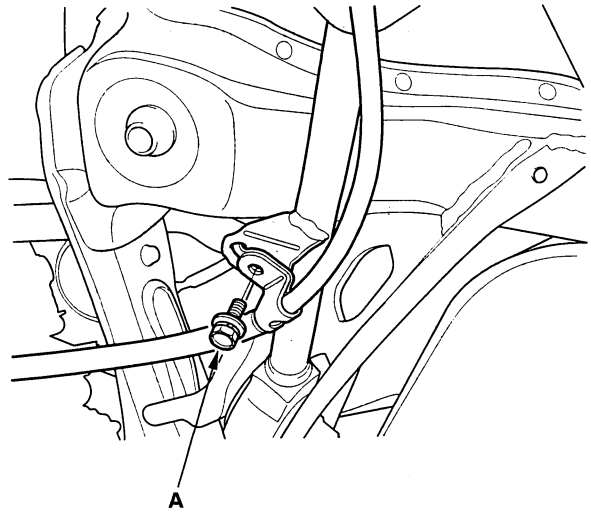

(cont'd)

Protected by AR

Fuel Tank Replacement (cont'd)

19. Remove the heat shield (A). Place a jack or support under the suspension subframe. Remove the mounting bolts (B). Remove the rear suspension subframe.

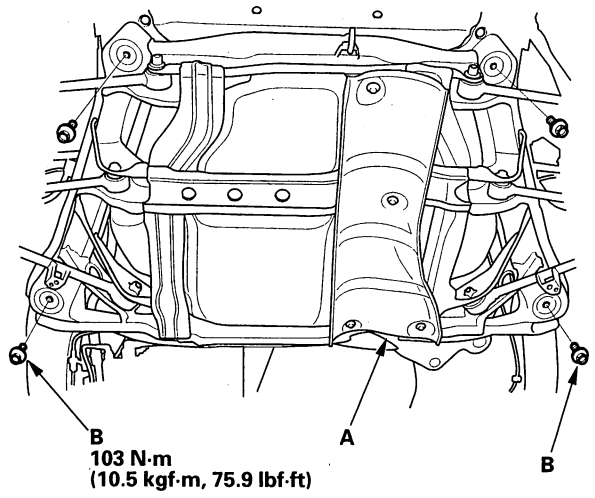

20. Remove the bolts (A) and the fuel tank straps (B).

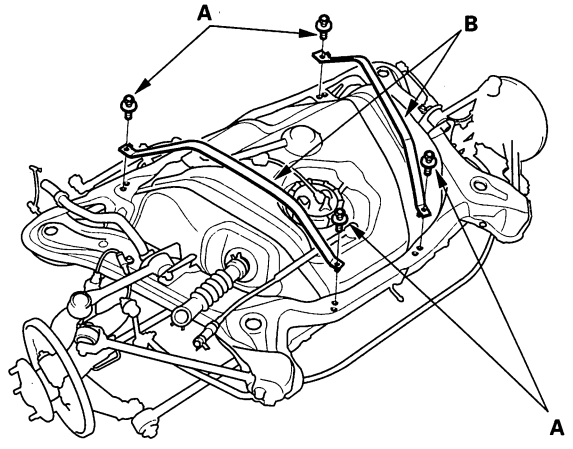

21. Lift the fuel tank out of the subframe.

Installation

1. Install the tank straps (A), and tighten the bolts (B).

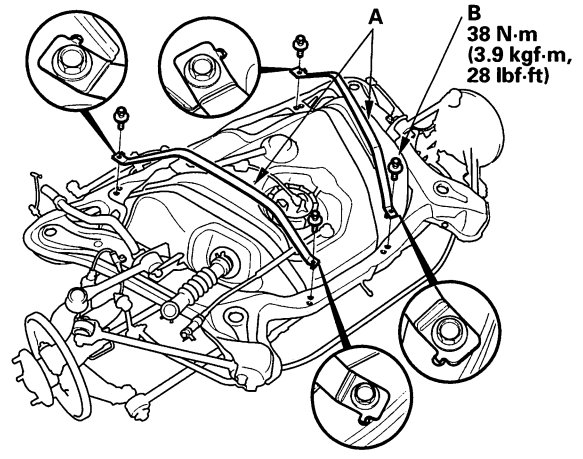

2. Place a jack or support under the rear suspension subframe. Install the rear suspension subframe, aligning the pins (A) with the holes in the rear suspension subframe.

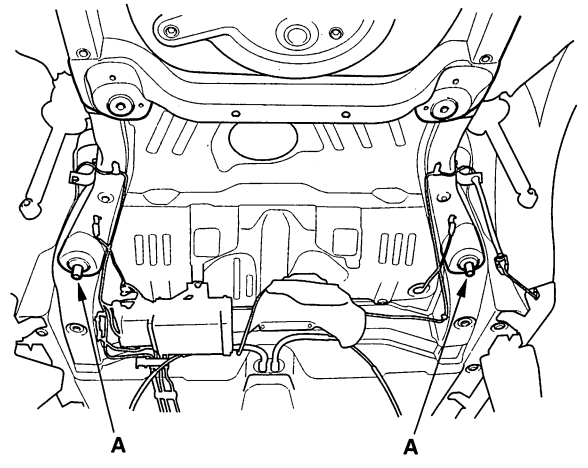

3. Install the remaining parts in the reverse order of removal.

4. If equipped with drum brakes, bleed the brake system after installing the brake hose (see page 19-32). If not, go to step 5.

5. After installation, check the wheel alignment (see page 18-6).

BACK

Protected by AR

Fuel Gauge Sending Unit Test

2003-2004 models

NOTE: For the fuel gauge system circuit diagram, refer to the Gauges Circuit Diagram (see page 22-261).

1. Do multiplex integrated control system troubleshooting test mode A (see page 22-91).
   - If no problem is found, go to step 2.
   - If DTC B1175 is indicated, go to the DTC B1175 troubleshooting (see page 22-283).
2. Check the No. 21 METER (7.5 A) fuse in the under-dash fuse/relay box.
3. Do the gauge drive circuit check (see page 22-260).
   - If the fuel gauge needle sweeps from the minimum to maximum position and then returns to minimum, the gauge is OK. Go to step 4.
   - If the fuel gauge needle does not sweep correctly, replace the gauge assembly and retest.
4. Turn the ignition switch OFF.
5. Remove the trunk floor.
6. Remove the access panel (A) from the floor.

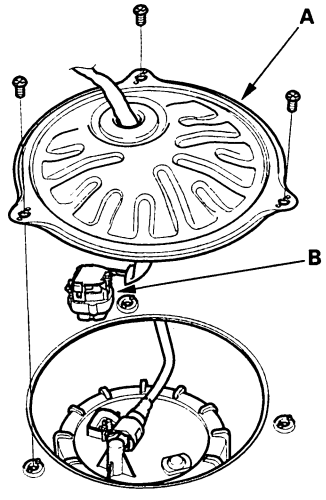

*: This illustration shows the non-SULEV model.

7. Disconnect the fuel tank unit connector (B).
8. Non-SULEV model:
   Remove the fuel tank unit from the fuel tank (see page 11-345).
9. SULEV model:
   Remove the fuel tank unit from the fuel tank (see page 11-346).
10. Measure resistance between the No. 1 and No. 2 terminals of the fuel tank unit 5P connector with the float at E (EMPTY), 1/2 (HALF FULL), and F (FULL) positions.
    If you do not get the following readings, replace the fuel gauge sending unit; Non-SULEV model (see page 11-345), SULEV model (see page 11-346).

Non-SULEV model:

Float Position	F	1/2	LOW	E
	7.5 in. (191.4 mm)	4.4 in. (113.1 mm)	2.0 in. (52.4 mm)	1.0 in. (25.6 mm)
Resistance (Ω)	19 to 21	205.5 to 215.5	487.9 to 617.1	770 to 790

SULEV model:

Float Position	F	1/2	LOW	E
	1.9 in. (49 mm)	5.2 in. (132.4 mm)	7.6 in. (194.1 mm)	8.6 in. (219.7 mm)
Resistance (Ω)	19 to 21	215.4 to 225.4	491.7 to 634.2	770 to 790

(cont'd)

Protected by AR

Fuel Gauge Sending Unit Test (cont'd)

NOTE: Remove the No. 15 BACK UP (40 A) fuse from the under-hood fuse/relay box for at least 10 seconds after completing troubleshooting, otherwise it may take up to 20 minutes for the fuel gauge to indicate the correct fuel level.

Non-SULEV model

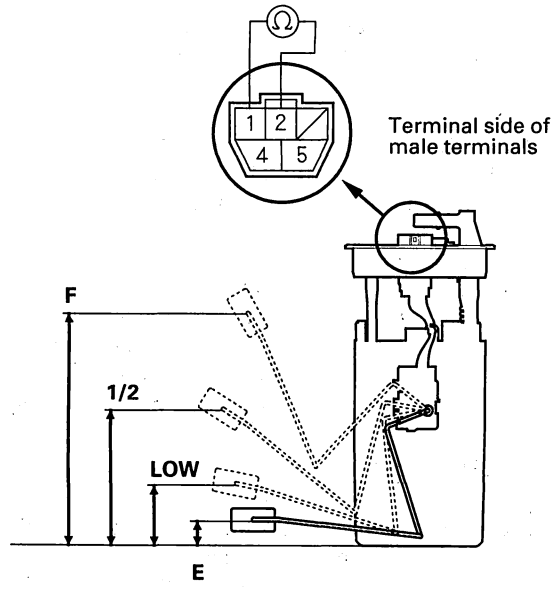

SULEV model

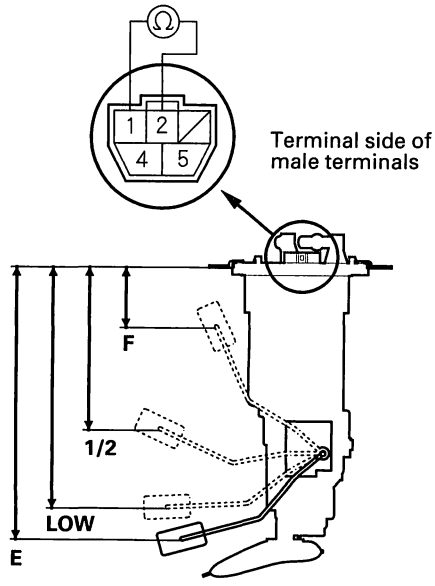

2005-2006 models

NOTE: For the fuel gauge system circuit diagram, refer to the Gauges Circuit Diagram; 2003-2005 models (see page 22-261), 2006 model (see page 22-268).

1. Check the No. 21 METER (7.5 A) fuse in the under-dash fuse/relay box before testing.
2. Do the B-CAN system diagnosis Test Mode A troubleshooting (see page 22-91).
   - If no problem is found, go to step 3.
   - If DTC B1175 or B1176 is indicated, go to the indicated DTC's troubleshooting.
3. Turn the ignition switch OFF.
4. Remove the trunk floor.
5. Remove the access panel (A) from the floor.

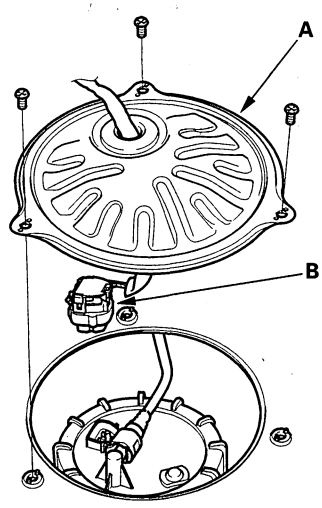

*: This illustration shows the non-SULEV model.

6. Disconnect the fuel tank unit connector (B).

BACK

Protected by AR

7. Measure voltage between fuel tank unit 5P connector terminals No. 1 and No. 2 with the ignition switch ON (II). There should be battery voltage.

   - If the voltage is OK, go to step 8.
   - If the voltage is not as specified, check for:
     - a short in the YEL/BLK wire to ground.
     - an open in the YEL/BLK or BLK/WHT wire.

FUEL TANK UNIT 5P CONNECTOR

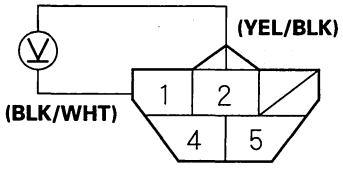

Wire side of female terminals

8. Turn the ignition switch OFF.

9. Non-SULEV model:
   Remove the fuel tank unit from the fuel tank (see page 11-345).

10. SULEV model:
    Remove the fuel tank unit from the fuel tank (see page 11-346).

11. Measure resistance between fuel tank unit 5P connector terminals No. 1 and No. 2 with the float at E (EMPTY), LOW (LOW FUEL INDICATOR), 1/2 (HALF FULL), and F (FULL) positions.
    If you do not get the following readings, replace the fuel gauge sending unit; Non-SULEV model (see page 11-345), SULEV model (see page 11-346).

Non-SULEV model:

Float Position	F 7.5 in. (191.4 mm)	1/2 4.4 in. (113.1 mm)	LOW 2.0 in. (52.4 mm)	E 1.0 in. (25.6 mm)
Resistance (Ω)	19 to 21	205.5 to 215.5	487.9 to 617.1	770 to 790

SULEV model:

Float Position	F 1.9 in. (49 mm)	1/2 5.2 in. (132.4 mm)	LOW 7.6 in. (194.1 mm)	E 8.6 in. (219.7 mm)
Resistance (Ω)	19 to 21	215.4 to 225.4	491.7 to 634.2	770 to 790

Non-SULEV model

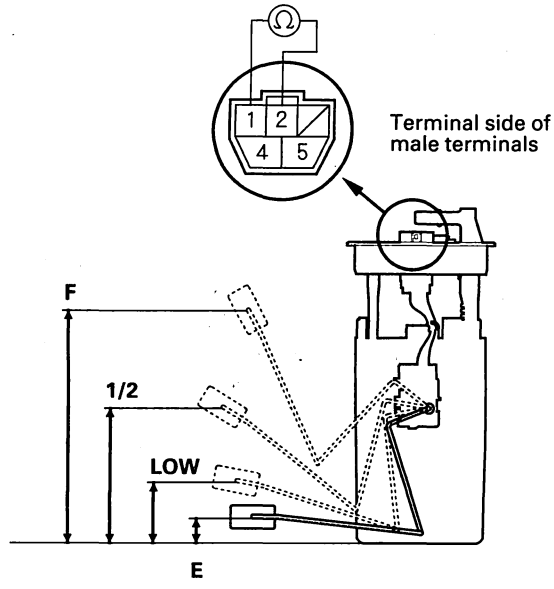

SULEV model

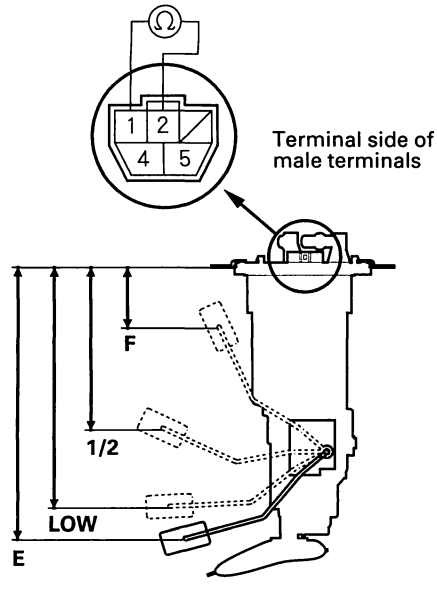

12. Reconnect the fuel tank unit 5P connector.

13. Remove the No. 15 BACK UP (40 A) fuse from the under-hood fuse/relay box for at least 10 seconds, then reinstall it.

14. Turn the ignition switch ON (II).

(cont'd)

Protected by AR

Fuel Gauge Sending Unit Test (cont'd)

15. Check that the pointer of the fuel gauge indicates "F" with the float at F.

    - If the pointer of the fuel gauge does not indicate "F" replace the gauge assembly.
    - If the gauge is OK, the test is complete.

    NOTE:
    - The pointer of the fuel gauge returns to the bottom of the gauge dial when the ignition switch is OFF, regardless of the fuel level.
    - Remove the No. 15 BACK UP (40 A) fuse from the under-hood fuse/relay box for at least 10 seconds after completing troubleshooting, otherwise it may take up to 20 minutes for the fuel gauge to indicate the correct fuel level.

Low Fuel Indicator Test

1. Do the gauge drive circuit check (see page 22-260).

    - If the low fuel indicator flashes, go to step 2.
    - If the low fuel indicator does not flash, replace the gauge control module assembly.

2. Do the B-CAN system diagnosis Test Mode A troubleshooting (see page 22-91).

    - If any DTCs are indicated, go to the indicated DTC's troubleshooting.
    - If no DTCs are indicated, go to step 3.

3. Do the fuel gauge sending unit test; 2003-2004 models (see page 11-351), 2005-2006 models (see page 11-352).

BACK

Protected by AR

Component Location Index

2003-2005 models

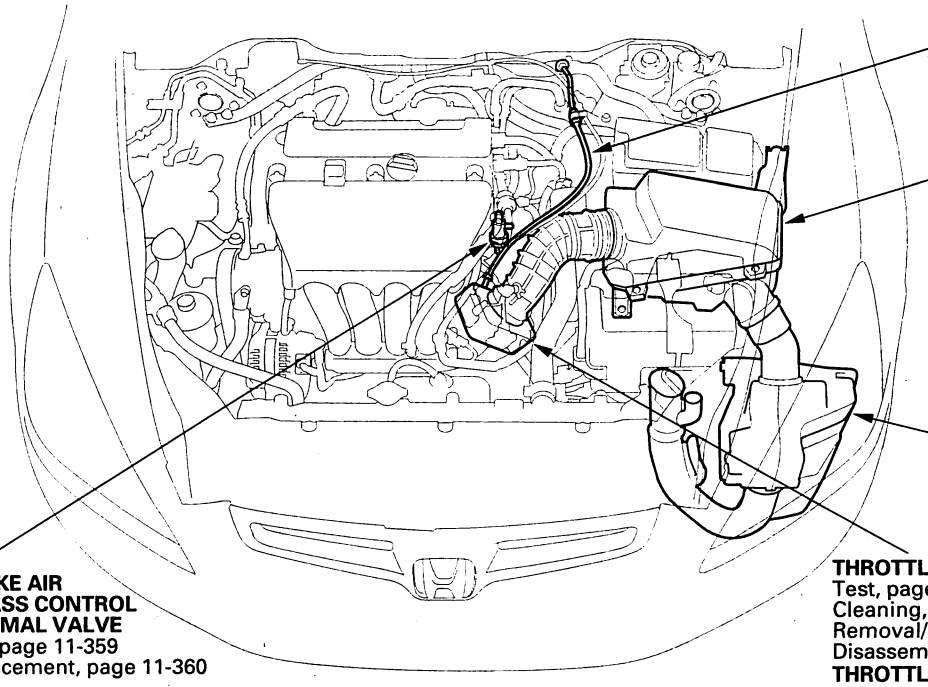

THROTTLE CABLE
Adjustment, page 11-362
Removal/Installation, page 11-364

AIR CLEANER
Removal/Installation, page 11-361
AIR CLEANER ELEMENT
Inspection/Replacement, page 11-361

RESONATOR
Removal/Installation, page 11-362

INTAKE AIR BYPASS CONTROL THERMAL VALVE
Test, page 11-359
Replacement, page 11-360

THROTTLE BODY
Test, page 11-356
Cleaning, page 11-357
Removal/Installation, page 11-366
Disassembly/Reassembly, page 11-368
THROTTLE POSITION (TP) SENSOR
Signal Inspection, page 11-358

*: This illustration does not show SULEV and LX-P models.

2006 model

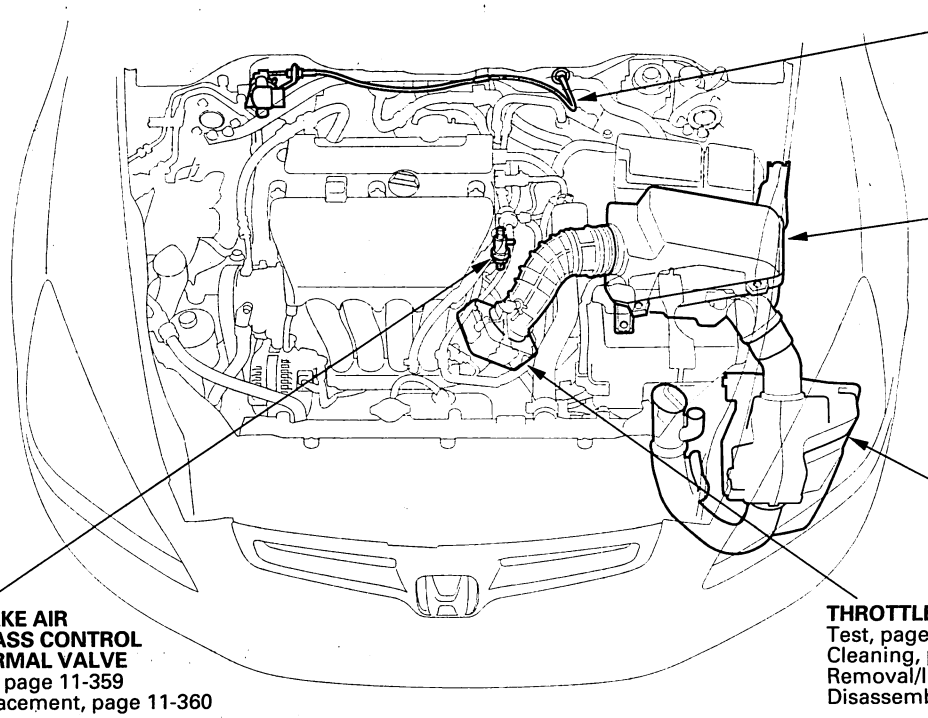

THROTTLE CABLE
Adjustment, page 11-363
Removal/Installation, page 11-365

AIR CLEANER
Removal/Installation, page 11-361
AIR CLEANER ELEMENT
Inspection/Replacement, page 11-361

RESONATOR
Removal/Installation, page 11-362

INTAKE AIR BYPASS CONTROL THERMAL VALVE
Test, page 11-359
Replacement, page 11-360

THROTTLE BODY
Test, page 11-356
Cleaning, page 11-357
Removal/Installation, page 11-366
Disassembly/Reassembly, page 11-368

Protected by AR

Throttle Body Test

2003-2005 models

NOTE:
- Do not adjust the throttle stop screw. It is preset at the factory.
- If the malfunction indicator lamp (MIL) has been reported on, check for diagnostic trouble codes (DTCs) (see page 11-3).

1. With the engine off, check the throttle cable movement. The cable should move without binding or sticking.

   - If the cable moves OK, go to step 2.
   - If the cable binds or sticks, check it and its routing. If the cable is faulty, reroute it or replace it, then adjust it (see page 11-362). Go to step 2.

2. Move the throttle lever by hand to see if the throttle valve and/or shaft are too loose or too tight.

   - If there is excessive play in the throttle valve shaft, or any binding in the throttle valve at the fully closed or fully opened position, replace the throttle body.
   - If the throttle valve and shaft are OK, go to step 3.

3. Connect the HDS to the data link connector (DLC).

4. Turn the ignition switch ON (II).

5. Check the throttle position with the HDS. The reading should be about 0 ° (REL), 0 % (REL) or 0.5 V when the throttle is fully closed and about 80 ° (REL), 89 % (REL) or 4.5 V when the throttle is fully opened.

   - If the throttle position is correct, the throttle body is OK.
   - If the throttle position is not correct, replace the throttle body.

2006 model

Carbon Accumulation Check

NOTE: If the malfunction indicator lamp (MIL) has been reported on, check for diagnostic trouble codes (DTCs) (see page 11-3).

1. Connect the HDS to the data link connector (DLC) (A) located under the driver's side of the dashboard.

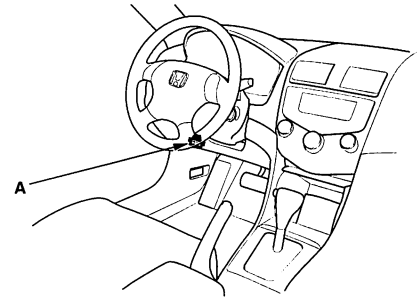

2. Start the engine. Hold the engine speed at 3,000 rpm without load (in Park or neutral) until the radiator fan comes on, then let it idle.

3. Check the REL TP SENSOR in the DATA LIST with the HDS. The reading should be below 2.46 %. If it is not, clean the throttle body (see page 11-357).

Throttle Position Learning Check

NOTE: If the malfunction indicator lamp (MIL) has been reported on, check for diagnostic trouble codes (DTCs) (see page 11-3).

1. Connect the HDS to the data link connector (DLC) (A) located under the driver's side of the dashboard.

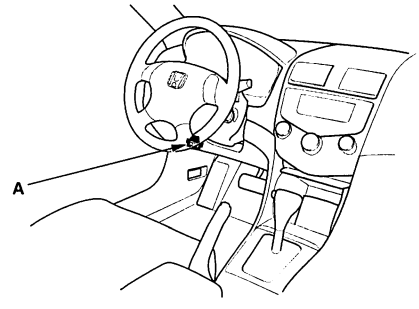

2. Select the INSPECTION MENU with the HDS.

3. Do the TP POSITION CHECK in the ETCS TEST. If needed, clean the throttle body (see page 11-357).

BACK

Protected by AR

Throttle Body Cleaning

2003-2005 models

1. Check for damage to the air cleaner.
2. Remove the throttle body (see page 11-366).
3. Clean off any carbon from the throttle valve and inside of the throttle body with throttle plate and induction cleaner.
4. Install the throttle body (see page 11-366).
5. Do the ECM/PCM idle learn procedure (see page 11-316).

2006 model

⚠CAUTION

Do not insert your fingers into the installed throttle body when you turn the ignition switch ON (II) or while the ignition switch is ON (II). If you do, you will seriously injure your finger if the throttle valve is activated.

1. Check for damage to the air cleaner. If the air cleaner is damaged, replace it (see page 11-361).
2. Remove the throttle body (see page 11-367).
3. Wipe off the carbon from the throttle valve and inside the throttle body with a paper towel soaked in throttle plate and induction cleaner.

   NOTE:
   - Remove the throttle body to clean it.
   - Be careful not to pinch your fingers.
   - To avoid removing the molybdenum coating, do not clean the bearing area of the throttle shaft (A).
   - Do not spray throttle plate and induction cleaner directly on the throttle body.
   - Use Honda genuine throttle plate and induction cleaner.

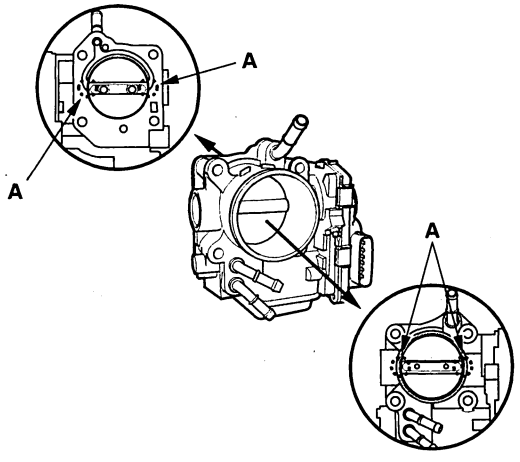

4. Install the throttle body (see page 11-367).
5. Reset the ECM/PCM with the HDS.
6. Turn the ignition switch ON (II), and wait 2 seconds.
7. Do the ECM/PCM idle learn procedure (see page 11-316).

Protected by AR

Throttle Position Sensor Signal Inspection

NOTE:
- This procedure is to inspect the abnormalities of the throttle position sensor full closed position.
- Other failures than full closed position will store a DTC, therefore the procedure to inspect them are not included in this procedure.
- Check for Temporary DTCs or DTCs with the HDS before this procedure. If there are any DTCs indicated, troubleshoot them first, then do this procedure.
- Press the accelerator pedal several times, and check the operation. If it does not operate properly check the accelerator pedal, the throttle cable, and the throttle linkage individually. If you fined a problem in one of them, replace the parts that caused the problem.

1. Connect the HDS to the data link connector (DLC) (A) located under the driver's side of the dashboard.

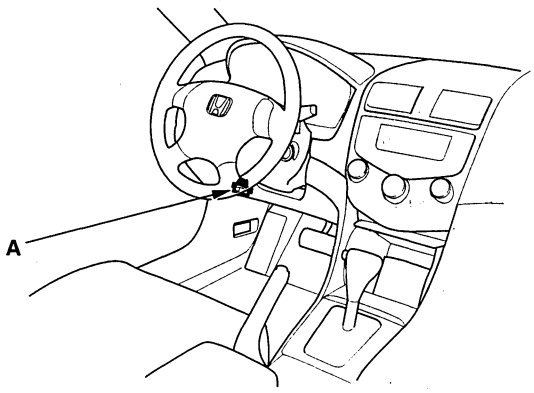

2. Turn the ignition switch ON (II).

3. Make sure the accelerator pedal is not pressed and check the TP SENSOR in the DATA LIST with the HDS.

   - If it is below 0.5 V, the throttle position sensor is OK.
   - If it is above 0.5 V, adjust the throttle cable (see page 11-362), then go to step 4.

4. Make sure the accelerator pedal is not pressed and check the TP SENSOR in the DATA LIST with the HDS.

   - If it is below 0.5 V, the throttle position sensor is OK.
   - If it is above 0.5 V, update the ECM/PCM if it does not have the latest software, or substitute a known-good ECM/PCM (see page 11-6), then go to step 5.

5. Make sure the accelerator pedal is not pressed and check the TP SENSOR in the DATA LIST with the HDS.

   - If it is below 0.5 V, the throttle position sensor is OK.
   - If it is above 0.5 V, replace the throttle body assembly (see page 11-366), then go to step 1.

BACK

Protected by AR

Intake Air Bypass Control Thermal Valve Test

Special Tools Required
Vacuum pump/gauge, 0—30 in.Hg, Snap-on YA4000A or equivalent, commercially available

1. Start the engine, and let it idle.

   NOTE: The engine coolant temperature must be below 131 °F (55 °C).

2. Remove the vacuum hose (A) from the intake air duct, and connect a vacuum pump/gauge, 0—30 in.Hg, to the hose.

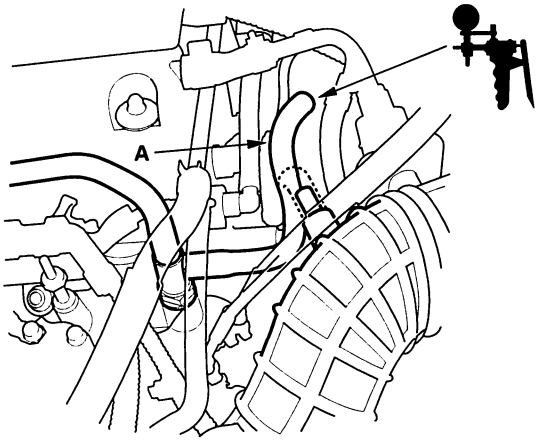

3. Raise and lower the engine speed, making sure the vacuum gauge reading changes as the engine speed changes.

   If the vacuum reading does not change, check for these problems:

   - Misrouted, leaking, broken, or clogged intake air bypass control system vacuum lines.
   - A cracked or damaged intake air bypass control thermal valve.

4. Hold the engine speed at 3,000 rpm without load (in Park or neutral) until the radiator fan comes on, then let it idle.

5. Raise and lower the engine speed, making sure the vacuum gauge reading does not indicate any vacuum as the rpm changes.

   If there is a vacuum reading, check for these problems:

   - Misrouted, leaking, broken, or clogged intake air bypass control system vacuum lines.
   - A cracked or damaged intake air bypass control thermal valve.

Protected by AR

Intake Air Bypass Control Thermal Valve Replacement

1. Remove the intake manifold cover.
   - 2003-2005 models (see step 3 on page 9-4)
   - 2006 model (see step 3 on page 9-9)
2. Remove the air intake boot.
3. Remove the throttle cable bracket.
4. Disconnect the hoses (A).

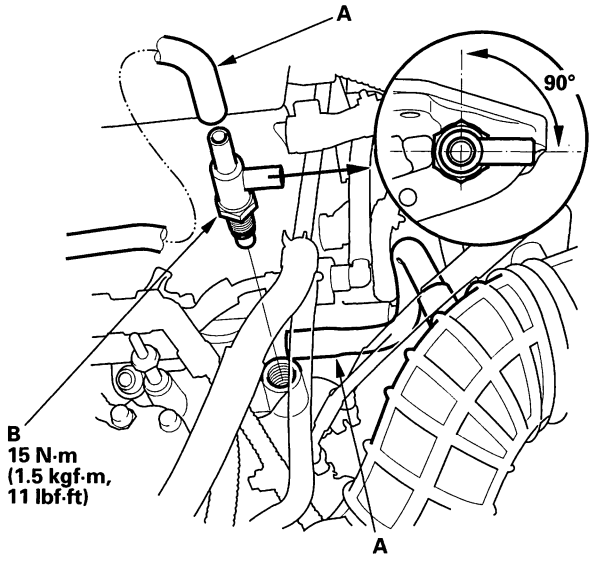

5. Remove the intake air bypass control thermal valve (B).
6. Install the valve in the reverse order of removal.

   NOTE: Position the valve angle as shown.

BACK

Protected by AR

Air Cleaner Removal/Installation

1. Remove the bolts (A) and the clamp (B) (2003-2004 SULEV, LX-P models, and 2005-2006 models: Disconnect the MAF sensor/IAT sensor connector).

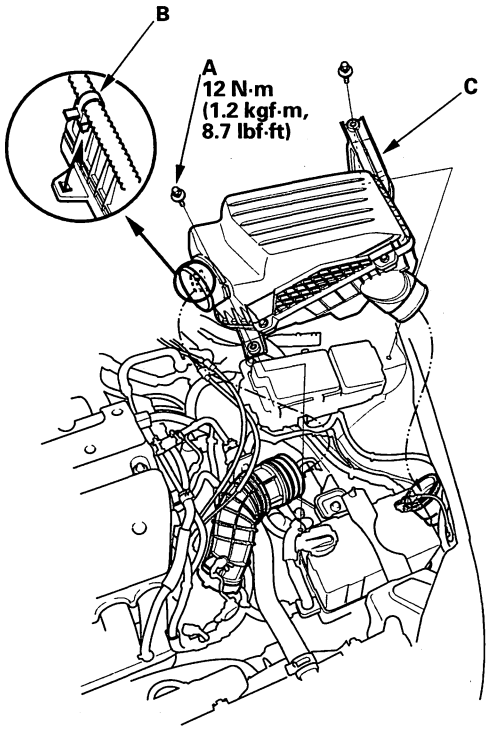

*: This illustration shows 2003-2004 except SULEV, LX-P models.

2. Remove the air cleaner (C).
3. Install the parts in the reverse order of removal.

Air Cleaner Element Inspection/ Replacement

1. Open the air cleaner housing cover (A).

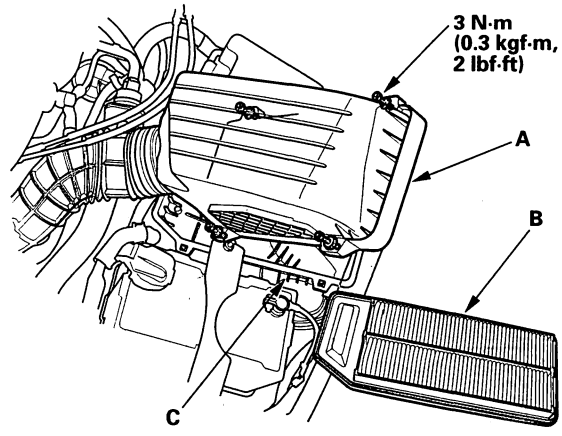

*: This illustration shows 2003-2004 except SULEV, LX-P models.

2. Remove the air cleaner element (B) from the air cleaner housing (C).
3. Check the air cleaner element for damage or clogging. It needed, replace the air cleaner element.

   NOTE: Do not use compressed air to clean the air cleaner element.

4. Install the parts in the reverse order of removal.

Protected by AR

Resonator Removal/Installation

1. Remove the front bumper; 2-door (see page 20-184), 4-door (see page 20-185).
2. Remove the bolts (A), and the intake air duct (B).

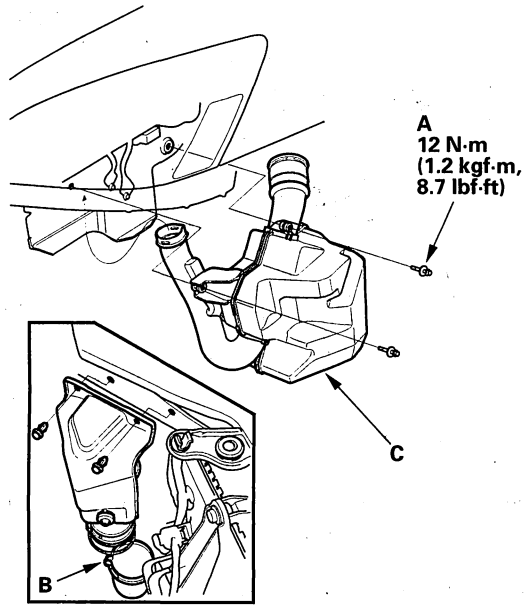

3. Remove the resonator (C).
4. Install the parts in the reverse order of removal.

Throttle Cable Adjustment

2003-2005 models

1. Check cable free play at the throttle linkage. Cable free play (A) should be 3/8—1/2 in. (10—12 mm).

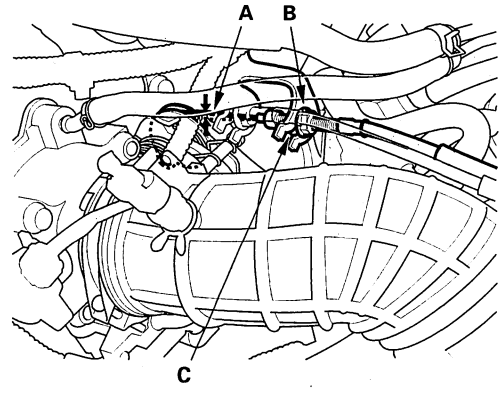

2. If the free play is not within spec (3/8—1/2 in., 10—12 mm), loosen the locknut (B), turn the adjusting nut (C) until the free play is as specified, then retighten the locknut.
3. With the cable properly adjusted, check the throttle valve to be sure it opens fully when you push the accelerator pedal to the floor. Also check the throttle valve to be sure it returns to the idle position whenever you release the accelerator pedal.

BACK

Protected by AR

2006 model

1. Remove the throttle cable cover (A).

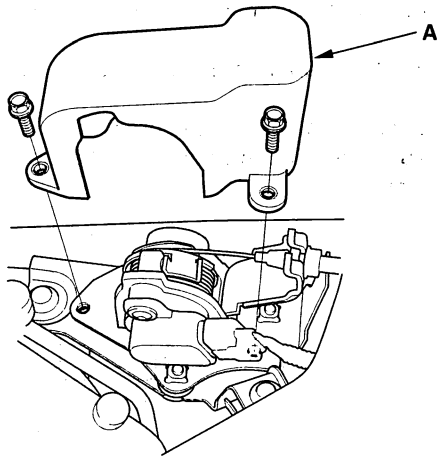

2. Check cable free play at the throttle linkage. Cable free play (A) should be 10—12 mm (3/8—1/2 in.).

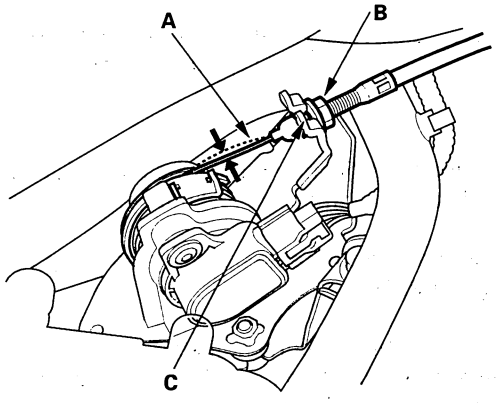

3. If the free play (A) is not within spec (10—12 mm, 3/8—1/2 in.), loosen the locknut (B), turn the adjusting nut (C) until the free play is as specified, then retighten the locknut.

4. With the cable properly adjusted, check the throttle link to be sure it opens fully when you push the accelerator pedal to the floor. Also check the throttle link to be sure it returns to the idle position whenever you release the accelerator pedal.

Protected by AR

Throttle Cable Removal/Installation

2003-2005 models

1. Remove the engine cover.
2. Fully open the throttle valve, then remove the throttle cable (A) from the throttle link (B).

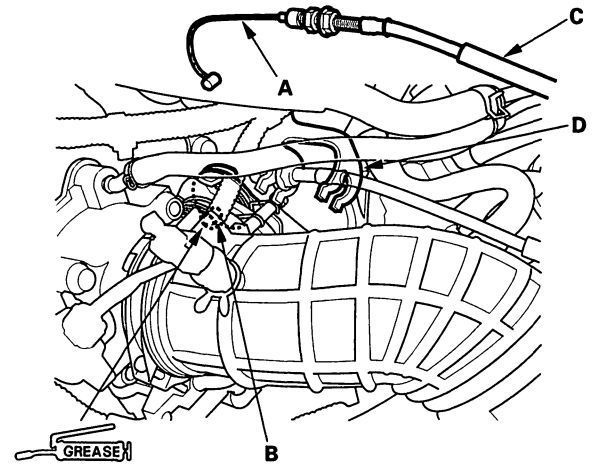

SILICONE GREASE
(P/N 08798-9002)

3. Remove the cable housing (C) from the cable bracket (D).
4. Remove the throttle cable (A) from the accelerator pedal (B).

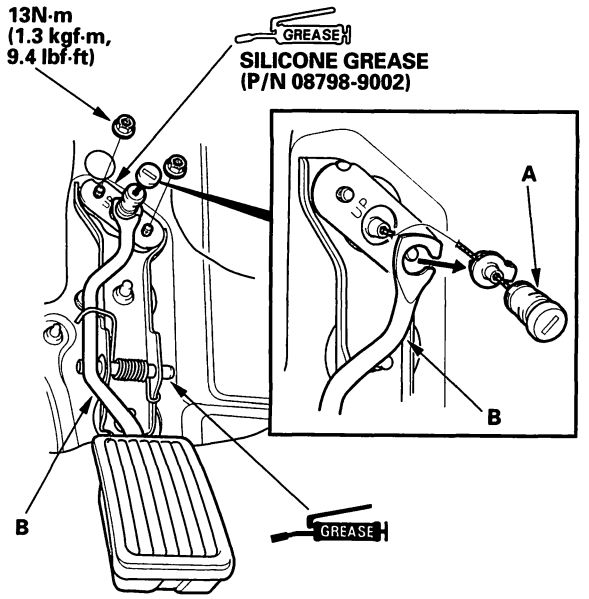

5. Install the cable in the reverse order of removal.
6. Start the engine. Hold the engine speed at 3,000 rpm without load (in Park or neutral) until the radiator fan comes on, then let it idle.
7. Hold the cable, removing all slack from it.
8. Set the cable (A) on the bracket (B). Turn the adjusting nut (C) so that its free play is 0 mm.

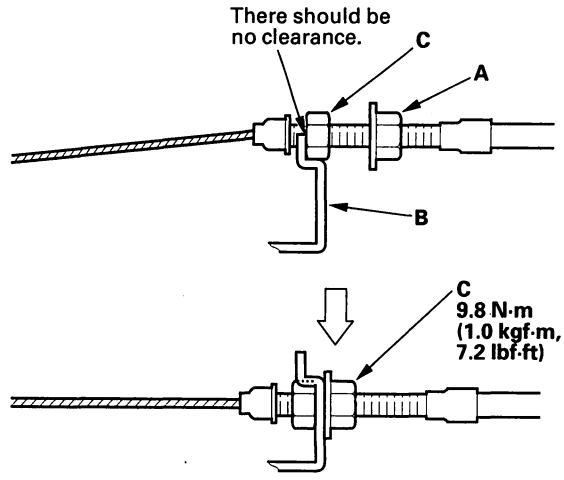

9. Position the adjusting nut on the other side of the bracket, then tighten the locknut .
10. Check the throttle cable free play (see step 2 on page 11-362).
11. With the cable properly adjusted, check the throttle valve to be sure it opens fully when you push the accelerator pedal to the floor. Also check the throttle valve to be sure it returns to the idle position whenever you release the accelerator pedal.

BACK

Protected by AR

2006 model

1. Remove the throttle cable cover (see page 11-363).
2. Fully open the throttle link, then remove the throttle cable (A) from the throttle link (B).

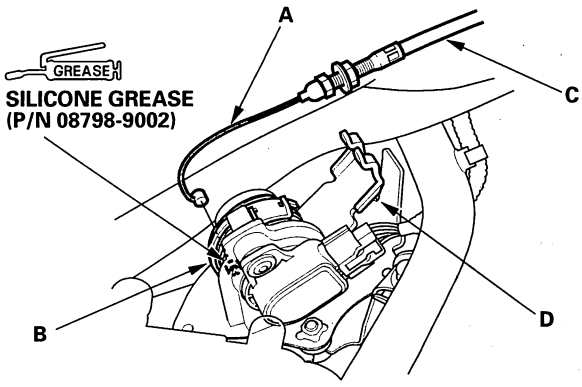

3. Remove the cable housing (C) from the cable bracket (D).
4. Remove the throttle cable (A) from the accelerator pedal (B).

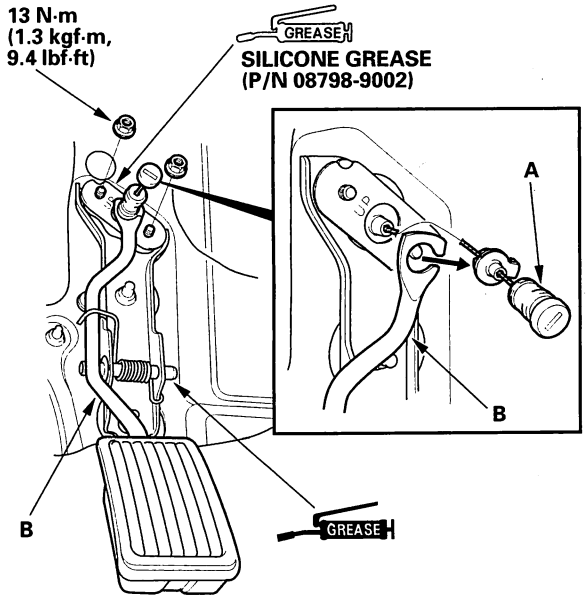

5. Install the cable in the reverse order of removal.
6. Start the engine. Hold the engine speed at 3,000 rpm without load (in Park or neutral) until the radiator fan comes on, then let it idle.
7. Hold the cable, removing all slack from it.
8. Set the cable on the bracket (A).
   Adjust the adjusting nut (B) so that its free play is 0 mm.

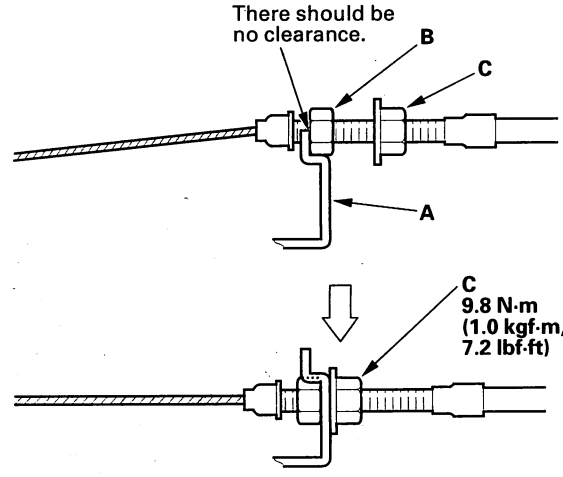

9. Position the adjusting nut on the other side of the bracket, then tighten the locknut (C).
10. Check the throttle cable free play (see step 2 on page 11-362).
11. With the cable properly adjusted, check the throttle link to be sure it opens fully when you push the accelerator pedal to the floor. Also check the throttle link to be sure it returns whenever you release the accelerator pedal.

Protected by AR

Throttle Body Removal/Installation

2003-2005 models

1. 2003-2004 except SULEV, LX-P models:
   Disconnect the IAT sensor connector (A).

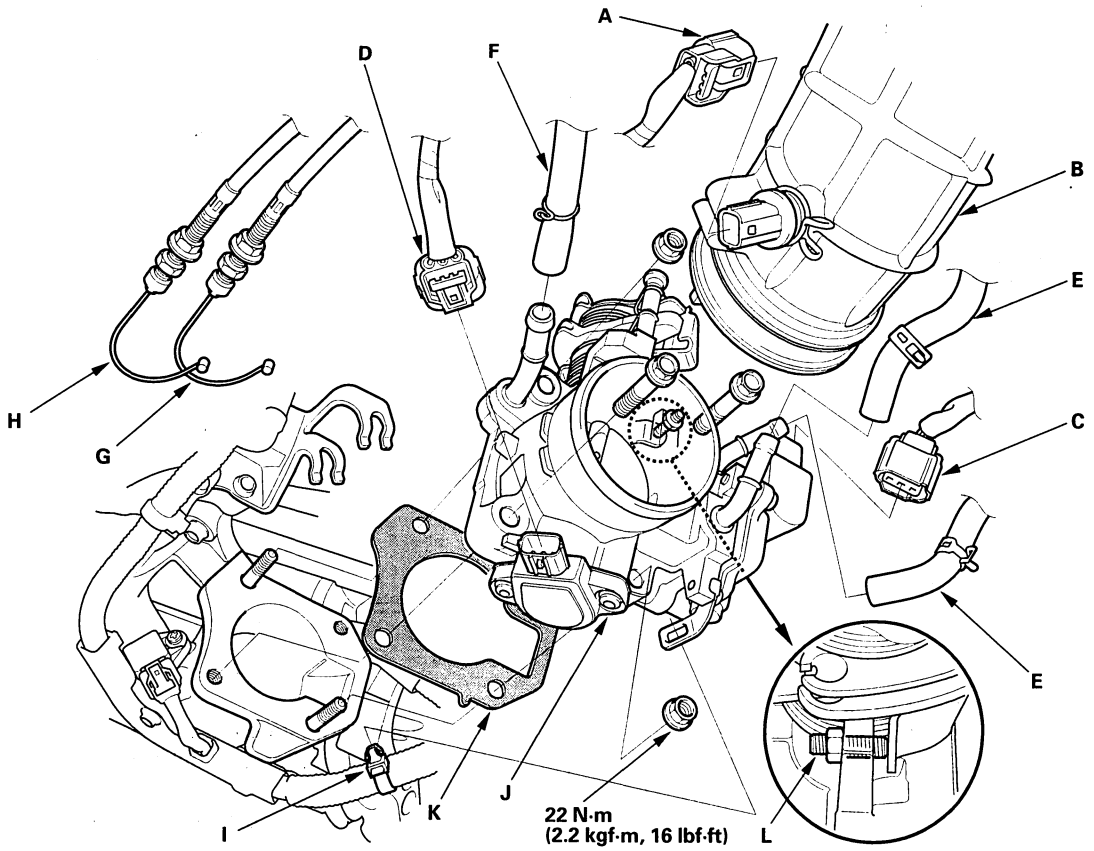

2. Remove the intake air duct (B).
3. Disconnect the IAC valve connector (C), and the TP sensor connector (D).
4. Disconnect and plug the water bypass hoses (E).
5. Disconnect the vacuum hose (F).
6. Remove the throttle cable (G) and actuator cable (with cruise control) (H).
7. Remove the harness clip (I) and throttle body (J).
8. Install the parts in the reverse order of removal with a new gasket (K).

NOTE:
- Do not adjust the throttle stop screw (L).
- Do the ECM/PCM idle learn procedure after the throttle body has been replaced (see page 11-316).
- Refill the radiator with engine coolant (see page 10-6).
- After reassembly, adjust the cruise control cable (see page 4-63), and the throttle cable (see page 11-362).
- The throttle position (TP) sensor is not removable.

BACK

Protected by AR

2006 model

⚠CAUTION

Do not insert your fingers into the installed throttle body when you turn the ignition switch ON (II) or while the ignition switch is ON (II). If you do, you will seriously injure your finger if the throttle valve is activated.

NOTE: If you are replacing or cleaning the throttle body, begin from step 1. If you are removing the throttle body, skip step 1 to 3, and begin from step 4.

1. Connect the HDS while the engine is stopped.
2. Select the INSPECTION MENU with the HDS.
3. Do the TP POSITION CHECK in the ETCS TEST.
4. Remove the intake air duct (A).

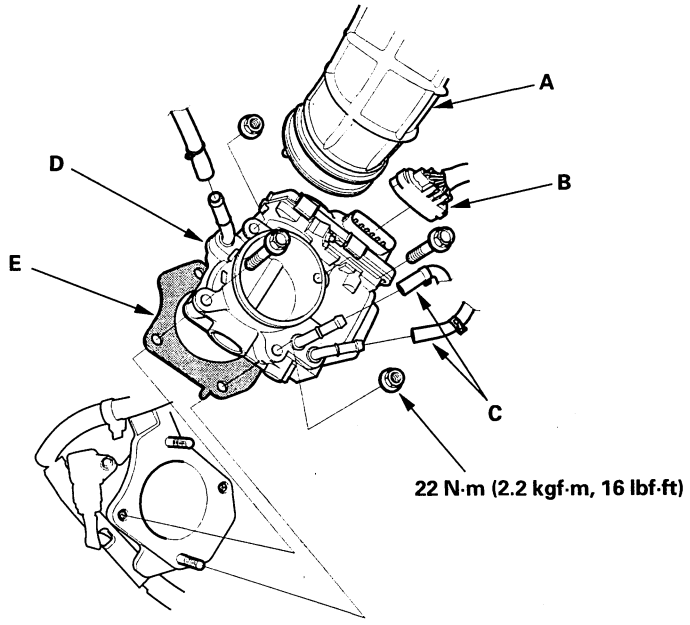

5. Disconnect the throttle body connector (B).
6. Disconnect and plug the water bypass hoses (C).
7. Remove the throttle body (D).
8. Install the parts in the reverse order of removal with a new gasket (E).

NOTE:
- Do the ECM/PCM idle learn procedure after the throttle body has been replaced (see page 11-316).
- Refill the radiator with engine coolant (see page 10-6).

Protected by AR

Throttle Body Disassembly/Reassembly

2003-2005 models

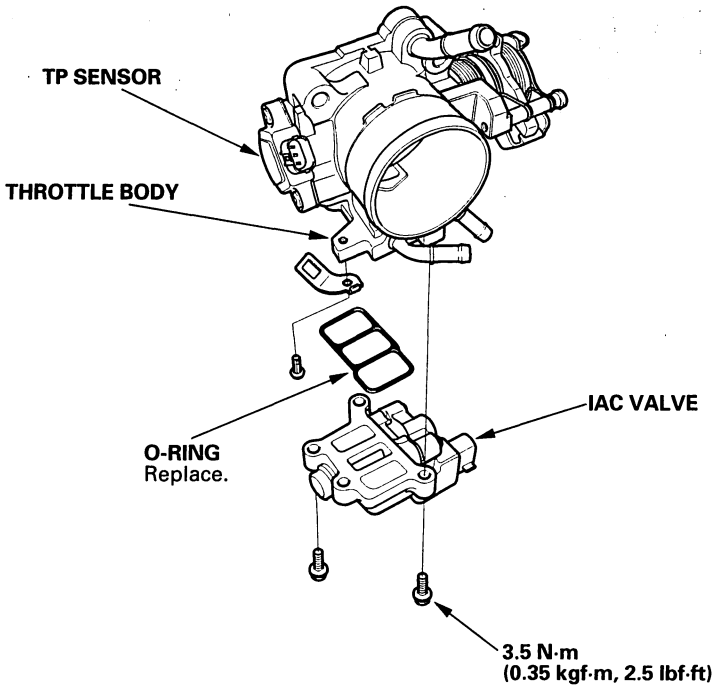

2006 model

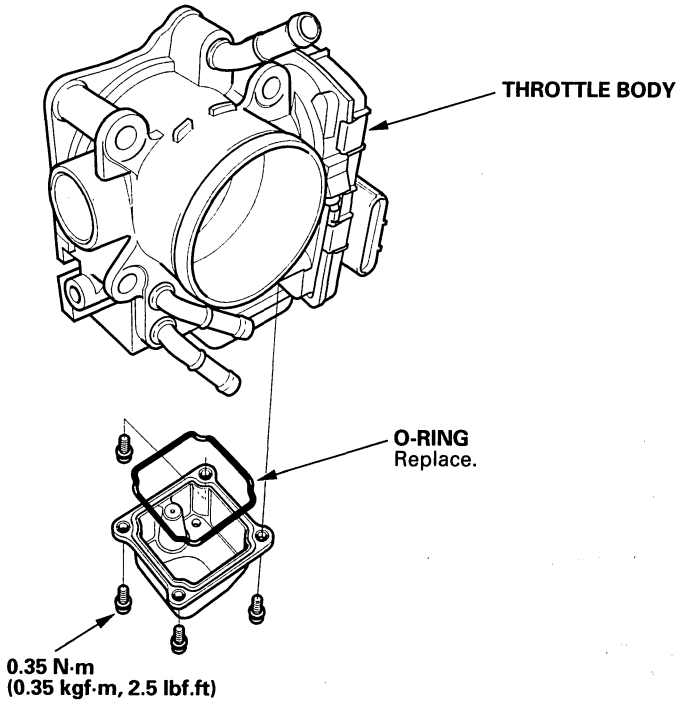

BACK

Protected by AR

Accelerator Pedal Replacement

1. Remove the throttle cable (A) from the accelerator pedal (B).

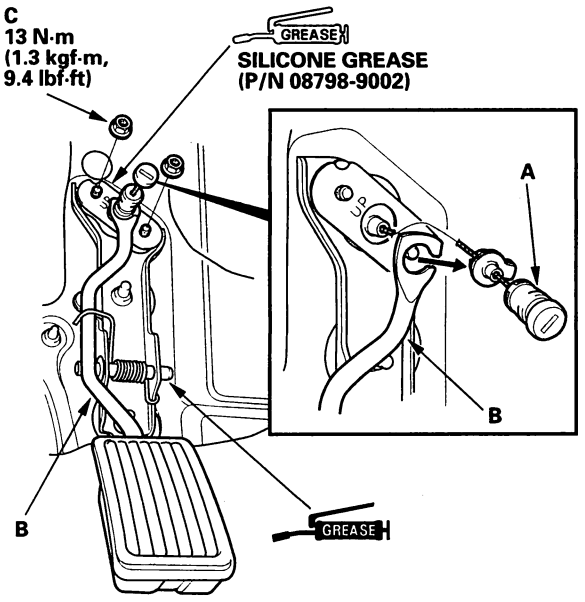

2. Remove the nuts (C) and the accelerator pedal.
3. Install in the reverse order of removal.

Protected by AR

DTC Troubleshooting

DTC P0420: Catalyst System Efficiency Below Threshold
(2003-2004 models)

NOTE:
- If some of the DTCs listed below are stored at the same time as DTC P0420, troubleshoot them first, then recheck for DTC P0420.
  P0137, P0138: Secondary HO2S (Sensor 2)
  P0141: Secondary HO2S (Sensor 2) heater
- Poor quality fuel may cause this DTC.

1. Turn the ignition switch ON (II).
2. Clear the DTC with the HDS.
3. Start the engine. Hold the engine speed at 3,000 rpm without load (in Park or neutral) until the radiator fan comes on, then let it idle.
4. Test-drive under these conditions:
   - Engine coolant temperature above 158 °F (70 °C)
   - A/T in D position (M/T in 5th gear)
   - Vehicle speed between 50 mph (80 km/h) and 55 mph (88 km/h) with cruise control set
   - Drive about 2 minutes, decelerate for at least 4 seconds with the throttle completely closed, then maintain 55 mph (88 km/h) for 20 minutes with cruise control set
5. Monitor the OBD STATUS for DTC P0420 in the DTCs MENU with the HDS.

   Does the screen indicate EXECUTING?

   YES—Go to step 6.

   NO—Go to step 4 and recheck.
6. Continue test driving until a result comes on.
7. Monitor the OBD STATUS for DTC P0420 in the DTCs MENU with the HDS.

   Does the screen indicate FAILED?

   YES—Go to step 8.

   NO—If the screen indicates PASSED, intermittent failure, system is OK at this time. If the screen indicates EXECUTING, keep driving until a result comes on. If the screen indicates OUT OF CONDITION, go to step 4 and recheck.
8. Turn the ignition switch OFF.
9. Replace the TWC (see page 9-15).
10. Turn the ignition switch ON (II).
11. Reset the ECM/PCM with the HDS.
12. Do the ECM/PCM idle learn procedure (see page 11-316).
13. Start the engine. Hold the engine speed at 3,000 rpm without load (in Park or neutral) until the radiator fan comes on, then let it idle.
14. Test-drive for about 10 minutes, varying the vehicle speed.
15. Check the CATA MON TEMP in the DATA LIST with the HDS.

    Is the temperature OK?

    YES—Go to step 16.

    NO—Go to step 13 and recheck.
16. Test-drive under these conditions:
    - Engine coolant temperature above 158 °F (70 °C)
    - A/T in D position (M/T in 5th gear)
    - Vehicle speed between 50 mph (80 km/h) and 55 mph (88 km/h) with cruise control set
    - Drive about 2 minutes, decelerate for at least 4 seconds with the throttle completely closed, then maintain 55 mph (88 km/h) for 20 minutes with cruise control set

BACK

Protected by AR

17. Monitor the OBD STATUS for DTC P0420 in the DTCs MENU with the HDS.

    Does the screen indicate EXECUTING?

    YES—Go to step 18.

    NO—Go to step 16 and recheck.

18. Continue test driving until a result comes on.

19. Check for Temporary DTCs or DTCs with the HDS.

    Are any Temporary DTCs or DTCs indicated?

    YES—Go to the indicated DTC's troubleshooting. ■

    NO—Go to step 20.

20. Monitor the OBD STATUS for DTC P0420 in the DTCs MENU with the HDS.

    Does the screen indicate PASSED?

    YES—Troubleshooting is complete. ■

    NO—If the screen indicates FAILED, check the fuel quality. If the screen indicates EXECUTING, keep driving until a result comes on. If the screen indicates OUT OF CONDITION, go to step 13 and recheck.

Protected by AR

DTC Troubleshooting (cont'd)

DTC P0420: Catalyst System Efficiency Below Threshold
(2005-2006 models)

NOTE:
- If some of the DTCs listed below are stored at the same time as DTC P0420, troubleshoot them first, then recheck for DTC P0420.
  P0137, P0138: Secondary HO2S (Sensor 2)
  P0141: Secondary HO2S (Sensor 2) heater
- Poor quality fuel may cause this DTC.

1. Turn the ignition switch ON (II).
2. Clear the DTC with the HDS.
3. Start the engine. Hold the engine speed at 3,000 rpm without load (in Park or neutral) until the radiator fan comes on, then let it idle.
4. Test-drive under these conditions:
   - Engine coolant temperature above 158 °F (70 °C)
   - A/T in D position (M/T in 5th gear)
   - Vehicle speed between 45—75 mph (72—120 km/h) for 5 minutes or more with cruise control set
   - Maintain the vehicle speed at 55 mph (88 km/h) for 5 minutes or more with cruise control set
5. Monitor the OBD STATUS for DTC P0420 in the DTCs MENU with the HDS.

   Does the screen indicate EXECUTING?

   YES—Go to step 6.

   NO—Go to step 4 and recheck.
6. Continue test driving until a result comes on.
7. Monitor the OBD STATUS for DTC P0420 in the DTCs MENU with the HDS.

   Does the screen indicate FAILED?

   YES—Go to step 8.

   NO—If the screen indicates PASSED, intermittent failure, system is OK at this time. If the screen indicates EXECUTING, keep driving until a result comes on. If the screen indicates OUT OF CONDITION, go to step 4 and recheck.
8. Turn the ignition switch OFF.
9. Replace the TWC (see page 9-16).
10. Turn the ignition switch ON (II).
11. Reset the ECM/PCM with the HDS.
12. Do the ECM/PCM idle learn procedure (see page 11-316).
13. Start the engine. Hold the engine speed at 3,000 rpm without load (in Park or neutral) until the radiator fan comes on, then let it idle.
14. Test-drive for about 10 minutes, varying the vehicle speed.
15. Check the CATA MON TEMP in the DATA LIST with the HDS.

    Is the temperature OK?

    YES—Go to step 16.

    NO—Go to step 13 and recheck.
16. Test-drive under these conditions:
    - Engine coolant temperature above 158 °F (70 °C)
    - A/T in D position (M/T in 5th gear)
    - Vehicle speed at 55 mph (88 km/h) for 5 minutes or more with cruise control set

BACK

Protected by AR

17. Monitor the OBD STATUS for DTC P0420 in the DTCs MENU with the HDS.

    Does the screen indicate EXECUTING?

    YES—Go to step 18.

    NO—Go to step 16 and recheck.

18. Continue test driving until a result comes on.

19. Check for Temporary DTCs or DTCs with the HDS.

    Are any Temporary DTCs or DTCs indicated?

    YES—Go to the indicated DTC's troubleshooting. ■

    NO—Go to step 20.

20. Monitor the OBD STATUS for DTC P0420 in the DTCs MENU with the HDS.

    Does the screen indicate PASSED?

    YES—Troubleshooting is complete. ■

    NO—If the screen indicates FAILED, check the fuel quality. If the screen indicates EXECUTING, keep driving until a result comes on. If the screen indicates OUT OF CONDITION, go to step 13 and recheck.

Protected by AR

EGR System

Component Location Index

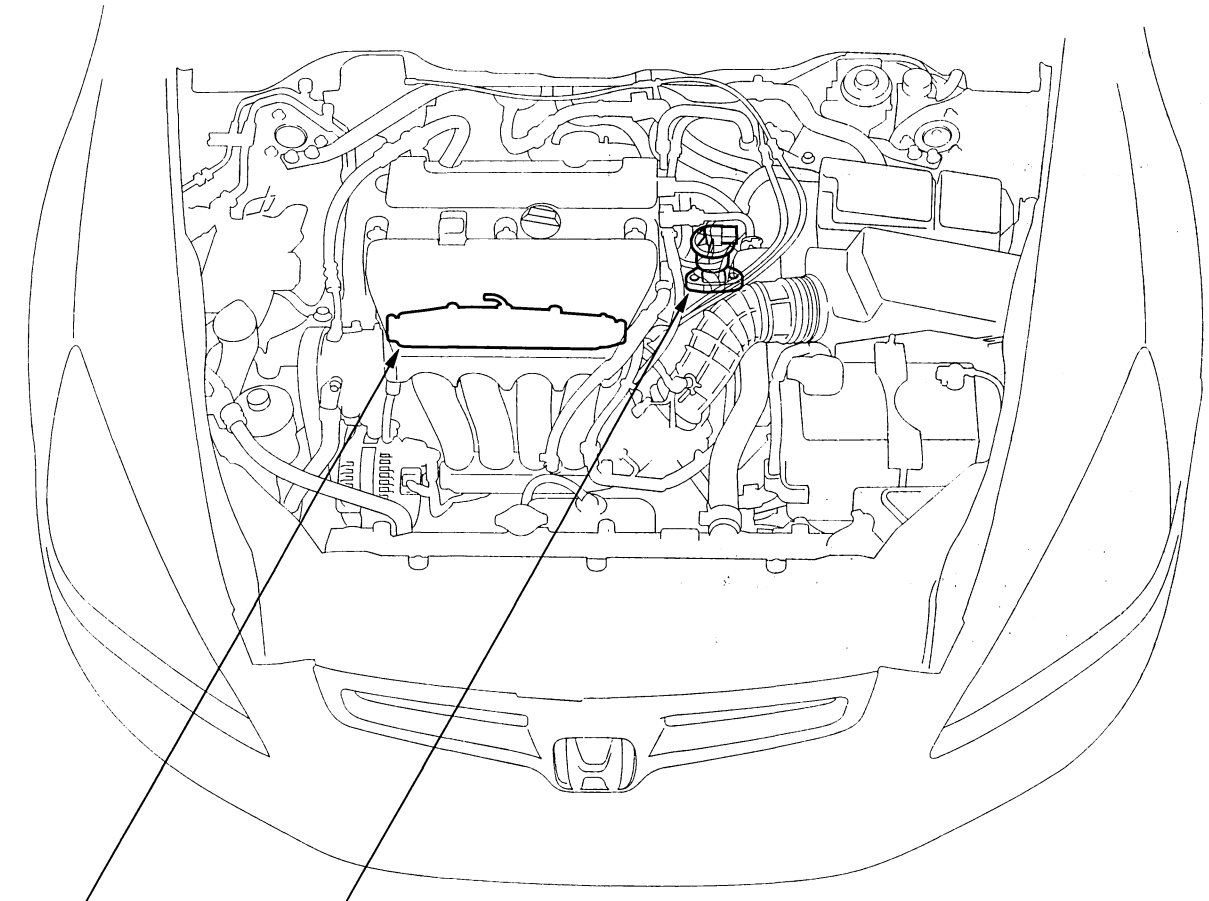

EXHAUST GAS RECIRCULATION (EGR) VALVE
Replacement, page 11-386

EXHAUST GAS RECIRCULATION (EGR) PLATE
Removal, page 9-2

*: This illustration shows 2003-2005 models.

BACK

Protected by AR



DTC Troubleshooting

DTC P0401: EGR Insufficient Flow

1. Turn the ignition switch ON (II).
2. Clear the DTC with the HDS.
3. Start the engine. Hold the engine speed at 3,000 rpm without load (in Park or neutral) until the radiator fan comes on, then let it idle.
4. Do the EGR TEST in the INSPECTION MENU with the HDS.

   Is the result OK?

   YES—Go to step 5.

   NO—Go to step 7.
5. Test-drive under these conditions:

   - Engine coolant temperature above 158 °F (70 °C)
   - A/T in D position (M/T in 4th gear)
   - Vehicle speed at 25 mph (40 km/h) or more, and engine speed between 1,100 and 3,000 rpm
   - During the drive, decelerate (with the throttle fully closed) for 5 seconds
6. Monitor the OBD STATUS for DTC P0401 in the DTCs MENU with the HDS.

   Does the screen indicate FAILED?

   YES—Remove the EGR plate (see page 9-2), and clean the intake manifold port with throttle plate and induction cleaner, then go to step 9.

   NO—If the screen indicates PASSED, intermittent failure, system is OK at this time. If the screen indicates EXECUTING, keep driving until a result comes on. If the screen indicates OUT OF CONDITION, go to step 5 and recheck.
7. Turn the ignition switch OFF.
8. Replace the EGR valve (see page 11-386).
9. Turn the ignition switch ON (II).
10. Reset the ECM/PCM with the HDS.
11. Do the ECM/PCM idle learn procedure (see page 11-316).
12. Test-drive under these conditions:

    - Engine coolant temperature above 158 °F (70 °C)
    - A/T in D position (M/T in 4th gear)
    - Vehicle speed at 25 mph (40 km/h) or more, and engine speed between 1,100 and 3,000 rpm
    - During the drive, decelerate (with the throttle fully closed) for 5 seconds
13. Check for Temporary DTCs or DTCs with the HDS.

    Are any Temporary DTCs or DTCs indicated?

    YES—If DTC P0401 is indicated, check for poor connections or loose terminals at the EGR valve and the ECM/PCM. If the connections are OK, go to step 15. If any other Temporary DTCs or DTCs are indicated, go to the indicated DTC's troubleshooting.

    NO—Go to step 14.
14. Monitor the OBD STATUS for DTC P0401 in the DTCs MENU with the HDS.

    Does the screen indicate PASSED?

    YES—Troubleshooting is complete. ■

    NO—If the screen indicates FAILED, go to step 1 and recheck. If the screen indicates EXECUTING, keep driving until a result comes on. If the screen indicates OUT OF CONDITION, go to step 12 and recheck.

(cont'd)

Protected by AR

DTC Troubleshooting (cont'd)

15. Update the ECM/PCM if it does not have the latest software, or substitute a known-good ECM/PCM (see page 11-6).

16. Test-drive under these conditions:

    - Engine coolant temperature above 158 °F (70 °C)
    - A/T in D position (M/T in 4th gear)
    - Vehicle speed at 25 mph (40 km/h) or more, and engine speed between 1,100 and 3,000 rpm
    - During the drive, decelerate (with the throttle fully closed) for 5 seconds

17. Check for Temporary DTCs or DTCs with the HDS.

    Are any Temporary DTCs or DTCs indicated?

    YES—If DTC P0401 is indicated, check for poor connections or loose terminals at the EGR valve and the ECM/PCM, then go to step 1. If any other Temporary DTCs or DTCs are indicated, go to the indicated DTC's troubleshooting.

    NO—If the ECM/PCM was updated, troubleshooting is complete. If the ECM/PCM was substituted, replace the original ECM/PCM (see page 11-227). ■

BACK

Protected by AR

DTC P0404: EGR Valve Circuit Range/ Performance Problem

1. Turn the ignition switch ON (II).
2. Clear the DTC with the HDS.
3. Start the engine. Hold the engine speed at 3,000 rpm without load (in Park or neutral) until the radiator fan comes on, then let it idle.
4. Do the EGR TEST in the INSPECTION MENU with the HDS.

   Is the result OK?

   YES—Intermittent failure, system is OK at this time. Check for carbon in the EGR valve.■

   NO—Go to step 5.
5. Turn the ignition switch OFF.
6. Disconnect the EGR valve 6P connector.
7. At the sensor side, measure resistance between EGR valve 6P connector terminals No. 1 and No. 2.

EGR VALVE 6P CONNECTOR

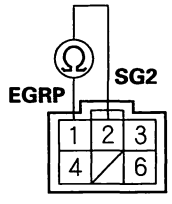

Terminal side of male terminals

Is there 100 kΩ or more?

YES—Go to step 26.

NO—Go to step 8.

8. Measure resistance between EGR valve 6P connector terminals No. 1 and No. 3.

EGR VALVE 6P CONNECTOR

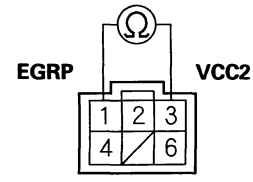

Terminal side of male terminals

Is there 100 kΩ or more?

YES—Go to step 26.

NO—Go to step 9.

9. Check for continuity between EGR valve 6P connector terminal No. 6 and body ground.

EGR VALVE 6P CONNECTOR

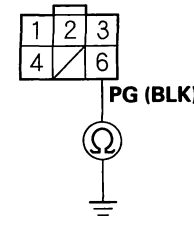

Wire side of female terminals

Is there continuity?

YES—Go to step 10.

NO—Repair open in the wire between the EGR valve and G101, then go to step 27.

(cont'd)

Protected by AR

DTC Troubleshooting (cont'd)

10. Jump the SCS line with the HDS.
11. Disconnect ECM/PCM connector B (24P).
12. Check for continuity between ECM/PCM connector terminal B16 and body ground.

ECM/PCM CONNECTOR B (24P)

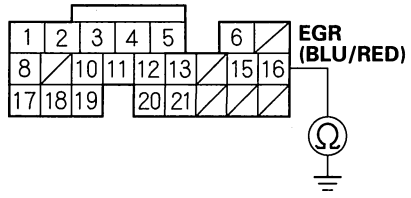

Wire side of female terminals

Is there continuity?

YES—Repair short in the wire between the ECM/PCM (B16) and the EGR valve, then go to step 27.

NO—Go to step 13.

13. Connect EGR valve 6P connector terminal No. 4 to body ground with a jumper wire.

EGR VALVE 6P CONNECTOR

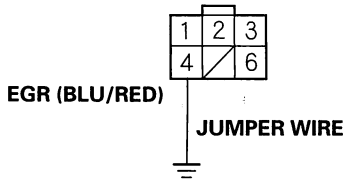

Wire side of female terminals

14. Check for continuity between ECM/PCM connector terminal B16 and body ground.

ECM/PCM CONNECTOR B (24P)

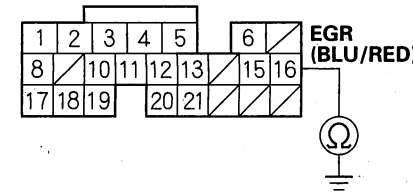

Wire side of female terminals

Is there continuity?

YES—Go to step 15.

NO—Repair open in the wire between the ECM/PCM (B16) and the EGR valve, then go to step 27.

15. Remove the EGR valve (see page 11-386).
16. Clean the intake manifold EGR port with throttle plate and induction cleaner. Also, clean the passage inside the EGR valve with throttle plate and induction cleaner.
17. Install the EGR valve (see page 11-386).
18. Reconnect the EGR valve 6P connector.
19. Reconnect ECM/PCM connector B (24P).
20. Turn the ignition switch ON (II).
21. Reset the ECM/PCM with the HDS.
22. Do the ECM/PCM idle learn procedure (see page 11-316).
23. Start the engine. Hold the engine speed at 3,000 rpm without load (in Park or neutral) until the radiator fan comes on, then let it idle.

BACK

Protected by AR

24. Do the EGR TEST in the INSPECTION MENU with the HDS.

    Is the result OK?

    YES—Go to step 31.

    NO—Go to step 25.

25. Turn the ignition switch OFF.

26. Replace the EGR valve (see page 11-386).

27. Reconnect all connectors.

28. Turn the ignition switch ON (II).

29. Reset the ECM/PCM with the HDS.

30. Do the ECM/PCM idle learn procedure (see page 11-316).

31. Start the engine. Hold the engine speed at 3,000 rpm without load (in Park or neutral) until the radiator fan comes on, then let it idle.

32. Do the EGR TEST in the INSPECTION MENU with the HDS.

33. Check for Temporary DTCs or DTCs with the HDS.

    Are any Temporary DTCs or DTCs indicated?

    YES—If DTC P0404 is indicated, check for poor connections or loose terminals at the EGR valve and the ECM/PCM. If the connections are OK, go to step 35. If any other Temporary DTCs or DTCs are indicated, go to the indicated DTC's troubleshooting.

    NO—Go to step 34.

34. Monitor the OBD STATUS for DTC P0404 in the DTCs MENU with the HDS.

    Does the screen indicate PASSED?

    YES—Troubleshooting is complete.■

    NO—If the screen indicates FAILED, go to step 1 and recheck. If the screen indicates EXECUTING, keep driving until a result comes on. If the screen indicates OUT OF CONDITION, go to step 31 and recheck.

35. Update the ECM/PCM if it does not have the latest software, or substitute a know-good ECM/PCM (see page 11-6).

36. Do the EGR TEST in the INSPECTION MENU with the HDS.

37. Check for Temporary DTCs or DTCs with the HDS.

    Are any Temporary DTCs or DTCs indicated?

    YES—If DTC P0404 is indicated, check for poor connections or loose terminals at the EGR valve and the ECM/PCM, then go to step 1. If any other Temporary DTCs or DTCs are indicated, go to the indicated DTC's troubleshooting.

    NO—If the ECM/PCM was updated, troubleshooting is complete. If the ECM/PCM was substituted, replace the original ECM/PCM (see page 11-227).■

Protected by AR

DTC Troubleshooting (cont'd)

DTC P0406: EGR Valve Position Sensor Circuit High Voltage

1. Turn the ignition switch ON (II).
2. Check the EGR VLS in the DATA LIST with the HDS.

   Is 4.88 V or higher indicated?

   YES—Go to step 3.
   NO—Intermittent failure, system is OK at this time. Check for poor connections or loose terminals at the EGR valve and the ECM/PCM. ■
3. Turn the ignition switch OFF.
4. Disconnect the EGR valve 6P connector.
5. Turn the ignition switch ON (II).
6. Measure voltage between EGR valve 6P connector terminals No. 2 and No. 3.

EGR VALVE 6P CONNECTOR

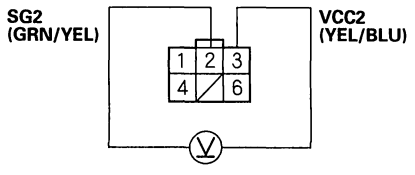

Wire side of female terminals

Is there about 5 V?

YES—Go to step 8.
NO—Go to step 7.

7. Measure voltage between ECM/PCM connector terminals A20 and A23.

ECM/PCM CONNECTOR A (31P)

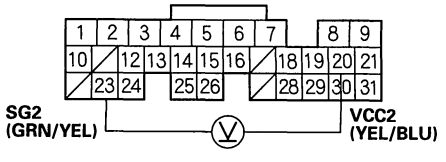

Wire side of female terminals

Is there about 5 V?

YES—Repair open in the wire between the EGR valve and the ECM/PCM (A23), then go to step 10.

NO—Go to step 14.

8. Turn the ignition switch OFF.
9. Replace the EGR valve (see page 11-386).
10. Turn the ignition switch ON (II).
11. Reset the ECM/PCM with the HDS.
12. Do the ECM/PCM idle learn procedure (see page 11-316).
13. Check for Temporary DTCs or DTCs with the HDS.

    Are any Temporary DTCs or DTCs indicated?

    YES—If DTC P0406 is indicated, check for poor connections or loose terminals at the EGR valve and the ECM/PCM, then go to step 1. If any other Temporary DTCs or DTCs are indicated, go to the indicated DTC's troubleshooting.

    NO—Troubleshooting is complete. ■
14. Update the ECM/PCM if it does not have the latest software, or substitute a known-good ECM/PCM (see page 11-6).
15. Check for Temporary DTCs or DTCs with the HDS.

    Are any Temporary DTCs or DTCs indicated?

    YES—If DTC P0406 is indicated, check for poor connections or loose terminals at the EGR valve and the ECM/PCM, then go to step 1. If any other Temporary DTCs or DTCs are indicated, go to the indicated DTC's troubleshooting.

    NO—If the ECM/PCM was updated, troubleshooting is complete. If the ECM/PCM was substituted, replace the original ECM/PCM (see page 11-227). ■

BACK

Protected by AR

DTC P2413: EGR System Malfunction

1. Turn the ignition switch ON (II).
2. Clear the DTC with the HDS.
3. Start the engine. Hold the engine speed at 3,000 rpm without load (in Park or neutral) until the radiator fan comes on, then let it idle.
4. Do the EGR TEST in the INSPECTION MENU with the HDS.

   Is the result OK?

   YES—Intermittent failure, system is OK at this time. Check for poor connections or loose terminals at the EGR valve and the ECM/PCM. ■

   NO—Go to step 5.
5. Turn the ignition switch OFF.
6. Turn the ignition switch ON (II).
7. Check the EGR VLS in the DATA LIST with the HDS.

   Is about 0 V indicated?

   YES—Go to step 8.

   NO—Go to step 19.
8. Turn the ignition switch OFF.
9. Disconnect the EGR valve 6P connector.
10. Turn the ignition switch ON (II).
11. Measure voltage between EGR valve 6P connector terminal No. 3 and body ground.

EGR VALVE 6P CONNECTOR

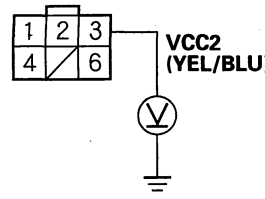

Wire side of female terminals

Is there about 5 V?

YES—Go to step 13.

NO—Go to step 12.

12. Measure voltage between ECM/PCM connector terminal A20 and body ground.

ECM/PCM CONNECTOR A (31P)

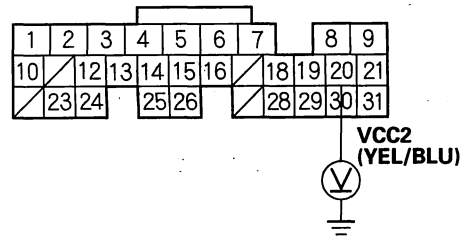

Wire side of female terminals

Is there about 5 V?

YES—Repair open in the wire between the EGR valve and the ECM/PCM (A20), then go to step 44.

NO—Go to step 51.

(cont'd)

Protected by AR

DTC Troubleshooting (cont'd)

13. Turn the ignition switch OFF.
14. Jump the SCS line with the HDS.
15. Disconnect ECM/PCM connector B (24P).
16. Check for continuity between ECM/PCM connector terminal B12 and body ground.

ECM/PCM CONNECTOR B (24P)

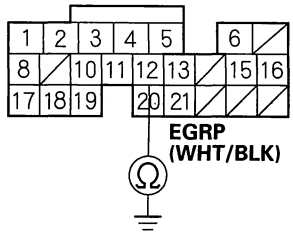

Wire side of female terminals

Is there continuity?

YES—Repair short in the wire between the ECM/PCM (B12) and the EGR valve, then go to step 44.

NO—Go to step 17.

17. Connect EGR valve 6P connector terminal No. 1 to body ground with a jumper wire.

EGR VALVE 6P CONNECTOR

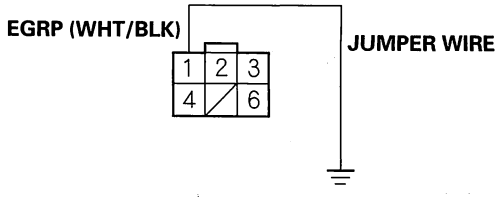

Wire side of female terminals

18. Check for continuity between ECM/PCM connector terminal B12 and body ground.

ECM/PCM CONNECTOR B (24P)

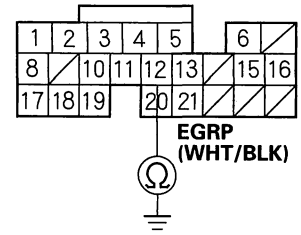

Wire side of female terminals

Is there continuity?

YES—Go to step 19.

NO—Repair open in the wire between the ECM/PCM (B12) and the EGR valve, then go to step 44.

19. Turn the ignition switch OFF.
20. If not already done, disconnect the EGR valve 6P connector.
21. At the sensor side, measure resistance between EGR valve 6P connector terminals No. 1 and No. 2.

EGR VALVE 6P CONNECTOR

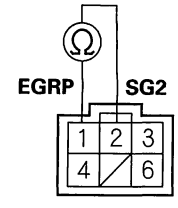

Terminal side of male terminals

Is there continuity or resistance of 100 kΩ or more?

YES—Go to step 43.

NO—Go to step 22.

BACK

Protected by AR

22. Measure resistance between EGR valve 6P connector terminals No. 1 and No. 3.

EGR VALVE 6P CONNECTOR

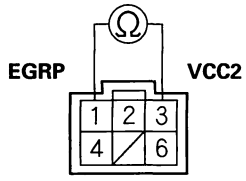

Terminal side of male terminals

Is there 100 kΩ or more?

YES—Go to step 43.

NO—Go to step 23.

23. If not already done, jump the SCS line with the HDS.

24. If not already done, disconnect ECM/PCM connector B (24P).

25. Check for continuity between ECM/PCM connector terminal B16 and body ground.

ECM/PCM CONNECTOR B (24P)

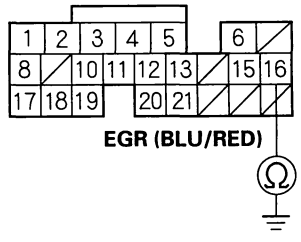

Wire side of female terminals

Is there continuity?

YES—Repair short in the wire between the ECM/PCM (B16) and the EGR valve, then go to step 44.

NO—Go to step 26.

26. Connect EGR valve 6P connector terminal No. 4 to body ground with a jumper wire.

EGR VALVE 6P CONNECTOR

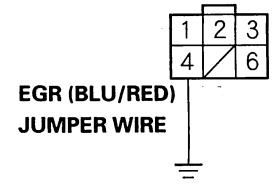

Wire side of female terminals

27. Check for continuity between ECM/PCM connector terminal B16 and body ground.

ECM/PCM CONNECTOR B (24P)

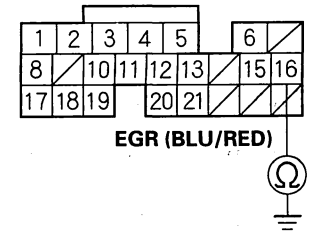

Wire side of female terminals

Is there continuity?

YES—Go to step 28.

NO—Repair open in the wire between the ECM/PCM (B16) and the EGR valve, then go to step 44.

(cont'd)

Protected by AR

DTC Troubleshooting (cont'd)

28. Remove the jumper wire from the EGR valve 6P connector.

29. Check for continuity between EGR valve 6P connector terminal No. 6 and body ground.

EGR VALVE 6P CONNECTOR

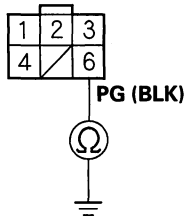

Wire side of female terminals

Is there continuity?

YES—Go to step 30.

NO—Repair open in the wire between the EGR valve and G101, then go to step 44.

30. Reconnect ECM/PCM connector B (24P).

31. Connect the battery positive terminal to EGR valve 6P connector terminal No. 4 with a jumper wire.

EGR VALVE 6P CONNECTOR

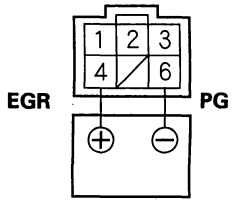

Terminal side of male terminals

32. Start the engine and let it idle, then connect the battery negative terminal to EGR valve 6P connector terminal No. 6 with a jumper wire.

Does the engine stall or run rough?

YES—Go to step 51.

NO—Go to step 33.

33. Turn the ignition switch OFF.

34. Remove the EGR valve (see page 11-386).

35. Clean the intake manifold EGR port with throttle plate and induction cleaner. Also, clean the passage inside the EGR valve with throttle plate and induction cleaner.

36. Install the EGR valve (see page 11-386).

37. Reconnect the EGR valve 6P connector.

38. Turn the ignition switch ON (II).

39. Reset the ECM/PCM with the HDS.

40. Do the ECM/PCM idle learn procedure (see page 11-316).

41. Do the EGR TEST in the INSPECTION MENU with the HDS.

Is the result OK?

YES—Go to step 49.

NO—Go to step 42.

BACK

Protected by AR

42. Turn the ignition switch OFF.

43. Replace the EGR valve (see page 11-386).

44. Reconnect all connectors.

45. Turn the ignition switch ON (II).

46. Reset the ECM/PCM with the HDS.

47. Do the ECM/PCM idle learn procedure (see page 11-316).

48. Do the EGR TEST in the INSPECTION MENU with the HDS.

49. Check for Temporary DTCs or DTCs with the HDS.

    Are any Temporary DTCs or DTCs indicated?

    YES—If DTC P2413 is indicated, check for poor connections or loose terminals at the EGR valve and the ECM/PCM, then go to step 1. If any other Temporary DTCs or DTCs are indicated, go to the indicated DTC's troubleshooting.

    NO—Go to step 50.

50. Monitor the OBD STATUS for DTC P2413 in the DTCs MENU with the HDS.

    Does the screen indicate PASSED?

    YES—Troubleshooting is complete. ■

    NO—If the screen indicates FAILED, go to step 1 and recheck. If the screen indicates EXCUTING, keep driving until a result comes on. If the screen indicates OUT OF CONDITION, go to step 48 and recheck.

51. Update the ECM/PCM if it does not have the latest software, or substitute a known-good ECM/PCM (see page 11-6).

52. Do the EGR TEST in the INSPECTION MENU with the HDS.

53. Check for Temporary DTCs or DTCs with the HDS.

    Are any Temporary DTCs or DTCs indicated?

    YES—If DTC P2413 is indicated, check for poor connections or loose terminals at the EGR valve and the ECM/PCM, then go to step 1. If any other Temporary DTCs or DTCs are indicated, go to the indicated DTC's troubleshooting.

    NO—If the ECM/PCM was updated, troubleshooting is complete. If the ECM/PCM was substituted, replace the original ECM/PCM (see page 11-227). ■

Protected by AR

EGR Valve Replacement

1. Remove the air cleaner (see page 11-361).
2. Remove the EGR valve 6P connector (A).

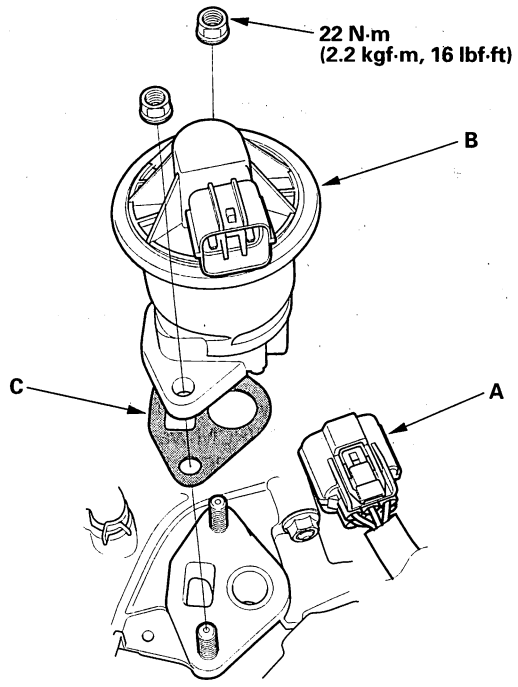

3. Remove the EGR valve (B).
4. Install the valve in the reverse order of removal with a new gasket (C).

BACK

Protected by AR

DTC Troubleshooting

DTC P2279: Intake Air System Leak Detected (2003-2004 except SULEV, LX-P models)

NOTE: If DTC P0443 is stored at the same time as DTC P2279, troubleshoot DTC P0443 first, then recheck for DTC P2279.

1. Check for vacuum leaks at these parts:

   - PCV valve
   - PCV hose
   - Purge (PCS) line
   - Throttle body
   - Intake manifold
   - Brake booster hose

   Are the parts OK?

   YES—Go to step 2.

   NO—Repair or replace the leaking part(s), then go to step 4.

2. Start the engine. Hold the engine speed at 3,000 rpm without load (in Park or neutral) until the radiator fan comes on, then let it idle for 1 minute.

3. Monitor the OBD STATUS for DTC P2279 in the DTCs MENU with the HDS.

   Does the screen indicate FAILED?

   YES—Check the camshaft timing (see step 1 on page 6-15), then go to step 4.

   NO—If the screen indicates PASSED, intermittent failure, system is OK at this time. If the screen indicates NOT COMPLETED, go to step 2 and recheck.

4. Reset the ECM/PCM with the HDS.

5. Do the ECM/PCM idle learn procedure (see page 11-316).

6. Start the engine. Hold the engine speed at 3,000 rpm without load (in Park or neutral) until the radiator fan comes on, then let it idle for 1 minute.

7. Check for Temporary DTCs or DTCs with the HDS.

   Are any Temporary DTCs or DTCs indicated?

   YES—If DTC P2279 is indicated, check for vacuum leaks at the PCV valve, the PCV hose, the purge (PCS) line, the throttle body, the intake manifold, or the brake booster hose, then go to step 4. If any other Temporary DTCs or DTCs are indicated, go to the indicated DTC's troubleshooting.

   NO—Go to step 8.

8. Monitor the OBD STATUS for DTC P2279 in the DTCs MENU with the HDS.

   Does the screen indicate PASSED?

   YES—Troubleshooting is complete.■

   NO—If the screen indicates FAILED, go to step 1 and recheck. If the screen indicates NOT COMPLETED, go to step 6 and recheck.

Protected by AR

PCV System

PCV Valve Inspection

1. Check the PCV valve (A), hoses (B), and connections for leaks or restrictions.

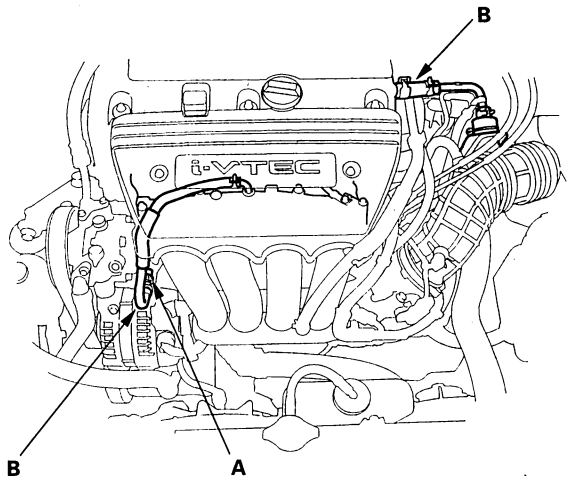

*: This illustration shows 2003-2005 models.

2. At idle, make sure there is a clicking sound from the PCV valve when the hose between the PCV valve and intake manifold is lightly pinched (A) with your fingers or pliers.
   If there is no clicking sound, check the PCV valve washer for cracks or damage. If the washer is OK, replace the PCV valve and recheck.

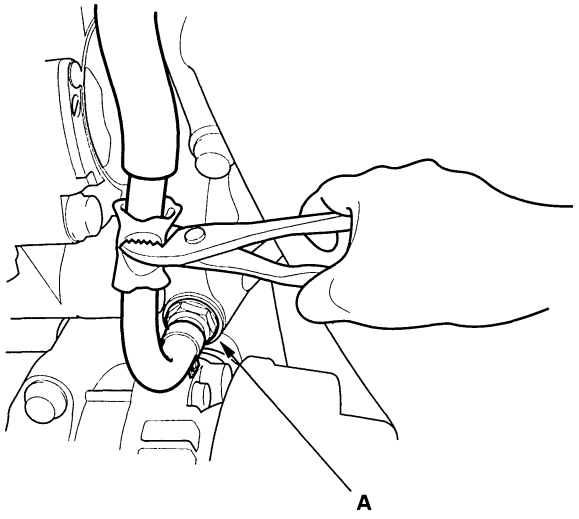

PCV Valve Replacement

1. Disconnect the PCV hose.
2. Remove the PCV valve (A).

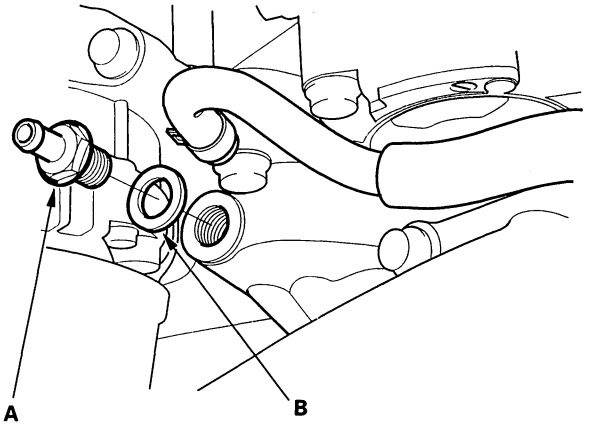

A
44 N·m
(4.5 kgf·m, 33 lbf·ft)

3. Install the valve in the reverse order of removal with a new washer (B).

BACK

Protected by AR

Component Location Index

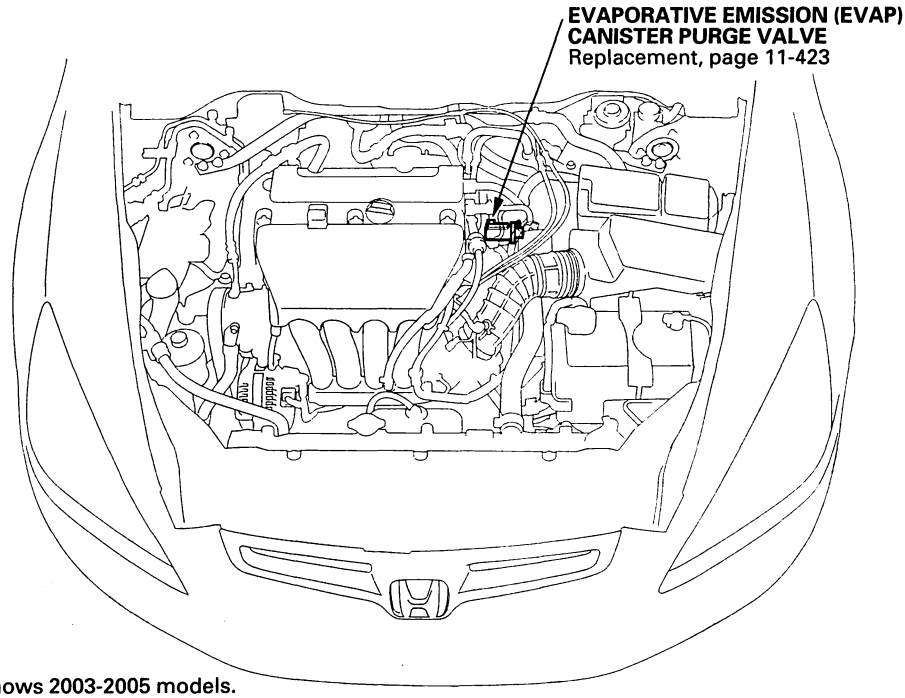

*: This illustration shows 2003-2005 models.

Non-SULEV model

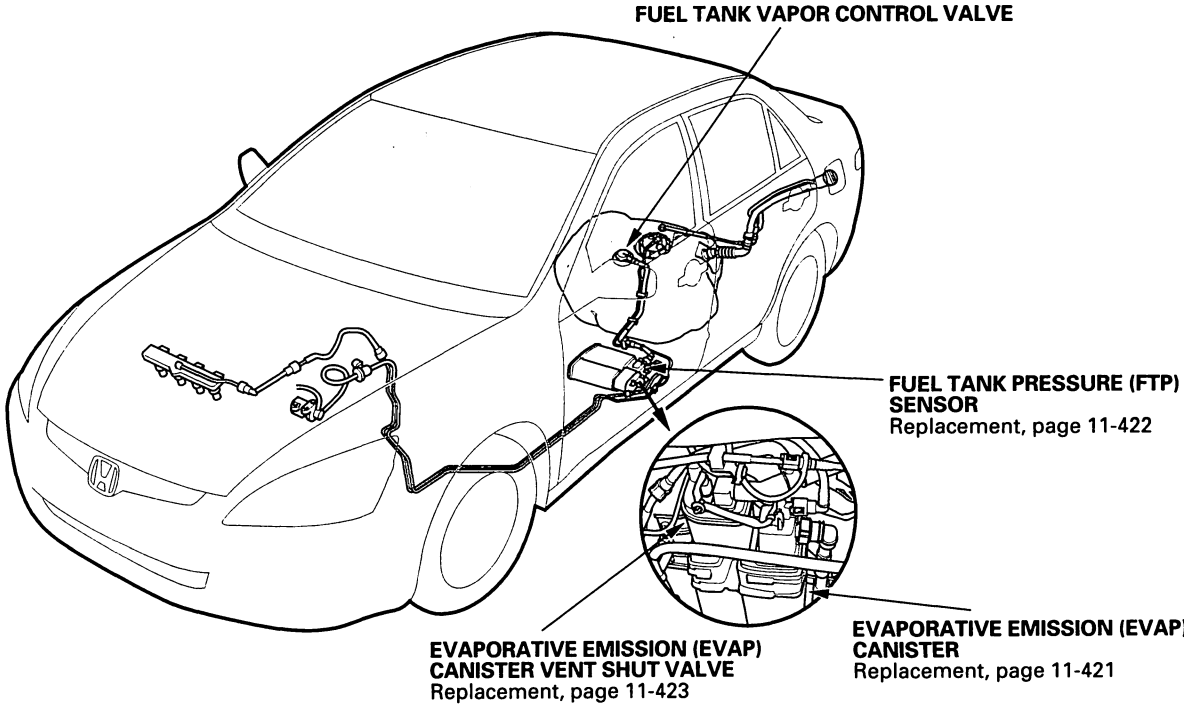

(cont'd)

Protected by AR

Component Location Index (cont'd)

SULEV model

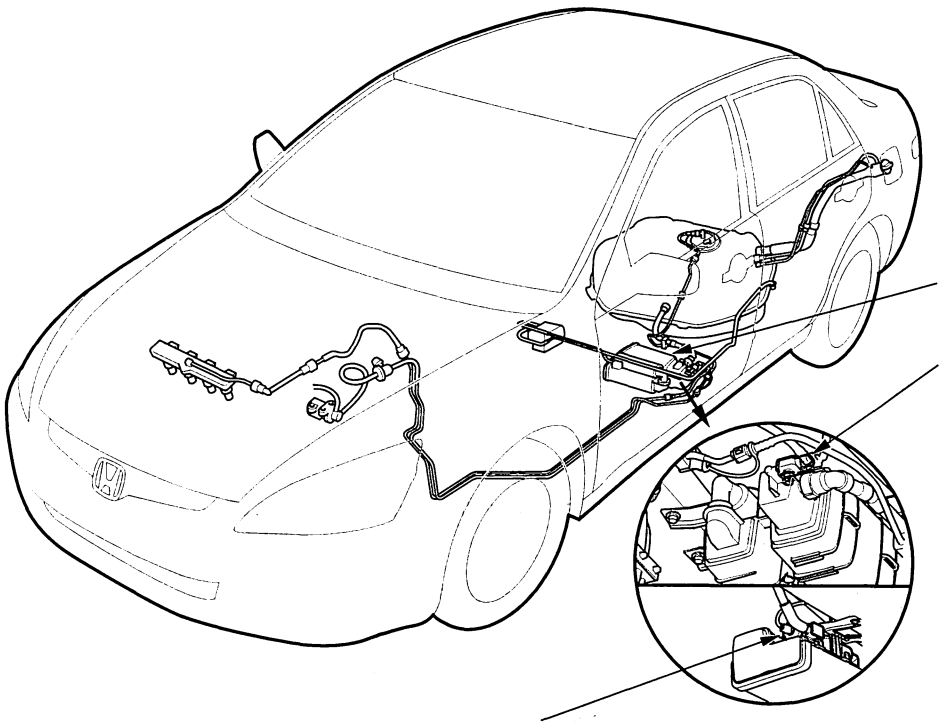

EVAPORATIVE EMISSION (EVAP) CANISTER
Replacement, page 11-421

FUEL TANK PRESSURE (FTP) SENSOR
Replacement, page 11-422

EVAPORATIVE EMISSION (EVAP) CANISTER VENT SHUT VALVE
Replacement, page 11-424

BACK

Protected by AR

DTC Troubleshooting

DTC P0442: EVAP System Small Leak Detected
(2003-2004 models)

DTC P0455: EVAP System Large Leak Detected
(2005-2006 models)

DTC P0456: EVAP System Very Small Leak Detected

NOTICE

The fuel system is designed to allow specified maximum vacuum and pressure conditions. Do not deviate from the vacuum and pressure tests as indicated in these procedures. Excessive pressure/vacuum would damage the EVAP components or cause eventual fuel tank failure.

Special Tools Required

- Vacuum/pressure gauge, 0—4 in.Hg 07JAZ-001000B
- Vacuum pump/gauge, 0—30 in.Hg, Snap-on YA4000A or equivalent, commercially available

NOTE: Fresh fuel has a higher volatility that will create greater pressure/vacuum. The optimum condition for testing is less than a full tank of fresh fuel. If possible, to assist in leak detection, add 1 gallon of fresh fuel to the tank (as long as it will not fill the tank) just before starting these procedures.

1. Check the fuel fill cap (the cap must say "Tighten to click"). It should turn 1/4 turn after it's tight, then it clicks.

   Is the correct fuel fill cap installed and properly tightened?

   YES—Go to step 2.

   NO—Replace or tighten the cap, then go to step 22.

2. Check the fuel fill cap seal (A) and the fuel fill pipe mating surface (B). Verify that the fuel fill cap tether cord (C) is not caught under the cap.

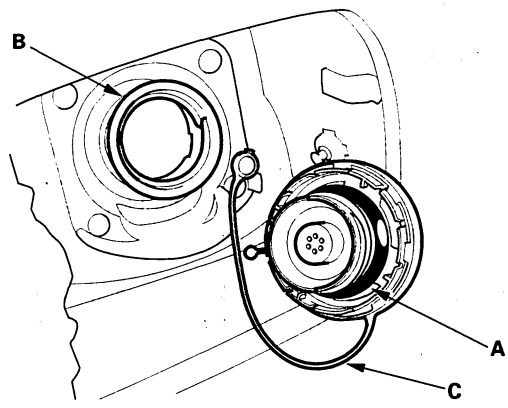

   Is the fuel fill cap seal missing or damaged, is the fuel fill pipe damaged, or is the tether cord caught under the cap?

   YES—Replace the fuel fill cap or the fuel fill pipe, then go to step 22.

   NO—Go to step 3.

3. Turn the ignition switch ON (II).

4. Clear the DTC with the HDS.

5. Do the EVAP FUNCTION TEST in the INSPECTION MENU with the HDS.

   Is the result OK?

   YES—Intermittent failure, system is OK at this time. Check for poor connections or loose terminals at the FTP sensor, the EVAP canister purge valve, or the EVAP canister vent shut valve and the ECM/PCM. ■

   NO—Go to step 6.

6. Turn the ignition switch OFF.

7. Turn the ignition switch ON (II).

(cont'd)

Protected by AR

DTC Troubleshooting (cont'd)

8. Check for a poor connection or damage at the fuel tank vapor recirculation tube (see page 11-334).

   Is the tube OK?

   YES—Go to step 9.

   NO—
   - Replace the fuel tank vapor recirculation tube (see page 11-347), then go to step 22.
   - If necessary, replace the fuel tank (see page 11-347), then go to step 22.

9. Disconnect the fuel tank vapor recirculation tube (A) from the EVAP canister (B), and plug the EVAP canister port (C).

   SULEV model

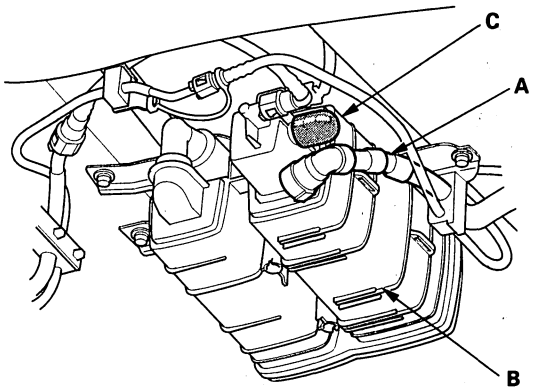

   Non-SULEV model

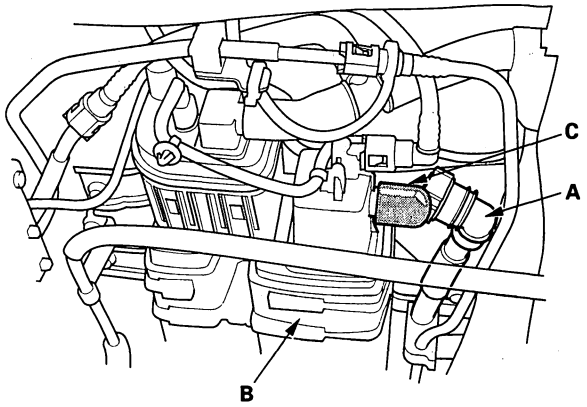

10. Disconnect the vacuum hose (purge line) (A) from the EVAP canister purge valve (B) in the engine compartment, and connect a T-fitting (C) from the vacuum gauge and the vacuum pump/gauge, 0—30 in.Hg, to the hose as shown.

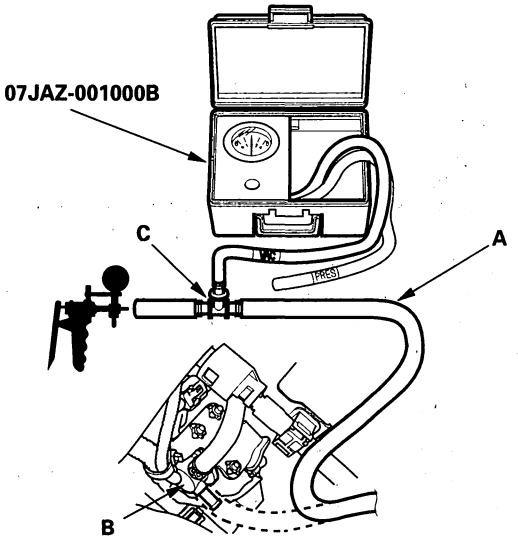

11. Select EVAP CVS ON in the INSPECTION MENU with the HDS.

12. Apply vacuum to the hose until the FTP reads 1.90 V (—0.59 in.Hg, —15.1 mmHg).

13. Monitor the FTP SENSOR in the DATA LIST for 1 minute with the HDS.

    Does the voltage increase more than 0.2 V (0.1 in.Hg, 2.5 mmHg)?

    YES—Go to step 14.

    NO—Go to step 19.

14. Select EVAP CVS OFF in the INSPECTION MENU with the HDS.

BACK

Protected by AR

15. Disconnect the fresh air hoses (A) from the EVAP canister vent shut valve (B), and plug the EVAP canister vent shut valve ports (C).

SULEV model

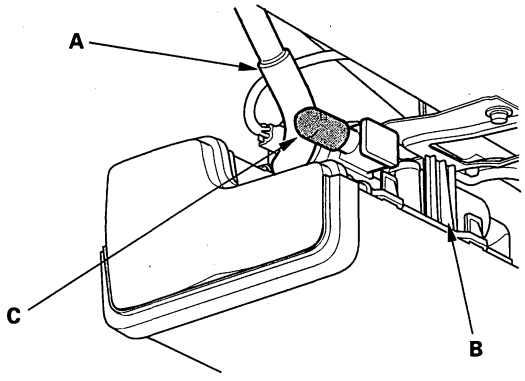

Non-SULEV model

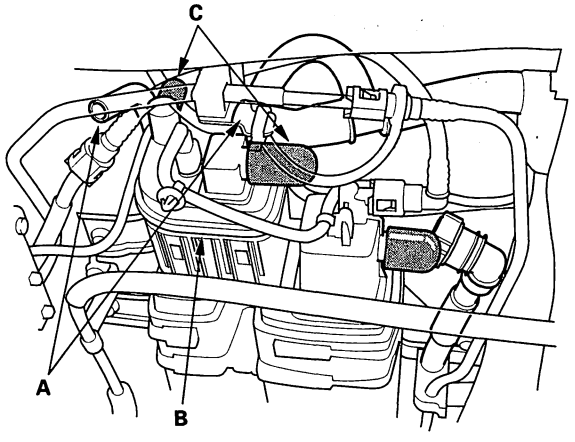

16. Apply vacuum to the hose (disconnected in step 10) until the FTP reads 1.90 V (—0.59 in.Hg, —15.1 mmHg).

17. Monitor the FTP SENSOR in the DATA LIST for 1 minute with the HDS.

Does the voltage increase more than 0.2 V (0.1 in.Hg, 2.5 mmHg)?

YES—Go to step 18.

NO—Replace the EVAP canister vent shut valve; Non-SULEV model (see page 11-423), SULEV model (see page 11-424), then go to step 21.

18. Check for a loose or damaged EVAP canister purge line between the EVAP canister and the EVAP canister purge valve.

Is the line OK?

YES—Replace the following parts, then go to step 21.

- FTP sensor O-ring (see page 11-422)
- EVAP canister vent shut valve case and O-ring; Non-SULEV model (see page 11-423), SULEV model (see page 11-424)
- EVAP canister (see page 11-421)

NO—Reconnect or repair the EVAP canister purge hose, then go to step 21.

19. Select EVAP CVS OFF in the INSPECTION MENU with the HDS.

20. Check these parts for looseness or damage:

- Fuel fill pipe
- Fuel vapor return pipe
- Fuel tank vapor signal tube (SULEV model)

Are the parts OK?

YES—Check the fuel pump base gasket (see page 11-345), and check the fuel tank, then go to step 21.

NO—Repair or replace the damaged parts, then go to step 21.

21. Reconnect all hoses and connectors.

22. Turn the ignition switch ON (II).

23. Reset the ECM/PCM with the HDS.

24. Do the ECM/PCM idle learn procedure (see page 11-316).

25. Do the EVAP FUNCTION TEST in the INSPECTION MENU with the HDS.

Is the result OK?

YES—Troubleshooting is complete.■

NO—Check for poor connections or loose terminals at the FTP sensor, the EVAP canister purge valve, or the EVAP canister vent shut valve and the ECM/PCM, then go to step 1.

Protected by AR

DTC Troubleshooting (cont'd)

DTC P0443: EVAP Canister Purge Valve Circuit Malfunction

1. Turn the ignition switch ON (II).
2. Clear the DTC with the HDS.
3. Start the engine. Hold the engine speed at 3,000 rpm without load (in Park or neutral) until the radiator fan comes on, then let it idle.
4. Check for Temporary DTCs or DTCs with the HDS.

   Is DTC P0443 indicated?

   YES—Go to step 5.

   NO—Intermittent failure, system is OK at this time. Check for poor connections or loose terminals at the EVAP canister purge valve and the ECM/PCM. ■
5. Turn the ignition switch OFF, and allow the engine to cool below 131 °F (55 °C).
6. Disconnect the vacuum hose (A) from the EVAP canister purge valve (B) in the engine compartment, and connect a vacuum pump/gauge, 0—30 in.Hg, to the hose.

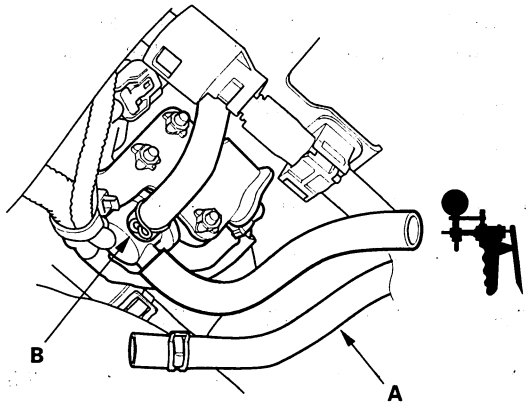

7. Start the engine, and let it idle.

   Is there vacuum?

   YES—Go to step 8.

   NO—Go to step 14.
8. Turn the ignition switch OFF.
9. Disconnect the EVAP canister purge valve 2P connector.
10. Check for continuity between EVAP canister purge valve 2P connector terminal No. 2 and body ground.

EVAP CANISTER PURGE VALVE 2P CONNECTOR

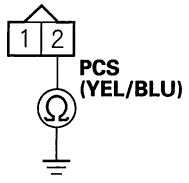

Wire side of female terminals

Is there continuity?

YES—Go to step 11.

NO—Go to step 24.

BACK

Protected by AR

11. Jump the SCS line with the HDS.
12. Disconnect ECM/PCM connector B (24P).
13. Check for continuity between EVAP canister purge valve 2P connector terminal No. 2 and body ground.

EVAP CANISTER PURGE VALVE 2P CONNECTOR

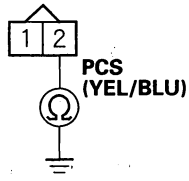

Wire side of female terminals

Is there continuity?

YES—Repair short in the wire between the EVAP canister purge valve and the ECM/PCM (B21), then go to step 25.

NO—Go to step 31.

14. Turn the ignition switch OFF.
15. Disconnect the EVAP canister purge valve 2P connector.
16. Turn the ignition switch ON (II).
17. Measure voltage between EVAP canister purge valve 2P connector terminal No. 1 and body ground.

EVAP CANISTER PURGE VALVE 2P CONNECTOR

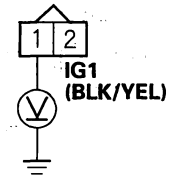

Wire side of female terminals

Is there battery voltage?

YES—Go to step 18.

NO—Repair open in the wire between the EVAP canister purge valve and the No. 18 ACG (15 A) fuse in the under-dash fuse/relay box, then go to step 25.

18. Turn the ignition switch OFF.
19. Jump the SCS line with the HDS.
20. Disconnect ECM/PCM connector B (24P).
21. Connect EVAP canister purge valve 2P connector terminal No. 2 to body ground with a jumper wire.

EVAP CANISTER PURGE VALVE 2P CONNECTOR

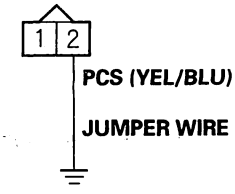

Wire side of female terminals

(cont'd)

Protected by AR

DTC Troubleshooting (cont'd)

22. Check for continuity between ECM/PCM connector terminal B21 and body ground.

ECM/PCM CONNECTOR B (24P)

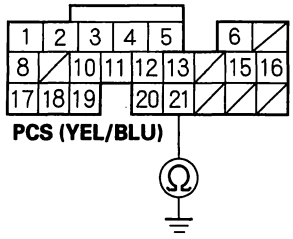

Wire side of female terminals

Is there continuity?

YES—Go to step 23.

NO—Repair open in the wire between the EVAP canister purge valve and the ECM/PCM (B21), then go to step 25.

23. Measure resistance between EVAP canister purge valve 2P connector terminals No. 1 and No. 2.

EVAP CANISTER PURGE VALVE 2P CONNECTOR

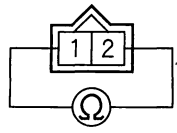

Terminal side of male terminals

Is there about 33 Ω at room temperature?

YES—Go to step 31.

NO—Go to step 24.

24. Replace the EVAP canister purge valve (see page 11-423).

25. Reconnect all connectors.

26. Turn the ignition switch ON (II).

27. Reset the ECM/PCM with the HDS.

28. Do the ECM/PCM idle learn procedure (see page 11-316).

29. Check for Temporary DTCs or DTCs with the HDS.

Are any Temporary DTCs or DTCs indicated?

YES—If DTC P0443 is indicated, check for poor connections or loose terminals at the EVAP canister purge valve and the ECM/PCM, then go to step 1. If any other Temporary DTCs or DTCs are indicated, go to the indicated DTC's troubleshooting.

NO—2003 model: Troubleshooting is complete.■ 2004-2006 models: Go to step 30.

30. Monitor the OBD STATUS for DTC P0443 in the DTCs MENU with the HDS.

Does the screen indicate PASSED?

YES—Troubleshooting is complete.■

NO—If the screen indicate FAILED, check for poor connections or loose terminals at the EVAP canister purge valve and the ECM/PCM, then go to step 1. If the screen indicates EXECUTING, keep idling until a result comes on. If the screen indicates OUT OF CONDITION, go to step 28 and recheck.

BACK

Protected by AR

31. Update the ECM/PCM if it does not have the latest software, or substitute a known-good ECM/PCM (see page 11-6).

32. Check for Temporary DTCs or DTCs with the HDS.

    Are any Temporary DTCs or DTCs indicated?

    YES—If DTC P0443 is indicated, check for poor connections or loose terminals at the EVAP canister purge valve and the ECM/PCM, then go to step 1. If any other Temporary DTCs or DTCs are indicated, go to the indicated DTC's troubleshooting.

    NO—If the ECM/PCM was updated, troubleshooting is complete. If the ECM/PCM was substituted, replace the original ECM/PCM (see page 11-227). ■

Protected by AR

DTC Troubleshooting (cont'd)

DTC P0451: FTP Sensor Range/Performance Problem

NOTE: If DTC P2422 is stored at the same time as DTC P0451, troubleshoot DTC P2422 first, then recheck for DTC P0451.

1. Turn the ignition switch ON (II).
2. Clear the DTC with the HDS.
3. Start the engine, and let it idle 1 minute.
4. Monitor the OBD STATUS for DTC P0451 in the DTCs MENU with the HDS.

   Does the screen indicate FAILED?

   YES—Go to step 5.

   NO—If the screen indicates PASSED, intermittent failure, system is OK at this time. Check for poor connections or loose terminals at the FTP sensor and the ECM/PCM. If the screen indicates NOT COMPLETED, go to step 3 and recheck.
5. Turn the ignition switch OFF.
6. Replace the FTP sensor (see page 11-422).
7. Turn the ignition switch ON (II).
8. Reset the ECM/PCM with the HDS.
9. Do the ECM/PCM idle learn procedure (see page 11-316).
10. Start the engine, and let it idle 1 minute.
11. Check for Temporary DTCs or DTCs with the HDS.

    Are any Temporary DTCs or DTCs indicated?

    YES—If DTC P0451 is indicated, check for poor connections or loose terminals at the FTP sensor and the ECM/PCM, then go to step 1. If any other Temporary DTCs or DTCs are indicated, go to the indicated DTC's troubleshooting.

    NO—Go to step 12.
12. Monitor the OBD STATUS for DTC P0451 in the DTCs MENU with the HDS.

    Does the screen indicate PASSED?

    YES—Troubleshooting is complete. ■

    NO—If the screen indicates FAILED, check for poor connections or loose terminals at the FTP sensor and the ECM/PCM, then go to step 1. If the screen indicates NOT COMPLETED, go to step 10 and recheck.

BACK

Protected by AR

DTC P0452: FTP Sensor Circuit Low Voltage (2003-2004 models)

1. Turn the ignition switch ON (II).
2. Clear the DTC with the HDS.
3. Turn the ignition switch OFF.
4. Turn the ignition switch ON (II).
5. Check for Temporary DTCs or DTCs with the HDS.

   Are DTC P0107, P0122, and P0452 indicated at the same time?

   YES—Go to step 23.

   NO—Go to step 6.
6. Turn the ignition switch OFF.
7. Remove the fuel fill cap.
8. Turn the ignition switch ON (II).
9. Check the FTP SENSOR in the DATA LIST with the HDS.

   Is about −7.3 kPa (−2.16 in.Hg, −55 mmHg), or 0.3 V or less indicated?

   YES—Go to step 13.

   NO—Go to step 10.
10. Install the fuel fill cap.
11. Start the engine.
12. Monitor the OBD STATUS for DTC P0452 in the DTCs MENU with the HDS.

    Does the screen indicate FAILED?

    YES—Go to step 13.

    NO—If the screen indicates PASSED, intermittent failure, system is OK at this time. Check for poor connections or loose terminals at the FTP sensor and the ECM/PCM. If the screen indicates NOT COMPLETED, go to step 8 and recheck.
13. Turn the ignition switch OFF.
14. Disconnect the FTP sensor 3P connector.
15. Turn the ignition switch ON (II).
16. Check the FTP SENSOR in the DATA LIST with the HDS.

    Is about 7.3 kPa (2.15 in.Hg, 54.7 mmHg), or 4.90 V indicated?

    YES—Go to step 32.

    NO—Go to step 17.
17. Measure voltage between FTP sensor 3P connector terminal No. 1 and body ground.

FTP SENSOR 3P CONNECTOR

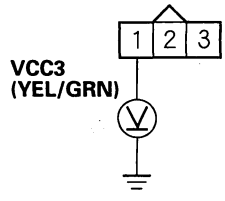

Wire side of female terminals

Is there about 5 V?

YES—Go to step 19.

NO—Go to step 18.

(cont'd)

Protected by AR

DTC Troubleshooting (cont'd)

18. Measure voltage between ECM/PCM connector terminal E5 and body ground.

ECM/PCM CONNECTOR E (31P)

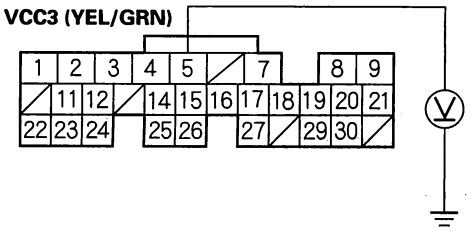

Wire side of female terminals

Is there 5 V?

YES—Repair open in the wire between the ECM/PCM (E5) and the FTP sensor, then go to step 35.

NO—Go to step 41.

19. Turn the ignition switch OFF.

20. Jump the SCS line with the HDS.

21. Disconnect ECM/PCM connector E (31P).

22. Check for continuity between FTP sensor 3P connector terminal No. 2 and body ground.

FTP SENSOR 3P CONNECTOR

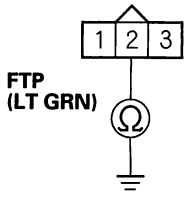

Wire side of female terminals

Is there continuity?

YES—Repair short in the wire between the ECM/PCM (E14) and the FTP sensor, then go to step 34.

NO—Go to step 41.

23. Turn the ignition switch OFF.

24. Jump the SCS line with the HDS.

25. Disconnect ECM/PCM connectors A (31P) and E (31P).

26. Disconnect the connectors from these parts:

- MAP sensor
- TP sensor
- FTP sensor
- EGR valve
- Input shaft (mainshaft) speed sensor
- Output shaft (countershaft) speed sensor

27. Check for continuity between body ground and ECM/PCM connector terminals A20, A21, and E5 individually.

ECM/PCM CONNECTORS

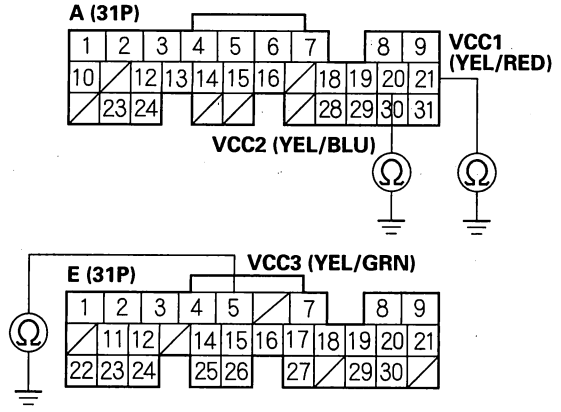

Wire side of female terminals

Is there continuity?

YES—Repair short in the wire between the ECM/PCM (A20, A21, or E5) and each disconnected part, then go to step 34.

NO—Go to step 28.

BACK

Protected by AR

28. Reconnect ECM/PCM connectors A (31P) and E (31P).

29. Turn the ignition switch ON (II).

30. Measure voltage between ECM/PCM connector terminal A21 and body ground.

ECM/PCM CONNECTOR A (31P)

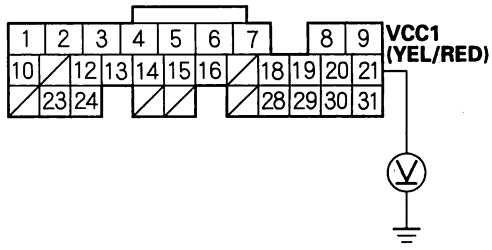

Wire side of female terminals

Is there about 5 V?

YES—Go to step 31.

NO—Go to step 41.

31. Continue to monitor voltage at ECM/PCM connector terminal A21 while reconnecting these parts, one at a time:

- MAP sensor
- TP sensor
- FTP sensor
- EGR valve
- Input shaft (mainshaft) speed sensor
- Output shaft (countershaft) speed sensor

Did the voltage drop to about 0 V?

YES—Replace the part that caused the voltage to drop, then go to step 36.

NO—Go to step 41.

32. Turn the ignition switch OFF.

33. Replace the FTP sensor (see page 11-422).

34. Reconnect the ECM/PCM connectors.

35. Reconnect the FTP sensor 3P connector.

36. Turn the ignition switch ON (II).

37. Reset the ECM/PCM with the HDS.

38. Do the ECM/PCM idle learn procedure (see page 11-316).

39. Check for Temporary DTCs or DTCs with the HDS.

Are any Temporary DTCs or DTCs indicated?

YES—If DTC P0452 is indicated, check for poor connections or loose terminals at the FTP sensor and the ECM/PCM, then go to step 1. If any other Temporary DTCs or DTCs are indicated, go to the indicated DTC's troubleshooting.

NO—Go to step 40.

40. Monitor the OBD STATUS for DTC P0452 in the DTCs MENU with the HDS.

Does the screen indicate PASSED?

YES—Troubleshooting is complete.■

NO—If the screen indicates FAILED, check for poor connections or loose terminals at the FTP sensor and the ECM/PCM, then go to step 1. If the sereen indicates NOT COMPLETED, go to step 38 and recheck.

41. Update the ECM/PCM if it does not have the latest software, or substitute a known-good ECM/PCM (see page 11-6).

42. Check for Temporary DTCs or DTCs with the HDS.

Are any Temporary DTCs or DTCs indicated?

YES—If DTC P0452 is indicated, check for poor connections or loose terminals at the FTP sensor and the ECM/PCM, then go to step 1. If any other Temporary DTCs or DTCs are indicated, go to the indicated DTC's troubleshooting.

NO—If the ECM/PCM was updated, troubleshooting is complete. If the ECM/PCM was substituted, replace the original ECM/PCM (see page 11-227).■

Protected by AR

DTC Troubleshooting (cont'd)

DTC P0452: FTP Sensor Circuit Low Voltage (2005-2006 models)

1. Turn the ignition switch ON (II).
2. Clear the DTC with the HDS.
3. Turn the ignition switch OFF.
4. Remove the fuel fill cap.
5. Turn the ignition switch ON (II).
6. Check the FTP SENSOR in the DATA LIST with the HDS.

   Is about −7.3 kPa (−2.16 in.Hg, −55 mmHg), or 0.3 V or less indicated?

   YES—Go to step 10.

   NO—Go to step 7.
7. Install the fuel fill cap.
8. Start the engine.
9. Monitor the OBD STATUS for DTC P0452 in the DTCs MENU with the HDS.

   Does the screen indicate FAILED?

   YES—Go to step 10.

   NO—If the screen indicates PASSED, intermittent failure, system is OK at this time. Check for poor connections or loose terminals at the FTP sensor and the ECM/PCM. If the screen indicates NOT COMPLETED, go to step 5 and recheck.
10. Turn the ignition switch OFF.
11. Disconnect the FTP sensor 3P connector.
12. Turn the ignition switch ON (II).
13. Check the FTP SENSOR in the DATA LIST with the HDS.

    Is about 7.3 kPa (2.15 in.Hg, 54.7 mmHg), or 4.90 V indicated?

    YES—Go to step 20.

    NO—Go to step 14.
14. Measure voltage between FTP sensor 3P connector terminal No. 1 and body ground.

FTP SENSOR 3P CONNECTOR

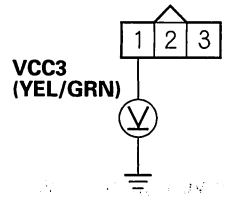

Wire side of female terminals

Is there about 5 V?

YES—Go to step 16.

NO—Go to step 15.

BACK

Protected by AR

15. Measure voltage between ECM/PCM connector terminal E5 and body ground.

ECM/PCM CONNECTOR E (31P)

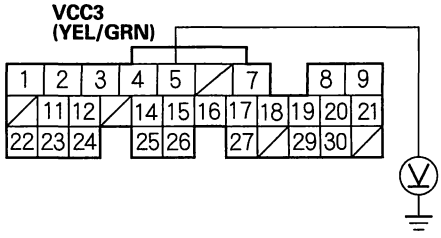

Wire side of female terminals

Is there 5 V?

YES—Repair open in the wire between the ECM/PCM (E5) and the FTP sensor, then go to step 22.

NO—Go to step 28.

16. Turn the ignition switch OFF.

17. Jump the SCS line with the HDS.

18. Disconnect ECM/PCM connector E (31P).

19. Check for continuity between FTP sensor 3P connector terminal No. 2 and body ground.

FTP SENSOR 3P CONNECTOR

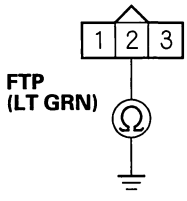

Wire side of female terminals

Is there continuity?

YES—Repair short in the wire between the ECM/PCM (E14) and the FTP sensor, then go to step 22.

NO—Go to step 28.

20. Turn the ignition switch OFF.

21. Replace the FTP sensor (see page 11-422).

22. Reconnect all connectors.

23. Turn the ignition switch ON (II).

24. Reset the ECM/PCM with the HDS.

25. Do the ECM/PCM idle learn procedure (see page 11-316).

26. Check for Temporary DTCs or DTCs with the HDS.

Are any Temporary DTCs or DTCs indicated?

YES—If DTC P0452 is indicated, check for poor connections or loose terminals at the FTP sensor and the ECM/PCM, then go to step 1. If any other Temporary DTCs or DTCs are indicated, go to the indicated DTC's troubleshooting.

NO—Go to step 27.

27. Monitor the OBD STATUS for DTC P0452 in the DTCs MENU with the HDS.

Does the screen indicate PASSED?

YES—Troubleshooting is complete.■

NO—If the screen indicates FAILED, check for poor connections or loose terminals at the FTP sensor and the ECM/PCM, then go to step 1. If the screen indicates NOT COMPLETED, go to step 25 and recheck.

(cont'd)

Protected by AR

DTC Troubleshooting (cont'd)

28. Update the ECM/PCM if it does not have the latest software, or substitute a known-good ECM/PCM (see page 11-6).

29. Check for Temporary DTCs or DTCs with the HDS.

    Are any Temporary DTCs or DTCs indicated?

    YES—If DTC P0452 is indicated, check for poor connections or loose terminals at the FTP sensor and the ECM/PCM, then go to step 1. If any other Temporary DTCs or DTCs are indicated, go to the indicated DTC's troubleshooting.

    NO—If the ECM/PCM was updated, troubleshooting is complete. If the ECM/PCM was substituted, replace the original ECM/PCM (see page 11-227). ■

BACK

Protected by AR

DTC P0453: FTP Sensor Circuit High Voltage

1. Turn the ignition switch ON (II).
2. Clear the DTC with the HDS.
3. Turn the ignition switch OFF.
4. Remove the fuel fill cap.
5. Turn the ignition switch ON (II).
6. Check the FTP SENSOR in the DATA LIST with the HDS.

   Is about 7.3 kPa (2.16 in.Hg, 55 mmHg), or 4.7 V or more indicated?

   YES—Go to step 10.

   NO—Go to step 7.
7. Install the fuel fill cap.
8. Start the engine.
9. Monitor the OBD STATUS for DTC P0453 in the DTCs MENU with the HDS.

   Does the screen indicate FAILED?

   YES—Go to step 10.

   NO—If the screen indicates PASSED, intermittent failure, system is OK at this time. Check for poor connections or loose terminals at the FTP sensor and the ECM/PCM. If the screen indicates NOT COMPLETED, go to step 6 and recheck.
10. Turn the ignition switch OFF.
11. Disconnect the FTP sensor 3P connector.
12. Connect FTP sensor 3P connector terminals No. 2 and No. 3 with a jumper wire.

FTP SENSOR 3P CONNECTOR

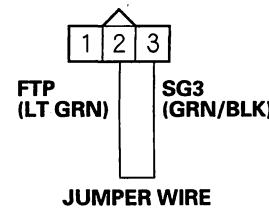

Wire side of female terminals

13. Turn the ignition switch ON (II).
14. Check the FTP SENSOR in the DATA LIST with the HDS.

    Is about 7.3 kPa (2.16 in.Hg, 55 mmHg), or 4.7 V or more indicated?

    YES—Go to step 15.

    NO—Go to step 25.
15. Measure voltage between FTP sensor 3P connector terminals No. 1 and No. 3.

FTP SENSOR 3P CONNECTOR

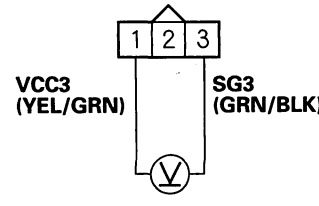

Wire side of female terminals

Is there about 5 V?

YES—Go to step 21.

NO—Go to step 16.

(cont'd)

Protected by AR

DTC Troubleshooting (cont'd)

16. Turn the ignition switch OFF.
17. Jump the SCS line with the HDS.
18. Disconnect ECM/PCM connector E (31P).
19. Connect FTP sensor 3P connector terminal No. 3 to body ground with a jumper wire.

FTP SENSOR 3P CONNECTOR

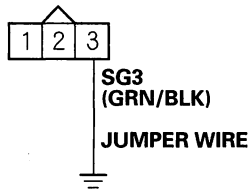

Wire side of female terminals

20. Check for continuity between ECM/PCM connector terminal E4 and body ground.

ECM/PCM CONNECTOR E (31P)

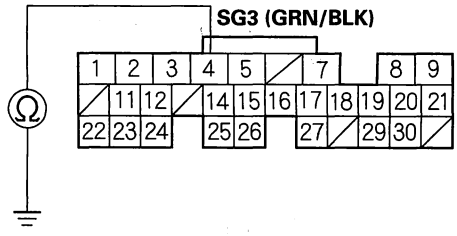

Wire side of female terminals

Is there continuity?

YES—Go to step 33.

NO—Repair open in the wire between the ECM/PCM (E4) and the FTP sensor, then go to step 27.

21. Turn the ignition switch OFF.
22. Connect ECM/PCM connector terminals E4 and E14 with a jumper wire.

ECM/PCM CONNECTOR E (31P)

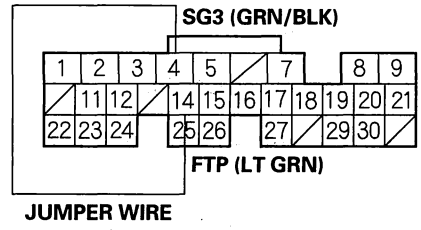

Wire side of female terminals

23. Turn the ignition switch ON (II).
24. Check the FTP SENSOR in the DATA LIST with the HDS.

    Is about 7.3 kPa (2.16 in.Hg, 55 mmHg), or 4.7 V or more indicated?

    YES—Go to step 33.

    NO—Repair open in the wire between the ECM/PCM (E14) and the FTP sensor, then go to step 27.
25. Turn the ignition switch OFF.
26. Replace the FTP sensor (see page 11-422).
27. Reconnect all connectors.

BACK

Protected by AR

28. Turn the ignition switch ON (II).

29. Reset the ECM/PCM with the HDS.

30. Do the ECM/PCM idle learn procedure (see page 11-316).

31. Check for Temporary DTCs or DTCs with the HDS.

    Are any Temporary DTCs or DTCs indicated?

    YES—If DTC P0453 is indicated, check for poor connections or loose terminals at the FTP sensor and the ECM/PCM, then go to step 1. If any other Temporary DTCs or DTCs are indicated, go to the indicated DTC's troubleshooting.

    NO—Go to step 32.

32. Monitor the OBD STATUS for DTC P0453 in the DTCs MENU with the HDS.

    Does the screen indicate PASSED?

    YES—Troubleshooting is complete.■

    NO—If the screen indicates FAILED, check for poor connections or loose terminals at the FTP sensor and the ECM/PCM, then go to step 1. If the screen indicates NOT COMPLETED, go to step 30 and recheck.

33. Update the ECM/PCM if it does not have the latest software, or substitute a known-good ECM/PCM (see page 11-6).

34. Check for Temporary DTCs or DTCs with the HDS.

    Are any Temporary DTCs or DTCs indicated?

    YES—If DTC P0453 is indicated, check for poor connections or loose terminals at the FTP sensor and the ECM/PCM, then go to step 1. If any other Temporary DTCs or DTCs are indicated, go to the indicated DTC's troubleshooting.

    NO—If the ECM/PCM was updated, troubleshooting is complete. If the ECM/PCM was substituted, replace the original ECM/PCM (see page 11-227).■

Protected by AR

DTC Troubleshooting (cont'd)

DTC P0457: EVAP System Leak Detected/Fuel Cap Loose or Missing

1. Check the fuel fill cap (the cap must say "Tighten to click"). It should turn 1/4 turn after it's tight, then it clicks.

   Is the correct fuel fill cap installed and properly tightened?

   YES—Go to step 2.

   NO—Replace or tighten the cap, then go to step 19.

2. Check the fuel fill cap seal (A) and the fuel fill pipe mating surface (B). Verify that the fuel fill cap tether cord (C) is not caught under the cap.

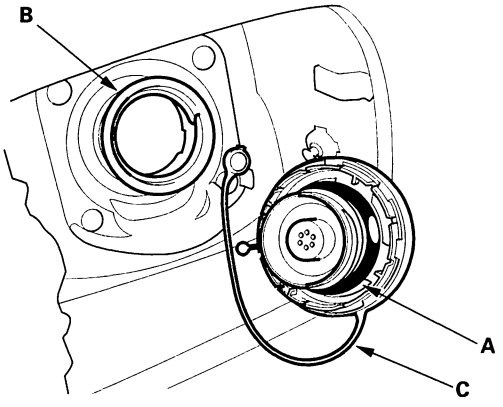

   Is the fuel fill cap seal missing or damaged, is the fuel fill pipe damaged, or is the tether cord caught under the cap?

   YES—Replace the fuel fill cap or the fuel fill pipe, then go to step 19.

   NO—Go to step 3.

3. Turn the ignition switch ON (II).

4. Clear the DTC with the HDS.

5. Do the EVAP FUNCTION TEST in the INSPECTION MENU with the HDS.

   Is the result OK?

   YES—Intermittent failure, system is OK at this time. Check for poor connections or loose terminals at the FTP sensor or the EVAP canister vent shut valve and the ECM/PCM. ■

   NO—Go to step 6.

6. Turn the ignition switch OFF.

7. Remove the EVAP canister vent shut valve from the EVAP canister; Non-SULEV model (see page 11-423), SULEV model (see page 11-424).

8. Connect the 2P connector to the EVAP canister vent shut valve.

9. Turn the ignition switch ON (II).

10. Select EVAP CVS ON in the INSPECTION MENU with the HDS.

11. Check the EVAP canister vent shut valve (A) operation.

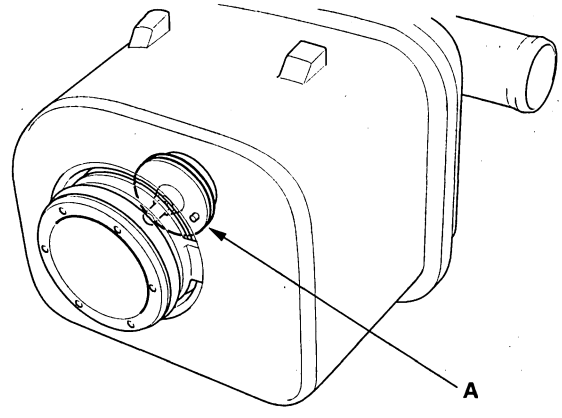

This illustration shows the non-SULEV model.

   Does the valve operate?

   YES—Check the routing of the EVAP canister vent tube, then go to step 18.

   NO—Go to step 12.

BACK

Protected by AR

12. Turn the ignition switch OFF.
13. Replace the EVAP canister vent shut valve; Non-SULEV model (see page 11-423), SULEV model (see page 11-424).
14. Turn the ignition switch ON (II).
15. Reset the ECM/PCM with the HDS.
16. Do the ECM/PCM idle learn procedure (see page 11-316).
17. Do the EVAP FUNCTION TEST in the INSPECTION MENU with the HDS.

    Is the result OK?

    YES—Troubleshooting is complete.■

    NO—Check for poor connections or loose terminals at the FTP sensor or the EVAP canister vent shut valve and the ECM/PCM, then go to step 1.
18. Reinstall the EVAP canister vent shut valve; Non-SULEV model (see page 11-423), SULEV model (see page 11-424).
19. Turn the ignition switch ON (II).
20. Reset the ECM/PCM with the HDS.
21. Do the ECM/PCM idle learn procedure (see page 11-316).
22. Do the EVAP FUNCTION TEST in the INSPECTION MENU with the HDS.

    Is the result OK?

    YES—Troubleshooting is complete.■

    NO—Check for poor connections or loose terminals at the FTP sensor or the EVAP canister vent shut valve and the ECM/PCM, then go to step 1.

Protected by AR

DTC Troubleshooting (cont'd)

DTC P0496: EVAP System High Purge Flow

1. Turn the ignition switch ON (II).
2. Clear the DTC with the HDS.
3. Do the EVAP FUNCTION TEST in the INSPECTION MENU with the HDS.

   Is the result OK?

   YES—Intermittent failure, system is OK at this time. Check for poor connections or loose terminals at the FTP sensor, the EVAP canister purge valve, or the EVAP canister vent shut valve and the ECM/PCM. ■

   NO—Go to step 4.
4. Turn the ignition switch OFF.
5. Replace the EVAP canister purge valve; Non-SULEV model (see page 11-423), SULEV model (see page 11-424).
6. Turn the ignition switch ON (II).
7. Reset the ECM/PCM with the HDS.
8. Do the ECM/PCM idle learn procedure (see page 11-316).
9. Do the EVAP FUNCTION TEST in the INSPECTION MENU with the HDS.

   Is the result OK?

   YES—Troubleshooting is complete. ■

   NO—Check for poor connections or loose terminals at the FTP sensor, the EVAP canister purge valve, or the EVAP canister vent shut valve and the ECM/PCM, then go to step 1.

BACK

Protected by AR

DTC P0497: EVAP System Low Purge Flow

Special Tools Required
- Vacuum/pressure gauge, 0—4 in.Hg, 07JAZ-001000B
- Vacuum pump/gauge, 0—30 in.Hg, Snap-on YA4000A or equivalent, commercially available

1. Check the fuel fill cap installation.

   Is the fuel fill cap installed and properly tightened?

   YES—Go to step 2.

   NO—Properly install the fuel fill cap (the cap must say "Tighten to click"). It should turn 1/4 turn after it's tight, then go to step 23.

2. Turn the ignition switch ON (II).

3. Clear the DTC with the HDS.

4. Do the EVAP FUNCTION TEST in the INSPECTION MENU with the HDS.

   Is the result OK?

   YES—Intermittent failure, system is OK at this time. Check for poor connections or loose terminals at the FTP sensor, the EVAP canister purge valve, or the EVAP canister vent shut valve and the ECM/PCM. ■

   NO—Go to step 5.

5. Check for a loose or damaged EVAP canister purge line between the intake manifold and the EVAP canister purge valve.

   Is the line OK?

   YES—Go to step 6.

   NO—Reconnect or repair the EVAP canister purge line, then go to step 23.

6. Disconnect the vacuum hose (A) from the EVAP canister purge valve (B) in the engine compartment, and connect a T-fitting (C) from the vacuum gauge and the vacuum pump/gauge, 0—30 in.Hg, to the EVAP canister purge valve as shown.

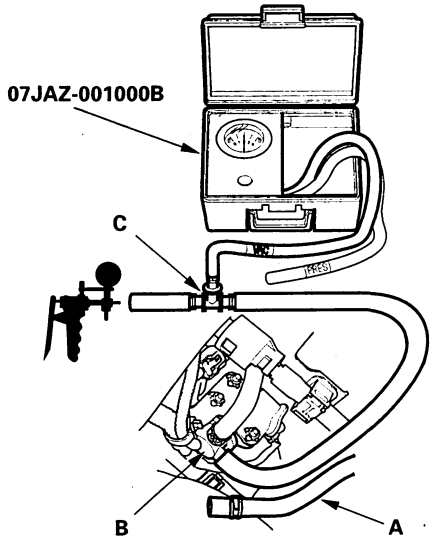

7. Select EVAP PCS ON in the INSPECTION MENU with the HDS.

8. Slowly apply about 2 kPa (0.6 in.Hg, 15 mmHg) of vacuum to the hose.

   Does it hold vacuum?

   YES—Check for blockage in the EVAP canister purge line between the intake manifold and the EVAP canister purge valve. If the vacuum hose is OK, replace the EVAP canister purge valve, then go to step 22.

   NO—Go to step 9.

9. Reconnect the vacuum hose to the EVAP canister purge valve.

(cont'd)

Protected by AR

DTC Troubleshooting (cont'd)

10. Disconnect the vacuum hose from the EVAP canister purge line (EVAP canister side), and connect a T-fitting (A) from the vacuum gauge and the vacuum pump/gauge, 0—30 in.Hg, to the hose as shown.

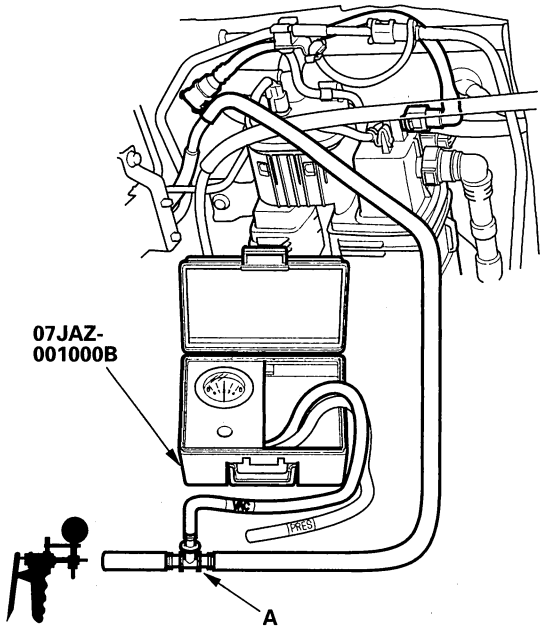

*: This illustration shows the non-SULEV model.

11. Select EVAP PCS ON in the INSPECTION MENU with the HDS.

12. Slowly apply about 2 kPa (0.6 in.Hg, 15 mmHg) of vacuum to the hose.

    Does it hold vacuum?

    YES—Check for a restricted in the PCS line between the EVAP canister purge valve and the EVAP canister, then go to step 22.

    NO—Go to step 13.

13. Remove the FTP sensor with its connector connected (see page 11-422).

14. Connect a T-fitting (A) from the vacuum gauge and the commercially available vacuum pump/gauge, 0—30 in.Hg, to the FTP sensor (B) as shown.

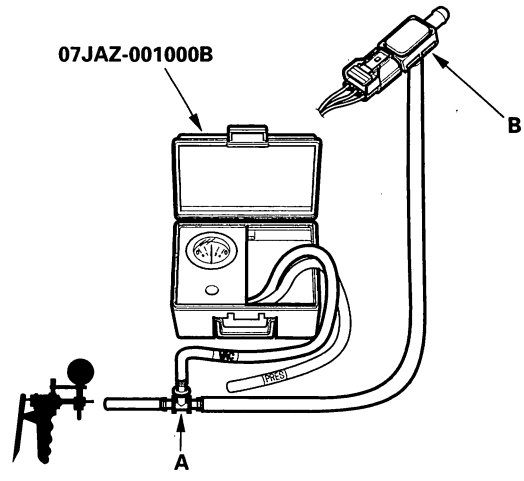

15. Check and record the FTP SENSOR reading in the DATA LIST with the HDS.

16. Slowly apply about 1.3 kPa (0.4 in.Hg, 10 mmHg) of vacuum to the hose.

17. Check the FTP SENSOR in the DATA LIST with the HDS.

    Is the difference more than 1.1 kPa (0.31 in.Hg, 8 mmHg) before and after applying vacuum?

    YES—Go to step 18.

    NO—Replace the FTP sensor (see page 11-422), then go to step 22.

18. Reconnect the vacuum hose to the PCS line (EVAP canister side) and reinstall the FTP sensor.

BACK

Protected by AR

19. Disconnect the vacuum hose (A) from the EVAP canister purge valve (B), and connect a T-fitting (C) from the vacuum gauge and the vacuum pump/gauge, 0—30 in.Hg, to the hose as shown.

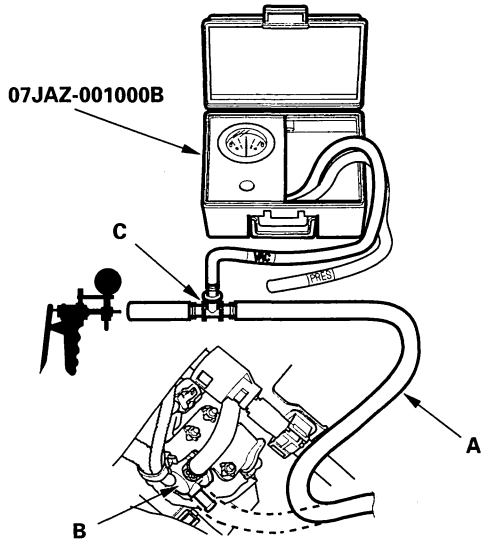

20. Select EVAP CVS ON in the INSPECTION MENU with the HDS.

21. Slowly apply about 2 kPa (0.6 in.Hg, 15 mmHg) of vacuum to the hose.

    Does the hose hold vacuum?

    YES—Check for blockage at the EVAP canister port, then go to step 22.

    NO—Replace the EVAP canister vent shut valve, then go to step 22.

22. Reconnect all hoses.

23. Turn the ignition switch ON (II).

24. Reset the ECM/PCM with the HDS.

25. Do the ECM/PCM idle learn procedure (see page 11-316).

26. Do the EVAP FUNCTION TEST in the INSPECTION MENU with the HDS.

    Is the result OK?

    YES—Troubleshooting is complete.■

    NO—Check for poor connections or loose terminals at the FTP sensor, the EVAP canister purge valve, or the EVAP canister vent shut valve and the ECM/PCM, then go to step 1.

Protected by AR

DTC Troubleshooting (cont'd)

DTC P0498: EVAP Canister Vent Shut Valve Circuit Low Voltage

1. Turn the ignition switch ON (II).
2. Clear the DTC with the HDS, then wait 5 seconds.
3. Check for Temporary DTCs or DTCs with the HDS.

   Is DTC P0498 indicated?

   YES—Go to step 6.

   NO—Go to step 4.
4. Select EVAP CVS ON in the INSPECTION MENU with the HDS.
5. Check for Temporary DTCs or DTCs with the HDS.

   Is DTC P0498 indicated?

   YES—Go to step 6.

   NO—Intermittent failure, system is OK at this time. Check for poor connections or loose terminals at the EVAP canister vent shut valve and the ECM/PCM. ■
6. Turn the ignition switch OFF.
7. Disconnect the EVAP canister vent shut valve 2P connector.
8. Measure resistance between EVAP canister vent shut valve 2P connector terminals No. 1 and No. 2.

EVAP CANISTER VENT SHUT VALVE 2P CONNECTOR

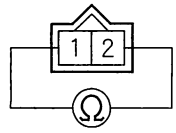

Terminal side of male terminals

Is there about 25—30 Ω at room temperature?

YES—Go to step 9.

NO—Go to step 12.

9. Jump the SCS line with the HDS.
10. Disconnect ECM/PCM connector E (31P).
11. Check for continuity between ECM/PCM connector terminal E19 and body ground.

ECM/PCM CONNECTOR E (31P)

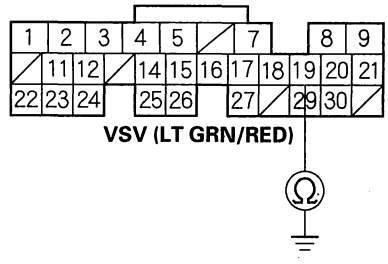

Wire side of female terminals

Is there continuity?

YES—Repair short in the wire between the EVAP canister vent shut valve and the ECM/PCM (E19), then go to step 13.

NO—Go to step 20.

BACK

Protected by AR

12. Replace the EVAP canister vent shut valve; Non-SULEV model (see page 11-423), SULEV model (see page 11-424).

13. Reconnect ECM/PCM connector E (31P).

14. Reconnect the EVAP canister vent shut valve 2P connector.

15. Turn the ignition switch ON (II).

16. Reset the ECM/PCM with the HDS.

17. Do the ECM/PCM idle learn procedure (see page 11-316).

18. Select EVAP CVS ON in the INSPECTION MENU with the HDS.

19. Check for Temporary DTCs or DTCs with the HDS.

    Are any Temporary DTCs or DTCs indicated?

    YES—If DTC P0498 is indicated, check for poor connections or loose terminals at the EVAP canister vent shut valve and the ECM/PCM, then go to step 1. If any other Temporary DTCs or DTCs are indicated, go to the indicated DTC's troubleshooting.

    NO—Troubleshooting is complete.■

20. Update the ECM/PCM if it does not have the latest software, or substitute a known-good ECM/PCM (see page 11-6).

21. Select EVAP CVS ON in the INSPECTION MENU with the HDS.

22. Check for Temporary DTCs or DTCs with the HDS.

    Are any Temporary DTCs or DTCs indicated?

    YES—If DTC P0498 is indicated, check for poor connections or loose terminals at the EVAP canister vent shut valve and the ECM/PCM, then go to step 1. If any other Temporary DTCs or DTCs are indicated, go to the indicated DTC's troubleshooting.

    NO—If the ECM/PCM was updated, troubleshooting is complete. If the ECM/PCM was substituted, replace the original ECM/PCM (see page 11-227).■

Protected by AR

DTC Troubleshooting (cont'd)

DTC P0499: EVAP Canister Vent Shut Valve Circuit High Voltage

1. Turn the ignition switch ON (II).
2. Clear the DTC with the HDS, then wait 5 seconds.
3. Select EVAP CVS ON in the INSPECTION MENU with the HDS.
4. Check for Temporary DTCs or DTCs with the HDS.

   Is DTC P0499 indicated?

   YES—Go to step 5.

   NO—Intermittent failure, system is OK at this time. Check for poor connections or loose terminals at the EVAP canister vent shut valve and the ECM/PCM. ■
5. Turn the ignition switch OFF.
6. Disconnect the EVAP canister vent shut valve 2P connector.
7. Turn the ignition switch ON (II).
8. Measure voltage between EVAP canister vent shut valve 2P connector terminal No. 2 (No. 1)* and body ground.
   *: SULEV model

EVAP CANISTER VENT SHUT VALVE 2P CONNECTOR

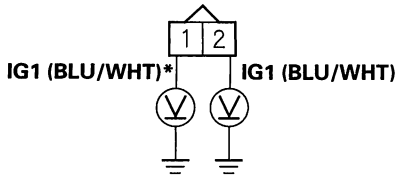

Wire side of female terminals

Is there battery voltage?

YES—Go to step 9.

NO—2003-2004 models: Repair open in the wire between the EVAP canister vent shut valve and the No. 18 ACG (15 A) fuse in the under-dash fuse/relay box, then go to step 16.
2005-2006 models: Repair open in the wire between the EVAP canister vent shut valve and the A/F sensor relay, then go to step 16.

9. Turn the ignition switch OFF.
10. Measure resistance between EVAP canister vent shut valve 2P connector terminals No. 1 and No. 2.

EVAP CANISTER VENT SHUT VALVE 2P CONNECTOR

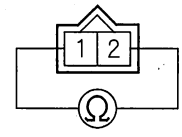

Terminal side of male terminals

Is there about 25—30 Ω at room temperature?

YES—Go to step 11.

NO—Go to step 15.

BACK

Protected by AR

11. Jump the SCS line with the HDS.

12. Disconnect ECM/PCM connector E (31P).

13. Connect EVAP canister vent shut valve 2P connector terminal No. 1 (No. 2)* to body ground with a jumper wire.
    *: SULEV model

EVAP CANISTER VENT SHUT VALVE 2P CONNECTOR

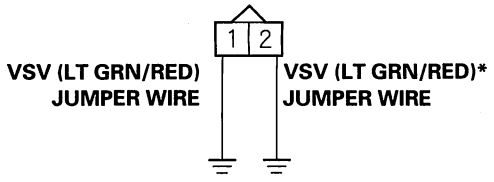

Wire side of female terminals

14. Check for continuity between ECM/PCM connector terminal E19 and body ground.

ECM/PCM CONNECTOR E (31P)

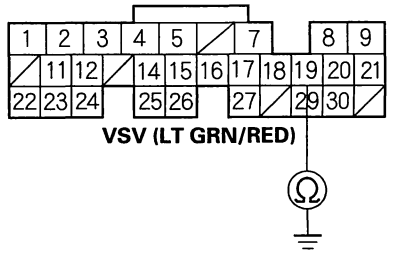

Wire side of female terminals

Is there continuity?

YES—Go to step 22.

NO—Repair open in the wire between the EVAP canister vent shut valve and the ECM/PCM (E19), then go to step 16.

15. Replace the EVAP canister vent shut valve; Non-SULEV model (see page 11-423), SULEV model (see page 11-424).

16. Reconnect all connectors.

17. Turn the ignition switch ON (II).

18. Reset the ECM/PCM with the HDS.

19. Do the ECM/PCM idle learn procedure (see page 11-316).

20. Select EVAP CVS ON in the INSPECTION MENU with the HDS.

21. Check for Temporary DTCs or DTCs with the HDS.

    Are any Temporary DTCs or DTCs indicated?

    YES—If DTC P0499 is indicated, check for poor connections or loose terminals at the EVAP canister vent shut valve and the ECM/PCM, then go to step 1. If any other Temporary DTCs or DTCs are indicated, go to the indicated DTC's troubleshooting.

    NO—Troubleshooting is complete.■

22. Update the ECM/PCM if it does not have the latest software, or substitute a known-good ECM/PCM (see page 11-6).

23. Select EVAP CVS ON in the INSPECTION MENU with the HDS.

24. Check for Temporary DTCs or DTCs with the HDS.

    Are any Temporary DTCs or DTCs indicated?

    YES—If DTC P0499 is indicated, check for poor connections or loose terminals at the EVAP canister vent shut valve and the ECM/PCM, then go to step 1. If any other Temporary DTCs or DTCs are indicated, go to the indicated DTC's troubleshooting.

    NO—If the ECM/PCM was updated, troubleshooting is complete. If the ECM/PCM was substituted, replace the original ECM/PCM (see page 11-227).■

Protected by AR

DTC Troubleshooting (cont'd)

DTC P1454: FTP Sensor Range/Performance Problem

DTC P2422: EVAP Canister Vent Shut Valve Stuck Close Malfunction

1. Turn the ignition switch ON (II).
2. Clear the DTC with the HDS.
3. Turn the ignition switch OFF.
4. Remove the fuel fill cap, and wait 1 minute.
5. Check the FTP SENSOR in the DATA LIST with the HDS.

   Is it between −0.67 kPa and 0.67 kPa (−0.2 and 0.2 in.Hg, −5 and 5 mmHg), or 2.4−2.6 V?

   YES—Go to step 6.

   NO—Go to step 17.
6. Install the fuel fill cap.
7. Clear the DTC with the HDS.
8. Start the engine. Hold the engine speed at 3,000 rpm without load (in Park or neutral) until the radiator fan comes on, then let it idle.
9. Monitor the OBD STATUS for DTC P1454 in the DTCs MENU with the HDS.

   Does the screen indicate FAILED?

   YES—Go to step 10.

   NO—If the screen indicates PASSED, intermittent failure, system is OK at this time. Check for poor connections or loose terminals at the FTP sensor, or the EVAP canister vent shut valve and the ECM/PCM. Also check for a blockage in the canister filter, vent hoses, and drain joint. If the screen indicates NOT COMPLETED, go to step 8 and recheck.
10. Clear the DTC with the HDS.
11. Turn the ignition switch OFF.
12. Remove the EVAP canister vent shut valve from the EVAP canister; Non-SULEV model (see page 11-423), SULEV model (see page 11-424).
13. Connect the 2P connector to the EVAP canister vent shut valve.
14. Turn the ignition switch ON (II).
15. Select EVAP CVS ON in the INSPECTION MENU with the HDS.
16. Check the EVAP canister vent shut valve (A) operation.

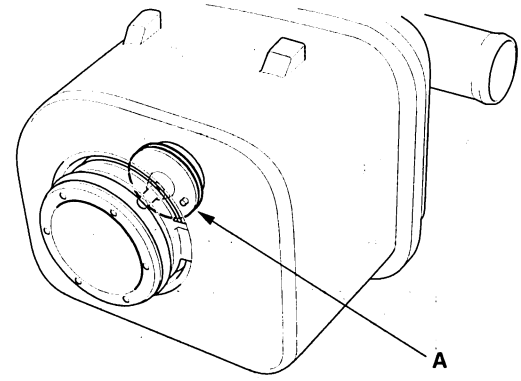

*: This illustration shows the non-SULEV model.

Does the valve operate?

YES—Check for a blockage in the EVAP canister, canister filter, vent hoses, and drain joint, then install the EVAP canister vent shut valve, and go to step 23.

NO—Replace the EVAP canister vent shut valve; Non-SULEV model (see page 11-423), SULEV model (see page 11-424), then go to step 23.

BACK

Protected by AR

17. Disconnect the air tube (A) from the FTP sensor (B).

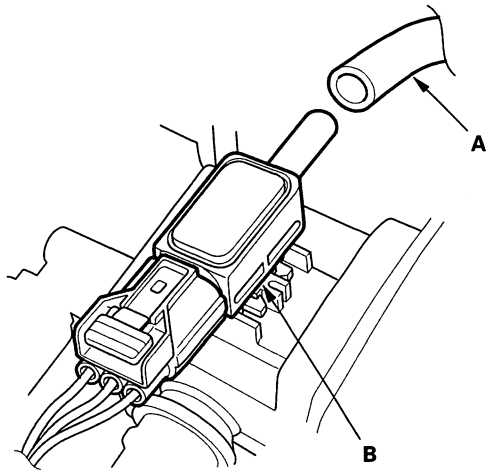

*: This illustration shows the non-SULEV model.

18. Check the FTP SENSOR in the DATA LIST with the HDS.

Is it between −0.67 kPa and 0.67 kPa (−0.2 and 0.2 in.Hg, −5 and 5 mmHg), or 2.4−2.6 V?

YES—Check for a blockage in the FTP sensor air tube, then go to step 23.

NO—Go to step 19.

19. Turn the ignition switch OFF.

20. Remove the FTP sensor (A) from the EVAP canister with its connector connected (see page 11-422).

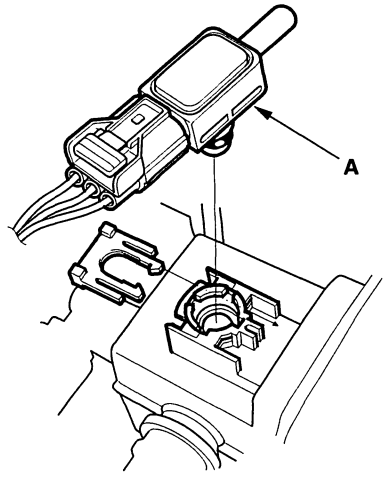

21. Turn the ignition switch ON (II).

22. Check the FTP SENSOR in the DATA LIST with the HDS.

Is it between −0.67 kPa and 0.67 kPa (−0.2 and 0.2 in.Hg, −5 and 5 mmHg), or 2.4−2.6 V?

YES—Check for debris or clogging at the EVAP canister and the FTP sensor port, then go to step 23.

NO—Replace the FTP sensor (see page 11-422), then go to step 23.

23. Turn the ignition switch ON (II).

24. Reset the ECM/PCM with the HDS.

25. Do the ECM/PCM idle learn procedure (see page 11-316).

26. Start the engine. Hold the engine speed at 3,000 rpm without load (in Park or neutral) until the radiator fan comes on, then let it idle.

27. Check for Temporary DTCs or DTCs with the HDS.

Are any Temporary DTCs or DTCs indicated?

YES—If DTC P1454 and/or P2422 is indicated, check for poor connections or loose terminals at the FTP sensor, or the EVAP canister vent shut valve and the ECM/PCM, then go to step 1. If any other Temporary DTCs or DTCs are indicated, go to the indicated DTC's troubleshooting.

NO—Go to step 28.

(cont'd)

Protected by AR

DTC Troubleshooting (cont'd)

28. Monitor the OBD STATUS for DTC P1454 in the DTCs MENU with the HDS.

    Does the screen indicate PASSED?

    YES—Troubleshooting is complete. ■

    NO—If the screen indicates FAILED, check for poor connections or loose terminals at the FTP sensor, or the EVAP canister vent shut valve and the ECM/PCM, then go to step 1. If the screen indicates NOT COMPLETED, go to step 26 and recheck.

BACK

Protected by AR

EVAP Canister Replacement

1. Remove the EVAP canister cover (A).

Non-SULEV model

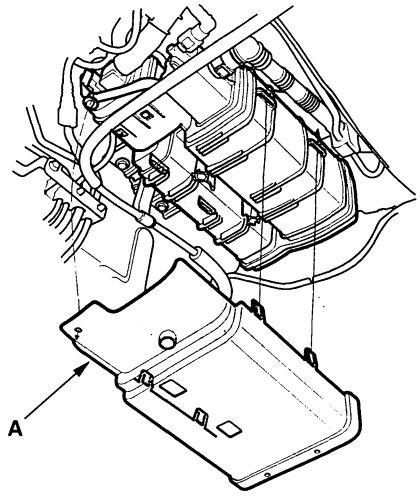

SULEV model

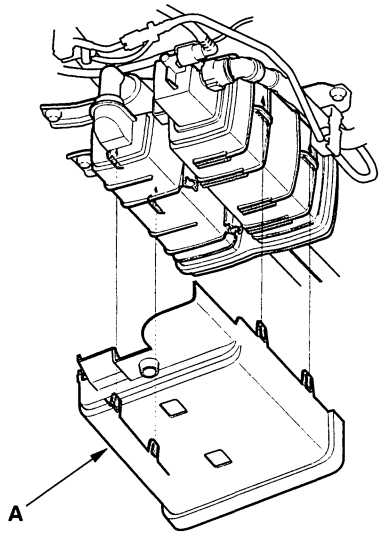

2. Remove the hoses (A), the FTP sensor 3P connector (B), and the EVAP canister vent shut valve 2P connector (C).

Non-SULEV model

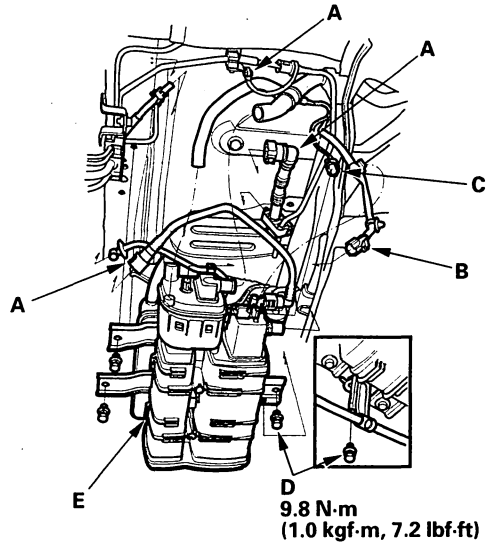

SULEV model

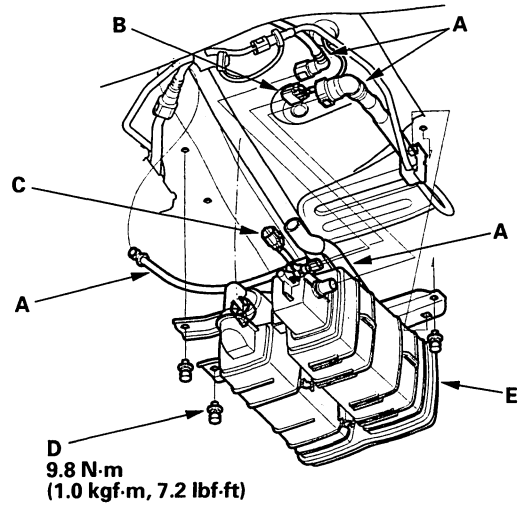

3. Remove the bolts (D).

4. Remove the EVAP canister assembly (E).

(cont'd)

Protected by AR

EVAP Canister Replacement (cont'd)

5. Remove the EVAP canister bracket (A).

Non-SULEV model

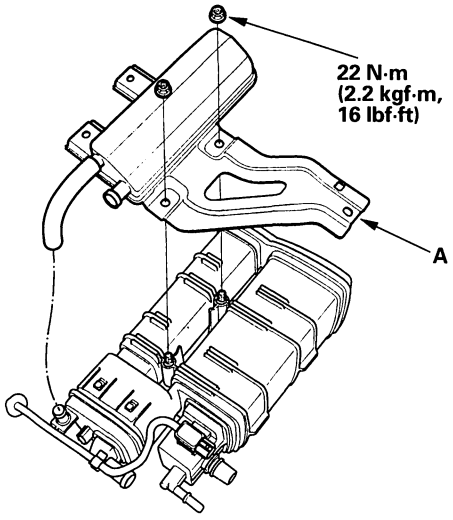

SULEV model

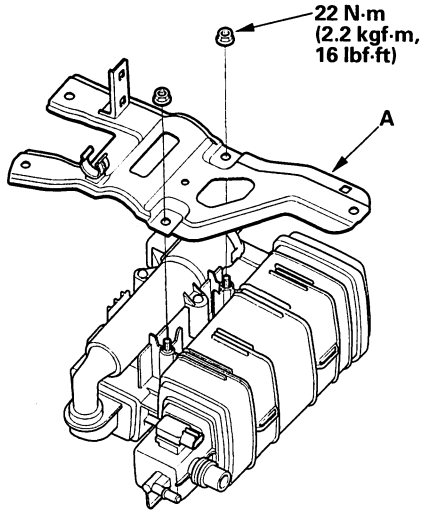

6. Install the canister in the reverse order of removal.

FTP Sensor Replacement

1. Remove the EVAP canister (see page 11-421).

2. Remove the FTP sensor (A).

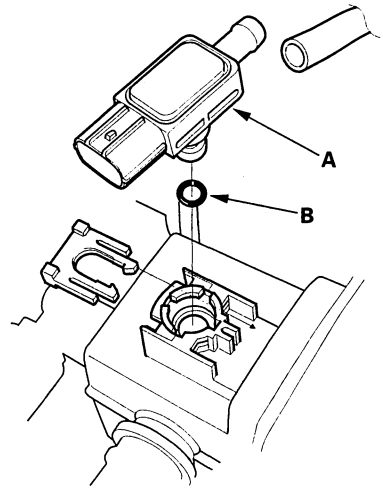

3. Install the sensor in the reverse order of removal with a new O-ring (B).

BACK

Protected by AR

EVAP Canister Purge Valve Replacement

1. Disconnect the EVAP canister purge valve 2P connector (A).

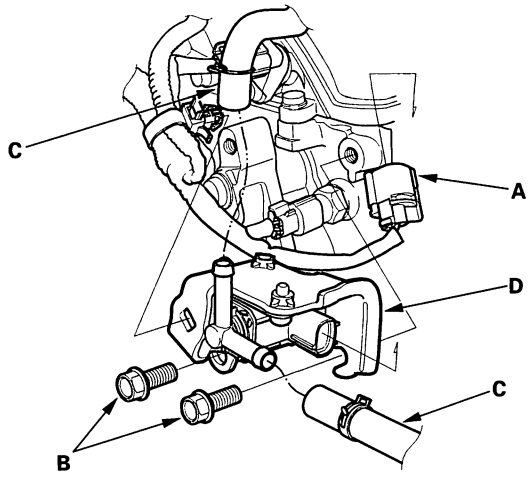

2. Remove the bolts (B) and the hoses (C), then remove the EVAP canister purge valve assembly (D).

3. Remove the screws (A).

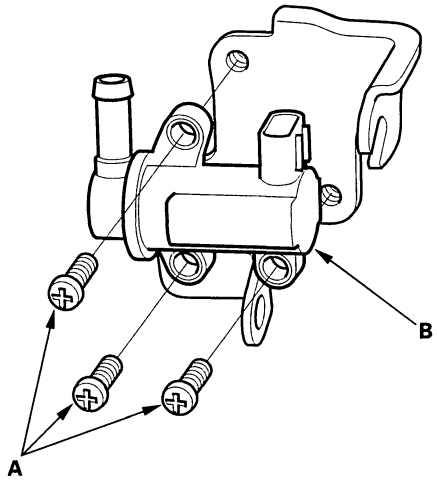

4. Remove the EVAP canister purge valve (B) from the bracket.

5. Install the valve in the reverse order of removal.

EVAP Canister Vent Shut Valve Replacement

Non-SULEV model

1. Remove the EVAP canister (see page 11-421).

2. Pry the lock tabs outward (A) then remove the EVAP canister vent shut valve (B).

   NOTE: Be careful not to damage the lock tabs.

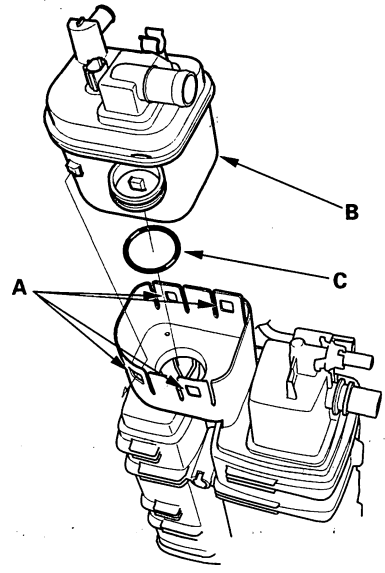

3. Install the valve in the reverse order of removal with a new O-ring (C).

   NOTE: Do not coat the O-ring with oil.

Protected by AR

EVAP Canister Vent Shut Valve Replacement (cont'd)

SULEV model

1. Remove the EVAP canister (see page 11-421).
2. Remove the cap (A).

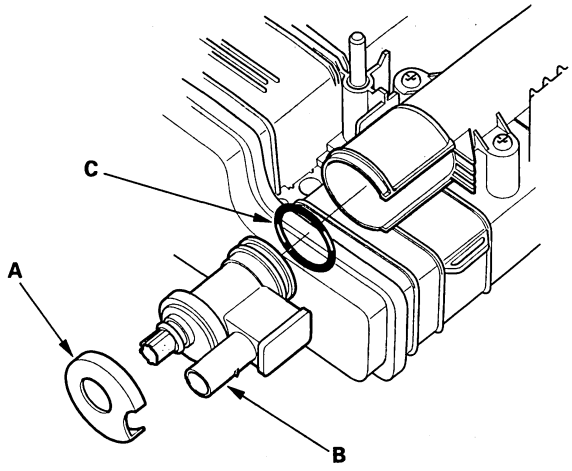

3. Remove the EVAP canister vent shut valve (B).
4. Install the valve in the reverse order of removal with a new O-ring (B).

   NOTE: Do not coat the O-ring with engine oil.

BACK

Protected by AR

Transaxle

Clutch **12-1**

Manual Transmission **13-1**

Automatic Transmission **14-1**

Driveline/Axle **16-1**

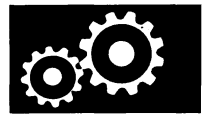

Protected by AR

BACK

Protected by AR

Clutch

Special Tools 12-2
Component Location Index 12-3
Clutch Pedal, Clutch Pedal Position Switch,
and Clutch Interlock Switch Adjustment 12-4
Clutch Pedal Replacement 12-5
Clutch Master Cylinder Replacement 12-6
Slave Cylinder Replacement 12-8
Clutch Replacement 12-10

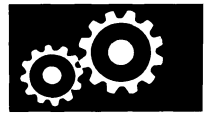

BACK

Protected by AR

Clutch

Special Tools

Ref. No.	Tool Number	Description	Qty
①	07JAF-PM7011A	Clutch Alignment Disc	1
②	07LAB-PV00100 or 07924-PD20003	Ring Gear Holder	1
③	07ZAF-PR8A100	Clutch Alignment Shaft	1
④	07936-3710100	Remover Handle	1

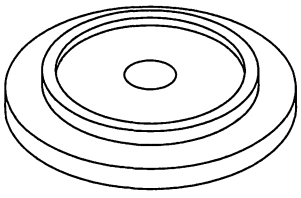

①

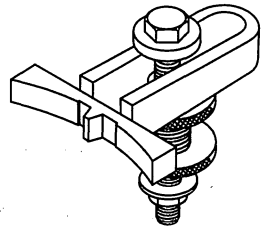

②

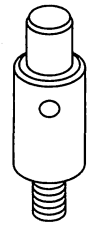

③

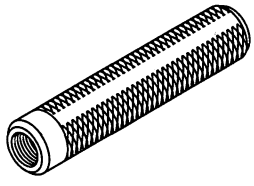

④

BACK

Protected by AR

Component Location Index

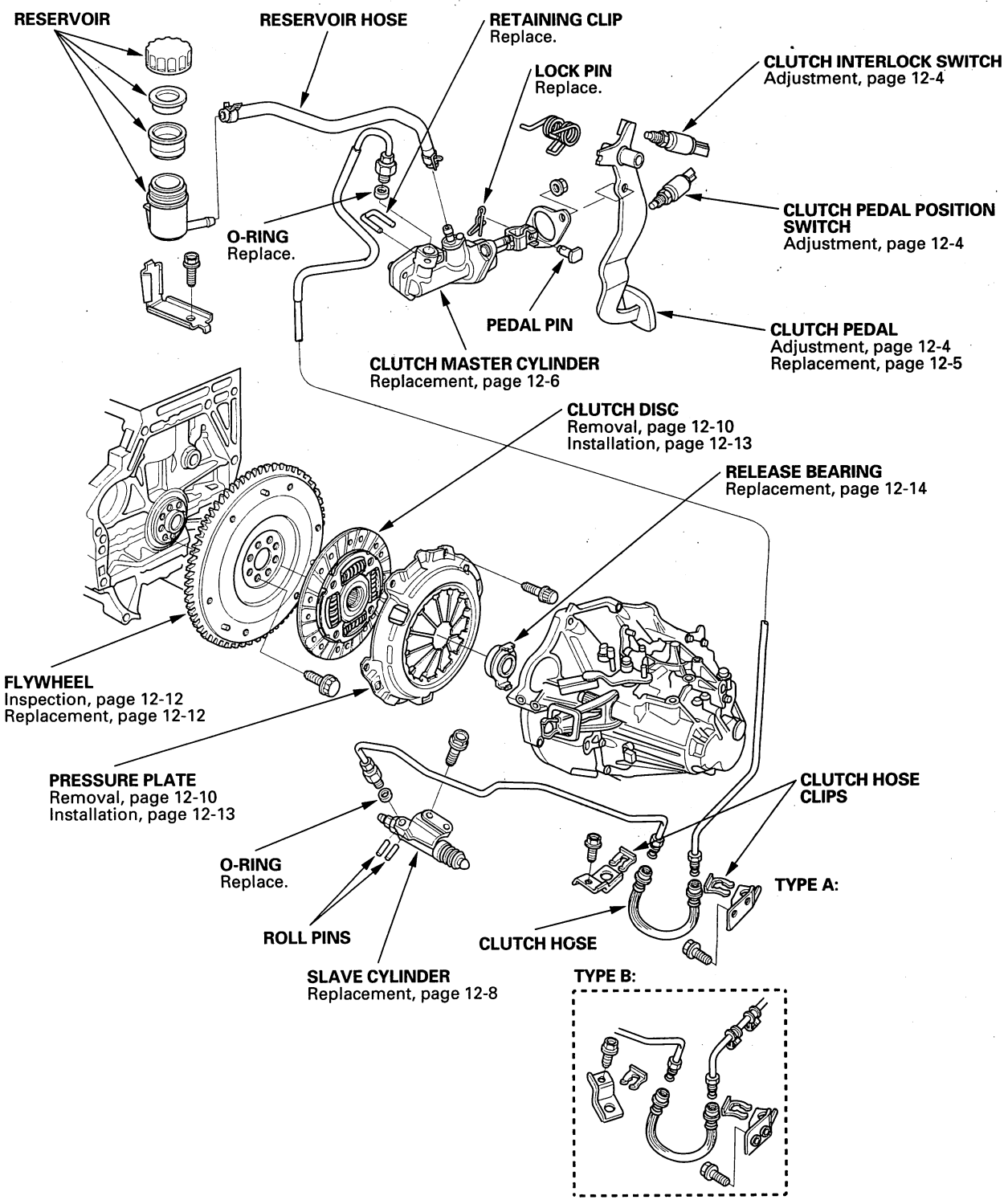

Protected by AR

Clutch Pedal, Clutch Pedal Position Switch, and Clutch Interlock Switch Adjustment

NOTE:
- Check the clutch pedal position switch (see page 4-63).
- Check the clutch interlock switch (see page 4-8).
- Remove the driver's floor mat before adjusting the clutch pedal.
- The clutch is self-adjusting to compensate for wear.
- If there is no clearance between the master cylinder piston and push rod, the release bearing will be held against the diaphragm spring, which can result in clutch slippage or other clutch problems.

1. Loosen the clutch pedal position switch locknut (A), and back off the clutch pedal position switch (B) until it no longer touches the clutch pedal (C).

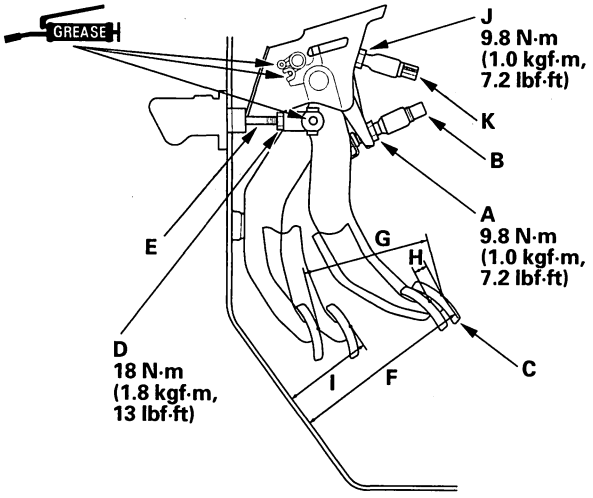

2. Loosen the clutch pushrod locknut (D), and turn the pushrod (E) in or out to get the specified height (F), stroke (G), free play (H), and disengagement height (I) at the clutch pedal.

Clutch Pedal Stroke:	**130—140 mm (5.12—5.51 in.)**
Clutch Pedal Free Play:	**10—18 mm (0.39—0.71 in.)**
Clutch Pedal Height:	**191 mm (7.52 in.)**
Clutch Pedal Disengagement Height:	**95 mm (3.74 in.)**

3. Tighten the clutch pushrod locknut.
4. With the clutch pedal released, turn in the clutch pedal position switch until it contacts the clutch pedal.
5. Turn in the clutch pedal position switch an additional 3/4 to 1 turn.
6. Tighten the clutch pedal position switch locknut.
7. Press the clutch pedal to the floor.
8. Release the clutch pedal 9—12 mm (0.35—0.47 in.) from the fully pressed position, and hold it there. Adjust the position of the clutch interlock switch (K) so the engine will start with the clutch pedal in this position.
9. Tighten the clutch interlock switch locknut (J).

BACK

Protected by AR

Clutch Pedal Replacement

1. Disconnect the clutch pedal position switch connector (A) and clutch interlock switch connector (B).

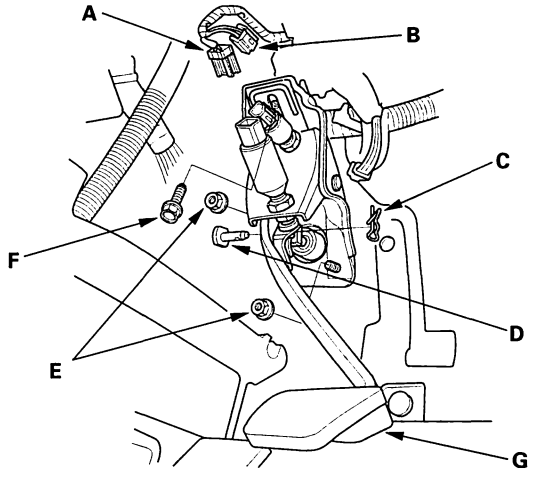

2. Pry out the lock pin (C), and pull the pedal pin (D) out of the yoke.
3. Remove the master cylinder mounting nuts (E) and clutch pedal mounting bolt (F).
4. Remove the clutch pedal (G).
5. Install the clutch pedal (A).

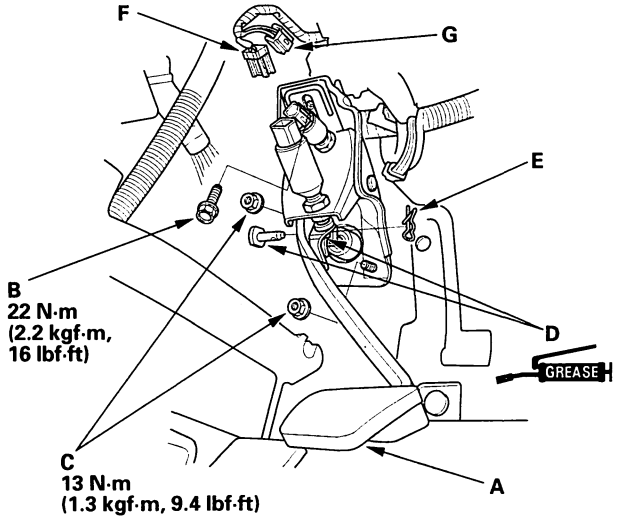

6. Install the clutch pedal mounting bolt (B) and master cylinder mounting nuts (C).
7. Apply grease to the pedal pin (D), and slide it into the yoke, then install a new lock pin (E).
8. Connect the clutch pedal position switch connector (F) and clutch interlock switch connector (G).
9. Adjust the clutch pedal, clutch pedal position switch, and clutch interlock switch (see page 12-4).

Protected by AR

Clutch Master Cylinder Replacement

NOTE: Do not spill brake fluid on the vehicle; it may damage the paint; if brake fluid does contact the paint, wash it off immediately with water.

1. Remove the brake fluid from the clutch master cylinder reservoir with a syringe.
2. Make sure you have the anti-theft codes for the radio and the navigation system, then write down the customer's audio presets. Disconnect the negative cable from the battery first, then disconnect the positive cable. Remove the battery.
3. Remove the air cleaner housing (see page 11-361).
4. Remove the battery base (see step 10 on page 5-2).
5. Pry out the lock pin (A), and pull the pedal pin (B) out of the yoke. Remove the master cylinder mounting nuts (C).

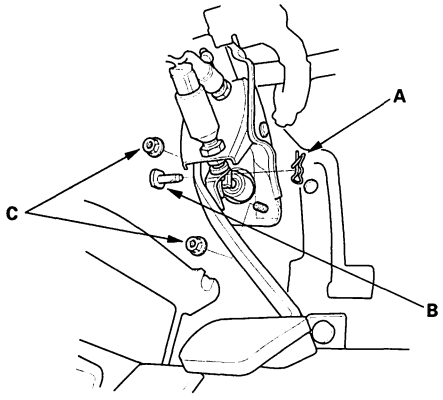

6. Remove the reservoir mounting bolt (A).

Type A:

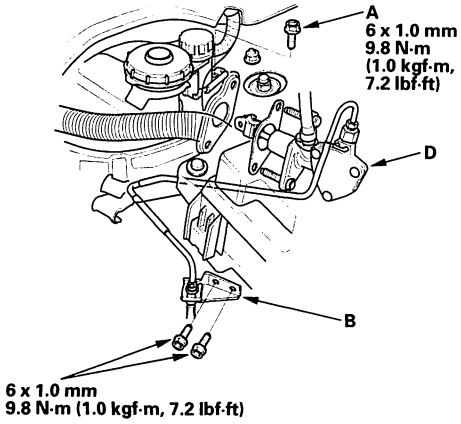

Type B:

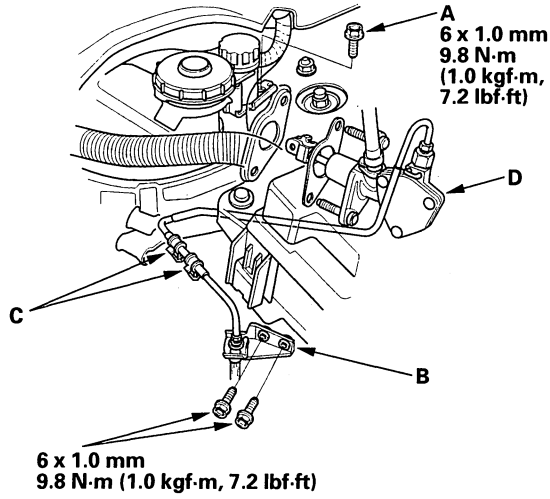

7. Remove the clutch line bracket (B).
8. Remove the clutch line clips (C).
9. Remove the clutch master cylinder (D).
10. Disconnect the reservoir hose (A), then remove the retaining clip (B) and remove clutch line (C) from the clutch master cylinder (D). Plug the end of the reservoir hose and clutch line to prevent brake fluid from coming out.

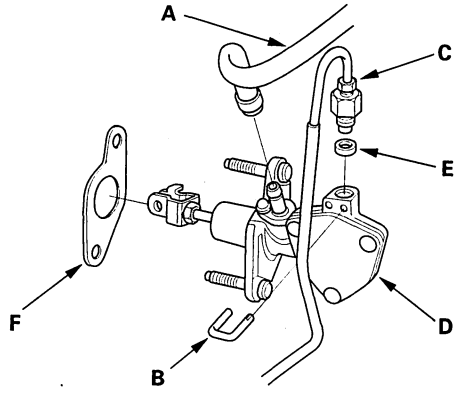

11. Remove the O-ring (E) and clutch master cylinder seal (F) from the clutch master cylinder.

BACK

Protected by AR

12. Install the clutch master cylinder in the reverse order of removal, and note these items.

    - Apply brake assembly lube to the clutch line, and install a new O-ring.
    - Tighten the master cylinder mounting nuts to 13 N·m (1.3 kgf·m, 9.4 lbf·ft).
    - Install the battery base (see step 47 on page 5-18).
    - Install the air cleaner housing (see page 11-361).
    - Install the battery. Connect the positive cable to the battery first, then connect the negative cable.
    - Enter the anti-theft code for the radio and the navigation system, then enter the customer's audio presets.
    - Do the power window control unit reset procedure (see page 22-232).

13. Make sure the hose clamps (A) are positioned on the master cylinder (B) and reservoir (C) as shown.

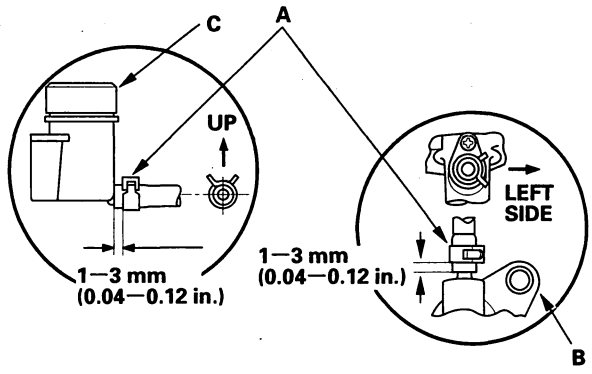

14. To prevent the retaining clip (A) from coming off, pry apart the tip of the retaining clip (B) with a screwdriver.

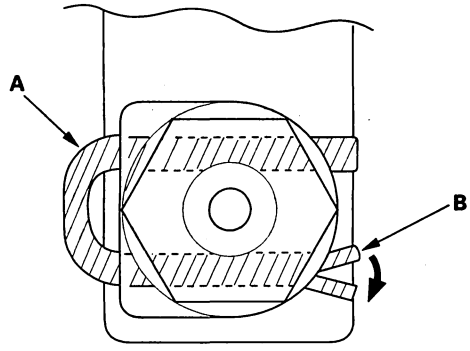

15. Bleed the clutch master hydraulic system (see step 11 on page 12-9).

    NOTE: Reservoir filling is covered in the bleeding procedure.

Protected by AR

Slave Cylinder Replacement

NOTE:
- Use fender covers to avoid damaging painted surfaces.
- Do not spill brake fluid on the vehicle; it may damage the paint; if brake fluid does contact the paint, wash it off immediately with water.

1. Make sure you have the anti-theft codes for the radio and the navigation system, then write down the customer's audio presets.
2. Disconnect the negative cable from the battery first, then disconnect the positive cable. Remove the battery.
3. Remove the air cleaner housing (see page 11-361).
4. Remove the battery base (see step 10 on page 5-2).
5. Remove the clutch line bracket.

Type A:

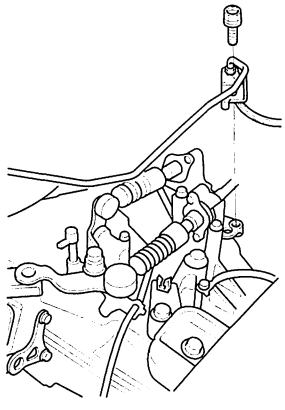

Type B:

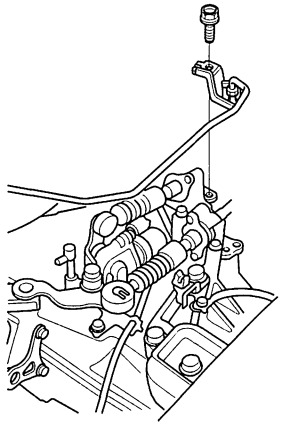

6. Remove the mounting bolts (A) and the slave cylinder (B).

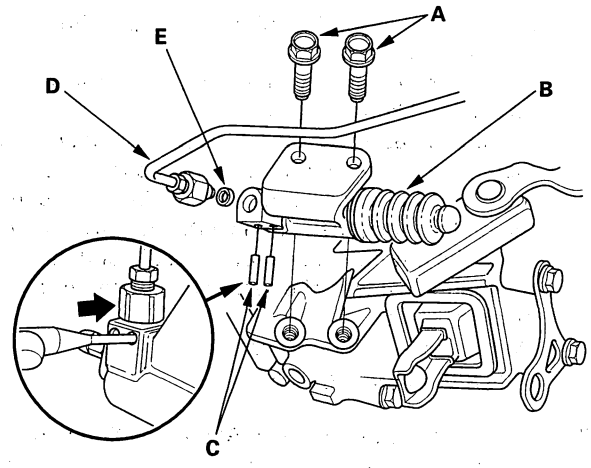

7. Remove the roll pins (C). Disconnect the clutch line (D), and remove the O-ring (E). Plug the end of the clutch line to prevent brake fluid from coming out.
8. Install the slave cylinder in the reverse order of removal. Install a new O-ring (A).

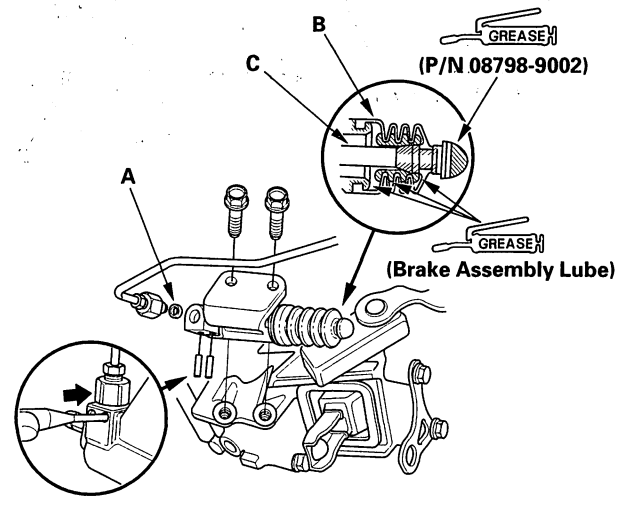

9. Pull back the boot (B), and apply brake assembly lube to the boot and slave cylinder rod (C). Reinstall the boot.
10. Apply super high temp urea grease (P/N 08798-9002) to the pushrod of the slave cylinder. Tighten the slave cylinder mounting bolts to 22 N·m (2.2 kgf·m, 16 lbf·ft).

BACK

Protected by AR

11. Bleed the clutch hydraulic system.

    - Attach a hose to the bleeder screw (A), and suspend the hose in a container of brake fluid.
    - Make sure there is an adequate supply of fluid in the reservoir, then slowly pump the clutch pedal until no more bubbles appear at the bleeder hose.
    - It may be necessary to limit the movement of the release fork (B) with a block of wood to remove all the air from the system.
    - Tighten the bleeder screw to 8 N·m (0.8 kgf·m, 5.8 lbf·ft); do not overtighten it.
    - After bleeding, refill the reservoir to the MAX mark with fluid.
    - Use only Honda DOT 3 brake fluid from an unopened container.

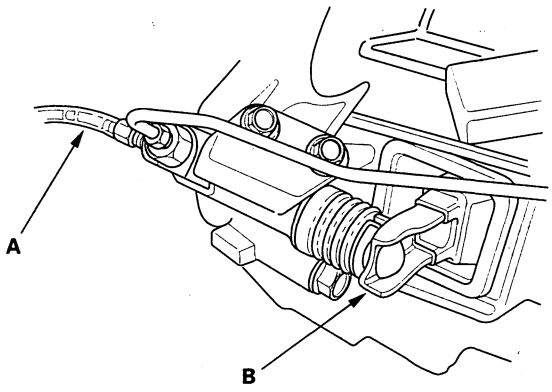

12. Install the air cleaner housing (see page 11-361).

13. Install the battery base (see step 47 on page 5-18).

14. Install the battery. Connect the positive cable to the battery first, then connect the negative cable.

15. Enter the anti-theft codes for the radio and navigation system, then enter the customer's audio presets.

Protected by AR

Clutch Replacement

Special Tools Required
- Clutch alignment disc 07JAF-PM7011A
- Ring gear holder 07LAB-PV00100 or 07924-PD20003
- Clutch alignment shaft 07ZAF-PR8A100
- Remover handle 07936-3710100

Pressure Plate and Clutch Disc Removal

1. Check the height of the diaphragm spring fingers using the special tool and a feeler gauge. If the height is more than the service limit, replace the pressure plate.

   Standard (New): 0.6 mm (0.02 in.) max.
   Service Limit: 0.8 mm (0.03 in.)

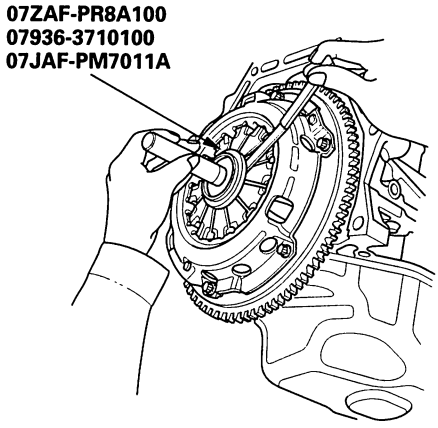

2. Install the special tools.

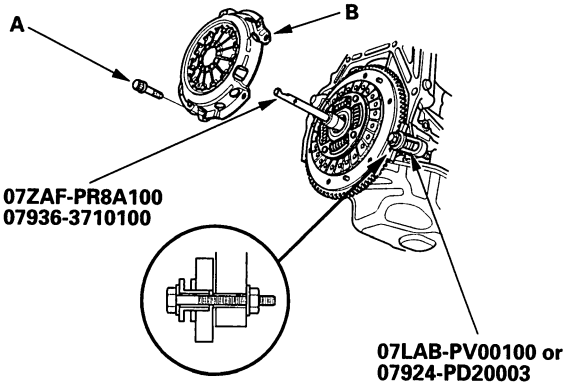

3. To prevent warping, unscrew the pressure plate mounting bolts (A) in a crisscross pattern in several steps, then remove the pressure plate (B).

4. Inspect the fingers of the diaphragm spring (A) for wear at the release bearing contact area.

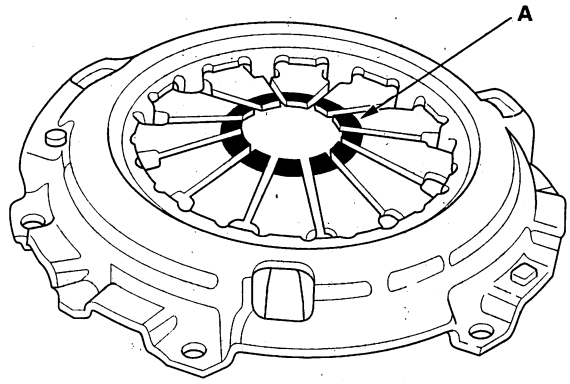

5. Inspect the pressure plate surface (A) for wear, cracks, and burning.

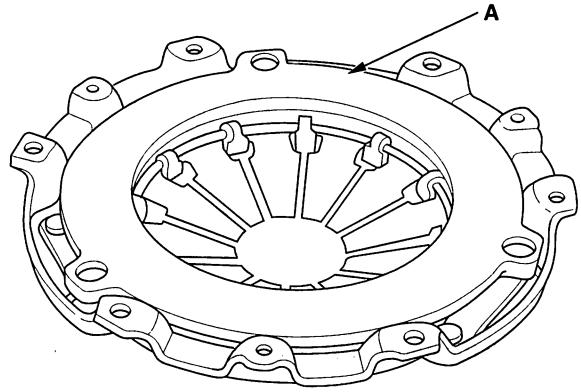

BACK

Protected by AR

6. Inspect for warpage using a straight edge (A) and a feeler gauge (B). Measure across the pressure plate (C). If the warpage is more than the service limit, replace the pressure plate.

Standard (New): **0.03 mm (0.001 in.) max.**
Service Limit: **0.15 mm (0.006 in.)**

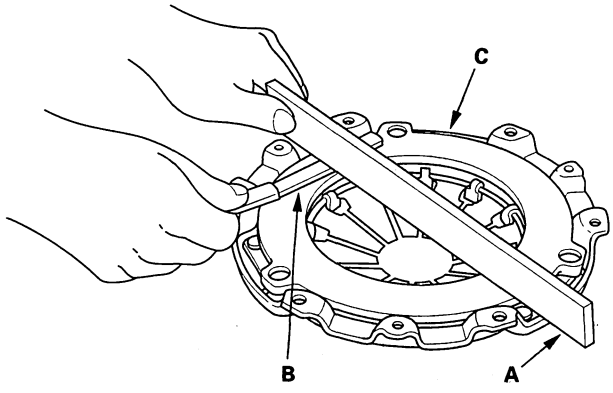

7. Remove the clutch disc and special tools.

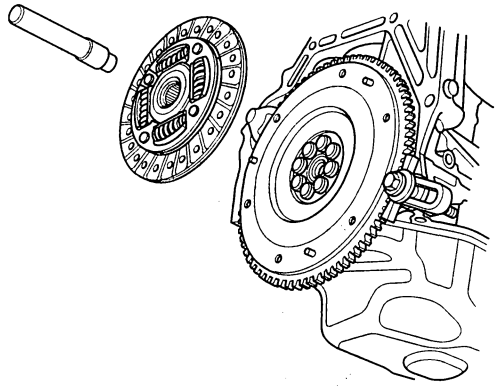

8. Inspect the lining of the clutch disc for signs of slippage or oil. If the clutch disc looks burnt or is oil soaked, replace it. Find and repair the source of the oil leak, if the clutch disc is soaked.

9. Measure the clutch disc thickness. If the thickness is less than the service limit, replace the clutch disc.

Standard (New): **8.6—9.2 mm (0.343—0.366 in.)**
Service Limit: **6.0 mm (0.24 in.)**

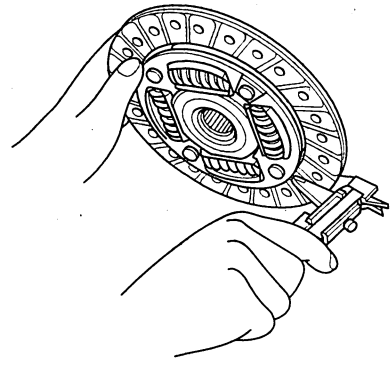

10. Measure the rivet depth from the clutch disc lining surface (A) to the rivets (B) on both sides. If the rivet depth is less than the service limit, replace the clutch disc.

Standard (New): **1.65—2.25 mm (0.065—0.089 in.)**
Service Limit: **0.7 mm (0.03 in.)**

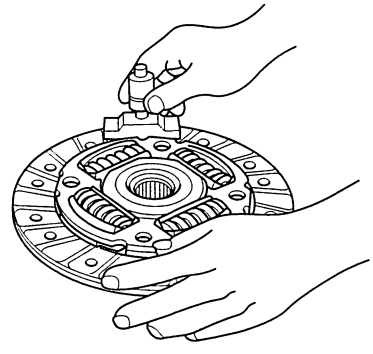

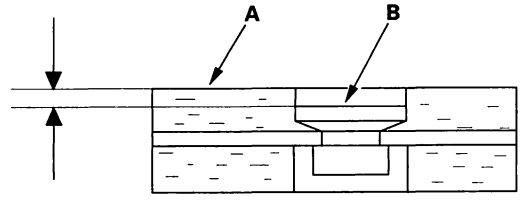

(cont'd)

BACK

Protected by AR

Clutch Replacement (cont'd)

Flywheel Inspection

1. Inspect the ring gear teeth for wear and damage.
2. Inspect the clutch disc mating surface on the flywheel for wear, cracks, and burning.
3. Measure the flywheel runout with the flywheel (A) installed on the engine. Set the dial indicator (B). Turn the flywheel at least two turns while pressing the flywheel. If the runout is more than the service limit, replace the flywheel, and recheck the runout. Resurfacing the flywheel is not recommended.

Standard (New): **0.05 mm (0.002 in.) max.**
Service Limit: **0.15 mm (0.006 in.)**

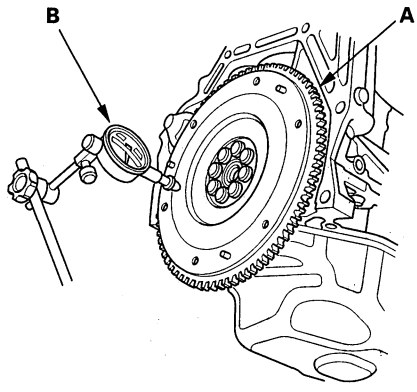

Flywheel Replacement

1. Install the special tool.

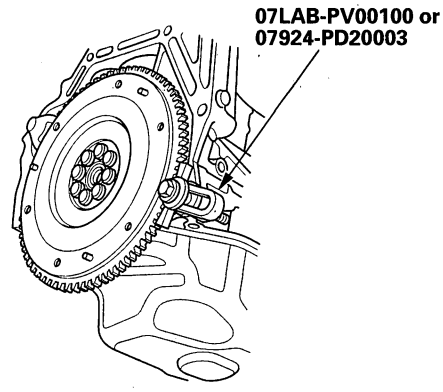

2. Loosen the flywheel mounting bolts in a crisscross pattern in several steps. Remove the bolts, then remove the flywheel.
3. Install the flywheel on the crankshaft, and install the mounting bolts, finger-tight.
4. Install the special tool, then torque the flywheel mounting bolts in a crisscross pattern in several steps.

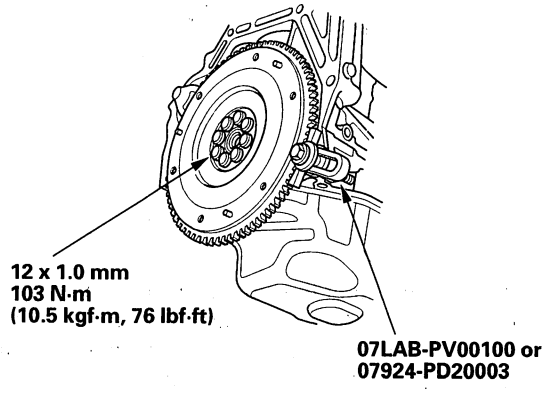

BACK

Protected by AR

Clutch Disc and Pressure Plate Installation

1. Temporarily install the clutch disc onto the splines of the transmission mainshaft. Make sure the clutch disc slides freely on the mainshaft.

2. Install the ring gear holder.

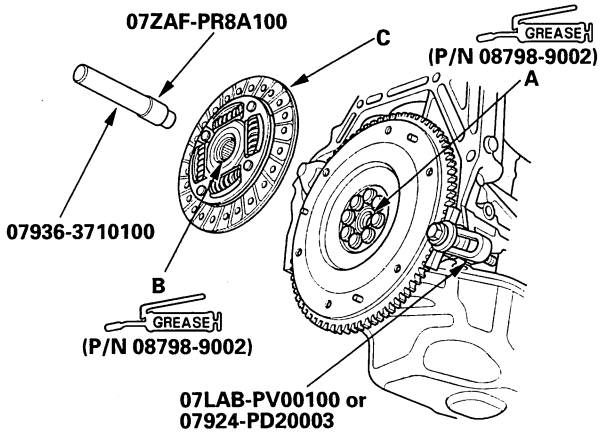

3. Apply a light coat of super high temp urea grease (P/N 08798-9002) to the crankshaft pilot bushing (A).

4. Apply super high temp urea grease (P/N 08798-9002) to the splines (B) of the clutch disc (C), then install the clutch disc using the special tools.

5. Install the pressure plate (A) and the mounting bolts (B), finger-tight.

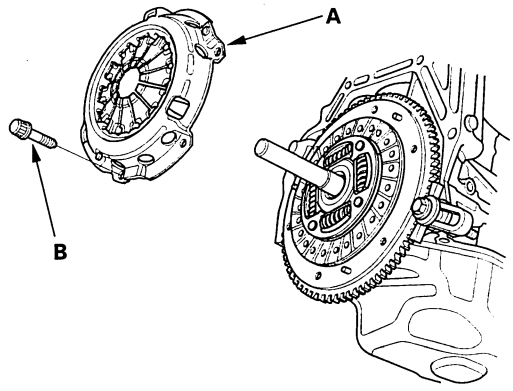

6. Torque the mounting bolts in a crisscross pattern. Tighten the bolts in several steps to prevent warping the diaphragm spring.

PRESSURE PLATE MOUNTING BOLT TORQUE:
25 N·m (2.6 kgf·m, 19 lbf·ft)

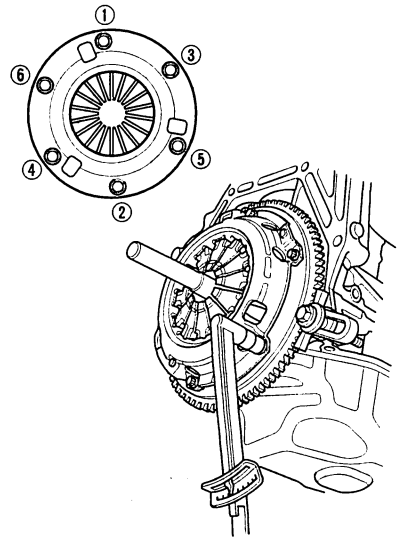

7. Remove the special tools.

8. Make sure the diaphragm spring fingers are all the same height.

(cont'd)

Protected by AR

Clutch Replacement (cont'd)

Release Bearing Replacement

1. Remove the release fork boot (A) from the clutch housing (B).

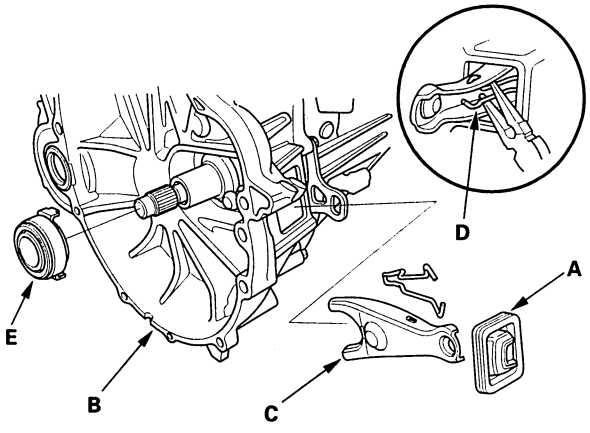

2. Remove the release fork (C) from the clutch housing by squeezing the release fork set spring (D) with pliers. Remove the release bearing (E).

3. Check the play of the release bearing by spinning it by hand. If there is excessive play, replace the release bearing.

   NOTE: The release bearing is packed with grease. Do not wash it in solvent.

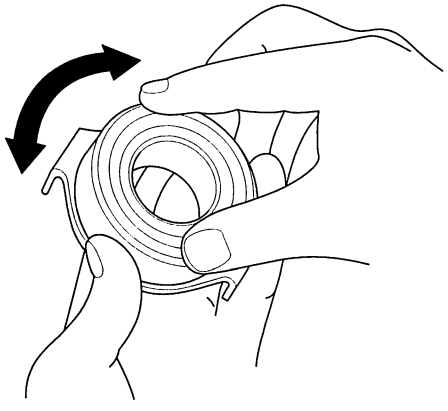

4. Apply super high temp urea grease (P/N 08798-9002) to the release fork (A), the release fork bolt (B), the release bearing (C), and the release bearing guide (D) in the shaded areas.

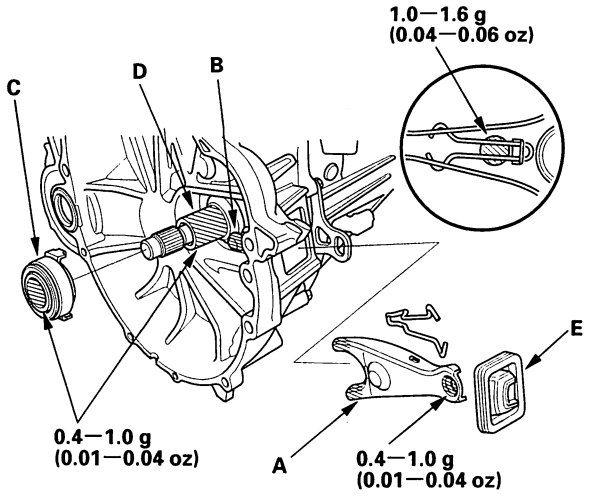

5. With the release fork slid between the release bearing pawls, install the release bearing on the mainshaft while inserting the release fork through the hole in the clutch housing.

6. Align the detent of the release fork with the release fork bolt, then press the release fork over the release fork bolt squarely.

7. Install the release fork boot (E). Make sure the boot seals around the release fork and clutch housing.

8. Move the release fork (A) right and left to make sure that it fits properly against the release bearing (B) and that the release bearing slides smoothly.

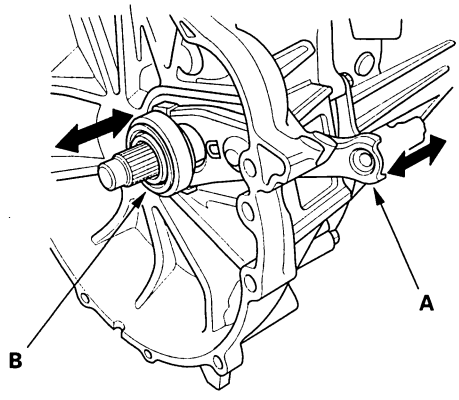

BACK

Protected by AR

Manual Transmission

Special Tools 13-2
Transmission Fluid Inspection and Replacement 13-3
Back-up Light Switch Test 13-3
Transmission Removal 13-4
Transmission Installation 13-11
Transmission Disassembly 13-19
Reverse Shift Fork Clearance Inspection 13-24
Change Lever Clearance Inspection 13-24
Change Lever Assembly Disassembly/Reassembly 13-25
Shift Fork Clearance Inspection 13-26
Shift Fork Disassembly/Reassembly 13-27
Mainshaft Assembly Clearance Inspection 13-28
Mainshaft Disassembly 13-30
Mainshaft Inspection 13-31
Mainshaft Reassembly 13-33
Countershaft Assembly Clearance Inspection 13-36
Countershaft Disassembly 13-38
Countershaft Inspection 13-39
Countershaft Reassembly 13-40
Synchro Sleeve and Hub Inspection and Reassembly 13-45
Synchro Ring and Gear Inspection 13-45
Mainshaft Bearing and Oil Seal Replacement 13-47
Countershaft Bearing Replacement 13-48
Mainshaft Thrust Clearance Adjustment 13-49
Transmission Reassembly 13-51
Gearshift Mechanism Replacement 13-55

M/T Differential

Component Location Index 13-56
Backlash Inspection 13-57
Differential Carrier, Final Driven Gear Replacement 13-57
Carrier Bearing Replacement 13-58
Oil Seal Replacement 13-59
Differential Thrust Clearance Adjustment 13-60

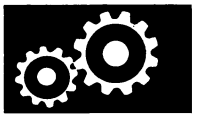

BACK

Protected by AR

Special Tools

Ref. No.	Tool Number	Description	Qty
*①	07GAJ-PG20110	Mainshaft Holder	1
*②	07GAJ-PG20130	Mainshaft Base	1
③	07JAD-PL90100	Oil Seal Driver	1
④	07NAD-P20A100	Oil Seal Driver Attachment	1
**⑤	07736-A01000B	Adjustable Bearing Puller, 20—40 mm	1
⑥	07746-0010300	Attachment, 42 x 47 mm	1
⑦	07746-0030100	Driver, 40 mm I.D.	1
⑧	07746-0030300	Driver, 30 mm I.D.	1
⑨	07749-0010000	Driver	1

* Part of Mainshaft Inspection Tool Set, 07GAJ-PG20102.
** Must be used with commercially available 3/8"-16 Slide Hammer.

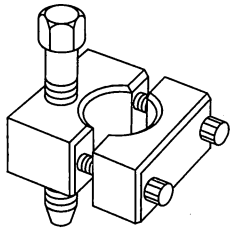
①

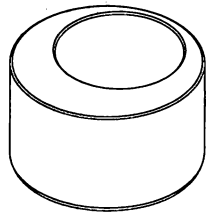
②

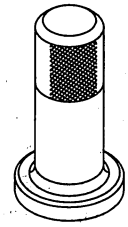
③

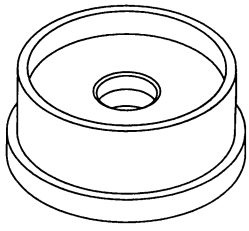
④

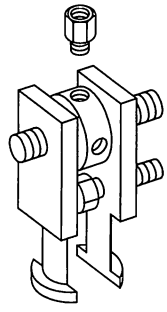
⑤

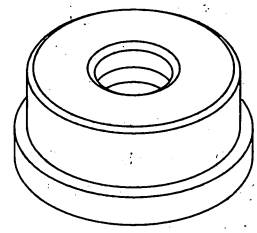
⑥

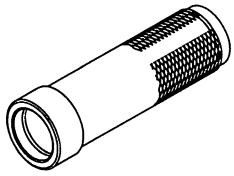
⑦

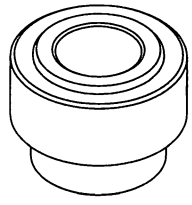
⑧

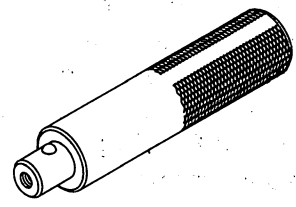
⑨

BACK

Protected by AR

Transmission Fluid Inspection and Replacement

1. Park the vehicle on level ground, and turn the ignition switch OFF.
2. Remove the oil filler plug (A) and washer (B), check the condition of the fluid, and make sure it is at the proper level (C).

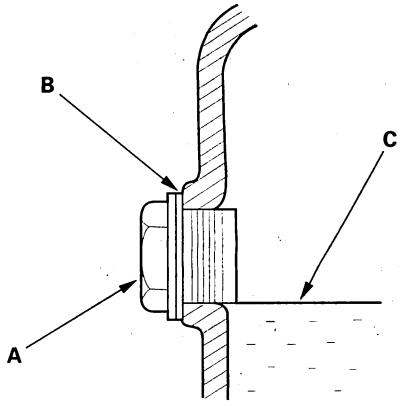

3. If the fluid is dirty, remove the drain plug (D) and drain the fluid.

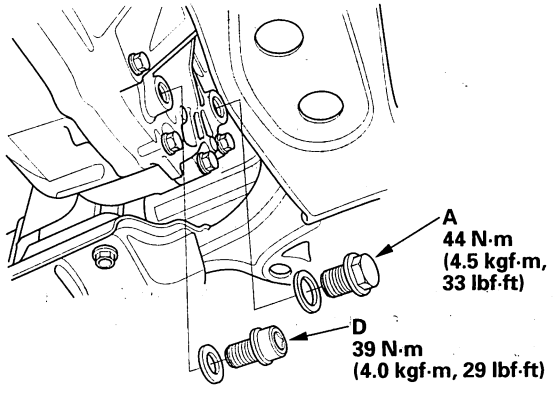

4. Install the drain plug with a new washer, and refill the transmission fluid to the proper level.

   Fluid Capacity
   1.9 L (2.0 US qt) at fluid change
   2.1 L (2.2 US qt) at overhaul

   Always use Honda Manual Transmission Fluid (MTF). Using engine oil can cause stiffer shifting because it does not contain the proper additives.

5. Install the oil filler plug with a new washer.

Back-up Light Switch Test

1. Disconnect the back-up light switch 2P connector (A).

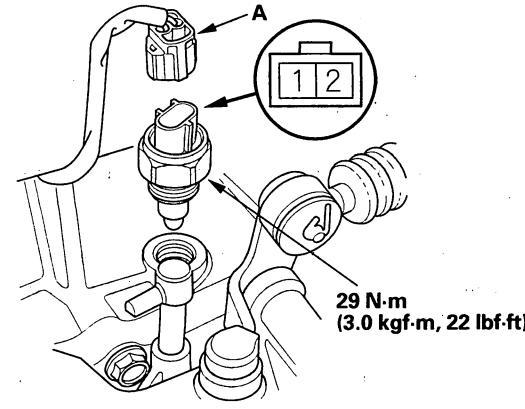

2. Check for continuity between the No. 1 and No. 2 terminals of the back-up light switch 2P connector. There should be continuity when the shift lever is in Reverse.
3. If necessary, replace the back-up light switch. Apply liquid gasket (P/N 08718-0001), and install it on the transmission housing.

Protected by AR

Transmission Removal

Special Tools Required
- Engine hanger/adapter VSB02C000015 *
- Engine support hanger, A & Reds AAR-T-12566 *
- Subframe adapter VSB02C000016 *

* Available through the Honda Tool and Equipment Program 888-424-6857.

NOTE: Use fender covers to avoid damaging painted surfaces.

1. Make sure you have the anti-theft codes for the radio and the navigation system, then write down the customer's audio presets.
2. Set the wheels in the straight ahead position.
3. Lock the steering wheel.
4. Disconnect the negative cable from the battery first, then disconnect the positive cable. Remove the battery.
5. Remove the air cleaner housing (see page 11-361).
6. Remove the battery base (see step 10 on page 5-2).
7. Carefully remove the slave cylinder without bending the clutch line. Do not press the clutch pedal once the slave cylinder has been removed.

Type A:

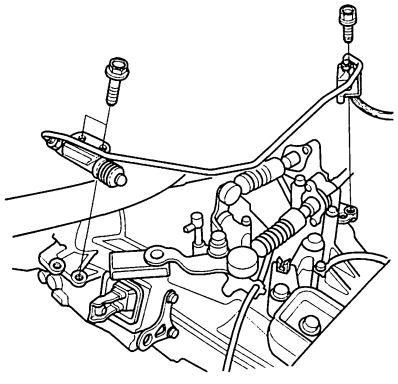

Type B:

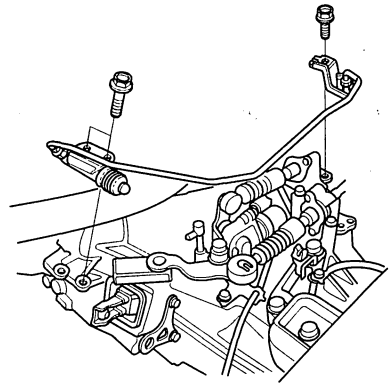

8. Remove the cable bracket (A), then disconnect the cables (B) from the top of the transmission housing. Carefully remove both cables and the bracket together to avoid bending the cables.

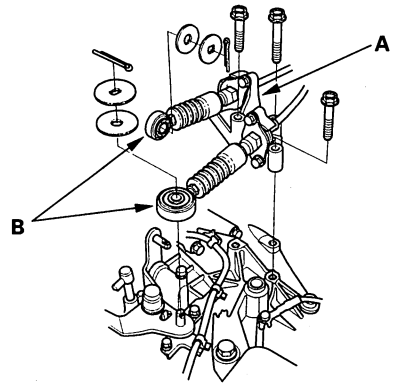

9. Disconnect the output shaft (countershaft) speed sensor connector (A) and back-up light switch connector (B).

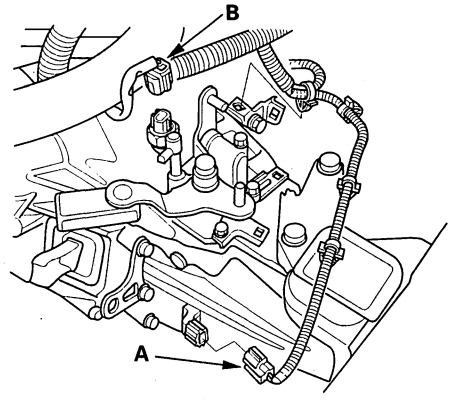

BACK

Protected by AR

10. Disconnect the secondary heated oxygen sensor (secondary HO2S) connector (A), then remove the bracket (B).

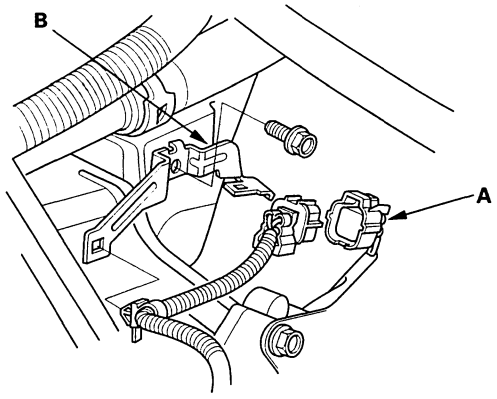

11. Remove the front mount stop (A), then remove the front mount bolt (B).

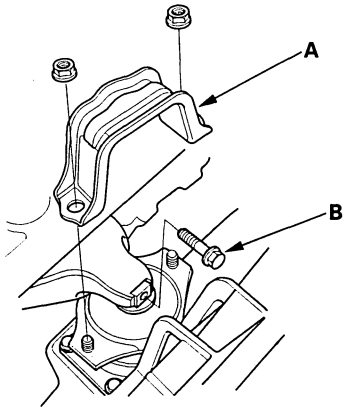

12. Remove the rear mount stop.

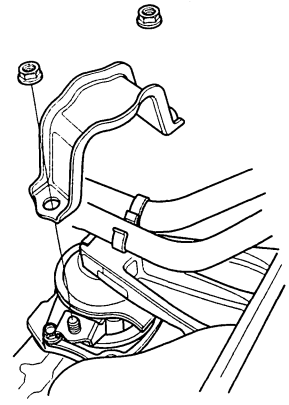

13. Remove the transmission upper mounting bolts.

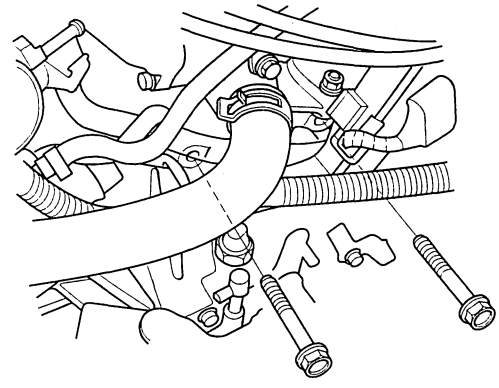

(cont'd)

Protected by AR

Transmission Removal (cont'd)

14. Remove and plug the return hose (A) from the power steering fluid reservoir (B). Wipe off any spilled fluid at once.

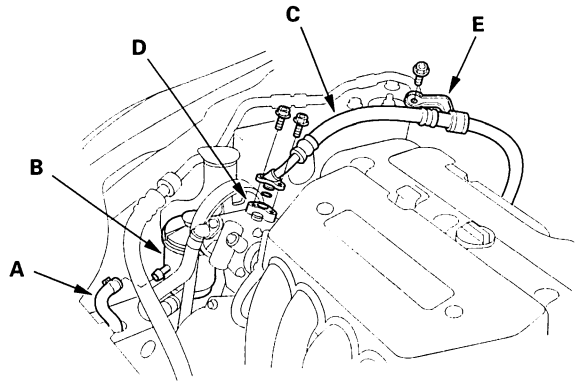

15. Remove the power steering pump outlet line (C) from the power steering pump (D).

16. Remove the power steering pump outlet line bracket (E).

17. Attach the special tool to the threaded hole in the cylinder head.

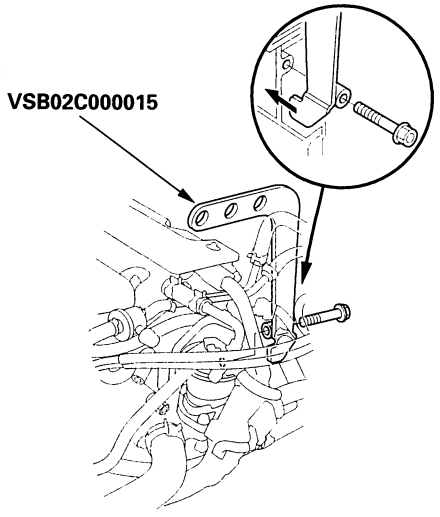

18. Install the engine support hanger (AAR-T-12566) to the vehicle, and attach the hook (A) to the special tool adapter (B). Tighten the wing nut (C) by hand, and lift and support the engine.

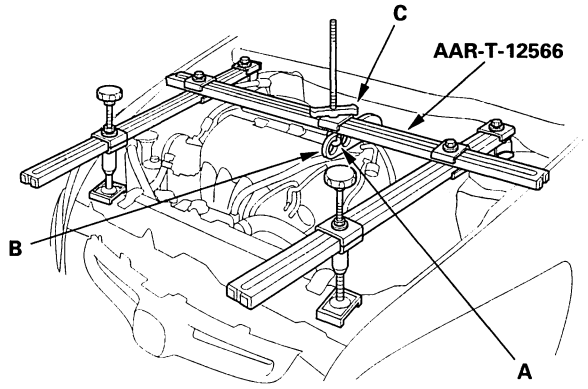

19. Remove the transmission mount bracket (A) and ground cable (B).

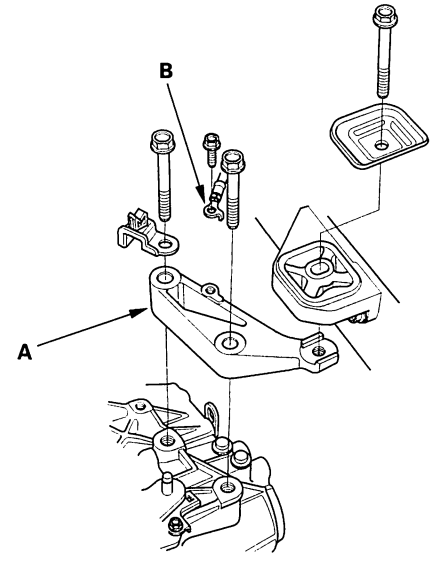

BACK

Protected by AR

20. Remove the steering joint cover (A).

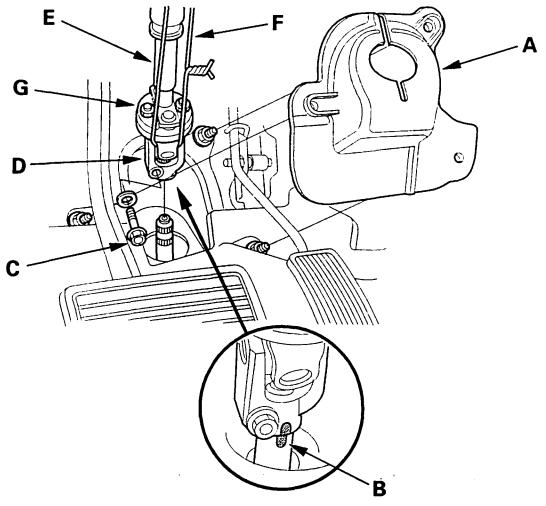

21. Make a reference mark (B) across the steering joint and steering gearbox pinion shaft. Remove the steering joint bolt (C), and disconnect the steering joint (D) by removing the steering joint toward the steering column. Hold the slider shaft (E) on the column with a piece of wire (F) between the joint yoke (G) on the slider shaft and the joint yoke on the upper shaft (see page 17-25).

22. Raise the vehicle, and make sure it is securely supported.

23. Remove the front wheels.

24. Drain the transmission fluid. Reinstall the drain bolt using a new washer (see page 13-3).

25. Remove the splash shield.

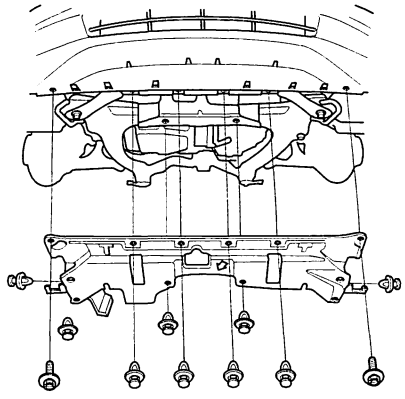

26. Separate the tie-rod ball joint (see step 8 on page 17-31).

27. Separate the front stabilizer link (see step 6 on page 16-4).

28. Remove the damper fork (see step 7 on page 16-5).

29. Separate the knuckle from the lower arm (see step 8 on page 16-5).

30. Disconnect the power steering pressure switch connector.

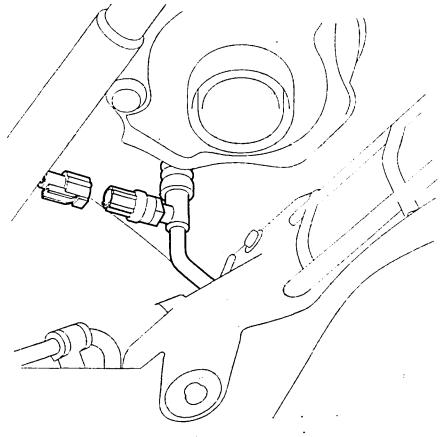

31. Remove exhaust pipe A.

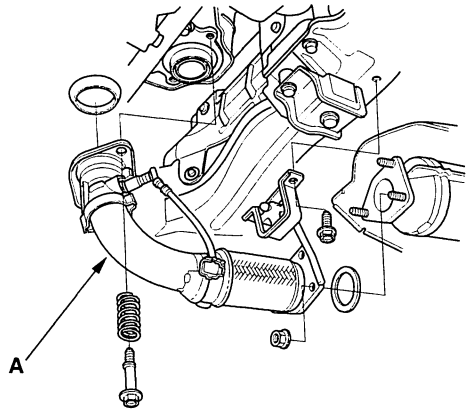

32. Remove the left and right driveshaft inboard joints (see step 12 on page 16-6).

33. Remove the intermediate shaft (see page 16-21).

(cont'd)

Protected by AR

Transmission Removal (cont'd)

34. Remove the engine lower rear mount mounting bolts.

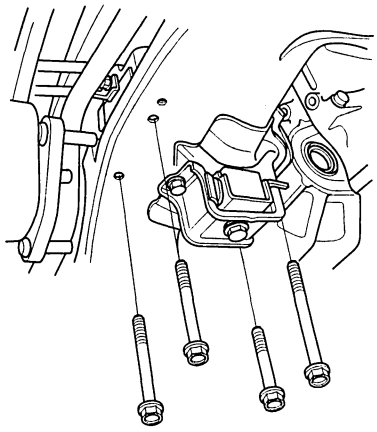

35. Remove the transmission lower mount mounting nuts.

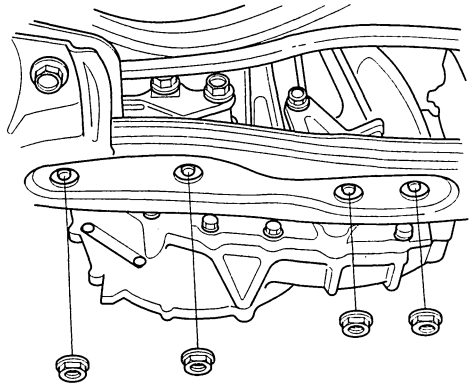

36. Remove the subframe mid mounts from both sides.

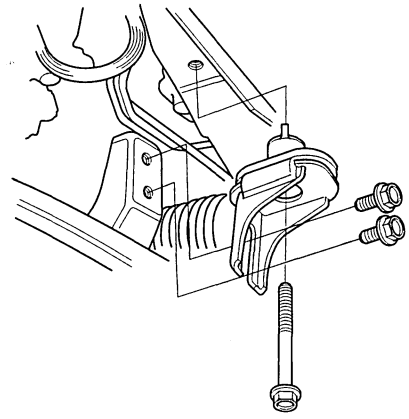

37. Make the appropriate reference lines (A) at both ends of the subframe (B) that line up with the edge (C) of the stiffeners (D).

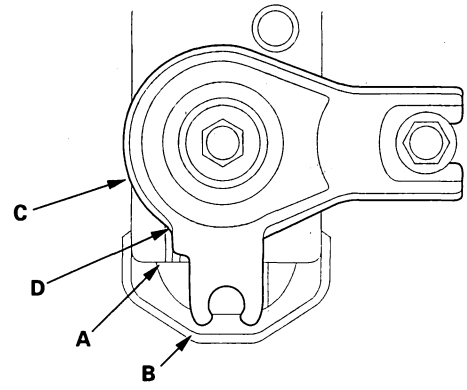

BACK

Protected by AR

38. Attach the special tool to the subframe by wrapping the band over the subframe and attaching the end of the band to the tool with a pin (A).

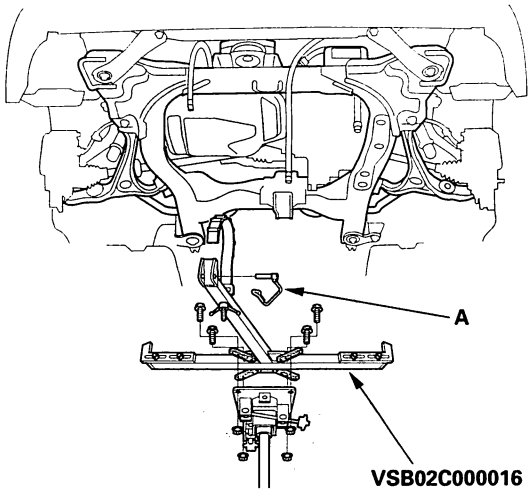

39. Raise the jack, and line up the slots in the arms with the bolt holes on the corner of the jack base, then attach them securely.

40. Remove the front suspension subframe stays (A) and the front suspension subframe (B).

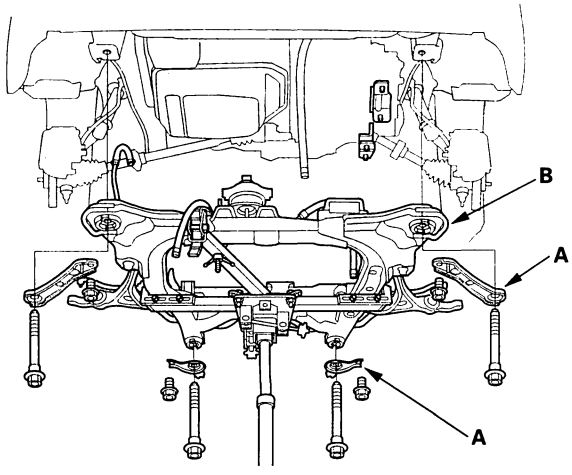

41. Remove the front engine mount upper bracket.

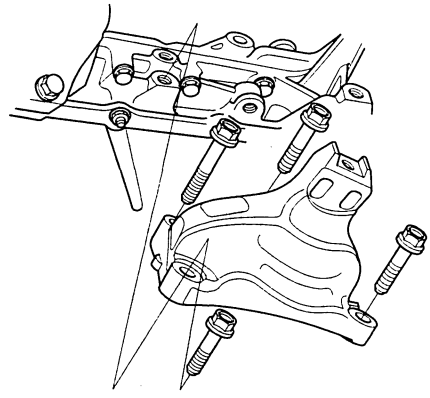

42. Remove the shift cable bracket (A), rear engine mount upper mounting bolt (B), and rear engine mount (C).

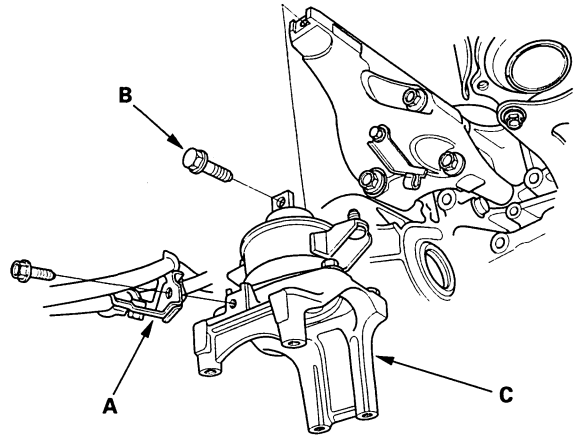

(cont'd)

Protected by AR

Transmission Removal (cont'd)

43. Remove the rear engine mount upper bracket.

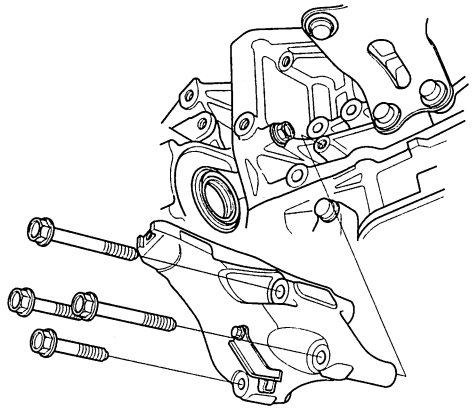

44. Remove the clutch cover.

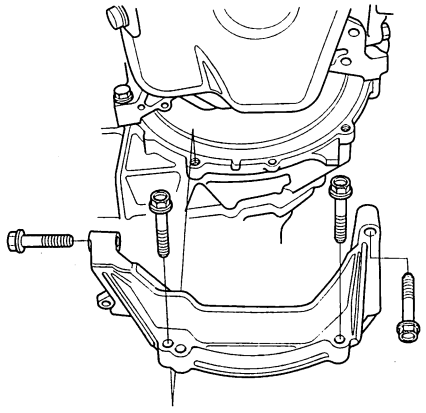

45. Place the transmission jack under the transmission, and remove the transmission lower mounting bolts.

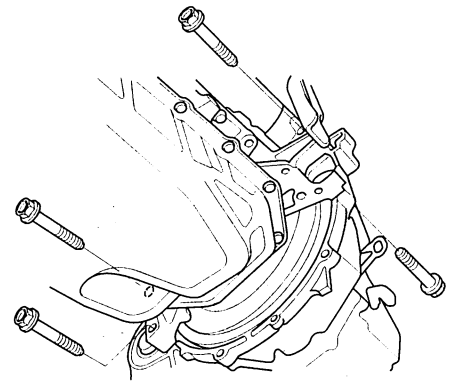

46. Pull the transmission away from the engine until the transmission mainshaft clears the clutch pressure plate, then lower the transmission on the transmission jack.

47. Remove the transmission lower front mount (A) and transmission lower rear mount (B).

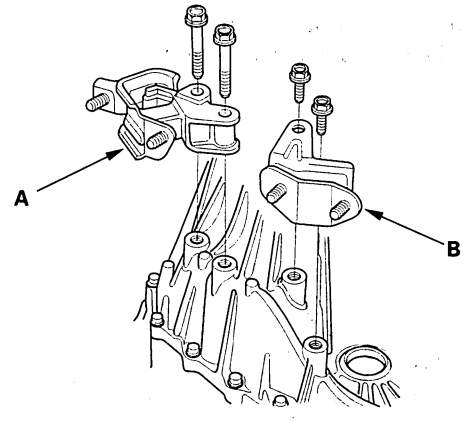

BACK

Protected by AR

48. Remove the release fork boot (A) from the clutch housing (B).

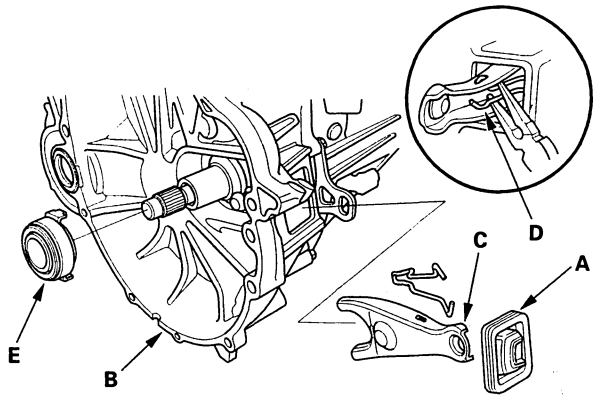

49. Remove the release fork (C) from the clutch housing by squeezing the release fork set spring (D) with pliers. Remove the release bearing (E).

Transmission Installation

Special Tools Required
- Engine hanger/adapter VSB02C000015 *
- Engine support hanger, A & Reds AAR-T-12566 *
- Subframe adapter VSB02C000016 *

* Available through the Honda Tool and Equipment Program 888-424-6857.

1. Make sure the two dowel pins are installed in the clutch housing.

2. Apply super high temp urea grease (P/N 08798-9002) to the release fork (A), the release bearing (B) and the mainshaft splines. Install the release fork, the release bearing, and the boot (C).

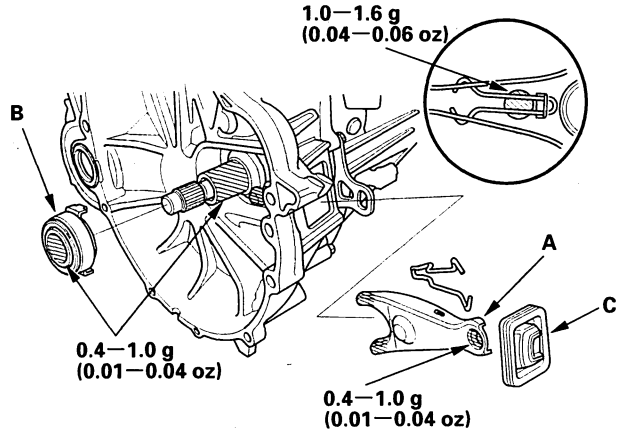

3. Install the transmission lower front mount (A) and transmission lower rear mount (B).

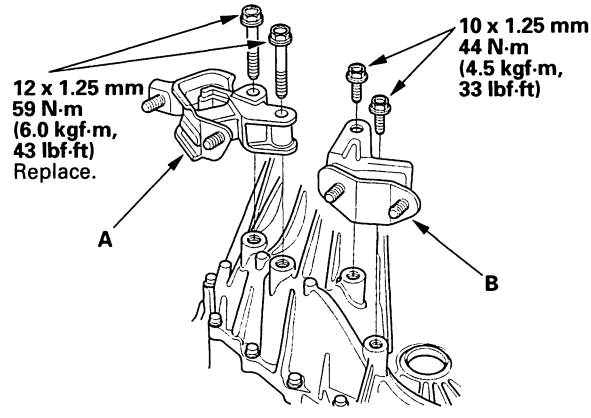

4. Place the transmission on the transmission jack, and raise it to engine level.

(cont'd)

Protected by AR

Transmission Installation (cont'd)

5. Install the transmission mounting lower bolts.

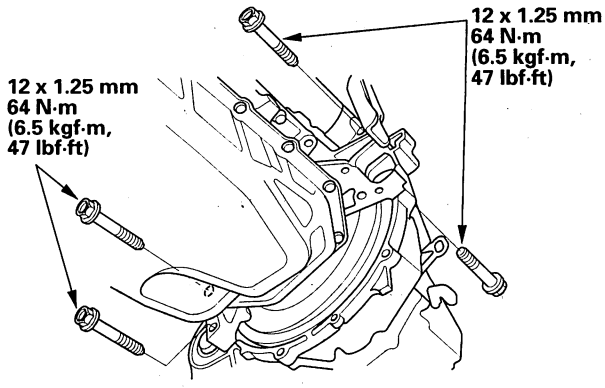

6. Install the clutch cover.

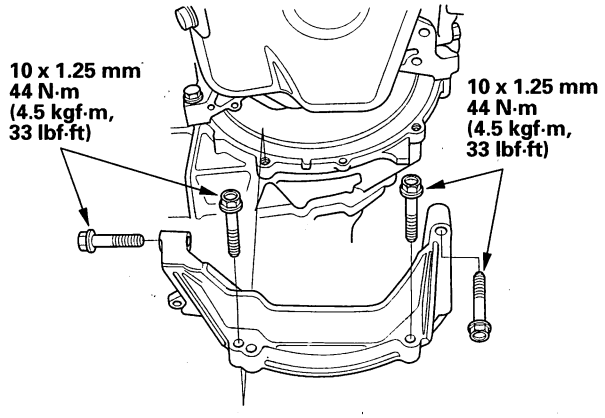

7. Install the rear engine mount upper bracket.

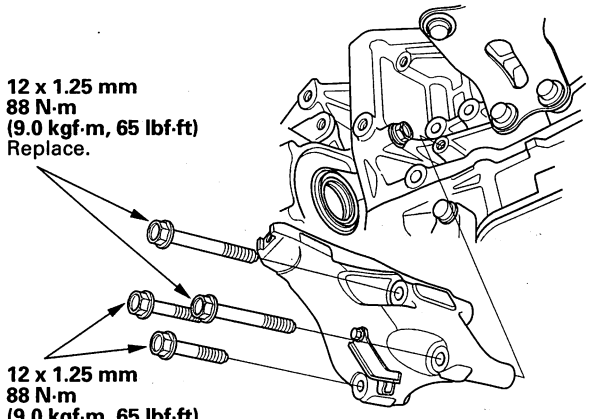

8. Install the rear engine mount (A), rear engine mount upper mounting bolt (B), and shift cable bracket (C).

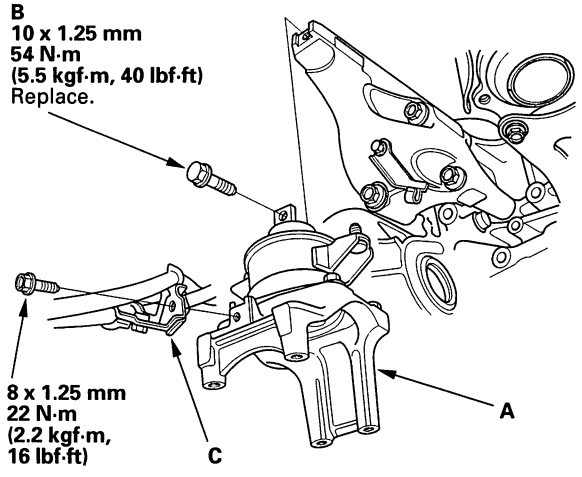

BACK

Protected by AR

9. Install the front engine mount upper bracket.

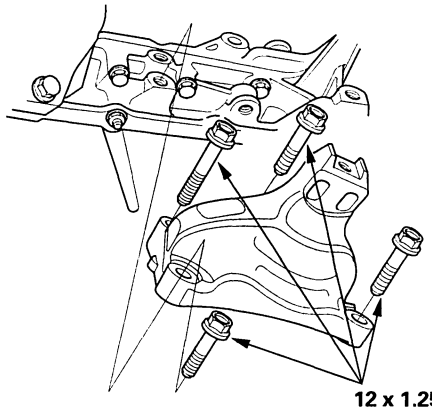

10. Support the subframe with the subframe adapter and a jack.

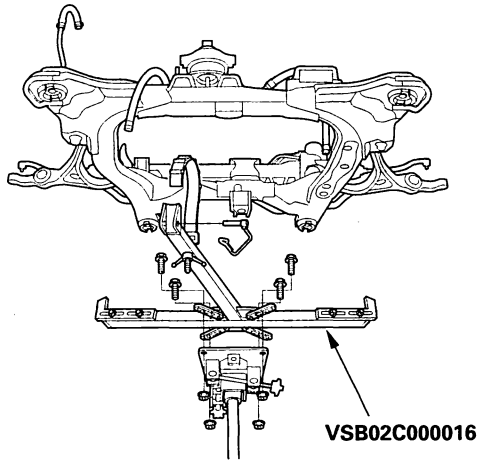

11. Install the front suspension subframe (A) and front suspension subframe stays (B).

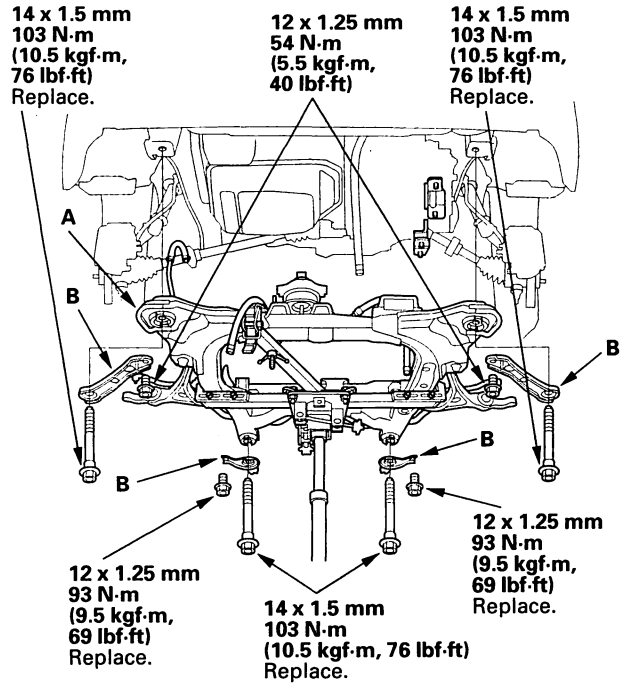

12. Align the reference marks (A) with the edge (B) of both rear stiffeners (C), then tighten the rear subframe mounting bolts, the front bolts, and the stiffener bolts to the specified torque.

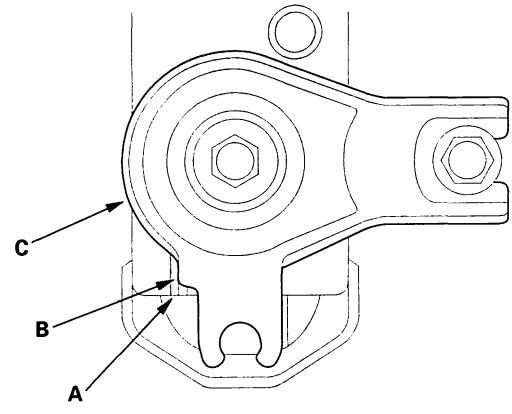

(cont'd)

Protected by AR

Transmission Installation (cont'd)

13. Install the subframe mid mounts on both sides.

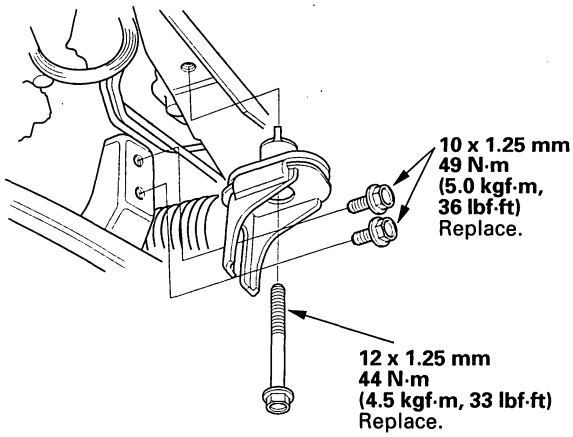

14. Install the transmission lower mount mounting nuts.

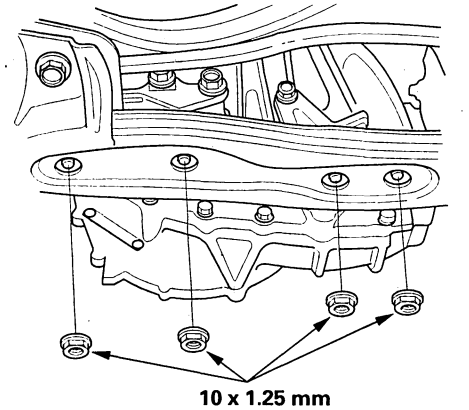

15. Install the engine lower rear mount mounting bolts.

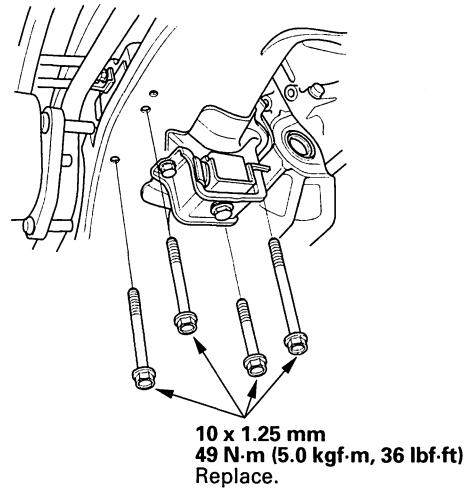

16. Install the intermediate shaft (see page 16-25).

17. Install the left and right inboard joints (see page 16-19).

18. Install the knuckle onto the lower arm (see step 6 on page 16-20).

19. Install the damper fork (see step 8 on page 16-20).

20. Connect the front stabilizer links (see step 10 on page 16-20).

21. Install exhaust pipe A, the mount (B), and new gaskets (C).

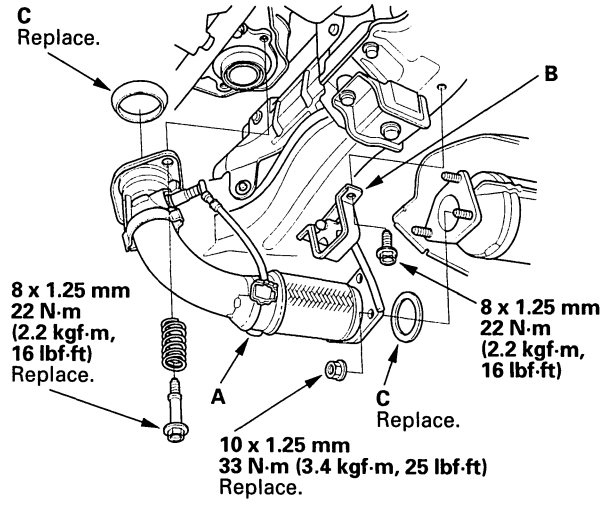

BACK

Protected by AR

22. Connect the power steering pressure switch connector.

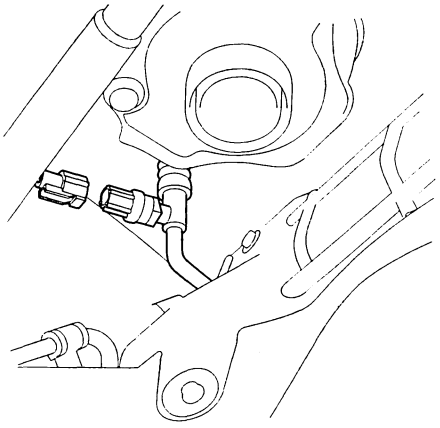

23. Connect the return line to the power steering fluid reservoir.

24. Install the tie-rod ball joint (see step 23 on page 17-54).

25. Install the splash shield.

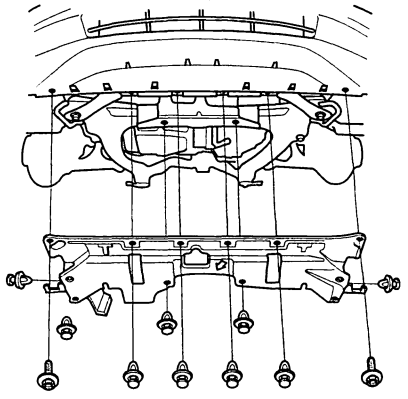

26. Refill the transmission with fluid.

27. Install the front wheels, and set them in the straight ahead position.

28. Lower the vehicle.

29. Unlock the steering wheel.

30. Connect the steering joint to the steering gearbox pinion shaft (A) by aligning the reference mark (B), and remove the wire (C) from the joint yoke (D).

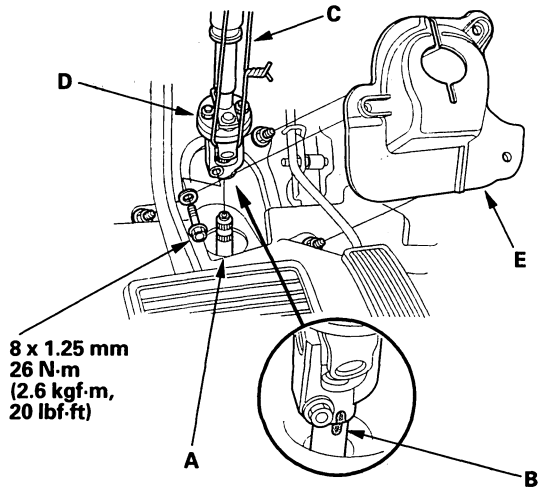

31. Install the steering joint cover (E).

32. Install the transmission mount bracket (A) and ground cable (B).

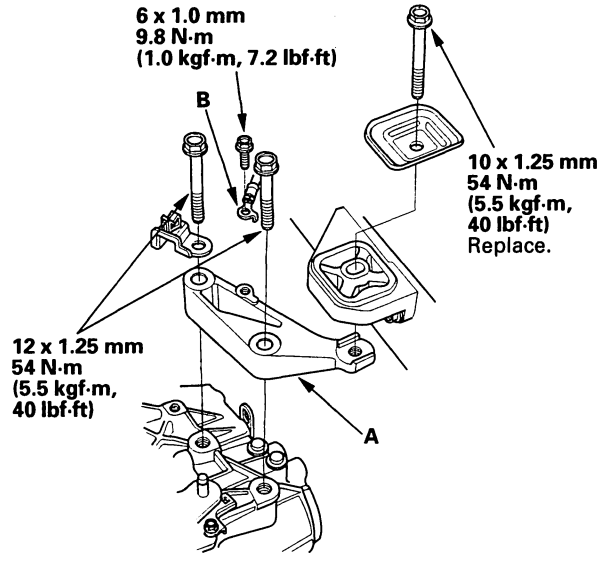

(cont'd)

BACK

Protected by AR

Transmission Installation (cont'd)

33. Remove the engine hanger and the special tool from the engine.

34. Install the power steering pump outlet line (A) with a new O-ring (B) to the pump (C), and secure the hose clamp (D) with the bolt.

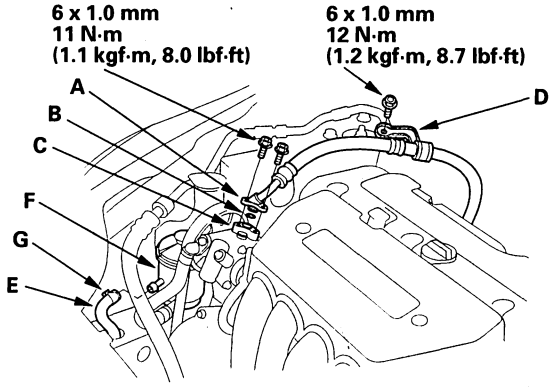

35. Connect the return hose (E) to the power steering fluid reservoir (F), then secure the hose with the clamp (G).

36. Install the transmission upper mounting bolts.

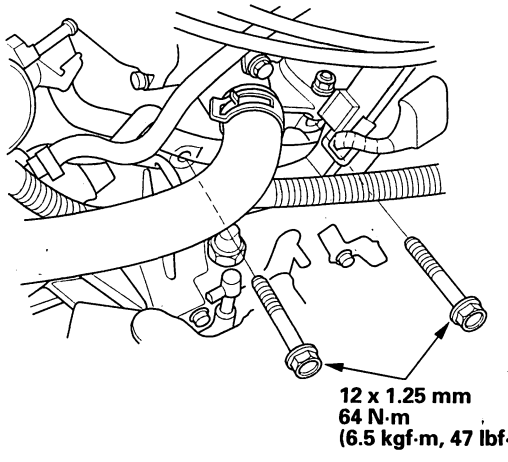

37. Install the engine rear mount stop.

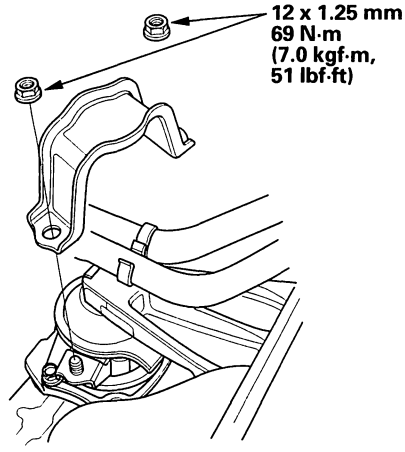

38. Install the engine front mount mounting bolt (A) and front mount stop (B).

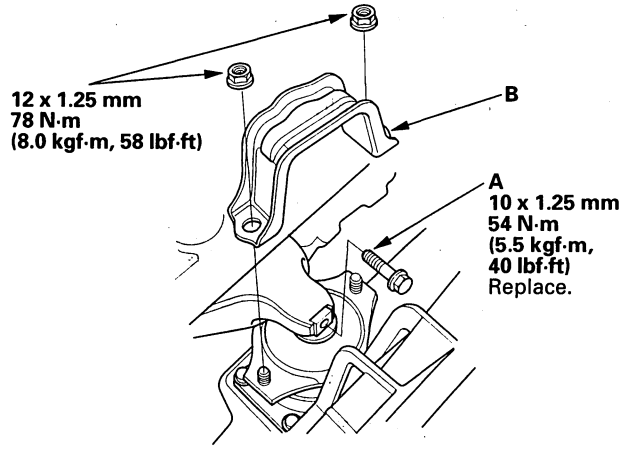

BACK

Protected by AR

39. Install the bracket (A), then connect the secondary heated oxygen sensor (secondary HO2S) connector (B).

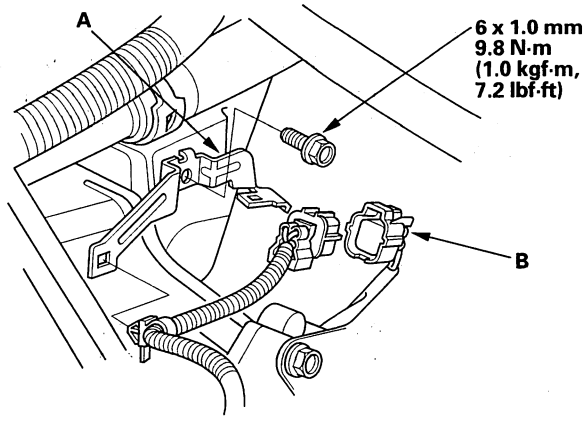

40. Connect the back-up light switch connector (A) and output shaft (countershaft) speed sensor connector (B).

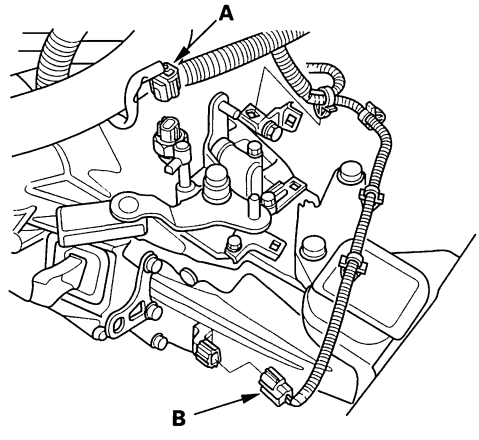

41. Install the cable bracket (A) and cables (B).

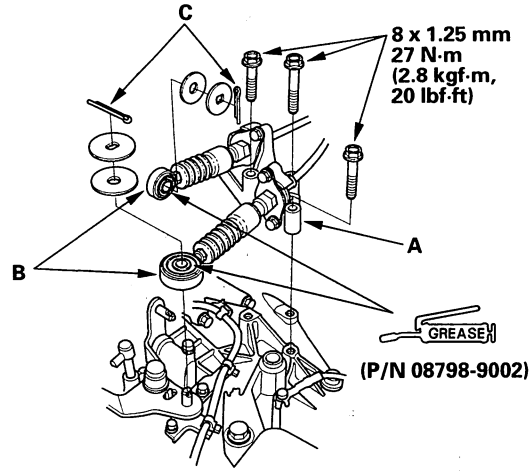

42. Apply a light coat of super high temp urea grease (P/N 08798-9002) to the cable ends, and install new cotter pins (C).

43. Apply super high temp urea grease (P/N 08798-9002) to the end of the cylinder rod. Install the slave cylinder. Be careful not to bend the clutch line.

Type A:

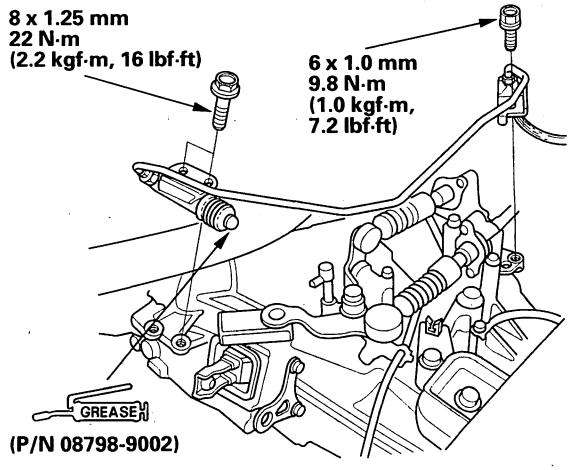

(cont'd)

Protected by AR

Transmission Installation (cont'd)

Type B:

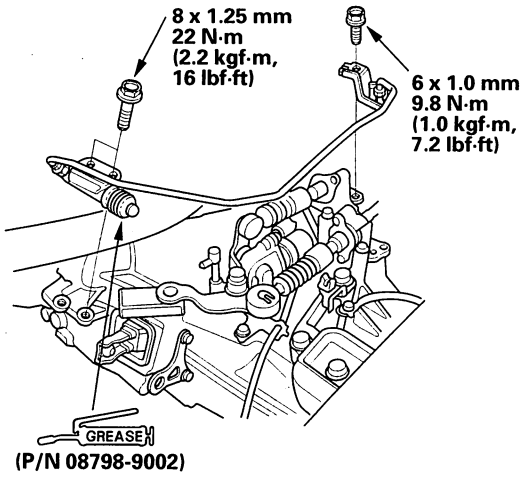

(P/N 08798-9002)

44. Install the battery base (see step 47 on page 5-18).
45. Install the air cleaner housing (see page 11-361).
46. Remove the steering wheel (see page 17-22).
47. Center the cable reel by first rotating it clockwise until it stops. Then rotate it counterclockwise (about three full turns) until the arrow mark on the label points straight up.
48. Reinstall the steering wheel (see page 17-24).
49. Install the battery. Connect the positive cable to the battery first, then connect the negative cable.
50. Fill the power steering fluid reservoir with fluid to the upper level line.
51. Start the engine, and run it at fast idle, then turn the steering wheel from lock-to-lock several times to bleed air from the system.
52. Recheck the fluid level, and refill if necessary.
53. Check the front wheel alignment (see page 18-6).
54. Check the steering wheel spoke angle. If the steering spoke angles to the right and left are not equal (steering wheel and rack are not centered), correct the engagement of the joint/pinion shaft serrations, then adjust the front toe by turning the tie-rod ends if necessary. If you need to correct the engagement of the joint/pinion shaft, repeat step 46 thru 48 after disconnecting the battery and waiting 3 minutes.
55. Test-drive the vehicle.
56. Check the clutch operation.
57. Enter the anti-theft code for the radio and navigation system, then enter the customer's audio presets.
58. Do the power window control unit reset procedure (see page 22-232).

BACK

Protected by AR

Transmission Disassembly

Exploded View-Clutch Housing

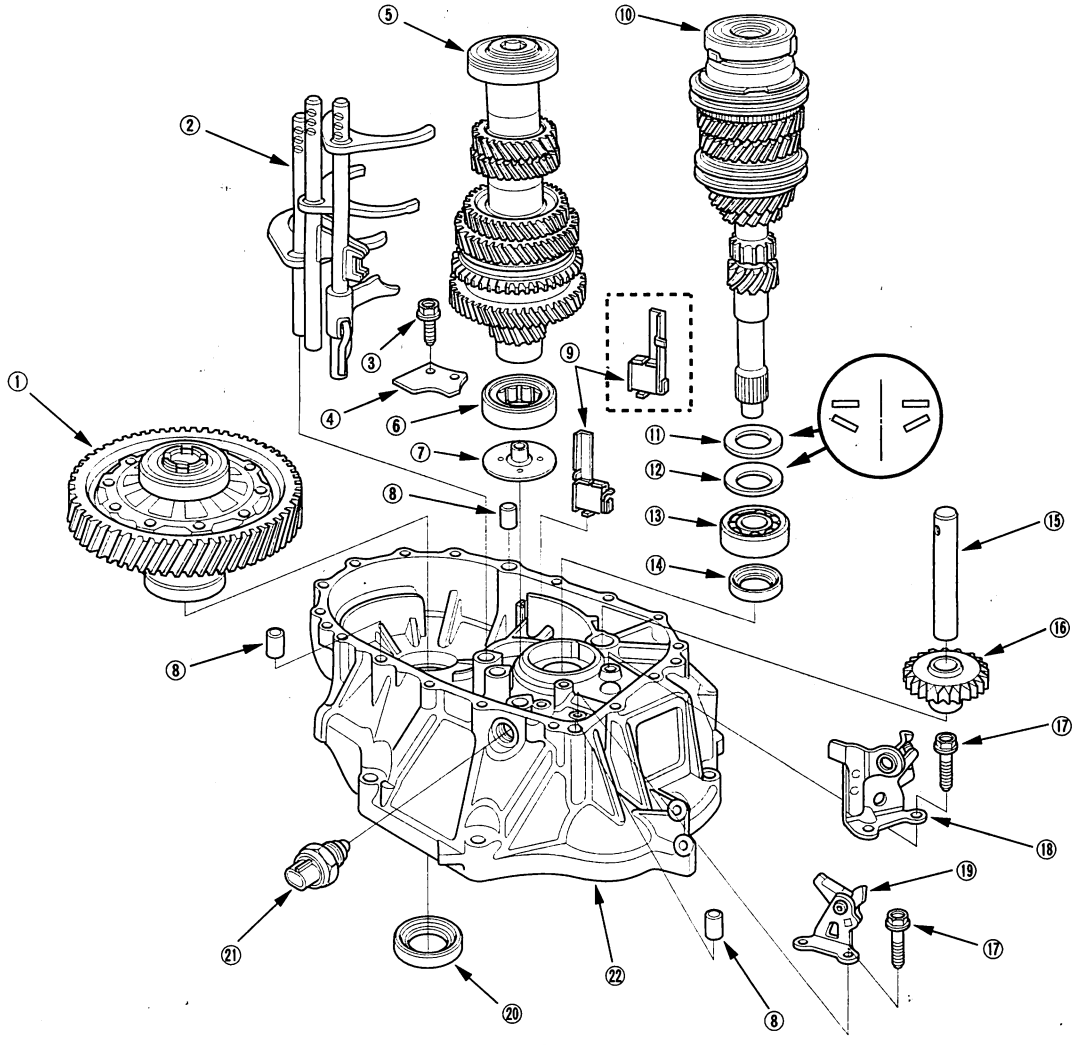

① DIFFERENTIAL ASSEMBLY
② SHIFT FORK ASSEMBLY
③ 6 mm FLANGE BOLT
12 N·m (1.2 kgf·m, 9 lbf·ft)
④ BEARING SET PLATE
⑤ COUNTERSHAFT ASSEMBLY
⑥ NEEDLE BEARING
⑦ OIL GUIDE PLATE C
⑧ 14 x 20 mm DOWEL PIN
⑨ MAGNET
⑩ MAINSHAFT ASSEMBLY
⑪ 28 mm WASHER
⑫ 28 mm SPRING WASHER
⑬ BALL BEARING
⑭ 28 x 43 x 7 mm OIL SEAL
Replace.
⑮ REVERSE GEAR SHAFT
⑯ REVERSE IDLER GEAR
⑰ 6 mm SPECIAL BOLT
15 N·m (1.5 kgf·m, 11 lbf·ft)
⑱ REVERSE SHIFT FORK ASSEMBLY
⑲ REVERSE LOCK CAM
⑳ 35 x 58 x 8 mm OIL SEAL
Replace.
㉑ BACK-UP LIGHT SWITCH
29 N·m (3.0 kgf·m, 22 lbf·ft)
㉒ CLUTCH HOUSING

(cont'd)

BACK

Protected by AR

Transmission Disassembly (cont'd)

Exploded View-Transmission Housing

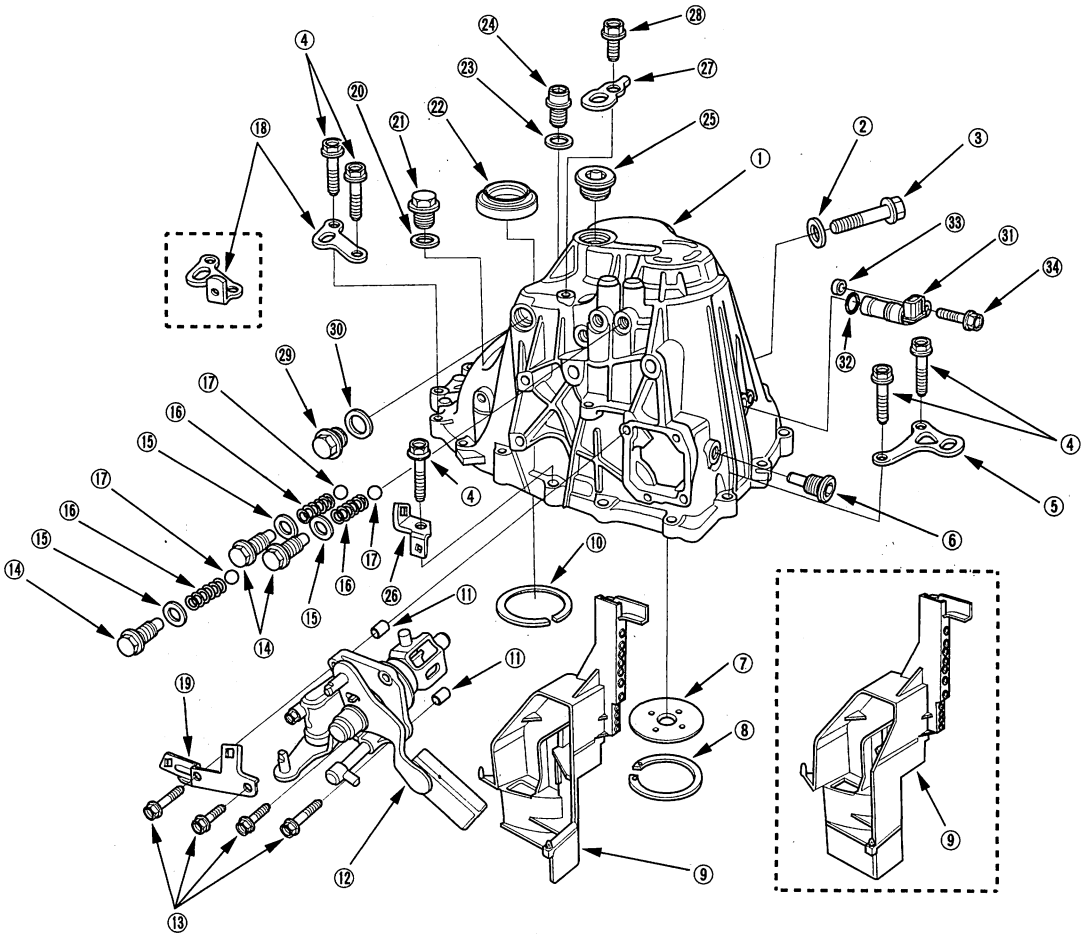

① TRANSMISSION HOUSING
② 10 mm WASHER
Replace.
③ 10 mm FLANGE BOLT
44 N·m (4.5 kgf·m, 33 lbf·ft)
④ 8 mm FLANGE BOLT
27 N·m (2.8 kgf·m, 20 lbf·ft)
⑤ TRANSMISSION HANGER A
⑥ INTERLOCK BOLT
39 N·m (4.0 kgf·m, 29 lbf·ft)
⑦ OIL GUIDE PLATE M
⑧ 72 mm SHIM
⑨ OIL GUTTER PLATE
⑩ 80 mm SHIM
⑪ 8 x 14 mm DOWEL PIN
⑫ CHANGE LEVER ASSEMBLY
⑬ 6 mm FLANGE BOLT
12 N·m (1.2 kgf·m, 9 lbf·ft)
⑭ DETENT BOLT
22 N·m (2.2 kgf·m, 16 lbf·ft)
⑮ 12 mm WASHER
Replace.
⑯ SPRING
⑰ STEEL BALL
⑱ TRANSMISSION HANGER B
⑲ HARNESS BRACKET A
⑳ 20 mm WASHER
Replace.
㉑ FILLER PLUG
44 N·m (4.5 kgf·m, 33 lbf·ft)
㉒ 40 x 56 x 8 mm OIL SEAL
Replace.
㉓ 14 mm WASHER
Replace.
㉔ DRAIN PLUG
39 N·m (4.0 kgf·m, 29 lbf·ft)
㉕ 32 mm SEALING CAP
34 N·m (3.5 kgf·m, 25 lbf·ft)
㉖ HARNESS BRACKET B
㉗ TRANSMISSION HANGER
㉘ 10 mm FLANGE BOLT
44 N·m (4.5 kgf·m, 33 lbf·ft)
㉙ 20 mm BOLT
44 N·m (4.5 kgf·m, 33 lbf·ft)
㉚ 20 mm WASHER
Replace.
㉛ OUTPUT SHAFT (COUNTERSHAFT) SPEED SENSOR
㉜ O-RING
Replace.
㉝ PLAIN WASHER
㉞ 6 mm FLANGE BOLT
12 N·m (1.2 kgf·m, 9 lbf·ft)

BACK

Protected by AR

NOTE: Place the clutch housing on two pieces of wood thick enough to keep the mainshaft from hitting the workbench.

1. Remove the detent bolts (A), springs, steel balls, and back-up light switch (B).

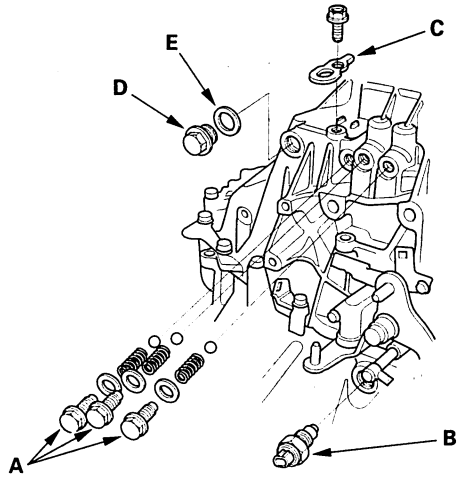

2. Remove the transmission hanger (C), 20 mm bolt (D), and 20 mm washer (E).

3. Remove the interlock bolt (B), change lever assembly (C), 8 x 14 mm dowel pins (D), and harness bracket A.

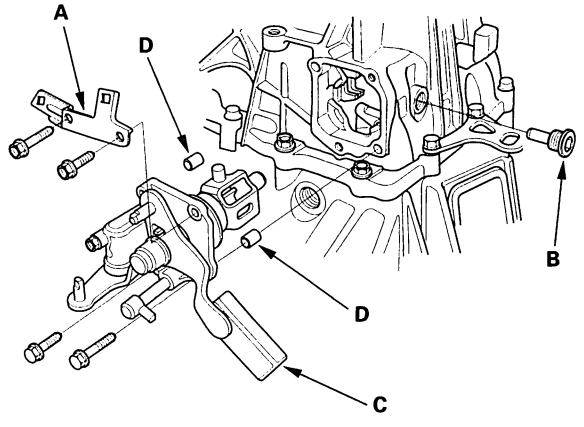

4. Remove the drain plug (A), filler plug (B), and 10 mm flange bolt (C).

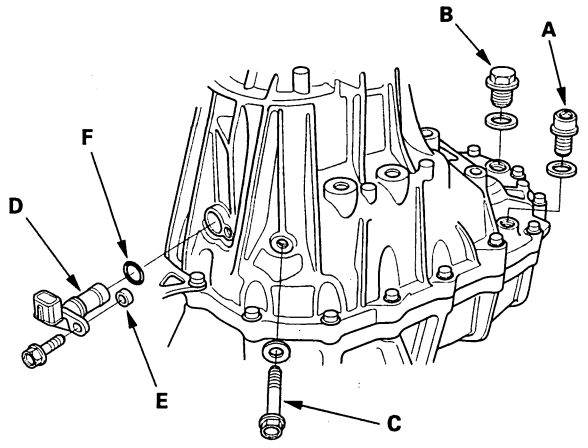

5. Remove the output shaft (countershaft) speed sensor (D), plain washer (E), and O-ring (F).

6. Loosen the 8 mm flange bolts in a crisscross pattern in several steps, then remove them.

7. Remove the transmission hanger A, transmission hanger B, and harness bracket B (C).

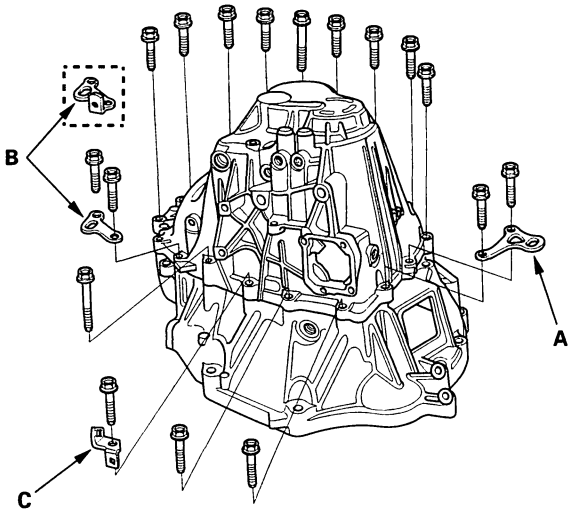

(cont'd)

BACK

Protected by AR

Transmission Disassembly (cont'd)

8. Remove the 32 mm sealing cap (A).

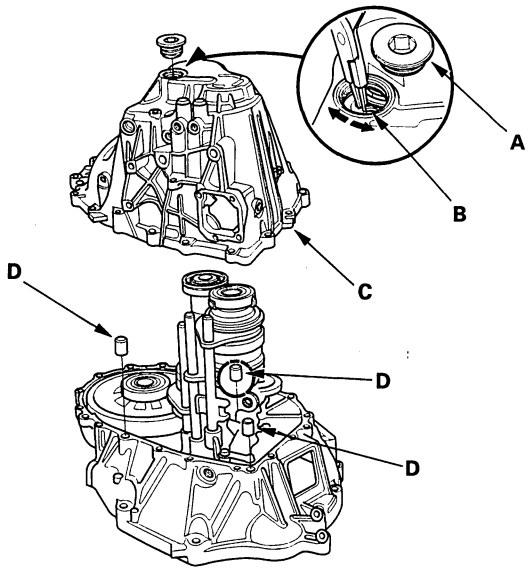

9. While expanding the 72 mm snap ring (B) of the countershaft ball bearing with snap ring pliers, lift the transmission housing (C). Release the snap ring pliers, and remove the transmission housing and 14 x 20 mm dowel pins (D).

10. Remove the reverse lock cam.

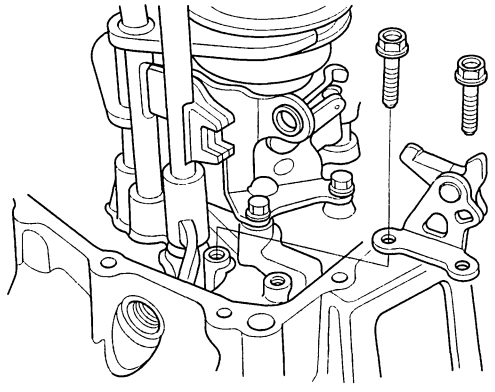

11. Remove the reverse idler gear (A) and reverse gear shaft (B).

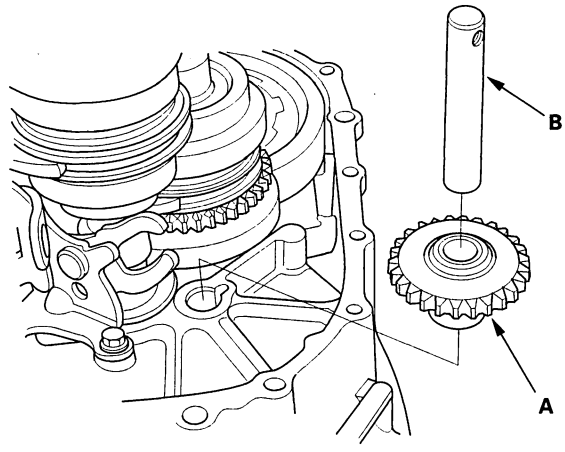

12. Remove the reverse shift fork.

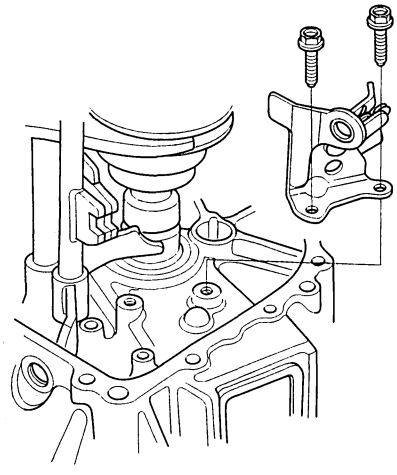

BACK

Protected by AR

13. Apply tape to the mainshaft splines to protect the seal, then remove the mainshaft assembly (A) and the countershaft assembly (B) with the shift forks (C) from the clutch housing (D).

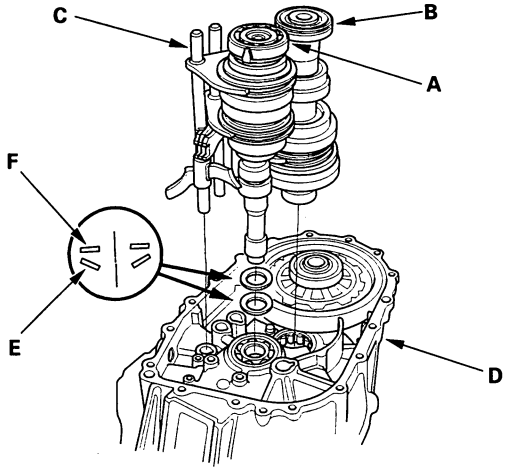

14. Remove the 28 mm spring washer (E) and the 28 mm washer (F).

15. Remove the differential assembly (A) and magnet (B).

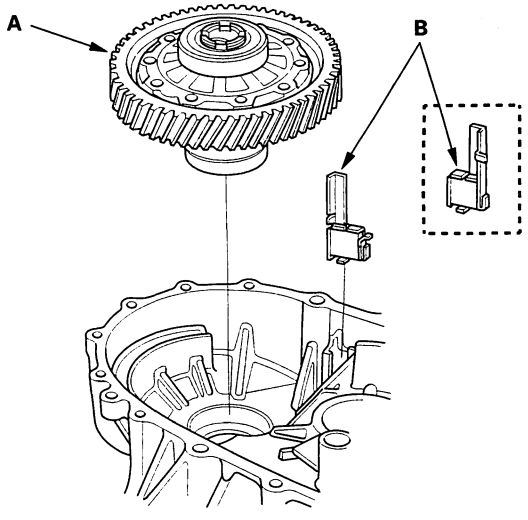

16. Remove the oil gutter plate (A), 72 mm shim (B), and oil guide plate M.

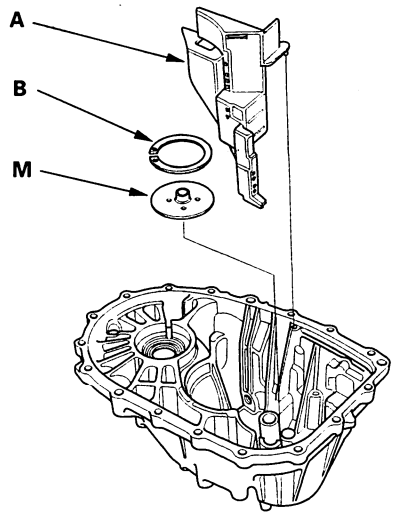

Protected by AR

Reverse Shift Fork Clearance Inspection

1. Measure the clearance between the reverse idler gear (A) and the reverse shift fork (B) with a feeler gauge (C). If the clearance is more than the service limit, go to step 2.

Standard: 0.20—0.59 mm (0.007—0.024 in.)
Service Limit: 1.2 mm (0.047 in.)

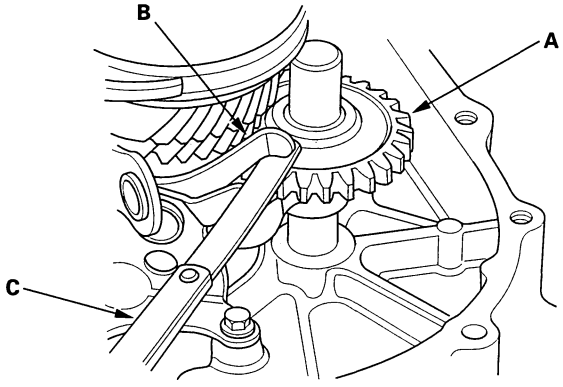

2. Measure the width of the reverse shift fork.

- If the width is not within the standard, replace the reverse shift fork.
- If the width is within the standard, replace the reverse gear.

Standard: 13.4—13.7 mm (0.527—0.539 in.)

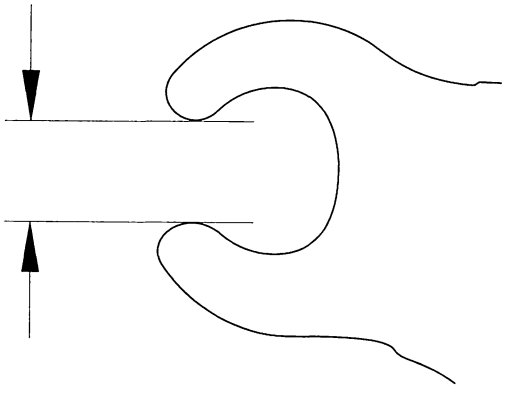

Change Lever Clearance Inspection

1. Measure the clearance between change lever (A) and the select lever (B) with a feeler gauge (C). If the clearance is more than the service limit, go to step 2.

Standard: 0.05—0.25 mm (0.002—0.010 in.)
Service Limit: 0.5 mm (0.020 in.)

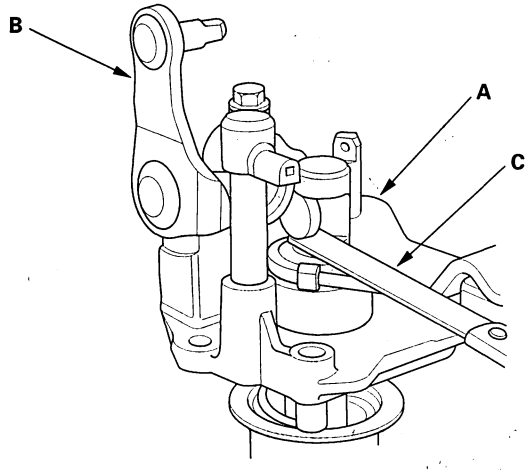

2. Measure the groove width of the change lever.

- If the groove width is not within the standard, replace the change lever.
- If the groove width is within the standard, replace the select lever.

Standard: 15.00—15.10 mm (0.591—0.594 in.)

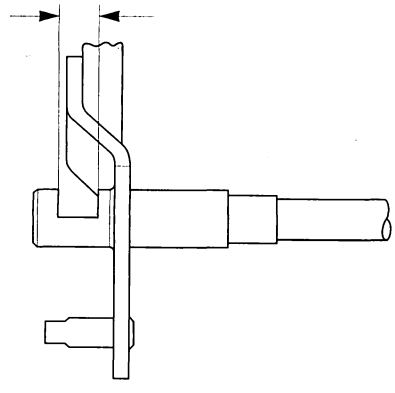

BACK

Protected by AR

Change Lever Assembly Disassembly/Reassembly

Prior to reassembling, clean all the parts in solvent, dry them, and apply grease to contact surfaces as shown.

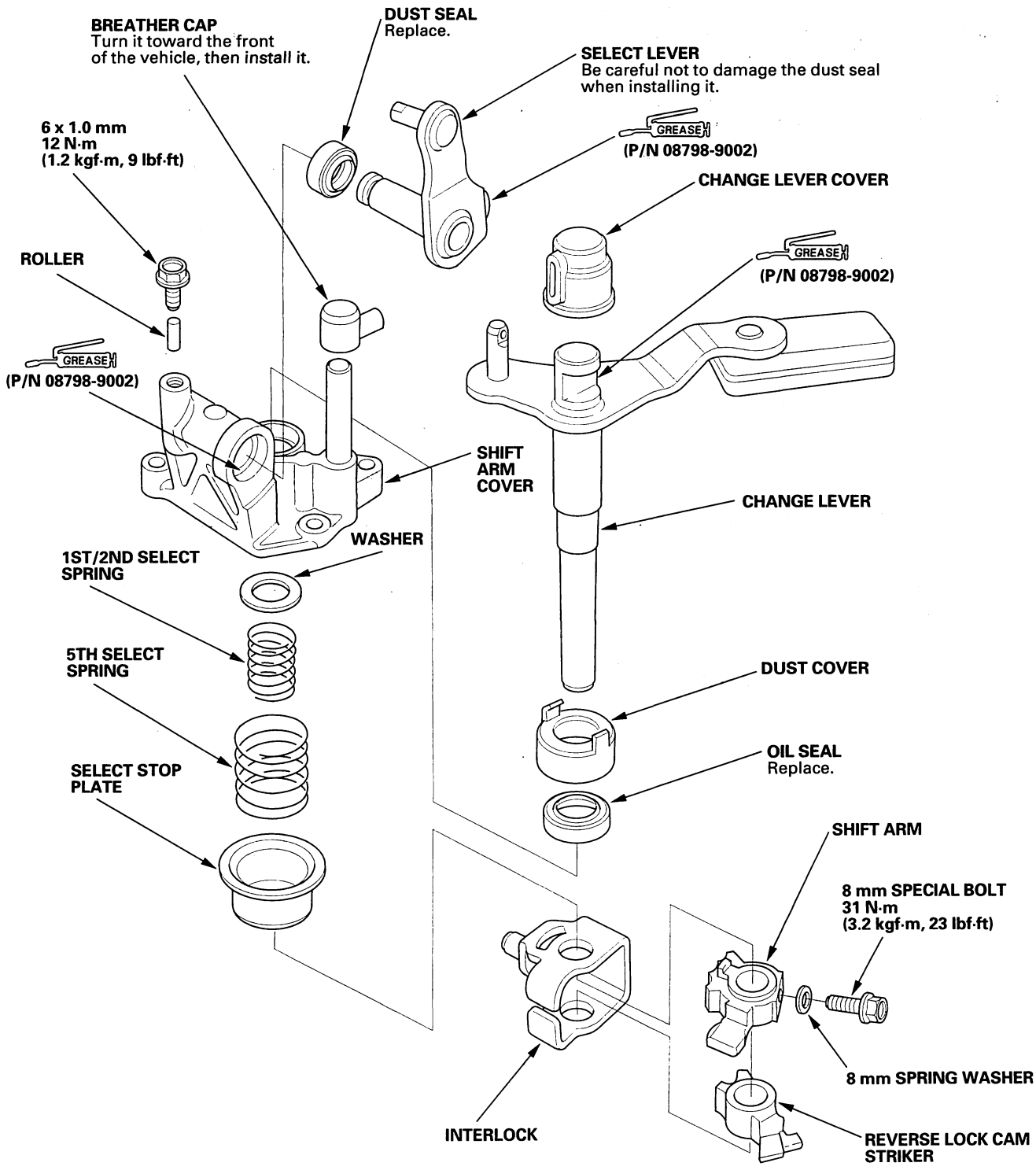

Protected by AR

Shift Fork Clearance Inspection

NOTE: The synchro sleeve and synchro hub should be replaced as a set.

1. Measure the clearance between each shift fork (A) and its matching synchro sleeve (B). If the clearance exceeds the service limit, go to step 2.

Standard: 0.35—0.65 mm (0.014—0.026 in.)
Service Limit: 1.0 mm (0.039 in.)

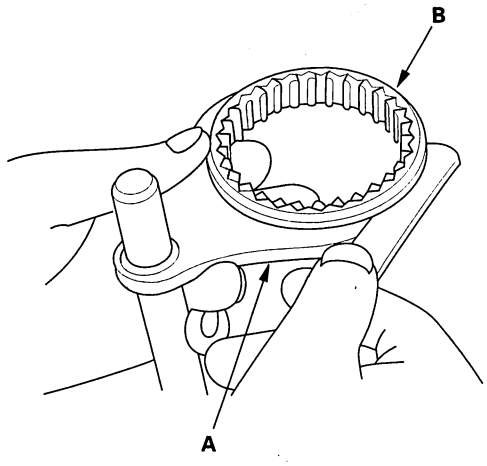

2. Measure the thickness of the shift fork fingers.

- If the thickness is not within the standard, replace the shift fork.
- If the thickness is within the standard, replace the synchro sleeve.
- If one arm of the shift fork shows more wear than others, the fork may be bent and needs to be replaced.

Standard: 7.4—7.6 mm (0.29—0.30 in.)

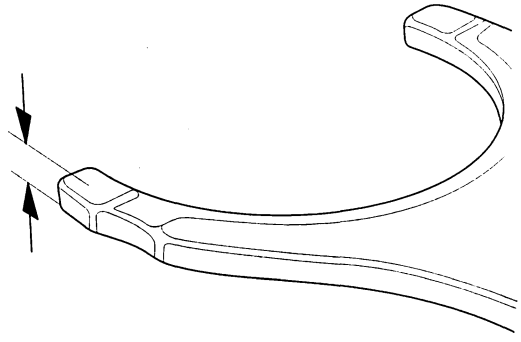

3. Measure the clearance between the shift fork (A) and the shift arm (B). If the clearance exceeds the service limit, go to step 4.

Standard: 0.2—0.5 mm (0.008—0.020 in.)
Service Limit: 0.6 mm (0.023 in.)

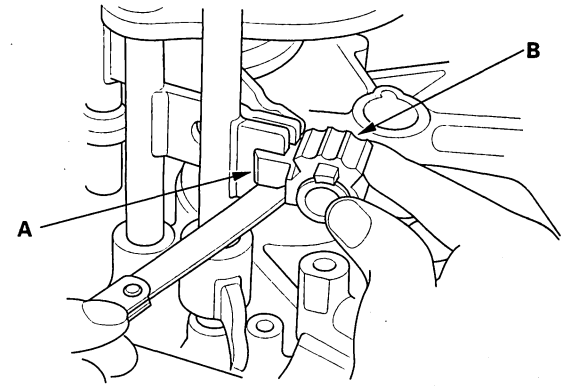

4. Measure the width of the shift arm.

- If the width is not within the standard, replace the shift arm.
- If the width is within the standard, replace the shift fork.

Standard: 16.9—17.0 mm (0.665—0.669 in.)

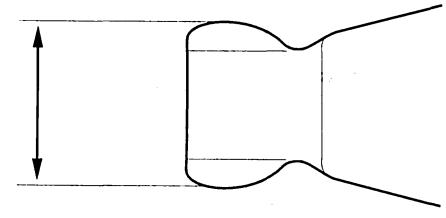

BACK

Protected by AR

Shift Fork Disassembly/Reassembly

Prior to reassembling, clean all the parts in solvent, dry them, and apply lubricant to all contact surfaces.

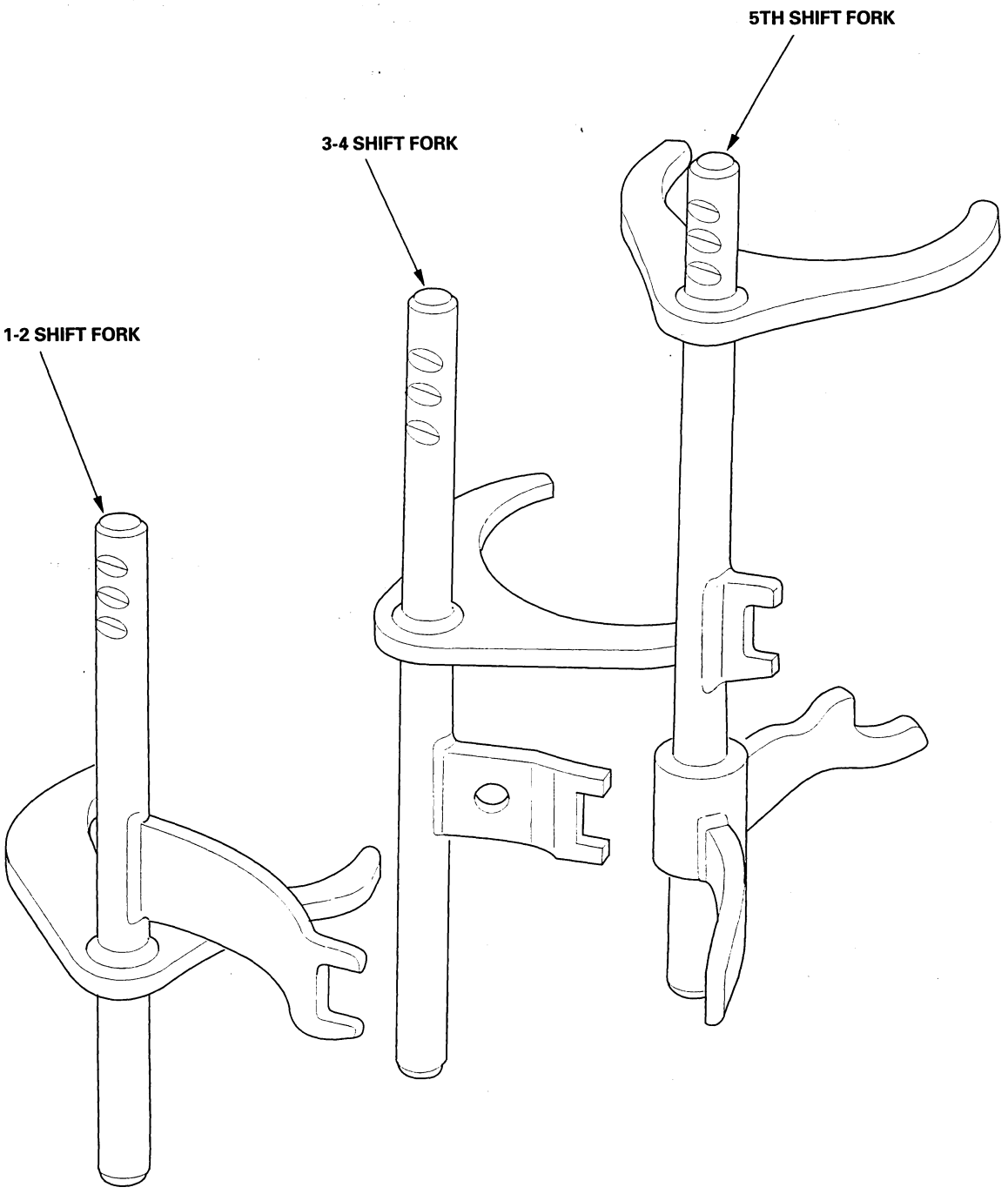

Protected by AR

Mainshaft Assembly Clearance Inspection

NOTE: If replacement is required, always replace the synchro sleeve and hub as a set.

1. Support the bearing inner race with an appropriate sized socket (A), and push down on the mainshaft (B).

   Standard: 0.06—0.16 mm (0.002—0.006 in.)
   Service Limit: 0.25 mm (0.010 in.)

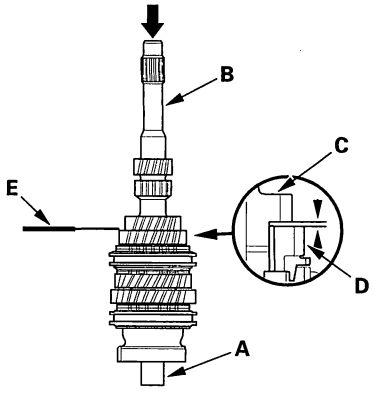

2. Measure the clearance between 2nd gear (C) and 3rd gear (D) with a feeler gauge (E).

   - If the clearance is more than the service limit, go to step 3.
   - If the clearance is within the service limit, go to step 4.

3. Measure the thickness of 3rd gear.

   - If the thickness is less than the service limit, replace 3rd gear.
   - If the thickness is within the service limit, replace the 3rd/4th synchro hub.

   Standard: 23.92—23.97 mm (0.941—0.944 in.)
   Service Limit: 23.80 mm (0.937 in.)

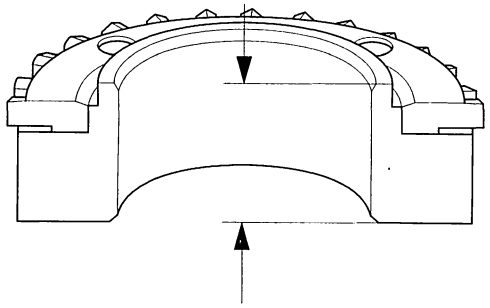

4. Measure the clearance between 4th gear (A) and the distance collar (B) with a dial indicator (C). If the clearance is more than the service limit, go to step 5.

   Standard: 0.06—0.16 mm (0.002—0.006 in.)
   Service Limit: 0.25 mm (0.010 in.)

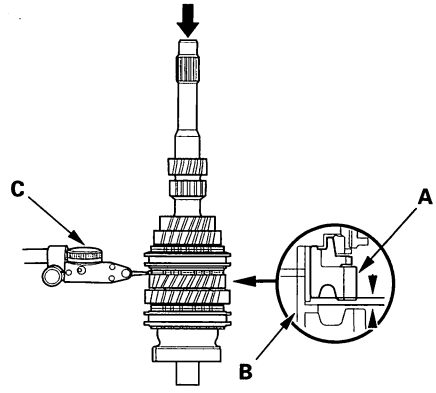

5. Measure distance ① on the distance collar.

   - If distance ① is not within the standard, replace the distance collar.
   - If distance ① is within the standard, go to step 6.

   Standard: 24.03—24.08 mm (0.946—0.947 in.)

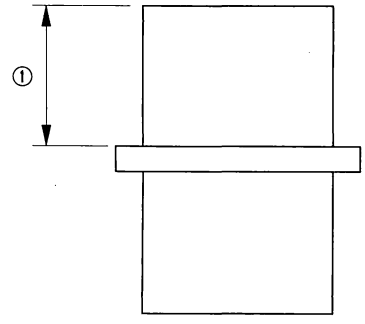

BACK

Protected by AR

6. Measure the thickness of 4th gear.

   - If the thickness is less than the service limit, replace 4th gear.
   - If the thickness is within the service limit, replace the 3rd/4th synchro hub.

   Standard: 23.92—23.97 mm (0.941—0.944 in.)
   Service Limit: 23.80 mm (0.937 in.)

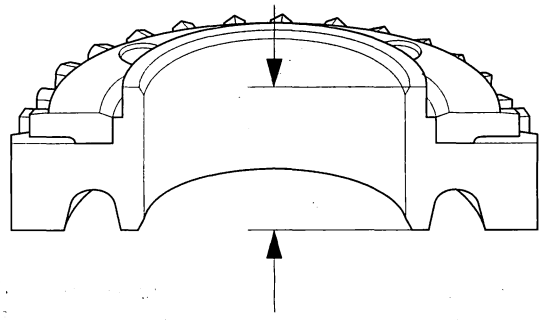

7. Measure the clearance between the distance collar (A) and 5th gear (B) with a dial indicator (C). If the clearance is more than the service limit, go to step 8.

   Standard: 0.06—0.16 mm (0.002—0.006 in.)
   Service Limit: 0.25 mm (0.010 in.)

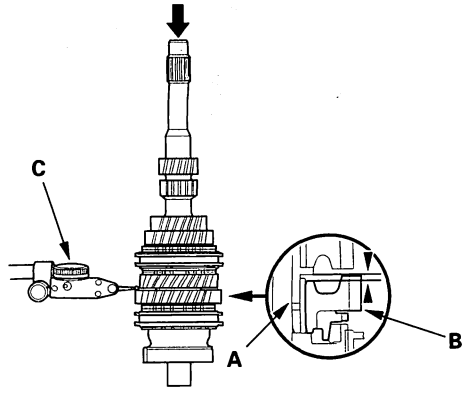

8. Measure distance ② on the distance collar.

   - If distance ② is not within the standard, replace the distance collar.
   - If distance ② is within the standard, go to step 9.

   Standard: 24.03—24.08 mm (0.946—0.947 in.)

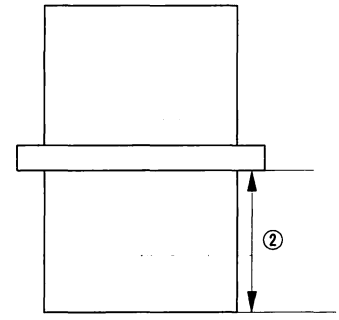

9. Measure the thickness of 5th gear.

   - If the thickness is less than the service limit, replace 5th gear.
   - If the thickness is within the service limit, replace the 5th synchro hub.

   Standard: 23.92—23.97 mm (0.941—0.944 in.)
   Service Limit: 23.80 mm (0.937 in.)

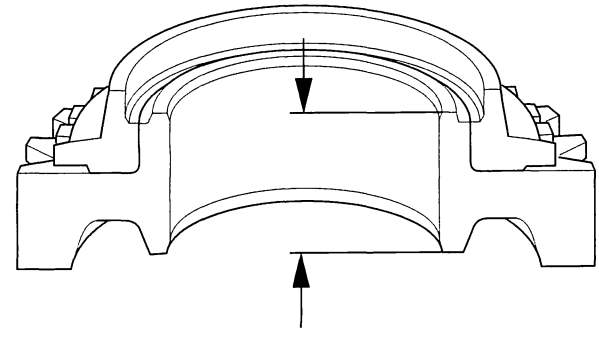

(cont'd)

Protected by AR

Mainshaft Assembly Clearance Inspection (cont'd)

10. Measure the thickness of the MBS distance collar.

    If the thickness is not within standard, replace the MBS distance collar.

    Standard: 23.95—24.05 mm (0.943—0.947 in.)

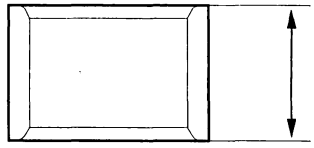

Mainshaft Disassembly

1. Remove the angular ball bearing (A) and the tapered cone ring using a commercially available bearing separator (B) and a commercially available bearing puller (C). Make sure the bearing separator is under the tapered cone ring.

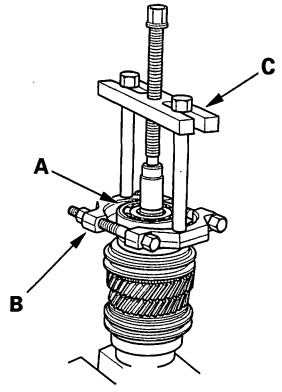

2. Support 5th gear (A) on steel blocks, and press the mainshaft out of the 5th synchro hub (B). Use of a jaw-type puller can damage the gear teeth.

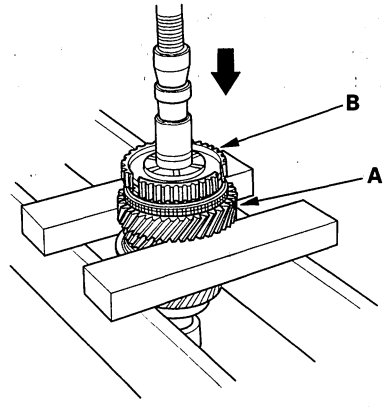

BACK

Protected by AR

3. Support 3rd gear (A) on steel blocks, and press the mainshaft out of the 3rd/4th synchro hub (B). Use of a jaw-type puller can damage the gear teeth.

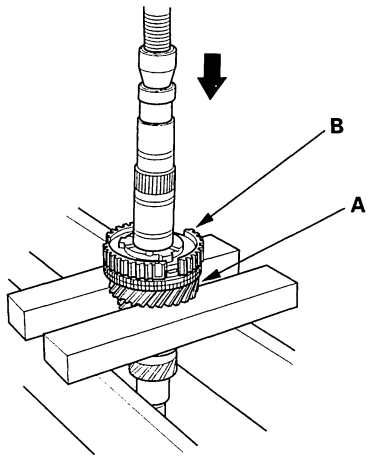

Mainshaft Inspection

1. Inspect the gear and bearing surfaces for wear and damage, then measure the mainshaft at points A, B, C, D, and E. If any part of the mainshaft is less than the service limit, replace it.

Standard:
A Ball bearing surface (transmission housing side):
27.987—28.000 mm (1.1019—1.1024 in.)
B Distance collar surface:
31.984—32.000 mm (1.2594—1.2598 in.)
C Needle bearing surface:
38.984—39.000 mm (1.5348—1.5354 in.)
D Ball bearing surface (clutch housing side):
27.977—27.990 mm (1.1015—1.1020 in.)
E Bushing surface:
20.80—20.85 mm (0.8189—0.8209 in.)
Service Limit:
A: 27.94 mm (1.100 in.)
B: 31.93 mm (1.257 in.)
C: 38.93 mm (1.533 in.)
D: 27.94 mm (1.100 in.)
E: 20.75 mm (0.817 in.)

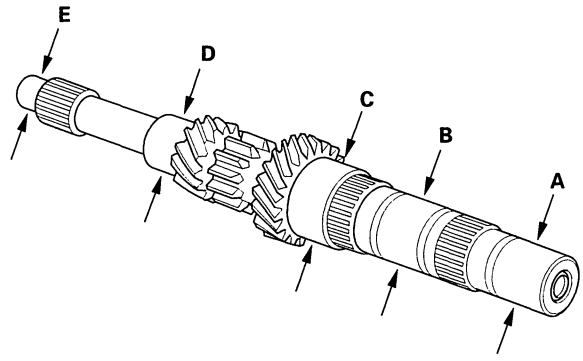

(cont'd)

Protected by AR

Mainshaft Inspection (cont'd)

2. Inspect the runout by supporting both ends of the mainshaft. Then rotate the mainshaft two complete turns while measuring with a dial gauge. If the runout is more than the service limit, replace the mainshaft.

Standard: **0.02 mm (0.001 in.) max.**
Service Limit: **0.05 mm (0.002 in.)**

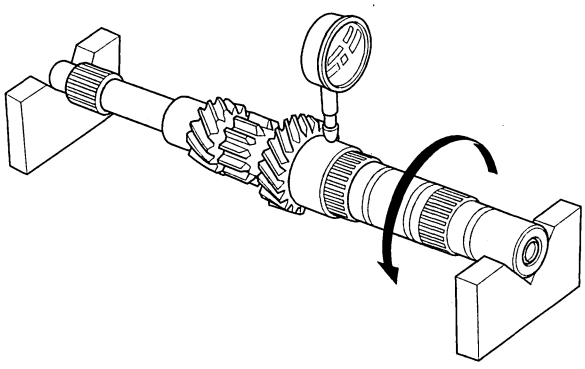

BACK

Protected by AR

Mainshaft Reassembly

Exploded View

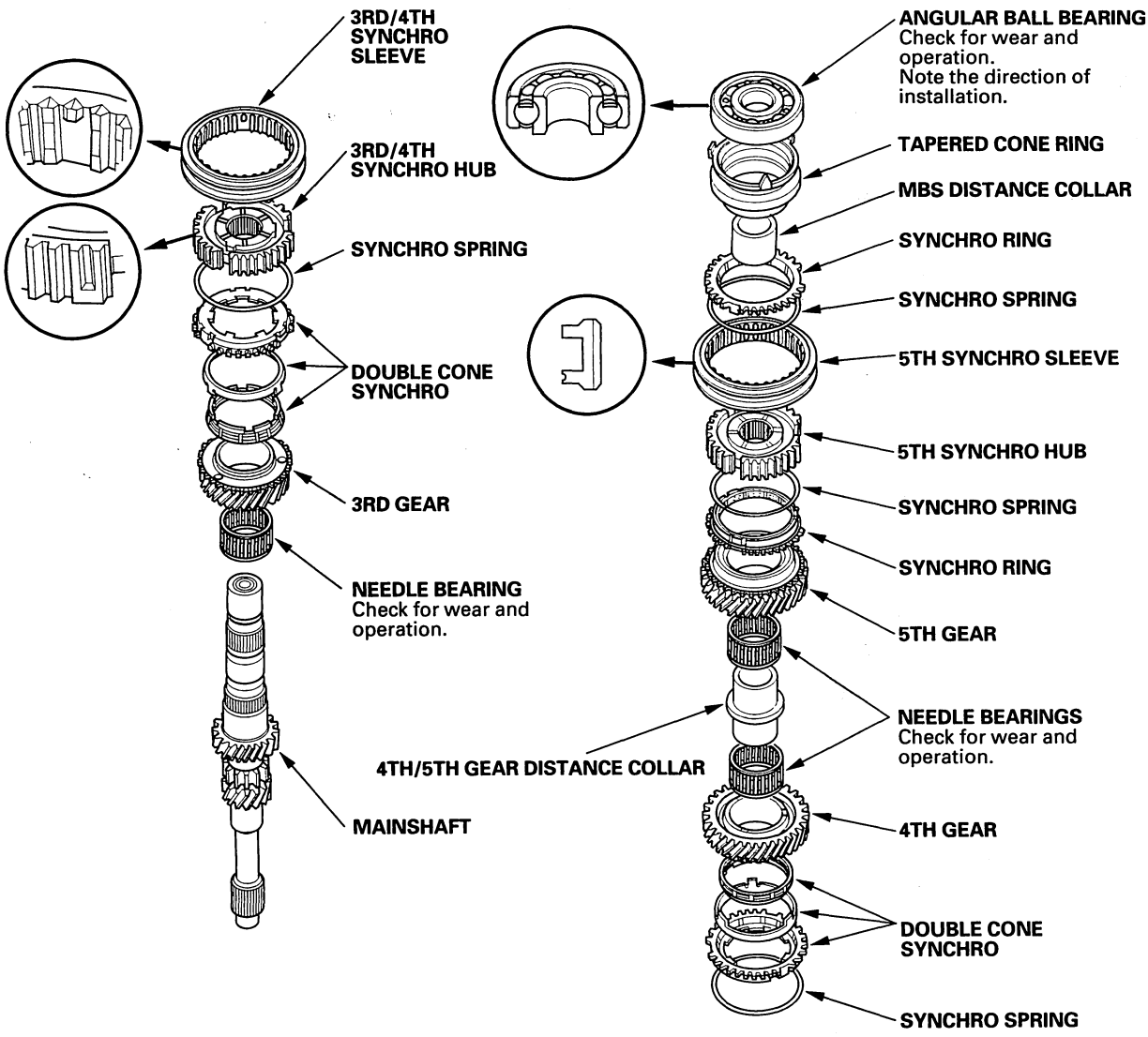

(cont'd)

Protected by AR

Mainshaft Reassembly (cont'd)

Special Tools Required
- Driver, 40 mm I.D. 07746-0030100
- Attachment, 30 mm I.D. 07746-0030300

NOTE: Refer to the Exploded View as needed during this procedure.

1. Clean all the parts in solvent, dry them, and apply lubricant to all contact surfaces except the 3rd/4th and 5th synchro hubs.

2. Install the needle bearing and 3rd gear on the mainshaft.

3. Install the double cone synchro assembly (A) by aligning the synchro cone fingers (B) with the holes in 3rd gear (C), then install the synchro spring (D).

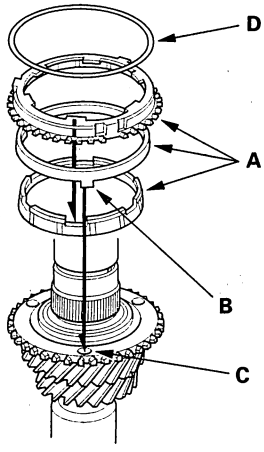

4. Install the 3rd/4th synchro hub (A) by aligning the synchro cone fingers (B) with the grooves in the 3rd/4th synchro hub (C).

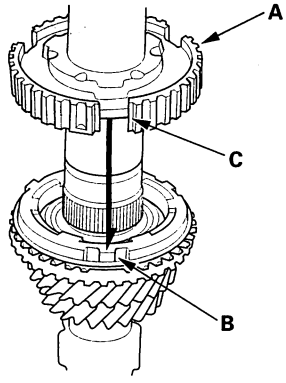

5. Install the 3rd/4th synchro hub (A) using the special tool.

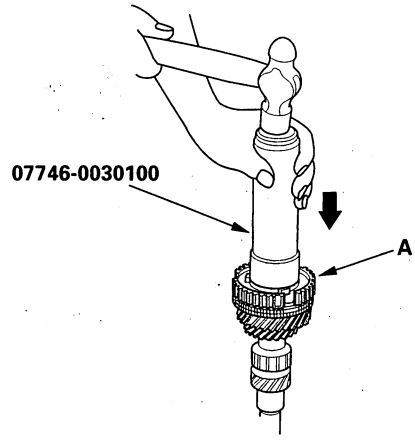

6. Install the 3rd/4th synchro sleeve (A) by aligning the stops (B) with the 3rd/4th synchro sleeve and hub. After installing, check the operation of the 3rd/4th synchro hub set.

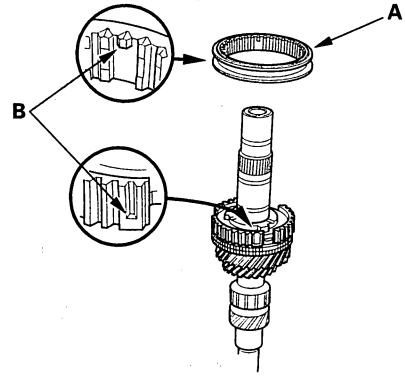

BACK

Protected by AR

7. Install the synchro spring (A).

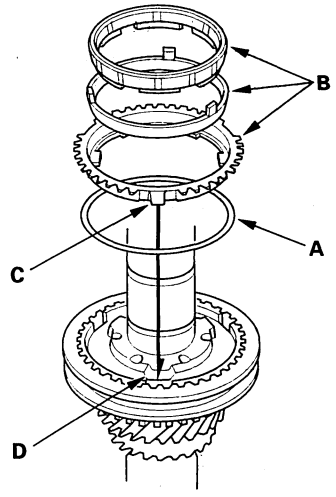

8. Install the double cone synchro assembly (B) by aligning the synchro cone fingers (C) with the grooves in the 3rd/4th synchro hub (D).

9. Install 4th gear (A) by aligning the synchro cone fingers (B) with holes in 4th gear (C).

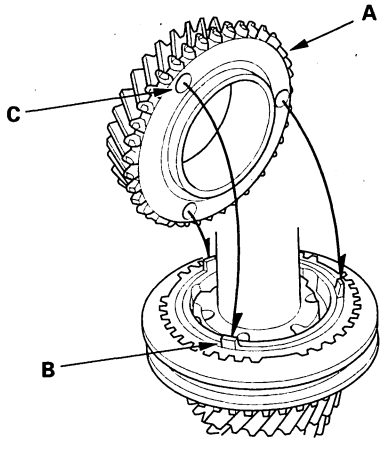

10. Install the needle bearings, distance collar, 5th gear, and 5th gear synchro spring and ring.

11. Install the 5th synchro hub (A) by aligning the synchro cone fingers (B) with the grooves in the 5th synchro hub (C).

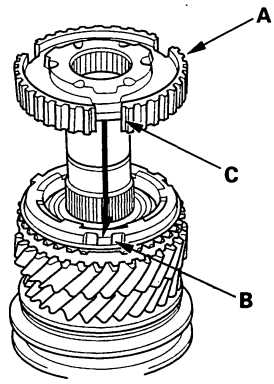

12. Install the 5th synchro hub (A) using the special tools.

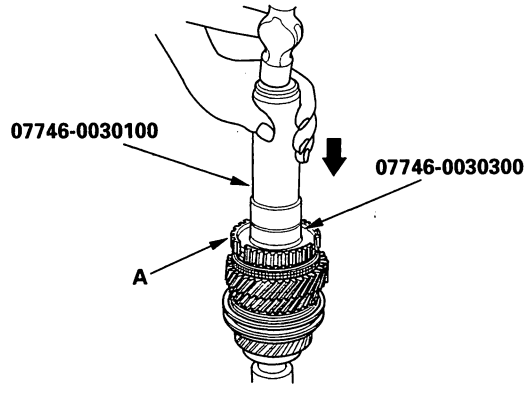

13. Install the 5th synchro sleeve.

(cont'd)

Protected by AR

Mainshaft Reassembly (cont'd)

14. Install the synchro spring (A).

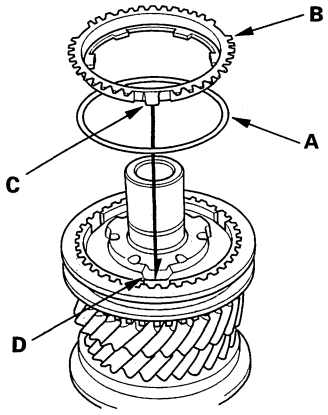

15. Install the synchro ring (B) by aligning the synchro cone fingers (C) with the grooves in the 5th synchro hub (D).

16. Install the new ball bearing (A) using the special tools and a press (B).

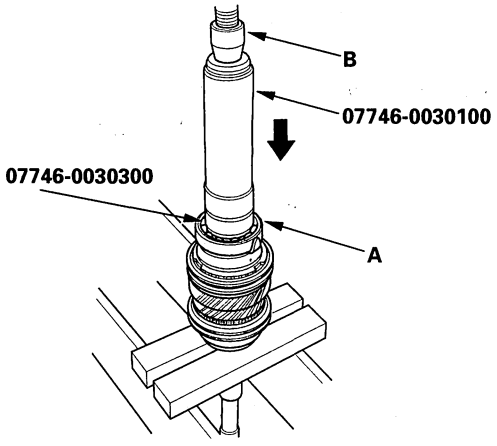

Countershaft Assembly Clearance Inspection

1. Measure the clearance between 1st gear (A) and the distance collar (B) with a feeler gauge (C). If the clearance is more than the service limit, go to step 2.

Standard: **0.06—0.16 mm (0.002—0.006 in.)**
Service Limit: **0.25 mm (0.010 in.)**

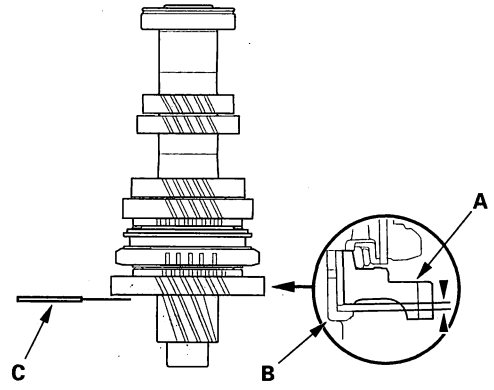

2. Measure the thickness of the distance collar.

- If the thickness is not within the standard, replace the distance collar.
- If the thickness is within the standard, go to step 3.

Standard: 23.03—23.08 mm (0.907—0.909 in.)

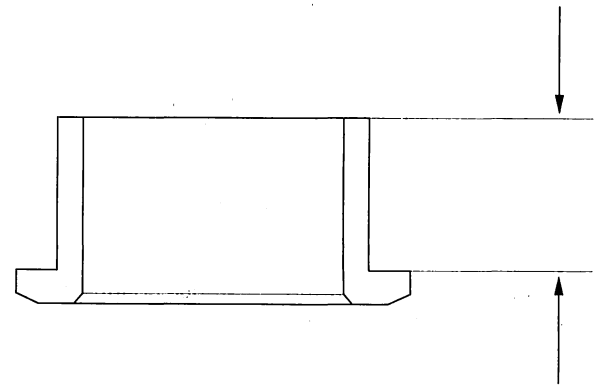

BACK

Protected by AR

3. Measure the thickness of 1st gear.

   - If the thickness is less than the service limit, replace 1st gear.
   - If the thickness is within the service limit, replace the 1st/2nd synchro hub.

   Standard: 22.92—22.97 mm (0.902—0.904 in.)
   Service Limit: 22.87 mm (0.900 in.)

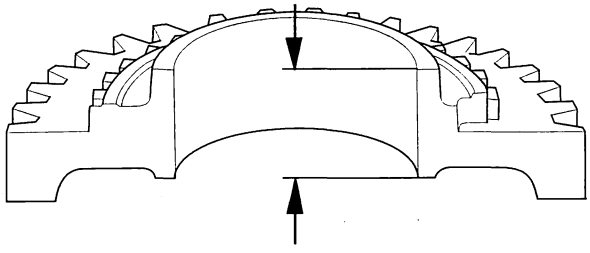

4. Measure the clearance between 2nd gear (A) and 3rd gear (B) with a feeler gauge (C). If the clearance is more than the service limit, go to step 5.

   Standard: 0.06—0.16 mm (0.002—0.006 in.)
   Service Limit: 0.25 mm (0.010 in.)

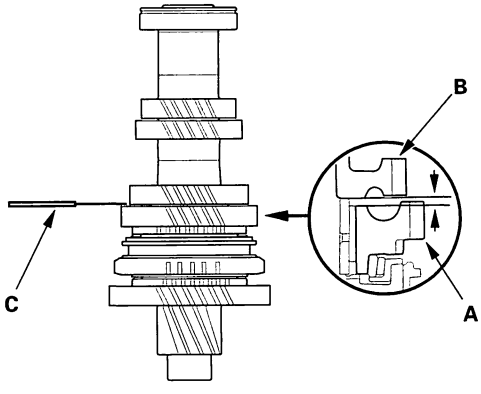

5. Measure the thickness of the distance collar.

   - If the thickness is not within the standard, replace the distance collar.
   - If the thickness *is within* the standard, go to step 6.

   Standard: 28.03—28.08 mm (1.104—1.106 in.)

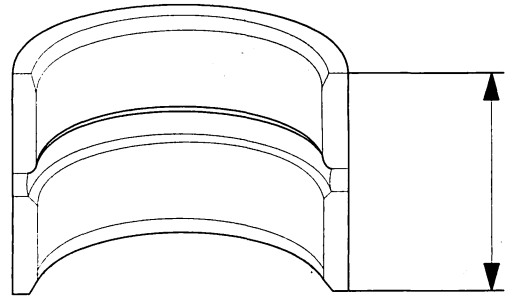

6. Measure the thickness of 2nd gear.

   - If the thickness is less than the service limit, replace 2nd gear.
   - If the thickness is within the service limit, replace the 1st/2nd synchro hub.

   Standard: 27.92—27.97 mm (1.099—1.101 in.)
   Service Limit: 27.87 mm (1.097 in.)

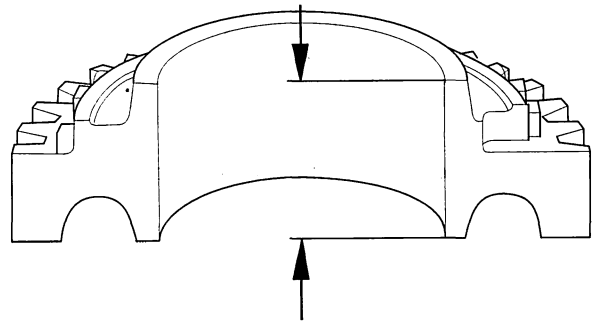

Protected by AR

Countershaft Disassembly

1. Securely clamp the countershaft assembly in a vise with wood blocks.

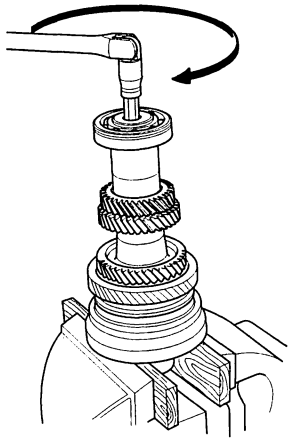

2. Remove the special bolt (left-hand threads).

3. Support the ball bearing (A) on steel blocks (B), then use a press (C) and an attachment (D) to press the countershaft out of the ball bearing.

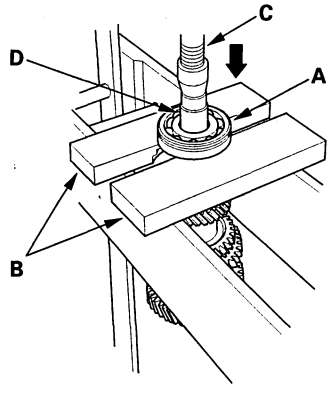

4. Remove the 35 mm shim and distance collar.

5. Support 4th gear (A) on steel blocks (B), then use a press (C) and an attachment (D) to press the countershaft (E) out of 5th gear.

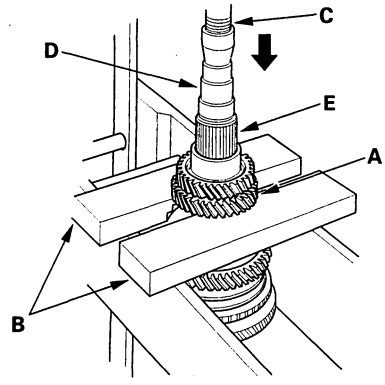

6. Support 2nd gear (A) on steel blocks (B), then use a press (C) and an attachment (D) to press the countershaft (E) out of 3rd gear.

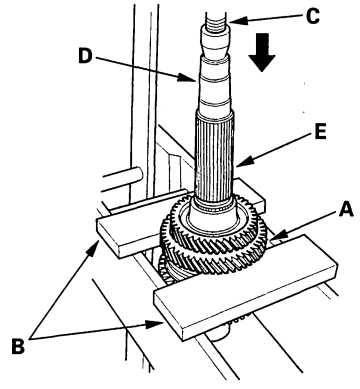

BACK

Protected by AR

Countershaft Inspection

1. Inspect the gear and bearing surfaces for wear and damage, then measure the countershaft at points A, B, and C. If any part of the countershaft is less than the service limit, replace it.

   Standard:
   A Ball bearing surface (transmission housing side):
   30.020—30.033 mm (1.1819—1.1824 in.)
   B Distance collar surface:
   39.937—39.950 mm (1.5723—1.5728 in.)
   C Needle bearing surface (clutch housing side):
   40.000—40.015 mm (1.5748—1.5754 in.)
   Service Limit:
   A: 29.97 mm (1.180 in.)
   B: 39.88 mm (1.570 in.)
   C: 39.95 mm (1.573 in.)

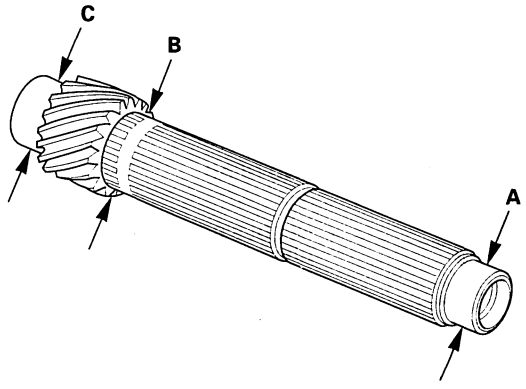

2. Inspect the runout by supporting both ends of the countershaft. Then rotate the countershaft two complete turns while measuring with a dial gauge. If the runout exceeds the service limit, replace the countershaft.

   Standard: 0.02 mm (0.001 in.) max.
   Service Limit: 0.05 mm (0.002 in.)

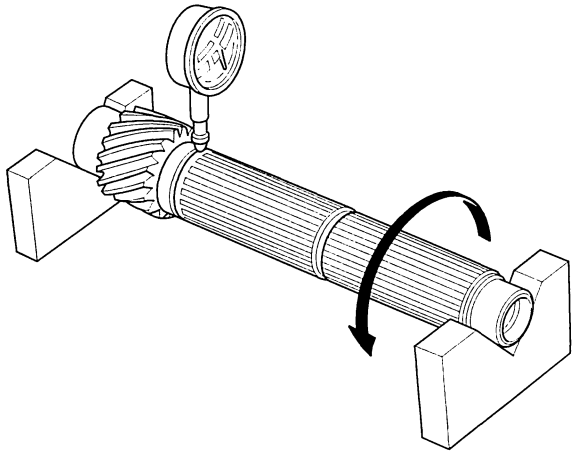

BACK

Protected by AR

Countershaft Reassembly

Exploded View

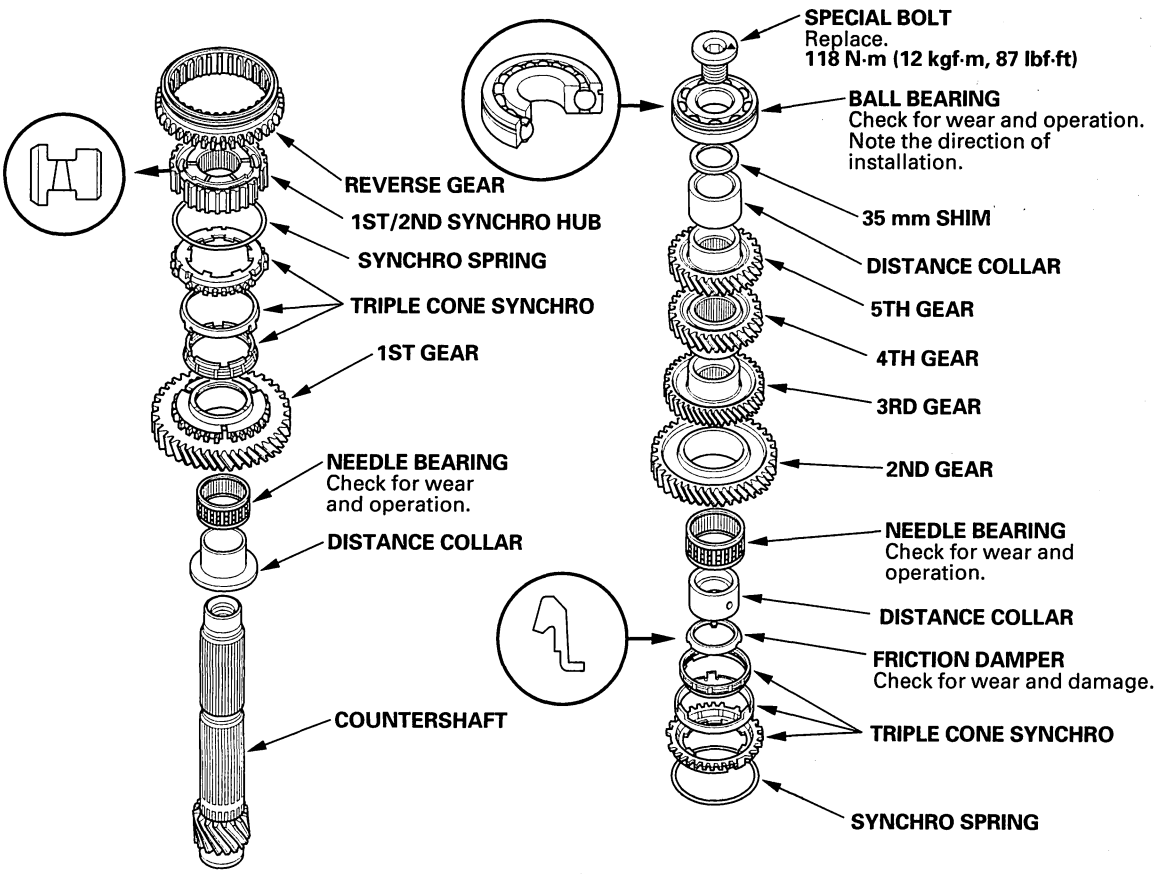

BACK

Protected by AR

Special Tools Required
- Driver, 40 mm I.D. 07746-0030100
- Attachment, 30 mm 07746-0030300

NOTE: Refer to the Exploded View as needed during this procedure.

1. Clean all parts in solvent, dry them, and apply lubricant to all contact surfaces.

2. Install the distance collar and needle bearing onto the countershaft.

3. Install the triple cone synchro assembly (A) by aligning the synchro cone fingers (B) with the 1st gear grooves (C), then install the synchro spring (D).

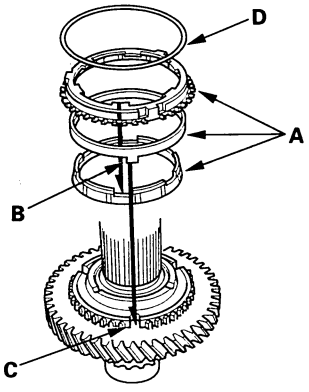

4. Install the 1st/2nd synchro hub (A) by aligning the synchro cone fingers (B) with the 1st/2nd synchro hub grooves (C).

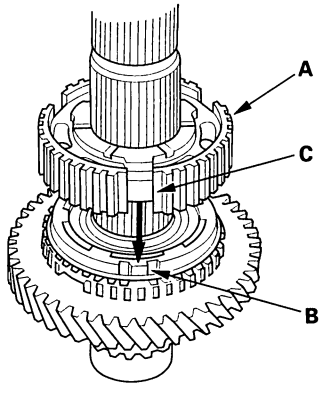

5. Install the reverse gear.

6. Install the synchro spring (A).

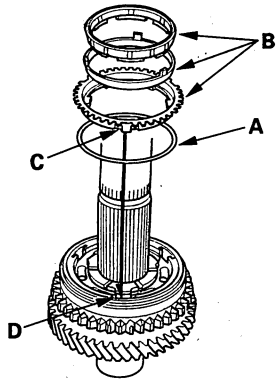

7. Install the triple cone synchro assembly (B) by aligning the synchro cone fingers (C) with the 1st/2nd synchro hub grooves (D).

8. Install the distance collar (A) and friction damper (B) by aligning the friction damper fingers (C) with the 1st/2nd synchro hub grooves (D).

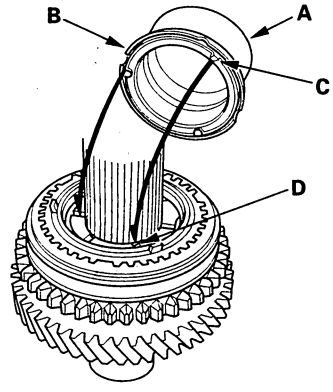

(cont'd)

Protected by AR

Countershaft Reassembly (cont'd)

9. Install the needle bearing.

10. Install 2nd gear (A) by aligning the synchro cone fingers (B) with the 2nd gear grooves (C).

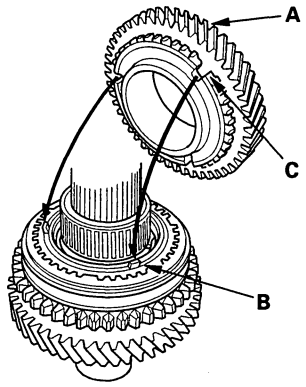

11. Support the countershaft (A) on steel blocks, then install 3rd gear (B) using the special tool and a press (C). Do not exceed the maximum pressure.

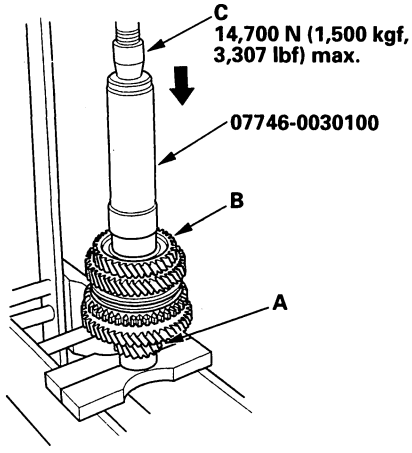

12. Install 4th gear (A) using the special tool and a press (B). Do not exceed the maximum pressure.

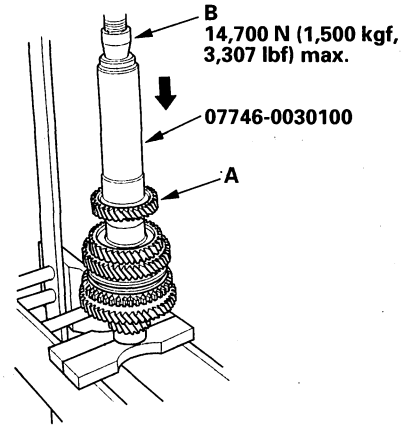

13. Install 5th gear (A) using the special tool and a press (B). Do not exceed the maximum pressure.

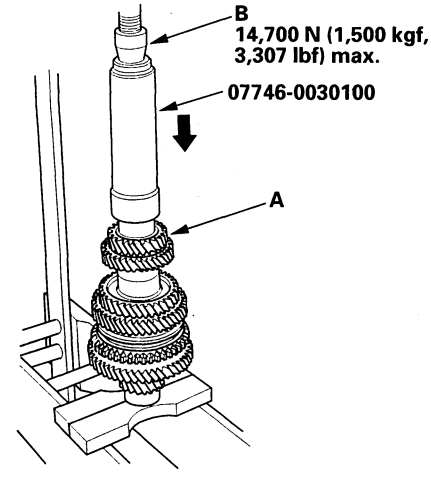

BACK

Protected by AR

14. Install the distance collar (A), 35 mm shim, and old ball bearing (B) using the special tools and a press (C).

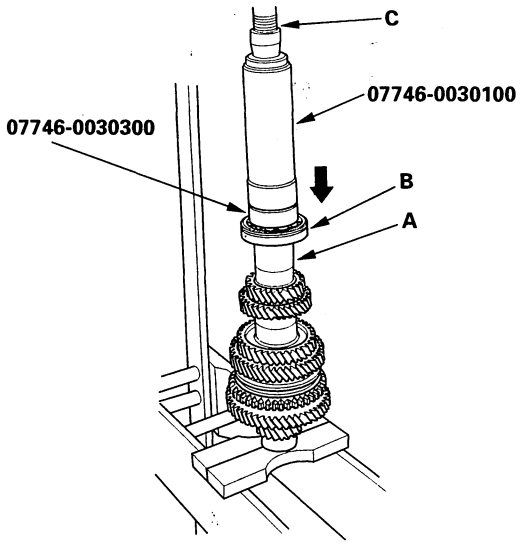

15. Measure the clearance between the old bearing (A) and the 35 mm shim (B) with a feeler gauge (C).

Standard: 0.04—0.10 mm (0.0016—0.0039 in.)

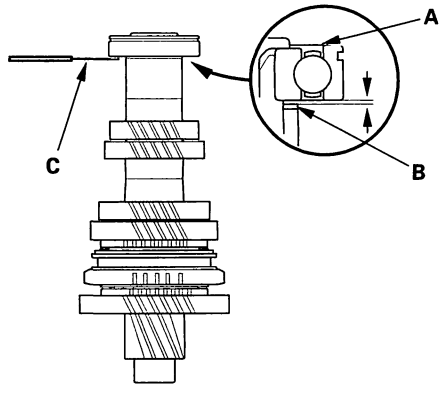

16. If the clearance is more than the standard, select a new shim from the following table. If the clearance measured in step 15 is within the standard, replace only the ball bearing.

35 mm Shim

	Part Number	Thickness
A	23981-PPP-000	0.87 mm (0.034 in.)
AA	23981-PPP-900	0.91 mm (0.036 in.)
B	23982-PPP-000	0.95 mm (0.037 in.)
AB	23982-PPP-900	0.99 mm (0.039 in.)
C	23983-PPP-000	1.03 mm (0.041 in.)
AC	23983-PPP-900	1.07 mm (0.042 in.)
D	23984-PPP-000	1.11 mm (0.044 in.)
AD	23984-PPP-900	1.15 mm (0.045 in.)
E	23985-PPP-000	1.19 mm (0.047 in.)
AE	23985-PPP-900	1.23 mm (0.048 in.)
F	23986-PPP-000	1.27 mm (0.050 in.)
AF	23986-PPP-900	1.31 mm (0.052 in.)
G	23987-PPP-000	1.35 mm (0.053 in.)
AG	23987-PPP-900	1.39 mm (0.055 in.)
H	23988-PPP-000	1.43 mm (0.056 in.)
AH	23988-PPP-900	1.47 mm (0.058 in.)
J	23989-PPP-000	1.51 mm (0.060 in.)
AJ	23989-PPP-900	1.55 mm (0.061 in.)
K	23990-PPP-000	1.59 mm (0.063 in.)
AK	23990-PPP-900	1.63 mm (0.064 in.)
L	23991-PPP-000	1.67 mm (0.066 in.)
AL	23991-PPP-900	1.71 mm (0.067 in.)
M	23992-PPP-000	1.75 mm (0.069 in.)
AM	23992-PPP-900	1.79 mm (0.070 in.)
N	23993-PPP-000	1.83 mm (0.072 in.)
AN	23993-PPP-900	1.87 mm (0.074 in.)
P	23994-PPP-000	1.91 mm (0.075 in.)
AP	23994-PPP-900	1.95 mm (0.077 in.)
O	23995-PPP-000	1.99 mm (0.078 in.)

(cont'd)

Protected by AR

Countershaft Reassembly (cont'd)

17. Support the ball bearing (A) on steel blocks (B), then use a press (C) and an attachment (D) to press the countershaft (E) out of the ball bearing.

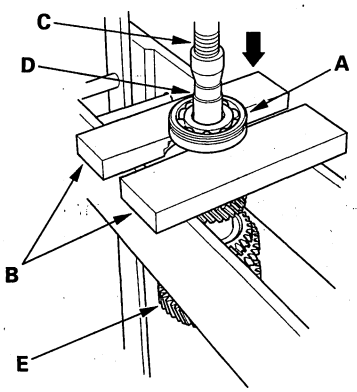

18. If necessary, install the 35 mm shim selected in step 16, then recheck the clearance.

19. Install the distance collar (A), 35 mm shim, and new ball bearing (B) using the special tools and a press (C).

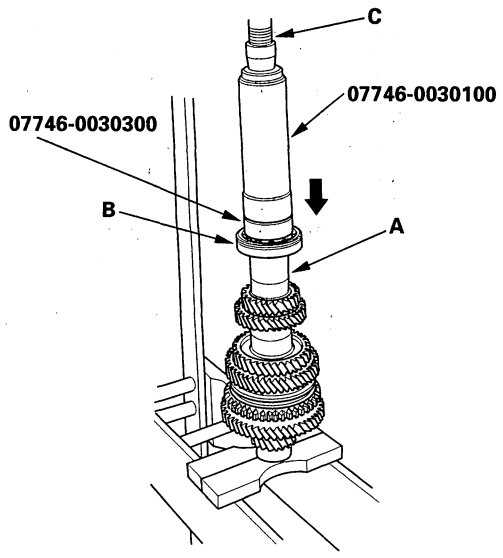

20. Securely clamp the countershaft assembly in a bench vise with wood blocks (A).

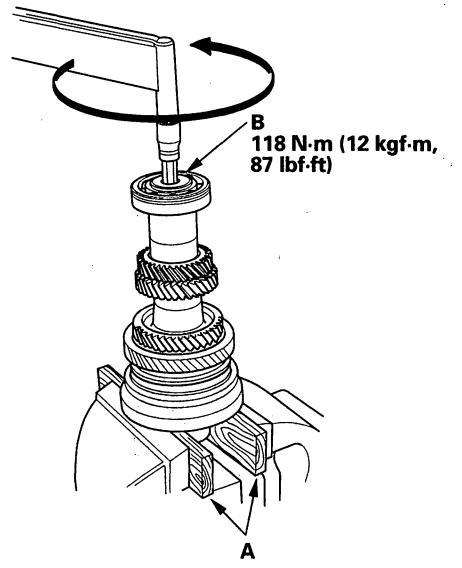

21. Tighten the new special bolt (B) (left-hand threads).

BACK

Protected by AR

Synchro Sleeve and Hub Inspection and Reassembly

1. Inspect gear teeth on all synchro hubs and synchro sleeves for wear (rounded off corners).
2. Install each synchro hub (A) in its mating synchro sleeve (B), and check for free movement. Make sure you match the three sets of longer teeth (C) (120 degrees apart) on the synchro sleeve with the three sets of deeper grooves (D) in the synchro hub. Do not install the synchro sleeve with its longer teeth in the 1st/2nd synchro hub slots (E) because it will damage the spring ring.

   NOTE: If replacement is required, always replace the synchro sleeve and synchro hub as a set.

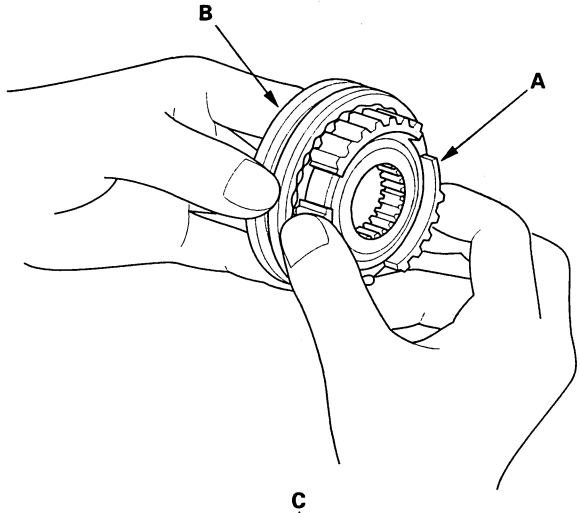

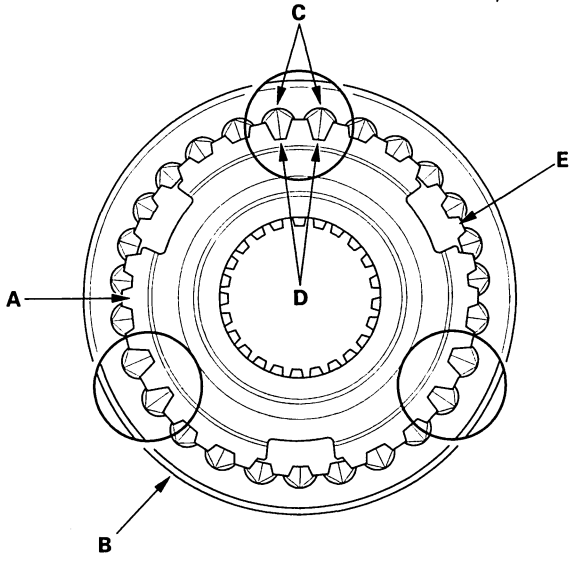

Synchro Ring and Gear Inspection

1. Inspect the inside of each synchro ring (A) for wear. Inspect the teeth (B) on each synchro ring for wear (rounded off).

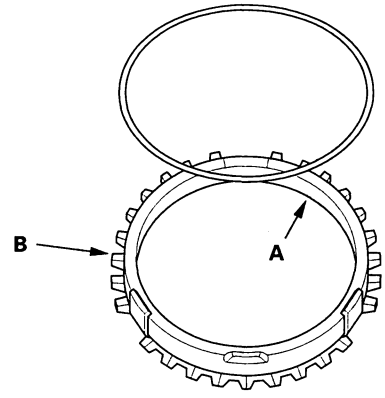

Example of synchro ring teeth



2. Inspect the teeth (C) on each synchro sleeve and matching teeth on each gear for wear (rounded off).

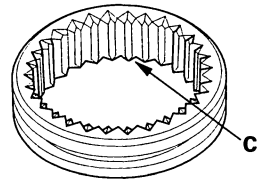

Example of synchro sleeve teeth and gear teeth

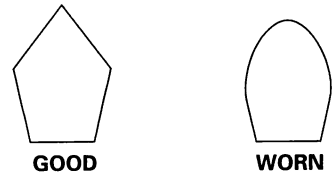

(cont'd)

Protected by AR

Synchro Ring and Gear Inspection (cont'd)

3. Inspect the thrust surface (D) on each gear hub for wear.

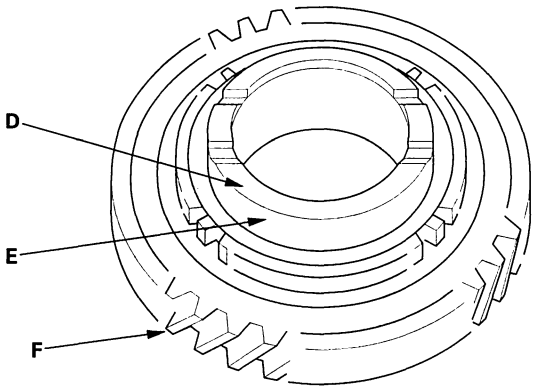

4. Inspect the cone surface (E) on each gear hub for wear and roughness.

5. Inspect the teeth on all gears (F) for uneven wear, scoring, galling, and cracks.

6. Coat the cone surface of each gear (E) with oil, and place its synchro ring on it. Rotate the synchro ring, making sure that it does not slip.

7. Measure the clearance between each gear (A) and its synchro ring (B) all around the gear. Hold the synchro ring against the gear evenly while measuring the clearance. If the clearance is less than the service limit, replace the synchro ring and gear.

Synchro Ring-to-Gear Clearance
Standard: 0.70—1.49 mm (0.028—0.059 in.)
Service Limit: 0.4 mm (0.016 in.)

Double Cone Synchro and Triple Cone Synchro-to-Gear Clearance
Standard:
①: Outer Synchro Ring (B) to Synchro Cone (C) 0.70—1.19 mm (0.028—0.047 in.)
②: Synchro Cone (C) to Gear (A) 0.50—1.04 mm (0.020—0.041 in.)
③: Outer Synchro Ring (B) to Gear (A) 0.95—1.68 mm (0.037—0.066 in.)
Service Limit:
①: 0.3 mm (0.012 in.)
②: 0.3 mm (0.012 in.)
③: 0.6 mm (0.024 in.)

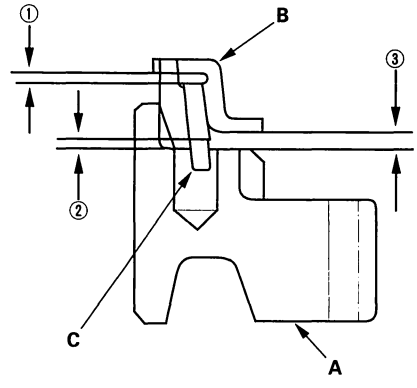

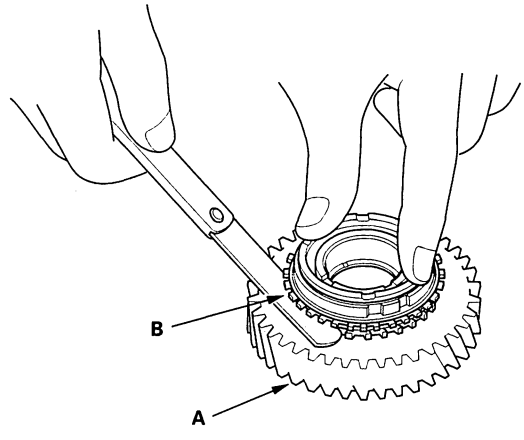

BACK

Protected by AR

Mainshaft Bearing and Oil Seal Replacement

Special Tools Required
- Oil seal driver 07JAD-PL90100
- Adjustable bearing puller, 20—40 mm 07736-A01000B
- Attachment, 42 x 47 mm 07746-0010300
- Driver 07749-0010000

1. Remove the differential assembly.

2. Remove the ball bearing (A) from the clutch housing (B) using the special tool and a commercially available 3/8"-16 slide hammer (C).

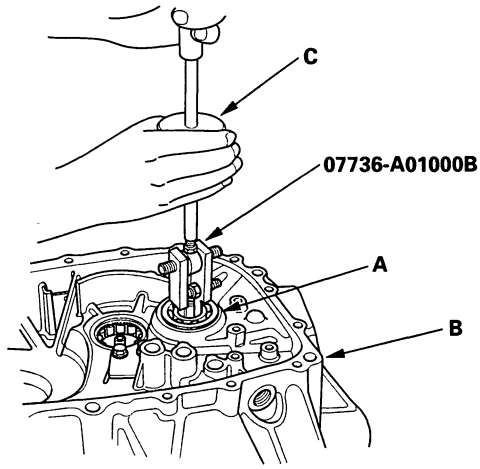

3. Remove the oil seal (A) from the clutch housing. Be careful when removing the seal so the clutch housing is not damaged.

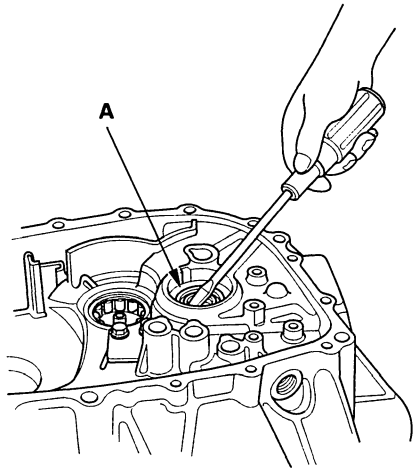

4. Drive in the new oil seal from the transmission side using the special tools.

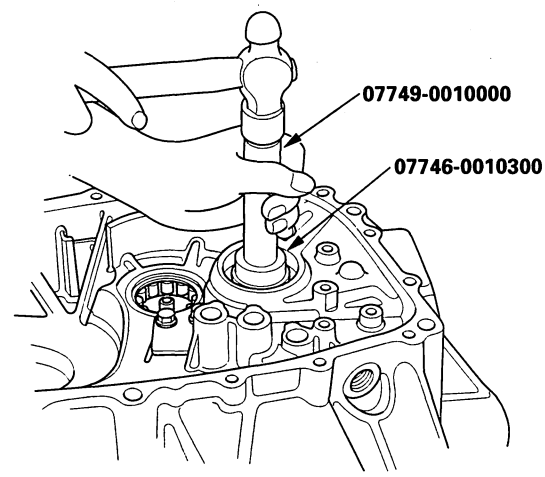

5. Drive in the new ball bearing (A) from the transmission side using the special tools.

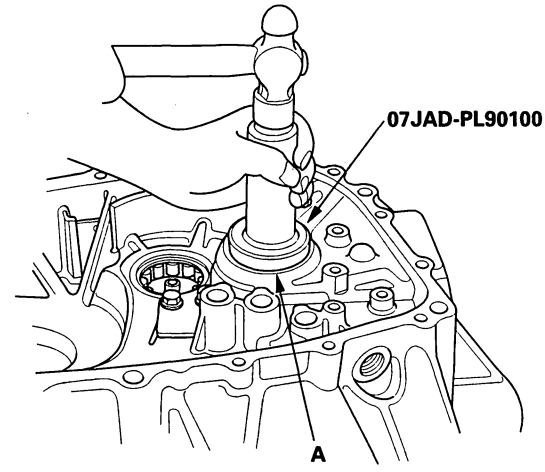

Protected by AR

Countershaft Bearing Replacement

Special Tools Required
- Oil seal driver 07JAD-PL90100
- Adjustable bearing puller, 20—40 mm 07736-A01000B
- Slide hammer, commercially available

1. Remove the bearing set plate (A) from the clutch housing (B).

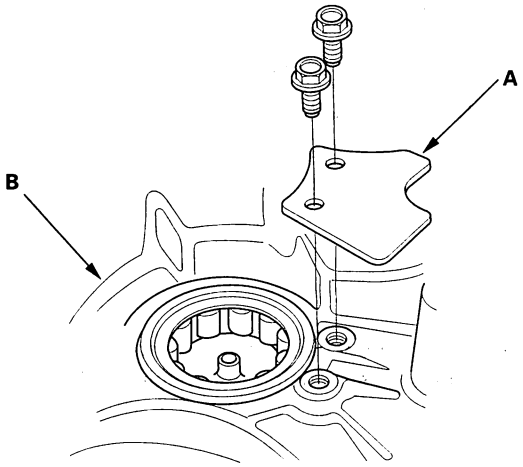

2. Remove the needle bearing (A) using the special tool and a commercially available 3/8''-16 slide hammer (B), then remove the oil guide plate C.

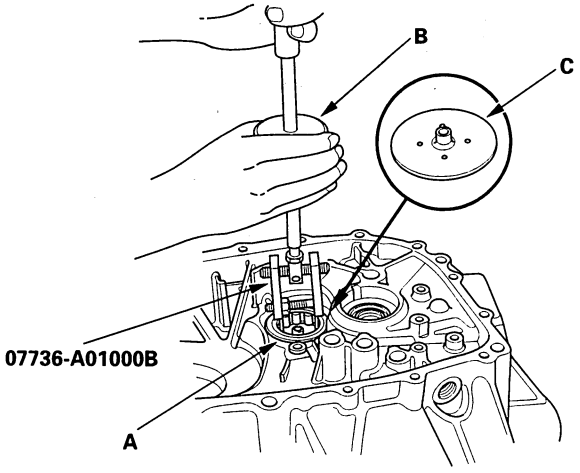

3. Position the oil guide plate C and new needle bearing (A) in the bore of the clutch housing (B).

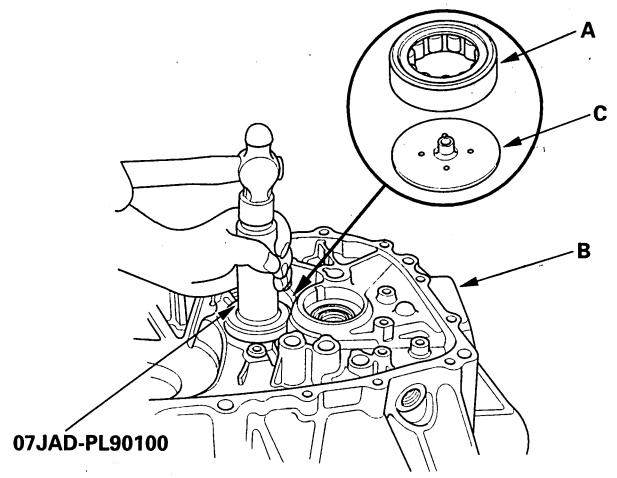

4. Install the needle bearing using the special tools.

5. Install the bearing set plate (A) with bolts (B).

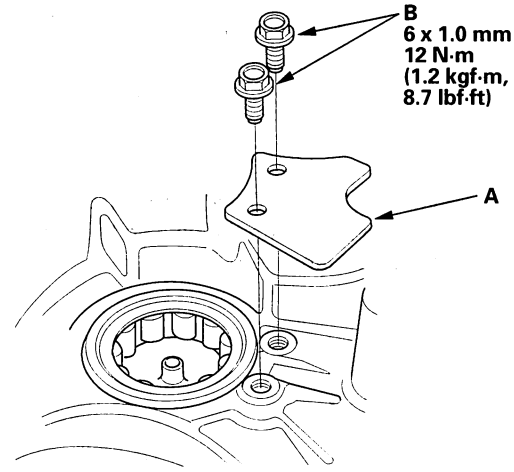

BACK

Protected by AR

Mainshaft Thrust Clearance Adjustment

Special Tools Required
- Mainshaft base 07GAJ-PG20130
- Mainshaft holder 07GAJ-PG20110

1. Remove the 72 mm shim (A) and oil guide plate M from the transmission housing (B).

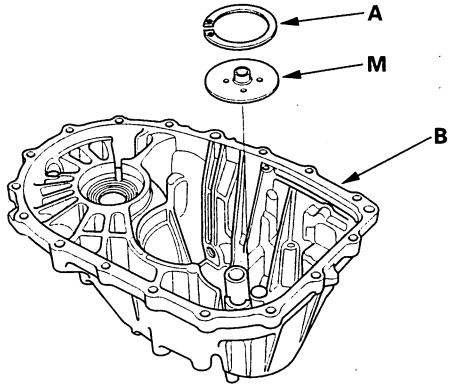

2. Thoroughly clean the spring washer (A) and washer (B) before installing them on the clutch housing side ball bearing (C). Note the installation direction of the spring washer.

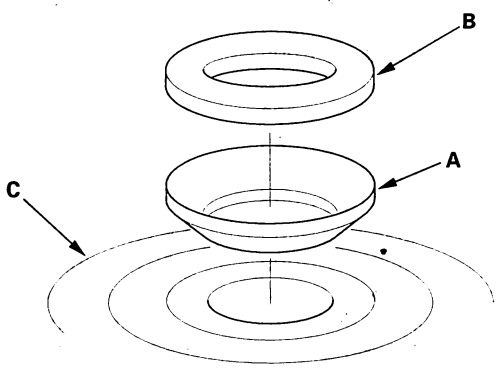

3. Install the 3rd/4th synchro hub, the distance collar, the 5th synchro hub, the distance collar, and the ball bearing on the mainshaft.

   NOTE: Refer to the mainshaft reassembly Exploded View (see page 13-33).

4. Install the mainshaft in the clutch housing.

5. Place the transmission housing over the mainshaft and onto the clutch housing.

6. Secure the clutch and transmission housings with several 8 mm bolts.

   NOTE: It is not necessary to use sealing agent between the housing for this procedure.

7. Lightly tap on the mainshaft with a plastic hammer.

8. Attach the special tool to the mainshaft as follows:

   - Back-out the mainshaft holder bolt (A), and loosen the two hex bolts (B).
   - Fit the holder over the mainshaft so its lip is towards the transmission.
   - Align the mainshaft holder lip around the groove at the inside of the mainshaft splines, then tighten the hex bolts.

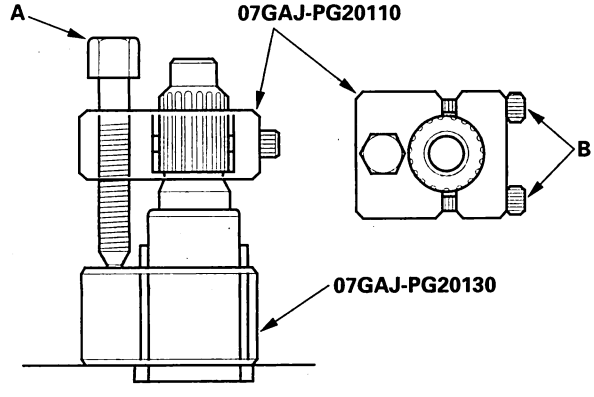

9. Fully seat the mainshaft by tapping its end with a plastic hammer.

10. Thread the mainshaft holder bolt in until it just contacts the wide surface of the mainshaft base.

(cont'd)

Protected by AR

Mainshaft Thrust Clearance Adjustment (cont'd)

11. Zero a dial gauge (A) on the end of the mainshaft.

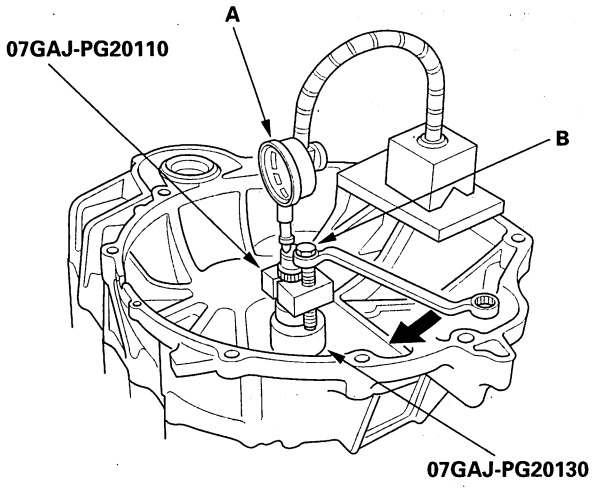

12. Turn the mainshaft holder bolt (B) clockwise; stop turning when the dial gauge has reached its maximum movement. The reading on the dial gauge is the amount of mainshaft thrust clearance.

    NOTE: Do not turn the mainshaft holder bolt more than 60 degrees after the needle of the dial gauge stops moving. Applying more pressure with the mainshaft holder bolt could damage the transmission.

13. If the reading is with in the standard, the clearance is correct. If the reading is not within the standard, select the appropriate shim needed from the table, and recheck the thrust clearance.

    Standard: 0.11—0.17 mm (0.004—0.007 in.)

    (Example)
    Measure reading: 1.93 mm (0.0759 in.)

    Subtract the total clearance measurement from the middle of the clearance standard 0.14 mm (0.0056 in.)

    1.93—0.14=1.79 mm (0.0704 in.)

    Select the shim closest to the amount calculated, for example the 1.80 mm (0.0709 in.) shim.

14. With oil guide plate M and the appropriate size shim installed in the transmission housing, check the thrust clearance again to verify the clearance is within the standard.

72 mm Shim

	Part Number	Thickness
A	23931-P21-000	0.60 mm (0.024 in.)
B	23932-P21-000	0.63 mm (0.025 in.)
C	23933-P21-000	0.66 mm (0.026 in.)
D	23934-P21-000	0.69 mm (0.027 in.)
E	23935-P21-000	0.72 mm (0.028 in.)
F	23936-P21-000	0.75 mm (0.030 in.)
G	23937-P21-000	0.78 mm (0.031 in.)
H	23938-P21-000	0.81 mm (0.032 in.)
I	23939-P21-000	0.84 mm (0.033 in.)
J	23940-P21-000	0.87 mm (0.034 in.)
K	23941-P21-000	0.90 mm (0.035 in.)
L	23942-P21-000	0.93 mm (0.037 in.)
M	23943-P21-000	0.96 mm (0.038 in.)
N	23944-P21-000	0.99 mm (0.039 in.)
O	23945-P21-000	1.02 mm (0.040 in.)
P	23946-P21-000	1.05 mm (0.041 in.)
Q	23947-P21-000	1.08 mm (0.043 in.)
R	23948-P21-000	1.11 mm (0.044 in.)
S	23949-P21-000	1.14 mm (0.045 in.)
T	23950-P21-000	1.17 mm (0.046 in.)
U	23951-P21-000	1.20 mm (0.047 in.)
V	23952-P21-000	1.23 mm (0.048 in.)
W	23953-P21-000	1.26 mm (0.050 in.)
X	23954-P21-000	1.29 mm (0.051 in.)
Y	23955-P21-000	1.32 mm (0.052 in.)
Z	23956-P21-000	1.35 mm (0.053 in.)
AA	23957-P21-000	1.38 mm (0.054 in.)
AB	23958-P21-000	1.41 mm (0.056 in.)
AC	23959-P21-000	1.44 mm (0.057 in.)
AD	23960-P21-000	1.47 mm (0.058 in.)
AE	23961-P21-000	1.50 mm (0.059 in.)
AF	23962-P21-000	1.53 mm (0.060 in.)
AG	23963-P21-000	1.56 mm (0.061 in.)
AH	23964-P21-000	1.59 mm (0.063 in.)
AI	23965-P21-000	1.62 mm (0.064 in.)
AJ	23966-P21-000	1.65 mm (0.065 in.)
AK	23967-P21-000	1.68 mm (0.066 in.)
AL	23968-P21-000	1.71 mm (0.067 in.)
AM	23969-P21-000	1.74 mm (0.069 in.)
AN	23970-P21-000	1.77 mm (0.070 in.)
AO	23971-P21-000	1.80 mm (0.071 in.)

BACK

Protected by AR

Transmission Reassembly

NOTE: Prior to reassembling, clean all parts in solvent, dry them, and apply lubricant to any contact surfaces.

1. Install the magnet (A) and differential assembly (B).

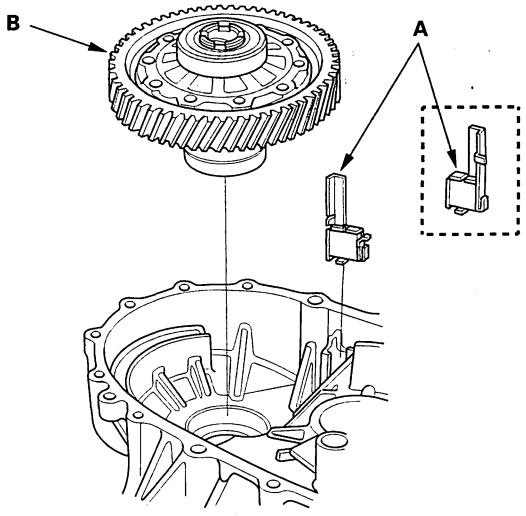

2. Install the 28 mm spring washer (A) and the 28 mm washer (B) over the ball bearing (C). Note the installation direction of the spring washer.

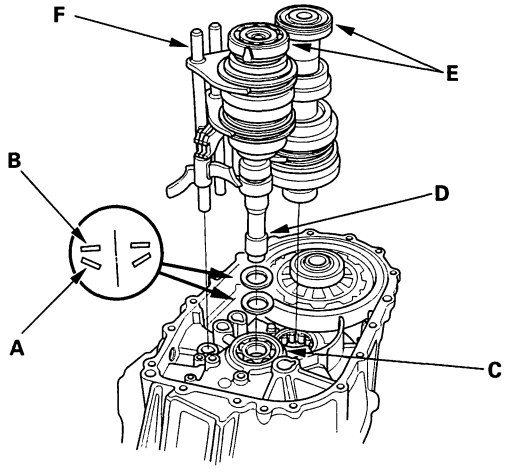

3. Apply vinyl tape to the mainshaft splines (D) to protect the seal. Install the mainshaft and the countershaft (E) with the shift forks (F), as an assembly.

4. Install the reverse shift fork.

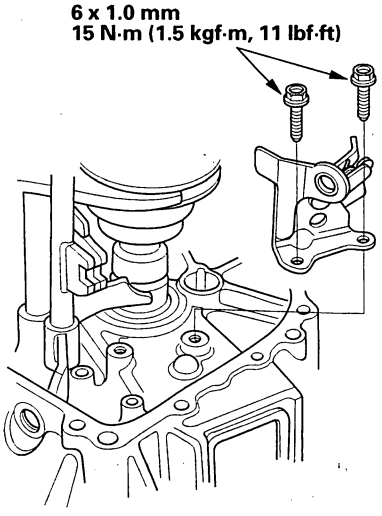

5. Install the reverse idler gear (A) and reverse gear shaft (B) by aligning the mark (C) with the reverse gear shaft hole (D).

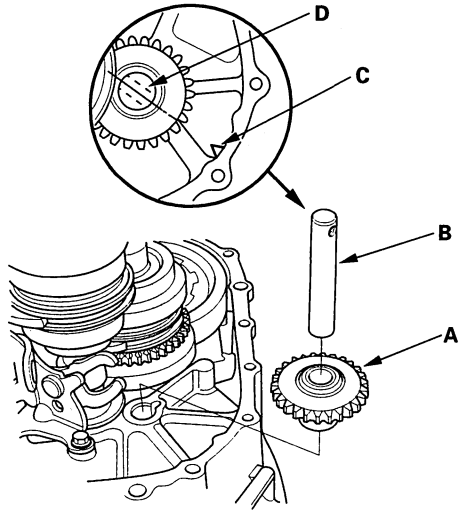

(cont'd)

Protected by AR

Transmission Reassembly (cont'd)

6. Install the reverse lock cam.

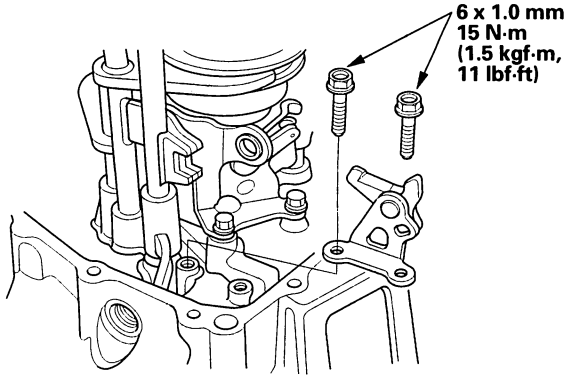

7. Select the proper size 72 mm shim (A) according to the measurements made during the Mainshaft Thrust Clearance Adjustment (see page 13-49). Install the oil gutter plate (B), oil guide plate M, and 72 mm shim into the transmission housing (C).

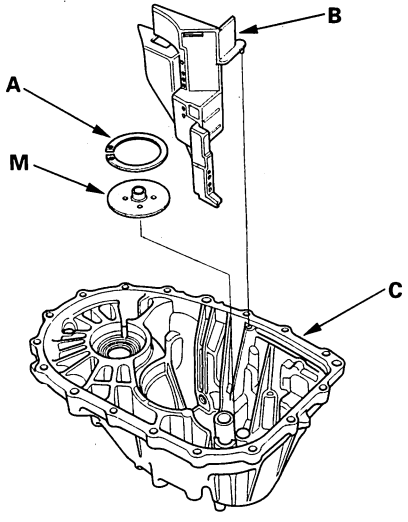

8. Remove any dirt or oil from the transmission housing sealing surface. Apply liquid gasket (P/N 08718-0002) to the sealing surface. Make sure you seal the entire circumference of the bolt holes to prevent oil leakage.

NOTE: Do not install components if 4 minutes or more have passed after applying the liquid gasket. Instead, remove the old residue and reapply the liquid gasket.

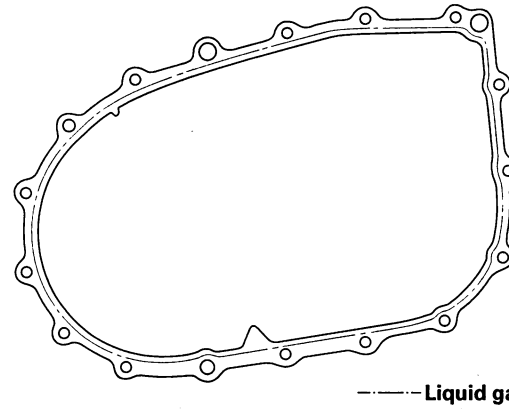

BACK

Protected by AR

9. Install the 14 x 20 mm dowel pins (A).

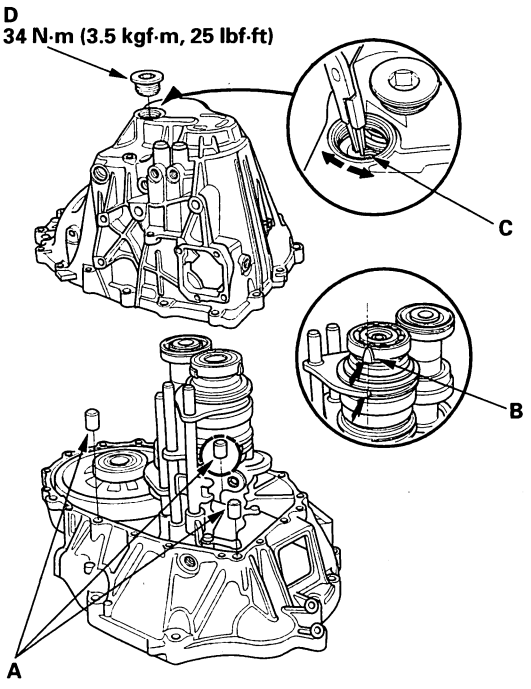

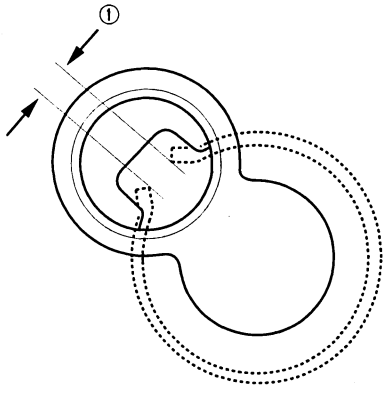

10. Set the tapered cone ring (B) as shown. Place the transmission housing on the clutch housing, being careful to line up the shafts.

11. While expanding the 72 mm snap ring (C) of the countershaft ball bearing using the snap ring pliers, push the transmission housing down to start the countershaft ball bearing through the snap ring. Then release the pliers, and push down the housing until it bottoms and the snap ring snaps in place in the countershaft ball bearing snap ring groove.

12. Make sure the 52 mm snap ring is securely seated in the groove of the countershaft bearing.

Dimension ① as installed: 3.3—6.0 mm (0.13—0.24 in.)

13. Apply liquid gasket (P/N 08718-0001) to the threads of the 32 mm sealing cap (D), and install it on the transmission housing.

14. Install the transmission hangers A and B, harness bracket B (C), and the 8 mm flange bolts, finger-tight.

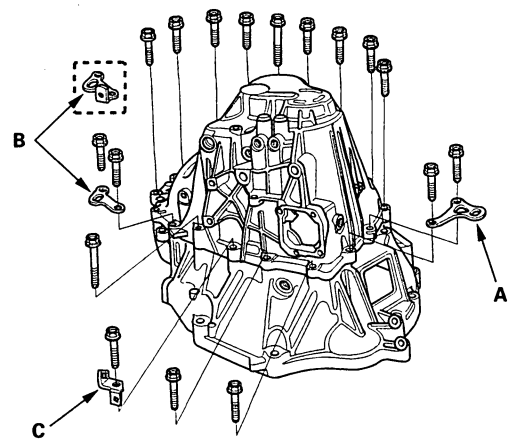

15. Tighten the 8 mm flange bolts in a crisscross pattern in several steps.

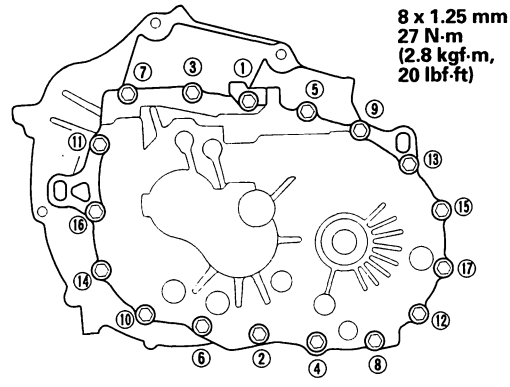

(cont'd)

Protected by AR

Transmission Reassembly (cont'd)

16. Remove any dirt or oil from the shift lever cover sealing surface. Apply liquid gasket (P/N 08718-0002) to the sealing surface.

    NOTE: Do not install components if 4 minutes or more have passed after applying the liquid gasket. Instead, remove the old residue and reapply the liquid gasket.

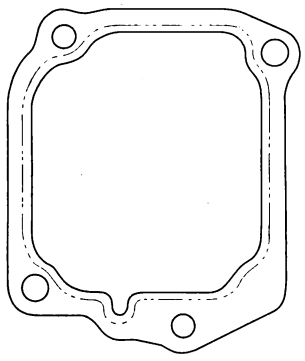

17. Install the 8 x 14 mm dowel pins (B), change lever assembly (C), and harness bracket A.

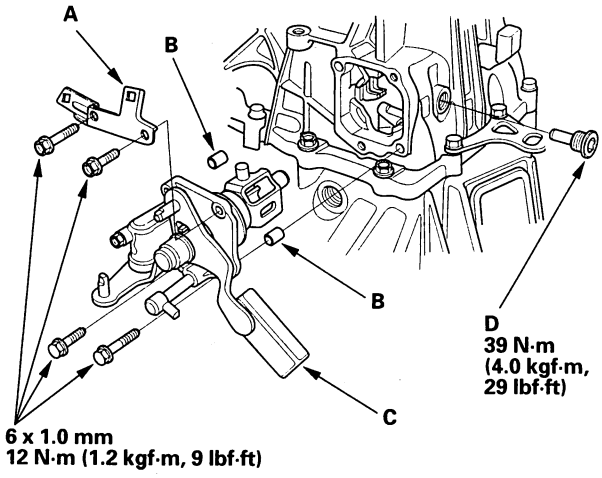

18. Apply liquid gasket (P/N 08718-0002) to the threads of the interlock bolt (D), and install it on the transmission housing.

19. Install the drain plug (A), filler plug (B), and 10 mm flange bolt (C) with new washers.

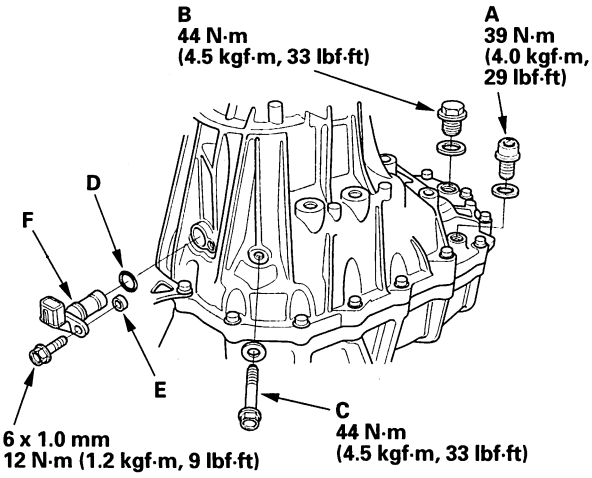

20. Install the new O-ring (D), plain washer (E), and output shaft (countershaft) speed sensor (F).

21. Install the detent bolts (A), spring, and steel balls with new washers.

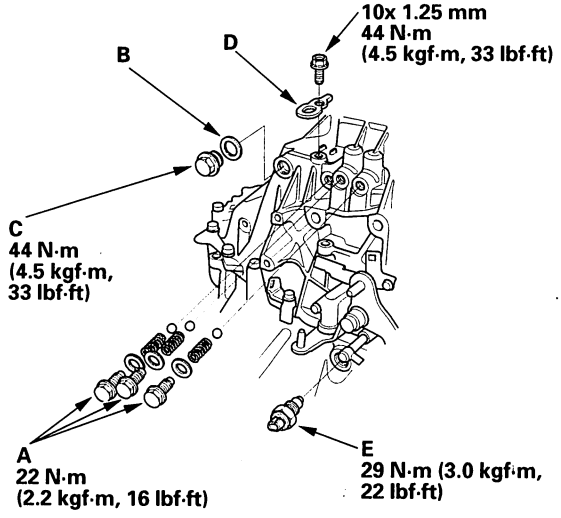

22. Install the new 20 mm washer (B), 20 mm bolt (C), and transmission hanger (D).

23. Apply liquid gasket (P/N 08718-0002) to the threads of the back-up light switch (E), and install it in the transmission housing.

BACK

Protected by AR

Gearshift Mechanism Replacement

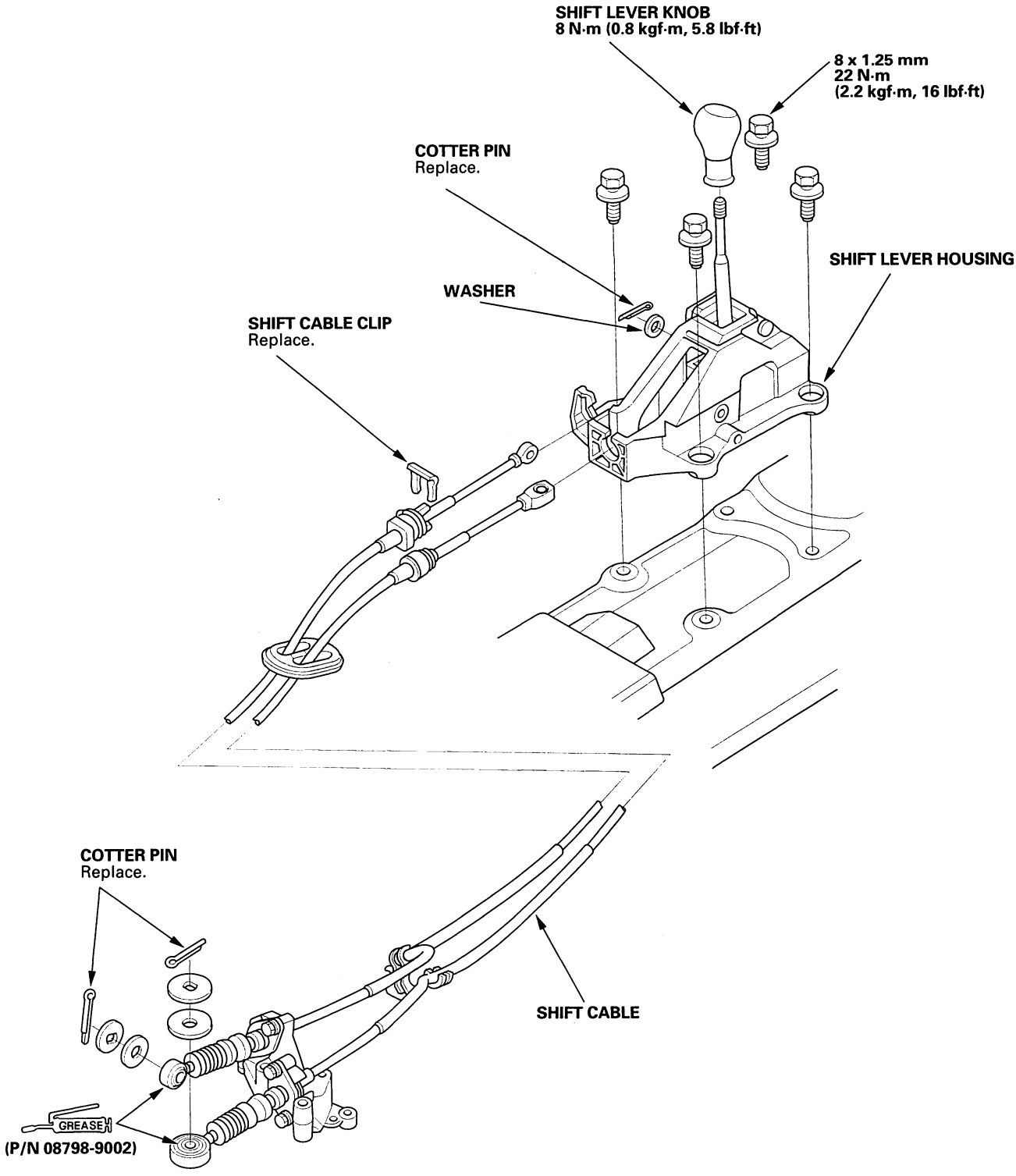

Protected by AR

M/T Differential

Component Location Index

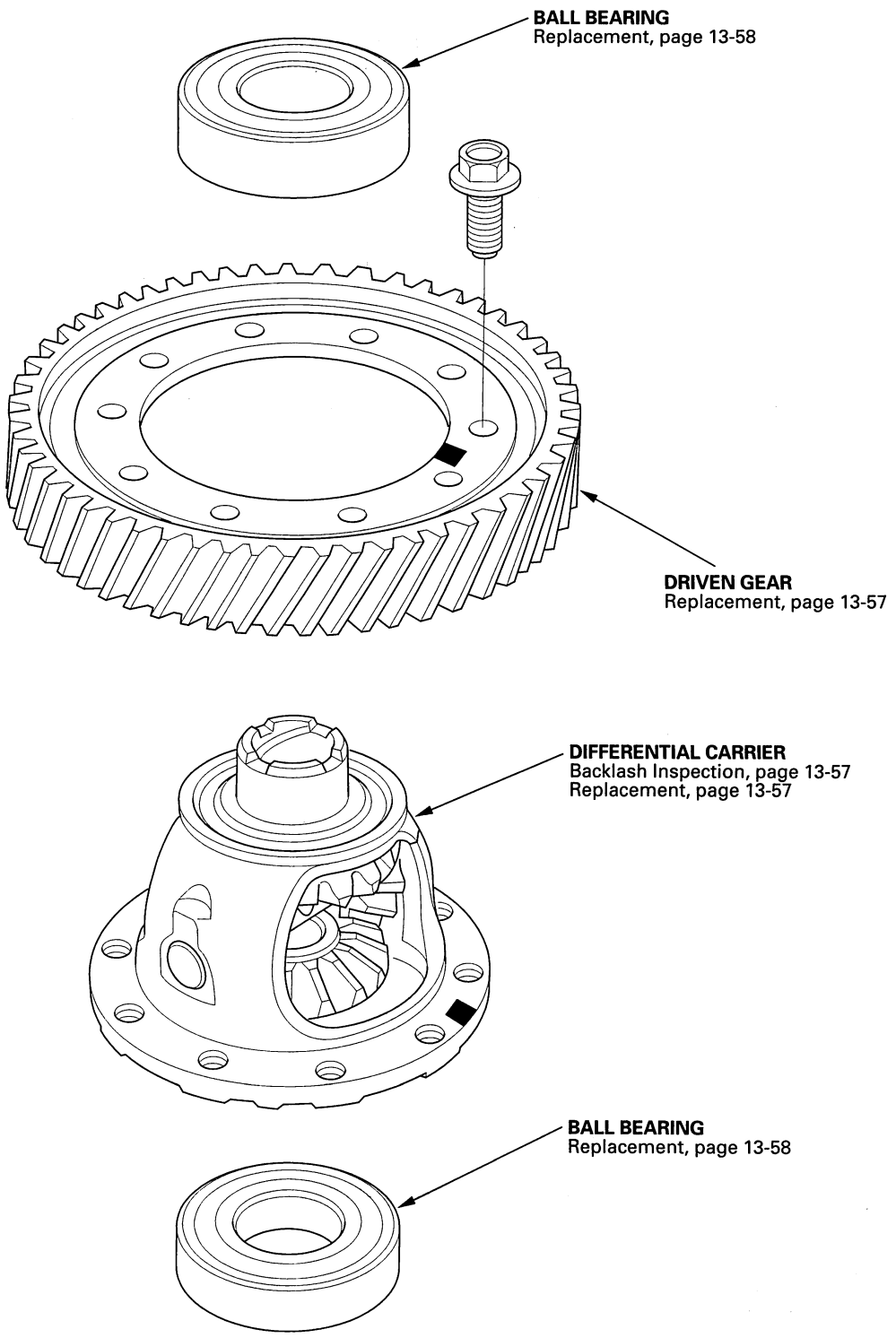

BACK

Protected by AR

Backlash Inspection

1. Place the differential assembly on V-blocks (A), and install both axles.

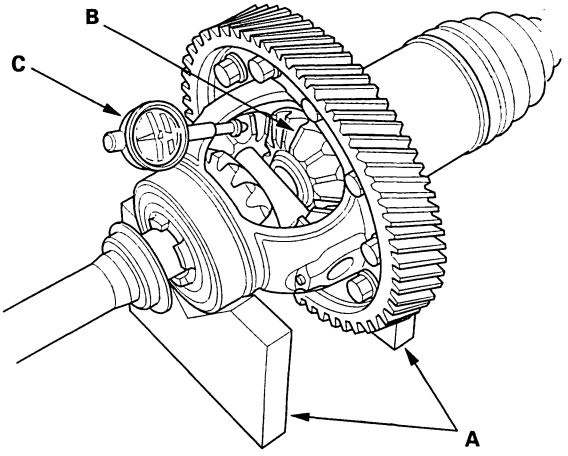

2. Measure the backlash of both pinion gears (B) with a dial indicator (C). If the backlash is not within the standard, replace the differential carrier.

Standard (New): 0.05—0.15 mm (0.002—0.006 in.)

Differential Carrier, Final Driven Gear Replacement

1. Loosen the bolts (left-hand threads) in a crisscross pattern in several steps, then remove the bolts and the final driven gear (A) from the differential carrier (B).

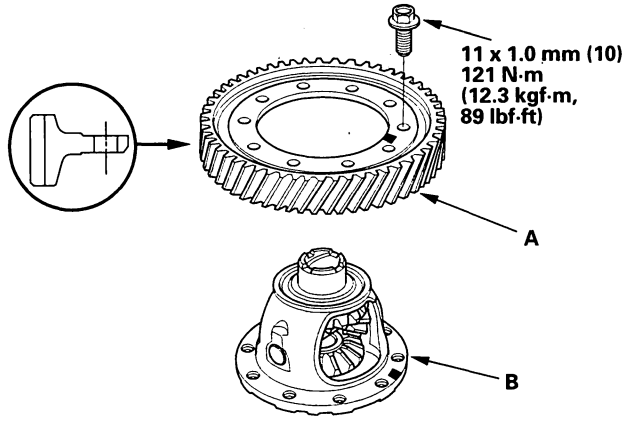

2. Install the final driven gear with the chamfer on the inside diameter facing the carrier. Tighten the bolts in a crisscross pattern in several steps.

Protected by AR

Carrier Bearing Replacement

Special Tools Required
Driver, 40 mm I.D. 07746-0030100

1. Check the carrier bearings for wear and rough rotation. If they rotate smoothly and their rollers show no signs of wear, the bearings are OK.

2. Remove the carrier bearing (A) with a commercially available bearing puller (B).

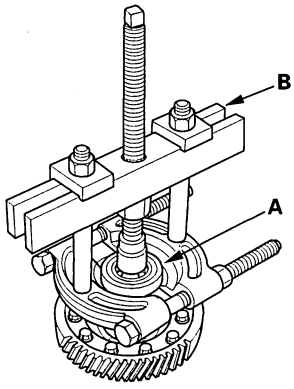

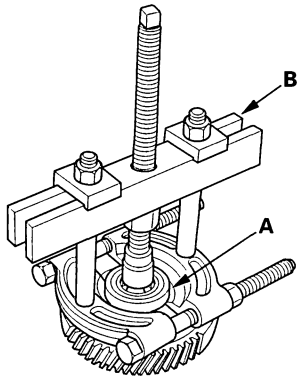

3. Install the new bearings (A) with the special tool and a press. Press each bearing on until it bottoms. There should be no clearance between the bearings and the carrier.

   NOTE: Place the seal part of the bearing (B) towards the outside of the differentral, then install it.

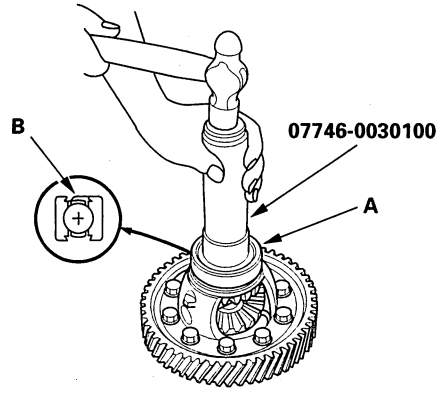

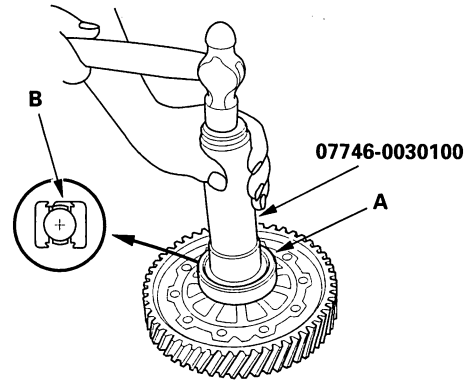

BACK

Protected by AR

Oil Seal Replacement

Special Tools Required
- Driver 07749-0010000
- Oil seal driver attachment 07NAD-P20A100

1. Remove the differential assembly.
2. Remove the oil seal (A) from the transmission housing (B).

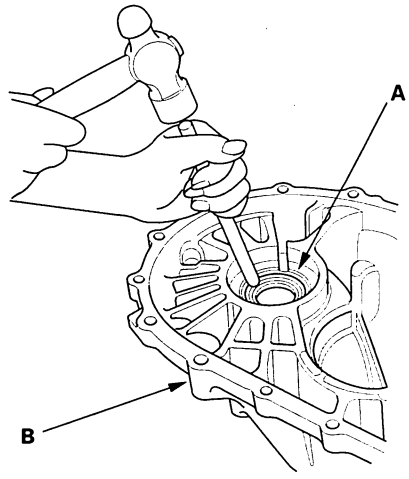

3. Remove the oil seal (A) from the clutch housing (B).

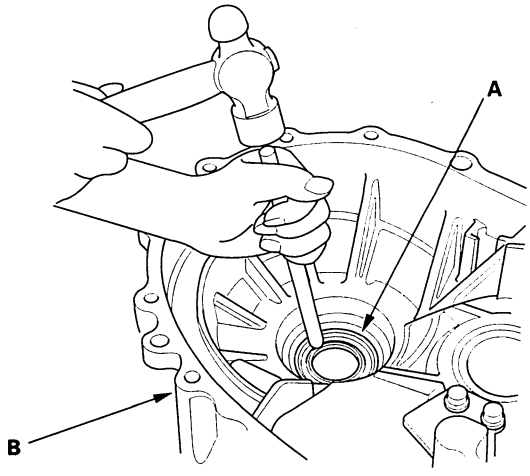

4. Install the new oil seal in the transmission housing with the special tools.

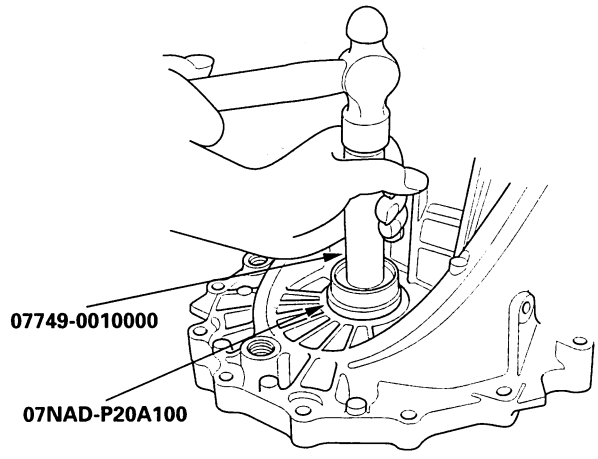

5. Install the new oil seal in the clutch housing with the special tools.

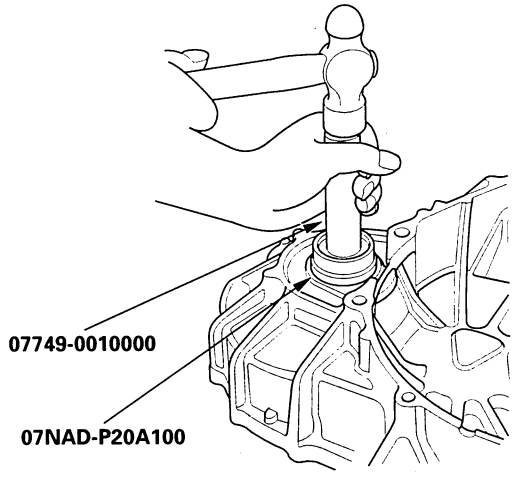

Protected by AR

Differential Thrust Clearance Adjustment

Special Tools Required
Driver, 40 mm I.D. 07746-0030100

1. If you removed the 80 mm shim from the clutch housing, reinstall the same sized shim.

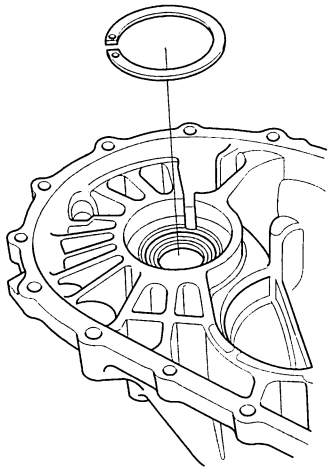

2. Install the differential assembly into the clutch housing.

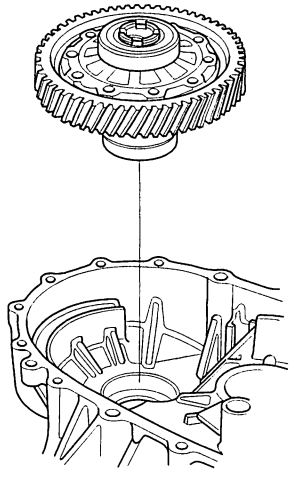

3. Install the transmission housing onto the clutch housing, then tighten the 8 mm flange bolts in a crisscross pattern in several steps (see step 15 on page 13-53).

8 x 1.25 mm
27 N·m (2.8 kgf·m, 20 lbf·ft)

4. Use the special tool to bottom the differential assembly in the clutch housing.

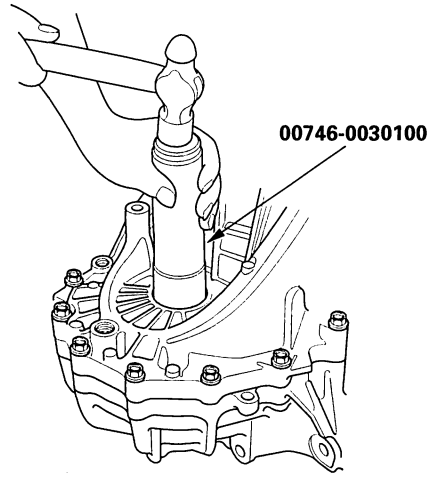

5. Measure clearance between 80 mm shim and the bearing outer race in the transmission housing.

Standard: 0—0.10 mm (0—0.0039 in.)

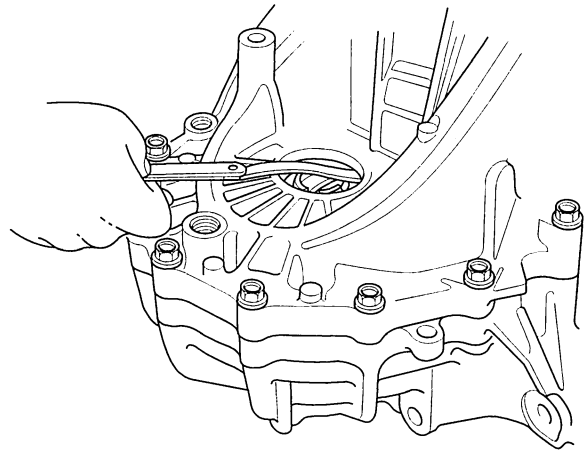

BACK

Protected by AR

6. If the clearance is more than the standard, select a new shim from the following table. If the clearance measured in step 5 is within the standard, go to step 9.

80 mm Shim

	Part Number	Thickness
A	41441-PL3-B00	1.0 mm (0.039 in.)
B	41442-PL3-B00	1.1 mm (0.043 in.)
C	41443-PL3-B00	1.2 mm (0.047 in.)
D	41444-PL3-B00	1.3 mm (0.051 in.)
E	41445-PL3-B00	1.4 mm (0.055 in.)
F	41446-PL3-B00	1.5 mm (0.059 in.)
G	41447-PL3-B00	1.6 mm (0.063 in.)
H	41448-PL3-B00	1.7 mm (0.067 in.)
J	41449-PL3-B00	1.8 mm (0.071 in.)
K	41450-PL3-B00	1.05 mm (0.041 in.)
L	41451-PL3-B00	1.15 mm (0.045 in.)
M	41452-PL3-B00	1.25 mm (0.049 in.)
N	41453-PL3-B00	1.35 mm (0.053 in.)
P	41454-PL3-B00	1.45 mm (0.057 in.)
Q	41455-PL3-B00	1.55 mm (0.061 in.)
R	41456-PL3-B00	1.65 mm (0.065 in.)
S	41457-PL3-B00	1.75 mm (0.069 in.)

7. Remove the bolts and transmission housing.

8. Replace the thrust shim selected in step 6, then recheck the clearance.

9. Reinstall the transmission.

Protected by AR

BACK

Protected by AR

SUPPLEMENTAL RESTRAINT SYSTEM (SRS) (If automatic transmission maintenance is required)

The Accord SRS includes a driver's airbag in the steering wheel hub, a passenger's airbag in the dashboard above the glove box, seat belt tensioners in the front seat belt retractors, side curtain airbags in the sides of the roof, and side airbags in the front seat-backs. Information necessary to safely service the SRS is included in this Service Manual. Items marked with an asterisk (*) on the contents page include or are located near SRS components. Servicing, disassembling, or replacing these items require special precautions and tools, and should be done only by an authorized Honda dealer.

- To avoid rendering the SRS inoperative, which could lead to personal injury or death in the event of a severe frontal or side collision, all SRS service work must be performed by an authorized Honda dealer.
- Improper service procedures, including incorrect removal and installation of the SRS, could lead to personal injury caused by unintentional deployment of the airbags and/or side airbags.
- Do not bump or impact the SRS unit, front impact sensors, or side impact sensors when the ignition switch is ON (II), or for at least 3 minutes after the ignition switch is turned OFF; otherwise, the system may fail in a collision, or the airbags may deploy.
- SRS electrical connectors are identified by yellow color coding. Related components are located in the steering column, front console, dashboard, dashboard lower panel, in the dashboard above the glove box, in the front seats, in the roof side, and around the floor. Do not use electrical test equipment on these circuits.

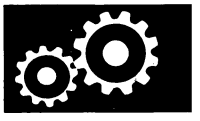

BACK

Protected by AR

Automatic Transmission

Automatic Transmission

Special Tools 14-2
General Troubleshooting Information 14-3
DTC Troubleshooting Index 14-8
Symptom Troubleshooting Index 14-11
System Description 14-22
DTC Troubleshooting 14-76
Road Test 14-186
Stall Speed Test 14-188
Pressure Test 14-189
Shift Solenoid Valve Test 14-191
Shift Solenoid Valve Replacement 14-194
A/T Clutch Pressure Control Solenoid Valve
Solenoid Valve A Test 14-197
Solenoid Valve A Replacement 14-198
Solenoid Valve B Test 14-199
Solenoid Valve B Replacement 14-200
Solenoid Valve C Test 14-199
Solenoid Valve C Replacement 14-200
Input Shaft (Mainshaft) Speed Sensor Replacement 14-201
Output Shaft (Countershaft) Speed Sensor Replacement 14-201
2nd Clutch Transmission Fluid Pressure Switch Replacement 14-202
3rd Clutch Transmission Fluid Pressure Switch Replacement 14-203
ATF Temperature Sensor Test/Replacement 14-204
ATF Level Check 14-207
ATF Replacement 14-208
Transmission Removal 14-209
Drive Plate Removal and Installation 14-218
Transmission Installation 14-219
ATF Cooler Cleaning 14-228
ATF Cooler Hose Replacement 14-230
Shift Lever Removal 14-231
Shift Lever Installation 14-232
Shift Lever Disassembly/Reassembly 14-235
Shift Cable Replacement 14-238
Shift Cable Adjustment 14-241

A/T Gear Position Indicator

Component Location Index 14-244
Circuit Diagram 14-245
A/T Gear Position Indicator Circuit Troubleshooting 14-246
Transmission Range Switch Test 14-247
Transmission Range Switch Replacement 14-249

A/T Interlock System

Component Location Index 14-251
Circuit Diagram 14-252
Shift Lock System Circuit Troubleshooting 14-254
* Key Interlock System Circuit Troubleshooting 14-259
* Key Interlock Solenoid Test 14-260
Shift Lock Solenoid Test 14-261
Shift Lock Solenoid Replacement 14-262
Park Pin Switch Test 14-263
Park Pin Switch Replacement 14-263

BACK

Protected by AR

Transmission End Cover
End Cover Removal 14-264
Park Lever Stop Inspection and Adjustment 14-266
Idler Gear Shaft Bearing Replacement 14-266
Selector Control Shaft Oil Seal Replacement 14-267
Selector Control Shaft Bearing Replacement 14-267
ATF Feed Pipe Replacement 14-268
End Cover Installation 14-329

Transmission Housing
Housing and Shaft Assembly Removal 14-269
Bearing Removal 14-271
Bearing Installation 14-272
Reverse Idler Gear Removal and Installation 14-273
Shaft Assembly and Housing Installation 14-324

Valve Body
Valve Body and ATF Strainer Removal 14-274
Valve Body Repair 14-276
Valve Body Valve Installation 14-277
Main Valve Body Disassembly, Inspection, and Reassembly 14-278
ATF Pump Inspection 14-279
Regulator Valve Body Disassembly, Inspection, and Reassembly
2003-2004 Models 14-280
2005-2006 Models 14-281
Servo Body Disassembly, Inspection, and Reassembly 14-282
Shift Solenoid Valve Removal and Installation 14-283
Valve Body and ATF Strainer Installation 14-322

Torque Converter Housing
Mainshaft Bearing and Oil Seal Replacement 14-284
Countershaft Bearing Replacement 14-285
Secondary Shaft Bearing Replacement 14-286
Selector Control Shaft Oil Seal Replacement 14-287

Shafts and Clutches
Mainshaft Disassembly, Inspection, and Reassembly 14-288
Mainshaft 5th Gear Clearance Inspection 14-289
Countershaft Disassembly, Inspection, and Reassembly 14-291
Countershaft Reverse Selector Hub and 3rd Gear Removal 14-292
Countershaft 3rd Gear and Reverse Selector Hub Installation 14-293
Secondary Shaft Disassembly, Inspection, and Reassembly 14-294
Secondary Shaft Ball Bearing, Idler Gear Removal and Installation 14-295
Secondary Shaft 2nd Gear Clearance Inspection 14-296
Secondary Shaft 1st Gear Clearance Inspection 14-298
Idler Gear Shaft Removal and Installation 14-300
Idler Gear/Idler Gear Shaft Replacement 14-301
Clutch Disassembly 14-302
Clutch Inspection 14-308
Clutch Waved-plate Phase Difference Inspection 14-309
Clutch Clearance Inspection 14-310
Clutch Reassembly 14-316

A/T Differential
Component Location Index 14-334
Backlash Inspection 14-334
Carrier Bearing Replacement 14-335
Differential Carrier, Final Driven Gear Replacement 14-335
Oil Seal Replacement 14-336
Carrier Bearing Outer Race Replacement 14-337
Carrier Bearing Preload Inspection 14-339

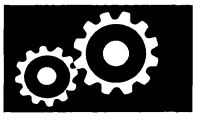

BACK

Protected by AR

Special Tools

Ref. No.	Tool Number	Description	Qty
①	07GAB-PF50101 or 07GAB-PF50100	Mainshaft Holder	1
②	07GAD-SD40101	Attachment, 78 x 90 mm	1
③	07GAE-PG40200 or 07GAE-PG4020A	Clutch Spring Compressor Bolt Assembly	1
④	07HAC-PK40102	Housing Puller	1
⑤	07HAJ-PK40201	Preload Inspection Tool	1
⑥	07JAD-PH80101	Oil Seal Driver Attachment	1
⑦	07KAF-PS30200	Bearing Separator	1
⑧	07LAD-PW50601	Attachment, 40 x 50 mm	1
⑨	07LAE-PX40100	Clutch Spring Compressor Attachment	2
⑩	07MAJ-PY4011A	A/T Pressure Hose, 2,210 mm	3
⑪	07MAJ-PY40120	A/T Pressure Hose Adapter	3
⑫	07QAD-P0A0100	Attachment, 42 mm I.D.	1
⑬	07SAZ-001000A	Backprobe Set	2
⑭	07ZAE-PRP0100	Clutch Compressor Attachment	1
⑮	07406-0020400 or 07406-0020401	A/T Oil Pressure Gauge Set w/Panel	1
⑯	07736-A01000B or 07736-A01000A	Adjustable Bearing Puller, 25—40 mm	1
⑰	07746-0010100	Attachment, 32 x 35 mm	1
⑱	07746-0010300	Attachment, 42 x 47 mm	1
⑲	07746-0010400	Attachment, 52 x 55 mm	1
⑳	07746-0010500	Attachment, 62 x 68 mm	1
㉑	07746-0010600	Attachment, 72 x 75 mm	1
㉒	07746-0010800	Attachment, 22 x 24 mm	1
㉓	07746-0030100	Driver, 40 mm I.D.	1
㉔	07749-0010000	Driver	1
㉕	07947-SD90101	Oil Seal Driver Attachment	1
㉖	07947-ZV00100	Oil Seal Driver Attachment	1

④: If the top arm is too short, replace it with 07SAC-P0Z01001.
⑨: 07HAE-PL50101 may be used to substitute one of these tools.
⑯: Must be used with commercially available 3/8 ″-16 slide hammer.

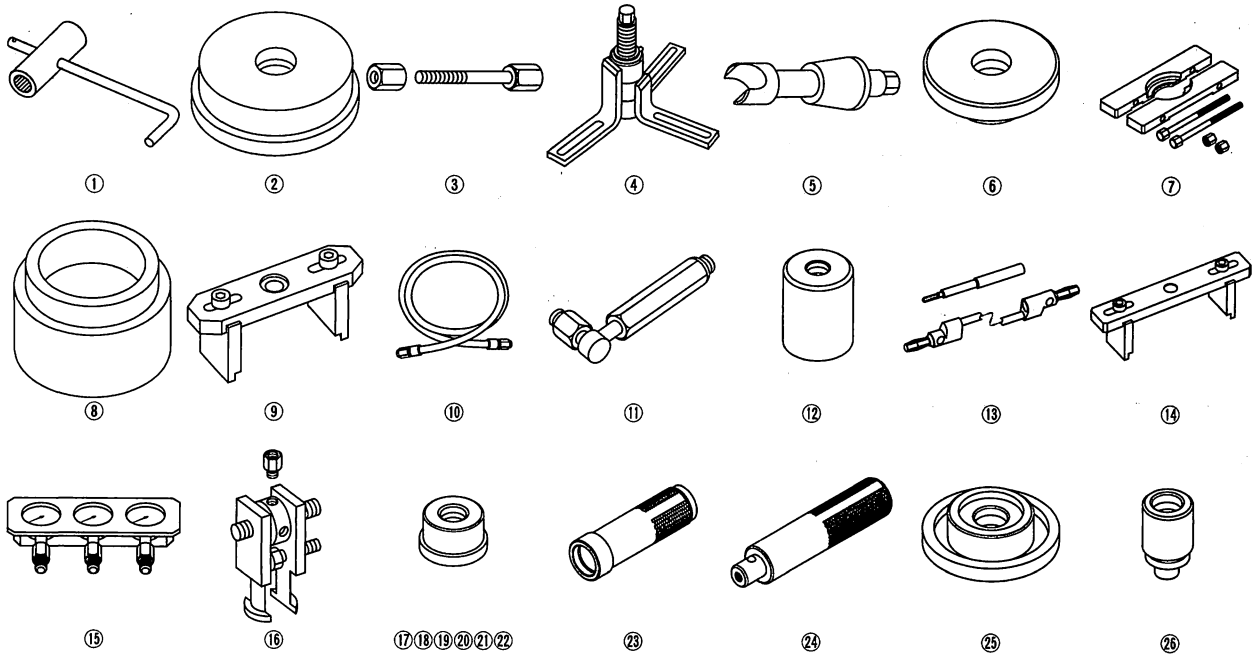

BACK

Protected by AR

General Troubleshooting Information

How to Check for DTCs with the Honda Diagnostic System

When the powertrain control module (PCM) senses an abnormality in the input or output systems, the D indicator (A) in the gauge assembly (B) will usually blink.

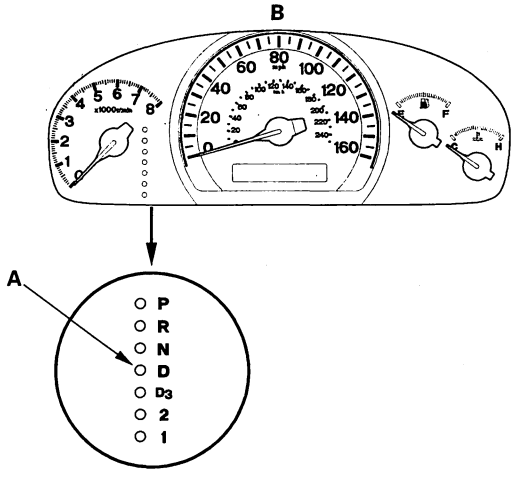

When the Honda diagnostic system (HDS) is connected to the data link connector (DLC) (A) (located under the left end of the dash) and the SCS mode is selected, it will indicate the diagnostic trouble code (DTC) when the ignition switch is turned ON (II) and the appropriate menu is selected.

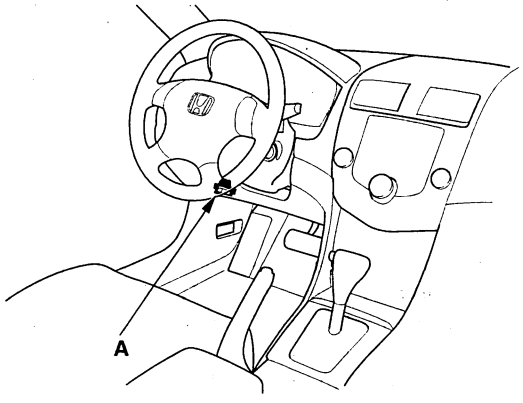

If the D indicator or malfunction indicator lamp (MIL) has been reported on, or if a driveability problem is suspected, follow this procedure:

1. Connect the HDS to the DLC. (See the HDS user's manual for specific instructions.)
2. Turn the ignition switch ON (II), select A/T system, and observe the DTC in the DTCs MENU on the HDS screen.
3. Record all fuel and emissions DTCs, A/T DTCs, and freeze data.
4. If there is a fuel and emissions DTC, first check the fuel and emissions system as indicated by the DTC (except for DTC P0700, DTC P0700 means there is one or more A/T DTCs, and no problems were detected in the fuel and emissions circuit of the PCM).
5. Clear the DTC and data.
6. Drive the vehicle for several minutes under the same conditions as those indicated by the freeze data, and then recheck for a DTC. If the A/T DTC returns, go to the DTC troubleshooting Index. If the DTC does not return, there was an intermittent problem within the circuit. Make sure all pins and terminals in the circuit are tight.

Symptom Troubleshooting Versus DTC Troubleshooting

Some symptoms will not trigger diagnostic trouble codes (DTCs) or cause the D indicator to blink. If the malfunction indicator lamp (MIL) was reported ON or the D indicator has been blinking, check for DTCs. If the vehicle has an abnormal symptom, and there are no DTCs stored, go to the Symptom Troubleshooting Index. Check the list of probable cause(s) for the symptom, in the sequence listed, until you find the problem.

(cont'd)

Protected by AR

General Troubleshooting Information (cont'd)

How to Check for DTCs with the SCS Mode (retrieving the flash codes)

When the PCM senses an abnormality in the input or output system, the D indicator (A) in the gauge assembly (B) will usually blink.

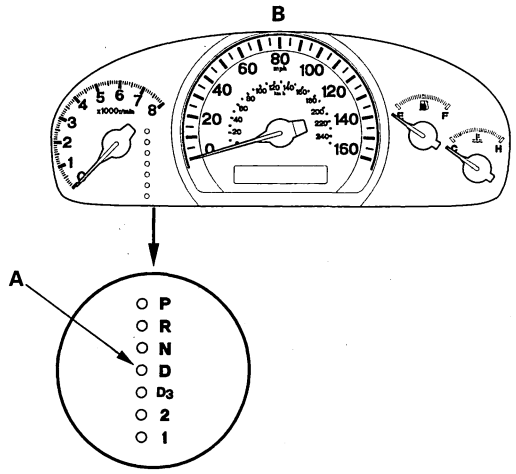

When the D indicator has been reported on, connect the HDS to the DLC (A) (located under the left end of the dash). Turn the ignition switch ON (II), select SCS mode, then the D indicator will indicate the DTC.

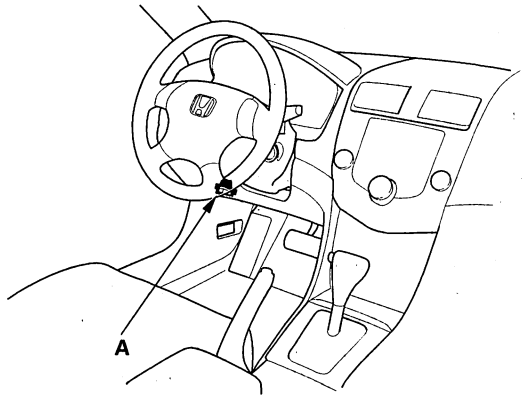

If the D indicator and the MIL come on at the same time, or if a driveability problem is suspected, follow this procedure:

1. Connect the HDS to the DLC. (See the HDS user's manual for specific instructions.)
2. Turn the ignition switch ON (II), select SCS mode, then observe the D indicator in the gauge assembly. Codes 1 through 9 are indicated by individual short blinks. Code 10 and above are indicated by a series of long and short blinks. One long blink equals 10 short blinks. Add the long and short blinks together to determine the code.

Example: DTC 1-1

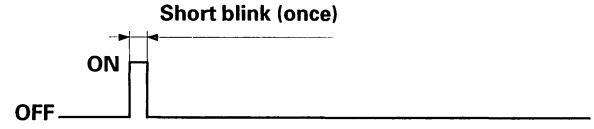

Example: DTC 15-5

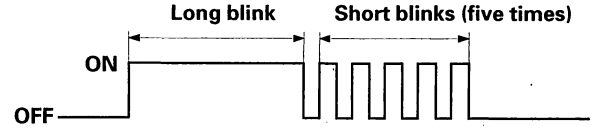

3. Record all fuel and emissions DTCs and A/T DTCs.
4. If there is a fuel and emissions DTC, first check the fuel and emissions system as indicated by the DTC (except DTC 70, DTC 70 means there is one or more A/T DTCs, and no problems were detected in the fuel and emissions circuit of the PCM).
5. Clear the DTC and data.
6. Drive the vehicle for several minutes under the same conditions as those indicated by the freeze data, and then recheck for DTC. If the A/T DTC returns, go to the DTC Troubleshooting Index. If the DTC does not return, there was an intermittent problem within the circuit. Make sure all pins and terminals in the circuit are tight.

BACK

Protected by AR

How to Troubleshoot Circuits at the PCM

Special Tools Required
Backprobe set 07SAZ-001000A (two required)

1. Pull back the carpet, and remove the passenger's center lower cover and rear vent duct (see step 5 on page 20-136).

2. Inspect the circuit on the PCM, according to the DTC troubleshooting, with the special tools and a digital multimeter.

3. Connect the backprobe adapters (A) to the stacking patch cords (B), and connect the cords to a multimeter (C).

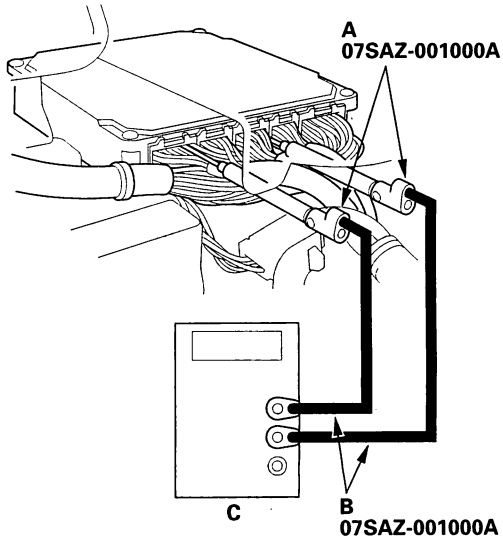

4. Using the wire insulation as a guide for the contoured tip of the backprobe adapter, gently slide the tip into the connector from the wire side until it touches the end of the wire terminal.

5. If you cannot get to the wire side of the connector or the wire side is sealed, disconnect the connector and use the tester probe to probe the connectors from the terminal side. Do not force the probe into the connector.

Clear A/T DTCs, and PCM Reset Procedures

1. Connect the HDS to the DLC.

2. Turn the ignition switch ON (II).

3. Clear the DTC(s) on the HDS screen.

OBD Status

The OBD Status shows the current system status of each DTC and all of the parameters. This function is used to see if the technician's repair was successfully finished. The results of diagnostic tests for the DTC are displayed as:

- PASSED: On Board Diagnosis is successfully finished.
- FAILED: On Board Diagnosis has finished but failed.
- NOT COMPLETED: The On Board Diagnosis was running but is out of the Enable conditions of the DTC.

(cont'd)

Protected by AR

General Troubleshooting Information (cont'd)

PCM Updating and Substitution for Testing

Special Tools Required
Honda Interface Module (HIM) EQS05A35570

Use this procedure when you have to substitute a known-good PCM in a troubleshooting procedure. Update the PCM only if the PCM does not already have the latest software loaded.

NOTE: Do not turn the ignition switch OFF while updating the PCM. If you turn the ignition switch OFF before completion, the PCM can be damaged.

How to Update the PCM

NOTE:
- To ensure the latest program is installed, update a PCM whenever the PCM is substituted or replaced.
- You cannot update a PCM with the program it already has. It will only accept a new program.
- Before you update the PCM, make sure the vehicle's battery is fully charged.
- To prevent PCM damage, do not operate any electrical system; audio system, brakes, air conditioning, power windows, moonroof, and door locks, during the update.
- If you need to diagnose the Honda interface module (HIM) because the HIM's red (#3) light came on or was flashing during the update, leave the ignition switch in the ON (II) position when you disconnect the HIM from the data link connector (DLC). This will prevent PCM damage.

1. Turn the ignition switch ON (II). Do not start the engine.
2. Connect the HDS or the Honda interface module (HIM) to the DLC (A) located under the left end of the dash.

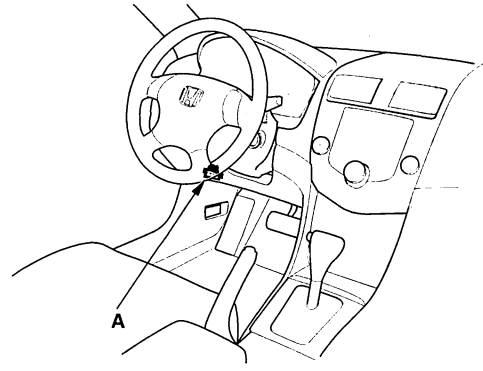

3. Select the INSPECTION MENU with the HDS.
4. Do the TP POSITION CHECK in the ETCS TEST.
5. If the HDS does not have the update function, disconnect the HDS from the vehicle and connect the Honda interface module (HIM).
6. If the software in the PCM is the latest, disconnect the HDS or the HIM from the DLC and go back to the procedure that you were doing.
   If the software in the PCM is not the latest, do the PCM update procedure as described on the HIM label or in the PCM update system.

   NOTE: If the PCM update system requires you to cool the PCM, follow what is shown in the screen.
7. Do the PCM idle learn procedure (see page 11-316).
8. Clean the CKP pattern with the HDS while the engine is stopped.

BACK

Protected by AR

How to Substitute the PCM

1. Connect the HDS to the DLC.
2. Turn the ignition switch OFF.
3. Jump the SCS line with the HDS.
4. Remove the PCM, and install a known-good PCM.
5. Rewrite the immobilizer code with the PCM replacement procedure in the HDS; this will allow you to start the engine.
6. After completing your test, reinstall the original PCM and rewrite the immobilizer code with the PCM replacement procedure in the HDS again.

How to Remove and Install the PCM

1. Pull back the carpet, and remove the driver's and passenger's center lower covers and rear vent ducts (see page 20-136).
2. Connect the HDS to the DLC.
3. Turn the ignition switch OFF.
4. Jump the SCS line with the HDS.
5. Disconnect PCM connectors.
6. Remove the two bolts, and remove the PCM.
7. Install the PCM in the reverse order of the removal.

How to End a Troubleshooting Session

This procedure must be done after any troubleshooting.

1. Turn the ignition switch OFF.
2. Connect the HDS to the DLC.
3. Turn the ignition switch ON (II).
4. Clear the DTC(s) on the HDS screen.
5. Turn the ignition switch ON (II).
6. Start the engine in the P or N position, and warm it up to normal operating temperature (the radiator fan comes on).
7. To verify that the problem is repaired, test-drive the vehicle for several minutes at speeds over 30 mph (50 km/h) or in freeze data range.

Protected by AR

DTC Troubleshooting Index

NOTE: Record all freeze data and review General Troubleshooting Information (see page 14-3) before you troubleshoot.

DTC * (1)	D Indicator	MIL	Detection Item	Page
P0705 (5-2) * (2)	Blinks	ON	Transmission range switch (multiple shift-position input)	(see page 14-76)
P0706 (6-2) * (2)	OFF	ON	Transmission range switch (open)	(see page 14-85)
P0711 (28-5) * (2)	Blinks	OFF	ATF temperature sensor (range/performance)	(see page 14-89)
P0712 (28-3) * (2)	Blinks	OFF	ATF temperature sensor (short)	(see page 14-90)
P0713 (28-4) * (2)	Blinks	OFF	ATF temperature sensor (open)	(see page 14-91)
P0716 (15-5) * (2)	Blinks	ON	Input shaft (mainshaft) speed sensor (range/ performance)	(see page 14-93)
P0717 (15-3) * (2)	Blinks	ON	Input shaft (mainshaft) speed sensor (no signal input)	(see page 14-98)
P0718 (15-6) * (2)	Blinks	ON	Input shaft (mainshaft) speed sensor (intermittent failure)	(see page 14-103)
P0721 (9-5) * (2)	Blinks	ON	Output shaft (countershaft) speed sensor (range/ performance)	(see page 14-105)
P0722 (9-3) * (2)	Blinks	ON	Output shaft (countershaft) speed sensor (no signal input)	(see page 14-110)
P0723 (9-6) * (2)	Blinks	ON	Output shaft (countershaft) speed sensor (intermittent failure)	(see page 14-115)
P0731 (64-1)	Blinks	OFF	1st gear incorrect ratio	(see page 14-117)
P0732 (64-2)	Blinks	OFF	2nd gear incorrect ratio	(see page 14-118)
P0733 (64-3)	Blinks	OFF	3rd gear incorrect ratio	(see page 14-119)
P0734 (64-4)	Blinks	OFF	4th gear incorrect ratio	(see page 14-120)
P0735 (64-5)	Blinks	OFF	5th gear incorrect ratio	(see page 14-121)
P0741 (40-3)	Blinks	OFF	Torque converter clutch circuit performance or stuck OFF	(see page 14-122)
P0747 (76-4)	Blinks	ON	A/T clutch pressure control solenoid valve A stuck ON	(see page 14-123)
P0752 (70-4)	Blinks	ON	Shift solenoid valve A stuck ON	(see page 14-124)
P0756 (71-3)	Blinks	ON	Shift solenoid valve B stuck OFF	(see page 14-125)
P0757 (71-4)	Blinks	ON	Shift solenoid valve B stuck ON	(see page 14-126)
P0761 (72-3)	Blinks	ON	Shift solenoid valve C stuck OFF	(see page 14-127)

NOTE:

* (1): The DTC in parentheses is the Honda code that you will see when you use the HDS. The first number(s) before the - (hyphen) is the flash code the D indicator indicates when the data link connector is connected to the HDS, and the HDS in SCS mode.
* (2): This code is caused by an electrical circuit problem and cannot be caused by a mechanical problem in the transmission.

BACK

Protected by AR

NOTE: Record all freeze data and review General Troubleshooting Information (see page 14-3) before you troubleshoot.

DTC * (1)	D Indicator	MIL	Detection Item	Page
P0771 (74-3)	Blinks	ON	Shift solenoid valve E stuck OFF	(see page 14-128)
P0776 (77-3)	Blinks	ON	A/T clutch pressure control solenoid valve B stuck OFF	(see page 14-129)
P0777 (77-4)	Blinks	ON	A/T clutch pressure control solenoid valve B stuck ON	(see page 14-130)
P0780 (45-1)	Blinks	ON	Shift control system	(see page 14-131)
P0796 (78-3)	Blinks	ON	A/T clutch pressure control solenoid valve C stuck OFF	(see page 14-132)
P0797 (78-4)	Blinks	ON	A/T clutch pressure control solenoid valve C stuck ON	(see page 14-133)
P0812 (62-2) * (2)	Blinks	OFF	Transmission range switch ATP RVS switch	(see page 14-134)
P0842 (25-3) * (2)	Blinks	ON	2nd clutch transmission fluid pressure switch (short or stuck ON)	(see page 14-136)
P0843 (25-4) * (2)	Blinks	ON	2nd clutch transmission fluid pressure switch (open or stuck OFF)	(see page 14-138)
P0847 (26-3) * (2)	Blinks	OFF	3rd clutch transmission fluid pressure switch (short or stuck ON)	(see page 14-140)
P0848 (26-4) * (2)	Blinks	OFF	3rd clutch transmission fluid pressure switch (open or stuck OFF)	(see page 14-142)
P0962 (16-3) * (2)	Blinks	ON	A/T clutch pressure control solenoid valve A (open/ short)	(see page 14-144)
P0963 (16-4) * (2)	Blinks	ON	A/T clutch pressure control solenoid valve A	(see page 14-146)
P0966 (23-3) * (2)	Blinks	ON	A/T clutch pressure control solenoid valve B (open/ short)	(see page 14-148)
P0967 (23-4) * (2)	Blinks	ON	A/T clutch pressure control solenoid valve B	(see page 14-150)
P0970 (29-3) * (2)	Blinks	ON	A/T clutch pressure control solenoid valve C (open/ short)	(see page 14-152)
P0971 (29-4) * (2)	Blinks	ON	A/T clutch pressure control solenoid valve C	(see page 14-154)
P0973 (7-3) * (2)	Blinks	ON	Shift solenoid valve A (short)	(see page 14-156)

NOTE:

* (1): The DTC in parentheses is the Honda code that you will see when you use the HDS. The first number(s) before the - (hyphen) is the flash code the D indicator indicates when the data link connector is connected to the HDS, and the HDS in SCS mode.
* (2): This code is caused by an electrical circuit problem and cannot be caused by a mechanical problem in the transmission.

(cont'd)

Protected by AR

DTC Troubleshooting Index (cont'd)

NOTE: Record all freeze data and review General Troubleshooting Information (see page 14-3) before you troubleshoot.

DTC * (1)	D Indicator	MIL	Detection Item	Page
P0974 (7-4) * (2)	Blinks	ON	Shift solenoid valve A (open)	(see page 14-158)
P0976 (8-3) * (2)	Blinks	ON	Shift solenoid valve B (short)	(see page 14-160)
P0977 (8-4) * (2)	Blinks	ON	Shift solenoid valve B (open)	(see page 14-162)
P0979 (22-3) * (2)	Blinks	ON	Shift solenoid valve C (short)	(see page 14-164)
P0980 (22-4) * (2)	Blinks	ON	Shift solenoid valve C (open)	(see page 14-166)
P0982 (60-3) * (2)	Blinks	ON	Shift solenoid valve D (short)	(see page 14-168)
P0983 (60-4) * (2)	Blinks	ON	Shift solenoid valve D (open)	(see page 14-170)
P0985 (61-3) * (2)	Blinks	ON	Shift solenoid valve E (short)	(see page 14-172)
P0986 (61-4) * (2)	Blinks	ON	Shift solenoid valve E (open)	(see page 14-174)
P1730 (45-2)	Blinks	ON	Shift control system • Shift solenoid valves A or D stuck OFF • Shift solenoid valve B stuck ON • Shift valves A, B, or D stuck	(see page 14-176)
P1731 (45-3)	Blinks	ON	Shift control system • Shift solenoid valve E stuck ON • Shift valve E stuck • A/T clutch pressure control solenoid valve A stuck OFF	(see page 14-178)
P1732 (45-4)	Blinks	ON	Shift control system • Shift solenoid valves B or C stuck ON • Shift valves B or C stuck	(see page 14-180)
P1733 (45-5)	Blinks	ON	Shift control system • Shift solenoid valve D stuck ON • Shift valve D stuck • A/T clutch pressure control solenoid valve C stuck OFF	(see page 14-182)
P1734 (45-6)	Blinks	ON	Shift control system • Shift solenoid valves B or C stuck OFF • Shift valves B or C stuck	(see page 14-184)

NOTE:

* (1): The DTC in parentheses is the Honda code that you will see when you use the HDS. The first number(s) before the - (hyphen) is the flash code the D indicator indicates when the data link connector is connected to the HDS, and the HDS in SCS mode.
* (2): This code is caused by an electrical circuit problem and cannot be caused by a mechanical problem in the transmission.

BACK

Protected by AR

Symptom Troubleshooting Index

Symptom	Probable cause(s)	Notes
When you turn the ignition switch ON (II), the D indicator comes on and stays on in all shift lever positions, or it never comes on at all	Communication line between multiplex integrated control unit and gauge control module defective	Check the multiplex integrated control system - communication line between the multiplex integrated control unit and gauge control module (see page 22-119).
Shift lever cannot be moved from P while you are pressing on the brake pedal	A problem in the shift lock system (interlock system)	Check the interlock system - shift lock system circuit (see page 14-254).
Ignition switch cannot be moved from ACC (I) to LOCK (0) (key is pushed in, shift lever in P)	A problem in the key interlock system (interlock system)	Check the interlock system - key interlock system circuit (see page 14-259).

(cont'd)

Protected by AR

Symptom Troubleshooting Index (cont'd)

Symptom	Probable cause(s)	Notes
Engine runs, but vehicle does not move in any gear	1. Low ATF level 2. Shift cable broken or out of adjustment 3. Connection between the shift cable and transmission or body is worn 4. ATF pump worn or binding 5. Regulator valve stuck or spring worn 6. ATF strainer clogged 7. Mainshaft worn or damaged 8. Final gears worn or damaged 9. Transmission-to-engine assembly error 10. Axle disengaged	• Check the ATF level, and check the ATF cooler lines for leakage and loose connections. If necessary, clean the ATF cooler lines. • Check for a loose shift cable at the shift lever and the transmission control shaft. • Improper alignment of ATF pump and torque converter housing may cause ATF pump seizure. The symptoms are mostly an rpm-related ticking noise or a high pitched squeak. • Check the line pressure. • Be careful not to damage the torque converter housing when replacing the main ball bearing. You may also damage the ATF pump when you torque down the main valve body. This will result in ATF pump seizure if not detected. Use the proper tools. • Install the main seal flush with the torque converter housing. If you push it into the torque converter housing until it tops out, it will block the fluid return passage and result in damage. • Check the ATF strainer for debris. If the ATF strainer is clogged with particles of steel or aluminum, inspect the ATF pump. If the ATF pump is OK, find the damaged components that caused the debris. If no cause for contamination is found, replace the torque converter. • Inspect the differential pinion gears for wear. If the differential pinion gears are worn, replace the differential assembly, replace the ATF strainer, thoroughly clean the transmission, and clean the torque converter, cooler, and lines.
Vehicle moves in 2 and R, but not in D, D3, or 1	1. 1st accumulator defective 2. 1st gears worn or damaged 3. 1st clutch defective	• Check the 1st clutch pressure. • Inspect the clutch piston, clutch piston check valve, and O-rings. Check the spring retainer and retainer seal for wear and damage. Inspect the clutch end-plate-to-top-disc clearance. If the clearance is out of tolerance, inspect the clutch discs and plates for wear and damage. If the discs are worn or damaged, replace them as a set. Inspect the clutch waved-plate height. If the height is out of tolerance, replace the waved-plate. If the discs and plates are OK, adjust the clearance with the clutch end plate. • Inspect the 1st clutch feed pipe. If the 1st clutch feed pipe is scored, replace the end cover. • Replace the secondary shaft if the bushing for the 1st clutch feed pipe is loose or damaged.

BACK

Protected by AR

Symptom	Probable cause(s)	Notes
Vehicle moves in D, D3, 1, and R, but not in 2	1. 2nd accumulator defective 2. 2nd gears worn or damaged 3. 2nd clutch defective	• Check the 2nd clutch pressure. • Inspect the clutch piston, clutch piston check valve, and O-rings. Check the spring retainer and retainer seal for wear and damage. Inspect the clutch end-plate-to-top-disc clearance. If the clearance is out of tolerance, inspect the clutch discs and plates for wear and damage. If the discs are worn or damaged, replace them as a set. Inspect the clutch waved-plate height. If the height is out of tolerance, replace the waved-plate. If the discs and plates are OK, adjust the clearance with the clutch end plate.
Vehicle moves in D, D3, 2, and 1, but not in R	1. Shift solenoid valve E defective 2. Shift fork shaft stuck 3. Shift valve E defective 4. 4th/reverse accumulator defective 5. 4th clutch defective 6. Reverse gears worn or damaged	• Check the D indicator, and check for loose connectors. Inspect the shift solenoid valve E for seizure, and O-rings for wear and damage. • Check for a missing shift fork bolt on the shift fork shaft. • Check the 4th clutch pressure. • Inspect the clutch piston, clutch piston check valve, and O-rings. Check the spring retainer for wear and damage. Inspect the clutch end-plate-to-top-disc clearance. If the clearance is out of tolerance, inspect the clutch discs and plates for wear and damage. If the discs are worn or damaged, replace them as a set. Inspect the clutch waved-plate height. If the height is out of tolerance, replace the waved-plate. If the discs and plates are OK, adjust the clearance with the clutch end plate. • Inspect the reverse selector gear teeth chamfers, and inspect the engagement teeth chamfers of the countershaft 4th gear and reverse gear. Replace the reverse gears and the reverse selector if they are worn or damaged. If the transmission makes a clicking, grinding, or whirring noise, also replace the mainshaft 4th gear, reverse idler gear, and countershaft 4th gear.
Poor acceleration; flares when starting off in D, D3, and R; stall speed high in 2 and 1, and in D and D3 in 1st and 2nd	1. Low ATF level 2. Shift cable broken or out of adjustment 3. ATF pump worn or binding 4. Regulator valve stuck or spring worn 5. ATF strainer clogged 6. Torque converter check valve defective	• Check the ATF level, and check the ATF cooler lines for leakage and loose connections. If necessary, clean the ATF cooler lines. • Check for a loose shift cable at the shift lever and the transmission control shaft. • Improper alignment of ATF pump and torque converter housing may cause ATF pump seizure. The symptoms are mostly an rpm-related ticking noise or a high pitched squeak. • Check the ATF strainer for debris. If the ATF strainer is clogged with particles of steel or aluminum, inspect the ATF pump. If the ATF pump is OK, find the damaged components that caused the debris. If no cause for contamination is found, replace the torque converter.

(cont'd)

Protected by AR

Symptom Troubleshooting Index (cont'd)

Symptom	Probable cause(s)	Notes
Poor acceleration; flares when starting off in D, D3, and R; stall speed high when starting off in 2	2nd clutch defective	• Check the 2nd clutch pressure. • Inspect the clutch piston, clutch piston check valve, and O-rings. Check the spring retainer and retainer seal for wear and damage. Inspect the clutch end-plate-to-top-disc clearance. If the clearance is out of tolerance, inspect the clutch discs and plates for wear and damage. If the discs are worn or damaged, replace them as a set. Inspect the clutch waved-plate height. If the height is out of tolerance, replace the waved-plate. If the discs and plates are OK, adjust the clearance with the clutch end plate.
Poor acceleration; flares when starting off in D, D3, and R; stall speed high in R	1. Shift cable broken or out of adjustment 2. 4th clutch defective	• Check for a loose shift cable at the shift lever and the transmission control shaft. • Check the 4th clutch pressure in the D and R positions. • Inspect the clutch piston, clutch piston check valve, and O-rings. Check the spring retainer for wear and damage. Inspect the clutch end-plate-to-top-disc clearance. If the clearance is out of tolerance, inspect the clutch discs and plates for wear and damage. If the discs are worn or damaged, replace them as a set. Inspect the clutch waved-plate height. If the height is out of tolerance, replace the waved-plate. If the discs and plates are OK, adjust the clearance with the clutch end plate.
Poor acceleration; stall speed low in 2 and 1, and in D and D3 in 1st and 2nd	1. Shift solenoid valve E defective 2. Torque converter one-way clutch defective 3. Engine output low 4. Torque converter clutch piston defective 5. Lock-up shift valve defective	• Check the D indicator, and check for loose connectors. Inspect the shift solenoid valve E for seizure, and O-ring for wear and damage. • Replace the torque converter.
Poor acceleration; stall speed low in R	1. Engine output low 2. Torque converter clutch piston defective 3. Lock-up shift valve defective	Replace the torque converter.

BACK

Protected by AR

Symptom	Probable cause(s)	Notes
Engine idle vibration	1. Low ATF level 2. Shift solenoid valve E defective 3. Drive plate defective or transmission misassembled 4. Engine output low 5. Torque converter clutch piston defective 6. ATF pump worn or binding 7. Lock-up shift valve defective 8. Misadjusted engine and transmission mounts	• Check the ATF level, and check the ATF cooler lines for leakage and loose connections. If necessary, clean the ATF cooler lines. • Improper alignment of ATF pump and torque converter housing may cause ATF pump seizure. The symptoms are mostly an rpm-related ticking noise or a high pitched squeak. • Inspect the ATF strainer for clogging with particles of steel or aluminum. If the ATF strainer is clogged, replace it, and clean the torque converter, cooler, and lines. • Check the D indicator, and check for loose connectors. Inspect the shift solenoid valve E for seizure, and O-rings for wear and damage. • Check for a misinstalled/damaged drive plate. • Set idle rpm in gear to the specified idle speed. If still no good, adjust the engine and transmission mounts. • Replace the torque converter.
Vehicle moves in N	1. Excessive ATF 2. Foreign material in separator plate orifice 3. Relief valve defective 4. 1st clutch defective 5. 2nd clutch defective 6. 3rd clutch defective 7. 4th clutch defective 8. 5th clutch defective 9. Clutch end plate-to-top disc clearance incorrect 10. Needle bearing seized up, worn, or damaged 11. Thrust washer seized up, worn, or damaged	• Check the ATF level, and drain the ATF if it is over-filled. • Check the 1st, 2nd, 3rd, 4th, and 5th clutch pressures. • Check the ATF strainer for debris. If the ATF strainer is clogged with particles of steel or aluminum, inspect the ATF pump. If the ATF pump is OK, find the damaged components that caused the debris. If no cause for contamination is found, replace the torque converter. • Inspect the clutch piston, clutch piston check valve, and O-rings. Check the spring retainer and retainer seal (1st, 2nd, and 3rd) for wear and damage. Inspect the clutch end-plate-to-top-disc clearance. If the clearance is out of tolerance, inspect the clutch discs and plates for wear and damage. If the discs are worn or damaged, replace them as a set. Inspect the clutch waved-plate height. If the height is out of tolerance, replace the waved-plate. If the discs and plates are OK, adjust the clearance with the clutch end plate. • Inspect the 1st clutch feed pipe. If the 1st clutch feed pipe is scored, replace the end cover. • Inspect the 3rd clutch feed pipe. If the 3rd clutch feed pipe is scored, replace it and O-ring under the feed pipe guide. • Replace the secondary shaft if the bushing for the 1st or 3rd clutch feed pipe is loose or damaged. • Inspect the 5th clutch feed pipe. If the 5th clutch feed pipe is scored, replace it and the O-ring under the feed pipe guide. • Replace the mainshaft if the bushing for the 5th clutch feed pipe is loose or damaged.

(cont'd)

BACK

Protected by AR

Symptom Troubleshooting Index (cont'd)

Symptom	Probable cause(s)	Notes
Late shift after shifting from N to D and D3, or excessive shock when shifted into D and D3	1. Shift solenoid valve E defective 2. A/T clutch pressure control solenoid valve A defective 3. A/T clutch pressure control solenoid valve B defective 4. A/T clutch pressure control solenoid valve C defective 5. Shift cable broken or out of adjustment 6. Connection between the shift cable and transmission or body is worn 7. Input shaft (mainshaft) speed sensor defective 8. Output shaft (countershaft) speed sensor defective 9. ATF temperature sensor defective 10. Foreign material in separator plate orifice 11. Servo control valve defective 12. 1st accumulator defective 13. 1st check ball stuck 14. Lock-up shift valve defective 15. 1st clutch defective	• Check the D indicator, and check for loose connectors. • Inspect the solenoid valve filter/gasket and O-rings for wear and damage, and inspect the solenoid valves for seizure. • Check the input shaft (mainshaft) speed sensor and output shaft (countershaft) speed sensor installation. • Check for a loose shift cable at the shift lever and the transmission control shaft. • Check the 1st clutch pressure. • Inspect the clutch piston, clutch piston check valve, and O-rings. Check the spring retainer and retainer seal for wear and damage. Inspect the clutch end-plate-to-top-disc clearance. If the clearance is out of tolerance, inspect the clutch discs and plates for wear and damage. If the discs are worn or damaged, replace them as a set. Inspect the clutch waved-plate height. If the height is out of tolerance, replace the waved-plate. If the discs and plates are OK, adjust the clearance with the clutch end plate. • Inspect the 1st clutch feed pipe. If the 1st clutch feed pipe is scored, replace the end cover. • Replace the secondary shaft if the bushing for the 1st clutch feed pipe is loose or damaged.
Late shift after shifting from N to R, or excessive shock when shifted into R	1. Shift solenoid valve E defective 2. A/T clutch pressure control solenoid valve A defective 3. Shift cable broken or out of adjustment 4. Loose or poor connection between the shift cable and transmission or body is worn 5. Input shaft (mainshaft) speed sensor defective 6. Output shaft (countershaft) speed sensor defective 7. ATF temperature sensor defective 8. Shift fork shaft stuck 9. Foreign material in separator plate orifice 10. Shift valve E defective 11. 4th/reverse accumulator defective 12. Lock-up shift valve defective 13. 4th clutch defective	• Check the D indicator, and check for loose connectors. • Inspect the solenoid valve filter/gasket and O-rings for wear and damage, and inspect the solenoid valves for seizure. • Check the input shaft (mainshaft) speed sensor and output shaft (countershaft) speed sensor installation. • Check for a loose shift cable at the shift lever and the transmission control shaft. • Inspect the clutch piston, clutch piston check valve, and O-rings. Check the spring retainer for wear and damage. Inspect the clutch end-plate-to-top-disc clearance. If the clearance is out of tolerance, inspect the clutch discs and plates for wear and damage. If the discs are worn or damaged, replace them as a set. Inspect the clutch waved-plate height. If the height is out of tolerance, replace the waved-plate. If the discs and plates are OK, adjust the clearance with the clutch end plate. • Check for a missing shift fork bolt on the shift fork shaft. • Check the 4th clutch pressure. • Inspect the servo valve and O-ring.

BACK

Protected by AR

Symptom	Probable cause(s)	Notes
The A/T does not shift	1. Input shaft (mainshaft) speed sensor defective 2. Output shaft (countershaft) speed sensor defective	• Check the D indicator, and check for loose connectors. • Check the input shaft (mainshaft) and output shaft (countershaft) speed sensor installation.
Excessive shock or flares on all upshifts and downshifts	1. A/T clutch pressure control solenoid valve B defective 2. A/T clutch pressure control solenoid valve C defective 3. Input shaft (mainshaft) speed sensor defective 4. Output shaft (countershaft) speed sensor defective 5. ATF temperature sensor defective 6. Foreign material in separator plate orifice	• Check the D indicator, and check for loose connectors. • Inspect the solenoid valve filter/gasket and O-rings for wear and damage, and inspect the solenoid valves for seizure. • Check the input shaft (mainshaft) speed sensor and output shaft (countershaft) speed sensor installation.
Excessive shock or flares on 1-2 upshift or 2-1 downshift	1. Shift solenoid valve E defective 2. A/T clutch pressure control solenoid valve A defective 3. A/T clutch pressure control solenoid valve B defective 4. A/T clutch pressure control solenoid valve C defective 5. 2nd clutch transmission fluid pressure switch defective 6. Foreign material in separator plate orifice 7. 1st accumulator defective 8. 2nd accumulator defective 9. 1st check ball stuck 10. 2nd check ball stuck 11. Lock-up shift valve defective 12. 1st clutch defective 13. 2nd clutch defective	• Check the D indicator, and check for loose connectors. • Inspect the solenoid valve filter/gasket and O-rings for wear and damage, and inspect the solenoid valves for seizure. • Check the 1st and 2nd clutch pressures. • Inspect the clutch piston, clutch piston check valve, and O-rings. Check the spring retainer and retainer seal for wear and damage. Inspect the clutch end-plate-to-top-disc clearance. If the clearance is out of tolerance, inspect the clutch discs and plates for wear and damage. If the discs are worn or damaged, replace them as a set. Inspect the clutch waved-plate height. If the height is out of tolerance, replace the waved-plate. If the discs and plates are OK, adjust the clearance with the clutch end plate. • Inspect the 1st clutch feed pipe. If the 1st clutch feed pipe is scored, replace the end cover. • Replace the secondary shaft if the bushing for the 1st clutch feed pipe is loose or damaged.

(cont'd)

Protected by AR

Symptom Troubleshooting Index (cont'd)

Symptom	Probable cause(s)	Notes
Excessive shock or flares on 2-3 upshift or 3-2 downshift	1. A/T clutch pressure control solenoid valve B defective 2. A/T clutch pressure control solenoid valve C defective 3. 3rd clutch transmission fluid pressure switch defective 4. Foreign material in separator plate orifice 5. 2nd accumulator defective 6. 3rd accumulator defective 7. 2nd check ball stuck 8. 2nd clutch defective 9. 3rd clutch defective	• Check the D indicator, and check for loose connectors. • Inspect the solenoid valve filter/gasket for wear and damage, and inspect the solenoid valves for seizure. • Check the 2nd and 3rd clutch pressures. • Inspect the clutch piston, clutch piston check valve, and O-rings. Check the spring retainer and retainer seal for wear and damage. Inspect the clutch end-plate-to-top-disc clearance. If the clearance is out of tolerance, inspect the clutch discs and plates for wear and damage. If the discs are worn or damaged, replace them as a set. Inspect the clutch waved-plate height. If the height is out of tolerance, replace the waved-plate. If the discs and plates are OK, adjust the clearance with the clutch end plate. • Inspect the 3rd clutch feed pipe. If the 3rd clutch feed pipe is scored, replace it and the O-ring under the feed pipe guide. • Replace the secondary shaft if the bushing for the 3rd clutch feed pipe is loose or damaged.
Excessive shock or flares on 3-4 upshift or 4-3 downshift	1. A/T clutch pressure control solenoid valve B defective 2. A/T clutch pressure control solenoid valve C defective 3. Foreign material in separator plate orifice 4. 3rd accumulator defective 5. 4th accumulator defective 6. 3rd clutch defective 7. 4th clutch defective	• Check the D indicator, and check for loose connectors. • Inspect the solenoid valve filter/gasket and O-rings for wear and damage, and inspect the solenoid valves for seizure. • Check the 3rd and 4th clutch pressures. • Inspect the clutch piston, clutch piston check valve, and O-rings. Check the spring retainer and retainer seal (3rd) for wear and damage. Inspect the clutch end-plate-to-top-disc clearance. If the clearance is out of tolerance, inspect the clutch discs and plates for wear and damage. If the discs are worn or damaged, replace them as a set. Inspect the clutch waved-plate height. If the height is out of tolerance, replace the waved-plate. If the discs and plates are OK, adjust the clearance with the clutch end plate. • Inspect the 3rd clutch feed pipe. If the 3rd clutch feed pipe is scored, replace it and the O-ring under the feed pipe guide. • Replace the secondary shaft if the bushing for the 3rd clutch feed pipe is loose or damaged.

BACK

Protected by AR

Symptom	Probable cause(s)	Notes
Excessive shock or flares on 4-5 upshift or 5-4 downshift	1. A/T clutch pressure control solenoid valve B defective 2. A/T clutch pressure control solenoid valve C defective 3. Foreign material in separator plate orifice 4. 4th accumulator defective 5. 5th accumulator defective 6. 4th clutch defective 7. 5th clutch defective	• Check the D indicator, and check for loose connectors. • Inspect the solenoid valve filter/gasket and O-rings for wear and damage, and inspect the solenoid valves for seizure. • Check the 4th and 5th clutch pressures. • Inspect the clutch piston, clutch piston check valve, and O-rings. Check the spring retainer for wear and damage. Inspect the clutch end-plate-to-top-disc clearance. If the clearance is out of tolerance, inspect the clutch discs and plates for wear and damage. If the discs are worn or damaged, replace them as a set. Inspect the clutch waved-plate height. If the height is out of tolerance, replace the waved-plate. If the discs and plates are OK, adjust the clearance with the clutch end plate. • Inspect the 5th clutch feed pipe. If the 5th clutch feed pipe is scored, replace it and the O-ring under the feed pipe guide. • Replace the mainshaft if the bushing for the 5th clutch feed pipe is loose or damaged.
Noise from transmission in all shift lever positions	1. ATF pump worn or binding 2. Mainshaft bearing, countershaft bearing, or secondary shaft bearing defective	• Improper alignment of ATF pump and torque converter housing may cause ATF pump seizure. The symptoms are mostly an rpm-related ticking noise or a high pitched squeak. • Be careful not to damage the torque converter housing when replacing the main ball bearing. You may also damage the ATF pump when you torque down the main valve body. This will result in ATF pump seizure if not detected. Use the proper tools. • Install the main seal flush with the torque converter housing. If you push it into the torque converter housing until it tops out, it will block the fluid return passage and result in damage. • Inspect the ATF strainer for clogging with particles of steel or aluminum. If the ATF strainer is clogged, replace it, and clean the torque converter, cooler, and lines. • Inspect the mainshaft, countershaft and secondary shaft for wear or damage.
Vehicle does not accelerate above 31 mph (50 km/h)	Torque converter one-way clutch defective	Replace the torque converter.
Vibration in all shift lever positions	Drive plate defective or transmission misassembled	• Check for a misinstalled/damaged drive plate. • Set idle rpm in gear to the specified idle speed. If still no good, adjust the engine and transmission mounts.

(cont'd)

Protected by AR

Symptom Troubleshooting Index (cont'd)

Symptom	Probable cause(s)	Notes
Shift lever does not operate smoothly	1. Transmission range switch defective or out of adjustment 2. Shift cable broken or out of adjustment 3. Connection between the shift cable and transmission or body is worn	• Check the D indicator, and check for loose connectors. • Inspect the transmission range switch for operation. • Check for a loose shift cable at the shift lever and the transmission control shaft.
Transmission does not shift into P	1. Shift cable broken or out of adjustment 2. Connection between the shift cable and transmission or body is worn 3. Park mechanism defective	• Check for a loose shift cable at the shift lever and the transmission control shaft. • Check the park pawl spring installation and the park lever spring installation. If installation is incorrect, install the spring correctly. Make sure that the park lever stop is not installed upside down. Check the distance between the park pawl shaft and park lever roller pin. If the distance is out of tolerance, adjust the distance with the park lever stop.
Torque converter clutch does not disengage	1. Shift solenoid valve E defective 2. A/T clutch pressure control solenoid valve A defective 3. Torque converter clutch piston defective 4. Lock-up shift valve defective 5. Lock-up control valve defective	• Check the D indicator, and check for loose connectors. • Inspect the solenoid valve filter/gasket for wear and damage, and inspect the solenoid valves for seizure. • Replace the torque converter.
Torque converter clutch does not operate smoothly	1. Shift solenoid valve E defective 2. A/T clutch pressure control solenoid valve A defective 3. Torque converter clutch piston defective 4. Torque converter check valve defective 5. Lock-up shift valve defective 6. Lock-up control valve defective	• Check the D indicator, and check for loose connectors. • Inspect the solenoid valve filter/gasket for wear and damage, and inspect the solenoid valves for seizure. • Replace the torque converter.

BACK

Protected by AR

Symptom	Probable cause(s)	Notes
Torque converter clutch does not engage	1. Shift solenoid valve E defective 2. A/T clutch pressure control solenoid valve A defective 3. Input shaft (mainshaft) speed sensor defective 4. Output shaft (countershaft) speed sensor defective 5. Torque converter clutch piston defective 6. Torque converter check valve defective 7. Lock-up shift valve defective 8. Lock-up control valve defective	• Check the D indicator, and check for loose connectors. • Inspect the solenoid valve filter/gasket for wear and damage, and inspect the solenoid valves for seizure. • Replace the torque converter. • Check the input shaft (mainshaft) speed sensor and output shaft (countershaft) speed sensor installation.
A/T gear position indicator does not indicate shift lever positions	1. Transmission range switch defective or out of adjustment 2. Shift cable broken or out of adjustment 3. Connection between the shift cable and transmission or body is worn	• Check the D indicator, and check for loose connectors. • Inspect the transmission range switch operation. • Check for a loose shift cable at the shift lever and the transmission control shaft.
Speedometer and odometer do not work	Output shaft (countershaft) speed sensor defective	• Check the D indicator, and check for loose connectors. • Inspect the transmission range switch operation. • Check the output shaft (countershaft) speed sensor installation.
The engine does not rev to high rpm, and the transmission upshifts at low rpm	VTEC rocker arms defective	Check the engine rocker arms.

Protected by AR

System Description

General Operation

The automatic transmission is a combination of a 3-element torque converter and triple-shaft electronically controlled unit which provides 5 speeds forward and 1 reverse. The entire unit is positioned in line with the engine.

Torque Converter, Gears, and Clutches
The torque converter consists of a pump, turbine, and stator assembly in a single unit. The converter housing (pump) is connected to the engine crankshaft and turns as the engine turns. Around the outside of the torque converter is a ring gear which meshes with the starter pinion when the engine is being started. The entire torque converter assembly serves as a flywheel while transmitting power to the transmission mainshaft, the transmission has three parallel shafts; the mainshaft, the countershaft, and the secondary shaft. The mainshaft is in line with the engine crankshaft, and includes the 4th and 5th clutches, and gears for 5th, 4th, reverse, and idler. The mainshaft reverse gear is integral with the mainshaft 4th gear. The countershaft includes the gears for 1st, 2nd, 3rd, 4th, 5th, reverse, park, and the final drive. The final drive gear is integral with the countershaft. The countershaft 4th gear and the countershaft reverse gear can be locked to the countershaft providing 4th or reverse gear, depending on which way the selector is moved. The secondary shaft includes the 1st, 2nd, and 3rd clutches, and gears for 1st, 2nd, 3rd, and idler. The idler shaft is located between the mainshaft and secondary shaft, and the idler gear transmits power between the mainshaft and the secondary shaft. The gears on the mainshaft and the secondary shaft are in constant mesh with those on the countershaft. When certain combinations of gears in the transmission are engaged by the clutches, power is transmitted through the mainshaft, then to the secondary shaft to the countershaft provide drive.

Electronic Control
The electronic control system consists of the powertrain control module (PCM), sensors, and solenoid valves. Shifting and lock-up are electronically controlled for comfortable driving under all conditions. The PCM is located below the dashboard, under the front lower panel behind the center console.

Hydraulic Control
The valve bodies include the main valve body, the regulator valve body, and the servo body. They are bolted to the torque converter housing. The main valve body contains the manual valve, the shift valves A, B, C, and E, the relief valve, the lock-up control valve, the cooler check valve, the servo control valve, and the ATF pump gears. The regulator valve body contains the regulator valve, the torque converter check valve, lock-up shift valve, and the 1st and 3rd accumulators. The servo body contains the servo valve, the shift valve D, accumulators for 2nd, 4th, and 5th, and shift solenoid valves for A, B, C, D, and E. Fluid from the regulator passes through the manual valve to the various control valves. The 1st, 3rd, 5th clutches receive fluid from their respective feed pipes, and the 2nd and the 4th clutches receive fluid from the internal hydraulic circuit.

Shift Control Mechanism
The PCM controls to shift gears shift solenoid valves A, B, C, D, and E, and the A/T clutch pressure control solenoid valves A, B, and C, while receiving input signals from various sensors and switches located throughout the vehicle. The shift solenoid valves shift the positions of the shift valves to switch the port leading hydraulic pressure to the clutch. The A/T clutch pressure control solenoid valves A, B, and C regulate their respective pressure, and pressurize to the clutches to engage it and its corresponding gear. The pressures of the A/T clutch pressure control solenoid valves also apply to the shift valves to switch the port.

Lock-up Mechanism
The lock-up mechanism operates in the D position (2nd, 3rd, 4th, and 5th), and in D3 position (2nd and 3rd). The pressurized fluid is drained from the back of the torque converter through a fluid passage, causing the torque converter clutch piston to be held against the torque converter cover. As this takes place, the mainshaft rotates at the same speed as the engine crankshaft. Together with the hydraulic control, the PCM optimizes the timing and volume of the lock-up mechanism. When the shift solenoid valve E is turned on by the PCM, shift solenoid valve E pressure switches the lock-up shift valve on and off. The A/T clutch pressure control solenoid valve A and the lock-up control valve control the volume of the lock-up conditions.

BACK

Protected by AR

Gear Selection
The shift lever has seven positions; P: PARK, R: REVERSE, N: NEUTRAL, D: 1st through 5th gear ranges, D3: 1st through 3rd gear ranges, 2: 2nd gear, and 1: 1st gear.

Position	Description
P: PARK	Front wheels locked; park pawl engaged with park gear on countershaft. All clutches are released.
R: REVERSE	Reverse; reverse selector engaged with countershaft reverse gear and 4th clutch engaged.
N: NEUTRAL	All clutches are released.
D: DRIVE (1st through 5th)	General driving; starts off in 1st, shifts automatically to 2nd, 3rd, 4th, then 5th, depending on vehicle speed and throttle position. Downshifts through 4th, 3rd, 2nd, and 1st on deceleration to stop. The lock-up mechanism operates in 2nd, 3rd, 4th, and 5th gear.
D3: DRIVE (1st through 3rd)	Used for rapid acceleration at highway speeds and general driving; up-hill and down-hill driving; starts off in 1st, shifts automatically to 2nd, then 3rd, depending on vehicle speed and throttle position. Downshifts through 2nd to 1st on deceleration to stop. The lock-up mechanism operates in 2nd and 3rd gear.
2: SECOND	Used for engine braking or better traction starting off on loose or slippery surfaces; stays in 2nd gear; does not shift up or down.
1: FIRST	Used for engine braking; stays in 1st gear; does not shift up.

Starting is possible only in the P and N positions because of a slide-type neutral-safety switch.

Automatic Transmission (A/T) Gear Position Indicator
The A/T gear position indicator in the instrument panel shows which shift lever position has been selected without having to look down at the shift lever.

Protected by AR

System Description (cont'd)

Clutches and Gears

The 5-speed automatic transmission uses hydraulically-actuated clutches to engage or disengage the transmission gears. When hydraulic pressure is introduced into the clutch drum, the clutch piston moves. This presses the friction discs and steel plates together, locking them so they don't slip. Power is then transmitted through the engaged clutch pack to its hub-mounted gear. Likewise, when the hydraulic pressure is bled from the clutch pack, the piston releases the friction discs and steel plates, and they are free to slide past each other. This allows the gear to spin independently on its shaft, transmitting no power.

1st Clutch
The 1st clutch engages/disengages 1st gear, and is located at the middle of the secondary shaft. The 1st clutch is joined back-to-back to the 3rd clutch. The 1st clutch is supplied hydraulic pressure by its ATF feed pipe within the secondary shaft.

2nd Clutch
The 2nd clutch engages/disengages 2nd gear, and is located at the end of the secondary shaft, opposite the end cover. The 2nd clutch is supplied hydraulic pressure by a circuit connected to the internal hydraulic circuit.

3rd Clutch
The 3rd clutch engages/disengages 3rd gear, and is located at the middle of the secondary shaft. The 3rd clutch is joined back-to-back to the 1st clutch. The 3rd clutch is supplied hydraulic pressure by its ATF feed pipe within the secondary shaft.

4th Clutch
The 4th clutch engages/disengages 4th gear, as well as reverse gear, and is located at the middle of the mainshaft. The 4th clutch is joined back-to-back to the 5th clutch. The 4th clutch is supplied hydraulic pressure by its ATF feed pipe within the mainshaft.

5th Clutch
The 5th clutch engages/disengages 5th gear, and is located at the middle of the mainshaft. The 5th clutch is joined back-to-back to the 4th clutch. The 5th clutch is supplied hydraulic pressure by its ATF feed pipe within the mainshaft.

Gear operation
Gears on the mainshaft:
- 4th gear engages/disengages with the mainshaft by the 4th clutch.
- 5th gear engages/disengages with the mainshaft by the 5th clutch.
- Reverse gear engages/disengages with the mainshaft by the 4th clutch.
- Idler gear is splined with the mainshaft, and rotates with the mainshaft.

Gears on the countershaft:
- Final drive gear is integral with the countershaft.
- 1st, 2nd, 3rd, 5th, and park gears are splined with the countershaft, and rotate with the countershaft.
- 4th gear and reverse gear rotate freely from the countershaft. The reverse selector engages 4th gear and reverse gear with the reverse selector hub. The reverse selector hub is splined to the countershaft so that the 4th gear and reverse gear engage with the countershaft.

Gears on the secondary shaft:
- 1st gear engages/disengages with the secondary shaft by the 1st clutch.
- 2nd gear engages/disengages with the secondary shaft by the 2nd clutch.
- 3rd gear engages/disengages with the secondary shaft by the 3rd clutch.
- Idler gear is splined with the secondary shaft, and rotates with the secondary shaft.

The idler gear on the idler shaft transmits power between the mainshaft and the secondary shaft.
The reverse idler gear transmits power from the mainshaft reverse gear to the countershaft reverse gear, and changes rotational direction of the countershaft to reverse.

BACK

Protected by AR

Transmission Cutaway View

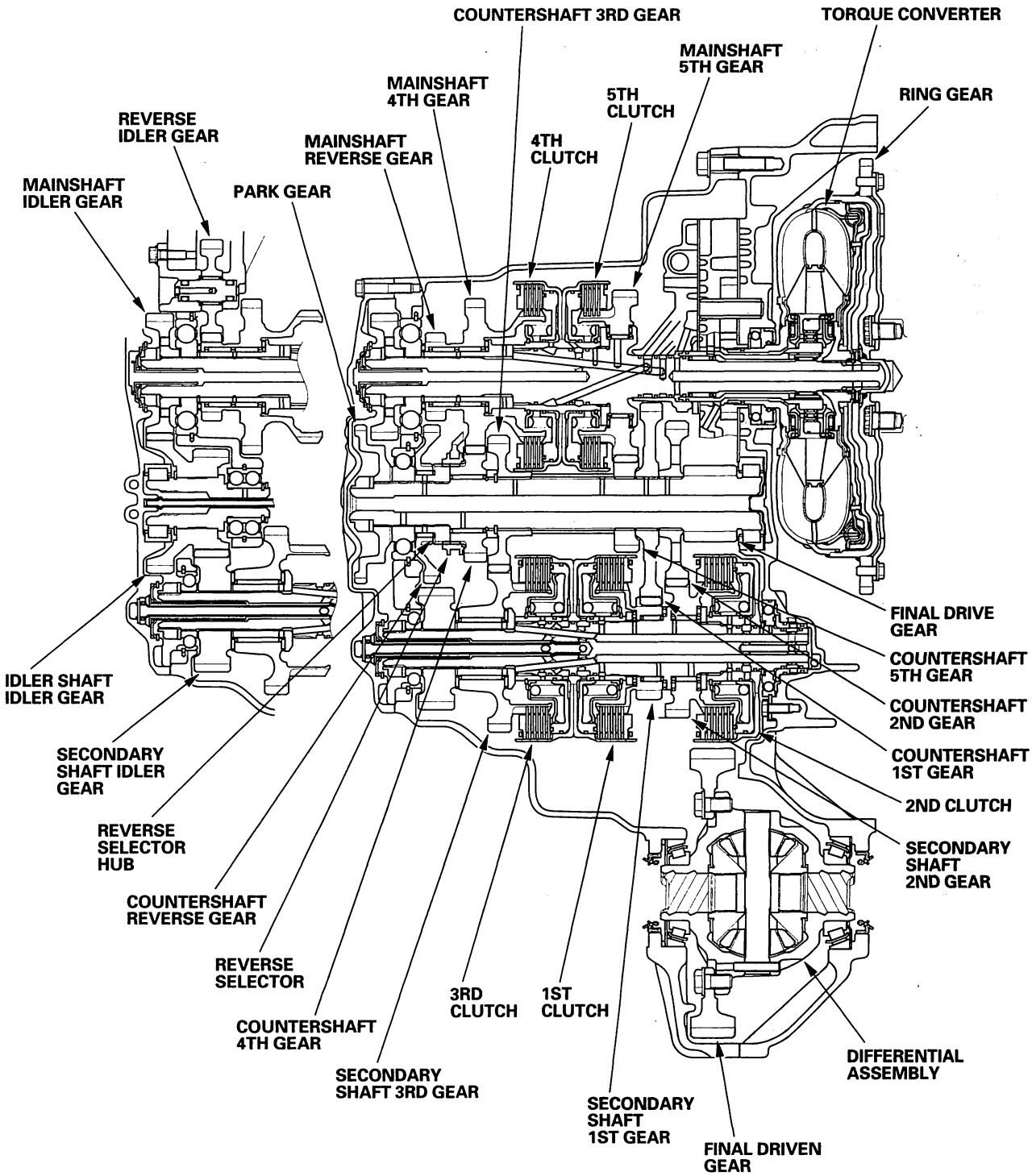

BACK

Protected by AR

System Description (cont'd)

Power Flow

P Position
Hydraulic pressure is not applied to the clutches. Power is not transmitted to the countershaft. The countershaft is locked by the park pawl, interlocking the park gear.

N Position
Engine power transmitted from the torque converter drives the mainshaft idler gear, the idler shaft idler gear, and the secondary shaft idler gear, but hydraulic pressure is not applied to the clutches. Power is not transmitted to the countershaft.
In this position, the position of the reverse selector differs according to whether the shift lever shifted from the D or R position:

- When shifted from the D position, the reverse selector engages with the countershaft 4th gear and the reverse selector hub, and the 4th gear engages with the countershaft.
- When shifted from the R position, the reverse selector engages with the countershaft reverse gear and the reverse selector hub, and the reverse gear engages with the countershaft.

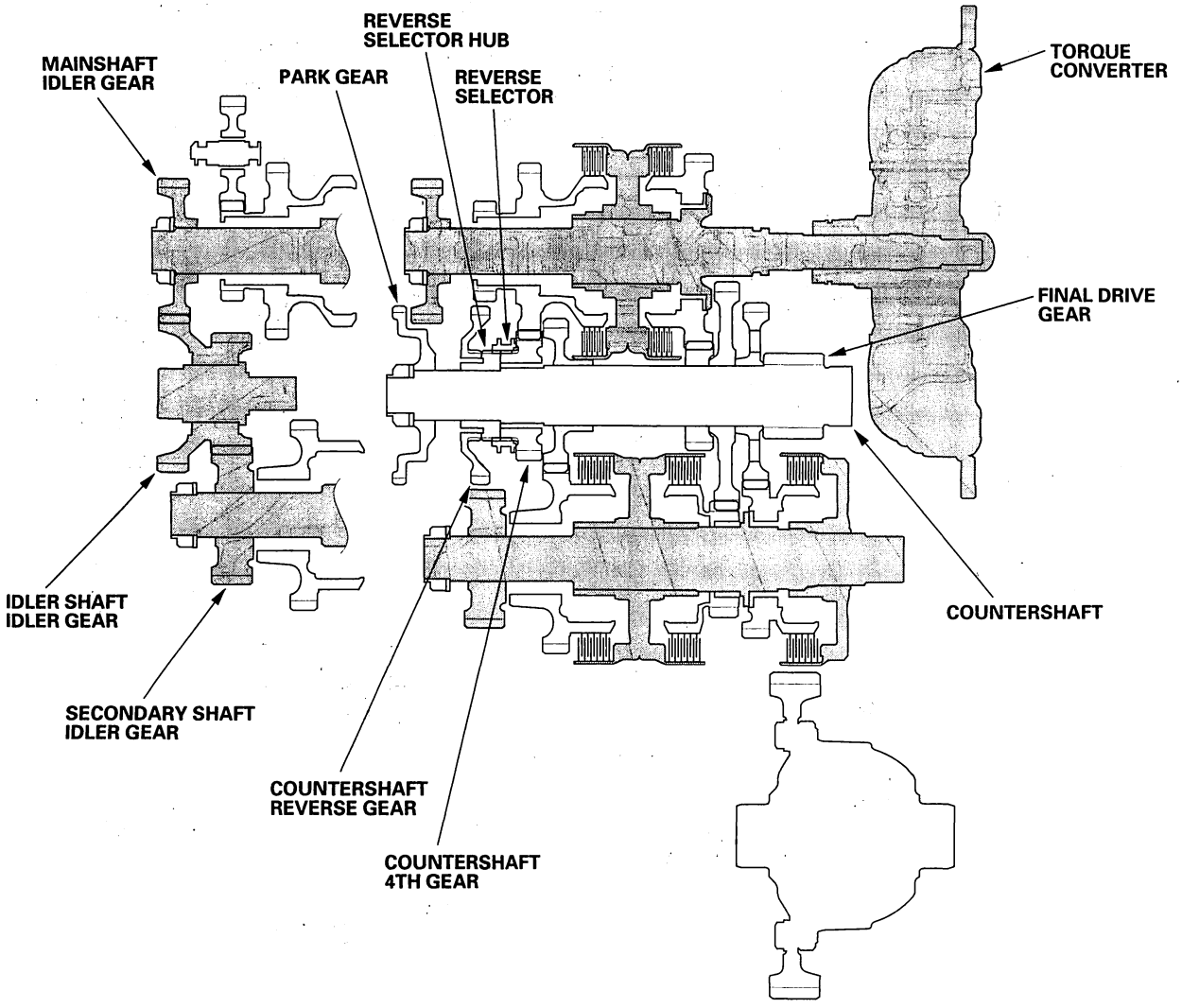

BACK

Protected by AR

1st Gear

- Hydraulic pressure is applied to the 1st clutch, then the 1st clutch engages the secondary shaft 1st gear with the secondary shaft.
- The mainshaft idler gear drives the secondary shaft via the idler shaft idler gear and the secondary shaft idler gear.
- The secondary shaft 1st gear drives the countershaft 1st gear and the countershaft.
- Power is transmitted to the final drive gear, which in turn drives the final driven gear.

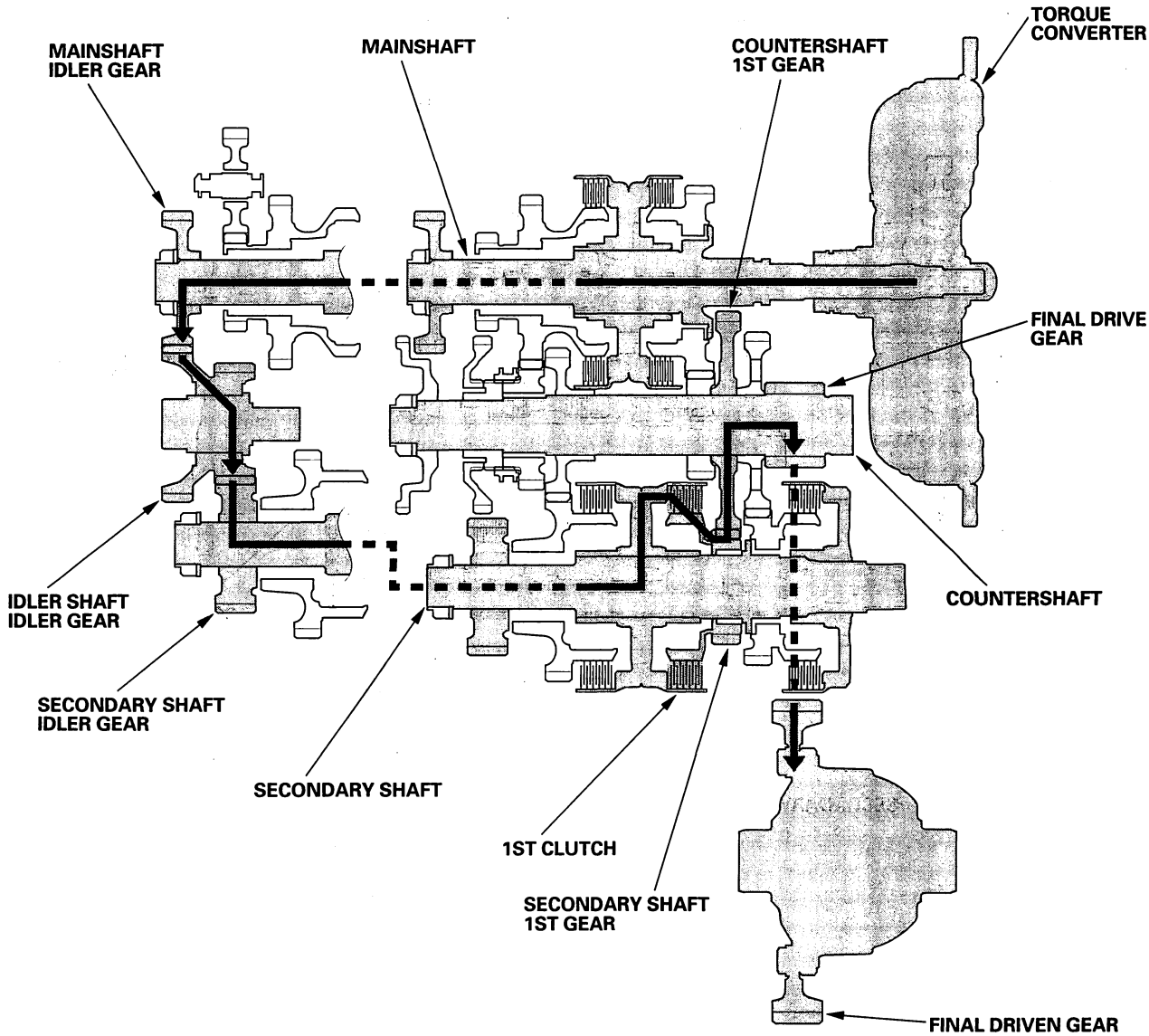

(cont'd)

BACK

Protected by AR

System Description (cont'd)

Power Flow (cont'd)

2nd Gear

- Hydraulic pressure is applied to the 2nd clutch, then the 2nd clutch engages the secondary shaft 2nd gear with the secondary shaft.
- The mainshaft idler gear drives the secondary shaft via the idler shaft idler gear and the secondary shaft idler gear.
- The secondary shaft 2nd gear drives the countershaft 2nd gear and the countershaft.
- Power is transmitted to the final drive gear, which in turn drives the final driven gear.

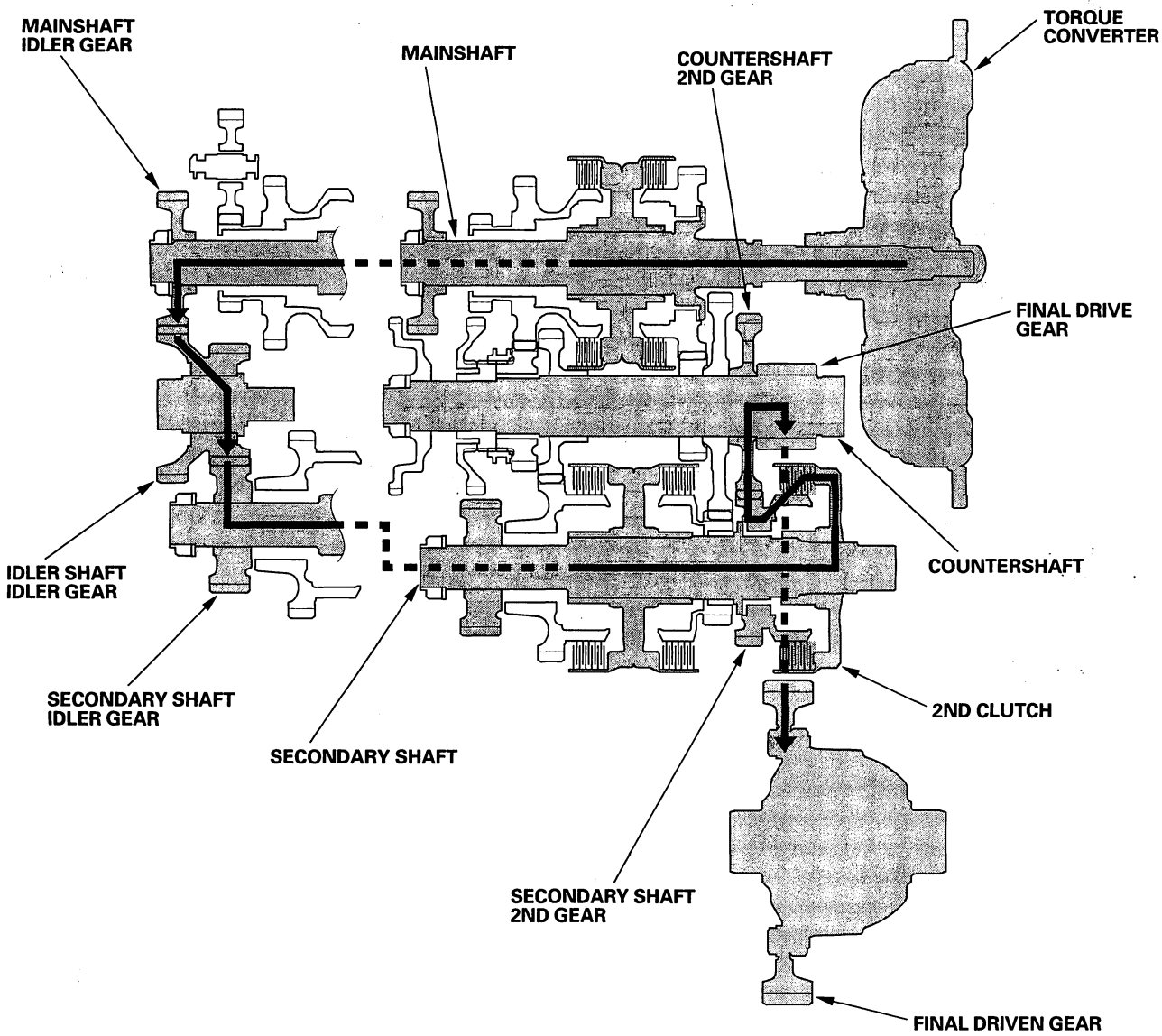

BACK

Protected by AR

3rd Gear

- Hydraulic pressure is applied to the 3rd clutch, then the 3rd clutch engages the secondary shaft 3rd gear with the secondary shaft.
- The mainshaft idler gear drives the secondary shaft via the idler shaft idler gear and secondary shaft idler gear.
- The secondary shaft 3rd gear drives the countershaft 3rd gear and the countershaft.
- Power is transmitted to the final drive gear, which in turn drives the final driven gear.

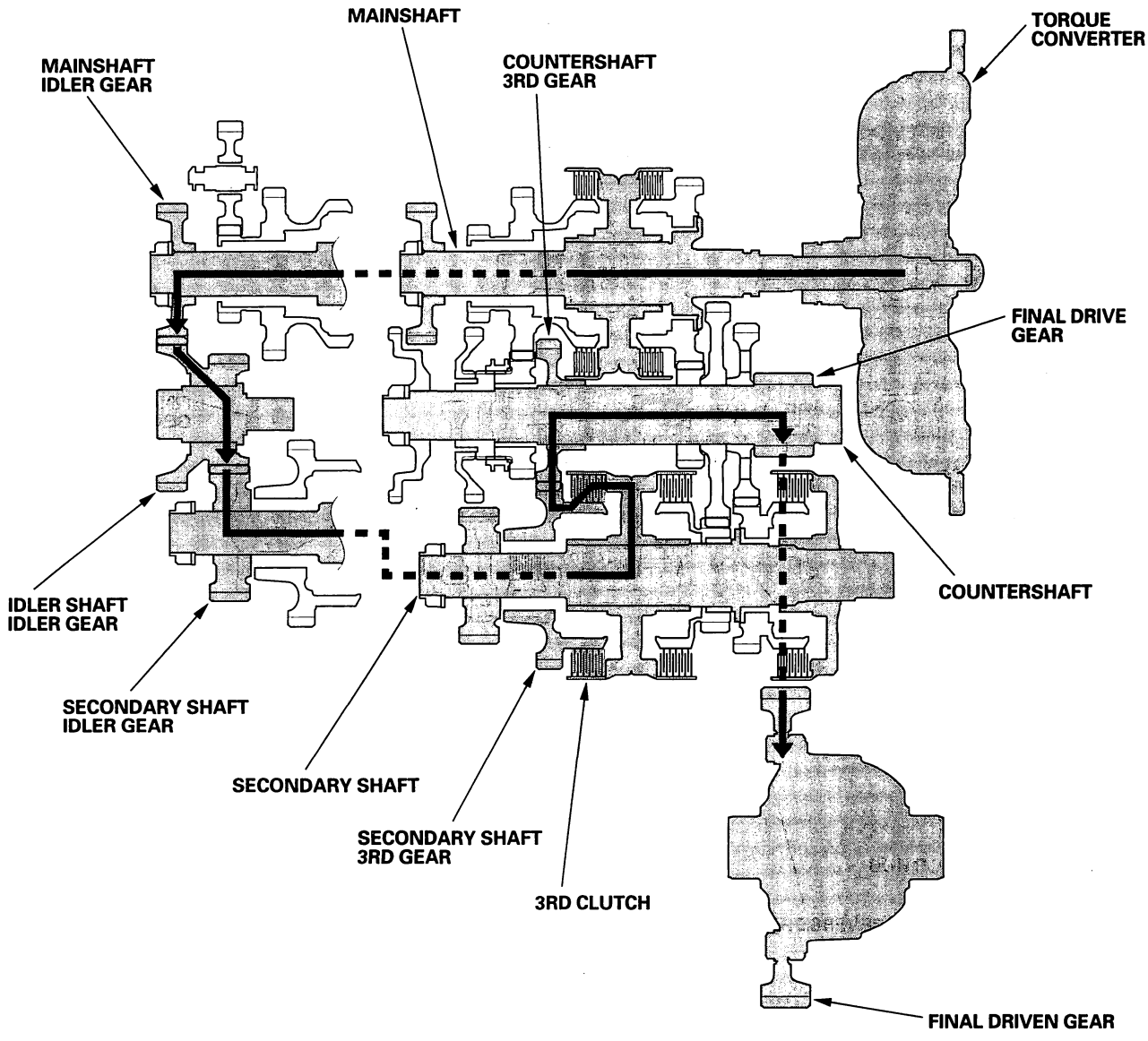

(cont'd)

BACK

Protected by AR

System Description (cont'd)

Power Flow (cont'd)

4th Gear

- Hydraulic pressure is applied to the servo valve to engage the reverse selector with the countershaft 4th gear and reverse selector hub while the shift lever is in forward range (D, D3, 2, and 1 positions).
- Hydraulic pressure is also applied to the 4th clutch, then the 4th clutch engages the mainshaft 4th gear with the mainshaft.
- The mainshaft 4th gear drives the countershaft 4th gear and the countershaft.
- Power is transmitted to the final drive gear, which in turn drives the final driven gear.

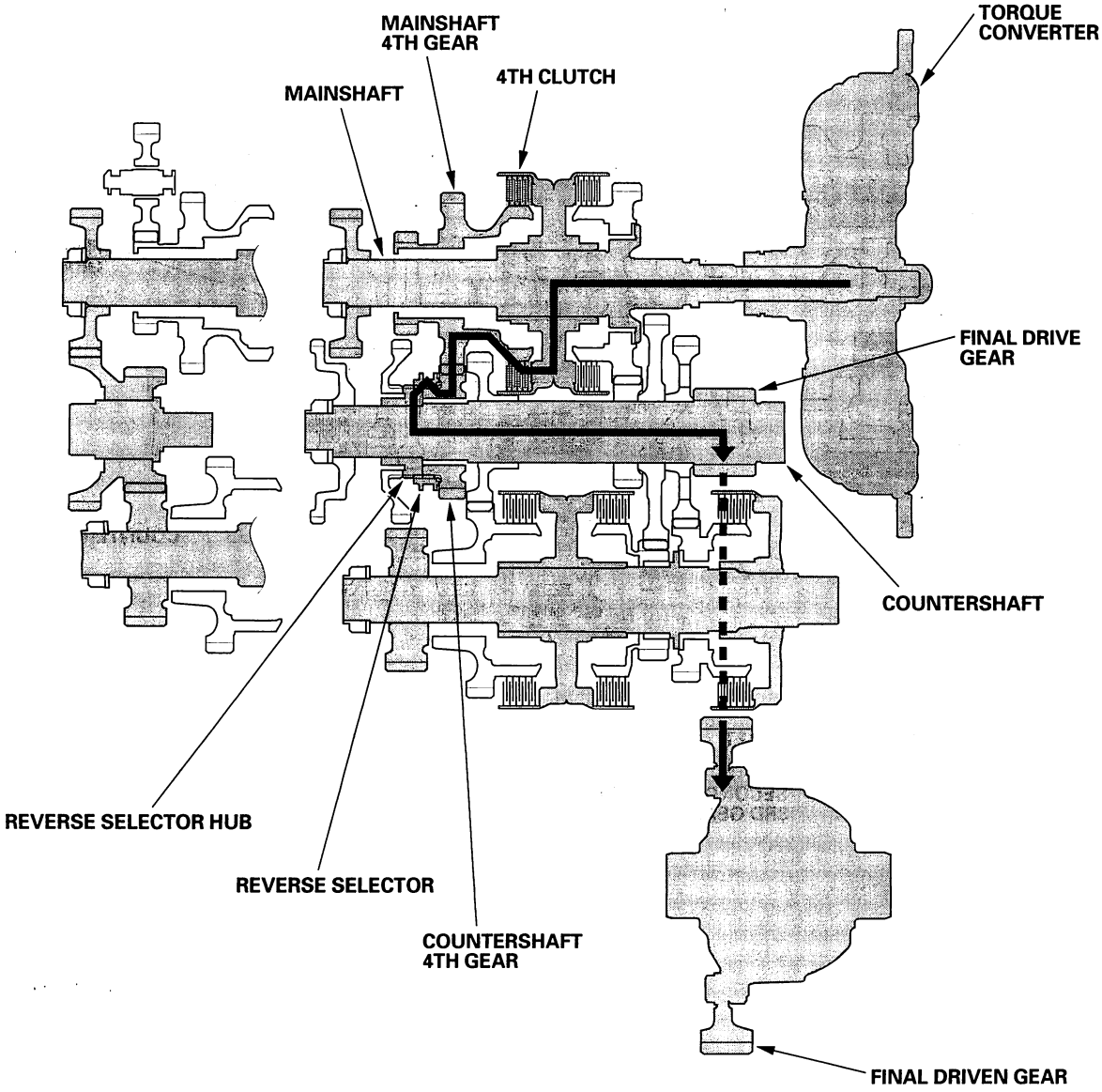

BACK

Protected by AR

5th Gear

- Hydraulic pressure is applied to the 5th clutch, then the 5th clutch engages the mainshaft 5th gear with the mainshaft.
- The mainshaft 5th gear drives the countershaft 5th gear and the countershaft.
- Power is transmitted to the final drive gear, which in turn drives the final driven gear.

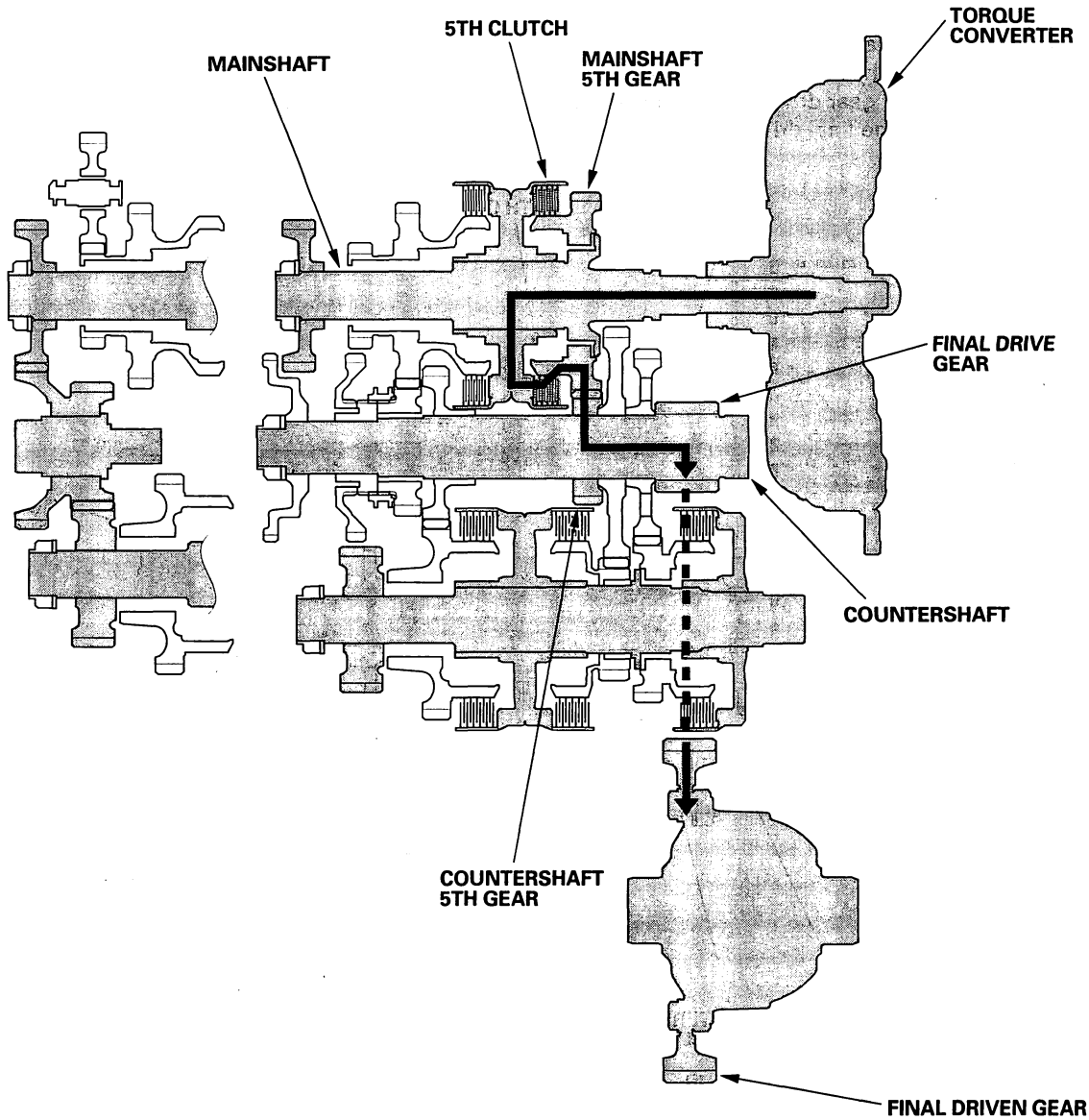

(cont'd)

BACK

Protected by AR

System Description (cont'd)

Power Flow (cont'd)

R Position

- Hydraulic pressure is applied to the servo valve to engage the reverse selector with the countershaft reverse gear and reverse selector hub while the shift lever is in the R position.
- Hydraulic pressure is also applied to the 4th clutch, then the 4th clutch engages the mainshaft reverse gear with the mainshaft.
- The mainshaft reverse gear drives the countershaft reverse gear via the reverse idler gear.
- The rotation direction of the countershaft reverse gear is changed by the reverse idler gear.
- The countershaft reverse gear drives the countershaft via the reverse selector, which drives the reverse selector hub.
- Power is transmitted to the final drive gear, which in turn drives the final driven gear.

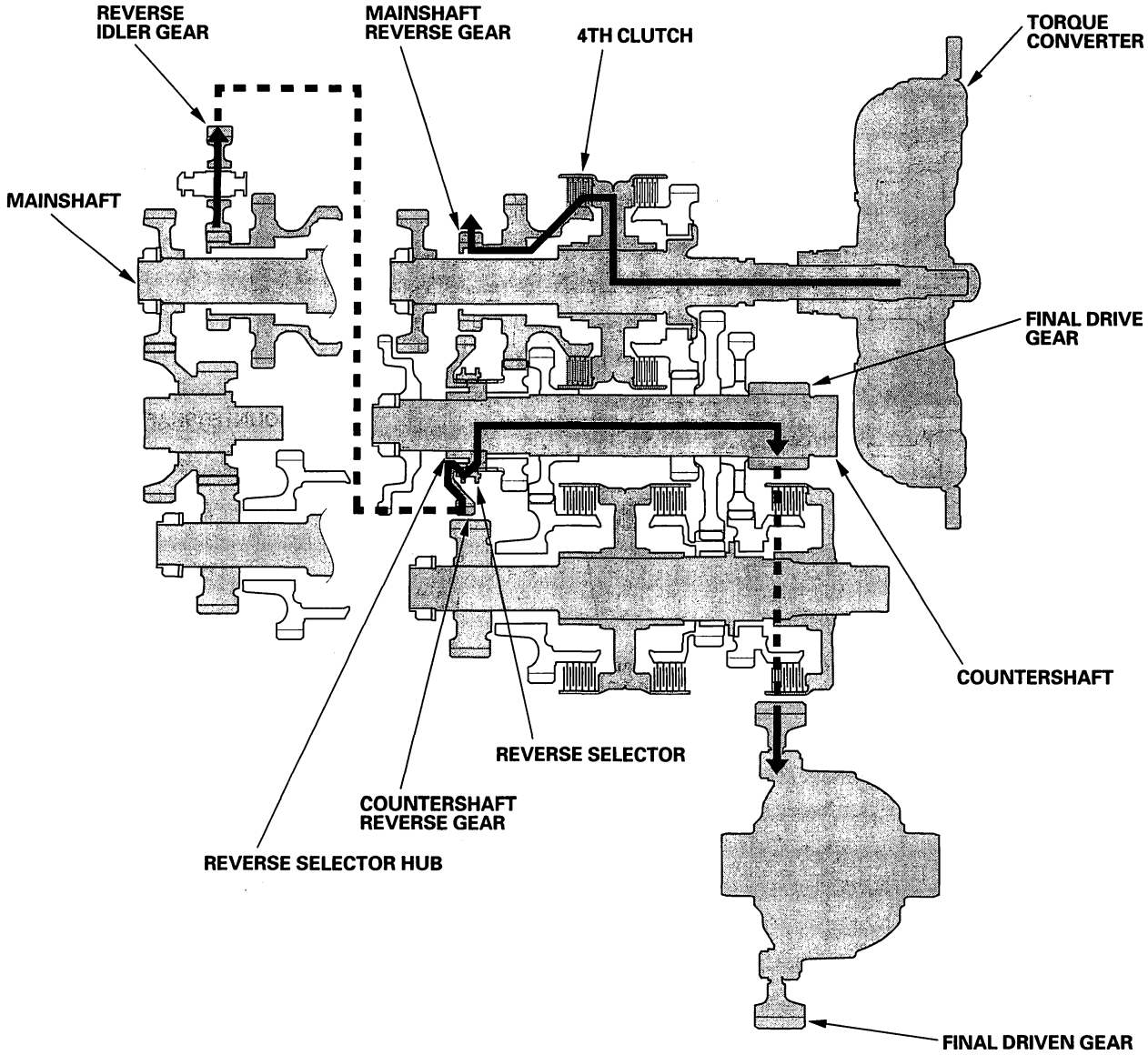

BACK

Protected by AR

Electronic Control System

Functional Diagram

The electronic control system consists of the powertrain control module (PCM), sensors, and solenoid valves. Shifting and lock-up are electronically controlled for comfortable driving under all conditions.

The PCM recieves input signals from the sensors, switches, and other control units, processes data, and outputs signals for the engine control system and A/T control system. The A/T control system includes shift control, grade logic control, clutch pressure control, and lock-up control.
The PCM switches the shift solenoid valves and the A/T clutch pressure control solenoid valves to control shifting transmission gears and lock-up torque converter clutch.

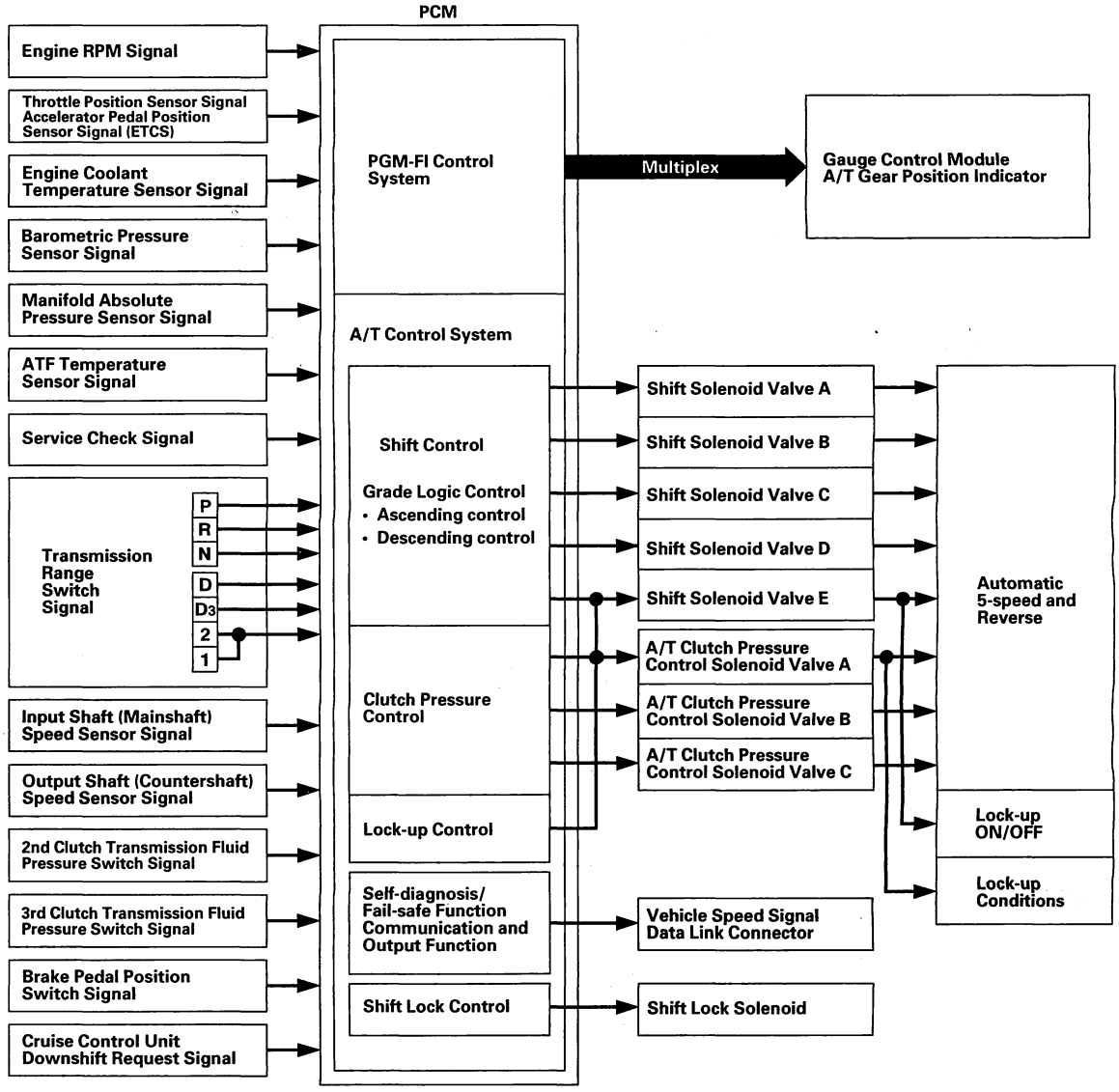

(cont'd)

BACK

Protected by AR

System Description (cont'd)

Electronic Control System (cont'd)

Electronic Controls Location

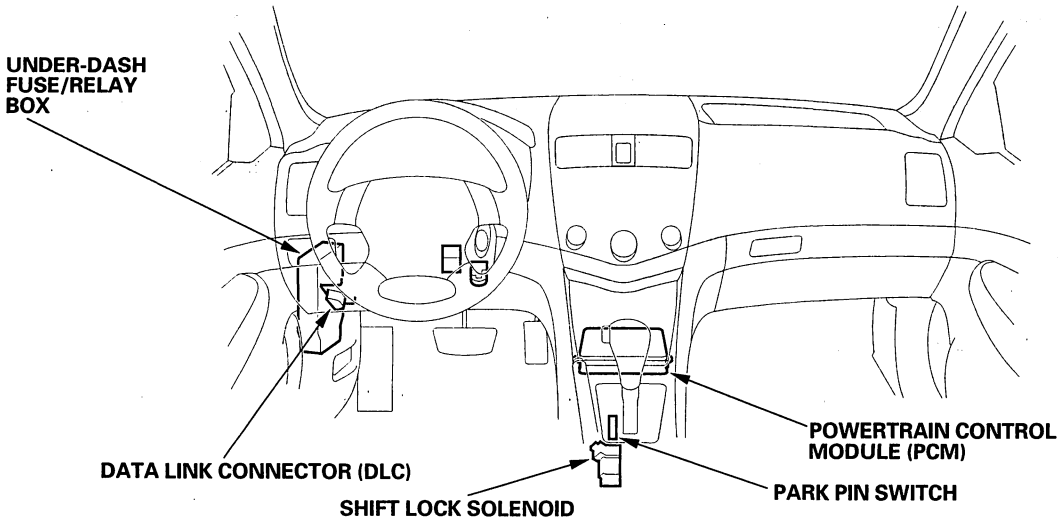

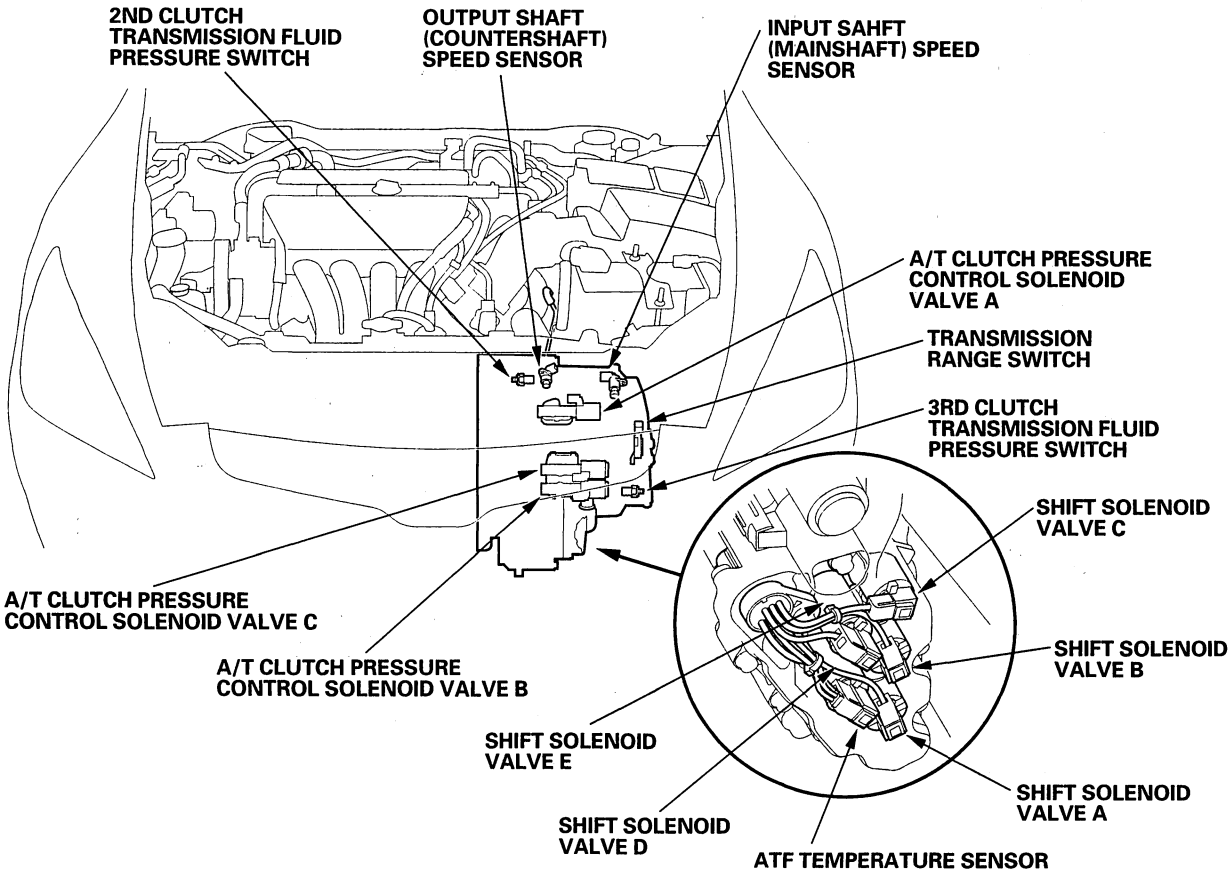

BACK

Protected by AR

Shift Control

The PCM instantly determines which gear should be selected by various signals sent from sensors and switches, and it actuates the shift solenoid valves A, B, C, D, and E to control shifting.

Also, a grade logic control system has been adopted to control shifting in D and D3 positions. The PCM compares actual driving conditions with memorized driving conditions, based on the input from the throttle position sensor (2003-2005 models), the accelerator pedal position sensor (2006 model), the engine coolant temperature sensor, the barometric pressure sensor, the brake pedal position switch signal, and the shift lever position signal, to control shifting while the vehicle is ascending or descending a slope.

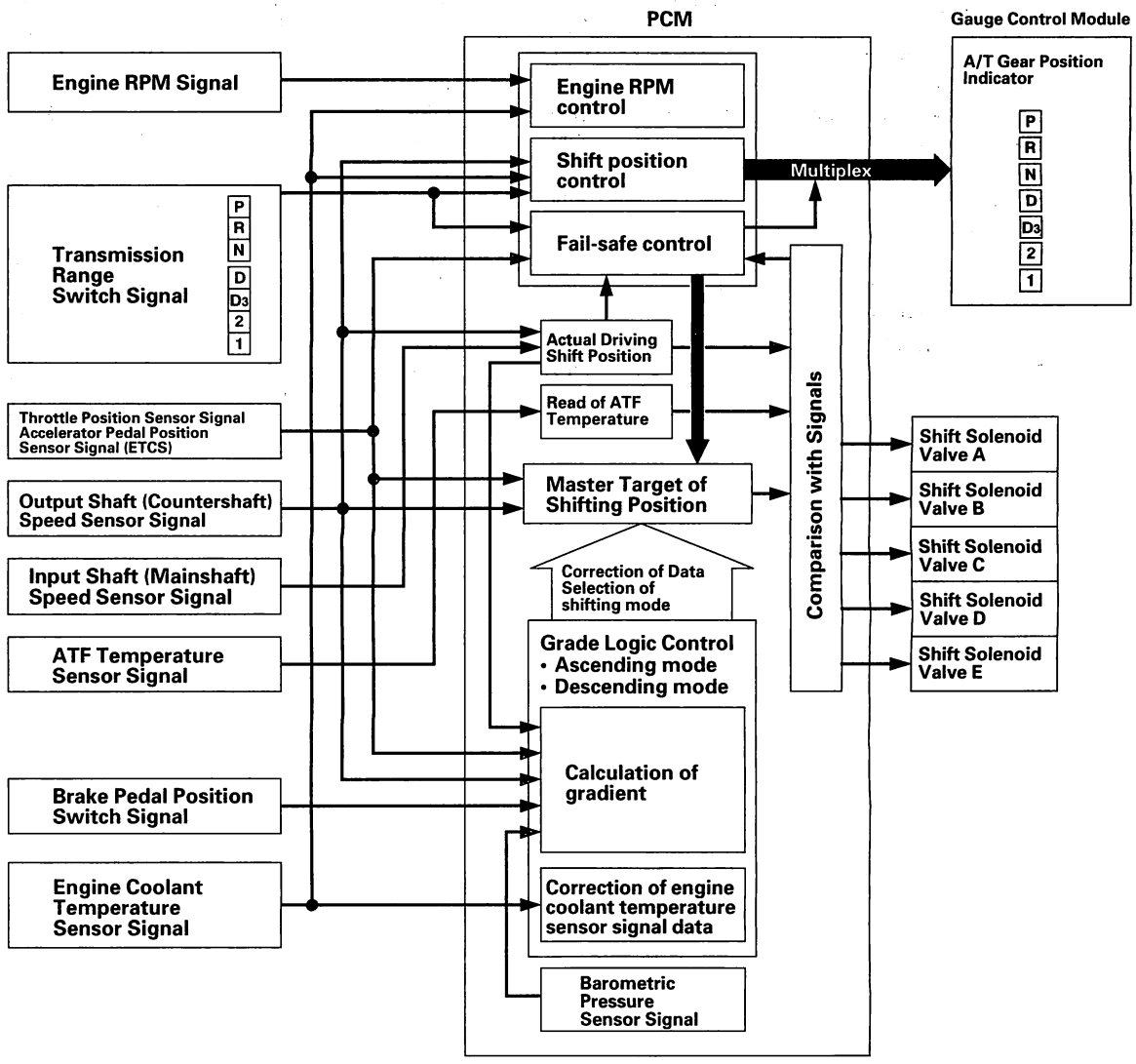

(cont'd)

BACK

Protected by AR

System Description (cont'd)

Electronic Control System (cont'd)

The PCM turns the shift solenoid valves A, B, C, D, and E ON and OFF to control transmission gear shifting. The combination of driving signals to shift solenoid valves A, B, C, D, and E are shown in the table.

Position	Gear position	Shift solenoid valves				
		A	B	C	D	E
D, D3	Shifting from N position	OFF	ON	ON	OFF	OFF
	Stays in 1st	ON	ON	ON	OFF	OFF
	Shifting gears between 1st and 2nd	OFF	ON	ON	OFF	OFF
	Stays in 2nd	OFF	ON	OFF	ON	OFF or ON
	Shifting gears between 2nd and 3rd	OFF	ON	ON	ON	OFF or ON
	Stays in 3rd	OFF	OFF	ON	OFF	OFF or ON
D	Shifting gears between 3rd and 4th	OFF	OFF	OFF	OFF	OFF or ON
	Stays in 4th	ON	OFF	OFF	OFF	OFF or ON
	Shifting gears between 4th and 5th	ON	OFF	OFF	ON	OFF or ON
	Stays in 5th	ON	OFF	ON	ON	OFF or ON
2	2nd gear	OFF	ON	OFF	ON	OFF
1	1st gear	ON	ON	ON	OFF	OFF
R	Shifting from P and N position	OFF	ON	OFF	OFF	ON
	Stays in reverse	ON	ON	OFF	OFF	ON
	Reverse inhibit	OFF	OFF	ON	OFF	OFF
P	Park	OFF	ON	OFF	OFF	ON
N	Neutral	OFF	ON	ON	OFF	OFF

BACK

Protected by AR

Grade Logic Control: Ascending Control

When the PCM determines that the vehicle is climbing a hill in D and D3 positions, the system extends the engagement area of 2nd, 3rd, and 4th gears to prevent the transmission from frequently shifting between 2nd and 3rd gears, between 3rd and 4th gears, and between 4th and 5th gears, so the vehicle can run smooth and have more power when needed.

Shift schedules stored in the PCM between 2nd and 3rd gears, between 3rd and 4th gears, and between 4th and 5th gears, enable it to automatically select the most suitable gear according to the magnitude of a gradient.

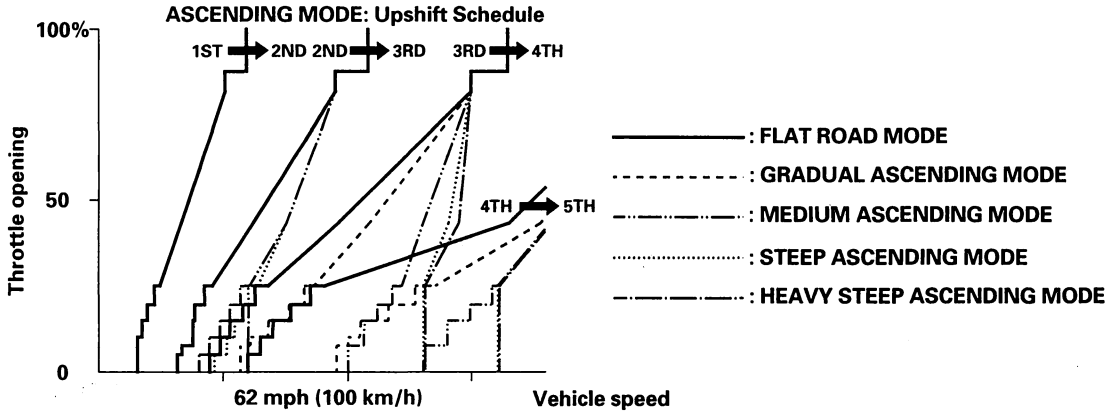

Grade Logic Control: Descending Control

When the PCM determines that the vehicle is going down a hill in D and D3 positions, the shift-up speed from 4th to 5th gear, from 3rd to 4th gear, and from 2nd to 3rd gear (when the throttle is closed) becomes faster than the set speed for flat road driving to widen the 4th gear, 3rd gear, and 2nd gear driving area. This, in combination with engine braking from the deceleration lock-up, achieves smooth driving when the vehicle is descending. There are three descending modes with different 4th gear driving areas, 3rd gear driving areas, and 2nd gear driving areas according to the magnitude of a gradient stored in the PCM. When the vehicle is in 5th gear or 4th gear, and you are decelerating when you are applying the brakes on a steep hill, the transmission will downshift to lower gear. When you accelerate, the transmission will then return to a higher gear.

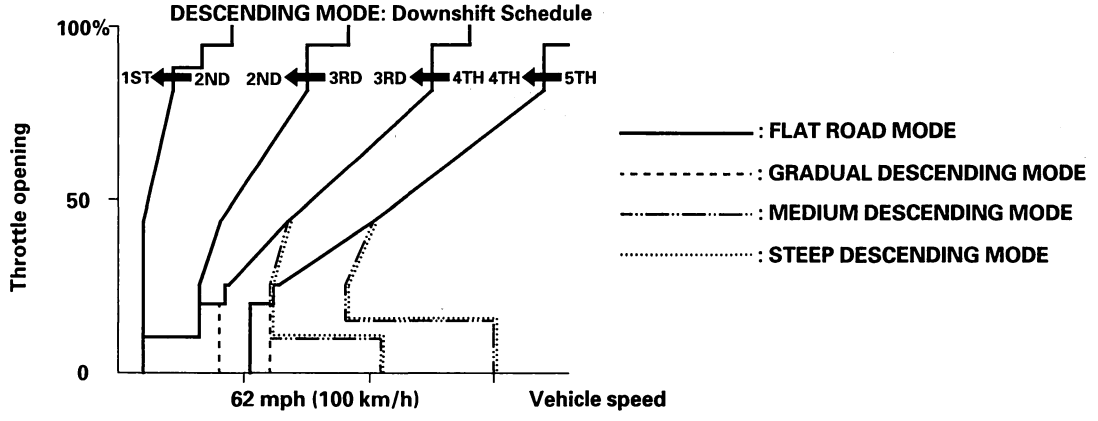

(cont'd)

Protected by AR

System Description (cont'd)

Electronic Control System (cont'd)

Clutch Pressure Control

The PCM actuates the A/T clutch pressure control solenoid valves A, B, and C to control the clutch pressure. When shifting between lower and higher gears, the clutch pressure regulated by the A/T clutch pressure control solenoid valves A, B, and C engages and disengages the clutch smoothly.

The PCM receives input signals from the various sensors and switches, performs data processing, and outputs a current to the A/T clutch pressure control solenoid valves A, B, and C.

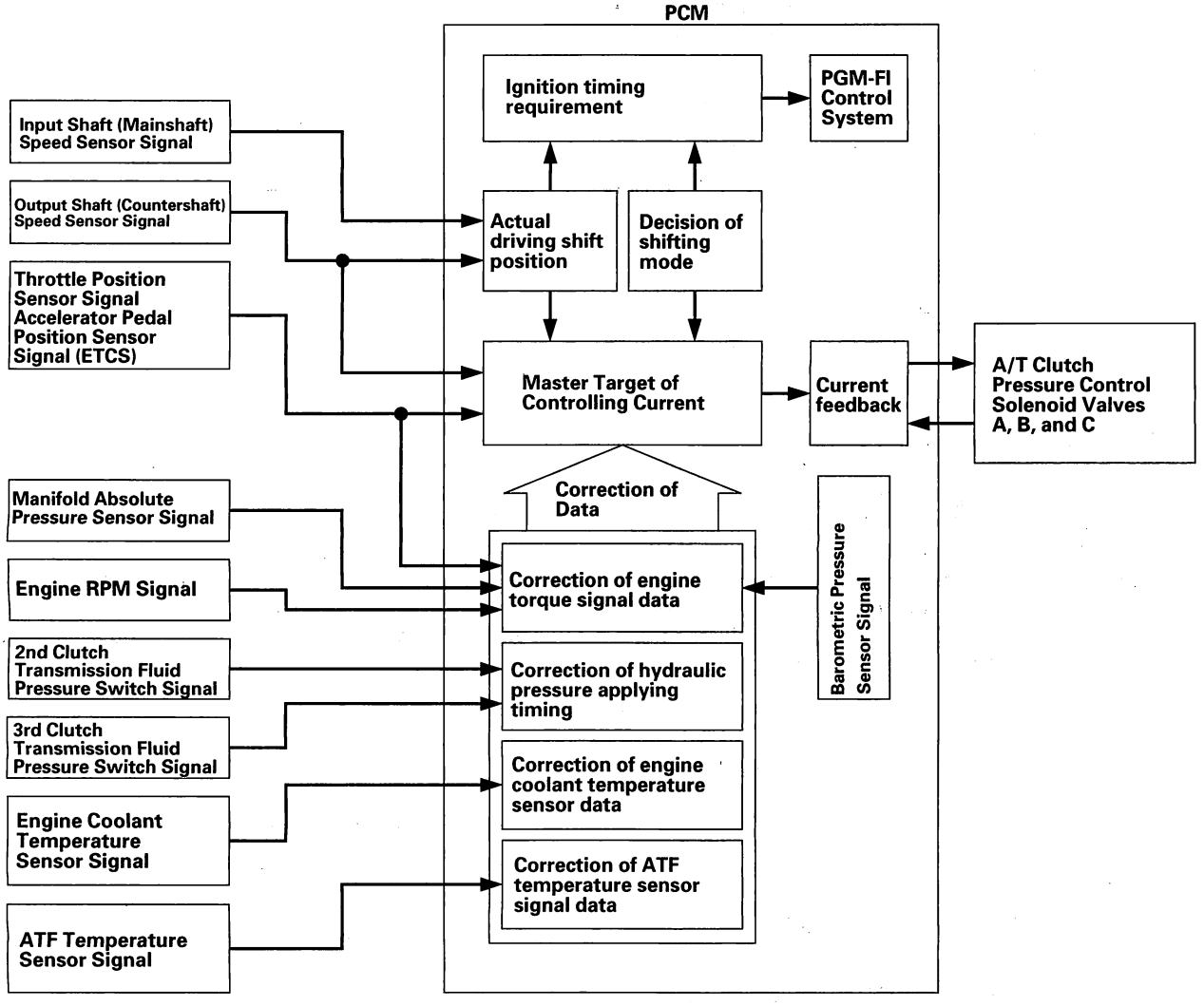

BACK

Protected by AR

Lock-up Control

The shift solenoid valve E controls the hydraulic pressure to switch the lock-up shift valve and lock-up ON and OFF. The PCM actuates the shift solenoid valve E and the A/T clutch pressure control solenoid valve A to control the torque converter clutch lock-up. When the shift solenoid valve E is turned ON, the lock-up condition starts.

The A/T clutch pressure control solenoid valve A regulates and apply the hydraulic pressure to the lock-up control valve to control the amount of the lock-up.

The lock-up mechanism operates in 2nd, 3rd, 4th, and 5th gears in D position, and 2nd and 3rd gears in D3 position.

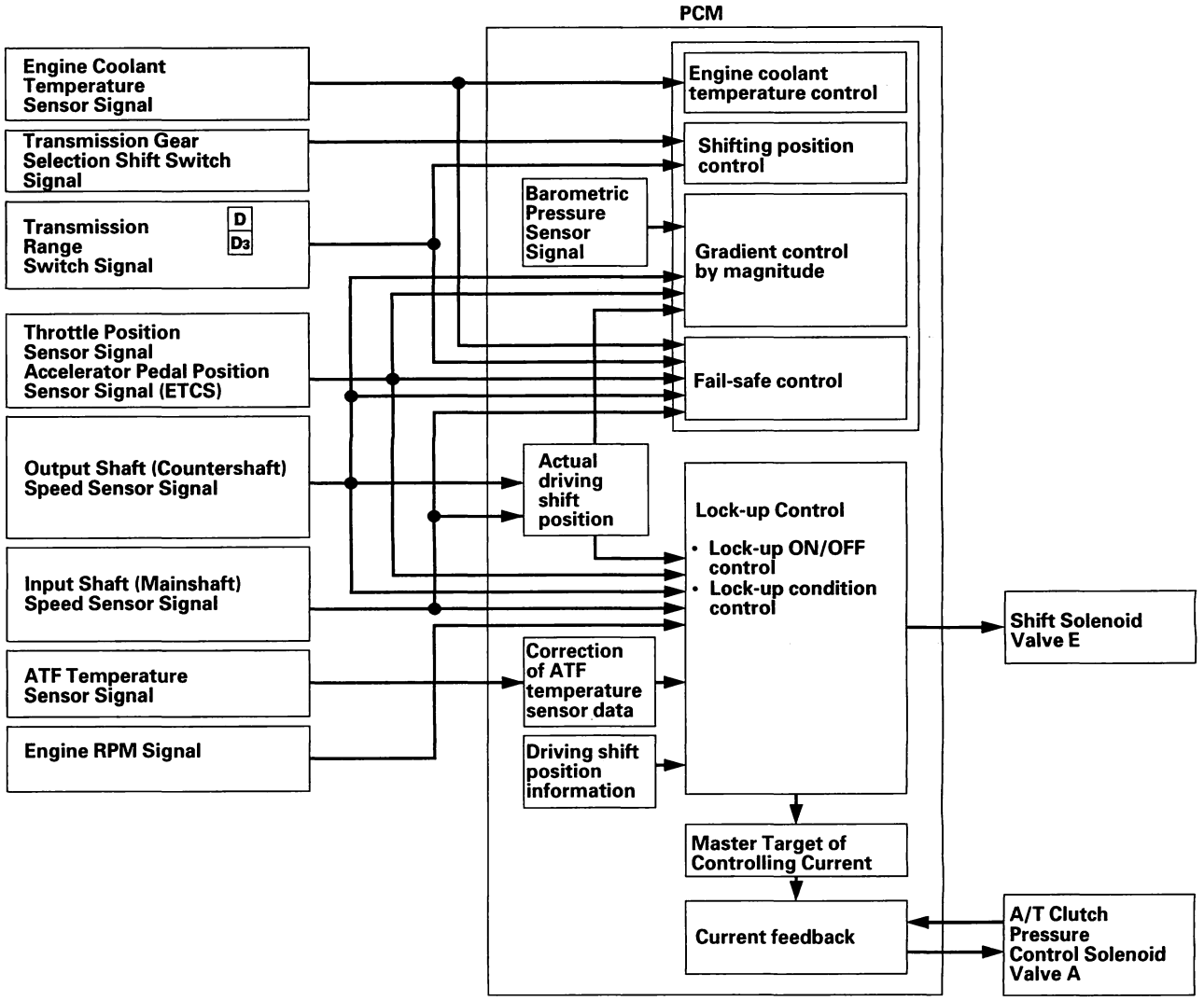

(cont'd)

BACK

Protected by AR

System Description (cont'd)

Electronic Control System (cont'd)

PCM Electrical Connections - 2003-2004 Models

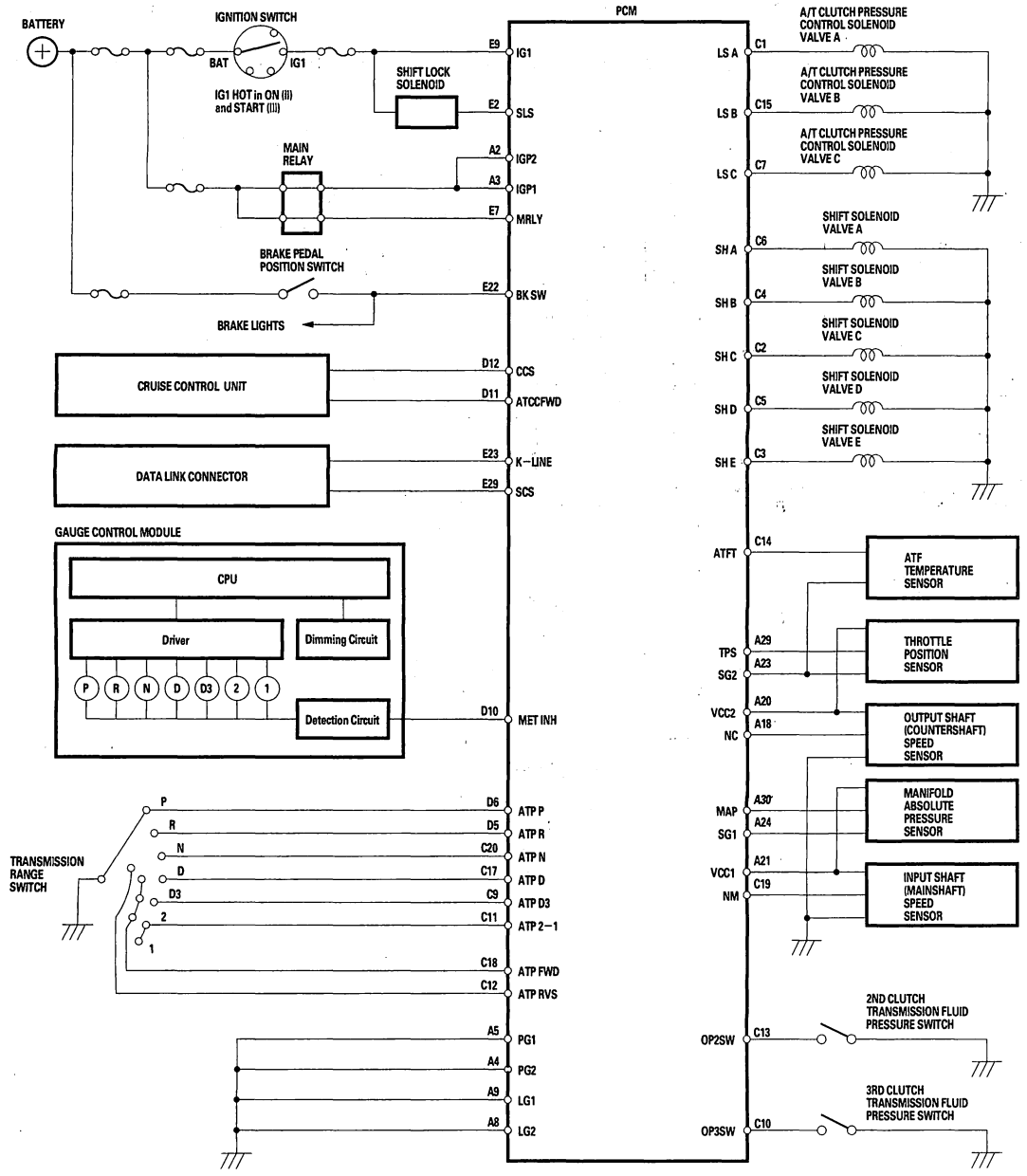

PCM Connector Terminal Locations

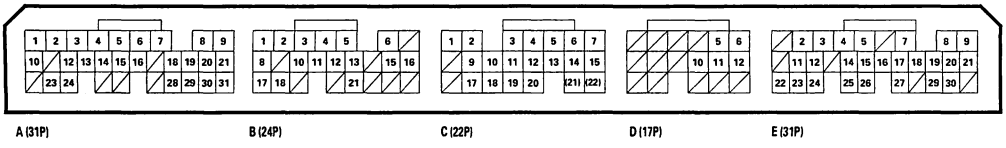

A (31P) B (24P) C (22P) D (17P) E (31P)

BACK

Protected by AR

PCM Electrical Connections - 2005-2006 Models

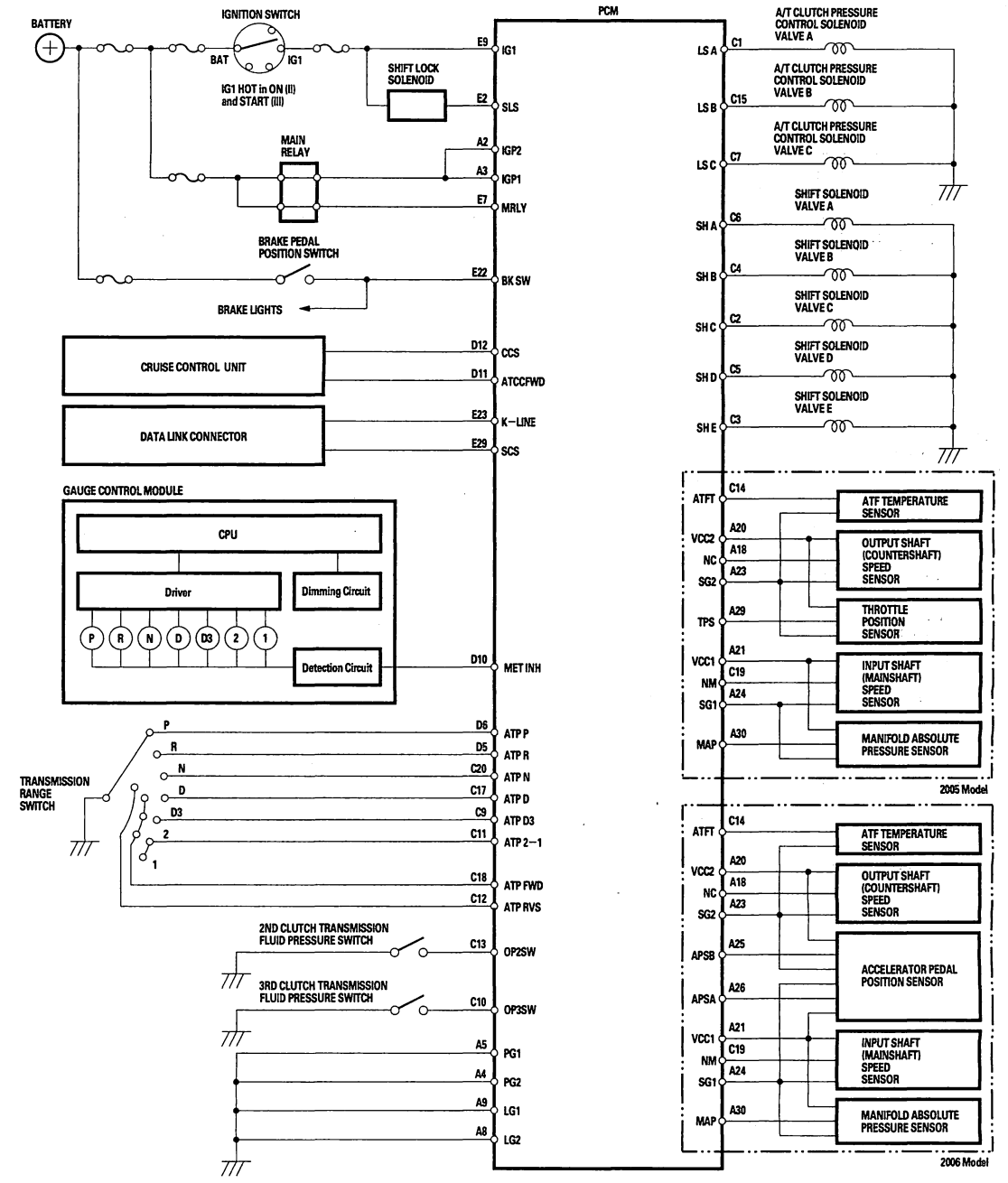

PCM Connector Terminal Locations

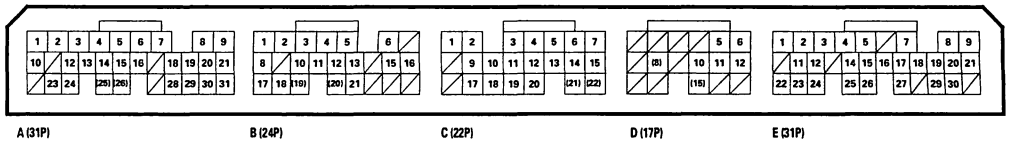

(cont'd)

BACK

Protected by AR

System Description (cont'd)

Electronic Control System (cont'd)

PCM Inputs and Outputs

PCM Connector Terminal Locations

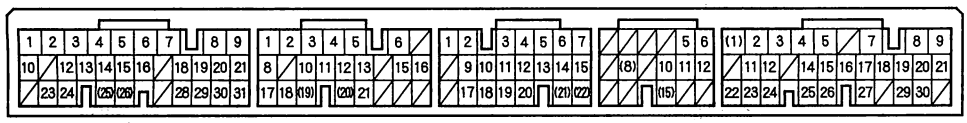

A (31P) **B (24P)** **C (22P)** **D (17P)** **E (31P)**

PCM CONNECTOR A (31P)

Terminal Number	Wire Color	Signal	Description	Measuring Conditions/Terminal Voltage
A2	YEL/BLK	IGP2	Power supply circuit from main relay	With ignition switch ON (II): Battery voltage With ignition switch OFF: 0 V
A3	YEL/BLK	IGP1	Power supply circuit from main relay	With ignition switch ON (II): Battery voltage With ignition switch OFF: 0 V
A4	BLK	PG2	Ground	Less than 1.0 V at all times
A5	BLK	PG1	Ground	Less than 1.0 V at all times
A8	BRN/YEL	LG2	Ground	Less than 1.0 V at all times
A9	BRN/YEL	LG1	Ground	Less than 1.0 V at all times
A18	BLK/BLU	NC	Output shaft (countershaft) speed sensor signal input	With ignition switch ON (II): 0 V or about 5 V While driving: About 2.5 V
A20	YEL/BLU	VCC2	Power supply circuit for sensors	With ignition switch ON (II): About 5 V With ignition switch OFF: 0 V
A21	YEL/RED	VCC1	Power supply circuit for sensors	With ignition switch ON (II): About 5 V With ignition switch OFF: 0 V
A23	GRN/YEL	SG2	Sensor ground	Less than 1.0 V at all times
A24	GRN/WHT	SG1	Sensor ground	Less than 1.0 V at all times
A29	RED/BLK	TPS	Detects TP sensor signal	With throttle fully open: About 4.5 V With throttle fully closed: About 0.5 V
A30	GRN/RED	MAP	Detects MAP sensor signal	With ignition switch ON (II): About 3 V At idle: About 1.0 V depending on engine speed

BACK

Protected by AR

PCM CONNECTOR C (22P)

Terminal Number	Wire Color	Signal	Description	Measuring Condition/Terminal Voltage
C1	RED/BLK	LS A	A/T clutch pressure control solenoid valve A control	With ignition switch ON (II): Pulsing signal
C2	GRN	SH C	Shift solenoid valve C control	Battery voltage in these positions: • N and 1 • 1st, 3rd, and 5th gears in D and D3 • Reverse inhibit in R 0 V in these positions: • P, R, and 2 • 2nd and 4th gears in D and D3
C3	YEL	SH E	Shift solenoid valve E control	Battery voltage in these positions: • P and R 0 V in these positions: • Reverse inhibit in R • N, D, D3, 2, and 1
C4	GRN/WHT	SH B	Shift solenoid valve B control	Battery voltage in these positions: • P, R, N, 2, and 1 • 1st and 2nd gears in D and D3 0 V in these positions: • Reverse inhibit in R • 3rd, 4th, and 5th gears in D and D3
C5	GRN/RED	SH D	Shift solenoid valve D control	Battery voltage in these positions: • 2 • 2nd and 5th gears in D and D3 0 V in these positions: • Reverse inhibit in R • P, R, N, and 1 • 1st, 3rd, and 4th gears in D and D3
C6	BLU/BLK	SH A	Shift solenoid valve A control	Battery voltage in these positions: • R and 1 • 1st, 4th, and 5th gears in D and D3 0 V in these positions: • Reverse inhibit in R • P, N, and 2 • 2nd and 3rd gears in D and D3
C7	BLU/YEL	LS C	A/T clutch pressure control solenoid valve C control	With ignition switch ON (II): Pulsing signal
C9	RED	ATP D3	Transmission range switch D3 position signal input	In the D3 position: 0 V In other than the D3 position: Battery voltage
C10	BLU/WHT	OP3SW	3rd clutch transmission fluid pressure switch signal input	With ignition switch ON (II): About 5 V With 3rd clutch pressure: 0 V
C11	GRN/RED	ATP 2-1	Transmission range switch 2 and 1 position signals input	In the 2 and 1 positions: 0 V In other than the 2 and 1 positions: Battery voltage
C12	RED/WHT	ATP RVS	Transmission range switch RVS (R position) signal input	In R position: 0 V In other than the R position: Battery voltage
C13	BLU/RED	OP2SW	2nd clutch transmission fluid pressure switch signal input	With ignition switch ON (II): About 5 V With 2nd clutch pressure: 0 V
C14	RED/YEL	ATFT	ATF temperature sensor signal input	With ignition switch ON (II): 0.2 V—4.8 V With ignition switch OFF: 0 V
C15	BRN/WHT	LS B	A/T clutch pressure control solenoid valve B control	With ignition switch ON (II): Pulsing signal
C17	YEL/GRN	ATP D	Transmission range switch D position signal input	In the D position: 0 V In other than the D position: Battery voltage
C18	BLU/YEL	ATP FWD	Transmission range switch D, D3, and 2 position signals input	In the D, D3, and 2 positions: 0 V In other than the D, D3, and 2 positions: Battery voltage
C19	WHT/RED	NM	Input shaft (mainshaft) speed sensor signal input	With ignition switch ON (II): 0 V or about 5 V With engine at idling in N position: About 2.5 V
C20	RED/BLK	ATP N	Transmission range switch N position signal input	In the N position: 0 V In other than the N position: Battery voltage

(cont'd)

Protected by AR

System Description (cont'd)

Electronic Control System (cont'd)

PCM Inputs and Outputs (cont'd)

PCM Connector Terminal Locations

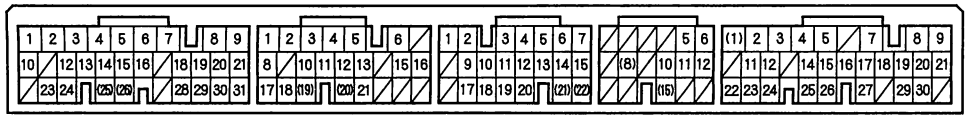

A (31P) **B (24P)** **C (22P)** **D (17P)** **E (31P)**

PCM CONNECTOR D (17P)

Terminal Number	Wire Color	Signal	Description	Measuring Conditions/Terminal Voltage
D5	WHT	ATP R	Transmission range switch R position input	In the R position: 0 V In other than the R position: Battery voltage
D6	BLU/RED	ATP P	Transmission range switch P position input	In the P position: 0 V In other than the P position: Battery voltage
D10	GRN	METINH	Communication line PCM-to-gauge control module	With ignition switch ON (II): Battery voltage
D11	PNK	ATCCFWD	Transmission range switch D and D3 position signals output to cruise control unit	In the D and D3 positions: 0 V In other than the D and D3 position: Battery voltage
D12	BLU/BLK	CCS	Downshift signal input from cruise control unit	When cruise control is used: Pulsing signal

PCM CONNECTOR E (31P)

Terminal Number	Wire Color	Signal	Description	Measuring Conditions/Terminal Voltage
E2	YEL/BLK	SLS	Shift lock solenoid (ground side)	With ignition switch ON (II), in the P position, brake pedal pressed, and accelerator released: 0 V
E7	RED/BLK	MRLY	Main relay control (ground side)	With ignition switch ON (II): 0 V With ignition switch OFF: Battery voltage
E9	BLK/YEL	IG1	Power supply circuit for solenoid valves	With ignition switch ON (II): Battery voltage With ignition switch OFF: 0 V
E22	WHT/BLK	BKSW	Brake pedal position switch signal input	Brake pedal pressed: Battery voltage Brake pedal released: 0 V
E23	BLU	K-LINE	Communication line PCM-to-DLC	With ignition switch ON (II): Battery voltage
E29	BRN	SCS	Detects service check signal	With the SCS shorted with the HDS: About 0 V With the SCS open: About 5 V

BACK

Protected by AR

Hydraulic Controls

Valve Bodies

The valve body includes the main valve body, the regulator valve body, and the servo body. The ATF pump is driven by splines on the left end of the torque converter which is attached to the engine. Fluid flows through the regulator valve to maintain specified pressure through the main valve body to the manual valve, directing pressure to the shift valves and to each of the clutches via the solenoid valves. The shift solenoid valves A, B, C, D, and E are bolted on the servo body. The A/T clutch pressure control solenoid valves A, B, and C are mounted on the outside of the transmission housing.

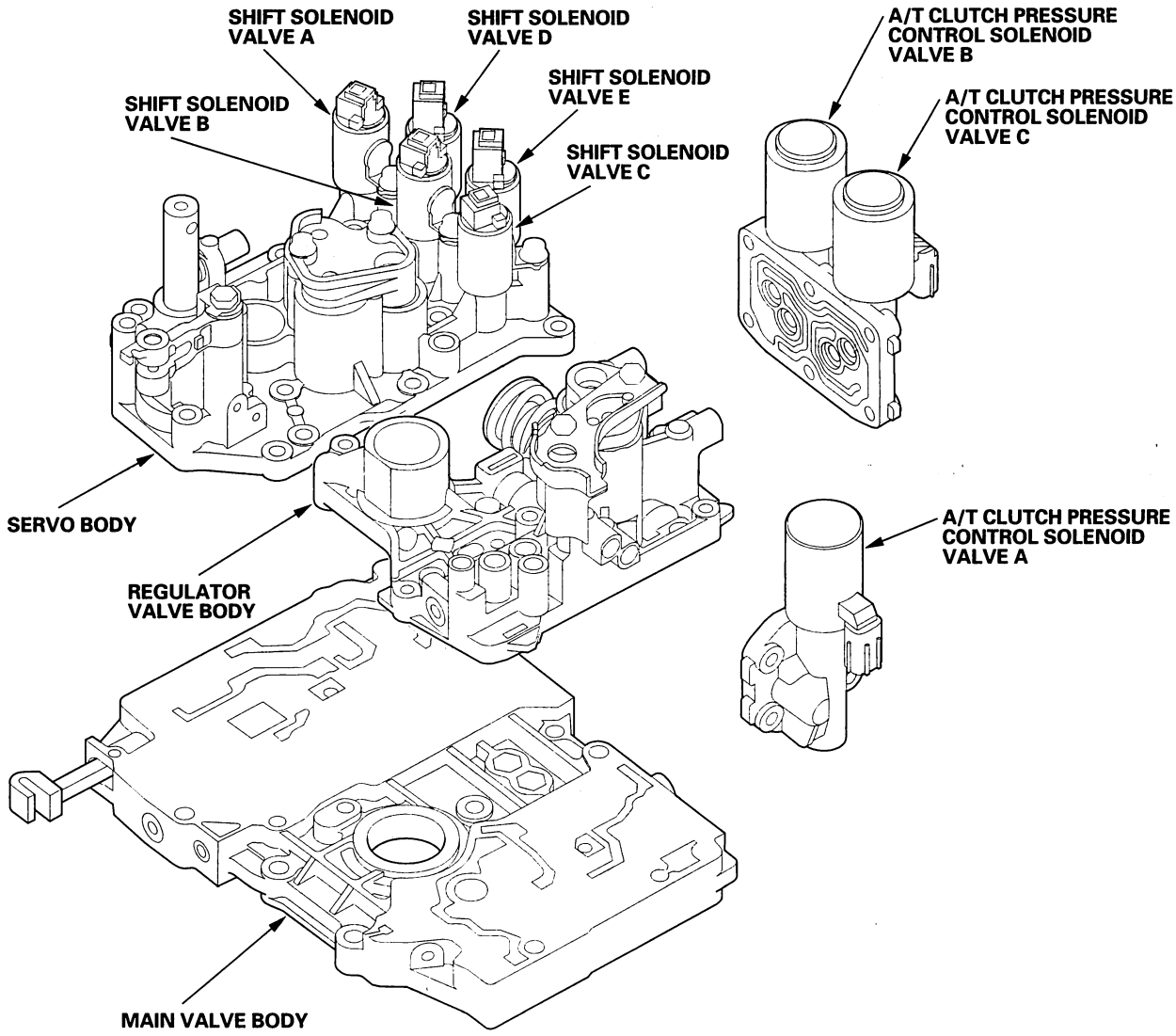

(cont'd)

Protected by AR

System Description (cont'd)

Hydraulic Controls (cont'd)

Main Valve Body

The main valve body contains the manual valve, the shift valves A, B, C, and E, the relief valve, the lock-up control valve, the cooler check valve, the servo control valve, and the ATF pump gears. The primary function of the main valve body is to switch fluid pressure on and off and to control hydraulic pressure going to the hydraulic control system.

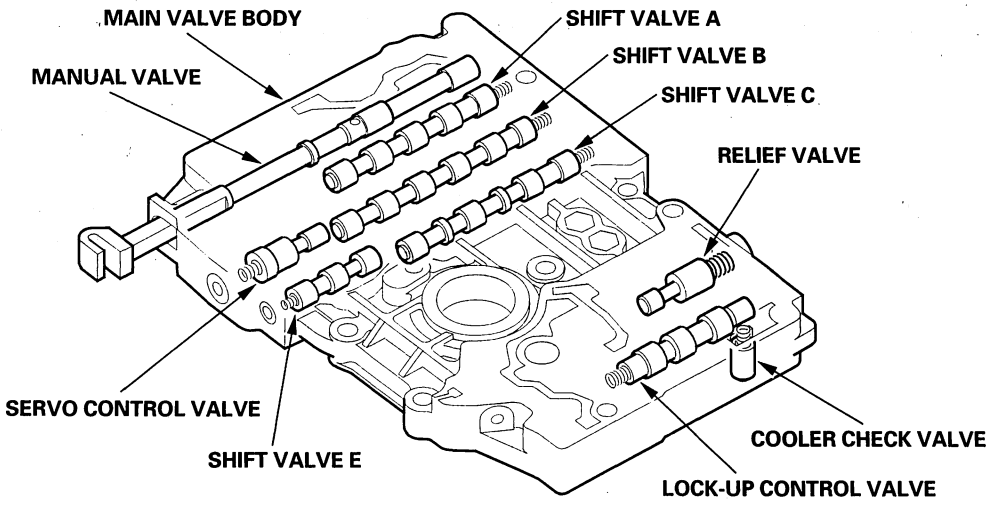

Regulator Valve Body

The regulator valve body contains the regulator valve, the torque converter check valve, lock-up shift valve, and the 1st and 3rd accumulators.

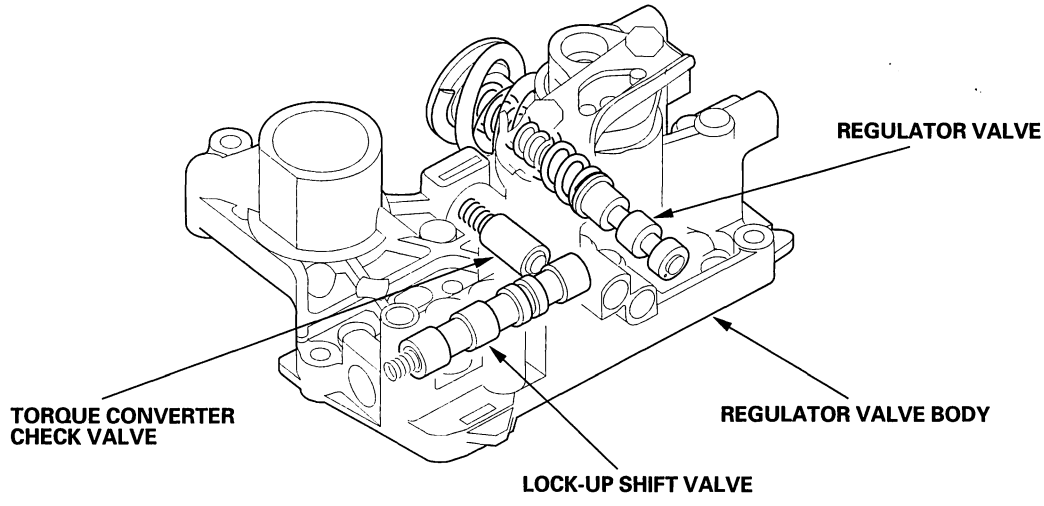

BACK

Protected by AR

Regulator Valve

The regulator valve maintains a constant hydraulic pressure from the ATF pump to the hydraulic control system, while also furnishing fluid to the lubrication system and torque converter. The fluid from the ATF pump flows through B and C. Fluid entering from B flows through the valve orifice to the A cavity. This pressure of the A cavity pushes the regulator valve to valve spring side, and this movement of the regulator valve uncovers the fluid port to the torque converter and the relief valve. The fluid flows out to the torque converter and the relief valve, and the regulator valve returns under spring force. According to the level of the hydraulic pressure through B, the position of the regulator valve changes, and the amount of fluid from C through torque converter also changes. This operation is continued, maintaining the line pressure.

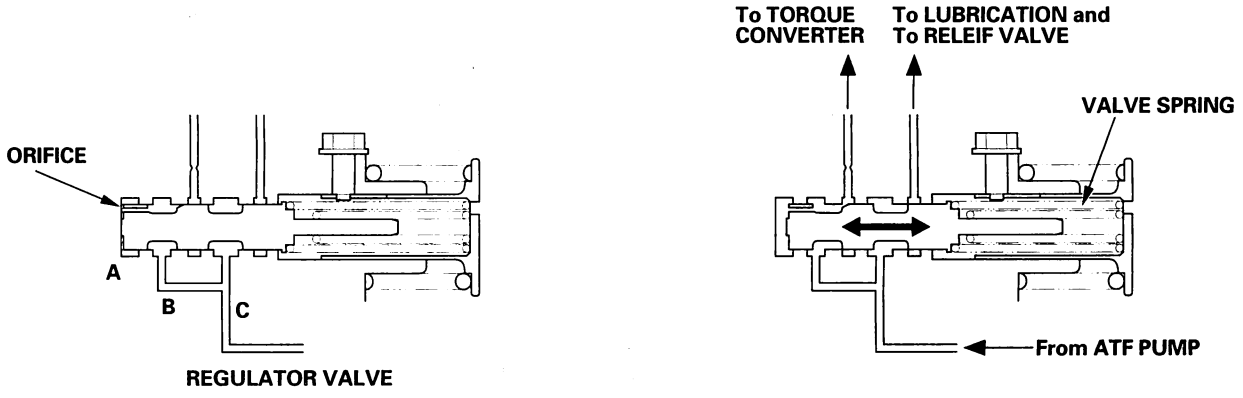

Increases in hydraulic pressure according to torque are performed by the regulator valve using stator torque reaction. The stator shaft is splined with the stator in the torque converter, and its arm end contacts the regulator spring cap. When the vehicle is accelerating or climbing (torque converter range), stator torque reaction acts on the stator shaft, and the stator arm pushes the regulator spring cap in the direction of the arrow in proportion to the reaction. The stator reaction spring compresses, and the regulator valve moves to increase the line pressure which is regulated by the regulator valve. The line pressure reaches its maximum when the stator torque reaction reaches its maximum.

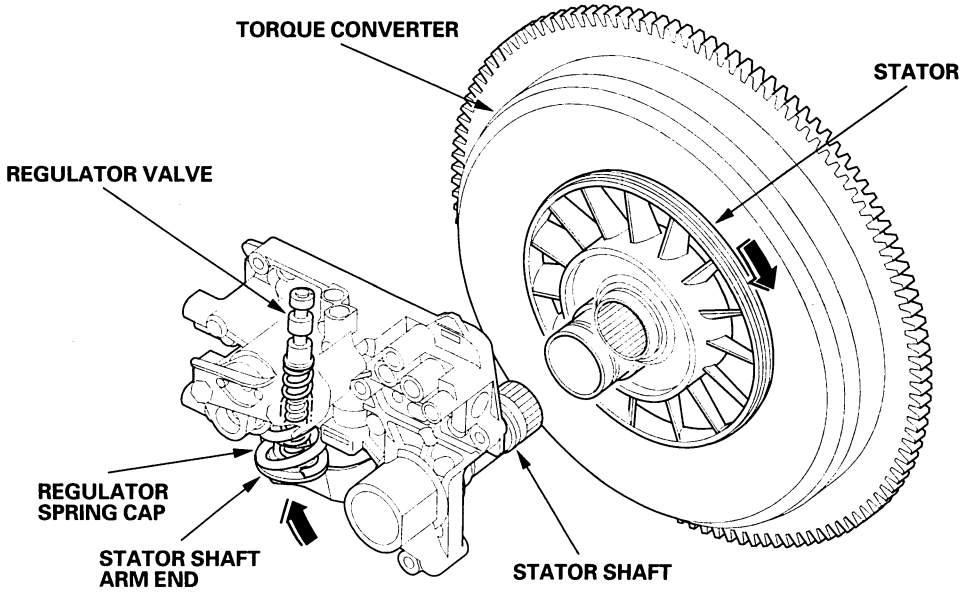

(cont'd)

BACK

Protected by AR

System Description (cont'd)

Hydraulic Controls (cont'd)

Servo Body

The servo body contains the servo valve, the shift valve D, accumulators for 2nd, 4th, and 5th, and shift solenoid valves for A, B, C, D, and E.

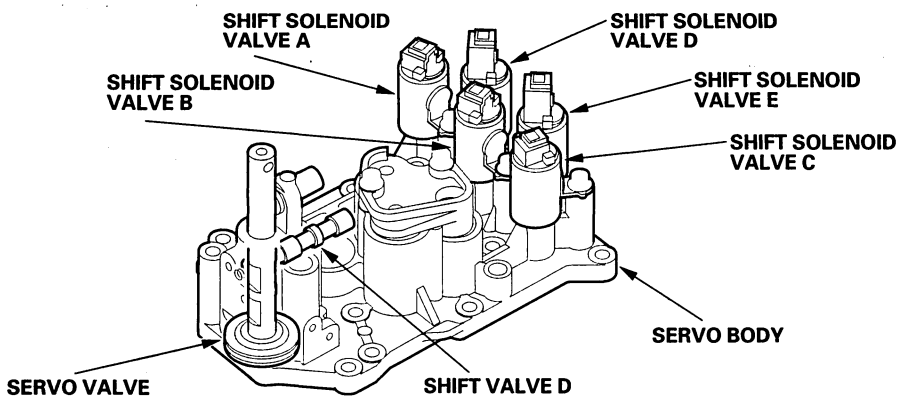

Accumulator

The accumulators are located in the regulator valve body and the servo body. The regulator valve body contains the 1st and 3rd accumulators, and the servo body contains the 2nd, 4th, and 5th accumulators.

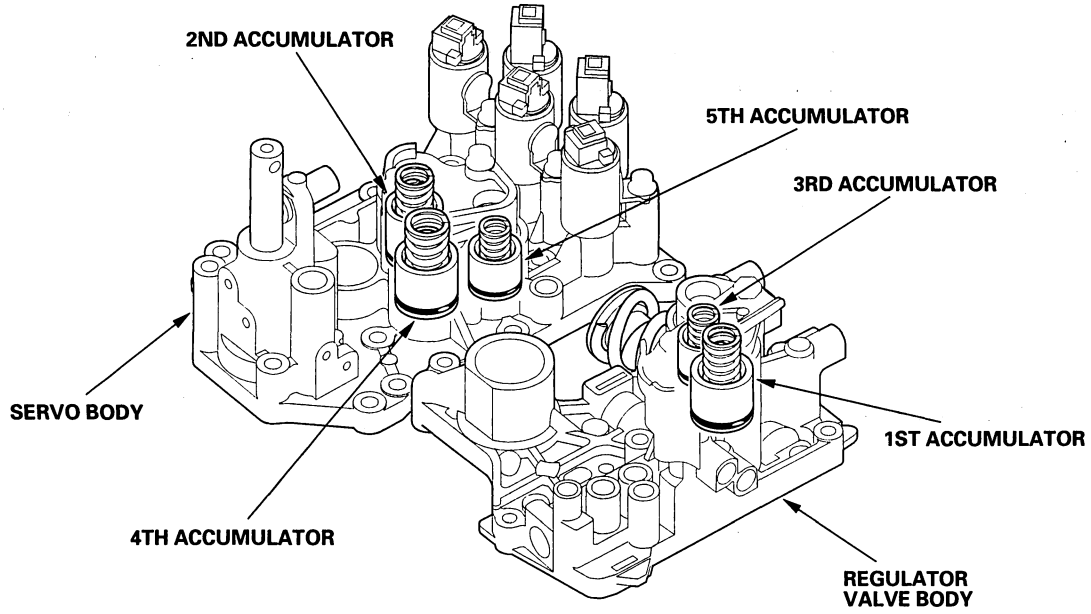

BACK

Protected by AR

Hydraulic Flow

Distribution of Hydraulic Pressure

As the engine turns, the ATF pump starts to operate. Automatic transmission fluid (ATF) is drawn through the ATF strainer (filter) and discharged into the hydraulic circuit. Then, ATF flowing from the ATF pump becomes line pressure that's regulated by the regulator valve. Torque converter pressure from the regulator valve enters the torque converter through the lock-up shift valve, and it is discharged from the torque converter. The torque converter check valve prevents torque converter pressure from rising.

The PCM controls the shift solenoid valves ON and OFF. The shift solenoid valve intercepts line pressure from the ATF pump via the manual valve when the shift solenoid valve is OFF. When the shift solenoid valve is turned ON, line pressure changes to shift solenoid valve pressure at the shift solenoid valve, then the solenoid valve pressure flows to the shift valve. Applying shift solenoid pressure to the shift valves moves the position of the shift valve, and switches the port of the hydraulic circuit. The PCM also controls A/T clutch pressure control solenoid valves A, B, and C. The A/T clutch pressure control solenoid valves regulate hydraulic pressure, and apply the pressure to the clutches to engage smoothly. The clutches receive optimum clutch pressure which is regulated by the A/T clutch pressure control solenoid valves for comfortable driving and shifting under all conditions.

Hydraulic pressure at the port is as follows:

PORT No.	DESCRIPTION OF PRESSURE	PORT No.	DESCRIPTION OF PRESSURE
1	LINE	SB	SHIFT SOLENOID VALVE B
3	LINE	SC	SHIFT SOLENOID VALVE C
3'	LINE	SD	SHIFT SOLENOID VALVE D
4	LINE	SE	SHIFT SOLENOID VALVE E
4'	LINE	10	1ST CLUTCH
4''	LINE	20	2ND CLUTCH
7	LINE	30	3RD CLUTCH
1A	LINE or A/T CLUTCH PRESSURE CONTROL SOLENOID VALVE A	40	4TH CLUTCH
1B	LINE	50	5TH CLUTCH
3A	LINE	55	A/T CLUTCH PRESSURE CONTROL SOLENOID VALVE A
3B	LINE	55'	A/T CLUTCH PRESSURE CONTROL SOLENOID VALVE A
3C	LINE	56	A/T CLUTCH PRESSURE CONTROL SOLENOID VALVE B
5A	LINE	57	A/T CLUTCH PRESSURE CONTROL SOLENOID VALVE C
5B	LINE	90	TORQUE CONVERTER
5C	LINE	91	TORQUE CONVERTER
5D	LINE	92	TORQUE CONVERTER
5E	LINE or A/T CLUTCH PRESSURE CONTROL SOLENOID VALVE B	93	ATF COOLER
5F	LINE or A/T CLUTCH PRESSURE CONTROL SOLENOID VALVE A or B	94	TORQUE CONVERTER
5G	A/T CLUTCH PRESSURE CONTROL SOLENOID VALVE B	95	LUBRICATION
5H	A/T CLUTCH PRESSURE CONTROL SOLENOID VALVE C	96	TORQUE CONVERTER
5J	A/T CLUTCH PRESSURE CONTROL SOLENOID VALVE C	97	TORQUE CONVERTER
5K	A/T CLUTCH PRESSURE CONTROL SOLENOID VALVE C	99	SUCTION
5L	A/T CLUTCH PRESSURE CONTROL SOLENOID VALVE C	X	DRAIN
5N	A/T CLUTCH PRESSURE CONTROL SOLENOID VALVE C	HX	HIGH POSITION DRAIN
SA	SHIFT SOLENOID VALVE A	AX	AIR DRAIN

(cont'd)

BACK

Protected by AR

System Description (cont'd)

Hydraulic Flow (cont'd)

N Position

The PCM controls the shift solenoid valves. The conditions of the shift solenoid valves and positions of the shift valves are as follows:

- Shift solenoid valve A: OFF, and shift valve A stays on the right side
- Shift solenoid valve B: ON, and shift valve B moves to the left side
- Shift solenoid valve C: ON, and shift valve C moves to the left side
- Shift solenoid valve D: OFF, and shift valve D stays on the left side
- Shift solenoid valve E: OFF, and shift valve E stays on the left side

Line pressure (1) flows to the shift solenoid valves and the A/T clutch pressure control solenoid valve A. Under this condition, hydraulic pressure is not applied to the clutches.

NOTE: When used, "left" or "right" indicates direction on the hydraulic circuit.

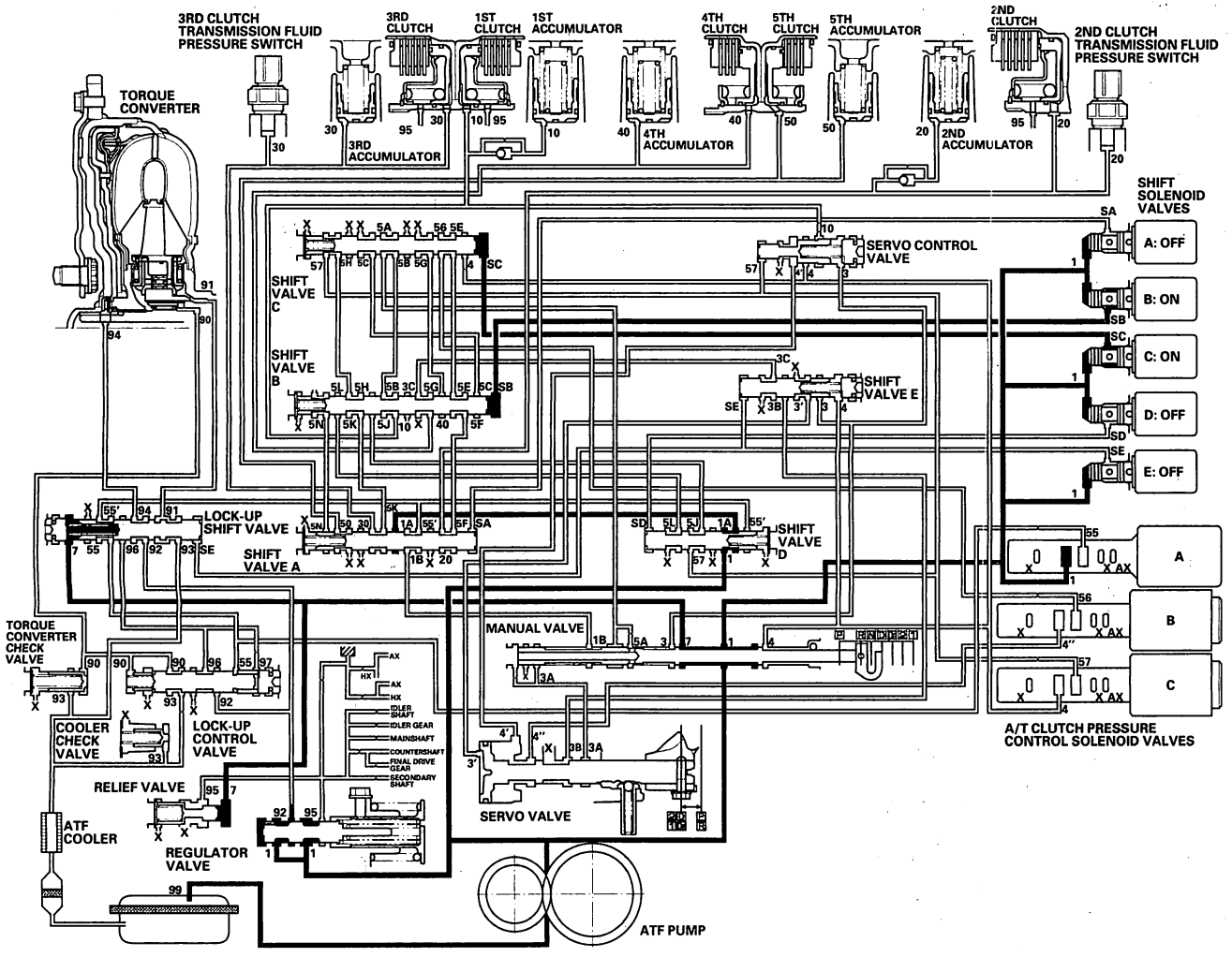

BACK

Protected by AR

D Position: 1st gear shifting from N position

Shift solenoid valves remain the same as in the N position when shifting to the D position from N. The manual valve is moved to the D position, and switches the port of line pressure (4) leading to the A/T clutch pressure control solenoid valve C. Hydraulic pressure to the 1st clutch from the A/T clutch pressure control solenoid valve A is created as shift solenoid valve A is OFF, B and C stays ON. A/T clutch pressure control solenoid valve A pressure (55) changes to 1st clutch pressure (10) at the shift valve B, and flows to the 1st clutch. The 1st clutch is engaged gently when shifting to the D position from N.

NOTE: When used, "left" or "right" indicates direction on the hydraulic circuit.

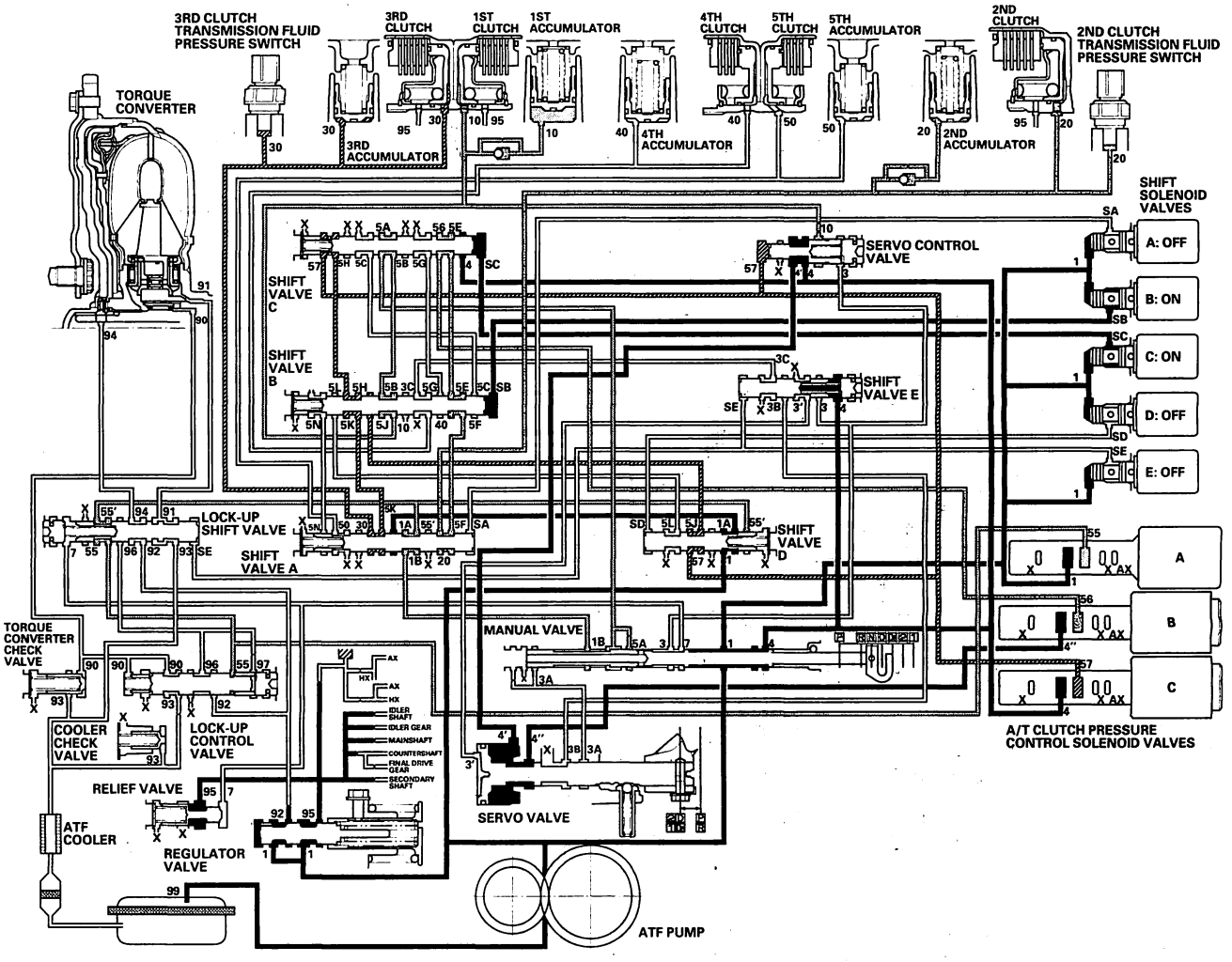

(cont'd)

BACK

Protected by AR

System Description (cont'd)

Hydraulic Flow (cont'd)

D Position: Driving in 1st gear
The PCM turns shift solenoid valve A ON, and B and C stays ON, and D and E OFF. Shift solenoid valve A pressure (SA) is applied to the right side of the shift valve A. Shift valve A is moved to the left side to uncover the line pressure port leading to the 1st clutch, and to cover the A/T clutch pressure control solenoid valve pressure port.

Fluid flows to the 1st clutch by way of:
Line pressure (1) → Shift valve D—Line pressure (1A) → Shift valve A—Line pressure (1B) → Manual valve—Line pressure (5A) → Shift valve C—Line pressure (5B) → Shift valve B—1st clutch pressure (10) → 1st clutch
The 1st clutch pressure (10) is applied to the 1st clutch, and the 1st clutch is engaged securely.

NOTE: When used, "left" or "right" indicates direction on the hydraulic circuit.

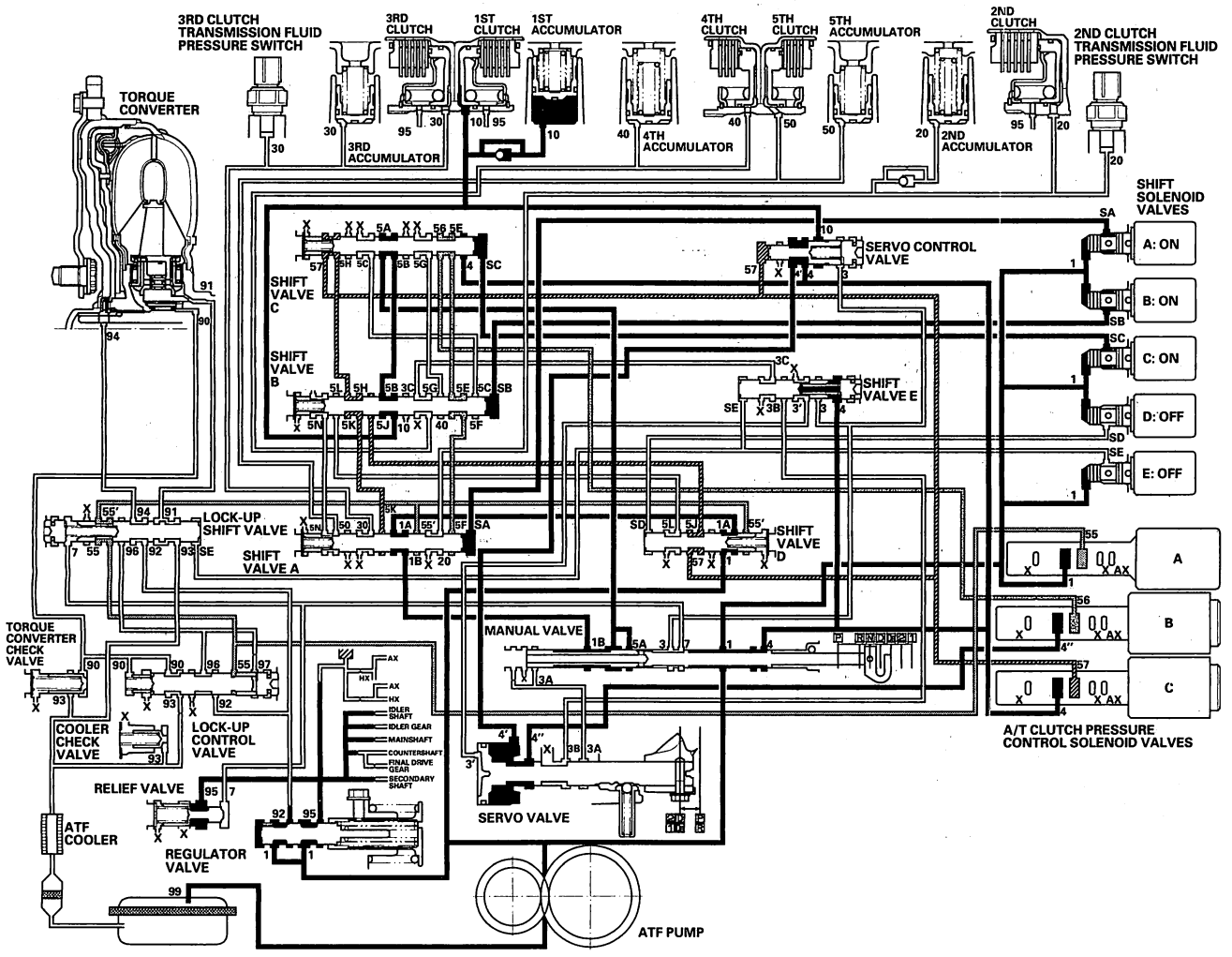

BACK

Protected by AR

D Position: Shifting between 1st gear and 2nd gear

As the speed of the vehicle reaches the prescribed value, the PCM turns shift solenoid valve A OFF, and B and C stays ON, and D and E OFF. Shift solenoid valve A pressure (SA) in the right side of the shift valve A is released. Shift valve A is moved to the right side to uncover the A/T clutch pressure control solenoid valve pressure port leading to the 1st and 2nd clutches. The PCM controls the A/T clutch pressure control solenoid valve to regulate hydraulic pressure. A/T clutch pressure control solenoid valve A pressure (55) changes to 1st clutch pressure (10) at shift valve B, and A/T clutch pressure control solenoid valve B pressure (56) changes to 2nd clutch pressure (20) at shift valve A. The 1st and 2nd clutches are engaged gently.

NOTE: When used, "left" or "right" indicates direction on the hydraulic circuit.

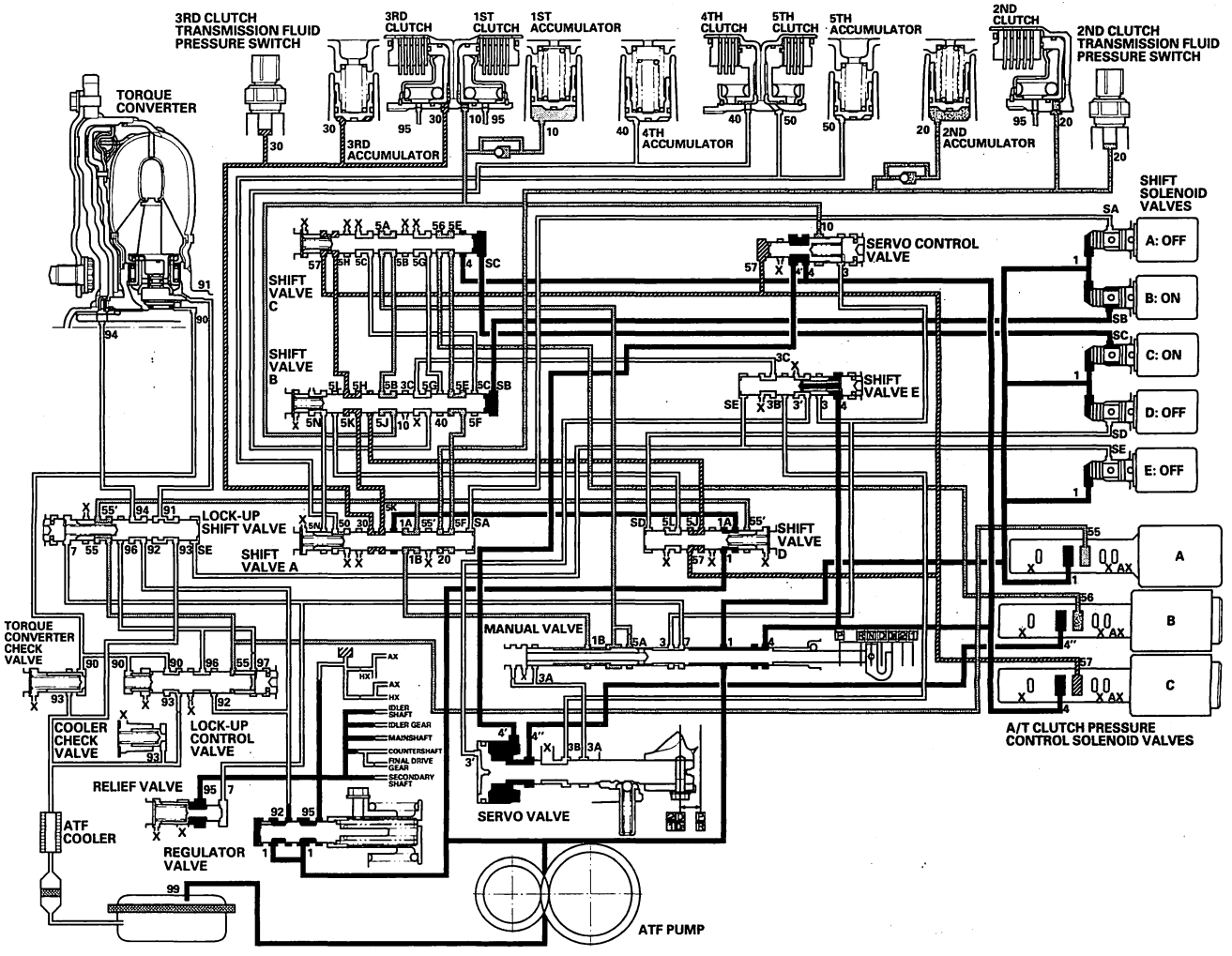

(cont'd)

BACK

Protected by AR

System Description (cont'd)

Hydraulic Flow (cont'd)

D Position: Driving in 2nd gear
The PCM turns shift solenoid valves C OFF, D ON, and A and E stays OFF, and B ON. Shift solenoid valve C pressure (SC) in the right side of the shift valve C is released. Shift valve C is moved to the right side to switch the ports. This movement covers the A/T clutch pressure control solenoid valve pressure ports to stop at shift valves C and A, and uncover the line pressure port leading to the 2nd clutch.

Fluid flows to 2nd clutch by way of:
Line pressure (1) → Manual valve—Line pressure (4) → Shift valve C—Line pressure (5E) → Shift valve B—Line pressure (5F) → Shift valve A—2nd clutch pressure (20) → 2nd clutch
The 2nd clutch pressure (20) is applied to the 2nd clutch, and the 2nd clutch is engaged securely.

NOTE: When used, "left" or "right" indicates direction on the hydraulic circuit.

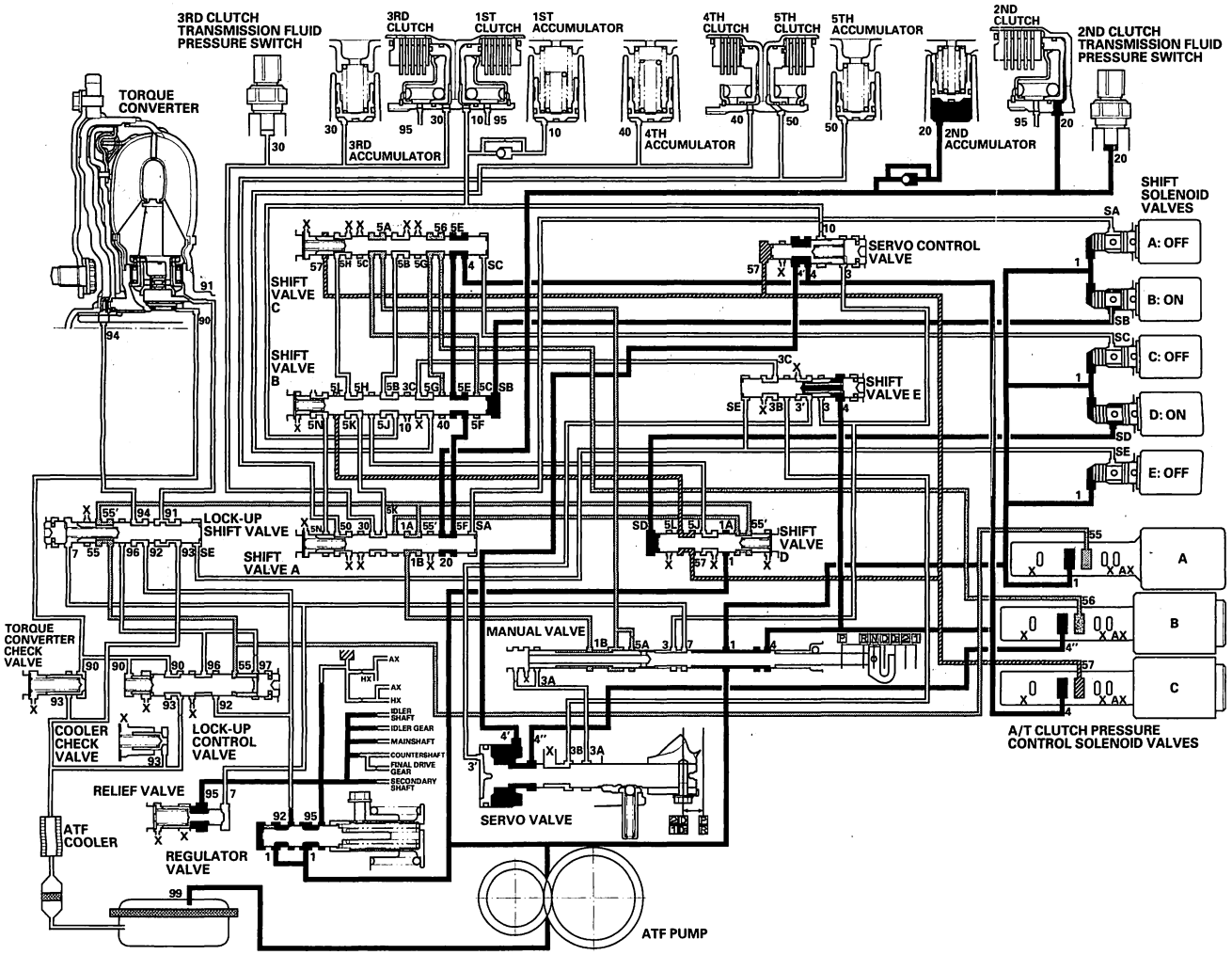

BACK

Protected by AR

D Position: Shifting between 2nd gear and 3rd gear

As the speed of the vehicle reaches the prescribed value, the PCM turns shift solenoid valves C ON, and A and E stays OFF, and B and D ON. Shift solenoid valve C pressure (SC) is applied to the right side of the shift valve C. Shift valve C is moved to the left side to uncover the A/T clutch pressure control solenoid valve pressure ports leading to the 2nd and 3rd clutches. The PCM controls the A/T clutch pressure control solenoid valves to regulate hydraulic pressure. A/T clutch pressure control solenoid valve B pressure (56) changes to 2nd clutch pressure (20) at shift valve A, and A/T clutch pressure control solenoid valve C pressure (57) changes to 3rd clutch pressure (30) at shift valve A. The 2nd and 3rd clutches are engaged gently.

NOTE: When used, "left" or "right" indicates direction on the hydraulic circuit.

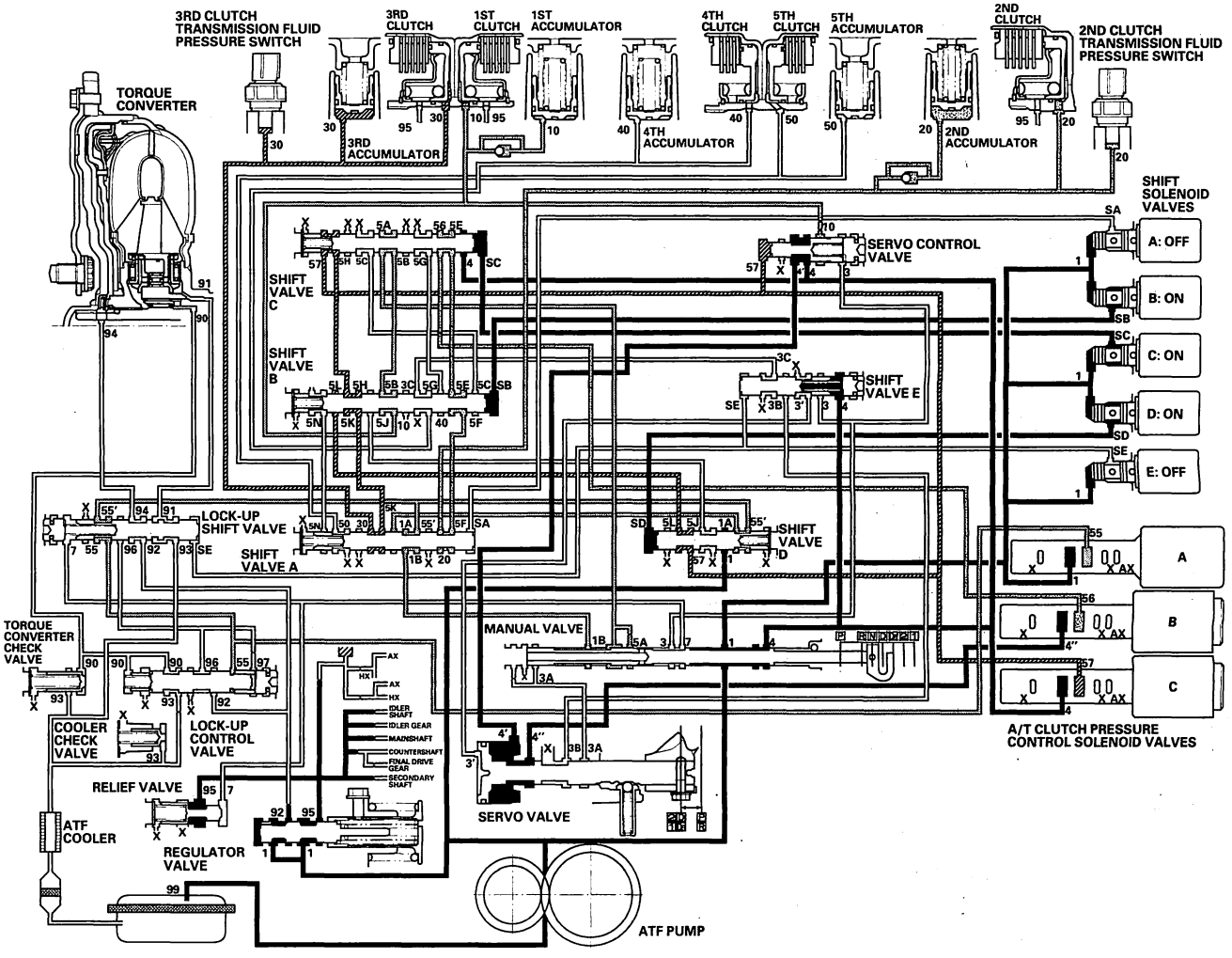

(cont'd)

Protected by AR

System Description (cont'd)

Hydraulic Flow (cont'd)

D Position: Driving in 3rd gear

The PCM turns shift solenoid valves B and D OFF, and A and E stays OFF, and C ON. Shift solenoid valve B pressure (SB) in the right side of shift valve B is released, and shift valve B is moved to the right side. Shift solenoid valve D pressure (SD) in the left side of the shift valve D is released, and shift valve D is moved to the left side. This valve movement switches the A/T clutch pressure control solenoid valve C pressure port leading to the 3rd clutch.
A/T clutch pressure control solenoid valve C pressure (57) changes to (5J) at shift solenoid valve D and to (5K) at shift valve B, and becomes 3rd clutch pressure (30) at shift valve A. The 3rd clutch pressure (30) is applied to the 3rd clutch, and the 3rd clutch is engaged securely.

NOTE: When used, "left" or "right" indicates direction on the hydraulic circuit.

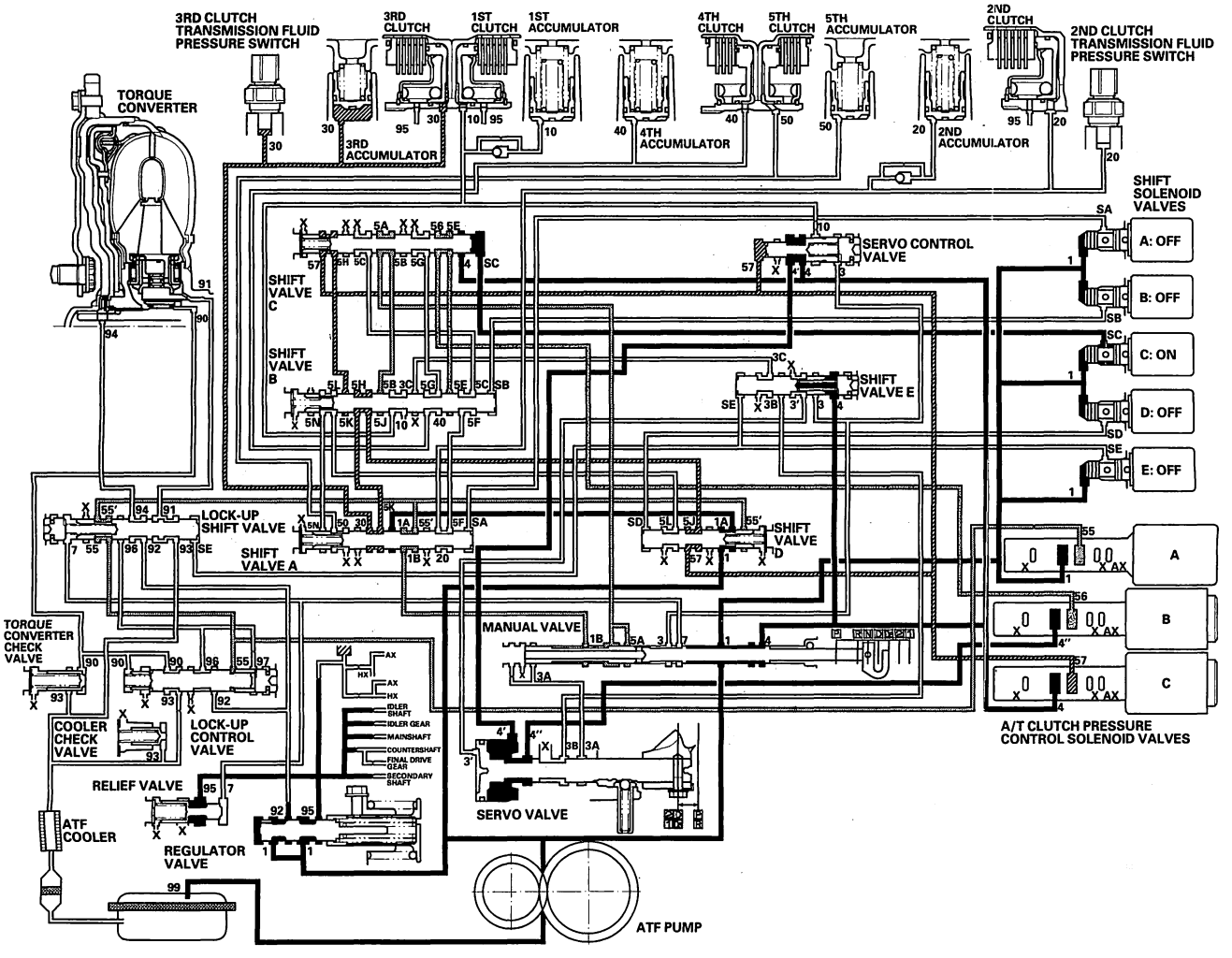

BACK

Protected by AR

D Position: Shifting between 3rd gear and 4th gear

As the speed of the vehicle reaches the prescribed value, the PCM turns shift solenoid valves C OFF, and A, B, D, and E stays OFF. Shift solenoid valve C pressure (SC) in the right side of shift valve C is released. Shift valve C is moved to the right side to uncover the A/T clutch pressure control solenoid valve B and C pressure ports leading to the 3rd and 4th clutches. The PCM controls the A/T clutch pressure control solenoid valves to regulate hydraulic pressure. A/T clutch pressure control solenoid valve C pressure (57) changes to 3rd clutch pressure (30) at shift valve A, and A/T clutch pressure control solenoid valve B pressure (56) changes to 4th clutch pressure (40) at shift valve B. The 3rd and 4th clutches are engaged gently.

NOTE: When used, "left" or "right" indicates direction on the hydraulic circuit.

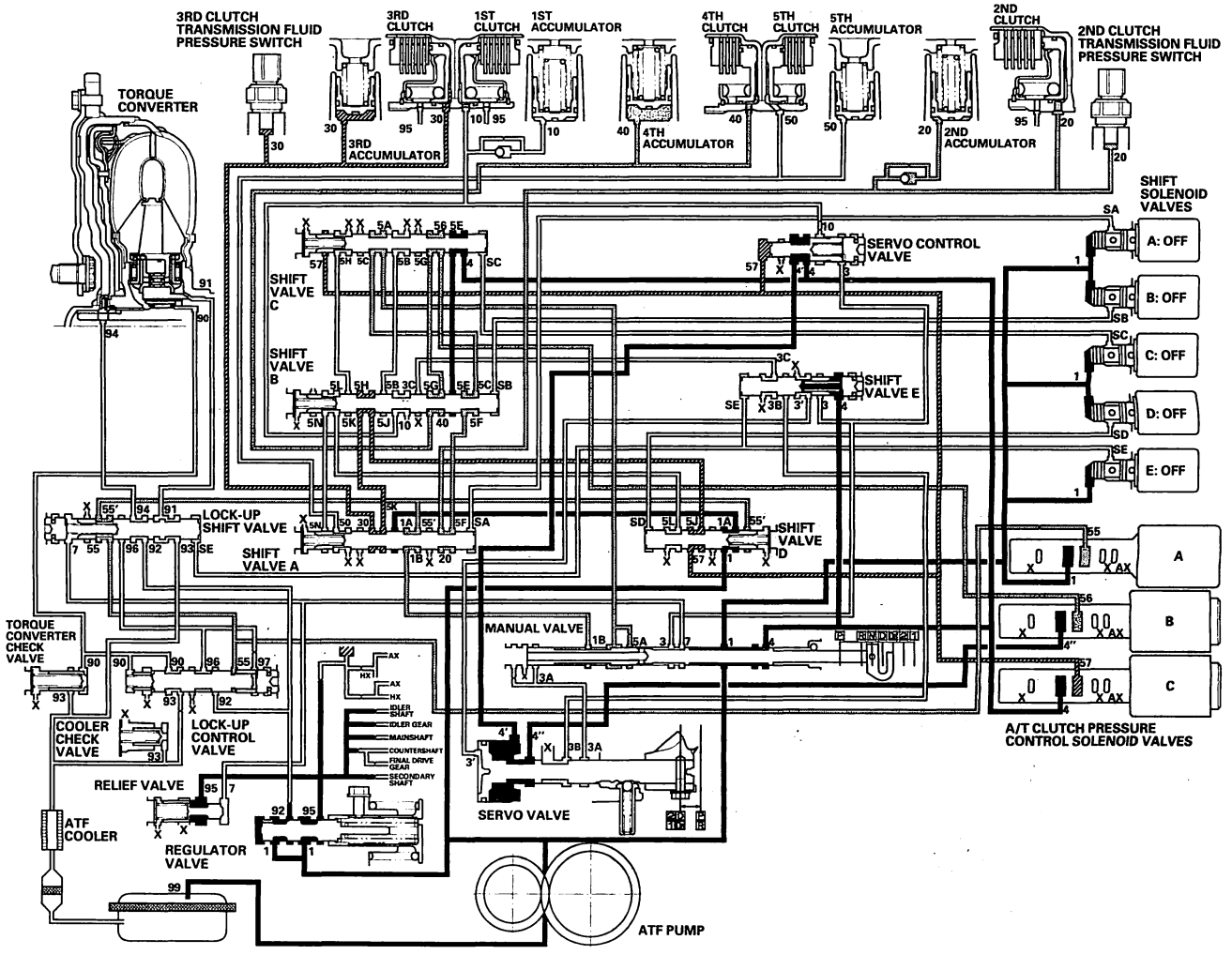

(cont'd)

BACK

Protected by AR

System Description (cont'd)

Hydraulic Flow (cont'd)

D Position: Driving in 4th gear

The PCM turns shift solenoid valve A ON, and B, C, D, and E stays OFF. Shift solenoid valve A pressure (SA) is applied to the right side of shift valve A. Shift valve A is moved to the left side to cover the A/T clutch pressure control solenoid valve A and C pressure ports leading to the 2nd and 3rd clutches.

A/T clutch pressure control solenoid valve B pressure (56) changes to (5G) at shift valve C, and becomes 4th clutch pressure (40) at shift valve B. The 4th clutch pressure (40) is held to high by the A/T clutch pressure control solenoid valve B, and the 4th clutch is engaged securely.

NOTE: When used, "left" or "right" indicates direction on the hydraulic circuit.

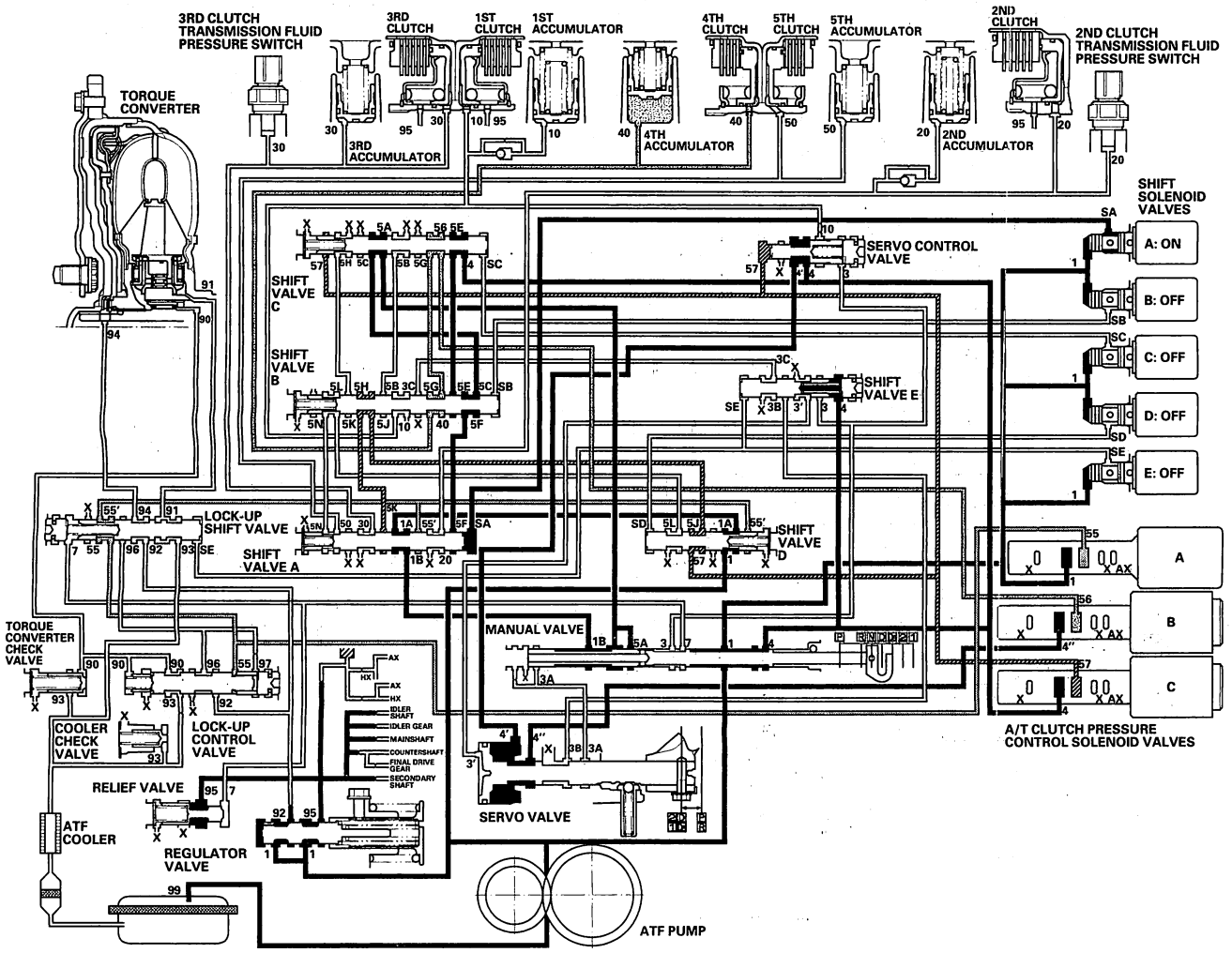

BACK

Protected by AR

D Position: Shifting between 4th gear and 5th gear

As the speed of the vehicle reaches the prescribed value, the PCM turns shift solenoid valve D ON, and A stays ON, and B, C, and E OFF. Shift solenoid valve D pressure (SD) is applied to the left side of the shift valve D. Shift valve D is moved to the right side to uncover the A/T clutch pressure control solenoid valve C pressure port leading to the 5th clutch. A/T clutch pressure control solenoid valve B pressure (56) changes to 4th clutch pressure (40) at shift valve B. A/T clutch pressure control solenoid valve C pressure (57) changes to (5L) at shift valve D and to (5N) at shift valve B, and becomes 5th clutch pressure (50) at shift valve A. The 4th and 5th clutches are engaged gently.

NOTE: When used, "left" or "right" indicates direction on the hydraulic circuit.

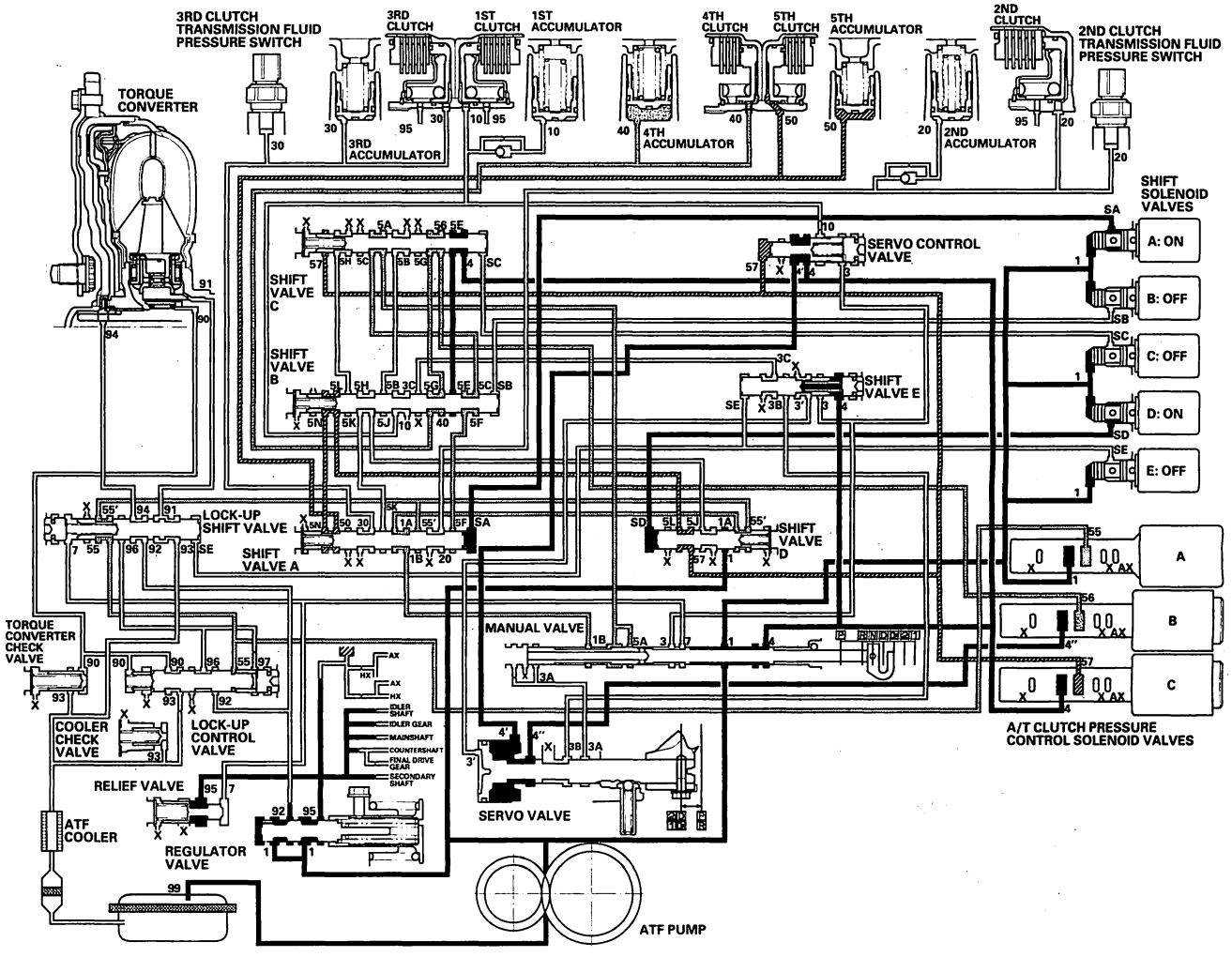

(cont'd)

Protected by AR

System Description (cont'd)

Hydraulic Flow (cont'd)

D Position: Driving in 5th gear

The PCM turns shift solenoid valve C ON, and A and D stays ON, and B and E turned OFF. Shift solenoid valve C pressure (SC) is applied to the right side of shift valve C. Shift valve C is moved to the left side to switch the A/T clutch pressure control solenoid valve B pressure port leading to the 4th clutch.

The 5th clutch pressure (50) is held to high by the A/T clutch pressure control solenoid valve C, and the 5th clutch is engaged securely.

NOTE: When used, "left" or "right" indicates direction on the hydraulic circuit.

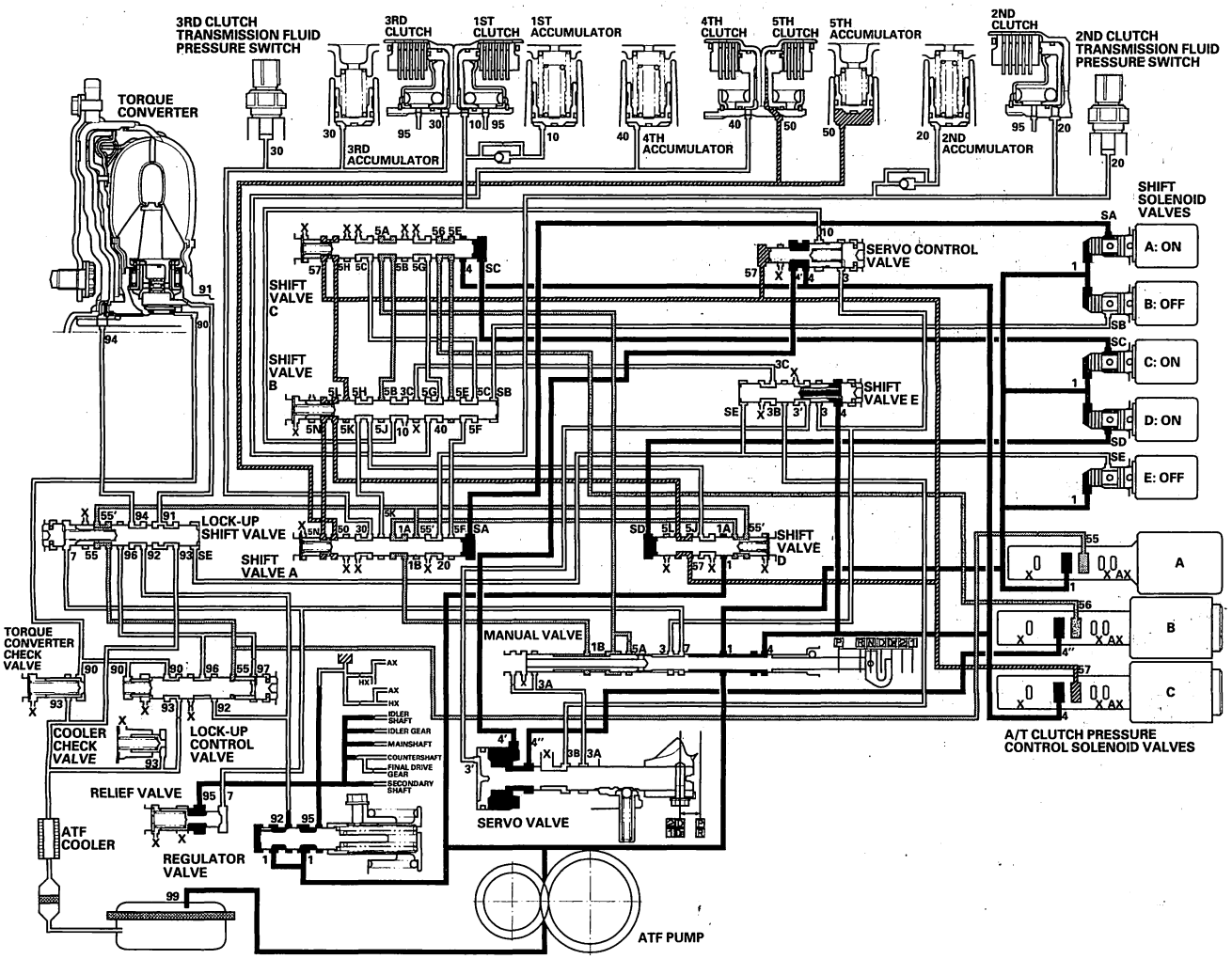

BACK

Protected by AR

2 Position

The PCM controls the shift solenoid valves. The conditions of the shift solenoid valves and positions of the shift valves are as follows:

- Shift solenoid valve A: OFF, and shift valve A stays on the in right side
- Shift solenoid valve B: ON, and shift valve B moves to the left side
- Shift solenoid valve C: OFF, and shift valve C stays on the in right side
- Shift solenoid valve D: ON, and shift valve D moves to the right side
- Shift solenoid valve E: OFF, and shift valve E stays on the in left side

Line pressure (1) changes to line pressure (4) at the manual valve, and flows to shift valve C. Line pressure (4) flows to shift valve A via shift valve B, and becomes the 2nd clutch pressure (20). The 2nd clutch pressure (20) is applied to the 2nd clutch, and the 2nd clutch is engaged.

NOTE: When used, "left" or "right" indicates direction on the hydraulic circuit.

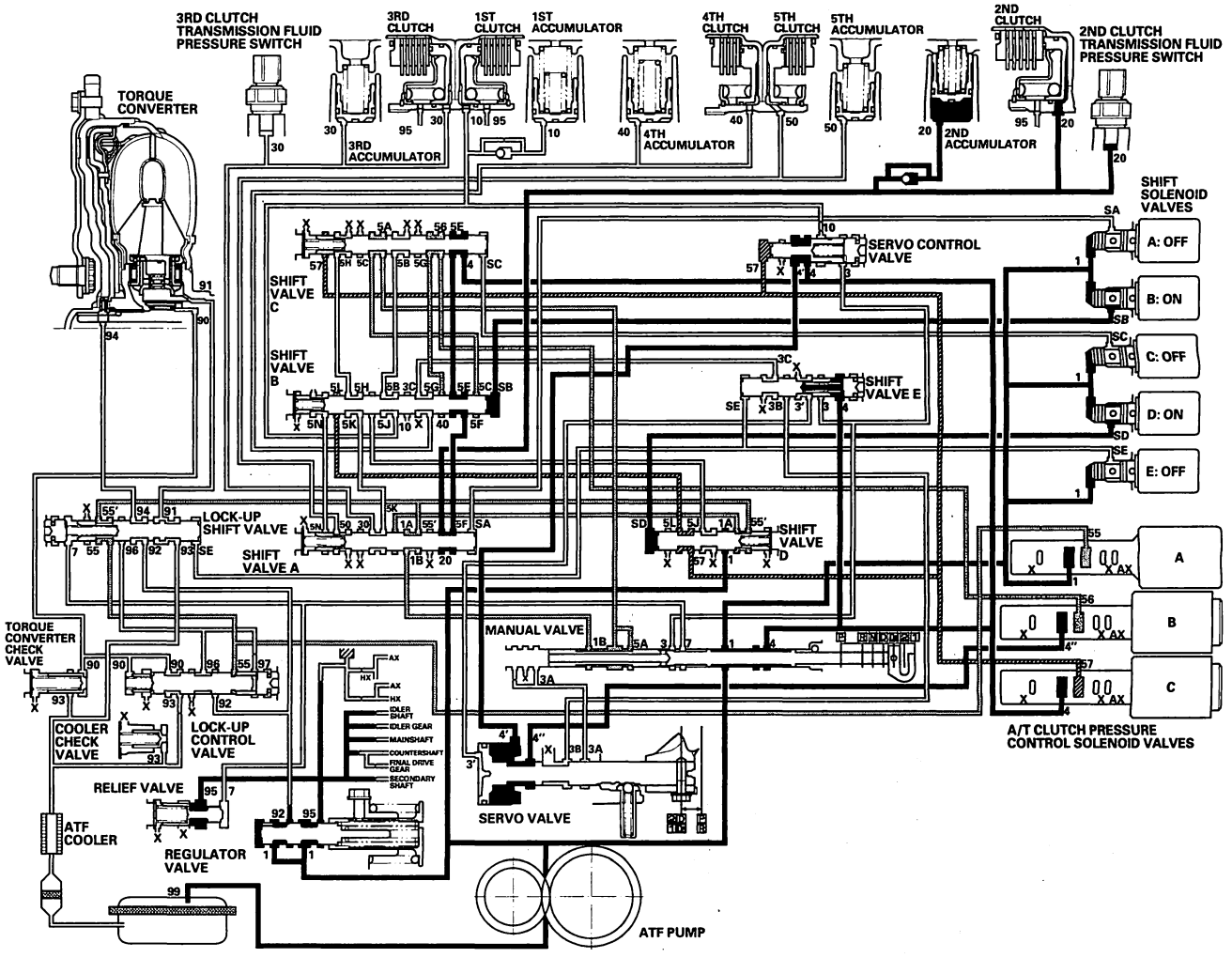

(cont'd)

BACK

Protected by AR

System Description (cont'd)

Hydraulic Flow (cont'd)

1 Position
The PCM controls the shift solenoid valves. The conditions of the shift solenoid valves and positions of the shift valves are as follows:

- Shift solenoid valve A: ON, and shift valve A moves to the left side
- Shift solenoid valve B: ON, and shift valve B moves to the left side
- Shift solenoid valve C: ON, and shift valve C moves to the left side
- Shift solenoid valve D: OFF, and shift valve D stays on the in left side
- Shift solenoid valve E: OFF, and shift valve E stays on the in left side

Line pressure (1) becomes the 1st clutch pressure (10) at the shift valve B.

Fluid flows to 1st clutch by way of:
Line Pressure (1) → Shift Valve D — Line Pressure (1A) → Shift Valve A — Line Pressure (1B) → Manual Valve — Line Pressure (5A) → Shift Valve C — Line Pressure (5B) → Shift Valve B — 1st Clutch Pressure (10) → 1st Clutch

The 1st clutch pressure (10) is applied to the 1st clutch, and the 1st clutch is engaged.

When used, "left" or "right" indicates direction on the hydraulic circuit.

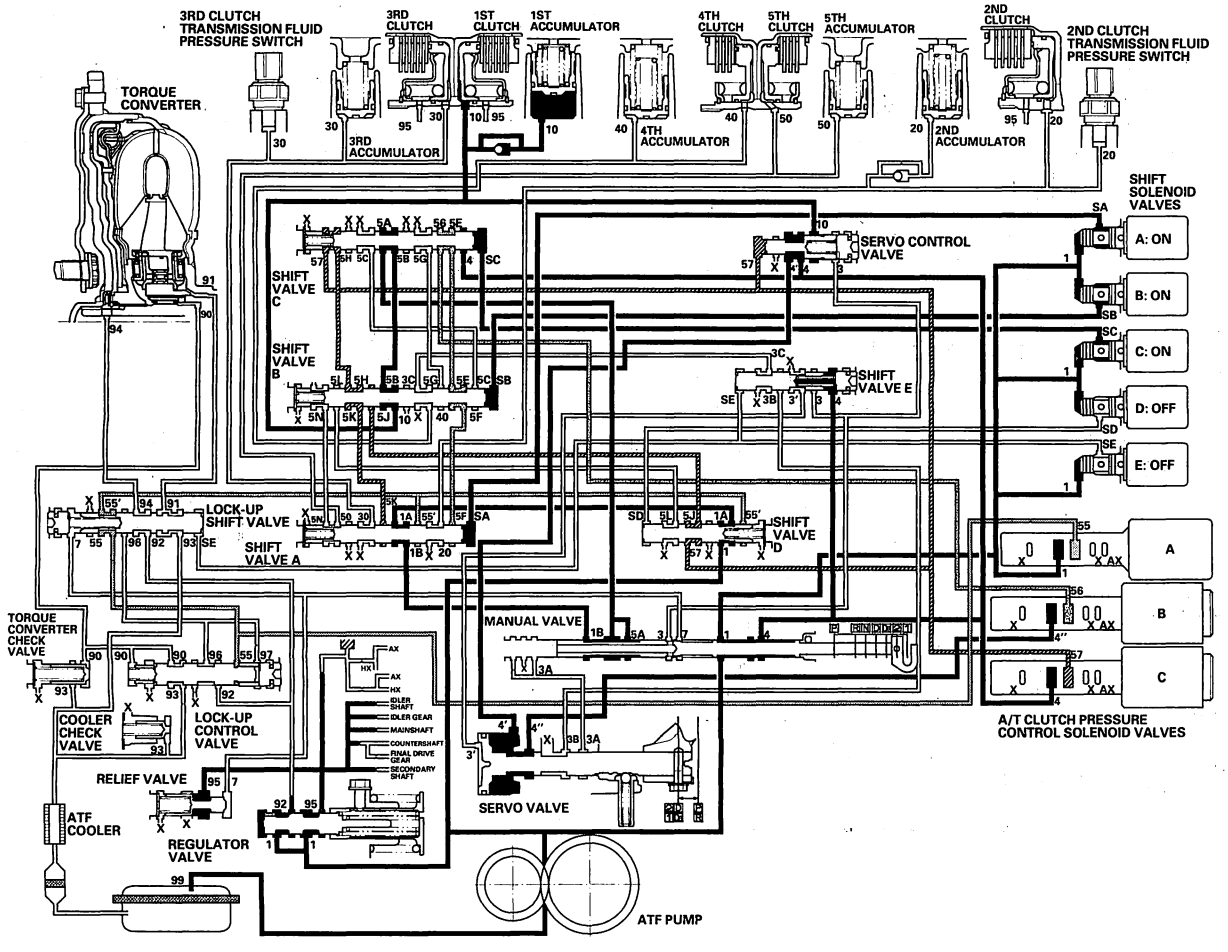

BACK

Protected by AR

R Position: Shifting to R position from P or N position

When shifting in the R position, the PCM turns shift solenoid valves B and E ON, and A, C, and D OFF. Shift solenoid valve B pressure (SB) is applied to the right side of shift valve B, and shift valve B is moved to left side. Shift solenoid valve E pressure (SE) is applied to the left side of shift valve E, and shift valve E is moved to the right side. Line pressure (1) changes to (3) at the manual valve, and flows to the servo valve via shift valve E. The servo valve is moved to reverse range position. Movement of shift valves B and E, and servo valve creates 4th clutch pressure line between the 4th clutch and the A/T clutch pressure control solenoid valve A. The 4th clutch pressure (40) is applied to the 4th clutch, and the 4th clutch is engaged gently.

NOTE: When used, "left" or "right" indicates direction on the hydraulic circuit.

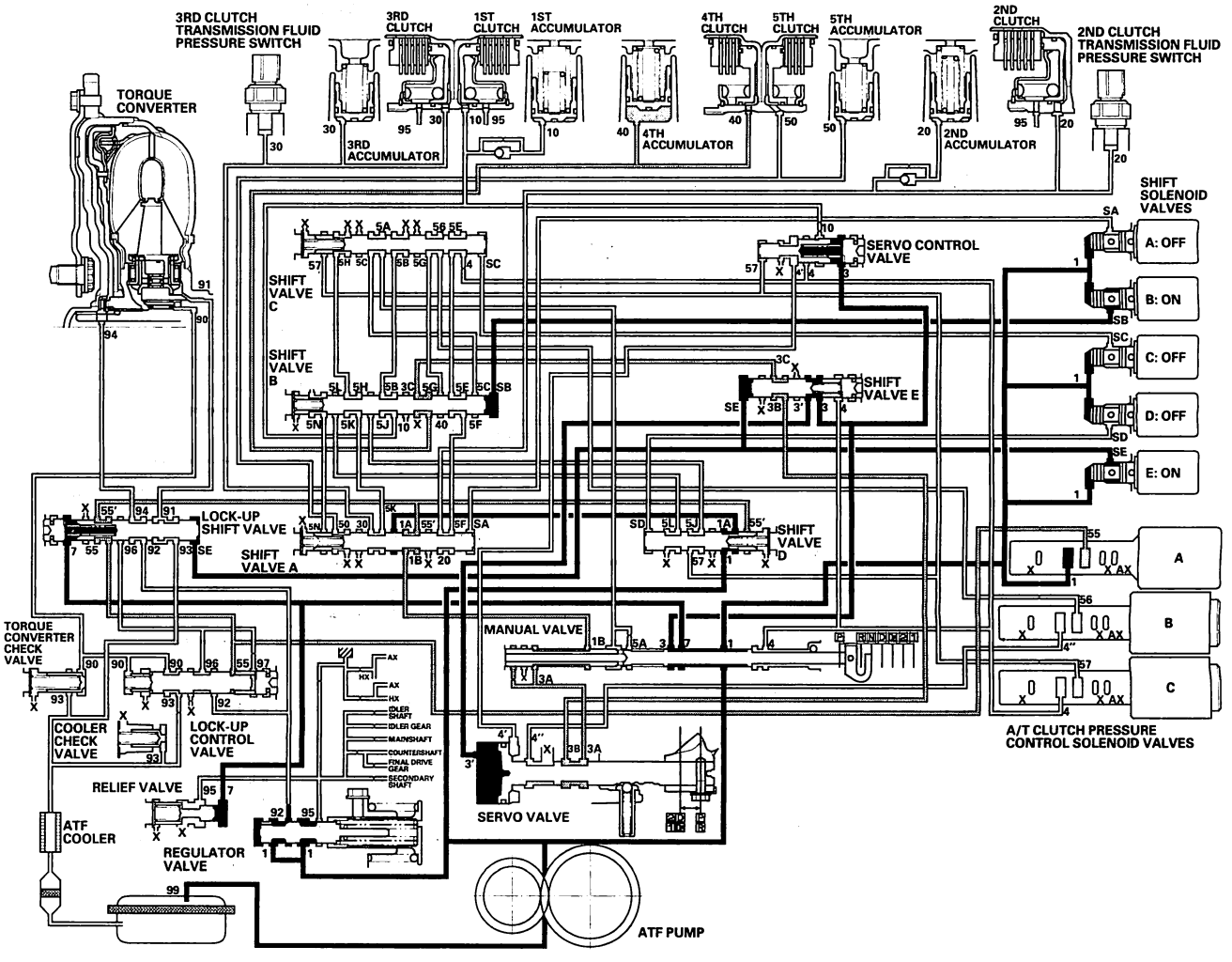

(cont'd)

Protected by AR

System Description (cont'd)

Hydraulic Flow (cont'd)

R Position: Driving in reverse gear
After starting off in reverse gear, the PCM turns shift solenoid valve A ON, and B and E stays ON, and C and D OFF. Shift solenoid valve A pressure (SA) is applied to the right side of shift valve A to cover the A/T clutch pressure control solenoid valve A pressure port, and to uncover the line pressure port leading to the 4th clutch creating full line pressure. The 4th clutch is engaged securely with line pressure.

Reverse Inhibitor Control
While the vehicle is moving forward, the PCM keeps shift solenoid valve E remaining OFF. Shift valve E covers the port of line pressure (3') leading to the servo valve reverse position. The servo valve cannot be shifted to reverse position, and hydraulic pressure is not applied to the 4th clutch from servo valve for reverse; as a result, power is not transmitted to the reverse direction.

NOTE: When used, "left" or "right" indicates direction on the hydraulic circuit.

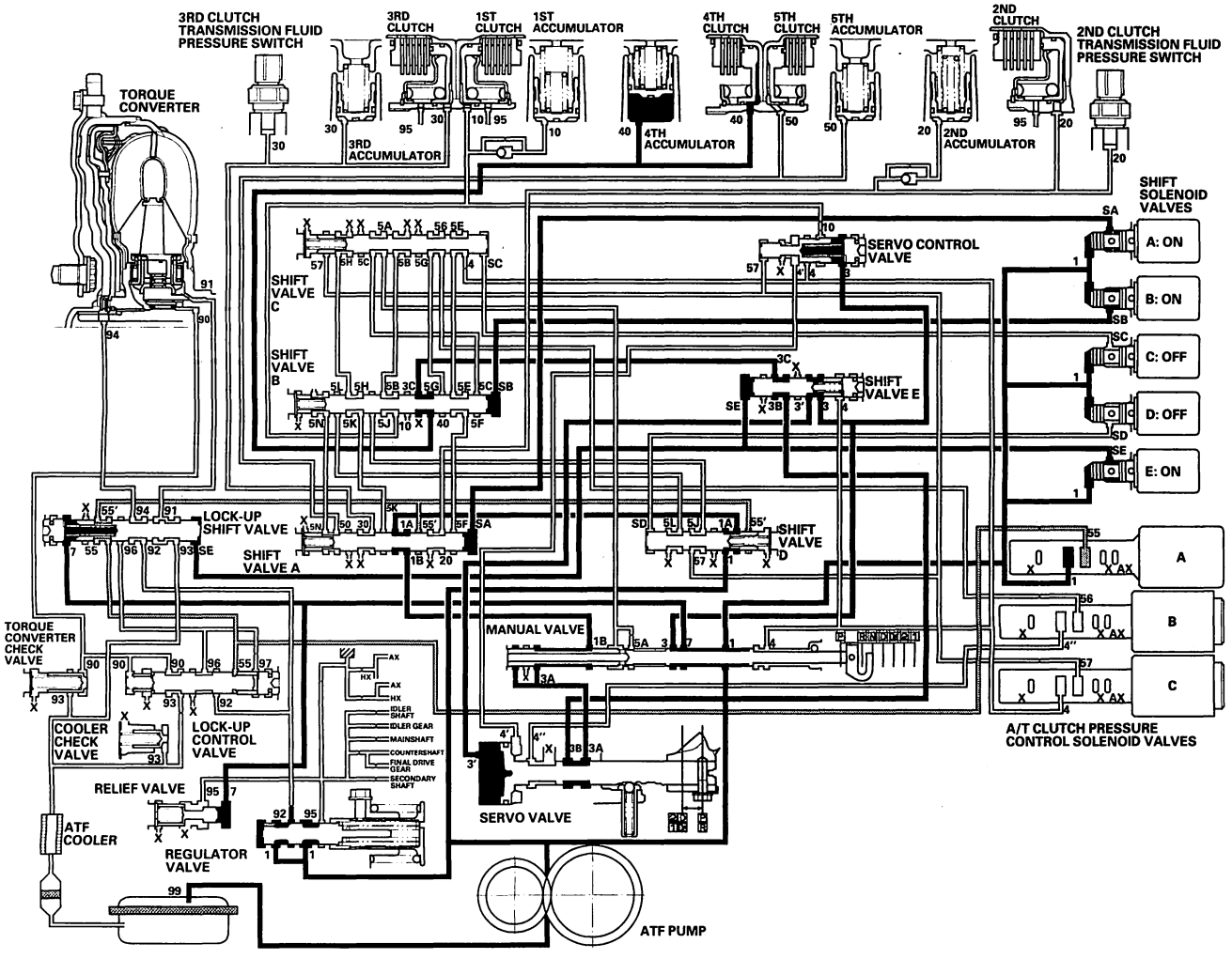

BACK

Protected by AR

P Position

Shift solenoid valves B and E are turned ON, and A, C, and D OFF by the PCM. Line pressure (1) flows to the shift solenoid valves and the A/T clutch pressure control solenoid valve A. Line pressure (3) changes to (3') at shift valve E, and flows to the servo valve. The servo valve is moved to reverse/park position. Hydraulic pressure is not applied to the clutches.

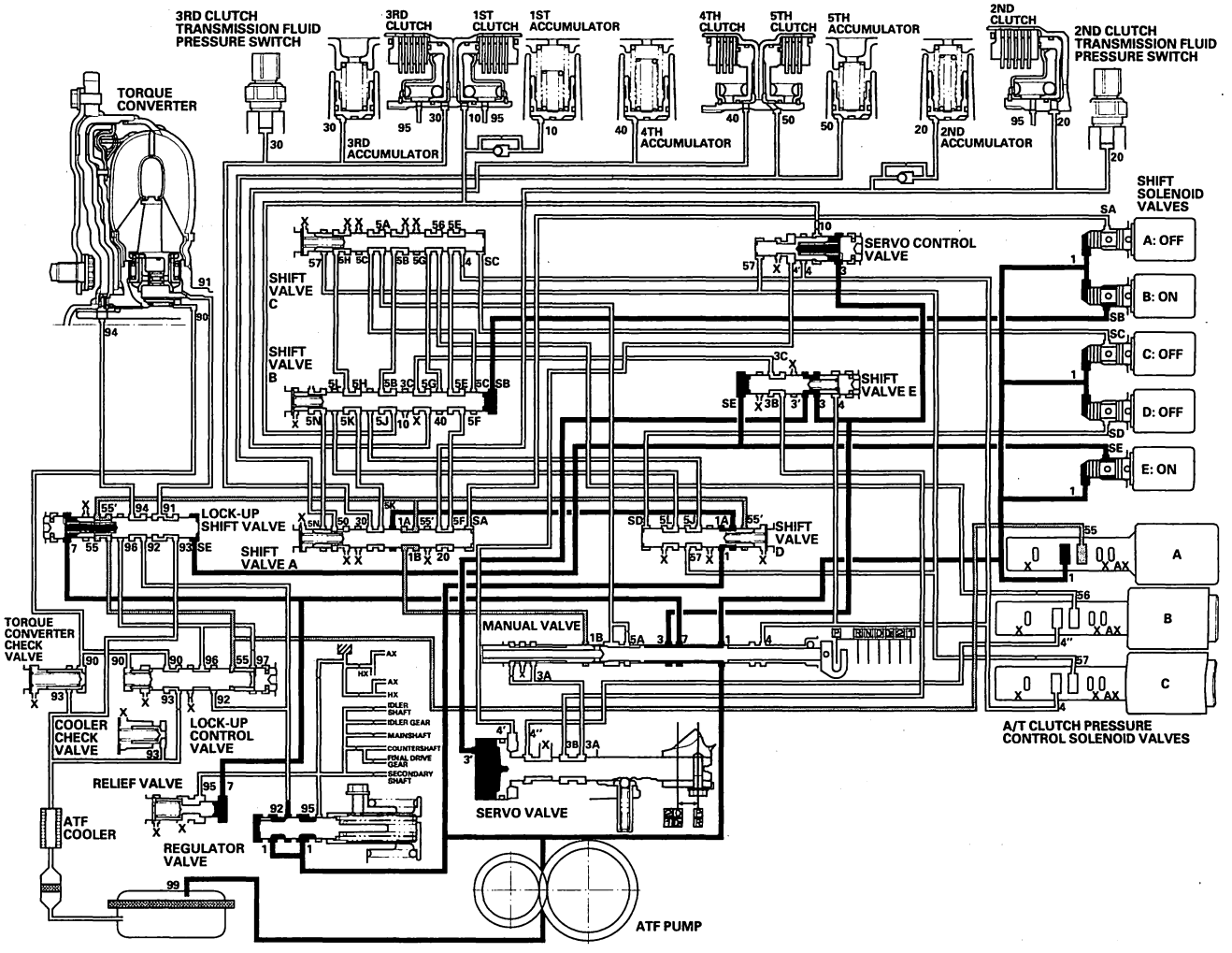

Protected by AR

System Description (cont'd)

Lock-up System

The lock-up mechanism of the torque converter clutch operates in D position (2nd, 3rd, 4th, and 5th), and in D3 position (2nd and 3rd). The pressurized fluid is drained from the back of the torque converter through a fluid passage, causing the torque converter clutch piston to be held against the torque converter cover. As this takes place, the mainshaft rotates at the same speed as the engine crankshaft. Together with the hydraulic control, the PCM optimizes the timing and volume of the lock-up mechanism. When the shift solenoid valve E is turned on by the PCM, shift solenoid valve E pressure switches the lock-up shift valve lock-up on and off. A/T clutch pressure control solenoid valve A and the lock-up control valve control the amount of the lock-up conditions.

Torque Converter Clutch Lock-up ON (Engaging Torque Converter Clutch)
Fluid in the chamber between the torque converter cover and the torque converter clutch piston is drained off, and fluid entering from the chamber between the pump and stator exerts pressure through the torque converter clutch piston against the torque converter cover. The torque converter clutch piston engages with the torque converter cover; the torque converter clutch lock-up is ON, and the mainshaft rotates at the same speed as the engine.

Power flow

The power flows by way of:

Engine
↓
Drive plate
↓
Torque converter cover
↓
Torque converter clutch piston
↓
Damper spring
↓
Turbine
↓
Mainshaft

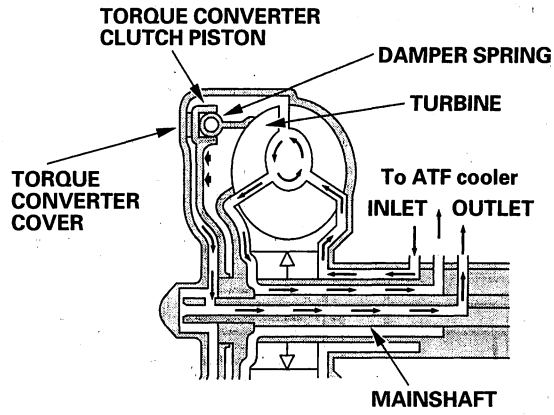

***Torque Converter* Clutch Lock-up OFF (Disengaging Torque Converter Clutch)**
Fluid entered from the chamber between the torque converter cover and the torque converter clutch piston passes through the torque converter and goes out through the chambers between the turbine and the stator, and between the pump and the stator. As a result, the torque converter clutch piston moves away from the torque converter, and the torque converter lock-up clutch is released; torque converter clutch lock-up is OFF.

Power flow

The power flows by way of:

Engine
↓
Drive plate
↓
Torque converter cover
↓
Pump
↓
Turbine
↓
Mainshaft

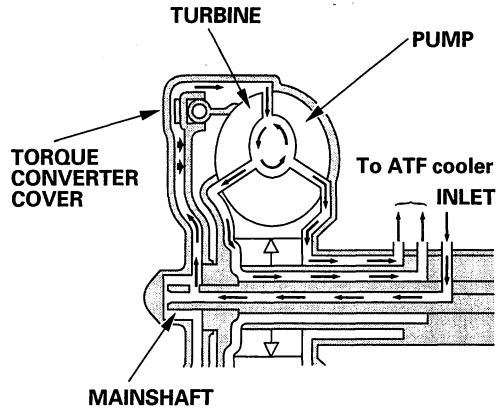

BACK

Protected by AR

No Lock-up

Shift solenoid valve E is turned OFF by the PCM, and shift solenoid valve E pressure (SE) is not applied to the lock-up shift valve. The lock-up shift valve stays to the right to uncover the torque converter pressure ports leading to the left side of the torque converter and releasing pressure from the right side of the torque converter. Torque converter pressure (92) changes to (94) at the lock-up shift valve, and enters into the left side of the torque converter to disengage the torque converter clutch. This keeps the torque converter clutch piston keeps away from the torque converter cover and the torque converter clutch lock-up is OFF.

NOTE: When used, "left" or "right" indicates direction on the hydraulic circuit.

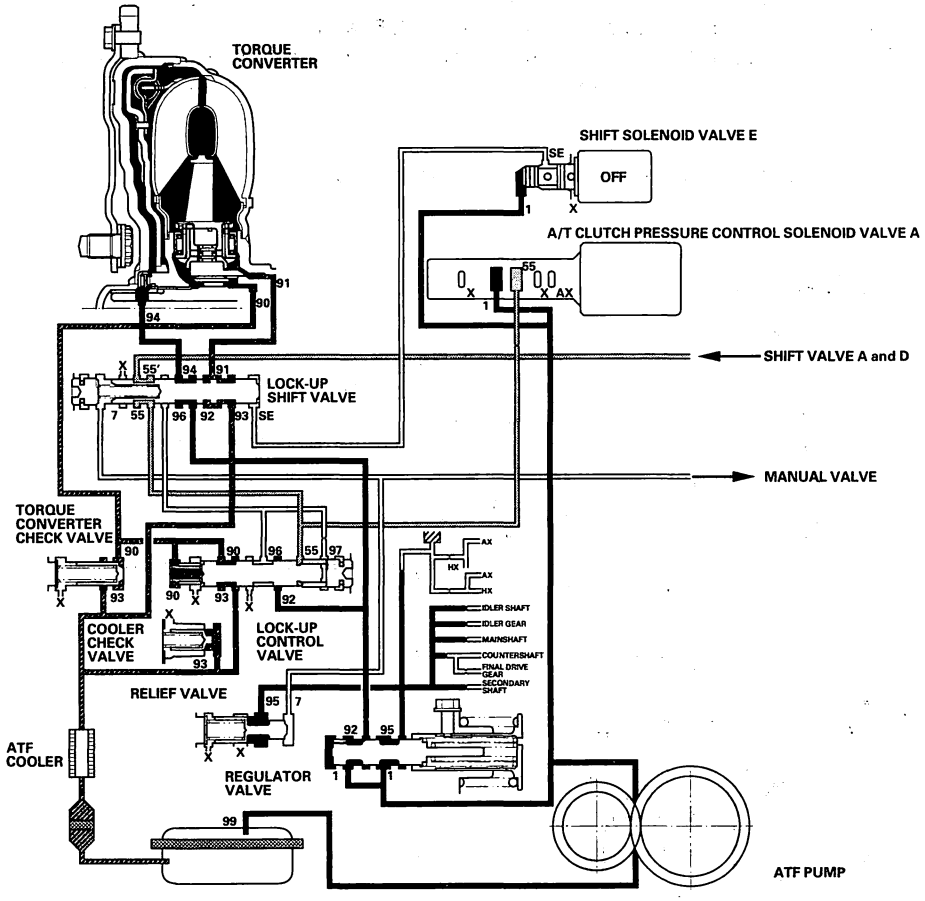

(cont'd)

Protected by AR

System Description (cont'd)

Lock-up System (cont'd)

Partial Lock-up

As the speed of the vehicle reaches the prescribed value, shift solenoid valve E is turned ON by the PCM, and shift solenoid valve E pressure (SE) is applied to the right side of the lock-up shift valve. The lock-up shift valve is moved to the left side to switch the torque converter pressure (91) port, which goes to the right side of the torque converter, and the port of torque converter pressure (94) is released from the left side of the torque converter. Torque converter pressure (91) flows to the right side of the torque converter to engage the torque converter clutch. The PCM also controls the A/T clutch pressure control solenoid valve A to regulate A/T clutch pressure control solenoid valve A pressure (55) is applied to the lock-up shift valve and lock-up control valve. The position of the lock-up control valve depends on A/T clutch pressure control solenoid valve A pressure (55) and torque converter pressure released from the torque converter. The lock-up control valve controls the amount of torque converter clutch lock-up until fluid between the clutch piston and torque converter cover is fully released; the torque converter clutch is in partial lock-up condition.

NOTE: When used, "left" or "right" indicates direction on the hydraulic circuit.

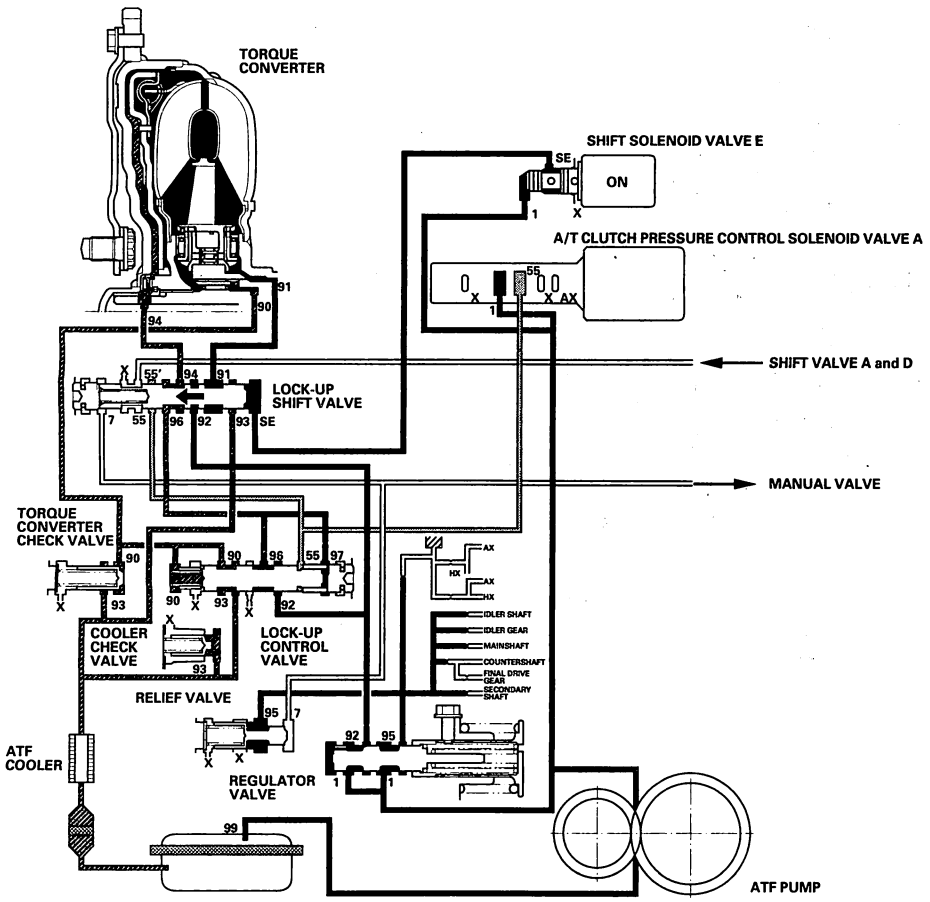

BACK

Protected by AR

Full Lock-up

When the vehicle speed increases, the PCM sends a signal to A/T clutch pressure control solenoid valve A to increase A/T clutch pressure control solenoid valve A pressure (55), and the lock-up control valve is moved to the left by the increased pressure. Then converter pressure (94) from the left side of the torque converter is completely released at the lock-up control valve, and torque converter pressure (91) engages the torque converter clutch securely; the torque converter clutch is in full lock-up.

NOTE: When used, "left" or "right" indicates direction on the hydraulic circuit.

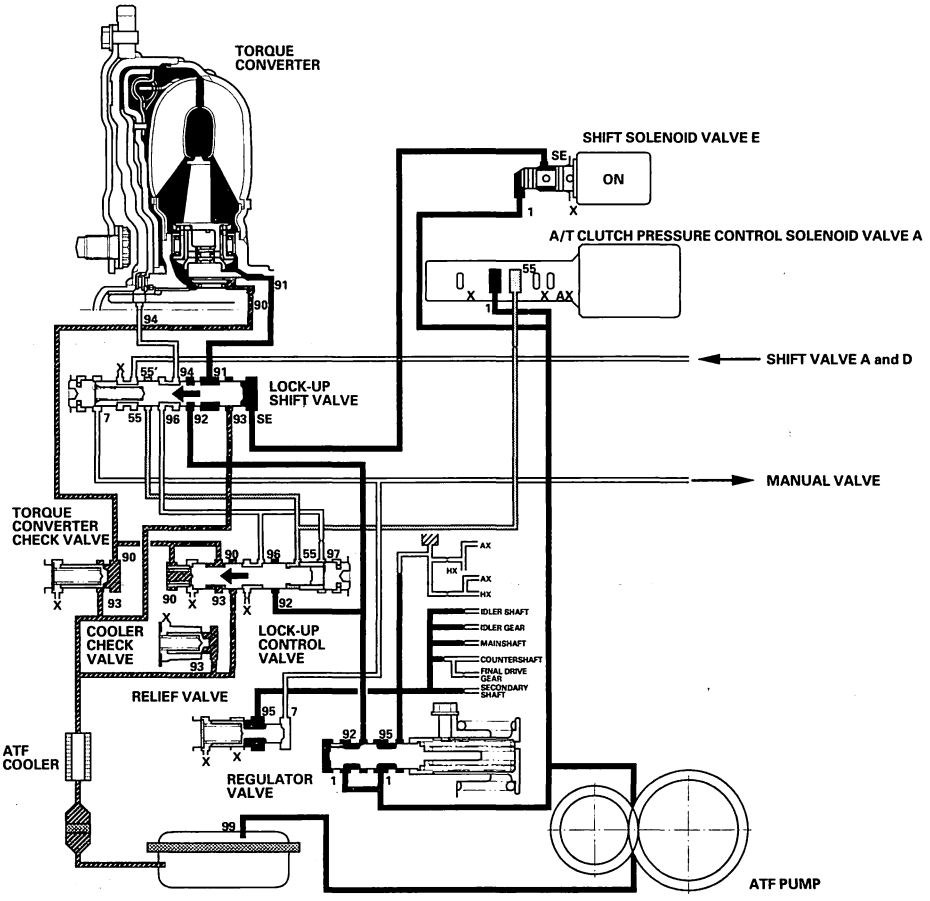

Protected by AR

System Description (cont'd)

Circuit Diagram - PCM A/T Control System - 2003-2004 Models

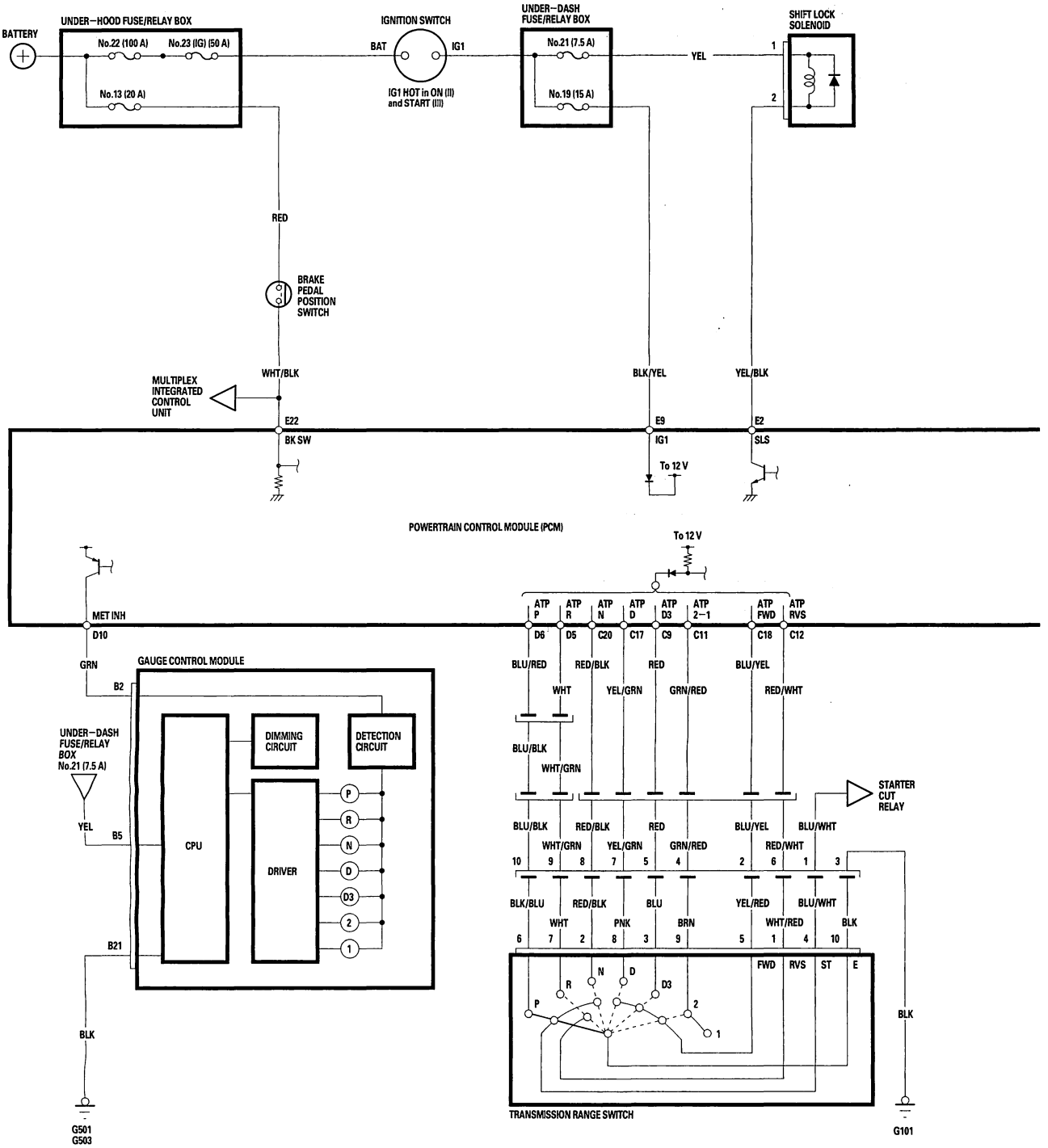

BACK

Protected by AR

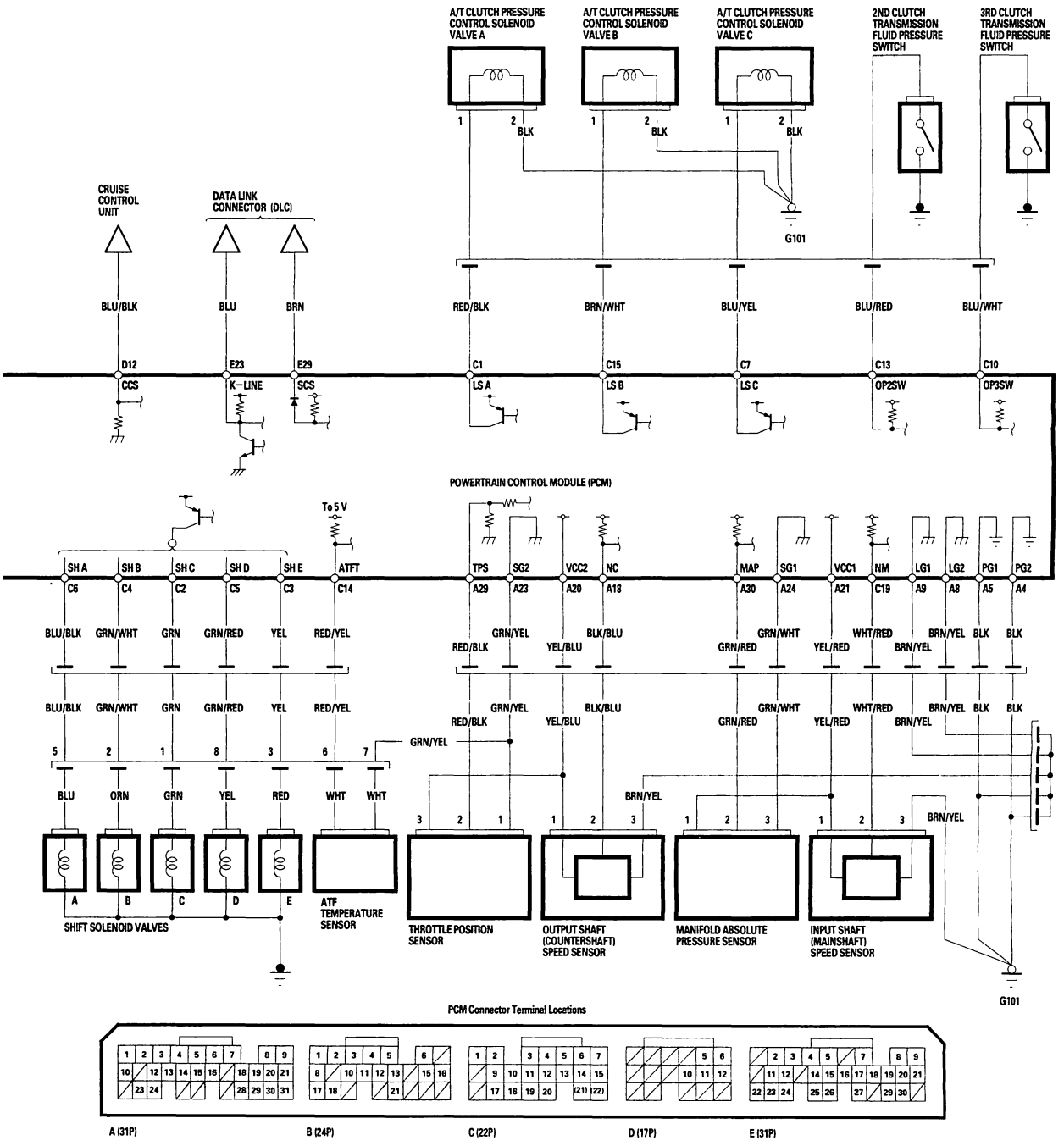

BACK

Protected by AR

System Description (cont'd)

Circuit Diagram - PCM A/T Control System - 2005 Model

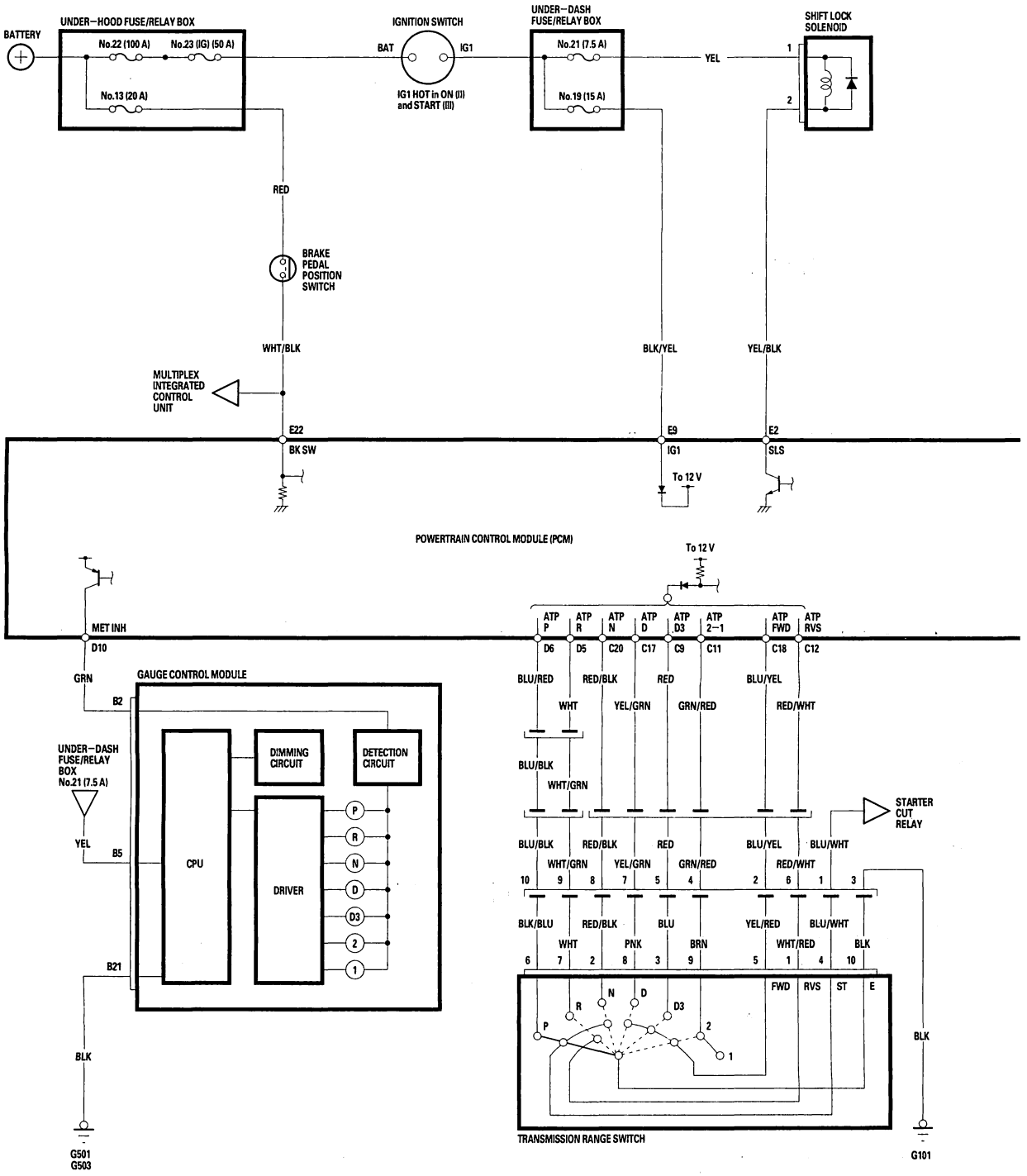

BACK

Protected by AR

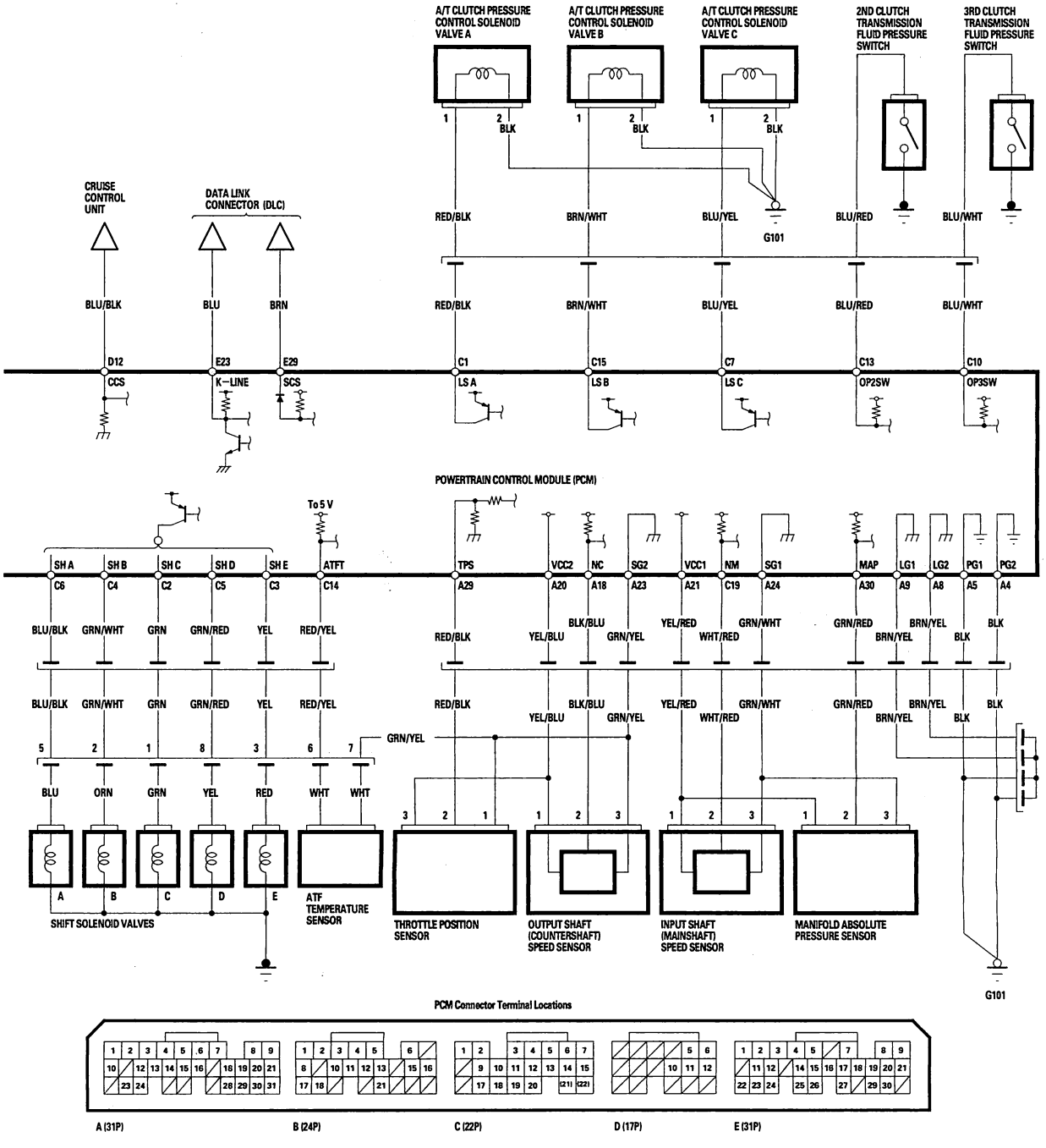

BACK

Protected by AR

System Description (cont'd)

Circuit Diagram - PCM A/T Control System - 2006 Model

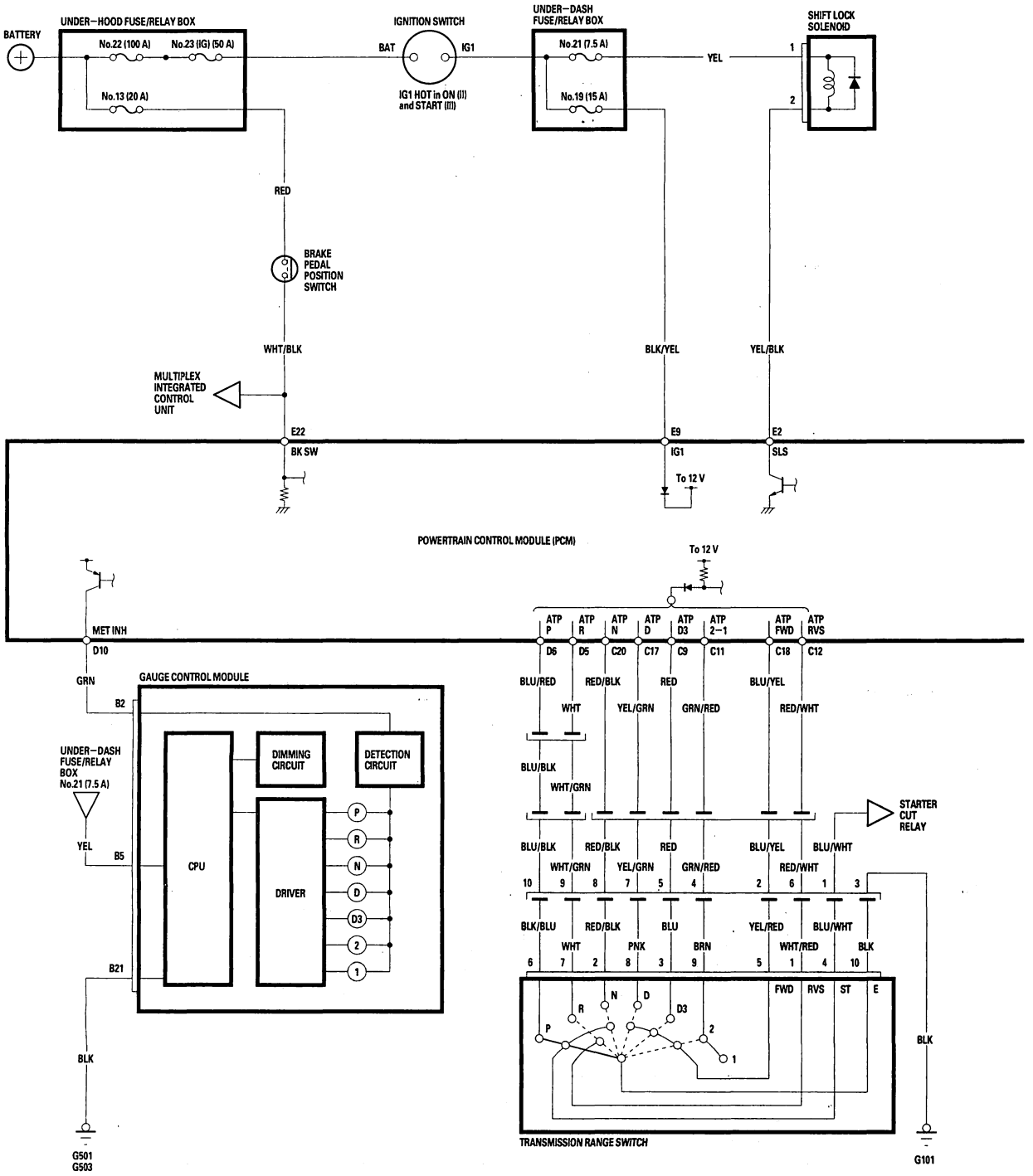

BACK

Protected by AR

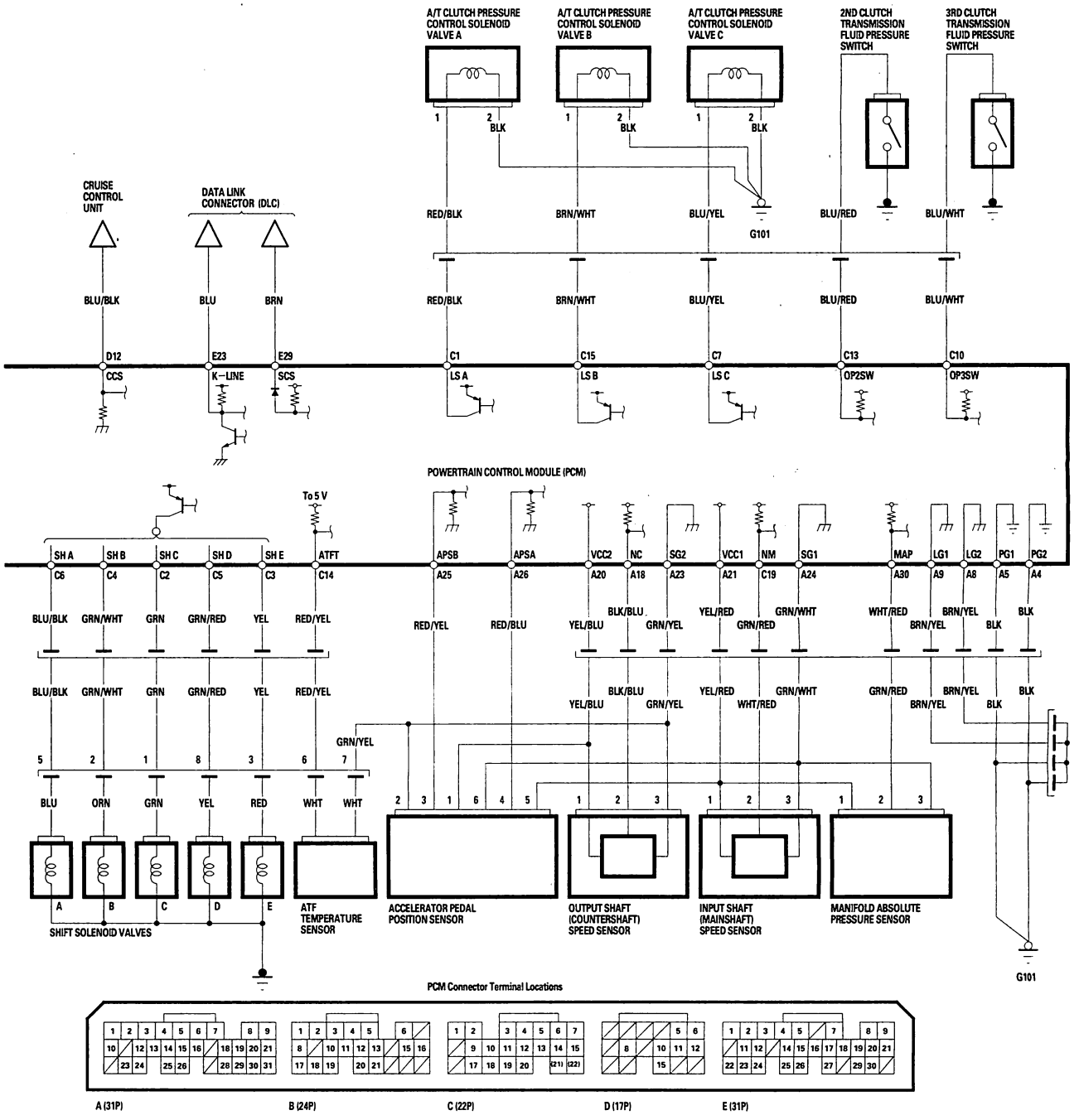

BACK

Protected by AR

DTC Troubleshooting

DTC P0705: Short in Transmission Range Switch Circuit (Multiple Shift-position Input)

NOTE:
- Record all freeze data and review General Troubleshooting Information (see page 14-3) before you troubleshoot.
- This code is caused by an electrical circuit problem and cannot be caused by a mechanical problem in the transmission.

1. Clear the DTC with the HDS.
2. Start the engine.
3. Move the shift lever through all positions. Stop for at least 1 second in each position, and monitor the OBD status for P0705 in the DTCs/Freeze Data in A/T Mode Menu.

   Does the result indicate FAILED?

   YES—Go to step 4.

   NO—Intermittent failure, the system is OK at this time. Check for an intermittent short in the wires between the transmission range switch and PCM. If the tester indicates NOT COMPLETED, repeat this step and recheck.■
4. Test the transmission range switch (see page 14-247).

   Is the switch OK?

   YES—Go to step 5.

   NO—Replace the transmission range switch, then go to step 55.
5. Turn the ignition switch ON (II).
6. Shift to all positions other than P.
7. Measure the voltage between PCM connector terminals D6 and A9.

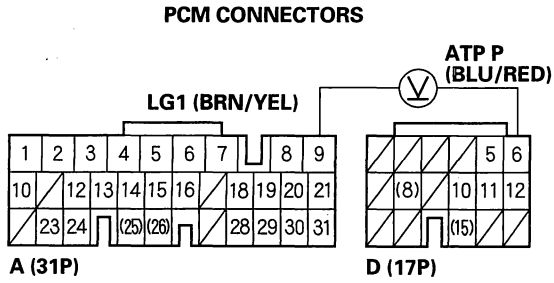

Wire side of female terminals

Is there battery voltage?

YES—Go to step 14.

NO—Go to step 8.

BACK

Protected by AR

8. Turn the ignition switch OFF.
9. Jump the SCS line with the HDS.
10. Disconnect PCM connector D (17P).
11. Check for continuity between PCM connector terminal D6 and body ground.

PCM CONNECTOR D (17P)

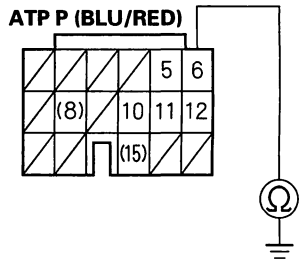

Wire side of female terminals

Is there continuity?

YES—Repair short in the wire between PCM connector terminal D6 and the transmission range switch, then go to step 55.

NO—Go to step 12.

12. Disconnect PCM connector A (31P).
13. Check for continuity between PCM connector terminals A8 and body ground, and between A9 and body ground.

PCM CONNECTOR A (31P)

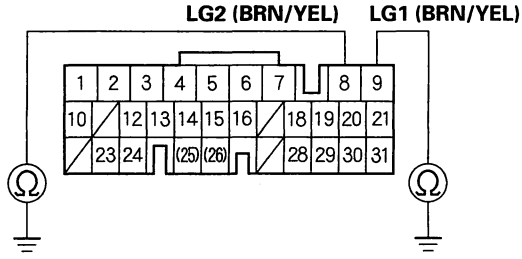

Wire side of female terminals

Is there continuity?

YES—Update the PCM if it does not have the latest software, or substitute a known-good PCM (see page 14-6), then recheck. If the symptom/indication goes away with a known-good PCM, replace the original PCM. ■

NO—Repair open in the wire between PCM connector terminals A8, A9, and ground (G101), or repair poor ground (G101), then go to step 55.

(cont'd)

Protected by AR

DTC Troubleshooting (cont'd)

14. Shift to all positions other than R.

15. Measure the voltage between PCM connector terminals D5 and A9.

PCM CONNECTORS

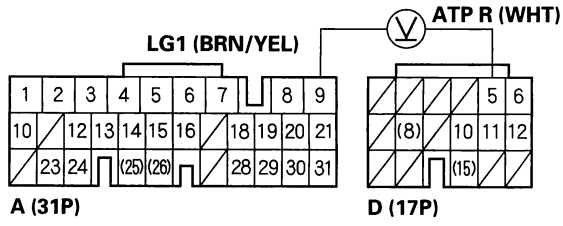

Wire side of female terminals

Is there battery voltage?

YES—Go to step 20.

NO—Go to step 16.

16. Turn the ignition switch OFF.

17. Jump the SCS line with the HDS.

18. Disconnect PCM connector D (17P).

19. Check for continuity between PCM connector terminal D5 and body ground.

PCM CONNECTOR D (17P)

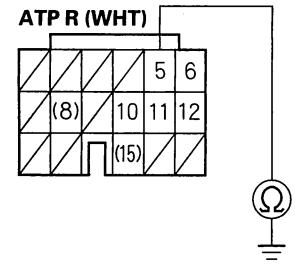

Wire side of female terminals

Is there continuity?

YES—Repair short in the wire between PCM connector terminal D5 and the transmission range switch, then go to step 55.

NO—Update the PCM if it does not have the latest software, or substitute a known-good PCM (see page 14-6), then recheck. If the symptom/indication goes away with a known-good PCM, replace the original PCM. ■

BACK

Protected by AR

20. Measure the voltage between PCM connector terminals C12 and A9.

PCM CONNECTORS

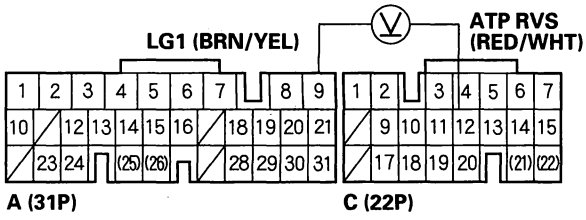

Wire side of female terminals

Is there battery voltage?

YES—Go to step 25.

NO—Go to step 21.

21. Turn the ignition switch OFF.

22. Jump the SCS line with the HDS.

23. Disconnect PCM connector C (22P).

24. Check for continuity between PCM connector terminal C12 and body ground.

PCM CONNECTOR C (22P)

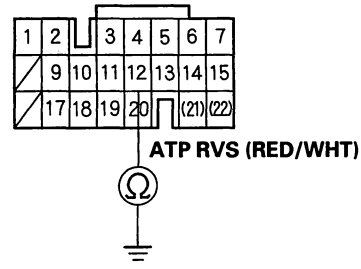

Wire side of female terminals

Is there continuity?

YES—Repair short in the wire between PCM connector terminal C12 and the transmission range switch, then go to step 55.

NO—Update the PCM if it does not have the latest software, or substitute a known-good PCM (see page 14-6), then recheck. If the symptom/indication goes away with a known-good PCM, replace the original PCM.■

(cont'd)

Protected by AR

DTC Troubleshooting (cont'd)

25. Shift to all positions other than N.

26. Measure the voltage between PCM connector terminals C20 and A9.

PCM CONNECTORS

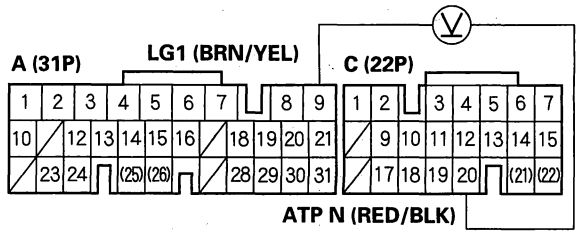

Wire side of female terminals

Is there battery voltage?

YES—Go to step 31.

NO—Go to step 27.

27. Turn the ignition switch OFF.

28. Jump the SCS line with the HDS.

29. Disconnect PCM connector C (22P).

30. Check for continuity between PCM connector terminal C20 and body ground.

PCM CONNECTOR C (22P)

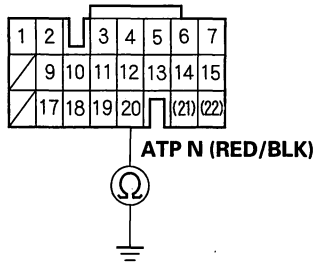

Wire side of female terminals

Is there continuity?

YES—Repair short in the wire between PCM connector terminal C20 and the transmission range switch, then go to step 55.

NO—Update the PCM if it does not have the latest software, or substitute a known-good PCM (see page 14-6), then recheck. If the symptom/indication goes away with a known-good PCM, replace the original PCM. ■

BACK

Protected by AR

31. Shift to all positions other than D.

32. Measure the voltage between PCM connector terminals C17 and A9.

PCM CONNECTORS

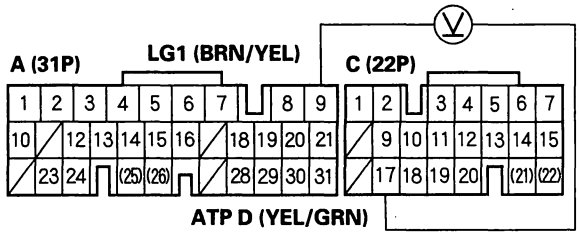

Wire side of female terminals

Is there battery voltage?

YES—Go to step 37.

NO—Go to step 33.

33. Turn the ignition switch OFF.

34. Jump the SCS line with the HDS.

35. Disconnect PCM connector C (22P).

36. Check for continuity between PCM connector terminal C17 and body ground.

PCM CONNECTOR C (22P)

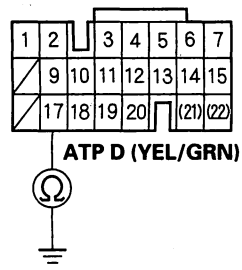

Wire side of female terminals

Is there continuity?

YES—Repair short in the wire between PCM connector terminal C17 and the transmission range switch, then go to step 55.

NO—Update the PCM if it does not have the latest software, or substitute a known-good PCM (see page 14-6), then recheck. If the symptom/indication goes away with a known-good PCM, replace the original PCM.■

(cont'd)

Protected by AR

DTC Troubleshooting (cont'd)

37. Shift to all positions other than D3.
38. Measure the voltage between PCM connector terminals C9 and A9.

PCM CONNECTORS

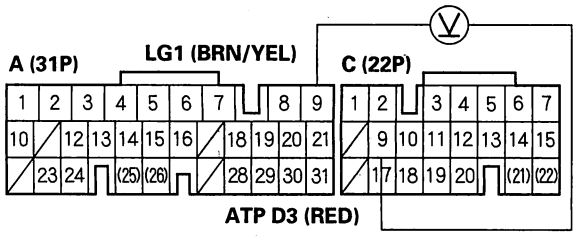

Wire side of female terminals

Is there battery voltage?

YES—Go to step 43.

NO—Go to step 39.

39. Turn the ignition switch OFF.
40. Jump the SCS line with the HDS.
41. Disconnect PCM connector C (22P).
42. Check for continuity between PCM connector terminal C9 and body ground.

PCM CONNECTOR C (22P)

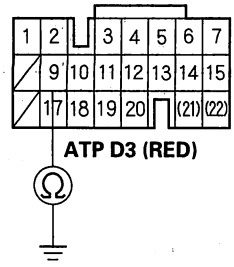

Wire side of female terminals

Is there continuity?

YES—Repair short in the wire between PCM connector terminal C9 and the transmission range switch, then go to step 55.

NO—Update the PCM if it does not have the latest software, or substitute a known-good PCM (see page 14-6), then recheck. If the symptom/indication goes away with a known-good PCM, replace the original PCM.■

BACK

Protected by AR

43. Shift to all positions other than 2 and 1.

44. Measure the voltage between PCM connector terminals C11 and A9.

PCM CONNECTORS

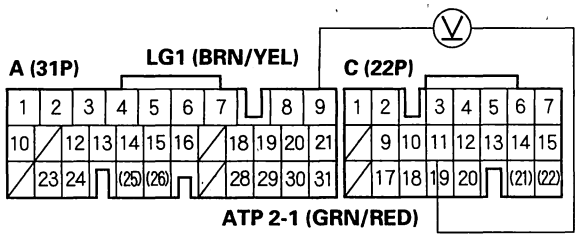

Wire side of female terminals

Is there battery voltage?

YES—Go to step 49.

NO—Go to step 45.

45. Turn the ignition switch OFF.

46. Jump the SCS line with the HDS.

47. Disconnect PCM connector C (22P).

48. Check for continuity between PCM connector terminal C11 and body ground.

PCM CONNECTOR C (22P)

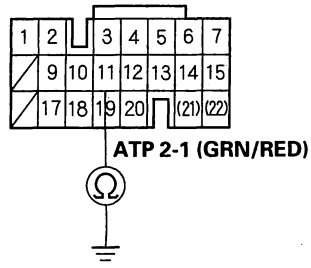

Wire side of female terminals

Is there continuity?

YES—Repair short in the wire between PCM connector terminal C11 and the transmission range switch, then go to step 55.

NO—Update the PCM if it does not have the latest software, or substitute a known-good PCM (see page 14-6), then recheck. If the symptom/indication goes away with a known-good PCM, replace the original PCM.■

(cont'd)

Protected by AR

DTC Troubleshooting (cont'd)

49. Shift to all positions other than D, D3, and 2.

50. Measure the voltage between PCM connector terminals C18 and A9.

PCM CONNECTORS

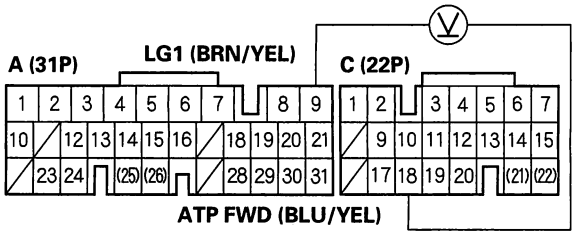

Wire side of female terminals

Is there battery voltage?

YES—Update the PCM if it does not have the latest software, or substitute a known-good PCM (see page 14-6), then recheck. If the symptom/indication goes away with a known-good PCM, replace the original PCM. ■

NO—Go to step 51.

51. Turn the ignition switch OFF.

52. Jump the SCS line with the HDS.

53. Disconnect PCM connector C (22P).

54. Check for continuity between PCM connector terminal C18 and body ground.

PCM CONNECTOR C (22P)

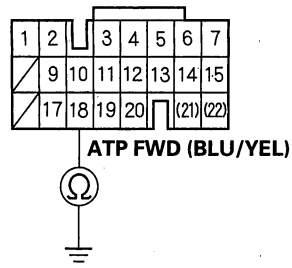

Wire side of female terminals

Is there continuity?

YES—Repair short in the wire between PCM connector terminal C18 and the transmission range switch, then go to step 55.

NO—Update the PCM if it does not have the latest software, or substitute a known-good PCM (see page 14-6), then recheck. If the symptom/indication goes away with a known-good PCM, replace the original PCM. ■

55. Clear the DTC with the HDS.

56. Move the shift lever through all positons. Stop for at least 1 second in each position, and monitor the OBD status for P0705 in the DTCs/Freeze Data in A/T Mode Menu.

Does the result indicate PASSED?

YES—Troubleshooting is complete. ■

NO—Return to step 1 and recheck.

BACK

Protected by AR

DTC P0706: Open in Transmission Range Switch Circuit

NOTE:
- Record all freeze data and review General Troubleshooting Information (see page 14-3) before you troubleshoot.
- This code is caused by an electrical circuit problem and cannot be caused by a mechanical problem in the transmission.

1. Clear the DTC with the HDS.
2. Raise the front of the vehicle, make sure it is securely supported, and allow the front wheels to rotate freely.
3. Start the engine, drive the vehicle in the D position until the vehicle speed reaches 35 mph (56 km/h), then slow down and stop the wheels.
4. Monitor the OBD status for P0706 in the DTCs/ Freeze Data in A/T Mode Menu for a pass/fail.

   Does the result indicate FAILED?

   YES—Go to step 5.

   NO—Intermittent failure, the system is OK at this time. Check for poor connections or loose terminals at the transmission range switch and PCM. If the tester indicates NOT COMPLETED, return to step 1 and recheck.■
5. Test the transmission range switch (see page 14-247).

   Is the switch OK?

   YES—Inspect the end of the selector control shaft (see step 8 on page 14-248), and go to step 6.

   NO—Replace the transmission range switch, then go to step 24.
6. Install the transmission range switch correctly, and adjust the shift cable (see page 14-241).
7. Clear the DTC with the HDS.
8. Raise the front of the vehicle, make sure it is securely supported, and allow the front wheels to rotate freely.
9. Start the engine, drive the vehicle in the D position until the vehicle speed reaches 35 mph (56 km/h), then slow down and stop the wheels.
10. Monitor the OBD status for P0706 in the DTCs/ Freeze Data in A/T Mode Menu for a pass/fail.

    Does the result indicate FAILED?

    YES—Go to step 11.

    NO—The problem has been corrected. If the tester indicates NOT COMPLETED, return to step 7 and recheck.■
11. Shift the shift lever into the D position, and verify the ATP FWD and ATP D inputs with the HDS in the A/T data list.

    Is the ATP FWD and ATP D ON?

    YES—Go to step 12.

    NO—Go to step 18.
12. Shift to the D3 position, and verify the ATP FWD and ATP D3 inputs with the HDS in the A/T date list.

    Is the ATP FWD and ATP D3 ON?

    YES—Go to step 13.

    NO—Go to step 18.
13. Shift to the 2 position, and verify the ATP FWD and ATP 2-1 signals with the HDS in the A/T data list.

    Is the ATP FWD and ATP 2-1 ON?

    YES—Go to step 14.

    NO—Go to step 18.

(cont'd)

Protected by AR

DTC Troubleshooting (cont'd)

14. Clear the DTC with the HDS, and turn the ignition switch OFF.
15. Raise the front of the vehicle, make sure it is securely supported, and allow the front wheels to rotate freely.
16. Start the engine, drive the vehicle in the D position until the vehicle speed reaches 35 mph (56 km/h), then slow down and stop the wheels.
17. Monitor the OBD status for P0706 in the DTCs/ Freeze Data in A/T Mode Menu for a pass/fail.

    Does the result indicate FAILED?

    YES—Go to step 18.

    NO—Intermittent failure, the system is OK at this time. Check for poor connections or loose terminals at the transmission range switch and PCM. If the tester indicates NOT COMPLETED, return to step 14 and recheck.■
18. Turn the ignition switch OFF.
19. Disconnect the transmission range switch connector.
20. Check for continuity between transmission range switch connector terminal No. 10 and body ground.

TRANSMISSION RANGE SWITCH CONNECTOR

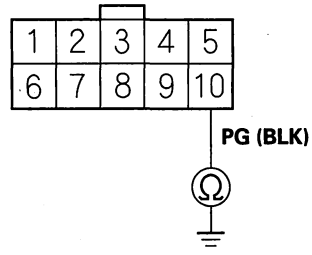

Wire side of female terminals

Is there continuity?

YES—Go to step 21.

NO—Repair open in the wire between transmission range switch connector terminal No. 10 and ground (G101), or repair poor ground (G101), then go to step 26.

BACK

Protected by AR

21. Turn the ignition switch ON (II).

22. Measure the voltage between transmission range switch connector terminals No. 5 and No. 10.

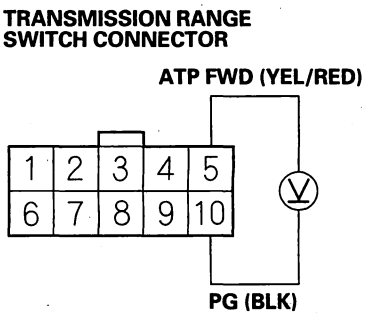

Wire side of female terminals

Is there voltage?

YES—Go to step 23.

NO—Repair open in the wire between the transmission range switch and PCM connector terminal C18, then go to step 26.

23. Measure the voltage between transmission range switch connector terminals No. 8 and No. 10.

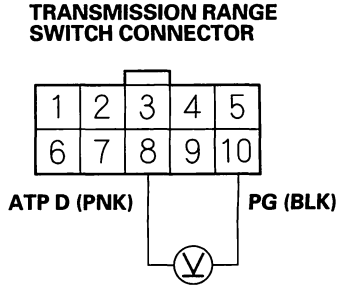

Wire side of female terminals

Is there voltage?

YES—Go to step 24.

NO—Repair open in the wire between the transmission range switch and PCM connector terminal C17, then go to step 26.

24. Measure the voltage between transmission range switch connector terminals No. 3 and No. 10.

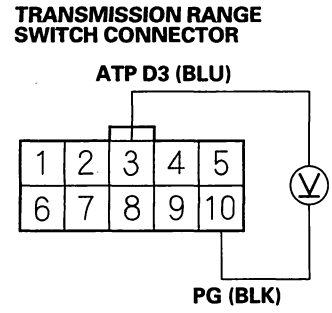

Wire side of female terminals

Is there voltage?

YES—Go to step 25.

NO—Repair open in the wire between the transmission range switch and PCM connector terminal C9, then go to step 26.

(cont'd)

Protected by AR

DTC Troubleshooting (cont'd)

25. Measure the voltage between transmission range switch connector terminals No. 9 and No. 10.

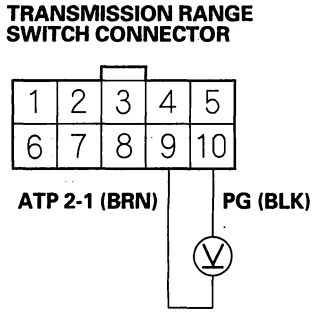

Wire side of female terminals

Is there voltage?

YES—Update the PCM if it does not have the latest software, or substitute a known-good PCM (see page 14-6), then recheck. If the symptom/indication goes away with a known-good PCM, replace the original PCM. ■

NO—Repair open in the wire between the transmission range switch and PCM connector terminal C11, then go to step 26.

26. Clear the DTC with the HDS.

27. Turn the ignition switch OFF.

28. Raise the front of the vehicle, make sure it is securely supported, and allow the front wheels to rotate freely.

29. Start the engine, drive the vehicle in the D position until the vehicle speed reaches 35 mph (56 km/h), then slow down and stop the wheels.

30. Monitor the OBD status for P0706 in the DTCs/Freeze Data in A/T Mode Menu for a pass/fail.

Does the result indicate PASSED?

YES—Troubleshooting is complete. ■

NO—Return to step 1 and recheck.

BACK

Protected by AR

DTC P0711: Problem in ATF Temperature Sensor Circuit

NOTE:
- Record all freeze data and review General Troubleshooting Information (see page 14-3) before you troubleshoot.
- This code is caused by an electrical circuit problem and cannot be caused by a mechanical problem in the transmission.

1. Check the ATF temperature with the HDS.

   Does the ATF temperature exceed the ambient-air temperature?

   YES—Record the ATF temperature. Leave the engine off for more than 30 minutes, and go to step 2.

   NO—Record the ATF temperature. Test the stall speed RPM (see page 14-188) three times. Go to step 2 after stall speed testing.

2. Check the ATF temperature with the HDS.

   Does the ATF temperature change?

   YES—Leave the engine off for at least 30 more minutes, and go to step 3.

   NO—Replace ATF temperature sensor (see page 14-204), then go to step 5.

3. Check the ECT SENSOR with the HDS.

   Is the ECT SENSOR equal to the ambient-air temperature?

   YES—Go to step 4.

   NO—Leave the engine off until ECT sensor equals ambient-air temperature, then go to step 4.

4. Check the ATF temperature with the HDS.

   Is the ATF temperature almost equal to ECT SENSOR?

   YES—Intermittent failure, the system is OK at this time. Check for poor connections or loose terminals at the ATF temperature sensor and PCM. ■

   NO—Replace ATF temperature sensor (see page 14-204), then go to step 5.

5. Clear the DTC with the HDS.

6. Test-drive the vehicle for several minutes in the D position through all five gears.

7. Monitor the OBD status for P0711 in the DTCs/ Freeze Data in A/T Mode Menu for a pass/fail.

   Does the result indicate PASSED?

   YES—Troubleshooting is complete. ■

   NO—Return to step 1 and recheck.

Protected by AR

DTC Troubleshooting (cont'd)

DTC P0712: Short in ATF Temperature Sensor Circuit

NOTE:
- Record all freeze data and review General Troubleshooting Information (see page 14-3) before you troubleshoot.
- This code is caused by an electrical circuit problem and cannot be caused by a mechanical problem in the transmission.

1. Check ATF temperature sensor voltage with the HDS in the A/T data list.

   Is ATF temperature sensor voltage 0.07 V or less?

   YES—Go to step 2.

   NO—Intermittent failure, the system is OK at this time. Check for intermittent short in the wires between the ATF temperature sensor and PCM. ■

2. Disconnect the shift solenoid harness connector at the shift solenoid valve cover.

3. Check ATF temperature sensor voltage with the HDS.

   Is ATF temperature sensor voltage 0.07 V or less?

   YES—Go to step 4.

   NO—Check for a short to ground in the shift solenoid harness wire in the transmission (see page 14-204). If the wire is OK, replace ATF temperature sensor (see page 14-204), then go to step 8.

4. Turn the ignition switch OFF.

5. Jump the SCS line with the HDS.

6. Disconnect PCM connector C (22P).

7. Check for continuity between shift solenoid harness connector terminal No. 6 and body ground.

SHIFT SOLENOID HARNESS CONNECTOR

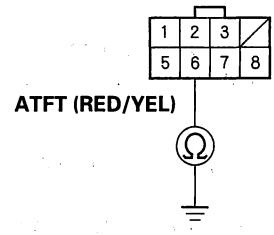

Wire side of female terminals

Is there continuity?

YES—Repair short to ground in the wire between PCM connector terminal C14 and the shift solenoid harness connector, then go to step 8.

NO—Check for a short to ground in the shift solenoid harness wire in the transmission (see page 14-204). If the wire is OK, update the PCM if it does not have the latest software, or substitute a known-good PCM (see page 14-6), then recheck. If the symptom/indication goes away with a known-good PCM, replace the original PCM. ■

8. Clear the DTC with the HDS.

9. Test-drive the vehicle for several minutes in the D position through all five gears.

10. Monitor the OBD status for P0712 in the DTCs/Freeze Data in A/T Mode Menu for a pass/fail.

    Does the result indicate PASSED?

    YES—Troubleshooting is complete. ■

    NO—Return to step 1 and recheck.

BACK

Protected by AR

DTC P0713: Open in ATF Temperature Sensor Circuit

NOTE:
- Record all freeze data and review General Troubleshooting Information (see page 14-3) before you troubleshoot.
- This code is caused by an electrical circuit problem and cannot be caused by a mechanical problem in the transmission.

1. Check ATF temperature sensor voltage with the HDS in the A/T data list.

   Does ATF temperature sensor voltage exceed 4.93 V?

   YES—Go to step 2.

   NO—Intermittent failure, the system is OK at this time. Check for poor connections or loose terminals at the ATF temperature sensor and PCM. ■

2. Turn the ignition switch OFF.
3. Disconnect the shift solenoid harness connector.
4. Turn the ignition switch ON (II).
5. Measure the voltage between shift solenoid harness connector terminal No. 6 and body ground.

SHIFT SOLENOID HARNESS CONNECTOR

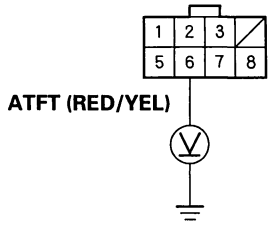

Wire side of female terminals

Is there about 5 V?

YES—Go to step 6.

NO—Go to step 7.

6. Measure the voltage between shift solenoid harness connector terminals No. 6 and No. 7.

SHIFT SOLENOID HARNESS CONNECTOR

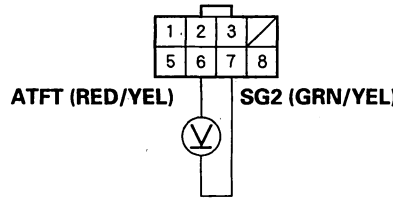

Wire side of female terminals

Is there about 5 V?

YES—Check the ATF temperature sensor and shift solenoid harness in the transmission housing (see page 14-204). ■

NO—Repair open in the wire between PCM connector terminal A23 and the shift solenoid harness connector, then go to step 8.

(cont'd)

Protected by AR

DTC Troubleshooting (cont'd)

7. Measure the voltage between PCM connector terminal C14 and body ground.

PCM CONNECTOR C (22P)

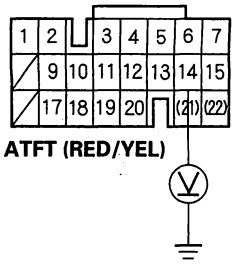

Wire side of female terminals

Is there about 5 V?

YES—Repair open in the wire between PCM connector terminal C14 and the shift solenoid harness connector, then go to step 8.

NO—Check for loose or poor connections at PCM connector terminal C14. If the connection is OK, update the PCM if it does not have the latest software, or substitute a known-good PCM (see page 14-6), then recheck. If the symptom/indication goes away with a known-good PCM, *replace the original* PCM. ■

8. Clear the DTC with the HDS.

9. Test-drive the vehicle for several minutes in the D position through all five gears.

10. Monitor the OBD status for P0713 in the DTCs/Freeze Data in A/T Mode Menu for a pass/fail.

Does the result indicate PASSED?

YES—Troubleshooting is complete. ■

NO—Return to step 1 and recheck.

BACK

Protected by AR

DTC P0716: Problem in Input Shaft (Mainshaft) Speed Sensor Circuit

NOTE:
- Record all freeze data and review General Troubleshooting Information (see page 14-3) before you troubleshoot.
- This code is caused by an electrical circuit problem and cannot be caused by a mechanical problem in the transmission.

1. Clear the DTC with the HDS.
2. Check for proper input shaft (mainshaft) speed sensor installation (see page 14-201).
3. Raise the front of the vehicle, make sure it is securely supported, and allow the front wheels to rotate freely.
4. Start the engine, drive the vehicle in the D position, and hold the vehicle at speeds over 30 mph (48 km/h) for more than 10 seconds.
5. Monitor the OBD status for P0716 in the DTCs/ Freeze Data in A/T Mode Menu for a pass/fail.

   Does the result indicate FAILED?

   YES—Go to step 6.

   NO—Intermittent failure, the system is OK at this time. Check for loose or poor connections at the PCM and input shaft (mainshaft) speed sensor connectors. If the tester indicates NOT COMPLETED, return to step 4 and recheck.■
6. Turn the ignition switch OFF.
7. Jump the SCS line with the HDS.
8. Disconnect PCM connector A (31P) and input shaft (mainshaft) speed sensor connector.
9. Check for continuity between PCM connector terminals A8 and body ground, and between A9 and body ground.

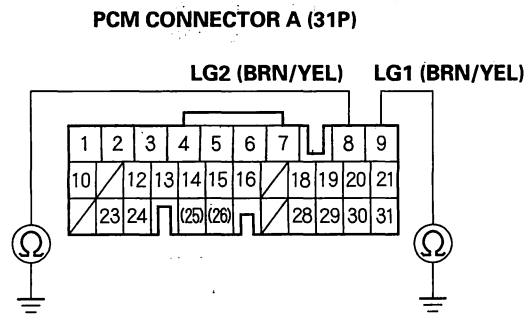

Wire side of female terminals

Is there continuity?

YES—Go to step 10.

NO—Repair open in the wires between PCM connector terminals A8, A9, and ground (G101), or repair poor ground (G101), then go to step 31.

10. Connect PCM connector A (31P).
11. Turn the ignition switch ON (II).
12. Measure the voltage between input shaft (mainshaft) speed sensor connector terminal No. 1 and body ground.

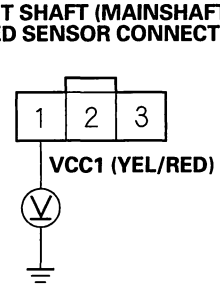

Wire side of female terminals

Is there about 5 V?

YES—Go to step 13.

NO—Go to step 25.

(cont'd)

Protected by AR

DTC Troubleshooting (cont'd)

13. Turn the ignition switch OFF.
14. Disconnect PCM connector C (22P).
15. Check for continuity between input shaft (mainshaft) speed sensor connector terminal No. 2 and body ground.

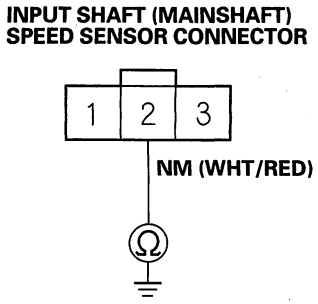

Wire side of female terminals

Is there continuity?

YES—Repair short to ground in the wire between PCM connector terminal C19 and input shaft (mainshaft) speed sensor, then go to step 31.

NO—
- 2003-2004 models: Go to step 16.
- 2005-2006 models: Go to step 17.

16. Check for continuity between input shaft (mainshaft) speed sensor connector terminal No. 3 and body ground.

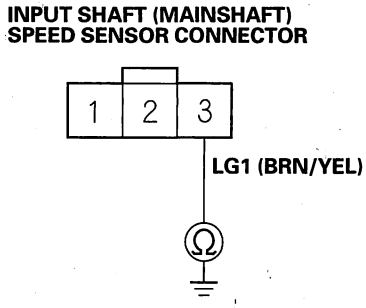

Wire side of female terminals

Is there continuity?

YES—Connect PCM connector C (22P), and go to step 19.

NO—Repair open in the wire between the input shaft (mainshaft) speed sensor and ground (G101), then go to step 31.

17. Disconnect PCM connector A (31P).
18. Check for continuity between input shaft (mainshaft) speed sensor connector terminal No. 3 and PCM connector terminal A24.

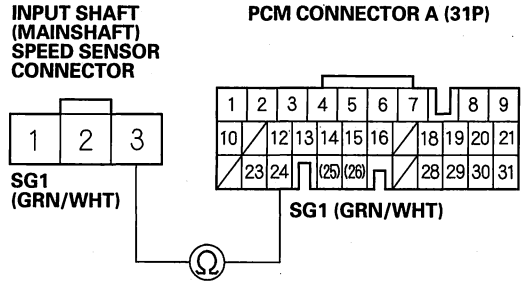

Wire side of female terminals

Is there continuity?

YES—Connect PCM connectors A (31P) and C (22P), and go to step 19.

NO—Repair open in the wire between input shaft (mainshaft) speed sensor and PCM connector terminal A24, then go to step 31.

BACK

Protected by AR

19. Turn the ignition switch ON (II).

20. Measure the voltage between input shaft (mainshaft) speed sensor connector terminals No. 2 and No. 3.

INPUT SHAFT (MAINSHAFT) SPEED SENSOR CONNECTOR

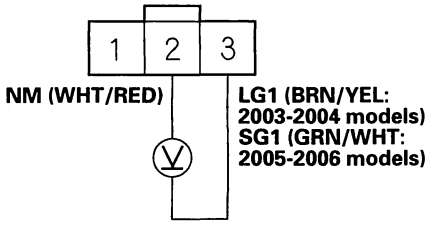

Wire side of female terminals

Is there about 5 V?

YES—Go to step 21.

NO—Go to step 30.

21. Connect input shaft (mainshaft) speed sensor connector.

22. Measure the voltage between PCM connector terminals C19 and A9.

PCM CONNECTORS

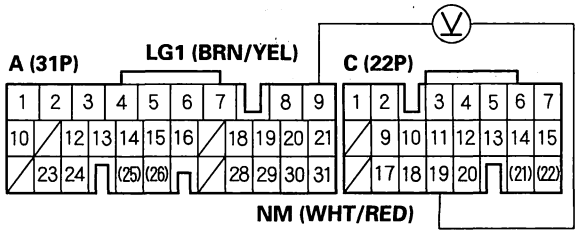

Wire side of female terminals

Is the voltage 0 V or about 5 V?

YES—Go to step 23.

NO—Replace the input shaft (mainshaft) speed sensor (see page 14-201), then go to step 31.

23. Shift to the P position. Start the engine, and let it idle.

24. With the engine idling, measure the voltage between PCM connector terminals C19 and A9.

PCM CONNECTORS

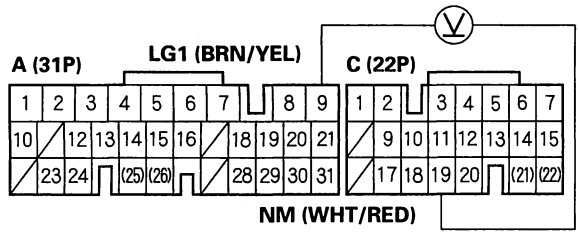

Wire side of female terminals

Is there 1.5—3.5 V?

YES—Update the PCM if it does not have the latest software, or substitute a known-good PCM (see page 14-6), then recheck. If the symptom/indication goes away with a known-good PCM, replace the original PCM.■

NO—Replace the input shaft (mainshaft) speed sensor (see page 14-201), then go to step 31.

(cont'd)

Protected by AR

DTC Troubleshooting (cont'd)

25. Measure the voltage between PCM connector terminals A21 and A9.

PCM CONNECTOR A (31P)

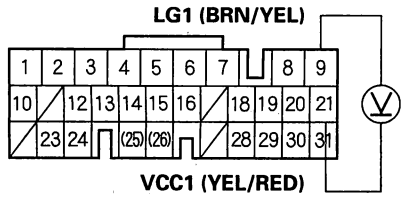

Wire side of female terminals

Is there about 5 V?

YES—Repair open in the wire between PCM connector terminal A21 and the input shaft (mainshaft) speed sensor connector, then go to step 31.

NO—Go to step 26.

26. Turn the ignition switch OFF.

27. Jump the SCS line with the HDS.

28. Disconnect PCM connector A (31P).

29. Check for continuity between PCM connector terminal A21 and body ground.

PCM CONNECTOR A (31P)

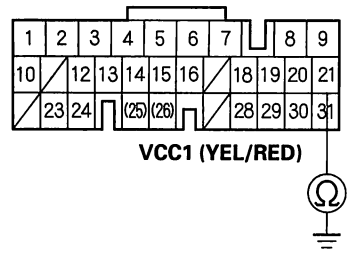

Wire side of female terminals

Is there continuity?

YES—Repair short to ground in the wire between PCM connector terminal A21 and the input shaft (mainshaft) speed sensor connector, then go to step 31.

NO—Check for loose or poor connections at PCM connector terminal A21. If the connection is OK, update the PCM if it does not have the latest software, or substitute a known-good PCM (see page 14-6), then recheck. If the symptom/indication goes away with a known-good PCM, replace the original PCM. ■

BACK

Protected by AR

30. Measure the voltage between PCM connector terminals C19 and A9.

PCM CONNECTORS

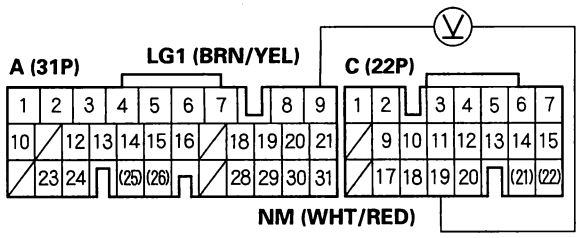

Wire side of female terminals

Is there about 5 V?

YES—Repair open in the wire between PCM connector terminal C19 and the input shaft (mainshaft) speed sensor connector, then go to step 31.

NO—Check for loose or poor connections at PCM connector terminal C19. If the connection is OK, update the PCM if it does not have the latest software, or substitute a known-good PCM (see page 14-6), then recheck. If the symptom/indication goes away with a known-good PCM, replace the original PCM.■

31. Clear the DTC with the HDS.

32. Start the engine, drive the vehicle in the D position, and hold the vehicle at speeds over 30 mph (48 km/h) for more than 10 seconds.

33. Monitor the OBD status for P0716 in the DTCs/Freeze Data in A/T Mode Menu for a pass/fail.

Does the result indicate PASSED?

YES—Troubleshooting is complete.■

NO—Return to step 1 and recheck.

Protected by AR

DTC Troubleshooting (cont'd)

DTC P0717: Problem in Input Shaft (Mainshaft) Speed Sensor Circuit (No Signal Input)

NOTE:
- Record all freeze data and review General Troubleshooting Information (see page 14-3) before you troubleshoot.
- This code is caused by an electrical circuit problem and cannot be caused by a mechanical problem in the transmission.

1. Clear the DTC with the HDS.
2. Check for proper input shaft (mainshaft) speed sensor installation (see page 14-201).
3. Raise the front of the vehicle, make sure it is securely supported, and allow the front wheels to rotate freely.
4. Start the engine, drive the vehicle in the D position, and hold the vehicle at speeds over 30 mph (48 km/h) for more than 10 seconds. Slow down and stop the wheels.
5. Monitor the OBD status for P0717 in the DTCs/ Freeze Data in A/T Mode Menu for a pass/fail.

   Does the result indicate FAILED?

   YES—Go to step 6.

   NO—Intermittent failure, the system is OK at this time. Check for loose or poor connections at the PCM and input shaft (mainshaft) speed sensor connectors. If the tester indicates NOT COMPLETED, return to step 4 and recheck.■
6. Turn the ignition switch OFF.
7. Jump the SCS line with the HDS.
8. Disconnect PCM connector A (31P) and input shaft (mainshaft) speed sensor connector.
9. Check for continuity between PCM connector terminals A8 and body ground, and between A9 and body ground.

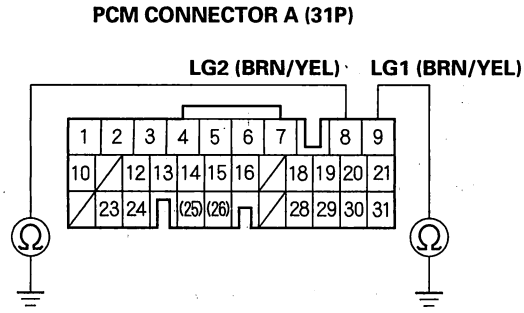

Wire side of female terminals

Is there continuity?

YES—Go to step 10.

NO—Repair open in the wires between PCM connector terminals A8, A9, and ground (G101), or repair poor ground (G101), then go to step 31.

10. Connect PCM connector A (31P).
11. Turn the ignition switch ON (II).
12. Measure the voltage between input shaft (mainshaft) speed sensor connector terminal No. 1 and body ground.

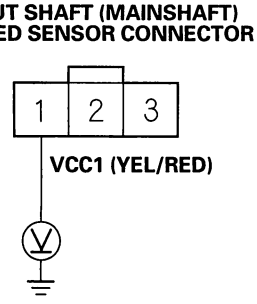

Wire side of female terminals

Is there about 5 V?

YES—Go to step 13.

NO—Go to step 25.

BACK

Protected by AR

13. Turn the ignition switch OFF.

14. Disconnect PCM connector C (22P).

15. Check for continuity between input shaft (mainshaft) speed sensor connector terminal No. 2 and body ground.

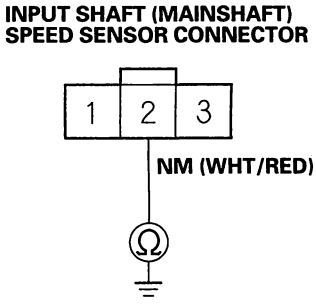

Wire side of female terminals

Is there continuity?

YES—Repair short to ground in the wire between PCM connector terminal C19 and input shaft (mainshaft) speed sensor, then go to step 31.

NO—
- 2003-2004 models: Go to step 16.
- 2005-2006 models: Go to step 17.

16. Check for continuity between input shaft (mainshaft) speed sensor connector terminal No. 3 and body ground.

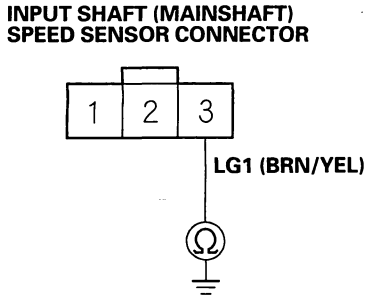

Wire side of female terminals

Is there continuity?

YES—Connect PCM connector C (22P), and go to step 19.

NO—Repair open in the wire between the input shaft (mainshaft) speed sensor and ground (G101), then go to step 31.

17. Disconnect PCM connector A (31P).

18. Check for continuity between input shaft (mainshaft) speed sensor connector terminal No. 3 and PCM connector terminal A24.

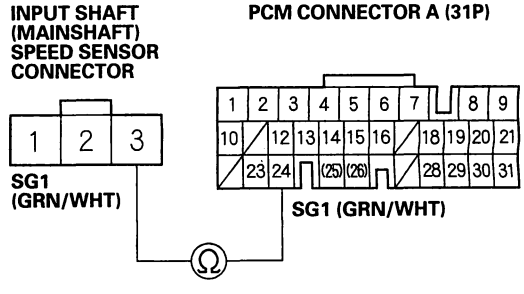

Wire side of female terminals

Is there continuity?

YES—Connect PCM connectors A (31P) and C (22P), and go to step 19.

NO—Repair open in the wire between input shaft (mainshaft) speed sensor and PCM connector terminal A24, then go to step 31.

(cont'd)

Protected by AR

DTC Troubleshooting (cont'd)

19. Turn the ignition switch ON (II).

20. Measure the voltage between input shaft (mainshaft) speed sensor connector terminals No. 2 and No. 3.

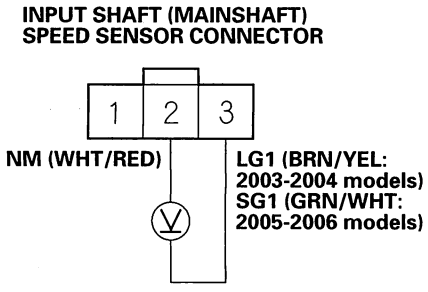

Wire side of female terminals

Is there about 5 V?

YES—Go to step 21.

NO—Go to step 30.

21. Connect input shaft (mainshaft) speed sensor connector.

22. Measure the voltage between PCM connector terminals C19 and A9.

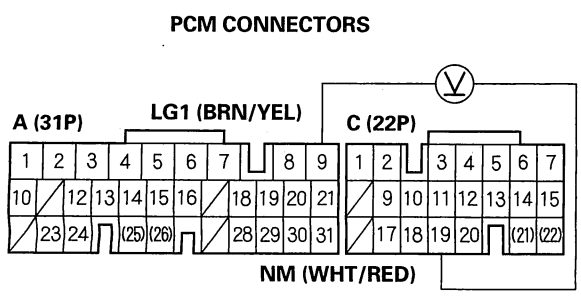

Wire side of female terminals

Is there 0 V or about 5 V?

YES—Go to step 23.

NO—Replace the input shaft (mainshaft) speed sensor (see page 14-201), then go to step 31.

23. Shift to the P position. Start the engine, and let it idle.

24. With the engine idling, measure the voltage between PCM connector terminals C19 and A9.

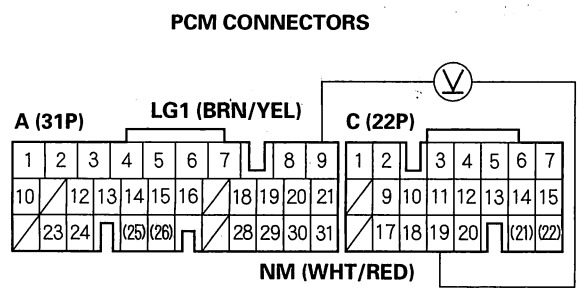

Wire side of female terminals

Is there 1.5—3.5 V?

YES—Update the PCM if it does not have the latest software, or substitute a known-good PCM (see page 14-6), then recheck. If the symptom/indication goes away with a known-good PCM, replace the original PCM. ■

NO—Replace the input shaft (mainshaft) speed sensor (see page 14-201), then go to step 31.

BACK

Protected by AR

25. Measure the voltage between PCM connector terminals A21 and A9.

PCM CONNECTOR A (31P)

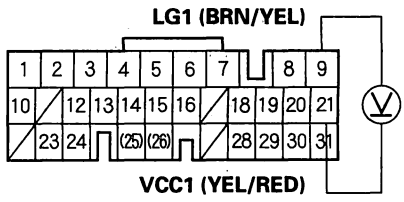

Wire side of female terminals

Is there about 5 V?

YES—Repair open in the wire between PCM connector terminal A21 and the input shaft (mainshaft) speed sensor connector, then go to step 31.

NO—Go to step 26.

26. Turn the ignition switch OFF.

27. Jump the SCS line with the HDS.

28. Disconnect PCM connector A (31P).

29. Check for continuity between PCM connector terminal A21 and body ground.

PCM CONNECTOR A (31P)

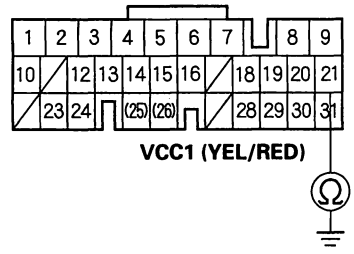

Wire side of female terminals

Is there continuity?

YES—Repair short to ground in the wire between PCM connector terminal A21 and the input shaft (mainshaft) speed sensor connector, then go to step 31.

NO—Check for loose or poor connections at PCM connector terminal A21. If the connection is OK, update the PCM if it does not have the latest software, or substitute a known-good PCM (see page 14-6), then recheck. If the symptom/indication goes away with a known-good PCM, replace the original PCM.■

(cont'd)

Protected by AR

DTC Troubleshooting (cont'd)

30. Measure the voltage between PCM connector terminals C19 and A9.

PCM CONNECTORS

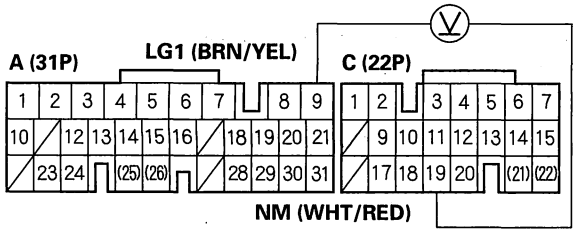

Wire side of female terminals

Is there about 5 V?

YES—Repair open in the wire between PCM connector terminal C19 and the input shaft (mainshaft) speed sensor connector, then go to step 31.

NO—Check for loose or poor connections at PCM connector terminal C19. If the connection is OK, update the PCM if it does not have the latest software, or substitute a known-good PCM (see page 14-6), then recheck. If the symptom/indication goes away with a known-good PCM, replace the original PCM. ■

31. Clear the DTC with the HDS.

32. Start the engine, drive the vehicle in the D position, and hold the vehicle at speeds over 30 mph (48 km/h) for more than 10 seconds.

33. Monitor the OBD status for P0717 in the DTCs/Freeze Data in A/T Mode Menu for a pass/fail.

Does the result indicate PASSED?

YES—Troubleshooting is complete. ■

NO—Return to step 1 and recheck.

BACK

Protected by AR

DTC P0718: Input Shaft (Mainshaft) Speed Sensor Intermittent Failure

NOTE:
- Record all freeze data and review General Troubleshooting Information (see page 14-3) before you troubleshoot.
- This code is caused by an electrical circuit problem and cannot be caused by a mechanical problem in the transmission.

1. Clear the DTC with the HDS.
2. Test-drive the vehicle for several minutes in the D position through all five gears.
3. Monitor the OBD status for P0718 in the DTCs/ Freeze Data in A/T Mode Menu for a pass/fail.

   Does the result indicate FAILED?

   YES—Go to step 4.

   NO—Intermittent failure, the system is OK at this time. Check for poor connections or loose terminals at the input shaft (mainshaft) speed sensor and PCM. If the tester indicates NOT COMPLETED, return to step 2 and recheck.■
4. Turn the ignition switch OFF.
5. Disconnect the input shaft (mainshaft) speed sensor connector, and inspect the connector and connector terminals to be sure they are making good contact.

   Are the connector terminals OK?

   YES—Go to step 6.

   NO—Repair the connector terminals, then go to step 6.
6. Connect the input shaft (mainshaft) speed sensor connector.
7. Test-drive the vehicle for several minutes, and monitor the OBD status for P0718 in the DTCs/ Freeze Data in A/T Mode Menu for a pass/fail.

   Does the result indicate FAILED?

   YES—Go to step 8.

   NO—The problem has been corrected. If the tester indicates NOT COMPLETED, return to step 7 and recheck.■
8. Turn the ignition switch OFF.
9. Jump the SCS line with the HDS.
10. Disconnect PCM connector C (22P).
11. Disconnect the input shaft (mainshaft) speed sensor connector.
12. Check for continuity between input shaft (mainshaft) speed sensor connector terminal No. 2 and body ground.

INPUT SHAFT (MAINSHAFT) SPEED SENSOR CONNECTOR

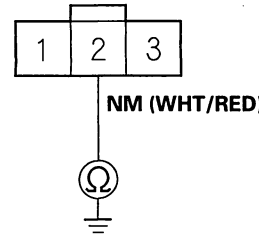

Wire side of female terminals

Is there continuity?

YES—Repair short to ground in the wire between PCM connector terminal C19 and the input shaft (mainshaft) speed sensor connector, then go to step 19.

NO—Go to step 13.

(cont'd)

Protected by AR

DTC Troubleshooting (cont'd)

13. Connect PCM connector C (22P).
14. Turn the ignition switch ON (II).
15. Measure the voltage between input shaft (mainshaft) speed sensor connector terminal No. 2 and body ground.

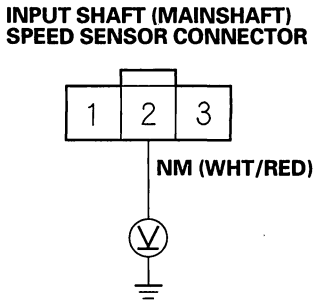

Wire side of female terminals

Is there about 5 V?

YES—Replace the input shaft (mainshaft) speed sensor (see page 14-201), then go to step 19.

NO—Go to step 16.

16. Turn the ignition switch OFF.
17. Disconnect PCM connector C (22P).
18. Check for continuity between PCM connector terminal C19 and input shaft (mainshaft) speed sensor connector terminal No. 2.

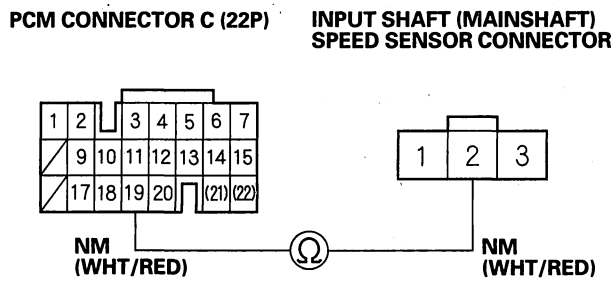

Wire side of female terminals

Is there continuity?

YES—Update the PCM if it does not have the latest software, or substitute a known-good PCM (see page 14-6), then recheck. If the symptom/indication goes away with a known-good PCM, replace the original PCM. ■

NO—Repair open in the wire between PCM connector terminal C19 and the input shaft (mainshaft) speed sensor, then go to step 19.

19. Clear the DTC with the HDS.
20. Test-drive the vehicle for several minutes in the D position through all five gears.
21. Monitor the OBD status for P0718 in the DTCs/Freeze Data in A/T Mode Menu for a pass/fail.

Does the result indicate PASSED?

YES—Troubleshooting is complete. ■

NO—Return to step 1 and recheck.

BACK

Protected by AR

DTC P0721: Problem in Output Shaft (Countershaft) Speed Sensor Circuit

NOTE:
- Record all freeze data and review General Troubleshooting Information (see page 14-3) before you troubleshoot.
- This code is caused by an electrical circuit problem and cannot be caused by a mechanical problem in the transmission.

1. Record all freeze data, and clear the DTC with the HDS.
2. Raise the front of the vehicle, make sure it is securely supported, and allow the front wheels to rotate freely.
3. Start the engine, run the vehicle in the D position with engine speed 2,000 rpm or higher for more than 10 seconds. Slow down and stop the wheels.
4. Monitor the OBD status for P0721 in the DTCs/ Freeze Data in A/T Mode Menu for a pass/fail.

   Does the result indicate FAILED?

   YES—Go to step 5.

   NO—Intermittent failure, the system is OK at this time. Check for poor connections or loose terminals at the output shaft (countershaft) speed sensor and PCM. If the tester indicates NOT COMPLETED, return to step 3 and recheck. ■
5. Turn the ignition switch OFF.
6. Jump the SCS line with the HDS.
7. Disconnect PCM connector A (31P) and output shaft (countershaft) speed sensor connector.
8. Check for continuity between PCM connector terminals A8 and body ground, and between A9 and body ground.

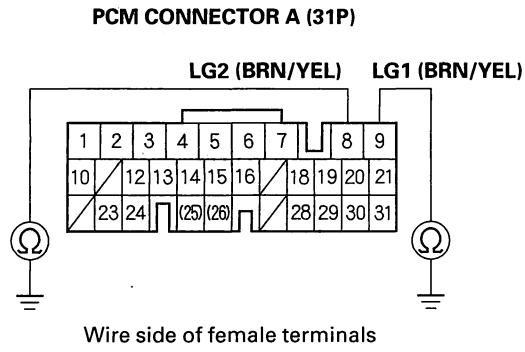

Wire side of female terminals

Is there continuity?

YES—Go to step 9.

NO—Repair open in the wire between PCM connector terminals A8, A9, and ground (G101), or repair poor ground (G101), then go to step 30.

9. Connect PCM connector A (31P).
10. Turn the ignition switch ON (II).
11. Measure the voltage between output shaft (countershaft) speed sensor connector terminal No. 1 and body ground.

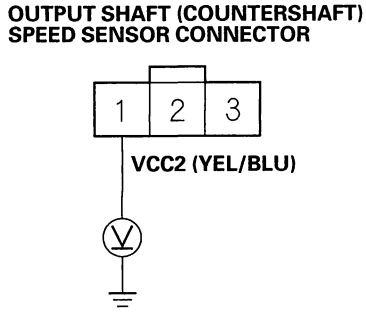

Wire side of female terminals

Is there about 5 V?

YES—Go to step 12.

NO—Go to step 24.

(cont'd)

Protected by AR

DTC Troubleshooting (cont'd)

12. Turn the ignition switch OFF.
13. Disconnect PCM connector A (31P).
14. Check for continuity between output shaft (countershaft) speed sensor connector terminal No. 2 and body ground.

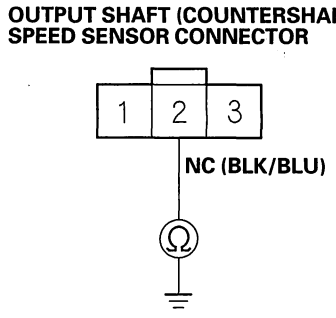

Wire side of female terminals

Is there continuity?

YES—Repair short to ground in the wire between PCM connector terminal A18 and output shaft (countershaft) speed sensor, then go to step 30.

NO—
- 2003-2004 models: Go to step 15.
- 2005-2006 models: Go to step 16.

15. Check for continuity between output shaft (countershaft) speed sensor connector terminal No. 3 and body ground.

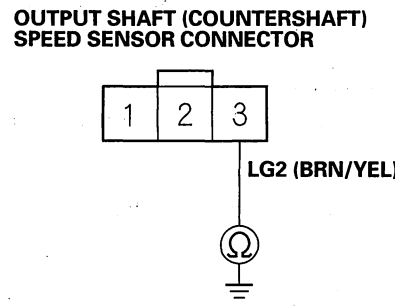

Wire side of female terminals

Is there continuity?

YES—Go to step 17.

NO—Repair open in the wire between the output shaft (countershaft) speed sensor and ground (G101), repair poor ground (G101), then go to step 30.

16. Check for continuity between output shaft (countershaft) speed sensor connector terminal No. 3 and PCM connector terminal A23.

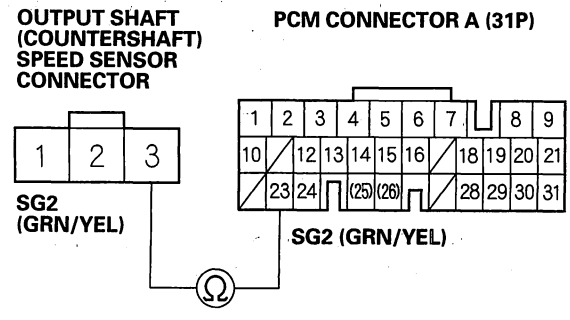

Wire side of female terminals

Is there continuity?

YES—Go to step 17.

NO—Repair open in the wire between the output shaft (countershaft) speed sensor and PCM connector terminal A23, then go to step 30.

BACK

Protected by AR

17. Connect PCM connector A (31P).

18. Turn the ignition switch ON (II).

19. Measure the voltage between output shaft (countershaft) speed sensor connector terminals No. 2 and No. 3.

OUTPUT SHAFT (COUNTERSHAFT) SPEED SENSOR CONNECTOR

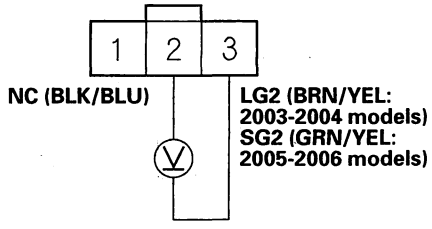

Wire side of female terminals

Is there about 5 V?

YES—Go to step 20.

NO—Go to step 29.

20. Connect output shaft (countershaft) speed sensor connector.

21. Measure the voltage between PCM connector terminals A18 and A9.

PCM CONNECTOR A (31P)

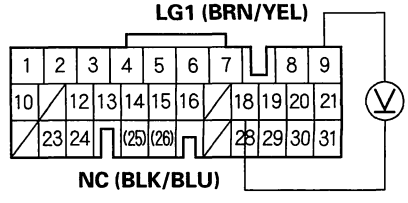

Wire side of female terminals

Is there 0 V or about 5 V?

YES—Go to step 22.

NO—Replace the output shaft (countershaft) speed sensor (see page 14-201), then go to step 30.

22. Shift to the P position. Start the engine, and let it idle.

23. Shift to the D position, and measure the voltage between PCM connector terminals A18 and A9.

PCM CONNECTOR A (31P)

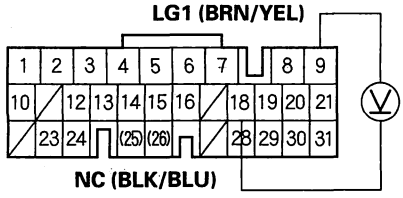

Wire side of female terminals

Is there 1.5—3.5 V?

YES—Update the PCM if it does not have the latest software, or substitute a known-good PCM (see page 14-6), then recheck. If the symptom/indication goes away with a known-good PCM, replace the original PCM.■

NO—Replace the output shaft (countershaft) speed sensor (see page 14-201), then go to step 30.

(cont'd)

Protected by AR

DTC Troubleshooting (cont'd)

24. Measure the voltage between PCM connector terminals A20 and A9.

PCM CONNECTOR A (31P)

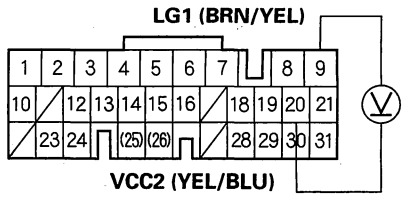

Wire side of female terminals

Is there about 5 V?

YES—Repair open in the wire between PCM connector terminal A20 and the output shaft (countershaft) speed sensor, then go to step 30.

NO—Go to step 25.

25. Turn the ignition switch OFF.

26. Jump the SCS line with the HDS.

27. Disconnect PCM connector A (31P).

28. Check for continuity between PCM connector terminal A20 and body ground.

PCM CONNECTOR A (31P)

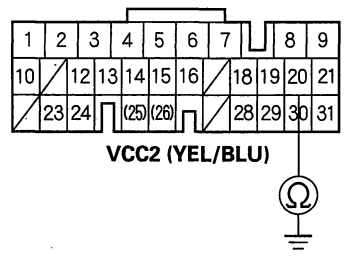

Wire side of female terminals

Is there continuity?

YES—Repair short to ground in the wire between PCM connector terminal A20 and the output shaft (countershaft) speed sensor, then go to step 30.

NO—Check for loose or poor connections at PCM connector terminal A20. If the connection is OK, update the PCM if it does not have the latest software, or substitute a known-good PCM (see page 14-6), then recheck. If the symptom/indication goes away with a known-good PCM, replace the original PCM. ■

BACK

Protected by AR

29. Measure the voltage between PCM connector terminals A18 and A9.

PCM CONNECTOR A (31P)

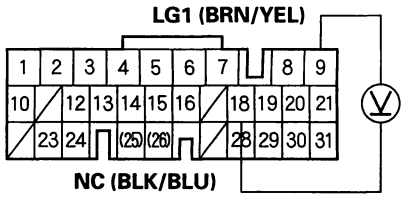

Wire side of female terminals

Is there about 5 V?

YES—Repair open in the wire between PCM connector terminal A18 and the output shaft (countershaft) speed sensor, then go to step 30.

NO—Update the PCM if it does not have the latest software, or substitute a known-good PCM (see page 14-6), then recheck. If the symptom/indication goes away with a known-good PCM, replace the original PCM. ■

30. Clear the DTC with the HDS.

31. Start the engine, run the vehicle in the D position with engine speed 2,000 rpm or higher for more than 10 seconds. Slow down and stop the wheels.

32. Monitor the OBD status for P0721 in the DTCs/Freeze Data in A/T Mode Menu for a pass/fail.

Does the result indicate PASSED?

YES—Troubleshooting is complete. ■

NO—Return to step 1 and recheck.

Protected by AR

DTC Troubleshooting (cont'd)

DTC P0722: Problem in Output Shaft (Countershaft) Speed Sensor Circuit (No Signal Input)

NOTE:
- Record all freeze data and review General Troubleshooting Information (see page 14-3) before you troubleshoot.
- This code is caused by an electrical circuit problem and cannot be caused by a mechanical problem in the transmission.

1. Clear the DTC with the HDS.
2. Raise the front of the vehicle, make sure it is securely supported, and allow the front wheels to rotate freely.
3. Start the engine, run the vehicle in the D position with engine speed 2,000 rpm or higher for more than 10 seconds. Slow down and stop the wheels.
4. Monitor the OBD status for P0722 in the DTCs/ Freeze Data in A/T Mode Menu for a pass/fail.

   Does the result indicate FAILED?

   YES—Go to step 5.

   NO—Intermittent failure, the system is OK at this time. Check for poor connections or loose terminals at the output shaft (countershaft) speed sensor and PCM. If the tester indicates NOT COMPLETED, return to step 3 and recheck.■
5. Turn the ignition switch OFF.
6. Jump the SCS line with the HDS.
7. Disconnect PCM connector A (31P) and output shaft (countershaft) speed sensor connector.
8. Check for continuity between PCM connector terminals A8 and body ground, and between A9 and body ground.

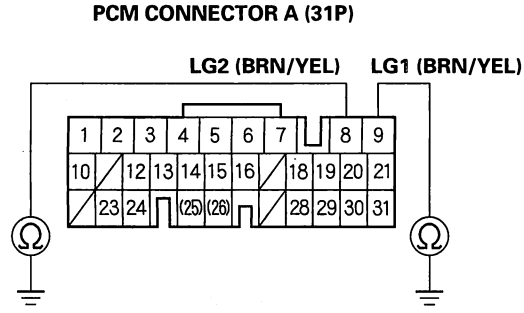

Wire side of female terminals

Is there continuity?

YES—Go to step 9.

NO—Repair open in the wires between PCM connector terminals A8, A9, and ground (G101), or repair poor ground (G101), then go to step 30.

9. Connect PCM connector A (31P).
10. Turn the ignition switch ON (II).
11. Measure the voltage between output shaft (countershaft) speed sensor connector terminal No. 1 and body ground.

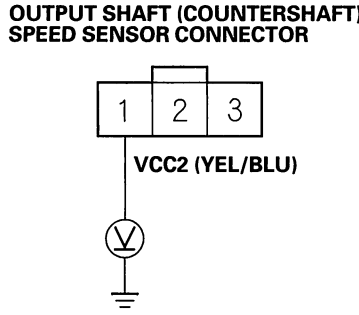

Wire side of female terminals

Is there about 5 V?

YES—Go to step 12.

NO—Go to step 24.

BACK

Protected by AR

12. Turn the ignition switch OFF.

13. Disconnect PCM connector A (31P).

14. Check for continuity between output shaft (countershaft) speed sensor connector terminal No. 2 and body ground.

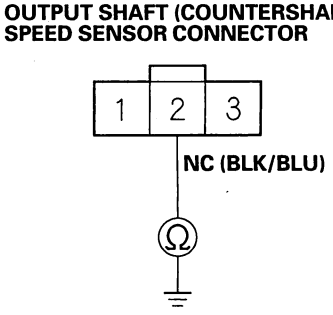

Wire side of female terminals

Is there continuity?

YES—Repair short to ground in the wire between PCM connector terminal A18 and output shaft (countershaft) speed sensor, then go to step 30.

NO—
- 2003-2004 models: Go to step 15.
- 2005-2006 models: Go to step 16.

15. Check for continuity between output shaft (countershaft) speed sensor connector terminal No. 3 and body ground.

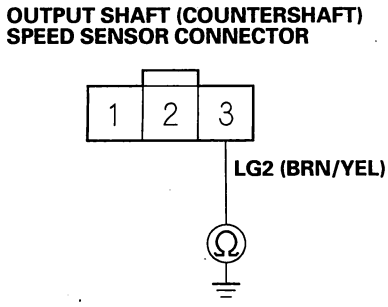

Wire side of female terminals

Is there continuity?

YES—Go to step 17.

NO—Repair open in the wire between the output shaft (countershaft) speed sensor and ground (G101), repair poor ground (G101), then go to step 30.

16. Check for continuity between output shaft (countershaft) speed sensor connector terminal No. 3 and PCM connector terminal A23.

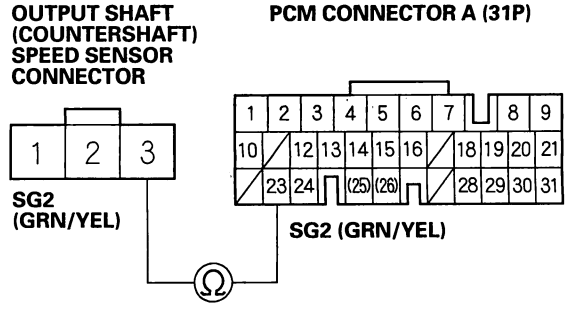

Wire side of female terminals

Is there continuity?

YES—Go to step 17.

NO—Repair open in the wire between the output shaft (countershaft) speed sensor and PCM connector terminal A23, then go to step 30.

(cont'd)

Protected by AR

DTC Troubleshooting (cont'd)

17. Connect PCM connector A (31P).

18. Turn the ignition switch ON (II).

19. Measure the voltage between output shaft (countershaft) speed sensor connector terminals No. 2 and No. 3.

OUTPUT SHAFT (COUNTERSHAFT) SPEED SENSOR CONNECTOR

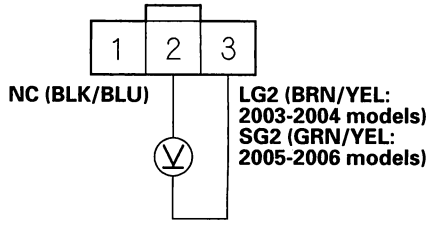

Wire side of female terminals

Is there about 5 V?

YES—Go to step 20.

NO—Go to step 29.

20. Connect output shaft (countershaft) speed sensor connector.

21. Measure the voltage between PCM connector terminals A18 and A9.

PCM CONNECTOR A (31P)

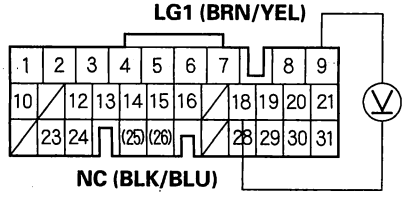

Wire side of female terminals

Is there 0 V or about 5 V?

YES—Go to step 22.

NO—Replace the output shaft (countershaft) speed sensor (see page 14-201), then go to step 30.

22. Shift to the P position. Start the engine, and let it idle.

23. Shift to the D position, and measure the voltage between PCM connector terminals A18 and A9.

PCM CONNECTOR A (31P)

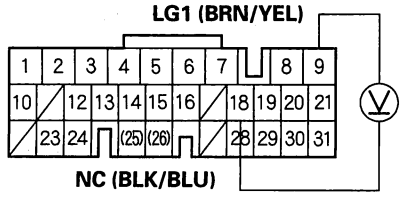

Wire side of female terminals

Is there 1.5—3.5 V?

YES—Update the PCM if it does not have the latest software, or substitute a known-good PCM (see page 14-6), then recheck. If the symptom/indication goes away with a known-good PCM, replace the original PCM. ■

NO—Replace the output shaft (countershaft) speed sensor (see page 14-201), then go to step 30.

BACK

Protected by AR

24. Measure the voltage between PCM connector terminals A20 and A9.

PCM CONNECTOR A (31P)

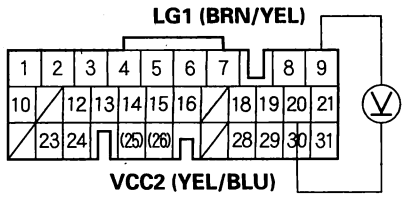

Wire side of female terminals

Is there about 5 V?

YES—Repair open in the wire between PCM connector terminal A20 and the output shaft (countershaft) speed sensor, then go to step 30.

NO—Go to step 25.

25. Turn the ignition switch OFF.

26. Jump the SCS line with the HDS.

27. Disconnect PCM connector A (31P).

28. Check for continuity between PCM connector terminal A20 and body ground.

PCM CONNECTOR A (31P)

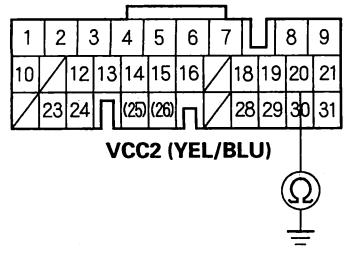

Wire side of female terminals

Is there continuity?

YES—Repair short to ground in the wire between PCM connector terminal A20 and the output shaft (countershaft) speed sensor, then go to step 30.

NO—Check for loose or poor connections at PCM connector terminal A20. If the connection is OK, update the PCM if it does not have the latest software, or substitute a known-good PCM (see page 14-6), then recheck. If the symptom/indication goes away with a known-good PCM, replace the original PCM.■

(cont'd)

Protected by AR

DTC Troubleshooting (cont'd)

29. Measure the voltage between PCM connector terminals A18 and A9.

PCM CONNECTOR A (31P)

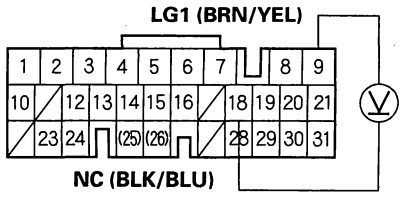

Wire side of female terminals

Is there about 5 V?

YES—Repair open in the wire between PCM connector terminal A18 and the output shaft (countershaft) speed sensor, then go to step 30.

NO—Update the PCM if it does not have the latest software, or substitute a known-good PCM (see page 14-6), then recheck. If the symptom/indication goes away with a known-good PCM, replace the original PCM.■

30. Clear the DTC with the HDS.

31. Start the engine, run the vehicle in the D position with engine speed 2,000 rpm or higher for more than 10 seconds. Slow down and stop the wheels.

32. Monitor the OBD status for P0722 in the DTCs/Freeze Data in A/T Mode Menu for a pass/fail.

Does the result indicate PASSED?

YES—Troubleshooting is complete.■

NO—Return to step 1 and recheck.

BACK

Protected by AR

DTC P0723: Output Shaft (Countershaft) Speed Sensor Intermittent Failure

NOTE:
- Record all freeze data and review General Troubleshooting Information (see page 14-3) before you troubleshoot.
- This code is caused by an electrical circuit problem and cannot be caused by a mechanical problem in the transmission.

1. Clear the DTC with the HDS.

2. Test-drive the vehicle for more than 10 minutes under the same conditions as those indicated by the freeze data, and monitor the OBD status for P0723 in the DTCs/Freeze Data in A/T Mode Menu for a pass/fail.

   Does the result indicate FAILED?

   YES—Go to step 3.

   NO—Intermittent failure, the system is OK at this time. Check for poor connections or loose terminals at the output shaft (countershaft) speed sensor and PCM. If the tester indicates NOT COMPLETED, return to step 2 and recheck.■

3. Turn the ignition switch OFF.

4. Disconnect the output shaft (countershaft) speed sensor connector, and inspect the connector and connector terminals to be sure they are making good contact.

   Are the connector terminals OK?

   YES—Go to step 5.

   NO—Repair the connector terminals, then go to step 5.

5. Connect the output shaft (countershaft) speed sensor connector.

6. Test-drive the vehicle for several minutes, and monitor the OBD status for P0723 in the DTCs/Freeze Data in A/T Mode Menu for a pass/fail.

   Does the result indicate FAILED?

   YES—Go to step 7.

   NO—The problem has been corrected. If the tester indicates NOT COMPLETED, return to step 6 and recheck.■

7. Turn the ignition switch OFF.

8. Jump the SCS line with the HDS.

9. Disconnect PCM connector A (31P).

10. Disconnect the output shaft (countershaft) speed sensor connector.

11. Check for continuity between output shaft (countershaft) speed sensor connector terminal No. 2 and body ground.

OUTPUT SHAFT (COUNTERSHAFT) SPEED SENSOR CONNECTOR

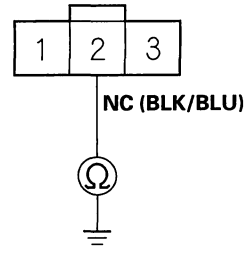

Wire side of female terminals

Is there continuity?

YES—Repair short to ground in the wire between PCM connector terminal A18 and the output shaft (countershaft) speed sensor, then go to step 18.

NO—Go to step 12.

(cont'd)

Protected by AR

DTC Troubleshooting (cont'd)

12. Connect PCM connector A (31P).
13. Turn the ignition switch ON (II).
14. Measure the voltage between output shaft (countershaft) speed sensor connector terminal No. 2 and body ground.

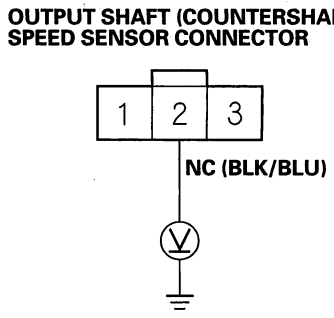

Wire side of female terminals

Is there about 5 V?

YES—Replace the output shaft (countershaft) speed sensor (see page 14-201), then go to step 18.

NO—Go to step 15.

15. Turn the ignition switch OFF.
16. Disconnect PCM connector A (31P).
17. Check for continuity between PCM connector terminal A18 and output shaft (countershaft) speed sensor connector terminal No. 2.

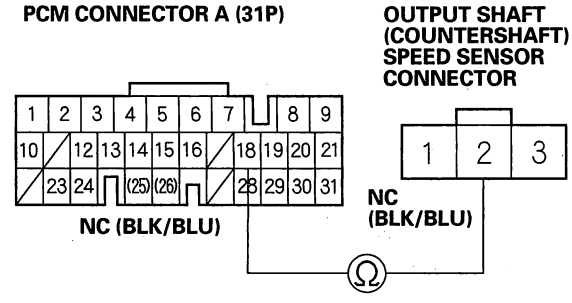

Wire side of female terminals

Is there continuity?

YES—Update the PCM if it does not have the latest software, or substitute a known-good PCM (see page 14-6), then recheck. If the symptom/indication goes away with a known-good PCM, replace the original PCM.■

NO—Repair open in the wire between PCM connector terminal A18 and the output shaft (countershaft) speed sensor, then go to step 18.

18. Clear the DTC with the HDS.
19. Test-drive the vehicle for several minutes in the D position through all five gears.
20. Monitor the OBD status for P0723 in the DTCs/Freeze Data in A/T Mode Menu for a pass/fail.

Does the result indicate PASSED?

YES—Troubleshooting is complete.■

NO—Return to step 1 and recheck.

BACK

Protected by AR

DTC P0731: Problem in 1st Clutch and 1st Clutch Hydraulic Circuit

NOTE: Record all freeze data and review General Troubleshooting Information (see page 14-3) before you troubleshoot.

1. Warm up the engine to normal operating temperature (the radiator fan comes on).
2. Make sure that the transmission is filled to the proper level, and check for fluid leaks.
3. Drain the ATF (see step 3 on page 14-208) through a strainer. Inspect the strainer for metal debris or excessive clutch material.

   Does the strainer contain metal debris or excessive clutch material?

   YES—Replace the transmission. ■

   NO—Replace the ATF (see step 4 on page 14-208), then go to step 4.
4. Measure the line pressure (see page 14-189).

   Is the line pressure within service limit?

   YES—Go to step 5.

   NO—Repair the ATF pump and regulator valve, or replace the transmission. ■
5. Measure the 1st clutch pressure (see page 14-189).

   Is the 1st clutch pressure within service limits?

   YES—Go to step 6.

   NO—Shift valves B and C are stuck. Repair these valves and hydraulic circuit, or replace the transmission. ■
6. Test stall speed in the 1 position (see page 14-188).

   Does the stall speed test within service limits?

   YES—Go to step 7.

   NO—Shift valves A and D are stuck. Repair these valves and hydraulic circuit, or replace the transmission. ■
7. Clear the DTC with the HDS.
8. Test-drive the vehicle for several minutes under the same conditions as those indicated by the freeze data, or drive in 1st gear in the D position at 10 mph (16 km/h) for 20 seconds.
9. Monitor the OBD status for P0731 in the DTCs/ Freeze Data in A/T Mode Menu for a pass/fail.

   Does the result indicate FAILED?

   YES—Repair the 1st clutch, or replace the transmission. ■

   NO—Intermittent failure, the system is OK at this time. If the tester indicates NOT COMPLETED, return to step 8 and recheck. ■

Protected by AR

DTC Troubleshooting (cont'd)

DTC P0732: Problem in 2nd Clutch and 2nd Clutch Hydraulic Circuit

NOTE: Record all freeze data and review General Troubleshooting Information (see page 14-3) before you troubleshoot.

1. Warm up the engine to normal operating temperature (the radiator fan comes on).
2. Make sure that the transmission is filled to the proper level, and check for fluid leaks.
3. Drain the ATF (see step 3 on page 14-208) through a strainer. Inspect the strainer for metal debris or excessive clutch material.

   Does the strainer contain metal debris or excessive clutch material?

   YES—Replace the transmission. ■

   NO—Replace the ATF (see step 4 on page 14-208), then go to step 4.
4. Measure the line pressure (see page 14-189).

   Is the line pressure within service limit?

   YES—Go to step 5.

   NO—Repair the ATF pump and regulator valve, or replace the transmission. ■
5. Measure the 2nd clutch pressure (see page 14-189).

   Is the 2nd clutch pressure within service limits?

   YES—Go to step 6.

   NO—Shift valves A and B are stuck. Repair these valves and hydraulic circuit, or replace the transmission. ■
6. Test stall speed in the 2 position (see page 14-188).

   Does the stall speed test within service limits?

   YES—Go to step 7.

   NO—Shift valve C is stuck. Repair the shift valve C and hydraulic circuit, or replace the transmission. ■
7. Clear the DTC with the HDS.
8. Test-drive the vehicle for several minutes under the same conditions as those indicated by the freeze data, or drive in 2nd gear in the D position at 10 mph (16 km/h) for 20 seconds.
9. Monitor the OBD status for P0732 in the DTCs/ Freeze Data in A/T Mode Menu for a pass/fail.

   Does the result indicate FAILED?

   YES—Repair the 2nd clutch, or replace the transmission. ■

   NO—Intermittent failure, the system is OK at this time. If the tester indicates NOT COMPLETED, return to step 8 and recheck. ■

BACK

Protected by AR

DTC P0733: Problem in 3rd Clutch and 3rd Clutch Hydraulic Circuit

NOTE: Record all freeze data and review General Troubleshooting Information (see page 14-3) before you troubleshoot.

1. Warm up the engine to normal operating temperature (the radiator fan comes on).
2. Make sure that the transmission is filled to the proper level, and check for fluid leaks.
3. Drain the ATF (see step 3 on page 14-208) through a strainer. Inspect the strainer for metal debris or excessive clutch material.

   Does the strainer contain metal debris or excessive clutch material?

   YES—Replace the transmission. ■

   NO—Replace the ATF (see step 4 on page 14-208), then go to step 4.
4. Measure the line pressure (see page 14-189).

   Is the line pressure within service limits?

   YES—Go to step 5.

   NO—Repair the ATF pump and regulator valve, or replace the transmission. ■
5. Measure the 3rd clutch pressure (see page 14-189).

   Is the 3rd clutch pressure within service limits?

   YES—Go to step 6.

   NO—Shift valves A and D are stuck. Repair these valves and hydraulic circuit, or replace the transmission. ■
6. Clear the DTC with the HDS.
7. Test-drive the vehicle for several minutes under the same conditions as those indicated by the freeze data, or drive in 3rd gear in the D3 position at speeds over 10 mph (16 km/h) for 20 seconds.
8. Monitor the OBD status for P0733 in the DTCs/ Freeze Data in A/T Mode Menu for a pass/fail.

   Does the result indicate FAILED?

   YES—Repair the 3rd clutch, or replace the transmission. ■

   NO—Intermittent failure, the system is OK at this time. If the tester indicates NOT COMPLETED, return to step 7 and recheck. ■

BACK

Protected by AR

DTC Troubleshooting (cont'd)

DTC P0734: Problem in 4th Clutch and 4th Clutch Hydraulic Circuit

NOTE: Record all freeze data and review General Troubleshooting Information (see page 14-3) before you troubleshoot.

1. Warm up the engine to normal operating temperature (the radiator fan comes on).

2. Make sure that the transmission is filled to the proper level, and check for fluid leaks.

3. Drain the ATF (see step 3 on page 14-208) through a strainer. Inspect the strainer for metal debris or excessive clutch material.

   Does the strainer contain metal debris or excessive clutch material?

   YES—Replace the transmission. ■

   NO—Replace the ATF (see step 4 on page 14-208), then go to step 4.

4. Measure the line pressure (see page 14-189).

   Is the line pressure within service limits?

   YES—Go to step 5.

   NO—Repair the ATF pump and regulator valve, or replace the transmission. ■

5. Measure the 4th clutch pressure (see page 14-189).

   Is the 4th clutch pressure within service limits?

   YES—Go to step 6.

   NO—Shift valve B, shift valve C, servo control valve, and servo valve are stuck. Repair these valves and hydraulic circuit, or replace the transmission. ■

6. Clear the DTC with the HDS.

7. Test-drive the vehicle for several minutes under the same conditions as those indicated by the freeze data, or drive in 4th gear in the D position at speeds over 10 mph (16 km/h) for 20 seconds.

8. Monitor the OBD status for P0734 in the DTCs/ Freeze Data in A/T Mode Menu for a pass/fail.

   Does the result indicate FAILED?

   YES—Repair the 4th clutch, or replace the transmission. ■

   NO—Intermittent failure, the system is OK at this time. If the tester indicates NOT COMPLETED, return to step 7 and recheck. ■

BACK

Protected by AR

DTC P0735: Problem in 5th Clutch and 5th Clutch Hydraulic Circuit

NOTE: Record all freeze data and review General Troubleshooting Information (see page 14-3) before you troubleshoot.

1. Warm up the engine to normal operating temperature (the radiator fan comes on).

2. Make sure that the transmission is filled to the proper level, and check for fluid leaks.

3. Drain the ATF (see step 3 on page 14-208) through a strainer. Inspect the strainer for metal debris or excessive clutch material.

   Does the strainer contain metal debris or excessive clutch material?

   YES—Replace the transmission. ■

   NO—Replace the ATF (see step 4 on page 14-208), then go to step 4.

4. Measure the line pressure (see page 14-189).

   Is the line pressure within service limits?

   YES—Go to step 5.

   NO—Repair the ATF pump and regulator valve, or replace the transmission. ■

5. Measure the 5th clutch pressure (see page 14-189).

   Is the 5th clutch pressure within service limits?

   YES—Go to step 6.

   NO—Shift valves A, B, and/or D are stuck. Repair these valves and hydraulic circuit, or replace the transmission. ■

6. Clear the DTC with the HDS.

7. Test-drive the vehicle for several minutes under the same conditions as those indicated by the freeze data, or drive in 5th gear in the D position at speeds over 10 mph (16 km/h) for 20 seconds.

8. Monitor the OBD status for P0735 in the DTCs/ Freeze Data in A/T Mode Menu for a pass/fail.

   Does the result indicate FAILED?

   YES—Repair the 5th clutch, or replace the transmission. ■

   NO—Intermittent failure, the system is OK at this time. If the tester indicates NOT COMPLETED, return to step 7 and recheck. ■

Protected by AR

DTC Troubleshooting (cont'd)

DTC P0741: Torque Converter Clutch Hydraulic Circuit Stuck OFF

NOTE: Record all freeze data and review General Troubleshooting Information (see page 14-3) before you troubleshoot.

1. Warm up the engine to normal operating temperature (the radiator fan comes on).
2. Make sure that the transmission is filled to the proper level, and check for fluid leaks.
3. Drain the ATF (see step 3 on page 14-208) through a strainer. Inspect the strainer for metal debris or excessive clutch material.

   Does the strainer contain metal debris or excessive clutch material?

   YES—Replace the transmission. ■

   NO—Replace the ATF (see step 4 on page 14-208), then go to step 4.
4. Clear the DTC with the HDS.
5. Choose Shift Solenoid E in Miscellaneous Test Menu, and check that the shift solenoid valve E operates with the HDS.

   Is a clicking sound heard?

   YES—Go to step 6.

   NO—Replace shift solenoid valve E (see page 14-194), then go to step 10.
6. Run the engine until the engine coolant temperature reaches 176 °F (80 °C).
7. Choose Clutch Pressure Control (Linear) Solenoid A in Miscellaneous Test Menu, and test the A/T clutch pressure control solenoid valve A with the HDS.

   Is the system OK?

   YES—Go to step 8.

   NO—Follow instructions indicated on the HDS by the test result. Go to step 10 if any part was replaced.
8. Test-drive the vehicle at 55 mph (88 km/h) for 2 minutes while monitoring the vehicle speed with the HDS.
9. Monitor the OBD status for P0741 in the DTCs/ Freeze Data in A/T Mode Menu for a pass/fail.

   Does the result indicate FAILED?

   YES—Faulty torque converter mechanism, torque converter clutch hydraulic circuit, lock-up shift valve, or lock-up control valve, or replace the transmission. ■

   NO—Intermittent failure, the system is OK at this time. If the tester indicates NOT COMPLETED, return to step 8 and recheck. ■
10. Clear the DTC with the HDS.
11. Test-drive the vehicle for several minutes under the same conditions as those indicated by the freeze data.
12. Monitor the OBD status for P0741 in the DTCs/ Freeze Data in A/T Mode Menu for a pass/fail.

    Does the result indicate PASSED?

    YES—Troubleshooting is complete. ■

    NO—Return to step 5 and recheck.

BACK

Protected by AR

DTC P0747: A/T Clutch Pressure Control Solenoid Valve A Stuck ON

NOTE: Record all freeze data and review General Troubleshooting Information (see page 14-3) before you troubleshoot.

1. Warm up the engine to normal operating temperature (the radiator fan comes on).
2. Make sure that the transmission is filled to the proper level, and check for fluid leaks.
3. Drain the ATF (see step 3 on page 14-208) through a strainer. Inspect the strainer for metal debris or excessive clutch material.

   Does the strainer contain metal debris or excessive clutch material?

   YES—Replace the transmission. ■

   NO—Replace the ATF (see step 4 on page 14-208), then go to step 4.
4. Clear the DTC with the HDS.
5. Test-drive the vehicle in the D position through all five gears at speeds over 12 mph (20 km/h) for more than 20 seconds, then slow down to a stop.
6. Retest-drive the vehicle in the D position through all five gears at speeds over 12 mph (20 km/h) for more than 20 seconds, then slow down to a stop.
7. Monitor the OBD status for P0747 in the DTCs/ Freeze Data in A/T Mode Menu for a pass/fail.

   Does the result indicate FAILED?

   YES—Go to step 8.

   NO—Intermittent failure, the system is OK at this time. If the tester indicates NOT COMPLETED, return to step 5 and recheck. ■
8. Clear the DTC with the HDS.
9. Choose Clutch Pressure Control (Linear) Solenoid A in Miscellaneous Test Menu, and test the A/T clutch pressure control solenoid valve A with the HDS.

   Is the system OK?

   YES—Intermittent failure, the system is OK at this time. ■

   NO—Follow instructions indicated on the HDS by the test result, but the tester has not determined the cause of the failure, go to step 10. If any part was replaced, go to step 11.
10. Inspect A/T clutch pressure control solenoid valve A (see page 14-197).

    Does the A/T clutch pressure control solenoid valve A work properly?

    YES—Repair hydraulic system related with shift valve B and E, or replace the transmission, then go to step 11.

    NO—Replace A/T clutch pressure control solenoid valve A (see page 14-198), then go to step 11.
11. Clear the DTC with the HDS.
12. Test-drive the vehicle in the D position through all five gears at speeds over 12 mph (20 km/h) for more than 20 seconds. Slow down to a stop.
13. Retest-drive the vehicle in the D position through all five gears at speeds over 12 mph (20 km/h) for more than 20 seconds, then slow down to a stop.
14. Monitor the OBD status for P0747 in the DTCs/ Freeze Data in A/T Mode Menu for a pass/fail.

    Does the result indicate PASSED?

    YES—Troubleshooting is complete. ■

    NO—Return to step 8 and recheck.

Protected by AR

DTC Troubleshooting (cont'd)

DTC P0752: Shift Solenoid Valve A Stuck ON

NOTE: Record all freeze data and review General Troubleshooting Information (see page 14-3) before you troubleshoot.

1. Warm up the engine to normal operating temperature (the radiator fan comes on).
2. Make sure that the transmission is filled to the proper level, and check for fluid leaks.
3. Drain the ATF (see step 3 on page 14-208) through a strainer. Inspect the strainer for metal debris or excessive clutch material.

   Does the strainer contain metal debris or excessive clutch material?

   YES—Replace the transmission. ■

   NO—Replace the ATF (see step 4 on page 14-208), then go to step 4.
4. Clear the DTC with the HDS.
5. Test-drive the vehicle in the D position through all five gears at speeds over 12 mph (20 km/h) for more than 20 seconds, then slow down to a stop.
6. Retest-drive the vehicle in the D position through all five gears at speeds over 12 mph (20 km/h) for more than 20 seconds, then slow down to a stop.
7. Monitor the OBD status for P0752 in the DTCs/ Freeze Data in A/T Mode Menu for a pass/fail.

   Does the result indicate FAILED?

   YES—Go to step 8.

   NO—Intermittent failure, the system is OK at this time. If the tester indicates NOT COMPLETED, return to step 5 and recheck. ■
8. Clear the DTC with the HDS.
9. Choose Shift Solenoid A in Miscellaneous Test Menu, and check that the shift solenoid valve A operates with the HDS.

   Is a clicking sound heard?

   YES—Go to step 10.

   NO—Replace shift solenoid valve A (see page 14-194), then go to step 13.
10. Test-drive the vehicle in the D position through all five gears at speeds over 12 mph (20 km/h) for more than 20 seconds, then slow down to a stop.
11. Retest-drive the vehicle in the D position through all five gears at speeds over 12 mph (20 km/h) for more than 20 seconds, then slow down to a stop.
12. Monitor the OBD status for P0752 in the DTCs/ Freeze Data in A/T Mode Menu for a pass/fail.

    Does the result indicate FAILED?

    YES—Repair shift valve A, or replace the transmission, then go to step 13.

    NO—Intermittent failure, the system is OK at this time. If the tester indicates NOT COMPLETED, return to step 10 and recheck. ■
13. Clear the DTC with the HDS.
14. Test-drive the vehicle in the D position through all five gears at speeds over 12 mph (20 km/h) for more than 20 seconds, then slow down to a stop.
15. Retest-drive the vehicle in the D position through all five gears at speeds over 12 mph (20 km/h) for more than 20 seconds, then slow down and to a stop.
16. Monitor the OBD status for P0752 in the DTCs/ Freeze Data in A/T Mode Menu for a pass/fail.

    Does the result indicate PASSED?

    YES—Troubleshooting is complete. ■

    NO—Return to step 8 and recheck.

BACK

Protected by AR

DTC P0756: Shift Solenoid Valve B Stuck OFF

NOTE: Record all freeze data and review General Troubleshooting Information (see page 14-3) before you troubleshoot.

1. Warm up the engine to normal operating temperature (the radiator fan comes on).
2. Make sure that the transmission is filled to the proper level, and check for fluid leaks.
3. Drain the ATF (see step 3 on page 14-208) through a strainer. Inspect the strainer for metal debris or excessive clutch material.

   Does the strainer contain metal debris or excessive clutch material?

   YES—Replace the transmission. ■

   NO—Replace the ATF (see step 4 on page 14-208), then go to step 4.
4. Clear the DTC with the HDS.
5. Test-drive the vehicle in the D position through all five gears at speeds over 12 mph (20 km/h) for more than 20 seconds, then slow down to a stop.
6. Retest-drive the vehicle in the D position through all five gears at speeds over 12 mph (20 km/h) for more than 20 seconds, then slow down to a stop.
7. Monitor the OBD status for P0756 in the DTCs/ Freeze Data in A/T Mode Menu for a pass/fail.

   Does the result indicate FAILED?

   YES—Go to step 8.

   NO—Intermittent failure, the system is OK at this time. If the tester indicates NOT COMPLETED, return to step 5 and recheck. ■
8. Clear the DTC with the HDS.
9. Choose Shift Solenoid B in Miscellaneous Test Menu, and check that the shift solenoid valve B operates with the HDS.

   Is a clicking sound heard?

   YES—Go to step 10.

   NO—Replace shift solenoid valve B (see page 14-194), then go to step 13.
10. Test-drive the vehicle in the D position through all five gears at speeds over 12 mph (20 km/h) for more than 20 seconds, then slow down to a stop.
11. Retest-drive the vehicle in the D position through all five gears at speeds over 12 mph (20 km/h) for more than 20 seconds, then slow down to a stop.
12. Monitor the OBD status for P0756 in the DTCs/ Freeze Data in A/T Mode Menu for a pass/fail.

    Does the result indicate FAILED?

    YES—Repair shift valve B, or replace the transmission, then go to step 13.

    NO—Intermittent failure, the system is OK at this time. If the tester indicates NOT COMPLETED, return to step 10 and recheck. ■
13. Clear the DTC with the HDS.
14. Test-drive the vehicle in the D position through all five gears at speeds over 12 mph (20 km/h) for more than 20 seconds, then slow down to a stop.
15. Retest-drive the vehicle in the D position through all five gears at speeds over 12 mph (20 km/h) for more than 20 seconds, then slow down to a stop.
16. Monitor the OBD status for P0756 in the DTCs/ Freeze Data in A/T Mode Menu for a pass/fail.

    Does the result indicate PASSED?

    YES—Troubleshooting is complete. ■

    NO—Return to step 8 and recheck.

Protected by AR

DTC Troubleshooting (cont'd)

DTC P0757: Shift Solenoid Valve B Stuck ON

NOTE: Record all freeze data and review General Troubleshooting Information (see page 14-3) before you troubleshoot.

1. Warm up the engine to normal operating temperature (the radiator fan comes on).
2. Make sure that the transmission is filled to the proper level, and check for fluid leaks.
3. Drain the ATF (see step 3 on page 14-208) through a strainer. Inspect the strainer for metal debris or excessive clutch material.

   Does the strainer contain metal debris or excessive clutch material?

   YES—Replace the transmission. ■

   NO—Replace the ATF (see step 4 on page 14-208), then go to step 4.
4. Clear the DTC with the HDS.
5. Test-drive the vehicle in the D position through all five gears at speeds over 12 mph (20 km/h) for more than 20 seconds, then slow down to a stop.
6. Retest-drive the vehicle in the D position through all five gears at speeds over 12 mph (20 km/h) for more than 20 seconds, then slow down to a stop.
7. Monitor the OBD status for P0757 in the DTCs/ Freeze Data in A/T Mode Menu for a pass/fail.

   Does the result indicate FAILED?

   YES—Go to step 8.

   NO—Intermittent failure, the system is OK at this time. If the tester indicates NOT COMPLETED, return to step 5 and recheck. ■
8. Clear the DTC with the HDS.
9. Choose Shift Solenoid B in Miscellaneous Test Menu, and check that the shift solenoid valve B operates with the HDS.

   Is a clicking sound heard?

   YES—Go to step 10.

   NO—Replace shift solenoid valve B (see page 14-194), then go to step 13.
10. Test-drive the vehicle in the D position through all five gears at speeds over 12 mph (20 km/h) for more than 20 seconds, then slow down to a stop.
11. Retest-drive the vehicle in the D position through all five gears at speeds over 12 mph (20 km/h) for more than 20 seconds, then slow down to a stop.
12. Monitor the OBD status for P0757 in the DTCs/ Freeze Data in A/T Mode Menu for a pass/fail.

    Does the result indicate FAILED?

    YES—Repair shift valve B, or replace the transmission, then go to step 13.

    NO—Intermittent failure, the system is OK at this time. If the tester indicates NOT COMPLETED, return to step 10 and recheck. ■
13. Clear the DTC with the HDS.
14. Test-drive the vehicle in the D position through all five gears at speeds over 12 mph (20 km/h) for more than 20 seconds, then slow down to a stop.
15. Retest-drive the vehicle in the D position through all five gears at speeds over 12 mph (20 km/h) for more than 20 seconds, then slow down to a stop.
16. Monitor the OBD status for P0757 in the DTCs/ Freeze Data in A/T Mode Menu for a pass/fail.

    Does the result indicate PASSED?

    YES—Troubleshooting is complete. ■

    NO—Return to step 8 and recheck.

BACK

Protected by AR

DTC P0761: Shift Solenoid Valve C Stuck OFF

NOTE: Record all freeze data and review General Troubleshooting Information (see page 14-3) before you troubleshoot.

1. Warm up the engine to normal operating temperature (the radiator fan comes on).
2. Make sure that the transmission is filled to the proper level, and check for fluid leaks.
3. Drain the ATF (see step 3 on page 14-208) through a strainer. Inspect the strainer for metal debris or excessive clutch material.

   Does the strainer contain metal debris or excessive clutch material?

   YES—Replace the transmission. ■

   NO—Replace the ATF (see step 4 on page 14-208), then go to step 4.
4. Clear the DTC with the HDS.
5. Test-drive the vehicle in the D position through all five gears at speeds over 12 mph (20 km/h) for more than 20 seconds, then slow down to a stop.
6. Retest-drive the vehicle in the D position through all five gears at speeds over 12 mph (20 km/h) for more than 20 seconds, then slow down to a stop.
7. Monitor the OBD status for P0761 in the DTCs/ Freeze Data in A/T Mode Menu for a pass/fail.

   Does the result indicate FAILED?

   YES—Go to step 8.

   NO—Intermittent failure, the system is OK at this time. If the tester indicates NOT COMPLETED, return to step 5 and recheck. ■
8. Clear the DTC with the HDS.
9. Choose Shift Solenoid C in Miscellaneous Test Menu, and check that the shift solenoid valve C operates with the HDS.

   Is a clicking sound heard?

   YES—Go to step 10.

   NO—Replace shift solenoid valve C (see page 14-194), then go to step 13.
10. Test-drive the vehicle in the D position through all five gears at speeds over 12 mph (20 km/h) for more than 20 seconds, then slow down to a stop.
11. Retest-drive the vehicle in the D position through all five gears at speeds over 12 mph (20 km/h) for more than 20 seconds, then slow down to a stop.
12. Monitor the OBD status for P0761 in the DTCs/ Freeze Data in A/T Mode Menu for a pass/fail.

    Does the result indicate FAILED?

    YES—Repair shift valve C, or replace the transmission, then go to step 13.

    NO—Intermittent failure, the system is OK at this time. If the tester indicates NOT COMPLETED, return to step 10 and recheck. ■
13. Clear the DTC with the HDS.
14. Test-drive the vehicle in the D position through all five gears at speeds over 12 mph (20 km/h) for more than 20 seconds, then slow down to a stop.
15. Retest-drive the vehicle in the D position through all five gears at speeds over 12 mph (20 km/h) for more than 20 seconds, then slow down to a stop.
16. Monitor the OBD status for P0761 in the DTCs/ Freeze Data in A/T Mode Menu for a pass/fail.

    Does the result indicate PASSED?

    YES—Troubleshooting is complete. ■

    NO—Return to step 8 and recheck.

BACK

Protected by AR

DTC Troubleshooting (cont'd)

DTC P0771: Shift Solenoid Valve E Stuck OFF

NOTE: Record all freeze data and review General Troubleshooting Information (see page 14-3) before you troubleshoot.

1. Warm up the engine to normal operating temperature (the radiator fan comes on).
2. Make sure that the transmission is filled to the proper level, and check for fluid leaks.
3. Drain the ATF (see step 3 on page 14-208) through a strainer. Inspect the strainer for metal debris or excessive clutch material.

   Does the strainer contain metal debris or excessive clutch material?

   YES—Replace the transmission. ■

   NO—Replace the ATF (see step 4 on page 14-208), then go to step 4.
4. Clear the DTC with the HDS.
5. Test-drive the vehicle in the D position through all five gears at speeds over 12 mph (20 km/h) for more than 20 seconds, then slow down to a stop.
6. Retest-drive the vehicle in the D position through all five gears at speeds over 12 mph (20 km/h) for more than 20 seconds, then slow down to a stop.
7. Monitor the OBD status for P0771 in the DTCs/ Freeze Data in A/T Mode Menu for a pass/fail.

   Does the result indicate FAILED?

   YES—Go to step 8.

   NO—Intermittent failure, the system is OK at this time. If the tester indicates NOT COMPLETED, return to step 5 and recheck. ■
8. Clear the DTC with the HDS.
9. Choose Shift Solenoid E in Miscellaneous Test Menu, and check that the shift solenoid valve E operates with the HDS.

   Is a clicking sound heard?

   YES—Go to step 10.

   NO—Replace shift solenoid valve E (see page 14-194), then go to step 13.
10. Test-drive the vehicle in the D position through all five gears at speeds over 12 mph (20 km/h) for more than 20 seconds, then slow down to a stop.
11. Retest-drive the vehicle in the D position through all five gears at speeds over 12 mph (20 km/h) for more than 20 seconds, then slow down to a stop.
12. Monitor the OBD status for P0771 in the DTCs/ Freeze Data in A/T Mode Menu for a pass/fail.

    Does the result indicate FAILED?

    YES—Repair shift valve E, or replace the transmission, then go to step 13.

    NO—Intermittent failure, the system is OK at this time. If the tester indicates NOT COMPLETED, return to step 10 and recheck. ■
13. Clear the DTC with the HDS.
14. Test-drive the vehicle in the D position through all five gears at speeds over 12 mph (20 km/h) for more than 20 seconds, then slow down to a stop.
15. Retest-drive the vehicle in the D position through all five gears at speeds over 12 mph (20 km/h) for more than 20 seconds, then slow down to a stop.
16. Monitor the OBD status for P0771 in the DTCs/ Freeze Data in A/T Mode Menu for a pass/fail.

    Does the result indicate PASSED?

    YES—Troubleshooting is complete. ■

    NO—Return to step 8 and recheck.

BACK

Protected by AR

DTC P0776: A/T Clutch Pressure Control Solenoid Valve B Stuck OFF

NOTE: Record all freeze data and review General Troubleshooting Information (see page 14-3) before you troubleshoot.

1. Warm up the engine to normal operating temperature (the radiator fan comes on).
2. Make sure that the transmission is filled to the proper level, and check for fluid leaks.
3. Drain the ATF (see step 3 on page 14-208) through a strainer. Inspect the strainer for metal debris or excessive clutch material.

   Does the strainer contain metal debris or excessive clutch material?

   YES—Replace the transmission.■

   NO—Replace the ATF (see step 4 on page 14-208), then go to step 4.
4. Clear the DTC with the HDS.
5. Test-drive the vehicle in the D position through all five gears at speeds over 12 mph (20 km/h) for more than 20 seconds, then slow down to a stop.
6. Retest-drive the vehicle in the D position through all five gears at speeds over 12 mph (20 km/h) for more than 20 seconds, then slow down to a stop.
7. Monitor the OBD status for P0776 in the DTCs/ Freeze Data in A/T Mode Menu for a pass/fail.

   Does the result indicate FAILED?

   YES—Go to step 8.

   NO—Intermittent failure, the system is OK at this time. If the tester indicates NOT COMPLETED, return to step 5 and recheck.■
8. Clear the DTC with the HDS.
9. Choose Clutch Pressure Control (Linear) Solenoid B in Miscellaneous Test Menu, and test the A/T clutch pressure control solenoid valve B with the HDS.

   Is the system OK?

   YES—Intermittent failure, the system is OK at this time. If the tester indicates NOT COMPLETED, return to step 9 and recheck.■

   NO—Follow instructions indicated on the HDS by the test result, but the tester has not determined the cause of the failure, go to step 10. If any part was replaced, go to step 11.
10. Inspect A/T clutch pressure control solenoid valve B (see page 14-199).

    Does the A/T clutch pressure control solenoid valve B work properly?

    YES—Repair hydraulic system related with shift valve B, or replace the transmission, then go to step 11.

    NO—Replace A/T clutch pressure control solenoid valve B (see page 14-200), then go to step 11.
11. Clear the DTC with the HDS.
12. Test-drive the vehicle in the D position through all five gears at speeds over 12 mph (20 km/h) for more than 20 seconds, then slow down to a stop.
13. Retest-drive the vehicle in the D position through all five gears at speeds over 12 mph (20 km/h) for more than 20 seconds, then slow down to a stop.
14. Monitor the OBD status for P0776 in the DTCs/ Freeze Data in A/T Mode Menu for a pass/fail.

    Does the result indicate PASSED?

    YES—Troubleshooting is complete.■

    NO—Return to step 8 and recheck.

Protected by AR

DTC Troubleshooting (cont'd)

DTC P0777: A/T Clutch Pressure Control Solenoid Valve B Stuck ON

NOTE: Record all freeze data and review General Troubleshooting Information (see page 14-3) before you troubleshoot.

1. Warm up the engine to normal operating temperature (the radiator fan comes on).
2. Make sure that the transmission is filled to the proper level, and check for fluid leaks.
3. Drain the ATF (see step 3 on page 14-208) through a strainer. Inspect the strainer for metal debris or excessive clutch material.

   Does the strainer contain metal debris or excessive clutch material?

   YES—Replace the transmission. ■

   NO—Replace the ATF (see step 4 on page 14-208), then go to step 4.
4. Clear the DTC with the HDS.
5. Test-drive the vehicle in the D position through all five gears at speeds over 12 mph (20 km/h) for more than 20 seconds, then slow down to a stop.
6. Retest-drive the vehicle in the D position through all five gears at speeds over 12 mph (20 km/h) for more than 20 seconds, then slow down to a stop.
7. Monitor the OBD status for P0777 in the DTCs/ Freeze Data in A/T Mode Menu for a pass/fail.

   Does the result indicate FAILED?

   YES—Go to step 8.

   NO—Intermittent failure, the system is OK at this time. If the tester indicates NOT COMPLETED, return to step 5 and recheck. ■
8. Clear the DTC with the HDS.
9. Choose Clutch Pressure Control (Linear) Solenoid B in Miscellaneous Test Menu, and test the A/T clutch pressure control solenoid valve B with the HDS.

   Is the system OK?

   YES—Intermittent failure, the system is OK at this time. If the tester indicates NOT COMPLETED, return to step 9 and recheck. ■

   NO—Follow instructions indicated on the HDS by the test result, but the tester has not determined the cause of the failure, go to step 10. If any part was replaced, go to step 11.
10. Inspect A/T clutch pressure control solenoid valve B (see page 14-199).

    Does the A/T clutch pressure control solenoid valve B work properly?

    YES—Repair hydraulic system related with shift valve B, or replace the transmission, then go to step 11.

    NO—Replace A/T clutch pressure control solenoid valve B (see page 14-200), then go to step 11.
11. Clear the DTC with the HDS.
12. Test-drive the vehicle in the D position through all five gears at speeds over 12 mph (20 km/h) for more than 20 seconds, then slow down to a stop.
13. Retest-drive the vehicle in the D position through all five gears at speeds over 12 mph (20 km/h) for more than 20 seconds, then slow down to a stop.
14. Monitor the OBD status for P0777 in the DTCs/ Freeze Data in A/T Mode Menu for a pass/fail.

    Does the result indicate PASSED?

    YES—Troubleshooting is complete. ■

    NO—Return to step 8 and recheck.

BACK

Protected by AR

DTC P0780: Shift Control System

NOTE: Record all freeze data and review General Troubleshooting Information (see page 14-3) before you troubleshoot.

1. Check for other DTCs indicated simultaneous with the code P0780.

   NOTE: P0780 means there is one or more A/T DTCs about the shift control system.

   Are there other DTCs?

   YES—Go to step 2.

   NO—Update the PCM if it does not have the latest software, or substitute a known-good PCM (see page 14-6), then recheck. If the symptom/indication goes away with a known-good PCM, replace the original PCM. ■

2. Perform the troubleshooting flowchart for the indicated codes:

   - P1730: (see page 14-176)
   - P1731: (see page 14-178)
   - P1732: (see page 14-180)
   - P1733: (see page 14-182)
   - P1734: (see page 14-184)

Protected by AR

DTC Troubleshooting (cont'd)

DTC P0796: A/T Clutch Pressure Control Solenoid Valve C Stuck OFF

NOTE: Record all freeze data and review General Troubleshooting Information (see page 14-3) before you troubleshoot.

1. Warm up the engine to normal operating temperature (the radiator fan comes on).
2. Make sure that the transmission is filled to the proper level, and check for fluid leaks.
3. Drain the ATF (see step 3 on page 14-208) through a strainer. Inspect the strainer for metal debris or excessive clutch material.

   Does the strainer contain metal debris or excessive clutch material?

   YES—Replace the transmission. ■

   NO—Replace the ATF (see step 4 on page 14-208), then go to step 4.
4. Clear the DTC with the HDS.
5. Test-drive the vehicle in the D position through all five gears at speeds over 12 mph (20 km/h) for more than 20 seconds, then slow down to a stop.
6. Retest-drive the vehicle in the D position through all five gears at speeds over 12 mph (20 km/h) for more than 20 seconds, then slow down to a stop.
7. Monitor the OBD status for P0796 in the DTCs/ Freeze Data in A/T Mode Menu for a pass/fail.

   Does the result indicate FAILED?

   YES—Go to step 8.

   NO—Intermittent failure, the system is OK at this time. If the tester indicates NOT COMPLETED, return to step 5 and recheck. ■
8. Clear the DTC with the HDS.
9. Choose Clutch Pressure Control (Linear) Solenoid C in Miscellaneous Test Menu, and test the A/T clutch pressure control solenoid valve C with the HDS.

   Is the system OK?

   YES—Intermittent failure, the system is OK at this time. If the tester indicates NOT COMPLETED, return to step 9 and recheck. ■

   NO—Follow instructions indicated on the HDS by the test result, but the tester has not determined the cause of the failure, go to step 10. If any part was replaced, go to step 11.
10. Inspect A/T clutch pressure control solenoid valve C (see page 14-199).

    Does the A/T clutch pressure control solenoid valve C work properly?

    YES—Repair hydraulic system related with shift valve B and C, or replace the transmission, then go to step 11.

    NO—Replace A/T clutch pressure control solenoid valve C (see page 14-200), then go to step 11.
11. Clear the DTC with the HDS.
12. Test-drive the vehicle in the D position through all five gears at speeds over 12 mph (20 km/h) for more than 20 seconds, then slow down to a stop.
13. Retest-drive the vehicle in the D position through all five gears at speeds over 12 mph (20 km/h) for more than 20 seconds, then slow down to a stop.
14. Monitor the OBD status for P0796 in the DTCs/ Freeze Data in A/T Mode Menu for a pass/fail.

    Does the result indicate PASSED?

    YES—Troubleshooting is complete. ■

    NO—Return to step 8 and recheck.

BACK

Protected by AR

DTC P0797: A/T Clutch Pressure Control Solenoid Valve C Stuck ON

NOTE: Record all freeze data and review General Troubleshooting Information (see page 14-3) before you troubleshoot.

1. Warm up the engine to normal operating temperature (the radiator fan comes on).
2. Make sure that the transmission is filled to the proper level, and check for fluid leaks.
3. Drain the ATF (see step 3 on page 14-208) through a strainer. Inspect the strainer for metal debris or excessive clutch material.

   Does the strainer contain metal debris or excessive clutch material?

   YES—Replace the transmission. ■

   NO—Replace the ATF (see step 4 on page 14-208), then go to step 4.
4. Clear the DTC with the HDS.
5. Test-drive the vehicle in the D position through all five gears at speeds over 12 mph (20 km/h) for more than 20 seconds, then slow down to a stop.
6. Retest-drive the vehicle in the D position through all five gears at speeds over 12 mph (20 km/h) for more than 20 seconds, then slow down to a stop.
7. Monitor the OBD status for P0797 in the DTCs/ Freeze Data in A/T Mode Menu for a pass/fail.

   Does the result indicate FAILED?

   YES—Go to step 8.

   NO—Intermittent failure, the system is OK at this time. If the tester indicates NOT COMPLETED, return to step 5 and recheck. ■
8. Clear the DTC with the HDS.
9. Choose Clutch Pressure Control (Linear) Solenoid C in Miscellaneous Test Menu, and test the A/T clutch pressure control solenoid valve C with the HDS.

   Is the system OK?

   YES—Intermittent failure, the system is OK at this time. If the tester indicates NOT COMPLETED, return to step 9 and recheck. ■

   NO—Follow instructions indicated on the HDS by the test result, but the tester has not determined the cause of the failure, go to step 10. If any part was replaced, go to step 11.
10. Inspect A/T clutch pressure control solenoid valve C (see page 14-199).

    Does the A/T clutch pressure control solenoid valve C work properly?

    YES—Repair hydraulic system related with shift valves B and C, or replace the transmission, then go to step 11.

    NO—Replace A/T clutch pressure control solenoid valve C (see page 14-200), then go to step 11.
11. Clear the DTC with the HDS.
12. Test-drive the vehicle in the D position through all five gears at speeds over 12 mph (20 km/h) for more than 20 seconds, then slow down to a stop.
13. Retest-drive the vehicle in the D position through all five gears at speeds over 12 mph (20 km/h) for more than 20 seconds, then slow down to a stop.
14. Monitor the OBD status for P0797 in the DTCs/ Freeze Data in A/T Mode Menu for a pass/fail.

    Does the result indicate PASSED?

    YES—Troubleshooting is complete. ■

    NO—Return to step 8 and recheck.

Protected by AR

DTC Troubleshooting (cont'd)

DTC P0812: Open in Transmission Range Switch ATP RVS Switch Circuit

NOTE:
- Record all freeze data and review General Troubleshooting Information (see page 14-3) before you troubleshoot.
- This code is caused by an electrical circuit problem and cannot be caused by a mechanical problem in the transmission.

1. Turn the ignition switch ON (II).

2. Shift to the R position, and verify the A/T R SWITCH signal with the HDS in the A/T data list.

   Is the A/T R SWITCH ON?

   YES—Go to step 3.

   NO—Inspect the end of the selector control shaft (see step 8 on page 14-248), adjust the shift cable (see page 14-241), then recheck. If the problem still exists, go to step 4.

3. Check the REVERSE SWITCH signal with the HDS.

   Is the REVERSE SWITCH ON?

   YES—Intermittent failure, the system is OK at this time. Check for poor connections or loose terminals at the transmission range switch and PCM. ■

   NO—Go to step 4.

4. Turn the ignition switch OFF.

5. Check for continuity between PCM connector terminals A8 and body ground, and between A9 and body ground.

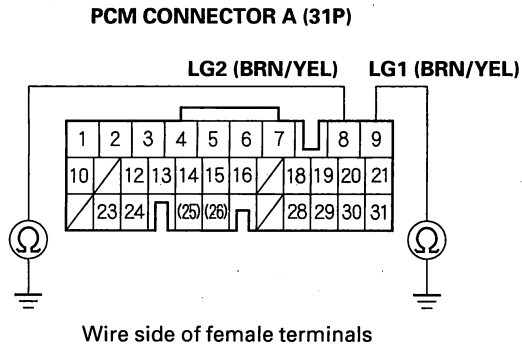

Wire side of female terminals

Is there continuity?

YES—Go to step 6.

NO—Repair open in the wires between PCM connector terminals A8, A9, and ground (G101), and repair poor ground (G101), then go to step 12.

BACK

Protected by AR

6. Turn the ignition switch ON (II).
7. Shift to the R position.
8. Measure the voltage between PCM connector terminals C12 and A9.

PCM CONNECTORS

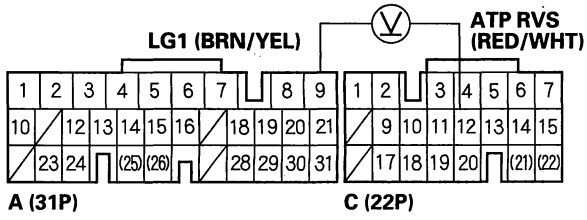

Wire side of female terminals

Is there voltage?

YES—Go to step 9.

NO—Check for loose or poor connections at PCM connector terminal C12. If the connection is OK, update the PCM if it does not have the latest software, or substitute a known-good PCM (see page 14-6), then recheck. If the symptom/indication goes away with a known-good PCM, replace the original PCM. ■

9. Turn the ignition switch OFF.
10. Disconnect the transmission range switch connector.
11. Check for continuity between the No. 1 and No. 10 terminals at the transmission range switch. The shift position must be R.

TRANSMISSION RANGE SWITCH CONNECTOR

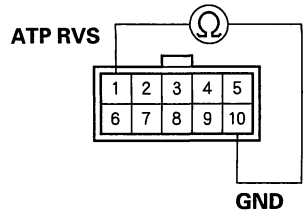

Terminal side of male terminals

Is there continuity?

YES—Check for loose or poor connections at the transmission range switch connector terminal No. 1. If the connection is OK, repair open in the wire between PCM connector terminal C12 and the transmission range switch, then go to step 12.

NO—Replace the transmission range switch, then go to step 12.

12. Clear the DTC with the HDS.
13. Start the engine, and shift the shift lever slowly into the P, R, then N position.
14. Monitor the OBD status for P0812 in the DTCs/Freeze Data in A/T Mode Menu for a pass/fail.

Does the result indicate PASSED?

YES—Troubleshooting is complete. ■

NO—Return to step 1 and recheck.

Protected by AR

DTC Troubleshooting (cont'd)

DTC P0842: Short in 2nd Clutch Transmission Fluid Pressure Switch Circuit, or 2nd Clutch Transmission Fluid Pressure Switch Stuck ON

NOTE:
- Record all freeze data and review General Troubleshooting Information (see page 14-3) before you troubleshoot.
- This code is caused by an electrical circuit problem and cannot be caused by a mechanical problem in the transmission.

1. Clear the DTC with the HDS.
2. Check the 2nd PRES SWITCH signal with the HDS in the A/T data list when not in 2nd gear.

   Is the 2nd PRES SWITCH OFF?

   YES—Go to step 3.

   NO—Go to step 5.
3. Start the engine, and warm it up to normal operating temperature (the radiator fan comes on). Drive the vehicle in 2nd gear in the 2 position for more than 5 seconds, then shift to the D position, and drive in 4th gear for more than 5 seconds. Slow down to a stop.
4. Monitor the OBD status for P0842 in the DTCs/ Freeze Data in A/T Mode Menu for a pass/fail.

   Does the result indicate FAILED?

   YES—Go to step 5.

   NO—Intermittent failure, the system is OK at this time. Check the BLU/RED wire for an intermittent short to ground between the 2nd clutch transmission fluid pressure switch and PCM. If the tester indicates NOT COMPLETED, return to step 3 and recheck. ■
5. Turn the ignition switch OFF.
6. Disconnect the 2nd clutch transmission fluid pressure switch connector.
7. Turn the ignition switch ON (II).
8. Check the 2nd PRES SWITCH signal with the HDS in the A/T data list.

   Is the 2nd PRES SWITCH OFF?

   YES—Replace the 2nd clutch transmission fluid pressure switch (see page 14-202), then go to step 13.

   NO—Go to step 9.
9. Turn the ignition switch OFF.
10. Jump the SCS line with the HDS.
11. Disconnect PCM connector C (22P).
12. Check for continuity between PCM connector terminal C13 and body ground.

PCM CONNECTOR C (22P)

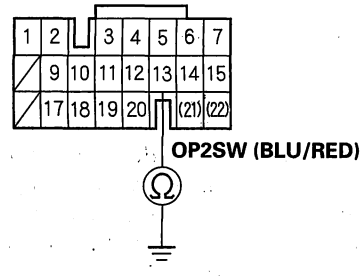

Wire side of female terminals

Is there continuity?

YES—Repair short to ground in the wire between PCM connector terminal C13 and the 2nd clutch transmission fluid pressure switch, then go to step 13.

NO—Update the PCM if it does not have the latest software, or substitute a known-good PCM (see page 14-6), then recheck. If the symptom/ indication goes away with a known-good PCM, replace the original PCM. ■

BACK

Protected by AR

13. Clear the DTC with the HDS.

14. Start the engine, and warm it up to normal operating temperature (the radiator fan comes on). Drive the vehicle in 2nd gear in the 2 position for more than 5 seconds, then shift to the D position, and drive in 4th gear for more than 5 seconds. Slow down to a stop.

15. Monitor the OBD status for P0842 in the DTCs/ Freeze Data in A/T Mode Menu for a pass/fail.

    Does the result indicate PASSED?

    YES—Troubleshooting is complete. ■

    NO—Return to step 1 and recheck.

Protected by AR

DTC Troubleshooting (cont'd)

DTC P0843: Open in 2nd Clutch Transmission Fluid Pressure Switch Circuit, or 2nd Clutch Transmission Fluid Pressure Switch Stuck OFF

NOTE:
- Record all freeze data and review General Troubleshooting Information (see page 14-3) before you troubleshoot.
- This code is caused by an electrical circuit problem and cannot be caused by a mechanical problem in the transmission.

1. Clear the DTC with the HDS.
2. Start the engine, and warm it up to normal operating temperature (the radiator fan comes on). Shift into the 2 position while pressing the brake pedal, and verify that the SHIFT MAP NUMBER indicates 2nd with the HDS in the A/T data list.
3. Check the 2nd PRES SWITCH signal with the HDS in the A/T data list.

   Is the 2nd PRES SWITCH ON?

   YES—Go to step 4.

   NO—Go to step 6.
4. Drive the vehicle in 2nd gear in the 2 position for more than 5 seconds, then shift to the D position, and drive in 4th gear for more than 5 seconds. Slow down to a stop.
5. Monitor the OBD status for P0843 in the DTCs/ Freeze Data in A/T Mode Menu for a pass/fail.

   Does the result indicate FAILED?

   YES—Go to step 6.

   NO—Intermittent failure, the system is OK at this time. Check for poor connections or loose terminals at the 2nd clutch transmission fluid pressure switch and PCM. If the tester indicates NOT COMPLETED, return to step 4 and recheck. ■
6. Turn the ignition switch OFF.
7. Disconnect the 2nd clutch transmission fluid pressure switch connector.
8. Turn the ignition switch ON (II).
9. Measure the voltage between the 2nd clutch transmission fluid pressure switch connector terminal and body ground.

2ND CLUTCH TRANSMISSION FLUID PRESSURE SWITCH CONNECTOR

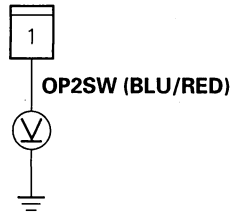

Wire side of female terminals

Is there about 5 V?

YES—Replace the 2nd clutch transmission fluid pressure switch (see page 14-202), then go to step 11.

NO—Go to step 10.

BACK

Protected by AR

10. Measure the voltage between PCM connector terminal C13 and body ground.

PCM CONNECTOR C (22P)

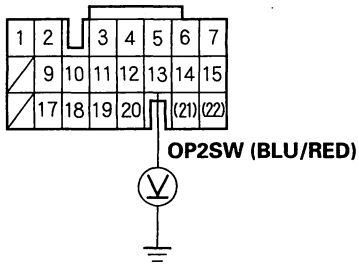

Wire side of female terminals

Is there about 5 V?

YES—Repair open in the wire between PCM connector terminal C13 and the 2nd clutch transmission fluid pressure switch, then go to step 11.

NO—Check for loose or poor connections at PCM connector terminal C13. If the connection is OK, update the PCM if it does not have the latest software, or substitute a known-good PCM (see page 14-6), then recheck. If the symptom/indication goes away with a known-good PCM, replace the original PCM. ■

11. Clear the DTC with the HDS.

12. Start the engine, and warm it up to normal operating temperature (the radiator fan comes on). Drive the vehicle in 2nd gear in the 2 position for more than 5 seconds, then shift to the D position, and drive in 4th gear for more than 5 seconds. Slow down to a stop.

13. Monitor the OBD status for P0843 in the DTCs/Freeze Data in A/T Mode Menu for a pass/fail.

Does the result indicate PASSED?

YES—Troubleshooting is complete. ■

NO—Return to step 1 and recheck.

Protected by AR

DTC Troubleshooting (cont'd)

DTC P0847: Short in 3rd Clutch Transmission Fluid Pressure Switch Circuit, or 3rd Clutch Transmission Fluid Pressure Switch Stuck ON

NOTE:
- Record all freeze data and review General Troubleshooting Information (see page 14-3) before you troubleshoot.
- This code is caused by an electrical circuit problem and cannot be caused by a mechanical problem in the transmission.

1. Clear the DTC with the HDS.
2. Check the 3rd PRES SWITCH signal with the HDS in the A/T data list when not in 3rd gear.

   Is the 3rd PRES SWITCH ON?

   YES—Go to step 3.

   NO—Go to step 5.
3. Start the engine, and warm it up to normal operating temperature (the radiator fan comes on). Drive the vehicle in 3rd gear in the D3 position for more than 5 seconds, then shift to the D position, and drive in 4th gear for more than 5 seconds. Slow down to a stop.
4. Monitor the OBD status for P0847 in the DTCs/ Freeze Data in A/T Mode Menu for a pass/fail.

   Does the result indicate FAILED?

   YES—Go to step 5.

   NO—Intermittent failure, the system is OK at this time. Check the BLU/WHT wire for an intermittent short to ground between the 3rd clutch transmission fluid pressure switch and PCM. If the tester indicates NOT COMPLETED, return to step 3 and recheck.■
5. Turn the ignition switch OFF.
6. Disconnect the 3rd clutch transmission fluid pressure switch connector.
7. Turn the ignition switch ON (II).
8. Check the 3rd PRES SWITCH signal with the HDS in the A/T data list.

   Is the 3rd PRES SWITCH OFF?

   YES—Replace the 3rd clutch transmission fluid pressure switch (see page 14-203), then go to step 13.

   NO—Go to step 9.
9. Turn the ignition switch OFF.
10. Jump the SCS line with the HDS.
11. Disconnect PCM connector C (22P).
12. Check for continuity between PCM connector terminal C10 and body ground.

PCM CONNECTOR C (22P)

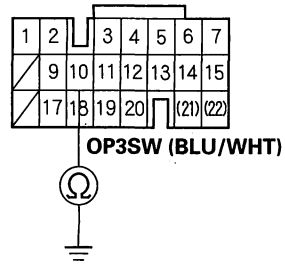

Wire side of female terminals

Is there continuity?

YES—Repair short to ground in the wire between PCM connector terminal C10 and the 3rd clutch transmission fluid pressure switch, then go to step 13.

NO—Update the PCM if it does not have the latest software, or substitute a known-good PCM (see page 14-6), then recheck. If the symptom/ indication goes away with a known-good PCM, replace the original PCM.■

BACK

Protected by AR

13. Clear the DTC with the HDS.

14. Start the engine, and warm it up to normal operating temperature (the radiator fan comes on). Drive the vehicle in 3rd gear in the D3 position for more than 5 seconds, then shift to the D position, and drive in 4th gear for more than 5 seconds. Slow down to a stop.

15. Monitor the OBD status for P0847 in the DTCs/ Freeze Data in A/T Mode Menu for a pass/fail.

    Does the result indicate PASSED?

    YES—Troubleshooting is complete. ■

    NO—Return to step 1 and recheck.

Protected by AR

DTC Troubleshooting (cont'd)

DTC P0848: Open in 3rd Clutch Transmission Fluid Pressure Switch Circuit, or 3rd Clutch Transmission Fluid Pressure Switch Stuck OFF

NOTE:
- Record all freeze data and review General Troubleshooting Information (see page 14-3) before you troubleshoot.
- This code is caused by an electrical circuit problem and cannot be caused by a mechanical problem in the transmission.

1. Clear the DTC with the HDS.
2. Start the engine, and warm it up to normal operating temperature (the radiator fan comes on). Drive the vehicle in the 3rd gear in the D3 position, and verify that the SHIFT MAP NUMBER indicates 3rd with the HDS in the A/T data list.
3. Check the 3rd PRES SWITCH signal with the HDS in the A/T data list.

   Is the 3rd PRES SWITCH ON?

   YES—Go to step 4.

   NO—Go to step 6.
4. Drive the vehicle in 3rd gear in the D3 position for more than 5 seconds, then shift to the D position, and drive in 4th gear for more than 5 seconds. Slow down to a stop.
5. Monitor the OBD status for P0848 in the DTCs/ Freeze Data in A/T Mode Menu for a pass/fail.

   Does the result indicate FAILED?

   YES—Go to step 6.

   NO—Intermittent failure, the system is OK at this time. Check for poor connections or loose terminals at the 3rd clutch transmission fluid pressure switch and PCM. If the tester indicates NOT COMPLETED, return to step 4 and recheck.■
6. Turn the ignition switch OFF.
7. Disconnect the 3rd clutch transmission fluid pressure switch connector.
8. Turn the ignition switch ON (II).
9. Measure the voltage between the 3rd clutch transmission fluid pressure switch connector terminal and body ground.

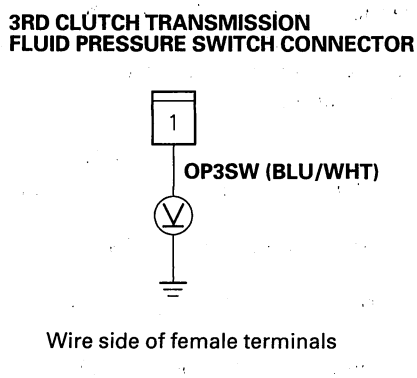

Wire side of female terminals

Is there about 5 V?

YES—Replace the 3rd clutch transmission fluid pressure switch (see page 14-203), then go to step 11.

NO—Go to step 10.

BACK

Protected by AR

10. Measure the voltage between PCM connector terminal C10 and body ground.

PCM CONNECTOR C (22P)

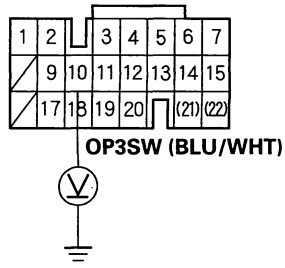

Wire side of female terminals

Is there about 5 V?

YES—Repair open in the wire between PCM connector terminal C10 and the 3rd clutch transmission fluid pressure switch, then go to step 11.

NO—Check for loose or poor connections at PCM connector terminal C10. If the connection is OK, update the PCM if it does not have the latest software, or substitute a known-good PCM (see page 14-6), then recheck. If the symptom/indication goes away with a known-good PCM, replace the original PCM.■

11. Clear the DTC with the HDS.

12. Start the engine, and warm it up to normal operating temperature (the radiator fan comes on). Drive the vehicle in 3rd gear in the D3 position for more than 5 seconds, then shift to the D position, and drive in 4th gear for more than 5 seconds. Slow down to a stop.

13. Monitor the OBD status for P0848 in the DTCs/Freeze Data in A/T Mode Menu for a pass/fail.

Does the result indicate PASSED?

YES—Troubleshooting is complete.■

NO—Return to step 1 and recheck.

Protected by AR

DTC Troubleshooting (cont'd)

DTC P0962: Problem in A/T Clutch Pressure Control Solenoid Valve A Circuit

NOTE:
- Record all freeze data and review General Troubleshooting Information (see page 14-3) before you troubleshoot.
- This code is caused by an electrical circuit problem and cannot be caused by a mechanical problem in the transmission.

1. Clear the DTC with the HDS.
2. Check that DTC P0962 recurs.

   Is DTC P0962 indicated?

   YES—Go to step 6.

   NO—Go to step 3.
3. Choose Clutch Pressure Control Solenoid Control in Miscellaneous Test Menu, and test the A/T clutch pressure control solenoid valve A with the HDS.
4. Drive with the A/T clutch pressure control solenoid valve A at 1.0 A in Clutch Pressure Control Solenoid Control menu.
5. Monitor the OBD status for P0962 in the DTCs/ Freeze Data in A/T Mode Menu for a pass/fail.

   Does the result indicate FAILED?

   YES—Go to step 6.

   NO—Intermittent failure, the system is OK at this time. Check for poor connections or loose terminals at the A/T clutch pressure control solenoid valve A and PCM. If the tester indicates NOT COMPLETED, return to step 3 and recheck.■
6. Turn the ignition switch OFF.
7. Disconnect the A/T clutch pressure control solenoid valve A connector.
8. Measure A/T clutch pressure control solenoid valve A resistance at the solenoid connector.

A/T CLUTCH PRESSURE CONTROL SOLENOID VALVE A CONNECTOR

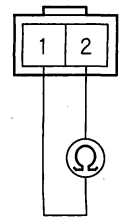

Terminal side of male terminals

Is there 3– 10 Ω ?

YES—Go to step 9.

NO—Replace A/T clutch pressure control solenoid valve A (see page 14-198), then go to step 12.

9. Check for continuity between A/T clutch pressure control solenoid valve A connector terminal No. 2 and body ground.

A/T CLUTCH PRESSURE CONTROL SOLENOID VALVE A CONNECTOR

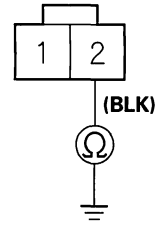

Wire side of female terminals

Is there continuity?

YES—Go to step 10.

NO—Repair open in the wire between the A/T clutch pressure control solenoid valve A and ground (G101), or repair poor ground (G101), then go to step 12.

BACK

Protected by AR

10. Turn the ignition switch ON (II).

11. Measure the voltage between A/T clutch pressure control solenoid valve A connector terminals No. 1 and No. 2.

A/T CLUTCH PRESSURE CONTROL SOLENOID VALVE A CONNECTOR

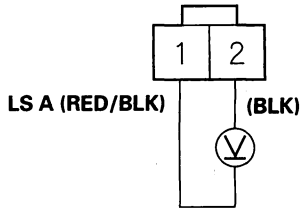

Wire side of female terminals

Is there about 11 V as the ignition switch is turned to the ON (II) position?

YES—Update the PCM if it does not have the latest software, or substitute a known-good PCM (see page 14-6), then recheck. If the symptom/indication goes away with a known-good PCM, replace the original PCM. ■

NO—Repair open or short in the wire between PCM connector terminal C1 and A/T clutch pressure control solenoid valve A, then go to step 12.

12. Clear the DTC with the HDS.

13. Test-drive the vehicle for several minutes in the D position through all five gears.

14. Monitor the OBD status for P0962 in the DTCs/Freeze Data in A/T Mode Menu for a pass/fail.

Does the result indicate PASSED?

YES—Troubleshooting is complete. ■

NO—Return to step 1 and recheck.

Protected by AR

DTC Troubleshooting (cont'd)

DTC P0963: Problem in A/T Clutch Pressure Control Solenoid Valve A

NOTE:
- Record all freeze data and review General Troubleshooting Information (see page 14-3) before you troubleshoot.
- This code is caused by an electrical circuit problem and cannot be caused by a mechanical problem in the transmission.

1. Clear the DTC with the HDS.
2. Check that DTC P0963 recurs.

   Is DTC P0963 indicated?

   YES—Go to step 6.

   NO—Go to step 3.
3. Choose Clutch Pressure Control Solenoid Control in Miscellaneous Test Menu, and test the A/T clutch pressure control solenoid valve A with the HDS.
4. Drive with the A/T clutch pressure control solenoid valve A at 0.2 A in Clutch Pressure Control Solenoid Control menu.
5. Monitor the OBD status for P0963 in the DTCs/ Freeze Data in A/T Mode Menu for a pass/fail.

   Does the result indicate FAILED?

   YES—Go to step 6.

   NO—Intermittent failure, the system is OK at this time. Check for poor connections or loose terminals at the A/T clutch pressure control solenoid valve A and PCM. If the tester indicates NOT COMPLETED, return to step 3 and recheck. ■
6. Turn the ignition switch OFF.
7. Disconnect the A/T clutch pressure control solenoid valve A connector.
8. Measure A/T clutch pressure control solenoid valve A resistance at the solenoid connector.

A/T CLUTCH PRESSURE CONTROL SOLENOID VALVE A CONNECTOR

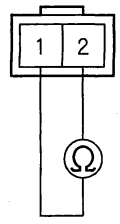

Terminal side of male terminals

Is there 3—10 Ω ?

YES—Go to step 9.

NO—Replace A/T clutch pressure control solenoid valve A (see page 14-198), then go to step 10.

BACK

Protected by AR

9. Check for continuity between A/T clutch pressure control solenoid valve A connector terminal No. 2 and body ground.

A/T CLUTCH PRESSURE CONTROL SOLENOID VALVE A CONNECTOR

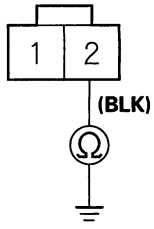

Wire side of female terminals

Is there continuity?

YES—Update the PCM if it does not have the latest software, or substitute a known-good PCM (see page 14-6), then recheck. If the symptom/indication goes away with a known-good PCM, replace the original PCM. ■

NO—Repair open in the wire between the A/T clutch pressure control solenoid valve A and ground (G101), or repair poor ground (G101), then go to step 10.

10. Clear the DTC with the HDS.

11. Test-drive the vehicle for several minutes in the D position through all five gears.

12. Monitor the OBD status for P0963 in the DTCs/Freeze Data in A/T Mode Menu for a pass/fail.

Does the result indicate PASSED?

YES—Troubleshooting is complete. ■

NO—Return to step 1 and recheck.

Protected by AR

DTC Troubleshooting (cont'd)

DTC P0966: Problem in A/T Clutch Pressure Control Solenoid Valve B Circuit

NOTE:
- Record all freeze data and review General Troubleshooting Information (see page 14-3) before you troubleshoot.
- This code is caused by an electrical circuit problem and cannot be caused by a mechanical problem in the transmission.

1. Clear the DTC with the HDS.
2. Check that DTC P0966 recurs.

   Is DTC P0966 indicated?

   YES—Go to step 6.

   NO—Go to step 3.
3. Choose Clutch Pressure Control Solenoid Control in Miscellaneous Test Menu, and test the A/T clutch pressure control solenoid valve B with the HDS.
4. Drive with the A/T clutch pressure control solenoid valve B at 1.0 A in Clutch Pressure Control Solenoid Control menu.
5. Monitor the OBD status for P0966 in the DTCs/ Freeze Data in A/T Mode Menu for a pass/fail.

   Does the result indicate FAILED?

   YES—Go to step 6.

   NO—Intermittent failure, the system is OK at this time. Check for poor connections and loose terminals at the A/T clutch pressure control solenoid valve B and PCM. If the tester indicates NOT COMPLETED, return to step 3 and recheck. ■
6. Turn the ignition switch OFF.
7. Disconnect the A/T clutch pressure control solenoid valve B connector.
8. Measure A/T clutch pressure control solenoid valve B resistance at the solenoid connector.

A/T CLUTCH PRESSURE CONTROL SOLENOID VALVE B CONNECTOR

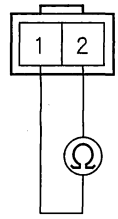

Terminal side of male terminals

Is there 3— 10 Ω ?

YES—Go to step 9.

NO—Replace A/T clutch pressure control solenoid valve B (see page 14-200), then go to step 12.

9. Check for continuity between A/T clutch pressure control solenoid valve B connector terminal No. 2 and body ground.

A/T CLUTCH PRESSURE CONTROL SOLENOID VALVE B CONNECTOR

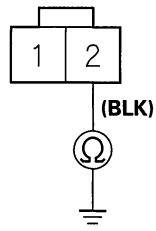

Wire side of female terminals

Is there continuity?

YES—Go to step 10.

NO—Repair open in the wire between the A/T clutch pressure control solenoid valve B and ground (G101), or repair poor ground (G101), then go to step 12.

BACK

Protected by AR

10. Turn the ignition switch ON (II).

11. Measure the voltage between A/T clutch pressure control solenoid valve B connector terminals No. 1 and No. 2.

A/T CLUTCH PRESSURE CONTROL SOLENOID VALVE B CONNECTOR

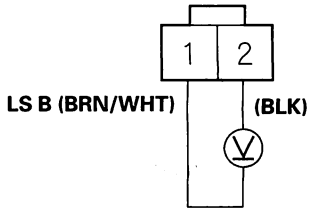

Wire side of female terminals

Is there about 11 V as the ignition switch is turned to the ON (II) position?

YES—Update the PCM if it does not have the latest software, or substitute a known-good PCM (see page 14-6), then recheck. If the symptom/indication goes away with a known-good PCM, replace the original PCM. ■

NO—Repair open or short in the wire between PCM connector terminal C15 and A/T clutch pressure control solenoid valve B, then go to step 12.

12. Clear the DTC with the HDS.

13. Test-drive the vehicle for several minutes in the D position through all five gears.

14. Monitor the OBD status for P0966 in the DTCs/Freeze Data in A/T Mode Menu for a pass/fail.

Does the result indicate FAILED?

YES—Troubleshooting is complete. ■

NO—Return to step 1 and recheck.

Protected by AR

DTC Troubleshooting (cont'd)

DTC P0967: Problem in A/T Clutch Pressure Control Solenoid Valve B

NOTE:
- Record all freeze data and review General Troubleshooting Information (see page 14-3) before you troubleshoot.
- This code is caused by an electrical circuit problem and cannot be caused by a mechanical problem in the transmission.

1. Clear the DTC with the HDS.
2. Check that DTC P0967 recurs.

   Is DTC P0967 indicated?

   YES—Go to step 6.

   NO—Go to step 3.
3. Choose Clutch Pressure Control Solenoid Control in Miscellaneous Test Menu, and test the A/T clutch pressure control solenoid valve B with the HDS.
4. Drive with the A/T clutch pressure control solenoid valve B at 0.2 A in Clutch Pressure Control Solenoid Control menu.
5. Monitor the OBD status for P0967 in the DTCs/ Freeze Data in A/T Mode Menu for a pass/fail.

   Does the result indicate FAILED?

   YES—Go to step 6.

   NO—Intermittent failure, the system is OK at this time. Check for poor connections or loose terminals at the A/T clutch pressure control solenoid valve B and PCM. If the tester indicates NOT COMPLETED, return to step 3 and recheck. ■
6. Turn the ignition switch OFF.
7. Disconnect the A/T clutch pressure control solenoid valve B connector.
8. Measure A/T clutch pressure control solenoid valve B resistance at the solenoid connector.

A/T CLUTCH PRESSURE CONTROL SOLENOID VALVE B CONNECTOR

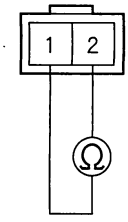

Terminal side of male terminals

Is there 3– 10 Ω ?

YES—Go to step 9.

NO—Replace A/T clutch pressure control solenoid valve B (see page 14-200), then go to step 10.

BACK

Protected by AR

9. Check for continuity between A/T clutch pressure control solenoid valve B connector terminal No. 2 and body ground.

A/T CLUTCH PRESSURE CONTROL SOLENOID VALVE B CONNECTOR

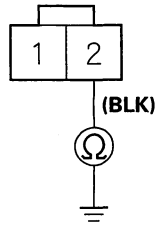

Wire side of female terminals

Is there continuity?

YES—Update the PCM if it does not have the latest software, or substitute a known-good PCM (see page 14-6), then recheck. If the symptom/indication goes away with a known-good PCM, replace the original PCM. ■

NO—Repair open in the wire between the A/T clutch pressure control solenoid valve B and ground (G101), or repair poor ground (G101), then go to step 10.

10. Clear the DTC with the HDS.

11. Test-drive the vehicle for several minutes in the D position through all five gears.

12. Monitor the OBD status for P0967 in the DTCs/Freeze Data in A/T Mode Menu for a pass/fail.

Does the result indicate PASSED?

YES—Troubleshooting is complete. ■

NO—Return to step 1 and recheck.

Protected by AR

DTC Troubleshooting (cont'd)

DTC P0970: Problem in A/T Clutch Pressure Control Solenoid Valve C Circuit

NOTE:
- Record all freeze data and review General Troubleshooting Information (see page 14-3) before you troubleshoot.
- This code is caused by an electrical circuit problem and cannot be caused by a mechanical problem in the transmission.

1. Clear the DTC with the HDS.
2. Check that DTC P0970 recurs.

   Is DTC P0970 indicated?

   YES—Go to step 6.

   NO—Go to step 3.
3. Choose Clutch Pressure Control Solenoid Control in Miscellaneous Test Menu, and test the A/T clutch pressure control solenoid valve C with the HDS.
4. Drive with the A/T clutch pressure control solenoid valve C at 1.0 A in Clutch Pressure Control Solenoid Control menu.
5. Monitor the OBD status for P0970 in the DTCs/ Freeze Data in A/T Mode Menu for a pass/fail.

   Does the result indicate FAILED?

   YES—Go to step 6.

   NO—Intermittent failure, the system is OK at this time. Check for poor connections or loose terminals at the A/T clutch pressure control solenoid valve C and PCM. If the tester indicates NOT COMPLETED, return to step 3 and recheck. ■
6. Turn the ignition switch OFF.
7. Disconnect the A/T clutch pressure control solenoid valve C connector.
8. Measure A/T clutch pressure control solenoid valve C resistance at the solenoid connector.

A/T CLUTCH PRESSURE CONTROL SOLENOID VALVE C CONNECTOR

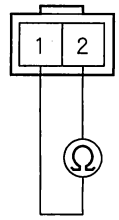

Terminal side of male terminals

Is there 3– 10 Ω ?

YES—Go to step 9.

NO—Replace A/T clutch pressure control solenoid valve C (see page 14-200), then go to step 12.

9. Check for continuity between A/T clutch pressure control solenoid valve C connector terminal No. 2 and body ground.

A/T CLUTCH PRESSURE CONTROL SOLENOID VALVE C CONNECTOR

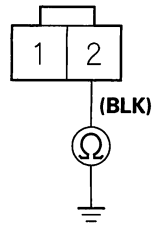

Wire side of female terminals

Is there continuity?

YES—Go to step 10.

NO—Repair open in the wire between the A/T clutch pressure control solenoid valve C and ground (G101), or repair poor ground (G101), then go to step 12.

BACK

Protected by AR

10. Turn the ignition switch ON (II).

11. Measure the voltage between A/T clutch pressure control solenoid valve C connector terminals No. 1 and No. 2.

A/T CLUTCH PRESSURE CONTROL SOLENOID VALVE C CONNECTOR

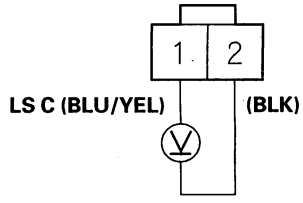

Wire side of female terminals

Is there about 11 V as the ignition switch is turned to the ON (II) position?

YES—Update the PCM if it does not have the latest software, or substitute a known-good PCM (see page 14-6), then recheck. If the symptom/indication goes away with a known-good PCM, replace the original PCM. ■

NO—Repair open or short in the wire between PCM connector terminal C7 and A/T clutch pressure control solenoid valve C, then go to step 12.

12. Clear the DTC with the HDS.

13. Test-drive the vehicle for several minutes in the D position through all five gears.

14. Monitor the OBD status for P0970 in the DTCs/Freeze Data in A/T Mode Menu for a pass/fail.

Does the result indicate PASSED?

YES—Troubleshooting is complete. ■

NO—Return to step 1 and recheck.

Protected by AR

DTC Troubleshooting (cont'd)

DTC P0971: Problem in A/T Clutch Pressure Control Solenoid Valve C

NOTE:
- Record all freeze data and review General Troubleshooting Information (see page 14-3) before you troubleshoot.
- This code is caused by an electrical circuit problem and cannot be caused by a mechanical problem in the transmission.

1. Clear the DTC with the HDS.
2. Check that DTC P0971 recurs.

   Is DTC P0971 indicated?

   YES—Go to step 6.

   NO—Go to step 3.
3. Choose Clutch Pressure Control Solenoid Control in Miscellaneous Test Menu, and test the A/T clutch pressure control solenoid valve C with the HDS.
4. Drive with the A/T clutch pressure control solenoid valve C at 0.2 A in Clutch Pressure Control Solenoid Control menu.
5. Monitor the OBD status for P0971 in the DTCs/ Freeze Data in A/T Mode Menu for a pass/fail.

   Does the result indicate FAILED?

   YES—Go to step 6.

   NO—Intermittent failure, the system is OK at this time. Check for poor connections or loose terminals at the A/T clutch pressure control solenoid valve C and PCM. If the tester indicates NOT COMPLETED, return to step 3 and recheck. ■
6. Turn the ignition switch OFF.
7. Disconnect the A/T clutch pressure control solenoid valve C connector.
8. Measure A/T clutch pressure control solenoid valve C resistance at the solenoid connector.

A/T CLUTCH PRESSURE CONTROL SOLENOID VALVE C CONNECTOR

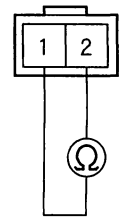

Terminal side of male terminals

Is there 3—10 Ω ?

YES—Go to step 9.

NO—Replace A/T clutch pressure control solenoid valve C (see page 14-200), then go to step 10.

BACK

Protected by AR

9. Check for continuity between A/T clutch pressure control solenoid valve C connector terminal No. 2 and body ground.

A/T CLUTCH PRESSURE CONTROL SOLENOID VALVE C CONNECTOR

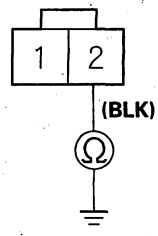

Wire side of female terminals

Is there continuity?

YES—Update the PCM if it does not have the latest software, or substitute a known-good PCM (see page 14-6), then recheck. If the symptom/indication goes away with a known-good PCM, replace the original PCM. ■

NO—Repair open in the wire between the A/T clutch pressure control solenoid valve C and ground (G101), or repair poor ground (G101), then go to step 10.

10. Clear the DTC with the HDS.

11. Test-drive the vehicle for several minutes in the D position through all five gears.

12. Monitor the OBD status for P0971 in the DTCs/Freeze Data in A/T Mode Menu for a pass/fail.

Does the result indicate PASSED?

YES—Troubleshooting is complete. ■

NO—Return to step 1 and recheck.

Protected by AR

DTC Troubleshooting (cont'd)

DTC P0973: Short in Shift Solenoid Valve A Circuit

NOTE:
- Record all freeze data and review General Troubleshooting Information (see page 14-3) before you troubleshoot.
- This code is caused by an electrical circuit problem and cannot be caused by a mechanical problem in the transmission.

1. Clear the DTC with the HDS.
2. Start the engine, and shift to the D position.
3. Check that DTC P0973 recurs.

   Is DTC P0973 indicated?

   YES—Go to step 7.

   NO—Go to step 4.
4. Choose Shift Solenoid A in Miscellaneous Test Menu, and test the shift solenoid valve A with the HDS.
5. Start the engine, and shift to the D position.
6. Monitor the OBD status for P0973 in the DTCs/ Freeze Data in A/T Mode Menu for a pass/fail.

   Does the result indicate FAILED?

   YES—Go to step 7.

   NO—Intermittent failure, the system is OK at this time. Check the BLU/BLK wire for an intermittent short to ground between shift solenoid valve A and PCM. If the tester indicates NOT COMPLETED, return to step 4 and recheck. ■
7. Turn the ignition switch OFF.
8. Jump the SCS line with the HDS.
9. Disconnect PCM connectors A (31P) and C (22P).
10. Measure the resistance between PCM connector terminals C6 and A9.

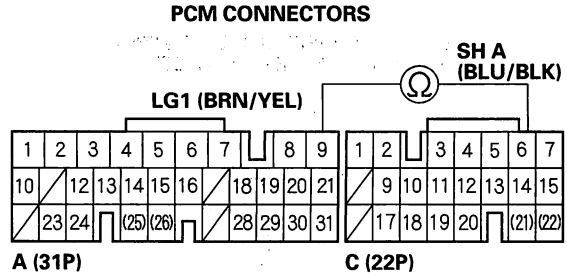

Wire side of female terminals

Is there less than 12 Ω ?

YES—Go to step 11.

NO—Update the PCM if it does not have the latest software, or substitute a known-good PCM (see page 14-6), then recheck. If the symptom/ indication goes away with a known-good PCM, replace the original PCM. ■

BACK

Protected by AR

11. Disconnect the shift solenoid harness connector at the transmission housing.

12. Check for continuity between PCM connector terminals C6 and A9.

PCM CONNECTORS

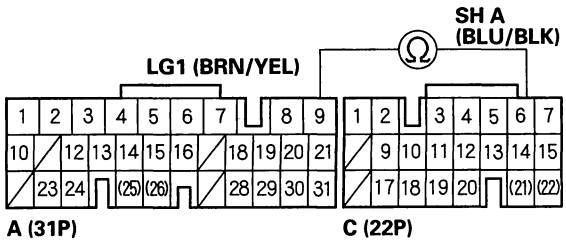

Wire side of female terminals

Is there continuity?

YES—Repair short to ground in the wire between PCM connector terminal C6 and the shift solenoid harness connector, then go to step 13.

NO—Check shift solenoid valve A, and check for a short in the shift solenoid harness in the transmission (see page 14-191). Replace shift solenoid valve A and/or shift solenoid harness, then go to step 13.

13. Clear the DTC with the HDS.

14. Start the engine, and shift to the D position.

15. Monitor the OBD status for P0973 in the DTCs/ Freeze Data in A/T Mode Menu for a pass/fail.

Does the result indicate PASSED?

YES—Troubleshooting is complete. ■

NO—Return to step 1 and recheck.

Protected by AR

DTC Troubleshooting (cont'd)

DTC P0974: Open in Shift Solenoid Valve A Circuit

NOTE:
- Record all freeze data and review General Troubleshooting Information (see page 14-3) before you troubleshoot.
- This code is caused by an electrical circuit problem and cannot be caused by a mechanical problem in the transmission.

1. Clear the DTC with the HDS.
2. Start the engine in the P position.
3. Check that DTC P0974 recurs.

   Is DTC P0974 indicated?

   YES—Go to step 7.

   NO—Go to step 4.
4. Choose Shift Solenoid A in Miscellaneous Test Menu, and test the shift solenoid valve A with the HDS.
5. Start the engine in the P position.
6. Monitor the OBD status for P0974 in the DTCs/ Freeze Data in A/T Mode Menu for a pass/fail.

   Does the result indicate FAILED?

   YES—Go to step 7.

   NO—Intermittent failure, the system is OK at this time. Check for poor connections or loose terminals at the shift solenoid valve A and PCM. If the tester indicates NOT COMPLETED, return to step 4 and recheck. ■
7. Turn the ignition switch OFF.
8. Jump the SCS line with the HDS.
9. Disconnect PCM connectors A (31P) and C (22P).
10. Measure the resistance between PCM connector terminals C6 and A9.

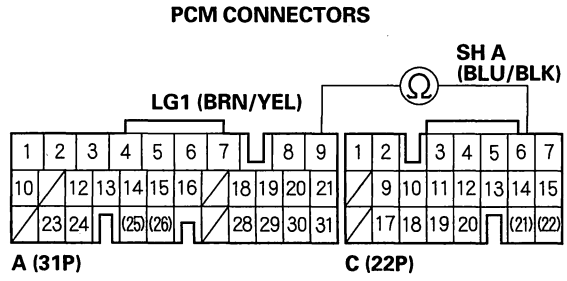

Wire side of female terminals

Is there 12—25 Ω ?

YES—Check for loose or poor connections at PCM connector terminal C6. If the connection is OK, update the PCM if it does not have the latest software, or substitute a known-good PCM (see page 14-6), then recheck. If the symptom/ indication goes away with a known-good PCM, replace the original PCM. ■

NO—Go to step 11.

BACK

Protected by AR

11. Disconnect the shift solenoid harness connector at the transmission housing.

12. Measure the resistance between shift solenoid harness connector terminal No. 5 and body ground.

SHIFT SOLENOID HARNESS CONNECTOR

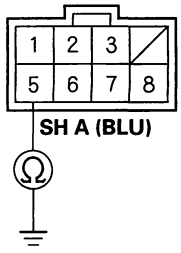

Terminal side of male terminals

Is there 12—25 Ω ?

YES—Repair open in the wire between PCM connector terminal C6 and the shift solenoid harness connector, then go to step 13.

NO—Check shift solenoid valve A, and check for an open in the shift solenoid harness in the transmission (see page 14-191). Replace shift solenoid valve A and/or shift solenoid harness, then go to step 13.

13. Clear the DTC with the HDS.

14. Start the engine in the P position.

15. Monitor the OBD status for P0974 in the DTCs/ Freeze Data in A/T Mode Menu for a pass/fail.

Does the result indicate PASSED?

YES—Troubleshooting is complete. ■

NO—Return to step 1 and recheck.

Protected by AR

DTC Troubleshooting (cont'd)

DTC P0976: Short in Shift Solenoid Valve B Circuit

NOTE:
- Record all freeze data and review General Troubleshooting Information (see page 14-3) before you troubleshoot.
- This code is caused by an electrical circuit problem and cannot be caused by a mechanical problem in the transmission.

1. Clear the DTC with the HDS.
2. Start the engine in the P position.
3. Check that DTC P0976 recurs.

   Is DTC P0976 indicated?

   YES—Go to step 7.

   NO—Go to step 4.
4. Choose Shift Solenoid B in Miscellaneous Test Menu, and test the shift solenoid valve B with the HDS.
5. Start the engine in the P position.
6. Monitor the OBD status for P0976 in the DTCs/ Freeze Data in A/T Mode Menu for a pass/fail.

   Does the result indicate FAILED?

   YES—Go to step 7.

   NO—Intermittent failure, the system is OK at this time. Check the GRN/WHT wire for an intermittent short to ground between the shift solenoid valve B and PCM. If the tester indicates NOT COMPLETED, return to step 4 and recheck.■
7. Turn the ignition switch OFF.
8. Jump the SCS line with the HDS.
9. Disconnect PCM connectors A (31P) and C (22P).
10. Measure the resistance between PCM connector terminals C4 and A9.

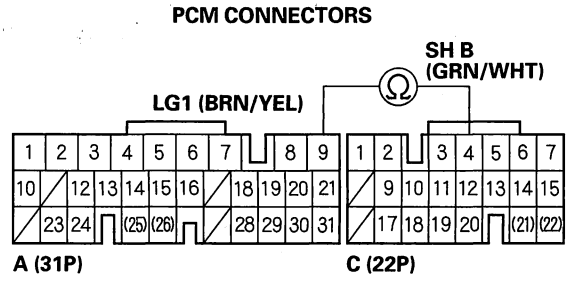

Wire side of female terminals

Is there less than 12 Ω ?

YES—Go to step 11.

NO—Update the PCM if it does not have the latest software, or substitute a known-good PCM (see page 14-6), then recheck. If the symptom/ indication goes away with a known-good PCM, replace the original PCM.■

BACK

Protected by AR

11. Disconnect the shift solenoid harness connector at the transmission housing.

12. Check for continuity between PCM connector terminals C4 and A9.

PCM CONNECTORS

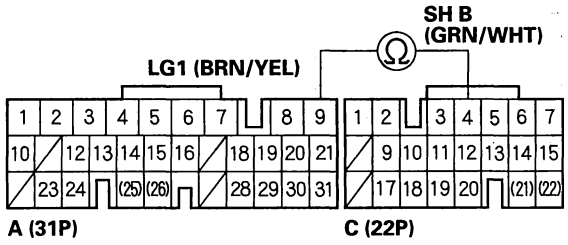

Wire side of female terminals

Is there continuity?

YES—Repair short to ground in the wire between PCM connector terminal C4 and the shift solenoid harness connector, then go to step 13.

NO—Check shift solenoid valve B, and check for a short in the shift solenoid harness in the transmission (see page 14-191). Replace shift solenoid valve B and/or shift solenoid harness, then go to step 13.

13. Clear the DTC with the HDS.

14. Start the engine in the P position.

15. Monitor the OBD status for P0976 in the DTCs/ Freeze Data in A/T Mode Menu for a pass/fail.

Does the result indicate PASSED?

YES—Troubleshooting is complete. ■

NO—Return to step 1 and recheck.

BACK

Protected by AR

DTC Troubleshooting (cont'd)

DTC P0977: Open in Shift Solenoid Valve B Circuit

NOTE:
- Record all freeze data and review General Troubleshooting Information (see page 14-3) before you troubleshoot.
- This code is caused by an electrical circuit problem and cannot be caused by a mechanical problem in the transmission.

1. Clear the DTC with the HDS.
2. Test-drive the vehicle for several minutes in 1st, 2nd and 3rd gears in the D3 position.
3. Check that DTC P0977 recurs.

   Is DTC P0977 indicated?

   YES—Go to step 7.

   NO—Go to step 4.
4. Choose Shift Solenoid B in Miscellaneous Test Menu, and test the shift solenoid valve B with the HDS.
5. Test-drive the vehicle for several minutes in 1st, 2nd and 3rd gears in the D3 position.
6. Monitor the OBD status for P0977 in the DTCs/ Freeze Data in A/T Mode Menu for a pass/fail.

   Does the result indicate FAILED?

   YES—Go to step 7.

   NO—Intermittent failure, the system is OK at this time. Check for poor connections or loose terminals at the shift solenoid valve B and PCM. If the tester indicates NOT COMPLETED, return to step 4 and recheck.■
7. Turn the ignition switch OFF.
8. Jump the SCS line with the HDS.
9. Disconnect PCM connectors A (31P) and C (22P).
10. Measure the resistance between PCM connector terminals C4 and A9.

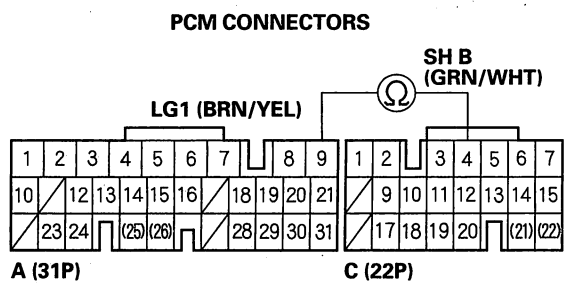

Wire side of female terminals

Is there 12—25 Ω ?

YES—Check for loose or poor connections at PCM connector terminal C4. If the connection is OK, update the PCM if it does not have the latest software, or substitute a known-good PCM (see page 14-6), then recheck. If the symptom/ indication goes away with a known-good PCM, replace the original PCM.■

NO—Go to step 11.

BACK

Protected by AR

11. Disconnect the shift solenoid harness connector at the transmission housing.

12. Measure the resistance between shift solenoid harness connector terminal No. 2 and body ground.

SHIFT SOLENOID HARNESS CONNECTOR

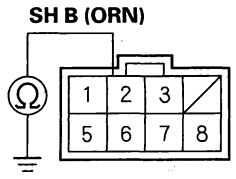

Terminal side of male terminals

Is there 12–25 Ω ?

YES—Repair open in the wire between PCM connector terminal C4 and the shift solenoid harness connector, then go to step 13.

NO—Check shift solenoid valve B, and check for an open in the shift solenoid harness in the transmission (see page 14-191). Replace shift solenoid valve B and/or shift solenoid harness, then go to step 13.

13. Clear the DTC with the HDS.

14. Test-drive the vehicle for several minutes in 1st, 2nd and 3rd gears in the D3 position.

15. Monitor the OBD status for P0977 in the DTCs/ Freeze Data in A/T Mode Menu for a pass/fail.

Does the result indicate PASSED?

YES—Troubleshooting is complete.■

NO—Return to step 1 and recheck.

Protected by AR

DTC Troubleshooting (cont'd)

DTC P0979: Short in Shift Solenoid Valve C Circuit

NOTE:
- Record all freeze data and review General Troubleshooting Information (see page 14-3) before you troubleshoot.
- This code is caused by an electrical circuit problem and cannot be caused by a mechanical problem in the transmission.

1. Clear the DTC with the HDS.
2. Start the engine, and shift to the D position.
3. Check that DTC P0979 recurs.

   Is DTC P0979 indicated?

   YES—Go to step 7.

   NO—Go to step 4.
4. Choose Shift Solenoid C in Miscellaneous Test Menu, and test the shift solenoid valve C with the HDS.
5. Start the engine, and shift to the D position.
6. Monitor the OBD status for P0979 in the DTCs/ Freeze Data in A/T Mode Menu for a pass/fail.

   Does the result indicate FAILED?

   YES—Go to step 7.

   NO—Intermittent failure, the system is OK at this time. Check the GRN wire for an intermittent short to ground between the shift solenoid valve C and PCM. If the tester indicates NOT COMPLETED, return to step 4 and recheck. ■
7. Turn the ignition switch OFF.
8. Jump the SCS line with the HDS.
9. Disconnect PCM connectors A (31P) and C (22P).
10. Measure the resistance between PCM connector terminals C2 and A9.

PCM CONNECTORS

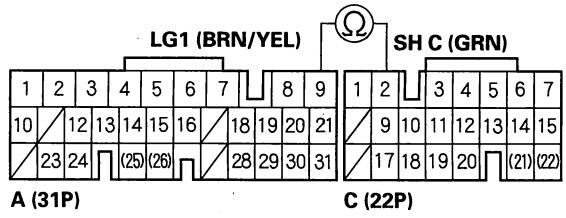

Wire side of female terminals

Is there less than 12 Ω ?

YES—Go to step 11.

NO—Update the PCM if it does not have the latest software, or substitute a known-good PCM (see page 14-6), then recheck. If the symptom/ indication goes away with a known-good PCM, replace the original PCM. ■

BACK

Protected by AR

11. Disconnect the shift solenoid harness connector at the transmission housing.

12. Check for continuity between PCM connector terminals C2 and A9.

PCM CONNECTORS

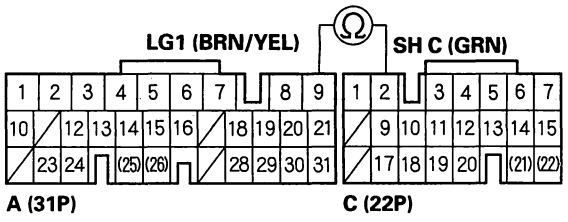

Wire side of female terminals

Is there continuity?

YES—Repair short to ground in the wire between PCM connector terminal C2 and the shift solenoid harness connector, then go to step 13.

NO—Check shift solenoid valve C, and check for a short in the shift solenoid harness in the transmission (see page 14-191). Replace shift solenoid valve C and/or shift solenoid harness, then go to step 13.

13. Clear the DTC with the HDS.

14. Start the engine, and shift to the D position.

15. Monitor the OBD status for P0979 in the DTCs/ Freeze Data in A/T Mode Menu for a pass/fail.

Does the result indicate PASSED?

YES—Troubleshooting is complete. ■

NO—Return to step 1 and recheck.

Protected by AR

DTC Troubleshooting (cont'd)

DTC P0980: Open in Shift Solenoid Valve C Circuit

NOTE:
- Record all freeze data and review General Troubleshooting Information (see page 14-3) before you troubleshoot.
- This code is caused by an electrical circuit problem and cannot be caused by a mechanical problem in the transmission.

1. Clear the DTC with the HDS.
2. Start the engine in the P position.
3. Check that DTC P0980 recurs.

   Is DTC P0980 indicated?

   YES—Go to step 7.

   NO—Go to step 4.
4. Choose Shift Solenoid C in Miscellaneous Test Menu, and test the shift solenoid valve C with the HDS.
5. Start the engine in the P position.
6. Monitor the OBD status for P0980 in the DTCs/ Freeze Data in A/T Mode Menu for a pass/fail.

   Does the result indicate FAILED?

   YES—Go to step 7.

   NO—Intermittent failure, the system is OK at this time. Check for poor connections or loose terminals at the shift solenoid valve C and PCM. If the tester indicates NOT COMPLETED, return to step 4 and recheck. ■
7. Turn the ignition switch OFF.
8. Jump the SCS line with the HDS.
9. Disconnect PCM connectors A (31P) and C (22P).
10. Measure the resistance between PCM connector terminals C2 and A9.

PCM CONNECTORS

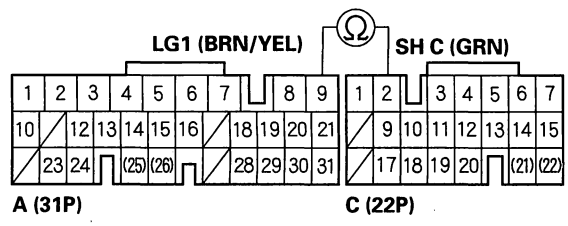

Wire side of female terminals

Is there 12—25 Ω ?

YES—Check for loose or poor connections at PCM connector terminal C2. If the connection is OK, update the PCM if it does not have the latest software, or substitute a known-good PCM (see page 14-6), then recheck. If the symptom/ indication goes away with a known-good PCM, replace the original PCM. ■

NO—Go to step 11.

BACK

Protected by AR

11. Disconnect the shift solenoid harness connector at the transmission housing.

12. Measure the resistance between shift solenoid harness connector terminal No. 1 and body ground.

SHIFT SOLENOID HARNESS CONNECTOR

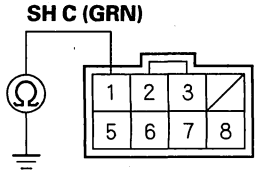

Terminal side of male terminals

Is there 12—25 Ω ?

YES—Repair open in the wire between PCM connector terminal C2 and the shift solenoid harness connector, then go to step 13.

NO—Check shift solenoid valve C, and check for an open in the shift solenoid harness in the transmission (see page 14-191). Replace shift solenoid valve C and/or shift solenoid harness, then go to step 13.

13. Clear the DTC with the HDS.

14. Start the engine in the P position.

15. Monitor the OBD status for P0980 in the DTCs/ Freeze Data in A/T Mode Menu for a pass/fail.

Does the result indicate PASSED?

YES—Troubleshooting is complete. ■

NO—Return to step 1 and recheck.

Protected by AR

DTC Troubleshooting (cont'd)

DTC P0982: Short in Shift Solenoid Valve D Circuit

NOTE:
- Record all freeze data and review General Troubleshooting Information (see page 14-3) before you troubleshoot.
- This code is caused by an electrical circuit problem and cannot be caused by a mechanical problem in the transmission.

1. Clear the DTC with the HDS.
2. Test-drive the vehicle for several minutes in 1st and 2nd gears in the D position.
3. Check that DTC P0982 recurs.

   Is DTC P0982 indicated?

   YES—Go to step 7.

   NO—Go to step 4.
4. Choose Shift Solenoid D in Miscellaneous Test Menu, and test the shift solenoid valve D with the HDS.
5. Test-drive the vehicle for several minutes in 1st and 2nd gears in the D position.
6. Monitor the OBD status for P0982 in the DTCs/ Freeze Data in A/T Mode Menu for a pass/fail.

   Does the result indicate FAILED?

   YES—Go to step 7.

   NO—Intermittent failure, the system is OK at this time. Check the GRN/RED wire for an intermittent short to ground between the shift solenoid valve D and PCM. If the tester indicates NOT COMPLETED, return to step 4 and recheck.■
7. Turn the ignition switch OFF.
8. Jump the SCS line with the HDS.
9. Disconnect PCM connectors A (31P) and C (22P).
10. Measure the resistance between PCM connector terminals C5 and A9.

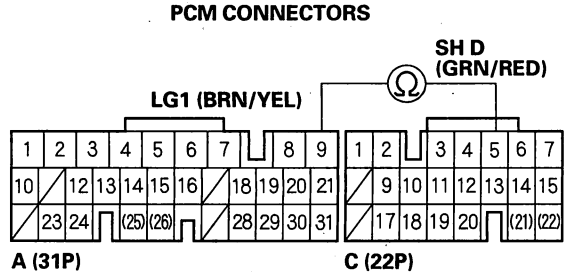

Wire side of female terminals

Is there less than 12 Ω ?

YES—Go to step 11.

NO—Update the PCM if it does not have the latest software, or substitute a known-good PCM (see page 14-6), then recheck. If the symptom/ indication goes away with a known-good PCM, replace the original PCM.■

BACK

Protected by AR

11. Disconnect the shift solenoid harness connector at the transmission housing.

12. Check for continuity between PCM connector terminals C5 and A9.

PCM CONNECTORS

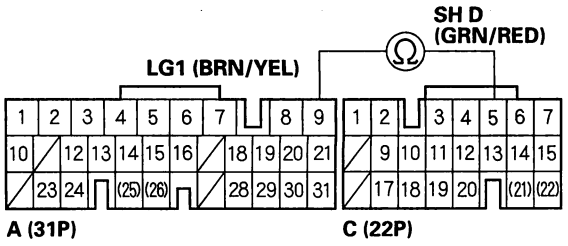

Wire side of female terminals

Is there continuity?

YES—Repair short to ground in the wire between PCM connector terminal C5 and the shift solenoid harness connector, then go to step 13.

NO—Check shift solenoid valve D, and check for a short in the shift solenoid harness in the transmission (see page 14-191). Replace shift solenoid valve D and/or shift solenoid harness, then go step 13.

13. Clear the DTC with the HDS.

14. Test-drive the vehicle for several minutes in 1st and 2nd gears in the D position.

15. Monitor the OBD status for P0982 in the DTCs/ Freeze Data in A/T Mode Menu for a pass/fail.

Does the result indicate PASSED?

YES—Troubleshooting is complete. ■

NO—Return to step 1 and recheck.

Protected by AR

DTC Troubleshooting (cont'd)

DTC P0983: Open in Shift Solenoid Valve D Circuit

NOTE:
- Record all freeze data and review General Troubleshooting Information (see page 14-3) before you troubleshoot.
- This code is caused by an electrical circuit problem and cannot be caused by a mechanical problem in the transmission.

1. Clear the DTC with the HDS.
2. Start the engine in the P position.
3. Check that DTC P0983 recurs.

   Is DTC P0983 indicated?

   YES—Go to step 6.

   NO—Go to step 4.
4. Choose Shift Solenoid D in Miscellaneous Test Menu, and test the shift solenoid valve D with the HDS.
5. Monitor the OBD status for P0983 in the DTCs/ Freeze Data in A/T Mode Menu for a pass/fail.

   Does the result indicate FAILED?

   YES—Go to step 6.

   NO—Intermittent failure, the system is OK at this time. Check for poor connections or loose terminals at the shift solenoid valve D and PCM. If the tester indicates NOT COMPLETED, return to step 4 and recheck. ■
6. Turn the ignition switch OFF.
7. Jump the SCS line with the HDS.
8. Disconnect PCM connectors A (31P) and C (22P).
9. Measure the resistance between PCM connector terminals C5 and A9.

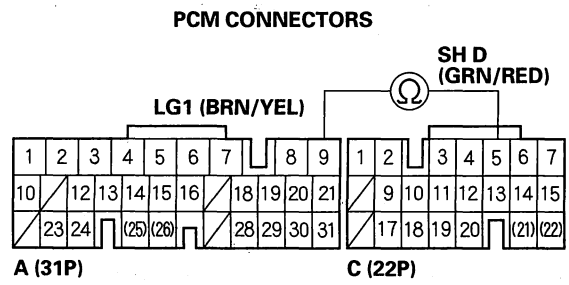

Wire side of female terminals

Is there 12—25 Ω ?

YES—Check for loose or poor connections at PCM connector terminal C5. If the connection is OK, update the PCM if it does not have the latest software, or substitute a known-good PCM (see page 14-6), then recheck. If the symptom/ indication goes away with a known-good PCM, replace the original PCM. ■

NO—Go to step 10.

BACK

Protected by AR

10. Disconnect the shift solenoid harness connector at the transmission housing.

11. Measure the resistance between shift solenoid harness connector terminal No. 8 and body ground.

SHIFT SOLENOID HARNESS CONNECTOR

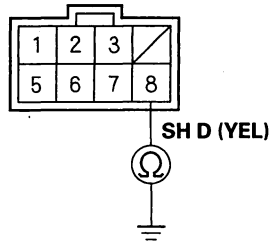

Terminal side of male terminals

Is there 12–25 Ω ?

YES—Repair open in the wire between PCM connector terminal C5 and the shift solenoid harness connector, then go to step 12.

NO—Check shift solenoid valve D, and check for an open in the shift solenoid harness in the transmission (see page 14-191). Replace shift solenoid valve D and/or shift solenoid harness, then go to step 12.

12. Clear the DTC with the HDS.

13. Start the engine in the P position.

14. Monitor the OBD status for P0983 in the DTCs/ Freeze Data in A/T Mode Menu for a pass/fail.

Does the result indicate PASSED?

YES—Troubleshooting is complete.■

NO—Return to step 1 and recheck.

Protected by AR

DTC Troubleshooting (cont'd)

DTC P0985: Short in Shift Solenoid Valve E Circuit

NOTE:
- Record all freeze data and review General Troubleshooting Information (see page 14-3) before you troubleshoot.
- This code is caused by an electrical circuit problem and cannot be caused by a mechanical problem in the transmission.

1. Clear the DTC with the HDS.
2. Start the engine in the P position.
3. Check that DTC P0985 recurs.

   Is DTC P0985 indicated?

   YES—Go to step 6.

   NO—Go to step 4.
4. Choose Shift Solenoid E in Miscellaneous Test Menu, and test the shift solenoid valve E with the HDS.
5. Monitor the OBD status for P0985 in the DTCs/ Freeze Data in A/T Mode Menu for a pass/fail.

   Does the result indicate FAILED?

   YES—Go to step 6.

   NO—Intermittent failure, the system is OK at this time. Check the YEL wire for an intermittent short to ground between the shift solenoid valve E and PCM. If the tester indicates NOT COMPLETED, return to step 4 and recheck.■
6. Turn the ignition switch OFF.
7. Jump the SCS line with the HDS.
8. Disconnect PCM connectors A (31P) and C (22P).
9. Measure the resistance between PCM connector terminals C3 and A9.

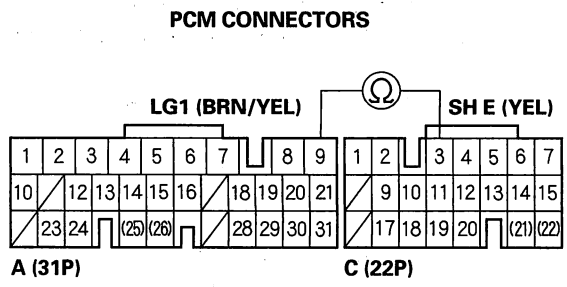

Wire side of female terminals

Is there less than 12 Ω ?

YES—Go to step 10.

NO—Update the PCM if it does not have the latest software, or substitute a known-good PCM (see page 14-6), then recheck. If the symptom/ indication goes away with a known-good PCM, replace the original PCM.■

BACK

Protected by AR

10. Disconnect the shift solenoid harness connector at the transmission housing.

11. Check for continuity between PCM connector terminals C3 and A9.

PCM CONNECTORS

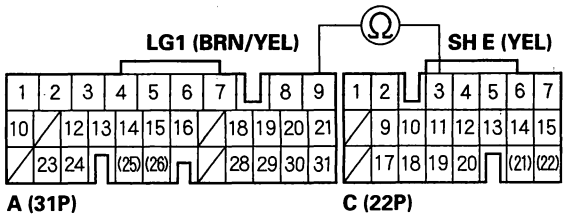

Wire side of female terminals

Is there continuity?

YES—Repair short to ground in the wire between PCM connector terminal C3 and the shift solenoid harness connector, then go to step 12.

NO—Check shift solenoid valve E, and check for a short in the shift solenoid harness in the transmission (see page 14-191). Replace shift solenoid valve E and/or shift solenoid harness, then go to step 12.

12. Clear the DTC with the HDS.

13. Start the engine in the P position.

14. Monitor the OBD status for P0985 in the DTCs/ Freeze Data in A/T Mode Menu for a pass/fail.

Does the result indicate PASSED?

YES—Troubleshooting is complete.■

NO—Return to step 1 and recheck.

Protected by AR

DTC Troubleshooting (cont'd)

DTC P0986: Open in Shift Solenoid Valve E Circuit

NOTE:
- Record all freeze data and review General Troubleshooting Information (see page 14-3) before you troubleshoot.
- This code is caused by an electrical circuit problem and cannot be caused by a mechanical problem in the transmission.

1. Clear the DTC with the HDS.
2. Test-drive the vehicle for several minutes in 1st and 2nd gears in the D position.
3. Check that DTC P0986 recurs.

   Is DTC P0986 indicated?

   YES—Go to step 7.

   NO—Go to step 4.
4. Choose Shift Solenoid E in Miscellaneous Test Menu, and test the shift solenoid valve E with the HDS.
5. Test-drive the vehicle for several minutes in 1st and 2nd gears in the D position.
6. Monitor the OBD status for P0986 in the DTCs/ Freeze Data in A/T Mode Menu for a pass/fail.

   Does the result indicate FAILED?

   YES—Go to step 7.

   NO—Intermittent failure, the system is OK at this time. Check for poor connections or loose terminals at the shift solenoid valve E and PCM. If the tester indicates NOT COMPLETED, return to step 4 and recheck. ■
7. Turn the ignition switch OFF.
8. Jump the SCS line with the HDS.
9. Disconnect PCM connectors A (31P) and C (22P).
10. Measure the resistance between PCM connector terminals C3 and A9.

PCM CONNECTORS

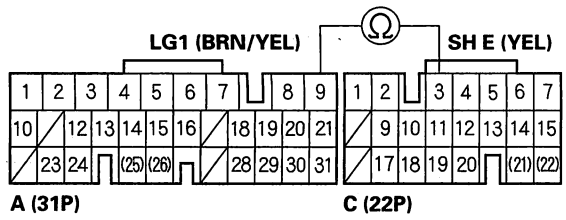

Wire side of female terminals

Is there 12—25 Ω ?

YES—Check for loose or poor connections at PCM connector terminal C3. If the connection is OK, update the PCM if it does not have the latest software, or substitute a known-good PCM (see page 14-6), then recheck. If the symptom/ indication goes away with a known-good PCM, replace the original PCM. ■

NO—Go to step 11.

BACK

Protected by AR

11. Disconnect the shift solenoid harness connector at the transmission housing.

12. Check for continuity between shift solenoid harness connector terminal No. 3 and body ground.

SHIFT SOLENOID HARNESS CONNECTOR

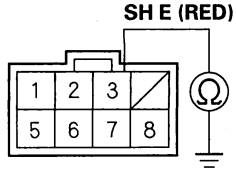

Terminal side of male terminals

Is there 12—25 Ω ?

YES—Repair open in the wire between PCM connector terminal C3 and the shift solenoid harness connector, then go to step 13.

NO—Check shift solenoid valve E, and check for an open in the shift solenoid harness in the transmission (see page 14-191). Replace shift solenoid valve E and/or shift solenoid harness, then go to step 13.

13. Clear the DTC with the HDS.

14. Test-drive the vehicle for several minutes in 1st and 2nd gears in the D position.

15. Monitor the OBD status for P0986 in the DTCs/ Freeze Data in A/T Mode Menu for a pass/fail.

Does the result indicate PASSED?

YES—Troubleshooting is complete.■

NO—Return to step 1 and recheck.

Protected by AR

DTC Troubleshooting (cont'd)

DTC P1730: Problem in Shift Control System:

- Shift Solenoid Valves A or D Stuck OFF
- Shift Solenoid Valve B Stuck ON
- Shift Valves A, B, or D Stuck

NOTE: Record all freeze data and review General Troubleshooting Information (see page 14-3) before you troubleshoot.

1. Warm up the engine to normal operating temperature (the radiator fan comes on).

2. Make sure that the transmission is filled to the proper level, and check for fluid leaks.

3. Drain the ATF (see step 3 on page 14-208) through a strainer. Inspect the strainer for metal debris or excessive clutch material.

   Does the strainer contain metal debris or excessive clutch material?

   YES—Replace the transmission.■

   NO—Replace the ATF (see step 4 on page 14-208), then go to step 4.

4. Clear the DTC with the HDS.

5. Test-drive the vehicle in the D position through all five gears at speeds over 12 mph (20 km/h) for more than 20 seconds, then slow down to a stop.

6. Retest-drive the vehicle in the D position through all five gears at speeds over 12 mph (20 km/h) for more than 20 seconds, then slow down to a stop.

7. Monitor the OBD status for P1730 in the DTCs/ Freeze Data in A/T Mode Menu for a pass/fail.

   Does the result indicate FAILED?

   YES—Go to step 8.

   NO—Intermittent failure, the system is OK at this time. If the tester indicates NOT COMPLETED, return to step 5 and recheck.■

8. Clear the DTC with the HDS.

9. Choose Shift Solenoid A in Miscellaneous Test Menu, and check that the shift solenoid valve A operates with the HDS.

   Is a clicking sound heard?

   YES—Go to step 10.

   NO—Replace shift solenoid valve A (see page 14-194), then go to step 15.

10. Choose Shift Solenoid B in Miscellaneous Test Menu, and check that the shift solenoid valve B operates with the HDS.

    Is a clicking sound heard?

    YES—Go to step 11.

    NO—Replace shift solenoid valve B (see page 14-194), then go to step 15.

11. Choose Shift Solenoid D in Miscellaneous Test Menu, and check that the shift solenoid valve D operates with the HDS.

    Is a clicking sound heard?

    YES—Go to step 12.

    NO—Replace shift solenoid valve D (see page 14-194), then go to step 15.

12. Test-drive the vehicle in the D position through all five gears at speeds over 12 mph (20 km/h) for more than 20 seconds, then slow down to a stop.

13. Retest-drive the vehicle in the D position through all five gears at speeds over 12 mph (20 km/h) for more than 20 seconds, then slow down to a stop.

14. Monitor the OBD status for P1730 in the DTCs/ Freeze Data in A/T Mode Menu for a pass/fail.

    Does the result indicate FAILED?

    YES—Repair hydraulic system related with shift valves A, B, and D, or replace the transmission, then go to step 15.

    NO—Intermittent failure, the system is OK at this time. If the tester indicates NOT COMPLETED, return to step 12 and recheck.■

BACK

Protected by AR

15. Clear the DTC with the HDS.

16. Test-drive the vehicle in the D position through all five gears at speeds over 12 mph (20 km/h) for more than 20 seconds, then slow down to a stop.

17. Retest-drive the vehicle in the D position through all five gears at speeds over 12 mph (20 km/h) for more than 20 seconds, then slow down to a stop.

18. Monitor the OBD status for P1730 in the DTCs/ Freeze Data in A/T Mode Menu for a pass/fail.

    Does the result indicate PASSED?

    YES—Troubleshooting is complete.■

    NO—Return to step 8 and recheck.

Protected by AR

DTC Troubleshooting (cont'd)

DTC P1731: Problem in Shift Control System:

- Shift Solenoid Valve E Stuck ON
- Shift Valve E Stuck
- A/T Clutch Pressure Control Solenoid Valve A Stuck OFF

NOTE: Record all freeze data and review General Troubleshooting Information (see page 14-3) before you troubleshoot.

1. Warm up the engine to normal operating temperature (the radiator fan comes on).

2. Make sure that the transmission is filled to the proper level, and check for fluid leaks.

3. Drain the ATF (see step 3 on page 14-208) through a strainer. Inspect the strainer for metal debris or excessive clutch material.

   Does the strainer contain metal debris or excessive clutch material?

   YES—Replace the transmission.■

   NO—Replace the ATF (see step 4 on page 14-208), then go to step 4.

4. Clear the DTC with the HDS.

5. Test-drive the vehicle in the D position through all five gears at speeds over 12 mph (20 km/h) for more than 20 seconds, then slow down to a stop.

6. Retest-drive the vehicle in the D position through all five gears at speeds over 12 mph (20 km/h) for more than 20 seconds, then slow down to a stop.

7. Monitor the OBD status for P1731 in the DTCs/ Freeze Data in A/T Mode Menu for a pass/fail.

   Does the result indicate FAILED?

   YES—Go to step 8.

   NO—Intermittent failure, the system is OK at this time. If the tester indicates NOT COMPLETED, return to step 5 and recheck.■

8. Clear the DTC with the HDS.

9. Choose Shift Solenoid E in Miscellaneous Test Menu, and check that the shift solenoid valve E operates with the HDS.

   Is a clicking sound heard?

   YES—Go to step 10.

   NO—Replace shift solenoid valve E (see page 14-194), then go to step 12.

10. Choose Clutch Pressure Control (Linear) Solenoid A in Miscellaneous Test Menu, and test the A/T clutch pressure control solenoid valve A with the HDS.

    Is the system OK?

    YES—Intermittent failure, the system is OK at this time. If the tester indicates NOT COMPLETED, return to step 10 and recheck.■

    NO—Follow instructions indicated on the HDS by the test result, but if the tester has not determined the cause of the failure, go to step 11. If any part was replaced, go to step 12.

11. Inspect A/T clutch pressure control solenoid valve A (see page 14-197).

    Dose the A/T clutch pressure control solenoid valve A work properly?

    YES—Repair hydraulic system related with shift valve E, or replace the transmission, then go to step 12.

    NO—Replace A/T clutch pressure control solenoid valve A (see page 14-198), then go to step 12.

BACK

Protected by AR

12. Clear the DTC with the HDS.

13. Test-drive the vehicle in the D position through all five gears at speeds over 12 mph (20 km/h) for more than 20 seconds, then slow down to a stop.

14. Retest-drive the vehicle in the D position through all five gears at speeds over 12 mph (20 km/h) for more than 20 seconds, then slow down to a stop.

15. Monitor the OBD status for P1731 in the DTCs/ Freeze Data in A/T Mode Menu for a pass/fail.

    Does the result indicate PASSED?

    YES—Troubleshooting is complete. ■

    NO—Return to step 8 and recheck.

Protected by AR

DTC Troubleshooting (cont'd)

DTC P1732: Problem in Shift Control System:

- Shift Solenoid Valves B or C Stuck ON
- Shift Valves B or C Stuck

NOTE: Record all freeze data and review General Troubleshooting Information (see page 14-3) before you troubleshoot.

1. Warm up the engine to normal operating temperature (the radiator fan comes on).
2. Make sure that the transmission is filled to the proper level, and check for fluid leaks.
3. Drain the ATF (see step 3 on page 14-208) through a strainer. Inspect the strainer for metal debris or excessive clutch material.

   Does the strainer contain metal debris or excessive clutch material?

   YES—Replace the transmission.■

   NO—Replace the ATF (see step 4 on page 14-208), then go to step 4.
4. Clear the DTC with the HDS.
5. Test-drive the vehicle in the D position through all five gears at speeds over 12 mph (20 km/h) for more than 20 seconds, then slow down to a stop.
6. Retest-drive the vehicle in the D position through all five gears at speeds over 12 mph (20 km/h) for more than 20 seconds, then slow down to a stop.
7. Monitor the OBD status for P1732 in the DTCs/ Freeze Data in A/T Mode Menu for a pass/fail.

   Does the result indicate FAILED?

   YES—Go to step 8.

   NO—Intermittent failure, the system is OK at this time. If the tester indicates NOT COMPLETED, return to step 5 and recheck.■
8. Clear the DTC with the HDS.
9. Choose Shift Solenoid B in Miscellaneous Test Menu, and check that the shift solenoid valve B operates with the HDS.

   Is a clicking sound heard?

   YES—Go to step 10.

   NO—Replace shift solenoid valve B (see page 14-194), then go to step 14.
10. Choose Shift Solenoid C in Miscellaneous Test Menu, and check that the shift solenoid valve C operates with the HDS.

    Is a clicking sound heard?

    YES—Go to step 11.

    NO—Replace shift solenoid valve C (see page 14-194), then go to step 14.
11. Test-drive the vehicle in the D position through all five gears at speeds over 12 mph (20 km/h) for more than 20 seconds, then slow down to a stop.
12. Retest-drive the vehicle in the D position through all five gears at speeds over 12 mph (20 km/h) for more than 20 seconds, then slow down to a stop.
13. Monitor the OBD status for P1732 in the DTCs/ Freeze Data in A/T Mode Menu for a pass/fail.

    Does the result indicate FAILED?

    YES—Repair hydraulic system related with shift valves B and C, or replace the transmission, then go to step 14.

    NO—Intermittent failure, the system is OK at this time. If the tester indicates NOT COMPLETED, return to step 14 and recheck.■

BACK

Protected by AR

14. Clear the DTC with the HDS.

15. Test-drive the vehicle in the D position through all five gears at speeds over 12 mph (20 km/h) for more than 20 seconds, then slow down to a stop.

16. Retest-drive the vehicle in the D position through all five gears at speeds over 12 mph (20 km/h) for more than 20 seconds, then slow down to a stop.

17. Monitor the OBD status for P1732 in the DTCs/ Freeze Data in A/T Mode Menu for a pass/fail.

    Does the result indicate PASSED?

    YES—Troubleshooting is complete. ■

    NO—Return to step 8 and recheck.

Protected by AR

DTC Troubleshooting (cont'd)

DTC P1733: Problem in Shift Control System:

- Shift Solenoid Valve D Stuck ON
- Shift Valve D Stuck
- A/T Clutch Pressure Control Solenoid Valve C Stuck OFF

NOTE: Record all freeze data and review General Troubleshooting Information (see page 14-3) before you troubleshoot.

1. Warm up the engine to normal operating temperature (the radiator fan comes on).

2. Make sure that the transmission is filled to the proper level, and check for fluid leaks.

3. Drain the ATF (see step 3 on page 14-208) through a strainer. Inspect the strainer for metal debris or excessive clutch material.

   Does the strainer contain metal debris or excessive clutch material?

   YES—Replace the transmission. ■

   NO—Replace the ATF (see step 4 on page 14-208), and go to step 4.

4. Clear the DTC with the HDS.

5. Test-drive the vehicle in the D position through all five gears at speeds over 12 mph (20 km/h) for more than 20 seconds, then slow down to a stop.

6. Retest-drive the vehicle in the D position through all five gears at speeds over 12 mph (20 km/h) for more than 20 seconds, then slow down to a stop.

7. Monitor the OBD status for P1733 in the DTCs/ Freeze Data in A/T Mode Menu for a pass/fail.

   Does the result indicate FAILED?

   YES—Go to step 8.

   NO—Intermittent failure, the system is OK at this time. If the tester indicates NOT COMPLETED, return to step 5 and recheck. ■

8. Clear the DTC with the HDS.

9. Choose Shift Solenoid D in Miscellaneous Test Menu, and check that the shift solenoid valve D operates with the HDS.

   Is a clicking sound heard?

   YES—Go to step 10.

   NO—Replace shift solenoid valve D (see page 14-194), then go to step 15.

10. Choose Clutch Pressure Control (Linear) Solenoid C in Miscellaneous Test Menu, and test the A/T clutch pressure control solenoid valve C with the HDS.

    Is the system OK?

    YES—Go to step 11.

    NO—Follow instructions indicated on the HDS by the test result, but if the tester has not determined the cause of the failure, go to step 14. If any part was replaced, go to step 15.

11. Test-drive the vehicle in the D position through all five gears at speeds over 12 mph (20 km/h) for more than 20 seconds, then slow down to a stop.

12. Retest-drive the vehicle in the D position through all five gears at speeds over 12 mph (20 km/h) for more than 20 seconds, then slow down to a stop.

13. Monitor the OBD status for P1733 in the DTCs/ Freeze Data in A/T Mode Menu for a pass/fail.

    Does the result indicate FAILED?

    YES—Repair hydraulic system related with shift valve D, or replace the transmission, then go to step 15.

    NO—Intermittent failure, the system is OK at this time. If the tester indicates NOT COMPLETED, return to step 11 and recheck. ■

BACK

Protected by AR

14. Inspect A/T clutch pressure control solenoid valve C (see page 14-199).

    Does the A/T clutch pressure control solenoid valve C work properly?

    YES—Repair hydraulic system related with shift valve D, or replace the transmission, then go to step 15.

    NO—Replace A/T clutch pressure control solenoid valve C (see page 14-200), then go to step 15.

15. Clear the DTC with the HDS.

16. Test-drive the vehicle in the D position through all five gears at speeds over 12 mph (20 km/h) for more than 20 seconds, then slow down to a stop.

17. Retest-drive the vehicle in the D position through all five gears at speeds over 12 mph (20 km/h) for more than 20 seconds, then slow down to a stop.

18. Monitor the OBD status for P1733 in the DTCs/ Freeze Data in A/T Mode Menu for a pass/fail.

    Does the result indicate PASSED?

    YES—Troubleshooting is complete. ■

    NO—Return to step 8 and recheck.

Protected by AR

DTC Troubleshooting (cont'd)

DTC P1734: Problem in Shift Control System:

- Shift Solenoid Valves B or C Stuck OFF
- Shift Valves B or C Stuck

NOTE: Record all freeze data and review General Troubleshooting Information (see page 14-3) before you troubleshoot.

1. Warm up the engine to normal operating temperature (the radiator fan comes on).
2. Make sure that the transmission is filled to the proper level, and check for fluid leaks.
3. Drain the ATF (see step 3 on page 14-208) through a strainer. Inspect the strainer for metal debris or excessive clutch material.

   Does the strainer contain metal debris or excessive clutch material?

   YES—Replace the transmission. ■

   NO—Replace the ATF (see step 4 on page 14-208), then go to step 4.
4. Clear the DTC with the HDS.
5. Test-drive the vehicle in the D position through all five gears at speeds over 12 mph (20 km/h) for more than 20 seconds, then slow down to a stop.
6. Retest-drive the vehicle in the D position through all five gears at speeds over 12 mph (20 km/h) for more than 20 seconds, then slow down to a stop.
7. Monitor the OBD status for P1734 in the DTCs/ Freeze Data in A/T Mode Menu for a pass/fail.

   Does the result indicate FAILED?

   YES—Go to step 8.

   NO—Intermittent failure, the system is OK at this time. If the tester indicates NOT COMPLETED, return to step 5 and recheck. ■
8. Clear the DTC with the HDS.
9. Choose Shift Solenoid B in Miscellaneous Test Menu, and check that the shift solenoid valve B operates with the HDS.

   Is a clicking sound heard?

   YES—Go to step 10.

   NO—Replace shift solenoid valve B (see page 14-194), then go to step 14.
10. Choose Shift Solenoid C in Miscellaneous Test Menu, and check that the shift solenoid valve C operates with the HDS.

    Is a clicking sound heard?

    YES—Go to step 11.

    NO—Replace shift solenoid valve C (see page 14-194), then go to step 14.
11. Test-drive the vehicle in the D position through all five gears at speeds over 12 mph (20 km/h) for more than 20 seconds, then slow down to a stop.
12. Retest-drive the vehicle in the D position through all five gears at speeds over 12 mph (20 km/h) for more than 20 seconds, then slow down to a stop.
13. Monitor the OBD status for P1734 in the DTCs/ Freeze Data in A/T Mode Menu for a pass/fail.

    Does the result indicate FAILED?

    YES—Repair hydraulic system related with shift valves B and C, or replace the transmission, then go to step 14.

    NO—Intermittent failure, the system is OK at this time. If the tester indicates NOT COMPLETED, return to step 11 and recheck. ■

BACK

Protected by AR

14. Clear the DTC with the HDS.

15. Test-drive the vehicle in the D position through all five gears at speeds over 12 mph (20 km/h) for more than 20 seconds, then slow down to a stop.

16. Retest-drive the vehicle in the D position through all five gears at speeds over 12 mph (20 km/h) for more than 20 seconds, then slow down to a stop.

17. Monitor the OBD status for P1734 in the DTCs/ Freeze Data in A/T Mode Menu for a pass/fail.

    Does the result indicate PASSED?

    YES—Troubleshooting is complete. ■

    NO—Return to step 8 and recheck.

Protected by AR

Road Test

1. Warm up the engine to normal operating temperature (the radiator fan comes on).
2. Apply the parking brake, and block both rear wheels. Start the engine, then shift to the D position while pressing the brake pedal. Press the accelerator pedal, and release it suddenly. The engine should not stall.
3. Repeat step 2 in the D3, 2, 1, and R positions.
4. Connect the HDS to the DLC (A), and go to the A/T data list.

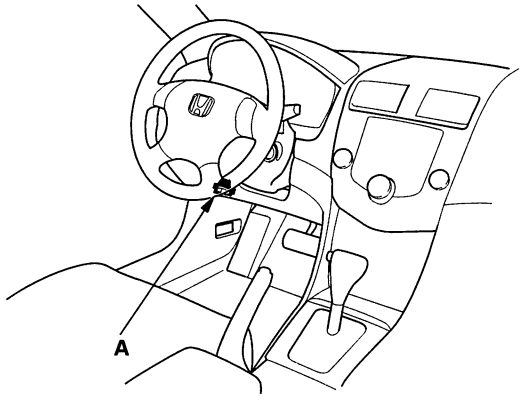

5. Test-drive the vehicle on a flat road in the D position. Check for abnormal noise and clutch slippage. While driving, check that the shift points occur at the proper speeds by monitoring the throttle position sensor (2003-2005 models) or accelerator pedal position sensor (2006 model) voltage with the HDS and comparing your shift point speeds and voltage to those in the table. (The throttle position sensor or accelerator pedal position sensor voltage represents the throttle opening.)

Upshift: D Position

Throttle position sensor or accelerator pedal position sensor voltage: 0.8 V	
1st→2nd	9—12 mph (15—19 km/h)
2nd→3rd	17—21 mph (28—33 km/h)
3rd→4th	27—32 mph (44—51 km/h)
4th→5th	41—47 mph (66—75 km/h)
Lock-up ON	48—55 mph (78—88 km/h)
Throttle position sensor or accelerator pedal position sensor voltage: 2.25 V	
1st→2nd	20—24 mph (32—38 km/h)
2nd→3rd	37—42 mph (60—68 km/h)
3rd→4th	57—62 mph (91—100 km/h)
4th→5th	102—112 mph (164—181 km/h)
Lock-up ON	108—119 mph (174—191 km/h)
Fully-opened throttle Throttle position sensor or accelerator pedal position sensor voltage: 4.5 V	
1st→2nd	36—41 mph (58—66 km/h)
2nd→3rd	65—73 mph (104—117 km/h)
3rd→4th	99—110 mph (160—177 km/h)
4th→5th	———
Lock-up ON	———

BACK

Protected by AR

Downshift: D Position

Throttle position sensor or accelerator pedal position sensor voltage: 0.8 V	
Lock-up OFF	47—53 mph (76—86 km/h)
5th→4th	30—35 mph (49—57 km/h)
4th→3rd	19—22 mph (30—35 km/h)
3rd→1st	5—8 mph (8—13 km/h)
Throttle position sensor or accelerator pedal position sensor voltage: 2.25 V	
Lock-up OFF	70—78 mph (113—126 km/h)
Fully-opened throttle Throttle position sensor or accelerator pedal position sensor voltage: 4.5 V	
Lock-up OFF	114—124 mph (183—200 km/h)
5th→4th	121—133 mph (195—214 km/h)
4th→3rd	88—98 mph (142—158 km/h)
3rd→2nd	53—60 mph (85—96 km/h)
2nd→1st	26—31 mph (42—50 km/h)

6. Accelerate to about 35 mph (57 km/h) so the transmission is in 4th or 5th, then shift from the D position to the 2 position. The vehicle should immediately begin to slow down from engine braking.

7. Check for abnormal noise and clutch slippage in the following positions.

   1 (1st Gear) Position
   Accelerate from a stop at full throttle. Check that there is no abnormal noise or clutch slippage. Upshifts should not occur with the shift lever in this position.

   2 (2nd Gear) Position
   Accelerate from a stop at full throttle. Check that there is no abnormal noise or clutch slippage. Upshifts and downshifts should not occur with the shift lever in this position.

   R (Reverse) Position
   Accelerate from a stop at full throttle, and check for abnormal noise and clutch slippage.

8. Test in P (Park) Position.
   Park the vehicle on a slope (about 16 °), apply the brake, and shift into the P position. Release the brake; the vehicle should not move.

   NOTE: Always use the brake to hold the vehicle, when stopped on an incline in gear. Depending on the grade of the incline, the vehicle could roll backwards if the brake is released.

Protected by AR

Stall Speed Test

1. Make sure the transmission fluid is filled to the proper level (see page 14-207).
2. Apply the parking brake, and block all four wheels.
3. Connect the HDS to the DLC (A), and go to the A/T data list.

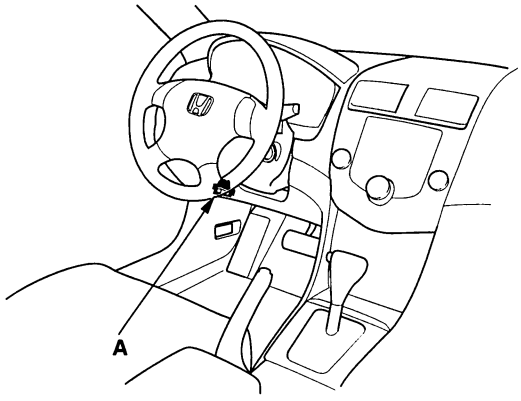

4. Make sure the A/C switch is OFF.
5. After the engine has warmed up to normal operating temperature (the radiator fan comes on), shift to the 2 position.
6. Firmly press the brake pedal and accelerator pedal for 6 to 8 seconds, and note the engine speed. Do not move the shift lever while raising engine speed.
7. Allow 2 minutes for cooling, then repeat the test in the D, 1, and R positions.

NOTE:
- Do not test stall speed for more than 10 seconds at a time.
- Stall speed tests should be used for diagnostic purposes only.
- Stall speed should be the same in D, 2, 1, and R positions.
- Do not test stall speed with the A/T pressure gauges installed.

Stall Speed rpm:
Specification: 2,400 rpm
Service Limit: 2,250—2,550 rpm

8. If the measurements are out of the service limit, problems and probable causes are listed in the table.

Problem	Probable causes
Stall speed rpm high in the D, 2, 1, and R positions	• ATF pump output low • Clogged ATF strainer • Regulator valve stuck • Slipping clutch
Stall speed rpm high in the 1 position	Slippage of 1st clutch
Stall speed rpm high in the 2 position	Slippage of 2nd clutch
Stall speed rpm high in the R position	Slippage 4th clutch
Stall speed rpm low in the D, 2, 1, and R positions	• Engine output low • Engine throttle valve closed • Torque converter one-way clutch slipping

BACK

Protected by AR

Pressure Test

Special Tools Required
- A/T clutch pressure gauge set 07406-0020400 or 07406-0020401
- A/T pressure hose, 2,210 mm 07MAJ-PY4011A
- A/T pressure hose adapter 07MAJ-PY40120

1. Make sure the transmission fluid is filled to the proper level (see page 14-207).

2. Lift the vehicle up on a lift or apply the parking brake, block rear wheels, and raise the front of the vehicle. Make sure it is securely supported.

3. Allow the front wheels to rotate freely.

4. Connect the oil pressure gauges to the line pressure inspection hole (A) and 4th clutch pressure inspection hole (B). Do not allow dust or other foreign particles to enter the holes while connecting the gauges.

A/T OIL PRESSURE GAUGE SET/W PANEL 07406-0020400 or 07406-0020401

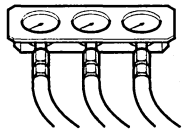

A/T PRESSURE HOSE, 2,210 mm 07MAJ-PY4011A (3 Required)

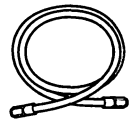

A/T PRESSURE HOSE ADAPTER 07MAJ-PY40120 (3 Required)

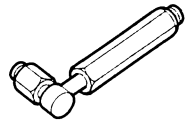

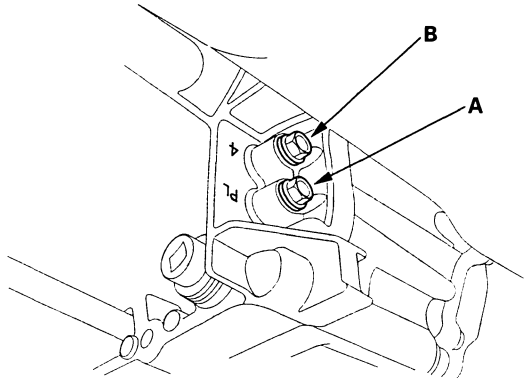

5. Remove the intake air duct and air cleaner housing, and connect the oil pressure gauges to the 2nd clutch pressure inspection hole (C). Then temporarily install the air cleaner housing and intake air duct.

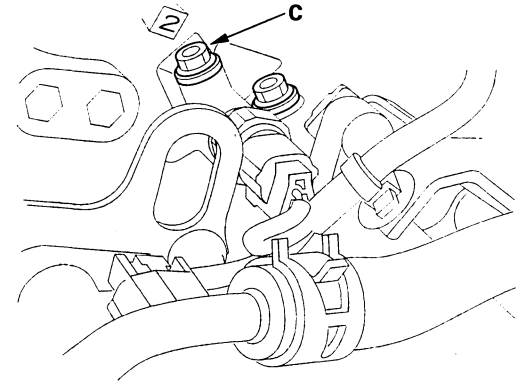

6. Connect the oil pressure gauge to the 1st clutch pressure inspection hole (D), 3rd clutch pressure inspection hole (E), and 5th clutch pressure inspection hole (F).

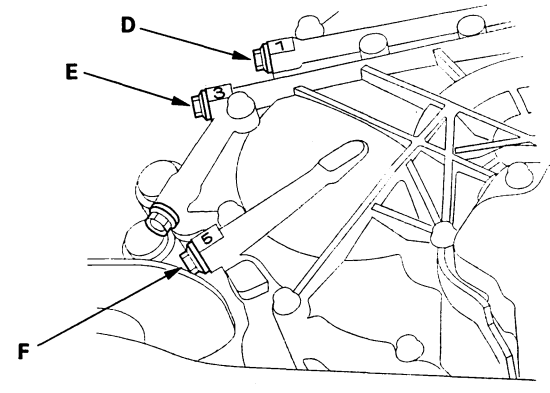

7. Warm up the engine (the radiator fan comes on), then stop it and connect the HDS to the DLC.

(cont'd)

Protected by AR

Pressure Test (cont'd)

8. Start the engine, and run it at 2,000 rpm in the P or N position.

9. Measure the line pressure at the line pressure inspection hole (A).

   NOTE: Higher pressure may be indicated if measurements are made in shift lever position other than N or P.

Pressure	Fluid Pressure	
	Standard	Service Limit
Line (A)	900—960 kPa (9.2—9.8 kgf/cm², 130—140 psi)	850 kPa (8.7 kgf/cm², 120 psi)

10. Shift to the 1 position, and measure the 1st clutch pressure at the 1st clutch pressure inspection hole (D) while holding engine speed at 2,000 rpm.

11. Shift to the 2 position, and measure the 2nd clutch pressure at the 2nd clutch pressure inspection hole (C) while holding engine speed at 2,000 rpm.

12. Shift to the P position, then press the brake pedal and hold it.

13. Shift to the D3 position, press the accelerator pedal to increase the engine speed to 2,500 rpm; the transmission shifts into 2nd gear.

14. Release the accelerator pedal; the engine speed decreases to 1,000 rpm with the transmission in 2nd gear.

15. Press the accelerator pedal very slowly so that the engine speed increases to 2,000 rpm on 5 seconds, then hold the accelerator; the transmission shifts into 3rd gear. Measure the 3rd clutch pressure at the 3rd clutch pressure inspection hole (E) while holding the engine speed at 2,000 rpm.

16. Shift to the D position, and measure the 4th clutch pressure at the 4th clutch pressure inspection hole (B) while holding the engine speed at 2,000 rpm, then in about 15 seconds, the transmission will shift to 5th gear.

17. Measure the 5th clutch pressure at the 5th clutch pressure inspection hole (F) while holding the engine speed at 2,000 rpm.

18. Bring the engine back to an idle, then apply the brake to stop the wheels from rotating.

19. Shift to the R position. Raise the engine rpm to 2,000 rpm, and measure the reverse clutch pressure at the 4th clutch pressure inspection hole (B).

Pressure	Fluid Pressure	
	Standard	Service Limit
1st clutch (D)	890—970 kPa (9.1—9.9 kgf/cm², 130—140 psi)	840 kPa (8.6 kgf/cm², 120 psi)
2nd clutch (C)		
3rd clutch (E)		
4th clutch (B)		
5th clutch (F)		

20. If the measurements are out of service limit, problems and probable causes are listed in the table.

Problem	Probable causes
No or low line pressure	• Torque converter • ATF pump • Regulator valve • Torque converter check valve
No or low 1st clutch pressure	• 1st clutch • O-rings
No or low 2nd clutch pressure	• 2nd clutch • O-rings
No or low 3rd clutch pressure	• 3rd clutch • O-rings
No or low 4th clutch pressure	• 4th clutch • O-rings
No or low 5th clutch pressure	• 5th clutch • O-rings
No or low 4th clutch pressure in the R position	• Servo valve • 4th clutch • O-rings

21. Install the sealing bolts with the new sealing washers, and tighten the bolts to the specified torque. Do not reuse old sealing washers.

    Torque: 18 N·m (1.8 kgf·m,13 lbf·ft)

22. Install the air cleaner housing and intake air duct.

BACK

Protected by AR

Shift Solenoid Valve Test

1. Connect the HDS to the DLC (A).

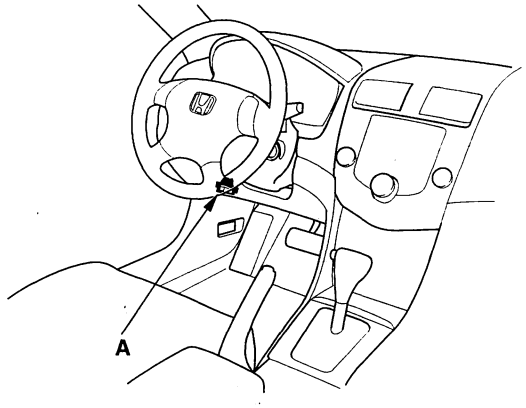

2. Choose Shift Solenoid A, B, C, D, and E in Miscellaneous Test Menu on the HDS.
3. Check that the shift solenoid valve A, B, C, D, and E operate with the HDS. A clicking sound should be heard.
4. Shift solenoid valves test has finished if the test results are OK.
   If no sound is heard, remove the shift solenoid valves and test.
5. Remove the splash shield.
6. Remove the drain plug (A), and drain the automatic transmission fluid (ATF). Then reinstall the drain plug with a new sealing washer (B).

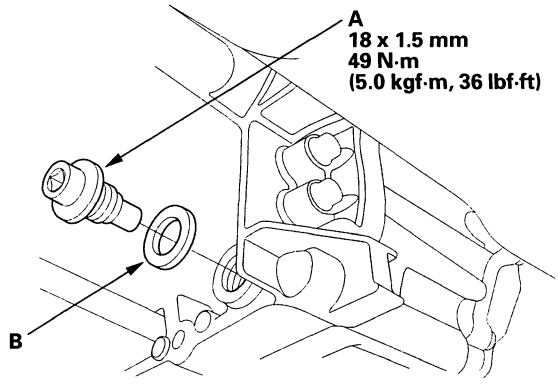

7. Get the customer's radio anti-theft code (navigation code), and write down the radio station presets.
8. Disconnect the battery negative terminal, then disconnect the battery positive terminal.
9. Remove the battery hold-down bracket, then remove the battery cover, battery, and battery tray.
10. Remove the intake air duct and air cleaner housing.
11. Loosen the two bolts securing the battery base from under the vehicle, and remove the two bolts securing the battery base in the engine compartment, then remove the battery base.
12. Remove the ground cable (A), transmission upper mount bracket (B), and bracket plate (C).

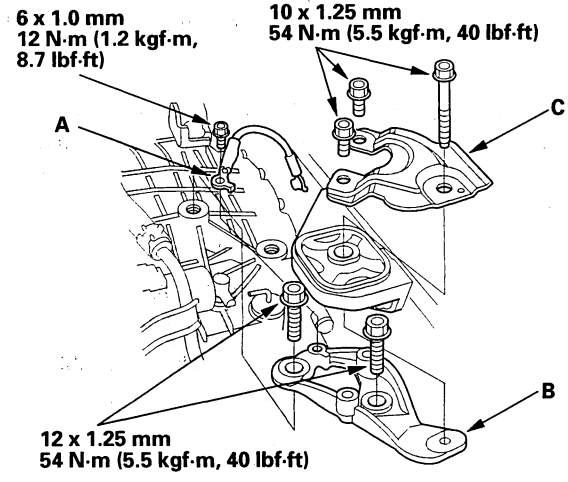

(cont'd)

Protected by AR

Shift Solenoid Valve Test (cont'd)

13. Place a transmission jack under the transmission, and remove the transmission lower mount nuts.

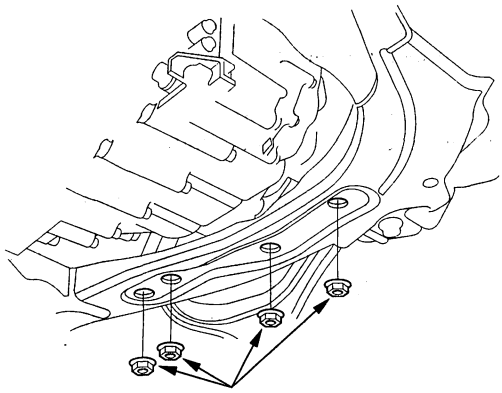

14. Lift the transmission up to create clearance between the transmission and front subframe with the jack.

15. Remove the ATF dipstick, and remove the bolts securing the ATF cooler inlet line brackets (A) and ATF dipstick guide pipe (B) from the transmission hanger (C).

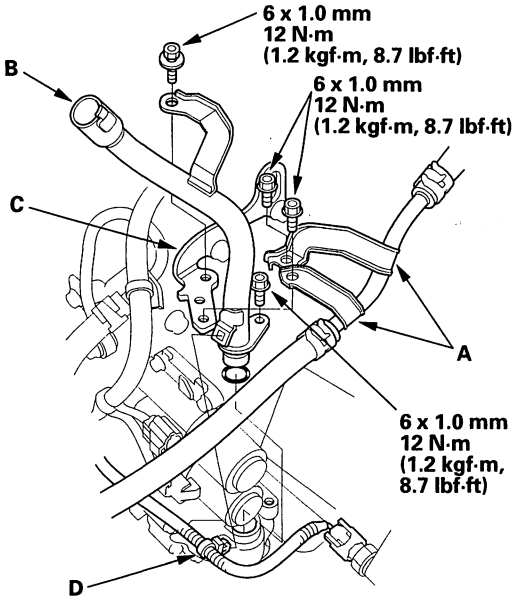

16. Remove the harness clamp (D), then remove the ATF dipstick guide pipe.

17. Disconnect the shift solenoid harness connector.

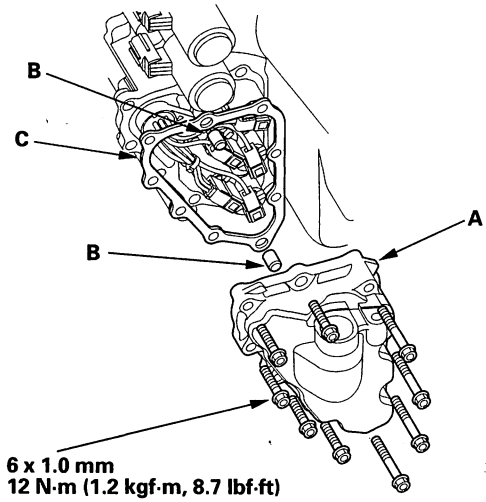

18. Remove the shift solenoid valve cover (A), dowel pins (B), and gasket (C).

BACK

Protected by AR

19. Remove the shift solenoid harness connector.

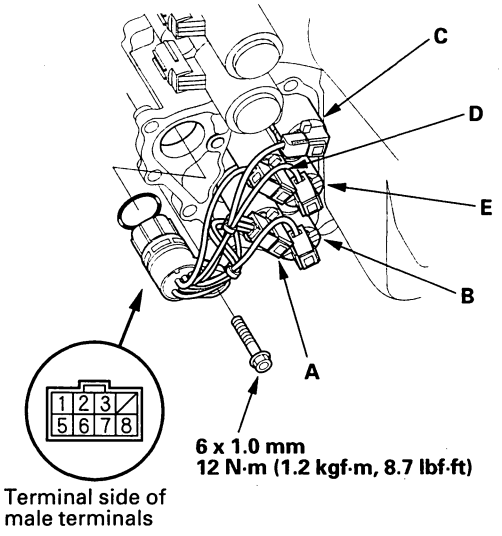

20. Measure shift solenoid valves resistance between shift solenoid harness connector terminals below and body ground:

    - No. 1 (GRN): shift solenoid valve C
    - No. 2 (ORN): shift solenoid valve B
    - No. 3 (RED): shift solenoid valve E
    - No. 5 (BLU): shift solenoid valve A
    - No. 8 (YEL): shift solenoid valve D

    Standard: 12—25 Ω

21. If the resistance is out of standard, disconnect the shift solenoid valve connector, and measure its resistance at the solenoid valve terminal. Replace the shift solenoid valve if the resistance is out of standard.

22. Connect the battery negative terminal to body ground, and connect the battery positive terminal to the shift solenoid valve terminal individually. A clicking sound should be heard.

23. If no sound is heard, connect the battery positive terminal to the shift solenoid valve terminal, and check for a clicking sound. Replace the shift solenoid valve if no clicking sound is heard.

24. Replace the shift solenoid harness if the test results are OK.

25. Install a new O-ring on the shift solenoid harness connector, and install the connector in the transmission housing.

26. Install the shift solenoid valve cover, dowel pins and a new gasket.

27. Install the new O-ring on the ATF dipstick guide pipe, and install the ATF dipstick guide pipe, then install the harness clamp on the ATF dipstick guide pipe.

28. Secure the ATF cooler line brackets on the transmission hanger with the bolts.

29. Check the connector for rust, dirt, or oil, then connect the connector securely.

30. Install the transmission lower mount nuts.

31. Install the transmission upper mount bracket, bracket plate, and ground cable, then remove the transmission jack.

32. Refill the transmission with ATF (see step 4 on page 14-208).

33. Install the battery base, then install the air cleaner housing and intake air duct.

34. Install the battery tray, battery, and battery cover, then secure the battery with its hold-down bracket. Connect the battery terminals.

35. Install the splash shield.

36. Enter the radio code (navigation code), reset the radio presets and set the clock.

37. Do the power window control unit reset procedure (see page 22-232).

BACK

Protected by AR

Shift Solenoid Valve Replacement

1. Get the customer's radio anti-theft code (navigation code), and write down the radio station presets.
2. Remove the splash shield.
3. Remove the drain plug (A), and drain the automatic transmission fluid (ATF). Then reinstall the drain plug with a new sealing washer (B).

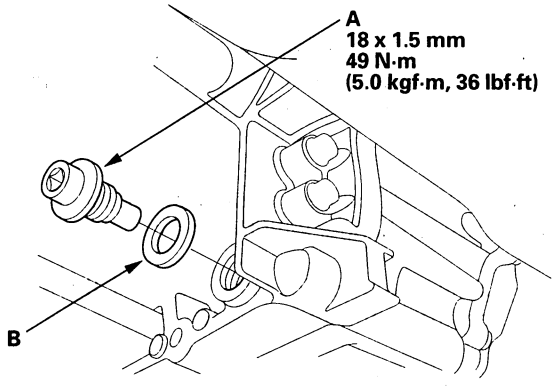

4. Disconnect the battery negative terminal, then disconnect the battery positive terminal.
5. Remove the battery hold-down bracket, then remove the battery cover, battery, and battery tray.
6. Remove the intake air duct and air cleaner housing.
7. Loosen the two bolts securing the battery base from under the vehicle, and remove the two bolts securing the battery base in the engine compartment, then remove the battery base.
8. Remove the ground cable (A), transmission upper mount bracket (B), and bracket plate (C).

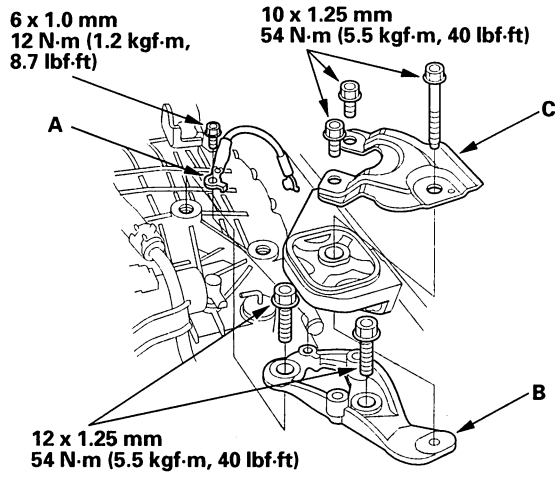

9. Place the transmission jack under the transmission, and remove the transmission lower mount nuts.

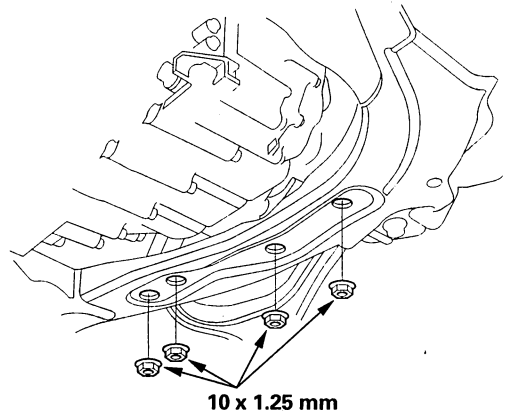

10. Lift the transmission up to create clearance between the transmission and front subframe with the jack.

BACK

Protected by AR

11. Remove the ATF dipstick, and remove the bolts securing the ATF cooler inlet line brackets (A) and ATF dipstick guide pipe (B) from the transmission hanger (C).

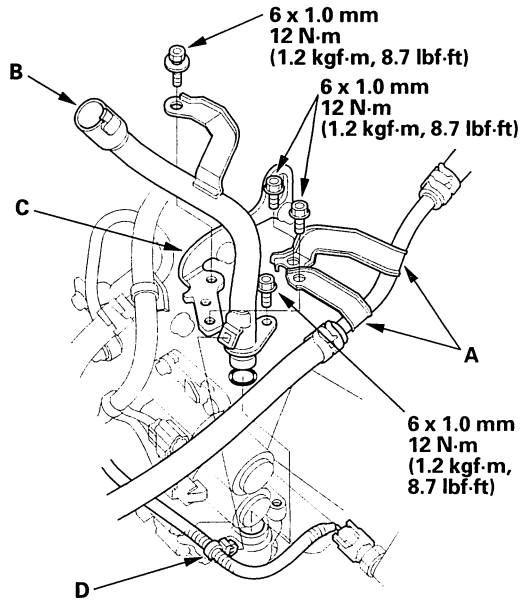

12. Remove the harness clamp (D), then remove the ATF dipstick guide pipe.

13. Remove the shift solenoid valve cover (A), dowel pins (B), and gasket (C).

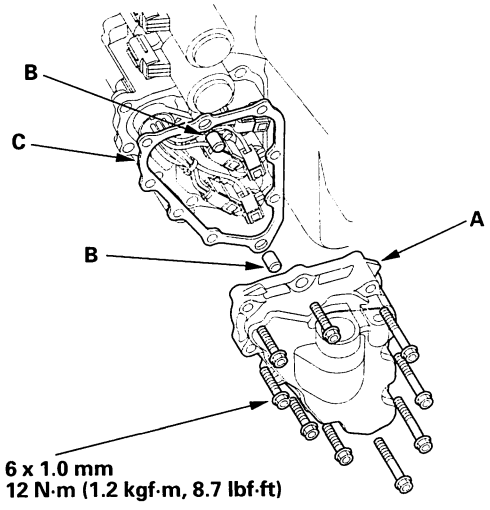

14. Disconnect the shift solenoid valve connectors, remove the solenoid mounting bolts, then hold the solenoid valve body and remove the shift valves. Do not hold the connector to remove the shift solenoid valve.

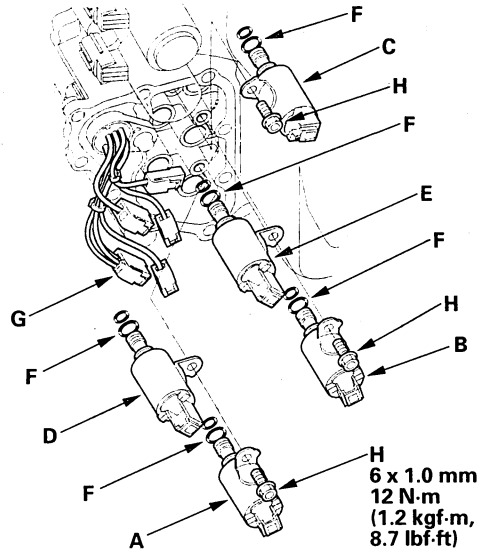

15. Install the new O-rings (two O-rings per solenoid valve) (F) on the reused solenoid valve.

    NOTE: A new solenoid valve comes with new O-rings. If you install a new solenoid valve, use the O-rings provided on it.

16. Install the shift solenoid valves C, D, and E. While holding the shift solenoid valve body, be sure to install the solenoid valves until their mounting brackets contact the servo body.

17. Install the shift solenoid valves A and B. While holding the shift solenoid valve body, be sure to install the solenoid valves until their mounting brackets contact the bracket of the installed solenoid. Install the solenoid mounting bolts (H) and tighten them.

    NOTE: Do not install the solenoid valves A and B before installing the shift solenoid valves D and E. If solenoid valves A and B are installed before solenoid valves D and E, it may damage the hydraulic control system.

18. Connect the shift solenoid valve D connector (G) with the ATF temperature sensor.

(cont'd)

Protected by AR

Shift Solenoid Valve Replacement (cont'd)

19. Connect the solenoid valve A connector (BLU wire), solenoid valve B connector (ORN wire), solenoid valve C connector (GRN wire), and solenoid valve E connector (RED wire).
20. Install the shift solenoid valve cover, dowel pins and a new gasket.
21. Install the new O-ring on the ATF dipstick guide pipe, and install the ATF dipstick guide pipe, then install the harness clamp on the ATF dipstick guide pipe.
22. Secure the ATF cooler line brackets on the transmission hanger with the bolts.
23. Install the transmission lower mount nuts.
24. Install the transmission upper mount bracket, bracket plate, and ground cable, then remove the transmission jack.
25. Refill the transmission with ATF (see step 4 on page 14-208).
26. Install the battery base, then install the air cleaner housing and intake air duct.
27. Install the battery tray, battery, and battery cover, then secure the battery with its hold-down bracket. Connect the battery terminals.
28. Install the splash shield.
29. Enter the radio code (navigation code), reset the radio presets and set the clock.
30. Do the power window control unit reset procedure (see page 22-232).

BACK

Protected by AR

A/T Clutch Pressure Control Solenoid Valve A Test

1. Connect the HDS to the DLC (A).

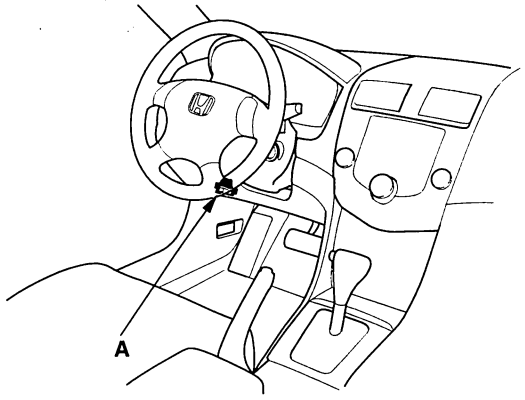

2. Choose Clutch Pressure Control (Linear) Solenoid A in Miscellaneous Test Menu on the HDS.
3. Test the A/T clutch pressure control solenoid valve A with the HDS.
4. Follow instructions indicated on the HDS by the test result. If the HDS has not determined the cause of the failure, remove A/T clutch pressure control solenoid valve A and test.
5. Remove the intake air duct.
6. Disconnect the A/T clutch pressure control solenoid valve A connector.

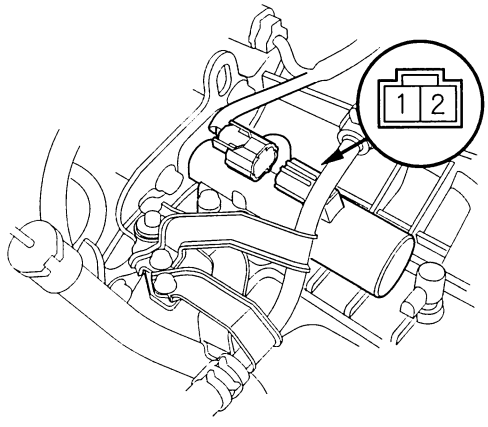

7. Measure A/T clutch pressure control solenoid valve A resistance at the solenoid valve A connector.

   Standard: 3—10 Ω

8. If the resistance is out of standard, replace A/T clutch pressure control solenoid valve A (see page 14-198).
9. If the resistance is *within* the standard, connect the battery positive terminal to the No. 1 terminal of the A/T clutch pressure control solenoid valve A connector, and connect the battery negative terminal to the No. 2 terminal. A clicking sound should be heard.
10. If no sound is heard, remove the A/T clutch pressure control solenoid valve A.
11. Check the fluid passage of the A/T clutch pressure control solenoid valve for dust or dirt.
12. Connect the No. 1 terminal of the A/T clutch pressure control solenoid valve A connector to the battery positive terminal, and connect the No. 2 terminal to the battery negative terminal. Make sure the A/T clutch pressure control solenoid valve moves.

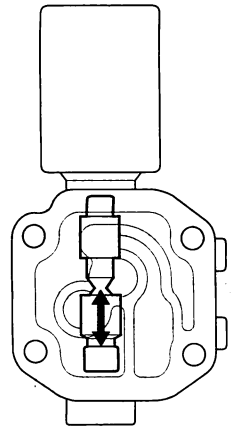

13. Disconnect one of the battery terminals and check for valve movement.

    NOTE: You can see valve movement through the fluid passage in the mounting surface of the A/T clutch pressure control solenoid valve A body.

14. If the valve binds or moves sluggishly, or if the solenoid valve does not operate, replace the A/T clutch pressure control solenoid valve A.

Protected by AR

A/T Clutch Pressure Control Solenoid Valve A Replacement

1. Remove the intake air duct.
2. Disconnect the A/T clutch pressure control solenoid valve A connector.
3. Remove the bolts securing the ATF cooler inlet line brackets (B) from the transmission hanger (C).

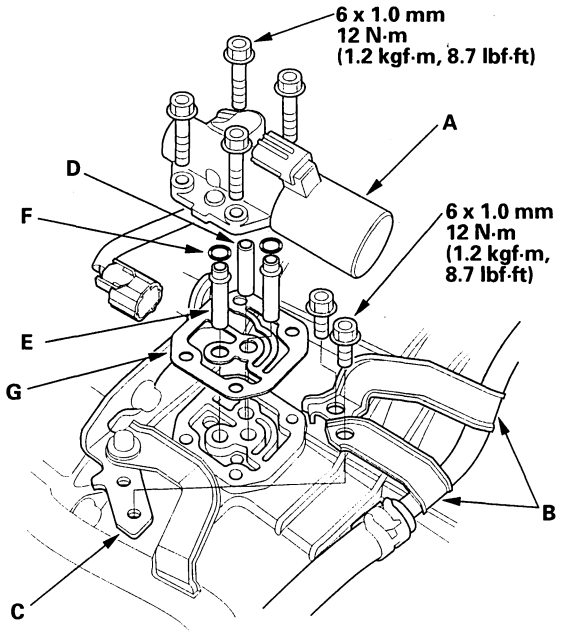

4. Remove the mounting bolts and the A/T clutch pressure control solenoid valve A.
5. Remove the ATF pipe (D), ATF joint pipes (E), O-rings (F), and gasket (G).
6. Clean the mounting surface and fluid passages of the transmission housing.
7. Install the new gasket on the transmission housing, and install the ATF pipe and ATF joint pipes.
8. Install the new O-rings over the ATF joint pipes.
9. Install the new A/T clutch pressure control solenoid valve A.
10. Secure the ATF cooler inlet line brackets with the bolts on the transmission hanger.
11. Check the A/T clutch pressure control solenoid valve A connector for rust, dirt, or oil, and clean if necessary, then connect the connector securely.
12. Install the intake air duct.

BACK

Protected by AR

A/T Clutch Pressure Control Solenoid Valve B and C Test

1. Connect the HDS to the DLC (A).

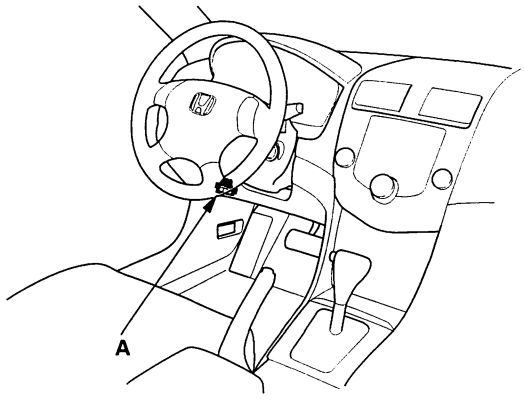

2. Choose Clutch Pressure Control (Linear) Solenoid B and C in Miscellaneous Test Menu on the HDS.

3. Test the A/T clutch pressure control solenoid valve B and C with the HDS.

4. Follow instructions indicated on the HDS by the test result. If the HDS has not determined the cause of the failure, remove A/T clutch pressure control solenoid valve B, C, and test.

5. Disconnect the A/T clutch pressure control solenoid valves B and C connectors.

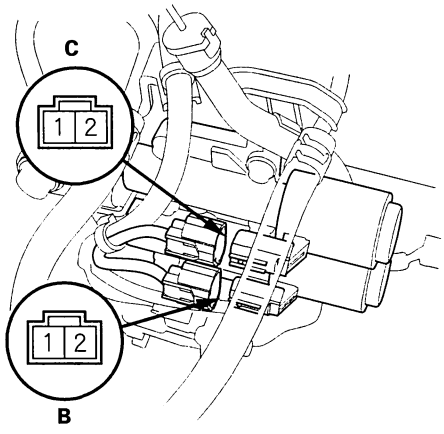

6. Measure A/T clutch pressure control solenoid valve B resistance between the solenoid valve B terminals No. 1 and No. 2, and measure A/T clutch pressure control solenoid valve C resistance between the solenoid valve C terminals No. 1 and No. 2.

   Standard: 3—10 Ω

7. If the resistance of either A/T clutch pressure control solenoid valve is out of standard, replace A/T clutch pressure control solenoid valves B and C (see page 14-200).

8. If the resistance is within the standard, connect the battery positive terminal to the No. 1 terminal of the A/T clutch pressure control solenoid valves B and C connectors, and connect the battery negative terminal to the No. 2 terminal. A clicking sound should be heard.

9. If no sound is heard, remove the A/T clutch pressure control solenoid valves B and C.

10. Check the fluid passage of the A/T clutch pressure control solenoid valve for dust or dirt.

11. Connect the No. 1 terminal of the A/T clutch pressure control solenoid valves B and C connectors to the battery positive terminal, and connect the No. 2 terminal to the battery negative terminal. Make sure the A/T clutch pressure control solenoid valves B and C move.

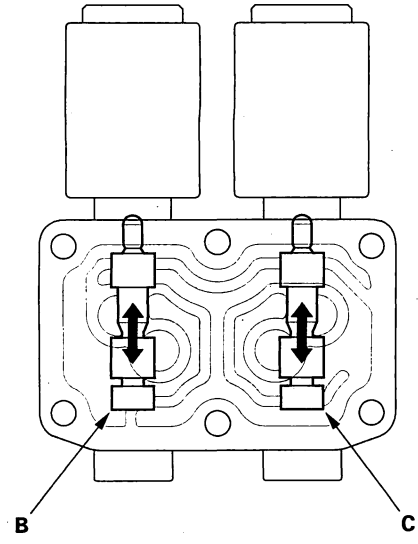

12. Disconnect one of the battery terminals, and check valve movement.

    NOTE: You can see valve movement through the fluid passage in the mounting surface of the A/T clutch pressure control solenoid valves B and C body.

13. If either valve binds or moves sluggishly, or if the solenoid valve does not operate, replace the A/T clutch pressure control solenoid valves B and C.

Protected by AR

A/T Clutch Pressure Control Solenoid Valve B and C Replacement

1. Disconnect the A/T clutch pressure control solenoid valves B and C connectors.
2. Remove the A/T clutch pressure control solenoid valves B and C.

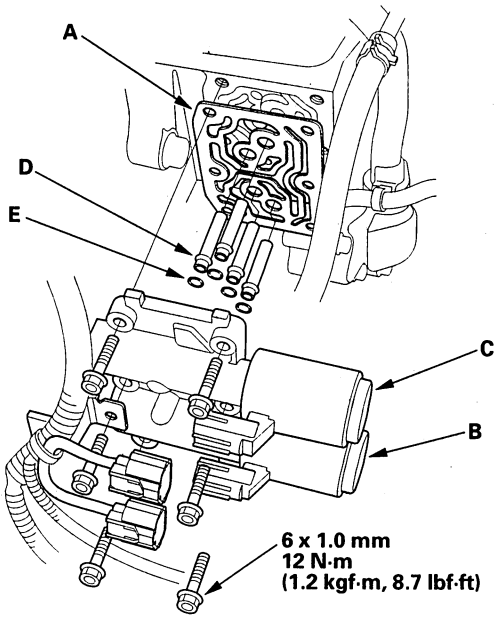

3. Remove the ATF joint pipes (D), O-rings (E), and gasket (A).
4. Clean the mounting surface and fluid passages of the transmission housing.
5. Install the new gasket on the transmission housing, and install the ATF joint pipes.
6. Install new O-rings over the ATF joint pipes.
7. Install new A/T clutch pressure control solenoid valves B and C.
8. Check A/T clutch pressure control solenoid valves B and C connectors for rust, dirt, or oil, and clean if necessary, then connect the connectors securely.

BACK

Protected by AR

Input Shaft (Mainshaft) Speed Sensor Replacement

1. Remove the intake air duct and air cleaner housing.
2. Disconnect the input shaft (mainshaft) speed sensor connector, and remove the input shaft (mainshaft) speed sensor.

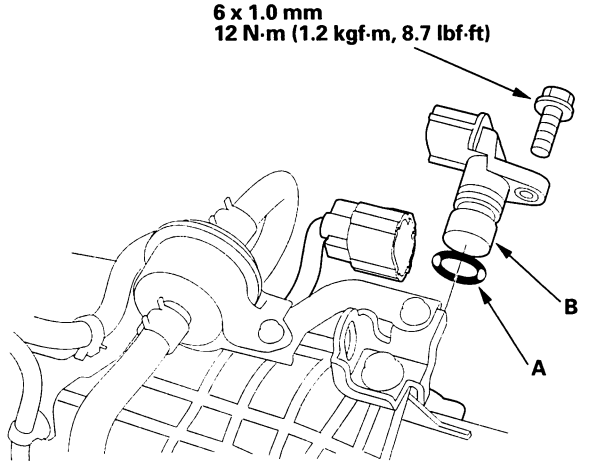

3. Install the new O-ring (A) on the new input shaft (mainshaft) speed sensor (B), then install the input shaft (mainshaft) speed sensor in the transmission housing.
4. Check the connector for rust, dirt, or oil, and clean if necessary, then connect the connector securely.
5. Install the intake air duct and air cleaner housing.

Output Shaft (Countershaft) Speed Sensor Replacement

1. Disconnect the output shaft (countershaft) speed sensor connector, and remove the output shaft (countershaft) speed sensor.

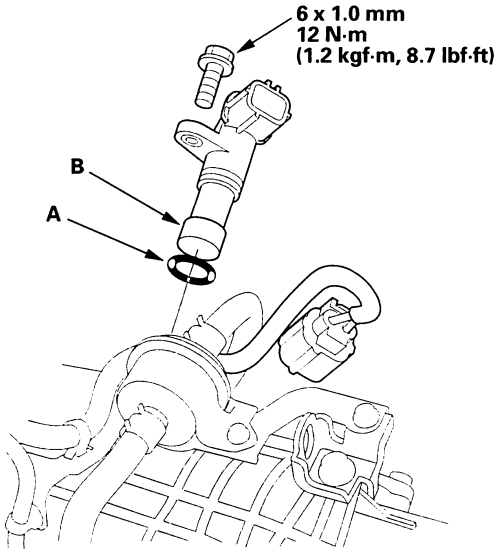

2. Install the new O-ring (A) on the new output shaft (countershaft) speed sensor (B), then install the output shaft (countershaft) speed sensor in the transmission housing.
3. Check the connector for rust, dirt, or oil, and clean if necessary, then connect the connector securely.

BACK

Protected by AR

2nd Clutch Transmission Fluid Pressure Switch Replacement

1. Remove the intake air duct.
2. Disconnect the connector from the 2nd clutch transmission fluid pressure switch (A), and remove the switch.

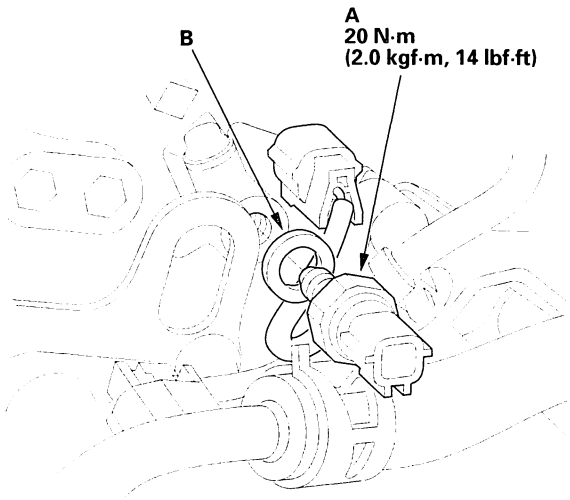

3. Make sure there is no water, oil, dust, or foreign particles inside the connector.
4. Install the new 2nd clutch transmission fluid pressure switch with a new sealing washer (B), and tighten the switch to the specified torque on the metal part, not the plastic part.
5. Connect the connector securely.
6. Install the intake air duct.

BACK

Protected by AR

3rd Clutch Transmission Fluid Pressure Switch Replacement

1. Get the customer's radio anti-theft code (navigation code), and write down the radio station presets.
2. Disconnect the battery negative terminal, then disconnect the battery positive terminal.
3. Remove the battery hold-down bracket, then remove the battery cover, battery, and battery tray.
4. Remove the intake air duct and air cleaner housing.
5. Loosen the two bolts securing the battery base from under the vehicle, and remove the two bolts securing the battery base in the engine compartment, then remove the battery base.
6. Disconnect the connector from the 3rd clutch transmission fluid pressure switch (A), then remove the switch.

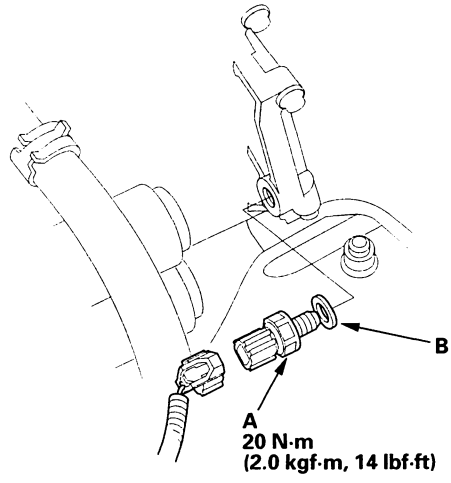

7. Make sure there is no water, oil, dust, or foreign particles inside the connector.
8. Install the 3rd clutch transmission fluid pressure switch with a new sealing washer (B), and tighten the switch to the specified torque on the metal part, not the plastic part.
9. Connect the connector securely.
10. Install the battery base, then install the air cleaner housing and intake air duct.
11. Install the battery tray, battery, and battery cover, then secure the battery with its hold-down bracket. Connect the battery terminals.
12. Enter the radio code (navigation code), reset the radio presets and set the clock.
13. Do the power window control unit reset procedure (see page 22-232).

Protected by AR

ATF Temperature Sensor Test/Replacement

1. Get the customer's radio anti-theft code (navigation code), and write down the radio station presets.
2. Remove the splash shield.
3. Remove the drain plug (A), and drain the automatic transmission fluid (ATF). Then reinstall the drain plug with a new sealing washer (B).

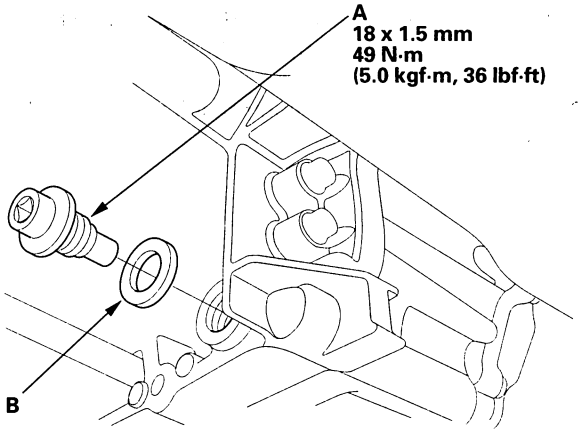

4. Disconnect the battery negative terminal, then disconnect the battery positive terminal.
5. Remove the battery hold-down bracket, then remove the battery cover, battery, and battery tray.
6. Remove the intake air duct and air cleaner housing.
7. Loosen the two bolts securing the battery base from under the vehicle, and remove the two bolts securing the battery base in the engine compartment, then remove the battery base.
8. Remove the ground cable (A), transmission upper mount bracket (B), and bracket plate (C).

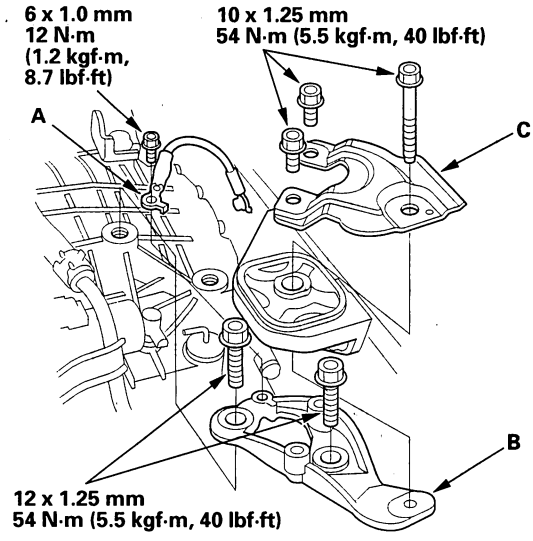

9. Place the transmission jack under the transmission, and remove the transmission lower mount nuts.

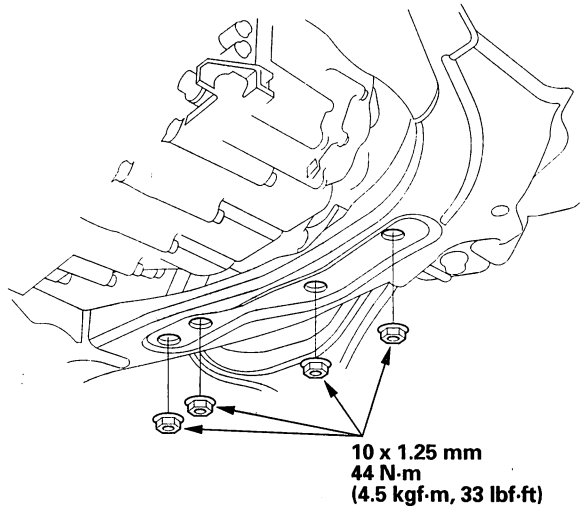

10. Lift the transmission up to create clearance between the transmission and front subframe with the jack.

BACK

Protected by AR

11. Remove the ATF dipstick, and remove the bolts securing the ATF cooler inlet line brackets (A) and ATF dipstick guide pipe (B) from the transmission hanger (C).

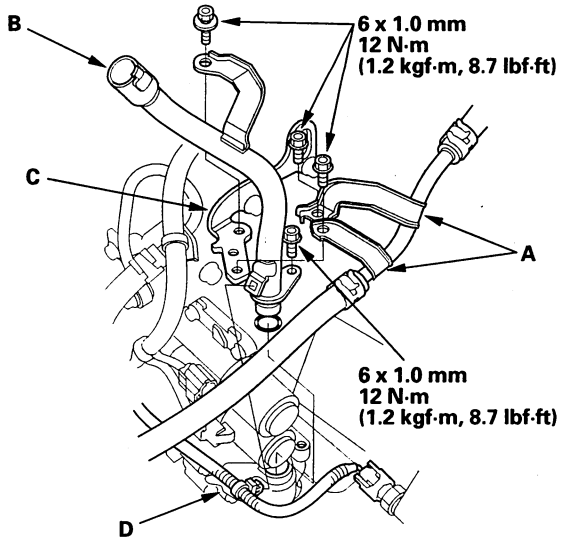

12. Remove the harness clamp (D), then remove the ATF dipstick guide pipe.

13. Disconnect the shift solenoid harness connector.

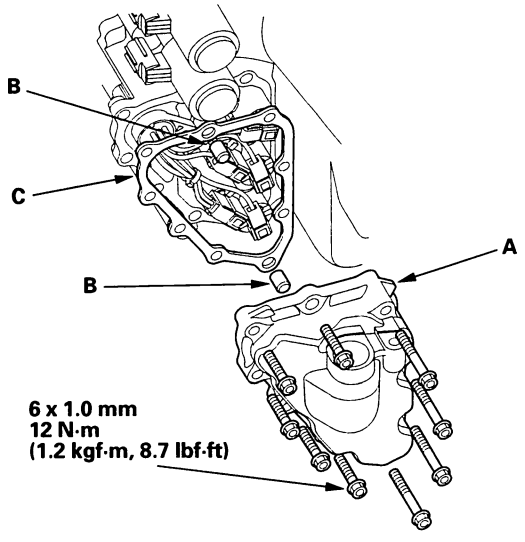

14. Remove the shift solenoid valve cover (A), dowel pins (B), and gasket (C).

15. Remove the shift solenoid harness connector.

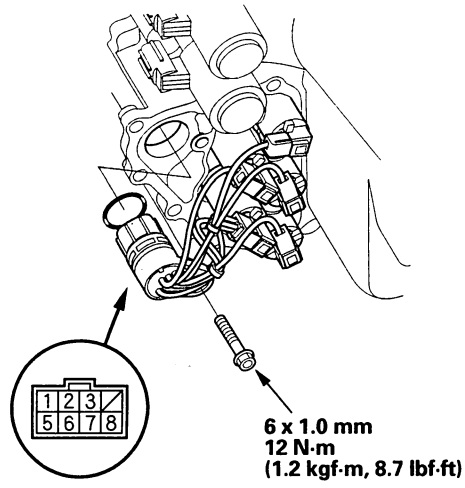

Terminal side of male terminals

16. Measure ATF temperature sensor resistance between shift solenoid harness connector terminals No. 6 and No. 7.

Standard: 50 Ω —25 kΩ

17. If the resistance is out of standard, replace the ATF temperature sensor and solenoid harness; go to step 18. The ATF temperature sensor is not available separately from the solenoid harness. If the measurement is within the standard, install the removed parts; go to step 20.

18. Disconnect the connectors from the shift solenoid valves.

(cont'd)

Protected by AR

ATF Temperature Sensor Test/Replacement (cont'd)

19. Connect the shift solenoid valve D connector with the ATF temperature sensor (F) on the shift solenoid harness.

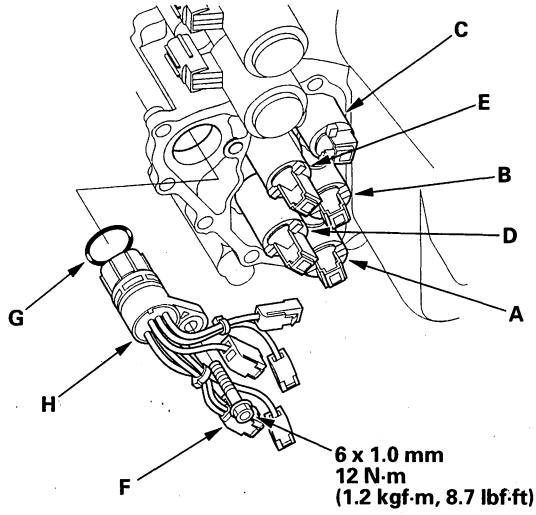

20. Connect the solenoid valve A connector (BLU wire), solenoid valve B connector (ORN wire), solenoid valve C connector (GRN wire), and solenoid valve E connector (RED wire).

21. Install the new O-ring (G) on the shift solenoid harness connector (H), and install the connector in the transmission housing.

22. Install the shift solenoid valve cover, dowel pins and a new gasket.

23. Install the new O-ring on the ATF dipstick guide pipe, and install the ATF dipstick guide pipe, then install the harness clamp on the ATF dipstick guide pipe.

24. Secure the ATF cooler line brackets on the transmission hanger with the bolts.

25. Check the connector for rust, dirt, or oil, and clean if necessary, then connect the connector securely.

26. Install the transmission lower mount nuts.

27. Install the transmission upper mount bracket, bracket plate, and ground cable, then remove the transmission jack.

28. Refill the transmission with ATF (see step 4 on page 14-208).

29. Install the battery base, then install the air cleaner housing and intake air duct.

30. Install the battery tray, battery, and battery cover, then secure the battery with its hold-down bracket. Connect the battery terminals.

31. Install the splash shield.

32. Enter the radio code (navigation code), reset the radio presets and set the clock.

33. Do the power window control unit reset procedure (see page 22-232).

BACK

Protected by AR

ATF Level Check

NOTE: Keep all foreign particles out of the transmission.

1. Warm up the engine to normal operating temperature (the radiator fan comes on).
2. Park the vehicle on level ground, and turn the engine off.

   NOTE: Check the fluid level within 60—90 seconds after turning the engine off.

3. Remove the ATF dipstick (yellow loop) (A) from the dipstick guide pipe, and wipe it with a clean cloth.

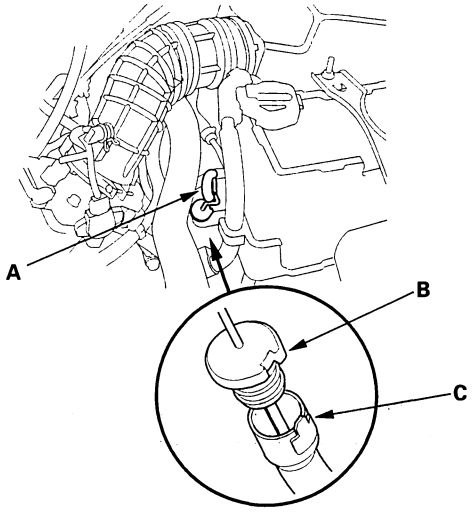

4. Insert the dipstick aligning the cap (B) with the guide tab (C).
5. Remove the dipstick (A) and check the fluid level. It should be between upper mark (B) and lower mark (C).

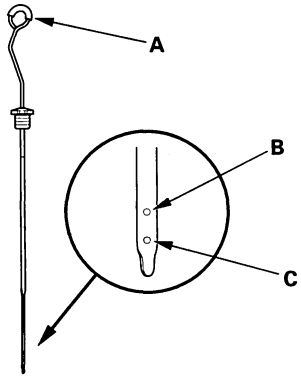

6. If the level is below the lower mark, check for fluid leaks at the transmission, hose and line joints, and cooler lines.
   If a problem is found, fix it before filling the transmission.
   If the level is above the upper mark, drain the ATF to proper level (see step 3 on page 14-208).
7. If necessary fill the transmission through the dipstick guide pipe opening (A) to bring the fluid level up to the upper mark. Always use Honda ATF-Z1 automatic transmission fluid (ATF). Using a non-Honda ATF can affect shift quality.

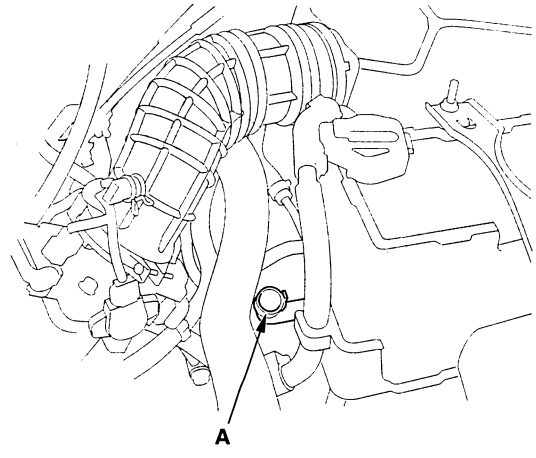

8. Insert the dipstick back into the dipstick guide pipe aligning the cap with the guide tab on the guide pipe.

BACK

Protected by AR

ATF Replacement

NOTE: Keep all foreign particles out of the transmission.

1. Bring the transmission up to normal operating temperature (the radiator fan comes on).
2. Park the vehicle on level ground, and turn the engine off.
3. Remove the drain plug (A), and drain the automatic transmission fluid (ATF). Then reinstall the drain plug with a new sealing washer (B).

   NOTE: If a cooler cleaner is going to be used, refer to ATF cooler cleaning (see page 14-228).

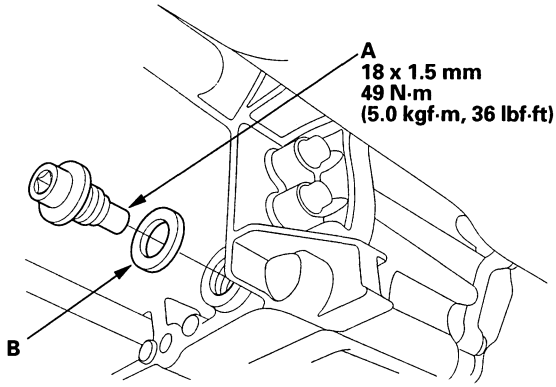

4. Remove the dipstick, and refill transmission with the recommended fluid amount through the opening of the dipstick guide pipe until the level reaches the upper mark on the dipstick. Always use Honda ATF-Z1 automatic transmission fluid (ATF). Using a non-Honda ATF can affect shift quality.

   Automatic Transmission Fluid Capacity:
   2.9 L (3.0 US qt) at change
   6.5 L (6.9 US qt) at overhaul

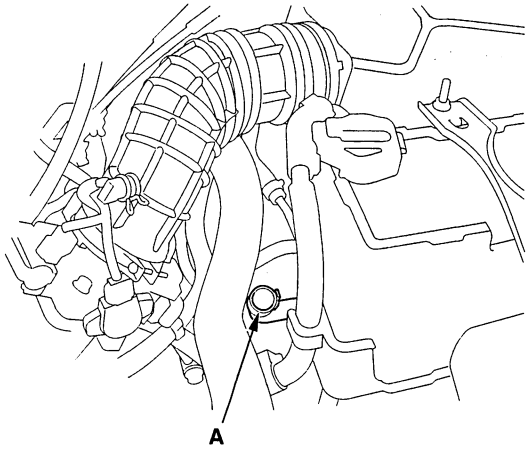

5. Insert the dipstick (A) into the dipstick guide pipe aligning the cap (B) with the guide tab (C).

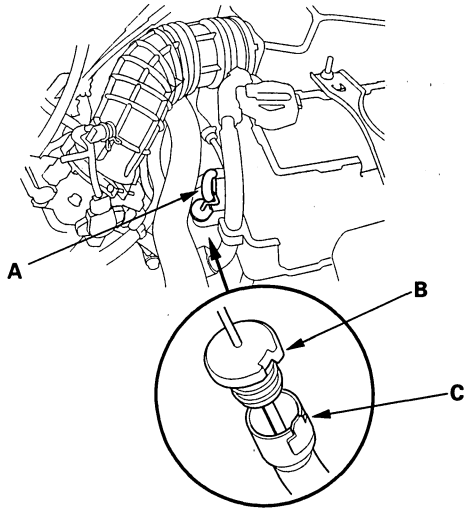

BACK

Protected by AR

Transmission Removal

Special Tools Required
- Engine hanger adapter VSB02C000015
- Engine support hanger, A and Reds AAR-T-12566
- Front subframe adapter VSB02C000016

These special tools are available through the Honda Tool and Equipment Program 1-888-424-6857.

NOTE:
- Use fender covers to avoid damaging painted surfaces.
- Special tool Reds engine support hanger AAR-T-12566 must be used with the side engine mount installed.

1. Get the customer's radio anti-theft code (navigation code), and write down the radio station presets.
2. Set the wheels in the straight ahead position.
3. Lock the steering wheel.
4. Remove the steering joint cover (A).

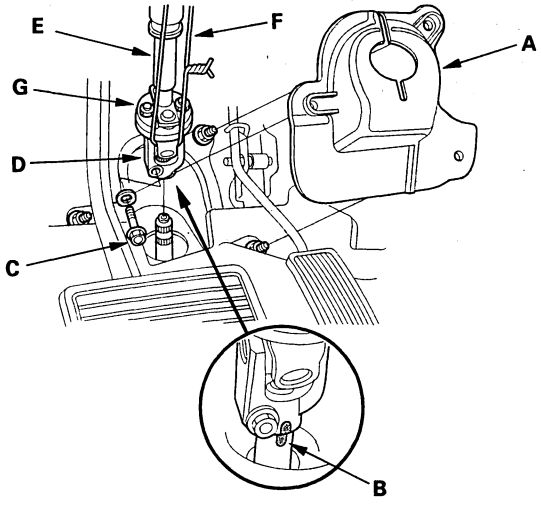

5. Make a reference mark (B) across the steering joint and steering gearbox pinion shaft. Remove the steering joint bolt (C), and disconnect the steering joint (D) by removing the steering joint toward the steering column. Hold the slider shaft (E) on the column with a piece of wire (F) between the joint yoke (G) on the slider shaft to the joint yoke on the upper shaft (see step 8 on page 17-25).
6. Remove and plug the return hose (A) from the power steering fluid reservoir (B). Wipe off any spilled fluid at once.

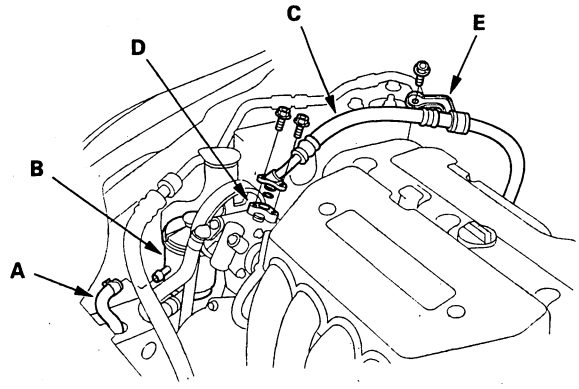

7. Remove the power steering pump outlet line (C) from the power steering pump (D).
8. Remove the bolt securing the power steering hose clamp (E).
9. Raise the vehicle, and make sure it is supported securely.
10. Remove the splash shield.
11. Remove the drain plug (A), and drain the automatic transmission fluid (ATF).

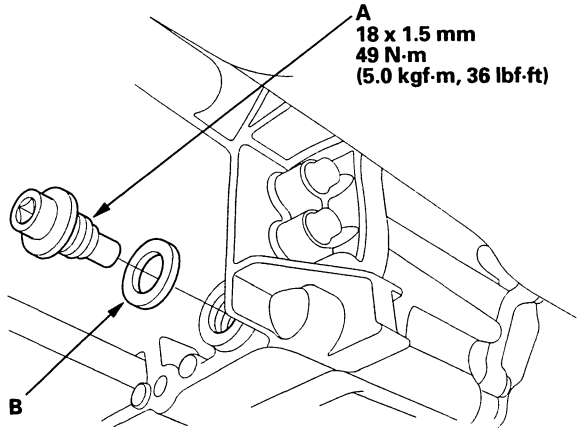

12. Reinstall the drain plug with a new sealing washer (B).

(cont'd)

Protected by AR

Transmission Removal (cont'd)

13. Disconnect the battery negative terminal, then disconnect the battery positive terminal.

14. Remove the battery hold-down bracket, then remove the battery cover, battery, and battery tray.

15. Remove the intake air duct and air cleaner housing.

16. Loosen the two bolts securing the battery base from under the vehicle, and remove the two bolts securing the battery base in the engine compartment, then remove the battery base.

17. Disconnect the A/T clutch pressure control solenoid valve A connector, and 2nd clutch transmission fluid pressure switch connector (B), and remove the harness clamps (C) from the clamp brackets (D).

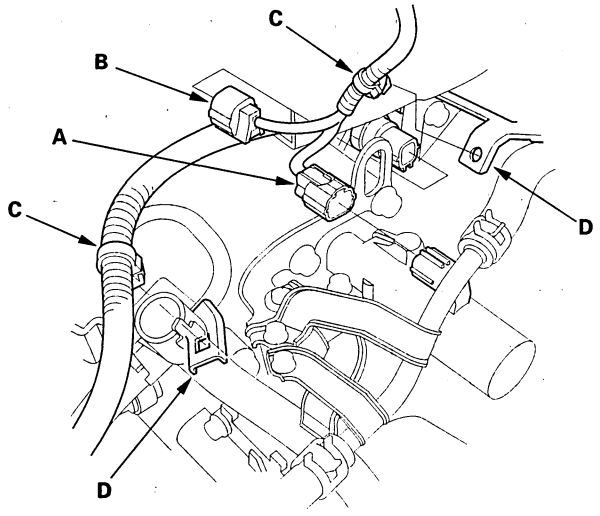

18. Remove the transmission range switch connector (A) from its bracket (B), then disconnect it.

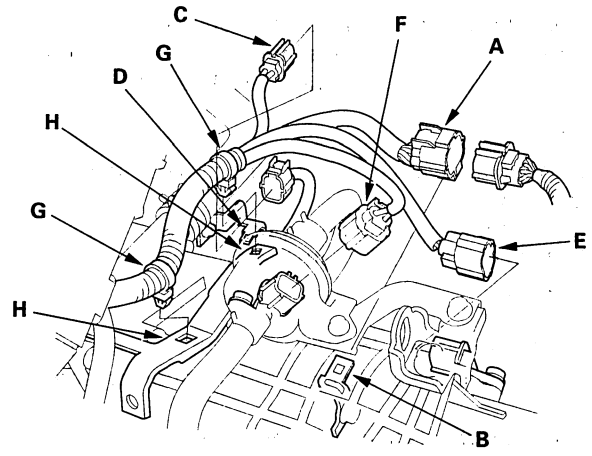

19. Remove the AF sensor connector (C) from its bracket (D), then disconnect it.

20. Disconnect the input shaft (mainshaft) speed sensor connector (E) and output shaft (countershaft) speed sensor connector (F), and remove the harness clamps (G) from the clamp brackets (H).

21. Disconnect the 3rd clutch transmission fluid pressure switch connector (A), and remove the harness clamp (B) from the clamp bracket (C).

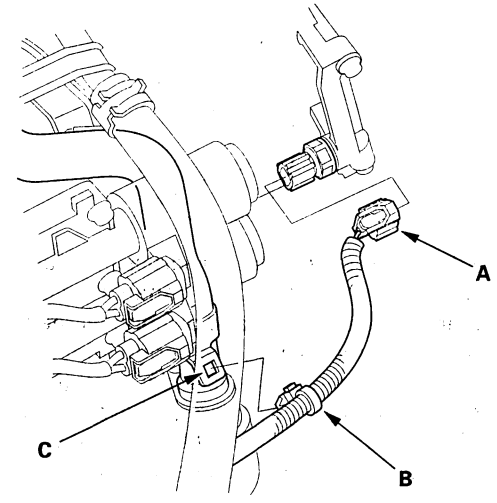

BACK

Protected by AR

22. Disconnect connector C108, A/T clutch pressure control solenoid valve B connector, and solenoid valve C connector, and remove the harness clamp (D) from the clamp bracket (E).

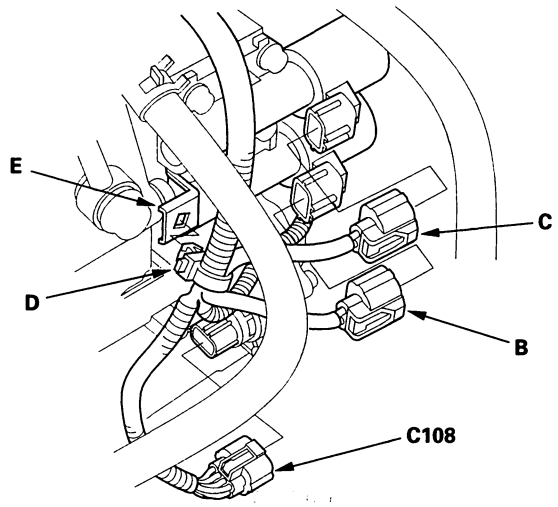

23. Remove the ATF cooler hoses (A) from the ATF cooler lines (B). Turn the ends of the ATF cooler hoses up to prevent ATF from flowing out, then plug the ATF cooler hoses and lines.

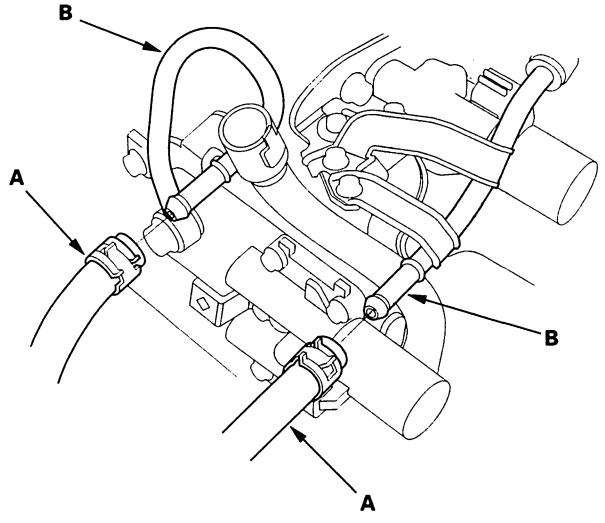

24. Check for any signs of leakage at the hose joints.

25. Remove the ATF cooler hose (A) from the hose clamp (B).

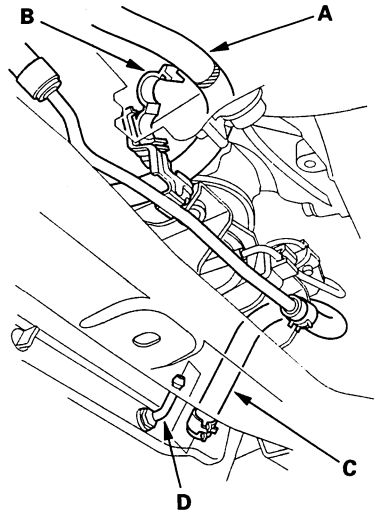

26. Disconnect the ATF cooler hose (C) from the ATF cooler line (D), then plug the hose end.

27. Remove the ground cable (A), transmission upper mount bracket plate (B), and transmission upper mount bracket (C).

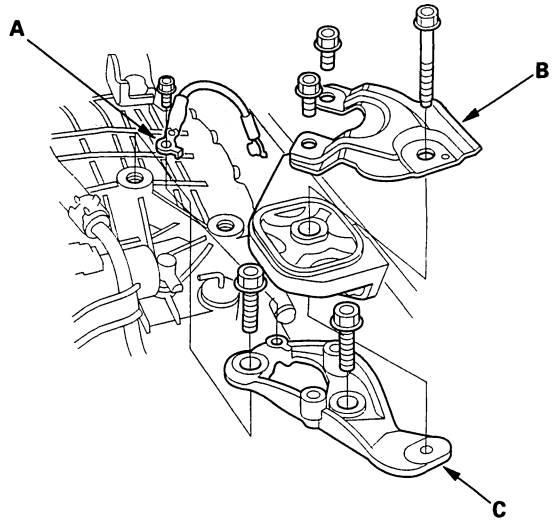

(cont'd)

BACK

Protected by AR

Transmission Removal (cont'd)

28. Attach the special tool adapter (VSB02C000015) to the threaded hole (A) in the cylinder head.

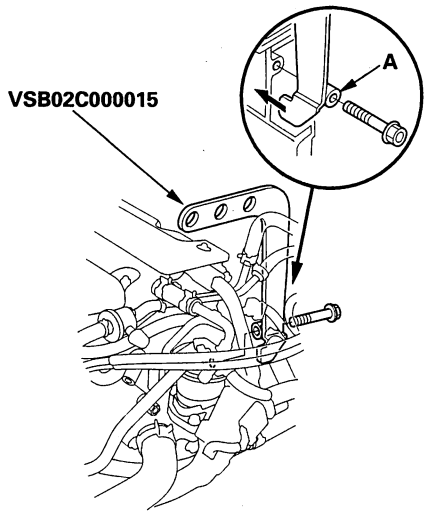

29. Install the engine support hanger (AAR-T-12566) to the vehicle, and attach the hook (A) to the special tool adapter (B). Tighten the wing nut (C) by hand, and lift and support the engine.

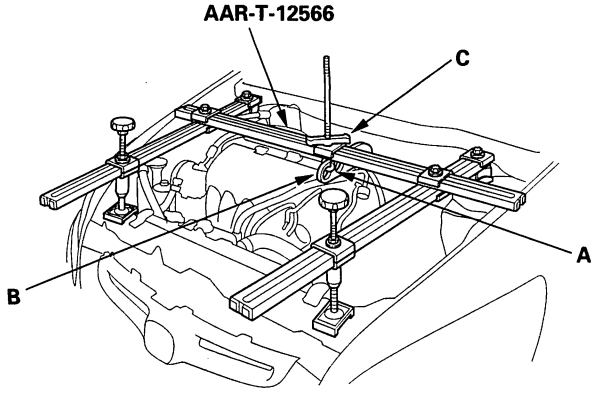

30. Remove the vacuum hose (A) from its clamp (B), then disconnect the hose from the vacuum line (C).

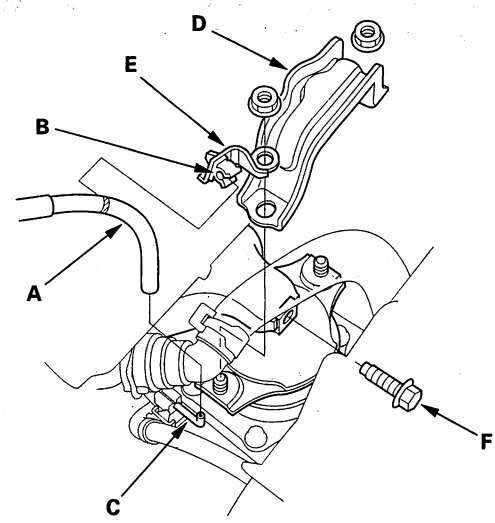

31. Remove the front mount stop (D) and clamp bracket (E), and remove the front mount bolt (F).

32. Remove the rear mount stop (A) and remove the rear mount bolt (B).

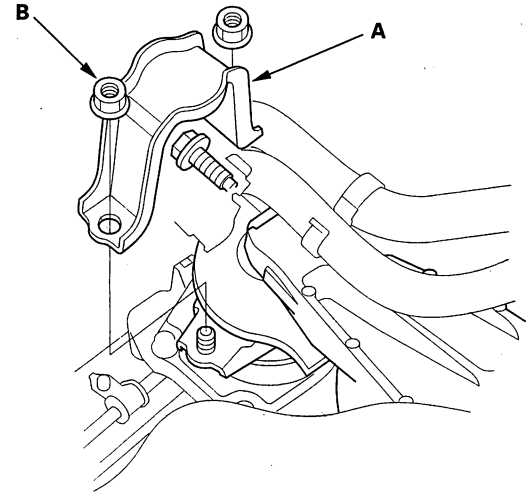

BACK

Protected by AR

33. Remove the exhaust pipe A and its mount.

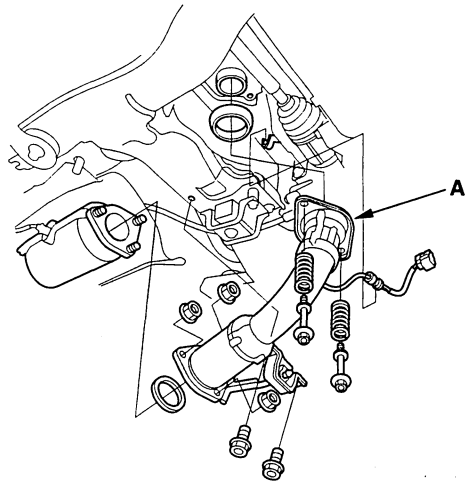

34. Disconnect the power steering pressure switch connector.

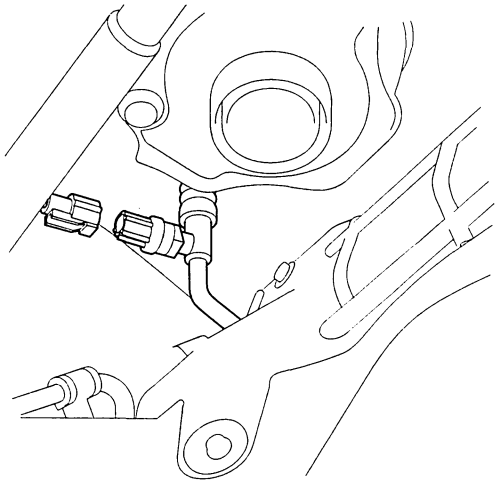

35. Insert a 6 mm Allen wrench (A) in the top of the ball joint pin (B), and remove the nuts (C), then separate the stabilizer link (D) from the lower arms (E).

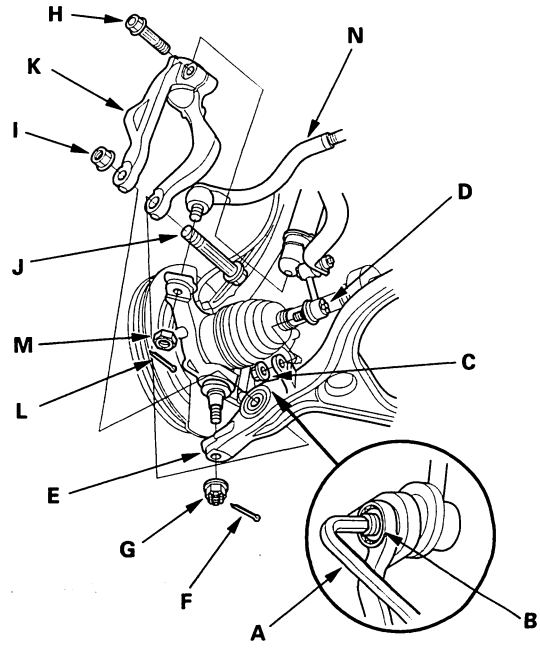

36. Remove the cotter pins (F), castle nuts (G), damper pinch bolt (H), self-locking nut (I), bolt (J), and damper forks (K), then separate the ball joints from the lower arms (see page 18-11).

37. Remove the cotter pins (L) and nuts (M), and separate the tie-rod end ball joints from the knuckles (see step 10 on page 18-14).

(cont'd)

BACK

Protected by AR

Transmission Removal (cont'd)

38. Remove the engine stiffener (A), and remove the drive plate bolts (B) while rotating the crankshaft pulley.

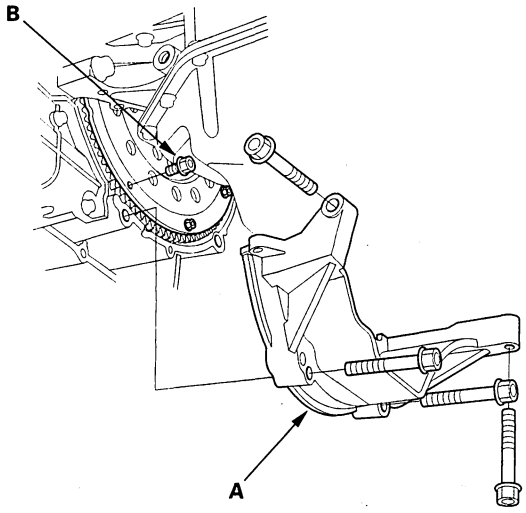

39. Remove the three bolts securing the shift cable *holder* (A), then remove the shift cable cover (B).

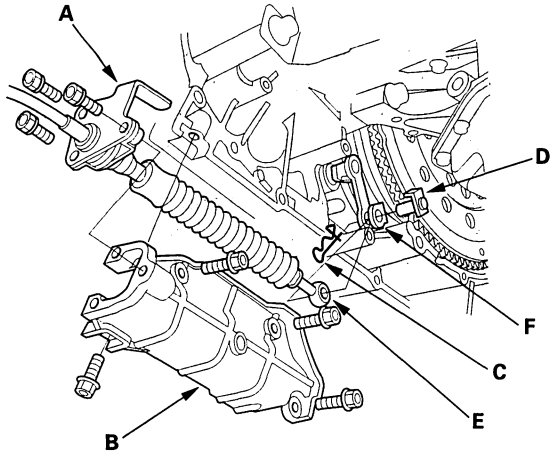

40. Remove the spring clip (C) and control pin (D), then separate the shift cable (E) from the selector control lever (F). Do not bend the shift cable excessively.

41. Remove the transmission lower mount nuts.

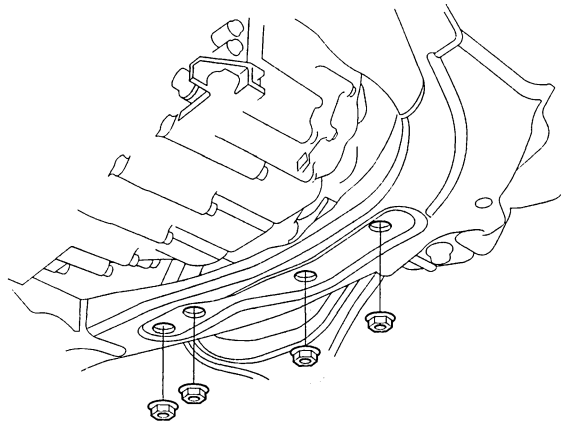

42. Remove both mid-mounts.

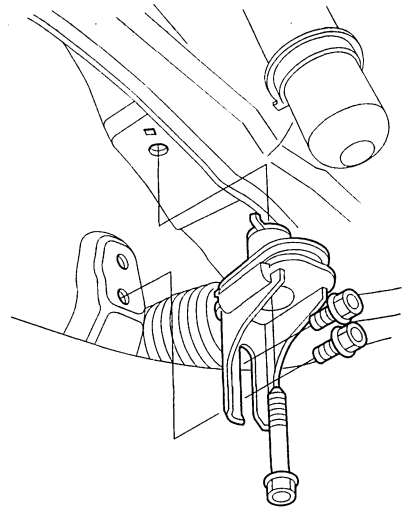

BACK

Protected by AR

43. Make the appropriate reference lines (A) at both ends of the subframe (B) that line up with the edge (C) of the stiffeners (D).

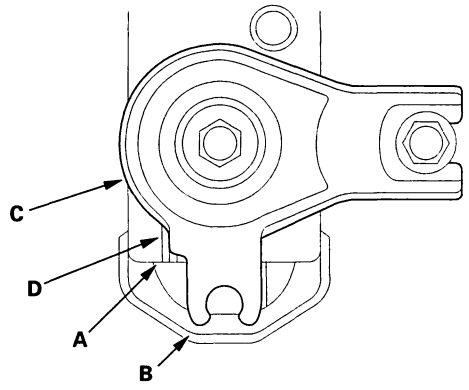

44. Attach the special tool to the subframe with hanging the belt of the special tool over the front of the subframe, then secure the belt with its stop.

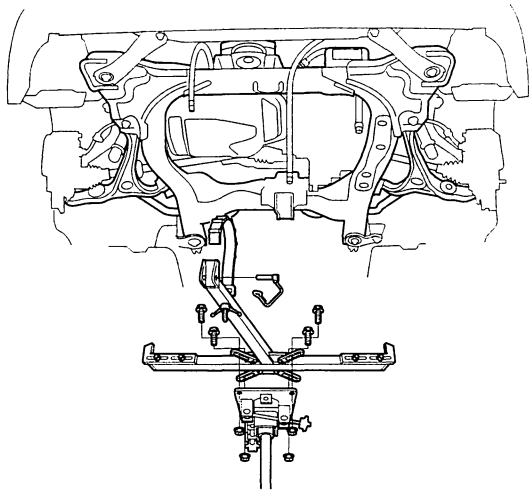

45. Raise the jack and line up the slots in the arms with the bolt holes on the corner of the jack base, then attach them with bolts securely.

46. Remove the four bolts securing the stiffeners (A), and four bolts securing the subframe (B), and lower the subframe.

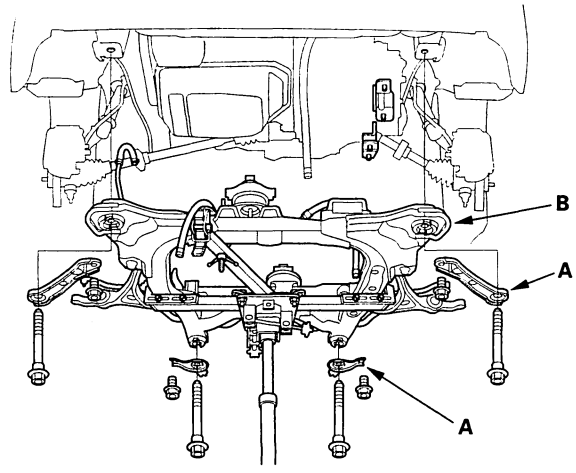

47. Remove the transmission lower mounts.

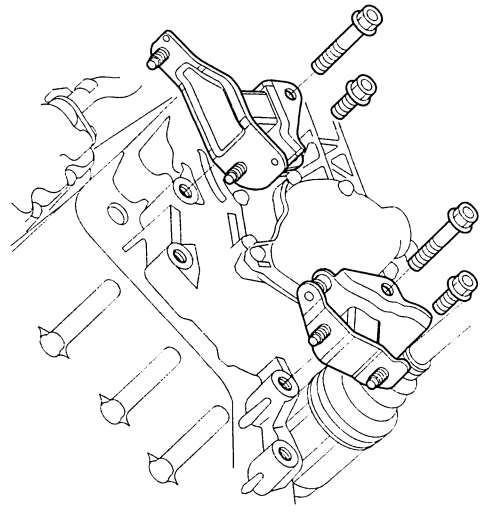

(cont'd)

Protected by AR

Transmission Removal (cont'd)

48. Remove the driveshaft boot cover (A) and bracket (B).

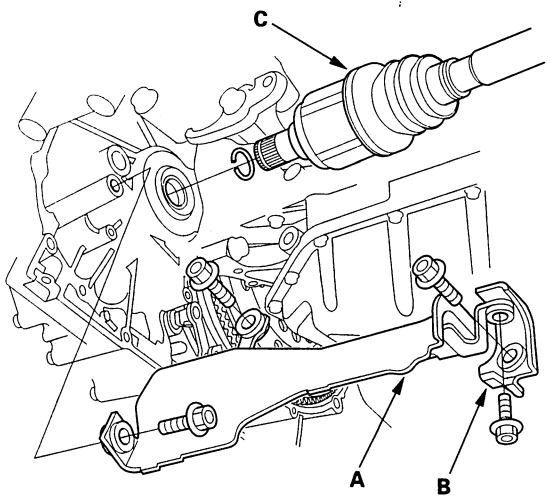

49. Pry the driveshafts (C), and remove them from the differential (see step 12 on page 16-6).

50. Remove the rear mount bracket.

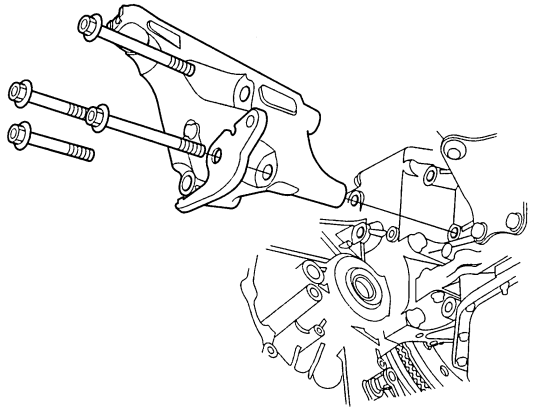

51. Place a jack under the transmission.

52. Remove the upper transmission housing mounting bolts.

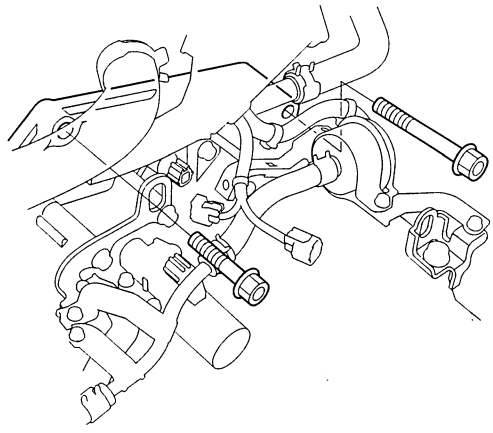

53. Remove the front mount bracket.

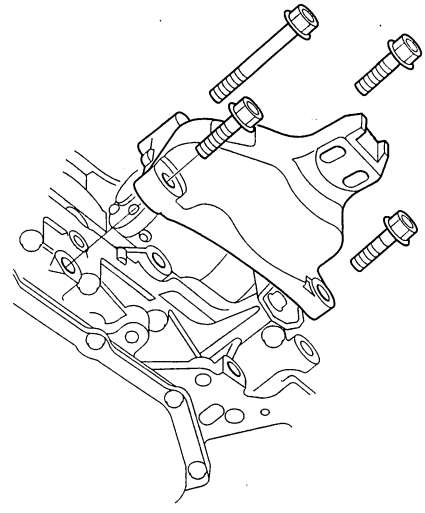

BACK

Protected by AR

54. Remove the front transmission housing mounting bolts.

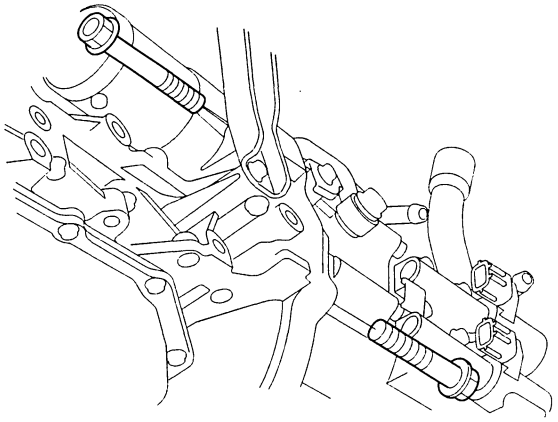

55. Remove the rear transmission housing mounting bolts.

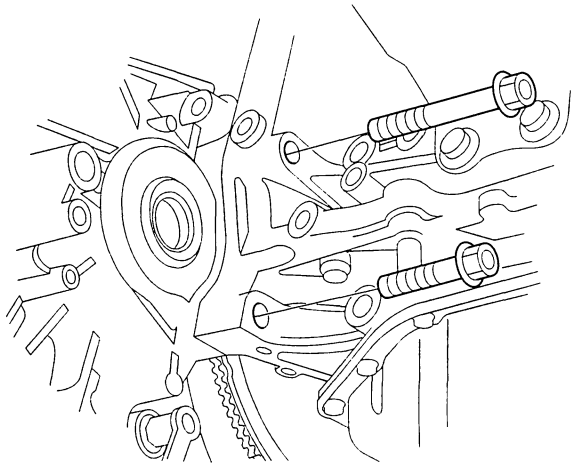

56. Slide the transmission away from the engine to remove it from the vehicle.

57. Remove the torque converter.

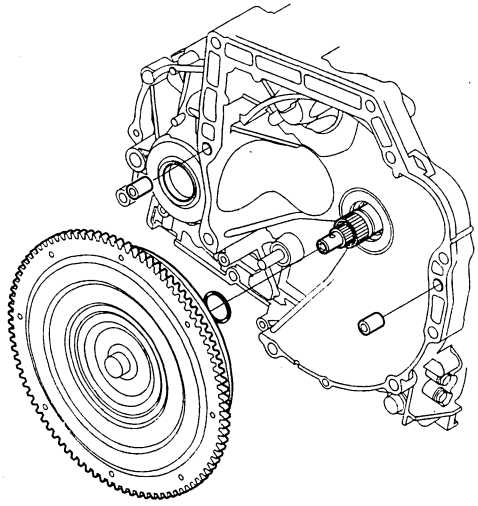

58. Inspect the drive plate, and replace it if it's damaged.

59. Check the transmission lower front mount (A) and lower rear mount (B). If the mount rubber (C) is worn or damaged, replace the mount. It is no need to replace the lower rear mount if its submount rubber (D) has ruptured or cracks, reuse it.

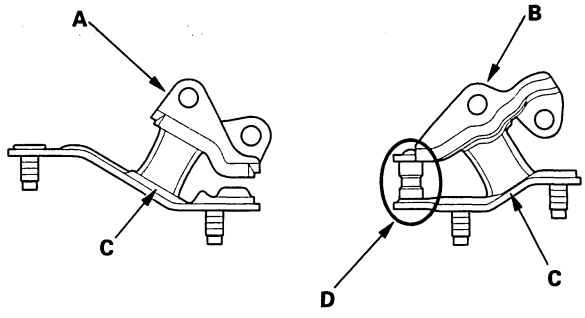

BACK

Protected by AR

Drive Plate Removal and Installation

1. Remove the transmission assembly (see page 14-209).
2. Remove the drive plate (A) and washer (B) from the engine crankshaft.

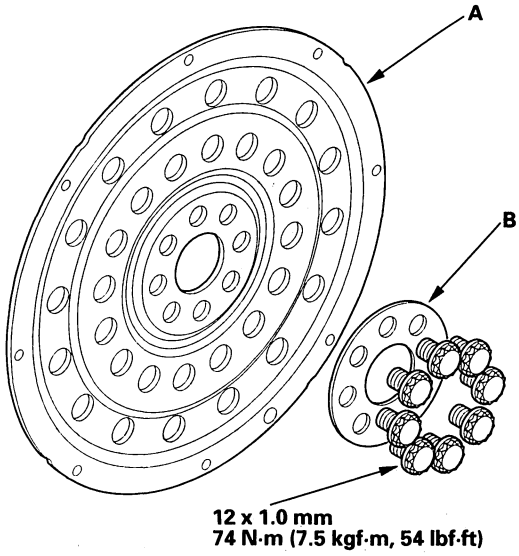

3. Install the drive plate and washer on the engine crankshaft, and tighten the eight bolts in a crisscross pattern in two or more steps.
4. Install the transmission assembly (see page 14-219).

BACK

Protected by AR

Transmission Installation

Special Tools Required
- Engine hanger adapter VSB02C000015
- Engine support hanger, A and Reds AAR-T-12566
- Front subframe adapter VSB02C000016

These special tools are available through the Honda Tool and Equipment Program 1-888-424-6857.

NOTE: Use fender covers to avoid damaging painted surfaces.

1. Clean the ATF cooler (see page 14-228).

2. Install the torque converter assembly (A) on the mainshaft (B) with the new O-ring (C).

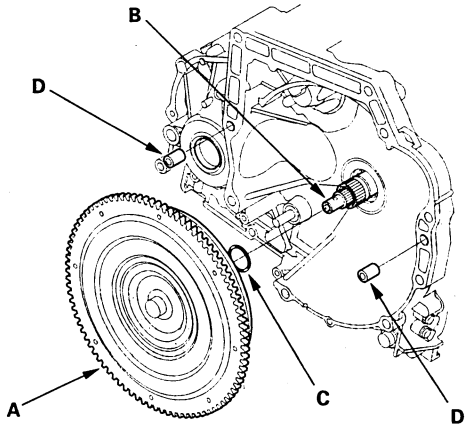

3. Install the 14 x 20 mm dowel pins (D) in the torque converter housing.

4. Place the transmission on the jack, and raise the transmission to the engine level.

5. Attach the transmission to the engine, then install the rear transmission housing mounting bolts.

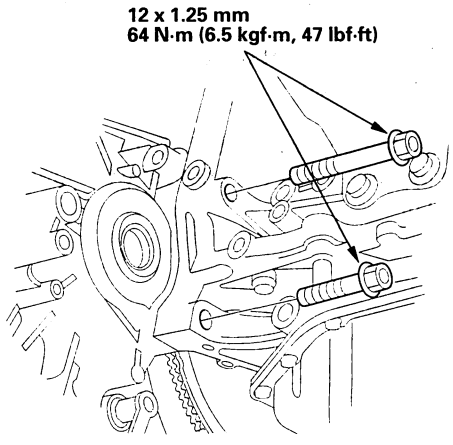

6. Install the front transmission housing mounting bolts.

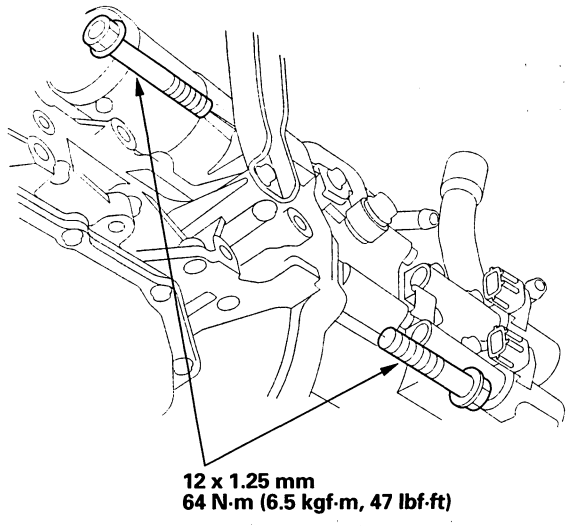

7. Install the upper transmission housing mounting bolts.

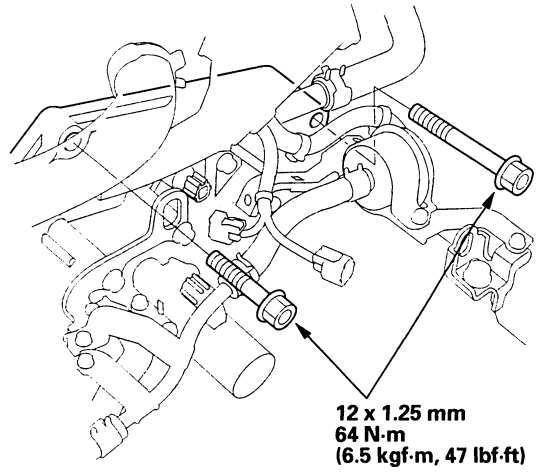

8. Remove the jack from the transmission.

(cont'd)

Protected by AR

Transmission Installation (cont'd)

9. Install the front mount bracket with the new bolts.

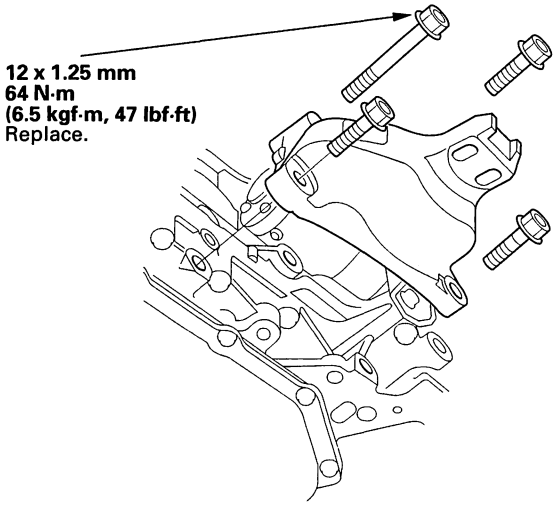

10. Install the rear mount bracket.

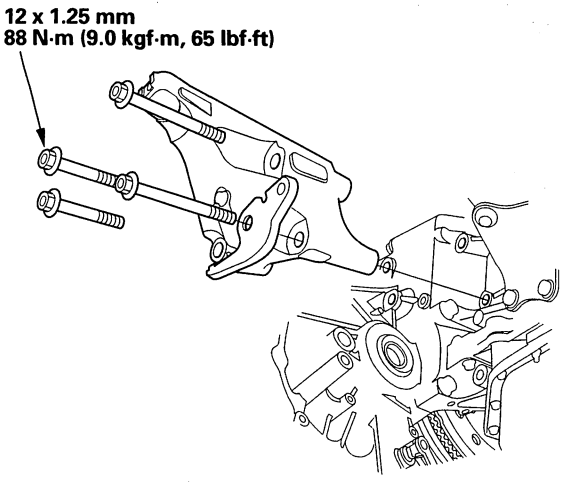

11. Install the new set rings (A) on the right and left driveshafts (B).

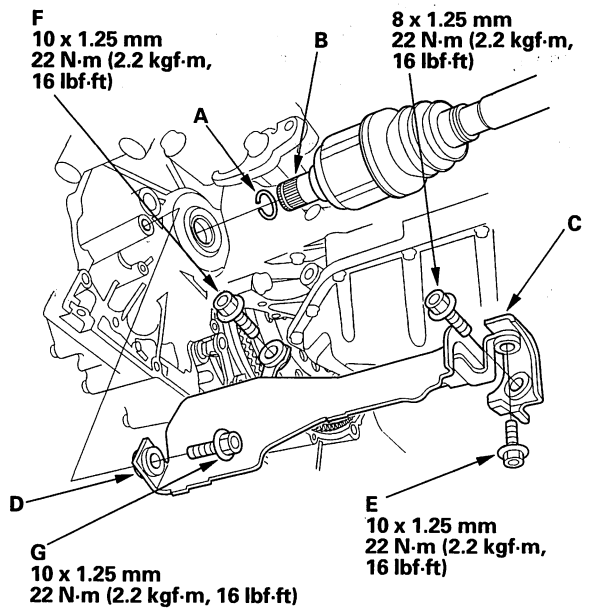

12. Install the right and left driveshafts (see page 16-19). While installing the driveshafts in the differential, be sure not to allow dust or other foreign particles to enter the transmission.

    NOTE:
    - Clean the areas where the driveshafts contact the transmission (differential) with solvent or carburetor cleaner, and dry with compressed air.
    - Turn the right and left steering knuckle fully outward, and slide the driveshafts into the differential until you feel its set ring engages the side gear.

13. Install the driveshaft boot cover bracket (C).

14. Install the driveshaft boot cover (D), but do not tighten the bolts.

15. Tighten the upper right bolt (E) on the cover first, then upper left bolt (F), and lastly the lower left bolt (G).

BACK

Protected by AR

16. Install the transmission lower mounts.

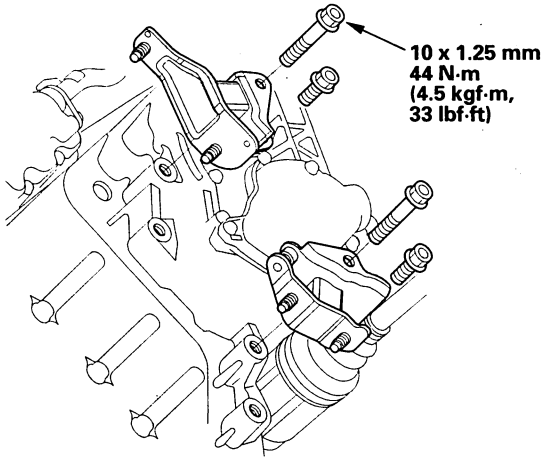

17. Support the front subframe (A) with the special tool and a jack, and lift it up to body.

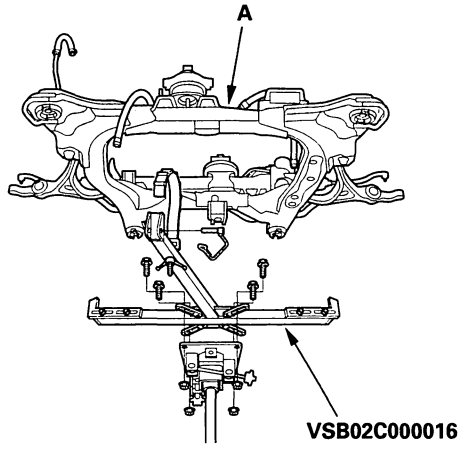

18. Loosely install the new subframe mounting bolts (A), and stiffener mounting bolts (B) (C).

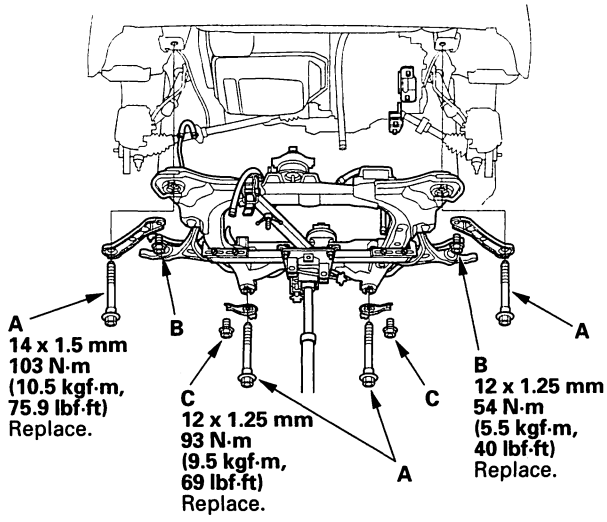

19. Loosely install both of the new mid-mounts mounting bolts.

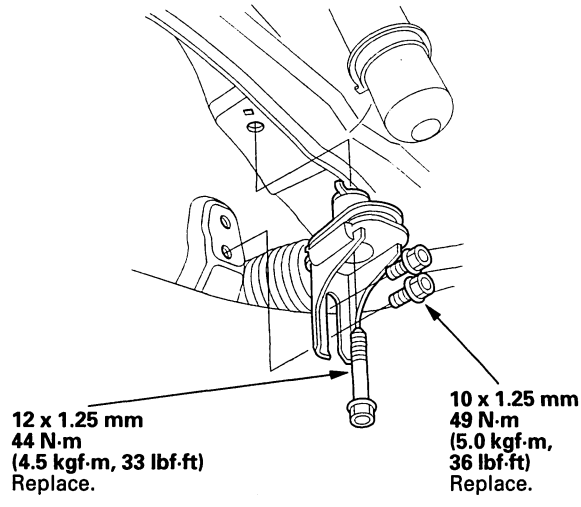

(cont'd)

Protected by AR

Transmission Installation (cont'd)

20. Align the reference marks (A) with edge (B) of both rear stiffeners (C), and tighten the rear subframe mounting bolts, then front bolts, and tighten the stiffener bolts to the specified torque.

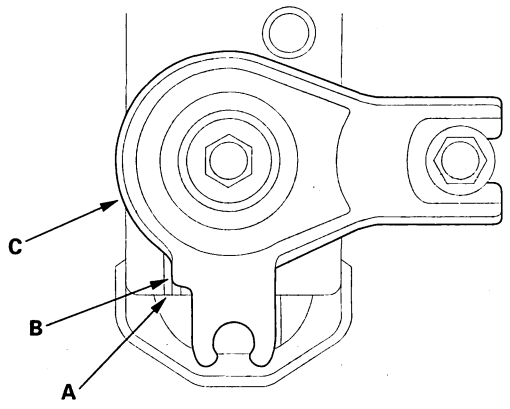

21. Tighten the mid-mount mounting bolts.

22. Install the transmission lower mount nuts.

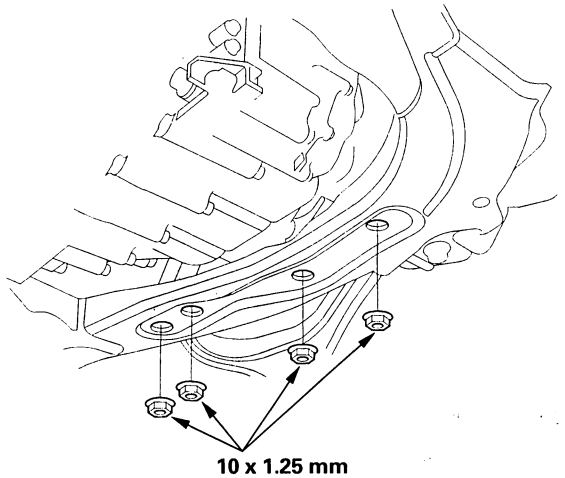

10 x 1.25 mm
44 N·m (4.5 kgf·m, 33 lbf·ft)

23. Attach the shift cable end (A) to the selector control lever (B), then insert the control pin (C) into the control lever hole through the shift cable end, and secure the control pin with the spring clip (D). Do not bend the shift cable excessively.

6 x 1.0 mm
9.8 N·m
(1.0 kgf·m, 7.2 lbf·ft)

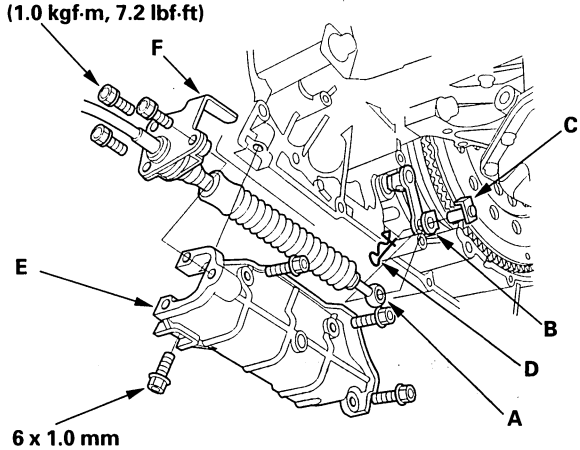

6 x 1.0 mm
12 N·m (1.2 kgf·m, 8.7 lbf·ft)

24. Install the shift cable cover (E), then secure the shift cable holder (F) to the shift cable cover with the three bolts.

BACK

Protected by AR

25. Attach the torque converter to the drive plate with eight bolts (A). Rotate the crankshaft pulley as necessary to tighten the bolts to 1/2 of the specified torque, then to the final torque, in a crisscross pattern. After tightening the last bolt, check that the crankshaft rotates freely.

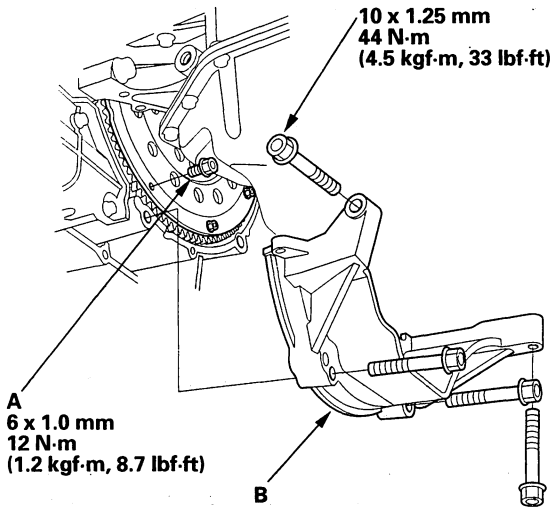

26. Install the engine stiffener (B).

27. Connect the power steering pressure switch connector.

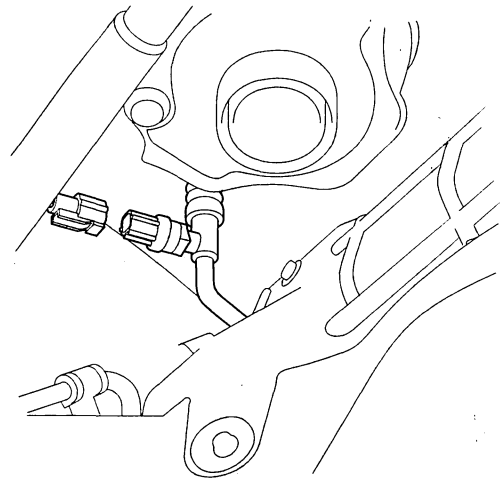

28. Install the exhaust pipe A, its mount (B), and new gaskets (C) (D).

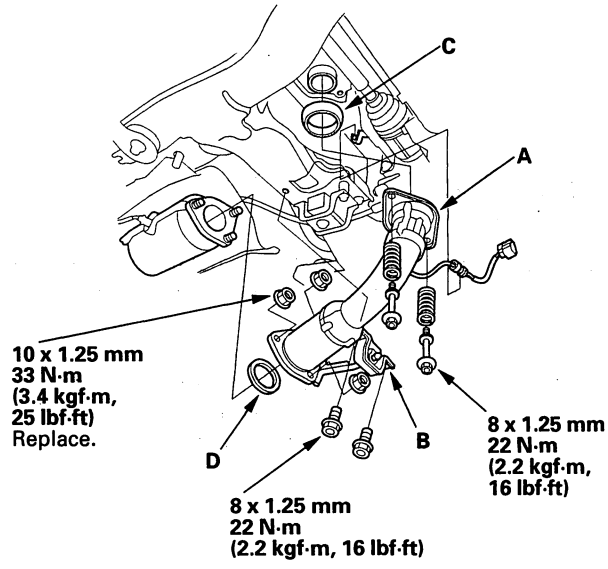

(cont'd)

Protected by AR

Transmission Installation (cont'd)

29. Install the damper forks (A) with damper pinch bolts (B) and new self-locking nuts (C), then install the ball joints on the lower arms (D) with the castle nuts (E) and new cotter pins (F) (see step 17 on page 18-15).

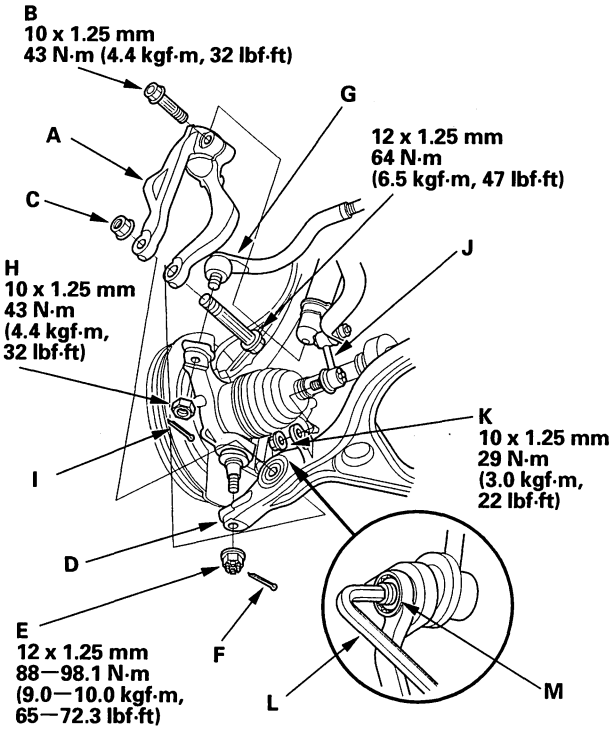

30. Install the tie-rod end ball joint (G) to each knuckle with the nuts (H) and new cotter pins (I) (see step 17 on page 18-15).

31. Install the stabilizer links (J) to the lower arms, and install the nuts (K). Insert a 6 mm Allen wrench (L) in the ball joint pin (M), and tighten the nuts.

32. Install the new front mount bolt.

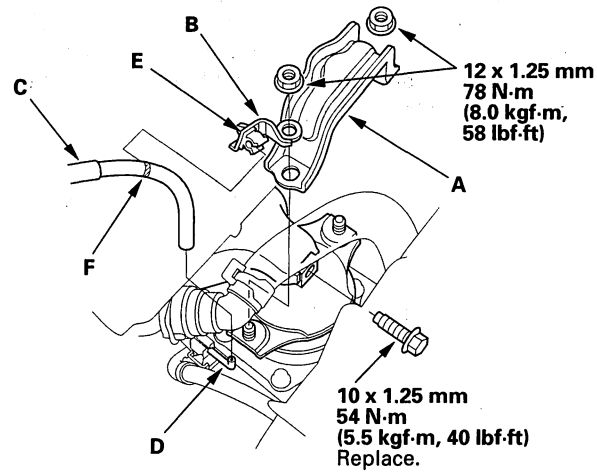

33. Install the front mount stop (A) and vacuum hose clamp bracket (B).

34. Connect the vacuum hose (C) to the vacuum line (D), then install the hose on its clamp (E) at the mark (F).

35. Install the new rear mount bolt.

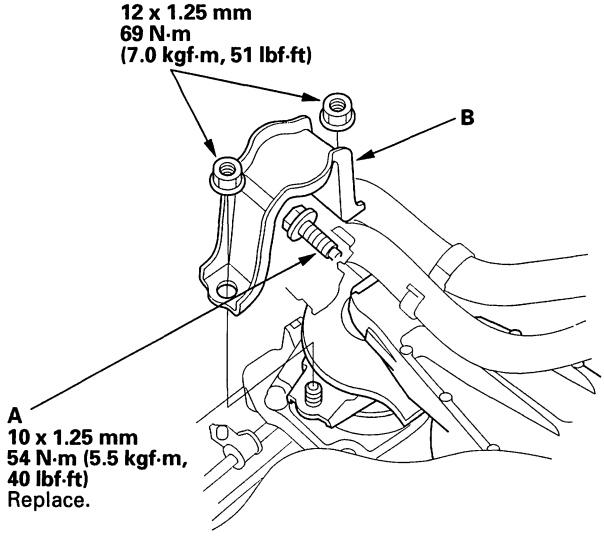

36. Install the rear mount stop (B).

BACK

Protected by AR

37. Remove the engine support hanger, and remove the special tool adapter from the engine.

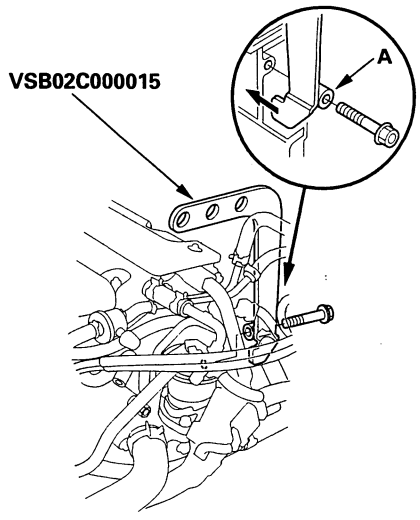

38. Install the transmission upper mount bracket (A), transmission upper mount bracket plate (B), and ground cable (C).

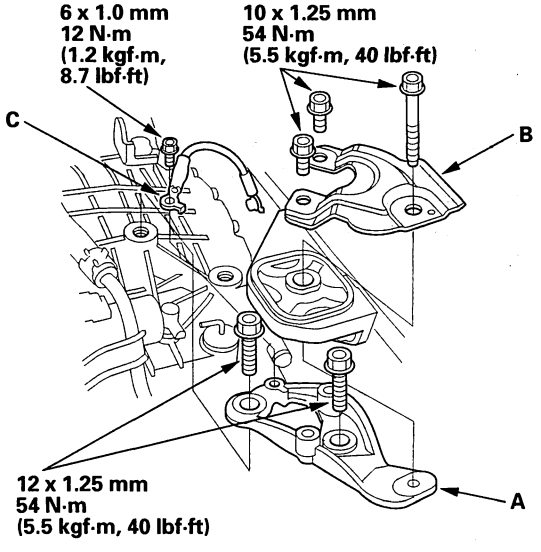

39. Connect the ATF cooler hose (A) to the ATF cooler line (B), and secure it with the clip (see page 14-230).

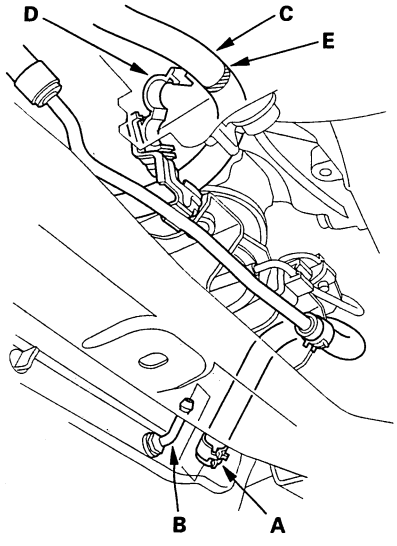

40. Install the ATF cooler hose (C) on the clamp (D) at the mark (E).

41. Connect the ATF cooler hoses (A) to the ATF cooler lines (B), and secure the hoses with the clips (see page 14-230).

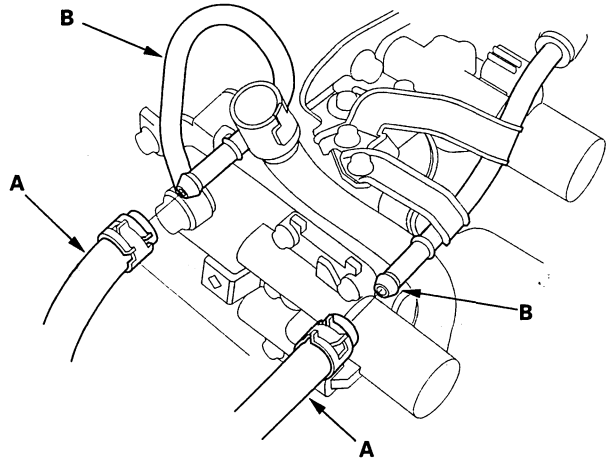

(cont'd)

Protected by AR

Transmission Installation (cont'd)

42. Connect the 3rd clutch transmission fluid pressure switch connector (A), and install the harness clamp (B) on the clamp bracket (C).

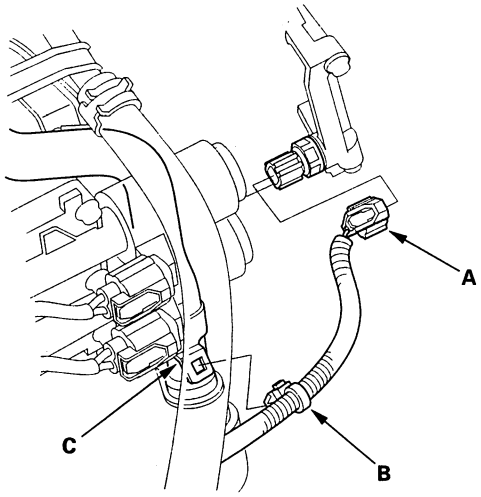

43. Connect the shift solenoid harness connector (A), A/T clutch pressure control solenoid valve B connector, and solenoid valve C connector, and install the harness clamp (D) on the clamp bracket (E).

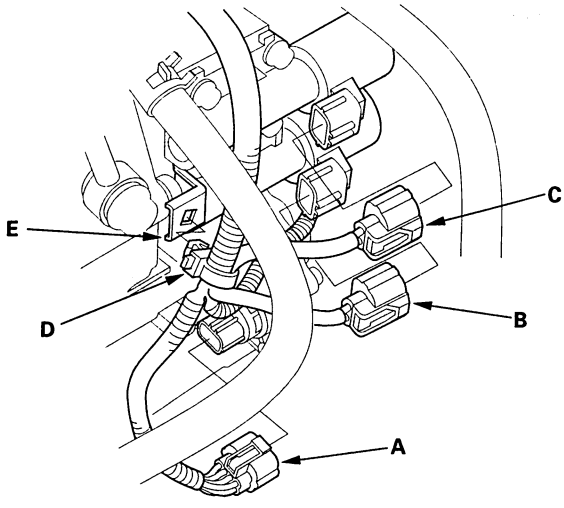

44. Connect the output shaft (countershaft) speed sensor connector (A) and input shaft (mainshaft) speed sensor connector (B).

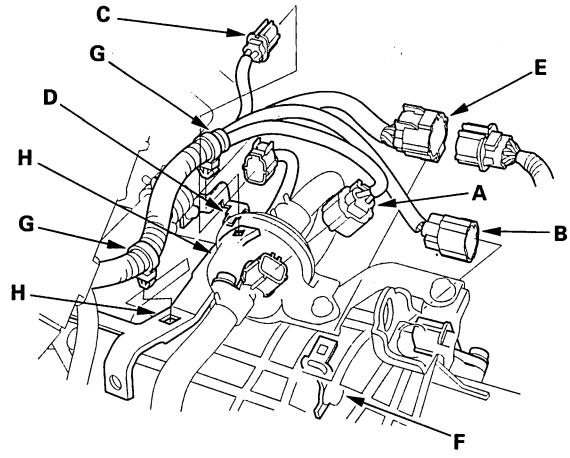

45. Connect the AF sensor connector (C), then install it on its bracket (D).

46. Connect the transmission range switch connector (E), then install it on its bracket (F).

47. Install the harness clamps (G) on the harness clamp brackets (H).

48. Install the A/T clutch pressure control solenoid valve A connector and 2nd clutch transmission fluid pressure switch connector (B), and install the harness clamps (C) on the harness clamp brackets (D).

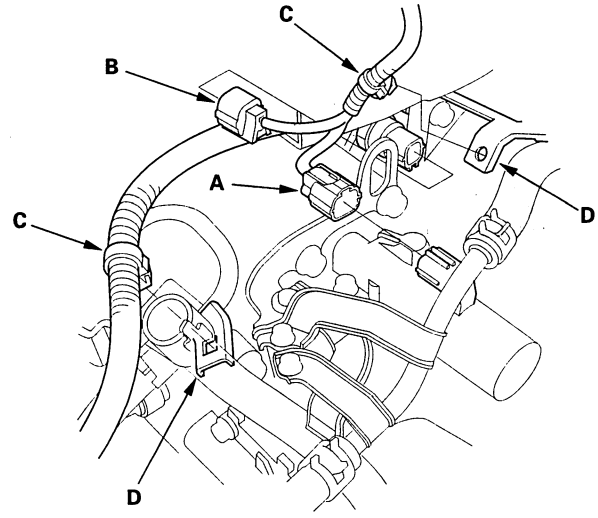

BACK

Protected by AR

49. Install the power steering pump outlet line (A) with a new O-ring (B) to the pump (C), and secure the hose clamp (D) with the bolt.

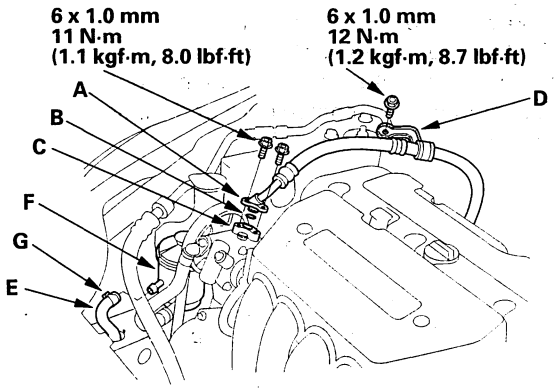

50. Connect the return hose (E) to the power steering fluid reservoir (F), then secure the hose with its clamp (G).

51. Refill the power steering system with fluid (see page 17-12).

52. Refill the transmission with ATF (see step 4 on page 14-208).

53. Connect the steering joint to the steering gearbox pinion shaft (A) by aligning the reference mark (B), and remove the wire (C) from the joint yoke (D).

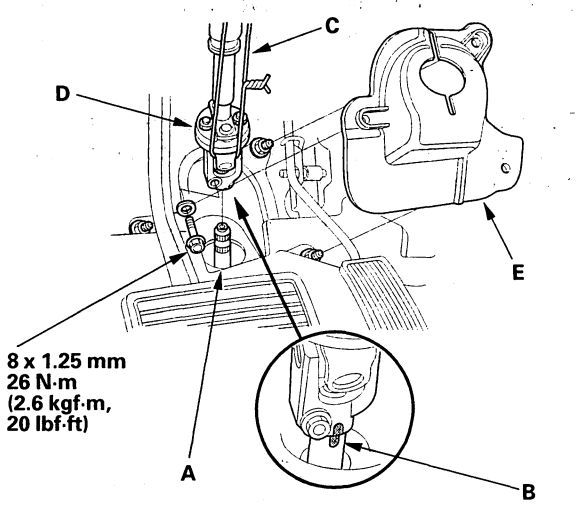

54. Install the steering joint cover (E).

55. Remove the steering wheel (see page 17-22).

56. Center the SRS cable reel and install the steering wheel (see page 17-24).

57. Install the battery base.

58. Install the air cleaner housing and intake air duct.

59. Install the battery tray, battery, and battery cover, then secure the battery with its hold-down bracket.

60. Connect the battery terminals.

61. Set the parking brake. Start the engine, and shift the transmission through all gears three times.

62. Check the shift lever operation, A/T gear position indicator operation, and shift cable adjustment.

63. Check and adjust the front wheel alignment (see page 18-6).

64. Install the splash shield.

65. Start the engine in the P or N position, and warm it up to normal operating temperature (the radiator fan comes on).

66. Turn off the engine, and check the ATF level (see page 14-207).

67. Do the power window control unit reset procedure (see page 22-232).

68. Do the road test (see page 14-186).

69. Enter the radio code (navigation code), reset the radio presets and set the clock.

Protected by AR

ATF Cooler Cleaning

Special Tools Required
- ATF Cooler Cleaner GHTTTCF6H
- Magnetic Nonbypass Spin-on Filter GTHGNBP2 (Available through the Honda Tool and Equipment Program 1-888-424-6857)

Before installing an overhauled or remanufactured automatic transmission, you must thoroughly clean the ATF cooler to prevent system contamination. Failure to do so could cause a repeat automatic transmission failure.

The cleaning procedure involves heated ATF-Z1 delivered under high pressure (100 psi). Check the security of all hoses and connections. Always wear safety glasses or a face shield, along with gloves and protective clothing. If you get ATF in your eyes or on your skin, rinse with water immediately.

⚠ WARNING

- Improper use of the ATF cooler cleaner can result in burns and other serious injuries.
- Always wear eye protection and protective clothing, and follow this procedure.

1. Check the fluid in the cooler cleaner tank. (The fluid level should be 4.5 inches from the top of the filler neck.) Adjust the level if needed; do not overfill. Use only Honda ATF-Z1; do not use any additives.

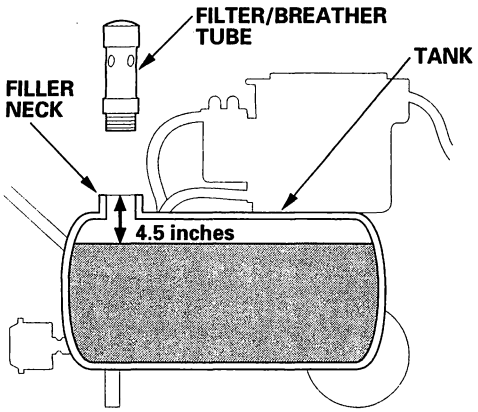

2. Plug the cooler cleaner into a 110 V grounded electrical outlet.

NOTICE

Make sure the outlet has no other appliances (light fixtures, drop lights, extension cords) plugged into it. Also, never plug the cooler cleaner into an extension cord or drop light; you could damage the unit.

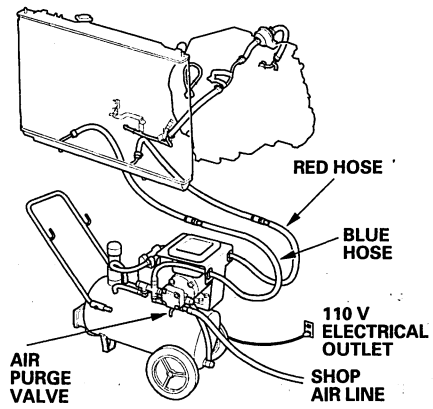

3. Flip the HEAT toggle switch to ON; the green indicator above the toggle switch comes on. Wait 1 hour for the cooler cleaner to reach its operating temperature. (The cooler cleaner is ready to use when the temperature gauge reads 140 ° to 150 °F.)

   NOTE: If the red indicator above the HEAT toggle switch comes on, the fluid level in the tank is too low for the tank heater to work (see step 1 of this procedure).

4. Select the appropriate pair of fittings, and attach them to the radiator, to the hoses, or to the banjo bolts for flow through the ATF cooler cleaner.

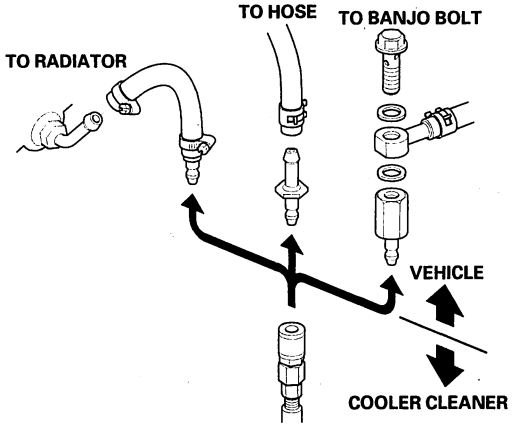

BACK

Protected by AR

5. Connect the red hose to the cooler outlet line (the line that normally goes to the external filter on the transmission).

6. Connect the blue hose to the cooler inlet line.

7. Connect a shop air hose (regulated to 100 to 125 psi) to the air purge valve.

   NOTICE
   The quick-connect fitting has a one-way check valve to keep ATF from entering your shop's air system. Do not remove or replace the fitting. Attach the coupler provided with the cooler cleaner to your shop air line if your coupler is not compatible.

8. Flip the MOTOR toggle switch to ON; the green indicator above the toggle switch comes on. Let the pump run for 5 minutes. While the pump is running, open and close the air purge valve periodically to cause agitation and improve the cleaning process. Always open the valve slowly. At the end of the 5-minutes cleaning period, leave the air purge valve open.

   NOTE: While the pump is running with the air purge valve open, it is normal to see vapor coming from the filler/breather tube vents.

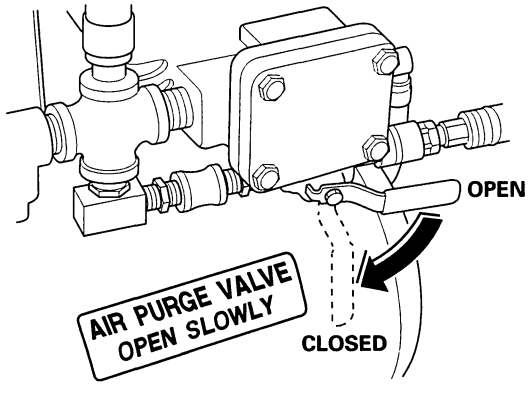

9. With the air purge valve open, flip the MOTOR toggle switch to OFF; the green indicator goes off. Leave the air purge valve open for at least 15 seconds to purge the lines and hoses of residual ATF, then close the valve.

10. Disconnect the red and blue hoses from the ATF cooler. Now connect the red hose to the cooler inlet line.

11. Now connect the blue hose to the cooler outlet line.

12. Flip the MOTOR toggle switch to ON, and let the pump run for 5 minutes. While the pump is running, open and close the air purge valve periodically. Always open the valve slowly. At the end of the 5-minutes cleaning period, leave the air purge valve open.

    NOTE: While the pump is running with the air purge valve open, it is normal to see vapor coming from the filler/breather tube vents.

13. With the air purge valve open, flip the MOTOR toggle switch to OFF. Leave the air purge valve open for at least 15 seconds to purge the lines and hoses of residual ATF, then close the valve.

14. Disconnect the red and blue hoses from the ATF cooler lines.

15. Connect the red and blue hoses to each other.

16. Disconnect the shop air from the air purge valve. Disconnect and stow the coupler if used.

17. Disconnect and stow the fittings from the ATF cooler inlet and outlet lines.

18. Unplug the cooler cleaner from the 110 V outlet.

Tool Maintenance

Follow these instructions to keep the ATF cooler cleaner working properly:

- Replace the two magnetic nonbypass spin-on filters once a year or when you notice a restriction in the ATF flow.
- Check the level and condition of the fluid in the tank before each use.
- Replace the ATF in the tank when it looks dark or dirty.

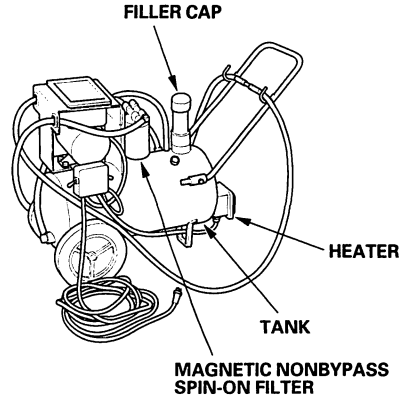

Protected by AR

ATF Cooler Hose Replacement

1. Slide the ATF cooler hoses (A) on the ATF filter (B) until they are 5—6 mm (0.20—0.24 in.) away from the filter housing.

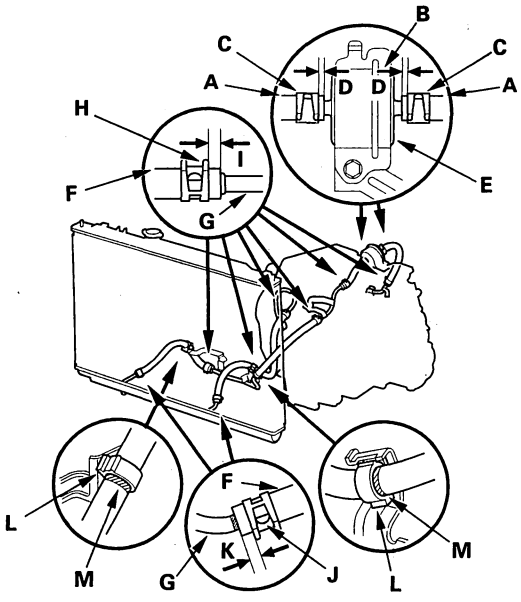

2. Secure the hoses with the clip (C) at 10—12 mm (0.4—0.5 in.) (D) from the filter housing (E).

3. Slide the ATF cooler hoses (F) over the ATF cooler lines (G).

4. Secure the hoses with the clips (H) at 5—6 mm (0.2—0.24 in.) (I) from the hose ends, and secure the hoses at the ATF cooler with the clips (J) at 2—4 mm (0.1—0.2 in.) (K) from the hose ends.

5. Install the hoses on the clamps (L) at the marks (M).

BACK

Protected by AR

Shift Lever Removal

1. Remove the center console (see page 20-125).
2. Shift the transmission into the R position.
3. Remove the nut securing the shift cable end.

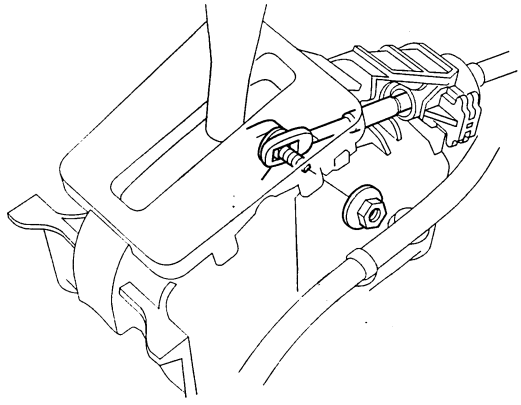

4. Press the holder lock release (A), and pull out the socket holder (B) on the shift cable (C) of the shift lever bracket base (D). Do not remove the shift cable by pulling the shift cable guide (E).

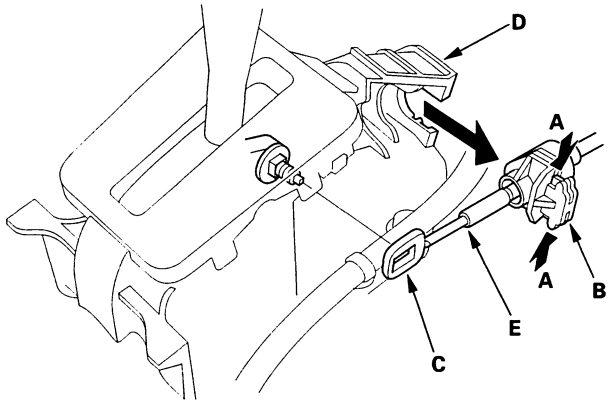

5. Disconnect shift lock solenoid connector (A) and park pin switch connector (B).

   NOTE: The illustration shows the 2003-2005-model type A shift lever; the 2003-2005-model type B shift lever and 2006-model shift lever are similar.

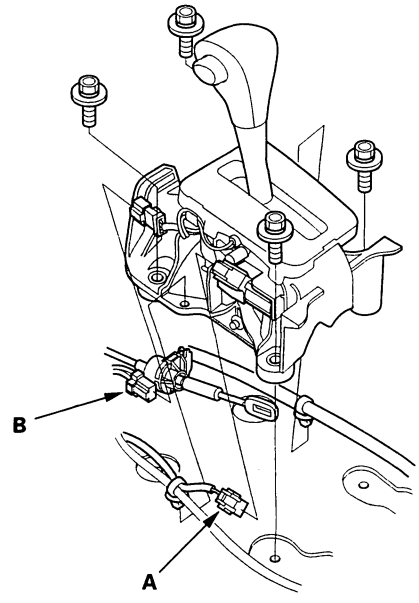

6. Remove the shift lever assembly.

BACK

Protected by AR

Shift Lever Installation

1. Install the shift lever assembly.

   NOTE: The illustration shows the 2003-2005-model type A shift lever; the 2003-2005-model type B shift lever and 2006-model shift lever are similar.

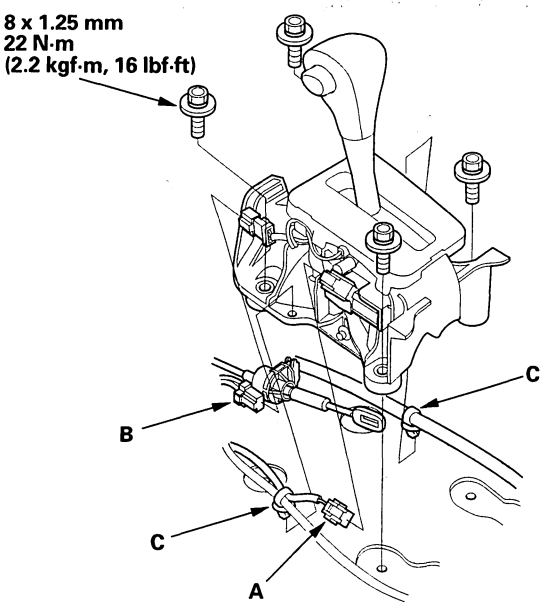

2. Connect the shift lock solenoid connector (A) and park pin switch connector (B), and install the harness clamps (C) on the shift lever bracket base.

3. Turn the ignition switch ON (II), and verify that the R position indicator comes on.

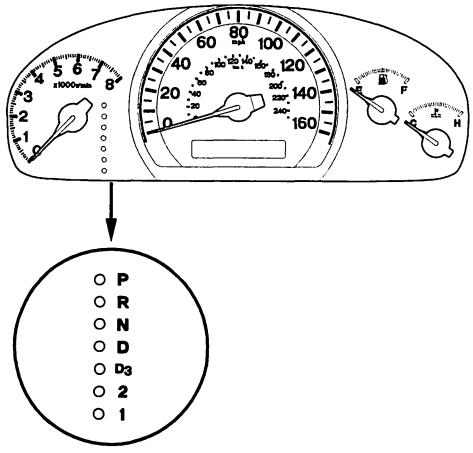

4. If necessary, push the shift cable until it stops, then release it. Pull the shift cable back one step so that the shift position is in R. Do not hold the shift cable guide (A) to adjust the shift cable (B).

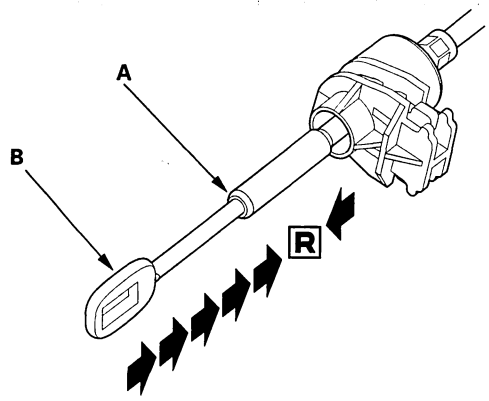

BACK

Protected by AR

5. Turn the ignition switch OFF.

6. Insert a 6.0 mm (0.24 in.) pin (A) through the positioning hole (B) on the shift lever bracket base and into the positioning hole (C) on the shift lever. The shift lever is secured in the R position.

2003-2005-Model Type A Shift Lever and 2006-Model Shift Lever:

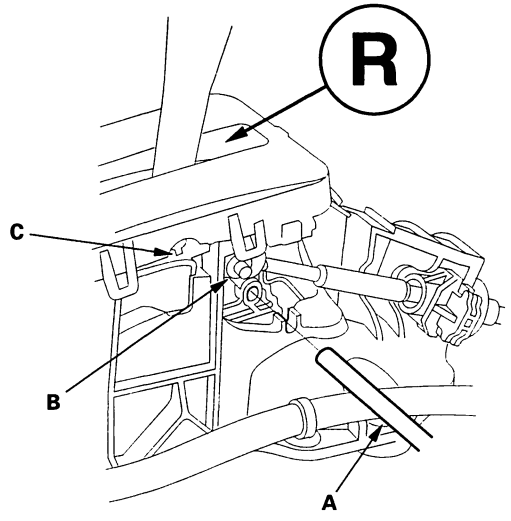

2003-2005-Model Type B Shift Lever:

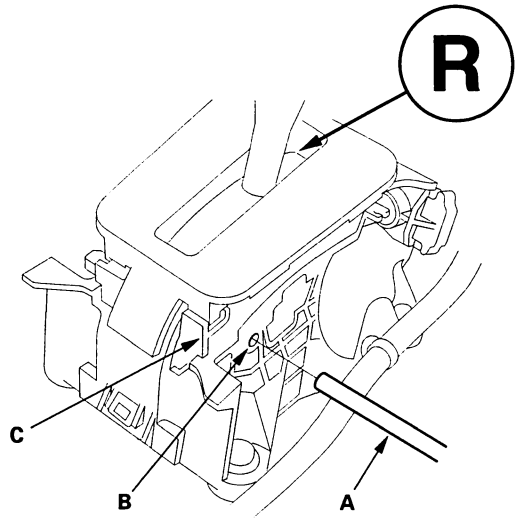

7. Align the socket holder (A) on the shift cable (B) with the slot in the bracket base (C), then slide the holder into the base. Install the shift cable end (D) over the mounting stud (E) by aligning its square hole (F) with the square fitting (G) at the bottom of the stud. Push the holder until it snaps securely in place. Do not install the shift cable by holding the shift cable guide (H).

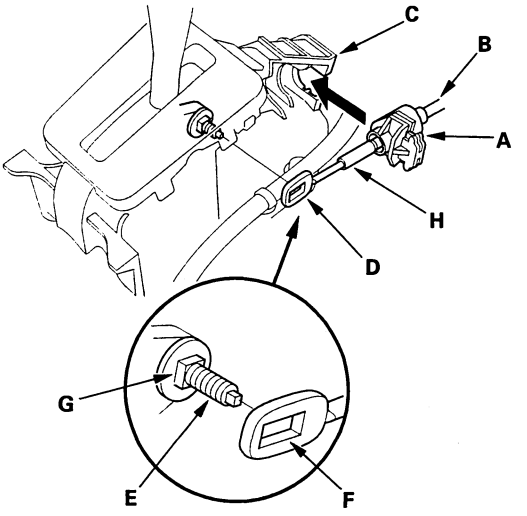

8. Verify that the shift cable end (A) is properly installed on the mounting stud (B).

Properly Installed:

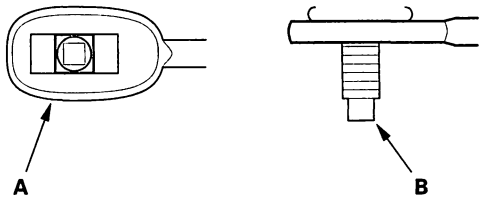

Improperly Installed:

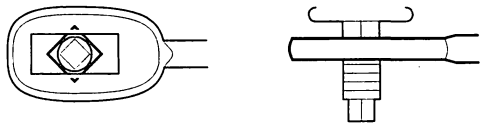

Cable end rides on the bottom of the mounting stud.

(cont'd)

Protected by AR

Shift Lever Installation (cont'd)

9. If improperly installed, remove the shift cable from the bracket base, and reinstall the shift cable. Do not install the shift cable end on the mounting stud while the shift cable is on the bracket base.

10. Install and tighten the nut.

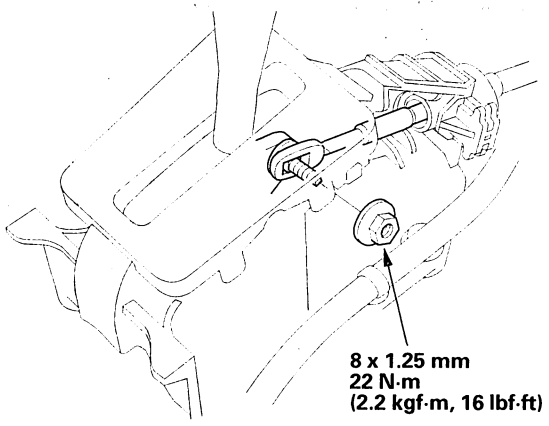

11. Remove the 6.0 mm (0.24 in.) pin that was installed to hold the shift lever.

12. Move the shift lever to each position, and verify that the A/T gear position indicator follows the transmission range switch.

13. Push the shift lock release, and verify that the shift lever releases.

14. Reinstall the center console (see page 20-125).

BACK

Protected by AR

Shift Lever Disassembly/Reassembly

2003-2005-Model Type A Shift Lever:

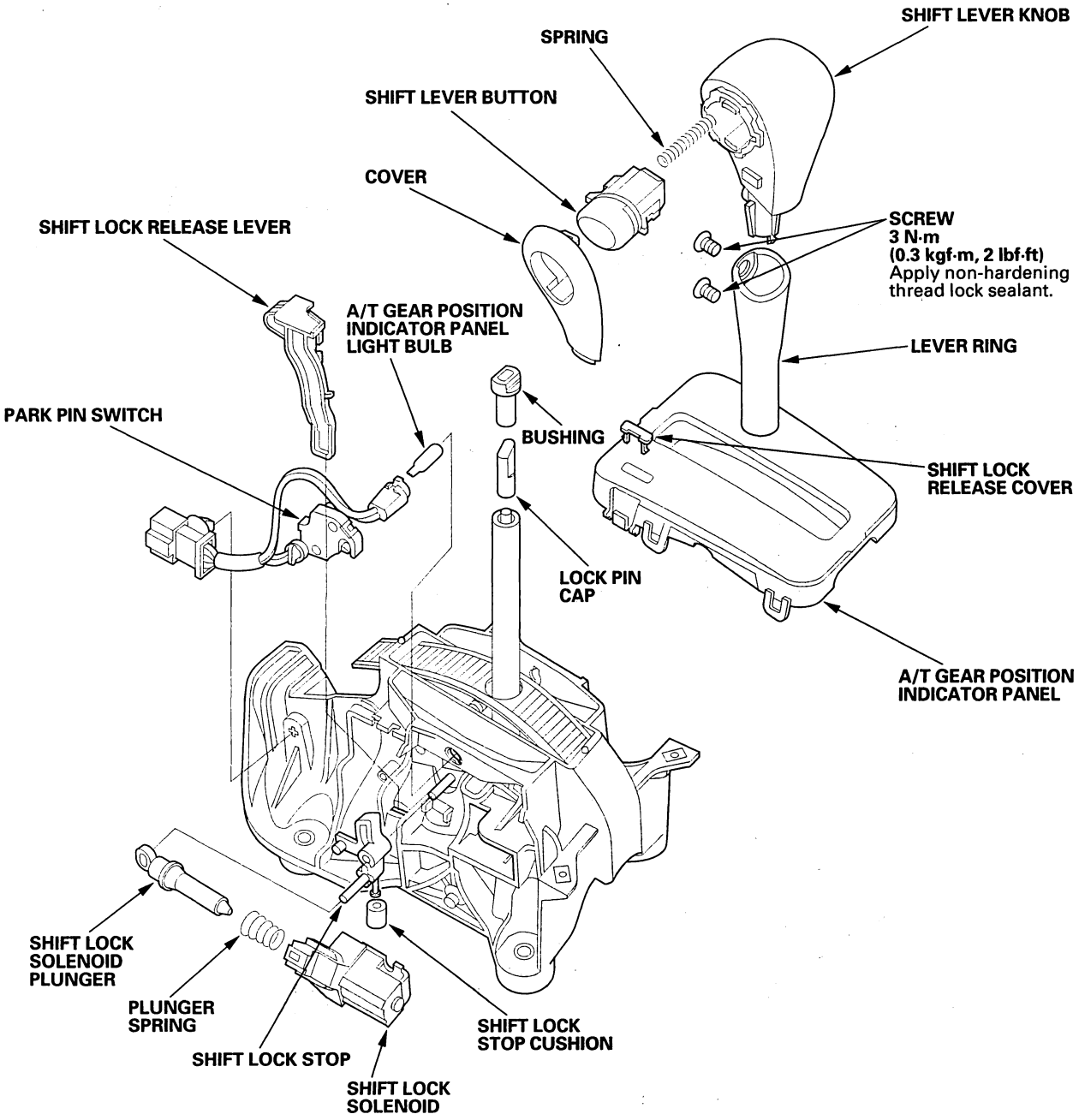

(cont'd)

BACK

Protected by AR

Shift Lever Disassembly/Reassembly (cont'd)

2003-2005-Model Type B Shift Lever:

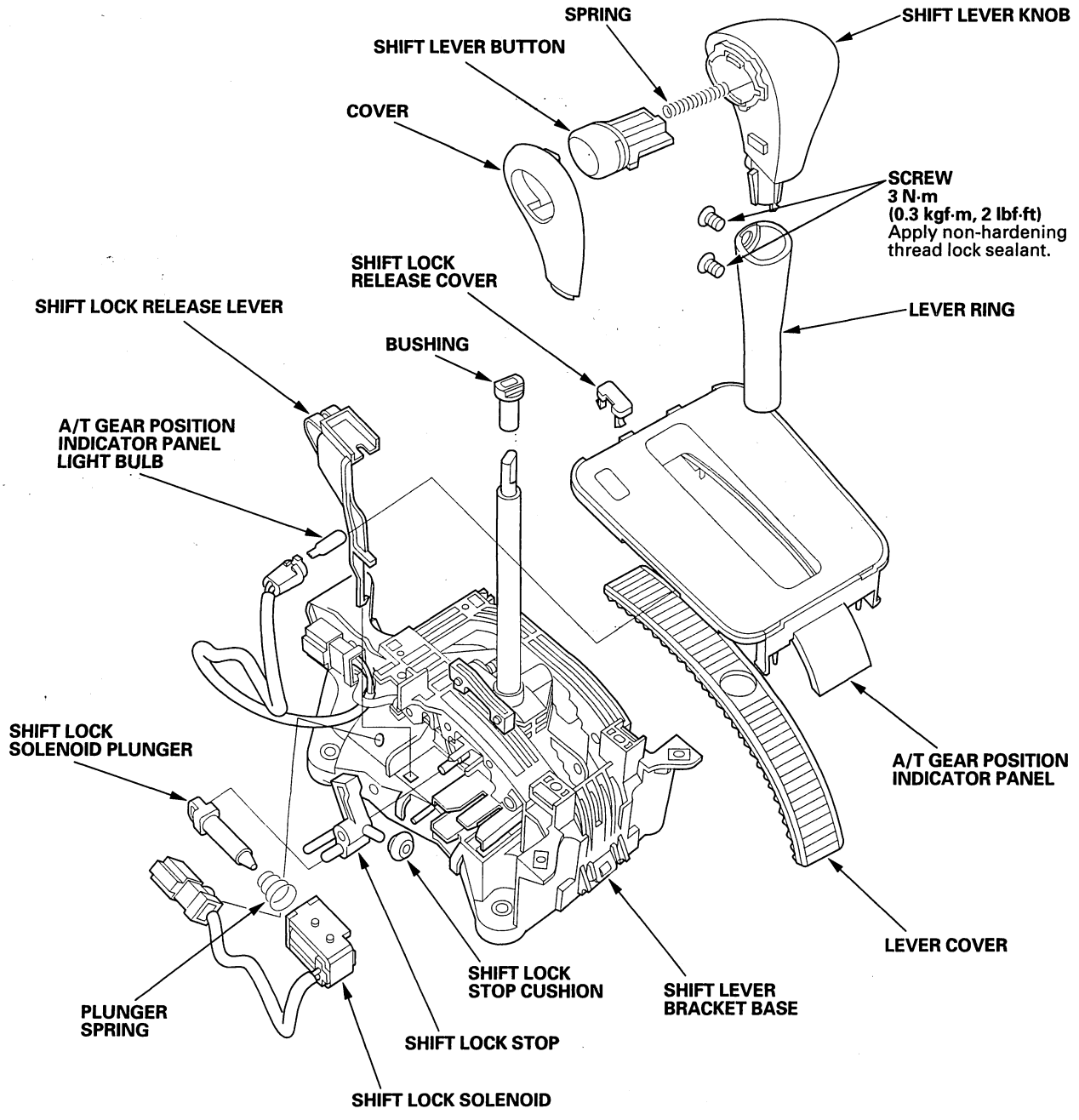

BACK

Protected by AR

2006-Model Shift Lever:

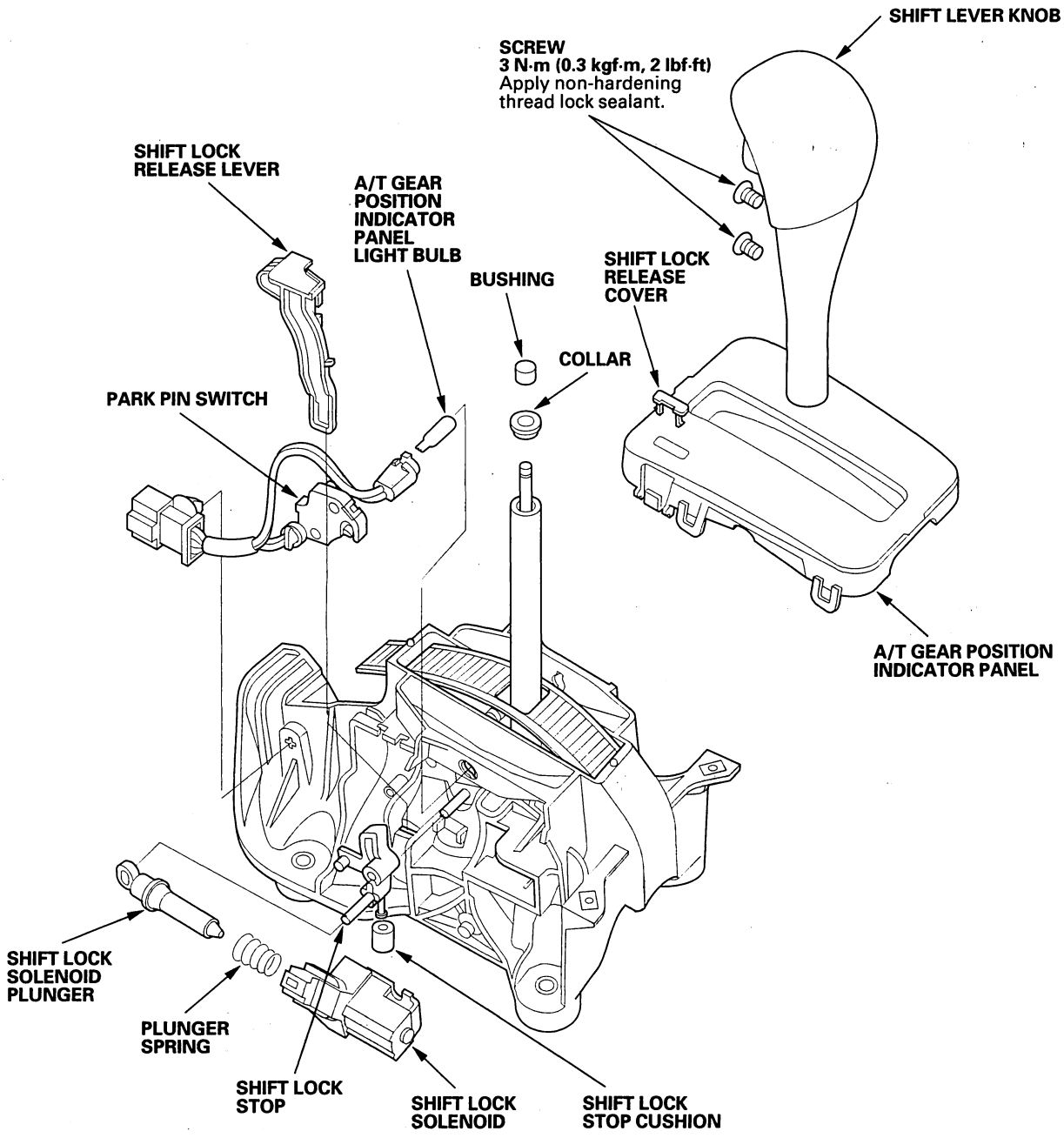

BACK

Protected by AR

Shift Cable Replacement

1. Raise the vehicle, and make sure it is securely supported.
2. Remove the center console (see page 20-125).
3. Shift the transmission into the R position.
4. Remove the nut securing the shift cable end.

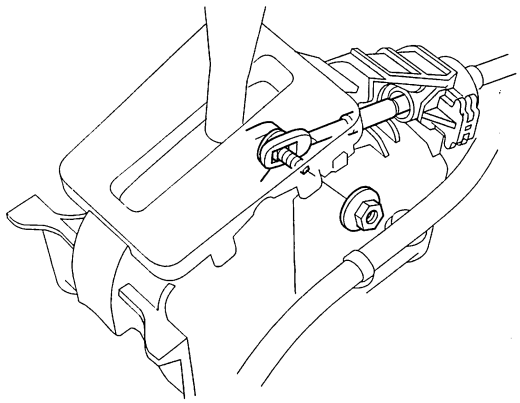

5. Press the holder lock release (A), and pull out the socket holder (B) on the shift cable (C) of the shift lever bracket base (D).

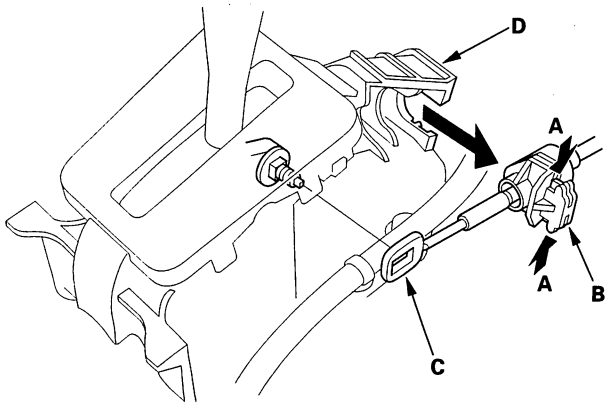

6. Remove the heat shield under the shift cable grommet.
7. Remove the shift cable bracket (A) and grommet (B).

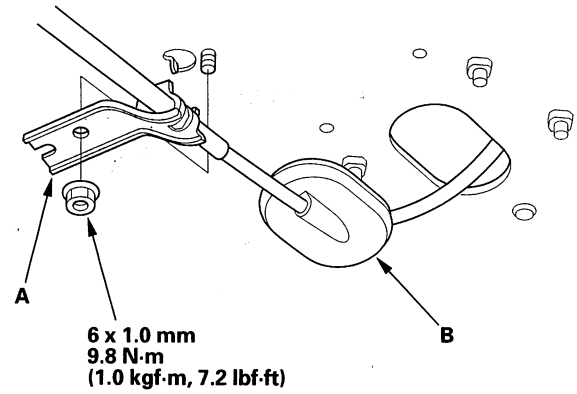

8. Remove the bolts securing the shift cable holder (A) and shift cable cover (B).

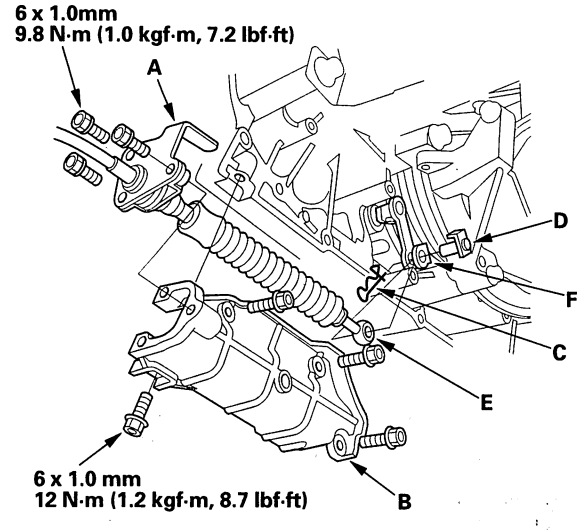

9. Remove the spring clip (C) and control pin (D), then separate the shift cable (E) from the control lever (F).
10. Insert the new shift cable through the grommet hole. Do not bend the shift cable excessively.
11. Install the shift cable bracket on the body, then install the grommet.
12. Verify that the transmission is in the R position at the control lever.

BACK

Protected by AR

13. Attach the shift cable end to the control lever, then insert the control pin into the control lever through the shift cable end, and secure the control pin with the spring clip.

14. Install the shift cable cover, then secure the shift cable holder to the shift cable cover with the two bolts.

15. Install the heat shield.

16. Turn the ignition switch ON (II), and verify that the R position indicator comes on.

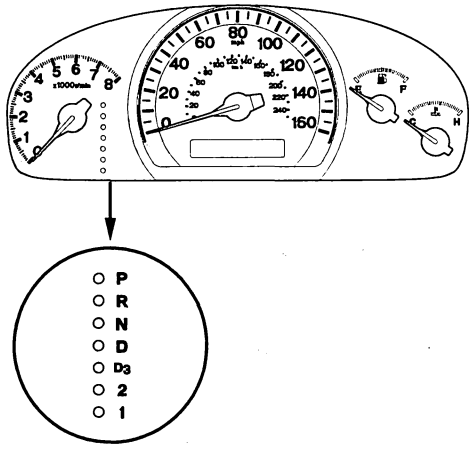

17. If necessary, push the shift cable until it stops, then release it. Pull the shift cable back one step so that the shift position is in R. Do not hold the shift cable guide (A) to adjust the shift cable (B).

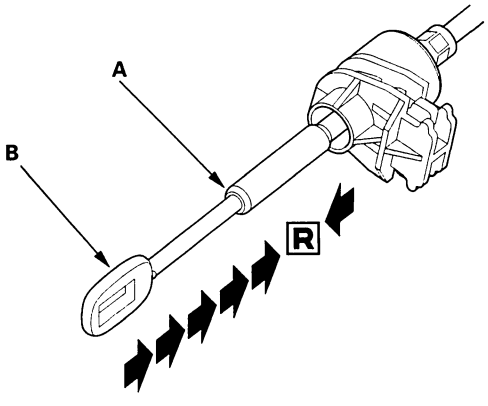

18. Turn the ignition switch OFF.

19. Insert a 6.0 mm (0.24 in.) pin (A) through the positioning hole (B) on the shift lever bracket base and into the positioning hole (C) on the shift lever. The shift lever is secured in the R position.

2003-2005-Model Type A Shift Lever and 2006-Model Shift Lever:

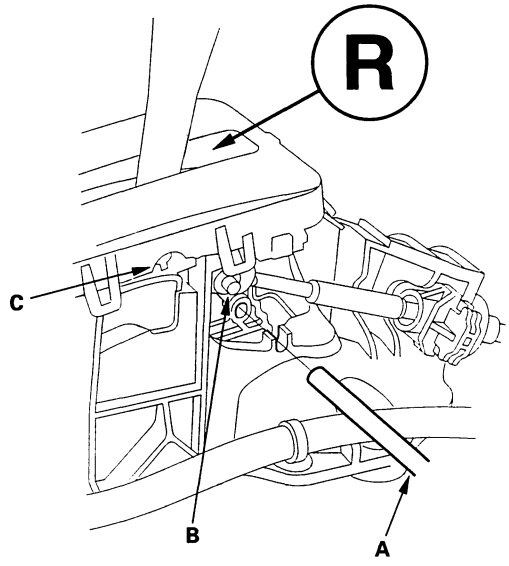

2003-2005-Model Type B Shift Lever:

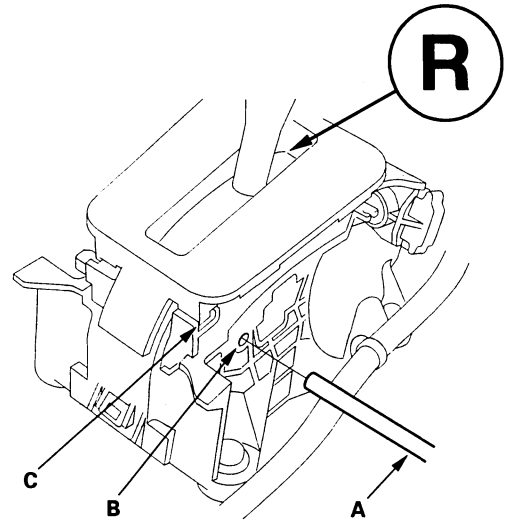

(cont'd)

Protected by AR

Shift Cable Replacement (cont'd)

20. Align the socket holder (A) on the shift cable (B) with the slot in the bracket base (C), then slide the holder into base. Install the shift cable end (D) over the mounting stud (E) by aligning its square hole (F) with the square fitting (G) at the bottom of the stud. Push the holder until it snaps securely in place. Do not install the shift cable by holding the shift cable guide (H).

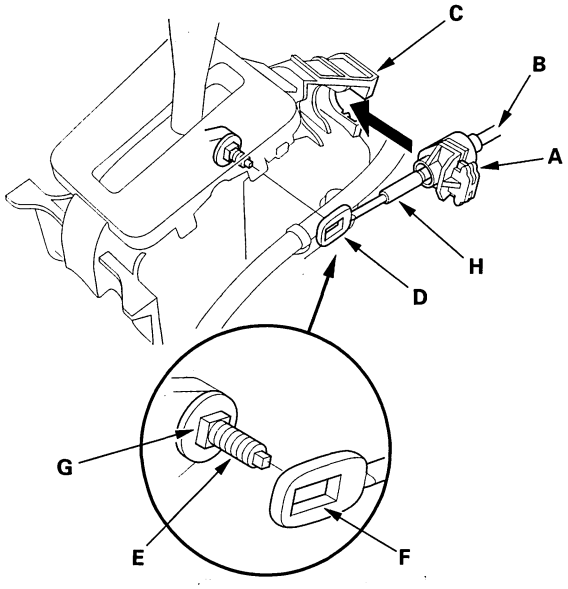

21. Verify that the shift cable end (A) is properly installed on the mounting stud (B).

Properly Installed:

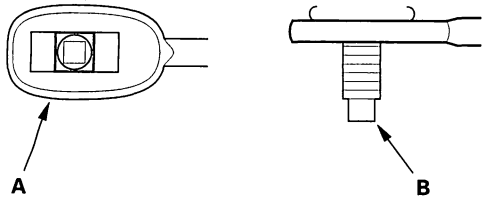

Improperly Installed:

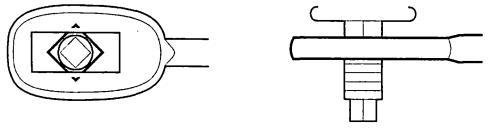

Cable end rides on the bottom of the mounting stud.

22. If improperly installed, remove the shift cable from the bracket base, and reinstall the shift cable. Do not install the shift cable end on the mounting stud while the shift cable is on the bracket base.

23. Install and tighten the nut.

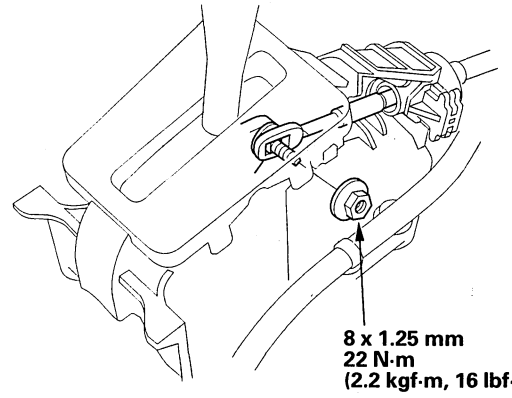

24. Remove the 6.0 mm (0.24 in.) pin that was installed to hold the shift lever.

25. Move the shift lever to each position, and verify that the A/T gear position indicator follows the transmission range switch.

26. Allow the front wheels to rotate freely.

27. Start the engine, and check the shift lever operation in all gears.

28. Push the shift lock release, and verify that the shift lever releases.

29. Reinstall the center console (see page 20-125).

BACK

Protected by AR

Shift Cable Adjustment

1. Remove the center console (see page 20-125).
2. Shift the transmission into the R position.
3. Remove the nut securing the shift cable end.

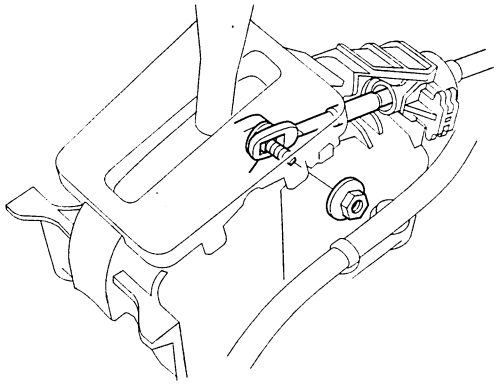

4. Press the holder lock release (A), and pull out the socket holder (B) on the shift cable (C) of the shift lever bracket base (D). Do not remove the shift cable by pulling the shift cable guide (E).

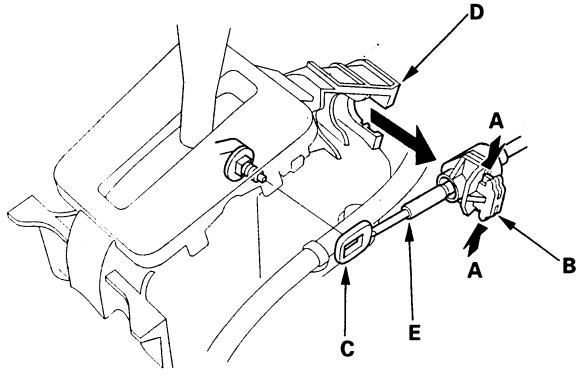

5. Push the shift cable until it stops, then release it. Pull the shift cable back one step so that the shift position is in R. Do not hold the shift cable guide (A) to adjust the shift cable (B).

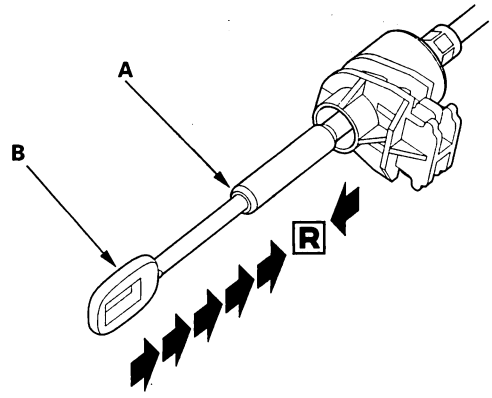

6. Turn the ignition switch ON (II), and verify that the R position indicator comes on.
7. Turn the ignition switch OFF.

(cont'd)

Protected by AR

Shift Cable Adjustment (cont'd)

8. Insert a 6.0 mm (0.24 in.) pin (A) through the positioning hole (B) on the shift lever bracket base and into the positioning hole (C) on the shift lever. The shift lever is secured in the R position.

2003-2005-Model Type A Shift Lever and 2006-Model Shift Lever:

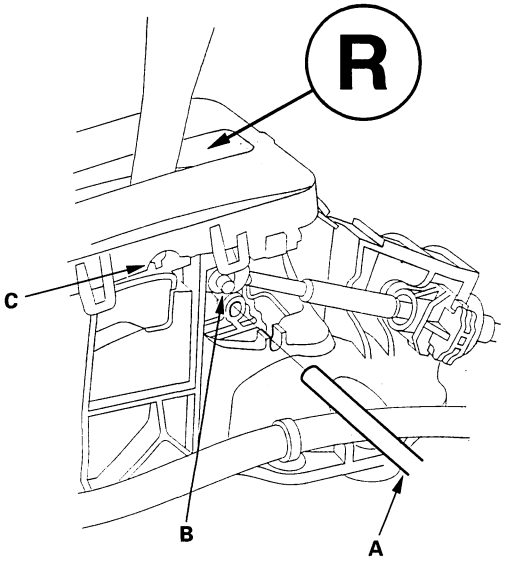

2003-2005-Model Type B Shift Lever:

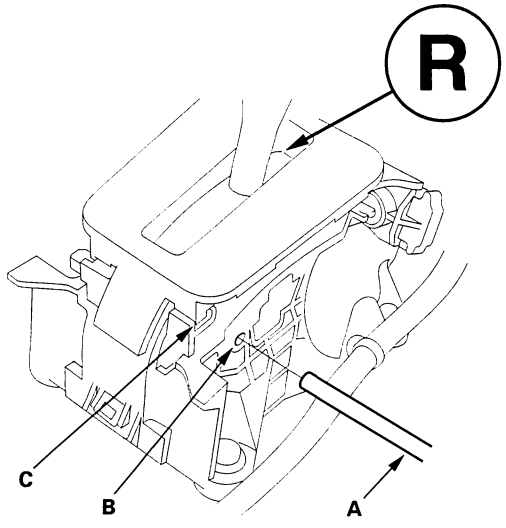

9. Align the socket holder (A) on the shift cable (B) with the slot in the bracket base (C), then slide the holder into base. Install the shift cable end (D) over the mounting stud (E) by aligning its square hole (F) with the square fitting (G) at the bottom of the stud. Push the holder until it snaps securely in place. Do not install the shift cable by holding the shift cable guide (H).

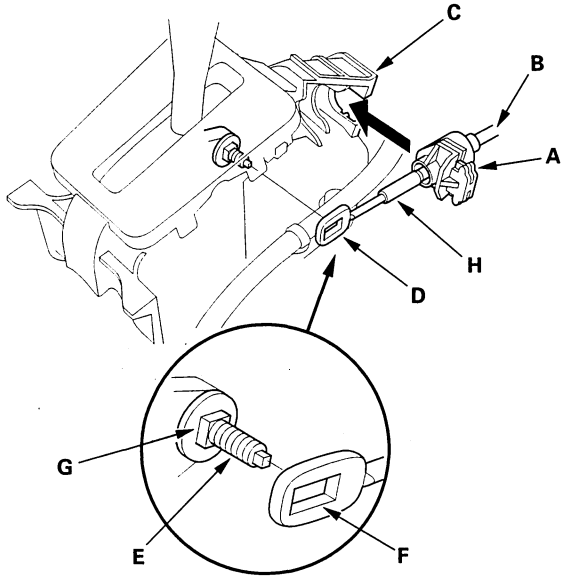

10. Verify that the shift cable end (A) is properly installed on the mounting stud (B).

Properly Installed:

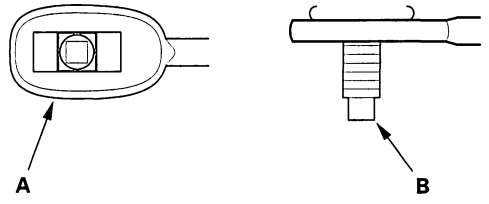

Improperly Installed:

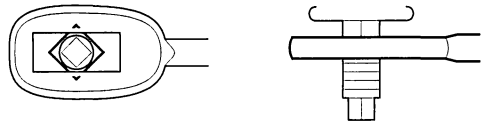

Cable end rides on the bottom of the mounting stud.

BACK

Protected by AR

11. If improperly installed, remove the shift cable from the bracket base, and reinstall the shift cable. Do not install the shift cable end on the mounting stud while the shift cable is on the bracket base.

12. Install and tighten the nut.

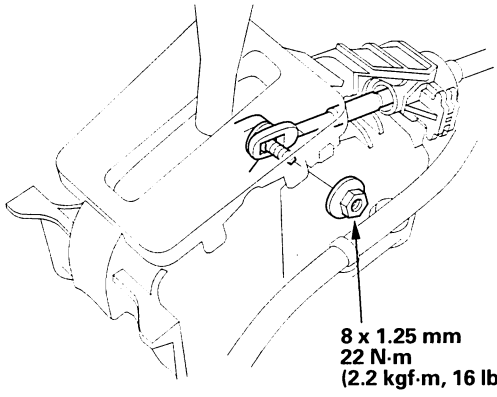

13. Remove the 6.0 mm (0.24 in.) pin that was installed to hold the shift lever.

14. Move the shift lever to each position, and verify that the A/T gear position indicator follows the transmission range switch.

15. Push the shift lock release, and verify that the shift lever releases.

16. Reinstall the center console (see page 20-125).

Protected by AR

A/T Gear Position Indicator

Component Location Index

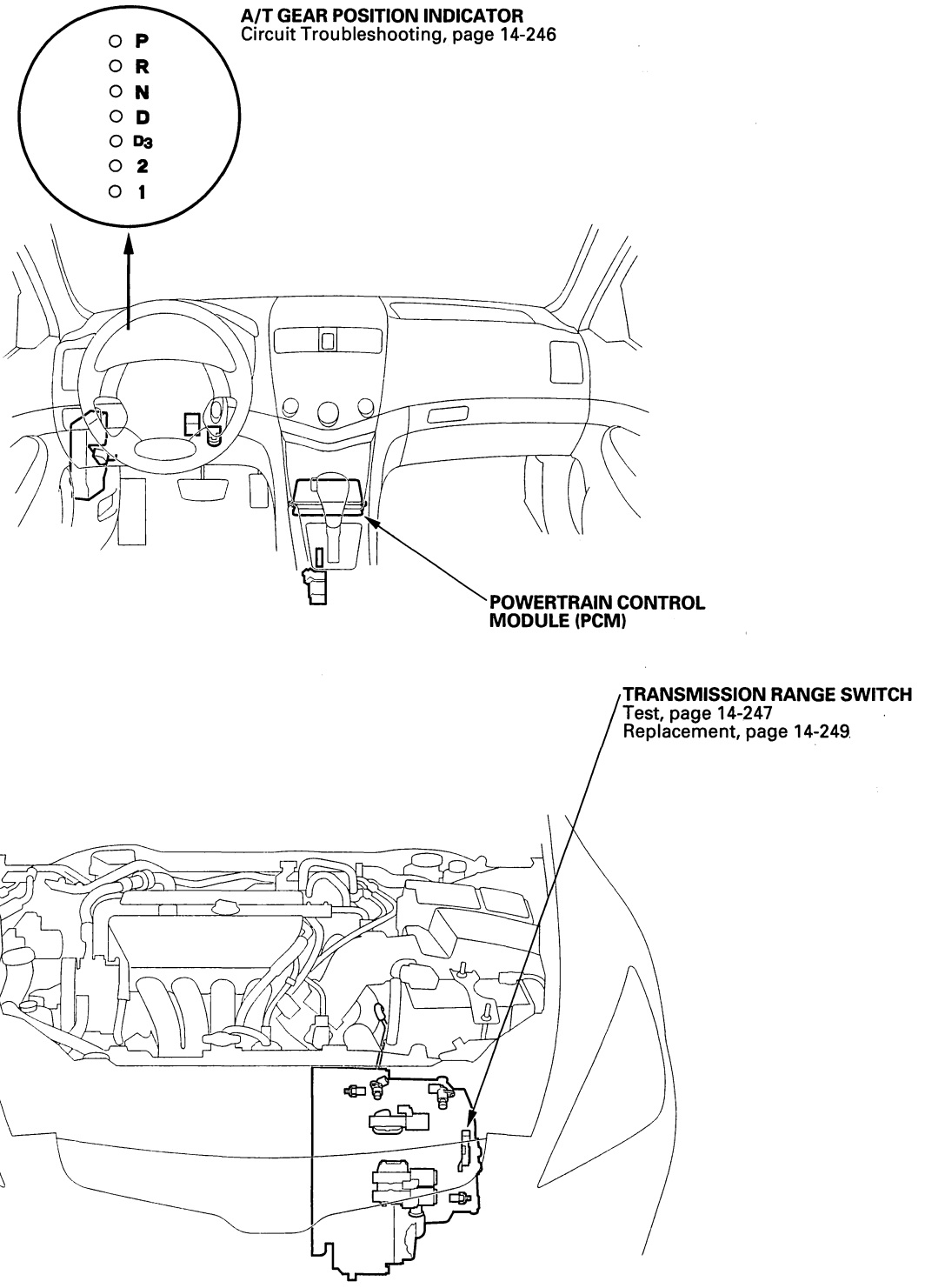

BACK

Protected by AR

Circuit Diagram

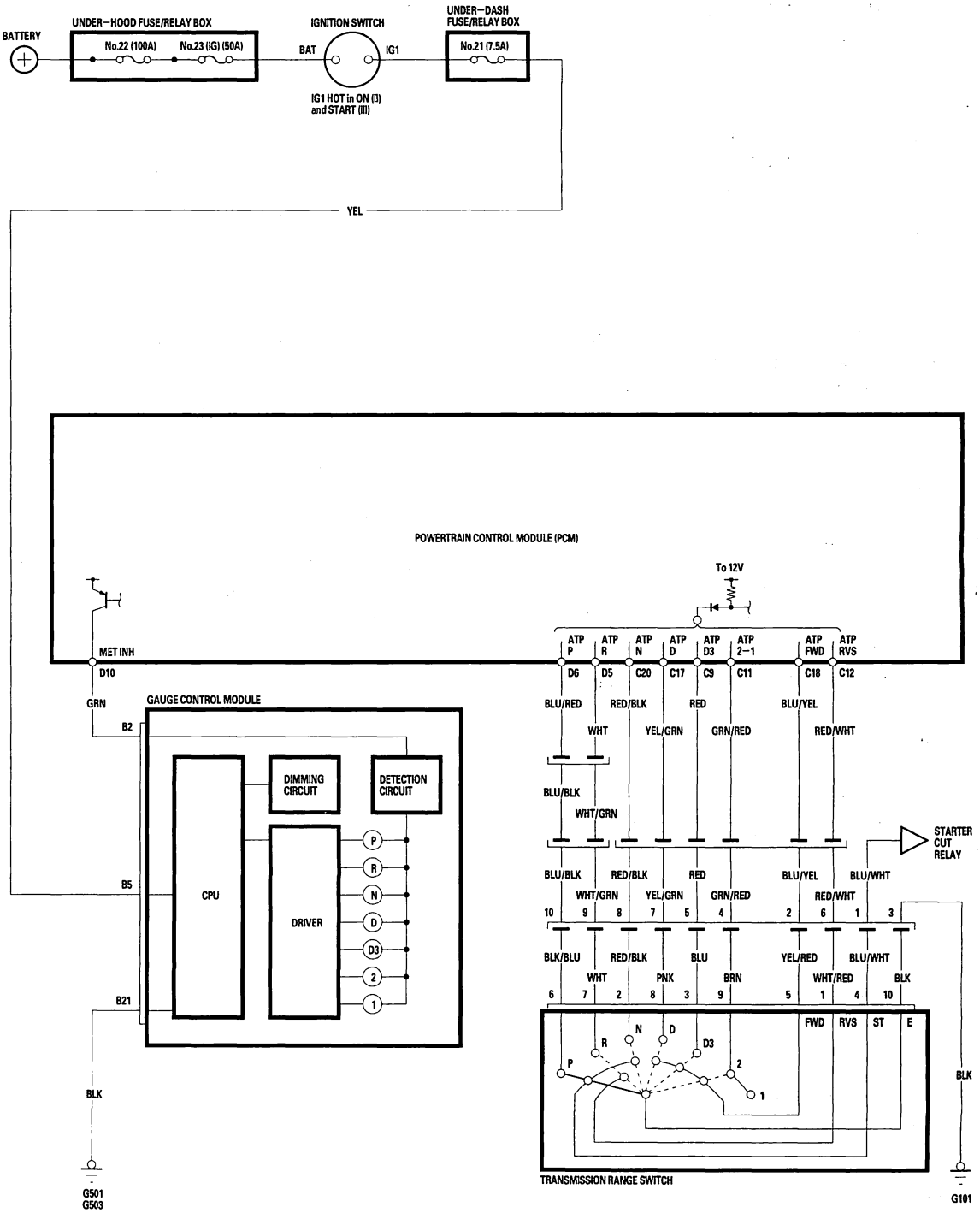

BACK

Protected by AR

A/T Gear Position Indicator

A/T Gear Position Indicator Circuit Troubleshooting

Symptom: A/T gear position indicator does not indicate the shift lever position, the D indicator does not blink, and no transmission range switch DTCs are indicated.

1. Check the indicator drive circuit and communication line in the gauge control module with the self-diagnostic function of the gauge control module (see page 22-259).

   Is the system OK?

   YES—Go to step 2.

   NO—Record the ODO data in the old gauge control module, and replace the gauge control module (see page 22-276). Input the old ODO data in the new gauge control module with the HDS (see page 22-276).■

2. Remove the gauge control module.

3. Turn the ignition switch ON (II).

4. Measure the voltage between gauge control module connector terminal B2 and body ground. The shift lever can be in any position.

   GAUGE CONTROL MODULE CONNECTOR B (30P)

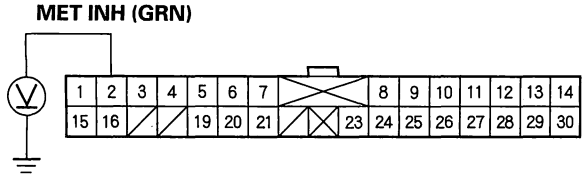

Wire side of female terminals

   Is there battery voltage?

   YES—Faulty A/T gear position indicator in the gauge control module, replace the gauge control module.■

   NO—Go to step 5.

5. Measure the voltage between PCM connector terminal D10 and body ground.

   PCM CONNECTOR D (17P)

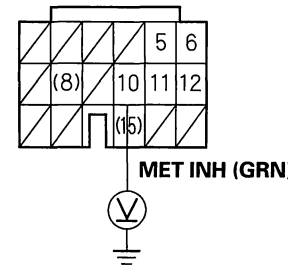

Wire side of female terminals

   Is there battery voltage?

   YES—Repair open or short in the wire between PCM connector terminal D10 and the gauge control module connector terminal B2.■

   NO—Check for loose terminal fit in the PCM connectors. If necessary, substitute a known-good PCM and recheck.■

BACK

Protected by AR

Transmission Range Switch Test

1. Remove the transmission range switch harness connector (A) from the connector bracket (B), then disconnect the connector.

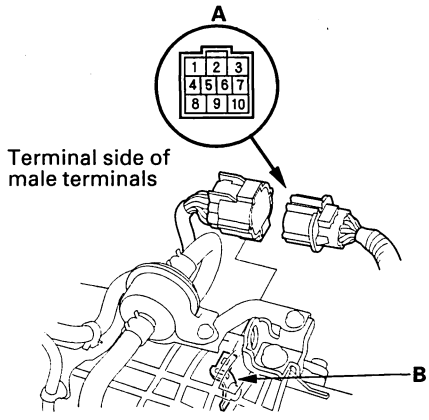

2. Check for continuity between terminals at the harness connector. There should be continuity between the terminals in the following table for each switch position.

Transmission Range Switch Harness Connector

Position	Connector Terminal/Signal									
	1	2	3	4	5	6	7	8	9	10
	ATP NP	ATP FWD	GND	ATP 2-1	D3	ATP RVS	D	N	R	P
P	○		○							○
R			○			○			○	
N	○		○					○		
D		○	○				○			
D3		○	○		○					
2		○	○	○						
1			○	○						

3. Transmisson range switch test has finished the test results are OK.
If there is no continuity between any terminals, go to step 4.

4. Remove the transmission range switch cover.

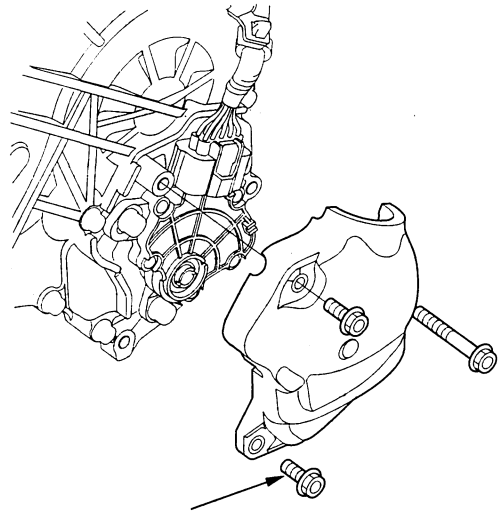

5. Disconnect the transmission range switch connector.

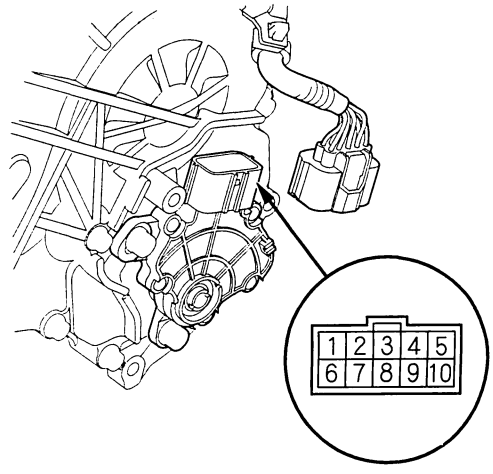

(cont'd)

BACK

Protected by AR

Transmission Range Switch Test (cont'd)

6. Check for continuity between terminals at the switch connector. There should be continuity between the terminals in the following table for each switch position.

Transmission Range Switch Connector

Position	Connector Terminal/Signal									
	1	2	3	4	5	6	7	8	9	10
	ATP RVS	N	D3	ATP NP	ATP FWD	P	R	D	ATP 2-1	GND
P				○		○				○
R	○						○			○
N		○		○						○
D					○			○		○
D3			○		○					○
2					○				○	○
1									○	○

7. If the transmission range switch continuity check is OK, replace the faulty transmission range switch harness.

8. If there is no continuity between any terminals, remove the transmission range switch, and check the end of the selector control shaft (A).

Selector Control Shaft
Width (B): 6.1—6.2 mm (0.240—0.244 in.)
End Gap (C): 1.8—2.0 mm (0.07—0.08 in.)

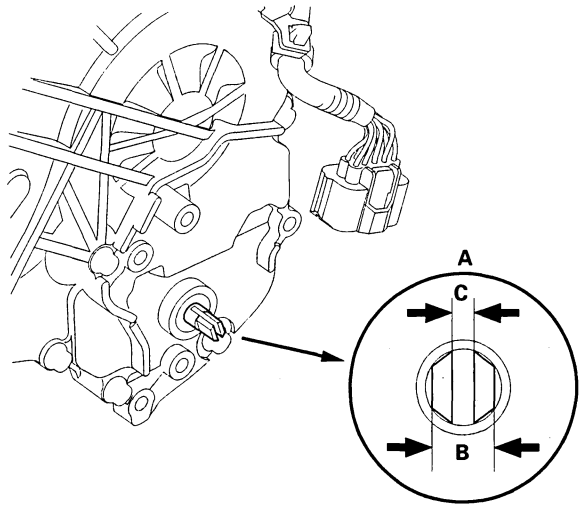

9. The measurement of the selector control shaft end is within the standard, replace the transmission range switch. If the measurement is out of the standard, repair the selector control shaft end, and recheck the transmission range switch continuity.

BACK

Protected by AR

Transmission Range Switch Replacement

1. Raise the vehicle, and make sure it is securely supported.
2. Shift to the N position.
3. Remove the transmission range switch cover.

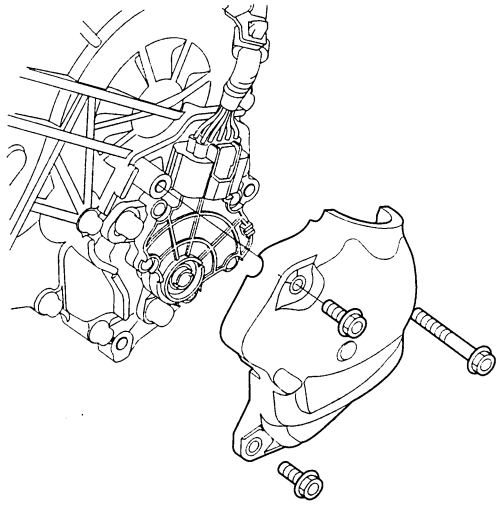

4. Disconnect the transmission range switch connector.

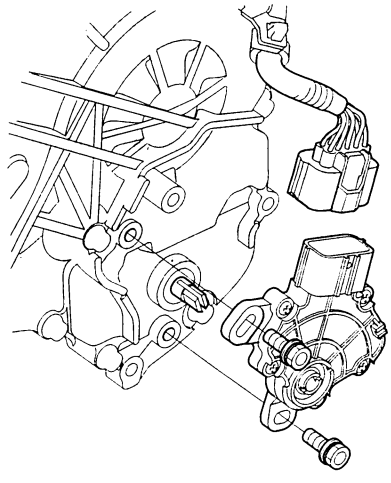

5. Remove the transmission range switch, and replace the new switch.
6. Make sure the selector control shaft is in the N position. If necessary, move the shift lever to the N position.

   NOTE: Do not use the selector control shaft to adjust the shift position. If the selector control shaft tips are squeezed together it will cause a faulty signal or position due to play between the selector control shaft and the switch.

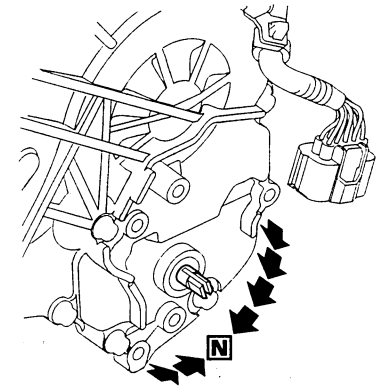

7. Align the cutouts (A) on the rotary-frame with the neutral positioning cutouts (B) on the transmission range switch (C), then put a 2.0 mm (0.08 in.) feeler gauge blade (D) in the cutouts to hold the switch in the N position.

   NOTE: Be sure to use a 2.0 mm (0.08 in.) blade or equivalent to hold the switch in the N position.

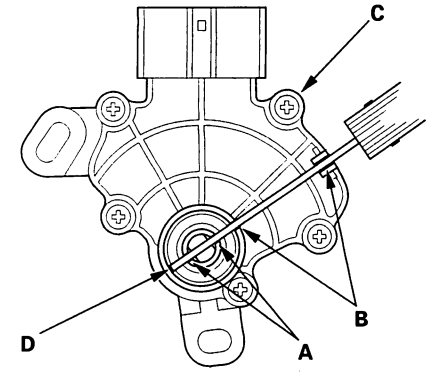

(cont'd)

Protected by AR

A/T Gear Position Indicator

Transmission Range Switch Replacement (cont'd)

8. Install the transmission range switch (A) gently on the selector control shaft (B) with holding it in the N position with the 2.0 mm (0.08 in.) blade (C).

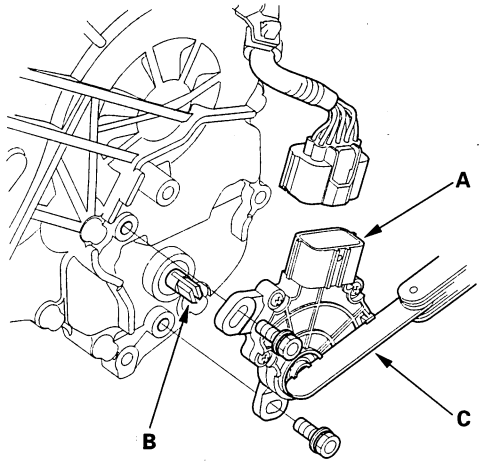

9. Tighten the bolts on the transmission range switch while you continue to hold the N position. Do not move the transmission range switch when tightening the bolts. Remove the feeler gauge.

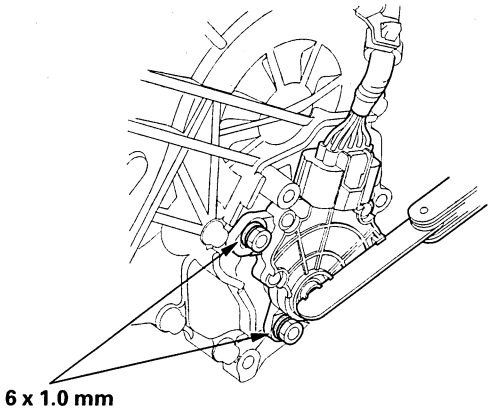

6 x 1.0 mm
12 N·m (1.2 kgf·m, 8.7 lbf·ft)

10. Connect the connector securely, then install the transmission range switch cover (A).

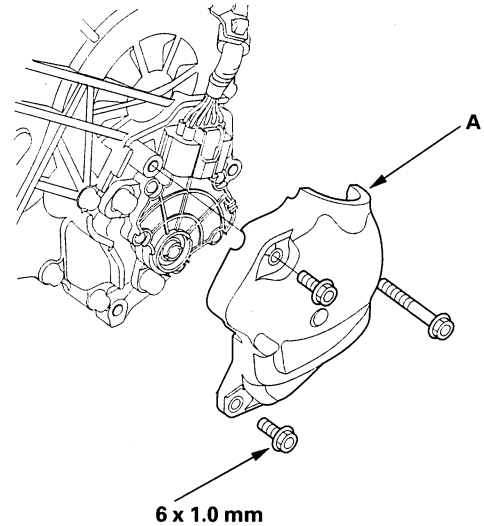

6 x 1.0 mm
12 N·m (1.2 kgf·m, 8.7 lbf·ft)

11. Turn the ignition switch ON (II). Move the shift lever through all positions, and check the transmission range switch synchronization with the A/T gear position indicator.

12. Check that the engine will start in the P and N positions, and will not start in any other shift lever position.

13. Check that the back-up lights come on when the shift lever is in R position.

14. Allow the front wheels to rotate freely, then start the engine, and check the shift lever operation.

BACK

Protected by AR

A/T Interlock System

Component Location Index

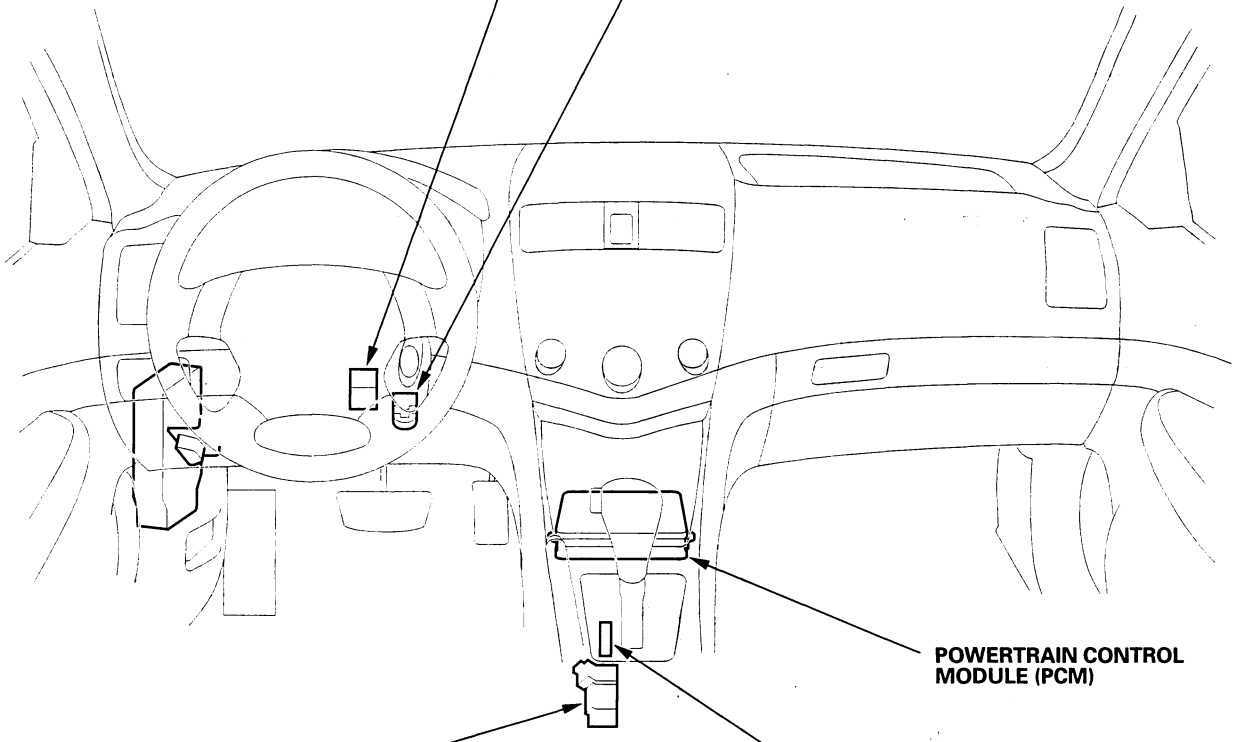

STEERING LOCK ASSEMBLY
KEY INTERLOCK SOLENOID
Interlock System Circuit Troubleshooting, page 14-259
Test, page 14-260

BRAKE PEDAL POSITION SWITCH
Shift Lock System Circuit Troubleshooting, page 14-254

POWERTRAIN CONTROL MODULE (PCM)

PARK PIN SWITCH
Interlock System Circuit Troubleshooting, page 14-259
Test, page 14-263
Replacement, page 14-263

SHIFT LOCK SOLENOID
Shift Lock System Circuit Troubleshooting, page 14-254
Test, page 14-261
Replacement, page 14-262

BACK

Protected by AR

A/T Interlock System

Circuit Diagram

2003-2005 Models

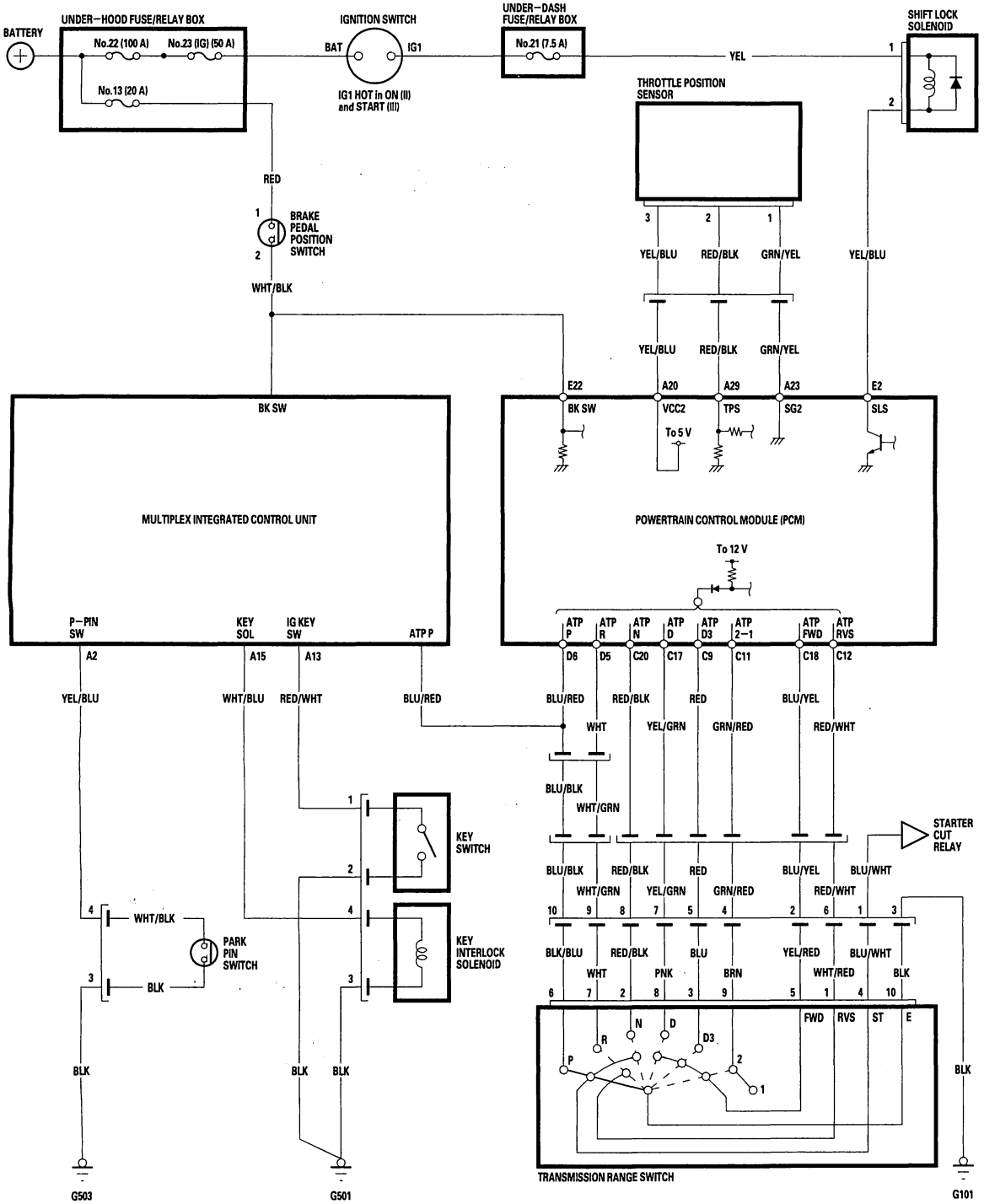

BACK

Protected by AR

2006 Model

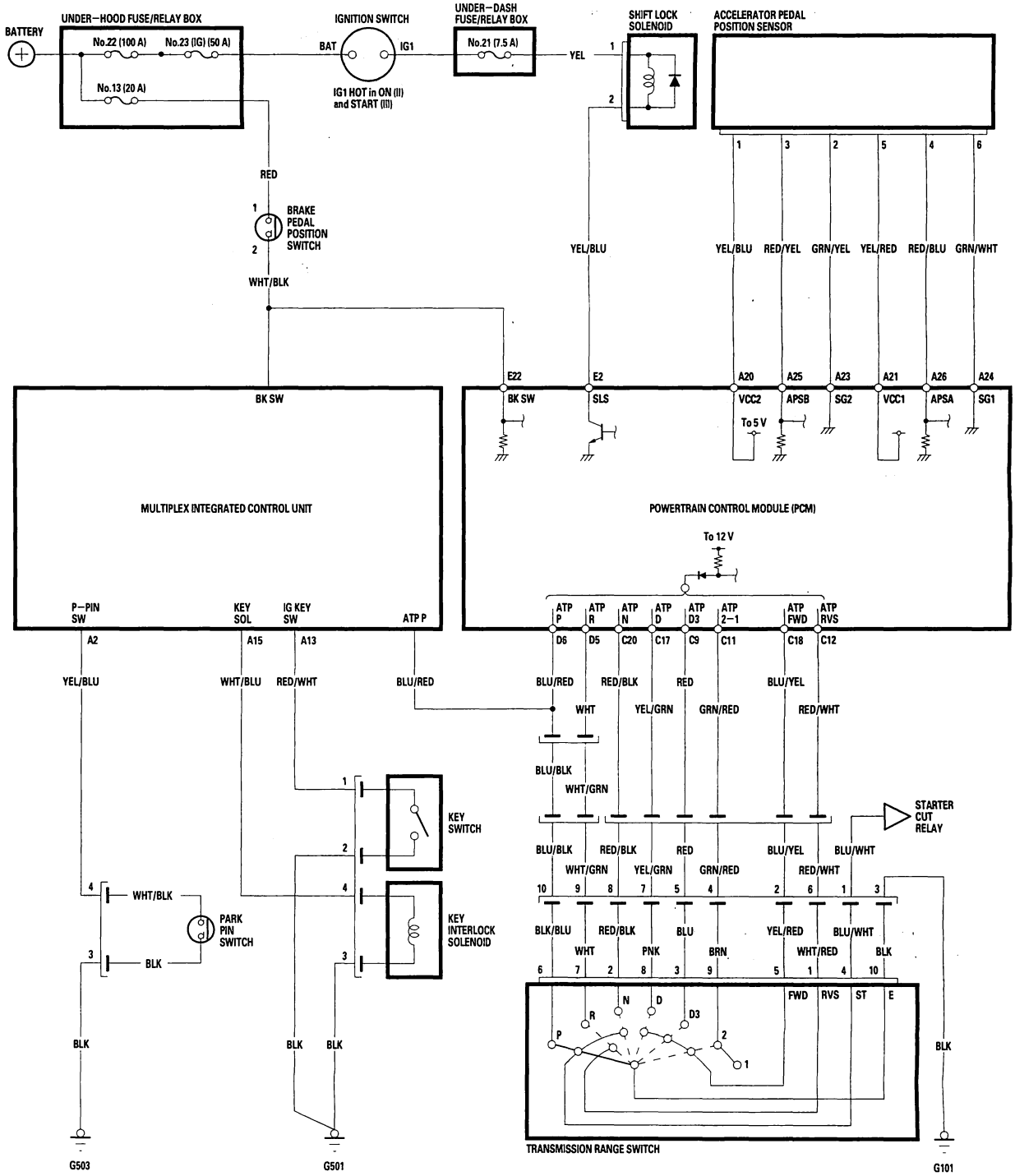

BACK

Protected by AR

A/T Interlock System

Shift Lock System Circuit Troubleshooting

1. Connect the HDS to the DLC.
2. Choose Shift Lock Solenoid Test in Miscellaneous Test Menu, and check that the shift lock solenoid operates with the HDS.

   Does the shift lock solenoid work properly?

   YES—Go to step 14.

   NO—Go to step 3.
3. Remove the center console (see page 20-125).
4. Disconnect the shift lock solenoid connector.
5. Turn the ignition switch ON (II).
6. Measure the voltage between shift lock solenoid connector terminal No. 1 and body ground.

SHIFT LOCK SOLENOID CONNECTOR

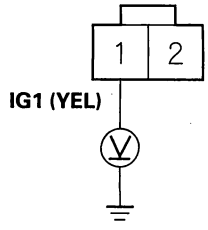

Wire side of female terminals

Is there battery voltage?

YES—Go to step 7.

NO—Check for a blown No. 21 (7.5 A) fuse in the under-dash fuse/relay box. If the fuse is OK, repair open or short in the wire between the shift lock solenoid connector and the under-dash fuse/relay box. ■

7. Shift the shift lever into the P position, and press the brake pedal. Do not press the accelerator.
8. Measure the voltage between shift lock solenoid connector terminals No. 1 and No. 2 while pressing the brake pedal.

SHIFT LOCK SOLENOID CONNECTOR

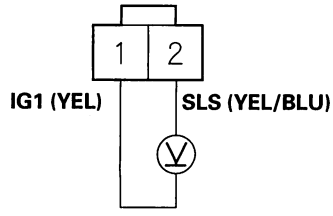

Wire side of female terminals

Is there battery voltage?

YES—go to step 9.

NO—go to step 10.

BACK

Protected by AR

9. Release the brake pedal, and measure the voltage between connector terminals No. 1 and No. 2. The shift lever must be in the P position.

SHIFT LOCK SOLENOID CONNECTOR

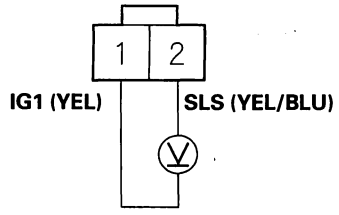

Wire side of female terminals

Is there battery voltage?

YES—Repair a short to ground in the wire between PCM connector terminal E2 and the shift lock solenoid. ■

NO—Check the shift lock mechanism. If the mechanism is OK, replace the shift lock solenoid (see page 14-262). ■

10. Turn the ignition switch OFF.

11. Jump the SCS line with the HDS.

12. Disconnect PCM connector E (31P).

13. Check for continuity between PCM connector terminal E2 and shift lock solenoid connector terminal No. 2.

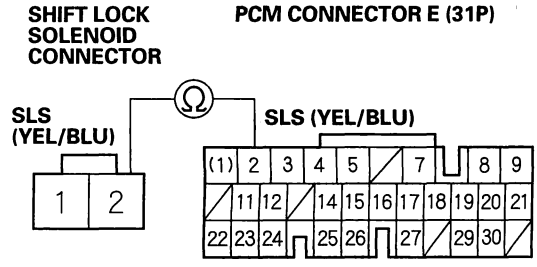

Wire side of female terminals

Is there continuity?

YES—Substitute a known-good PCM and recheck. ■

NO—Repair open in the wire between PCM connector terminal E2 and the shift lock solenoid. ■

(cont'd)

Protected by AR

Shift Lock System Circuit Troubleshooting (cont'd)

14. Press the brake pedal.

    Are the brake lights ON?

    YES—Go to step 15.

    NO—Repair faulty brake light circuit. ■

15. Turn the ignition switch OFF.

16. Jump the SCS line with the HDS.

17. Disconnect PCM connector E (31P).

18. Measure the voltage between PCM connector terminal E22 and body ground while pressing the brake pedal and when the brake pedal is released.

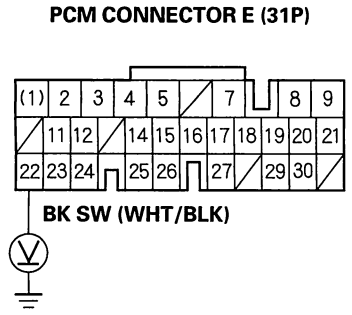

Wire side of female terminals

Is there battery voltage while the brake pedal is pressing, and no voltage when the pedal is released?

YES—Go to step 20.

NO—Go to step 19.

19. Check for continuity between PCM connector terminal E22 and brake pedal position switch 4P connector terminal No. 2.

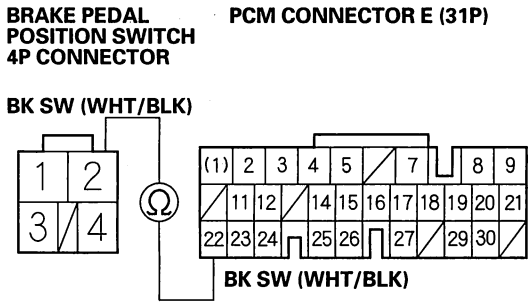

Wire side of female terminals

Is there continuity?

YES—Substitute a known-good PCM and recheck. ■

NO—Repair open in the wire between PCM connector terminal E22 and the brake pedal position switch. ■

BACK

Protected by AR

20. Connect PCM connector E (31P).
21. Disconnect the transmission range switch connector.
22. Turn the ignition switch ON (II).
23. Measure the voltage between transmission range switch connector terminals No. 6 and No. 10.

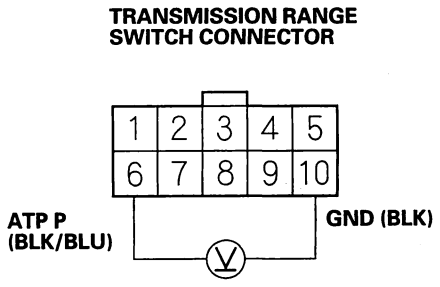

Wire side of female terminals

Is there battery voltage?

YES—Go to step 29.

NO—Go to step 24.

24. Turn the ignition switch OFF.
25. Disconnect PCM connector D (17P).
26. Check for continuity between PCM connector terminal D6 and body ground.

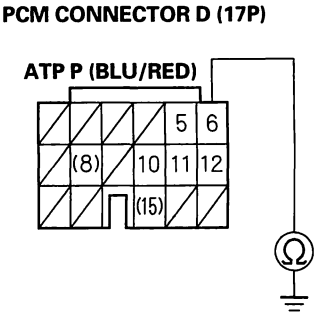

Wire side of female terminals

Is there continuity?

YES—Repair short in the wire between PCM connector terminal D6 and the transmission range switch. ■

NO—Go to step 27.

27. Check for continuity between PCM connector terminal D6 and transmission range switch connector terminal No. 6.

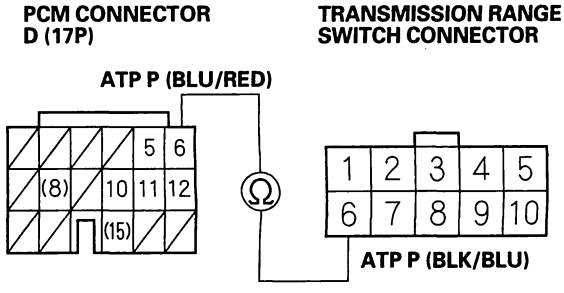

Wire side of female terminals

Is there continuity?

YES—Go to step 28.

NO—Repair open in the wire between PCM connector terminal D6 and the transmission range switch. ■

(cont'd)

Protected by AR

Shift Lock System Circuit Troubleshooting (cont'd)

28. Check for continuity between transmission range switch connector terminal No. 10 and body ground.

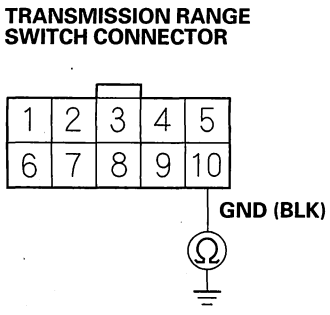

Wire side of female terminals

Is there continuity?

YES—Substitute a known-good PCM and recheck.■

NO—Repair open in the wire between transmission range switch connector terminal No. 10 and ground (G101), or repair poor ground (G101).■

29. Test the transmission range switch (see page 14-247).

Is the switch OK?

YES—
- 2003-2005 models: Go to step 30.
- 2006 model: Go to step 32.

NO—Replace the transmission range switch (see page 14-249).■

30. Connect the HDS to the DLC.

31. Check the throttle position sensor in the A/T data list with the HDS. Do not press the accelerator.

Is the throttle position sensor opening 11% and above, or the sensor voltage 0.90 V and above?

YES—Go to step 35.

NO—Substitute a known-good PCM and recheck.■

32. Connect the HDS to the DLC.

33. Start the engine.

34. Check the engine speed and accelerator pedal position in the A/T data list with the HDS. Do not press the accelerator.

Is the engine speed at a normal idle, APSA about 0.5 V, and APSB about 0.2 V?

YES—Go to step 35.

NO—Substitute a known-good PCM and recheck.■

35. Check the throttle cable adjustment.

- 2003-2005 models (see page 11-362).
- 2006 model (see page 11-363).

Is the throttle cable adjusted properly?

YES—Check the throttle body.■

- 2003-2005 models (see page 11-356).
- 2006 model (see page 11-356).

NO—Adjust the throttle cable.■

- 2003-2005 models (see page 11-362).
- 2006 model (see page 11-363).

BACK

Protected by AR

Key Interlock System Circuit Troubleshooting

SRS components are located in this area. Review the SRS component locations (see page 23-17) and the precautions and procedures (see page 23-19) before performing repairs or service.

1. Turn the ignition switch to ACC (I). The shift lever must be in the P position.
2. Disconnect the steering lock assembly connector.
3. Check if the ignition key can be moved to LOCK (0) position, and remove the key from the cylinder.

   Is the ignition key able to move to the LOCK (0) position, and then removed?

   YES—Go to step 4.

   NO—Replace the ignition key cylinder/steering lock assembly (see page 17-28). ■
4. Turn the ignition switch to ACC (I) or ON (II), and shift to the N position.
5. Check for the voltage between the No. 4 terminal of the steering lock assembly connector and body ground.

STEERING LOCK ASSEMBLY CONNECTOR

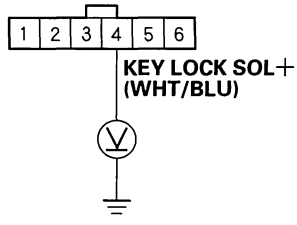

Wire side of female terminals

Is there battery voltage?

YES—Go to step 6.

NO—Check for an open in the WHT/BLU wire between the MICU and the steering lock assembly connector. If the wire is OK, substitute a known-good multiplex integrated control unit and recheck. ■

6. Turn the ignition switch to ACC (I), and shift to the P position.
7. Remove the center console (see page 20-125).
8. Disconnect the park pin switch connector.
9. Check for continuity between the No. 3 and No. 4 terminals of the park pin switch connector while pushing the button of the shift lever in, and when released.

PARK PIN SWITCH CONNECTOR

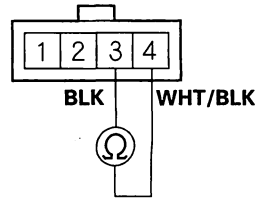

Terminal side of male terminals

Is there continuity when pushing the button in, and no continuity when it's released?

YES—Check for an open in the wire between the multiplex integrated control unit and the park pin switch connector. If the wire is OK, replace the multiplex integrated control unit. ■

NO—Replace the park pin switch (see page 14-263). ■

BACK

Protected by AR

Key Interlock Solenoid Test

SRS components are located in this area. Review the SRS component locations (see page 23-17) and the precautions and procedures (see page 23-19) before performing repairs or service.

1. Remove the driver's dashboard lower cover (see page 20-130) and lower steering column cover.
2. Disconnect steering lock assembly connector.
3. Insert the ignition key in the key cylinder, then turn the ignition key to ACC (I).
4. Connect the battery positive terminal to steering lock assembly connector terminal No. 4, and connect the battery negative terminal to No. 3 terminal. Make sure that the ignition key cannot be turned to LOCK (0) position. Release the battery terminals, and make sure that the key can be turned to LOCK (0) position and removed from the cylinder.
5. If the key interlock solenoid works improperly, replace the ignition key cylinder/steering lock assembly (see page 17-28).

STEERING LOCK ASSEMBLY CONNECTOR

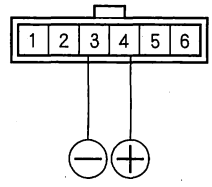

Terminal side of male terminals

BACK

Protected by AR

Shift Lock Solenoid Test

1. Connect the HDS to the DLC (A).

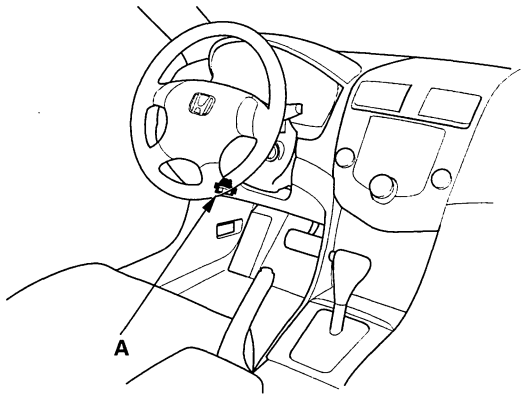

2. Choose Shift Lock Solenoid Test in Miscellaneous Test Menu, and check that the shift lock solenoid operates with the HDS.

3. Check that the shift lever can be moved out of the P position when Shift Lock Solenoid: ON. Move the shift lever back in the P position, and make sure it locks with Shift Lock Solenoid: OFF.

4. Check that the shift lock releases when the shift lock release is pushed, and check that it locks when the shift lock release is released.

5. If the shift lock solenoid does not work properly, perform shift lock system troubleshooting (see page 14-254).

Protected by AR

Shift Lock Solenoid Replacement

2003-2005-Model Type A Shift Lever and 2006-Model Shift Lever

1. Remove the shift lever assembly (see page 14-231).
2. Release the lock tab (A) securing the shift lock solenoid at the bottom of the shift lever assembly, and remove the shift lock solenoid.

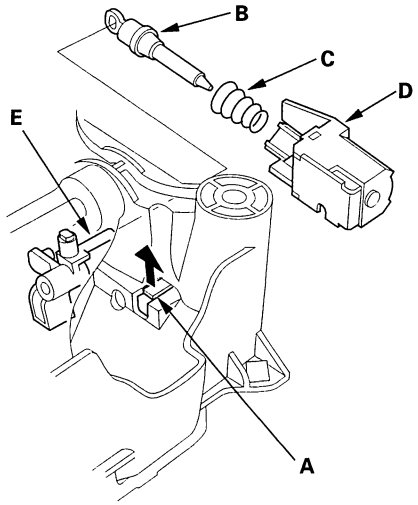

3. Install the shift lock solenoid plunger (B) and plunger spring (C) in the new shift lock solenoid (D).
4. Install the new shift lock solenoid by aligning the joint of the shift lock solenoid plunger with the tip of the shift lock stop (E).
5. Install the shift lever assembly (see page 14-232).

2003-2005-Model Type B Shift Lever

1. Remove the center console (see page 20-125).
2. Disconnect the shift lock solenoid connector (A), and remove it from the shift lever bracket base (B).

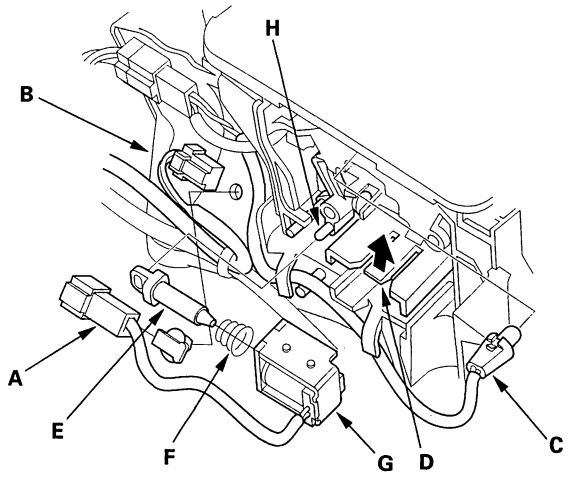

3. Remove the A/T gear position indicator panel light bulb socket (C).
4. Release the lock tab (D) securing the shift lock solenoid, and remove the shift lock solenoid.
5. Install the shift lock plunger (E) and plunger spring (F) in the new shift lock solenoid (G).
6. Install the new shift lock solenoid by aligning the joint of the shift lock solenoid plunger with the tip of the shift lock stop (H).
7. Install the A/T gear position indicator panel light bulb socket.
8. Install the shift lock solenoid connector on the shift lever bracket base, then connect the connector.
9. Install the center console (see page 20-125).

BACK

Protected by AR

Park Pin Switch Test

1. Remove the center console (see page 20-125).
2. Disconnect the park pin switch connector.

2003-2005-Model Type A Shift Lever and 2006-Model Shift Lever:

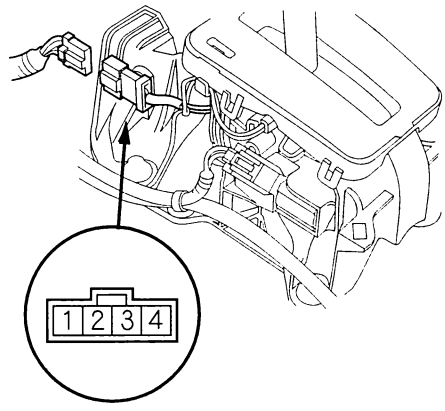

Terminal side of male terminals

2003-2005-Model Type B Shift Lever:

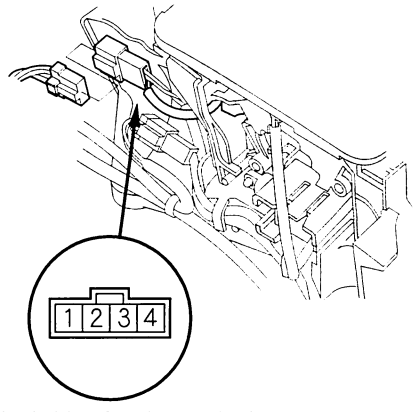

Terminal side of male terminals

3. Shift the shift lever into the P position and release the shift lever button, then check for continuity between connector terminals No. 3 and No. 4. There should be no continuity.
4. Shift out of the P position or press the shift lever button while in P position, and check for continuity between terminals No. 3 and No. 4. There should be continuity.
5. If the park pin switch is faulty, replace it (type A shift lever) or replace the shift lever bracket base (type B shift lever). The park pin switch of the type B shift lever is not available separately.

Park Pin Switch Replacement

NOTE: The park pin switch replacement is applied for the 2003-2005-model type A shift lever and 2006-model shift lever, the 2003-2005-model type B shift lever park pin switch is not available separately.

1. Remove the center console (see page 20-125).
2. Remove the A/T gear position indicator panel (A) from the shift lever bracket base (B).

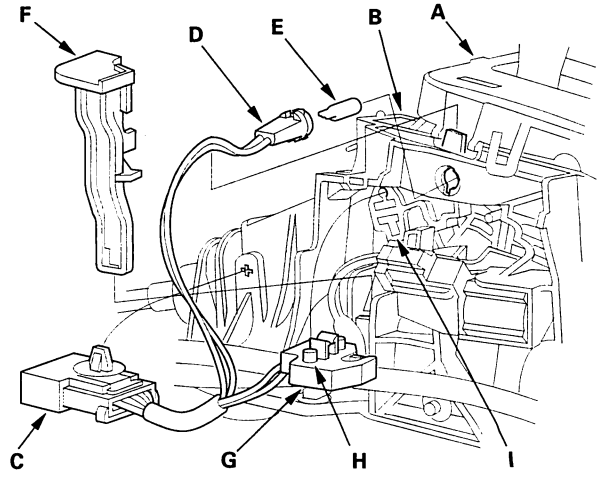

3. Disconnect the park pin switch connector (C), then remove it from the bracket base.
4. Remove the A/T gear position indicator panel light bulb socket (D), then remove the bulb (E) from the socket.
5. Remove the shift lock release lever (F).
6. Remove the park pin switch, and install the new switch (G) by aligning the tabs (H) with the slots (I).
7. Install the shift lock release lever.
8. Install the bulb in the socket, then install the socket in the bracket base.
9. Install the indicator panel on the bracket base.
10. Install the park pin switch connector on the bracket base, then connect the connector.
11. Install the center console (see page 20-125).

Protected by AR

Transmission End Cover

End Cover Removal

Special Tools Required
Mainshaft holder 07GAB-PF50101 or 07GAB-PF50100

1. Remove the two bolts securing the ATF cooler inlet line brackets, ATF filter bracket bolt, line bolt, and remove the ATF cooler line/ATF filter (D) and filter brackets (E).

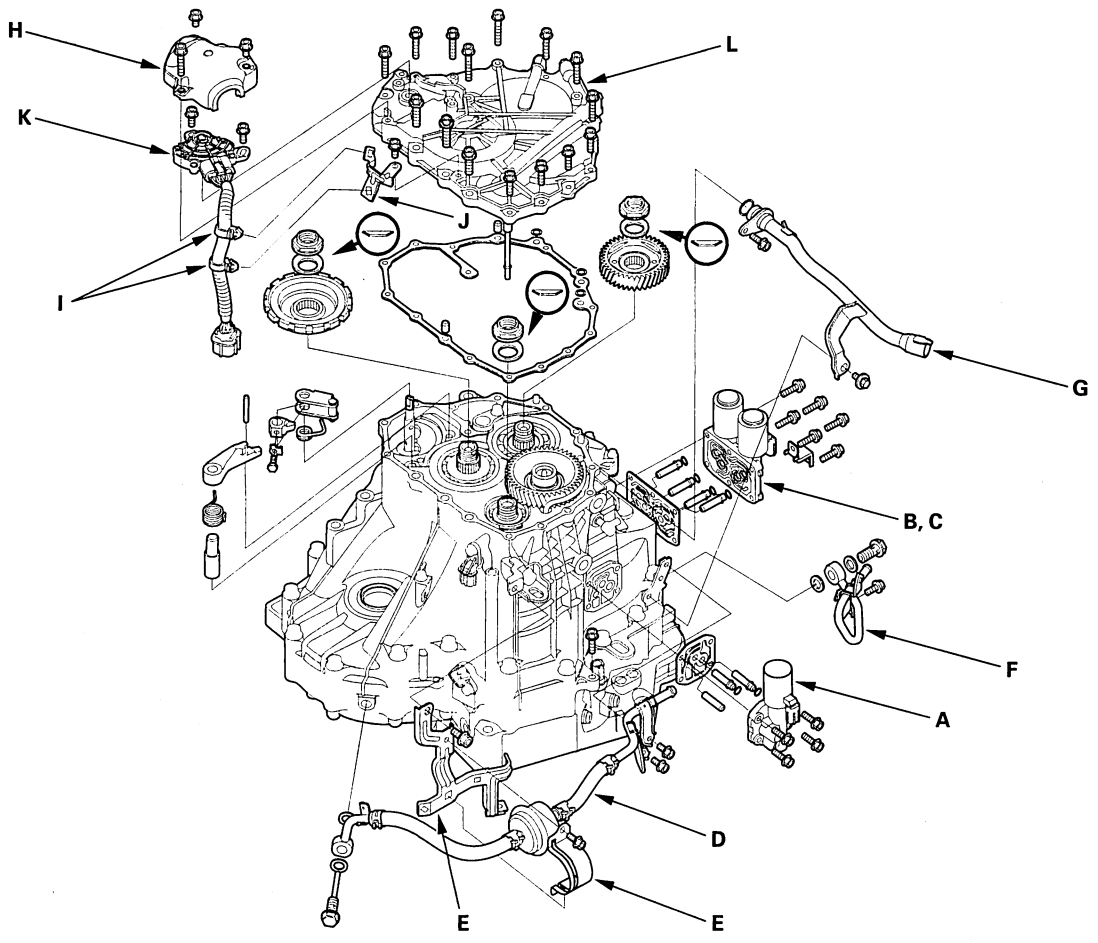

2. Remove the ATF cooler outlet line (F).
3. Remove the dipstick guide pipe (G).
4. Remove the A/T clutch pressure control solenoid valve A, ATF joint pipes, ATF pipe, and gasket.
5. Remove the A/T clutch pressure control solenoid valves B and C, ATF joint pipes, and gasket.
6. Remove the transmission range switch cover (H).
7. Remove the transmission range switch harness clamps (I) from the clamp bracket (J), then remove the transmission range switch (K).
8. Remove the end cover (L), dowel pins, O-rings, and end cover gasket.

BACK

Protected by AR

9. Slip the special tool onto the mainshaft.

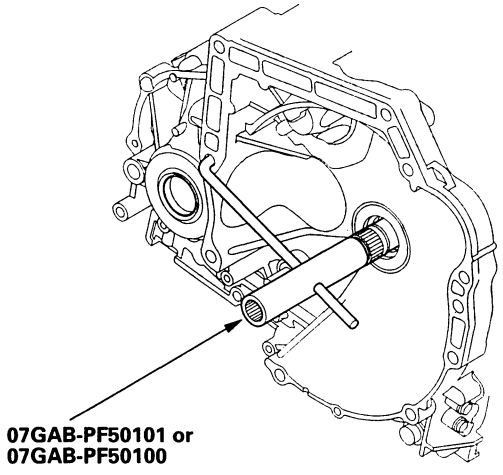

10. Engage the park pawl with the park gear.

11. Cut the lock tab (A) of the each shaft locknut (B) using a chisel (C). Then remove the locknuts and conical spring washers from each shaft.

NOTE:
- Countershaft and secondary shaft locknuts have left-hand threads.
- Keep all of the chiseled particles out of the transmission.
- Clean the old mainshaft and countershaft locknuts; they are used to install the press fit idler gear on the mainshaft, and park gear on the countershaft.

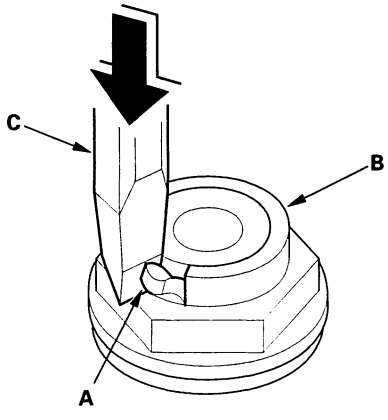

12. Remove the special tool from the mainshaft.

13. Set a two-jaw (or three-jaw) puller (A) on the countershaft (B) by putting a spacer (C) between the puller and countershaft, then remove the park gear (D).

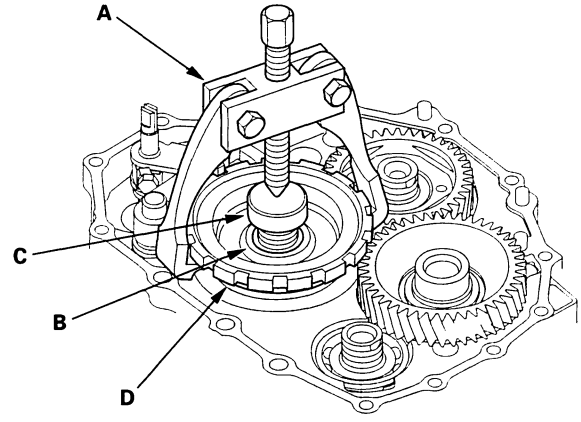

14. Install a 6 x 1.0 mm bolts (A) on the mainshaft idler gear (B). Set a puller (C) on the mainshaft (D) with putting a spacer (E) between the puller and mainshaft, then remove the mainshaft idler gear.

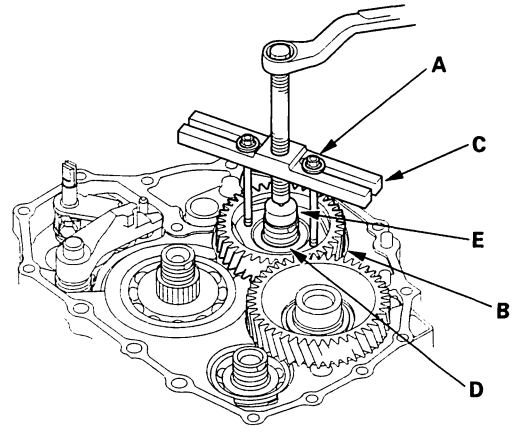

15. Remove the park pawl, park pawl spring, park pawl shaft, and stop shaft.

16. Remove the park lever from the control shaft.

Protected by AR

Transmission End Cover

Park Lever Stop Inspection and Adjustment

1. Set the park lever in the P position.
2. Measure the distance (A) between the park pawl shaft (B) and the park lever roller pin (C).

   Standard: 57.7—58.7 mm (2.27—2.31 in.)

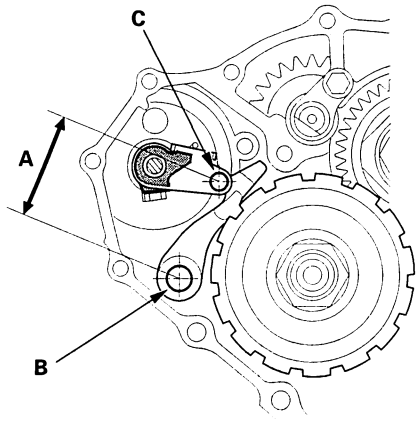

3. If the measurement is out of standard, select and install the appropriate park lever stop (A) from the table below.

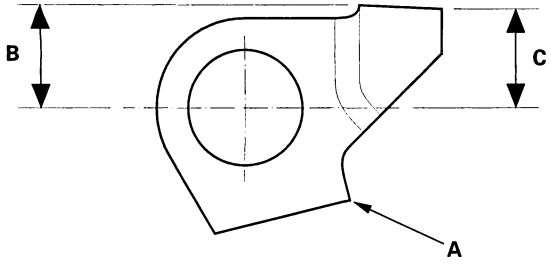

PARK LEVER STOP

Mark	Part Number	B	C
1	24537-PA9-003	11.00 mm (0.433 in.)	11.00 mm (0.433 in.)
2	24538-PA9-003	10.80 mm (0.425 in.)	10.65 mm (0.419 in.)
3	24539-PA9-003	10.60 mm (0.417 in.)	10.30 mm (0.406 in.)

4. After replacing the park lever stop, make sure the distance is within tolerance.

Idler Gear Shaft Bearing Replacement

Special Tools Required
- Adjustable bearing puller, 25—40 mm 07736-A01000B or 07736-A01000A
- Driver 07749-0010000
- Attachment, 52 x 55 mm 07746-0010400

1. Remove the idler gear shaft bearing (A) from the end cover (B) with the special tool.

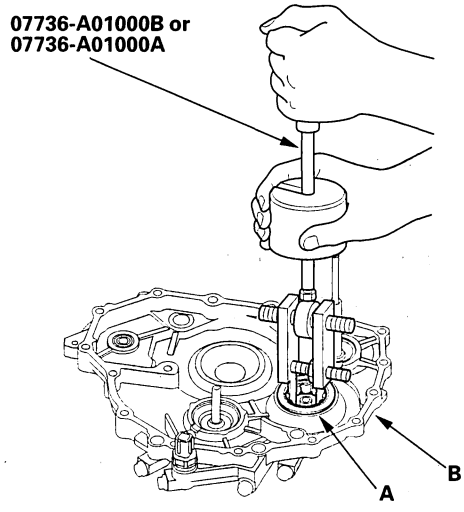

2. Install the new bearing in the end cover with the special tools.

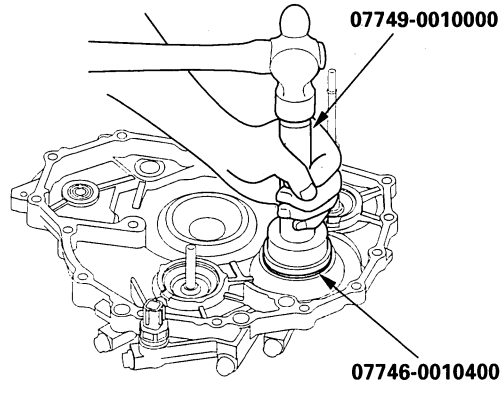

BACK

Protected by AR

Selector Control Shaft Oil Seal Replacement

Special Tools Required
- Driver 07749-0010000
- Attachment, 22 x 24 mm 07746-0010800

1. Remove the oil seal (A) from the end cover (B).

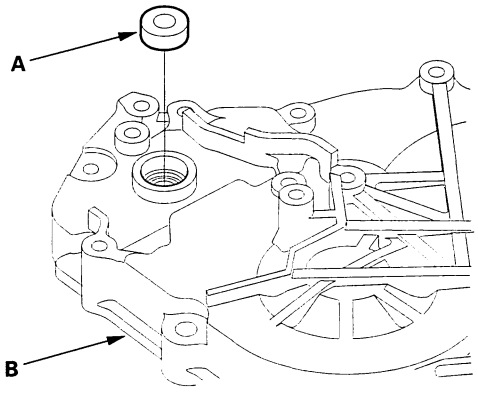

2. Install the new oil seal flush to the end cover with the special tools.

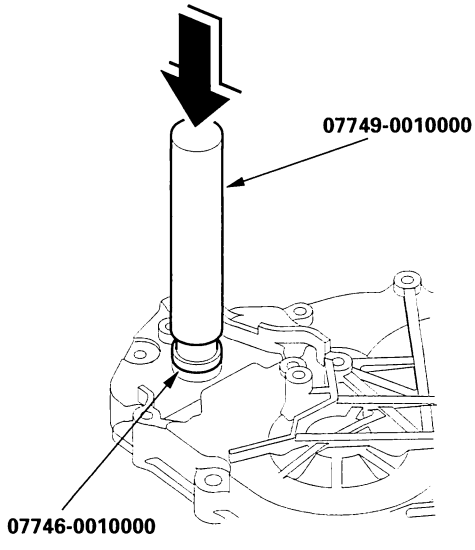

Selector Control Shaft Bearing Replacement

Special Tools Required
- Driver 07749-0010000
- Attachment, 22 x 24 mm 07746-0010800

1. Remove the oil seal from the end cover, then remove the bearing.

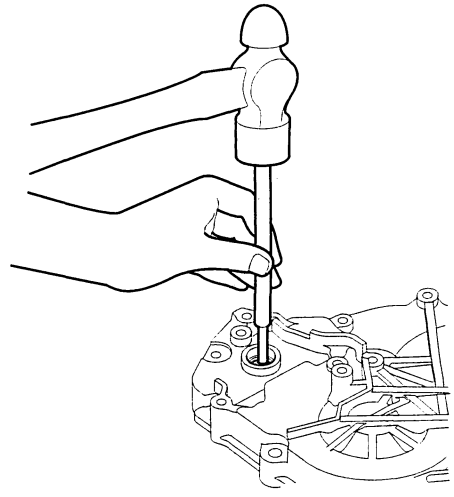

2. Install the new bearing flush to the end cover with the special tools.

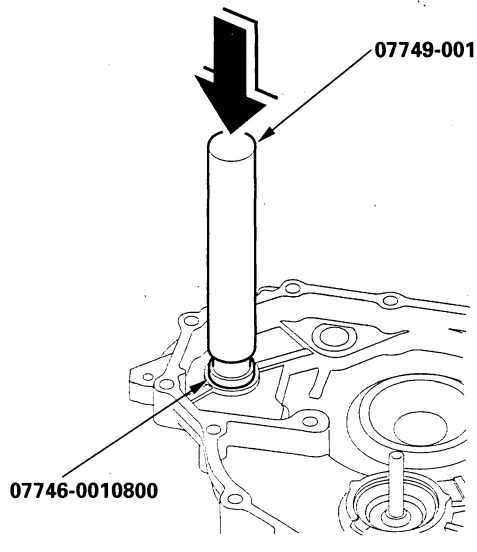

3. Install the new oil seal.

Protected by AR

Transmission End Cover

ATF Feed Pipe Replacement

1. Remove the snap rings (A), ATF feed pipes (B), and feed pipe flanges (C) from the end cover (D).

   NOTE: Replace the end cover, if the 1st clutch ATF feed pipe (E) replacement is required.

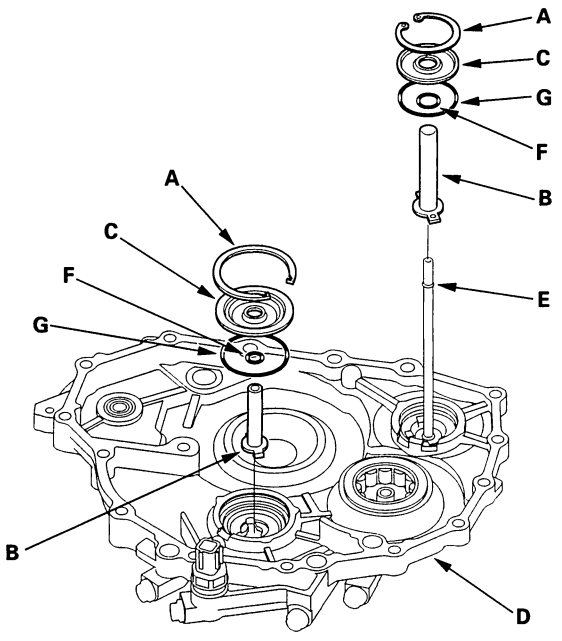

2. Install the new O-rings (F) over the ATF feed pipes.
3. Install the ATF feed pipes in the end cover by aligning the feed pipe tabs with the indentations in the end cover.
4. Install the new O-rings (G) in the end cover, then install the feed pipe flanges over the ATF feed pipes.
5. Secure the ATF feed pipes and feed pipe flanges with the snap rings.

BACK

Protected by AR

Housing and Shaft Assembly Removal

Special Tools Required
Housing puller 07HAC-PK40102

1. Remove the ATF feed pipe (A) from the idler gear shaft, and the ATF lubrication pipe (B) from the transmission housing.

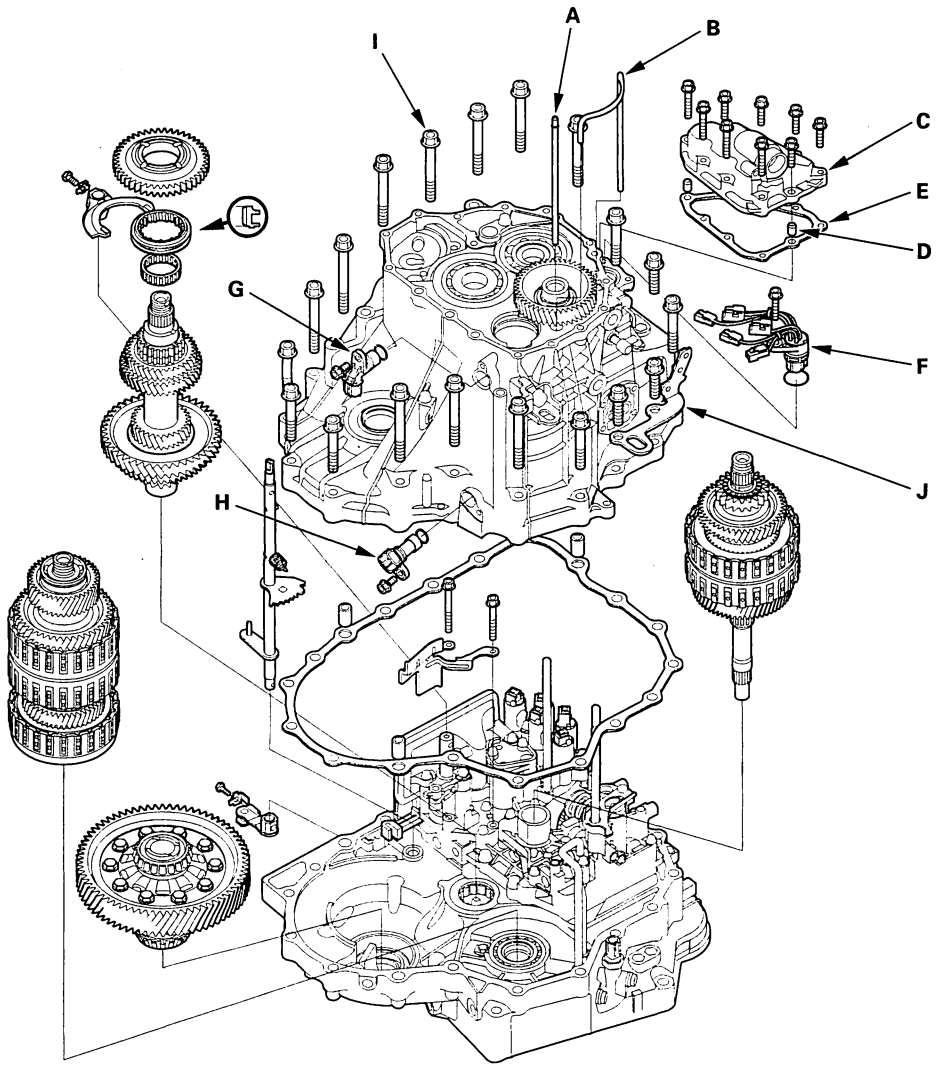

2. Remove the shift solenoid valve cover (C), dowel pins (D), and gasket (E).
3. Disconnect the connectors from the shift solenoid valves, and remove the solenoid harness connector (F).
4. Remove the input shaft (mainshaft) speed sensor (G) and output shaft (countershaft) speed sensor (H).
5. Remove the transmission housing mounting bolts (19 bolts) (I) and transmission hanger (J).

(cont'd)

Protected by AR

Housing and Shaft Assembly Removal (cont'd)

6. Align the spring pin (A) on the selector control shaft (B) with the transmission housing groove (C) by turning the control shaft with the control lever.

   NOTE: Do not squeeze the end of the control shaft tips together when turning the shaft.

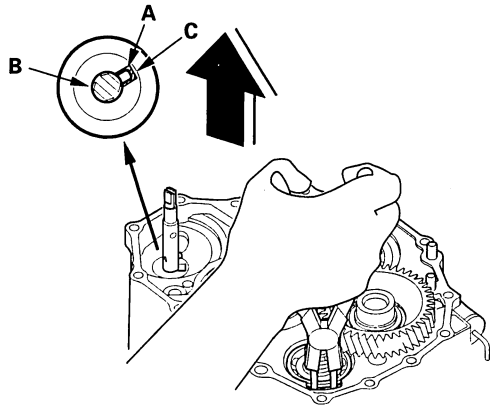

7. While expanding the snap ring of the secondary shaft bearing using the snap ring pliers, lift the transmission housing. Release the snap ring pliers and remove the transmission housing.

8. Remove the countershaft shaft reverse gear and needle bearing.

9. Remove the lock bolt securing the shift fork, then remove the shift fork with the reverse selector together.

10. Remove the selector control lever from the selector control shaft.

11. Unlock the detent spring (A) from the detent arm (B).

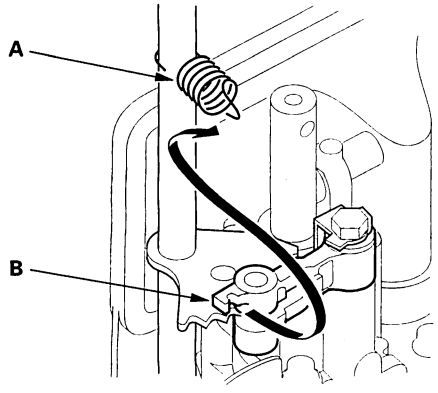

12. Remove the selector control shaft (A) from the torque converter housing.

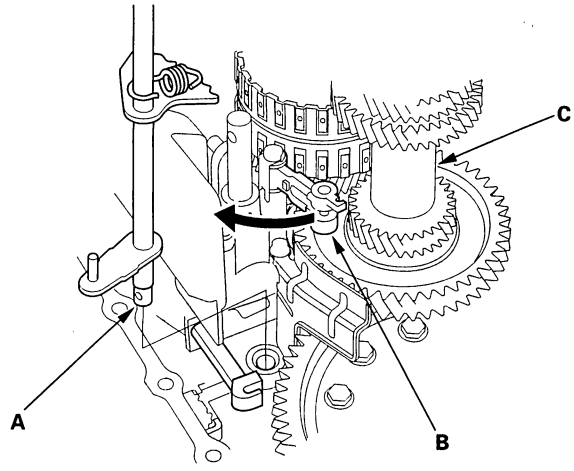

13. Turn the detent arm (B) away from the countershaft (C).

14. Remove the mainshaft subassembly (A), countershaft subassembly (B) and secondary shaft subassembly (C) together. Do not bump the countershaft on the baffle plate (D).

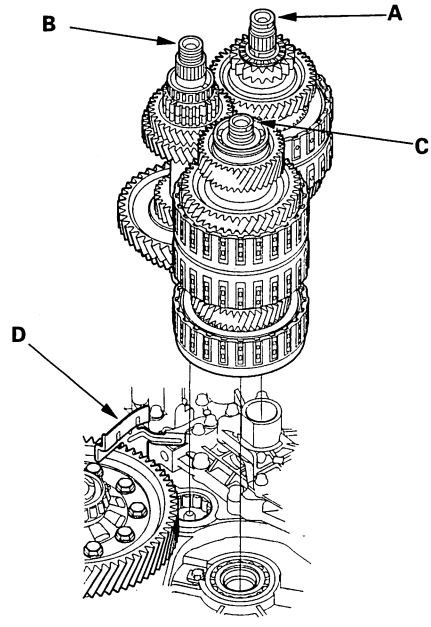

15. Remove the baffle plate.

16. Remove the differential assembly.

BACK

Protected by AR

Bearing Removal

Special Tools Required
- Attachment, 78 x 90 mm 07GAD-SD40101
- Driver 07749-0010000
- Attachment, 42 x 47 mm 07746-0010300

1. Remove the idler gear shaft when removing the mainshaft bearing and idler gear shaft bearing.

   NOTE: If you are only removing the countershaft bearing, idler gear shaft removal is not needed.

2. To remove the mainshaft bearing (A) and countershaft bearing (B) from the transmission housing, expand each snap ring with the snap ring pliers, then push the bearing out.

   NOTE: Do not remove the snap ring unless it's necessary to clean the grooves in the housing.

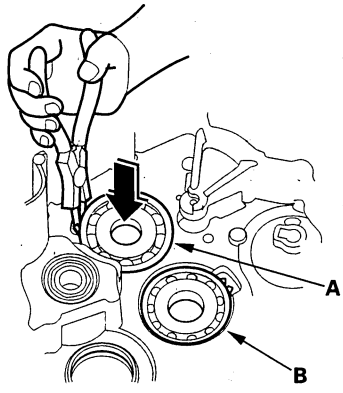

3. Expand the snap ring of the idler gear shaft bearing with the snap ring pliers, then push the bearing out.

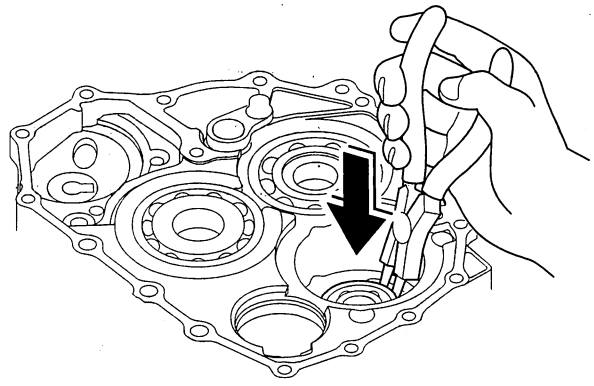

Protected by AR

Bearing Installation

Special Tools Required
- Attachment, 78 x 90 mm 07GAD-SD40101
- Driver 07749-0010000
- Attachment, 42 x 47 mm 07746-0010300

1. Install the bearings in the direction shown.
2. Expand each snap ring with the snap ring pliers, and install the mainshaft bearing (A) and countershaft bearing (B) part-way into the housing.

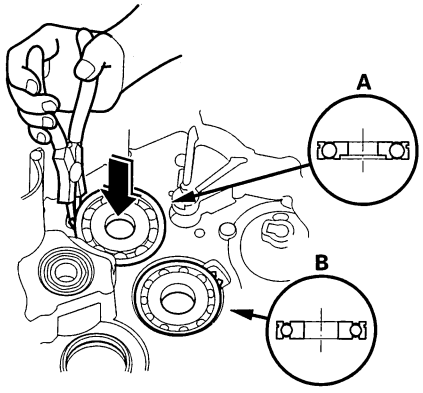

3. Release the pliers, then push the bearing down into the housing until the snap ring snaps in place around it.
4. Expand the snap ring of the idler gear shaft (A) with the snap ring pliers, and install the bearing part-way into the housing.

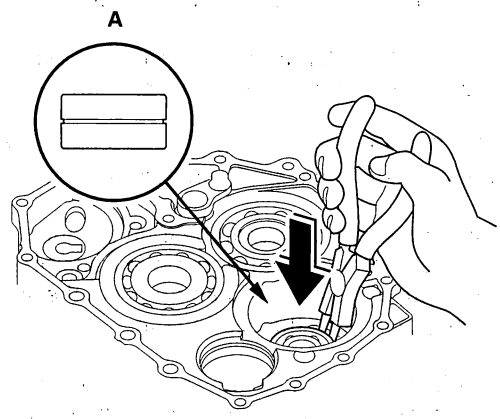

5. Release the pliers, then push the bearing down into the housing until the snap ring snaps in place around it.
6. After installing the bearings verify that the snap rings (A) are seated in the bearing and housing grooves, and that the ring end gaps (B) are correct.

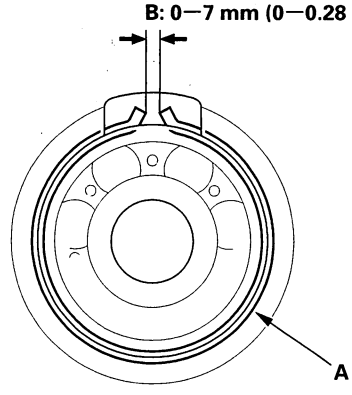

7. Install the idler shaft.

BACK

Protected by AR

Reverse Idler Gear Removal and Installation

Removal

1. Remove the bolt (A) securing the reverse idler gear shaft holder.

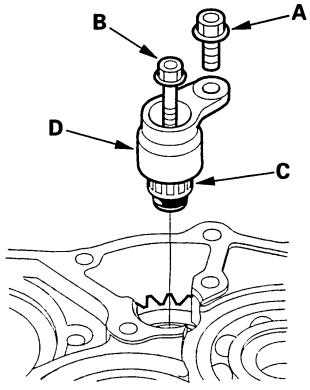

2. Install a 5 x 0.8 mm bolt (B) in the reverse idler gear shaft, and pull it to remove the reverse idler gear shaft (C) and gear shaft holder (D) together.

3. Remove the reverse idler gear.

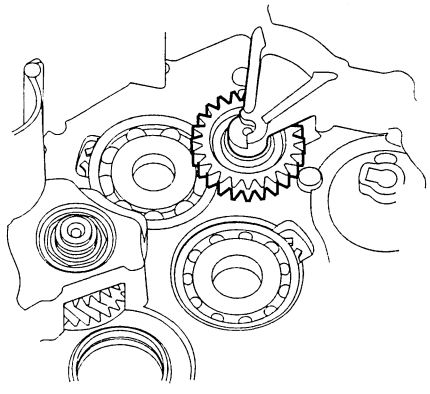

Installation

1. Install the reverse idler gear in the transmission housing.

2. Lightly coat the reverse idler gear shaft (A), needle bearing (B), and new O-rings (C) with lithium grease.

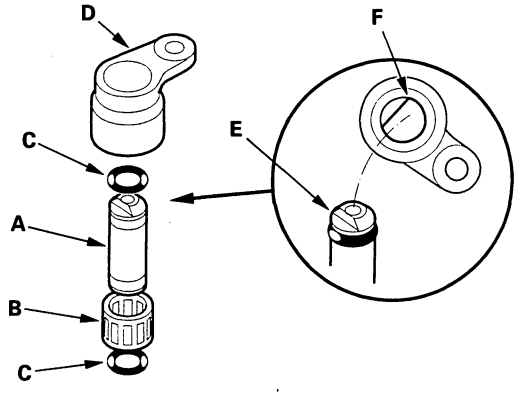

3. Assemble the new O-rings and needle bearing on the reverse idler gear shaft, then install the reverse idler gear shaft in the reverse idler gear shaft holder (D). Align the D-shaped cut out (E) of the shaft with the D-shaped area (F) of the holder.

4. Install the reverse idler gear shaft/holder assembly on the transmission housing.

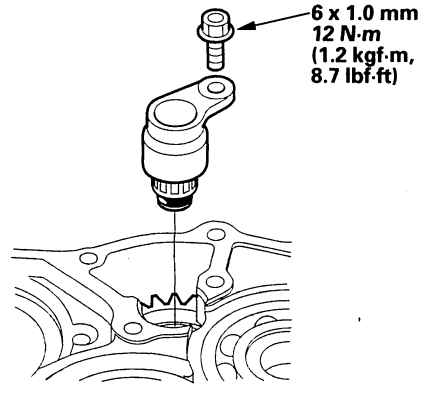

Protected by AR

Valve Body and ATF Strainer Removal

1. Remove the ATF feed pipes (A) and ATF joint pipes (B).

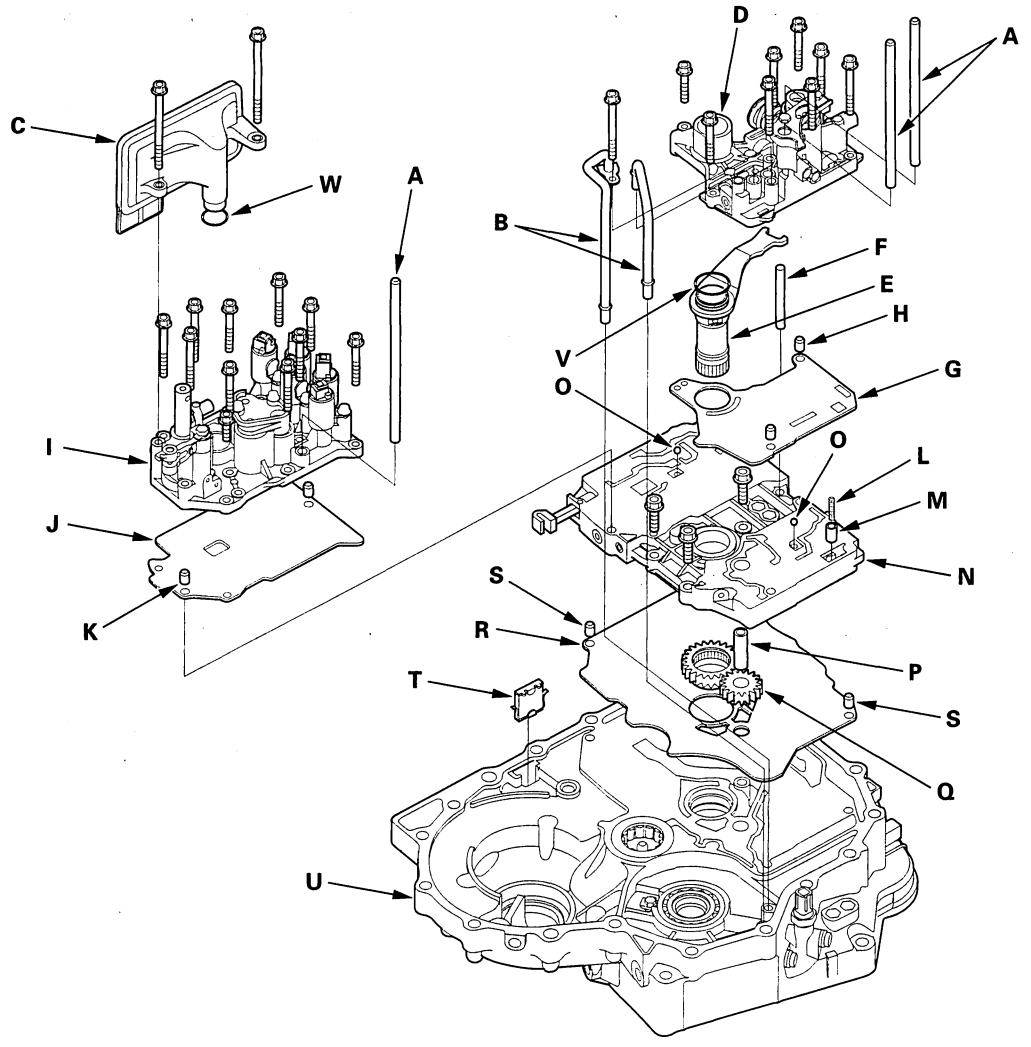

2. Remove the ATF strainer (C).
3. Remove the regulator valve body (D) (seven bolts).
4. Remove the stator shaft (E) and stator shaft stop (F), then remove the regulator separator plate (G) and two dowel pins (H).
5. Remove the servo body (I) (11 bolts), then remove the separator plate (J) and two dowel pins (K).

BACK

Protected by AR

6. Remove the cooler check valve spring (L) and valve (M), then remove the main valve body (N) (three bolts). Do not let the check balls (O) fall out.

7. Remove the ATF pump driven gear shaft (P), then remove the ATF pump gears (Q).

8. Remove the main separator plate (R) and two dowel pins (S).

9. Remove the ATF magnet (T), clean and reinstall it in the torque converter housing (U).

10. Clean the inlet opening (A) of the ATF strainer (B) thoroughly with compressed air, then check that it is in good condition and that the inlet opening is not clogged.

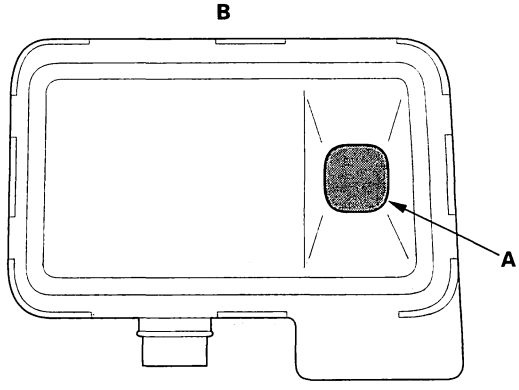

11. Test the ATF strainer by pouring clean ATF through the inlet opening, and replace it if it is clogged or damaged.

12. Remove the O-rings (V) (W) from the stator shaft and ATF strainer. Install the new ones when installing the valve bodies.

Protected by AR

Valve Body Repair

NOTE: This repair is only necessary if one or more of the valves in a valve body do not slide smoothly in their bores. Use this procedure to free the valves.

1. Soak a sheet of #600 abrasive paper in ATF for about 30 minutes.
2. Carefully tap the valve body so the sticking valve drops out of its bore. It may be necessary to use a small screwdriver to pry the valve free. Be careful not to scratch the bore with the screwdriver.
3. Inspect the valve for any scuff marks. Use the ATF-soaked #600 paper to polish off any burrs that are on the valve, then wash the valve in solvent and dry it with compressed air.
4. Roll up half a sheet of ATF-soaked #600 paper and insert it in the valve bore of the sticking valve. Twist the paper slightly, so that it unrolls and fits the bore tightly, then polish the bore by twisting the paper as you push it in and out.

   NOTE: The valve body is aluminum and doesn't require much polishing to remove any burrs.

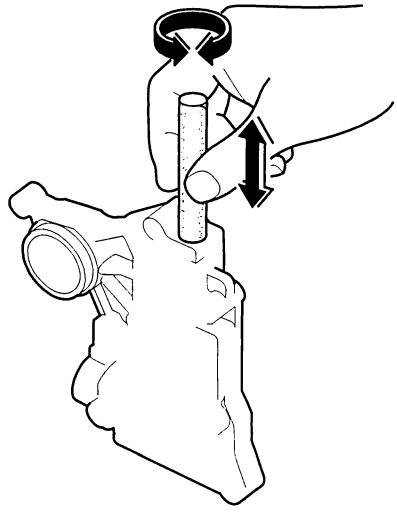

5. Remove the #600 paper. Thoroughly wash the entire valve body in solvent, then dry it with compressed air.
6. Coat the valve with ATF, then drop it into its bore. It should drop to the bottom of the bore under its own weight. If not, repeat step 4, then retest. If the valve still sticks, replace the valve body.

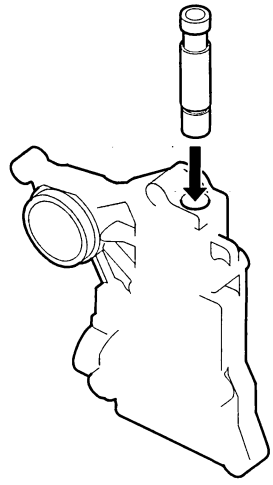

7. Remove the valve, and thoroughly clean it and the valve body with solvent. Dry all parts with compressed air, then reassemble using ATF as a lubricant.

BACK

Protected by AR

Valve Body Valve Installation

1. Coat all parts with ATF before assembly.

2. Install the valves and springs in the sequence shown for the main valve body (see page 14-278), regulator valve body 2003-2004 models (see page 14-280), 2005-2006 models (see page 14-281), and servo body (see page 14-282). Refer to the following valve cap illustrations, and install each valve cap so the end shown facing up will be facing the outside of the valve body.

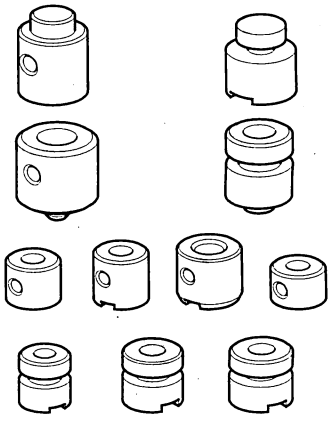

3. Install all the springs and seats. Insert the spring (A) in the valve, then install the valve in the valve body (B). Push the spring in with a screwdriver, then install the spring seat (C).

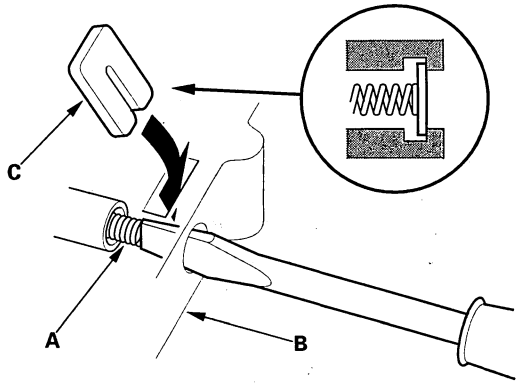

Protected by AR

Valve Body

Main Valve Body Disassembly, Inspection, and Reassembly

1. Clean all parts thoroughly in solvent or carburetor cleaner, and dry them with compressed air. Blow out all passages.
2. Do not use a magnet to remove the check balls, it may magnetize the balls.
3. Inspect the valve body for scoring and damage.
4. Check all valves for free movement. If any fail to slide freely, refer to valve body repair (see page 14-276).
5. Coat all parts with ATF during assembly.

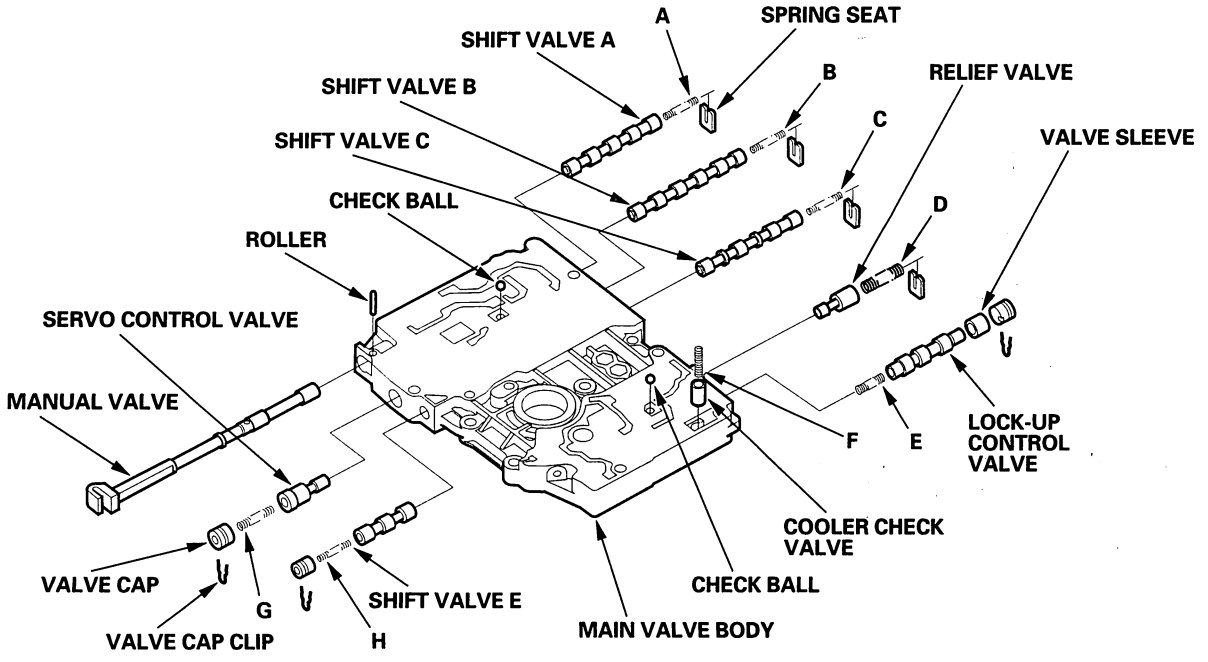

SPRING SPECIFICATIONS

Springs		Standard (New)-Unit: mm (in.)			
		Wire Diameter	O.D.	Free Length	No. of Coils
A	Shift valve A spring	0.8 (0.031)	5.6 (0.220)	28.1 (1.106)	15.9
B	Shift valve B spring	0.8 (0.031)	5.6 (0.220)	28.1 (1.106)	15.9
C	Shift valve C spring	0.8 (0.031)	5.6 (0.220)	28.1 (1.106)	15.9
D	Relief valve spring	1.0 (0.039)	9.6 (0.378)	34.1 (1.343)	10.2
E	Lock-up control valve spring	0.65 (0.026)	7.1 (0.280)	23.1 (0.909)	12.7
F	Cooler check valve spring				
	2003-2004 models	0.9 (0.035)	6.6 (0.260)	26.5 (1.043)	12.6
	2005-2006 models	0.85 (0.034)	6.6 (0.260)	27.0 (1.063)	11.3
G	Servo control valve spring	0.7 (0.028)	6.6 (0.260)	35.7 (1.406)	17.2
H	Shift valve E spring	0.8 (0.031)	5.6 (0.220)	28.1 (1.106)	15.9

BACK

Protected by AR

ATF Pump Inspection

1. Install the ATF pump drive gear (A), driven gear (B), and ATF pump driven gear shaft (C) in the main valve body (D). Lubricate all parts with ATF, and install the ATF pump driven gear with its grooved and chamfered side facing up.

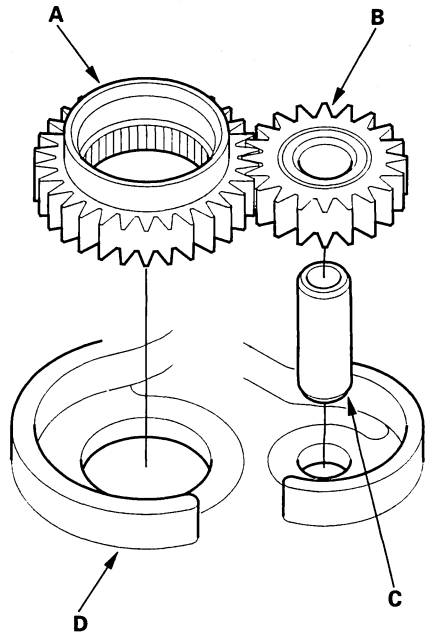

2. Measure the side clearance of the ATF pump drive gear (A) and driven gear (B).

ATF Pump Gears Side (Radial) Clearance
Standard (New)
ATF Pump Drive Gear:
0.210—0.265 mm (0.0083—0.0104 in.)
ATF Pump Driven Gear:
0.070—0.125 mm (0.0028—0.0049 in.)

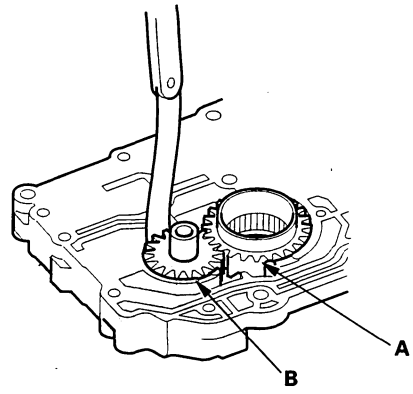

3. Remove the ATF pump driven gear shaft. Measure the thrust clearance between the ATF pump driven gear (A) and the valve body (B) with a straight edge (C) and a feeler gauge (D).

ATF Pump Drive/Driven Gear Thrust (Axial) Clearance
Standard (New): 0.03—0.05 mm (0.001—0.002 in.)
Service Limit: 0.07 mm (0.003 in.)

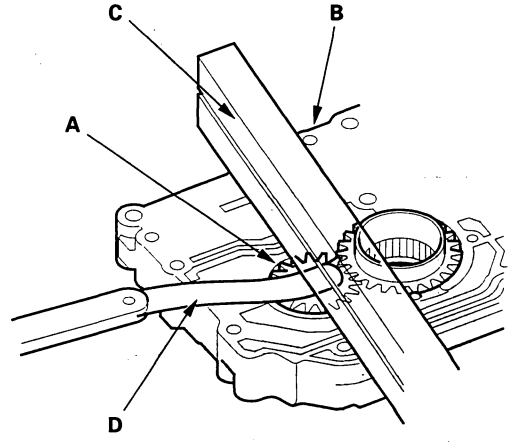

Protected by AR

Regulator Valve Body Disassembly, Inspection, and Reassembly

2003-2004 Models

1. Clean all parts thoroughly in solvent or carburetor cleaner, and dry them with compressed air. Blow out all passages.
2. Check all valves for free movement. If any fail to slide freely, refer to valve body repair (see page 14-276).
3. Hold the regulator spring cap in place while removing the stop bolt. The regulator spring cap is spring loaded. Once the stop bolt is removed, release the spring cap slowly so it does not pop out.
4. Coat all parts with ATF during assembly.
5. When reassembling the valve body, align the hole in the regulator spring cap with the hole in the valve body, then press the spring cap into the valve body, and tighten the stop bolt.

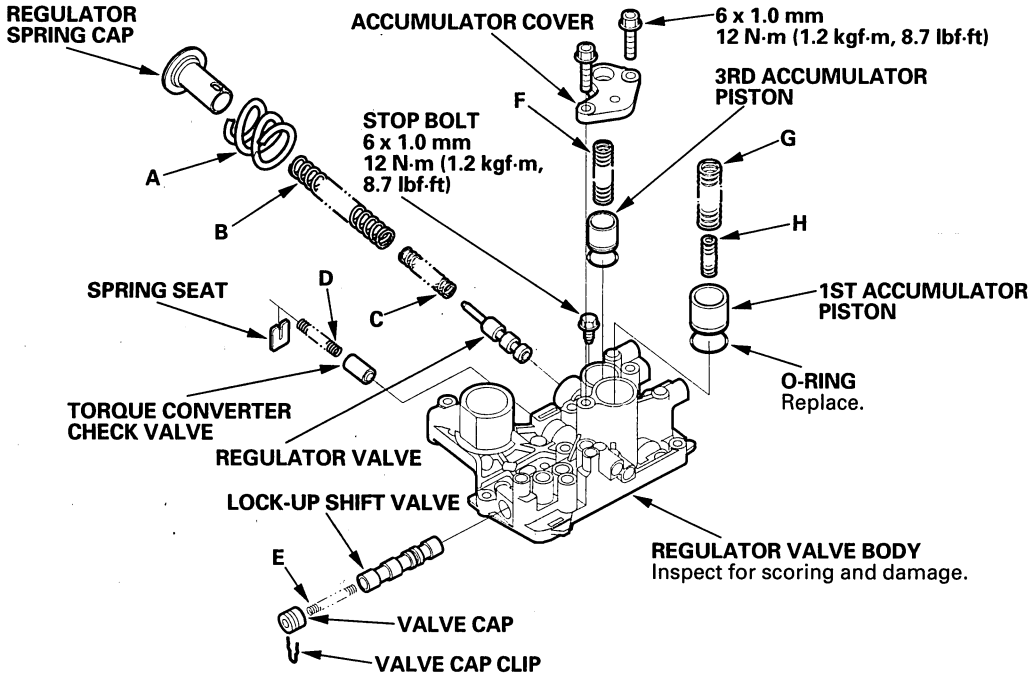

SPRING SPECIFICATIONS

Spring		Standard (New)-Unit: mm (in.)			
		Wire Diameter	O.D.	Free Length	No. of Coils
A	Stator reaction spring	4.5 (0.177)	35.4 (1.394)	30.3 (1.193)	1.92
B	Regulator valve spring A	1.9 (0.075)	14.7 (0.579)	80.6 (3.173)	16.1
C	Regulator valve spring B	1.6 (0.063)	9.2 (0.362)	44.0 (1.732)	12.5
D	Torque converter check valve spring	1.2 (0.047)	8.6 (0.339)	33.8 (1.331)	12.2
E	Lock-up shift valve spring	1.0 (0.039)	6.6 (0.260)	35.5 (1.398)	18.2
F	3rd accumulator spring	2.5 (0.098)	14.6 (0.575)	29.9 (1.177)	4.9
G	1st accumulator spring A	2.4 (0.094)	18.6 (0.732)	49.0 (1.929)	7.1
H	1st accumulator spring B	2.3 (0.091)	12.2 (0.480)	31.5 (1.240)	6.6

BACK

Protected by AR

2005-2006 Models

1. Clean all parts thoroughly in solvent or carburetor cleaner, and dry them with compressed air. Blow out all passages.
2. Check all valves for free movement. If any fail to slide freely, refer to valve body repair (see page 14-276).
3. Hold the regulator spring cap in place while removing the stop bolt. The regulator spring cap is spring loaded.
4. Coat all parts with ATF during assembly.
5. When reassembling the valve body, align the hole in the regulator spring cap with the hole in the valve body, then press the spring cap into the valve body, and tighten the stop bolt.

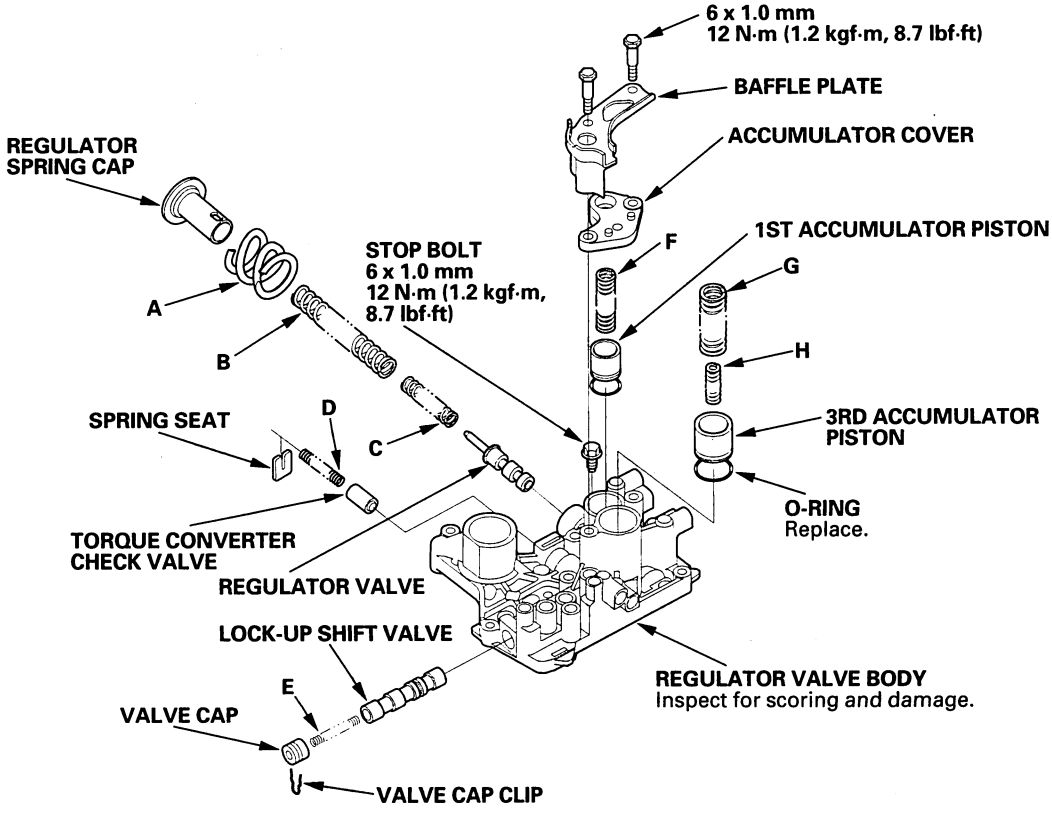

SPRING SPECIFICATIONS

Spring		Standard (New)-Unit: mm (in.)			
		Wire Diameter	O.D.	Free Length	No. of Coils
A	Stator reaction spring	4.5 (0.177)	35.4 (1.394)	30.3 (1.193)	1.92
B	Regulator valve spring A	1.9 (0.075)	14.7 (0.579)	80.6 (3.173)	16.1
C	Regulator valve spring B	1.6 (0.063)	9.2 (0.362)	44.0 (1.732)	12.5
D	Torque converter check valve spring	1.2 (0.047)	8.6 (0.339)	33.8 (1.331)	12.2
E	Lock-up shift valve spring	1.0 (0.039)	6.6 (0.260)	35.5 (1.398)	18.2
F	3rd accumulator spring	2.5 (0.098)	14.6 (0.575)	29.9 (1.177)	4.9
G	1st accumulator spring A	2.4 (0.094)	18.6 (0.732)	49.0 (1.929)	7.1
H	1st accumulator spring B	2.3 (0.091)	12.2 (0.480)	31.5 (1.240)	6.6

Protected by AR

Servo Body Disassembly, Inspection, and Reassembly

1. Clean all parts thoroughly in solvent or carburetor cleaner, and dry them with compressed air. Blow out all passages.
2. Inspect the valve body for scoring and damage.
3. Check the shift valve D for free movement. If any fail to slide freely, refer to valve body repair (see page 14-276).
4. When removing and installing the shift solenoid valves, refer to shift solenoid valves removal and installation (see page 14-283).
5. Coat all parts with ATF during assembly.
6. Replace the O-rings with new ones.

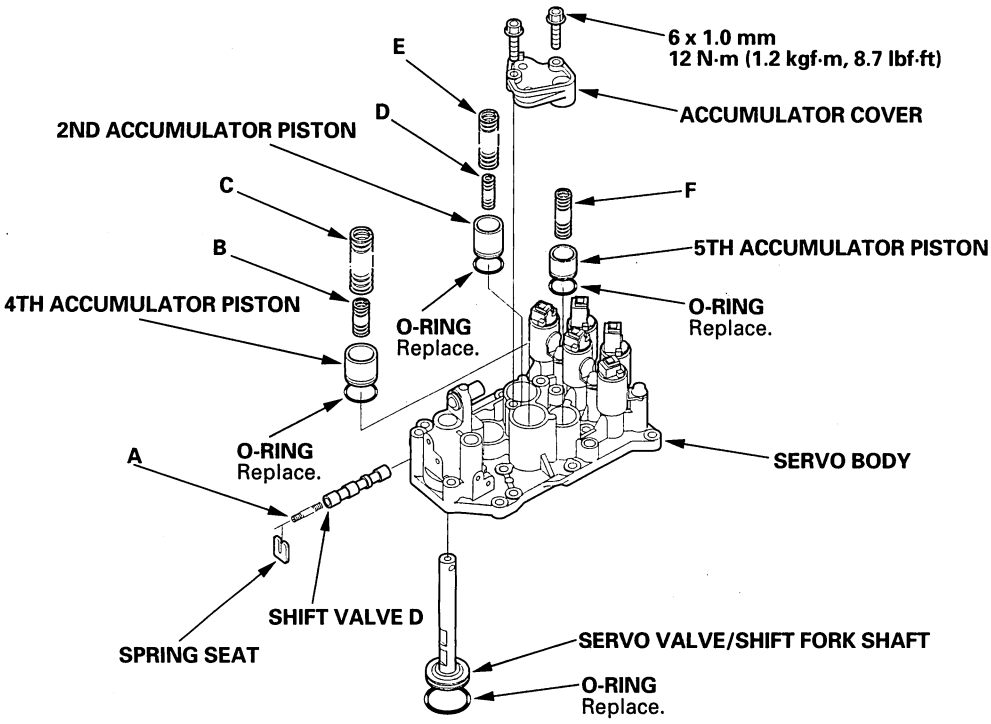

SPRING SPECIFICATIONS

Spring		Standard (New)-Unit: mm (in.)			
		Wire Diameter	O.D.	Free Length	No. of Coils
A	Shift valve D spring	0.8 (0.031)	5.6 (0.220)	28.1 (1.106)	15.9
B	4th accumulator spring B	2.3 (0.091)	12.2 (0.480)	31.5 (1.240)	6.6
C	4th accumulator spring A	2.4 (0.094)	18.6 (0.732)	49.0 (1.929)	7.1
D	2nd accumulator spring B	2.0 (0.079)	10.6 (0.417)	34.0 (1.339)	8.0
E	2nd accumulator spring A	2.2 (0.087)	16.6 (0.654)	48.2 (1.898)	8.5
F	5th accumulator spring	2.5 (0.098)	14.6 (0.575)	29.9 (1.177)	4.9

BACK

Protected by AR

Shift Solenoid Valve Removal and Installation

NOTE:
- Do not hold the shift solenoid connector to remove and to install the shift solenoid valves. Hold the shift solenoid valve body.
- Do not install the shift solenoid valve A before installing the shift solenoid valve D, and do not install shift solenoid valve B before solenoid valve E. If solenoid valves A and B are installed before solenoid valves D and E, it may damage the hydraulic control system.

1. Remove the shift solenoid valves by holding the solenoid valve body.

2. Install new O-rings (F) on each shift solenoid valves.

   NOTE: A new solenoid valve comes with new O-rings. If you install a new solenoid valve, use the O-rings provided on it.

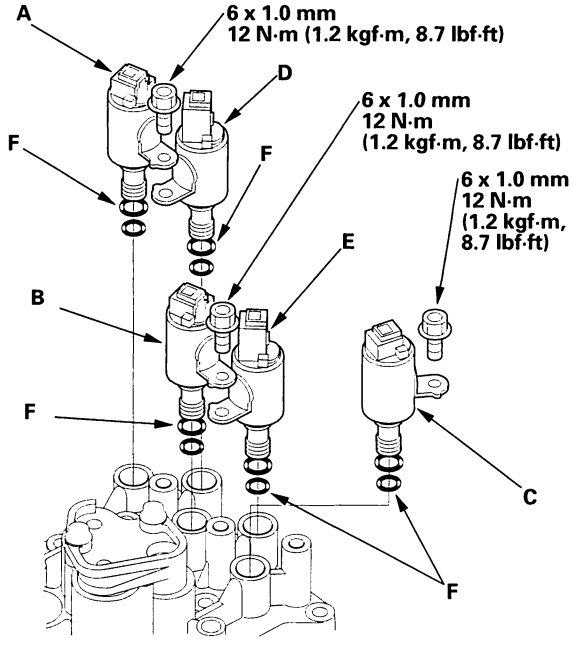

3. Install shift solenoid valve D by holding the shift solenoid valve body; be sure to install mounting bracket contacts the servo body.

4. Install shift solenoid valve A by holding the shift solenoid valve body; be sure to install mounting bracket contacts the bracket on shift solenoid valve D.

5. Install shift solenoid valve E by holding the shift solenoid valve body; be sure to install mounting bracket contacts the servo body.

6. Install shift solenoid valve B by holding the shift solenoid valve body; be sure to install mounting bracket contacts the bracket on shift solenoid valve E.

7. Install shift solenoid valve C by holding the shift solenoid valve body; be sure to install mounting bracket contacts the servo body.

Protected by AR

Torque Converter Housing

Mainshaft Bearing and Oil Seal Replacement

Special Tools Required
- Adjustable bearing puller, 25—40 mm 07736-A01000B or 07736-A01000A
- Driver 07749-0010000
- Attachment, 62 x 68 mm 07746-0010500
- Attachment, 72 x 75 mm 07746-0010600

1. Remove the mainshaft bearing and oil seal with the special tool and a commercially available 3/8 "-16 slide hammer (A).

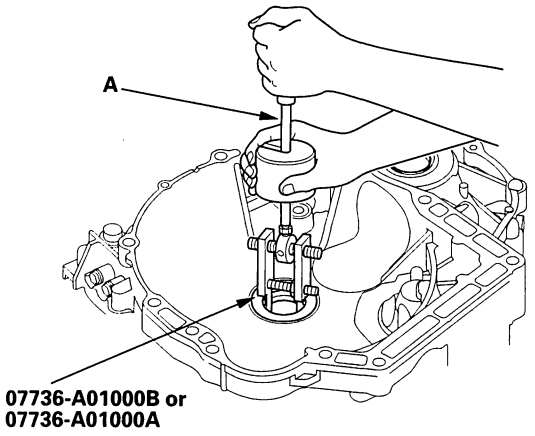

2. Install the new mainshaft bearing until it bottoms in the torque converter housing with the special tools.

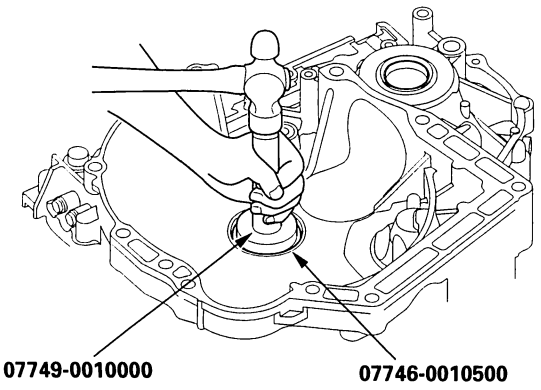

3. Install the new oil seal flush with the housing with the special tools.

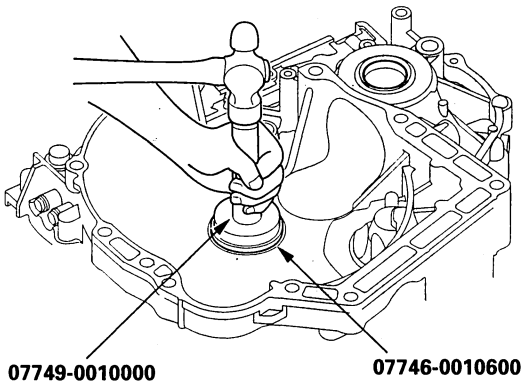

BACK

Protected by AR

Countershaft Bearing Replacement

Special Tools Required
- Adjustable bearing puller, 25—40 mm
  07736-A01000B or 07736-A01000A
- Driver 07749-0010000
- Attachment, 62 x 68 mm 07746-0010500

1. Remove the countershaft bearing with the special tool and a commercially available 3/8 "-16 slide hammer (A).

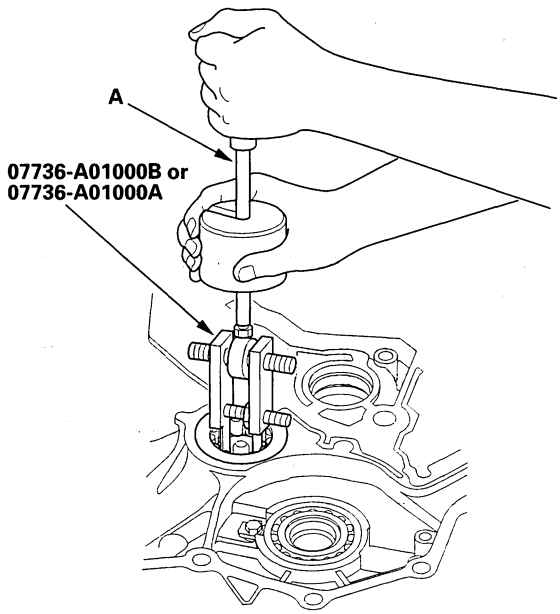

2. Install the ATF guide plate (A).

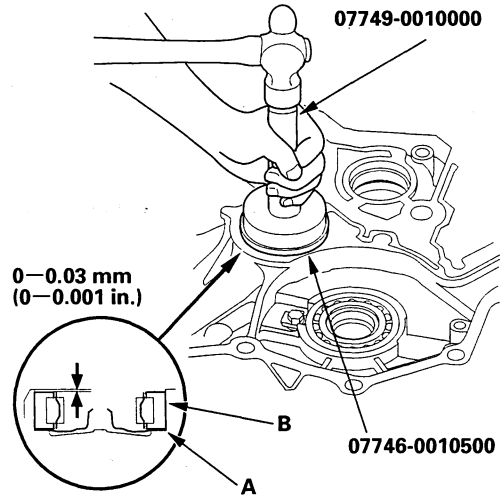

3. Install the new countershaft bearing (B) in the housing with the special tools.

Protected by AR

Torque Converter Housing

Secondary Shaft Bearing Replacement

Special Tools Required
- Driver 07749-0010000
- Attachment, 62 x 68 mm 07746-0010500

1. Remove the bolt, then remove the lock washer (A) and bearing set plate (B).

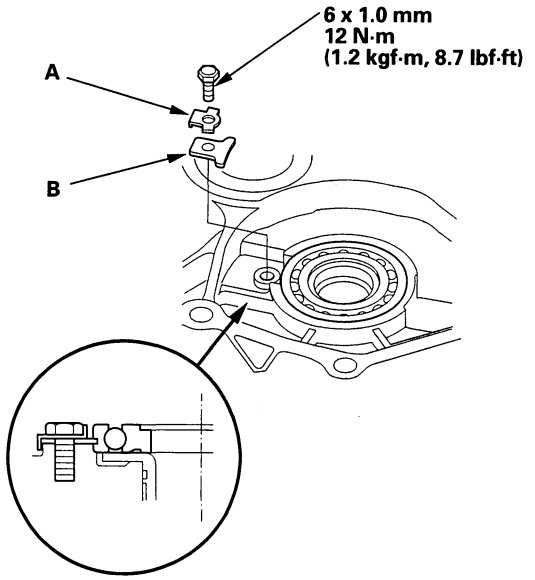

2. Remove the secondary shaft bearing (A) by heating the housing to about 212 °F (100 °C) with a heat gun (B). Do no heat the housing in excess of 212 °F (100 °C).

   NOTE: Let the housing cool to normal temperature before installing the bearing.

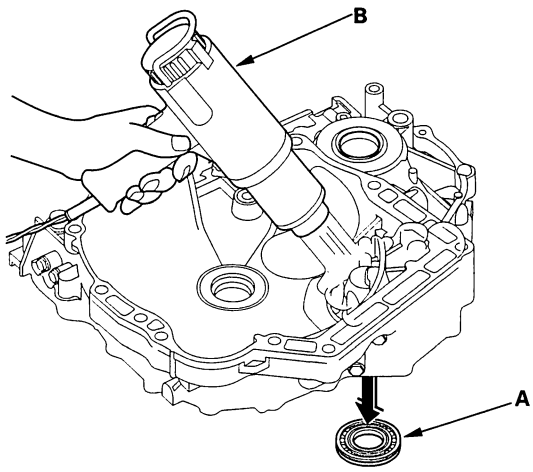

3. Install the new O-rings (A) on the ATF guide collar (B), then install the ATF guide collar in the housing.

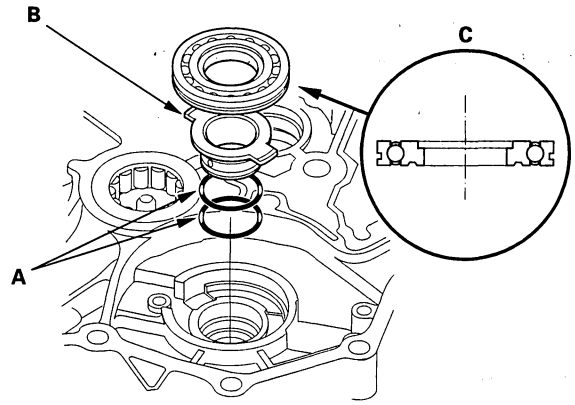

4. Install the new secondary shaft bearing (C) in the direction shown.

5. Drive the secondary shaft bearing with the special tools, and install it securely in the housing.

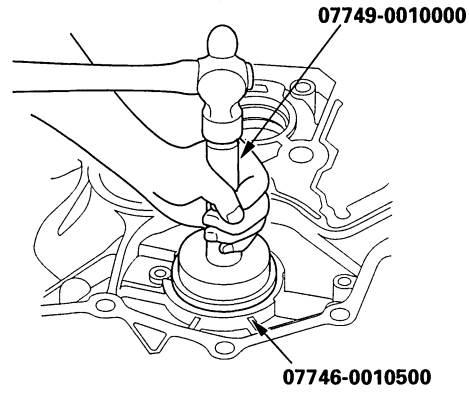

6. Check that the bearing groove aligns with the housing surface, then install the bearing set plate with aligning the bearing groove.

7. Install the new lock washer and bolt, then bend the lock tab of the lock washer against the bolt head.

BACK

Protected by AR

Selector Control Shaft Oil Seal Replacement

Special Tools Required
- Driver 07749-0010000
- Oil seal driver attachment 07947-ZV00100

1. Remove the oil seal (A) from the torque converter housing (B).

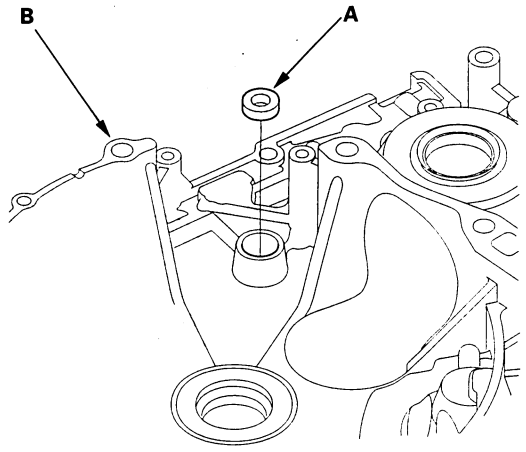

2. Install the new oil seal (A) in the torque converter housing in depth (B) of 0.5—1.5 mm (0.02—0.06 in.) below the housing surface with the special tools.

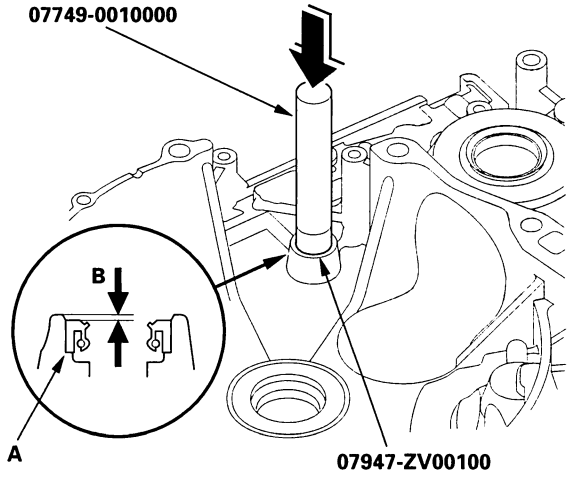

Protected by AR

Mainshaft Disassembly, Inspection, and Reassembly

1. Inspect the thrust needle bearing and the needle bearing for galling and rough movement.

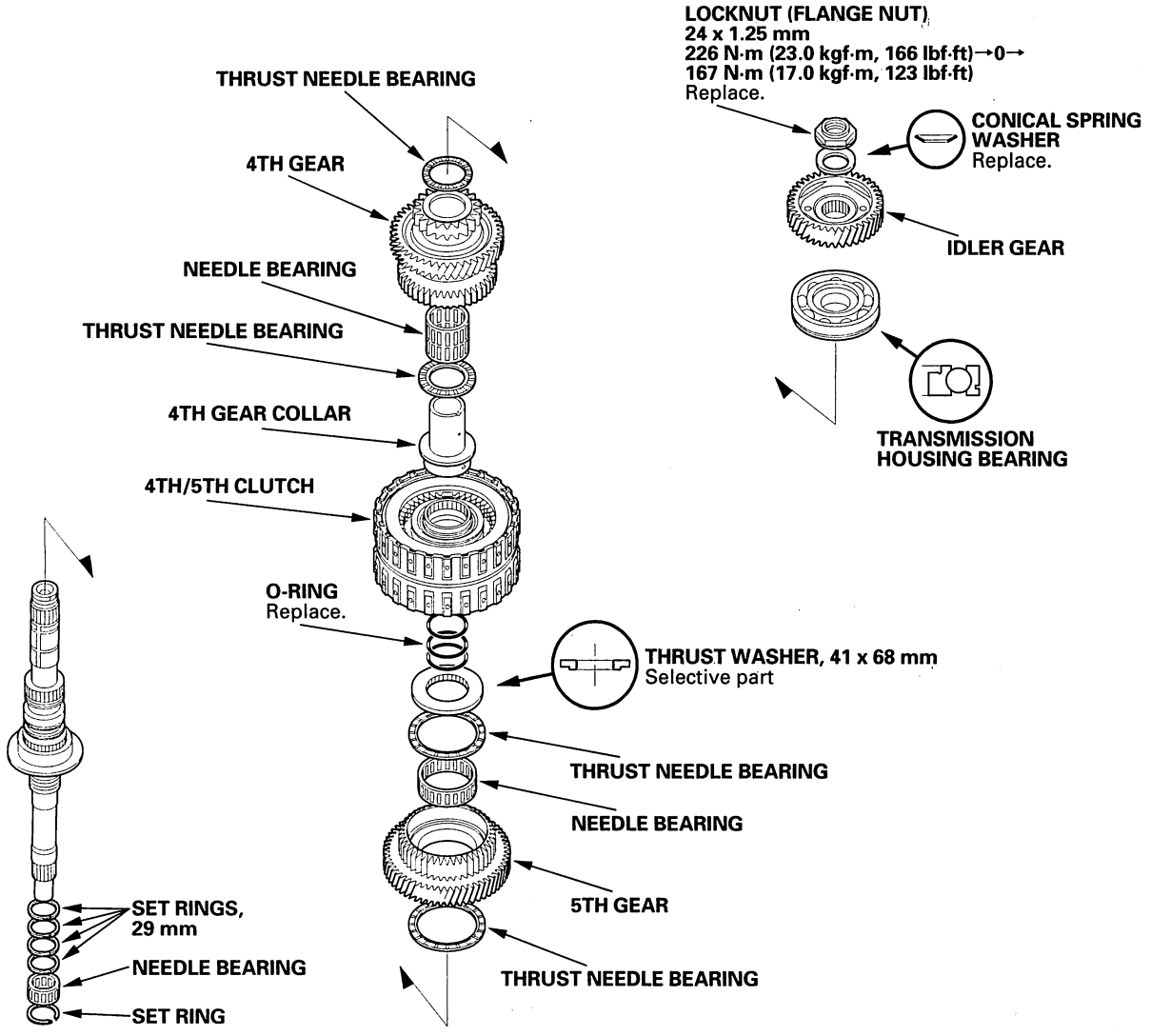

2. Inspect the splines for excessive wear and damage.
3. Check shaft bearing surface for scoring and excessive wear.
4. Before installing the O-rings, wrap the shaft splines with tape to prevent O-ring damage.
5. Lubricate all parts with ATF during assembly.
6. Install the conical spring washer, 41 x 68 mm thrust washer in the direction shown.
7. Replace the locknut and conical spring washer with new ones when assembling the transmission.
8. Check the clearance of the 5th gear (see page 14-289).

BACK

Protected by AR

Mainshaft 5th Gear Clearance Inspection

1. Remove the mainshaft transmission housing bearing (see page 14-271).

2. Assemble 41 x 68 mm thrust washer (A), 4th/5th clutch (B), 4th gear collar (C), and transmission housing bearing (D) on the mainshaft (E). Do not install the O-rings during inspection.

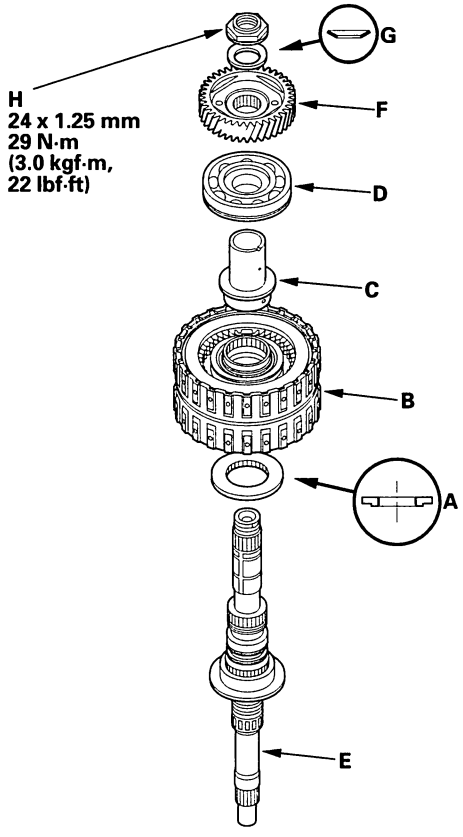

3. Install the idler gear (F) on the mainshaft by a press, then install the conical spring washer (G) and locknut (H).

4. Tighten the locknut to 29 N·m (3.0 kgf·m, 22 lbf·ft).

5. Measure the clearance between the mainshaft flange (A) and 41 x 68 mm thrust washer (B) with a feeler gauge (C), in at least three places. Use the average as the actual clearance.

Standard: 0.03—0.11 mm (0.001—0.004 in.)

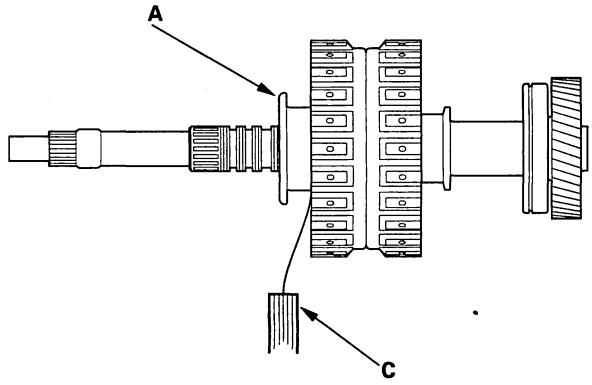

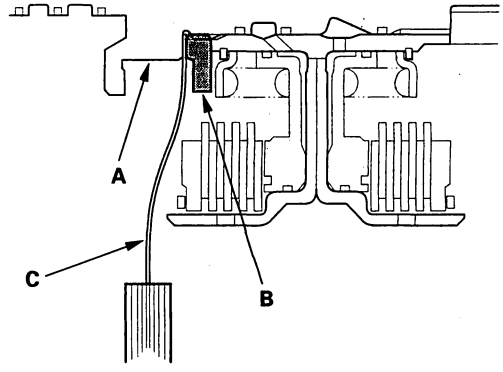

(cont'd)

Protected by AR

Mainshaft 5th Gear Clearance Inspection (cont'd)

6. If the clearance is out of standard, remove the 41 x 68 mm thrust washer and measure its thickness.

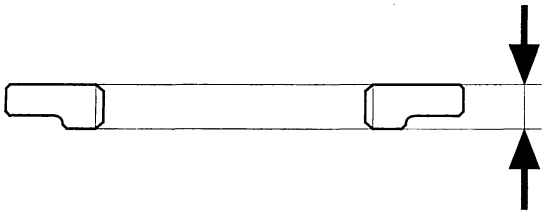

7. Select and install a new thrust washer, then recheck.

THRUST WASHER, 41 x 68 mm

No.	Part Number	Thickness
1	90414-PRP-000	6.35 mm (0.250 in.)
2	90415-PRP-000	6.40 mm (0.252 in.)
3	90416-PRP-000	6.45 mm (0.254 in.)
4	90417-PRP-000	6.50 mm (0.256 in.)
5	90418-PRP-000	6.55 mm (0.258 in.)
6	90419-PRP-000	6.60 mm (0.260 in.)

8. After replacing the thrust washer, make sure the clearance is within standard.

9. Disassemble the shaft and gears.

10. Reinstall the bearing in the transmission housing (see page 14-272).

BACK

Protected by AR

Countershaft Disassembly, Inspection, and Reassembly

1. Inspect the thrust needle bearing and the needle bearing for galling and rough movement.

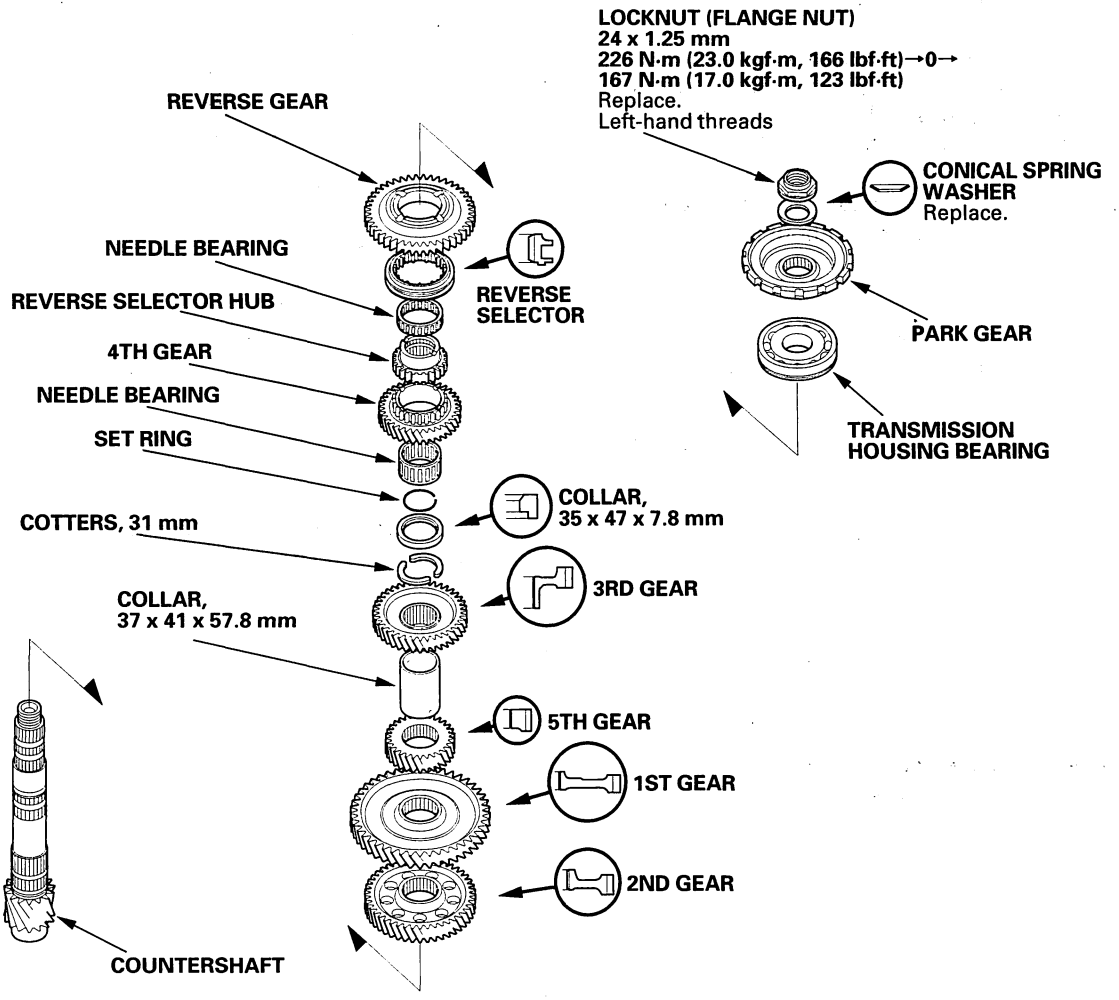

2. Inspect the splines for excessive wear and damage.
3. Check shaft bearing surface for scoring and excessive wear.
4. Lubricate all parts with ATF during assembly.
5. Install the conical spring washer, reverse selector, 35 x 47 x 7.8 mm collar, and all gears in the direction shown.
6. Replace the locknut and conical spring washer with new ones when assembling the transmission. The countershaft locknut has left-hand threads.
7. Some reverse selector hubs, and the 3rd gear are press-fitted to the countershaft; special tools are needed to remove them (see page 14-292) and to install them (see page 14-293).

Protected by AR

Countershaft Reverse Selector Hub and 3rd Gear Removal

Special Tools Required
Bearing separator 07KAF-PS30200

1. Install the special tool on the 4th gear (A). Set a press on the countershaft (B) with putting a spacer (C) between the press and countershaft, and remove the reverse selector hub (D).

   NOTE: Some reverse selector hubs are not press-fitted, and can be removed without using the special tool and a press.

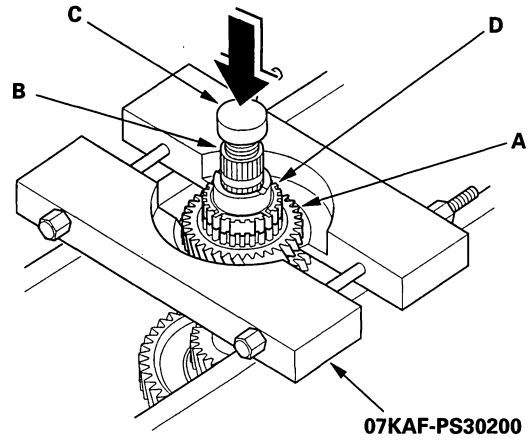

2. Remove the needle bearing, set ring, 35 x 47 x 7.8 mm collar, and cotters.

3. Set the press on the countershaft (A) with putting a spacer (B) between the press and countershaft, and remove the 3rd gear (C).

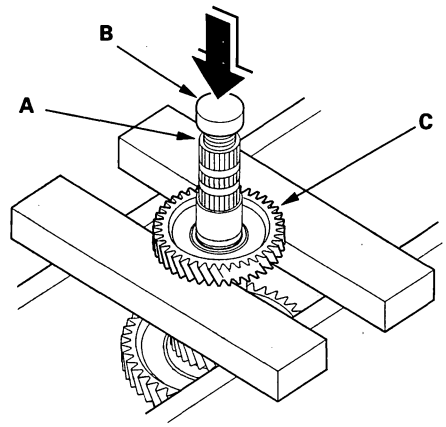

4. Remove the 37 x 41 x 57.8 mm collar, 5th gear, 1st gear, and 2nd gear.

BACK

Protected by AR

Countershaft 3rd Gear and Reverse Selector Hub Installation

Special Tools Required
Driver, 40 mm I.D. 07746-0030100

1. Install the 2nd gear, 1st gear, 5th gear, and 37 x 41 x 57.8 mm collar on the countershaft.

2. Slide the 3rd gear (A) over the countershaft, and press it in place with the special tool and a press.

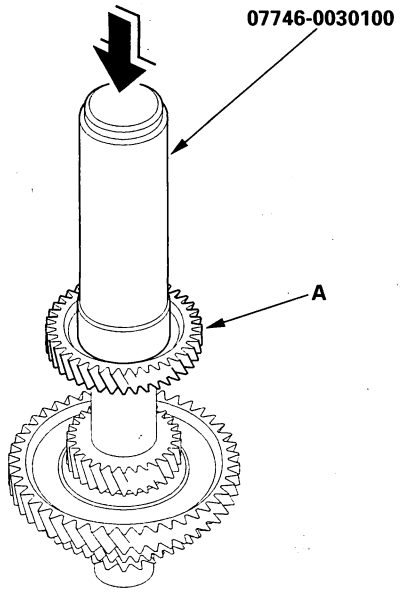

3. Install the cotters, 35 x 47 x 7.8 mm collar, set ring, needle bearing, and 4th gear.

4. Slide the reverse selector hub (A) over the countershaft, then press it in place with the special tool and a press.

   NOTE: Some reverse selector hubs are not press-fitted and can be installed without using the special tool and a press.

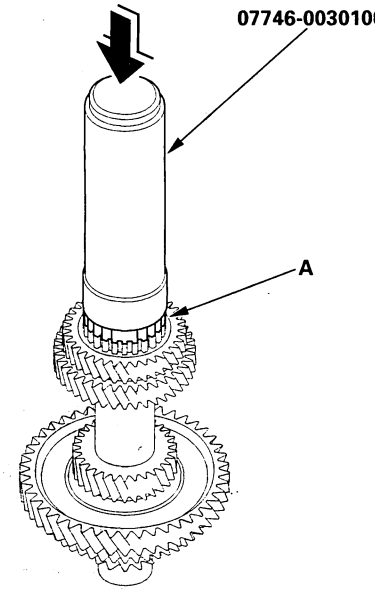

Protected by AR

Secondary Shaft Disassembly, Inspection, and Reassembly

1. Inspect the thrust needle bearing and the needle bearing for galling and rough movement.

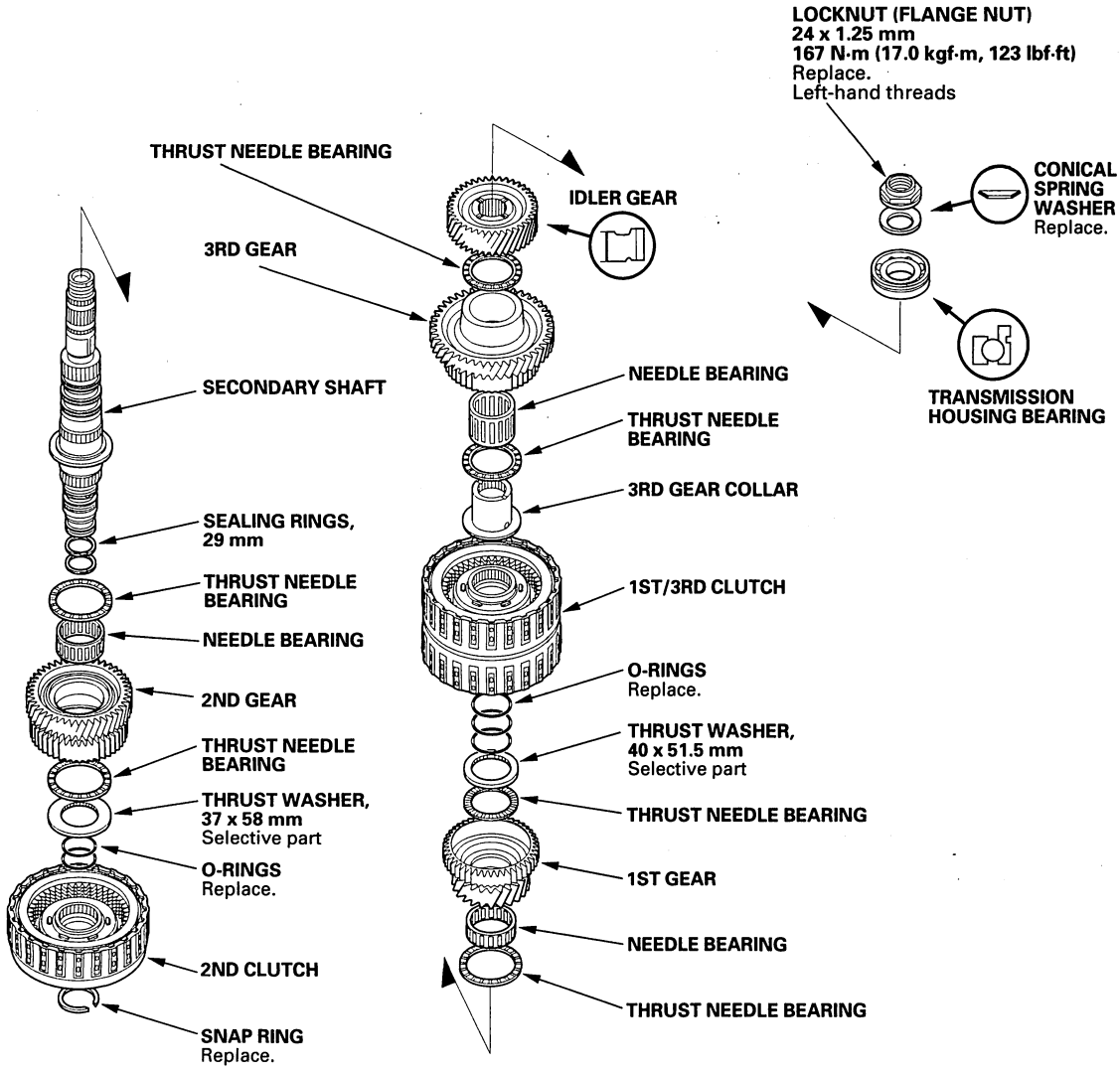

2. Inspect the splines for excessive wear and damage.
3. Check shaft bearing surface for scoring and excessive wear.
4. Before installing the O-rings, wrap the shaft splines with tape to prevent O-ring damage.
5. Lubricate all parts with ATF during assembly.
6. Install the conical spring washer, idler gear in the direction shown.
7. Replace the locknut and conical spring washer with new ones when assembling the transmission. The locknut has left-hand threads.
8. Check the clearance of the 2nd gear (see page 14-296) and 1st gear (see page 14-298).

BACK

Protected by AR

Secondary Shaft Ball Bearing, Idler Gear Removal and Installation

Special Tools Required
Attachment, 42 mm I.D. 07QAD-P0A0100

Removal

Place a shaft protector (A) on the secondary shaft (B), and set the puller (C) under the idler gear (D), then remove the idler gear and ball bearing (E).

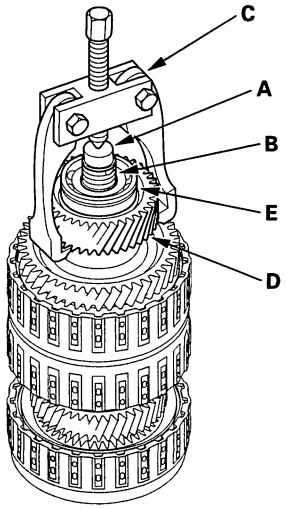

Installation

Install the idler gear (A) on the secondary shaft (B), and install the ball bearing (C) over the idler gear with the special tool and a press.

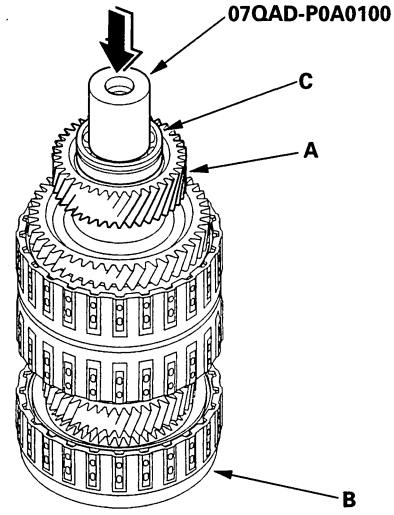

Protected by AR

Secondary Shaft 2nd Gear Clearance Inspection

1. Install the thrust needle bearing (A), needle bearing (B), 2nd gear (C), thrust needle bearing (D), 37 x 58 mm thrust washer (E), and 2nd clutch (F) on the secondary shaft (G), then secure them with the snap ring (H).

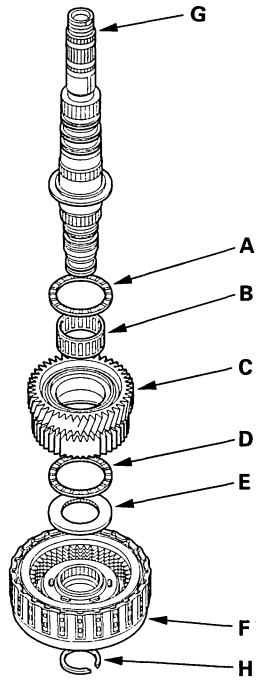

2. Measure the clearance between the snap ring (A) and the 2nd clutch guide (B) with a feeler gauge (C), in at least three places. Use the average as the actual clearance.

Standard: 0.04—0.12 mm (0.002—0.005 in.)

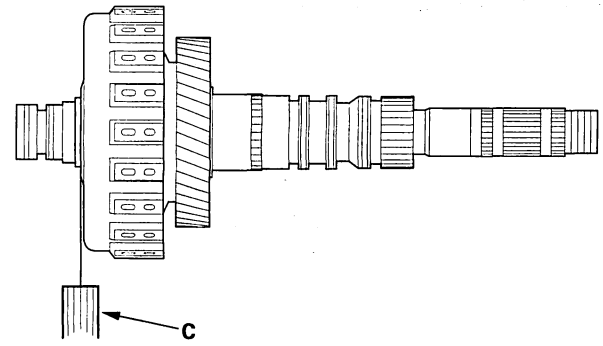

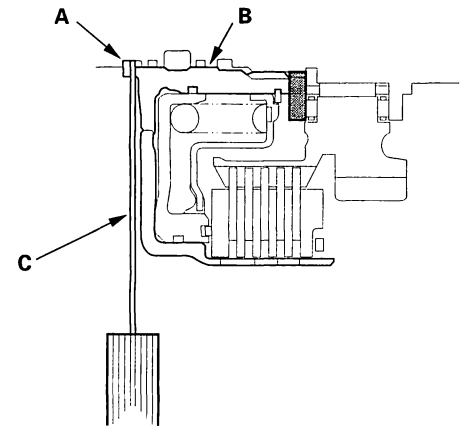

BACK

Protected by AR

3. If the clearance is out of standard, remove the 37 x 58 mm thrust washer and measure its thickness.

4. Select and install a new thrust washer, then recheck.

THRUST WASHER, 37 x 58 mm

No.	Part Number	Thickness
1	90511-PRP-010	3.900 mm (0.154 in.)
2	90512-PRP-010	3.925 mm (0.155 in.)
3	90513-PRP-010	3.950 mm (0.156 in.)
4	90514-PRP-010	3.975 mm (0.156 in.)
5	90515-PRP-010	4.000 mm (0.157 in.)
6	90516-PRP-010	4.025 mm (0.158 in.)
7	90517-PRP-010	4.050 mm (0.159 in.)
8	90518-PRP-010	4.075 mm (0.160 in.)
9	90519-PRP-010	4.100 mm (0.161 in.)
10	90520-PRP-010	4.125 mm (0.162 in.)
11	90521-PRP-010	4.150 mm (0.163 in.)
12	90522-PRP-010	4.175 mm (0.164 in.)
13	90523-PRP-000	4.200 mm (0.165 in.)
14	90524-PRP-000	4.225 mm (0.166 in.)
15	90525-PRP-000	4.250 mm (0.167 in.)
16	90526-PRP-000	4.275 mm (0.168 in.)
17	90527-PRP-000	4.300 mm (0.169 in.)
18	90528-PRP-000	4.325 mm (0.170 in.)
19	90529-PRP-000	4.350 mm (0.171 in.)
20	90530-PRP-000	4.375 mm (0.172 in.)

5. After replacing the thrust washer, make sure the clearance is within standard.

6. Disassemble the shaft and gears.

Protected by AR

Secondary Shaft 1st Gear Clearance Inspection

Special Tools Required
Attachment, 42 mm I.D. 07QAD-P0A0100

1. Install the thrust needle bearing (A), needle bearing (B), 1st gear (C), thrust needle bearing (D), 40 x 51.5 mm thrust washer (E), 1st/3rd clutch (F), and 3rd gear collar (G) on the secondary shaft (H).

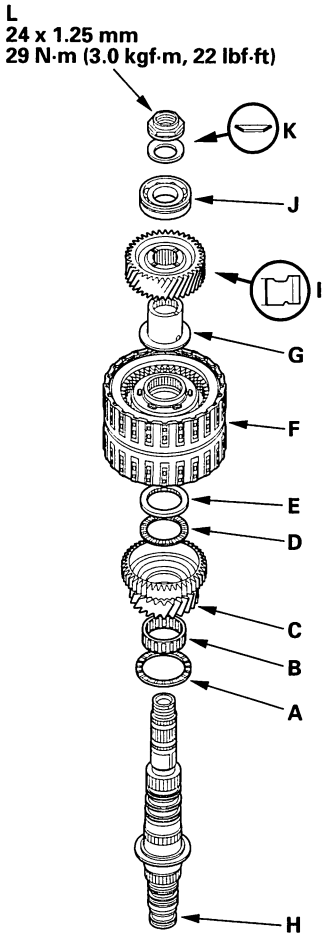

2. Install the idler gear (I), then install the ball bearing (J) on the idler gear with the special tool and a press.

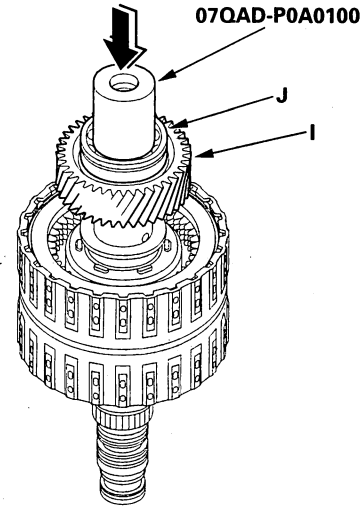

3. Install the conical spring washer (K) and locknut (L), then tighten the locknut to 29 N·m (3.0 kgf·m, 22 lbf·ft).

4. Turn the secondary shaft assembly upside down, and set the dial indicator (A) on the 1st gear (B).

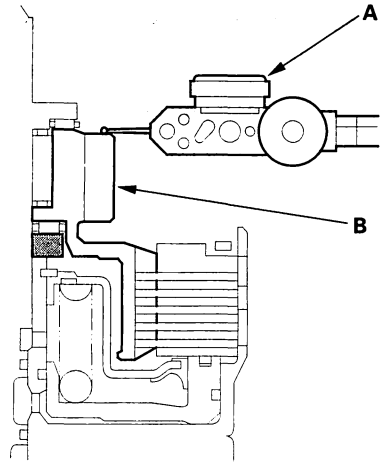

BACK

Protected by AR

5. Hold the secondary shaft, and measure the 1st gear axial clearance in at least three places while moving the 1st gear (A). Use the average as the actual clearance.

   Standard: 0.04—0.12 mm (0.002—0.005 in.)

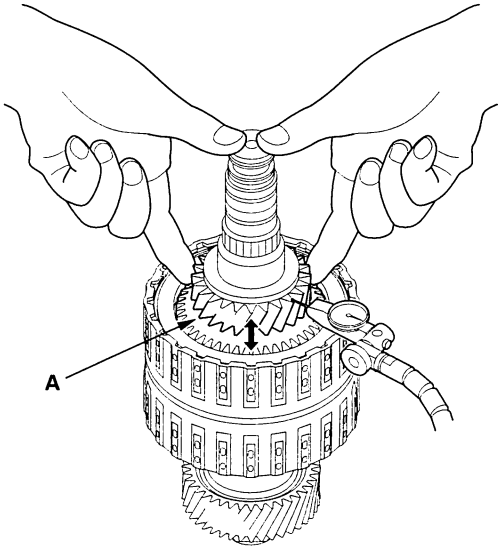

6. If the clearance is out of standard, remove the 40 x 51.5 mm thrust washer and measure its thickness.

7. Select and install a new thrust washer, then recheck.

   THRUST WASHER, 40 x 51.5 mm

No.	Part Number	Thickness
1	90503-PRP-000	4.80 mm (0.189 in.)
2	90504-PRP-000	4.85 mm (0.191 in.)
3	90505-PRP-000	4.90 mm (0.193 in.)
4	90506-PRP-000	4.95 mm (0.195 in.)
5	90507-PRP-000	5.00 mm (0.197 in.)
6	90508-PRP-000	5.05 mm (0.199 in.)

8. After replacing the thrust washer, make sure the clearance is within standard.

9. Disassemble the shaft and gears.

Protected by AR

Idler Gear Shaft Removal and Installation

1. Remove the snap ring (A), cotter retainer (B), and cotter keys (C). Do not distort the snap ring.

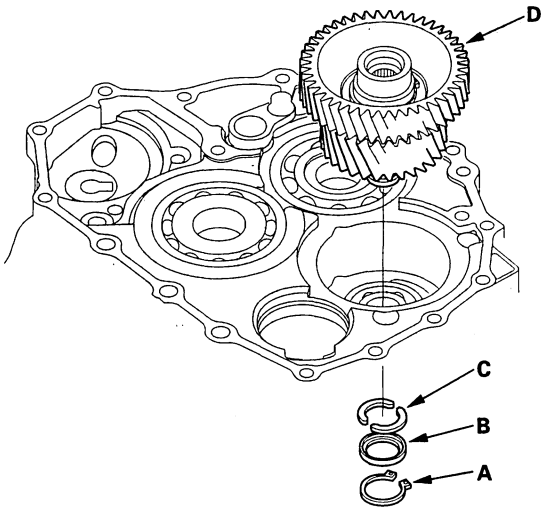

2. Remove the idler gear shaft/idler gear assembly (D) from the transmission housing.
3. Check the snap rings and cotter retainer for wear and damage. Replace them if they are worn, distorted, or damaged.
4. Install the idler gear and shaft in the reverse order of removal.

BACK

Protected by AR

Idler Gear/Idler Gear Shaft Replacement

Special Tools Required
- Driver 07749-0010000
- Attachment, 32 x 35 mm 07746-0010100

1. Remove the snap ring from the idler gear/idler shaft assembly.

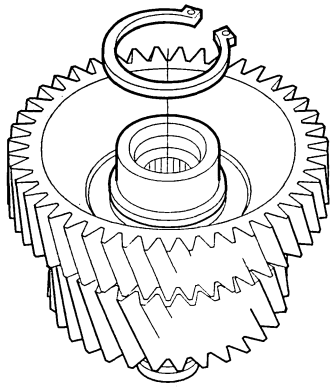

2. Remove the idler gear shaft (A) from the idler gear (B) with the special tools and a press.

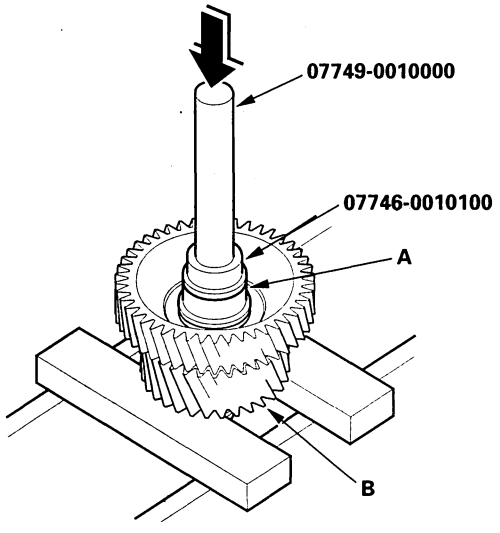

3. Replace the idler gear or idler gear shaft, and attach the idler gear shaft to the idler gear.

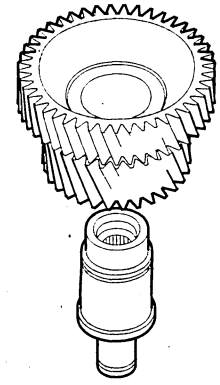

4. Install the idler gear shaft (A) in the idler gear (B) with the special tools and a press.

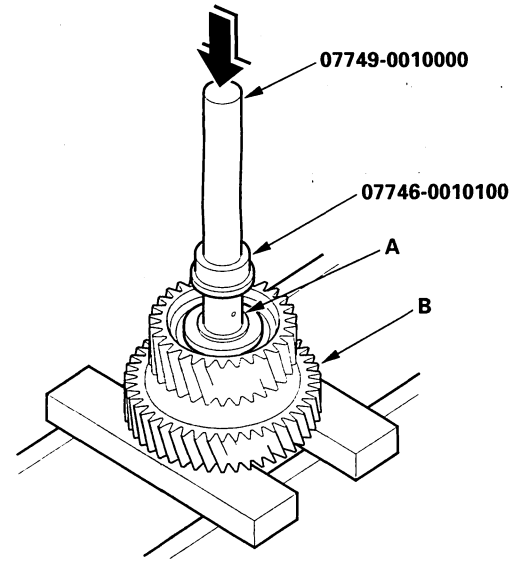

5. Install the snap ring.

BACK

Protected by AR

Clutch Disassembly

Special Tools Required
- Clutch spring compressor attachment 07LAE-PX40100 or 07HAE-PL50101
- Clutch spring compressor bolt assembly 07GAE-PG40200 or 07GAE-PG4020A

1. Remove the snap ring with a screwdriver.

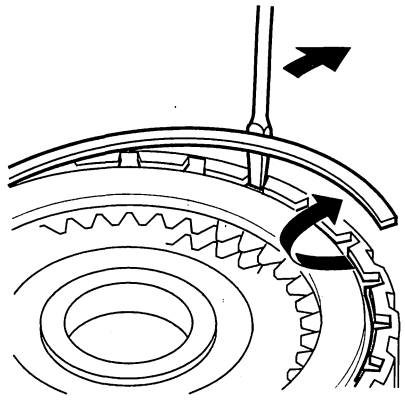

2. 2003-2005-model 1st clutch:
   Remove the clutch end plate (A), clutch discs (B) (5), clutch waved-plates (C) (5), and waved spring (D) from the 1st clutch drum (E).

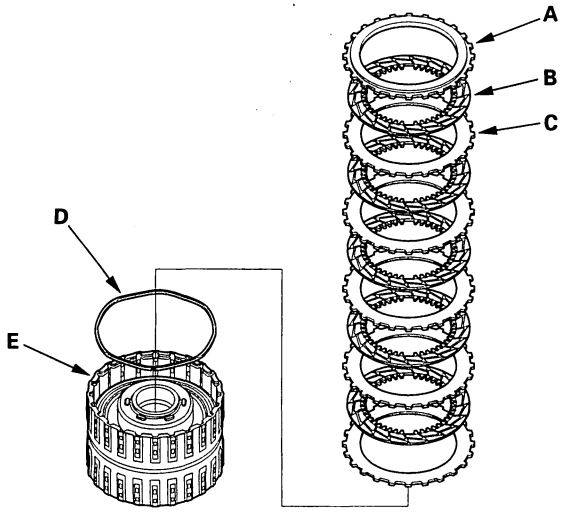

3. 2003-2005-model 2nd clutch:
   Remove the clutch end plate (A), clutch discs (B) (5), clutch waved-plates (C) (3), 2.0 mm-thick flat plate (D), 4.0 mm-thick plate (E), and waved spring (F) from the 2nd clutch drum (G).

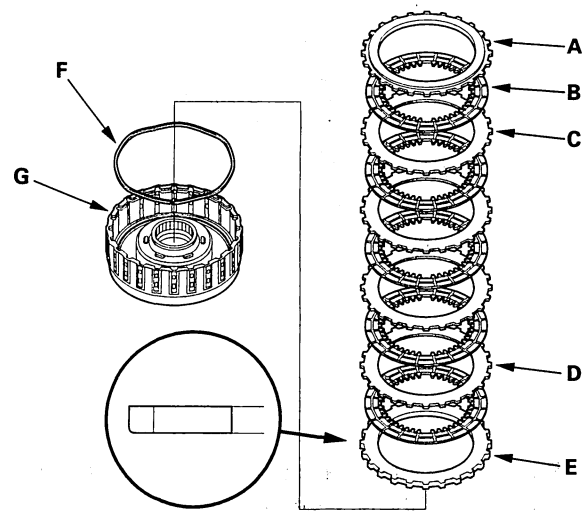

4. Make a reference mark on 2.0 mm-thick flat-plate (D).

5. 2003-2005-model 3rd clutch:
   Remove the clutch end plate (A), clutch discs (B) (5), clutch waved-plates (C) (3), clutch flat-plates (D) (2), and waved spring (E) from the 3rd clutch drum (F).

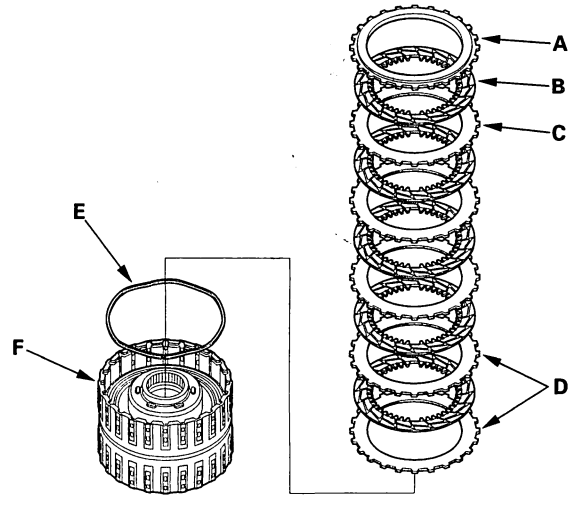

6. Make reference marks on the clutch flat-plates (D).

BACK

Protected by AR

7. 2003-2004-model 4th clutch:
Remove the clutch end plate (A), clutch discs (B) (3), clutch waved-plates (C) (3), and waved spring (D) from the 4th clutch drum (E).

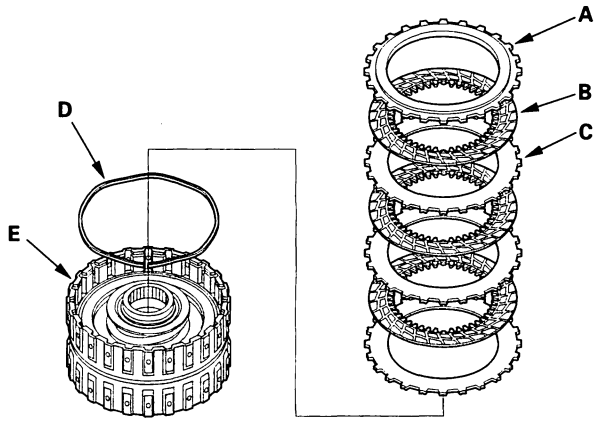

8. 2003-2004-model 5th clutch:
Remove the clutch end plate (A), clutch discs (B) (3), clutch waved-plates (C) (3), and waved spring (D) from the 5th clutch drum (E).

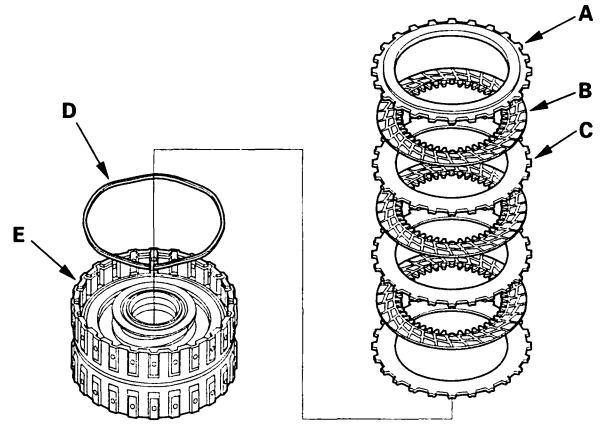

9. 2005-model 4th clutch:
Remove the clutch end plate (A), clutch discs (B) (4), clutch waved-plates (C) (4), and waved spring (D) from the 4th clutch drum (E).

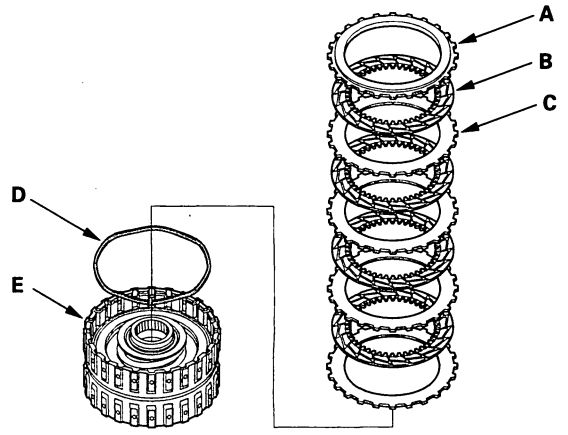

10. 2005-model 5th clutch:
Remove the clutch end plate (A), clutch discs (B) (4), clutch waved-plates (C) (4), and waved spring (D) from the 5th clutch drum (E).

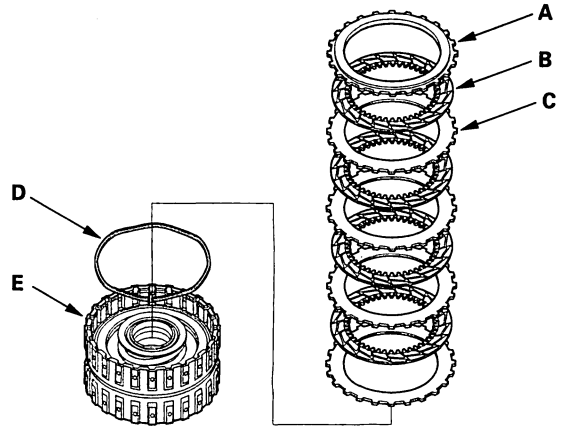

(cont'd)

Protected by AR

Clutch Disassembly (cont'd)

11. 2006-model 1st clutch:
    Remove the clutch end plate (A), clutch discs (B) (5), clutch waved-plates (C) (4), clutch flat-plate (D) (1), and waved spring (E) from the 1st clutch drum (F).

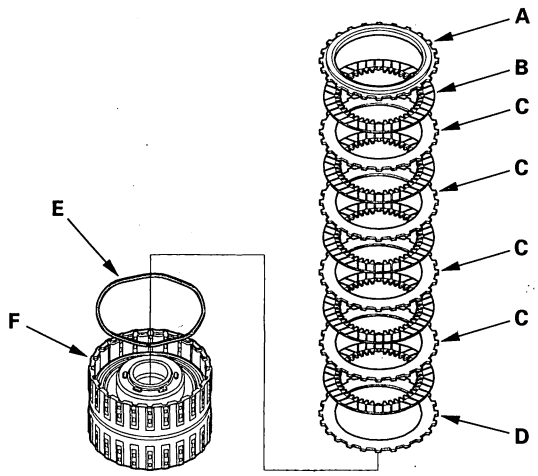

12. Make reference marks on the clutch waved-plates.

13. 2006-model 2nd clutch:
    Remove the clutch end plate (A), clutch discs (B) (6), clutch waved-plates (C) (5), clutch flat-plate (D) (1), and waved spring (E) from the 2nd clutch drum (F).

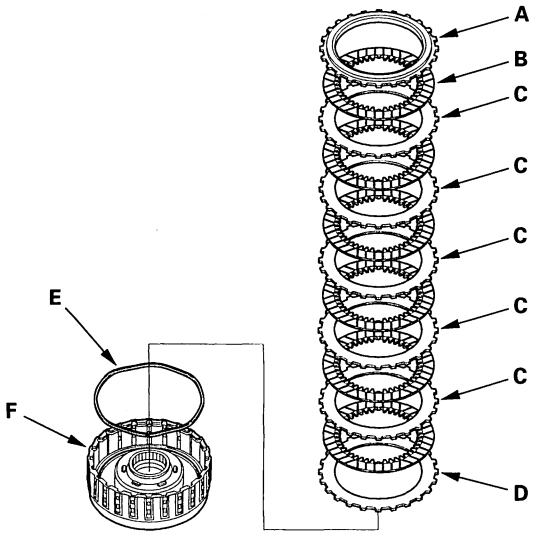

14. Make reference marks on the clutch waved-plates.

15. 2006-model 3rd clutch:
    Remove the clutch end plate (A), clutch discs (B) (6), clutch waved-plates (C) (5), clutch flat-plate (D) (1), and waved spring (E) from the 3rd clutch drum (F).

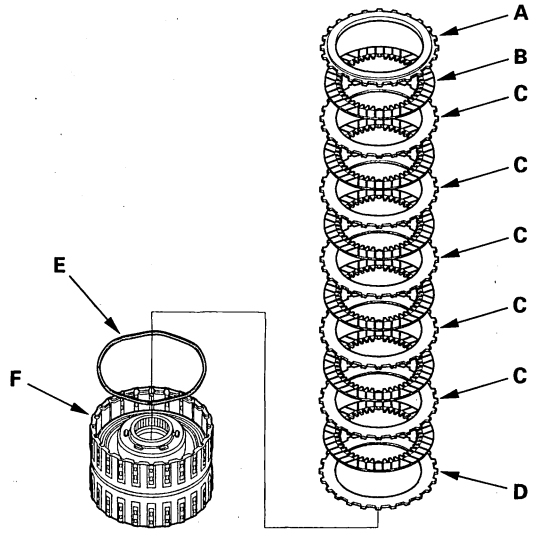

16. Make reference marks on the clutch waved-plates.

BACK

Protected by AR

17. 2006-model 4th clutch:
Remove the clutch end plate (A), clutch discs (B) (4), clutch waved-plates (C) (4), and waved spring (D) from the 4th clutch drum (E).

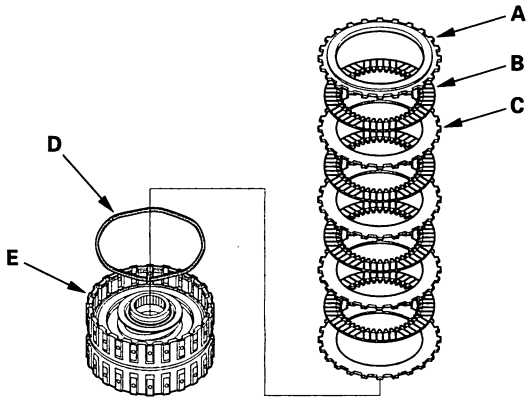

18. 2006-model 5th clutch:
Remove the clutch end plate (A), clutch discs (B) (4), clutch waved-plates (C) (4), and waved spring (D) from the 5th clutch drum (E).

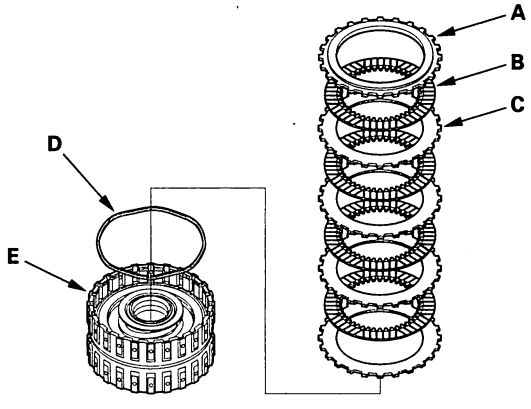

19. Install the special tools.

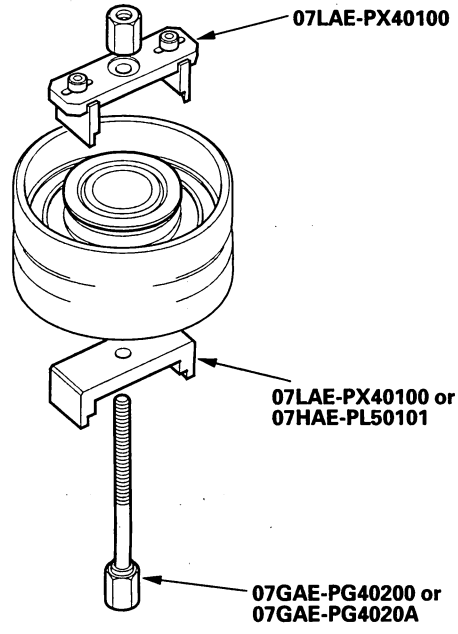

20. Set the special tool (A) on the spring retainer (B) of the 1st, 2nd, and 3rd clutches so the special tool works on the clutch return spring (C).

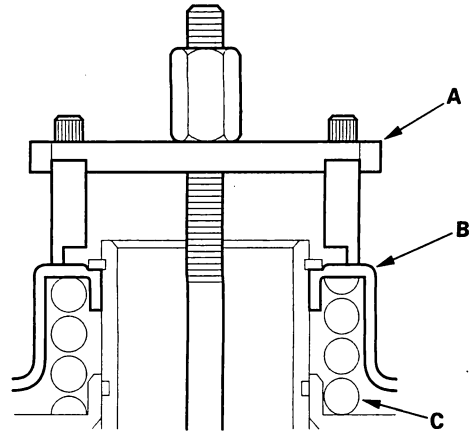

(cont'd)

Protected by AR

Clutch Disassembly (cont'd)

21. Be sure the special tool (A) is adjusted to have full contact with the spring retainer (B) on the 4th and 5th clutches.

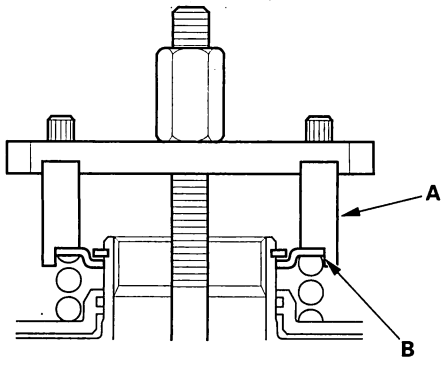

22. If either end of the special tool is set over an area of the spring retainer that is unsupported by the return spring, the retainer may be damaged.

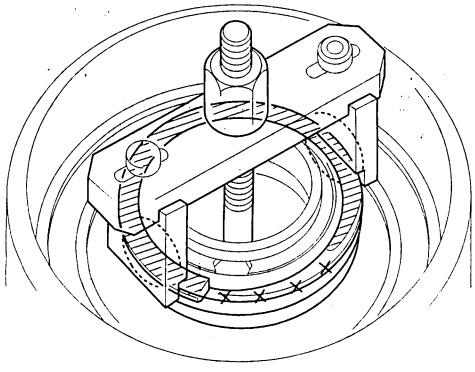

23. Compress the return spring until the snap ring can be removed.

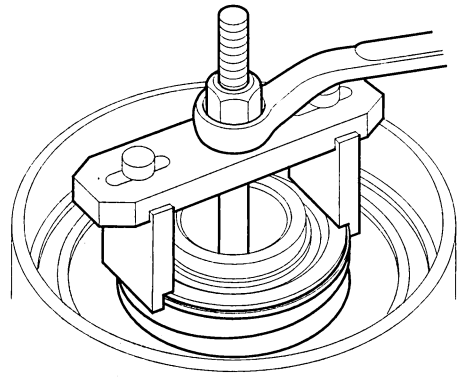

24. Remove the snap ring with the snap ring pliers.

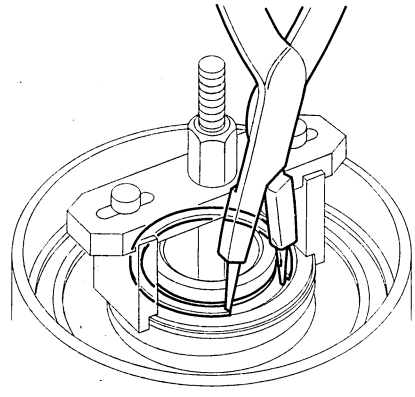

25. Remove the special tools.

BACK

Protected by AR

26. Remove the snap ring (A), spring retainer (B), and return spring (C).

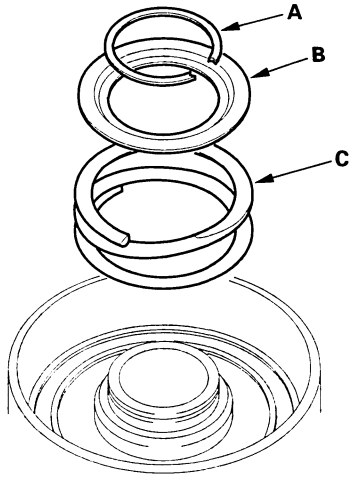

27. Wrap a shop rag around the clutch drum (A), and apply air pressure to the fluid passage to remove the piston (B). Place a finger tip on the other passage while applying air pressure.

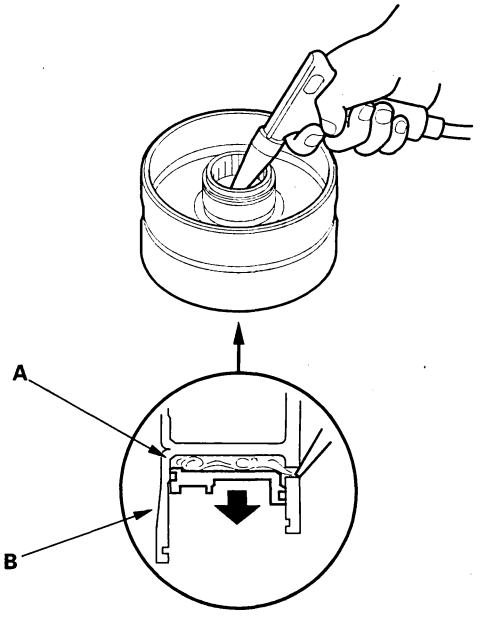

28. 1st, 2nd, and 3rd clutches:
Remove the clutch piston (A), remove the O-ring (B) from the piston, and remove the O-ring (C) from the clutch drum (D).

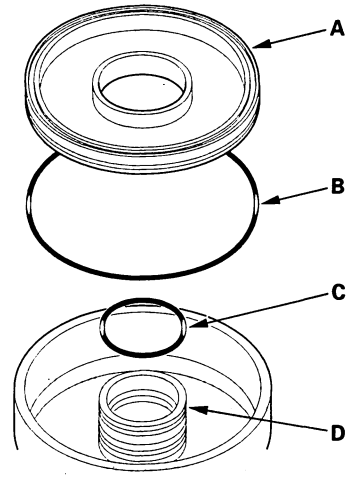

29. 4th and 5th clutches:
Remove the clutch piston (A), and remove the outer O-ring (B) and inner O-ring (C) from the piston.

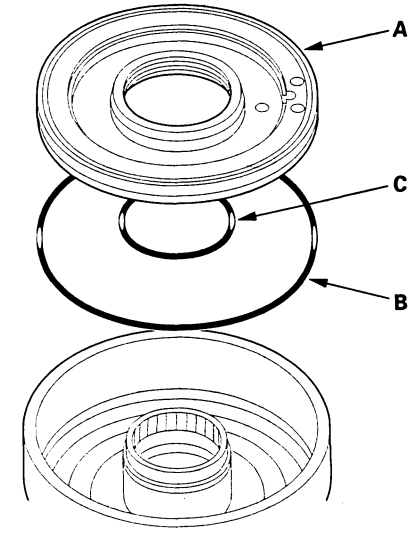

BACK

Protected by AR

Clutch Inspection

1. Inspect the clutch pistons and clutch piston check valves (A).

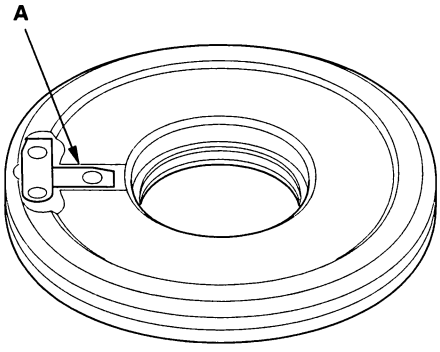

2. If the clutch piston check valve is loose or damaged, replace the clutch piston.
3. Check the spring retainer for wear and damage.
4. If the spring retainer is worn or damaged, replace it.
5. Check the oil seal (A) on the spring retainer of the 1st, 2nd, and 3rd clutches for wear, damaged, and peeling.

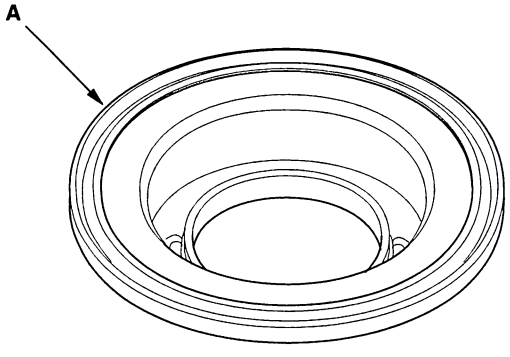

6. If the oil seal is worn, damaged, or peeling, replace the spring retainer.
7. Inspect the clutch discs, clutch plates, and clutch end plate for wear, damage, and discoloration.

Clutch Discs for All Models
Standard Thickness: 1.94 mm (0.076 in.)

Clutch Plates
Standard Thickness

2003-2004 Models

1st Clutch (waved-plates):		1.6 mm (0.063 in.)
2nd Clutch	Waved-plates:	2.0 mm (0.079 in.)
	Flat-plate:	2.0 mm (0.079 in.)
	4.0 mm-thick plate:	4.0 mm (0.157 in.)
3rd Clutch	Waved-plates:	1.6 mm (0.063 in.)
	Flat-plates:	1.6 mm (0.063 in.)
4th Clutch (waved-plates):		2.3 mm (0.091 in.)
5th Clutch (waved-plates):		2.3 mm (0.091 in.)

2005 Model

1st Clutch (waved-plates):		1.6 mm (0.063 in.)
2nd Clutch	Waved-plates:	2.0 mm (0.079 in.)
	Flat-plate:	2.0 mm (0.079 in.)
	4.0 mm-thick plate:	4.0 mm (0.157 in.)
3rd Clutch	Waved-plates:	1.6 mm (0.063 in.)
	Flat-plates:	1.6 mm (0.063 in.)
4th Clutch (waved-plates):		2.0 mm (0.079 in.)
5th Clutch (waved-plates):		2.0 mm (0.079 in.)

2006 Model

1st Clutch	Waved-plates:	1.6 mm (0.063 in.)
	Flat-plates:	1.6 mm (0.063 in.)
2nd Clutch	Waved-plates:	2.0 mm (0.079 in.)
	Flat-plate:	2.0 mm (0.079 in.)
3rd Clutch	Waved-plates:	1.6 mm (0.063 in.)
	Flat-plates:	1.6 mm (0.063 in.)
4th Clutch (waved-plates):		2.0 mm (0.079 in.)
5th Clutch (waved-plates):		2.0 mm (0.079 in.)

8. If the clutch discs are worn or damaged, replace them as a set. If the clutch discs are replaced, inspect the clutch end-plate-to-top-disc clearance.
9. If any plate is worn, damaged, or discolored, replace the damaged plate with a new plate, and inspect the other waved-plates for a phase difference. If the clutch plate is replaced, inspect the clutch end-plate-to-top-disc clearance.
10. If the clutch end plate is worn, damaged, or discolored, inspect the clutch end-plate-to-top-disc clearance, then replace the clutch end plate.

BACK

Protected by AR

Clutch Waved-plate Phase Difference Inspection

1. Place the clutch waved-plate (A) on a surface plate, and set a dial indicator (B) on the waved-plate.

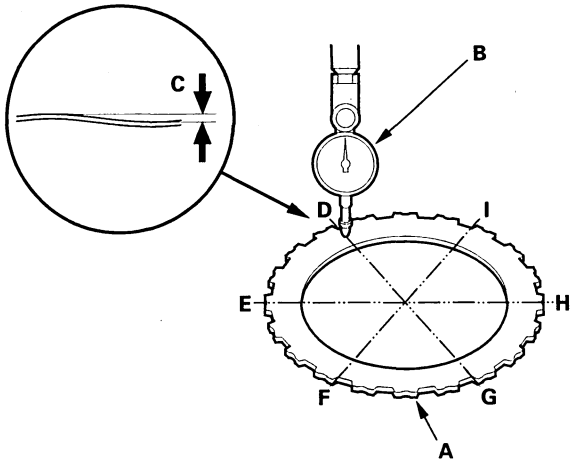

2. Find the bottom (D) of a phase difference of the waved-plate, zero the dial indicator and make a reference mark on the bottom of the waved-plate.

3. Rotate the waved-plate about 60-degrees apart from the bottom while holding the waved-plate by its circumference. The dial indicator should be at the top (E) of a phase difference. Do not rotate the waved-plate while holding its surface, always rotate it with holding its circumference.

4. Read the dial indicator. The dial indicator reads the phase difference (C) of the waved-plate between bottom and top.

   Standard Phase Difference
   1st clutch: 0.15—0.25 mm (0.006—0.010 in.)
   2nd clutch: 0.1—0.2 mm (0.004—0.008 in.)
   3rd clutch: 0.1—0.2 mm (0.004—0.008 in.)
   4th clutch: 0.1—0.2 mm (0.004—0.008 in.)
   5th clutch: 0.1—0.2 mm (0.004—0.008 in.)

5. Rotate the waved-plate about 60-degrees. The dial indicator should be at the bottom of a phase difference (F and H), and zero the dial indicator.

6. Measure the phase difference at the other two tops (G and I) of the waved-plate by following steps 3 thru 5.

7. If the two values of the three measurements are within the standard, the waved-plate is OK. If the two values of the three measurements are out of the standard, replace the waved-plate.

Protected by AR

Clutch Clearance Inspection

Special Tools Required
Clutch compressor attachment 07ZAE-PRP0100

1. Inspect the clutch piston, discs, plates, and end plate for wear and damage (see page 14-308), and inspect clutch waved-plate phase difference (see page 14-309), if necessary.

2. Install the clutch piston in the clutch drum. Do not install the O-rings during inspection.

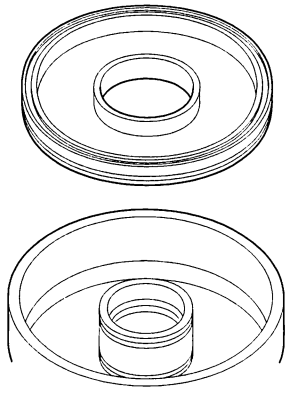

3. 2003-2005-model 1st clutch:
Install the waved spring (A) in the 1st clutch drum (B). Starting with the clutch waved-plate, alternately install the clutch plate (C) (5) and discs (D) (5). Install the clutch-end-plate (E) with the flat side down on the top disc.

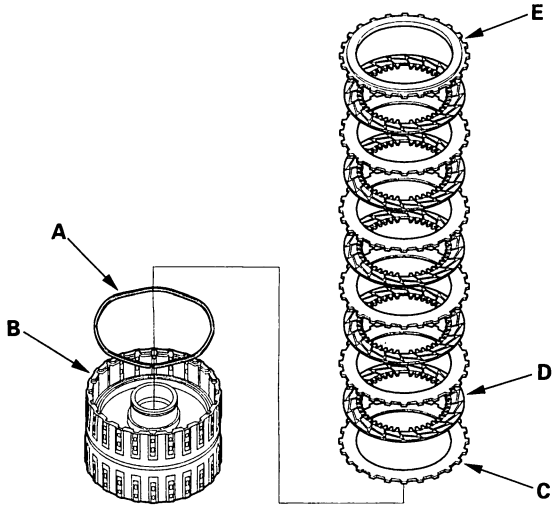

4. 2003-2005-model 2nd clutch:
Install the waved spring (A) in the 2nd clutch drum (B). Install the 4.0 mm-thick plate (C) with the shear droop side (D) toward the inside of the drum, clutch disc (E), and 2.0 mm-thick flat-plate (F), then starting with the disc, alternately install the discs (G) (4) and waved-plates (H) (3). Install the clutch-end-plate (I) with the flat side down on the top disc.

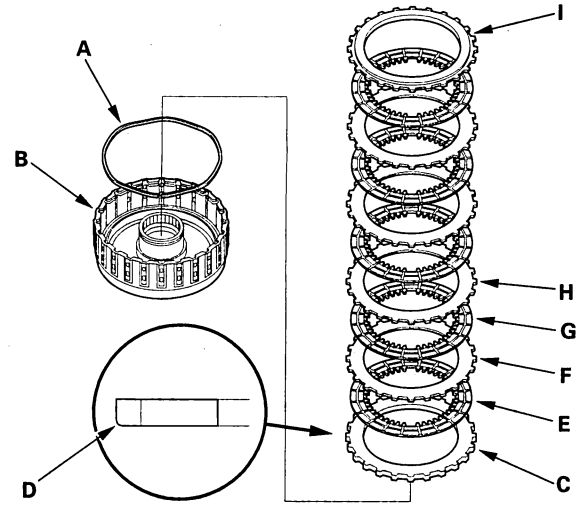

5. 2003-2005-model 3rd clutch:
Install the waved spring (A) in the 3rd clutch drum (B). Install the clutch flat-plate (C), clutch disc (D), and clutch flat-plate (E). Starting with the clutch disc, alternately install the clutch discs (F) (4) and clutch waved-plates (G) (3). Install the clutch-end-plate (H) with the flat side down on the top disc.

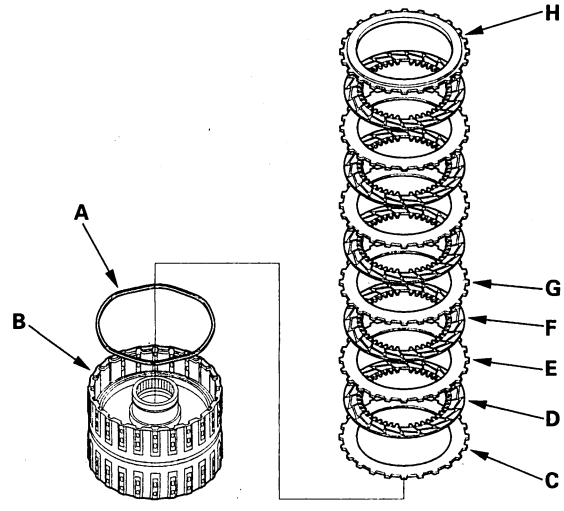

BACK

Protected by AR

6. 2003-2004-model 4th clutch:
   Install the waved spring (A) in the 4th clutch drum (B). Starting with the clutch waved-plate, alternately install the clutch plate (C) (3) and discs (D) (3). Install the clutch end plate (E) with the flat side down on the top disc.

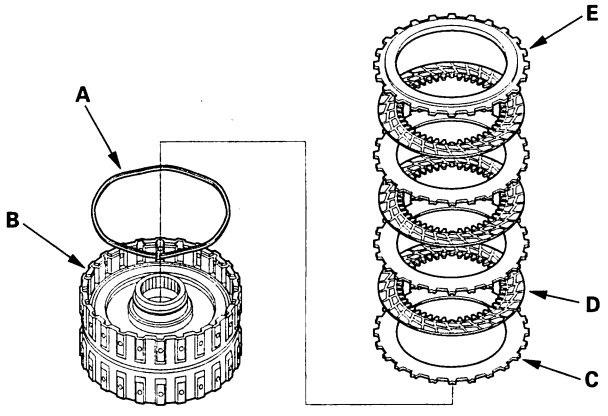

7. 2003-2004-model 5th clutch:
   Install the waved spring (A) in the 5th clutch drum (B). Starting with the clutch waved-plate, alternately install the clutch plate (C) (3) and discs (D) (3). Install the clutch end plate (E) with the flat side down on the top disc.

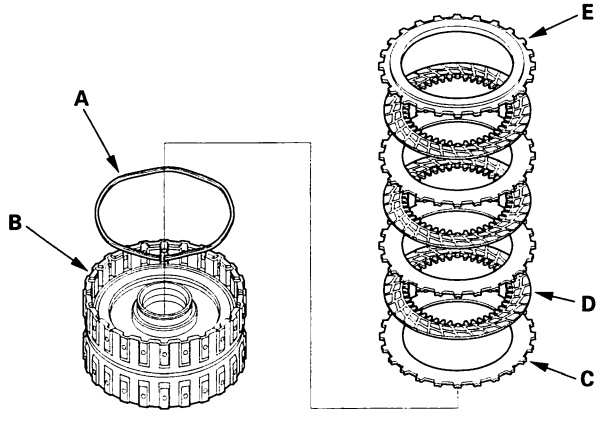

8. 2005-model 4th clutch:
   Install the waved spring (A) in the 4th clutch drum (B). Starting with the clutch waved-plate, alternately install the clutch plate (C) (4) and discs (D) (4). Install the clutch end plate (E) with the flat side down on the top disc.

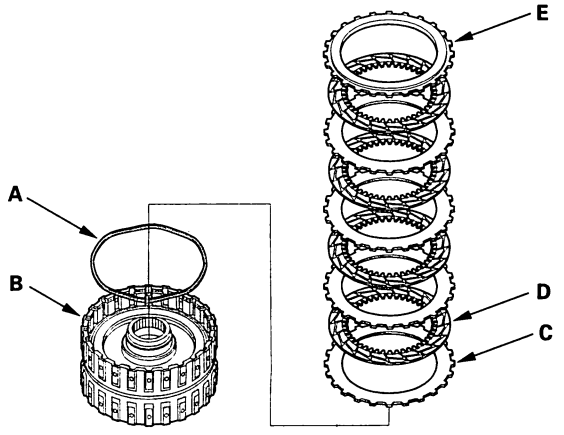

9. 2005-model 5th clutch:
   Install the waved spring (A) in the 5th clutch drum (B). Starting with the clutch waved-plate, alternately install the clutch plate (C) (4) and discs (D) (4). Install the clutch end plate (E) with the flat side down on the top disc.

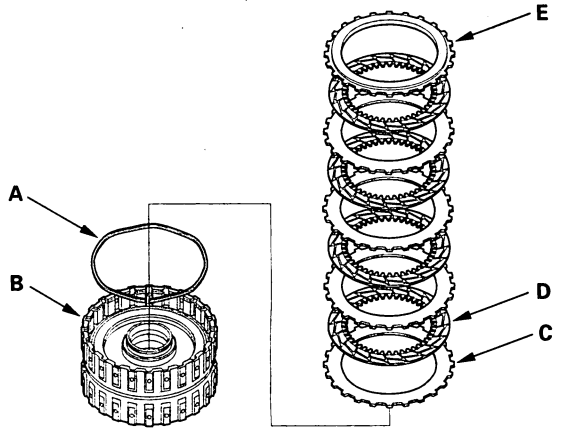

(cont'd)

Protected by AR

Clutch Clearance Inspection (cont'd)

10. 2006-model 1st clutch:
    Install the waved spring (A) in the 1st clutch drum (B). Install the clutch flat-plate (C), then starting with the clutch disc, alternately install the discs (D) (5) and waved-plates (E) (4). Install the clutch-end-plate (F) with the flat side down on the top disc.

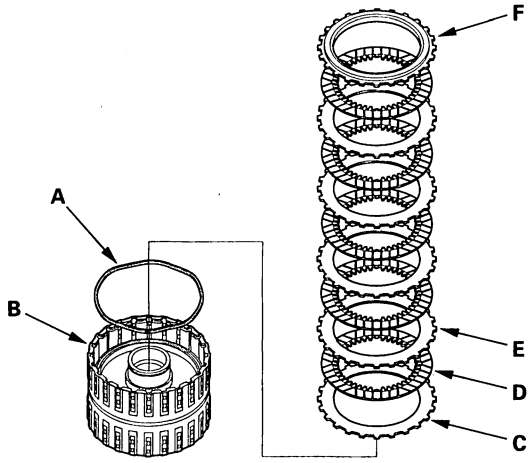

11. 2006-model 2nd clutch:
    Install the waved spring (A) in the 2nd clutch drum (B). Install the clutch flat-plate (C), then starting with the clutch disc, alternately install the discs (D) (6) and clutch waved-plates (E) (5). Install the clutch-end-plate (F) with the flat side down on the top disc.

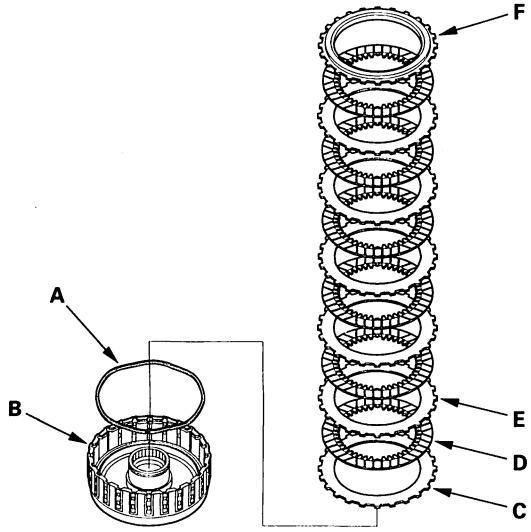

12. 2006-model 3rd clutch:
    Install the waved spring (A) in the 3rd clutch drum (B). Install the clutch flat-plate (C), then starting with the clutch disc, alternately install the discs (D) (6) and waved-plates (E) (5). Install the clutch-end-plate (F) with the flat side down on the top disc.

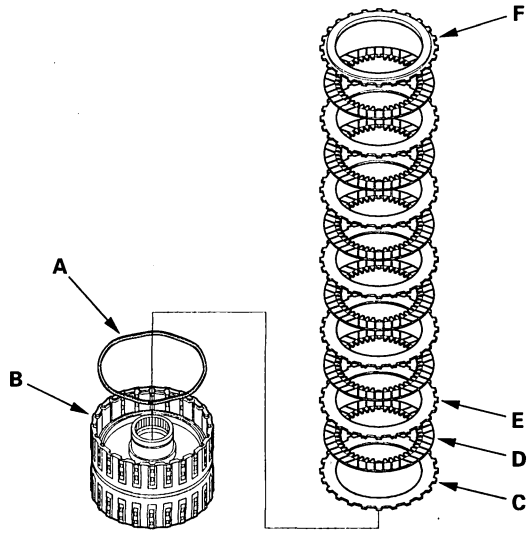

BACK

Protected by AR

13. 2006-model 4th clutch:
Install the waved spring (A) in the 4th clutch drum (B). Starting with the clutch waved-plate, alternately install the waved-plates (C) (4) and discs (D) (4). Install the clutch-end-plate (E) with the flat side down on the top disc.

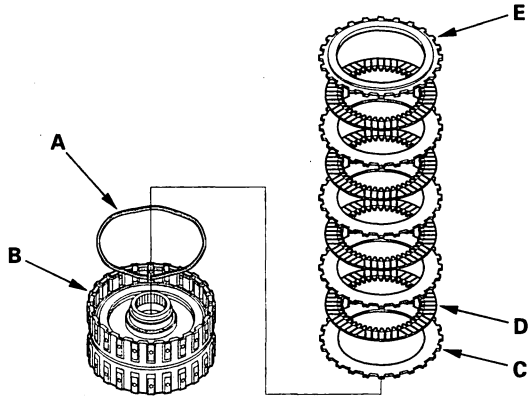

14. 2006-model 5th clutch:
Install the waved spring (A) in the 5th clutch drum (B). Starting with the clutch waved-plate, alternately install the waved-plates (C) (4) and discs (D) (4). Install the clutch-end-plate (E) with the flat side down on the top disc.

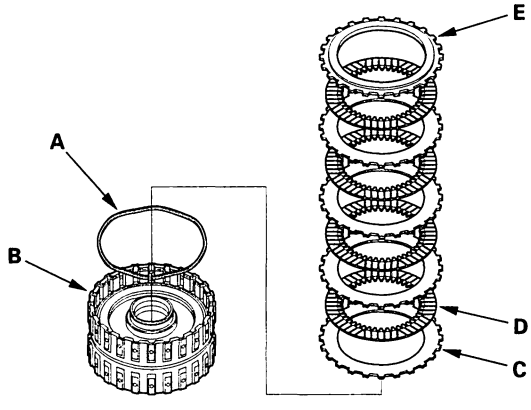

15. Install the snap ring with a screwdriver to secure the clutch-end-plate.

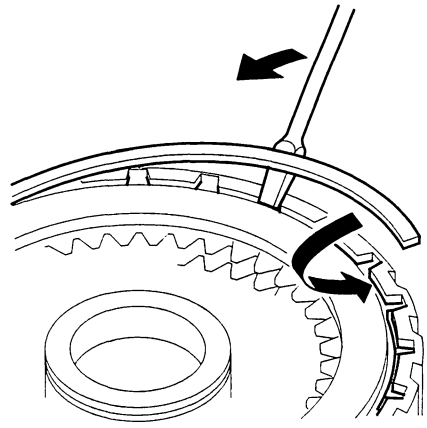

16. Set a dial indicator (A) on the clutch-end-plate (B).

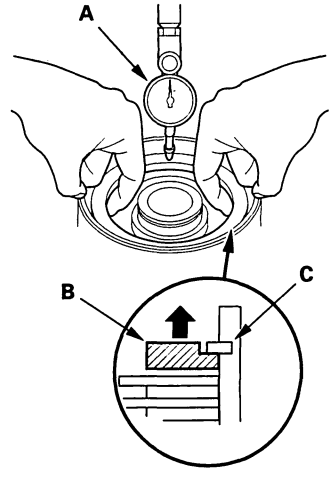

17. Zero the dial indicator with the clutch-end-plate lifted up to the snap ring (C).

(cont'd)

Protected by AR

Clutch Clearance Inspection (cont'd)

18. Release the clutch-end-plate to lower the clutch-end-plate, then put the special tool on the end-plate (A).

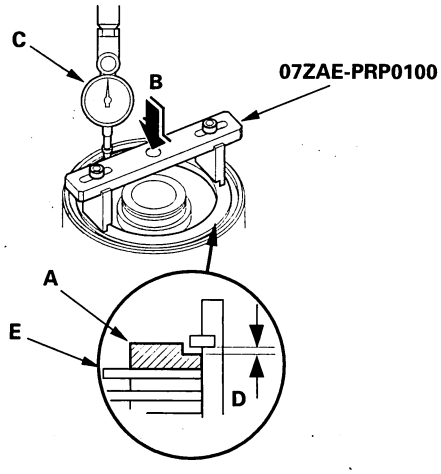

19. Press the special tool down with 150—160 N (15—16 kgf, 33—35 lbf) (B) using a force gauge, and read the dial indicator (C).

20. The dial indicator reads the clearance (D) between the clutch-end-plate and top disc (E). Take measurements in at least three places, and use the average as the actual clearance.

Clutch-End-Plate-to-Top Disc Clearance Service Limit

2003-2004 Models

1st clutch:	**1.28—1.48 mm (0.050—0.058 in.)**
2nd clutch:	**0.88—1.08 mm (0.035—0.043 in.)**
3rd clutch:	**0.93—1.13 mm (0.037—0.044 in.)**
4th clutch:	**0.73—0.93 mm (0.029—0.037 in.)**
5th clutch:	**0.73—0.93 mm (0.029—0.037 in.)**

2005 Model

1st clutch:	**1.28—1.48 mm (0.050—0.058 in.)**
2nd clutch:	**0.88—1.08 mm (0.035—0.043 in.)**
3rd clutch:	**0.93—1.13 mm (0.037—0.044 in.)**
4th clutch:	**0.93—1.13 mm (0.037—0.044 in.)**
5th clutch:	**0.93—1.13 mm (0.037—0.044 in.)**

2006 Model

1st clutch:	**1.38—1.58 mm (0.054—0.062 in.)**
2nd clutch:	**1.18—1.38 mm (0.046—0.054 in.)**
3rd clutch:	**1.23—1.43 mm (0.048—0.056 in.)**
4th clutch:	**0.93—1.13 mm (0.037—0.044 in.)**
5th clutch:	**0.93—1.13 mm (0.037—0.044 in.)**

BACK

Protected by AR

21. If the clearance is out of the service limit, select a new clutch-end-plate from the following table.



1ST, 2ND, and 3RD CLUTCH END PLATES
2003-2005 Models

Plate No.	Part Number	Thickness
1	22551-RCL-003	2.6 mm (0.102 in.)
2	22552-RCL-003	2.7 mm (0.106 in.)
3	22553-RCL-003	2.8 mm (0.110 in.)
4	22554-RCL-003	2.9 mm (0.114 in.)
5	22555-RCL-003	3.0 mm (0.118 in.)
6	22556-RCL-003	3.1 mm (0.122 in.)
7	22557-RCL-003	3.2 mm (0.126 in.)
8	22558-RCL-003	3.3 mm (0.130 in.)
9	22559-RCL-003	3.4 mm (0.134 in.)

1ST and 2ND CLUTCH END PLATES
2006 Model

Plate No.	Part Number	Thickness
1	22571-RCL-A01	2.6 mm (0.102 in.)
2	22572-RCL-A01	2.7 mm (0.106 in.)
3	22573-RCL-A01	2.8 mm (0.110 in.)
4	22574-RCL-A01	2.9 mm (0.114 in.)
5	22575-RCL-A01	3.0 mm (0.118 in.)
6	22576-RCL-A01	3.1 mm (0.122 in.)
7	22577-RCL-A01	3.2 mm (0.126 in.)
8	22578-RCL-A01	3.3 mm (0.130 in.)
9	22579-RCL-A01	3.4 mm (0.134 in.)

3RD CLUTCH END PLATES
2006 Model

Plate No.	Part Number	Thickness
1	22551-RCL-A01	2.1 mm (0.083 in.)
2	22552-RCL-A01	2.2 mm (0.087 in.)
3	22553-RCL-A01	2.3 mm (0.091 in.)
4	22554-RCL-A01	2.4 mm (0.094 in.)
5	22555-RCL-A01	2.5 mm (0.098 in.)
6	22556-RCL-A01	2.6 mm (0.102 in.)
7	22557-RCL-A01	2.7 mm (0.106 in.)
8	22558-RCL-A01	2.8 mm (0.110 in.)
9	22559-RCL-A01	2.9 mm (0.114 in.)

4TH and 5TH CLUTCH END PLATES
All Models

Plate No.	Part Number	Thickness
1	22581-RCL-003	2.1 mm (0.083 in.)
2	22582-RCL-003	2.2 mm (0.087 in.)
3	22583-RCL-003	2.3 mm (0.091 in.)
4	22584-RCL-003	2.4 mm (0.094 in.)
5	22585-RCL-003	2.5 mm (0.098 in.)
6	22586-RCL-003	2.6 mm (0.102 in.)
7	22587-RCL-003	2.7 mm (0.106 in.)
8	22588-RCL-003	2.8 mm (0.110 in.)
9	22589-RCL-003	2.9 mm (0.114 in.)

22. Install the new clutch-end-plate, and recheck the clearance. If the thickest clutch-end-plate is installed, but the clearance is still over the service limit, replace the clutch discs and plates.

Protected by AR

Clutch Reassembly

Special Tools Required
- Clutch spring compressor attachment 07LAE-PX40100 or 07HAE-PL50101
- Clutch spring compressor bolt assembly 07GAE-PG40200 or 07GAE-PG4020A

1. Soak the clutch discs thoroughly in ATF for a minimum of 30 minutes.
2. Install the new O-rings (A) on the 4th and 5th clutch piston (B).

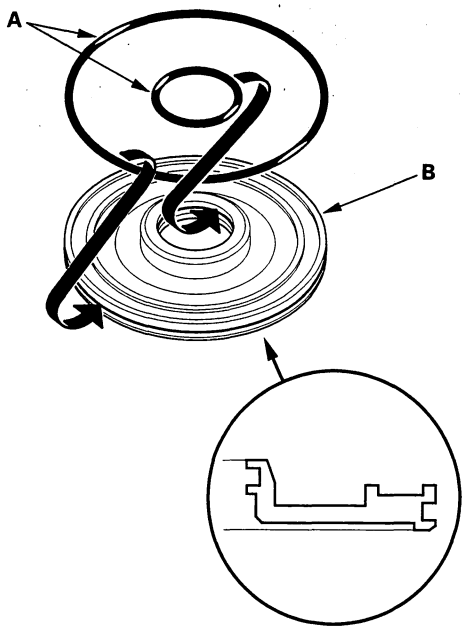

3. Install the new O-ring (A) in the 1st, 2nd, and 3rd clutch pistons (B), and install the new O-ring (C) on the clutch drums (D).

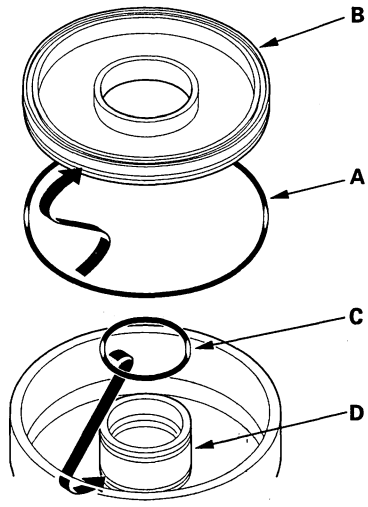

4. Install the clutch piston (A) in the clutch drum (B) while applying pressure and rotating to ensure proper seating. Do not pinch the O-ring.

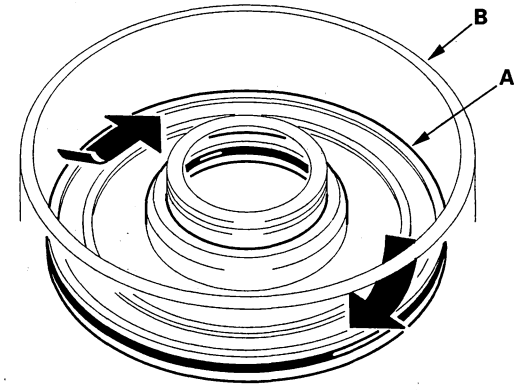

BACK

Protected by AR

5. Install the return spring (A) and spring retainer (B), and position the snap ring (C) on the retainer.

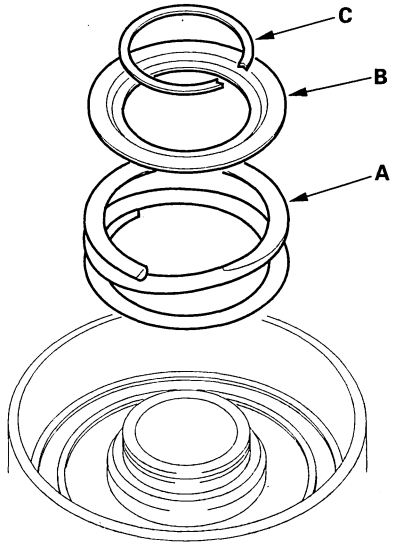

6. Install the special tools.

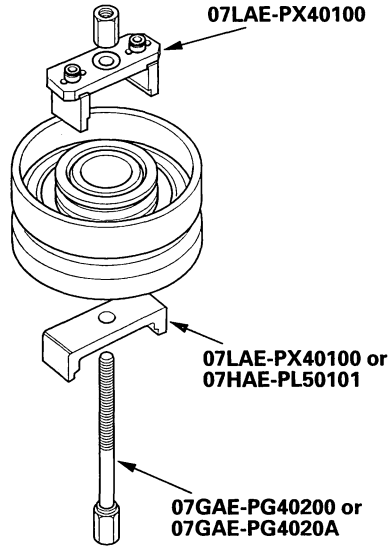

7. Set the special tool (A) on the spring retainer (B) of the 1st, 2nd, and 3rd clutches so the special tool works on the clutch return spring (C).

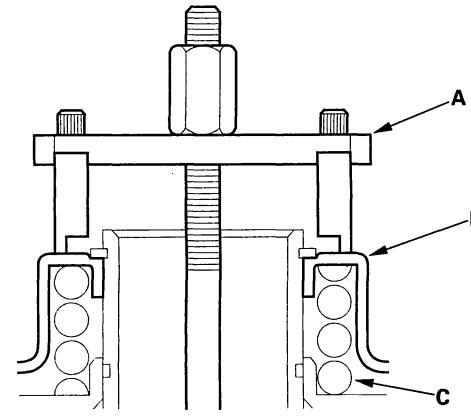

8. Be sure the special tool (A) is adjusted to have full contact with the spring retainer (B) on the 4th and 5th clutches.

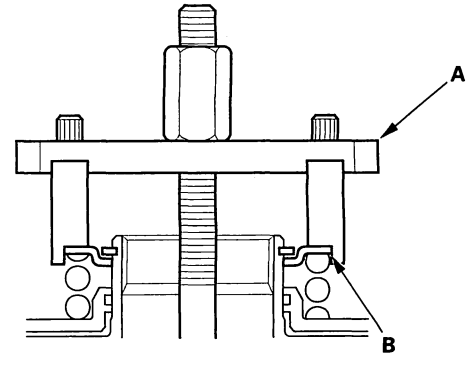

(cont'd)

Protected by AR

Clutch Reassembly (cont'd)

9. If either end of the special tool is set over an area of the spring retainer which is unsupported by the return spring, the retainer may be damaged.

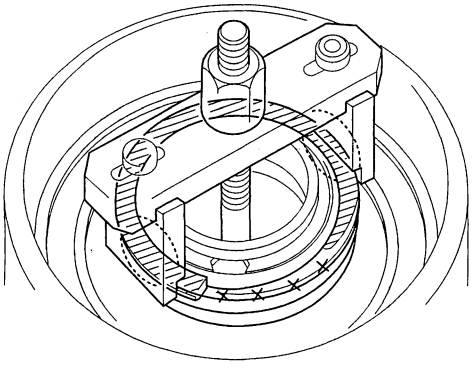

10. Compress the return spring.

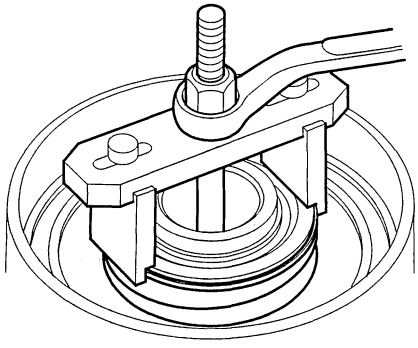

11. Install the snap ring with snap ring pliers.

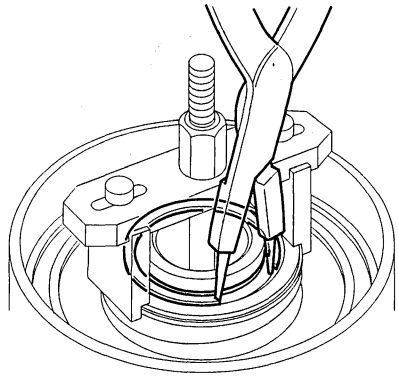

12. Remove the special tools.

13. 2003-2005-model 1st clutch:
Install the waved spring (A) in the 1st clutch drum (B). Starting with the clutch waved-plate, alternately install the clutch plate (C) (5) and discs (D) (5). Install the clutch-end-plate (E) with the flat side down on the top disc.

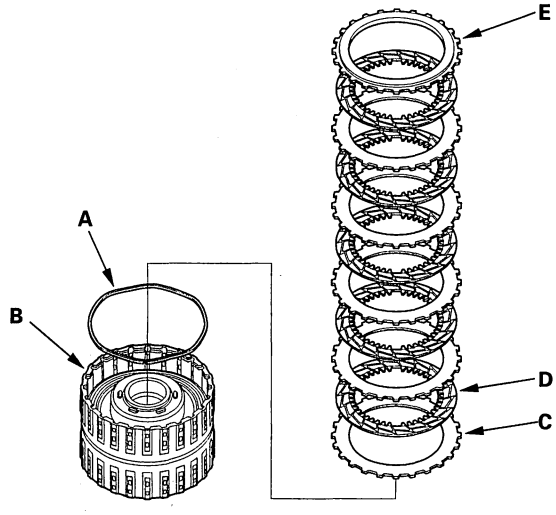

BACK

Protected by AR

14. 2003-2005-model 2nd clutch:
Install the waved spring (A) in the 2nd clutch drum (B). Install the 4.0 mm-thick plate (C) with the shear droop side (D) toward the inside of the drum, clutch disc (E), and 2.0 mm-thick flat-plate (F), then starting with the disc, alternately install the discs (G) (4) and waved-plates (H) (3). Install the clutch-end-plate (I) with the flat side down on the top disc.

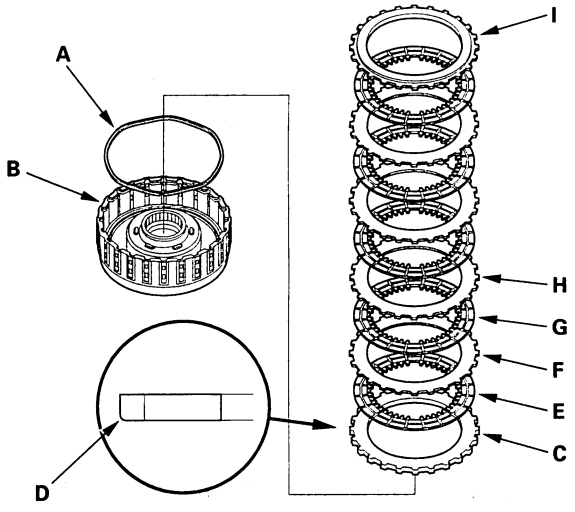

15. 2003-2005-model 3rd clutch:
Install the waved spring (A) in the 3rd clutch drum (B). Install the clutch flat-plate (C), clutch disc (D), and clutch flat-plate (E). Starting with the clutch disc, alternately install the clutch discs (F) (4) and clutch waved-plates (G) (3). Install the clutch-end-plate (H) with the flat side down on the top disc.

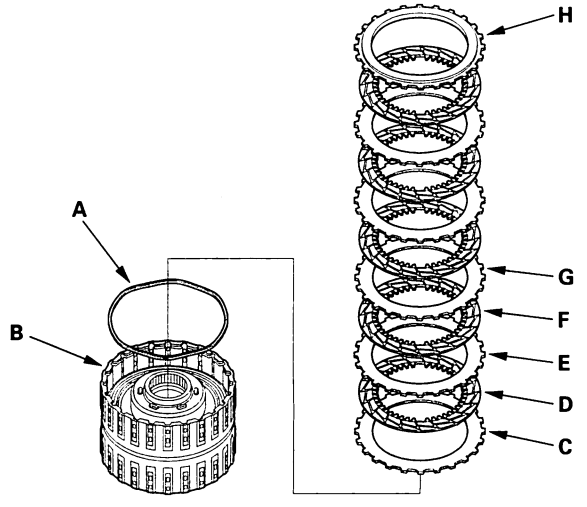

16. 2003-2004-model 4th clutch:
Install the waved spring (A) in the 4th clutch drum (B). Starting with the clutch waved-plate, alternately install the clutch plate (C) (3) and discs (D) (3). Install the clutch end plate (E) with the flat side down on the top disc.

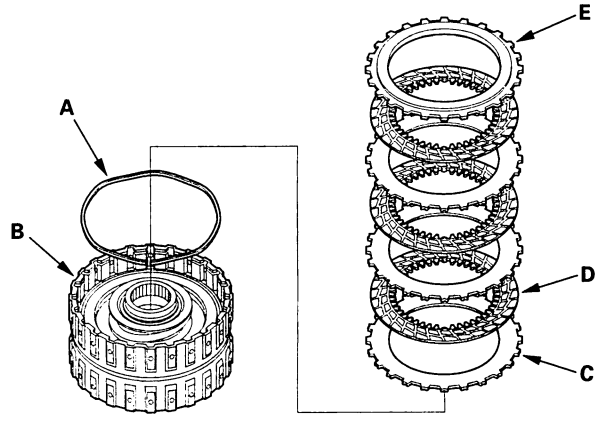

17. 2003-2004-model 5th clutch:
Install the waved spring (A) in the 5th clutch drum (B). Starting with the clutch waved-plate, alternately install the clutch plates (C) (3) and discs (D) (3). Install the clutch end plate (E) with the flat side down on the top disc.

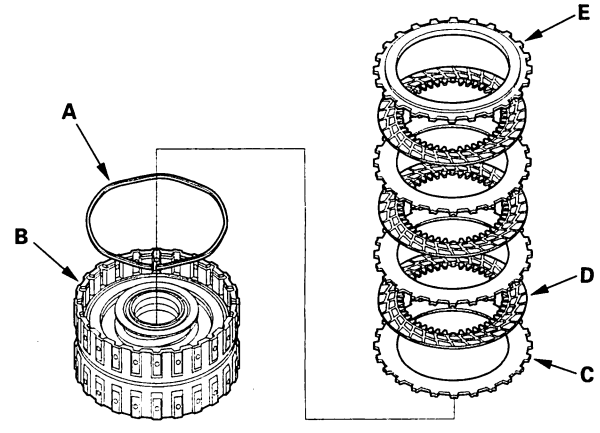

(cont'd)

Protected by AR

Clutch Reassembly (cont'd)

18. 2005-model 4th clutch:
Install the waved spring (A) in the 4th clutch drum (B). Starting with the clutch waved-plate, alternately install the waved-plates (C) (4) and discs (D) (4). Install the clutch-end-plate (E) with the flat side down on the top disc.

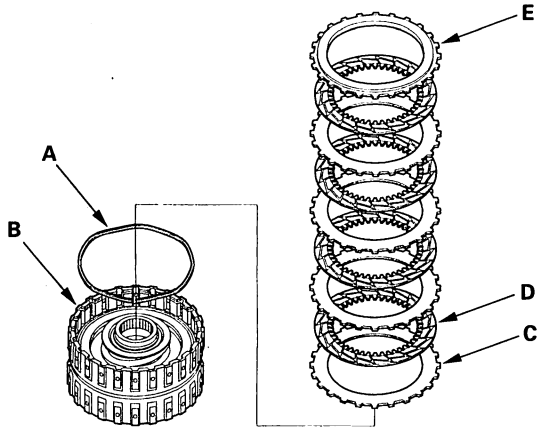

19. 2005-model 5th clutch:
Install the waved spring (A) in the 5th clutch drum (B). Starting with the clutch waved-plate, alternately install the waved-plates (C) (4) and discs (D) (4). Install the clutch-end-plate (E) with the flat side down on the top disc.

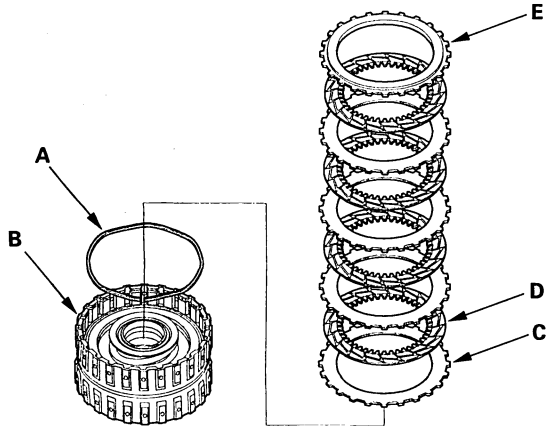

20. 2006-model 1st clutch:
Install the waved spring (A) in the 1st clutch drum (B). Install the clutch flat-plate (C), then starting with the clutch disc, alternately install the discs (D) (5) and waved-plates (E) (4). Install the clutch-end-plate (F) with the flat side down on the top disc.

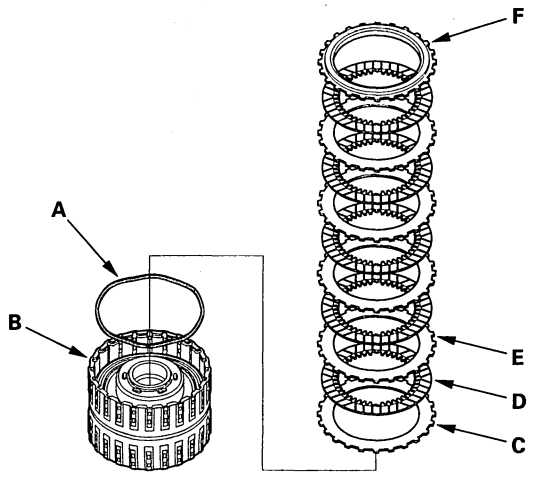

21. 2006-model 2nd clutch:
Install the waved spring (A) in the 2nd clutch drum (B). Install the clutch flat-plate (C), then starting with the clutch disc, alternately install the discs (D) (6) and clutch waved-plates (E) (5). Install the clutch-end-plate (F) with the flat side down on the top disc.

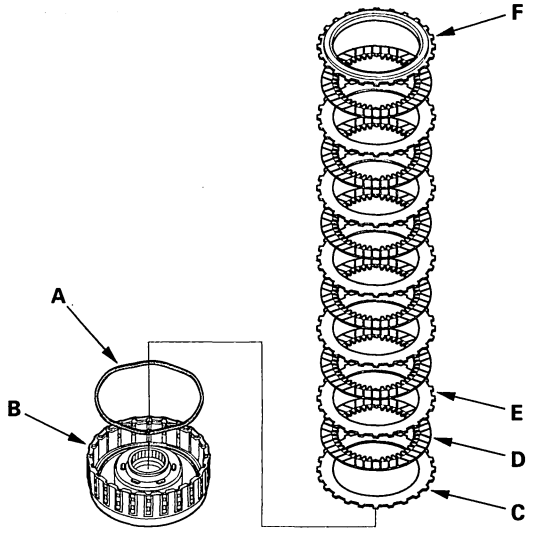

BACK

Protected by AR

22. 2006-model 3rd clutch:
Install the waved spring (A) in the 3rd clutch drum (B). Install the clutch flat-plate (C), then starting with the clutch disc, alternately install the discs (D) (6) and waved-plates (E) (5). Install the clutch-end-plate (F) with the flat side down on the top disc.

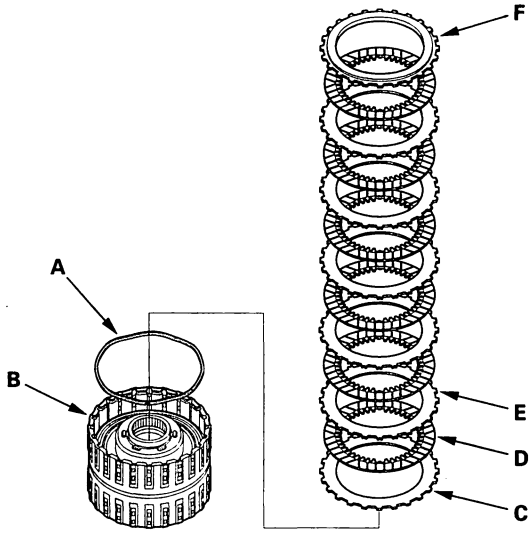

23. 2006-model 4th clutch:
Install the waved spring (A) in the 4th clutch drum (B). Starting with the clutch waved-plate, alternately install the waved-plates (C) (4) and discs (D) (4). Install the clutch-end-plate (E) with the flat side down on the top disc.

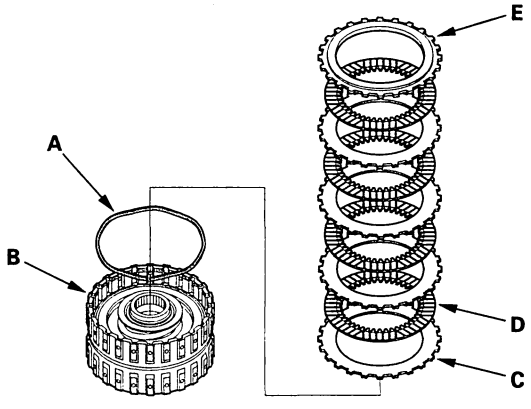

24. 2006-model 5th clutch:
Install the waved spring (A) in the 5th clutch drum (B). Starting with the clutch waved-plate, alternately install the waved-plates (C) (4) and discs (D) (4). Install the clutch-end-plate (E) with the flat side down on the top disc.

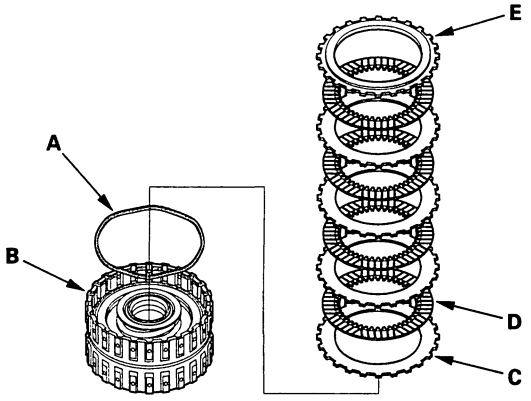

25. Install the snap ring with a screwdriver to secure the clutch-end -plate.

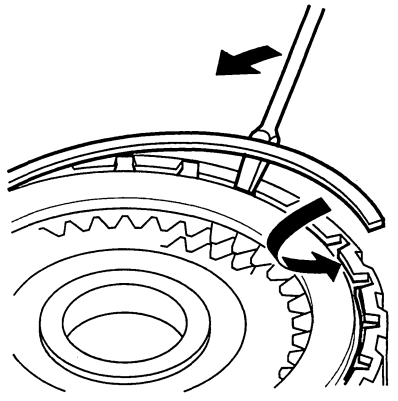

26. Check that the clutch piston moves by applying air pressure into fluid passage.

Protected by AR

Valve Body

Valve Body and ATF Strainer Installation

Exploded View

Torque Specifications:
6 x 1.0 mm: 12 N·m (1.2 kgf·m, 8.7 lbf·ft)
8 x 1.25 mm: 18 N·m (1.8 kgf·m, 13 lbf·ft)

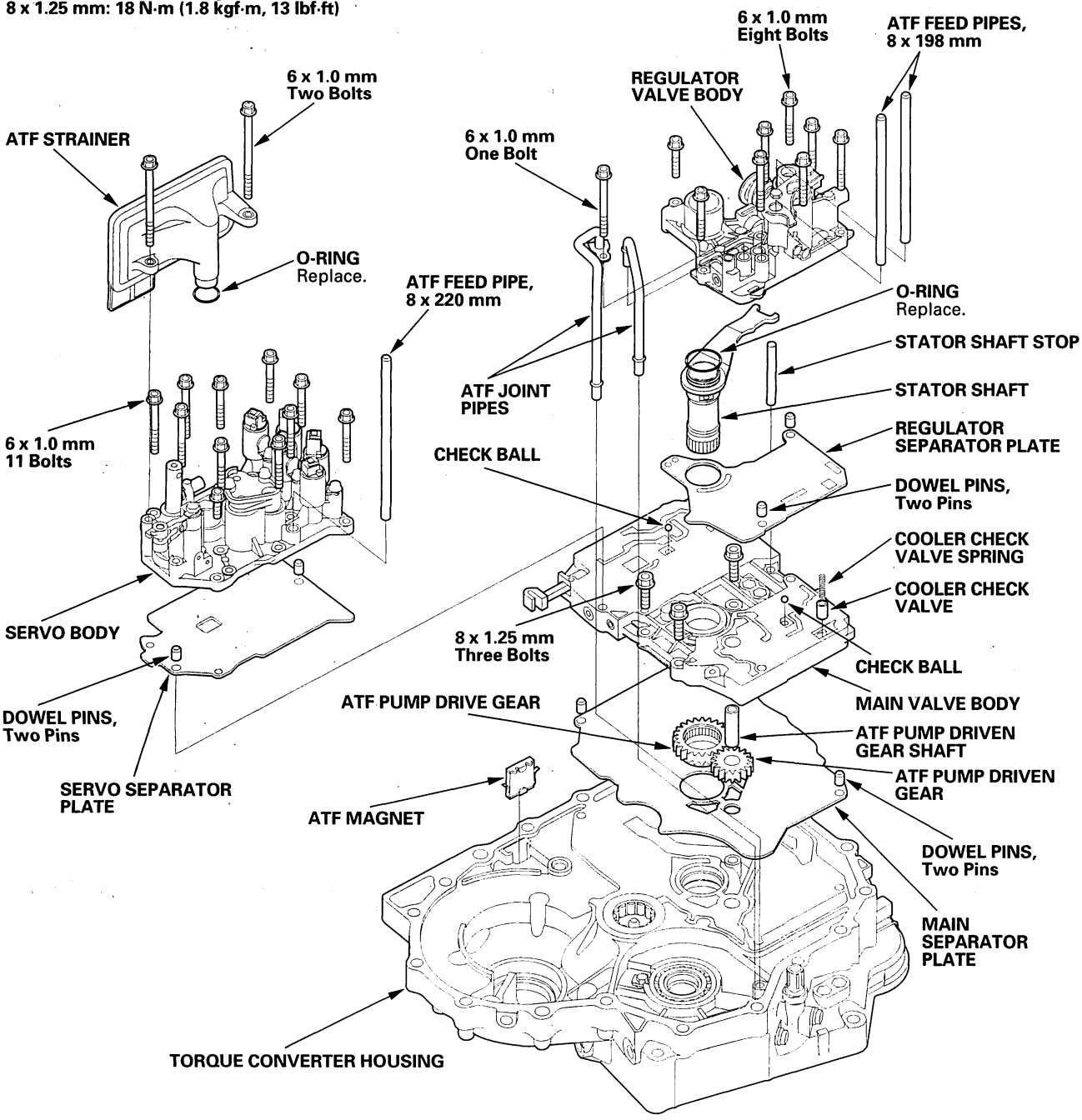

BACK

Protected by AR

NOTE: Refer to the exploded view as needed during the following procedures.

1. Make sure that the ATF magnet is cleaned and installed in the torque converter housing.

2. Install the main separator plate (A) and two dowel pins on the torque converter housing. Then install the ATF pump drive gear (B), driven gear (C), and ATF pump driven gear shaft (D). Install the ATF pump driven gear with its grooved and chamfered side facing down.

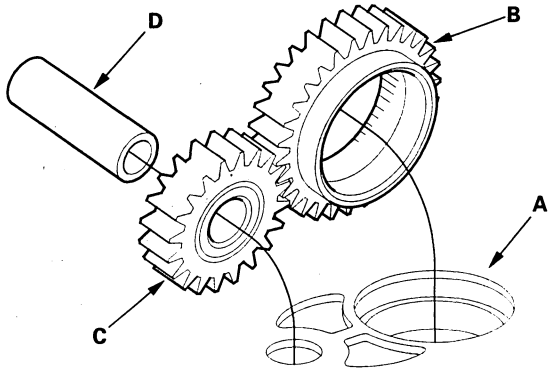

3. Install the main valve body.

4. Make sure the ATF pump drive gear (A) rotates smoothly in the normal operating direction, and the ATF pump driven gear shaft (B) moves smoothly in the axial and normal operating direction.

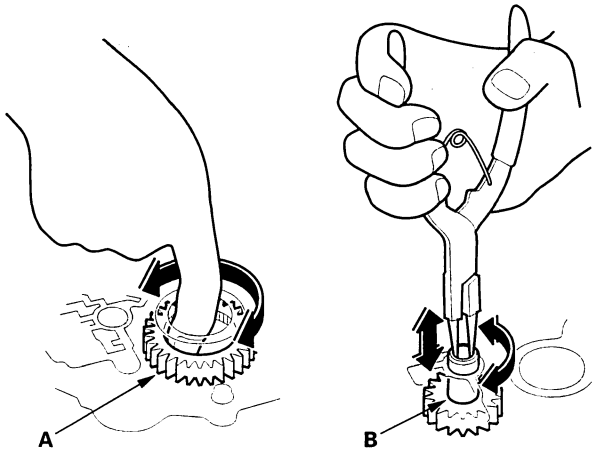

5. If the ATF pump drive gear and ATF pump driven gear shaft do not move smoothly, loosen the main valve body bolts. Realign the ATF pump driven gear shaft, and retighten the bolts to the specified torque, then recheck. Failure to align the ATF pump driven gear shaft correctly will result in a seized ATF pump drive gear or ATF pump driven gear shaft.

6. Make sure that the two check balls and the cooler check valve are in the main valve body, then install the cooler check valve spring in the cooler check valve.

7. Install the servo separator plate and two dowel pins on the main valve body.

8. Install the servo body (11 bolts). Install the ATF strainer with the two bolts in the bolt holes (A) in step 12, and install the baffle plate with the two bolts in the bolt holes (B) in step 2 in shaft assemblies and housing installation.

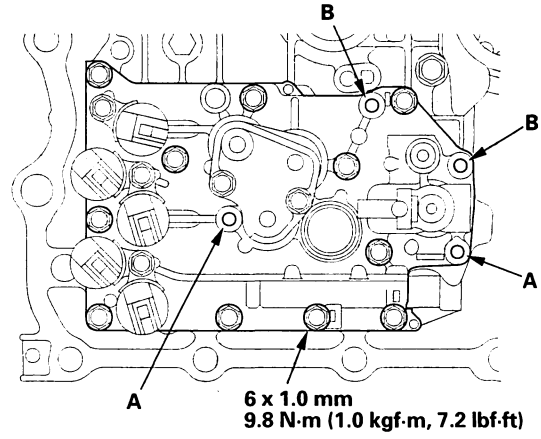

9. Install the regulator separator plate and two dowel pins on the main valve body.

10. Install the new O-ring on the stator shaft, and install the stator shaft and stator shaft stop.

11. Install the regulator valve body (eight bolts).

12. Install the new O-ring on the ATF strainer, and install the ATF strainer (two bolts).

13. Install the ATF joint pipes (one bolt).

14. Install the ATF feed pipes in the regulator valve body and servo body.

BACK

Protected by AR

Transmission Housing

Shaft Assembly and Housing Installation

Exploded View

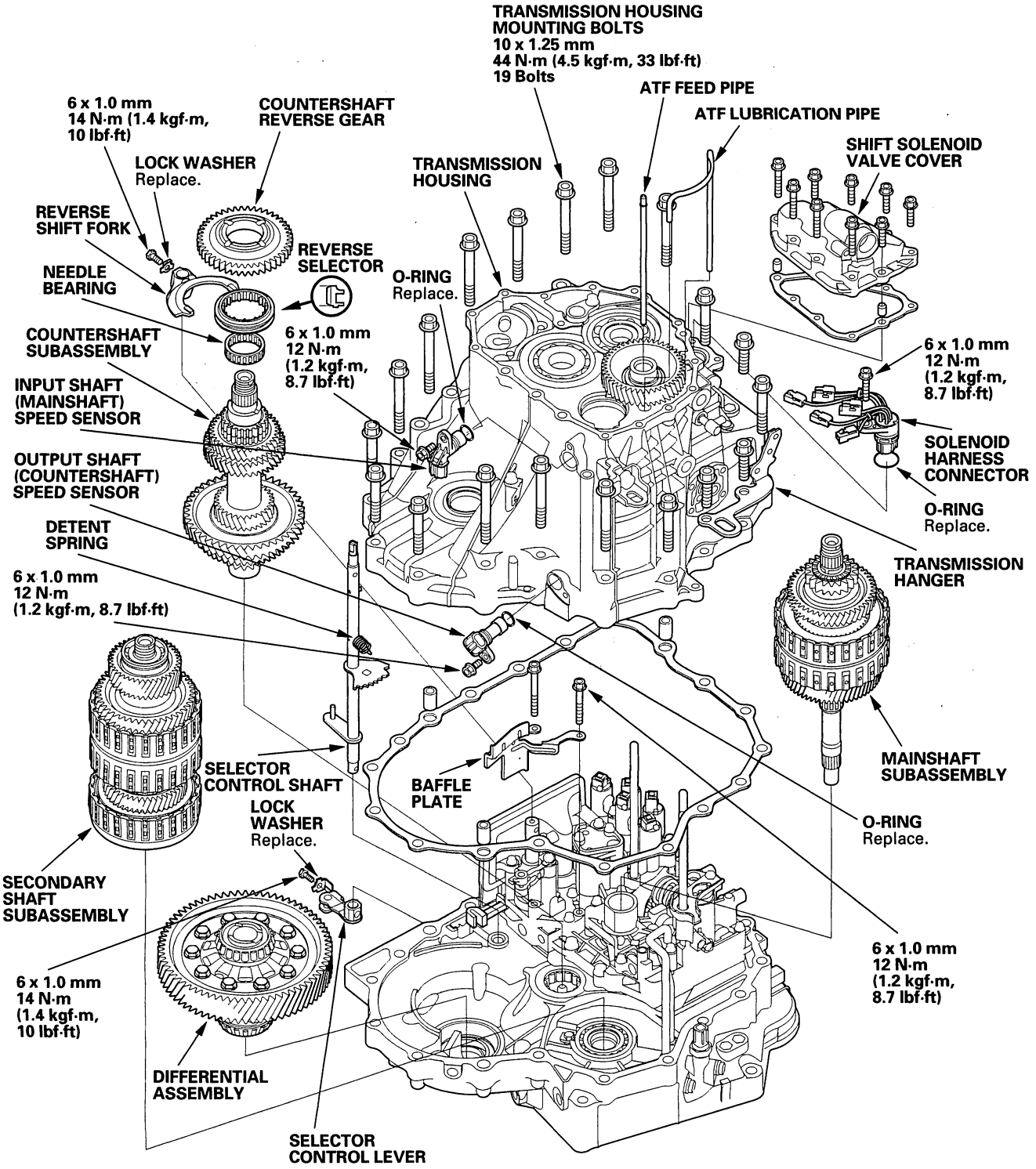

BACK

Protected by AR

NOTE: Refer to the exploded view as needed during the following procedure.

1. Install the differential assembly in the torque converter housing.
2. Install the baffle plate on the servo body.
3. Assemble the mainshaft, countershaft, and secondary shaft.
4. Join the mainshaft subassembly (A), countershaft subassembly (B), and secondary shaft subassembly (C) together, and install them in the torque converter housing. Do not bump the countershaft on the baffle plate (D).

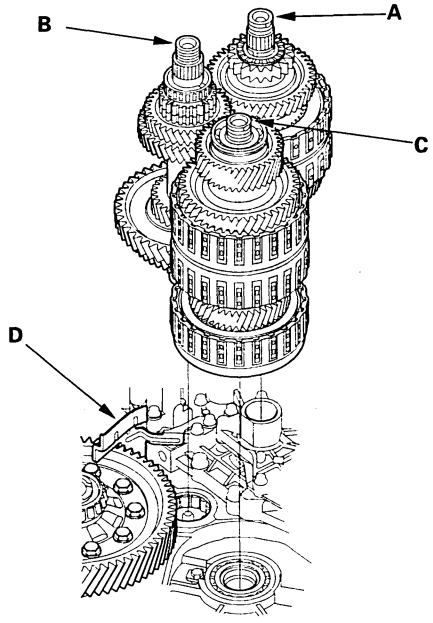

5. Make sure if the countershaft and differential are clear of the baffle plate (D).
6. If the detent arm was removed, install the detent arm (A) with arm collar (B) on the servo body (C), and install the new lock washer (D) by aligning its cutout (E) with the projection (F) of the servo body. Install and tighten the bolt, then bend the lock tab of the lock washer against the bolt head.

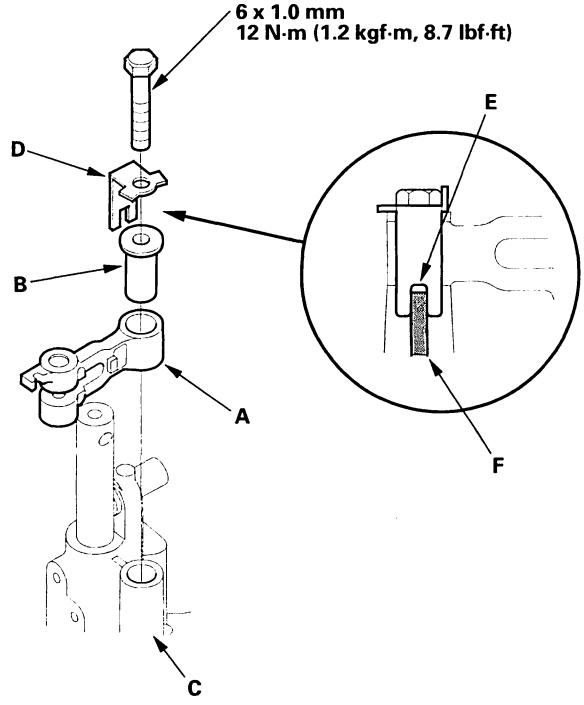

(cont'd)

Protected by AR

Shaft Assembly and Housing Installation (cont'd)

7. Install the control shaft (A) in the torque converter housing aligning the manual valve lever pin (B) on the control shaft with the guide of the manual valve (C). Pull the manual valve gently when aligning the manual valve with the control shaft.

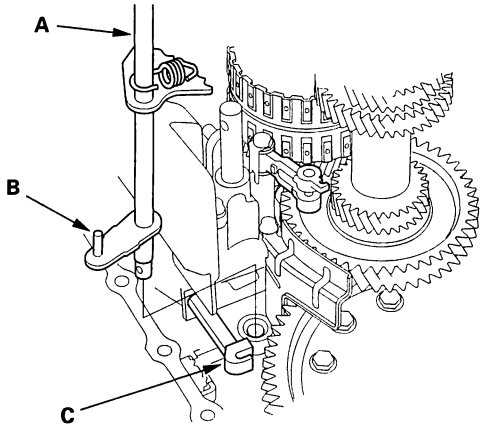

8. Hook the detent arm spring (A) to the detent arm (B).

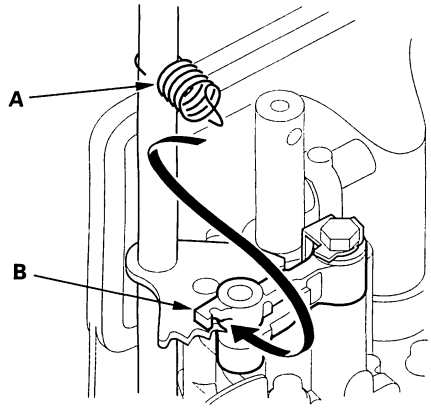

9. Turn the shift fork shaft (A) so the large chamfered hole (B) is facing the fork bolt hole (C) of the shift fork (D).

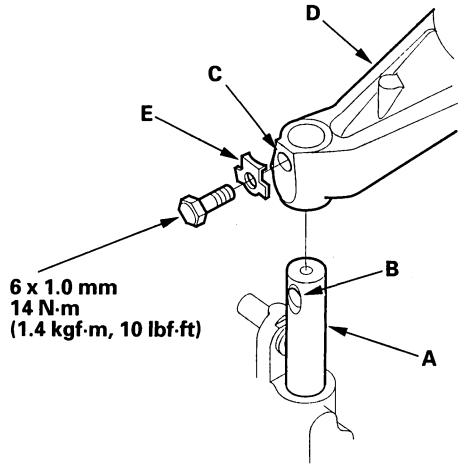

10. Install the shift fork and reverse selector together on the shift fork shaft and countershaft. Secure the shift fork to the shift fork shaft with the lock bolt and a new lock washer (E), then bend the lock tab of the lock washer against the bolt head.

11. Install the needle bearing and countershaft reverse gear on the countershaft.

12. Install the reverse idler gear in the transmission housing (see page 14-273).

13. Install the idler gear shaft (see page 14-300), if it was removed.

BACK

Protected by AR

14. Install the three dowel pins (A) and a new gasket (B) on the torque converter housing (C).

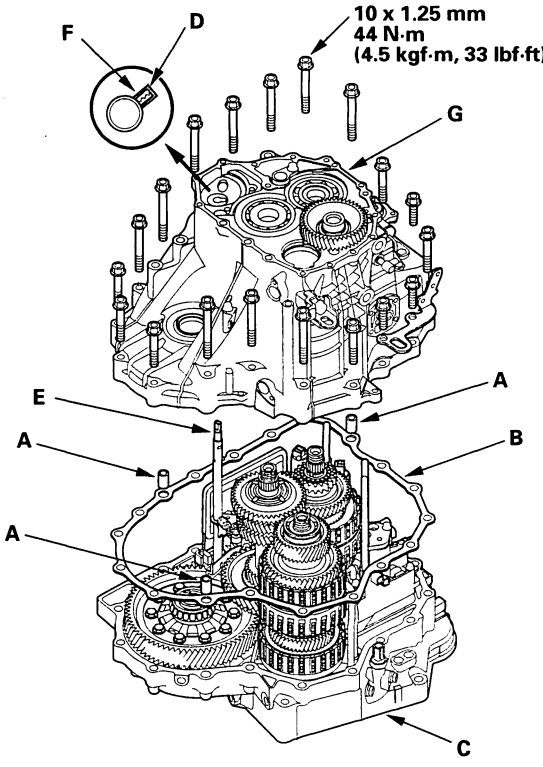

15. Align the spring pin (D) of the control shaft (E) with the transmission housing groove (F) by turning the control shaft. Do not squeeze the end of the control shaft tips together when turning the shaft. If the tips are squeezed together, it will cause a faulty shift position signal or position due to the play between the control shaft and the switch.

16. Place the transmission housing (G) on the torque converter housing. Do not install the mainshaft and countershaft speed sensors before installing the transmission housing on the torque converter housing.

17. While expanding the snap ring of the secondary shaft bearing using the snap ring pliers, push the transmission housing down to start the secondary shaft bearing through the snap ring. Then release the pliers, and push down the housing until it bottoms and snap ring snaps in place in the secondary shaft bearing snap ring groove.

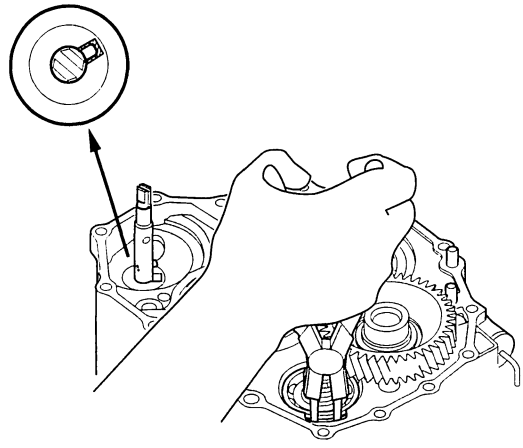

18. Verify that the secondary shaft bearing snap ring (A) is seated in the bearing and housing groove, and that the ring end gap (B) is correct.

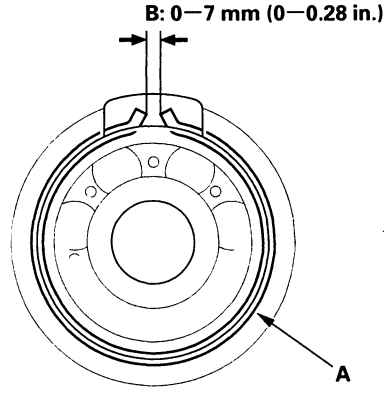

19. Install the transmission housing mounting bolts along with the transmission hanger, and tighten the 19 bolts in two or more steps in a crisscross pattern.

(cont'd)

Protected by AR

Shaft Assembly and Housing Installation (cont'd)

20. Install the input shaft (mainshaft) speed sensor (A) and output shaft (countershaft) speed sensor (B) with new O-rings (C).

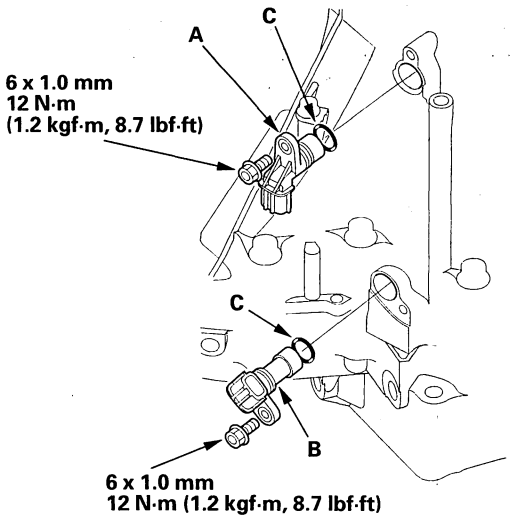

21. Install the shift solenoid harness connector (F) in the transmission housing with the new O-ring (G).

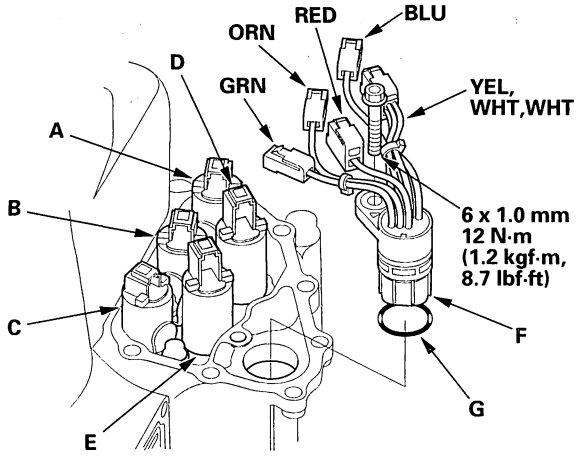

22. Connect the connector (YEL, WHT, and WHT wires) to the shift solenoid valve D.

23. Connect the connectors to the respective valves:

- BLU wire to shift solenoid valve A.
- ORN wire to shift solenoid valve B.
- GRN wire to shift solenoid valve C.
- RED wire to shift solenoid valve E.

24. Install the shift solenoid valve cover (A) with the two dowel pins (B) and the new gasket (C).

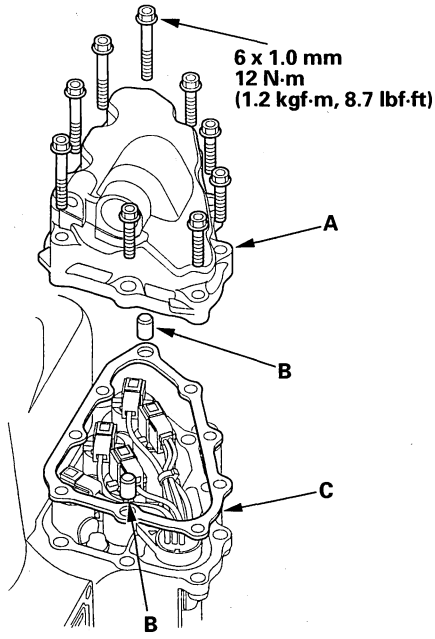

BACK

Protected by AR

End Cover Installation

Special Tool Required
Mainshaft holder 07GAB-PF50101 or 07GAB-PF50100

1. Install the special tool onto the mainshaft.

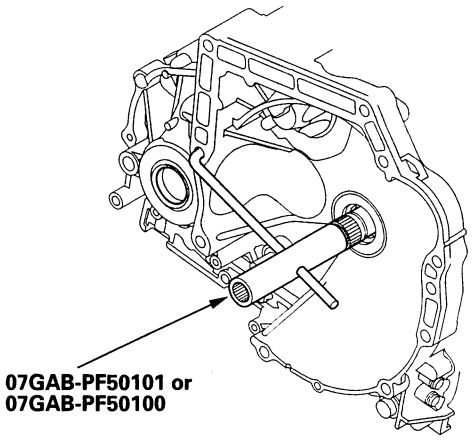

2. Lubricate the following parts with ATF:

   - Splines and threads of the mainshaft.
   - Splines of the mainshaft idler gear.
   - Old conical spring washer and old locknut.

3. Install the mainshaft idler gear (A), old conical spring washer (B), and old locknut (C) on the mainshaft (D), and tighten the locknut to 226 N·m (23.0 kgf·m, 166 lbf·ft).

   NOTE:
   - Do not tap the idler gear to install.
   - Use a torque wrench to tighten the locknut. Do not use an impact wrench.

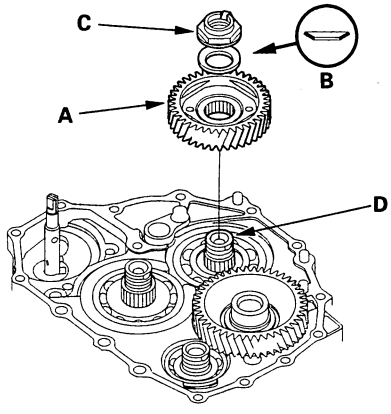

4. Install the park lever (A) and park lever stop (B) on the control shaft (C), then install the lock bolt with the new lock washer (D). Do not bend the lock tab of the lock washer until step 18.

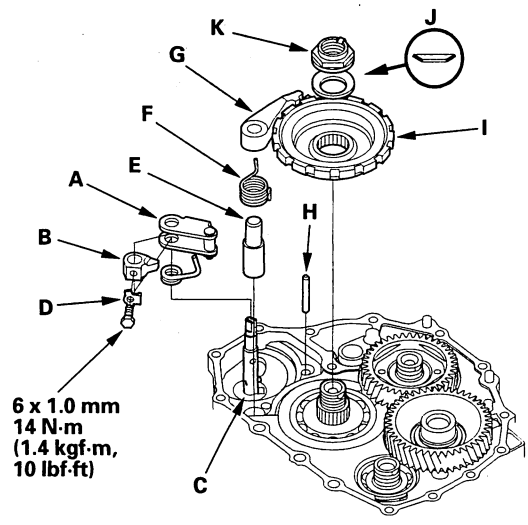

5. Install the park pawl shaft (E), park pawl spring (F), park pawl (G), and stop shaft (H) on the transmission housing.

6. Lubricate the following parts with ATF:

   - Threads and splines of the countershaft.
   - Old conical spring washer and old locknut.
   - Areas where the park gear contacts the conical spring washer.

7. Install the park gear (I), old conical spring washer (J), and old locknut (K) on the countershaft.

8. Lift the park pawl up, and engage it with the park gear, then tighten the locknut to 226 N·m (23.0 kgf·m, 166 lbf·ft).

   NOTE:
   - Do not tap the park gear to install.
   - Use a torque wrench to tighten the locknut. Do not use an impact wrench.
   - Countershaft locknut has left-hand threads.

9. Remove the locknuts and conical spring washers from the mainshaft and countershaft.

(cont'd)

Protected by AR

End Cover Installation (cont'd)

10. Lubricate the threads of the shafts, the new locknuts and the new conical spring washers with ATF.

11. Install the new conical spring washers (A) with facing stamped mark side up in the direction shown, and install the new mainshaft locknut (B), the new countershaft locknut (C), and the new secondary shaft locknut (D).

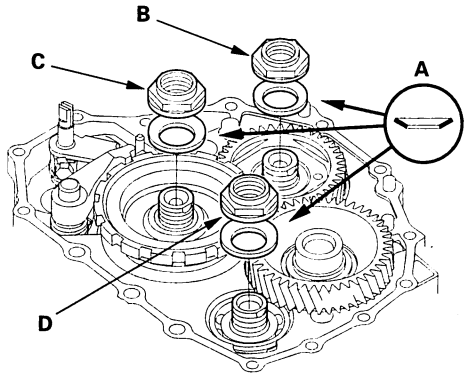

12. Tighten the locknuts to 167 N·m (17.0 kgf·m, 123 lbf·ft).

NOTE:
- Be sure to install the conical spring washers in the direction shown.
- Use a torque wrench to tighten the locknut. Do not use an impact wrench.
- Countershaft and secondary shaft locknuts have left-hand threads.

13. Remove the special tool from the mainshaft.

14. Stake the locknuts into the shafts with a punch.

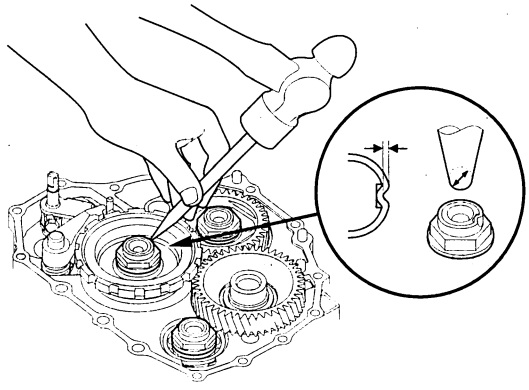

15. Install the selector control level (A) on the selector control shaft (B), and install the bolt with the new lock washer (C), then bend the lock tab of the lock washer against the bolt head.

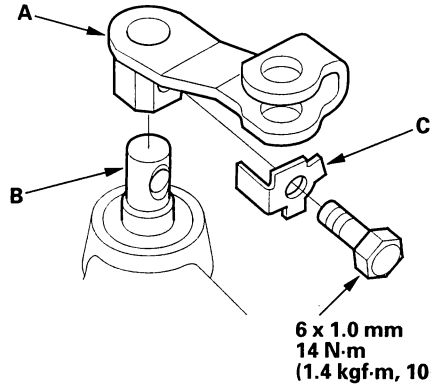

16. Set the park lever in the P position, then verify that the park pawl (A) engages the park gear (B).

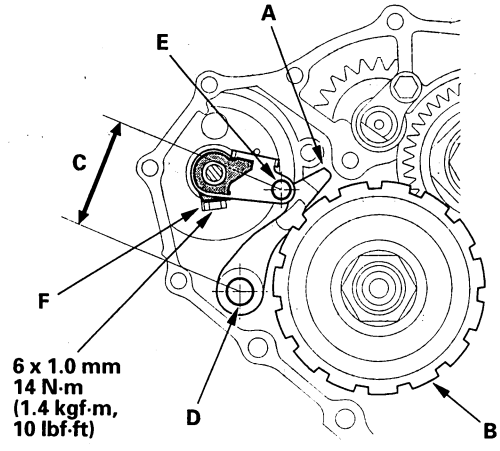

17. If the park pawl does not engage fully, check the distance (C) between the pawl shaft (D) and the park lever roller pin (E) (see page 14-266).

18. Tighten the lock bolt, and bend the lock tab of the lock washer (F) against the bolt head.

BACK

Protected by AR

19. Install the ATF feed pipe (A) into the idler gear shaft, and install the ATF lubrication pipe (B) into the transmission housing.

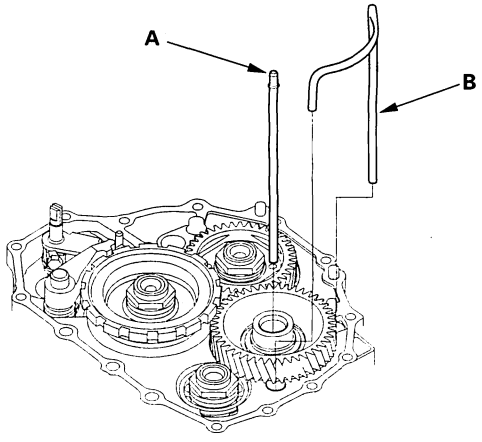

20. Install the new gasket (A) on the transmission housing, and install the two dowel pins (B) and new O-rings (C) over the top of the ATF feed pipes.

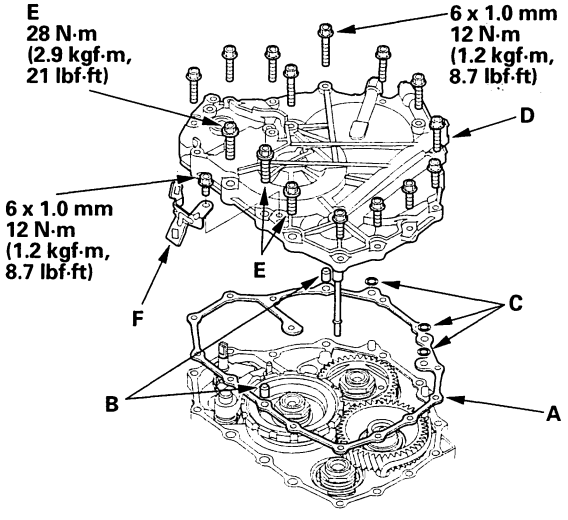

21. Install the end cover (D), and tighten the three special bolts (E) and the 6 x 1.0 mm bolts (12 bolts).

22. Install the harness clamp bracket (F) on the end cover.

23. Set the selector control shaft (A) to the N position by turning the selector control lever on the torque converter side.

NOTE: Do not squeeze the end of the selector control shaft tips together when turning the shaft. If the tips are squeezed together it will cause a faulty shift position signal or position due to the play between the selector control shaft and the switch.

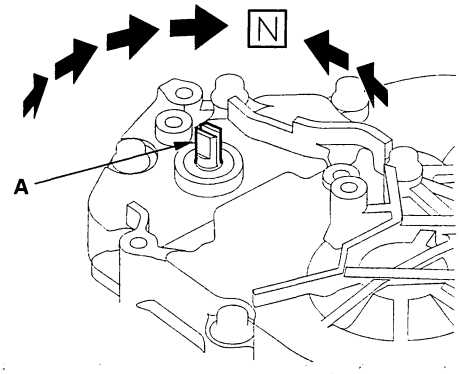

24. Align the cutouts (A) on the rotary-frame with the neutral positioning cutouts (B) on the transmission range switch (C), then put a 2.0 mm (0.08 in.) feeler gauge blade (D) in the cutouts to hold in the N position.

NOTE: Be sure to use a 2.0 mm (0.08 in.) blade or equivalent to hold the switch in the N position.

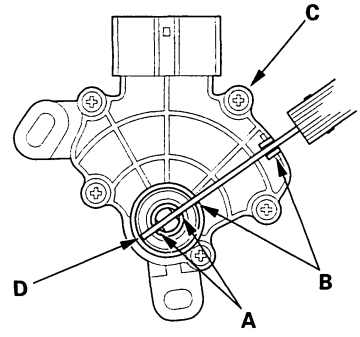

(cont'd)

Protected by AR

Transmission End Cover

End Cover Installation (cont'd)

25. Install the transmission range switch (A) gently on the selector control shaft (B) while holding it in the N position with the 2.0 mm (0.08 in.) blade (C).

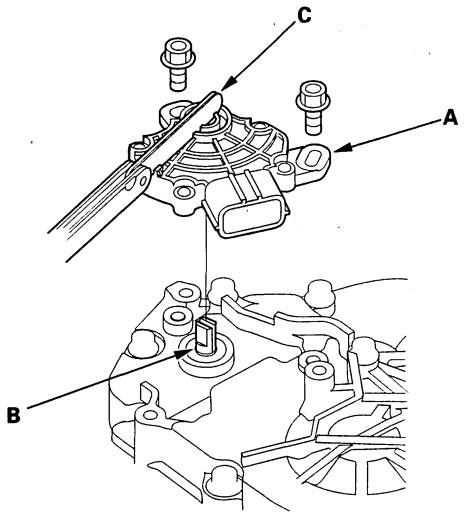

26. Tighten the bolts on the transmission range switch while you continue to hold it in the N position. Do not move the transmission range switch when tightening the bolts. Remove the feeler gauge.

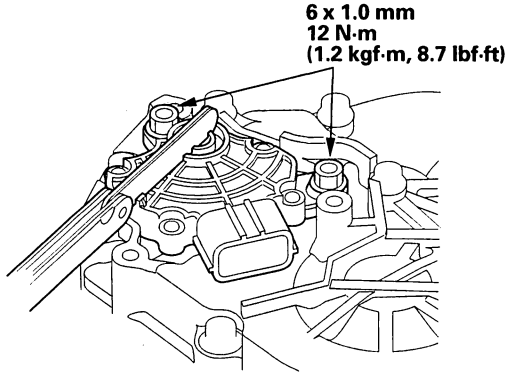

27. Connect the transmission range switch connector (A) securely, then install the harness clamps (B) on the clamp bracket (C).

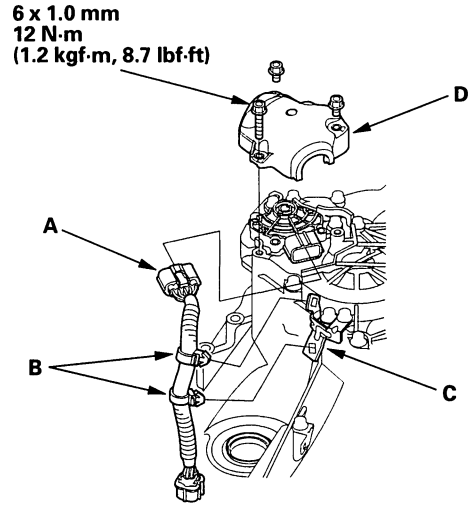

28. Install the transmission range switch cover (D).

29. Install the new gasket (B) on the transmission housing, and install the ATF pipe (C) and ATF joint pipes (D).

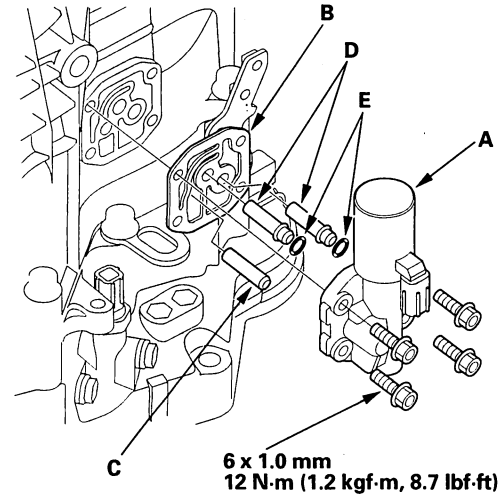

30. Install the new O-rings (E) over the ATF joint pipes, and install the A/T clutch pressure control solenoid valve A.

BACK

Protected by AR

31. Install the new gasket (A) and ATF joint pipes (D) on the transmission housing, and install the new O-rings (E) over the ATF joint pipes.

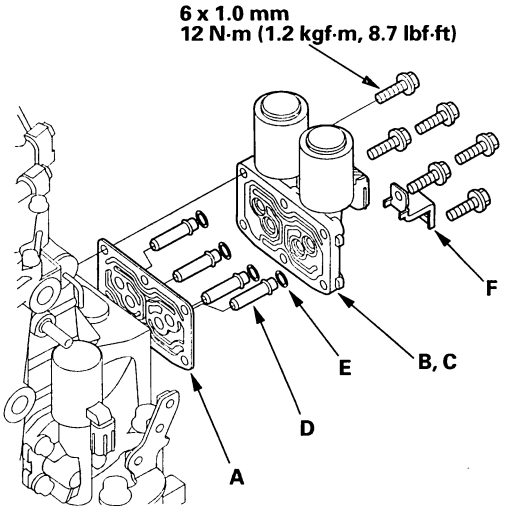

32. Install the A/T clutch pressure control solenoid valves B and C, and harness clamp bracket (F).

33. Install the new O-ring (A) on the dipstick guide pipe (B), then install the dipstick guide pipe.

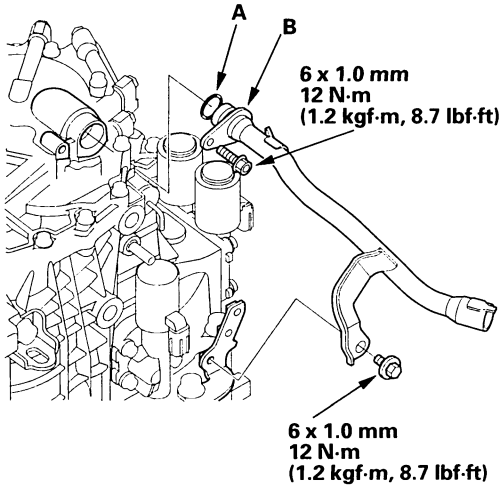

34. Install the ATF filter bracket (A) on the transmission housing, then install the ATF cooler line/ATF filter (B) with the line bolt (C) new sealing washers (D). Secure the ATF filter with its bracket (E).

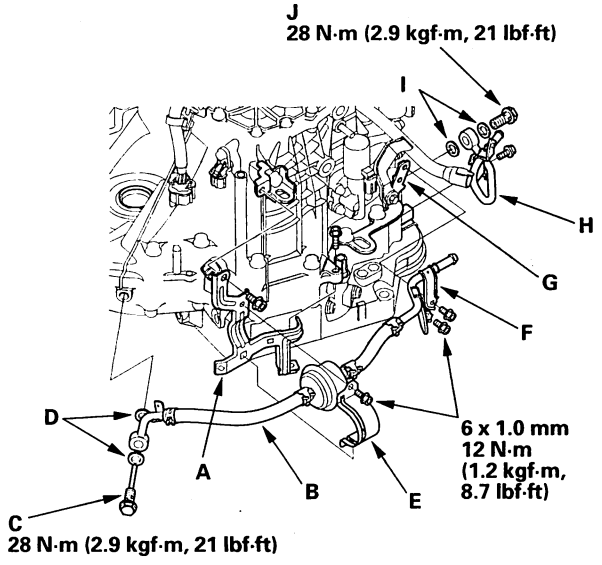

35. Secure the line brackets (F) with two bolts on the transmission hanger (G).

36. Install the ATF cooler outlet line (H) with the line bolt (I) and new sealing washers (J).

37. Install the breather cap (A) on the breather pipe (D) so its arrow (E) points to the A/T clutch pressure control solenoid valves B and C.

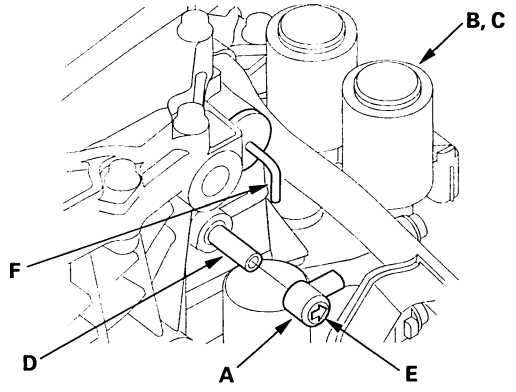

38. Install the filler cap with pointing its handle (F) in the direction shown.

Protected by AR

A/T Differential

Component Location Index

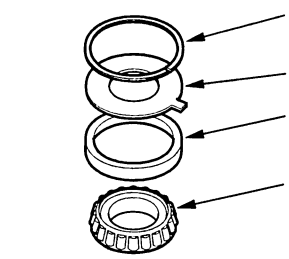

THRUST SHIM, 76 mm
Selection, page 14-339

THRUST WASHER, 76.2 mm

BEARING OUTER RACE
Replacement, page 14-337

CARRIER BEARING
Replacement, page 14-335

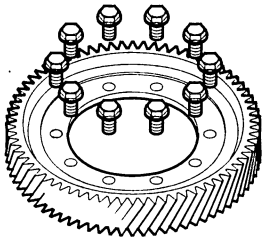

FINAL DRIVEN GEAR
Replacement,
page 14-335

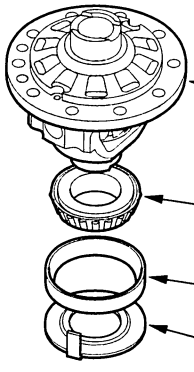

DIFFERENTIAL CARRIER
Backlash Inspection,
page 14-334
Replacement, page 14-335

CARRIER BEARING
Replacement, page 14-335

BEARING OUTER RACE
Replacement, page 14-337

THRUST WASHER, 80 mm

Backlash Inspection

1. Install the driveshafts on the differential, then place the axles on V-blocks.

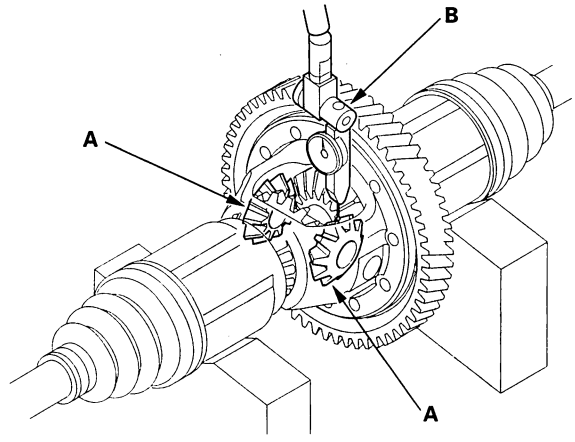

2. Check the backlash of the pinion gears (A) with a dial indicator (B).

   Standard: 0.05—0.15 mm (0.002—0.006 in.)

3. If the backlash is out of standard, replace the differential carrier.

BACK

Protected by AR

Carrier Bearing Replacement

Special Tools Required
Attachment, 40 x 50 mm 07LAD-PW50601

NOTE:
- The bearing and bearing outer race should be replaced as a set.
- Inspect and adjust the carrier bearing preload whenever bearing is replaced.
- Check the bearing for wear and rough rotation. If the bearing is OK, removal is not necessary.

1. Remove the carrier bearing (A) with a commercially available puller (B), bearing separator (C), and stepped adapter (D).

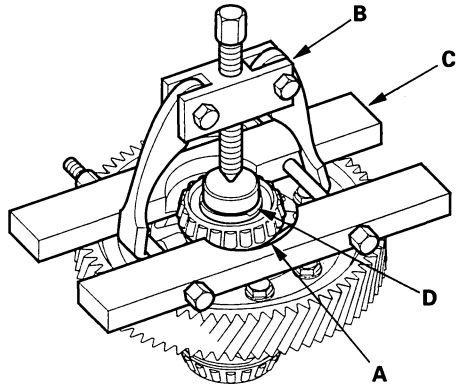

2. Install the new bearings with the special tool using the small end and a press until it bottoms. Press the bearing on securely so there is no clearance between the bearing and the differential carrier.

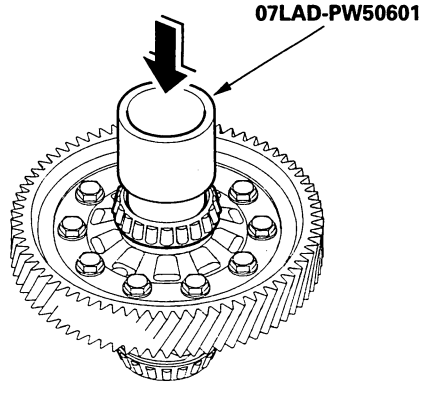

Differential Carrier, Final Driven Gear Replacement

1. Remove the final driven gear from the differential carrier, and replace the differential carrier or final driven gear.

2. Install the final driven gear (A) in the direction shown on the differential carrier (B).

   NOTE: Differential carrier bolts have left-hand threads.

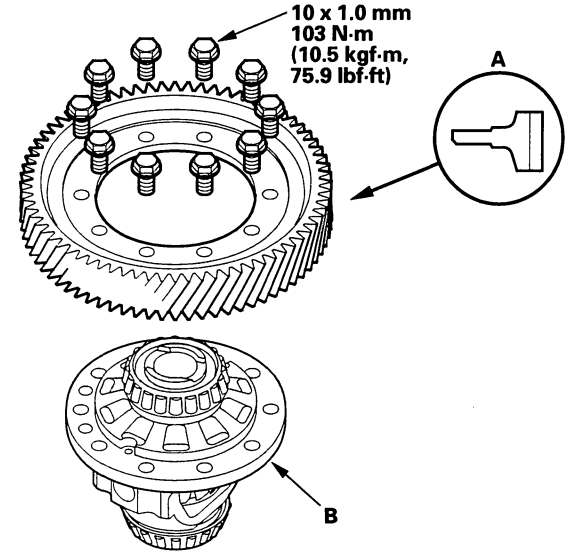

Protected by AR

Oil Seal Replacement

Special Tools Required
- Driver 07749-0010000
- Oil seal driver attachment 07947-SD90101
- Oil seal driver attachment 07JAD-PH80101

1. Remove the oil seal from the transmission housing.

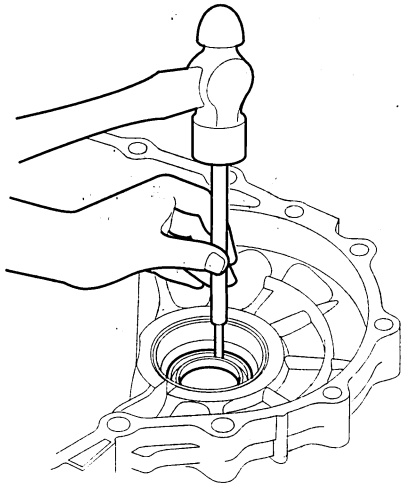

2. Remove the oil seal from the torque converter housing.

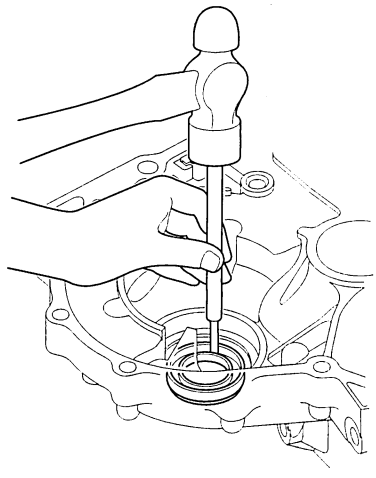

3. Install the new oil seal (A) in the transmission housing with the special tools.

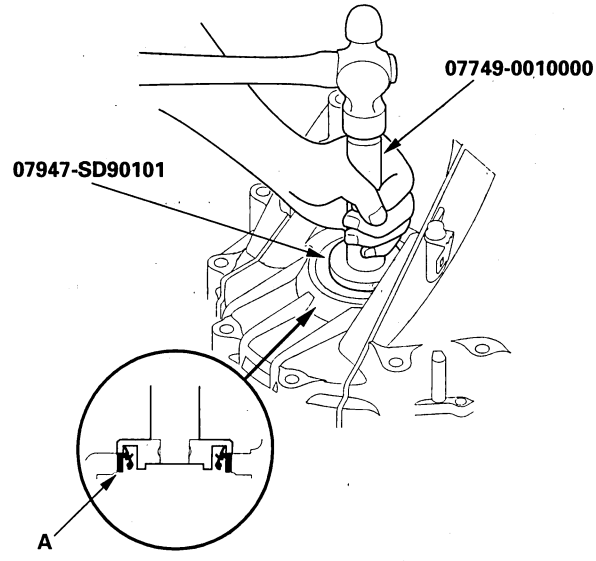

4. Install the new oil seal (A) in the torque converter housing with the special tools.

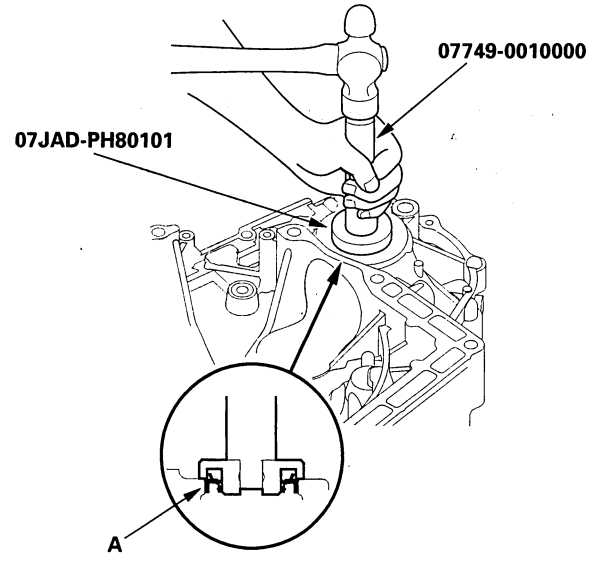

BACK

Protected by AR

Carrier Bearing Outer Race Replacement

Special Tools Required
- Driver 07749-0010000
- Attachment, 78 x 90 mm 07GAD-SD40101
- Attachment, 72 x 75 mm 07746-0010600

NOTE:
- The bearing and bearing outer race should be replaced as a set.
- Replace the bearing with a new one whenever the outer race is replaced.
- Do not use the thrust shim on the torque converter housing.
- Adjust bearing preload after replacing the bearing and outer race.
- Cost all parts with ATF during installation.

1. Remove the bearing outer race (A), 76.2 mm thrust washer (B), and 76 mm thrust shim (C) from the transmission housing (D) by heating the housing to about 212 °F (100 °C) with heat gun (E). Do not heat the housing in excess of 212 °F (100 °C).

   NOTE: Let the transmission housing cool to room temperature before installing the bearing outer race.

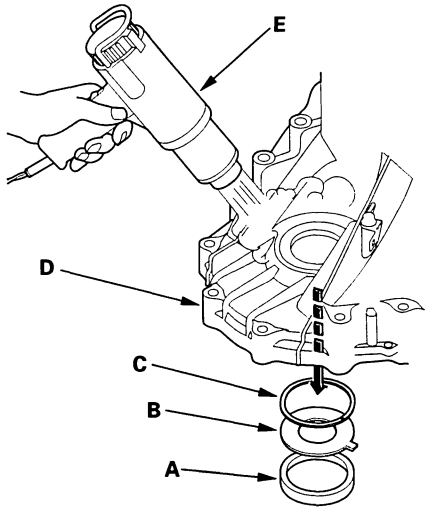

2. Remove the bearing outer race (A) and 80 mm thrust washer (B) from the torque converter housing (C).

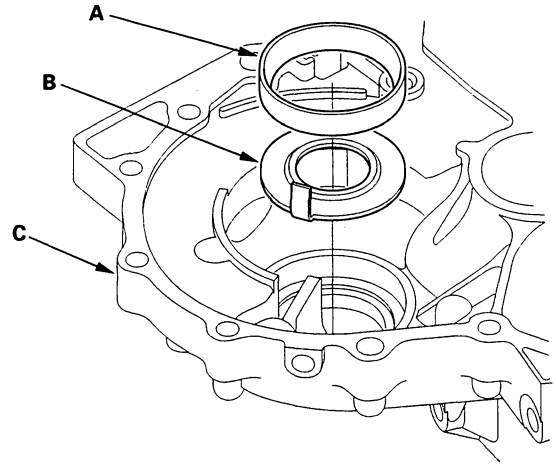

3. Install the 80 mm thrust washer and the new bearing outer race in the torque converter housing.

4. Drive the bearing outer race to install securely in the housing with the special tools.

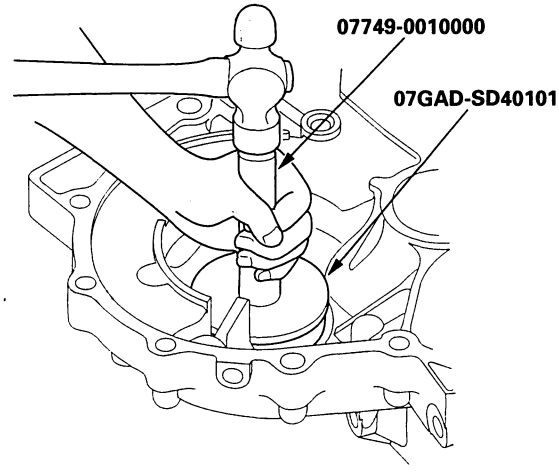

(cont'd)

Protected by AR

Carrier Bearing Outer Race Replacement (cont'd)

5. Install the 76 mm thrust shim (A), 76.2 mm thrust washer (B), and the new bearing outer race (C) in the transmission housing (D).

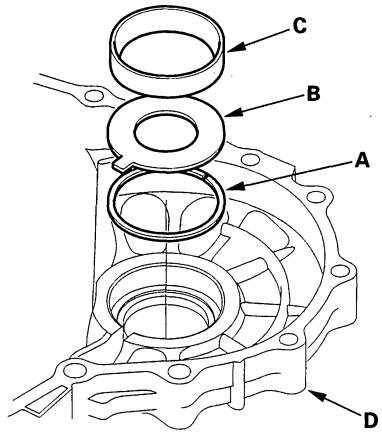

6. Drive the bearing outer race in securely so there is no clearance between the outer race, thrust washer, shim and housing with the special tools.

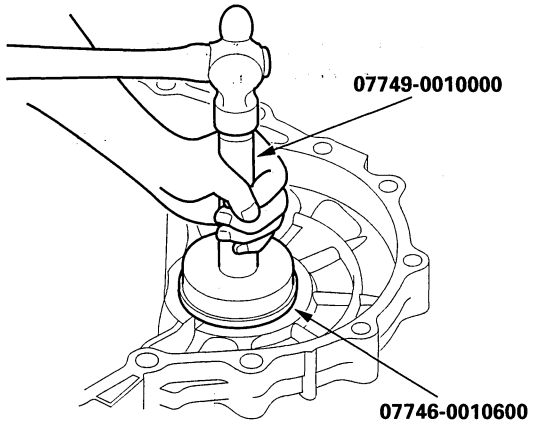

BACK

Protected by AR

Carrier Bearing Preload Inspection

Special Tools Required
- Driver 07749-0010000
- Attachment, 72 x 75 mm 07746-0010600
- Preload inspection tool 07HAJ-PK40201

NOTE:
- If the transmission housing, torque converter housing, differential carrier, carrier bearing and outer race, or thrust shim were replaced, the bearing preload must be adjusted.
- Coat all parts with ATF during installation.
- Do not use the thrust shim in the torque converter housing.

1. Remove the bearing outer race (A), 76.2 mm thrust washer (B), and 76 mm thrust shim (C) from the transmission housing (D) by heating the housing to about 212 °F (100 °C) with heat gun (E). Do not heat the housing in excess of 212 °F (100 °C).

   NOTE: Let the transmission housing cool to room temperature before adjusting the bearing preload.

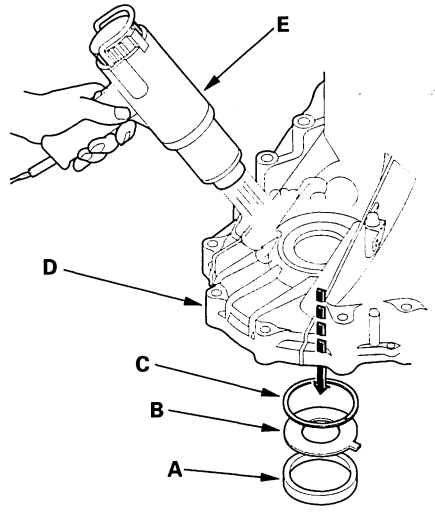

2. Install the 76 mm thrust shim (A) in the transmission housing (B). If you replace the 76 mm thrust shim with a new one, use the same thickness shim as the old one.

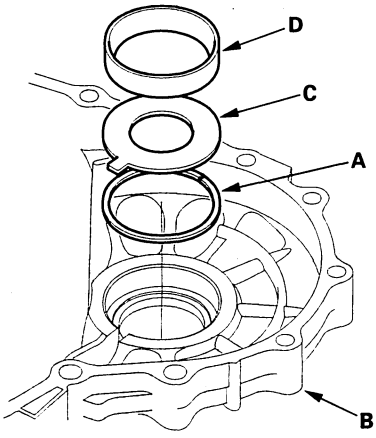

3. Install the 76.2 mm thrust washer (C) and the bearing outer race (D) in the transmission housing.

4. Drive the bearing outer race in securely so there is no clearance between the outer race, thrust washer, shim and housing with the special tools.

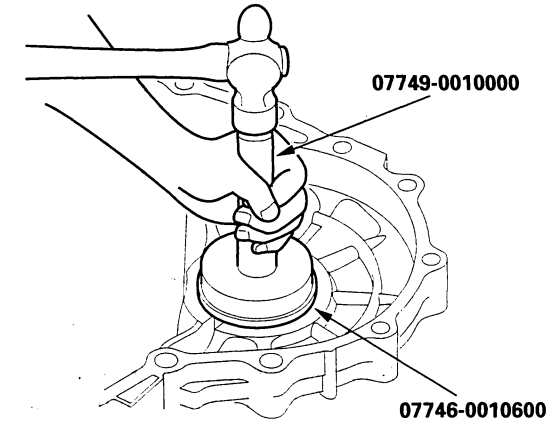

(cont'd)

Protected by AR

Carrier Bearing Preload Inspection (cont'd)

5. Install the differential assembly (A) in the torque converter housing (B), and install the gasket (C) and dowel pins (D) on the housing.

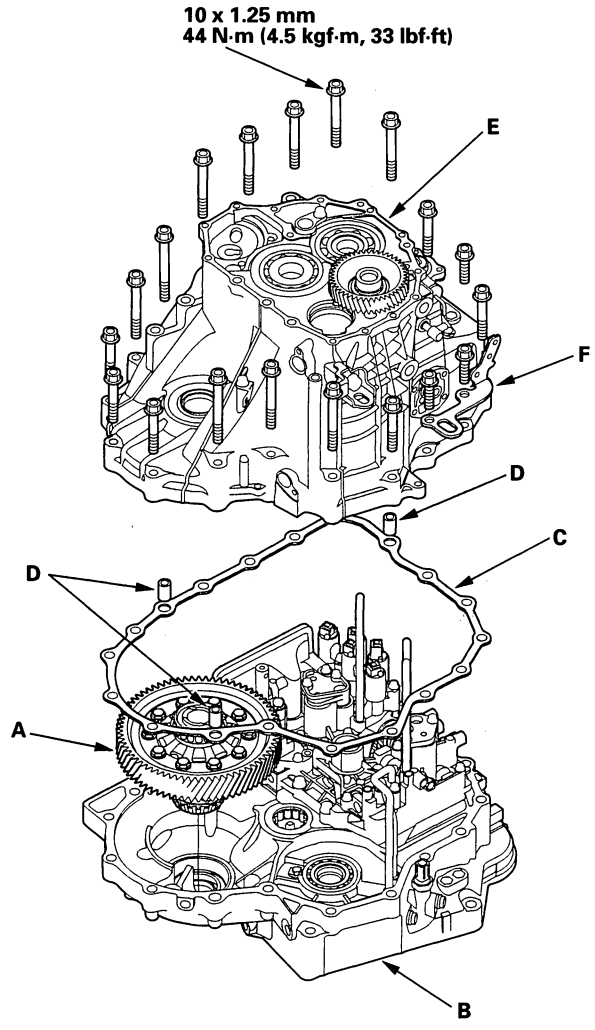

6. Install the transmission housing (E) and the transmission hanger (F), then tighten the bolts.

7. Rotate the differential assembly in both directions to seat the bearings.

8. Measure the starting torque of the differential assembly in both directions with the special tool, a torque wrench (A) and socket (B) at normal room temperature.

Standard
New Bearing: **2.7—3.9 N·m (28—40 kgf·cm, 24—35 lbf·in.)**
Reused Bearing: **2.5—3.6 N·m (25—37 kgf·cm, 22—32 lbf·in.)**

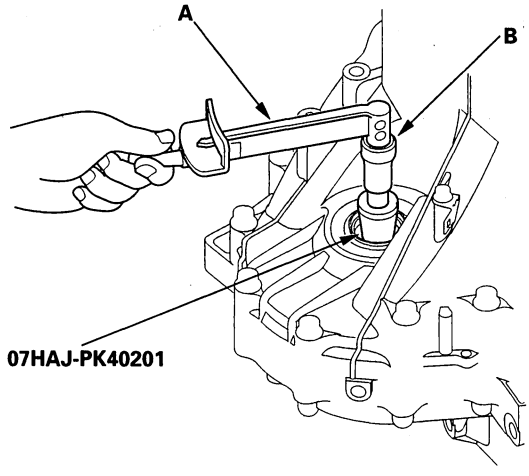

BACK

Protected by AR

9. If the measurement is out of standard, remove the thrust shim and select the thrust shim from table below. Install the new thrust shim and recheck. To increase the starting torque, increase the thickness of the thrust shim. To decrease the starting torque, decrease the thickness of the shim. Changing the shim to the next size will increase or decrease starting torque about 0.3—0.4 N·m (3—4 kgf·cm, 2—3 lbf·in.).

THRUST SHIM, 76 mm

No.	Part Number	Thickness
S	41438-PX4-700	2.05 mm (0.080 in.)
T	41439-PX4-700	2.10 mm (0.082 in.)
U	41440-PX4-700	2.15 mm (0.084 in.)
A	41441-PK4-000	2.20 mm (0.086 in.)
B	41442-PK4-000	2.25 mm (0.088 in.)
C	41443-PK4-000	2.30 mm (0.090 in.)
D	41444-PK4-000	2.35 mm (0.092 in.)
E	41445-PK4-000	2.40 mm (0.094 in.)
F	41446-PK4-000	2.45 mm (0.096 in.)
G	41447-PK4-000	2.50 mm (0.098 in.)
H	41448-PK4-000	2.55 mm (0.099 in.)
I	41449-PK4-000	2.60 mm (0.101 in.)
J	41450-PK4-000	2.65 mm (0.103 in.)
K	41451-PK4-000	2.70 mm (0.105 in.)
L	41452-PK4-000	2.75 mm (0.107 in.)
M	41453-PK4-000	2.80 mm (0.109 in.)
N	41454-PK4-000	2.85 mm (0.111 in.)
O	41455-PK4-000	2.90 mm (0.113 in.)
P	41456-PK4-000	2.95 mm (0.115 in.)
Q	41457-PK4-000	3.00 mm (0.117 in.)
R	41458-PK4-000	3.05 mm (0.119 in.)
0A	41428-PRP-000	1.55 mm (0.061 in.)
0B	41429-PRP-000	1.60 mm (0.063 in.)
0C	41430-PRP-000	1.65 mm (0.065 in.)
0D	41431-PRP-000	1.70 mm (0.067 in.)
0E	41432-PRP-000	1.75 mm (0.069 in.)
0F	41433-PRP-000	1.80 mm (0.071 in.)
0G	41434-PRP-000	1.85 mm (0.073 in.)
0H	41435-PRP-000	1.90 mm (0.075 in.)
0I	41436-PRP-000	1.95 mm (0.077 in.)
0J	41437-PRP-000	2.00 mm (0.079 in.)

(cont'd)

THRUST SHIM, 76 mm (cont'd)

No.	Part Number	Thickness
A	41428-PAX-000	1.575 mm (0.062 in.)
B	41429-PAX-000	1.625 mm (0.064 in.)
C	41430-PAX-000	1.675 mm (0.066 in.)
D	41431-PAX-000	1.725 mm (0.068 in.)
E	41432-PAX-000	1.775 mm (0.070 in.)
F	41433-PAX-000	1.825 mm (0.072 in.)
G	41434-PAX-000	1.875 mm (0.074 in.)
H	41435-PAX-000	1.925 mm (0.076 in.)
I	41436-PAX-000	1.975 mm (0.078 in.)
J	41437-PAX-000	2.025 mm (0.080 in.)
K	41438-PAX-000	2.075 mm (0.082 in.)
L	41439-PAX-000	2.125 mm (0.084 in.)
M	41440-PAX-000	2.175 mm (0.086 in.)
N	41441-PAX-000	2.225 mm (0.088 in.)
O	41442-PAX-000	2.275 mm (0.090 in.)
P	41443-PAX-000	2.325 mm (0.092 in.)
Q	41444-PAX-000	2.375 mm (0.094 in.)
R	41445-PAX-000	2.425 mm (0.095 in.)
S	41446-PAX-000	2.475 mm (0.097 in.)
T	41447-PAX-000	2.525 mm (0.099 in.)
U	41448-PAX-000	2.575 mm (0.101 in.)
V	41449-PAX-000	2.625 mm (0.103 in.)
W	41450-PAX-000	2.675 mm (0.105 in.)
X	41451-PAX-000	2.725 mm (0.107 in.)
Y	41452-PAX-000	2.775 mm (0.109 in.)
Z	41453-PAX-000	2.825 mm (0.111 in.)
0A	41454-PAX-000	2.875 mm (0.113 in.)
0B	41455-PAX-000	2.925 mm (0.115 in.)
0C	41456-PAX-000	2.975 mm (0.117 in.)
0D	41457-PAX-000	3.025 mm (0.119 in.)

Protected by AR

BACK

Protected by AR

Driveline/Axle

Special Tools 16-2
Component Location Index 16-3
Driveshaft Inspection 16-4
Driveshaft Removal 16-4
Driveshaft Disassembly 16-6
Dynamic Damper Replacement 16-10
Driveshaft Reassembly 16-11
Driveshaft Installation 16-19
Intermediate Shaft Removal 16-21
Intermediate Shaft Disassembly 16-22
Intermediate Shaft Reassembly 16-23
Intermediate Shaft Installation 16-25

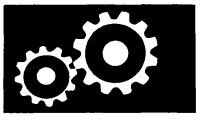

BACK

Protected by AR

Special Tools

Ref. No.	Tool Number	Description	Qty
①	07AAF-SDAA100	Ball Joint Thread Protector, 12 mm	1
②	07GAD-PH70201	Oil Seal Driver	1
③	07MAC-SL0A202	Ball Joint Remover, 28 mm	1
④	07NAF-SR30101 or 07NAF-SR34101	Half Shaft Base	1
⑤	07XAC-001010A	Threaded Adapter, 22 x 1.5 mm	1
⑥	07XAC-001020A	Threaded Adapter, 24 x 1.5 mm	1
⑦	07746-0010400	Attachment, 52 x 55 mm	1
⑧	07746-0030400	Attachment, 35 mm I.D.	1
⑨	07749-0010000	Driver	1
⑩	07947-SB00100	Oil Seal Driver	1

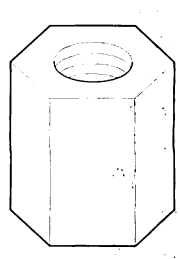

①

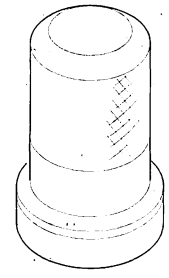

②

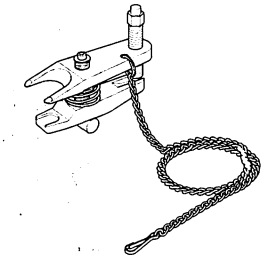

③

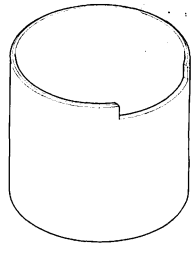

④

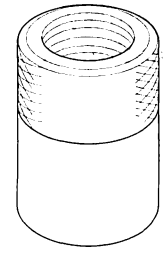

⑤, ⑥

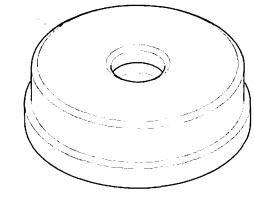

⑦

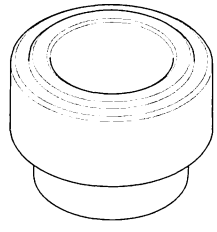

⑧

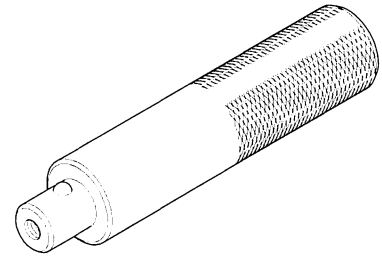

⑨

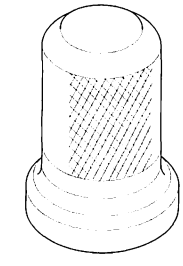

⑩

BACK

Protected by AR

Component Location Index

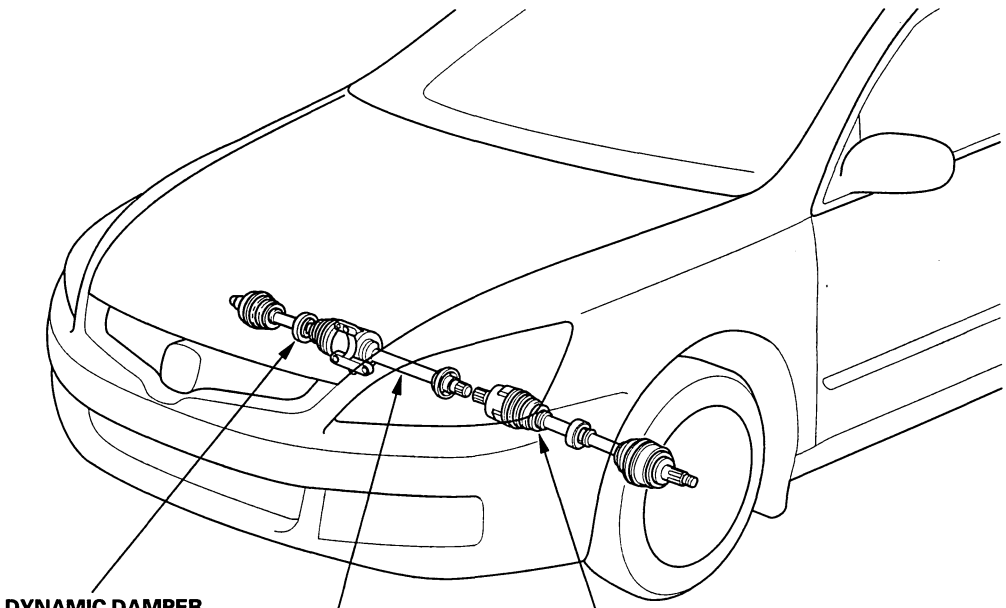

DYNAMIC DAMPER
Replacement, page 16-10

INTERMEDIATE SHAFT (M/T)
Removal, page 16-21
Disassembly, page 16-22
Reassembly, page 16-23
Installation, page 16-25

DRIVESHAFT
Inspection, page 16-4
Removal, page 16-4
Disassembly, page 16-6
Reassembly, page 16-11
Installation, page 16-19

Protected by AR

Driveshaft Inspection

1. Check the inboard boot (A) and the outboard boot (B) on the driveshaft (C) for cracks, damage, leaking grease, and loose boot bands (D). If any damage is found, replace the boot and boot bands.

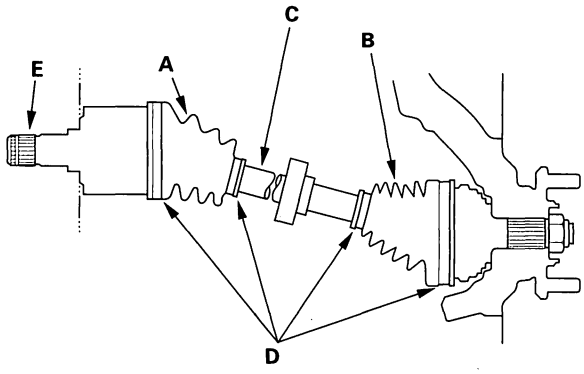

2. Turn the driveshaft by hand, and make sure the splines (E) and joint are not excessively loose.

3. Make sure the driveshaft is not twisted or cracked; if it is, replace it.

Driveshaft Removal

Special Tools Required
- Ball joint remover, 28 mm 07MAC-SL0A202
- Ball joint thread protector, 12 mm 07AAF-SDAA100

1. Loosen the wheel nuts slightly.

2. Raise the front of the vehicle, and support it with safety stands in the proper locations (see page 1-14).

3. Remove the wheel nuts and front wheels.

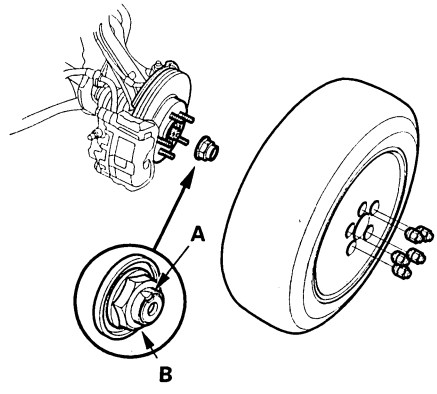

4. Lift up the locking tab (A) on the spindle nut (B), then remove the nut.

5. Drain the transmission fluid. Reinstall the drain plug using a new washer:

   - Manual transmission (see page 13-3)
   - Automatic transmission (see page 14-208)

6. Hold the stabilizer ball joint pin (A) with a hex wrench (B), and remove the flange nut (C). Separate the front stabilizer link (D) from the lower arm.

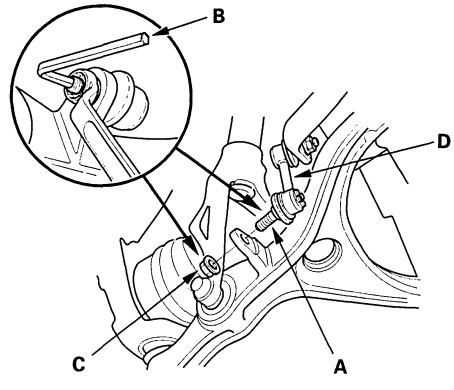

BACK

Protected by AR

7. Remove the self-locking nut (A), 12 mm flange bolt (B), and 10 mm flange bolt (C), then remove the damper fork (D).

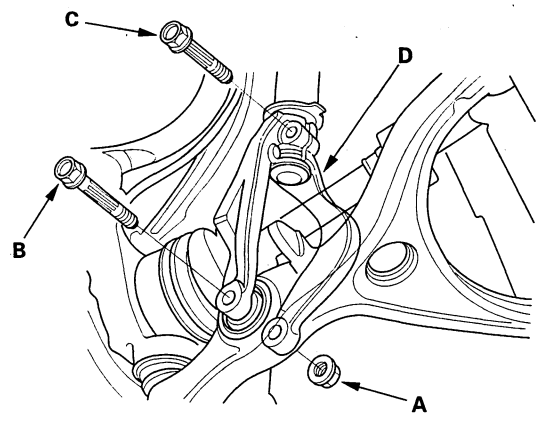

8. Remove the cotter pin (A) from the lower arm ball joint castle nut (B), and remove the nut.

NOTE:
- To avoid damaging the ball joint, install the ball joint thread protector onto the threads of the ball joint.
- Be careful not to damage the ball joint boot when installing the remover.

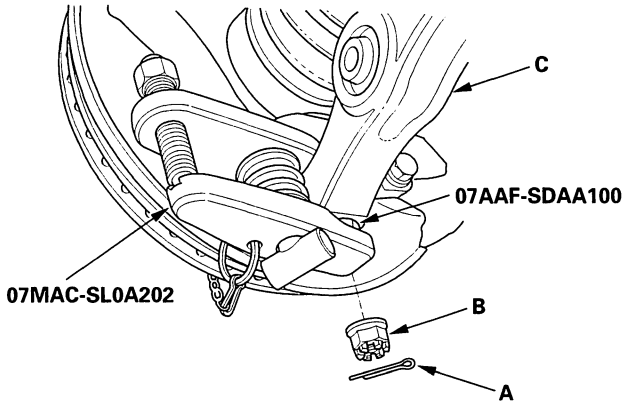

9. Separate the ball joint from the lower arm (C) with the special tool (see page 18-11).

10. Pull the knuckle outward, and remove the outboard joint from the front wheel hub using a plastic hammer.

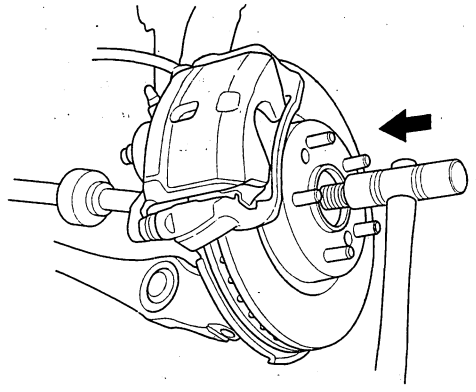

11. A/T model: Remove the heat shield.

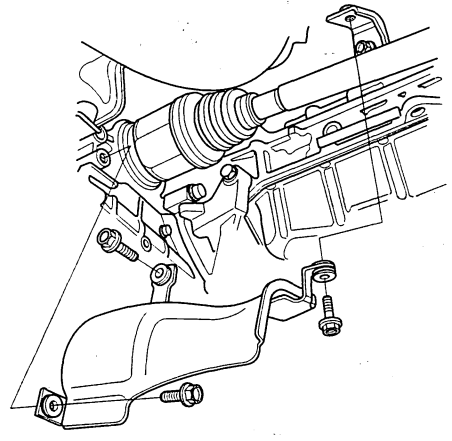

(cont'd)

Protected by AR

Driveshaft Removal (cont'd)

12. Left driveshaft: Pry the inboard joint (A) from the differential case with a prybar. Right driveshaft: Drive the inboard joint off of the intermediate shaft with a drift and hammer (M/T model). Pry the inboard joint from the differential case with a prybar (A/T model). Remove the driveshaft as an assembly. Do not pull on the driveshaft (B), because the inboard joint may come apart. Pull the driveshaft straight out to avoid damaging the oil seal.

Left driveshaft

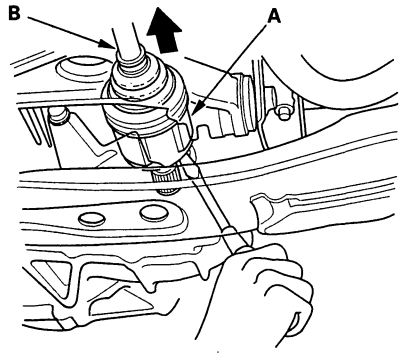

Right driveshaft

M/T model:

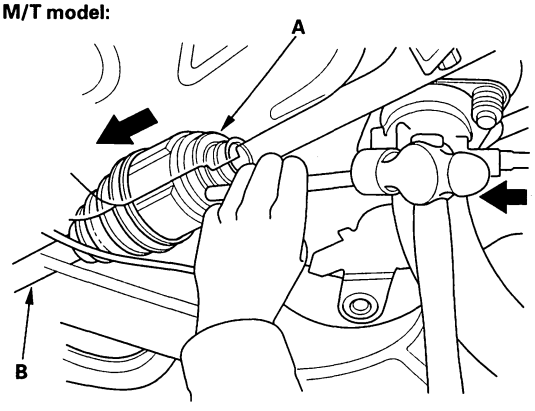

A/T model:

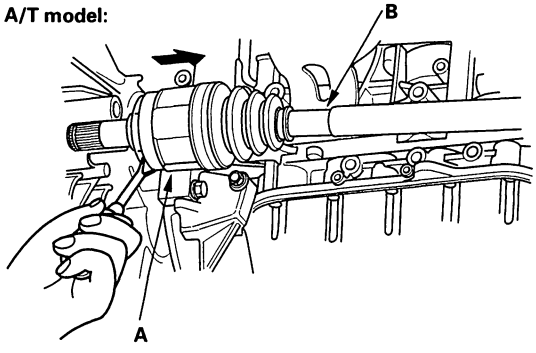

Driveshaft Disassembly

Special Tools Required
- Threaded adapter, 22 x 1.5 mm 07XAC-001010A
- Threaded adapter, 24 x 1.5 mm 07XAC-001020A
- Slide hammer, 5/8"-18 UNF, commercially available
- Boot band pincers, commercially available

Inboard Joint Side

1. Remove the set ring from the inboard joint.

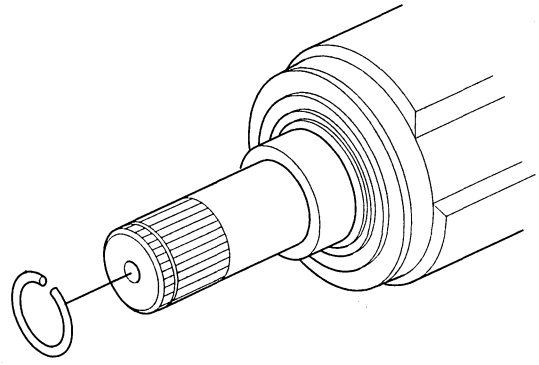

BACK

Protected by AR

2. Remove the boot bands. Be careful not to damage the boot.

   - If the boot band is a welded type (A), cut the boot band (B).
   - If the boot band is a double loop type (C), lift up the band end (D), and push it into the clip (E).
   - If the boot band is a low profile type (F), pinch the boot band using commercially available boot band pincers (G).

Welded Type

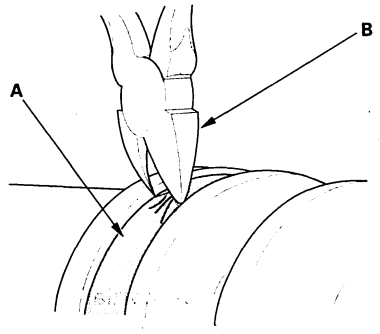

Double Loop Type

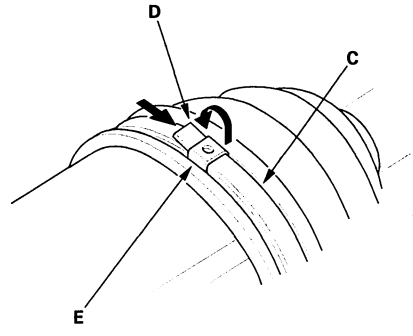

Low Profile Type

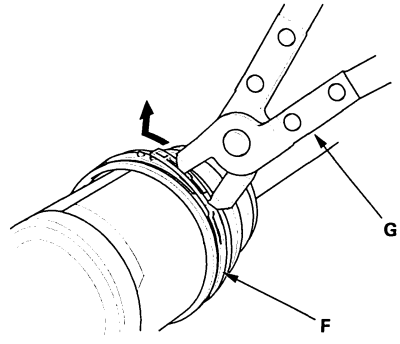

3. Make a mark (A) on each roller (B) and inboard joint (C) to identify the locations of rollers and grooves in the inboard joint. Then remove the inboard joint on the shop towel (D). Be careful not to drop the rollers when separating them from the inboard joint.

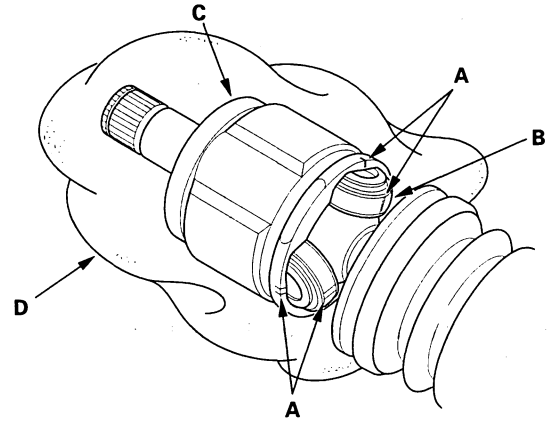

4. Make a mark (A) on the rollers (B) and spider (C) to identify the locations of the rollers on the spider, then remove the rollers.

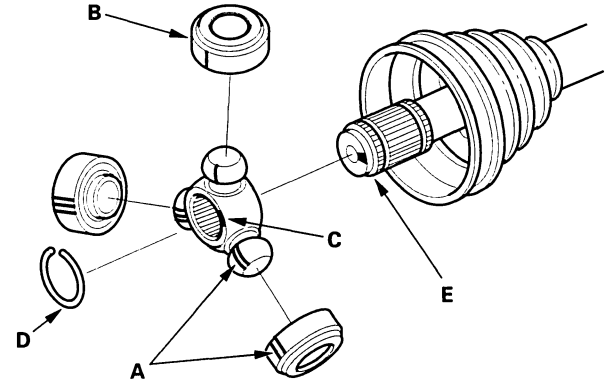

5. Remove the circlip (D).

6. Mark the spider and driveshaft (E) to identify the position of the spider on the shaft.

7. Remove the spider.

(cont'd)

Protected by AR

Driveshaft Disassembly (cont'd)

8. Wrap the splines on the driveshaft with vinyl tape (A) to prevent damage to the boot.

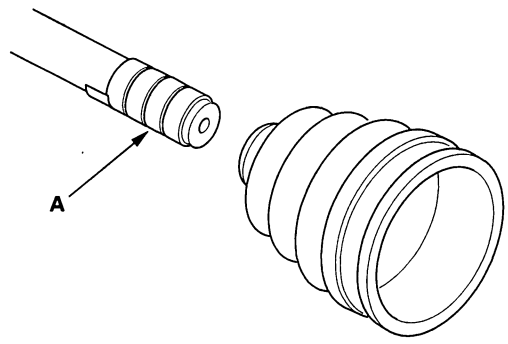

9. Remove the inboard boot. Be careful not to damage the boot.
10. Remove the vinyl tape.

Outboard Joint Side

1. Remove the boot bands (A). Lift up the three tabs (B) with a screwdriver. Be careful not to damage the boot and dynamic damper.

Ear Clamp Type

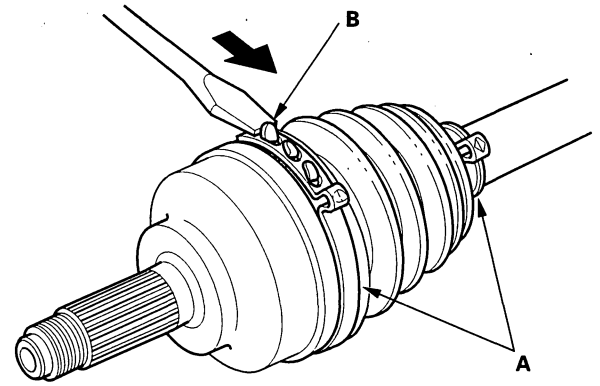

2. Slide the outboard boot (A) partially to the inboard joint side. Be careful not to damage the boot.

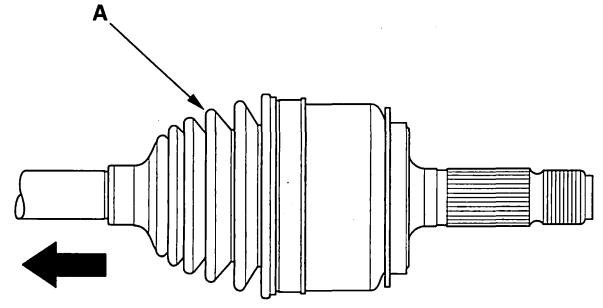

BACK

Protected by AR

3. Wipe off the grease to expose the driveshaft and the outboard joint inner race.

4. Make a mark (A) on the driveshaft (B) at the same position of the outboard joint end (C).

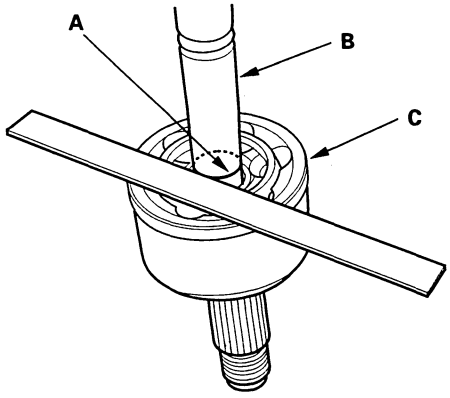

5. Carefully clamp the driveshaft in a vise.

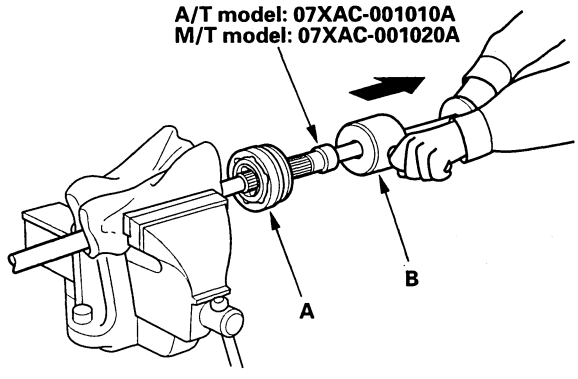

6. Remove the outboard joint (A) using the special tool and a commercially available 5/8"-18 UNF slide hammer (B).

7. Remove the driveshaft from the vise.

8. Remove the stop ring from the driveshaft.

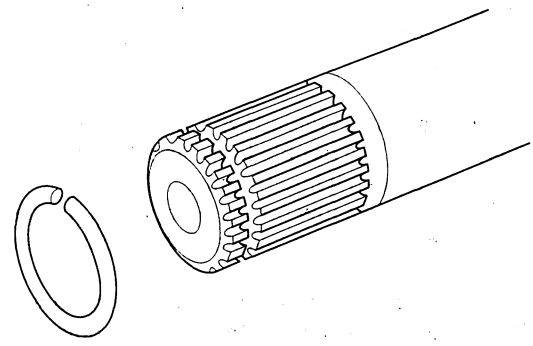

9. Wrap the splines on the driveshaft with vinyl tape (A) to prevent damage to the boot.

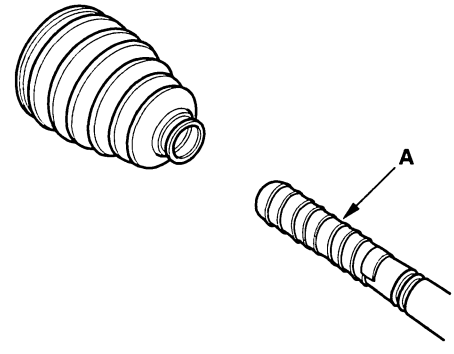

10. Remove the outboard boot. Be careful not to damage the boot.

11. Remove the vinyl tape.

Protected by AR

Dynamic Damper Replacement

1. Remove the inboard joint (see page 16-6).

2. Remove the dynamic damper bands. Be careful not to damage the dynamic damper (see step 2 on page 16-7).

   - If the band is a welded type, cut the band.
   - If the band is a double loop type, lift up the band end, and push it into the clip.
   - If the band is a low profile type, pinch the band using commercially available boot band pincers.

3. Wrap the splines on the driveshaft with vinyl tape (A) to prevent damage to the dynamic damper.

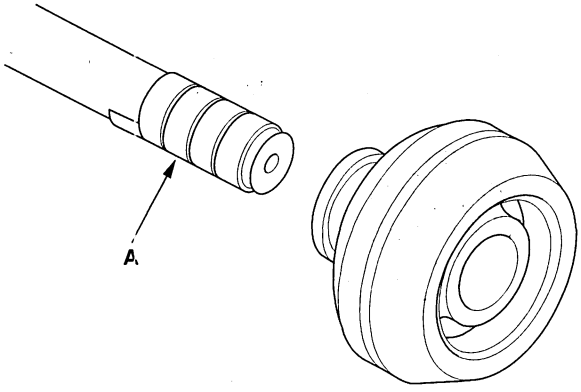

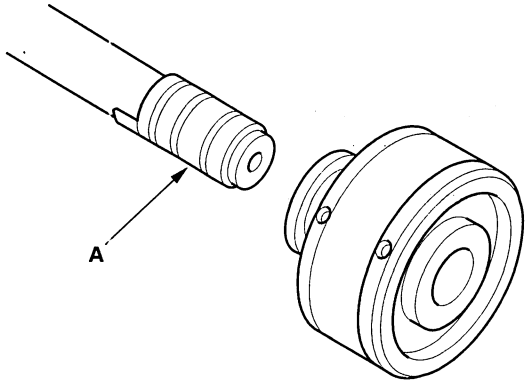

4. Remove the dynamic damper. Be careful not to damage the dynamic damper.

5. Adjust the position of the new dynamic damper to these measurements.

A/T model right driveshaft: 274—278 mm (10.79—10.94 in.)

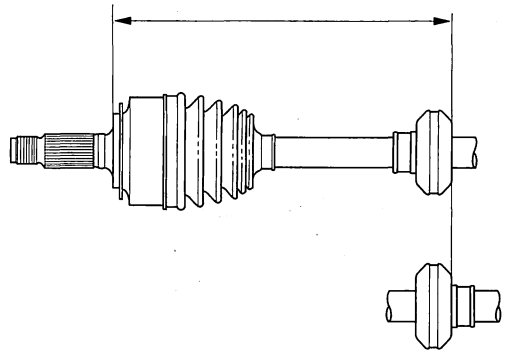

M/T model right driveshaft: 275—281 mm (10.83—11.06 in.)

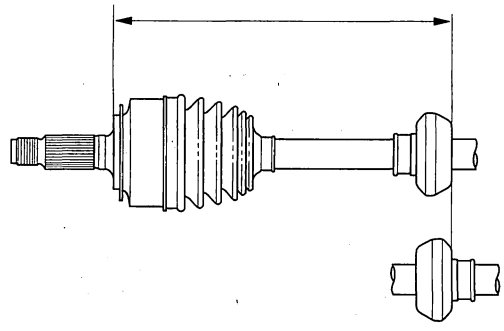

M/T model left driveshaft: 275—281 mm (10.83—11.06 in.)
A/T model left driveshaft: 283—287 mm (11.14—11.30 in.)

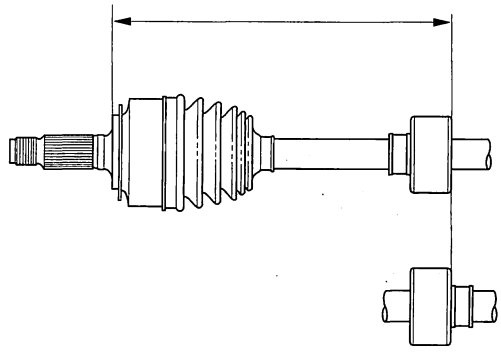

6. Install the dynamic damper band (see step 8 on page 16-13).

7. Install the inboard joint (see step 1 on page 16-12).

BACK

Protected by AR

Driveshaft Reassembly

Exploded View

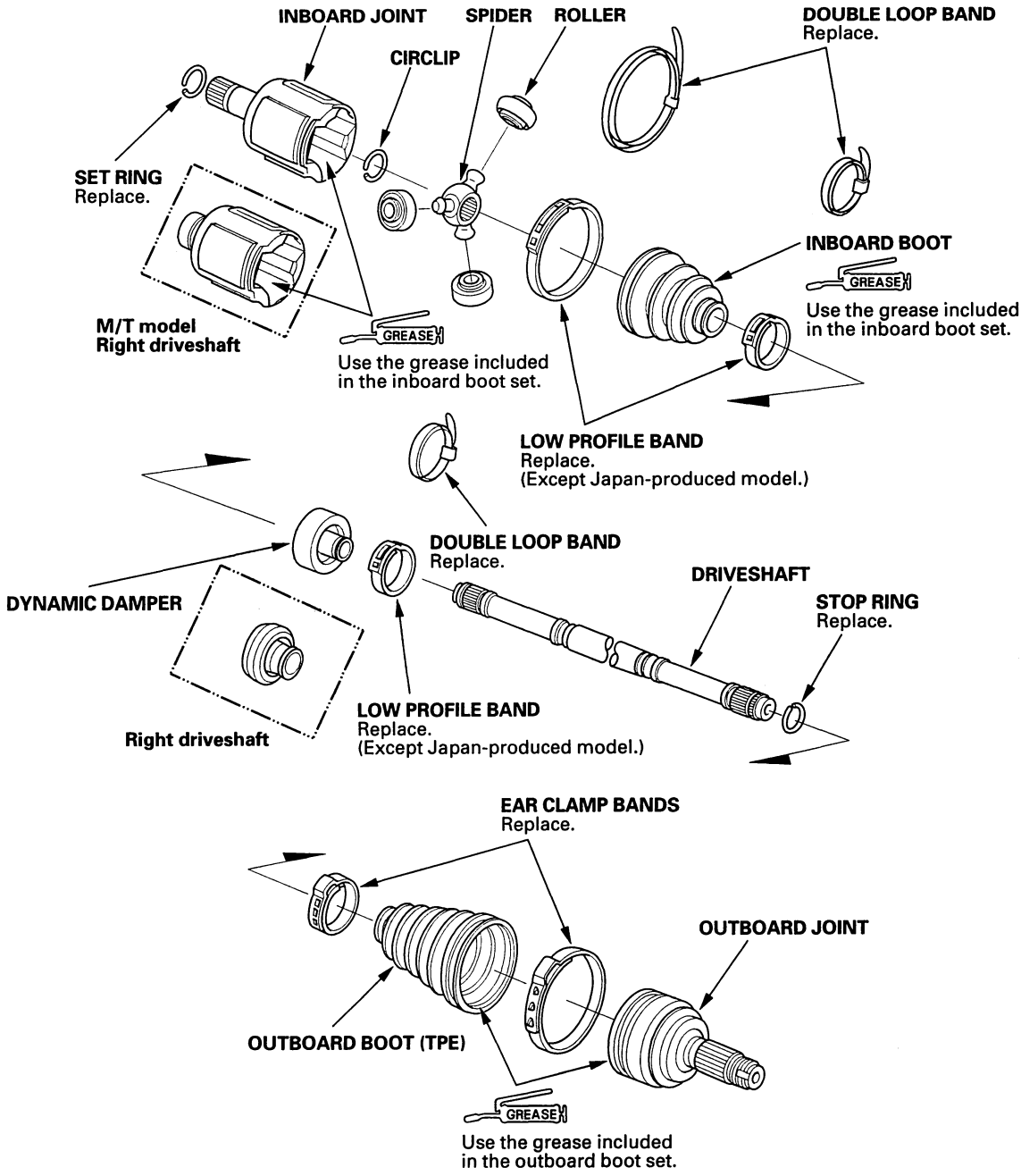

(cont'd)

Protected by AR

Driveshaft Reassembly (cont'd)

Special Tools Required
- Boot band tool, KD-3191 or equivalent, commercially available
- Boot band pincers, Kent-Moore J-35910 or equivalent, commercially available

NOTE: Refer to the Exploded View as needed during this procedure.

Inboard Joint Side

1. Wrap the splines with vinyl tape (A) to prevent damage to the inboard boot.

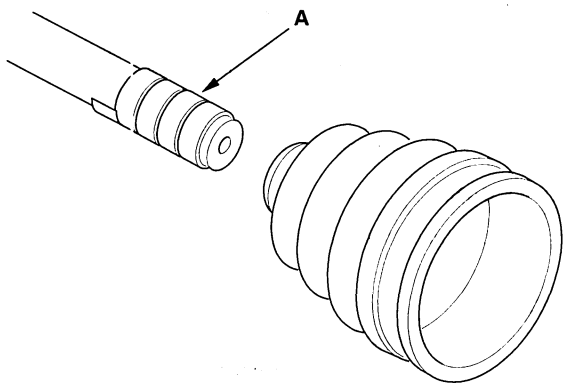

2. Install the inboard boot onto the driveshaft, then remove the vinyl tape. Be careful not to damage the inboard boot.

3. Install the spider (A) onto the driveshaft by aligning the marks (B) on the spider and the end of the driveshaft.

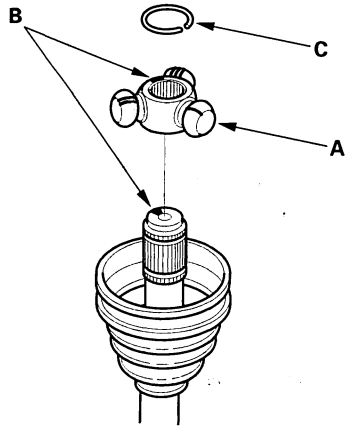

4. Fit the circlip (C) into the driveshaft groove. Rotate the circlip in its groove to make sure it is fully seated.

5. Fit the rollers (A) onto the spider (B) with their high shoulders facing outward, and note these items:
   - Reinstall the rollers in their original positions on the spider by aligning the marks (C).
   - Hold the driveshaft pointed up to prevent the rollers from falling off.

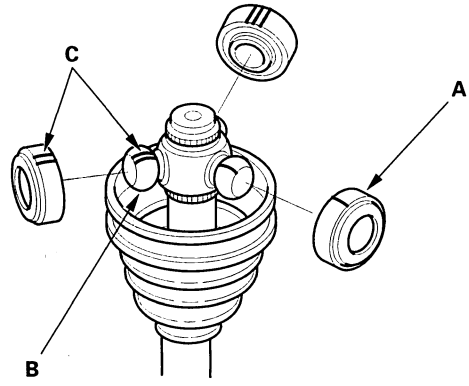

BACK

Protected by AR

6. Pack the inboard joint with the joint grease included in the new boot set.

Grease quantity
Inboard joint:
A/T model: 130—140 g (4.6—4.9 oz)
M/T model: 150—160 g (5.3—5.6 oz)

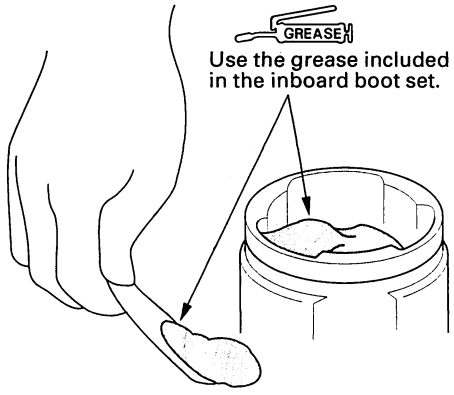

7. Fit the inboard joint onto the driveshaft, and note these items:

- Reinstall the inboard joint onto the driveshaft by aligning the marks (A) on the inboard joint and the rollers.
- Hold the driveshaft so the inboard joint is pointing up to prevent it from falling off.

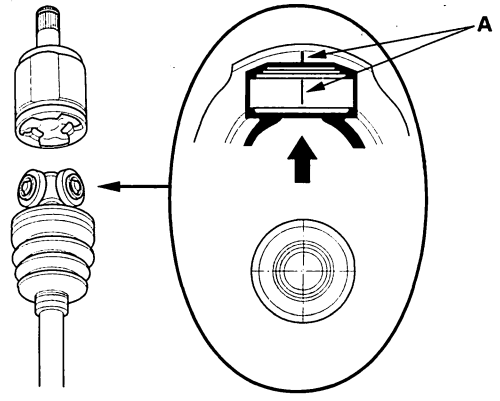

8. Install the boot bands.

- For the double loop type, go to step 13. (Boot band replacement only.)
- For the low profile type, go to step 9.

9. Install the new low profile band (A) onto the boot (B), then hook the tab (C) of the band.

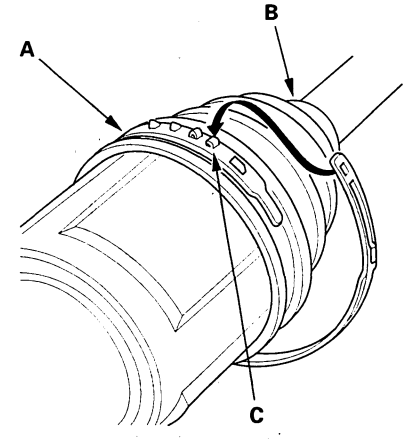

10. Close the hook portion of the band with commercially available boot band pincers (A), then hook the tabs (B) of the band.

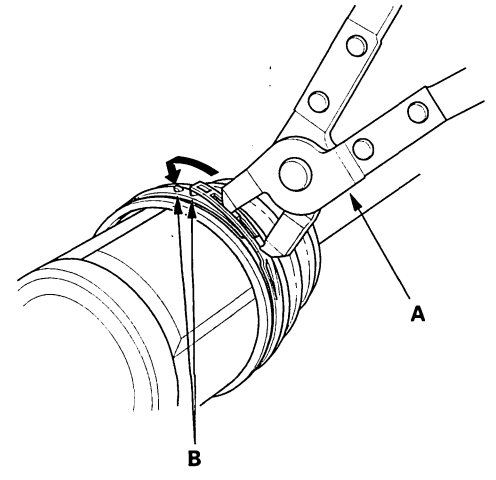

11. Install the boot band on the other end of the boot, and repeat steps 9 through 10.

(cont'd)

Protected by AR

Driveshaft Reassembly (cont'd)

12. Adjust the inboard joint until the rollers are in the middle of the joint.

13. Fit the boot ends onto the driveshaft and the inboard joint, then install the new double loop band (A) onto the boot.

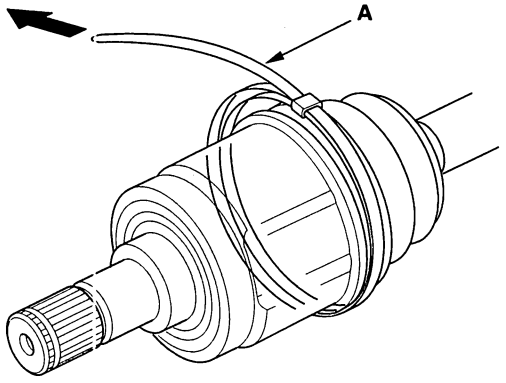

14. Pull up the slack in the band by hand.

15. Mark a position (A) on the band 10—14 mm (0.4—0.6 in.) from the clip (B).

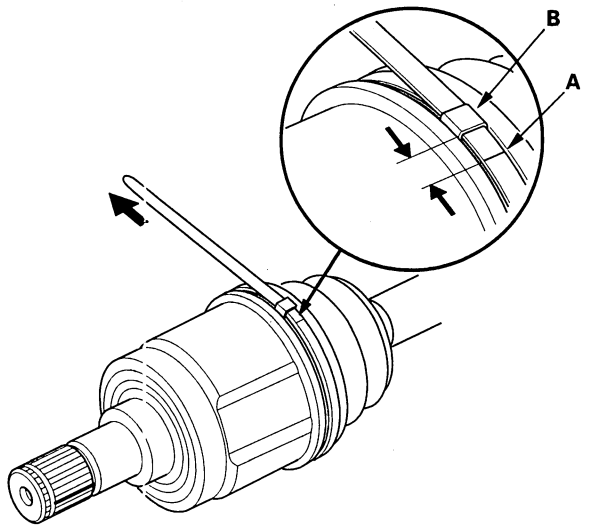

16. Thread the free end of the band through the nose section of the commercially available boot band tool KD-3191 or equivalent (A), and into the slot on the winding mandrel (B).

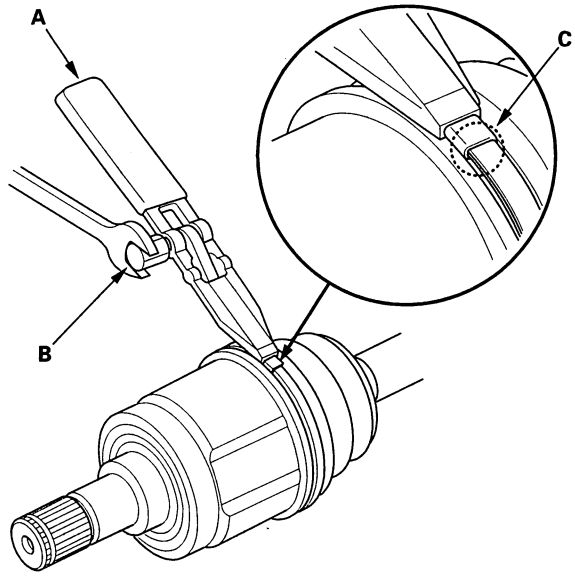

17. Place a wrench on the winding mandrel of the boot band tool, and tighten the band until the marked spot (C) on the band meets the edge of the clip.

18. Lift up the boot band tool to bend the free end of the band 90 degrees to the clip. Center-punch the clip, then fold over the remaining tail onto the clip.

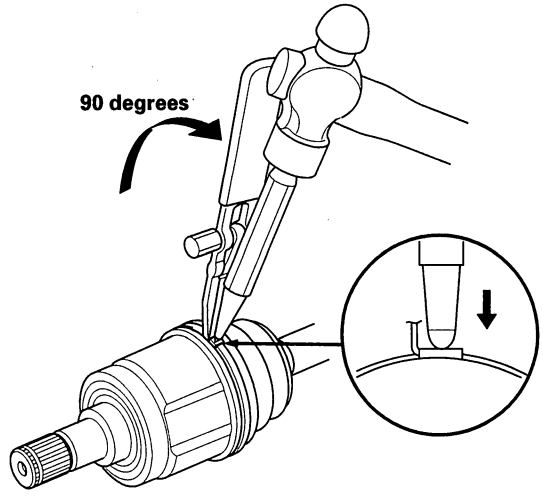

BACK

Protected by AR

19. Unwind the boot band tool, and cut off the excess free end of the band to leave a 5—10 mm (0.2—0.4 in.) tail protruding from the clip.

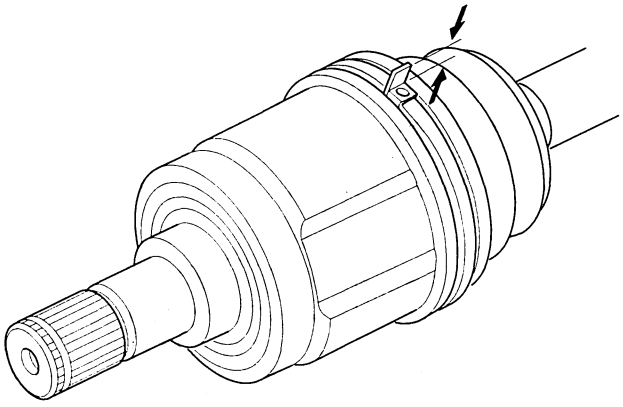

20. Bend the band end (A) by tapping it down with a hammer.

NOTE:
- Make sure the band and clip do not interfere with anything on the vehicle and the band does not move.
- Remove any grease remaining on the surrounding surfaces.

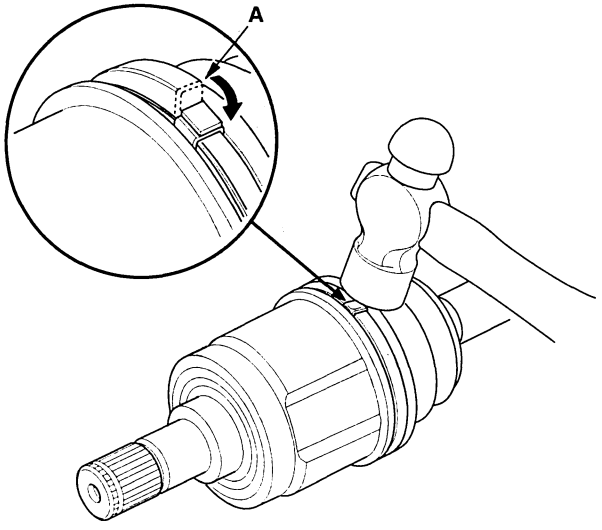

21. Repeat steps 13 through 20 for the band on the other end of the boot.

22. Install the new set ring.

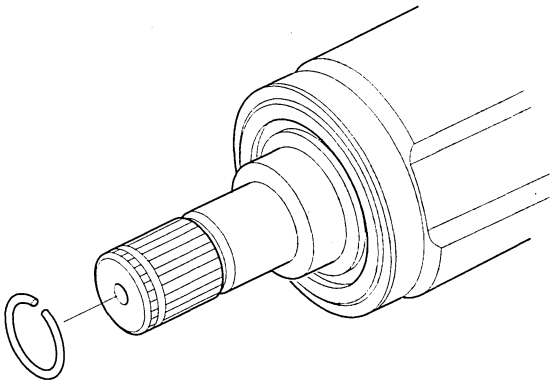

(cont'd)

Protected by AR

Driveshaft Reassembly (cont'd)

Outboard Joint Side

1. Wrap the splines with vinyl tape (A) to prevent damage to the outboard boot.

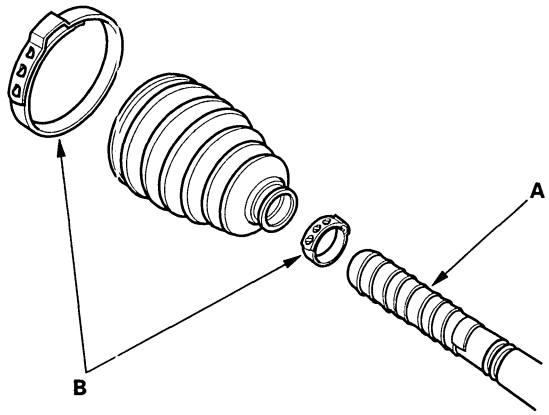

2. Install the new ear clamp bands (B) and outboard boot, then remove the vinyl tape. Be careful not to damage the outboard boot.

3. Install the new stop ring in the driveshaft groove (A).

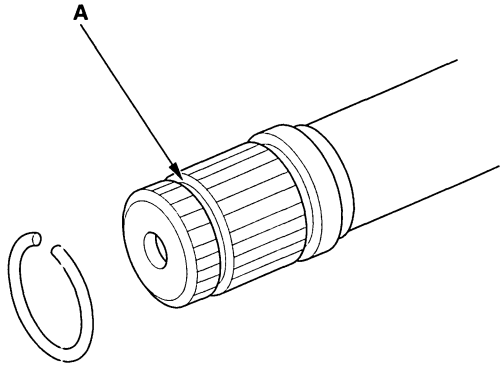

4. Insert the driveshaft (A) into the outboard joint (B) until the stop ring (C) is close to the joint.

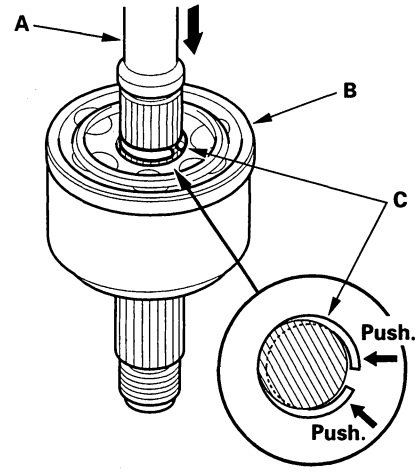

5. To completely seat the outboard joint, pick up the driveshaft and joint, and drop them from about 10 cm (4 in.) onto a hard surface. Do not use a hammer as excessive force may damage the driveshaft. Be careful not to damage the threaded section (A) of the outboard joint.

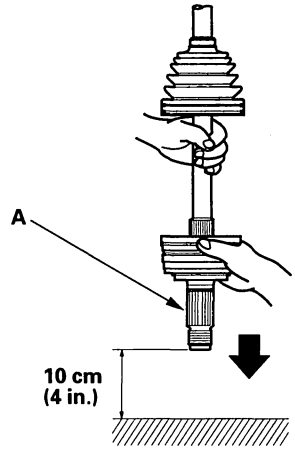

BACK

Protected by AR

6. Check the alignment of the paint mark (A) with the outboard joint end (B).

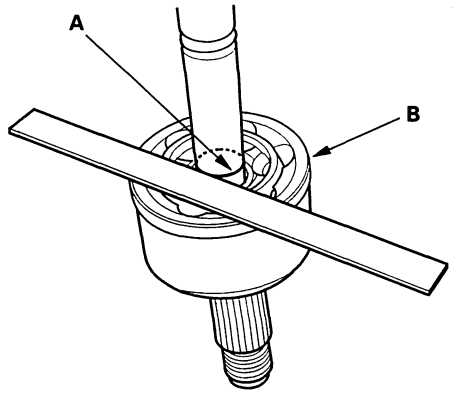

7. Pack the outboard joint (A) with the joint grease included in the new joint boot set.

Grease quantity
Outboard joint:
A/T model: 105—115 g (3.7—4.1 oz)
M/T model: 140—150 g (4.9—5.3 oz)

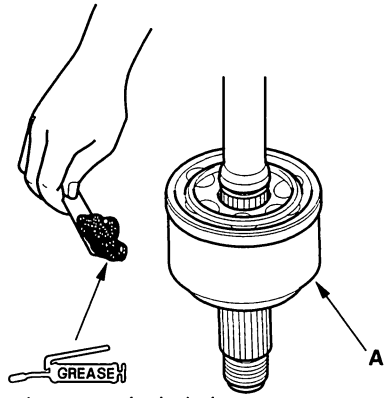

Use the grease included in the outboard boot set.

8. Adjust the length of the driveshafts to these measurements, then adjust the boots to halfway between full compression and full extension. Make sure the ends of the boots seat in the groove of the driveshaft and joint.

A/T model left driveshaft: 549—554 mm (21.61—21.81 in.)
M/T model left driveshaft: 544—549 mm (21.42—21.61 in.)

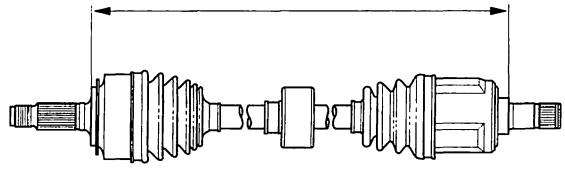

A/T model right driveshaft: 849—854 mm (33.43—33.62 in.)

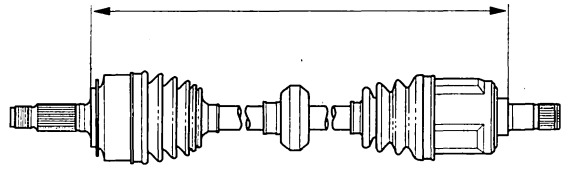

M/T model right driveshaft: 473—478 mm (18.62—18.82 in.)

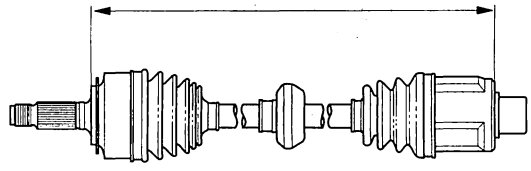

(cont'd)

Protected by AR

Driveshaft Reassembly (cont'd)

9. Fit the boot (A) ends onto the driveshaft (B) and outboard joint (C).

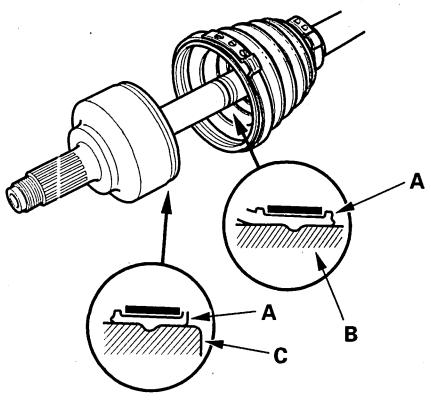

10. Close the ear portion (A) of the band with commercially available boot band pincers Kent-Moore J-35910 or equivalent (B).

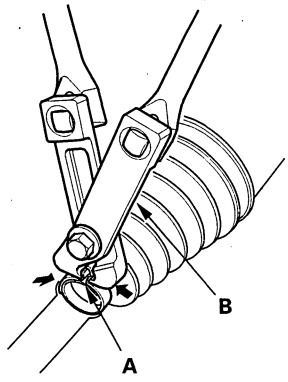

11. Check the clearance between the closed ear portion of the band. If the clearance is not within the standard, close the ear portion of the band farther.

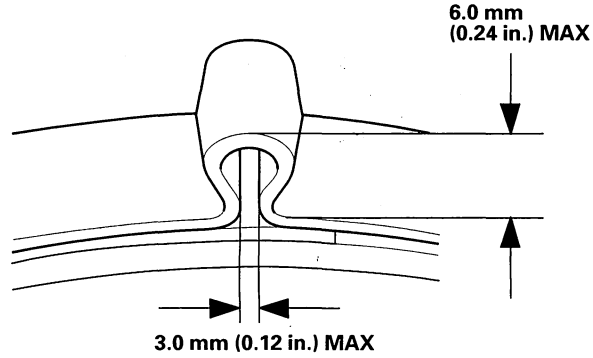

12. Repeat steps 10 and 11 for the band on the other end of the boot.

BACK

Protected by AR

Driveshaft Installation

1. Install a new set ring in the set ring groove of the driveshaft (left driveshaft).

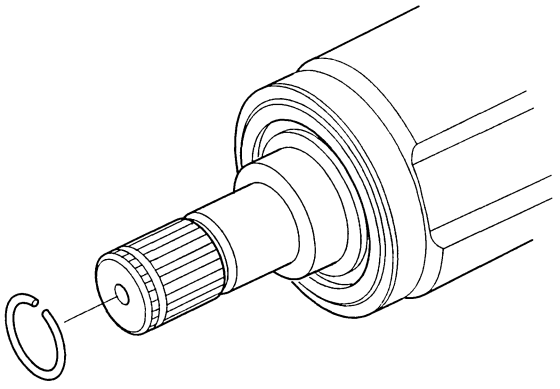

2. Apply 0.5—1.0 g (0.02—0.04 oz) of grease to the whole splined surface (A) of the right driveshaft. After applying grease, remove the grease from the splined grooves at intervals of 2—3 splines and from the set ring groove (B) so that air can bleed from the intermediate shaft.

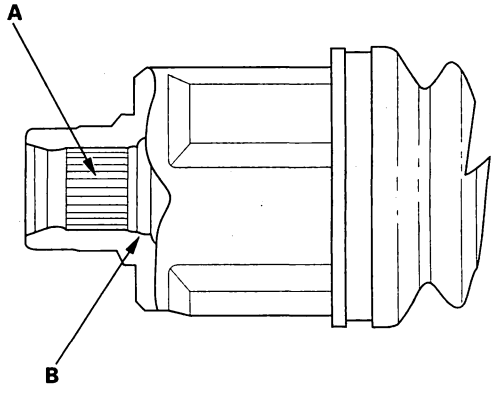

3. Clean the areas where the driveshaft contacts the differential thoroughly with solvent or brake cleaner, and dry with compressed air. Insert the inboard end (A) of the driveshaft into the differential (B) or intermediate shaft (C) until the new set ring (D) locks in the groove (E).

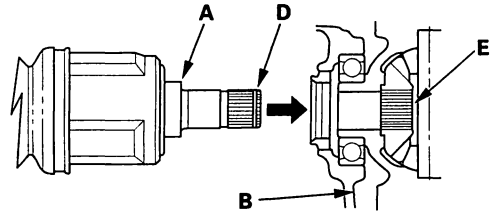

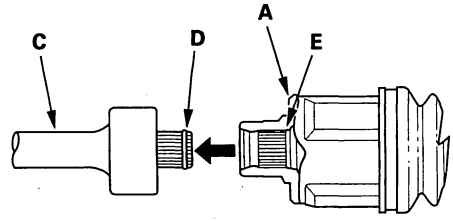

4. Install the outboard joint (A) into the front hub (B).

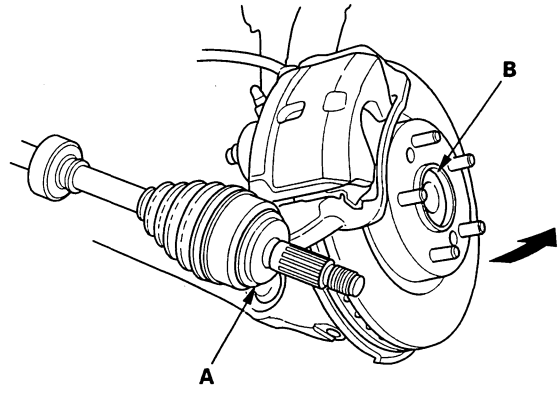

(cont'd)

Protected by AR

Driveshaft Installation (cont'd)

5. Install the heat shield (A/T model).

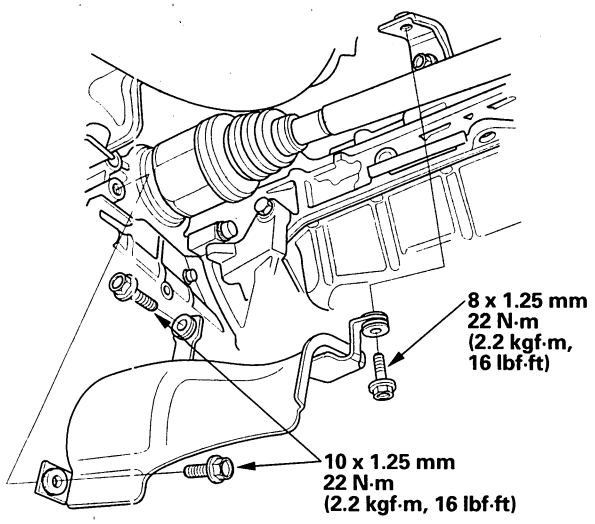

6. Clean off any grease contamination from the ball joint tapered section and threads, then install the knuckle (A) onto the lower arm (B). Torque the new castle nut (C) to the lower torque specification, then tighten it only far enough to align the slot with the ball joint pin hole. Do not align the nut by loosening it.

   NOTE: Make sure the ball joint boot is not damaged or cracked.

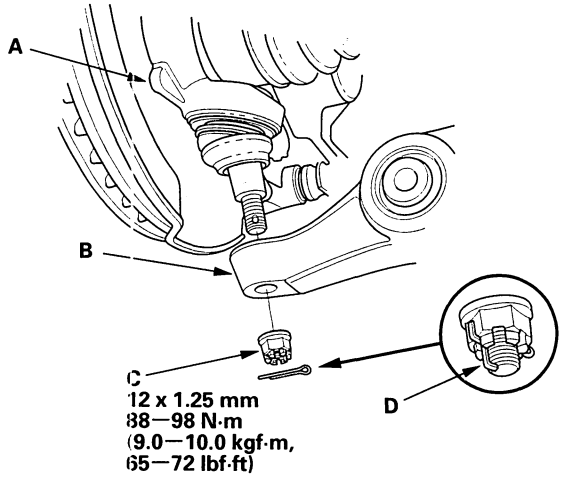

7. Install the new cotter pin (D) into the ball joint pin hole, and bend the cotter pin as shown.

8. Install the damper fork (A) over the driveshaft and onto the lower arm. Install the damper in the damper fork so the aligning tab (B) is aligned with the slot in the damper fork. Loosely install the flange bolt (C).

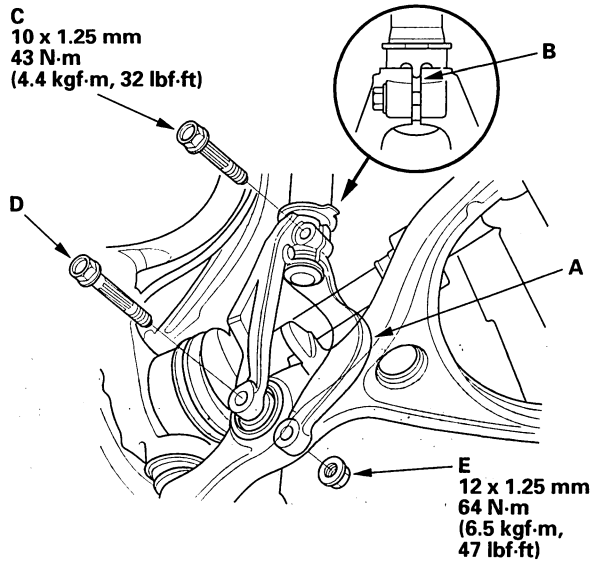

9. Loosely install the flange bolt (D) and a new self-locking nut (E).

10. Connect the front stabilizer link (A) to the lower arm. Hold the stabilizer link ball joint pin (B) with a hex wrench (C), and tighten the new flange nut (D).

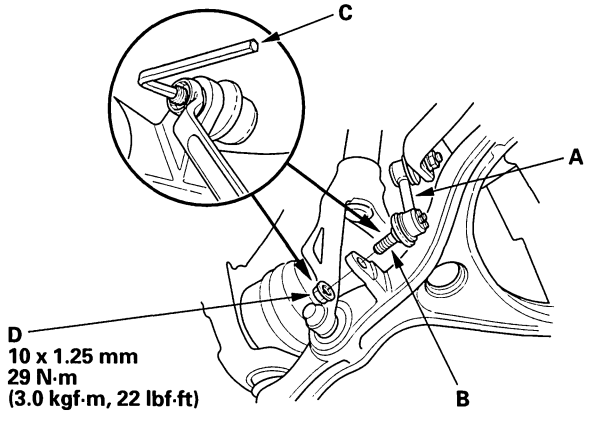

BACK

Protected by AR

11. Install a new spindle nut (A), then tighten the nut. After tightening, use a drift to stake the spindle nut shoulder (B) against the driveshaft.

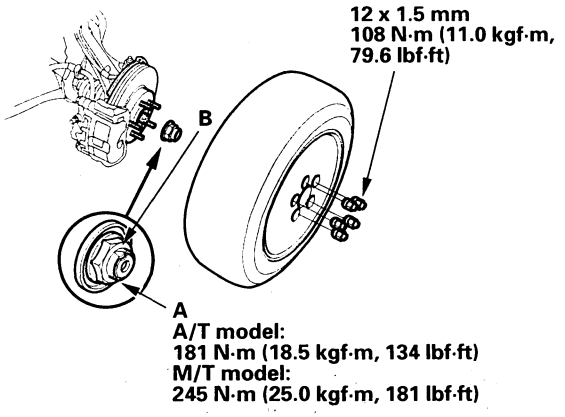

12. Clean the mating surfaces of the brake disc and the front wheel, then install the front wheel with the wheel nuts.

13. Turn the front wheel by hand, and make sure there is no interference between the driveshaft and surrounding parts.

14. Tighten the flange bolt and the self-locking nut with the vehicle's weight on the damper.

15. Refill the transmission with recommended transmission fluid:

    - Manual transmission (see page 13-3)
    - Automatic transmission (see page 14-208)

16. Check the front wheel alignment, and adjust it if necessary (see page 18-6).

Intermediate Shaft Removal

M/T model

1. Drain the transmission fluid. Reinstall the drain plug using a new washer (see page 13-3).

2. Remove the right driveshaft (see page 16-4).

3. Remove the flange bolt (A) and two dowel bolts (B).

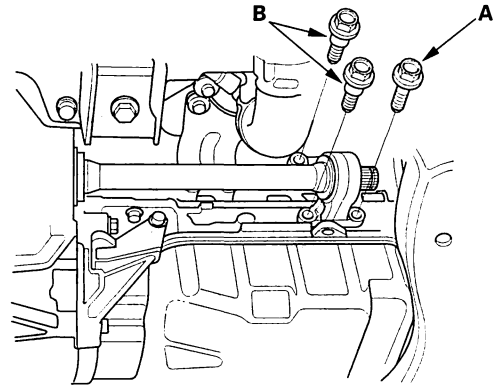

4. Remove the intermediate shaft (A) from the differential. Hold the intermediate shaft horizontal until it is clear of the differential to prevent damage to the differential oil seal (B).

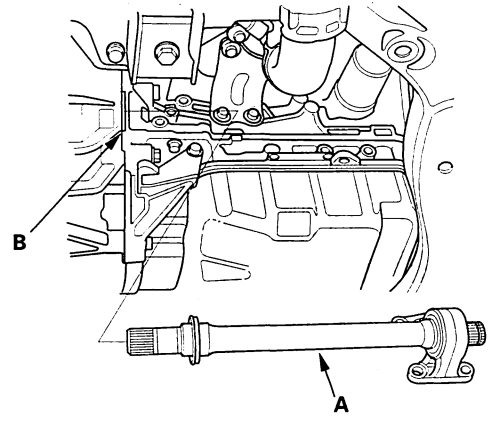

Protected by AR

Intermediate Shaft Disassembly

Special Tools Required
- Oil seal driver 07947-SB00100
- Half shaft base 07NAF-SR30101 or 07NAF-SR34101

M/T model

1. Remove the set ring (A), outer seal (B), and external snap ring (C).

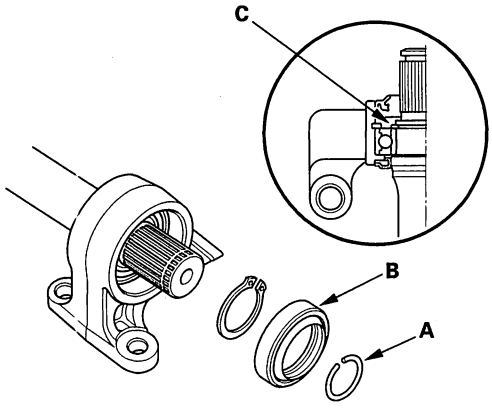

2. Press the intermediate shaft (A) out of the intermediate shaft bearing (B) using a press. Be careful not to damage the metal rings (C) on the intermediate shaft during disassembly.

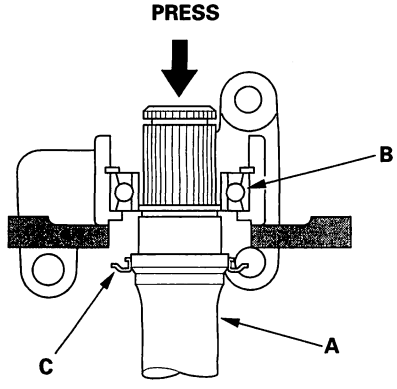

3. Remove the internal snap ring.

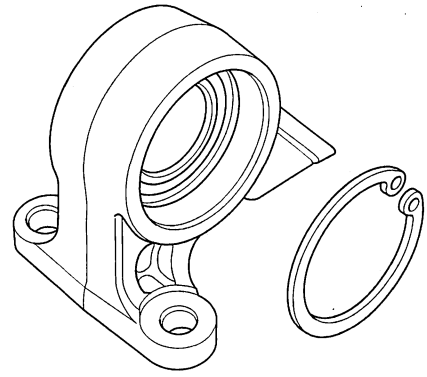

4. Press the intermediate shaft bearing (A) out of the bearing support (B) using the special tools and a press.

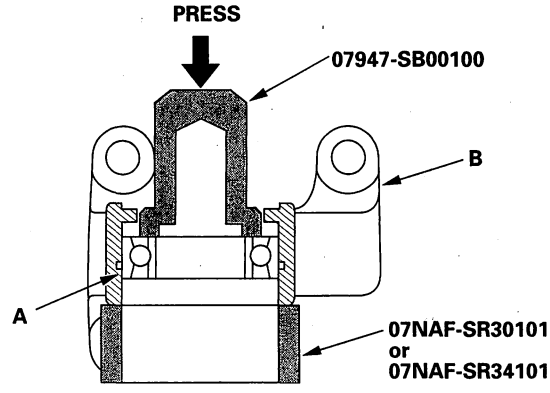

BACK

Protected by AR

Intermediate Shaft Reassembly

Exploded View

M/T model:

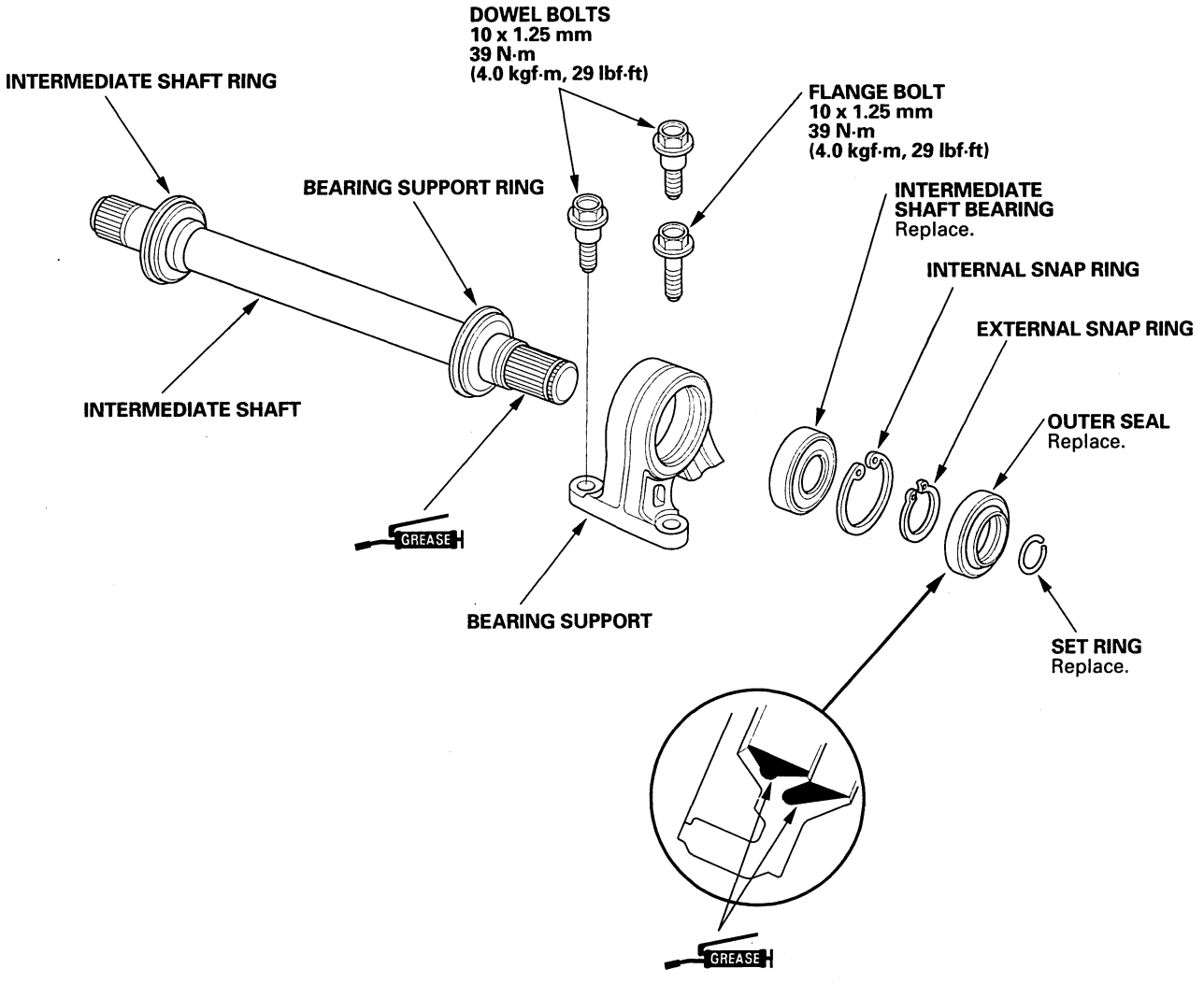

Pack the interior of the outer seal.

(cont'd)

Protected by AR

Intermediate Shaft Reassembly (cont'd)

Special Tools Required
- Driver 07749-0010000
- Attachment, 52 x 55 mm 07746-0010400
- Attachment, 35 mm I.D. 07746-0030400
- Oil seal driver 07GAD-PH70201

M/T model

NOTE: Refer to the Exploded View as needed during this procedure.

1. Clean the disassembled parts with solvent, and dry them with compressed air. Do not wash the rubber parts with solvent.

2. Press the intermediate shaft bearing (A) into the bearing support (B) using the special tools and a press.

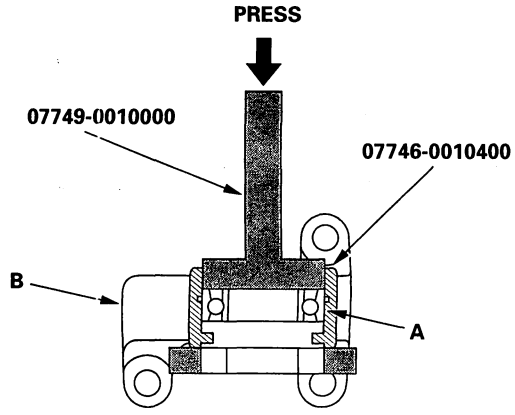

3. Install, then seat the internal snap ring in the groove of the bearing support.

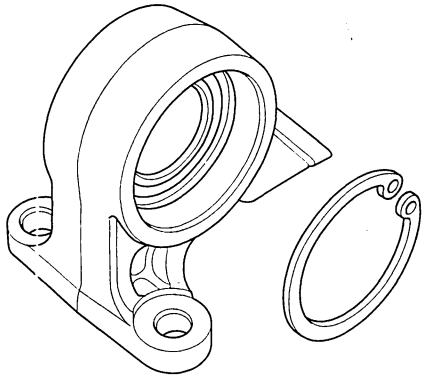

4. Press the intermediate shaft bearing (A) into the shaft bearing (B) using the special tool and a press.

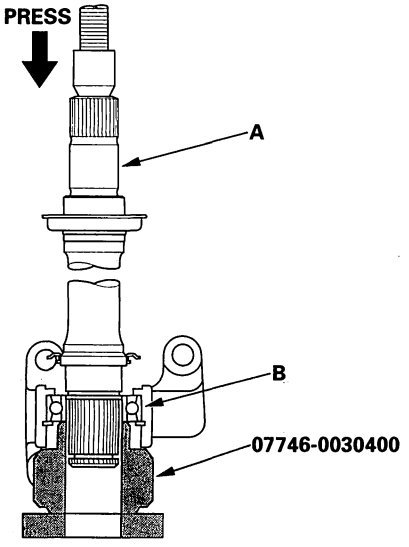

5. Install, then seat the external snap ring (A) in the groove of the intermediate shaft (B).

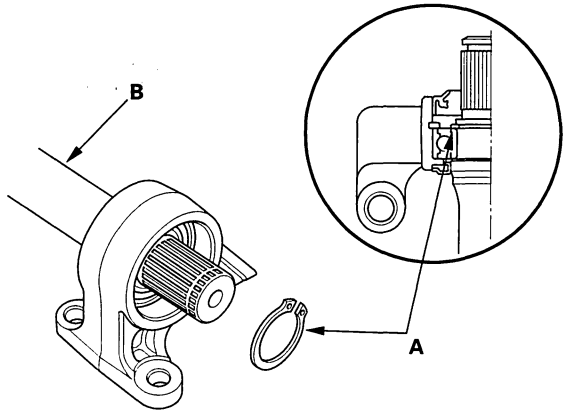

BACK

Protected by AR

6. Install the outer seal (A) into the bearing support (B) using the special tool and a press.

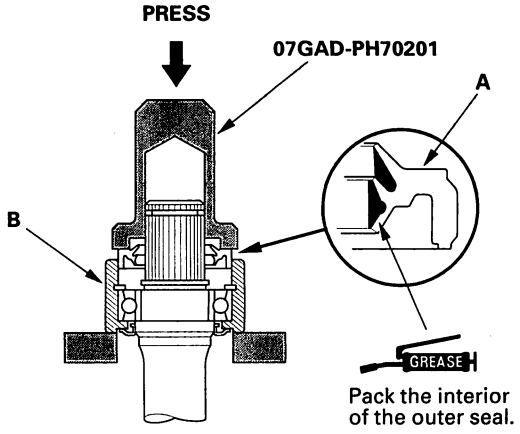

7. Install the set ring.

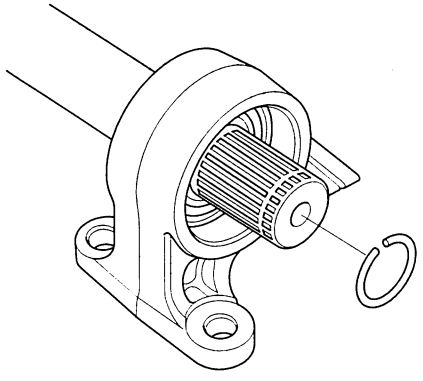

Intermediate Shaft Installation

M/T model

1. Use solvent or brake cleaner to thoroughly clean the areas where the intermediate shaft (A) contacts the transmission (differential), and dry with compressed air. Insert the intermediate shaft assembly into the differential. Hold the intermediate shaft horizontally to prevent damage to the differential oil seal (B).

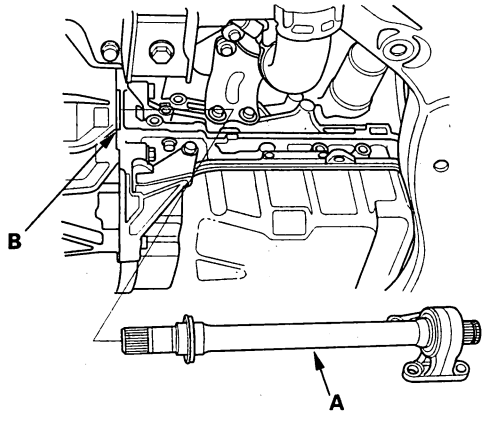

2. Install the flange bolt (A) and two dowel bolts (B).

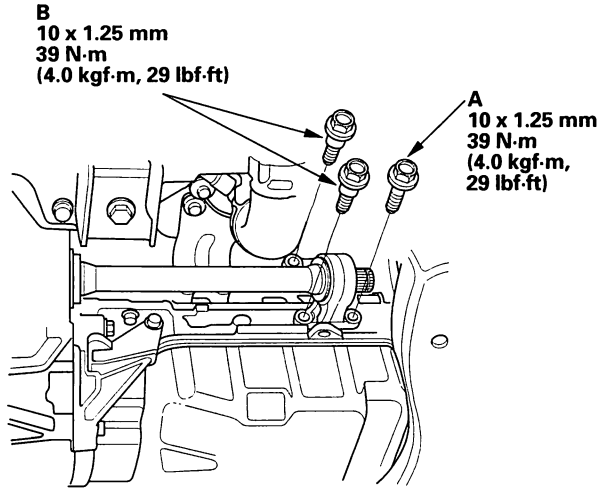

3. Install the right driveshaft (see page 16-19).

4. Refill the transmission fluid (see page 13-3).

Protected by AR

SUPPLEMENTAL RESTRAINT SYSTEM (SRS) (If steering wheel or steering column maintenance is required)

The Accord SRS includes a driver's airbag in the steering wheel hub, a passenger's airbag in the dashboard above the glove box, seat belt tensioners in the front seat belt retractors, side curtain airbags in the sides of the roof, and side airbags in the front seat-backs. Information necessary to safely service the SRS is included in this Service Manual. Items marked with an asterisk (*) on the contents page include or are located near SRS components. Servicing, disassembling, or replacing these items require special precautions and tools, and should be done only by an authorized Honda dealer.

- To avoid rendering the SRS inoperative, which could lead to personal injury or death in the event of a severe frontal or side collision, all SRS service work must be performed by an authorized Honda dealer.
- Improper service procedures, including incorrect removal and installation of the SRS, could lead to personal injury caused by unintentional deployment of the airbags and/or side airbags.
- Do not bump or impact the SRS unit, front impact sensors, or side impact sensors when the ignition switch is ON (II), or for at least 3 minutes after the ignition switch is turned OFF; otherwise, the system may fail in a collision, or the airbags may deploy.
- SRS electrical connectors are identified by yellow color coding. Related components are located in the steering column, front console, dashboard, dashboard lower panel, in the dashboard above the glove box, in the front seats, in the roof side, and around the floor. Do not use electrical test equipment on these circuits.

BACK

Protected by AR

Steering

Power Steering

Special Tools 17-2
Component Location Index 17-3
Symptom Troubleshooting Index 17-4
Symptom Troubleshooting 17-6
Steering Wheel Rotational Play Check 17-7
Power Assist Check 17-7
Steering Linkage and Gearbox Inspection 17-8
Pump Pressure Test with T/N 07406-0010001 17-9
Pump Pressure Test with T/N 07406-001000A 17-10
Fluid Leakage Inspection 17-11
Fluid Replacement 17-12
Power Steering Hose, Line, and Pressure Switch Replacement 17-13
Pump Replacement 17-14
Pump Overhaul 17-15
* Steering Wheel Removal 17-22
Steering Wheel Disassembly/Reassembly 17-23
Steering Wheel Installation 17-24
* Steering Column Removal and Installation 17-25
Steering Column/Tilt/Telescopic Inspection 17-28
Steering Lock Replacement 17-28
Rack Guide Adjustment 17-29
Steering Gearbox Removal 17-30
Steering Gearbox Overhaul 17-36
Steering Gearbox Installation 17-52
Tie-rod Ball Joint Boot Replacement 17-57
Gearbox Mount Cushion Replacement 17-57

Protected by AR

Power Steering

Special Tools

Ref. No.	Tool Number	Description	Qty
①	07GAF-PH70100	Pilot Collar	1
②	07HAG-SF10100	Piston Seal Ring Guide	1
③	07HAG-SF1020A or 07HAG-SF10200	Piston Seal Ring Sizing Tool	1
④	07MAC-SL0A202	Ball Joint Remover, 28 mm	1
⑤	07NAD-SR3020A	Cylinder End Seal Remover Attachment	1
⑥	07NAG-SR3090A	Valve Seal Ring Sizing Tool	1
⑦	07ZAB-S5A0100	Pulley Holder	1
⑧	07VAK-P8A011A	P/S Joint Adapter (Pump)	1
⑨	07ZAK-S7CA100	P/S Joint Adapter Plate (Pump)	1
⑩	07ZAK-S7CA200	P/S Joint Adapter (Hose)	1
⑪	07ZAG-S5A0300	Cylinder End Seal Slider	1
⑫	07406-0010001 or 07406-001000A	P/S Pressure Gauge	1
⑬	07746-0010100	Attachment, 32 x 35 mm	1
⑭	07749-0010000	Driver	1
⑮	07916-SA50001	Locknut Wrench, 40 mm	1
⑯	07965-SA50500	Front Hub Dis/Assembly Tool	1
⑰	07974-SA5020A or 07974-SA50200	Sleeve Seal Ring Sizing Tool	1
⑱	07974-SA50800	Ball Joint Boot Clip Guide	1

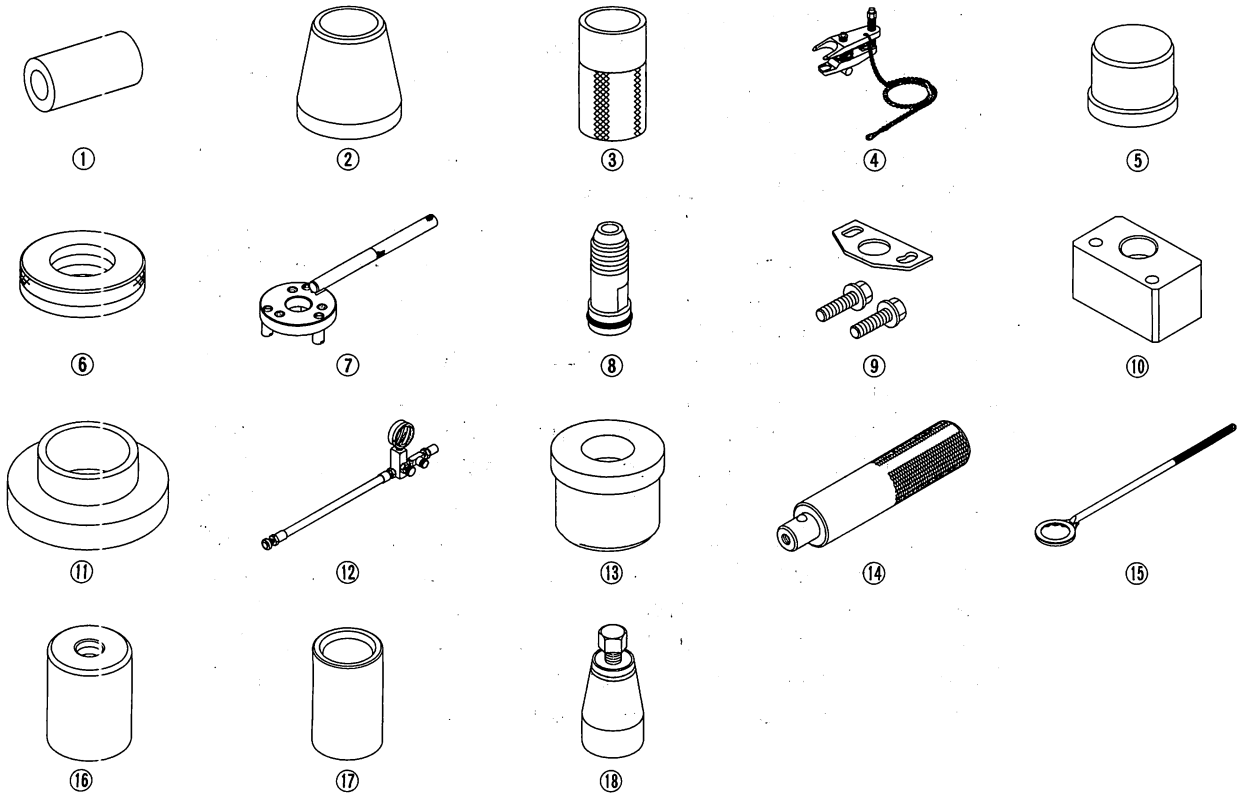

BACK

Protected by AR

Component Location Index

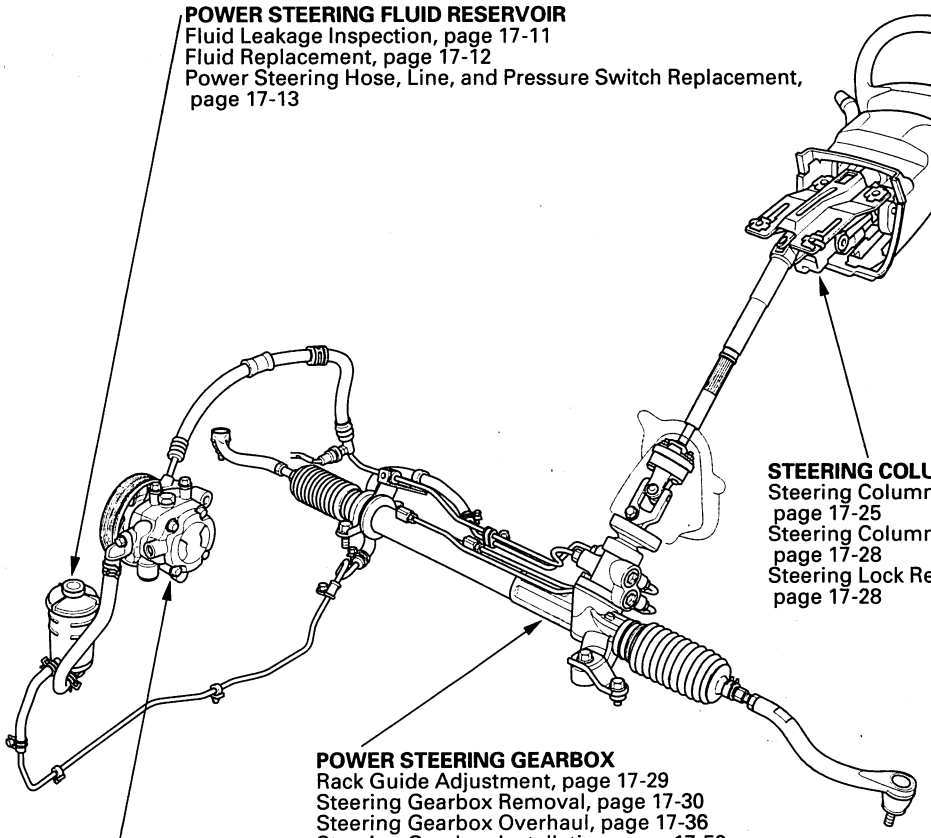

POWER STEERING FLUID RESERVOIR
Fluid Leakage Inspection, page 17-11
Fluid Replacement, page 17-12
Power Steering Hose, Line, and Pressure Switch Replacement, page 17-13

DRIVER'S AIRBAG
Replacement, page 23-197

STEERING WHEEL
Steering Wheel Removal, page 17-22
Steering Wheel Disassembly/ Reassembly, page 17-23
Steering Wheel Installation, page 17-24

STEERING COLUMN
Steering Column Removal and Installation, page 17-25
Steering Column/Tilt/Telescopic Inspection, page 17-28
Steering Lock Replacement, page 17-28

POWER STEERING GEARBOX
Rack Guide Adjustment, page 17-29
Steering Gearbox Removal, page 17-30
Steering Gearbox Overhaul, page 17-36
Steering Gearbox Installation, page 17-52
Tie-rod Ball Joint Boot Replacement, page 17-57
Gearbox Mount Cushion Replacement, page 17-57

POWER STEERING PUMP
Drive Belt Inspection, page 4-37
Drive Belt Replacement, page 4-37
Pump Pressure Test with T/N 07406-0010001, page 17-9
Pump Pressure Test with T/N 07406-001000A, page 17-10
Pump Replacement, page 17-14
Pump Overhaul, page 17-15

Protected by AR

Power Steering

Symptom Troubleshooting Index

Find the symptom in the chart below, and do the related procedures in the order listed until you find the cause.

Symptom	Procedure(s)	Also check for:
Hard steering	Troubleshoot the system (see page 17-6).	• Modified suspension • Damaged suspension • Tire sizes, tire varieties, and air pressure
Assist (excessively light steering at high speed)	Check the rack guide adjustment (see page 17-29).	Front wheel alignment (see page 18-6).
Shock or vibration when the steering wheel is turned to full lock	1. Check the rack guide adjustment (see page 17-29). 2. Check the drive belt for slippage (see page 4-37). 3. Check the power steering pump fluid pressure with T/N 07406-0010001 (see page 17-9) or T/N 07406-001000A (see page 17-10). 4. Overhaul the steering gearbox (see page 17-36).	
Steering wheel will not return smoothly	1. Check cylinder lines for deformation. 2. Check upper and lower ball joints for binding. 3. Check wheel alignment (see page 18-6). 4. Overhaul the steering gearbox (see page 17-36).	
Uneven or rough steering	1. Check the rack guide adjustment (see page 17-29). 2. Check the drive belt (see page 4-37). 3. Check low or erratic engine idle speed (see page 11-315). 4. Check for air in the power steering system due to air entering inlet side of pump. 5. Check for low fluid level in the power steering reservoir due to possible leaks in system. 6. Overhaul the steering gearbox (see page 17-36).	
Steering wheel kicks back during wide turns	1. Check the drive belt (see page 4-37). 2. Check the power steering pump fluid pressure with T/N 07406-0010001 (see page 17-9) or T/N 07406-001000A (see page 17-10).	
Humming noise from the power steering system	1. Check when the noise occurs: • If the noise is heard 2—3 minutes after starting the engine in cold weather, this is normal. • If the noise is heard when the wheel is turned with the vehicle stopped, this is normal due to the fluid pulsation. 2. Check for the high-pressure hose touching the subframe or body. 3. Check for automatic transmission converter noise. 4. Check for air bubbles in the power steering fluid, leak on inlet side of pump. 5. Check for particle contamination of fluid and restricted filter in the reservoir.	Pump pressure

BACK

Protected by AR

Power steering rack rattle or chattering	1. Check for loose steering components (tie-rod and ball joints). Tighten or replace as necessary. 2. Check the steering column shaft for wobbling. If the steering column wobbles, replace the steering column assembly (see page 17-25). 3. Check the rack guide adjustment (see page 17-29). 4. Check the power steering pump pulley. • If the pulley is loose, tighten it (see step 47 on page 17-21). • If the pump shaft is loose, replace the pump (see page 17-14).	
Hissing from the power steering system	• Check the fluid level. If low, fill the reservoir to the proper level and check for leaks. • Check the reservoir for leaks. • Check for crushed inlet hose or loose hose clamp allowing air into the suction side of the system. • Check the power steering pump shaft oil seal for leaks.	Air in the P/S fluid
Noise from the power steering pump	• Compare the pump noise at normal operating temperature to another like vehicle (pump noise up to 2—3 minutes after starting the engine in cold weather is normal). • Remove and inspect the pump for wear and damage (see page 17-15).	• P/S pump pressure • Air in the P/S fluid
Squeaking from the power steering pump	Check the drive belt (see page 4-37).	
Fluid leaks from the steering gearbox	• Fluid leaks from the top of the valve body unit: Overhaul the valve body unit (see page 17-36). • Fluid leaks from the left boot: Replace the valve oil seal on the pinion shaft. Replace the cylinder end seal on the gearbox side. • Fluid leaks from the right boot: Replace the right cylinder end seal. • Fluid leaks from pinion shaft near the lower steering joint bolt: Overhaul the valve body unit. • Fluid leaks from the steering damping valve covers on the valve body unit: Replace the valve housing.	
Fluid leaks from the power steering line	• Fluid leaks from the cylinder line connections (flare nuts): Tighten the connection and retest. • Fluid leaks from damaged cylinder lines: Replace the cylinder line. • Fluid leaks from the pump outlet hose or return line fitting on the valve body unit (flare nuts): Tighten the fitting and retest. If it still leaks, replace the hose, the line, or valve body unit as necessary.	
Fluid leaks from the power steering pump	• Fluid leaks from the front oil seal: Replace the front oil seal. • Fluid leaks from the power steering pump housing: Replace the leaking O-rings or seals (see page 17-15), and if necessary replace the power steering pump (see page 17-14).	
Fluid leaks from the power steering reservoir	• Fluid leaks from around the reservoir cap: Fluid level is too high; drain the reservoir to the proper level. Aerated fluid: check for an air leak on the inlet side of pump. • Fluid leaks from reservoir: Check the reservoir for cracks and replace as necessary.	
Fluid leaks from the power steering pump outlet hose (high-pressure)	• Check the fitting for loose bolts. If the bolts are tight, replace the fitting O-ring. • Fluid leaks at the swagged joint: Replace the outlet hose.	
Fluid leaks from the power steering pump inlet hose (low-pressure)	Check the hose for damage, deterioration, or improper assembly. Replace or repair as necessary.	

Protected by AR

Symptom Troubleshooting

Hard Steering

1. Check the power assist (see page 17-7).

   Is the starting load more than 29 N (3.0 kgf, 6.6 lbf)?

   YES—Go to step 2.

   NO—Power assist is OK.■

2. Measure steady-state fluid pressure from the pump at idle with T/N 07406-0010001 (see page 17-9) or T/N 07406-001000A (see page 17-10).

   Is the pressure 1,470 kPa (15 kgf/cm², 213 psi) or less?

   YES—Go to step 3.

   NO—Go to step 7.

3. Measure the pump relief pressure at idle with T/N 07406-0010001 (see step 10 on page 17-9) or T/N 07406-001000A (see step 9 on page 17-10).

   Is the pressure 7,160—7,850 kPa (73—80 kgf/cm², 1,040—1,140 psi) or less?

   YES—Go to step 4.

   NO—Faulty pump assembly.■

4. With a spring scale, measure the power assist in both directions, to the left and to the right.

   Are the two measurements within 2.9 N (0.3 kgf, 0.66 lbf) of each other?

   YES—Go to step 5.

   NO—Go to step 8.

5. Measure the fluid pressure with both pressure gauge valves open (if so equipped), while turning the steering wheel fully to the left and fully to the right.

   Is the pressure 7,160—7,850 kPa (73—80 kgf/cm², 1,040—1,140 psi) or less?

   YES—Go to step 6.

   NO—Faulty gearbox.■

6. Adjust the rack guide (see page 17-29), and retest.

   Is the steering OK?

   YES—Repair is completed.■

   NO—Faulty gearbox.■

7. Check the feed and return lines between the pump and the gearbox for clogging and deformation.

   Are the lines clogged or deformed?

   YES—Repair or replace the lines.■

   NO—Faulty valve body unit or pump.■

8. Check the cylinder lines for deformation (see page 17-11).

   Are the lines deformed?

   YES—Replace the lines.■

   NO—Go to step 9.

9. Check for a bent rack shaft or misadjusted rack guide (too tight).

   Is the rack shaft bent or the rack guide adjusted too tight?

   YES—Replace the rack shaft or readjust the rack guide.■

   NO—Faulty valve body unit.■

BACK

Protected by AR

Steering Wheel Rotational Play Check

1. Turn the front wheels to the straight ahead position.
2. Measure how far you can turn the steering wheel left and right without moving the front wheels.
   - If the play is within the limit, the gearbox and linkages are OK.
   - If the play exceeds the limit, adjust the rack guide (see page 17-29). If the play is still excessive after rack guide adjustment, inspect the steering linkage and gearbox (see page 17-8).

Rotational play: 0—10 mm (0—0.39 in.)

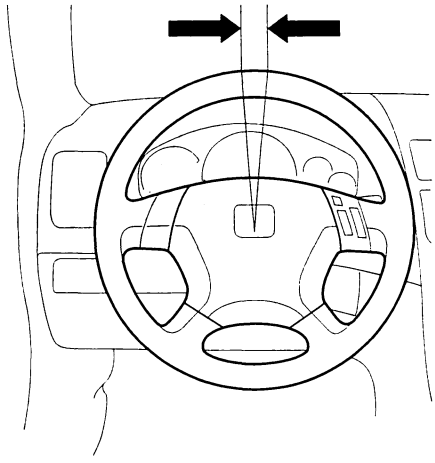

Power Assist Check

NOTE: This test should be done with original equipment tires and wheels at the correct tire pressure.

1. Check the power steering fluid level (see page 17-12).
2. Start the engine, let it idle, and turn the steering wheel from lock-to-lock several times to warm up the fluid.
3. Attach commercially available spring scale to the steering wheel. With the engine idling and the vehicle on a clean, dry floor, pull the scale as shown and read it as soon as the tires begin to turn.
   - If the scale reads no more than the specifications, the gearbox and pump are OK.
   - If the scale reads more than specifications, troubleshoot the steering system (see page 17-6).

Initial turning load: 29 N (3.0 kgf, 6.6 lbf)

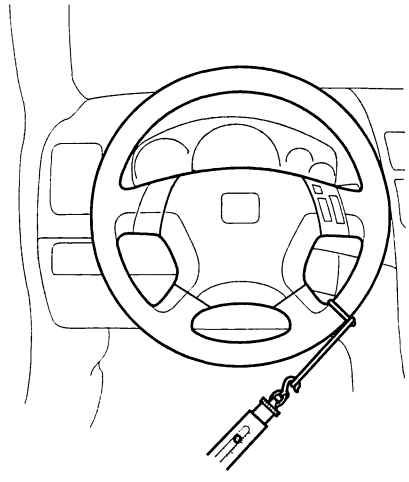

Protected by AR

Steering Linkage and Gearbox Inspection

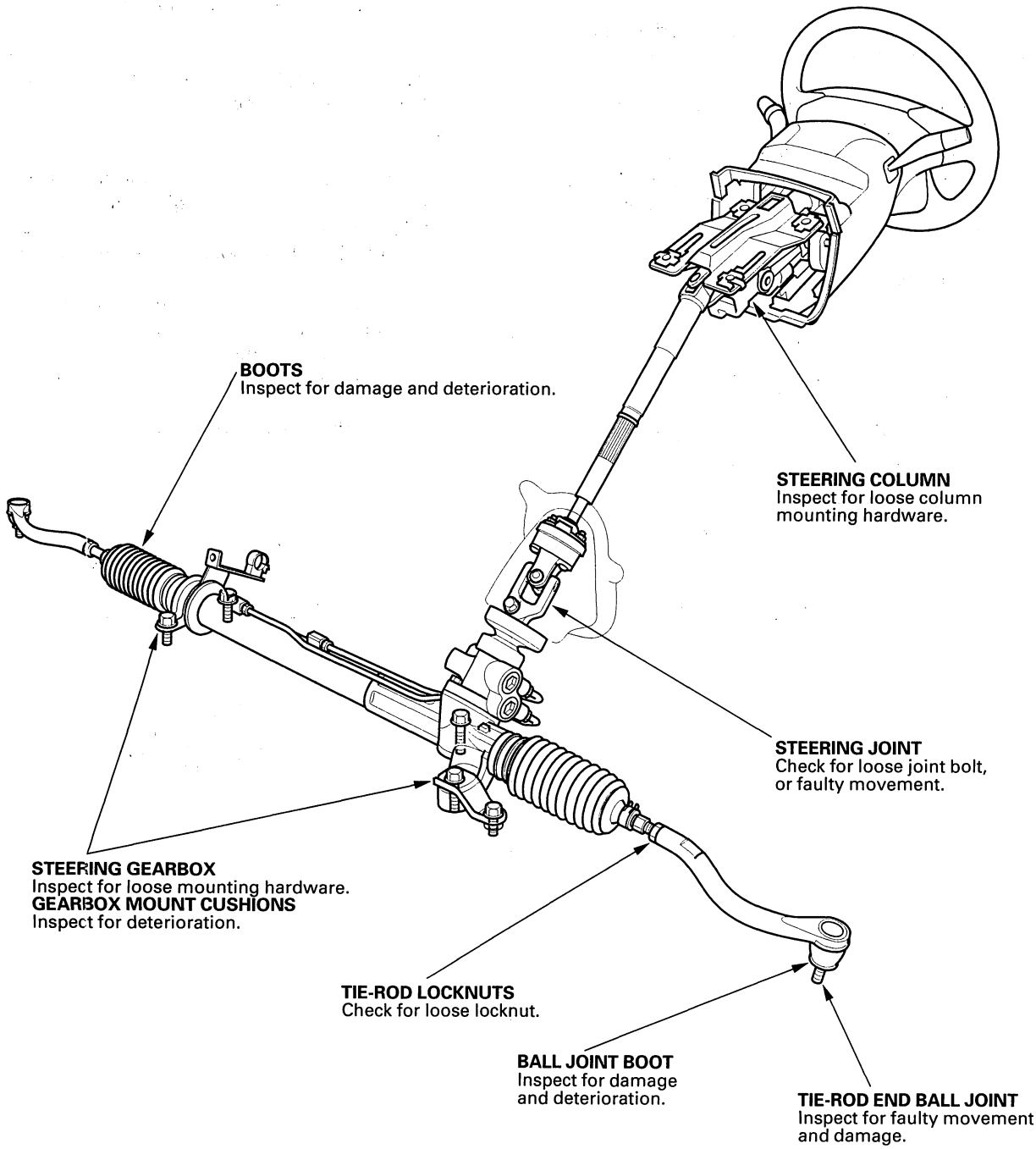

BACK

Protected by AR

Pump Pressure Test with T/N 07406-0010001

Special Tools Required
- P/S joint adapter (pump) 07VAK-P8A011A
- P/S joint adapter plate (pump) 07ZAK-S7CA100
- P/S joint adapter (hose) 07ZAK-S7CA200
- P/S pressure gauge 07406-0010001

Check the fluid pressure as follows to determine whether the trouble is in the pump or gearbox.

1. Check the power steering fluid level (see page 17-12).

2. Disconnect the pump outlet hose (A) from the pump outlet with care so as not to spill the power steering fluid on the frame and other parts. Install the P/S joint adapter (pump) on the pump outlet (B).

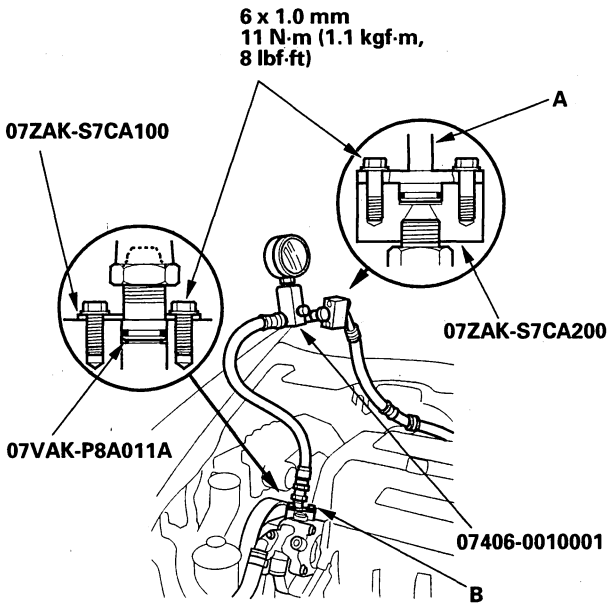

3. Connect the P/S joint adapter (hose) to the P/S pressure gauge, then connect the pump outlet hose to the P/S joint adapter (hose).

4. Install the P/S pressure gauge to the P/S joint adapter (pump).

5. Fully open the shut-off valve (A).

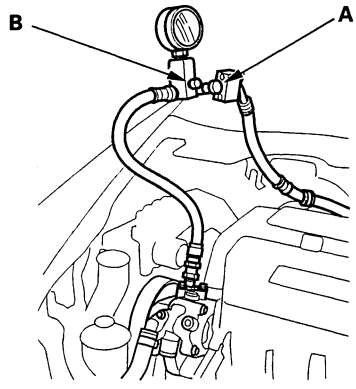

6. Fully open the pressure control valve (B).

7. Start the engine and let it idle.

8. Turn the steering wheel from lock-to-lock several times to warm the fluid to operating temperature at 158 °F (70 °C).

9. Measure steady-state fluid pressure while the engine is idling. If the pump is in good condition, the pressure should be no more than 1,470 kPa (15 kgf/cm², 214 psi). If the pressure is too high, check the outlet hose or valve body unit (see Steering System Troubleshooting).
   Raise the engine speed to 3,000 rpm, and measure the fluid pressure. If the pump is in good condition, the pressure should be at least 1,470 kPa (15 kgf/cm², 214 psi). If the pressure is too high, repair or replace the pump.

10. Lower the engine speed and let it idle. Close the shut-off valve, then close the pressure control valve gradually until the pressure gauge needle is stable. Read the pressure.

    NOTICE
    Do not keep the shut-off valve closed more than 5 seconds or the pump could be damaged by over-heating.

11. Immediately open the shut-off valve fully. If the pump is in good condition, the gauge should read at least 7,160—7,850 kPa (73—80 kgf/cm², 1,040—1,140 psi). A low reading means pump output is too low for full assist. Repair or replace the pump.

Protected by AR

Pump Pressure Test with T/N 07406-001000A

Special Tools Required
- P/S joint adapter (pump) 07VAK-P8A011A
- P/S joint adapter plate (pump) 07ZAK-S7CA100
- P/S joint adapter (hose) 07ZAK-S7CA200
- P/S pressure gauge 07406-001000A

Check the fluid pressure as follows to determine whether the trouble is in the pump or gearbox.

1. Check the power steering fluid level (see page 17-12).

2. Disconnect the pump outlet hose (A) from the pump outlet with care so as not to spill the power steering fluid on the frame and other parts. Install the P/S joint adapter (pump) on the pump outlet (B).

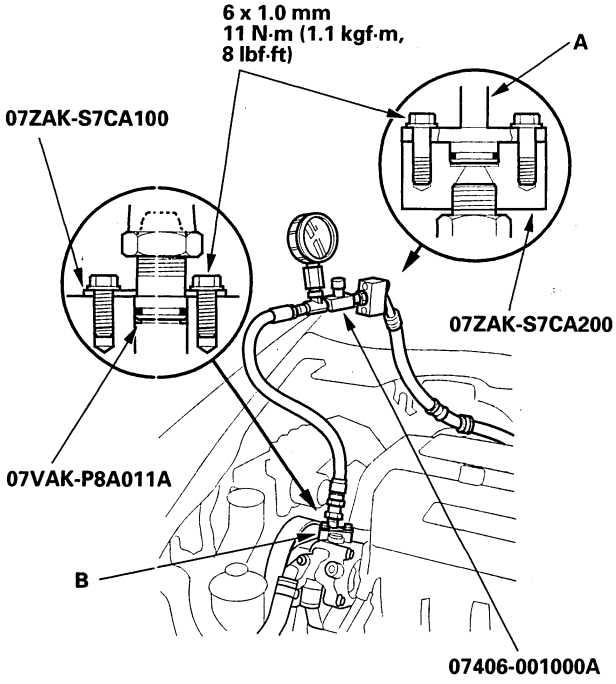

3. Connect the P/S joint adapter (hose) to the P/S pressure gauge, then connect the pump outlet hose to the P/S joint adapter (hose).

4. Install the P/S pressure gauge to the P/S joint adapter (pump).

5. Open the pressure control valve (A) fully.

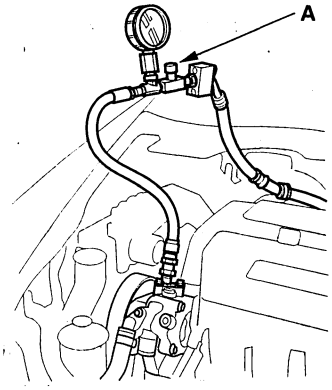

6. Start the engine and let it idle.

7. Turn the steering wheel from lock-to-lock several times to warm the fluid to operating temperature at 158 °F (70 °C).

8. Measure steady-state fluid pressure while the engine is idling. If the pump is in good condition, the pressure should be no more than 1,470 kPa (15 kgf/cm², 213 psi). If the pressure is too high, check the outlet hose or valve body unit (see Steering System Troubleshooting).
   Raise the engine speed to 3,000 rpm, and measure the fluid pressure. If the pump is in good condition, the pressure should be at least 1,470 kPa (15 kgf/cm², 213 psi). If the pressure is too high, repair or replace the pump.

9. Lower the engine speed and let it idle. Gradually close the pressure control valve and immediately read the pressure.

   NOTICE
   Do not keep the pressure control valve closed more than 5 seconds or the pump could be damaged by over-heating.

10. Immediately open the pressure control valve fully. If the pump is in good condition, the gauge should read at least 7,160—7,850 kPa (73—80 kgf/cm², 1,040—1,140 psi). A low reading means pump output is too low for full assist. Repair or replace the pump.

BACK

Protected by AR

Fluid Leakage Inspection

PUMP ASSEMBLY
Check for leaks at the pump seal and inlet and outlet fittings.

GEARBOX and VALVE BODY UNIT
Check for leaks at the mating surface and flare nut connections.

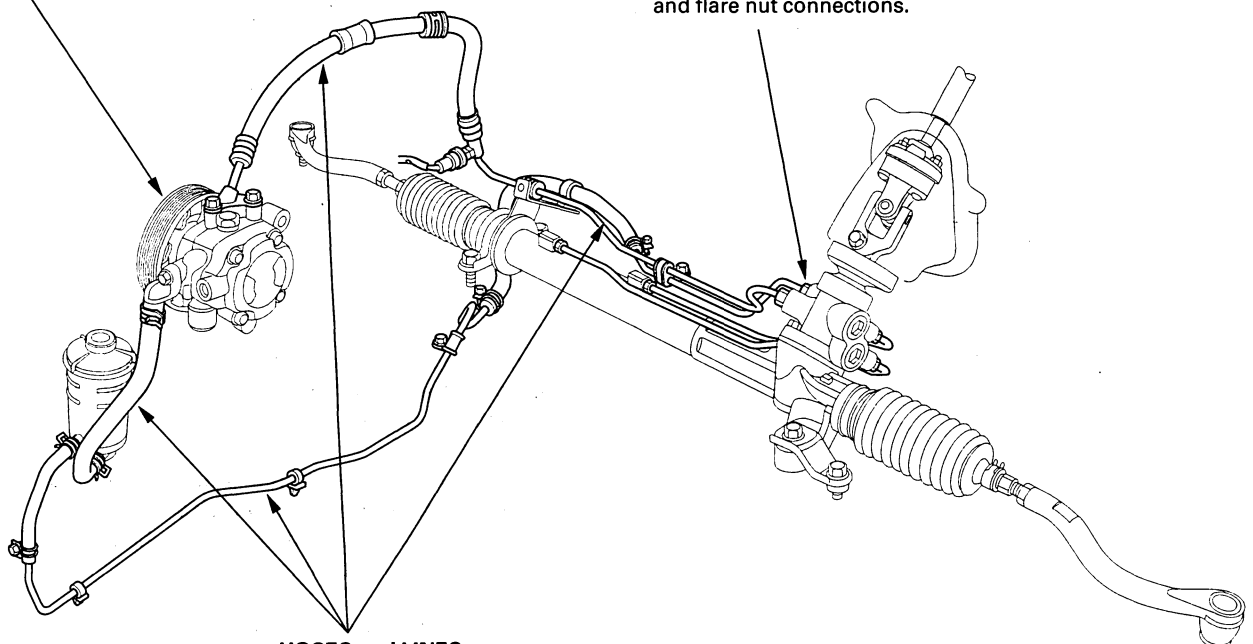

HOSES and LINES
Inspect hoses for damage, leaks, interference, and twisting.
Inspect fluid lines for damage, rusting, and leakage.
Check for leaks at hose and line joints and connections.

Protected by AR

Fluid Replacement

Check the reservoir (A) at regular intervals, and add the recommended fluid as necessary. Always use Honda Power Steering Fluid. Using any other type of power steering fluid or automatic transmission fluid can cause increased wear and poor steering in cold weather.

System capacity:
1.1 L (1.16 US. qt) at disassembly
Reservoir capacity:
0.4 L (0.42 US. qt)

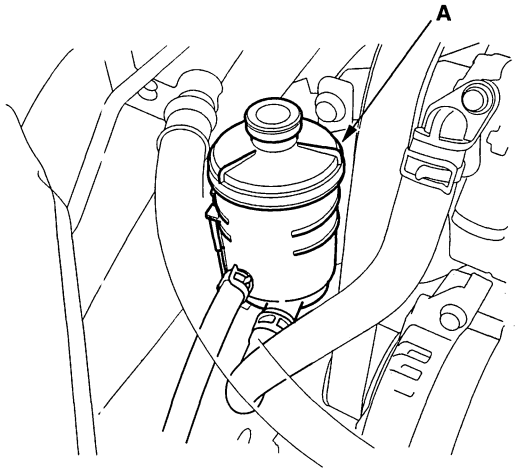

1. Raise the reservoir, then disconnect the return hose (A) to drain the reservoir. Take care not to spill the fluid on the body and parts. Wipe off any spilled fluid at once.

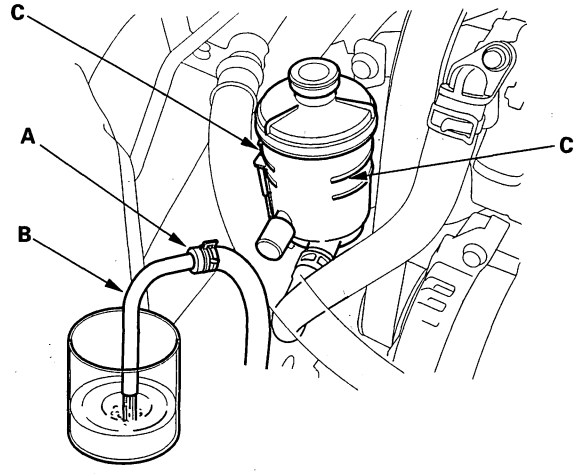

2. Connect a hose (B) of suitable diameter to the disconnected return hose, and put the hose end in a suitable container.
3. Start the engine, let it run at idle, and turn the steering wheel from lock-to-lock several times. When fluid stops running out of the hose, shut off the engine. Discard the fluid.
4. Reinstall the return hose on the reservoir.
5. Fill the reservoir to the upper level line (C).
6. Start the engine and run it at fast idle, then turn the steering wheel from lock-to-lock several times to bleed air from the system.
7. Recheck the fluid level and add more if necessary. Do not fill the reservoir beyond the upper level line.
8. If the fluid is contaminated, dark, or discolored, repeat procedure as necessary.

BACK

Protected by AR

Power Steering Hose, Line, and Pressure Switch Replacement

Note these items during installation:

- Connect each hose to the corresponding line securely until it contacts the stop on the line. Install the clamp or adjustable clamp at the specified distance from the hose end as shown.
- Check all clamps for deterioration or deformation; replace the clamps with new ones if necessary.
- Add the recommended power steering fluid to the specified level on the reservoir and check for leaks.

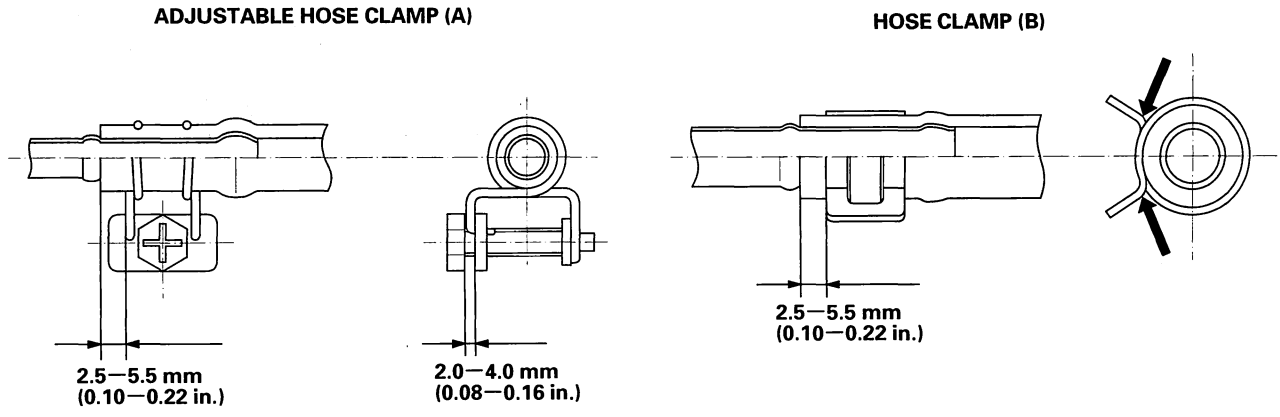

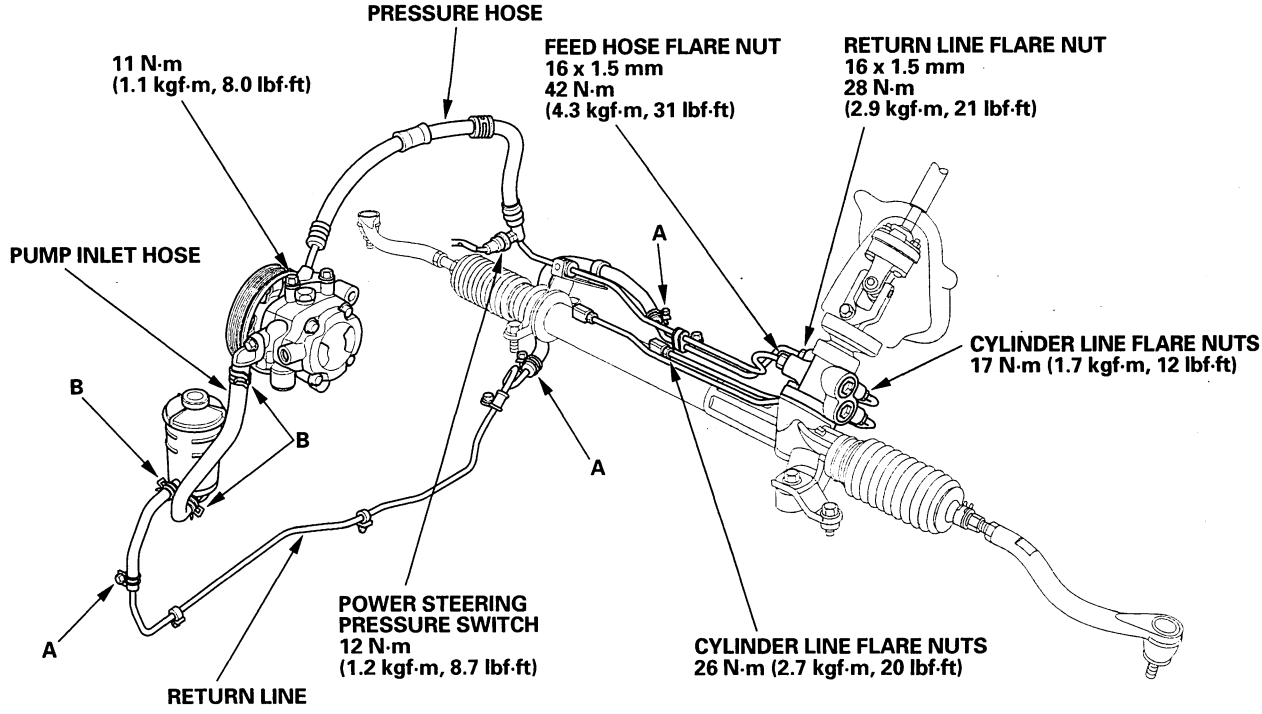

Protected by AR

Pump Replacement

1. Place a suitable container under the vehicle.
2. Drain the power steering fluid from the reservoir.
3. Remove the drive belt (A) from the pump pulley (see page 4-37).

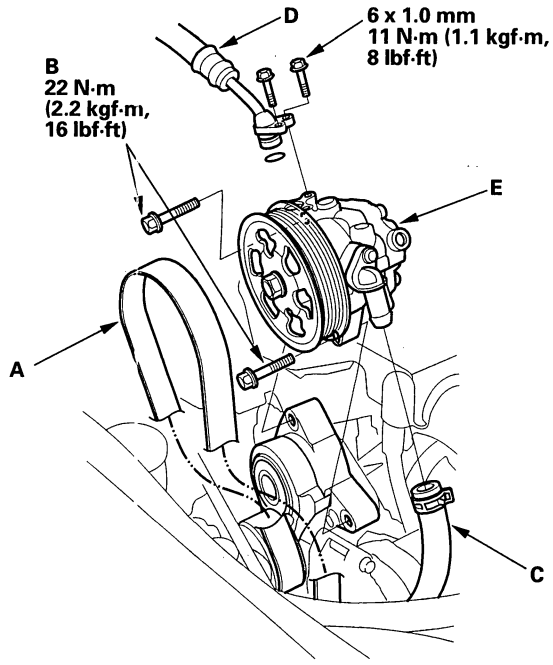

4. Remove the pump mounting bolts (B).
5. Cover the auto-tensioner, alternator, and A/C compressor with several shop towels to protect them from spilled power steering fluid. Disconnect the pump inlet hose (C) and pump outlet hose (D) from the pump (E), and plug them. Take care not to spill the fluid on the body or parts. Wipe off any spilled fluid at once. Do not turn the steering wheel with the pump removed.
6. Cover the opening of the pump with a piece of tape to prevent foreign material from entering the pump.
7. Connect the pump inlet hose and pump outlet hose.
8. Loosely install the pump in the pump bracket with the mounting bolts, then tighten the pump fittings securely.
9. Install the drive belt (A).

   Note these items during belt installation:
   - Make sure that the belt is properly positioned on the pulleys (B).
   - Do not get power steering fluid or grease on the auto-tensioner, alternator, A/C compressor, and drive belt or pulley faces. Clean off any fluid or grease before installation.

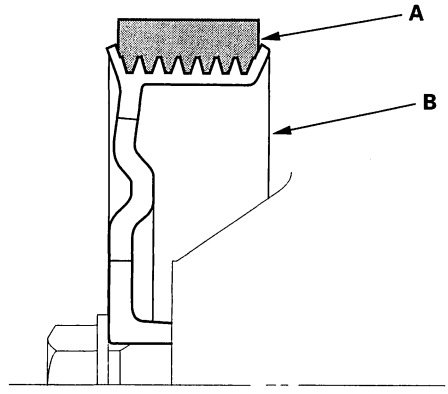

10. Tighten the pump mounting bolts to the specified torque.
11. Fill the reservoir to the upper level line (see page 17-12).

BACK

Protected by AR

Pump Overhaul

Exploded View

Replace the pump as an assembly if the parts indicated with asterisk (*) are worn or damaged.

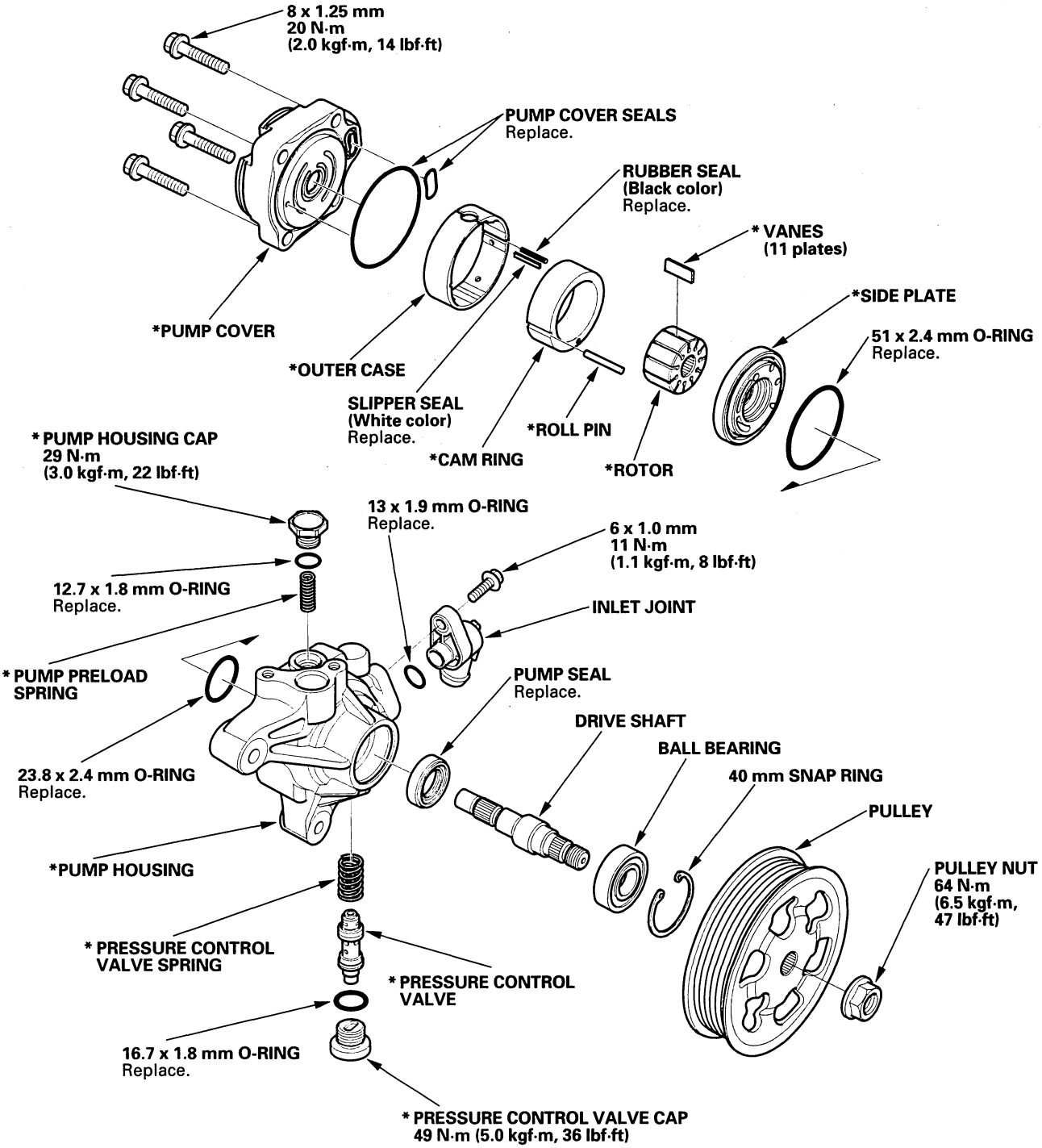

(cont'd)

Protected by AR

Pump Overhaul (cont'd)

Special Tools Required
- Attachment, 32 x 35 mm 07746-0010100
- Driver 07749-0010000
- Pulley holder 07ZAB-S5A0100

Disassembly

NOTE: Refer to the Exploded View as needed during the following procedure.

1. Drain the fluid from the pump (see page 17-12).
2. Remove the power steering pump (see page 17-14).
3. Hold the power steering pump (A) in a vise with soft jaws (B), hold the pulley (C) with the special tool (D), and remove the pulley nut (E) and pulley. Be careful not to damage the pump housing with the jaws of the vise.

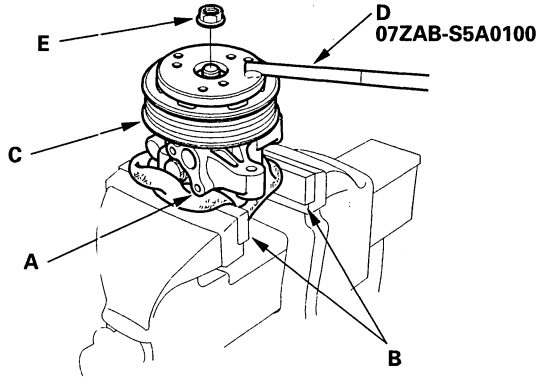

4. Remove the inlet joint and O-ring.
5. Remove the pressure control valve cap, O-ring, valve spring, and pressure control valve.
6. Remove the pump housing cap, O-ring, and pump preload spring.
7. Remove the pump cover and pump cover seals.
8. Pull out the roll pin.
9. Remove the outer case, cam ring, rotor, vanes, and side plate.
10. Remove the rubber seal and slipper seal from the outer case.
11. Remove the O-rings from the bottom of the housing.
12. Remove the snap ring, then remove the drive shaft by tapping the shaft end with the plastic hammer.
13. Remove the seal from the pump housing.

BACK

Protected by AR

Inspection

14. Check the pressure control valve for wear, burrs, and other damage to the edges of the grooves in the valve.

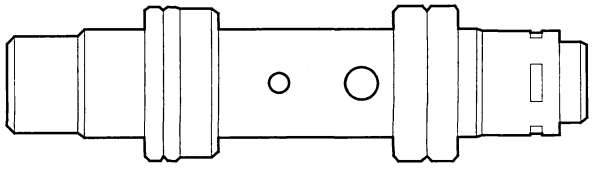

15. Inspect the bore of the pressure control valve on the pump housing for scratches and wear.

16. Slip the pressure control valve back in the pump housing, and check that it moves in and out smoothly. If OK, go to step 17; if not, replace the pump as an assembly. The pressure control valve is not available separately.

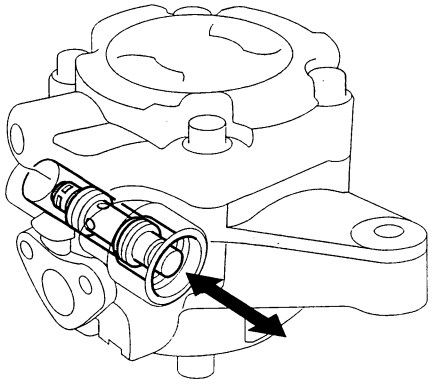

17. Attach a hose (A) to the end of the pressure control valve (B) as shown. Then submerge the pressure control valve in a container of power steering fluid or solvent (C), and blow in the hose.

    - If air bubbles leak through the valve at less than 98 kPa (1.0 kgf/cm², 14.2 psi), replace the pump as an assembly. The pressure control valve is not available separately.
    - If the pressure control valve is OK, set it aside for reassembly later.

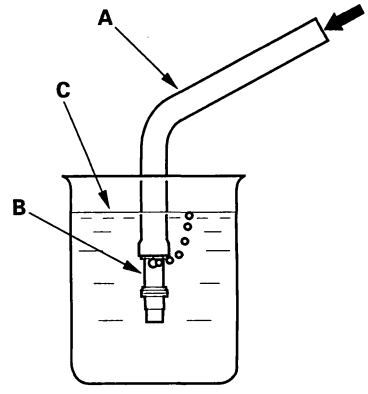

18. Inspect the ball bearing by rotating the outer race slowly. If you feel any play (axial or radial) or roughness, remove the faulty ball bearing (A), and install a new one (B).

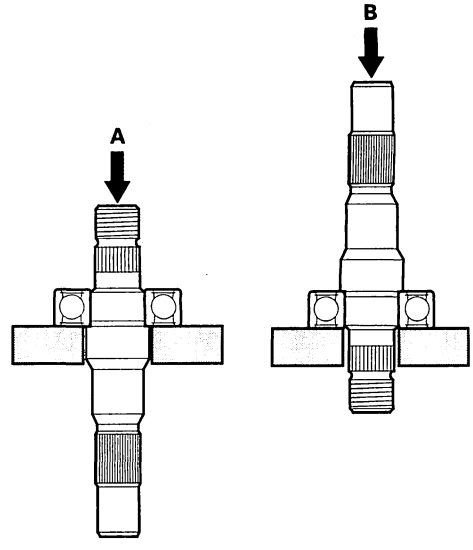

19. Inspect each part shown with an asterisk in the Exploded View; if any of them are worn or damaged, replace the pump as an assembly.

(cont'd)

Protected by AR

Pump Overhaul (cont'd)

Reassembly

20. Install the new pump seal (A) (with its grooved side facing in) into the pump housing (B) by hand first, then drive it in using the special tools until there is no step at the top of the pump seal, and the seal is fully seated in the pump housing.

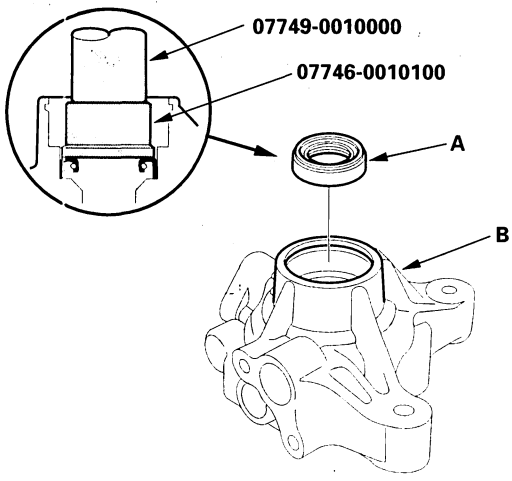

21. Position the pump drive shaft (A) in the pump housing, then press it in with the appropriate size socket wrench (B) as shown. Do not apply more than 1,370 N (140 kgf, 308 lbf) of pressure.

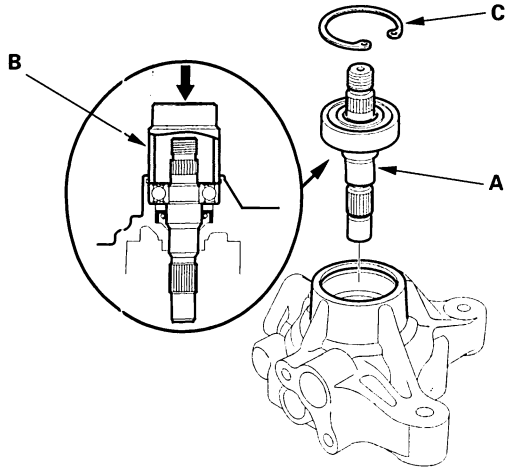

22. Install the 40 mm snap ring (C) with its radiused edge facing out.

23. Coat the new 23.8 mm O-ring (A) with power steering fluid, then position it on the bottom (B) of the pump housing.

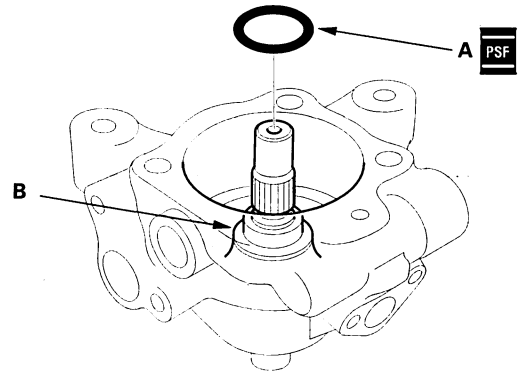

24. Coat the new cover seals (A) and (B) with power steering fluid, then position them into the grooves on the cover (C).

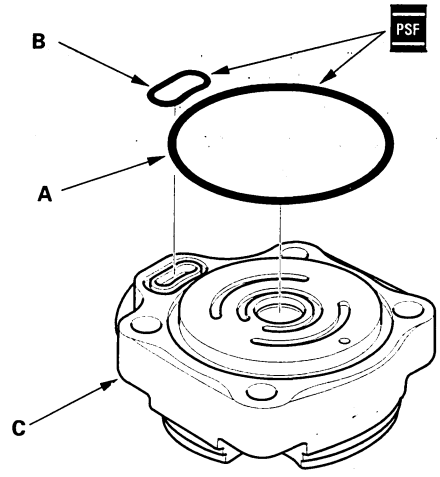

BACK

Protected by AR

25. Install the outer case (A) by aligning the slot (B) with the cover roll pin hole (C). Be sure that the slit (D) on the outer case is positioned as shown.

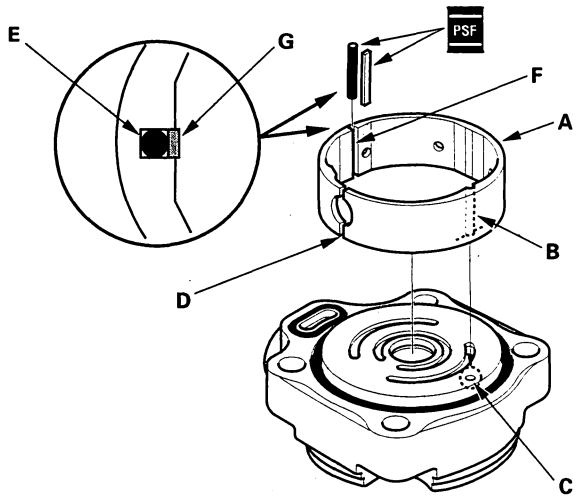

26. Apply the power steering fluid to the rubber seal (E) (black), and install it in the slot (F) of the outer case.

27. Apply power steering fluid to the slipper seal (G) (white), and install it on top of the rubber seal you just installed.

28. Install the cam ring (A) with the "·" mark (B) facing up. Align the slot (C) with the slot (D) in the outer case.

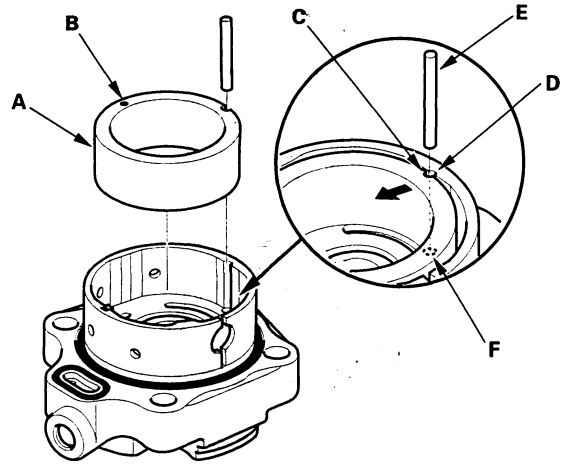

29. Insert the roll pin (E) into the slots between the cam ring and outer case, then push roll pin into the set hole (F).

30. Install the rotor (A) in the cam ring (B).

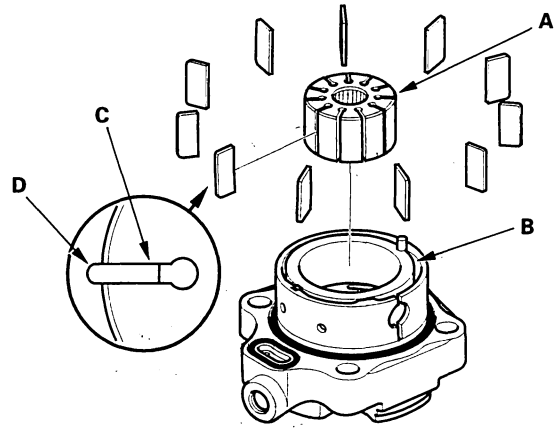

31. Set the 11 vanes (C) in the grooves in the rotor. Make sure that the round ends (D) of the vanes are in contact with the sliding surface of the cam ring.

(cont'd)

Protected by AR

Pump Overhaul (cont'd)

32. Place the side plate (A) on the cam ring, and aligning the roll pin set hole (B) in the side plate with the roll pin end (C).

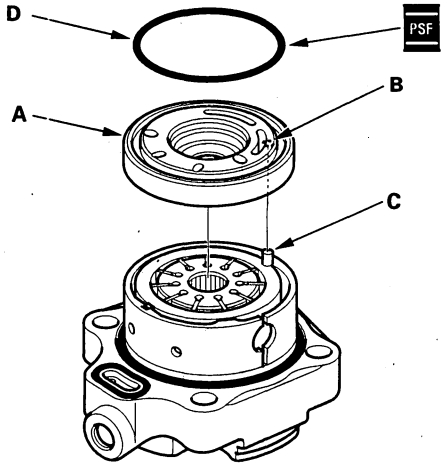

33. Coat the new O-ring (D) with the power steering fluid, then position it into the groove on the side plate.

34. Install the pump housing (A) over the cover assembly (B).

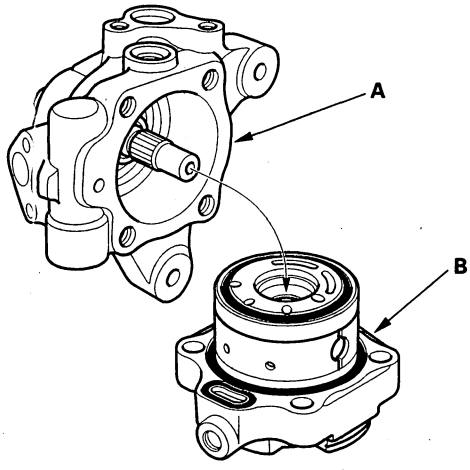

35. Align the bolt holes in the cover (A) with the threaded holes in the pump housing. Install the flange bolts loosely first, then torque the flange bolts in a criss cross pattern in two or more steps.

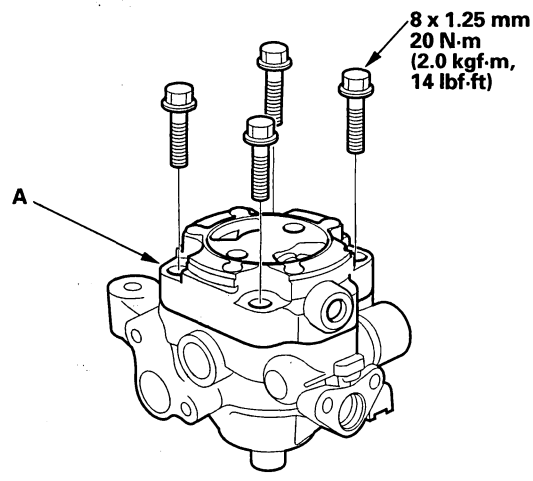

36. Push in the cam ring (A) from the pump housing cap hole (B) with a flat blade screwdriver, to make sure the cam ring is fully seated against the outer case.

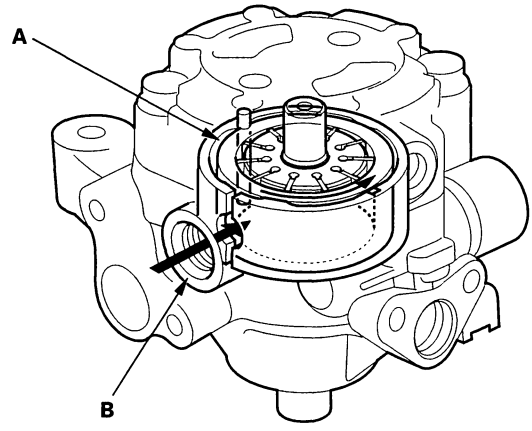

BACK

Protected by AR

37. Install the pump preload spring (A) in the pump housing.

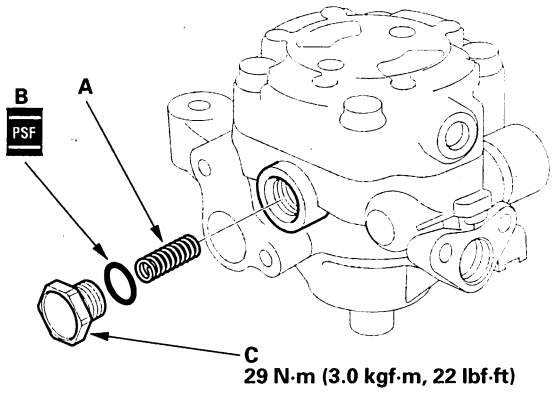

38. Coat the new 12.7 mm O-ring (B) with power steering fluid, and install it on the pump housing cap (C).

39. Install the pump housing cap on the pump housing, and tighten it to specified torque.

40. Install the pressure control valve spring (A) in the pump housing.

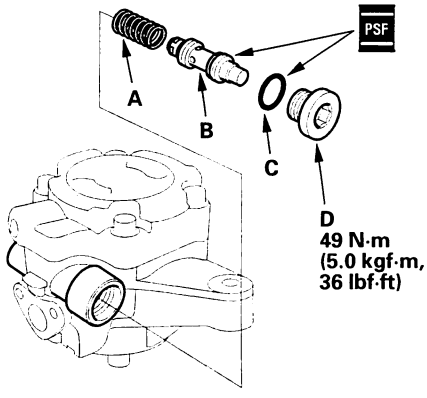

41. Coat the pressure control valve (B) with power steering fluid, and install it on the pump housing.

42. Coat the new 16.7 mm O-ring (C) with power steering fluid, and install it on the pressure control valve cap (D).

43. Install the pressure control valve cap on the pump housing, and tighten it to the specified torque.

44. Coat the new 13 mm O-ring (A) with power steering fluid, and install it on the inlet joint (B).

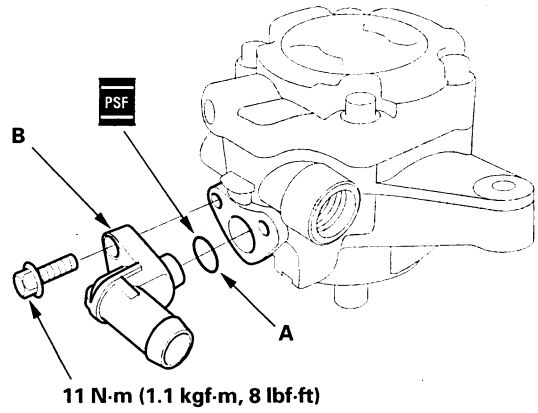

45. Install the inlet joint on the pump housing.

46. Install the pulley (A), then loosely install the pulley nut (B). Hold the power steering pump in a vise with soft jaws (C). Be careful not to damage the pump housing with the jaws of the vise.

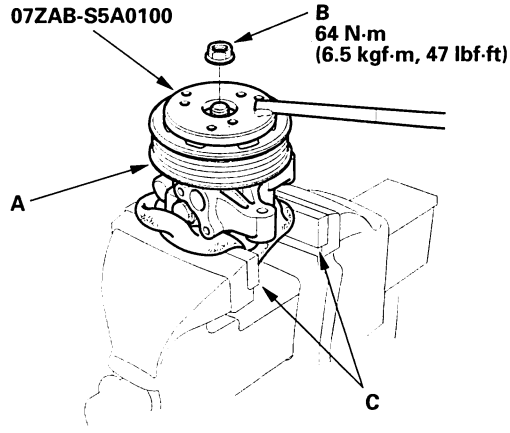

47. Hold the pulley with the special tool, and tighten the pulley nut to specified torque.

48. Check that the pump turns smoothly by turning the pulley. If it turns hard, loosen the four flange bolts on the cover, then retightening them in the same manner as in the step 35. Turning the pump again by hand.

Protected by AR

Steering Wheel Removal

SRS components are located in this area. Review the SRS component locations (see page 23-17) and the precautions and procedures (see page 23-19) before performing repairs or servise.

1. Make sure you have the anti-theft codes for the radio and the navigation system, then write down the customer's radio station presets.

2. Align the front wheels straight ahead, then remove the driver's airbag from the steering wheel (see page 23-197).

3. Disconnect the cruise control set/resume switch, audio remote switch and navigation guide switch connectors (if equipped).

4. Loosen the steering wheel bolt (A).

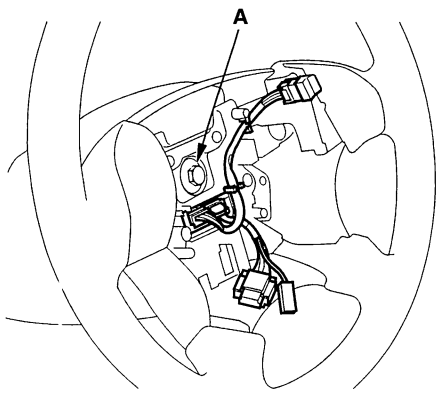

5. Install a commercially available steering wheel puller (A) on the steering wheel (B). Free the steering wheel from the steering column shaft by turning the pressure bolt (C) of the puller.

   Note these items when removing the steering wheel:
   - Do not tap on the steering wheel or the steering column shaft when removing the steering wheel.
   - If you thread the puller bolts (D) into the wheel hub more than five threads, the bolts will hit the cable reel and damage it. To prevent this, install a pair of jam nuts five threads up on each puller bolt.

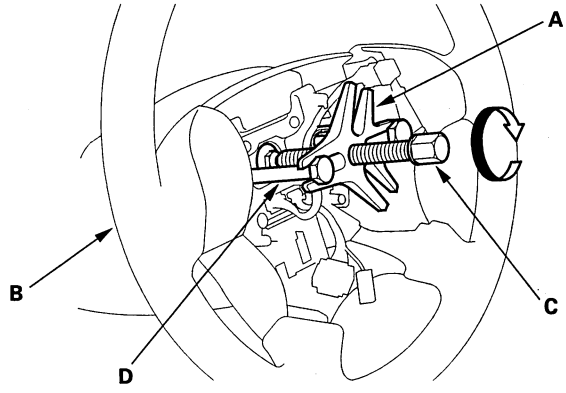

6. Remove the steering wheel puller, then remove the steering wheel bolt and steering wheel from the steering column.

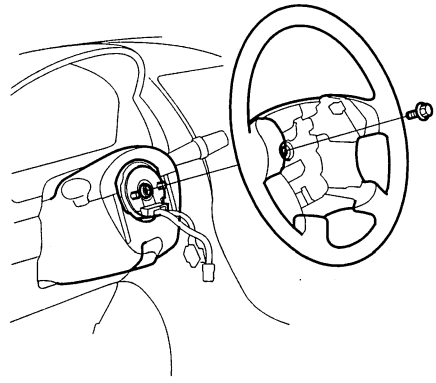

BACK

Protected by AR

Steering Wheel Disassembly/Reassembly

4-door:

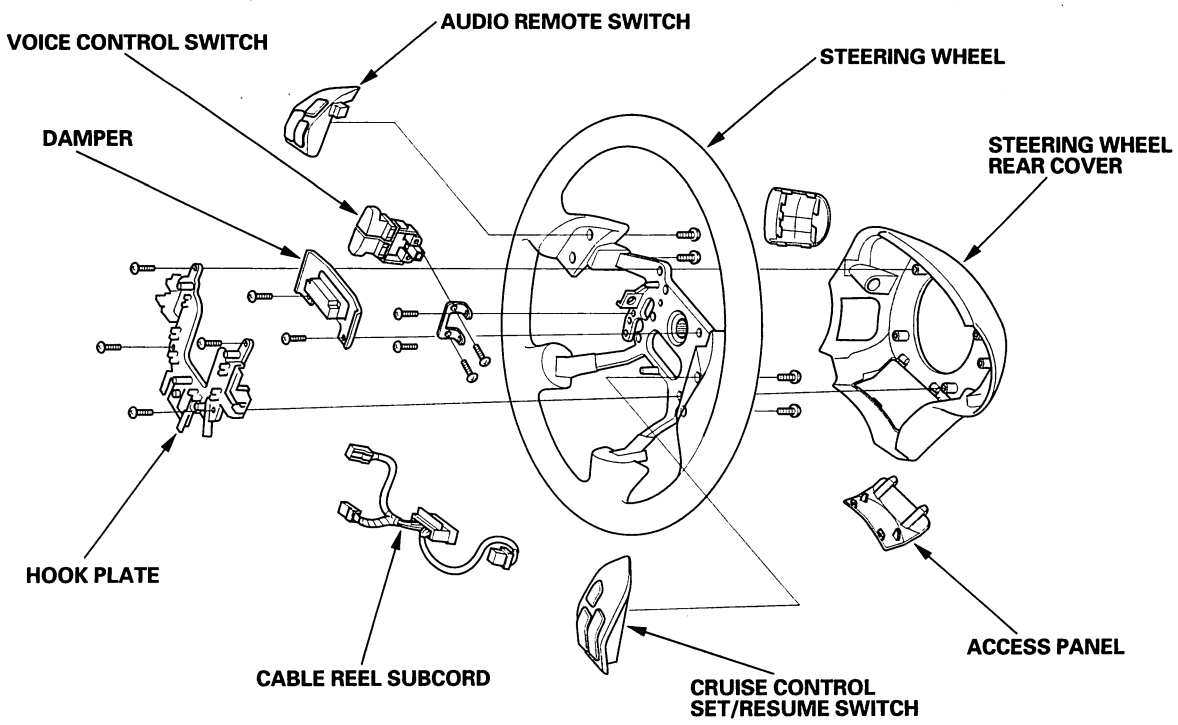

2-door:

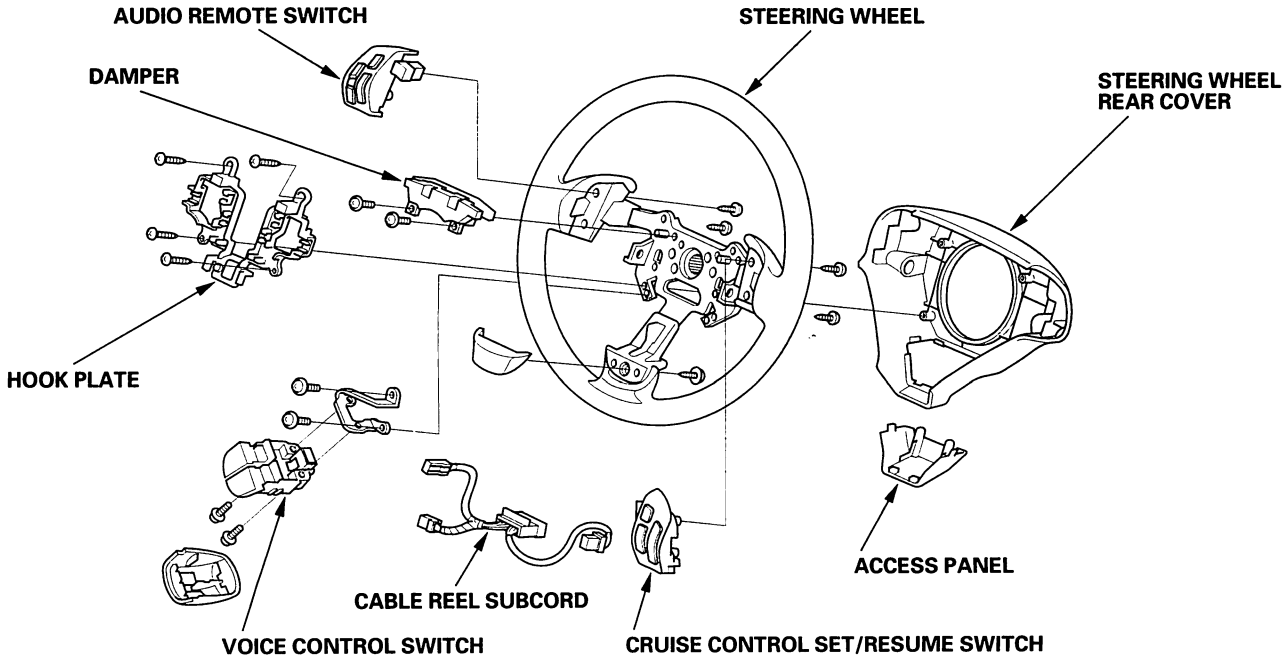

Protected by AR

Steering Wheel Installation

1. Before installing the steering wheel, make sure the front wheels are aligned straight ahead, then center the cable reel (A). Do this by first rotating the cable reel clockwise until it stops. Then rotate it counterclockwise about three full turns. The arrow mark (B) on the cable reel label point should point straight up.

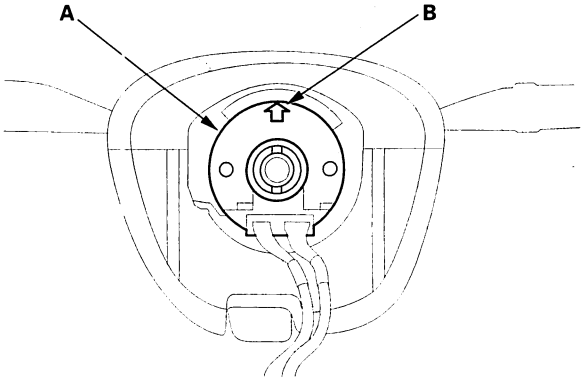

2. Position the two tabs (A) of the turn signal cancelling sleeve (B) as shown. Install the steering wheel on to the steering column shaft, making sure the steering wheel hub (C) engages the pins (D) of the cable reel and tabs of the turn signal canceling sleeve. Do not tap on the steering wheel or steering column shaft when installing the steering wheel.

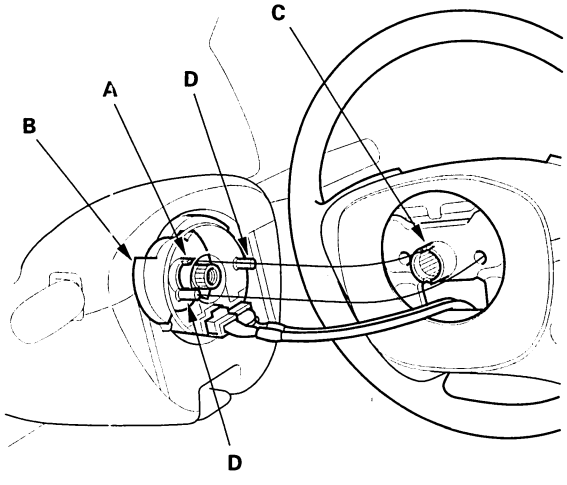

3. Install the steering wheel bolt (A) and tighten it to the specified torque. Connect the audio remote, navigation guide and cruise control set/resume switch connectors (if equipped). Make sure the wire harness is routed and fastened properly.

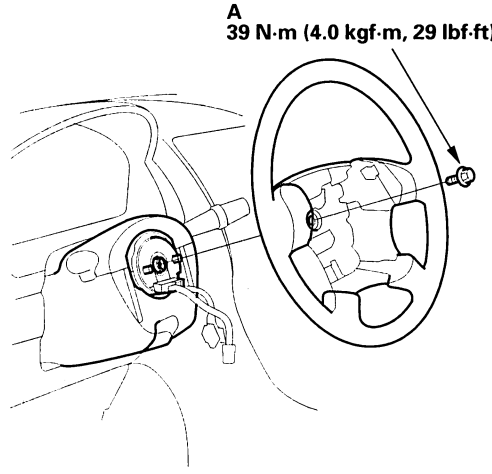

4. Install the driver's airbag, and confirm that the system is operating properly (see page 23-197).

5. Enter the anti-theft codes for the radio and the navigation system, then enter the customer's radio station presets. Reset the clock.

6. Check the cruise control, audio remote, navigation guide and turn signal canceling for proper operation.

BACK

Protected by AR

Steering Column Removal and Installation

SRS components are located in this area. Review the SRS component locations (see page 23-17) and the precautions and procedures (see page 23-19) before performing repairs or servise.

Removal

1. Make sure you have the anti-theft codes for the radio and the navigation system, then write down the customer's radio station presets.
2. Disconnect the negative cable from the battery.
3. Remove the driver's airbag assembly and the steering wheel (see page 17-22).
4. Remove the column covers.
5. Remove the steering joint cover A.

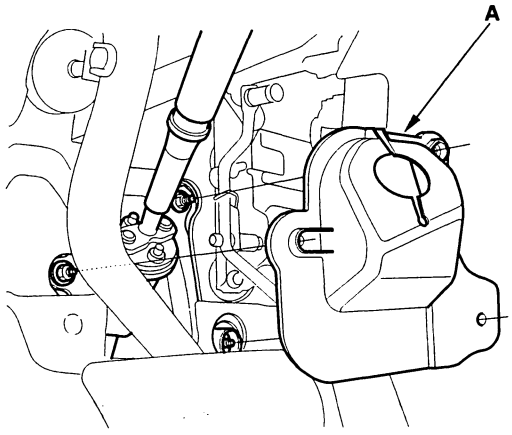

6. Release the tilt/telescopic lever, and adjust the steering column to full tilt up position, and to the full telescopic in position.
7. Tighten the tilt/telescopic lever.
8. Hold the slider shaft (A) on the column with a piece of wire (B) between the joint yoke (C) of the slider shaft and joint yoke (D) of the upper shaft to prevent the slider shaft from pulling out.

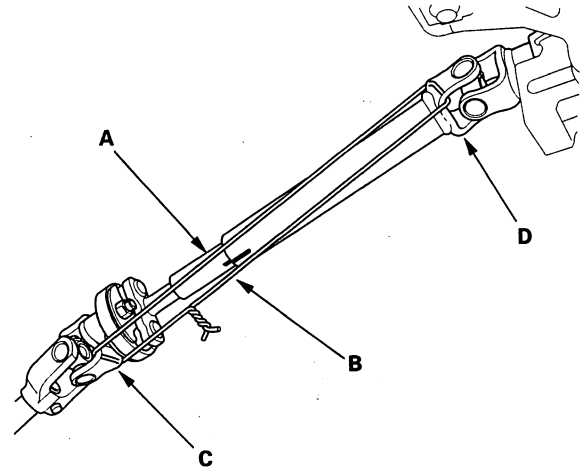

9. Release the tilt/telescopic lever, and adjust the steering column to the full telescopic out position, then tighten the tilt/telescopic lever.

(cont'd)

Protected by AR

Steering Column Removal and Installation (cont'd)

10. Disconnect the wire harness connectors from the combination switch assembly (A).

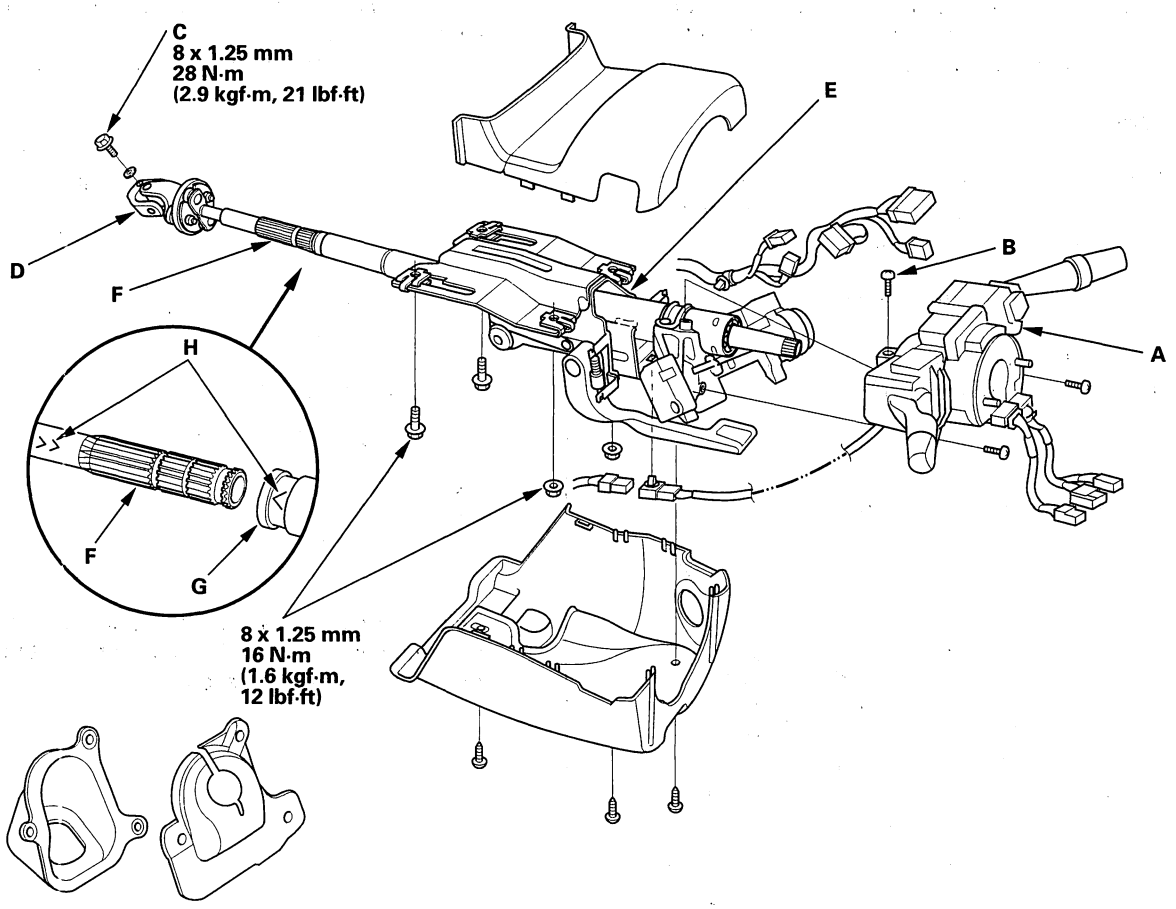

11. Remove the combination switch assembly from the steering column shaft by removing the screws (B).
12. Disconnect the connectors from the ignition switch, and release the wire harness clips from the steering column.
13. Remove the steering joint bolt (C), then disconnect the steering joint (D) from the pinion shaft.
14. Remove the steering column (E) by removing the attaching nuts and bolts. If the lower slide shaft (F) is removed, slip it into the upper shaft (G) by aligning the paint or stamped marks (H).

BACK

Protected by AR

Installation

1. Install the steering column in the reverse order of removal, and note these items:

   - Make sure the wires are not caught or pinched by any parts.
   - Take care not to let the sliding capsules fall out of position during column installation.

2. Steering joint connection; center the steering rack within its stroke.

3. Position the steering column joint (A) so the bolt (B) opposite to the notch (C) is within the range shown.

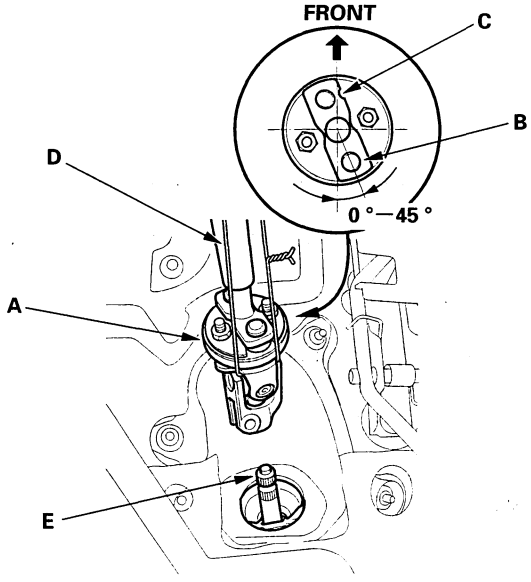

4. With the rack in the straight ahead driving position, cut the wire (D) and slip the lower end of the steering joint on to the pinion shaft (E).

5. Align the bolt hole (A) on the steering joint with the groove (B) around the pinion shaft, and loosely install the joint bolt (C). Be sure that the joint bolt is securely in the groove in the pinion shaft. Pull on the steering joint to make sure that the steering joint is fully seated. Tighten the steering joint bolt to the specified torque.

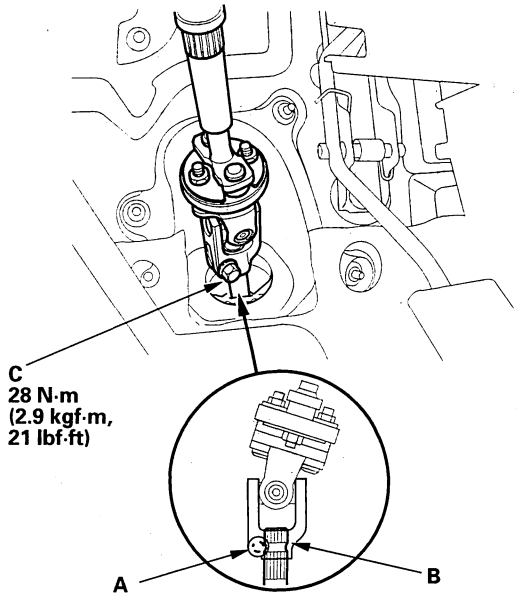

6. Finish the installation, and note these items:

   - Make sure the connectors are properly connected.
   - Reinstall the steering wheel (see page 17-24).
   - Reconnect the battery.
   - Enter the anti-theft codes for the radio and the navigation system, then the customer's radio station presets.
   - Set the clock.
   - Verify cruise control, audio remote, navigation guide and turn signal switch operation.
   - Make sure the steering wheel is centered.

Protected by AR

Steering Column/Tilt/Telescopic Inspection

- Check the steering column ball bearing (A) and the steering joint bearings (B) for play and proper movement. If any bearing is noisy or has excessive play, replace the steering column as an assembly.
- Check the lower side shaft (C) for smooth movement in and out. If the lower slide shaft is removed, slip it into the upper shaft by aligning the paint or stamped marks (D). If it sticks or binds, replace the steering column as an assembly.
- Check the sliding capsules (E) for distortion or breakage. If there is distortion or breakage, replace the steering column as an assembly.
- Check the tilt mechanism and telescopic mechanism for movement and damage.

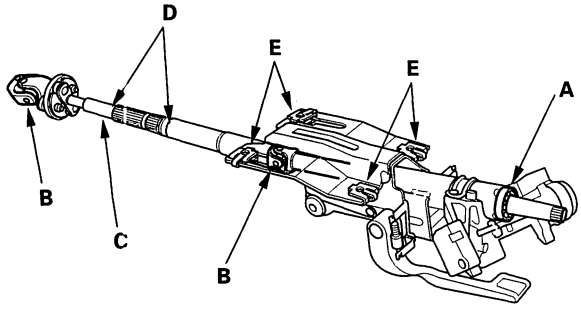

Steering Lock Replacement

1. Remove the steering column (see page 17-25).
2. Center-punch each of the two shear bolts, and drill the heads of the bolts off with a 5 mm (3/16 in.) drill bit. Be careful not to damage the switch body when removing the shear bolts.

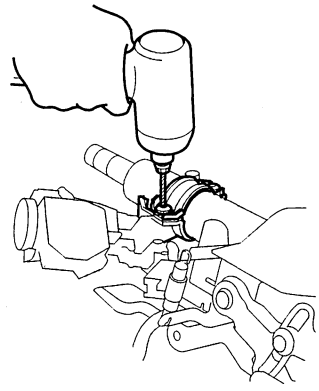

3. Remove the shear bolts from the switch body.
4. Install the switch body without the key inserted.
5. Loosely tighten the new shear bolts.
6. Insert the ignition key, and check for proper operation of the steering wheel lock and that the ignition key turns freely.
7. Tighten the shear bolts (A) until the hex heads (B) twist off.

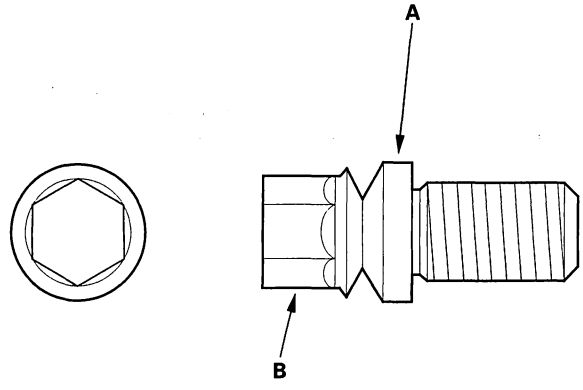

BACK

Protected by AR

Rack Guide Adjustment

Special Tools Required
Locknut wrench, 40 mm 07916-SA50001

1. Set the wheels in the straight ahead position.
2. Loosen the rack guide screw locknut (A) with the special tool, then remove the rack guide screw (B).

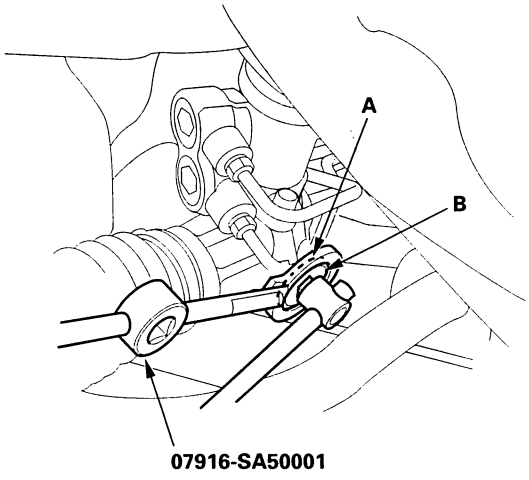

3. Remove the old sealant from the rack guide screw (A), and apply new sealant (Three Bond 1215 or Loctite 5699) to the middle of the threads (B). Loosely install the rack guide screw on the steering gearbox.

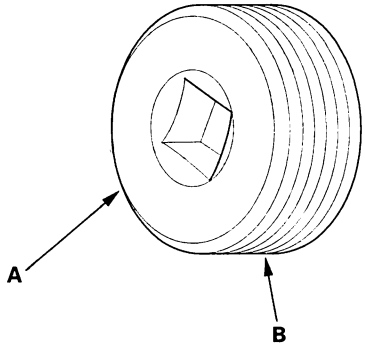

4. Tighten the rack guide screw (A) to 25 N·m (2.5 kgf·m, 18 lbf·ft), then loosen it.

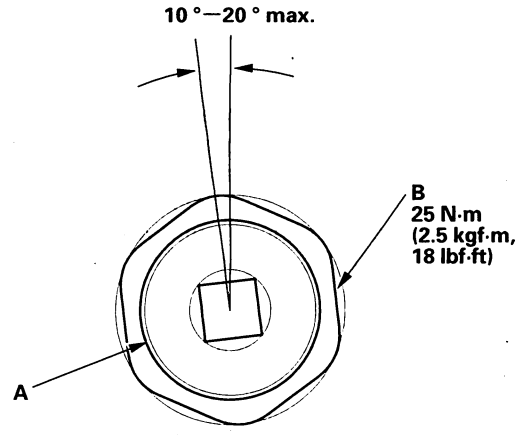

5. Retighten the rack guide screw to 3.9 N·m (0.4 kgf·m, 3 lbf·ft), then back it off to the specified angle.

   Specified return angle: 10 °—20 ° max.

6. Hold the rack guide screw stationary with a wrench, and tighten the locknut by hand until it's fully seated.
7. Install the special tool on the locknut (B), and hold the rack guide screw stationary with a wrench. Tighten the locknut an additional 30 ° with the special tool.
8. Check for unusual steering effort through the complete turning range.
9. Check the steering wheel rotation play (see page 17-7), and the power assist (see page 17-7).

Protected by AR

Steering Gearbox Removal

Special Tools Required
- Ball joint remover, 28 mm 07MAC-SL0A202
- Subframe adaptor EQS02C000016
  (Available through the Honda Tool and Equipment program 888-424-6857)

Note these items during removal:
- Using solvent and a brush, wash any oil and dirt off the valve body unit, its lines, and the end of the gearbox. Blow dry with compressed air.
- Make sure to remove the steering wheel before disconnecting the steering joint. Damage to the cable reel can occur.

1. Drain the power steering fluid. (see step 1 on page 17-12).
2. Raise the front of the vehicle, and support it with safety stands in the proper locations (see page 1-14).
3. Remove the front wheels.
4. Remove the steering wheel (see page 17-22).
5. Remove the steering joint cover A.

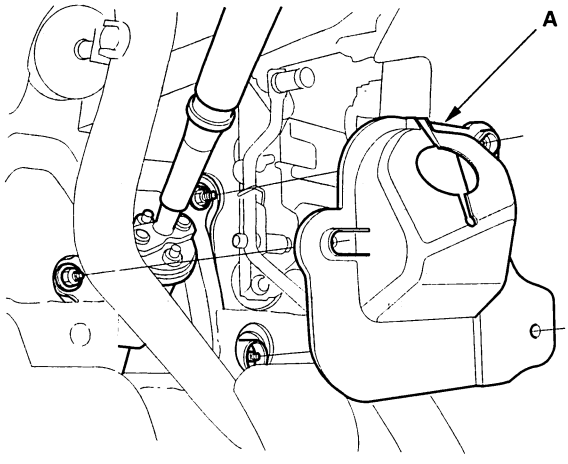

6. Remove the steering joint bolt (A), and disconnect the steering joint by moving the steering joint (B) toward the column. Hold the slider shaft (C) on the column with a piece of wire (D) between the joint yoke (E) on the slider shaft to the joint yoke on the upper shaft (see page 17-25).

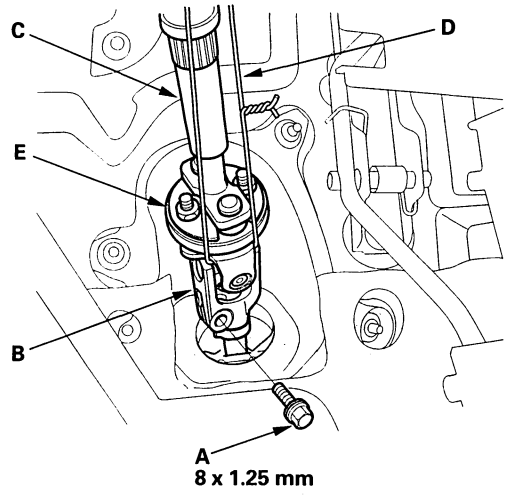

7. Remove the steering joint cover B. Be careful not to damage the mating surface on the joint cover B and pinion shaft grommet. Replace the cover seal (A) if necessary.

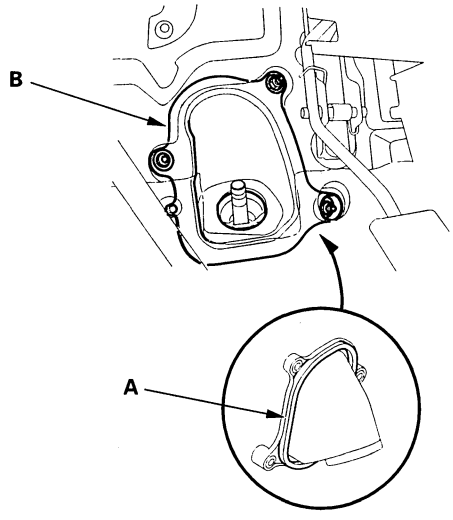

BACK

Protected by AR

8. Remove and discard the cotter pin (A) from the tie-rod ball joint nut (B), then loosen the nut.

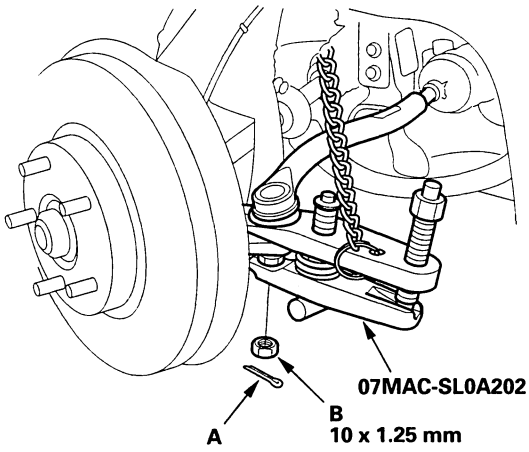

9. Separate the tie-rod ball joint and knuckle using the special tool (see page 18-11).

10. Remove the P/S heat baffle plate (A).

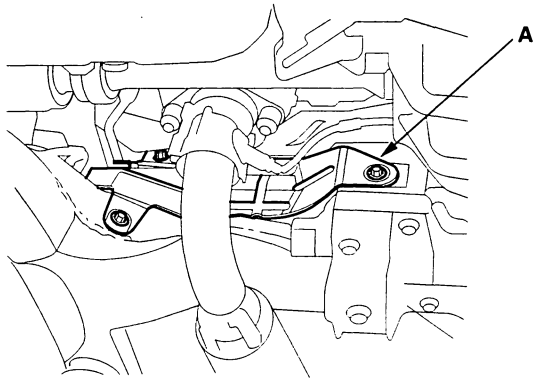

11. Remove the feed line holder mounting bolt (A) on the front suspension subframe.

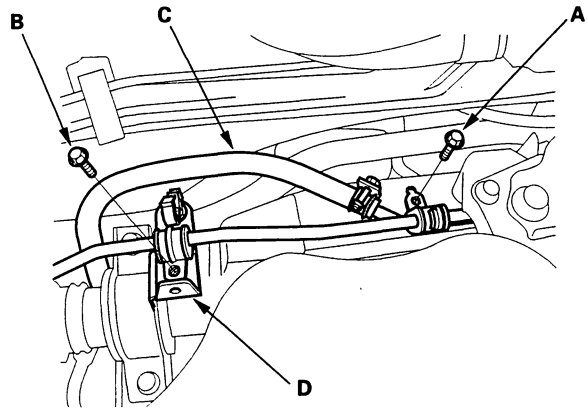

12. Remove the feed line holder mounting bolt (B) and return hose (C) from the gearbox mounting bracket (D).

(cont'd)

Protected by AR

Steering Gearbox Removal (cont'd)

13. Place several shop towels under the line connections, and cover the gearbox mounting part to protect it from the power steering fluid. Loosen the flare nut (A), and disconnect the feed line (B).

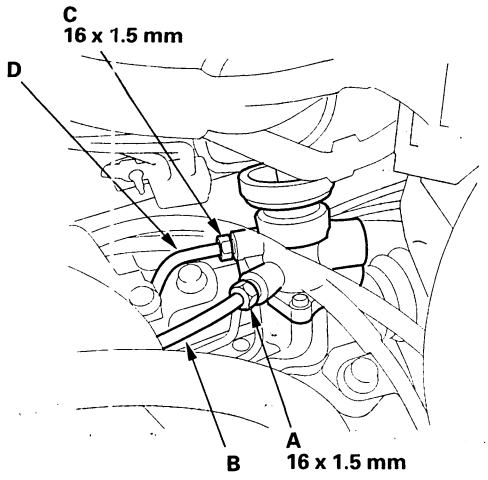

14. Loosen the flare nut (C), and disconnect the return line (D).

15. After disconnecting the lines, plug or seal them with a piece of tape or equivalent to prevent foreign materials from entering.

    NOTE: Do not loosen the cylinder line A and B between the valve body unit and the cylinder.

16. Attach the special tool to the front suspension subframe (A) with hanging the hook of the special tool over the front of the subframe, then tighten the special tool screw.

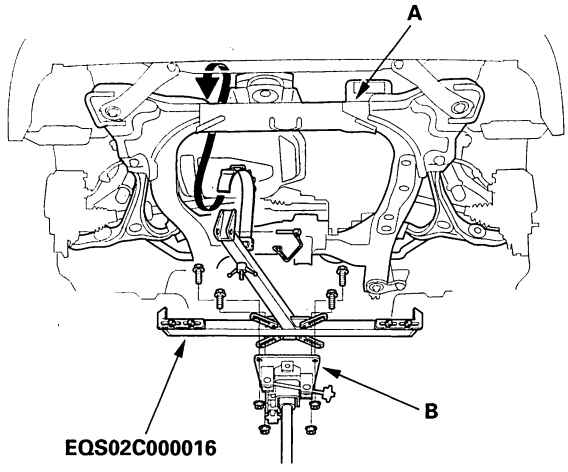

17. Raise the jack (B) and line up the slots in the arms with the bolt holes on the corner of the jack base, then attach them with bolts securely.

BACK

Protected by AR

18. Remove the front suspension subframe right middle mount bolts (A).

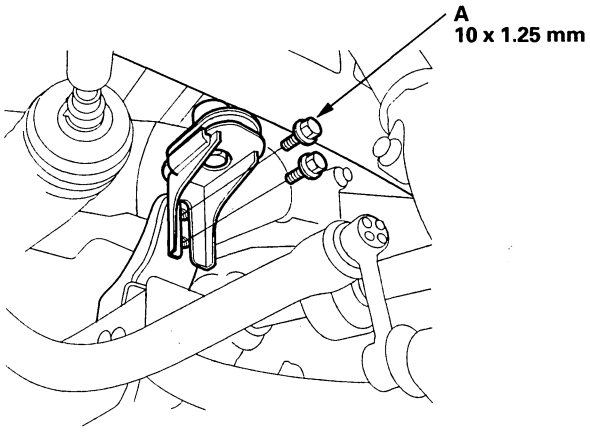

19. Remove the front suspension subframe left middle mount (A).

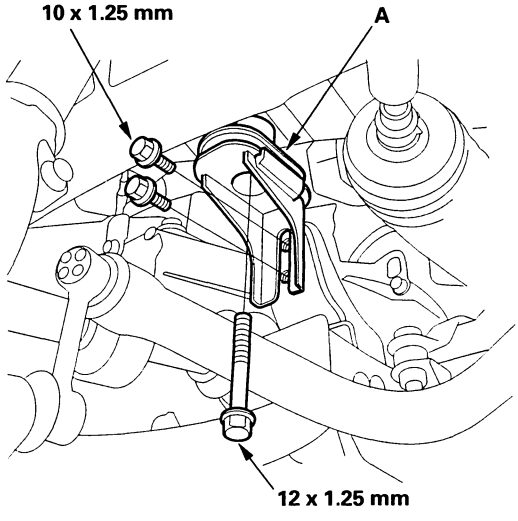

20. Remove the steering gearbox mounting bolts on the left gearbox mount, and remove the steering stiffener plate (A).

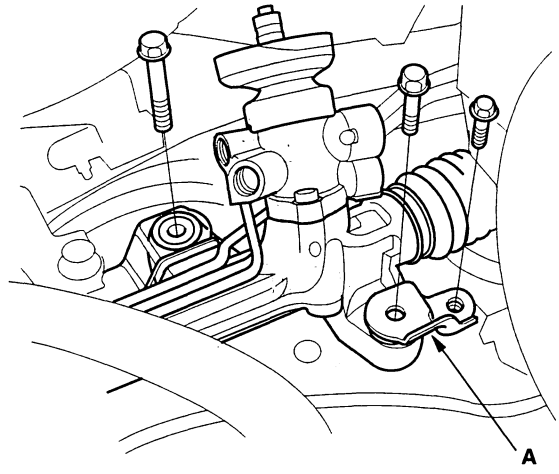

21. Remove the front suspension subframe rear bracket (A) mounting bolt (B).

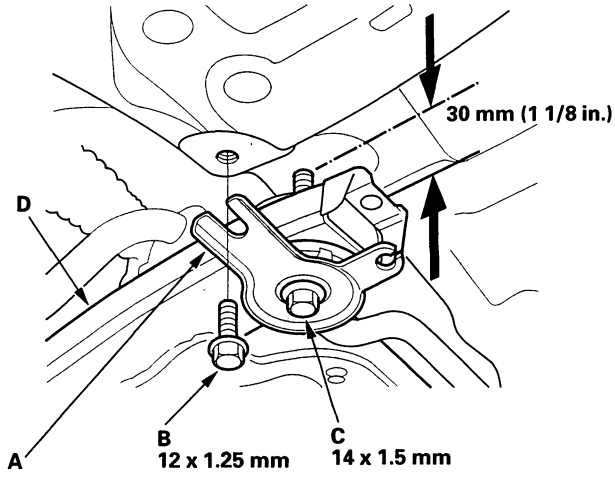

22. Loosen the two front suspension subframe rear bracket mounting bolts (C) on right and left, and slowly lower the jack supporting subframe (D) with special tool until the subframe has dropped 30 mm (1 1/8 in.) total.

(cont'd)

Protected by AR

Steering Gearbox Removal (cont'd)

23. Remove the two flange bolts from the right side of the gearbox, then remove the gearbox mounting bracket (A) and cushion (B).

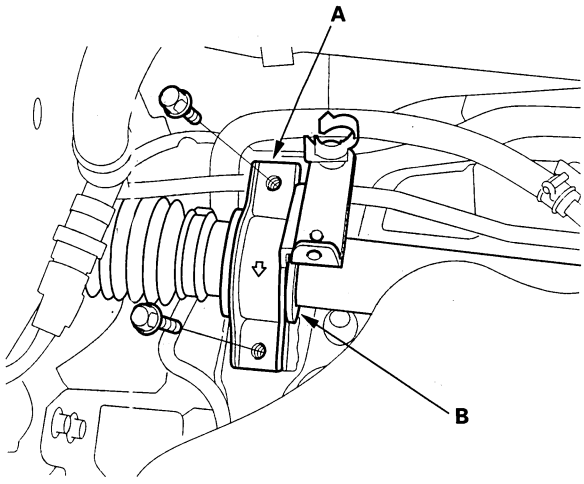

24. Move the steering gearbox toward the front, and remove the pinion shaft grommet (A) from the top of the valve body unit.

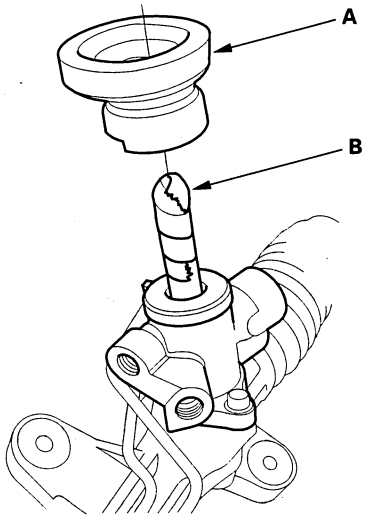

25. Apply vinyl tape (B) to the splines on the pinion shaft.

26. Apply vinyl tape or equivalent material (A) to the brake lines (B) to protect them from the pinion shaft.

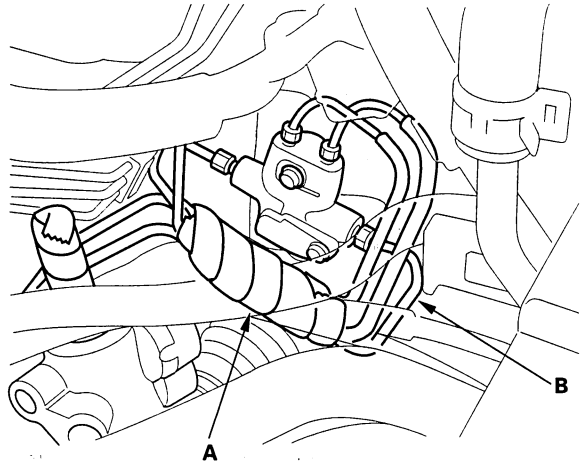

BACK

Protected by AR

27. Move the steering gearbox to the driver's side, and rotate it so the pinion shaft points toward the front of the vehicle.

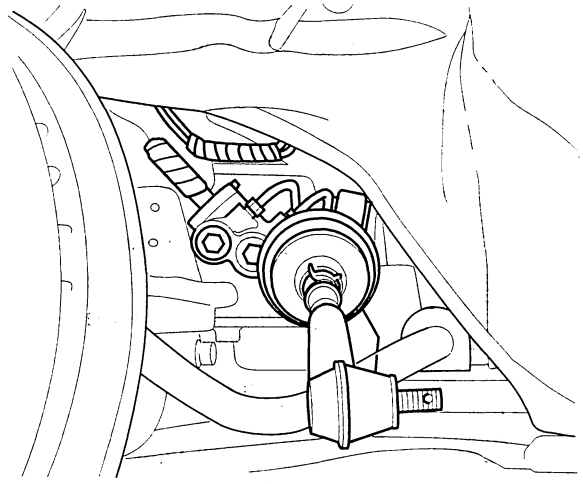

28. Carefully move the steering gearbox as an assembly toward the driver's side of the vehicle until the pinion shaft clears the wheelwell opening. Be careful not to damage the brake lines with the pinion shaft.

29. Remove the steering gearbox through the wheelwell opening on the driver's side.

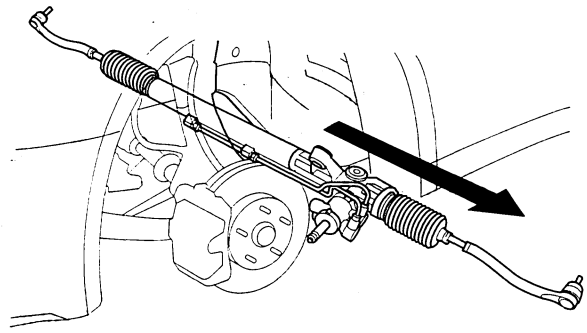

30. After removing the steering gearbox, make sure that no power steering fluid gets on the gearbox mount cushions, gearbox housing, surface of the subframe and stiffener. Wipe off any spilled fluid at once.

Protected by AR

Steering Gearbox Overhaul

Exploded View

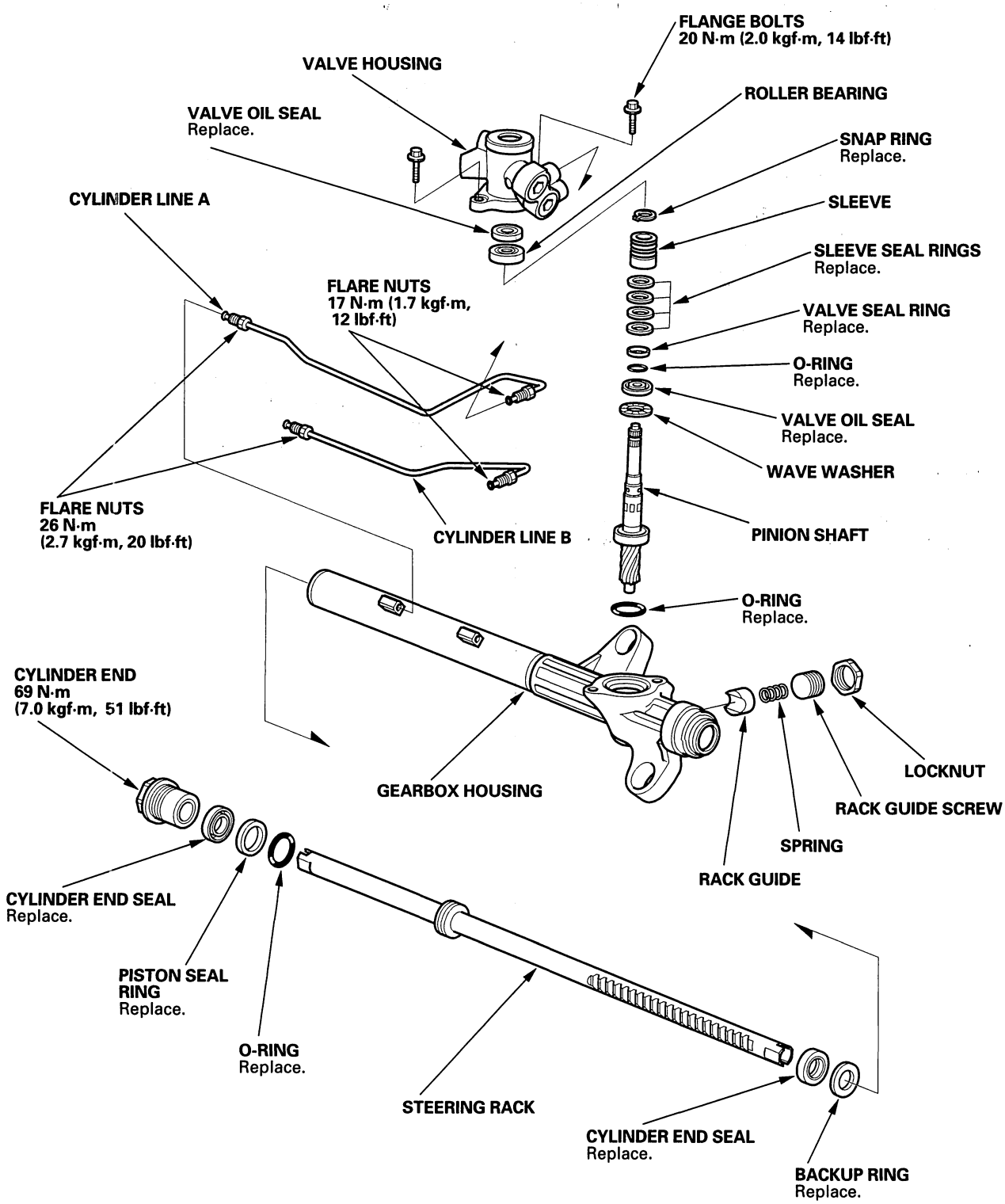

BACK

Protected by AR

Special Tools Required
- Cylinder end seal remover attachment 07NAD-SR3020A
- Pilot collar 07GAF-PH70100
- Valve seal ring sizing tool 07NAG-SR3090A
- Ball joint boot clip guide 07974-SA50800
- Sleeve seal ring sizing tool 07974-SA5020A or 07974-SA50200
- Attachment, 32 x 35 mm 07746-0010100
- Driver 07749-0010000
- Piston seal ring guide 07HAG-SF10100
- Piston seal ring sizing tool 07HAG-SF1020A or 07HAG-SF10200
- Cylinder end seal slider 07ZAG-S5A0300
- Pincers Oetiker 1098 or equivalent, commercially available

NOTE: Refer to the Exploded View as needed during this procedure.

Removal

1. Remove the steering gearbox (see page 17-30).

Disassembly

2. Remove the boot bands (A) and tie-rod clips (B). Pull the boot away from the ends of the steering gearbox.

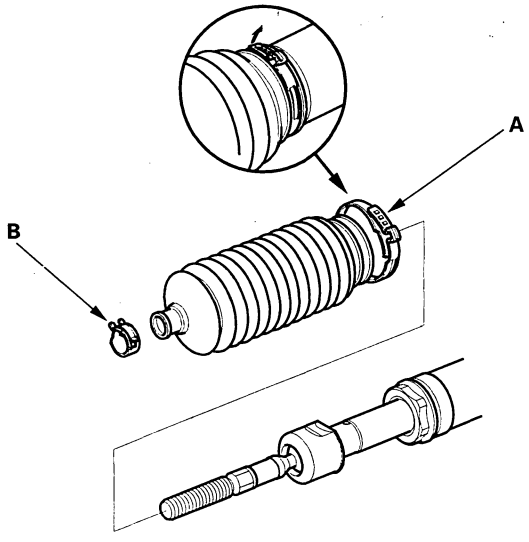

3. Unbend the lock washer (A).

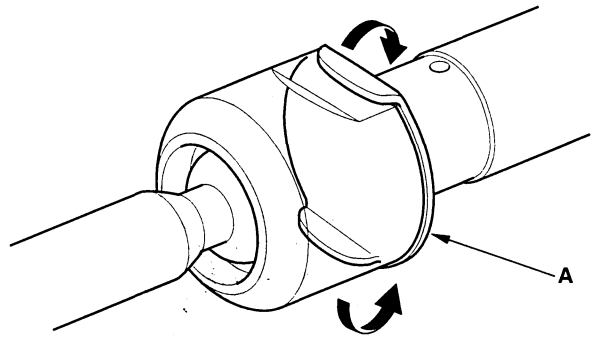

4. Hold the flat surface sections (A) of the steering rack with a wrench (B), and unscrew both rack ends (C) with a wrench (D). Be careful not to damage the rack surface with the wrench.

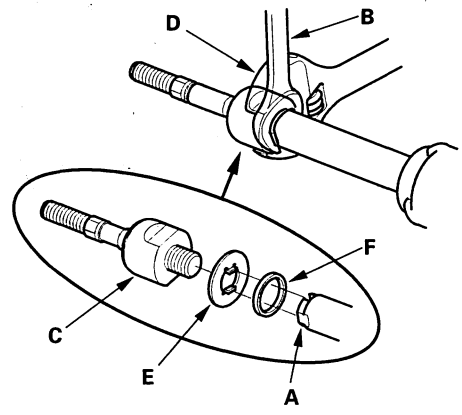

5. Remove the lock washer (E) and stop rubber (F).

(cont'd)

Protected by AR

Steering Gearbox Overhaul (cont'd)

6. Loosen the locknut (A), then remove the rack guide screw (B).

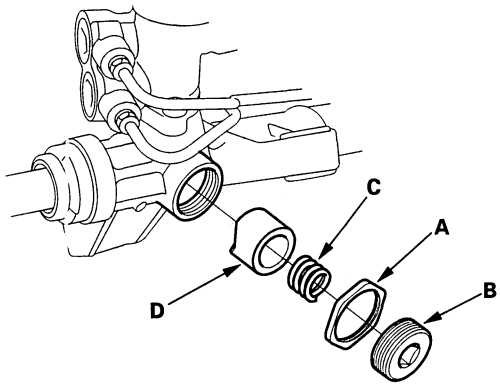

7. Remove the spring (C) and the rack guide (D) from the gearbox housing.

8. Remove the cylinder lines from the gearbox.

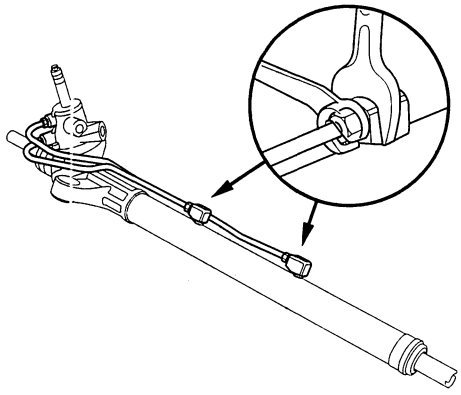

9. Drain the fluid from the cylinder fittings by slowly moving the steering rack back and forth.

10. Remove the two flange bolts, then remove the valve body unit (A) from the gearbox (B). Remove the O-ring (C), and discard it.

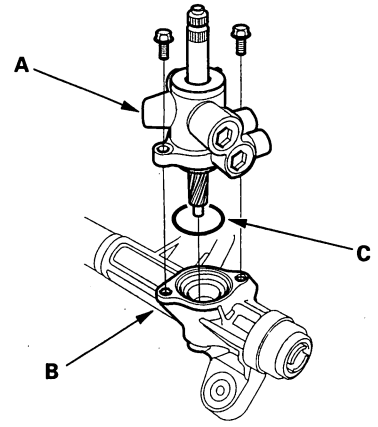

11. Drill a 3 mm (0.12 in.) diameter hole about 2.5—3.0 mm (0.10—0.12 in.) in depth in the staked point (A) on the cylinder. Do not allow metal shavings to enter the cylinder housing. After removing the cylinder end (B), remove any burrs at the staked point.

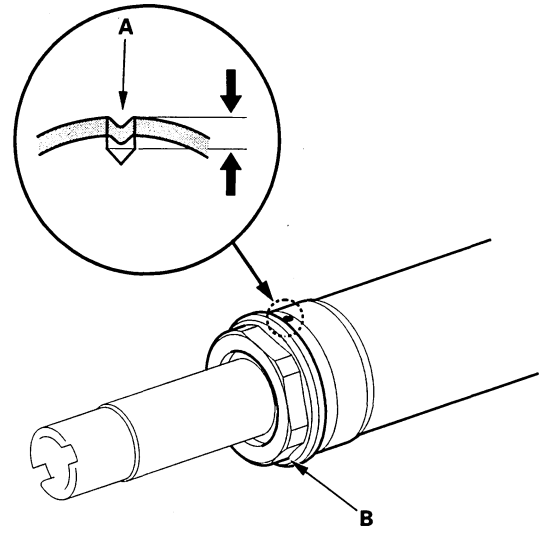

BACK

Protected by AR

12. Hold the gearbox housing using a C-clamp (commercially available) (A) and the wooden blocks (B) as shown. Do not clamp the cylinder part of the housing or gearbox housing in the vise. Then remove the cylinder end (C).

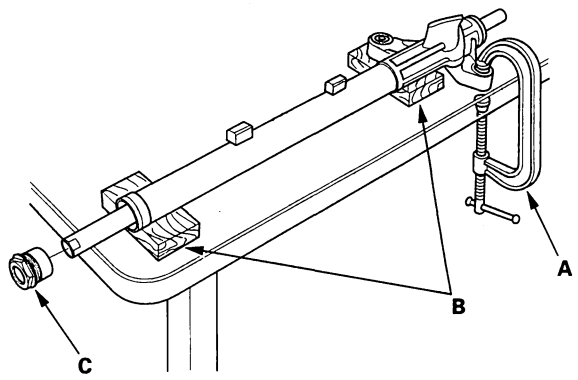

13. Install a commercially available bearing separator (A) in the gearbox housing as shown.

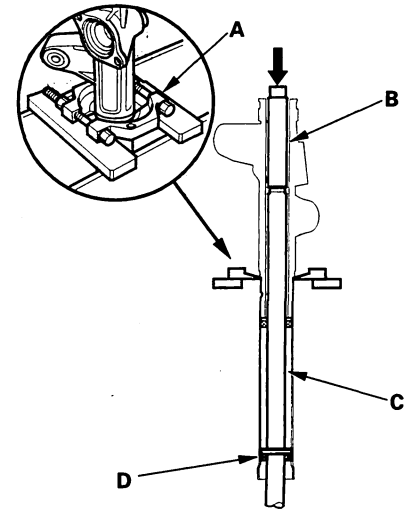

14. Place an appropriate size deep socket wrench (B) on the steering rack (C).

15. Set the steering gearbox in a press so the gearbox housing side points upward, then press the cylinder end seal (D) and steering rack out of the gearbox. Hold the steering rack to keep it from falling when pressed clear. Be careful not to damage the inner surface of the cylinder housing with the tool.

(cont'd)

Protected by AR

Steering Gearbox Overhaul (cont'd)

16. Install the special tool so it will fit through the rack guide hole of the gearbox housing. Insert a 24" long, 3/8" drive extension (A), and install it on the special tool. Make sure the special tool is securely positioned on the backup ring edges. Be careful not to damage the inner surface of the cylinder with the special tool.

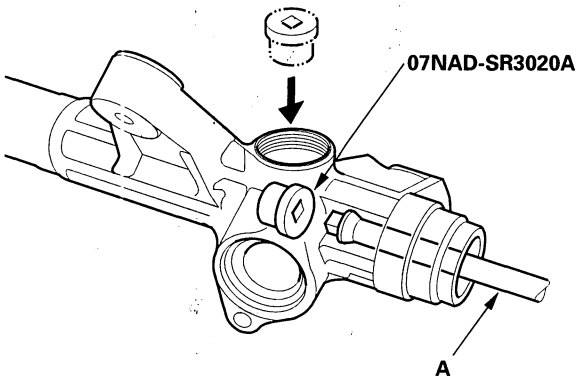

17. Place the steering gearbox in a press, then remove the cylinder end seal (A) and backup ring (B) from the gearbox by pressing on the 24" long, 3/8" drive extension.

    Note these items when pressing the cylinder end seal:
    - Keep the tool straight to avoid damaging the cylinder wall. Check the tool angle, and correct it if necessary, when removing the cylinder end seal.
    - Use a press to remove the cylinder end seal. Do not try to remove the seal by striking the tool; striking the tool could brake the backup ring, and the cylinder end seal would remain in the gearbox.

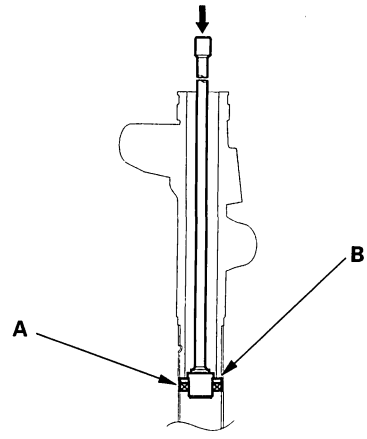

BACK

Protected by AR

18. Carefully pry the piston seal ring (A) and O-ring (B) off the rack piston. Be careful not to damage the inside of the seal ring groove and piston edges when removing the seal ring.

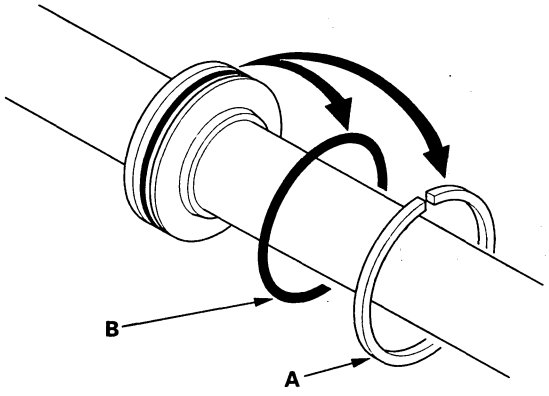

19. Before removing the valve housing (A), apply vinyl tape (B) to the splines on the pinion shaft.

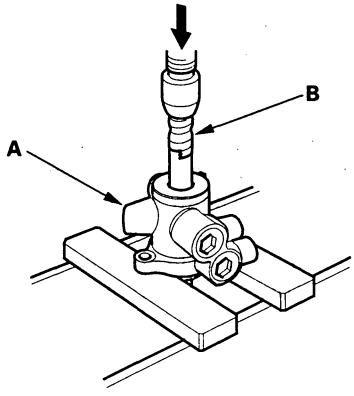

20. Separate the valve housing from the pinion shaft/valve using a press.

21. With your finger, check the inner wall of the valve housing where the seal ring slides. If there is a step in the wall, the housing is worn. Replace it.

    NOTE: There may be sliding marks from the seal ring on the wall of the valve housing. Replace the valve housing only if the wall is stepped.

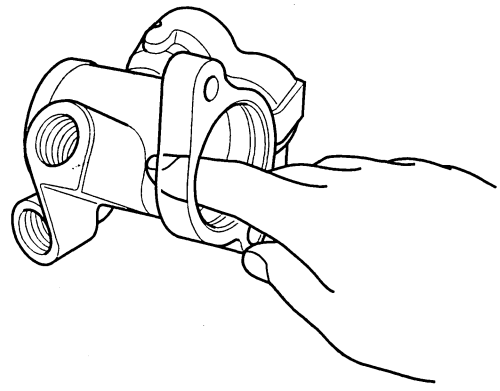

22. Check for wear, burrs, and other damage to the edges of the grooves in the sleeve.

    NOTE: The pinion shaft and sleeve are a precision matched set. If either the pinion shaft or sleeve must be replaced, replace both parts as a set.

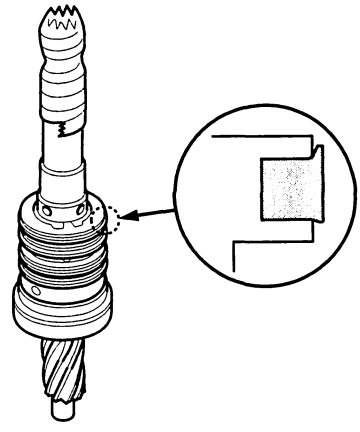

(cont'd)

Protected by AR

Steering Gearbox Overhaul (cont'd)

23. Remove the snap ring (A) and sleeve (B) from the pinion shaft.

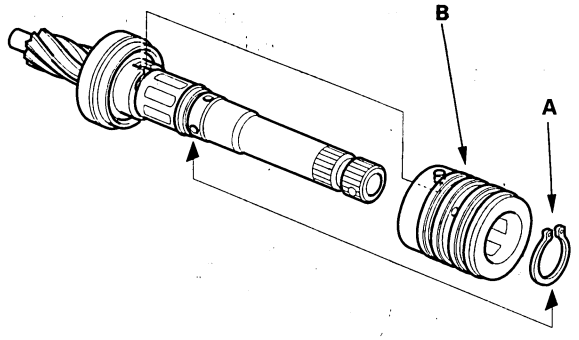

24. Using a cutter or an equivalent tool, cut and remove the four seal rings from the sleeve. Be careful not to damage the edges of the sleeve grooves and outer surface when removing the seal rings.

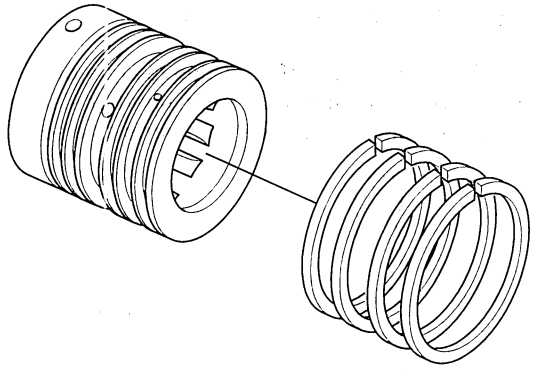

25. Using a cutter or an equivalent tool, cut the valve seal ring (A) and O-ring (B) at the cutting groove position (C) in the pinion shaft. Remove the valve seal ring and O-ring. Be careful not to damage the edges of the pinion shaft groove and outer surface when removing the valve seal ring and O-ring.

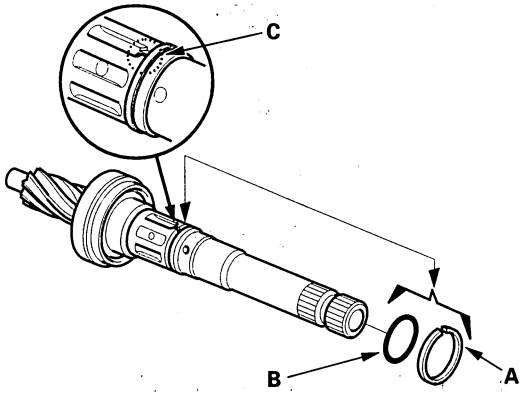

26. Remove the valve oil seal (A) and wave washer (B) from the pinion shaft.

Note these items during disassembly:
- Inspect the ball bearing (C) by rotating the outer race slowly. If there is any excessive play or wear, replace the pinion shaft and sleeve as an assembly.
- The pinion shaft and sleeve are a precise fit; do not intermix old and new pinion shafts and sleeves.

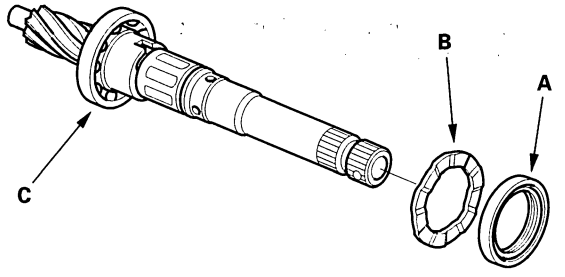

BACK

Protected by AR

27. Press the valve oil seal (A) and roller bearing (B) out of the valve housing using a hydraulic press and special tool.

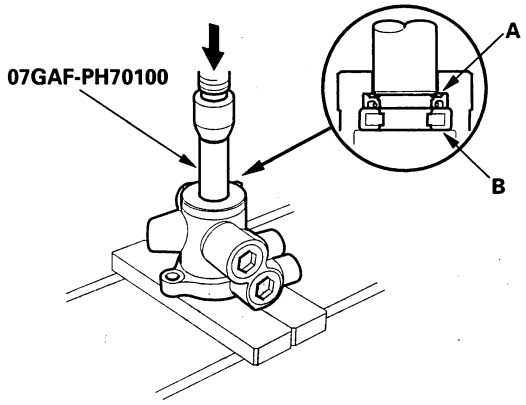

28. Clean the disassembled parts with solvent, and dry them with compressed air. Do not dip rubber parts in the solvent.

(cont'd)

Protected by AR

Steering Gearbox Overhaul (cont'd)

Reassembly

29. Apply vinyl tape (A) to the stepped portion of the pinion shaft, and coat the surface of the vinyl tape with power steering fluid.

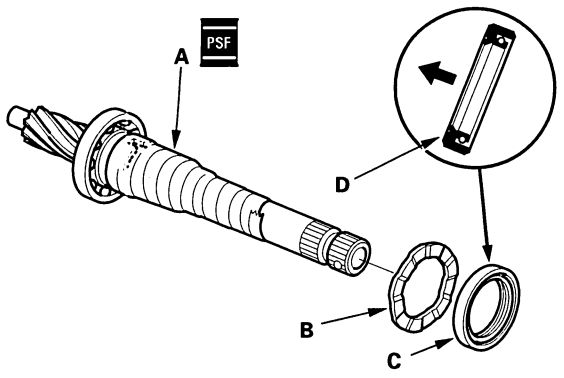

30. Install the wave washer (B).

31. Coat the inside surface of the new valve oil seal (C) with power steering fluid, and install the seal with its grooved side facing opposite the bearing, then slide it over the pinion shaft, being careful not to damage its sealing lip (D).

32. Apply vinyl tape (A) to the splines and stepped portion of the shaft, and coat the surface of the vinyl tape with power steering fluid.

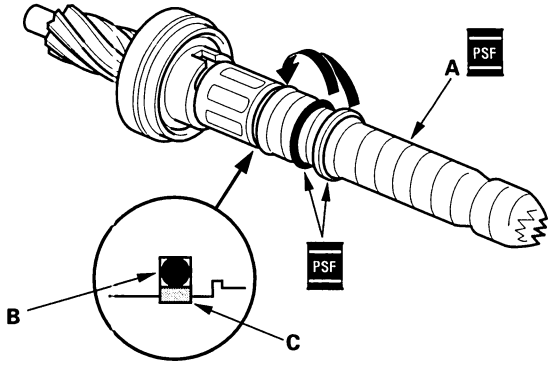

33. Fit the new O-ring (B) in the groove of the pinion shaft. Then slide the new valve seal ring (C) over the shaft and in the groove on the pinion shaft.

34. Remove the tape, and apply power steering fluid to the surface of the valve seal ring (A).

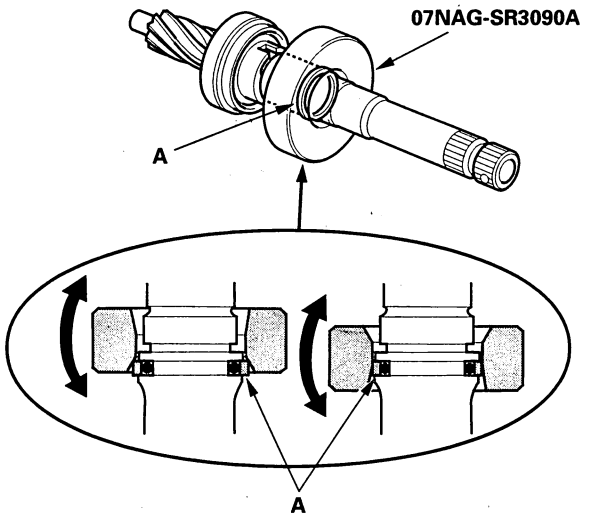

35. Apply power steering fluid to the inside of the special tool. Set the larger diameter end of the special tool over the valve seal ring, and move the special tool up and down several times to make the valve seal ring fit in the pinion shaft groove.

36. Remove the special tool, turn it over, slide the smaller diameter end over the valve seal ring. Move it up and down several times to make the valve seal ring fits snugly in the pinion shaft groove.

BACK

Protected by AR

37. Apply power steering fluid to the surface of the special tool. Slip two new seal rings (A) over the special tool from the smaller diameter end, and expand them. Install only two rings at a time from each end of the pinion shaft sleeve (B).

    Note these items when installing the seal ring:
    - Do not over-expand the seal ring. Install the resin seal rings with care so as not to damage them. After installation, make sure you contract the seal rings using the special tool (sizing tool).
    - There are two types of sleeve seal rings: black and brown. Do not mix the different types of rings as they are not compatible.

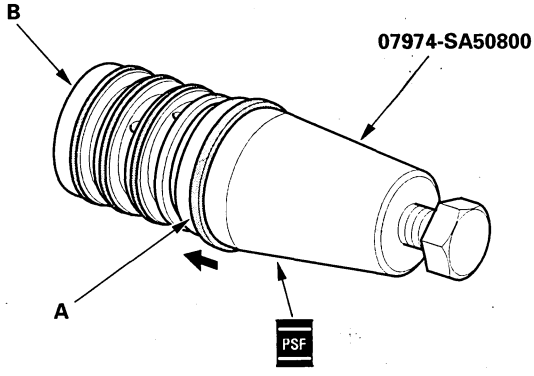

38. Align the special tool with each groove in the sleeve, and slide a sleeve seal ring into each groove. After installation, compress the seal rings with your fingers temporarily.

39. Apply power steering fluid to the seal rings on the sleeve, and to the entire inside surface of the special tool, then slowly insert the sleeve into the special tool.

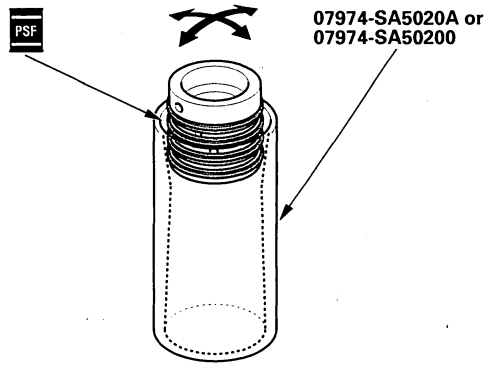

40. Move the sleeve back and forth several times to make the seal rings snugly fit in the sleeve. Make sure the seal rings are not twisted.

41. Apply power steering fluid to the surface of the pinion shaft (A). Slide the sleeve (B) onto the pinion shaft by aligning the locating pin (C) on the inside of the sleeve with the cutout (D) in the shaft. Then install the new snap ring (E) securely in the pinion shaft groove. Be careful not to damage the valve seal ring when inserting the sleeve.

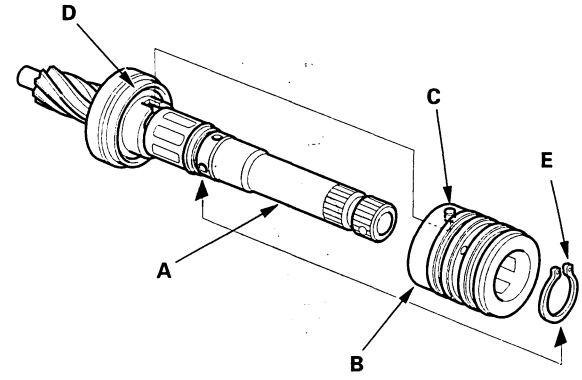

42. Apply power steering fluid to the seal ring lip of the new valve oil seal (A), then install the seal in the valve housing (B) using a hydraulic press and special tools. Install the seal with its grooved side facing the tool.

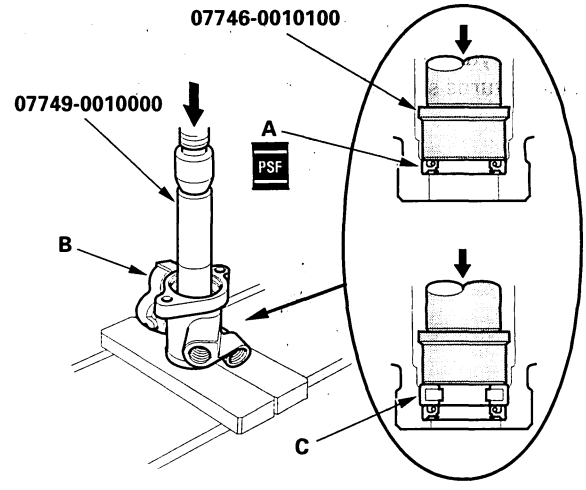

43. Press the roller bearing (C) into the valve housing with a hydraulic press and special tool.

(cont'd)

Protected by AR

Steering Gearbox Overhaul (cont'd)

44. Apply vinyl tape (A) to the pinion shaft, then coat the vinyl tape with power steering fluid.

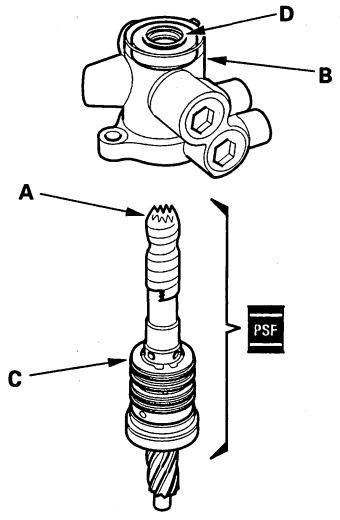

45. Insert the pinion shaft into the valve housing (B). Be careful not to damage the valve seal rings (C) and valve oil seal sealing lip (D).

46. Remove the vinyl tape from the pinion shaft, then remove any residue from the tape adhesive.

47. Press the pinion shaft/sleeve into the valve housing with a hydraulic press. Check that the pinion shaft/sleeve turns smoothly by hand after installing it.

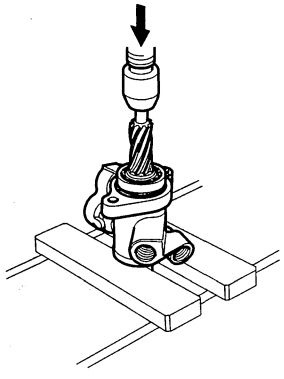

48. Coat the special tool with power steering fluid, then slide it onto the rack, big end first.

49. Position the new O-ring (A) and new piston seal ring (B) on the special tool, then slide them down toward the big end of the tool.

Note these items during reassembly:
- Do not over expand the resin seal rings. Install the resin seal rings with care so as not to damage them. After installation, make sure you contract the seal ring using the special tool (sizing tool).
- Replace the piston's O-ring and seal ring as a set.

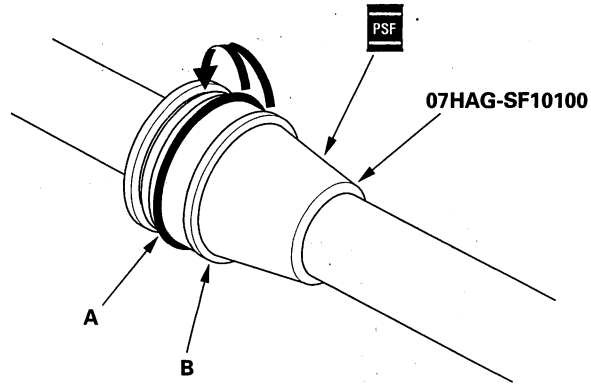

50. Pull the O-ring off into the piston groove, then pull the piston seal ring off into the piston groove on top of the O-ring.

51. Coat the piston seal ring (A) and the inside of the special tool with power steering fluid, then carefully slide the tool onto the rack and over the piston seal ring.

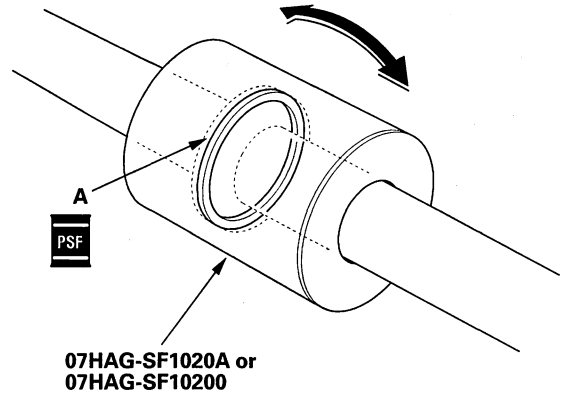

52. Move the special tool back and forth several times to make sure the piston seal ring fits snugly in the piston.

BACK

Protected by AR

53. Coat the sliding surface of the special tool (A) and new cylinder end seal (B) with power steering fluid. Place the seal on the special tool with its grooved side (C) facing opposite the special tool.

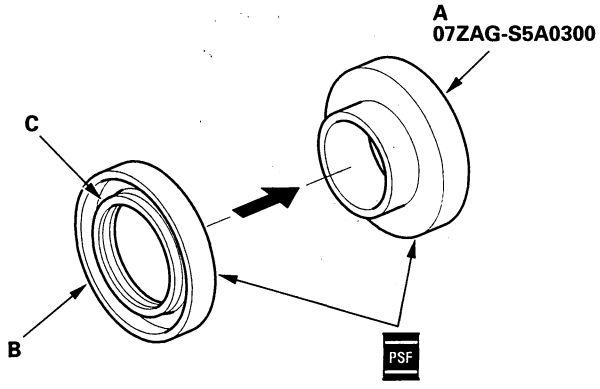

54. Coat the surface of the steering rack (A) with power steering fluid.

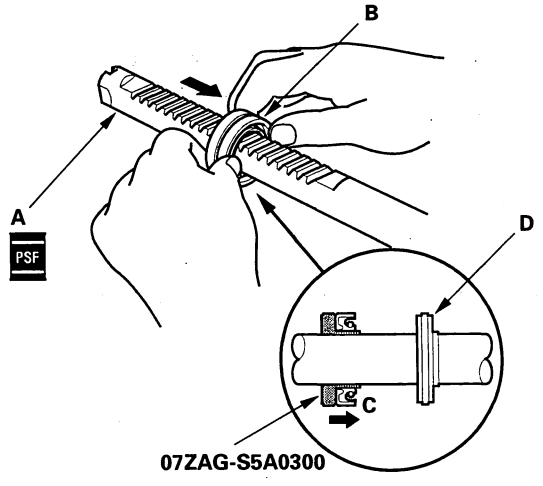

55. Install the cylinder end seal (B) onto the steering rack with its grooved side (C) toward the piston (D).

56. Separate the cylinder end seal from the special tool, then remove the special tool.

57. Install the new backup ring (A) on the steering rack, then place the backup ring and cylinder end seal (B) against the piston (C).

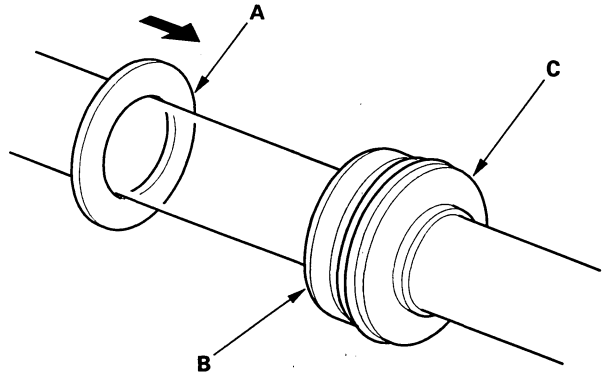

58. Apply multipurpose grease to the steering rack teeth, then insert the steering rack into the gearbox housing. Be careful not to damage the inner surface of the cylinder wall with the rack edges.

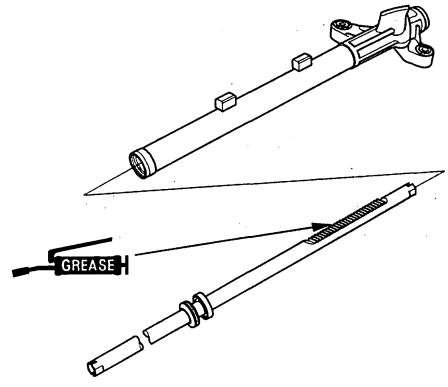

(cont'd)

Protected by AR

Steering Gearbox Overhaul (cont'd)

59. Insert an appropriate size deep socket wrench (A) onto the steering rack as shown.

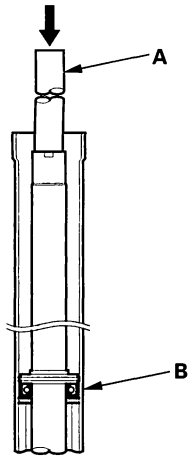

60. Install the cylinder end seal (B) into the bottom of the cylinder by pressing on the tool with a press. Do not push on the tool with excessive force as it may damage the cylinder end seal.

61. Remove the tool, and center the steering rack.

62. Coat the sliding surface of the special tool (A) and new cylinder end seal (B) with power steering fluid. Place the seal on the special tool with its grooved side (C) facing opposite the special tool.

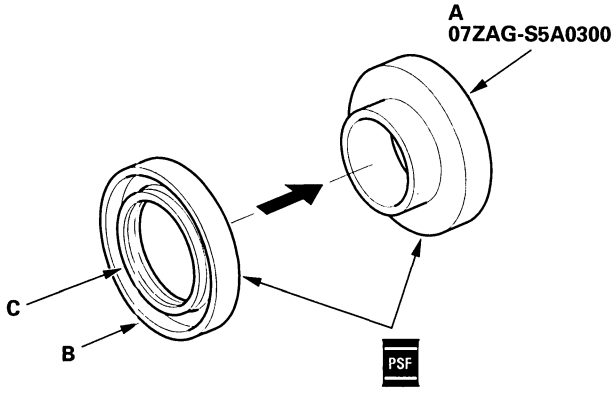

63. Coat the inside surface of the special tool and steering rack with power steering fluid, then install the cylinder end seal (A) onto the steering rack with its grooved side toward the cylinder.

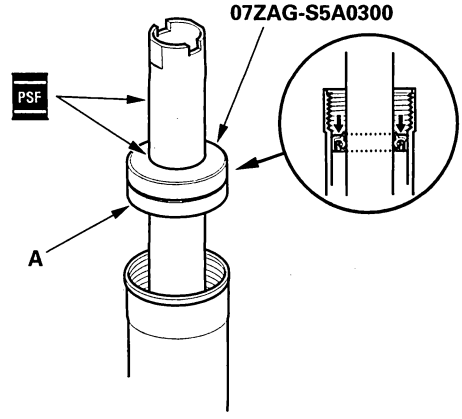

64. Separate the cylinder end seal from the special tool, then remove the special tool.

65. Push in the cylinder end seal with your finger. Be careful not to damage the face of the seal with the threads and burrs at the staked position of the cylinder housing.

66. Hold the gearbox housing using a C-clamp (commercially available) (A) and the wooden blocks (B). Do not clamp the cylinder part of the housing and gearbox housing in the vise.

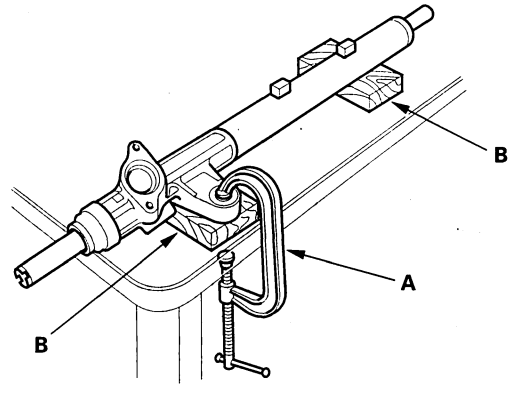

BACK

Protected by AR

67. Coat the inside surface of the cylinder end (A) with power steering fluid, then install the cylinder end by screwing it into the cylinder (B). Tighten the cylinder end to the specified torque.

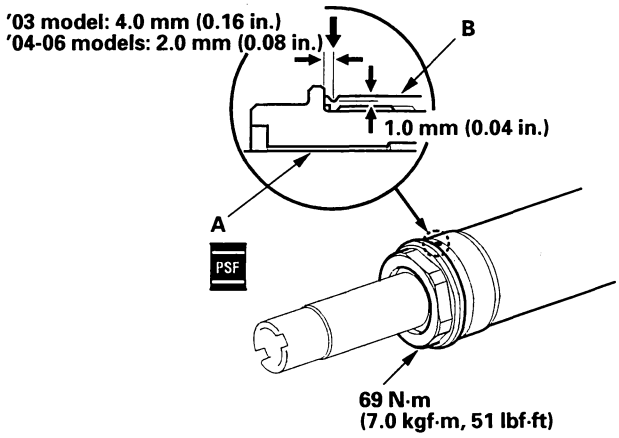

68. Stake the point of the cylinder show (opposite from where the stake was removed during disassembly).

69. Coat the new O-ring (A) with multipurpose grease, and carefully fit it on the valve housing.

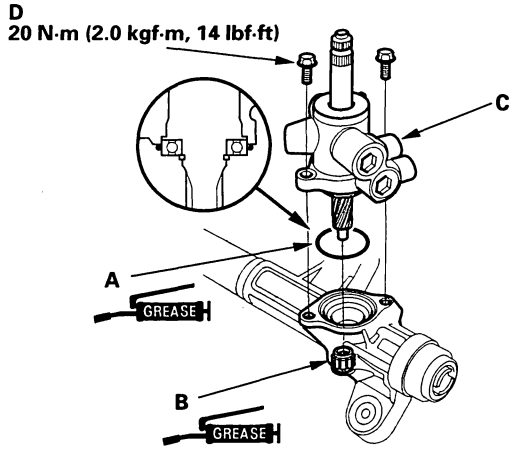

70. Apply multipurpose grease to the needle bearing (B) in the gearbox housing, then install the valve body unit (C) by engaging the gears. Note the valve body unit installation position (direction of the line connections).

71. Tighten the flange bolts (D) to the specified torque.

72. Install the cylinder lines.

    Note these items during reassembly:
    - Thoroughly clean the joints of the cylinder lines. The joints must be free of foreign material.
    - Install the cylinder lines by tightening the flare nuts by hand first, then tighten the flare nuts to the specified torque.

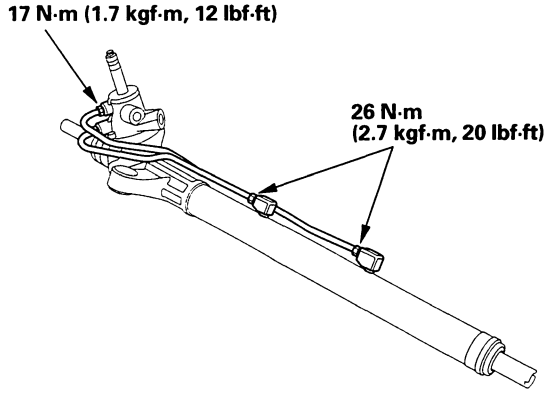

(cont'd)

Protected by AR

Steering Gearbox Overhaul (cont'd)

73. Apply multipurpose grease to the sliding surface and circumference of the rack guide (A), and install it onto the gearbox housing.

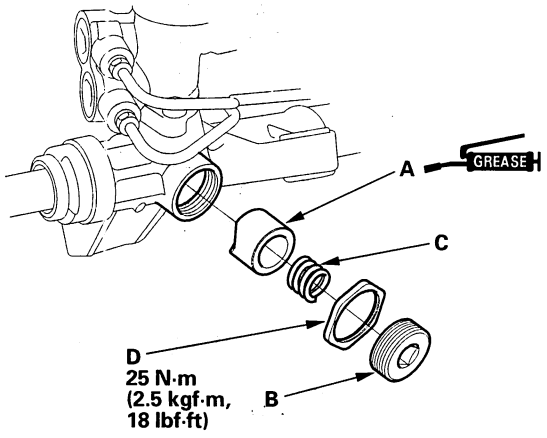

74. Apply new sealant (Three Bond 1215 or Loctite 5699) to the middle of the threads on the rack guide screw (B), then install the spring (C) and rack guide screw.

75. Tighten the rack guide screw, and loosely install the locknut (D).

76. Adjust the rack guide screw (see page 17-29). After adjusting, check that the rack moves smoothly by sliding it right and left.

77. Install a new stop rubber (A) and a new lock washer (B). Align the lock washer tabs (C) with the slots (D) on the rack end (E) while holding the lock washer in place. Repeat this step for the other side of the rack.

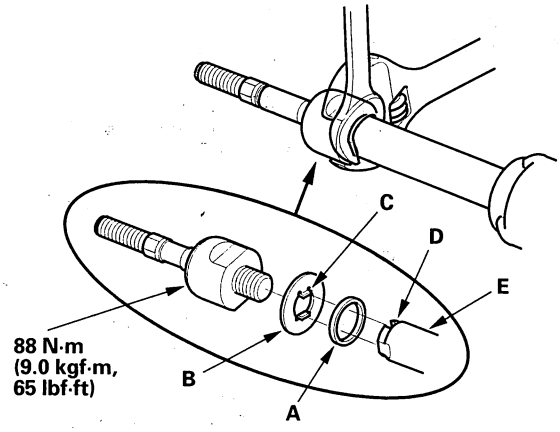

78. Hold the flat surface sections of the steering rack with a wrench, and tighten both rack ends. Be careful not to damage the rack surface with the wrench.

79. Bend the lock washer (A) back against the flat spots on the rack end joint housing.

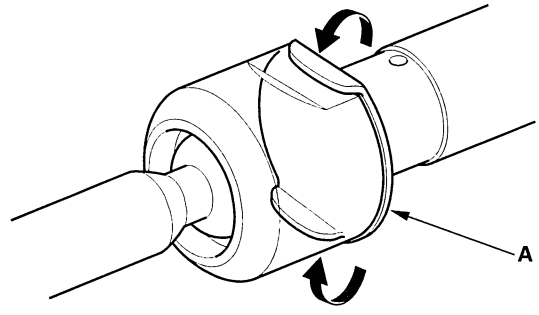

BACK

Protected by AR

80. Apply multipurpose grease to the circumference of the rack end joint housing (A).

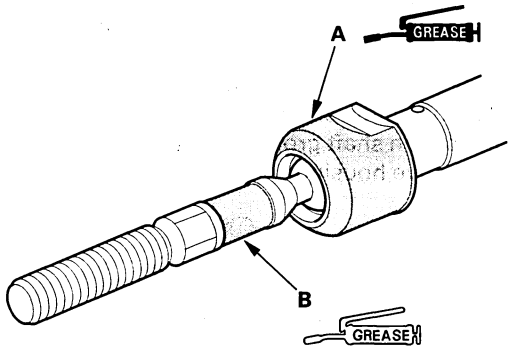

(P/N 08798-9013)

81. Apply a light coat of silicone grease to the boot grooves (B) on the rack ends.

82. Center the steering rack within its stroke.

83. Clean off any grease or contamination from the boot installation grooves (A) around the gearbox housing. Install the boots (B) on the rack ends with the tie-rod clips (C), and fit the boot end in the installation grooves in the housing properly.

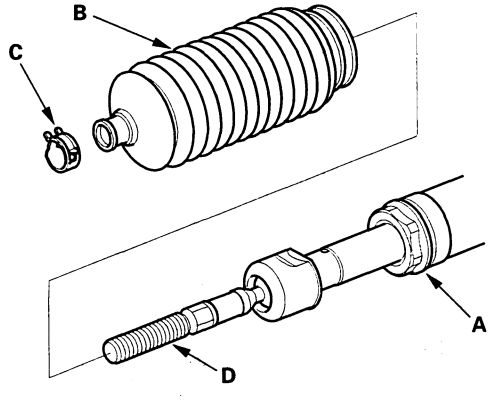

84. After installing the boots, wipe any grease off the threaded section (D) of the rack end.

85. Install the new boot bands by aligning the tabs (A) with the holes (B) of the band.

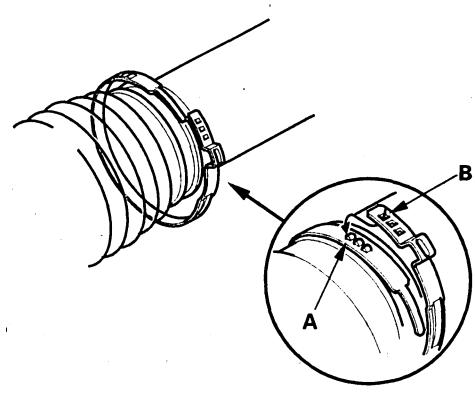

86. Close the ear portion (A) of the band (B) with commercially available pincers, Oetiker 1098 or equivalent (C).

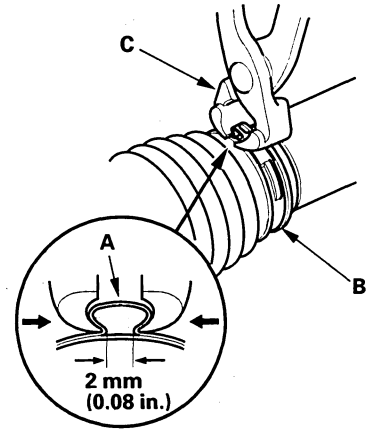

87. Slide the rack right and left to be certain that the boots are not deformed or twisted.

Protected by AR

Steering Gearbox Installation

Special Tools Required
Subframe adaptor EQS02C000016
(Available through the Honda Tool and Equipment program 888-424-6857)

1. Before installing the steering gearbox, make sure that no power steering fluid is on the mating surface of the gearbox and a front suspension subframe. To prevent the gearbox mounting bolts from loosening after the installation, remove any power steering fluid from the mount cushions and bolt holes.

2. Apply a mild soap and water solution to both sides of the mount cushion mating surfaces (A).

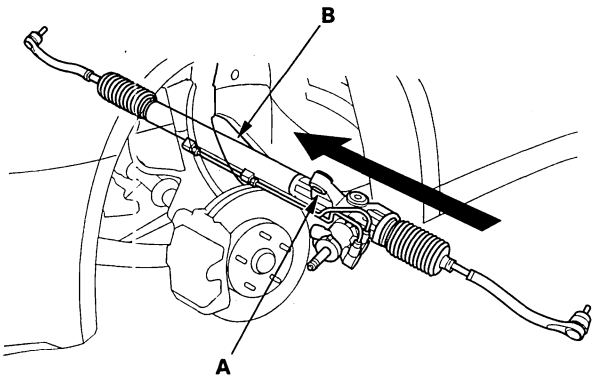

3. Pass the cylinder of the steering gearbox (B) through the wheelwell opening on the driver's side.

4. Carefully move the steering gearbox toward the passenger's side until the pinion shaft clears the wheelwell opening on the body.

5. Rotate the steering gearbox so the pinion shaft (A) points upward.

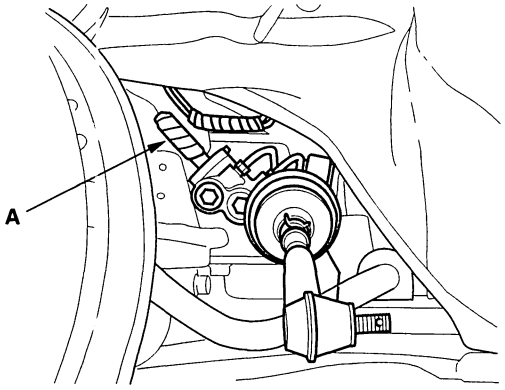

6. Continue moving the gearbox toward the passenger's side until the steering gearbox is in position. Make sure the power steering return line and feed line are routed above the gearbox.

7. Remove the vinyl tape from the pinion shaft, and install the pinion shaft grommet (A). Align the slot in the pinion shaft grommet with the lug portion (B) on the valve housing.

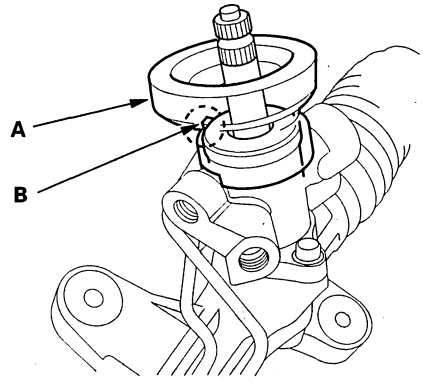

8. Position the cutout (A) on the mounting cushion (B) as shown, and install it on the cylinder of the gearbox securely.

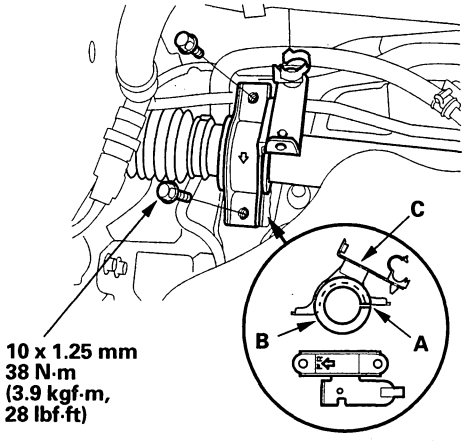

9. Install the gearbox mounting bracket (C) over the mounting cushion, and loosely install the two flange bolts.

BACK

Protected by AR

10. Install the steering stiffener plate (A) and gearbox mounting bolts on the left side of the gearbox, then tighten them to the specified torque.

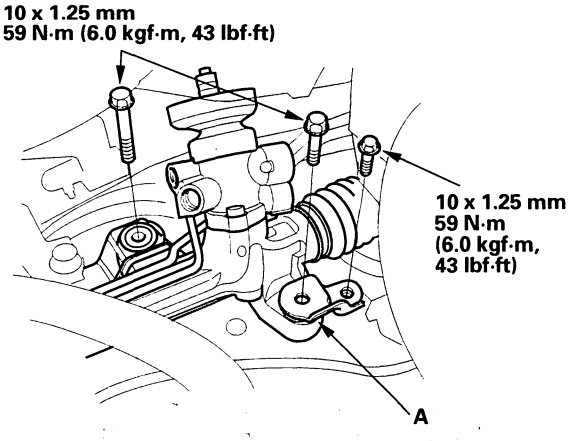

11. Tighten the flange bolts on the right side of the gearbox to specified torque alternately in two or more steps.

12. Loosely connect the return line and feed line by hand.

13. Install the feed line holder (A) and return hose (B) on the gearbox mounting bracket (C)

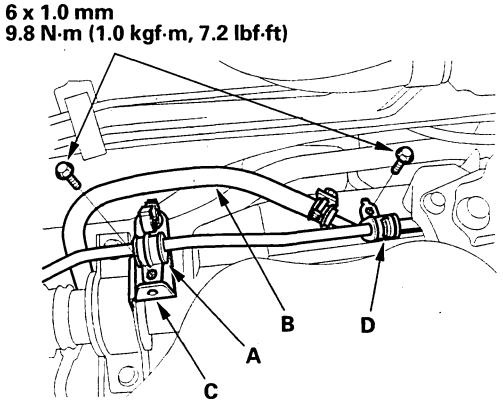

14. Install the feed line holder (D) on the front suspension subframe. Make sure that there is no interference between the feed and return lines and any other parts.

15. Tighten the return line flare nut (A) to the specified torque.

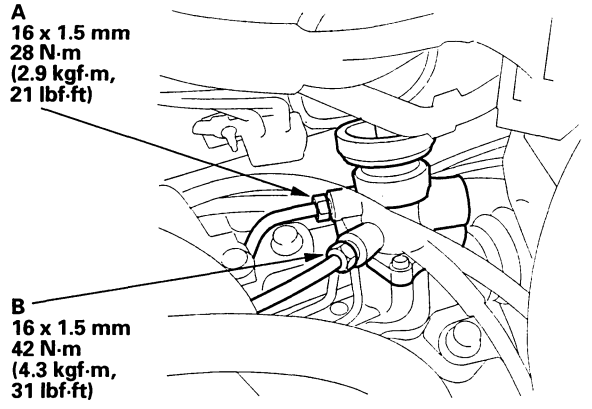

16. Tighten the feed line flare nut (B) to the specified torque.

17. Raise the jack supporting front suspension subframe (A) with special tool until the subframe is in position (see page 20-229).

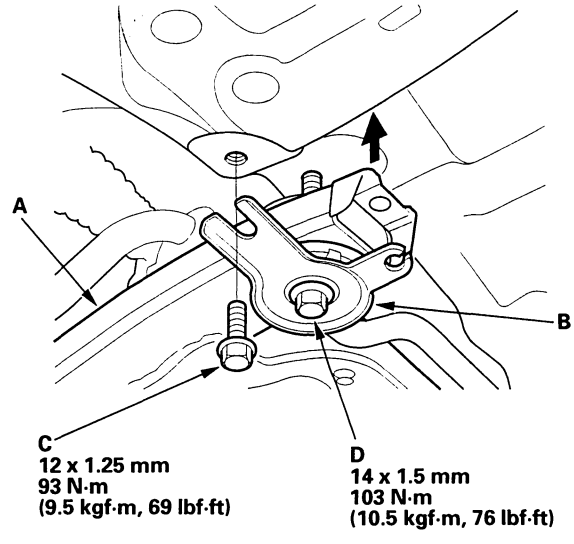

18. Install the front suspension subframe rear bracket (B) mounting bolt (C), then tighten new subframe mounting bolt (D) to the specified torque.

(cont'd)

Protected by AR

Steering Gearbox Installation (cont'd)

19. Install the front suspension subframe left middle mount (A).

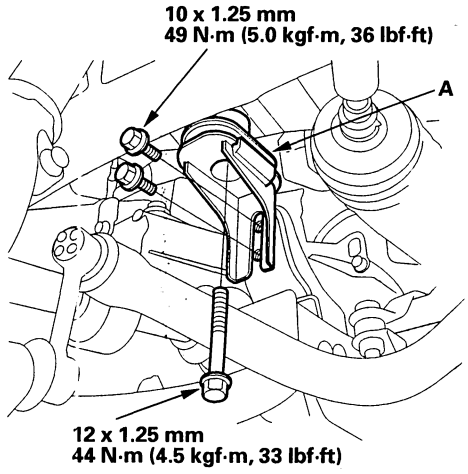

20. Install the front suspension subframe right middle mount bolts (A).

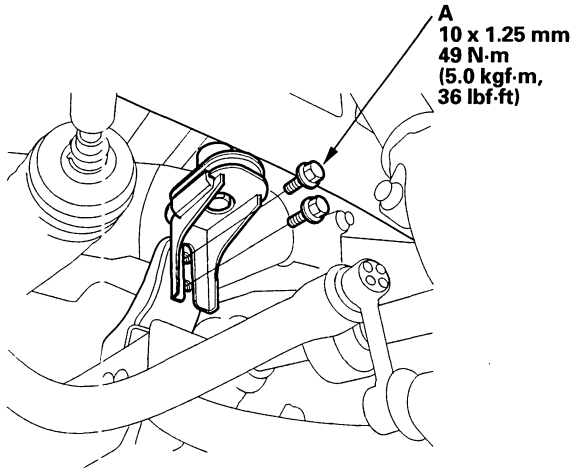

21. Install the P/S heat baffle plate (A).

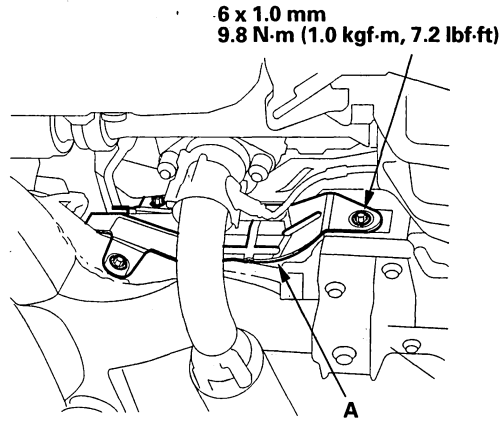

22. Wipe off any grease from the ball joint tapered section and threads. Then reconnect the tie-rod end (A) to the knuckle arms.

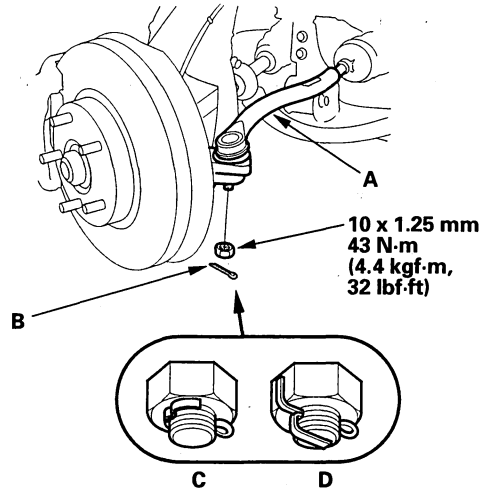

23. Install the tie-rod end ball joint nut, and tighten it to the specified torque. Then install the new cotter pin (B), and bend it as shown (C) or (D).

BACK

Protected by AR

24. Install the new cover seal (A) all the way around in the steering joint cover B. Make sure there are no wrinkles in the seal, then install the steering joint cover B.

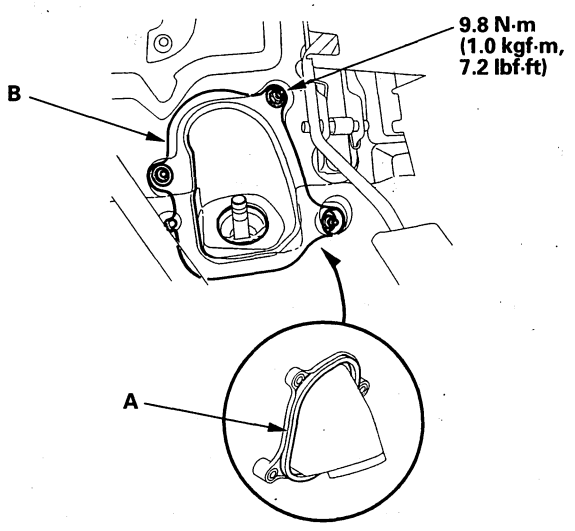

25. Center the steering rack within its stroke.

26. Position the steering column joint (A) so the bolt (B) opposite to the notch (C) is within the range shown.

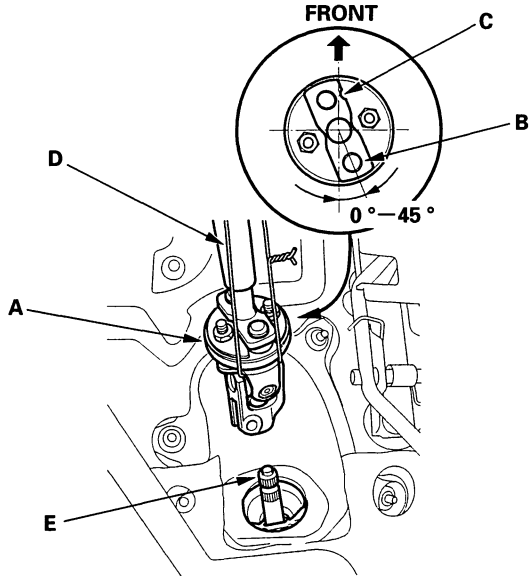

27. With the rack in the straight ahead driving position, cut the wire (D) and slip the lower end of the steering joint on to pinion shaft (E).

28. Align the bolt hole (A) on the steering joint with the groove (B) around the pinion shaft, and loosely install the joint bolt (C). Make sure the joint bolt is securely in the groove in the pinion shaft. Pull on the steering joint to make sure the steering joint is fully seated.

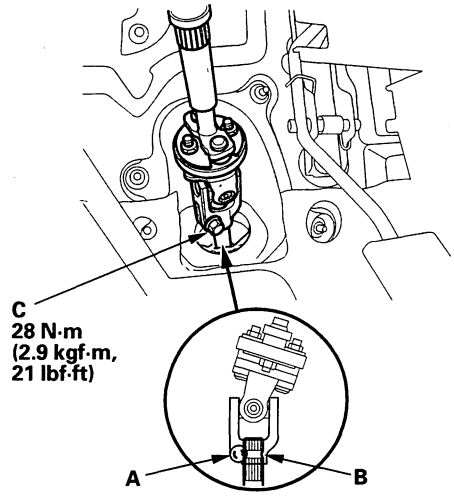

29. Tighten the steering joint bolt to the specified torque.

(cont'd)

Protected by AR

Steering Gearbox Installation (cont'd)

30. Install the steering joint cover A.

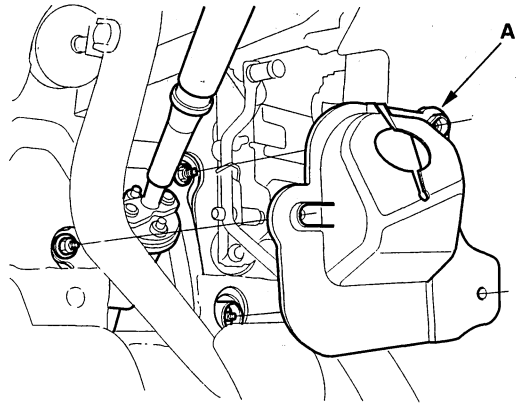

31. Install the front wheels, then set the wheels in the straight ahead position.

32. Center the cable reel by first rotating it clockwise until it stops. Then rotate it counterclockwise (about three full turns) until the arrow mark on the label points straight up. Reinstall the steering wheel (see page 17-24).

33. Fill the system with power steering fluid, and bleed air from the system (see page 17-12).

34. After installation, do the following checks.

- Start the engine, allow it to idle, and turn the steering wheel from lock-to-lock several times to warm up to the fluid. Check the gearbox for leaks (see page 17-11).
- Do the front toe inspection (see page 18-6).
- Check the steering wheel spoke angle. If steering spoke angles to the right and left are not equal (steering wheel and rack are not centered), correct the engagement of the joint/pinion shaft serrations, and repeat step 31. Then adjust the front toe by turning the tie-rod ends, if necessary.

BACK

Protected by AR

Tie-rod Ball Joint Boot Replacement

Special Tools Required
Front hub dis/assembly tool 07965-SA50500

1. Remove the boot from the tie-rod end, and wipe the old grease off the ball pin.

2. Pack the lower area of the ball pin (A) with fresh multipurpose grease.

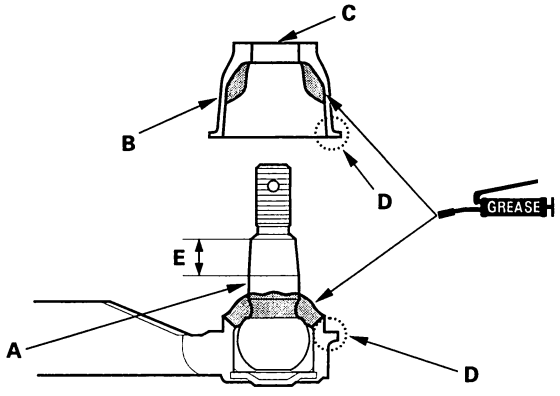

3. Pack the interior of the new boot (B) and lip (C) with fresh multipurpose grease.

   Note these items when installing new grease:
   - Keep grease off the boot mounting area (D) and the tapered section (E) of the ball pin.
   - Do not allow dust, dirt, or other foreign materials to enter the boot.

4. Install the new boot (A) using the special tool. The boot must not have a gap at the boot installation sections (B). After installing the boot, check the ball pin tapered section for grease contamination, and wipe it if necessary.

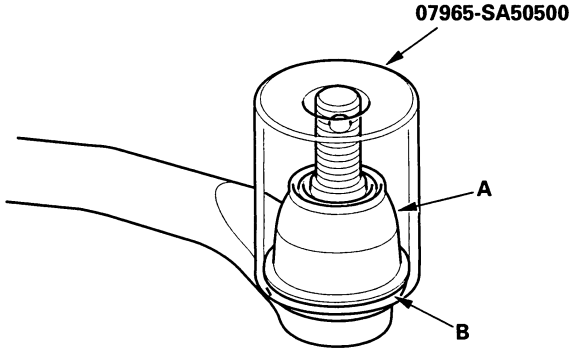

Gearbox Mount Cushion Replacement

1. Remove the steering gearbox (see page 17-30).

2. Position the 34 mm socket wrench (A) on the flange part of the gearbox housing with a washer (B), 10 x 105 mm flange bolt (C) and the 10 mm nut (D) as shown.

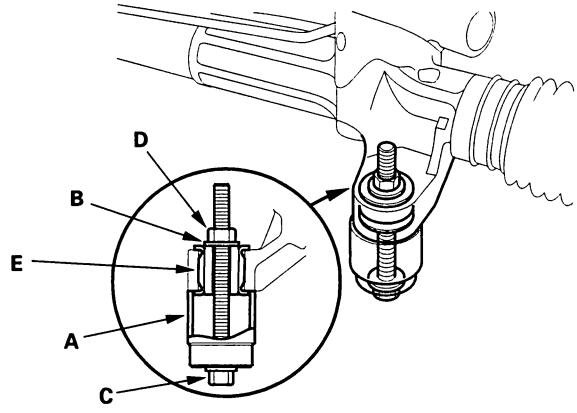

3. Hold the flange bolt with a wrench, and tighten the nut with a wrench. Remove the gearbox mount cushion (E).

4. Apply a mild soap and water solution to the new gearbox mount cushion surface (A), then place it on the gearbox mounting cushion hole.

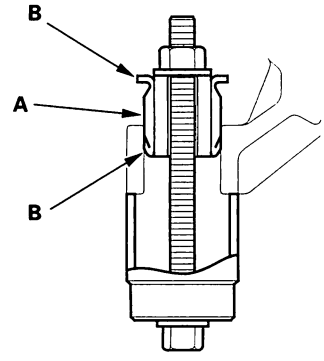

5. Position the 34 mm socket wrench on the flange part of the gearbox housing with a washer, flange bolt, and the nut as shown.

6. Install the gearbox mount cushion by tightening the nut until the mount cushion edges (B) properly fit on the gearbox flange surface.

Protected by AR

BACK

Protected by AR

Suspension

Front and Rear Suspension

Special Tools 18-2
Component Location Index 18-3
Wheel Alignment 18-6
Wheel Bearing End Play Inspection 18-9
Wheel Runout Inspection 18-10
Ball Joint Removal 18-11

Front Suspension

Knuckle/Hub/Wheel Bearing Replacement 18-12
Ball Joint Boot Replacement 18-18
Upper Arm Replacement 18-19
Lower Arm Removal/Installation 18-20
Stabilizer Link Replacement 18-22
Stabilizer Bar Replacement 18-23
Damper/Spring Replacement 18-24

Rear Suspension

Knuckle/Hub Replacement 18-29
Upper Arm Removal/Installation 18-39
Lower Arm Replacement 18-40
Control Arm Replacement 18-41
Trailing Arm Removal/Installation 18-41
Leading Arm Replacement 18-42
Stabilizer Link Removal/Installation 18-43
Stabilizer Bar Replacement 18-44
Knuckle Bushing Replacement 18-44
Damper/Spring Replacement 18-46

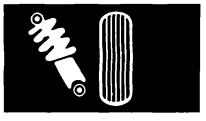

Protected by AR

Special Tools

Ref. No.	Tool Number	Description	Qty
①	07AAF-SDAA100	Ball Joint Thread Protector, 12 mm	1
②	07GAD-SD40101	Attachment, 78 x 90 mm	1
③	07GAF-SD40100	Hub Dis/Assembly Tool, 42 mm	1
④	07GAG-SD40700	Ball Joint Boot Clip Guide	1
⑤	07MAC-SL0A202	Ball Joint Remover, 28 mm	1
⑥	07NAD-SS00100 or 07NAD-SS00101	Bushing Driver 30—40	1
⑦	07746-0010600	Attachment, 72 x 75 mm	1
⑧	07749-0010000	Driver	1
⑨	07965-SD90100	Support Base	1

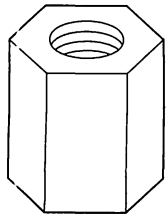

①

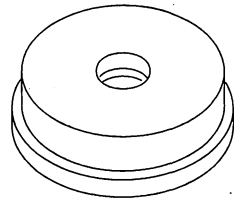

②, ⑦

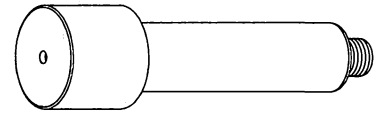

③

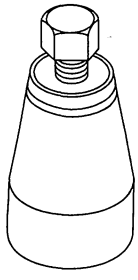

④

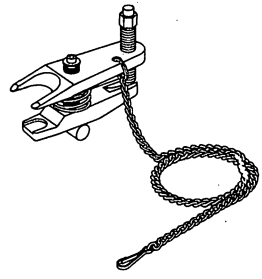

⑤

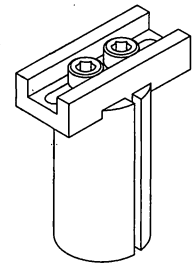

⑥

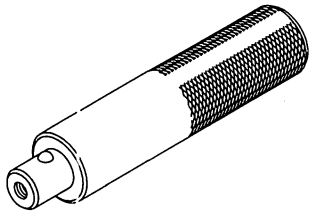

⑧

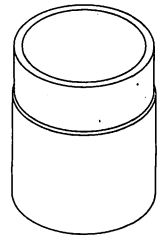

⑨

BACK

Protected by AR

Component Location Index

Front Suspension

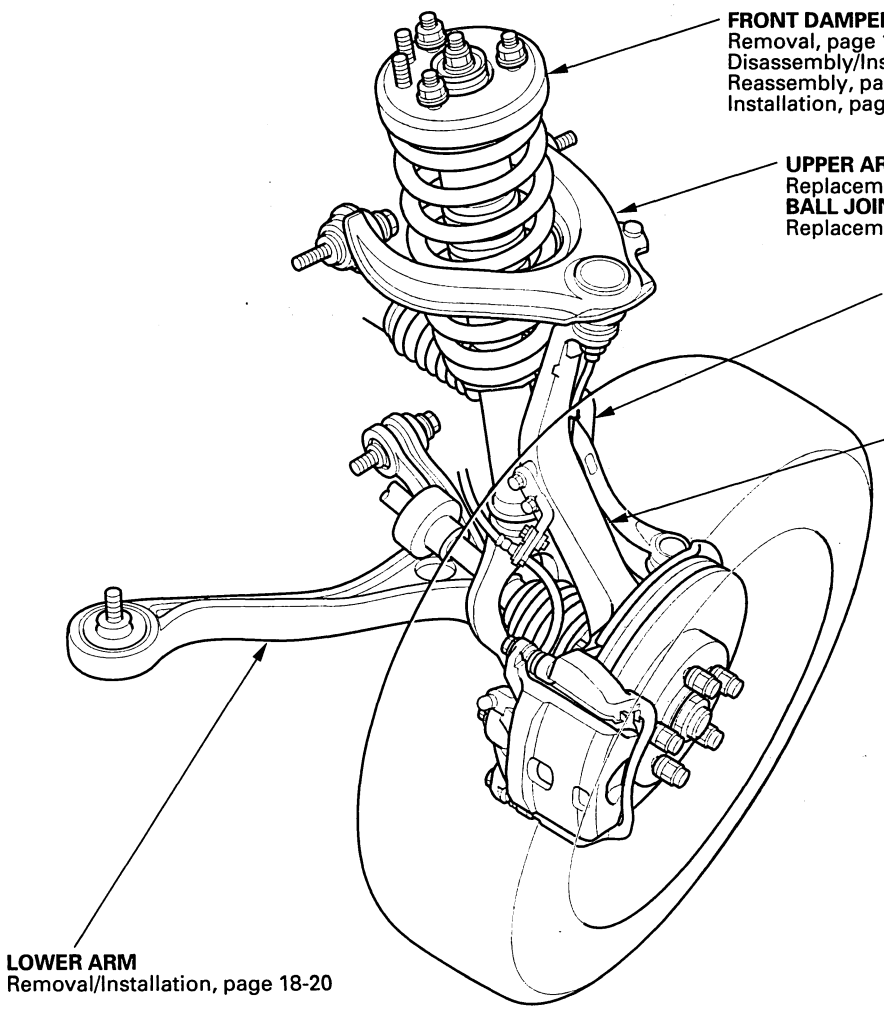

FRONT DAMPER
Removal, page 18-25
Disassembly/Inspection, page 18-25
Reassembly, page 18-26
Installation, page 18-27

UPPER ARM
Replacement, page 18-19
BALL JOINT BOOT
Replacement, page 18-18

STABILIZER LINK
Replacement, page 18-22
STABILIZER BAR
Replacement, page 18-23

KNUCKLE/
HUB/
WHEEL BEARING
Knuckle/Hub Replacement, page 18-13
Wheel Bearing Replacement, page 18-16
BALL JOINT BOOT
Replacement, page 18-18

LOWER ARM
Removal/Installation, page 18-20

Protected by AR

Component Location Index (cont'd)

Rear Suspension-Disc Brake

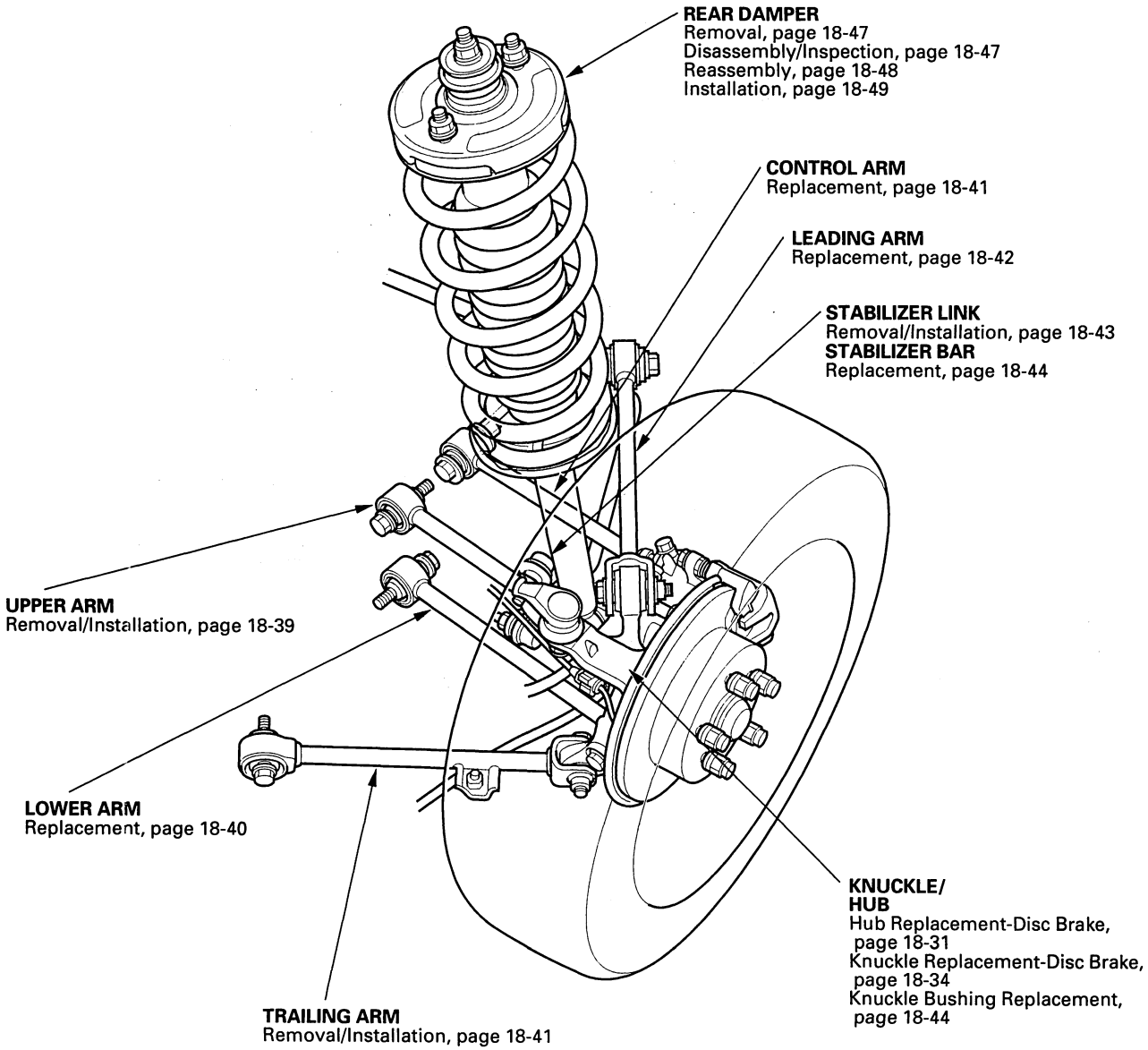

BACK

Protected by AR

Rear Suspension-Drum Brake

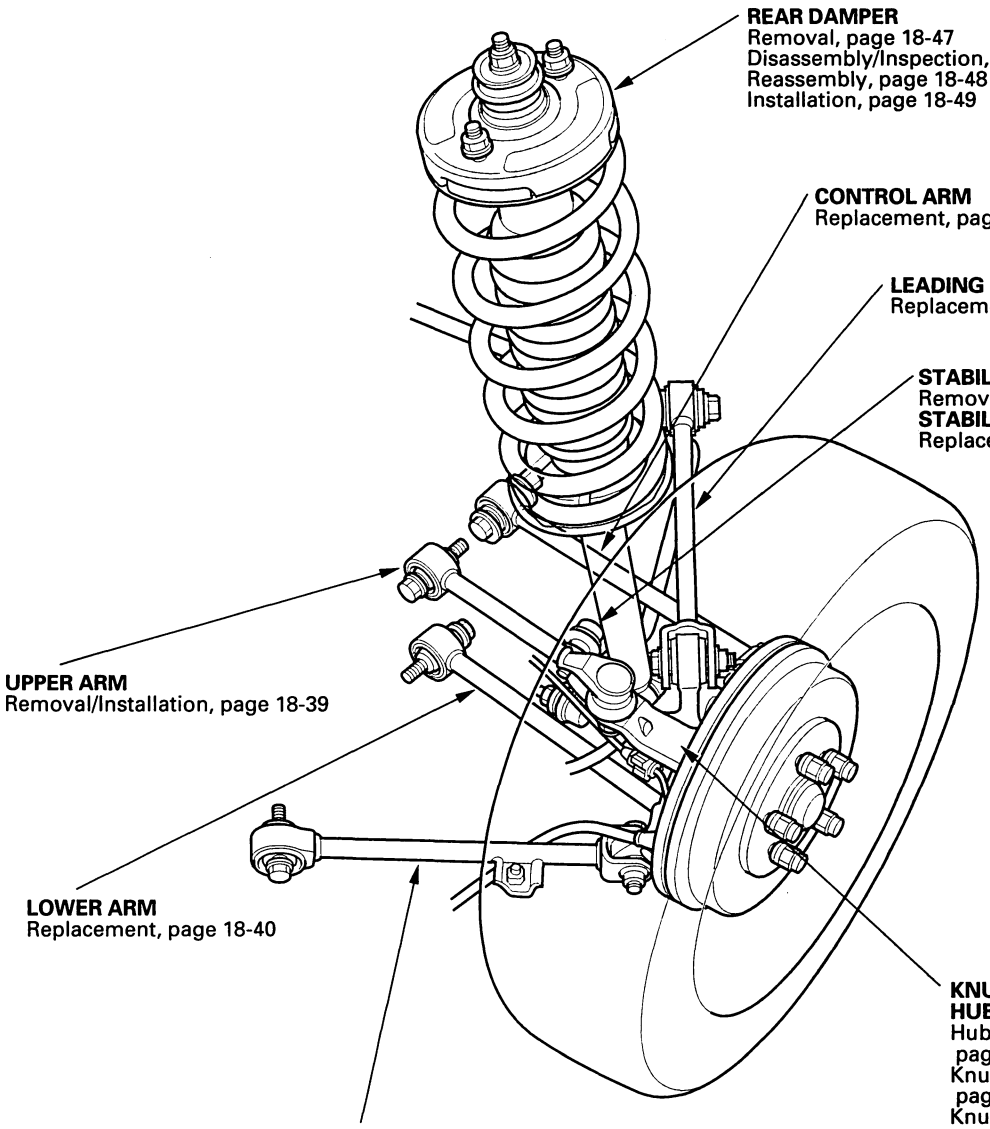

BACK

Protected by AR

Wheel Alignment

The suspension can be adjusted for front camber, front toe, and rear toe. However, each of these adjustments are related to each other. Forexample, when you adjust camber, the toe will change. Therefore you must adjust the front wheel alignment whenever you adjust camber or toe.

Pre-Alignment Checks

For proper inspection and adjustment of the wheel alignment, do these checks:

1. Release the parking brake to avoid an incorrect measurement.
2. Make sure the suspension is not modified.
3. Check the tire size and tire pressure.

Tire size

DX ('03-05), and VP models:	**P195/65R15 89H**
LX ('03-05), LX ('06 4-door) and LX-P models:	**P205/65R15 92H**
DX ('06), LX ('06 2-door), SE, EX, EXL models:	**P205/60R16 91V**

Tire pressure

DX ('03-06), VP, LX ('06 2-door), SE, EX, EXL models:
Front: 220 kpa (2.2 kgf/cm², 32 psi)
Rear: 210 kpa (2.1 kgf/cm², 30 psi)
LX ('03-05), LX ('06 4-door) and LX-P models:
Front: 210 kpa (2.1 kgf/cm², 30 psi)
Rear: 200 kpa (2.0 kgf/cm², 29 psi)

4. Check the runout of the wheels and tires (see page 18-10).
5. Check the suspension ball joints. (Hold a wheel with your hands, and move it up and down and right and left to check for wobbling.)

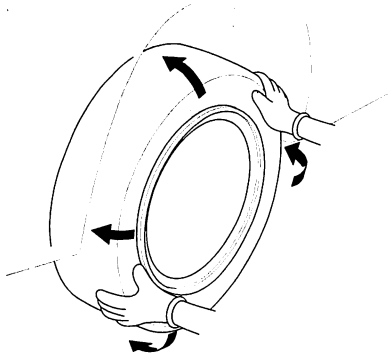

6. Bounce the vehicle up and down several times to stabilize the suspension.

Caster Inspection

Use commercially available computerized four wheel alignment equipment to measure wheel alignment (caster, camber, toe, and turning angle). Follow the equipment manufacturer's instructions.

1. Check the caster angle.

Caster angle:
DX ('03-05) and VP models: 3°10'±45'
DX ('06), LX, LX-P, SE, EX, EXL models: 3°15'±45'

2. If out of specification, check for bent or damaged suspension components.

BACK

Protected by AR

Camber Inspection

Use commercially available computerized four wheel alignment equipment to measure wheel alignment (caster, camber, toe, and turning angle). Follow the equipment manufacturer's instructions.

1. Check the camber angle.

   Camber angle:
   Front:
   DX ('03-05) and VP models: 0 ° 03 '±45 '
   DX ('06), LX, LX-P, SE, EX, EXL models:
   0 ° 00 '±45 '
   Maximum difference between the right and left side: 0 ° 45 '
   Rear:
   DX ('03-05) and VP models: −0 ° 50 '±30 '
   DX ('06), LX, LX-P, SE, EX, EXL models:
   −1 ° 00 '±30 '

2. If out of specification, check for bent or damaged suspension components.

Front Toe Inspection/Adjustment

Use commercially available computerized four wheel alignment equipment to measure wheel alignment (caster, camber, toe, and turning angle). Follow the equipment manufacturer's instructions.

1. Center the steering wheel spokes, and install a commercially available steering wheel holder tool.

2. Check the toe with the wheels pointed straight ahead.

   Front toe-in: 0±2 mm (0±1/16 in.)

   - If no adjustment is required, remove the alignment equipment.
   - If adjustment is required, go to step 3.

3. Loosen the tie-rod locknuts (A) while holding the flat surface sections (B) of the tie-rod end with a wrench, and turn both rack ends (C) until the front toe is within specifications.

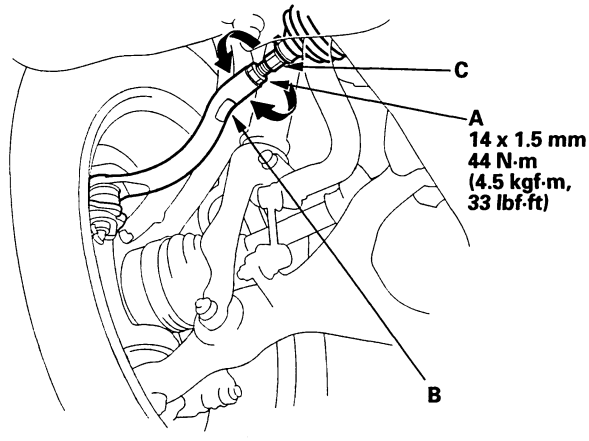

4. After adjusting, tighten the tie-rod locknuts. Reposition the rack-rod boot if it is twisted or displaced.

(cont'd)

Protected by AR

Wheel Alignment (cont'd)

Rear Toe Inspection/Adjustment

Use commercially available computerized four wheel alignment equipment to measure wheel alignment (caster, camber, toe, and turning angle). Follow the equipment manufacturer's instructions.

1. Release the parking brake to avoid an incorrect measurement.
2. Check the toe.

   Rear toe-in: 2±2 mm (1/16±1/16 in.)

   - If no adjustment is required, remove the alignment equipment.
   - If adjustment is required, go to step 3.
3. Hold the adjusting bolt (A) on the rear control arm (B), and loosen the self-locking nut (C).

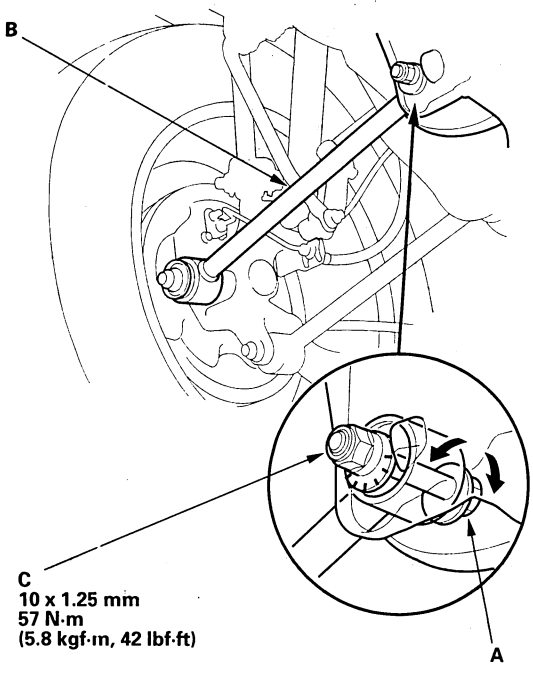

4. Replace the self-locking nut with a new one, and lightly tighten it.

   NOTE: Always use a new self-locking nut whenever it has been loosened.
5. Adjust the rear toe by turning the adjusting bolt until the toe is correct.
6. Tighten the self-locking nut while holding the adjusting bolt.

Turning Angle Inspection

Use commercially available computerized four wheel alignment equipment to measure wheel alignment (caster, camber, toe, and turning angle). Follow the equipment manufacturer's instructions.

1. Turn the wheel right and left while applying the brake, and measure the turning angle of both wheels.

   Turning angle:
   Inward:
   DX ('03-05) and VP models: 39 ° 00 '±2 °
   DX ('06), LX, LX-P, SE, EX, EXL models: 38 ° 50 '±2 °
   Outward:
   DX ('03-05) and VP models: 31 ° 50 ' (reference)
   DX ('06), LX, LX-P, SE, EX, EXL models: 31 ° 40 ' (reference)

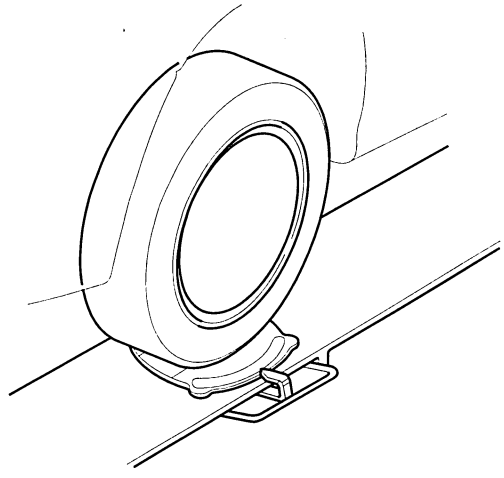

2. If the turning angle is not within the specifications, check for bent or damaged suspension components.

BACK

Protected by AR

Wheel Bearing End Play Inspection

1. Raise the vehicle, and support it with safety stands in the proper locations (see page 1-14).
2. Remove the wheels, then reinstall the wheel nuts (A), and torque to the specified torque.
3. Attach the dial gauge. Place the dial gauge against the hub flange or hub cap.

Front/Rear:
Standard: 0—0.05 mm (0—0.002 in.)

Front:

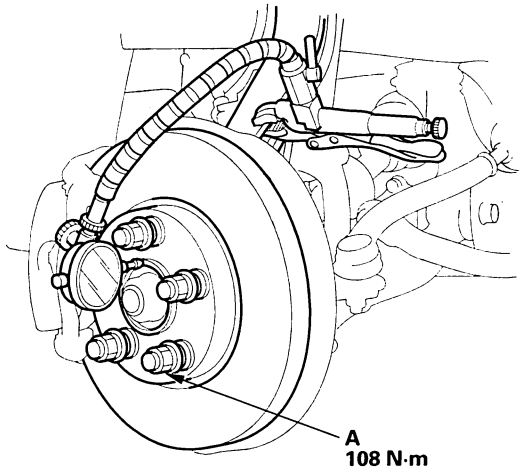

Rear-Drum Brake:

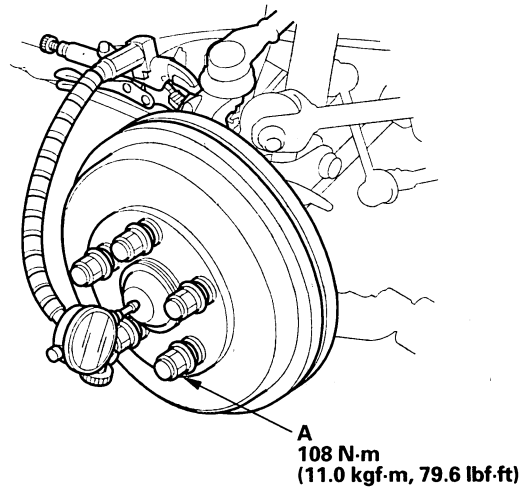

Rear-Disc Brake:

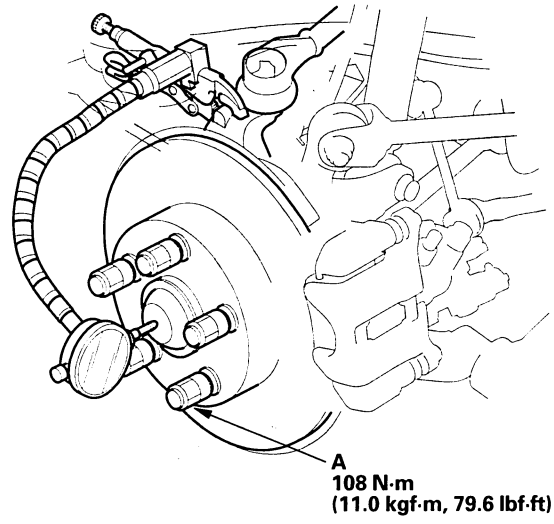

4. Measure the bearing end play by moving the brake drum or brake disc inward and outward.
5. If the bearing end play measurement is more than the standard, replace the wheel bearing or hub bearing unit.

Protected by AR

Wheel Runout Inspection

NOTE: When measuring the front wheel runout, turn the other side of the wheel slowly by hand.

1. Raise the vehicle, and support it with safety stands in the proper locations (see page 1-14).
2. Check for a bent or deformed wheel.
3. Set up the dial gauge as shown, and measure the axial runout by turning the wheel.

Front and rear wheel axial runout:

Standard:	
Steel wheel:	**0—1.0 mm (0—0.04 in.)**
Aluminum wheel:	**0—0.7 mm (0—0.03 in.)**
Service limit:	**2.0 mm (0.08 in.)**

Steel wheel:

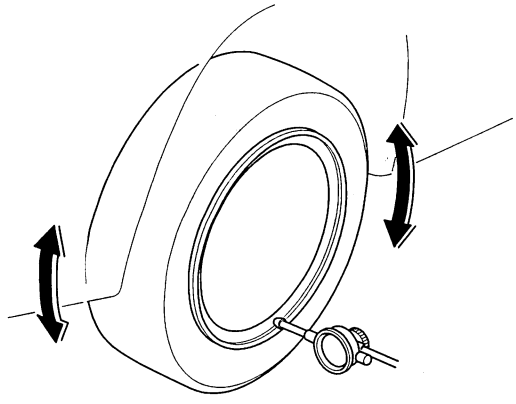

Aluminum wheel:

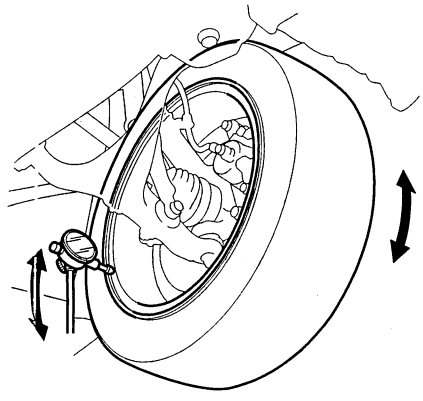

4. Reset the dial gauge to the position shown, and measure the radial runout.

Front and rear wheel radial runout:

Standard:	
Steel wheel:	**0—1.0 mm (0—0.04 in.)**
Aluminum wheel:	**0—0.7 mm (0—0.03 in.)**
Service limit:	**1.5 mm (0.06 in.)**

Steel wheel:

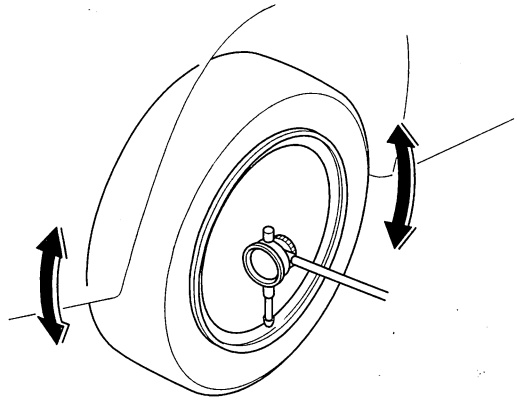

Aluminum wheel:

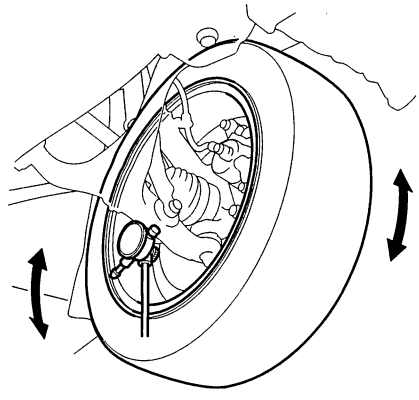

5. If the wheel runout is not within the specification, check the wheel bearing end play (see page 18-9), and make sure the mating surfaces on the brake disc or brake drum, and the inside of the wheel are clean.
6. If the bearing end play is within the specification but the wheel runout is more than the service limit, replace the wheel.

BACK

Protected by AR

Ball Joint Removal

Special Tools Required
- Ball joint thread protector, 12 mm 07AAF-SDAA100
- Ball joint remover, 28 mm 07MAC-SL0A202

NOTICE

Always use a ball joint remover to disconnect a ball joint. Do not strike the housing or any other part of the ball joint connection to disconnect it.

1. Install the special tool onto the threads of the ball joint (A) by hand until it stops. To prevent damage to the threaded end of the ball joint pin.

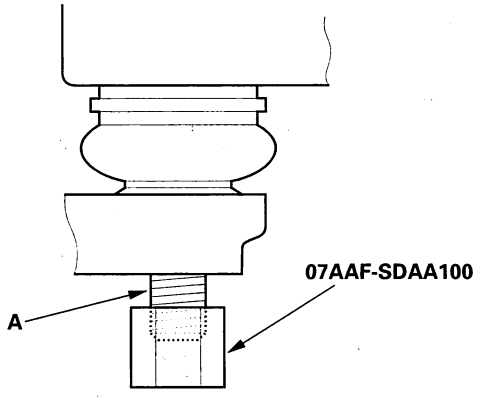

2. Apply grease to the special tool on the areas shown (A). This will ease installation of the tool and prevent damage to the pressure bolt (B) threads.

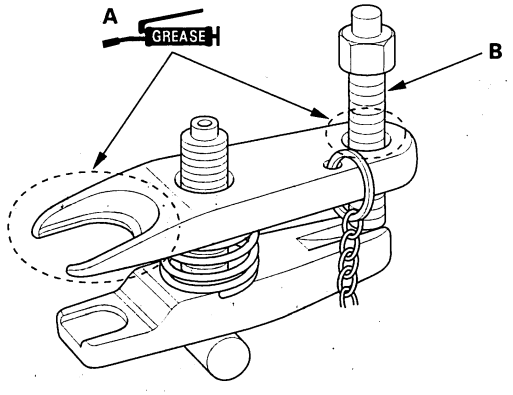

3. Loosen the pressure bolt (A), and install the special tools as shown. Insert the jaws carefully, making sure not to damage the ball joint boot. Adjust the jaw spacing by turning the adjusting bolt (B).

   NOTE: Fasten the safety chain (C) securely to a suspension arm or the subframe (D). Do not fasten it to a brake line or wire harness.

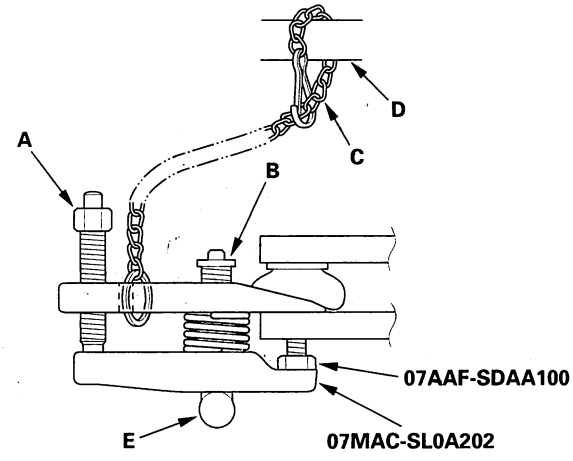

4. After adjusting the adjusting bolt, make sure the head (C) of the adjusting bolt is in the position shown to allow the jaw to pivot.

5. With a wrench, tighten the pressure bolt until the ball joint pin pops loose from the ball joint pin hole. If necessary, apply penetrating type lubricant to loosen the ball joint pin.

   NOTE: Do not use pneumatic or electric tools on the pressure bolt.

6. Remove the tool, then remove the nut from the end of the ball joint pin, and pull the ball joint out of the ball joint pin hole. Inspect the ball joint boot, and replace it if damaged.

Protected by AR

Knuckle/Hub/Wheel Bearing Replacement

Exploded View

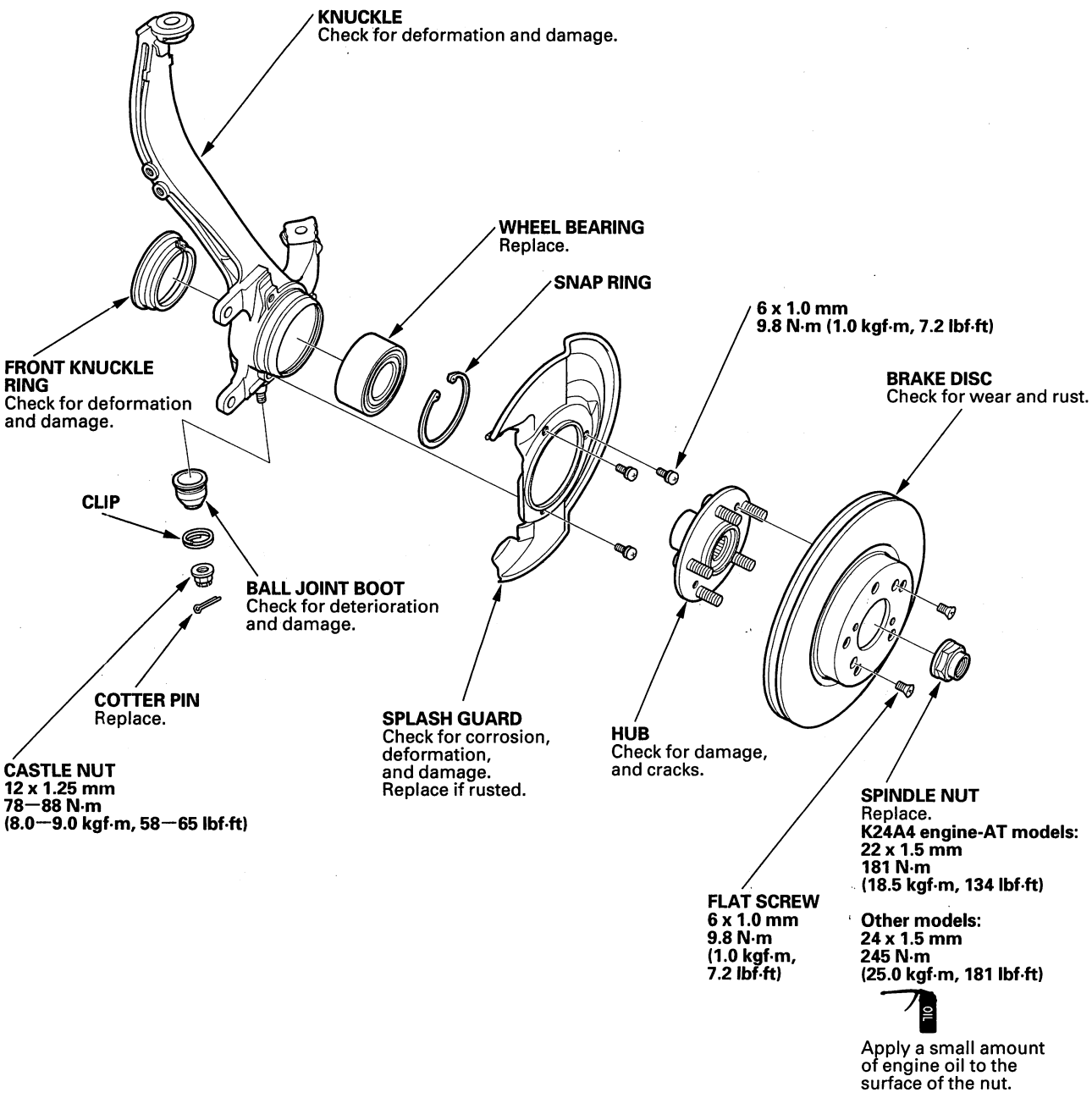

BACK

Protected by AR

Special Tools Required
- Hub dis/assembly tool, 42 mm 07GAF-SD40100
- Ball joint remover, 28 mm 07MAC-SL0A202
- Attachment, 72 x 75 mm 07746-0010600
- Attachment, 78 x 90 mm 07GAD-SD40101
- Driver 07749-0010000
- Support base 07965-SD90100
- Ball joint thread protector, 12 mm 07AAF-SDAA100

Knuckle/Hub Replacement

1. Raise the front of the vehicle, and support it with safety stands in the proper locations (see page 1-14).

2. Remove the wheel nuts and front wheel.

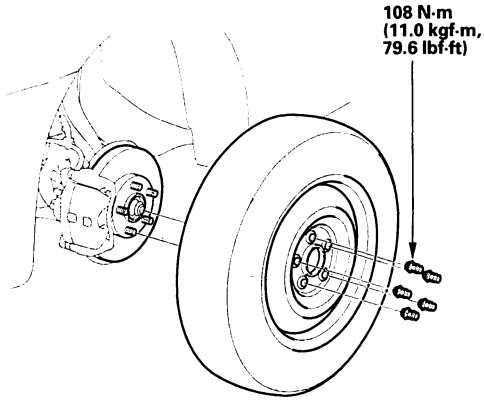

3. Remove the brake hose mounting bracket (A).

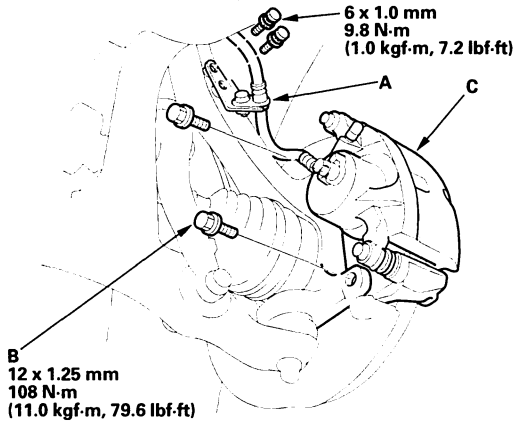

4. Remove the brake caliper bracket mounting bolts (B), and remove the caliper assembly (C) from the knuckle. To prevent damage to the caliper assembly or brake hose, use a short piece of wire to hang the caliper assembly from the undercarriage. Do not twist the brake hose with force.

5. Remove the wheel sensor (A) from the knuckle. Do not disconnect the wheel sensor connector.

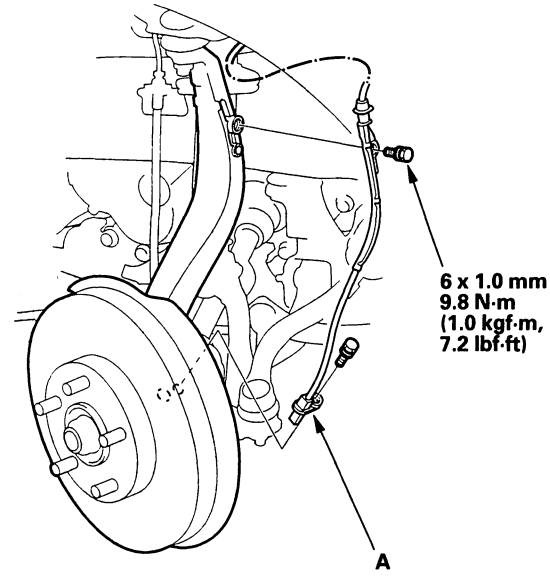

6. Raise the stake (A), and remove the spindle nut (B).

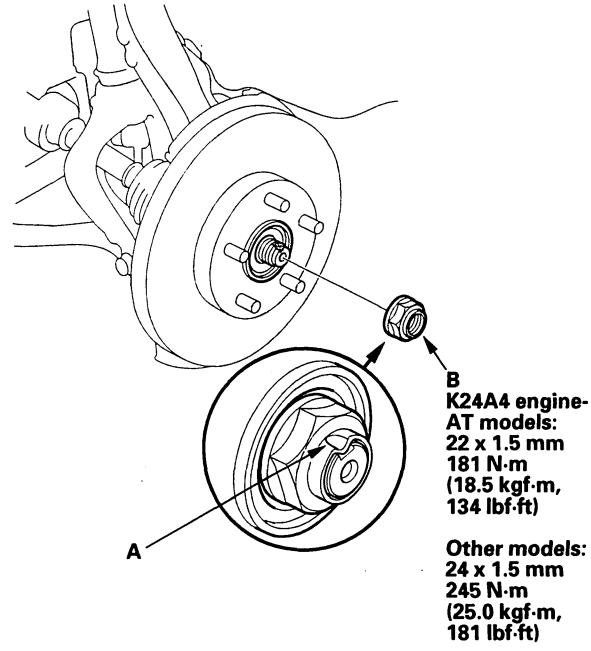

(cont'd)

Protected by AR

Knuckle/Hub/Wheel Bearing Replacement (cont'd)

7. Remove the 6 mm brake disc retaining screws (A).

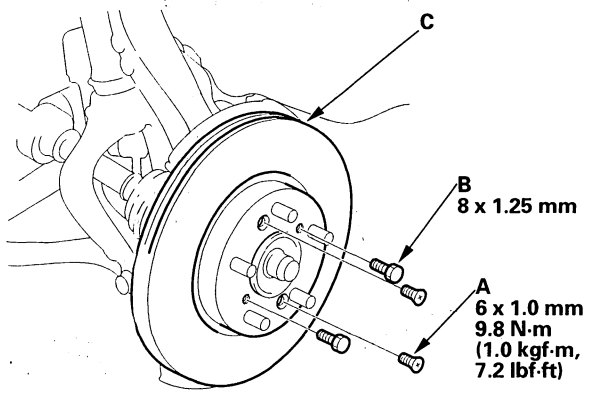

8. Screw two 8 x 1.25 mm bolts (B) into the disc to push it away from the hub. Turn each bolt two turns at a time to prevent cocking the disc excessively.

9. Remove the brake disc (C) from the hub.

10. Remove the cotter pin (A) from the tie-rod end ball joint, and loosen the nut (B).

    NOTE: During installation, install the new cotter pin after tightening the nut, and bend its end as shown.

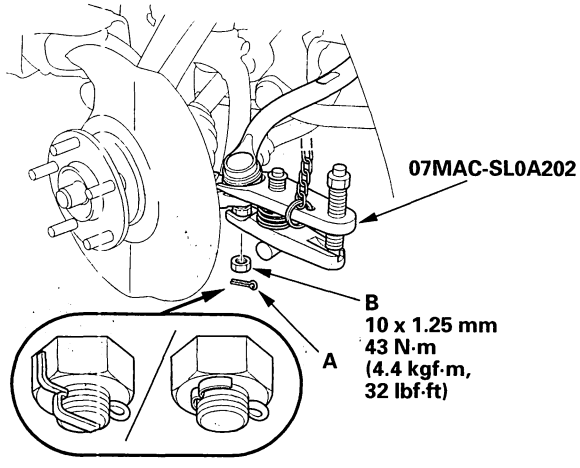

11. Disconnect the tie-rod end ball joint from the knuckle using the special tool (see page 18-11).

12. Remove the cotter pin (A) from the lower arm ball joint, and loosen the nut (B).

    NOTE:
    - To avoid damaging the ball joint, install the special tool on the threads of the ball joint.
    - Be carefull not to damage the ball joint boot when installing the remover.
    - Do not force or hammer on the lower arm, or pry between the lower arm and the knuckle. You could damage the ball joint.
    - Insert the new cotter pin in to the ball joint pin hole from the front to the rear of the vehicle, and bend its end as shown.

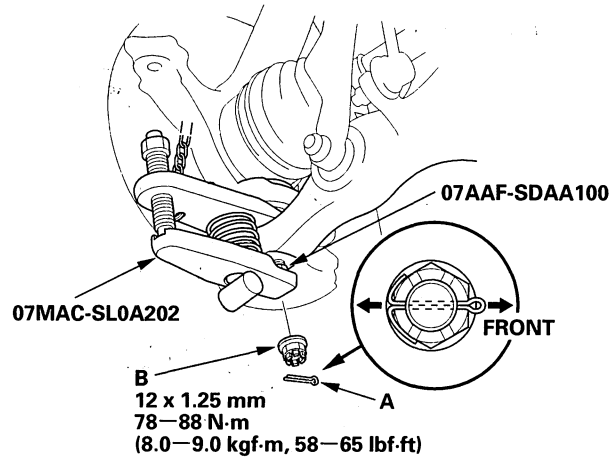

13. Disconnect the lower arm ball joint from the lower arm using the special tools (see page 18-11).

BACK

Protected by AR

14. Remove the cotter pin (A) from the upper arm ball joint, and loosen the nut (B).

    NOTE: During installation, insert the new cotter pin into the ball joint pin from the front to the rear of the vehicle, and bend its end as shown.

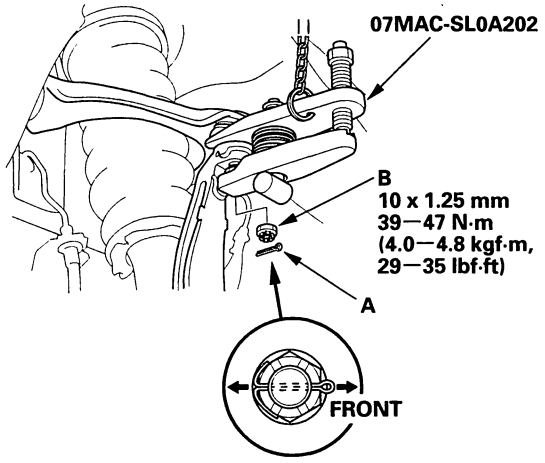

15. Disconnect the upper arm ball joint from the knuckle using the special tool (see page 18-11).

16. Remove the driveshaft outboard joint (A) from the knuckle (B) by tapping the driveshaft end (C) with a plastic hammer while drawing the hub outward, then remove the knuckle.

    NOTE: Do not pull the driveshaft end outward. The inner driveshaft joint may come apart.

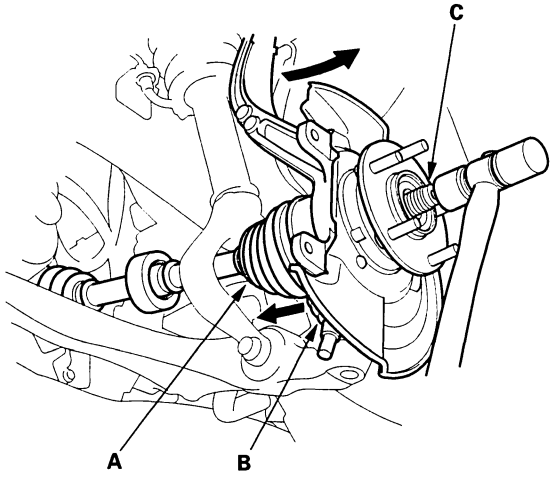

17. Install the knuckle/hub in the reverse order of removal, and note these items:

    - Be careful not to damage the ball joint boot when installing the knuckle.
    - Tighten all mounting hardware to the specified torque values.
    - Before connecting the lower arm ball joint to the lower arm, degrease the threaded section and tapered portion of the ball joint pin, the lower arm connecting hole, and the threaded section and mating surface of the castle nut.
    - First install all the components and lightly tighten the bolts and nuts, then raise the suspension to load it with the vehicle's weight before fully tightening to the specified torque values. Do not place the jack against the ball joint pin of the knuckle.
    - Torque the castle nut to the lower torque specification, then tighten it only far enough to align the slot with the ball joint pin hole. Do not align the castle nut by loosening it.
    - Install a new cotter pin on the castle nut after torquing.
    - Use a new spindle nut on reassembly.
    - Before installing the spindle nut, apply a small amount of engine oil to the seating surface of the nut. After tightening, use a drift to stake the spindle nut shoulder against the driveshaft.
    - Before installing the brake disc, clean the mating surface of the front hub and the inside of the brake disc.
    - Before installing the wheel, clean the mating surface of the brake disc and the inside of the wheel.
    - Check the front wheel alignment, and adjust it if necessary (see page 18-6).

(cont'd)

Protected by AR

Knuckle/Hub/Wheel Bearing Replacement (cont'd)

Wheel Bearing Replacement

1. Separate the hub (A) from the knuckle (B) using the special tool and a hydraulic press. Hold the knuckle with the attachment (C) of the hydraulic press or equivalent tool. Be careful not to deform the splash guard. Hold onto the hub to keep it from falling when pressed clear.

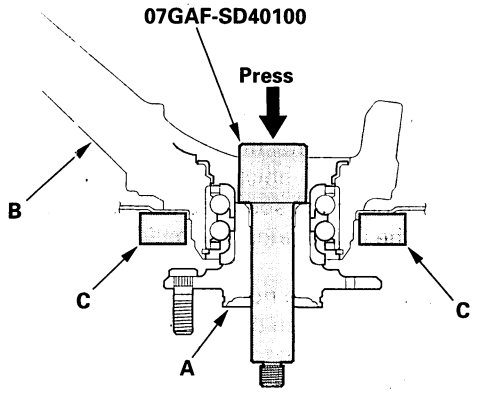

2. Press the wheel bearing inner race (A) off of the hub (B) using the special tool, commercially available bearing separator (C), and a press.

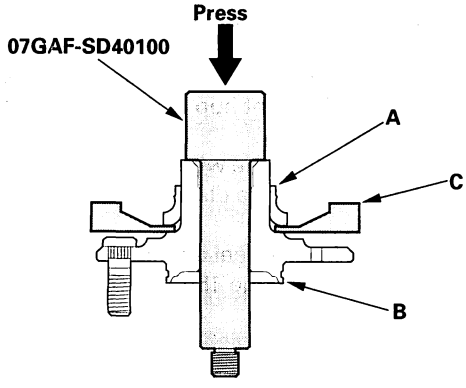

3. Remove the snap ring (A) and the splash guard (B) from the knuckle (C).

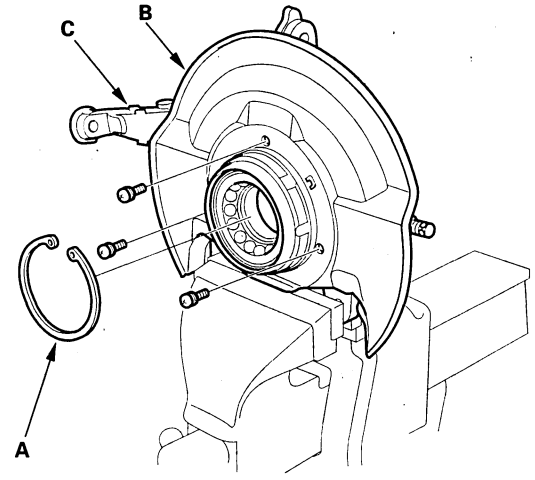

4. Check the front knuckle ring (A) for damage or deformation, and replace it if necessary.

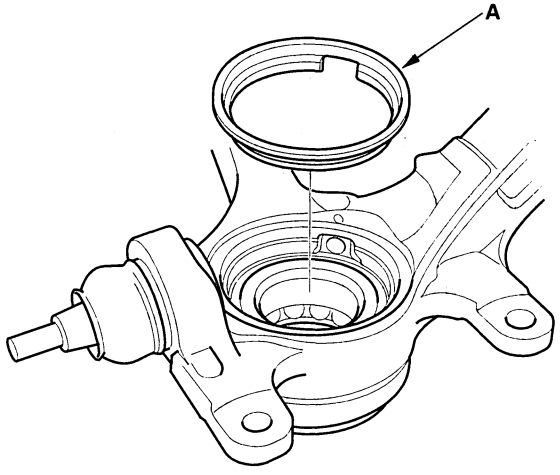

BACK

Protected by AR

5. Press the wheel bearing (A) out of the knuckle (B) using the special tools and a press.

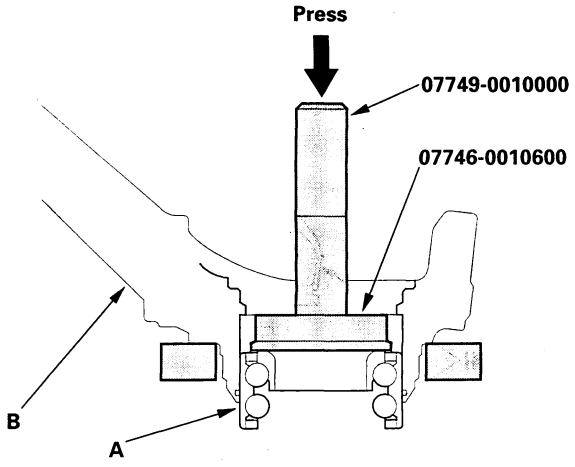

6. Wash the knuckle and hub thoroughly in high flash point solvent before reassembly.

7. Press a new wheel bearing (A) into the knuckle (B) using the old bearing (C), a steel plate (D), the special tools, and a press.

NOTE:
- Install the wheel bearing with the wheel sensor magnetic encoder (E) (brown color), toward the inside of the knuckle.
- Remove any oil, grease, dust, metal debris, and other foreign material from the encoder surface.
- Keep any magnetic tools away from the encoder surface.
- Be careful not to damage the encoder surface when you insert the wheel bearing.

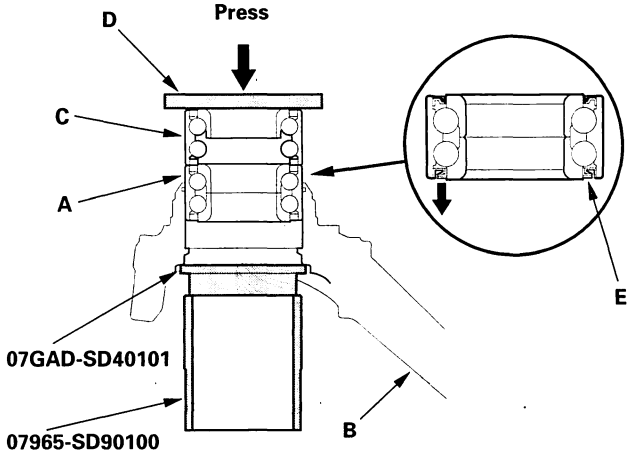

8. Install the new front knuckle ring (A) on the inside of the knuckle by aligning the cutout portion (B) on the ring with the wheel sensor hole (C) in the knuckle. Be careful not to damage or deform the ring when installing it.

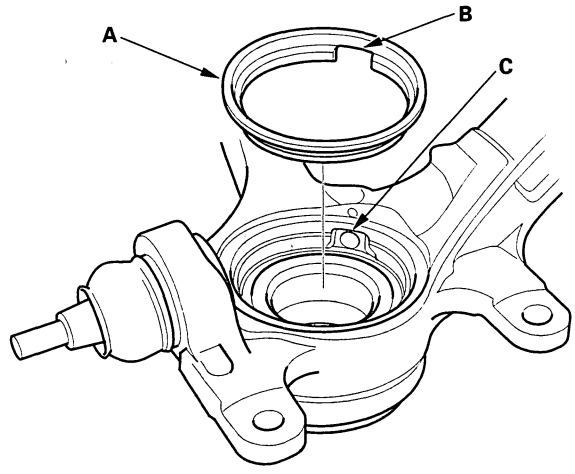

9. Install the snap ring (A) securely in the knuckle (B).

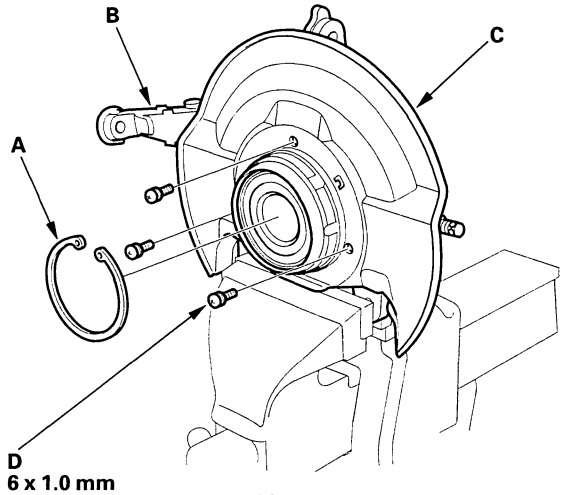

6 x 1.0 mm
9.8 N·m (1.0 kgf·m, 7.2 lbf·ft)

10. Install the splash guard (C), and tighten the screws (D) to the specified torque value.

(cont'd)

Protected by AR

Knuckle/Hub/Wheel Bearing Replacement (cont'd)

11. Press a wheel bearing (A) onto the hub (B) using the special tools and a press.

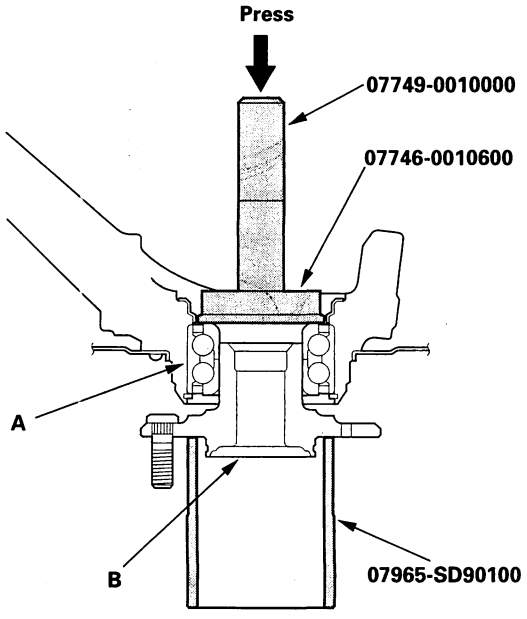

Ball Joint Boot Replacement

Special Tools Required
Ball joint boot clip guide 07GAG-SD40700

1. Remove the boot clip and the boot.
2. Pack the interior and lip (A) of a new boot with grease. Keep the grease off of the boot-to-knuckle mating surface (B).

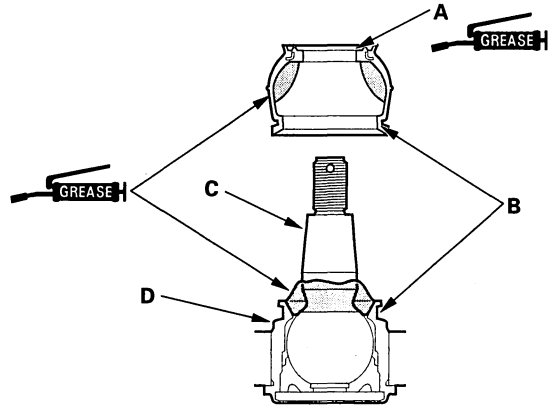

3. Wipe the grease off the tapered portion of the pin (C), and pack fresh grease into the base (D). Do not let dirt, or other foreign materials get into the boot.
4. Install the boot on the ball joint, then squeeze it gently to force out any air.
5. Adjust the special tool with the adjusting bolt (A) until its base is just above the groove around the bottom of the boot. Then slide the clip (B) over the tool and into position on the boot.

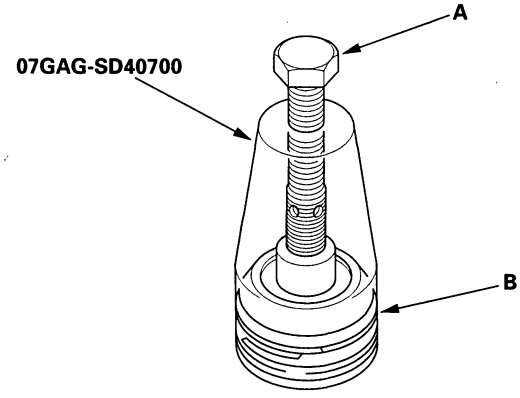

6. After installing a boot, wipe any grease off the exposed portion of the ball joint pin.

BACK

Protected by AR

Upper Arm Replacement

Special Tools Required
Ball joint remover, 28 mm 07MAC-SL0A202

1. Remove the front damper (see page 18-25).

2. Remove the wheel sensor bracket (A) from the upper arm (B).

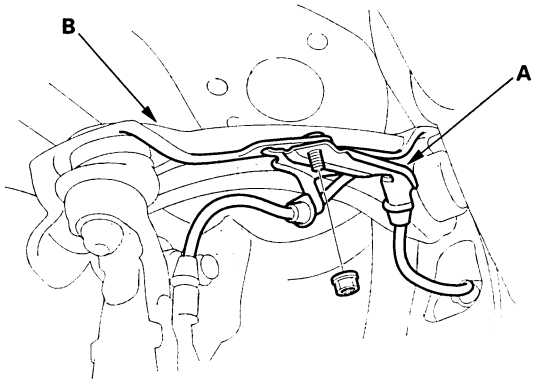

3. Remove the cotter pin (A) from the upper arm ball joint, and loosen the nut (B).

   NOTE: During installation, insert the new cotter pin into the ball joint pin hole from the front to the rear of vehicle, and bend its end as shown.

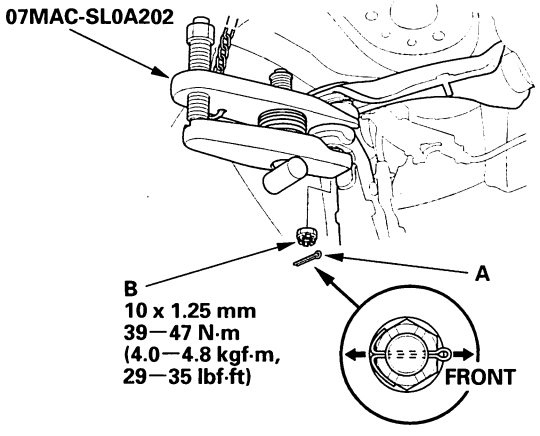

4. Disconnect the upper arm ball joint from the knuckle using the special tool (see page 18-11).

5. Remove the upper arm mounting bolts (A), and remove the upper arm (B).

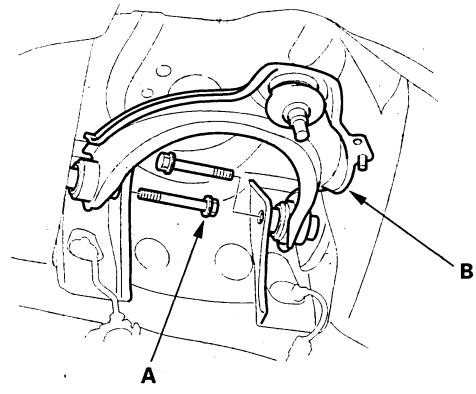

6. Install the upper arm by inserting a rod (A) of appropriate size (O.D. 6 mm/L: 300 mm) into the positioning holes (B), and place the upper arm (C) on the rod to position it before tightening the upper arm mounting bolts.

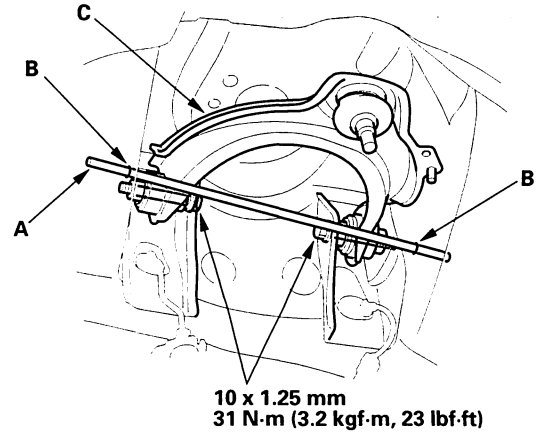

(cont'd)

Protected by AR

Upper Arm Replacement (cont'd)

7. Install the remaining parts in the reverse order of removal, and note these items:

   - Be careful not to damage the ball joint boot when installing the knuckle.
   - Tighten all mounting hardware to specified torque values.
   - First install all the components and lightly tighten the bolts and nuts, then raise the suspension to load it with the vehicle's weight before fully tightening to the specified torque values. Do not place the jack against the ball joint pin of the knuckle.
   - Torque the castle nut to the lower torque specification, then tighten it only far enough to align the slot with the ball joint pin hole. Do not align the castle nut by loosening it.
   - Install a new cotter pin on the castle nut after torquing.
   - Before installing the wheel, clean the mating surface on the brake disc and the inside of the wheel.
   - Check the front wheel alignment, and adjust it if necessary (see page 18-6).

Lower Arm Removal/Installation

Special Tools Required
- Ball joint remover, 28 mm 07MAC-SL0A202
- Ball joint thread protector, 12 mm 07AAF-SDAA100

1. Raise the front of the vehicle, and support it with safety stands in the proper locations (see page 1-14).

2. Remove the front wheel.

3. Remove the damper fork (A) from the damper (B) and lower arm (C).

   NOTE: During installation, insert the damper fork into the damper lower end so the aligning tab (D) is aligned with the slot (E) in the damper fork. Replace the damper fork mounting nut (F) with a new one.

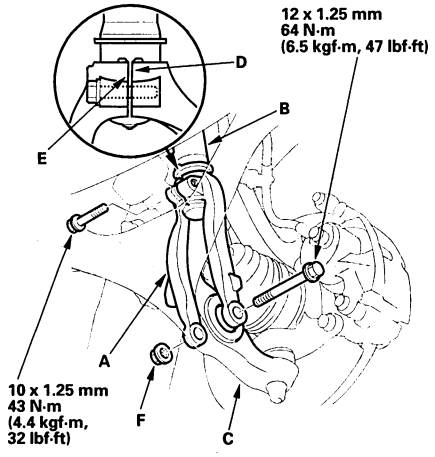

4. Remove the flange nut (A) while holding the joint pin (B) with a hex wrench (C), and disconnect the stabilizer link (D) from the lower arm (E).

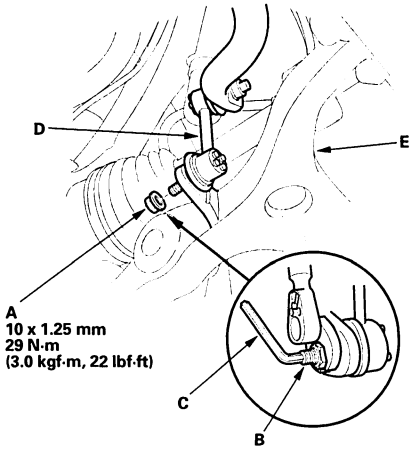

BACK

Protected by AR

5. Remove the cotter pin (A) from the lower arm ball joint castle nut (B), and remove the nut.

NOTE:
- To avoid damaging the ball joint, install the special tool on the threads of the ball joint.
- Be careful not to damage the ball joint boot when installing the remover.
- Do not force or hammer on the lower arm, or pry between the lower arm and knuckle. You could damage the ball joint.
- Insert the new cotter pin into the ball joint pin hole from the front to the rear of vehicle, and bend its end as shown.

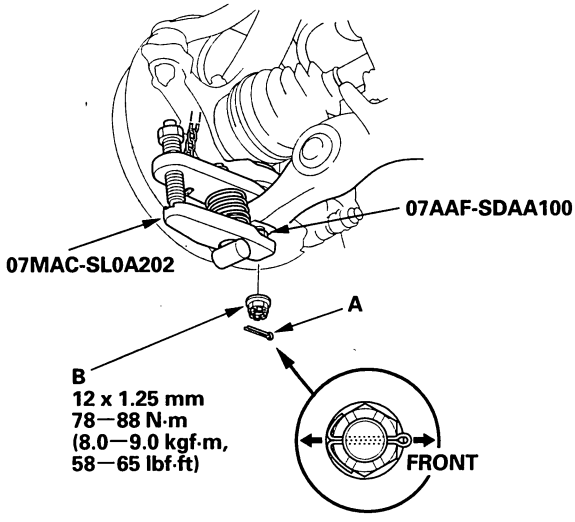

6. Disconnect the lower arm ball joint from the knuckle using the special tools (see page 18-11).

7. Remove the flange bolts, and remove the lower arm (A).

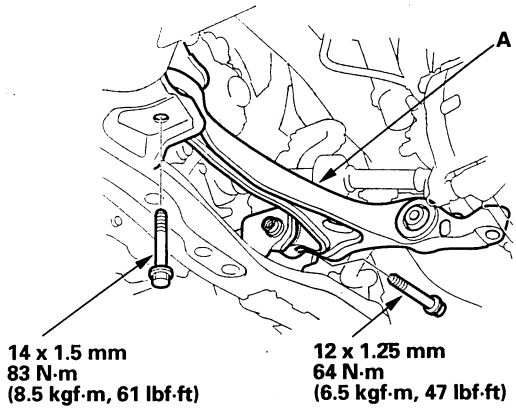

8. Install the lower arm in the reverse order of removal, and note these items:

- Be careful not to damage the ball joint boot when installing the knuckle.
- Tighten all mounting hardware to the specified torque values.
- Before connecting the lower arm ball joint to the lower arm, degrease the threaded section and tapered portion of the ball joint pin, the lower arm connecting hole, and the threaded section and mating surface of the castle nut.
- First install all the components and lightly tighten the bolts and nuts, then raise the suspension to load it with the vehicle's weight before fully tightening to the specified torque values. Do not place the jack against the ball joint pin of the knuckle.
- Torque the castle nut to the lower torque specification, then tighten it only far enough to align the slot with the ball joint pin hole. Do not align the castle nut by loosening it.
- Install a new cotter pin on the castle nut after torquing.
- Before installing the wheel, clean the mating surface of the brake disc and the inside of the wheel.
- Check the wheel alignment, and adjust it if necessary (see page 18-6).

Protected by AR

Stabilizer Link Replacement

1. Raise the front of the vehicle, and support it with safety stands in the proper locations (see page 1-14). Remove the front wheels.

2. Remove the self-locking nut (A) and flange nut (B) while holding the respective joint pin (C) with a hex wrench (D), and remove the stabilizer link (E).

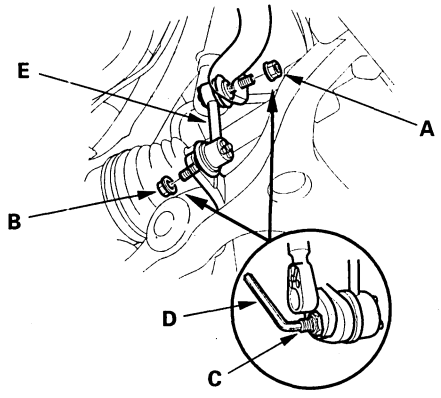

3. Install the stabilizer link (A) on the stabilizer bar (B) and lower arm (C) with the joint pins set at the center of their range of the movement.

   NOTE: The left stabilizer link has a yellow paint mark (D), while the right stabilizer link has a white paint mark.

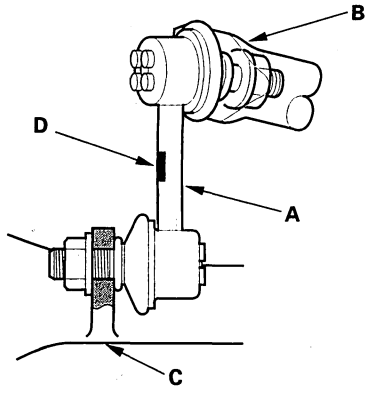

4. Install a new self-locking nut and flange nut, and lightly tighten them.

   NOTE: Use a new self-locking nut on reassembly.

5. Place the floor jack under the lower arm, and raise the suspension to load it with the vehicle's weight.

   NOTICE

   Do not place the jack against the ball joint pin of the knuckle.

6. Tighten the new self-locking nut (A) and flange nut (B) to the specified torque values while holding the respective joint pins (C) with a hex wrench (D).

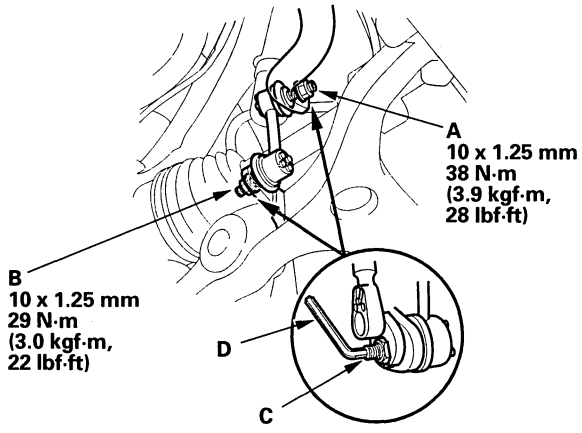

7. After 5 minutes of driving, tighten the self-locking nut again to the specified torque value.

BACK

Protected by AR

Stabilizer Bar Replacement

1. Raise the front of the vehicle, and support it with safety stands in the proper locations (see page 1-14). Remove the front wheels.

2. Disconnect the stabilizer links from the stabilizer bar on the right and left (see page 18-22).

3. Remove the front suspension subframe (A) from the body (see page 20-228).

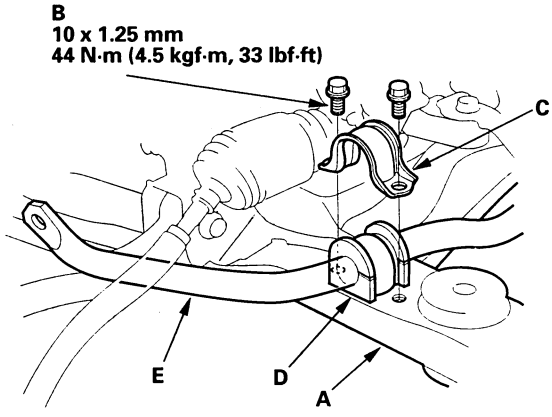

4. Remove the flange bolts (B) and bushing holders (C), then remove the bushings (D) and the stabilizer bar (E).

5. Install the stabilizer bar in the reverse order of removal, and note these items:

   - Note the right and left direction of the stabilizer bar.
   - Align the ends of the paint marks (A) on the stabilizer bar with each end of the bushings (B).
   - Note the fore/aft direction of the bushing holders.
   - Refer to Stabilizer Link Replacement to connect the stabilizer bar to the links (see page 18-22).

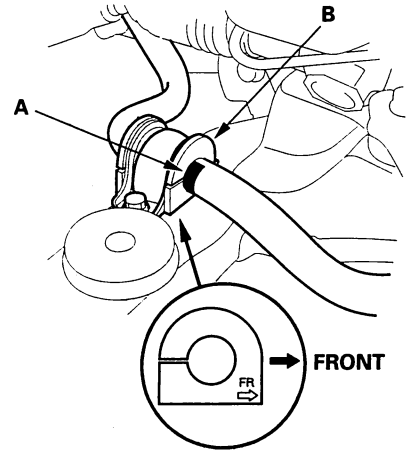

Protected by AR

Damper/Spring Replacement

Exploded View

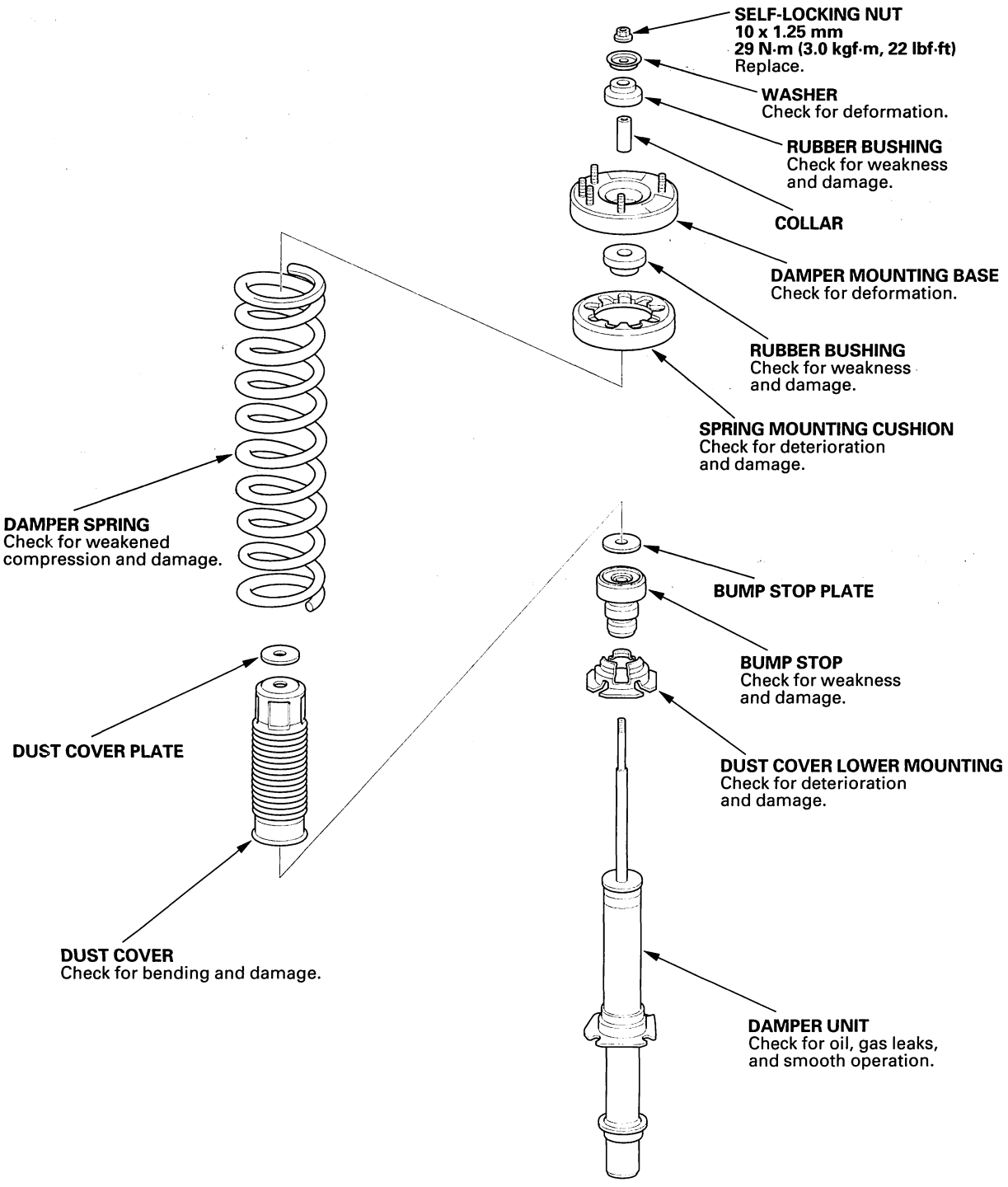

BACK

Protected by AR

NOTE: When compressing the damper spring, use a commercially available strut spring compressor (Branick MST-580A or Model 7200, or equivalent). According to the manufacturer's instructions.

Removal

1. Raise the front of the vehicle, and support it with safety stands in the proper locations (see page 1-14).
2. Remove the front wheel.
3. Remove the damper fork (A) from the damper (B) and lower arm (C).

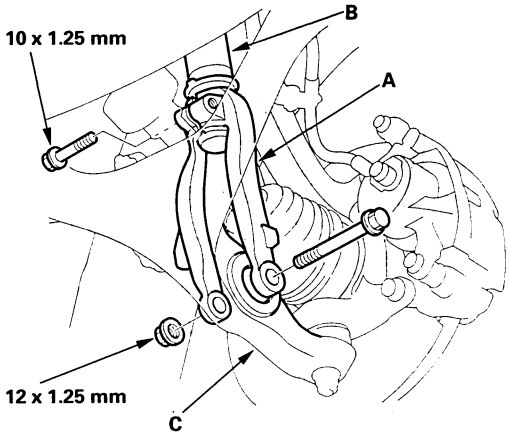

4. Remove the two 8 mm flange nuts (A) and three 10 mm flange nuts (B) from the top of the damper, and remove the damper assembly (C) .

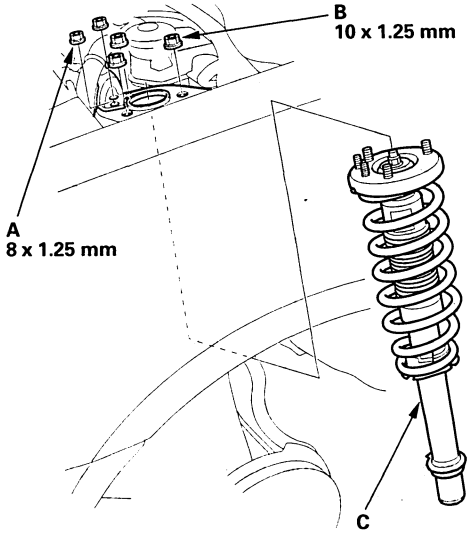

Disassembly/Inspection

1. Compress the damper spring, then remove the self-locking nut (A) while holding the damper shaft with a hex wrench (B). Do not compress the spring more than necessary to remove the nut.

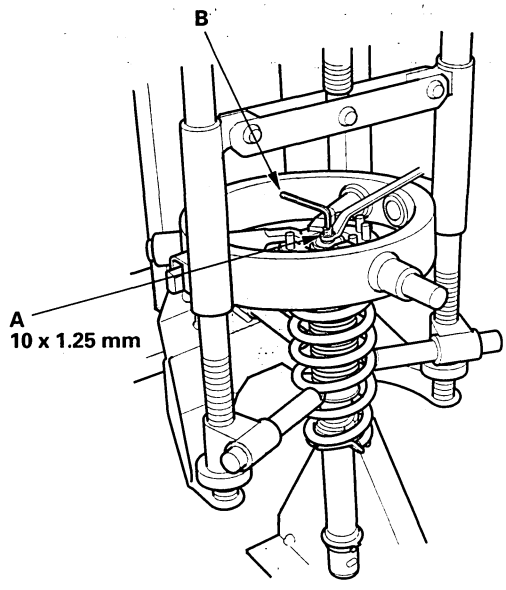

2. Release the pressure from the strut spring compressor, then disassemble the damper as shown in the Exploded View.

(cont'd)

Protected by AR

Damper/Spring Replacement (cont'd)

3. Reassemble all the parts, except for the spring mounting cushion and spring.

4. Compress the damper assembly by hand, and check for smooth operation through a full stroke, both compression and extension. The damper should extend smoothly and constantly when compression is released. If it does not, the gas is leaking and the damper should be replaced.

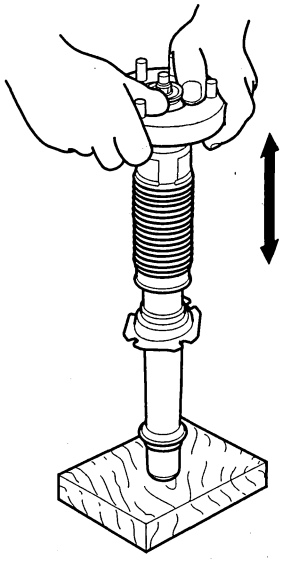

5. Check for oil leaks, abnormal noises, and binding during these tests.

Reassembly

NOTE: Refer to the Exploded View as needed.

1. Assemble the damper disassembled parts except for the washer and self-locking nut.

2. Install the damper assembly on commercially available strut spring compressor (A), and compress the spring lightly.

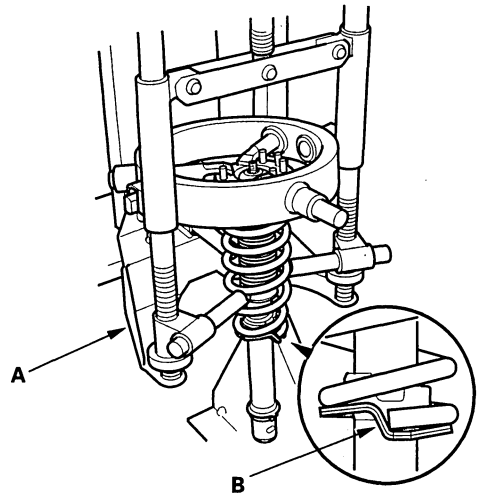

3. Align the bottom of the spring and the stepped part (B) of the lower spring seat.

4. Position the damper mounting base (A) so the stud bolt (B) in it is aligned with the aligning tab (C) in the damper unit.

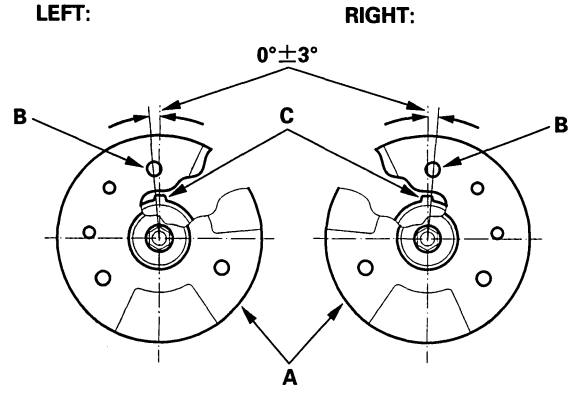

5. Compress the damper spring. Do not compress the spring excessively.

BACK

Protected by AR

6. Install the washer (A) and a new 10 mm self-locking nut (B). Hold the damper shaft with a hex wench (C), and tighten the 10 mm self-locking nut to the specified torque value.

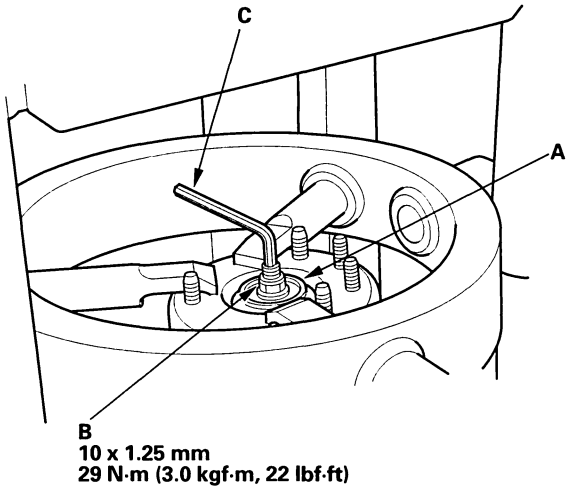

7. Remove the damper assembly from the strut spring compressor.

Installation

1. Position the damper assembly (A) in the body with the aligning tab (B) facing inside, then loosely install the flange nuts.

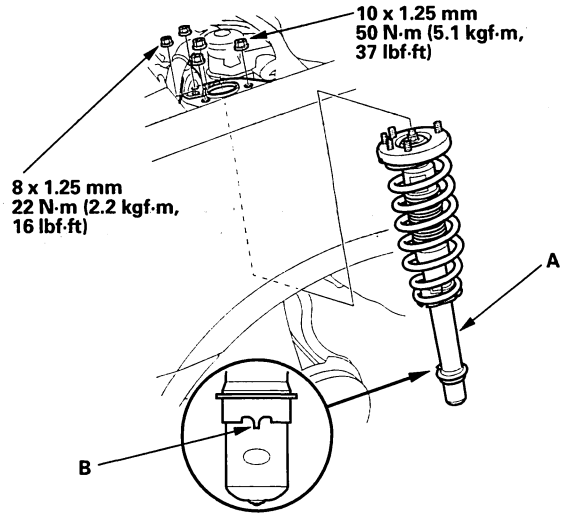

2. Install the damper fork (A) over the driveshaft and onto the lower arm. Install the front damper in the damper fork so the aligning tab (B) is aligned with the slot (C) in the damper fork.

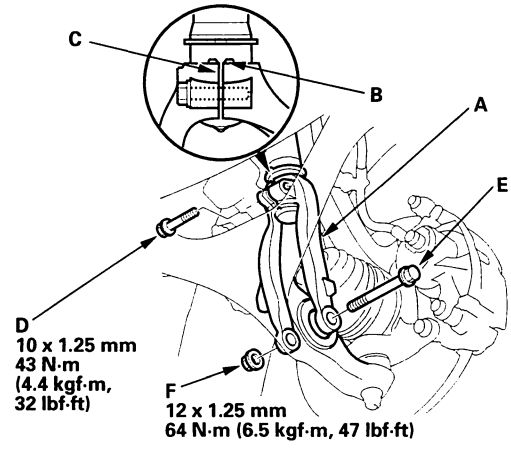

3. Loosely install the damper pinch bolt (D) into the damper fork.

4. Install the flange bolt (E) to the damper fork and lower arm, and lightly tighten the new damper fork mounting nut (F).

   NOTE: Use a new damper fork mounting nut on reassembly.

(cont'd)

Protected by AR

Damper/Spring Replacement (cont'd)

5. Place the floor jack under the lower arm, and raise the suspension to load it with the vehicle's weight.
6. Tighten the flange nuts on the top of the damper to the specified torque values.
7. Tighten the damper pinch bolts to the specified torque value.
8. Tighten the flange nut on the damper fork to the specified torque value.
9. Clean the mating surface of the brake disc and the inside of the wheel, then install the front wheel.

BACK

Protected by AR

Knuckle/Hub Replacement

Exploded View-Disc Brake

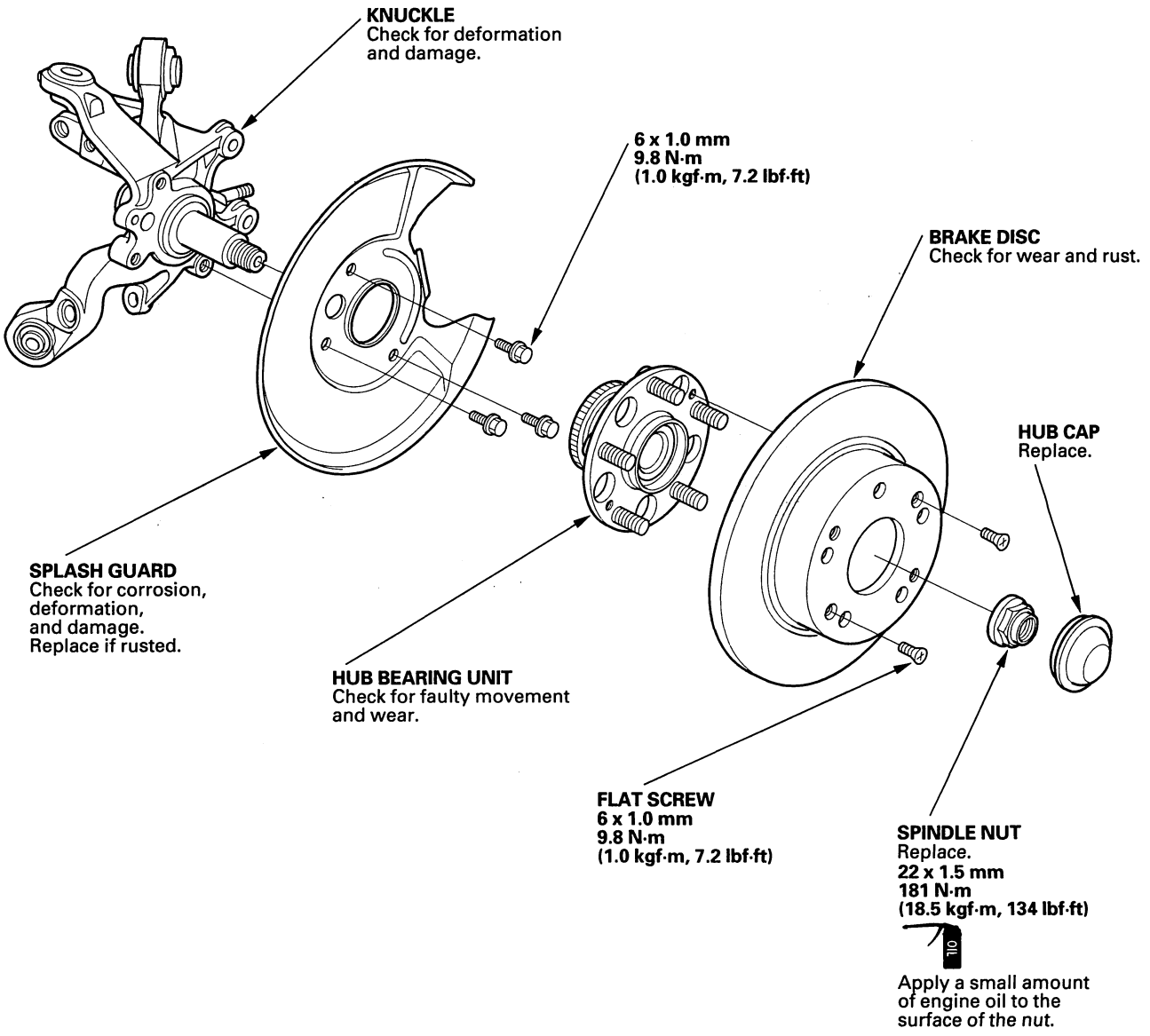

(cont'd)

Protected by AR

Knuckle/Hub Replacement (cont'd)

Exploded View-Drum Brake

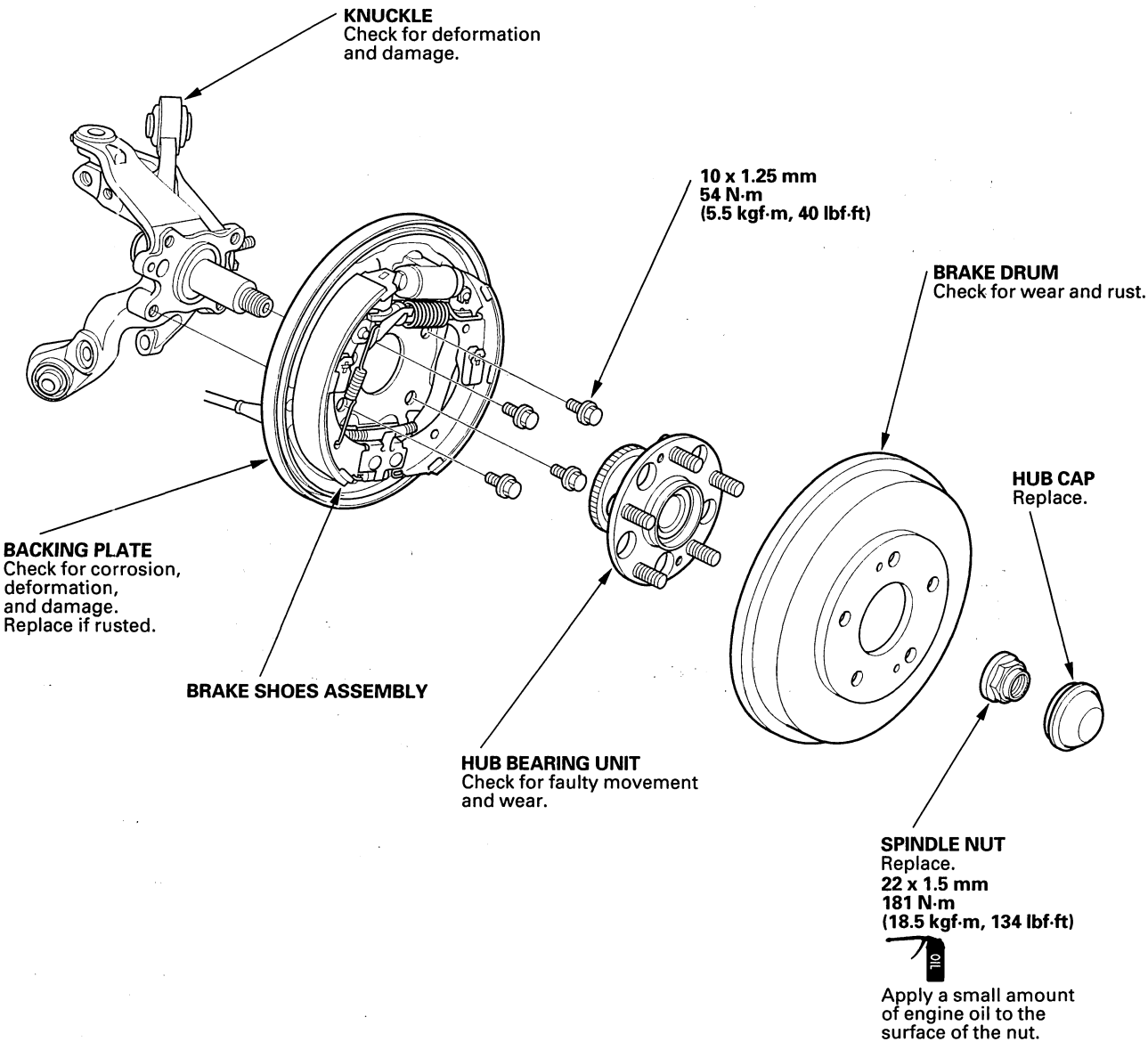

BACK

Protected by AR

Special Tools Required
Ball joint remover, 28 mm 07MAC-SL0A202

Hub Replacement-Disc Brake

1. Raise the rear of the vehicle, and support it with safety stands in the proper locations (see page 1-14).

2. Remove the wheel nuts and rear wheel.

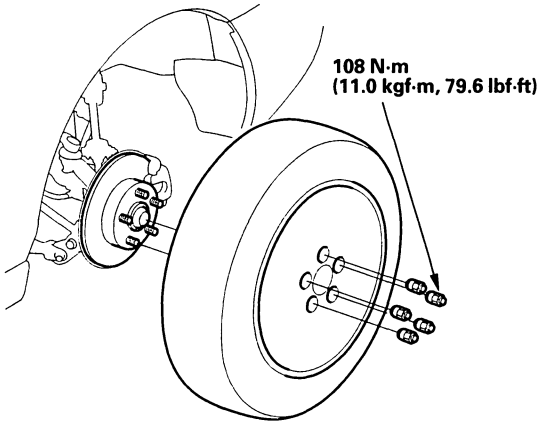

3. Remove the brake hose mounting bracket (A).

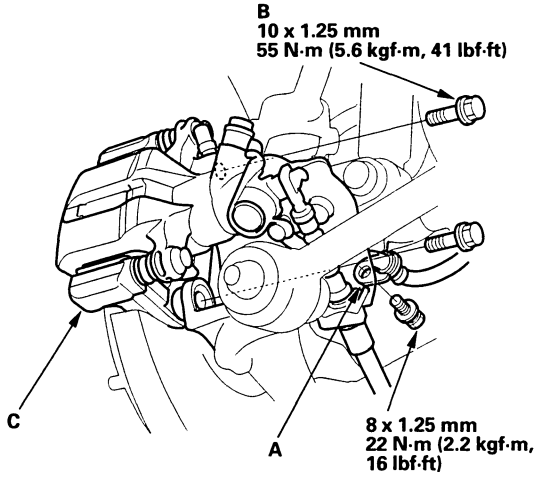

4. Remove the brake caliper bracket mounting bolts (B), and remove the caliper assembly (C) from the knuckle. To prevent damage to the caliper assembly or brake hose, use a short piece of wire to hang the caliper assembly from the undercarriage. Do not twist the brake hose with force.

5. Remove the hub cap (A).

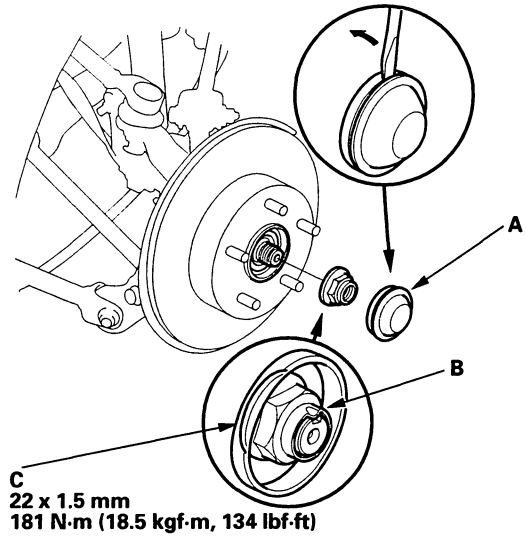

6. Raise the stake (B), and remove the spindle nut (C).

7. Remove the 6 mm brake disc retaining screws (A).

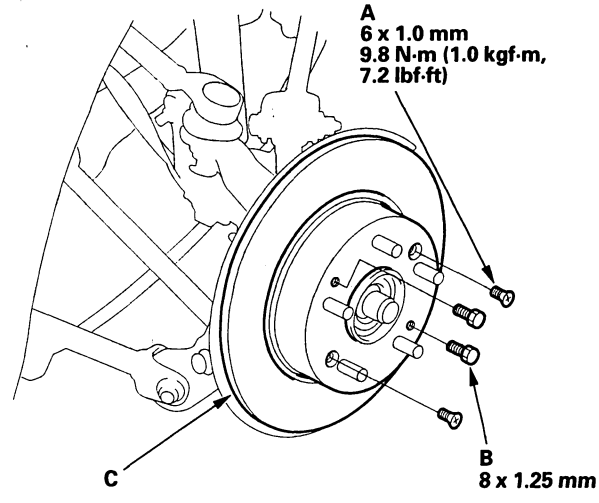

8. Screw two 8 x 1.25 mm bolts (B) into the disc to push it away from the hub. Turn each bolt two turns at a time to prevent cocking the disc excessively.

9. Remove the brake disc (C).

(cont'd)

Protected by AR

Knuckle/Hub Replacement (cont'd)

10. Remove the hub bearing unit (A).

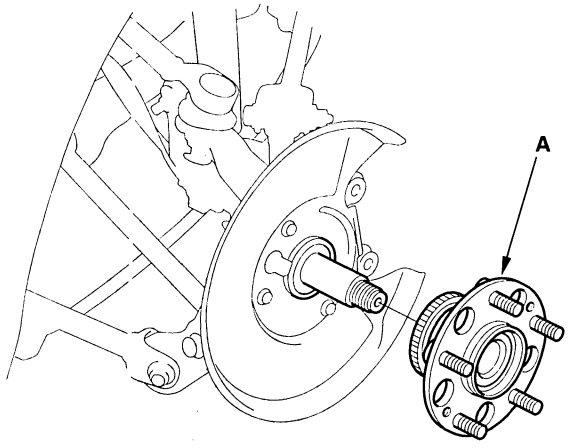

11. Install the hub bearing unit in the reverse order of removal, and note these items:

- Tighten all mounting hardware to the specified torque values.
- Use a new spindle nut on reassembly.
- Wash the spindle thoroughly in high flash point solvent before reassembly.
- Before installing the spindle nut, apply a small amount of engine oil to the seating surface of the nut. After tightening, use a drift to stake the spindle nut shoulder against the driveshaft.
- Before installing the brake disc, clean the matching surfaces of the hub bearing unit and brake disc.
- Before installing the wheel, clean the mating surfaces of the brake disc and the inside of the wheel.
- Check the wheel alignment, and adjust it if necessary (see page 18-6).

BACK

Protected by AR

Hub Replacement-Drum Brake

1. Raise the rear of the vehicle, and support it with safety stands in the proper locations (see page 1-14).

2. Remove the wheel nuts and rear wheel.

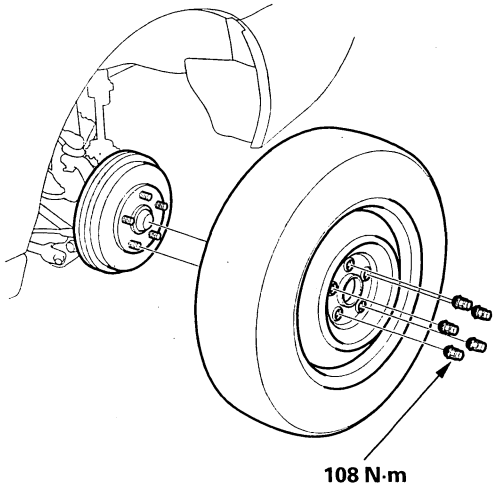

3. Remove the hub cap (A).

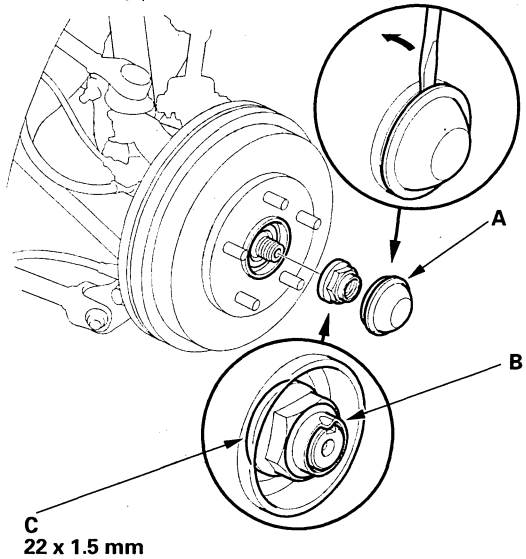

4. Raise the stake (B), and remove the spindle nut (C).

5. Release the parking brake lever, and remove the brake drum (A). Screw two 8 x 1.25 mm bolts (B) into the drum to push it away from the hub. Turn each bolt two turns at a time to prevent cocking the drum excessively.

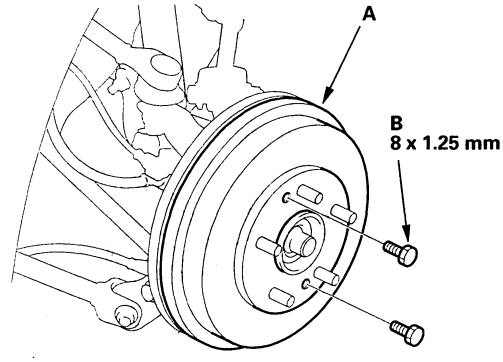

6. Remove the hub bearing unit (A).

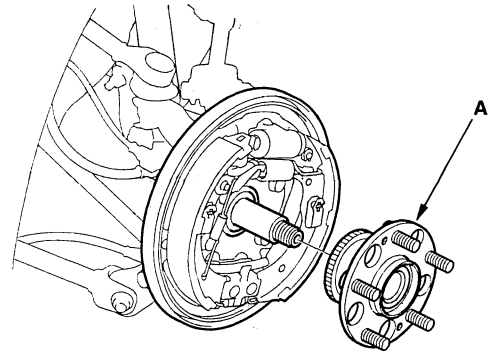

7. Install the hub bearing unit in the reverse order of removal, and note these items:

- Tighten all mounting hardware to the specified torque values.
- Wash the spindle thoroughly in high flash point solvent before reassembly.
- Use a new spindle nut reassembly.
- Before installing the spindle nut, apply a small amount of engine oil to the seating surface of the nut. After tightening, use a drift to stake the spindle nut shoulder against the driveshaft.
- Before installing the brake drum, clean the matching surfaces of the hub bearing unit and brake drum.
- Before installing the wheel, clean the mating surfaces of the brake drum and the inside of the wheel.
- Check the wheel alignment, and adjust it if necessary (see page 18-6).

(cont'd)

Protected by AR

Knuckle/Hub Replacement (cont'd)

Knuckle Replacement-Disc Brake

1. Remove the hub bearing unit.
2. Remove the splash guard (A).

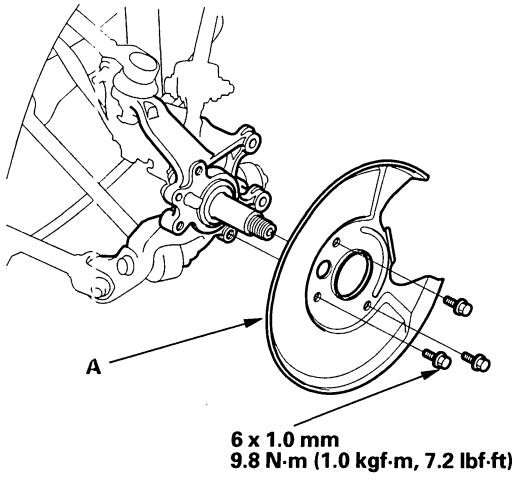

3. Remove the lock pin (A) from the upper arm ball joint, and loosen the nut (B).

   NOTE: During installation, install the new lock pin as shown after tightening the nut.

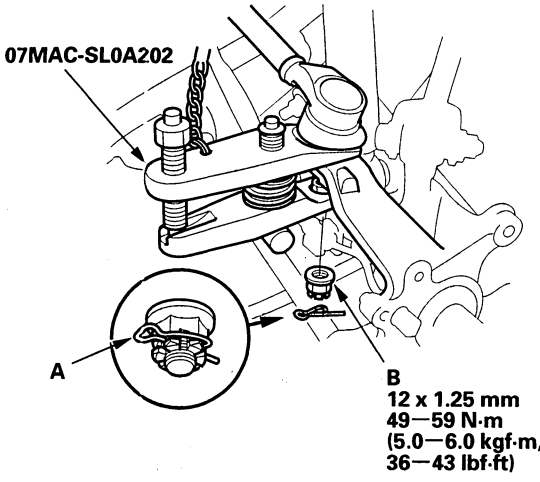

4. Disconnect the upper arm ball joint from the knuckle using the special tool (see page 18-11).
5. Remove the flange nut (A) while holding the joint pin (B) with a hex wrench (C), then disconnect the stabilizer link (D) from the stabilizer link bracket (E).

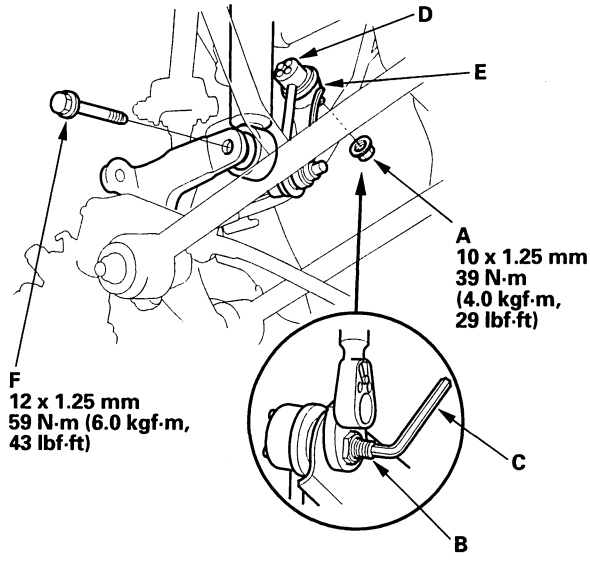

6. Remove the damper lower mounting bolt (F), and disconnect the damper from the knuckle.
7. Remove the wheel sensor (A) from the knuckle. Do not disconnect the wheel sensor connector.

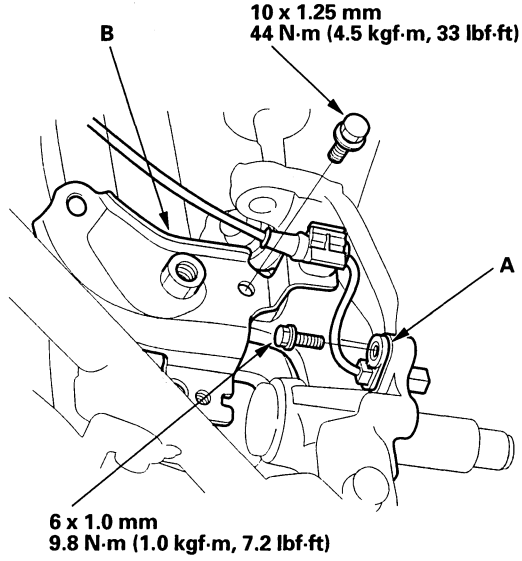

8. Remove the stabilizer link bracket (B) from the knuckle.

BACK

Protected by AR

9. Remove the leading arm mounting bolt (A) from the knuckle.

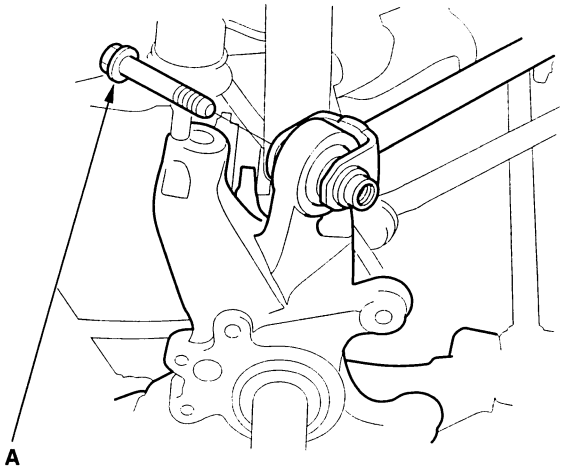

10. Remove the control arm mounting nut (A) and washer (B) from the knuckle.

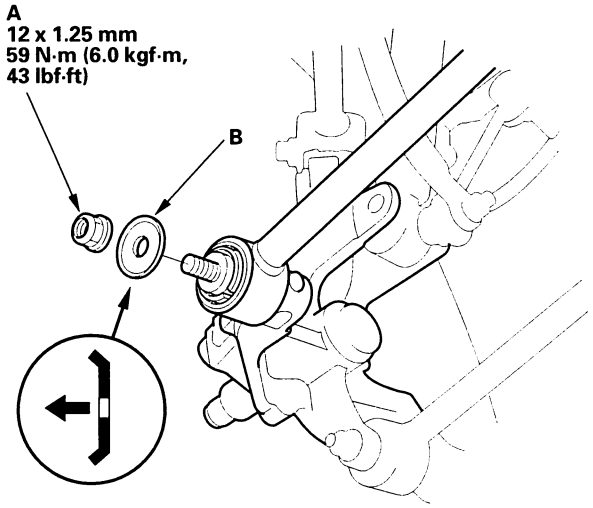

11. Remove the trailing arm mounting bolt (A) from the knuckle.

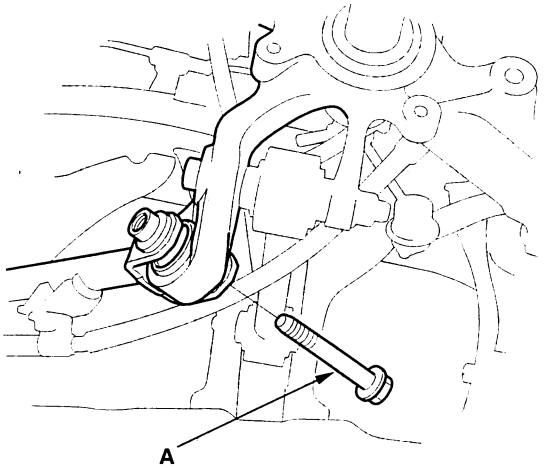

12. Remove the lower arm mounting bolt (A), then remove the knuckle (B).

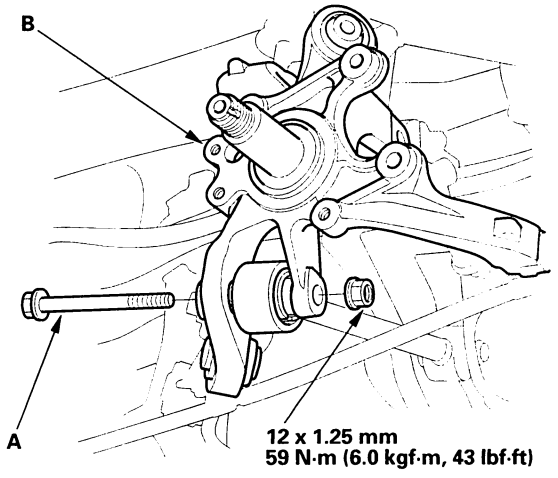

(cont'd)

Protected by AR

Knuckle/Hub Replacement (cont'd)

13. Install the knuckle in the reverse order of removal, and note these items:

    - Be careful not to damage the ball joint boot when installing the knuckle.
    - Tighten all mounting hardware to the specified torque values.
    - First install all the components and lightly tighten the bolts and nuts, then raise the suspension to load it with the vehicle's weight before fully tightening to the specified torque values.
    - Use a new lower arm mounting nut and control arm mounting nut on reassembly.
    - Torque the castle nut to the lower torque specification, then tighten it only far enough to align the slot with the ball joint pin hole. Do not align the castle nut by loosening it.
    - Install a new lock pin on the castle nut after torquing.
    - Before installing the wheel, clean the mating surface on the brake disc and the inside of the wheel.
    - Check the wheel alignment, and adjust it if necessary (see page 18-6).

BACK

Protected by AR

Knuckle Replacement-Drum Brake

1. Remove the hub bearing unit.
2. Remove the lock pin (A) from the upper arm ball joint, and loosen the nut (B).

   NOTE: During installation, insert the new lock pin as shown after tightening the nut.

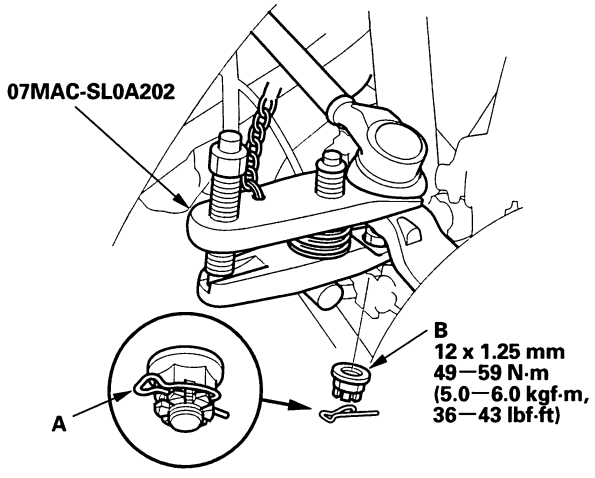

3. Disconnect the upper arm ball joint from the knuckle using the special tool (see page 18-11).
4. Remove the flange nut (A) while holding the joint pin (B) with a hex wrench (C), and disconnect the stabilizer link (D) from the stabilizer link bracket (E).

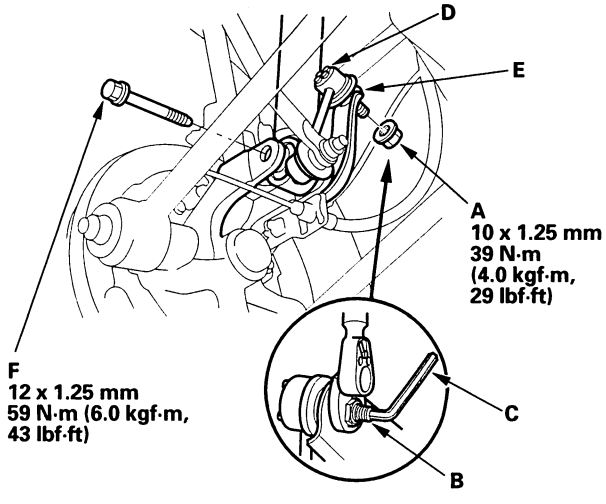

5. Remove the damper lower mounting bolt (F), and disconnect the damper from the knuckle.
6. Disconnect the brake line (A) from the wheel cylinder (B). Remove the flange bolts and rear brake assembly (C) from the knuckle.

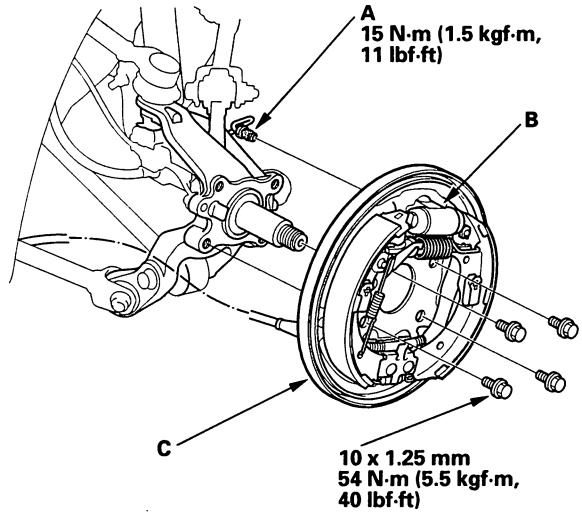

7. Remove the wheel sensor (A) from the knuckle. Do not disconnect the wheel sensor connector.

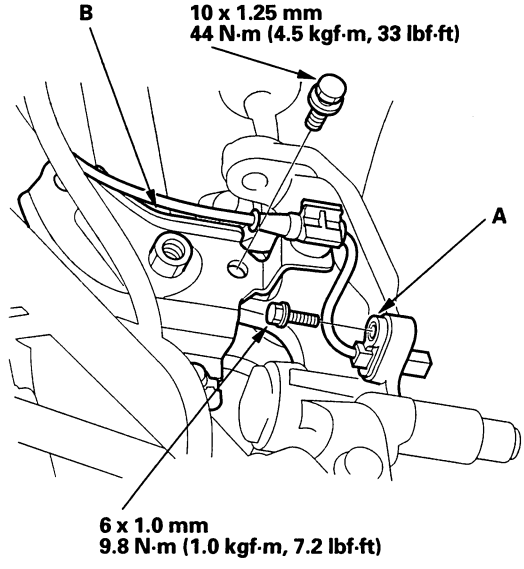

8. Remove the stabilizer link bracket (B) from the knuckle.

(cont'd)

Protected by AR

Knuckle/Hub Replacement (cont'd)

9. Remove the leading arm mounting bolt (A) from the knuckle.

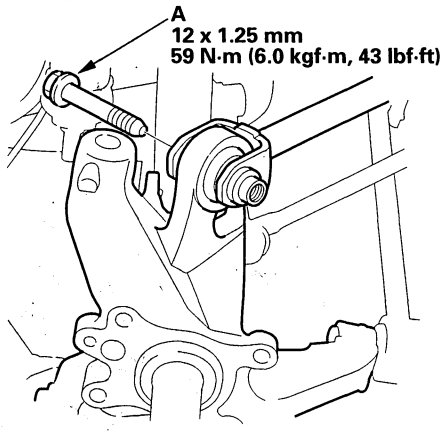

10. Remove the control arm mounting nut (A) and washer (B) from the knuckle.

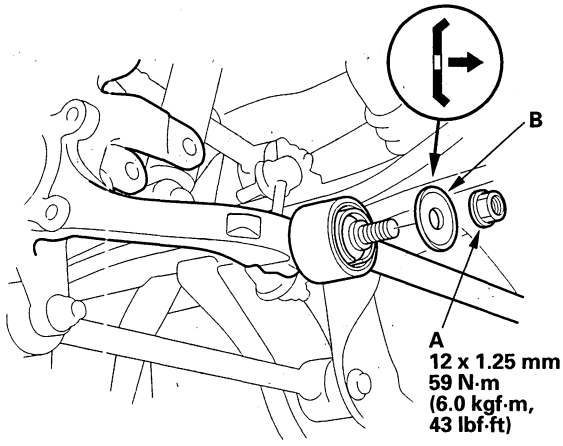

11. Remove the trailing arm mounting bolt (A) from the knuckle.

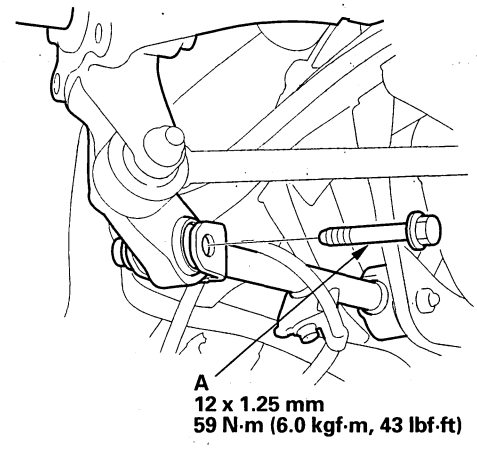

12. Remove the lower arm mounting bolt (A), then remove the knuckle (B).

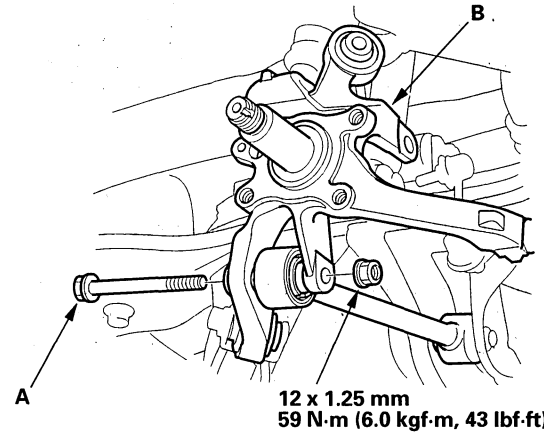

BACK

Protected by AR

13. Install the knuckle in the reverse order of removal, and note these items:

- Be careful not to damage the ball joint boot when installing the knuckle.
- Tighten all mounting hardware to the specified torque values.
- First install all the components and lightly tighten the bolts and nuts, then raise the suspension to load it with the vehicle's weight before fully tightening to the specified torque values.
- Use a new lower arm mounting nut and control arm mounting nut on reassembly.
- Torque the castle nut to the lower torque specification, then tighten it only far enough to align the slot with the ball joint pin hole. Do not align the castle nut by loosening it.
- Install a new lock pin on the castle nut after torquing.
- Before installing the wheel, clean the mating surface on the brake drum and the inside of the wheel.
- Fill the master cylinder reservoir to the MAX (upper) level line, and bleed the brake system (see page 19-9). Check for a leak at the brake line to wheel cylinder, and retighten if necessary.
- Check the wheel alignment, and adjust it if necessary (see page 18-6).

Upper Arm Removal/Installation

Special Tools Required
Ball joint remover, 28 mm 07MAC-SL0A202

1. Raise the rear of the vehicle, and support it with safety stands in the proper locations (see page 1-14).

2. Remove the rear wheel.

3. Remove the lock pin (A) from the upper arm ball joint, and loosen the nut (B).

   NOTE: During installation, install the new lock pin as shown after tightening the nut.

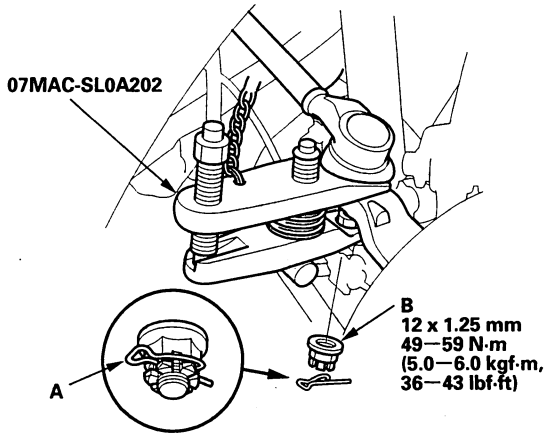

4. Disconnect the upper arm ball joint from the knuckle using the special tool (see page 18-11).

5. Remove the brake hose mounting bracket (A). Do not disconnect the brake line.

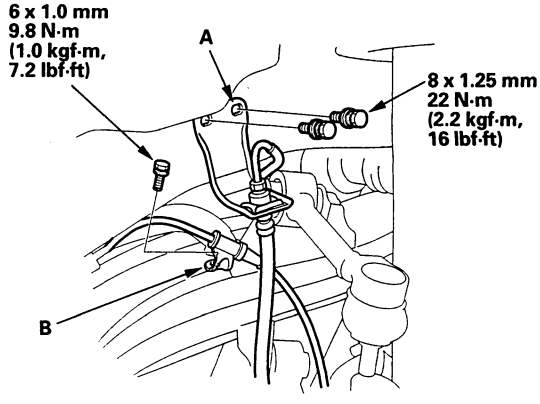

6. Remove the wheel sensor harness mounting bracket (B).

(cont'd)

Protected by AR

Upper Arm Removal/Installation (cont'd)

7. Remove the flange bolt (A), and remove the upper arm (B).

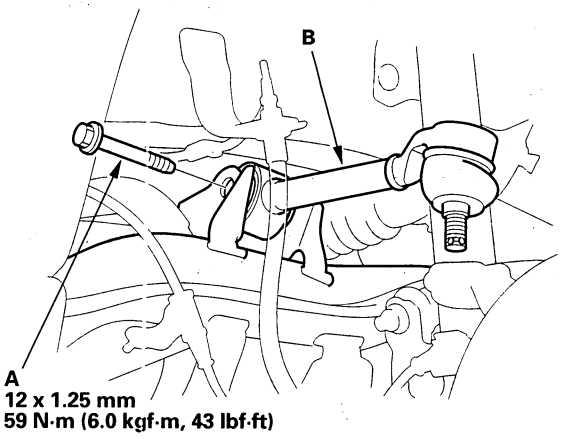

8. Install the upper arm in the reverse order of removal, and note these items:

- Be careful not to damage the ball joint boot when installing the knuckle.
- Tighten all mounting hardware to the specified torque values.
- First install all the components and lightly tighten the bolts and nuts, then raise the suspension to load it with the vehicle's weight before fully tightening to the specified torque values.
- Torque the castle nut to the lower torque specification, then tighten it only far enough to align the slot with the ball joint pin hole. Do not align the castle nut by loosening it.
- Install a new lock pin on the castle nut after torquing.
- Before installing the wheel, clean the mating surface on the brake disc or drum and inside of the wheel.
- Check the wheel alignment, and adjust it if necessary (see page 18-6).

Lower Arm Replacement

1. Raise the rear of the vehicle, and support it with safety stands in the proper locations (see page 1-14).

2. Remove the rear wheel.

3. Remove the lower arm mounting nut (A) and mounting bolt (B) from the knuckle side.

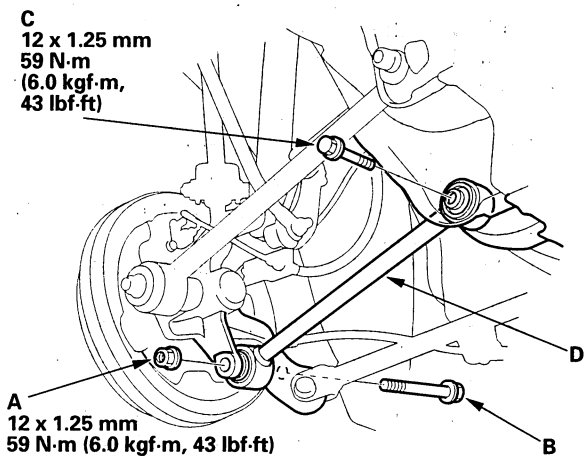

4. Remove the flange bolt (C), and remove the lower arm (D).

5. Install the lower arm in the reverse order of removal, and note these items:

- Tighten all mounting hardware to the specified torque values.
- Use a new lower arm mounting nut on reassembly.
- First install all the components and lightly tighten the bolts and nuts, then raise the suspension to load it with the vehicle's weight before fully tightening to the specified torque values.
- Before installing the wheel, clean the mating surface on the brake disc or drum and inside of the wheel.
- Check the wheel alignment, and adjust it if necessary (see page 18-6).

BACK

Protected by AR

Control Arm Replacement

1. Raise the rear of the vehicle, and support it with safety stands in the proper locations (see page 1-14).
2. Remove the rear wheel.
3. Remove the control arm mounting nut (A) and washer (B) from the knuckle side.

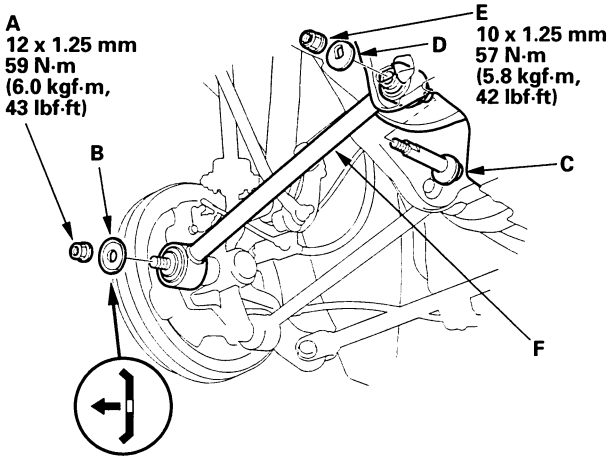

4. Mark the cam positions of the adjusting bolt (C) and adjusting cam (D), then remove the self-locking nut (E), and adjusting cam, and adjusting bolt. Discard the self-locking nut and control arm mounting nut.
5. Remove the control arm (F).
6. Install the control arm in the reverse order of removal, and note these items:

- Align the cam positions of the adjusting bolt and adjusting cam with the marked positions when tightening.
- Use a new self-locking nut and control arm mounting nut on reassembly.
- Tighten all mounting hardware to the specified torque values.
- First install all the components and lightly tighten the bolts and nuts, then raise the suspension to load it with the vehicle's weight before fully tightening to the specified torque values.
- Before installing the wheel, clean the mating surface on the brake disc or drum and inside of the wheel.
- Check the wheel alignment, and adjust it if necessary (see page 18-6).

Trailing Arm Removal/Installation

1. Raise the rear of the vehicle, and support it with safety stands in the proper locations (see page 1-14).
2. Remove the rear wheel.
3. Remove the parking brake cable bracket (A) from the trailing arm (B).

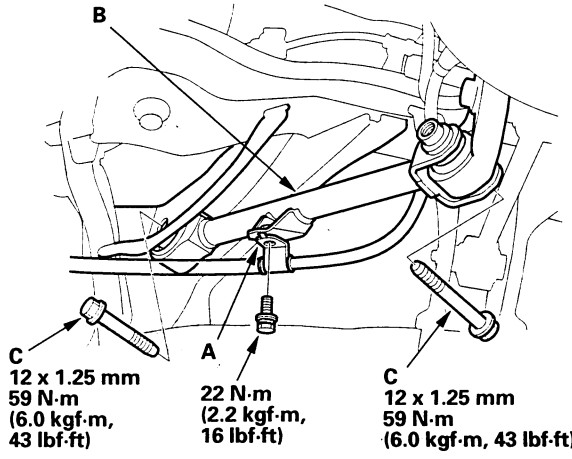

4. Remove the mounting bolts (C), and remove the trailing arm.
5. Install the trailing arm in the reverse order of removal, and note these items:

- Tighten all mounting hardware to the specified torque values.
- First install all the components and lightly tighten the bolts and nuts, then raise the suspension to load it with the vehicle's weight before fully tightening to the specified torque values.
- Before installing the wheel, clean the mating surface on the brake disc or drum and inside of the wheel.
- Check the wheel alignment, and adjust it if necessary (see page 18-6).

Protected by AR

Leading Arm Replacement

1. Raise the rear of the vehicle, and support it with safety stands in the proper locations (see page 1-14).
2. Remove the rear wheel.
3. Remove the mounting bolts, and remove the leading arm (A).

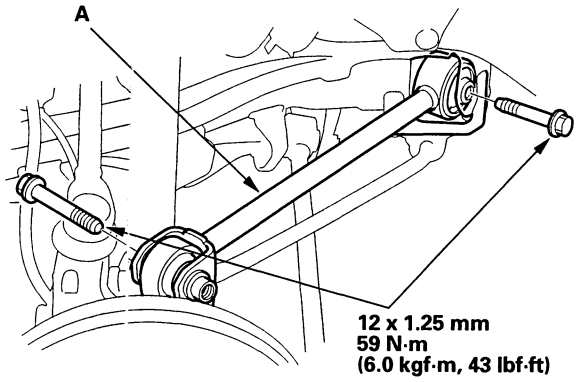

4. Install the leading arm in the reverse order of removal, and note these items:
   - Tighten all mounting hardware to the specified torque values.
   - First install all the components and lightly tighten the bolts and nuts, then raise the suspension to load it with the vehicle's weight before fully tightening to the specified torque values.
   - Before installing the wheel, clean the mating surface on the brake disc or drum and inside of the wheel.
   - Check the wheel alignment, and adjust it if necessary (see page 18-6).

BACK

Protected by AR

Stabilizer Link Removal/Installation

1. Raise the rear of the vehicle, and support it with safety stands in the proper locations (see page 1-14). Remove the rear wheels.

2. Remove the self-locking nut (A) and flange nut (B) while holding the respective joint pin (C) with a hex wrench (D), and remove the stabilizer link (E).

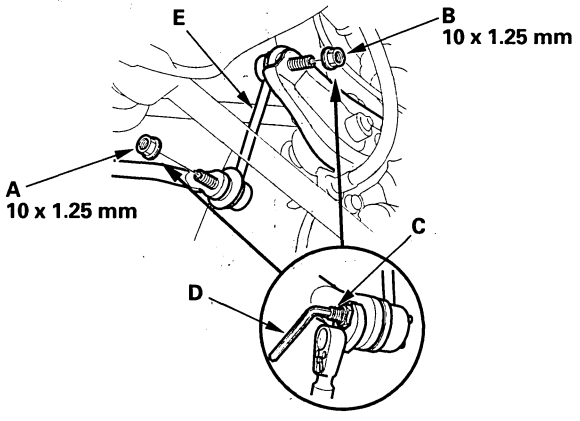

3. Install the stabilizer link (A) on the stabilizer bar (B) and stabilizer link bracket (C) with the joint pins set at the center of their range of the movement.

   NOTE: The left stabilizer link has a white paint mark (D), while the right stabilizer link has a yellow paint mark.

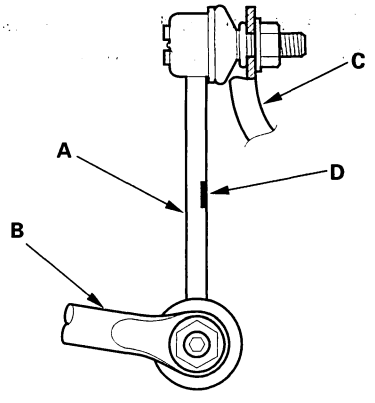

4. Install the new self-locking nut and flange nut, and lightly tighten them.

   NOTE: Use a new self-locking nut on reassembly.

5. Place the floor jack under the knuckle, and raise the suspension to load it with the vehicle's weight.

6. Tighten the self-locking nut (A) and flange nut (B) to the specified torque values while holding the respective joint pins (C) with a hex wrench (D).

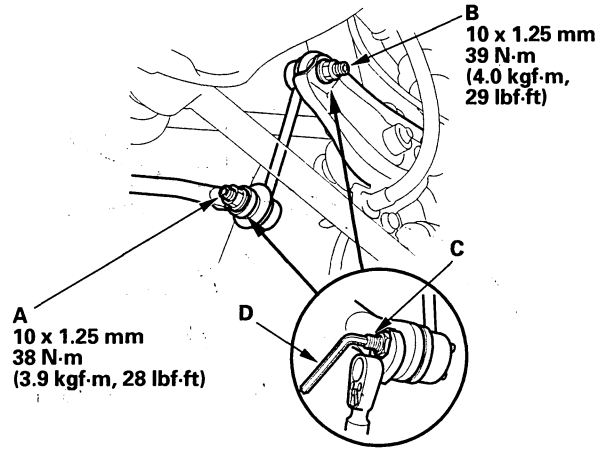

7. After 5 minutes of driving, tighten the self-locking nut again to the specified torque value.

Protected by AR

Stabilizer Bar Replacement

1. Raise the rear of the vehicle, and support it with safety stands in the proper locations (see page 1-14). Remove the rear wheels.
2. Disconnect the stabilizer links from the stabilizer bar (A) on the right and left (see page 18-43).

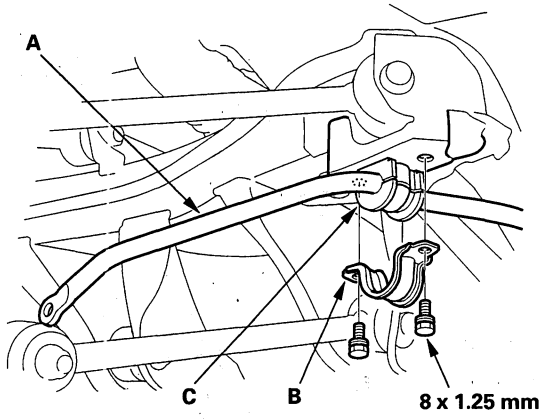

3. Remove the flange bolts and bushing holders (B), then remove the bushing (C) and the stabilizer bar.
4. Install the stabilizer bar in the reverse order of removal, and note these items:
   - Note the right and left direction of the stabilizer bar.
   - Align the ends of the paint marks (A) on the stabilizer bar with the bushing (B).
   - Refer to Stabilizer Link Replacement to connect the stabilizer to the links (see page 18-43).

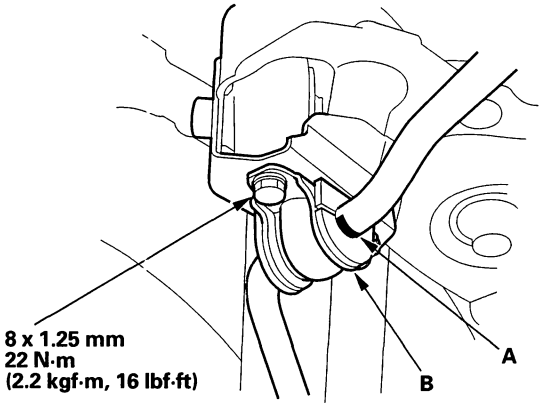

Knuckle Bushing Replacement

Special Tools Required
Bushing driver 30—40 07NAD-SS00100
or 07NAD-SS00101

1. Position the knuckle (A) on the press with the machined surface (B) facing down.

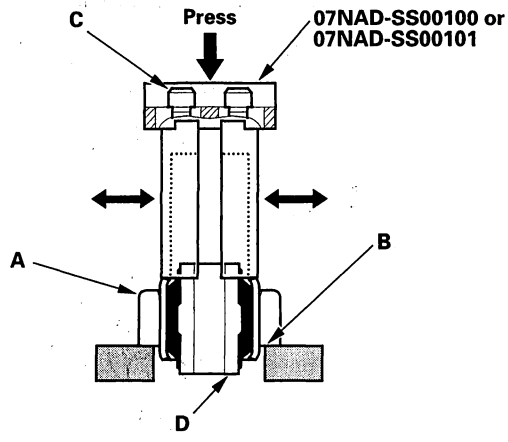

2. Adjust the special tool so it matches the inner diameter of the bushing hole, then tighten the socket bolts (C) securely.
3. Position the special tool on the bushing (D).
4. Remove the bushing by pressing on the special tool with a press as shown.

   NOTE: Be careful not to damage the inside of the bushing hole while pressing on the bushing.

BACK

Protected by AR

5. Position the knuckle (A) on the press with the machined surface (B) facing up.

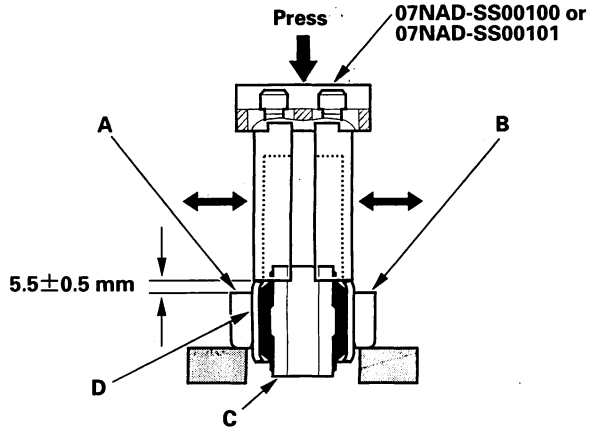

6. Adjust the special tool so it matches with the outer diameter of the bushing (C).

7. Position the special tool on the outer sleeve (D) of the bushing.

8. Press the bushing into the knuckle using the special tool as shown.

Protected by AR

Damper/Spring Replacement

Exploded View

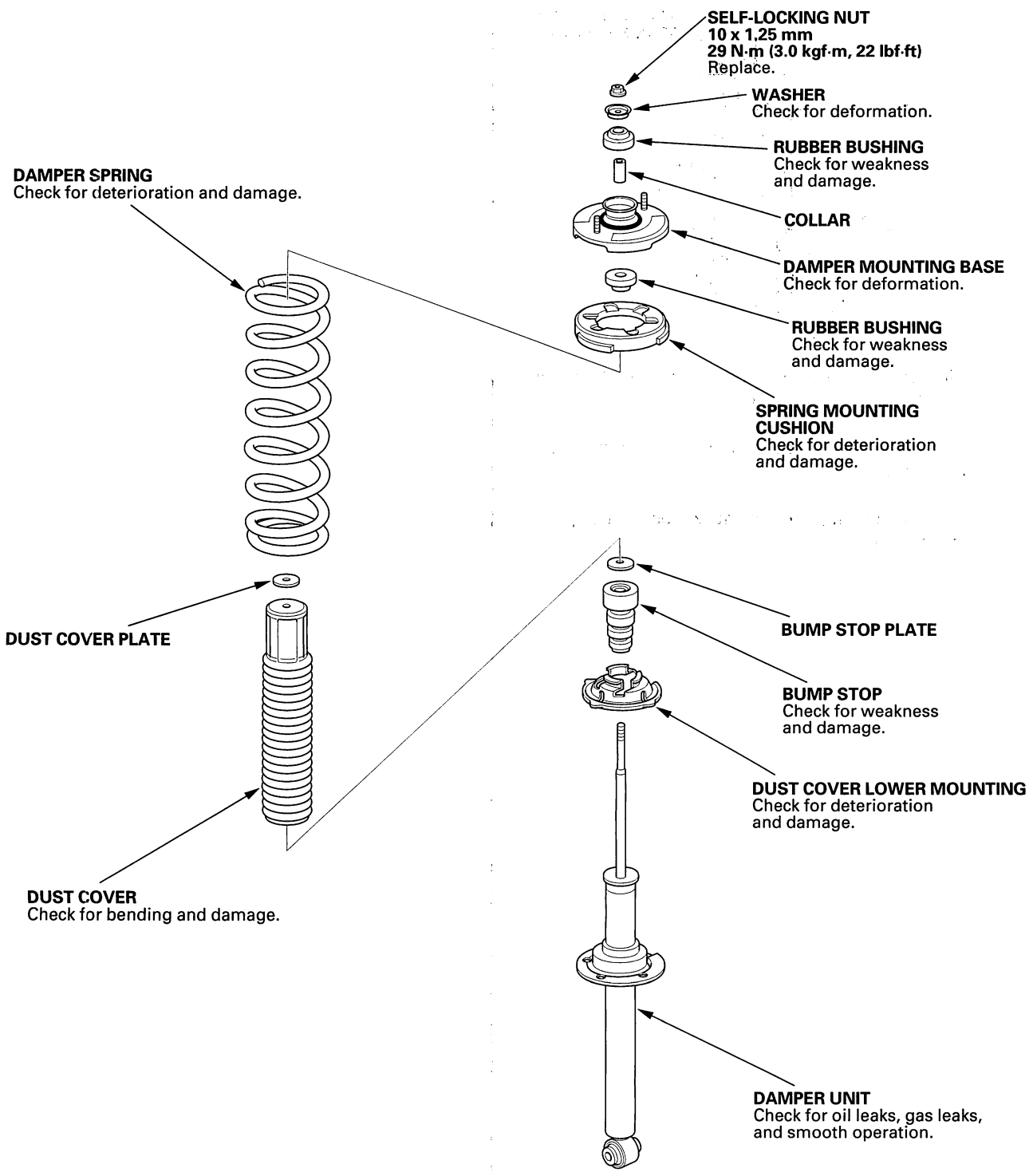

BACK

Protected by AR

NOTE: When compressing the damper spring, use a commercially available strut spring compressor (Branick MST-580A or Model 7200, or equivalent). According to the manufacturer's instructions.

Removal

1. Raise the rear of the vehicle, and support it with safety stands in the proper locations (see page 1-14). Remove the rear wheel.
2. Remove the rear bulkhead cover (see page 20-108).
3. Remove the seat side bolster (see page 20-174).
4. Remove the two flange nuts (A).

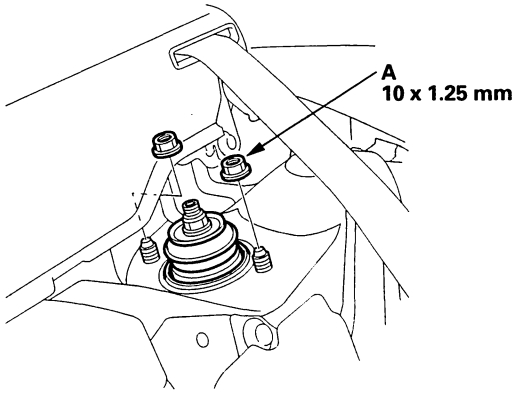

5. Remove the flange nut (A) while holding the joint pin (B) with a hex wrench (C), and disconnect the stabilizer link (D) from the stabilizer link bracket (E).

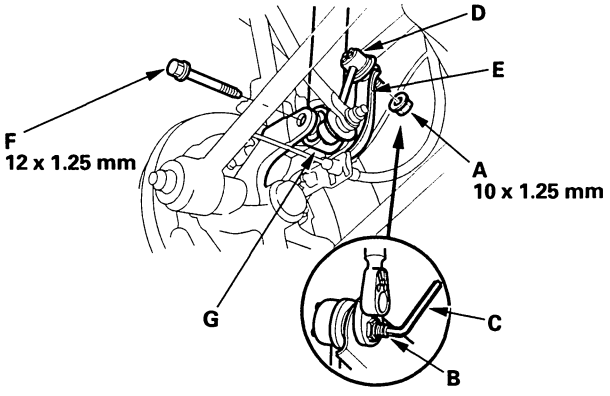

6. Remove the flange bolt (F) from the knuckle.
7. Lower the rear suspension, and remove the damper (G) from the vehicle. Damper springs are different, left and right. Mark the springs L and R before you continue.

Disassembly/Inspection

1. Compress the damper spring, then remove the self-locking nut (A) while holding the damper shaft with a hex wrench (B). Do not compress the spring more than necessary to remove the self-locking nut.

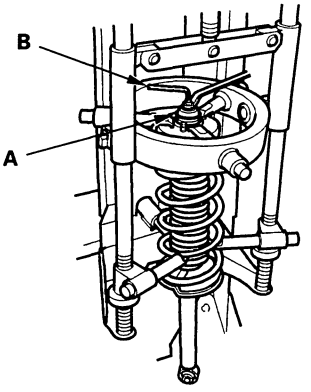

2. Release the pressure from the strut spring compressor, then disassemble the damper as shown in the Exploded View.
3. Reassemble all parts, except the spring.
4. Compress the damper assembly by hand, and check for smooth operation through a full stroke, both compression and extension. The damper should extend smoothly and constantly when compression is released. If it does not, the gas is leaking and the damper should be replaced.

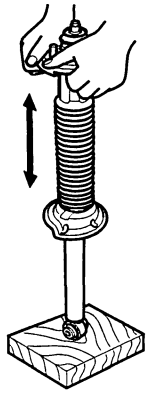

5. Check for oil leaks, abnormal noises, and binding during these tests.

(cont'd)

Protected by AR

Damper/Spring Replacement (cont'd)

Reassembly

1. Install all parts except the self-locking nut and washer onto the damper unit by referring to the Exploded View. Align the bottom of the spring (A) and the stepped part of the lower spring seat (B), and align the damper mounting base (C) as shown.

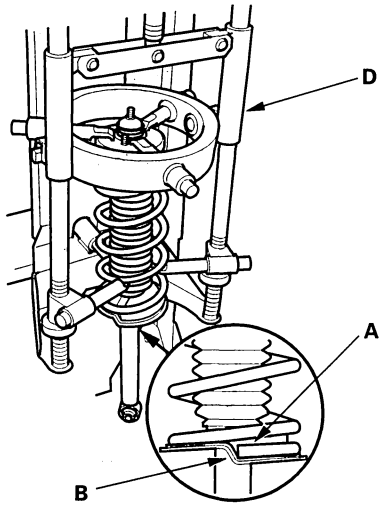

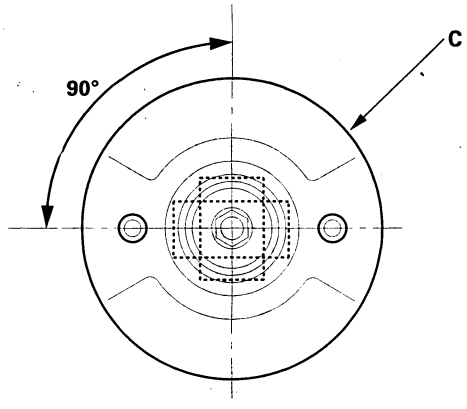

2. Install the damper assembly on commercially available strut spring compressor (D).

3. Compress the damper spring with the spring compressor.

4. Install the washer (A), and loosely install a new self-locking nut (B).

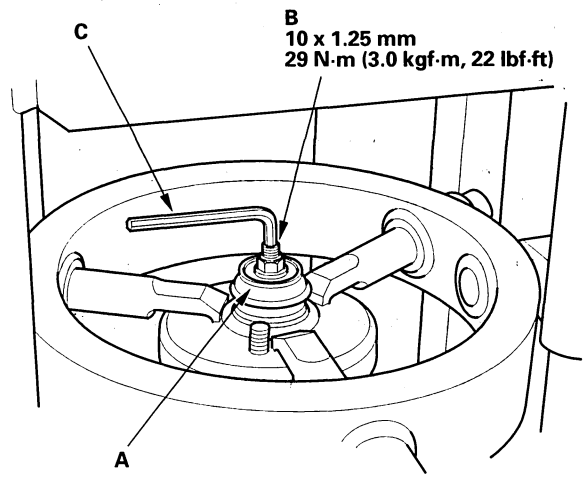

5. Hold the damper shaft with a hex wrench (C), and tighten the self-locking nut to the specified torque value.

BACK

Protected by AR

Installation

1. Lower the rear suspension, and position the damper (A), in the body.

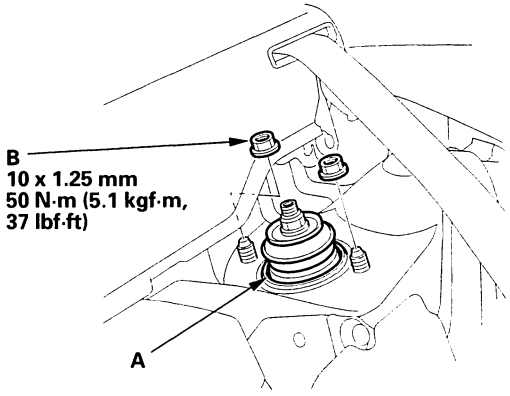

2. Loosely install the flange nuts (B) onto the top of the damper.

3. Loosely install the flange bolt (A) on the bottom of the damper. Connect the stabilizer link (B) on the bracket (C), and loosely install the flange nut (D).

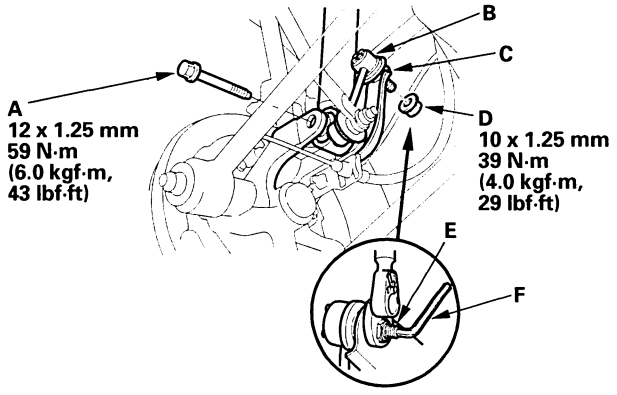

4. Raise the rear suspension with a floor jack load the vehicle weight, and tighten the flange bolt to the specified torque value.

5. Tighten the flange nut while holding the joint pin (E) with a hex wrench (F).

6. Tighten the two flange nuts on top of the damper to the specified torque value.

7. Install the seat side bolster (see page 20-174).

8. Install the rear bulkhead cover (see page 20-108).

9. Clean the mating surface of the brake disc or drum and the inside of the wheel, then install the rear wheel.

10. Check the wheel alignment, and adjust it if necessary (see page 18-6).

Protected by AR

BACK

Protected by AR

Brakes

Conventional Brake Components

Special Tools 19-2
Component Location Index 19-3
Brake System Inspection and Test 19-4
Symptom Troubleshooting 19-5
Brake Pedal and Brake Pedal Position Switch Adjustment 19-6
Parking Brake Check and Adjustment 19-7
Brake System Bleeding 19-9
Brake System Indicator Circuit Diagram 19-10
Parking Brake Switch Test 19-11
Brake Fluid Level Switch Test 19-11
Front Brake Pad Inspection and Replacement 19-12
Front Brake Disc Inspection 19-14
Front Brake Caliper Overhaul 19-15
Master Cylinder Replacement 19-16
Master Cylinder Inspection 19-17
Brake Booster Test 19-18
Brake Booster Replacement 19-19
Rear Brake Pad Inspection and Replacement 19-21
Rear Brake Disc Inspection 19-23
Rear Brake Caliper Overhaul 19-24
Rear Drum Brake Inspection 19-25
Rear Brake Shoe Replacement 19-27
Rear Wheel Cylinder Replacement 19-29
Brake Pedal Replacement 19-30
Brake Hose and Line Inspection 19-31
Brake Hose Replacement 19-32
Parking Brake Cable Replacement 19-33

ABS (Anti-lock Brake System) Components 19-35

Protected by AR

Conventional Brake Components

Special Tools

Ref. No.	Tool Number	Description	Qty
①	07LAF-SM40200	Brake Spring Installer	1

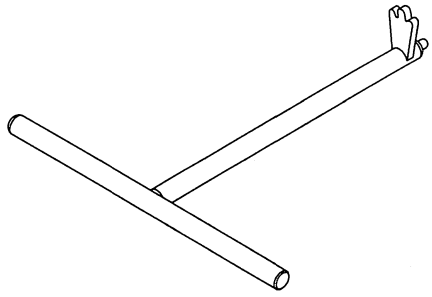

①

BACK

Protected by AR

Component Location Index

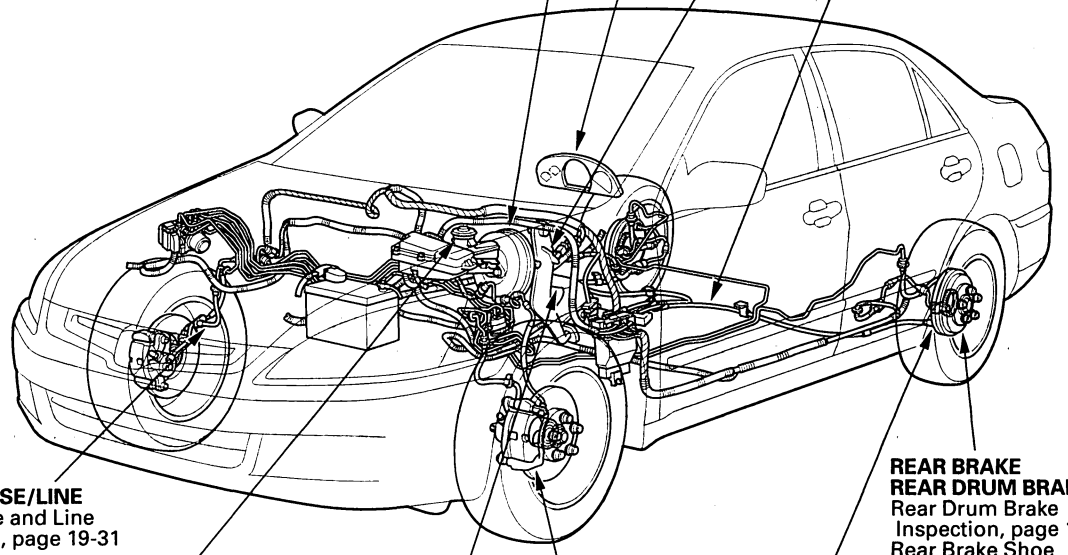

BRAKE BOOSTER
Brake Booster Test, page 19-18
Brake Booster Replacement, page 19-19

BRAKE SYSTEM INDICATOR
Brake System Indicator Circuit Diagram, page 19-10
Parking Brake Switch Test, page 19-11
Brake Fluid Level Switch Test, page 19-11

BRAKE PEDAL
Brake Pedal and Brake Pedal Position Switch Adjustment, page 19-6

PARKING BRAKE CABLE
Parking Brake Cable Replacement, page 19-33

BRAKE HOSE/LINE
Brake Hose and Line Inspection, page 19-31
Brake Hose Replacement, page 19-32

MASTER CYLINDER
Brake System Bleeding, page 19-9
Brake Fluid Level Switch Test, page 19-11
Master Cylinder Replacement, page 19-16

FRONT BRAKE
Front Brake Pad Inspection and Replacement, page 19-12
Front Brake Disc Inspection, page 19-14
Front Brake Caliper Overhaul, page 19-15

PARKING BRAKE LEVER
Parking Brake Check and Adjustment, page 19-7
Brake System Indicator Circuit Diagram, page 19-10
Parking Brake Switch Test, page 19-11

REAR BRAKE
REAR DRUM BRAKE:
Rear Drum Brake Inspection, page 19-25
Rear Brake Shoe Replacement, page 19-27
Rear Wheel Cylinder Replacement, page 19-29

REAR BRAKE
REAR DISC BRAKE:
Rear Brake Pad Inspection and Replacement, page 19-21
Rear Brake Disc Inspection, page 19-23
Rear Brake Caliper Overhaul, page 19-24

Protected by AR

Conventional Brake Components

Brake System Inspection and Test

Inspect the brake system components listed. Repair or replace any parts that are leaking or damaged.

Component Inspections:

Component	Procedure	Also check for:
Master Cylinder	Look for damage or signs of fluid leakage at: • Reservoir or reservoir grommets • Line joints • Between master cylinder and booster	Bulging seal at reservoir cap. This is a sign of fluid contamination.
Brake Hoses	Look for damage or signs of fluid leakage at: • Line joints and banjo bolt connections • Hoses and lines, also inspect for twisting or damage	Bulging, twisted, or bent lines.
Caliper	Look for damage or signs of fluid leakage at: • Piston seal • Banjo bolt connections • Bleed screw	Seized or sticking caliper pins.
ABS Modulator-Control Unit	Look for damage or signs of fluid leakage at: • Line joints • Modulator-control unit	

Brake System Test

Brake pedal sinks/fades when braking

1. Start the engine, and let it warm up to operating temperature.
2. Attach a 50 mm (2 in.) piece of masking tape along the bottom of the steering wheel, and draw a horizontal reference mark across it.
3. With the transmission in Neutral, press and hold the brake pedal lightly (about the same pressure needed to keep an A/T-equipped vehicle from creeping), then release the parking brake.
4. While still holding the brake pedal, hook the end of the tape measure behind it. Then pull the tape up to the steering wheel, noting where the tape measure lines up with the reference mark you made on the masking tape.
5. Apply steady pressure to the brake pedal for 3 minutes.
6. Watch the tape measure.

   • If it moves less than 10 mm (3/8 in.), the master cylinder is OK.
   • If it moves more than 10 mm (3/8 in.), replace the master cylinder.

   NOTE: If the brake pedal sinks more than 10 mm (3/8 in.) in 3 minutes, the master cylinder is faulty. A sight change in pedal height when the A/C compressor cycles on and off is normal. (The A/C compressor load changes the vacuum available to the brake booster.)

BACK

Protected by AR

Rapid brake pad wear, vehicle vibration (after a long drive), or high, hard brake pedal

NOTE: Make sure that the caliper pins are installed correctly.
The upper and lower caliper pins are different. If the top and bottom caliper pins are installed in the wrong location, it will cause uneven tire wear, vibration, and or uneven or rapid pad wear for proper caliper pin location (see page 19-15).

1. Drive the vehicle until the brakes drag or until the pedal is high and hard. This can take 20 or more brake pedal applications during an extended test-drive.

2. With the engine running, raise the vehicle on a lift, and spin all four wheels by hand.

   Is there brake drag at any of the wheels?

   YES—Go to step 3.

   NO—Look for other causes of the pad wear, high pedal, or vehicle vibration. ■

3. Turn the engine off, pump the brake pedal to deplete the vacuum in the brake booster, and then spin the wheels again to check for brake drag.

   Is there brake drag at any of the wheels?

   YES—Go to step 4.

   NO—Replace the brake booster (see page 19-19). ■

4. Without removing the brake lines, unbolt and separate the master cylinder from the booster, then spin the wheels to check for brake drag.

   Is there brake drag at any of the wheels?

   YES—Go to step 5.

   NO—Check the brake pedal position switch adjustment and pedal free play (see page 19-6). ■

5. Loosen the hydraulic lines at the master cylinder, then spin the wheels to check for brake drag.

   Is there brake drag at any of the wheels?

   YES—Go to step 6.

   NO—Replace the master cylinder (see page 19-16). ■

6. Loosen the bleed screws at each caliper, then spin the wheels to check for brake drag.

   Is there brake drag at any of the wheels?

   YES—Disassemble and repair the caliper on the wheel(s) with brake drag. ■

   NO—Look for a bulging master cylinder cap seal, discolored or contaminated brake fluid in the master cylinder, or damaged brake lines. If any of these items are damaged, replace them. If all of these items are OK, replace the ABS modulator-control unit (see page 19-65). ■

Protected by AR

Brake Pedal and Brake Pedal Position Switch Adjustment

Pedal Height

1. Turn the brake pedal position switch (A) counterclockwise, and pull it back until it is no longer touching the brake pedal.

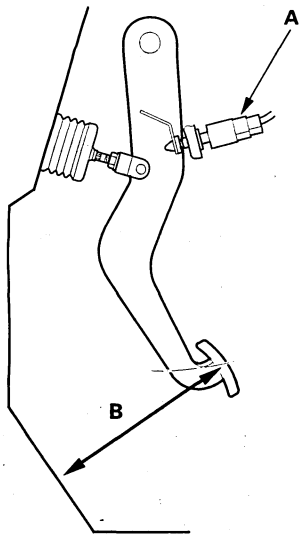

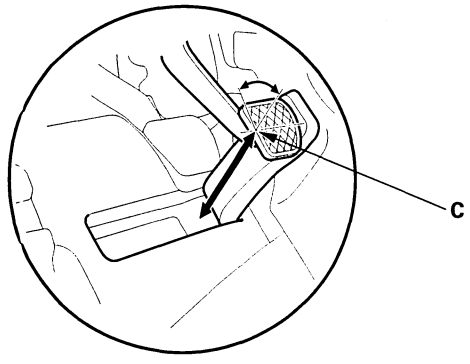

2. Lift up the carpet. At the insulator cutout, measure the pedal height (B) from the left side of the pedal pad (C).

Standard pedal height (with carpet removed):
M/T: 167 mm (6 9/16 in.)
A/T: 172 mm (6 13/16 in.)

3. Loosen the pushrod locknut (A), and screw the pushrod in or out with pliers on the knurled part of the push rod (B) until the standard pedal height from the floor is reached. After adjustment, tighten the locknut firmly. Do not adjust the pedal height with the pushrod pressed.

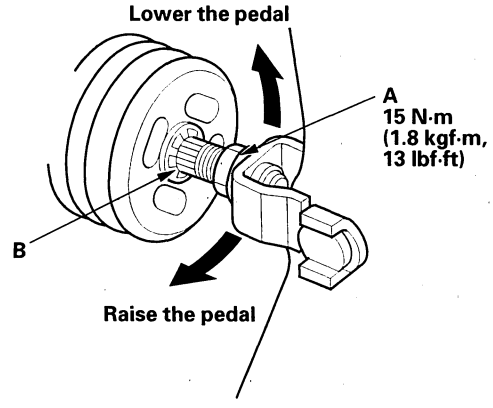

Brake Pedal Position Switch Clearance

4. Push in the brake pedal position switch until its plunger is fully pressed (threaded end (A) touching the pad (B) on the pedal arm). Then, turn the brake pedal position switch 45 ° clockwise to lock it. The gap between the brake pedal position switch and the pad is automatically adjusted to 0.4 to 3.0 mm (0.016 to 0.118 in.) by locking the switch. Make sure the brake lights go off when the pedal is released.

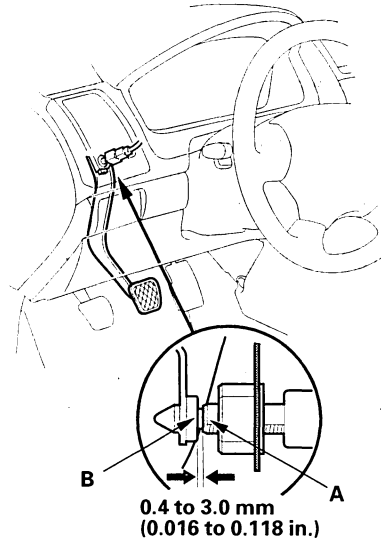

5. Check the brake pedal free play.

BACK

Protected by AR

Pedal Free Play

1. With the engine off, inspect the pedal free play (A) on the pedal pad (B) by pushing the brake pedal by hand.

   Free play: 1—5 mm (1/16—3/16 in.)

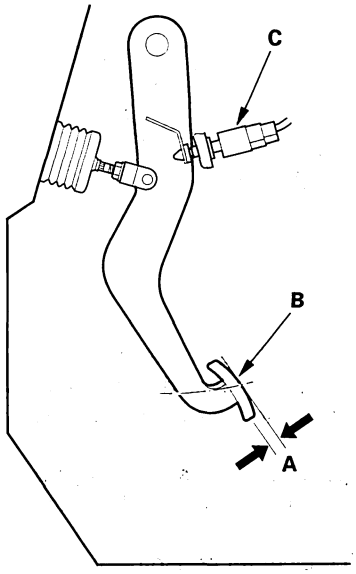

2. If the pedal free play is out of specification, adjust the brake pedal position switch (C). If the brake pedal free play is insufficient, it may result in excessive brake drag.

Parking Brake Check and Adjustment

Check

1. Pull the parking brake lever (A) with 196 N (20 kgf, 44 lbf) of force to fully apply the parking brake. The parking brake lever should be locked within the specified number of clicks (B).

   Lever locked clicks:
   With rear disc: 6 to 9
   With rear drum: 4 to 7

Pulled up with 196 N (20 kgf, 44 lbf)

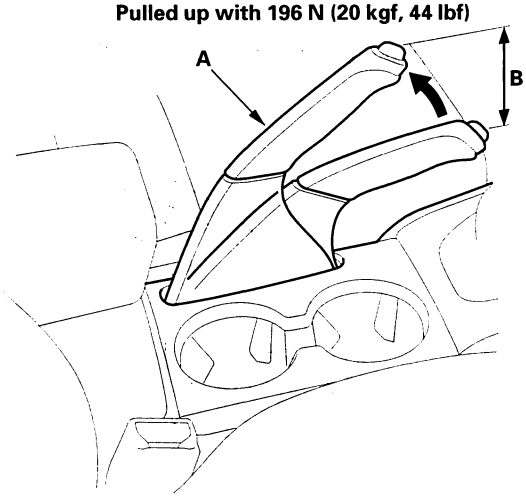

2. Adjust the parking brake if the lever clicks are not within the specification.

(cont'd)

Protected by AR

Parking Brake Check and Adjustment (cont'd)

Adjustment

NOTE: After servicing the rear brake shoes, loosen the parking brake adjusting nut, start the engine, and press the brake pedal several times to set the self-adjusting brake before adjusting the parking brake (with rear drum brake).

1. Raise the rear of the vehicle, and support it with safety stands in the proper locations (see page 1-14).
2. Remove the center console (see page 20-125).
3. Pull the parking brake lever up one click.

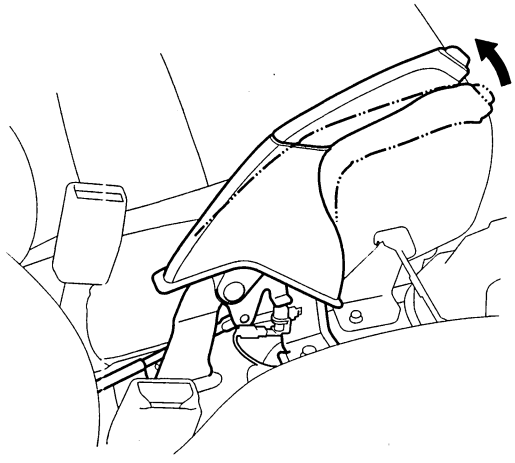

4. Tighten the adjusting nut (A) until the parking brakes drag slightly when the rear wheels are turned.

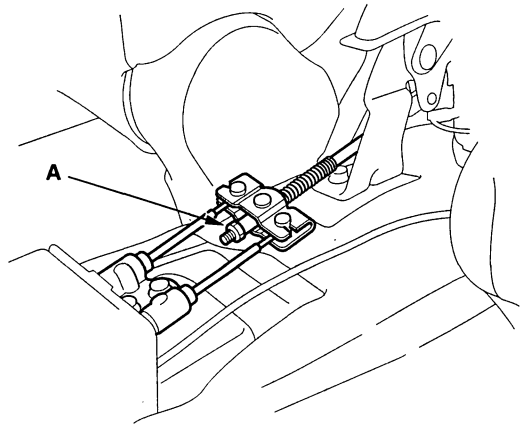

5. Release the parking brake lever fully, and check that the parking brakes do not drag when the rear wheels are turned. Readjust if necessary.
6. Pull the parking brake all the way up, and make sure the parking brakes are fully applied.
7. Reinstall the center console (see page 20-125).

BACK

Protected by AR

Brake System Bleeding

NOTE:
- Do not reuse the drained fluid. Use only clean Honda DOT 3 Brake Fluid from an unopened container. Using a non-Honda brake fluid can cause corrosion and shorten the life of the system.
- Do not mix different brands of brake fluid; they may not be compatible.
- Make sure no dirt or other foreign matter is allowed to contaminate the brake fluid.
- Do not spill brake fluid on the vehicle, it may damage the paint; if brake fluid does contact the paint, wash it off immediately with water.
- The reservoir on the master cylinder must be at the MAX (upper) level mark at the start of the bleeding procedure and checked after bleeding each brake caliper. Add fluid as required.

1. Make sure the brake fluid level in the reservoir is at the MAX (upper) level line (A).

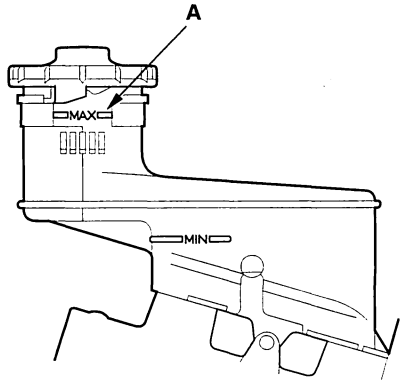

2. Attach a length of clear drain tube to the bleed screw.

3. Have someone slowly pump the brake pedal several times, then apply steady pressure.

4. Starting at the left-front, loosen the brake bleed screw to allow air to escape from the system. Then tighten the bleed screw securely.

5. Repeat the procedure for each wheel in the sequence shown following until air bubbles no longer appear in the fluid.

BLEEDING SEQUENCE:

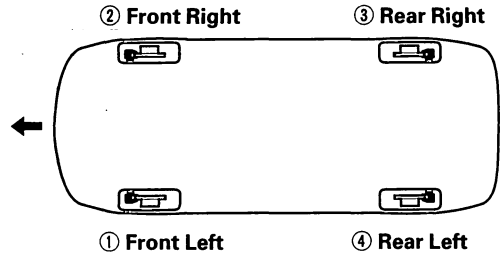

Front

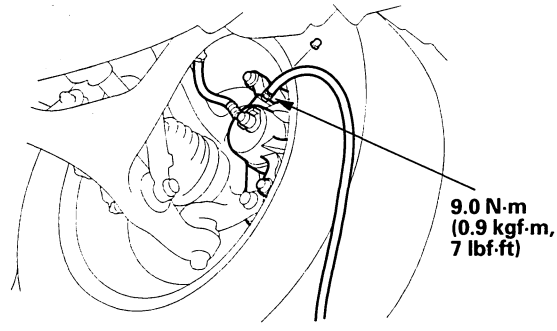

Rear

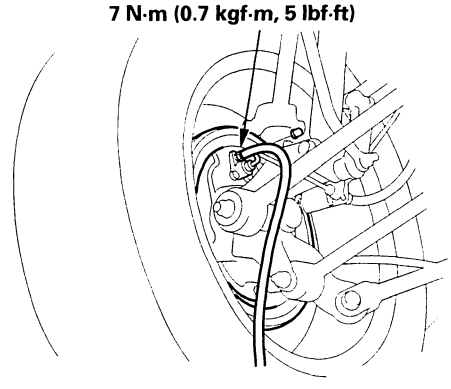

6. Refill the master cylinder reservoir to the MAX (upper) level line.

Protected by AR

Conventional Brake Components

Brake System Indicator Circuit Diagram

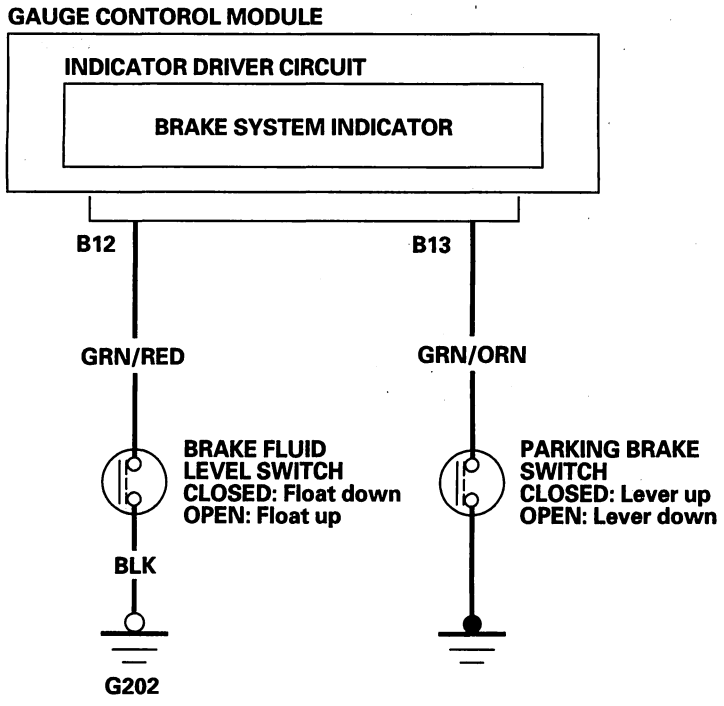

BACK

Protected by AR

Parking Brake Switch Test

1. Remove the center console, and disconnect the connector (A) from the parking brake switch (B).

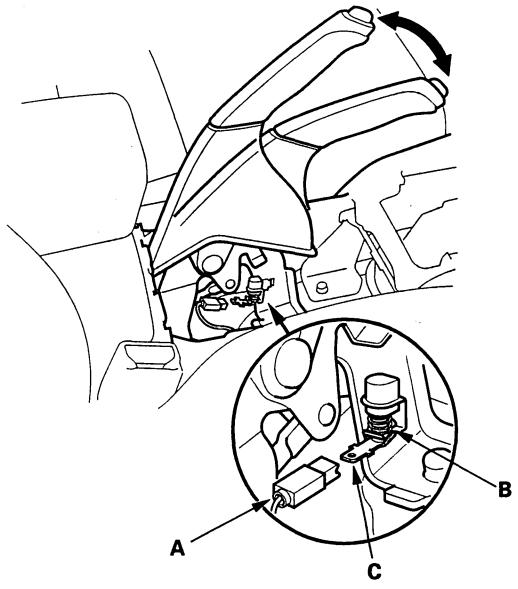

2. Check for continuity between the positive terminal (C) and body ground.

   - With the brake lever up, there should be continuity.
   - With the brake lever down, there should be no continuity.

Brake Fluid Level Switch Test

Check for continuity between the terminals (1 and 2) with the float in the down position and in the up position.

- Remove the brake fluid completely from the reservoir. With the float down, there should be continuity.
- Fill the reservoir with brake fluid to the MAX (upper) level (A). With the float up, there should be no continuity.

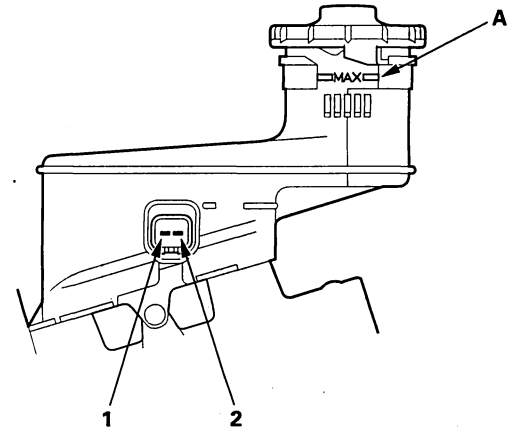

Protected by AR

Front Brake Pad Inspection and Replacement

⚠CAUTION

Frequent inhalation of brake pad dust, regardless of material composition, could be hazardous to your health.
- Avoid breathing dust particles.
- Never use an air hose or brush to clean brake assemblies. Use an OSHA-approved vacuum cleaner.

Inspection

1. Raise the front of the vehicle, and support it with safety stands in the proper locations (see page 1-14).
2. Remove the front wheels.
3. Check the thickness of the inner pad (A) and outer pad (B). Do not include the thickness of the backing plate.

Brake pad thickness:
Standard: 10.5—11.5 mm (0.41—0.45 in.)
Service limit: 1.6 mm (0.06 in.)

Inner pad

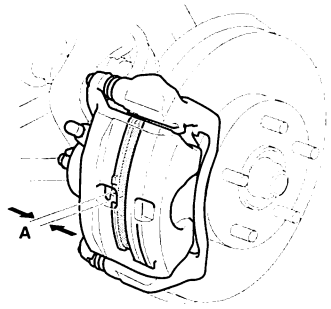

Outer pad

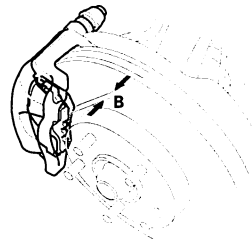

4. If the brake pad thickness is less than the service limit, replace all the front brake pads as a set.

Replacement

1. Raise the front of the vehicle, and support it with safety stands in the proper locations (see page 1-14).
2. Remove the front wheels.
3. Remove the brake hose mounting bolt.
4. Remove the flange bolt (B) while holding the pin A with a wrench being careful not to damage the pin boot, and pivot the caliper (C) up out of the way. Check the brake hose and pin boots for damage and deterioration.

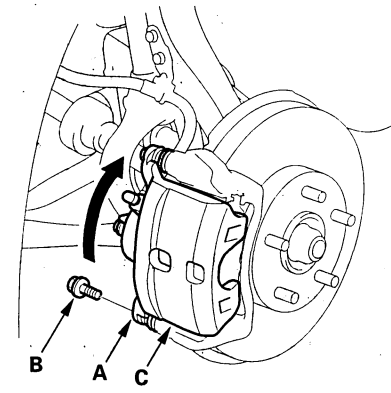

5. Remove the pad shims (A) and brake pads (B).

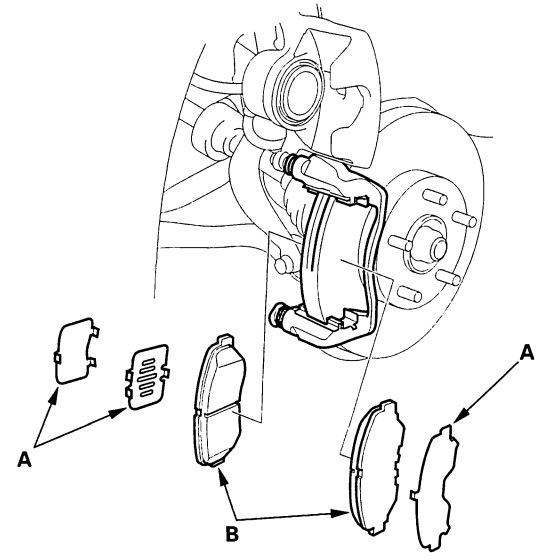

6. Check the hose and pin boots for damage and deterioration.

BACK

Protected by AR

7. Remove the pad retainers (A), and check the caliper pin for free movement.

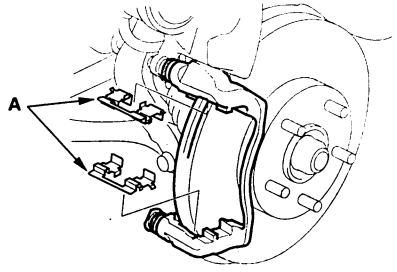

8. Clean the caliper thoroughly; remove any rust, and check for grooves and cracks.

9. Check the brake disc for damage and cracks.

10. Clean and install the pad retainers.

11. Apply a thin coat of M-77 assembly paste (P/N 08798-9010) to the pad side of shim outer pad shim C, inner pad shim B, both sides of inner pad shim A, the back of brake pads (D), and to the other areas indicated by the arrows. Wipe excess assembly paste off the pad shims and brake pads. Contaminated brake discs and pads reduce stopping ability. Keep assembly paste off the brake discs and brake pad material.

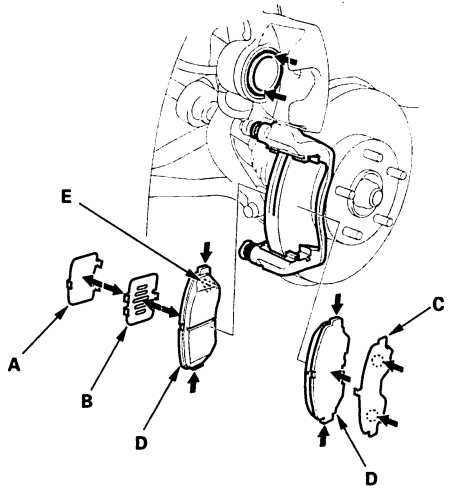

12. Install the brake pads and pad shims correctly. Install the brake pads with the wear indicator (E) on top.
If you are reusing the brake pads, always reinstall the brake pads in their original positions to prevent a momentary loss of braking efficiency.

13. Push in the piston (B) so the caliper will fit over the brake pads. Check the brake fluid level. The brake fluid may overflow if the reservoir is too full. Make sure the piston boot is in position to prevent damaging it when pivoting the caliper down.

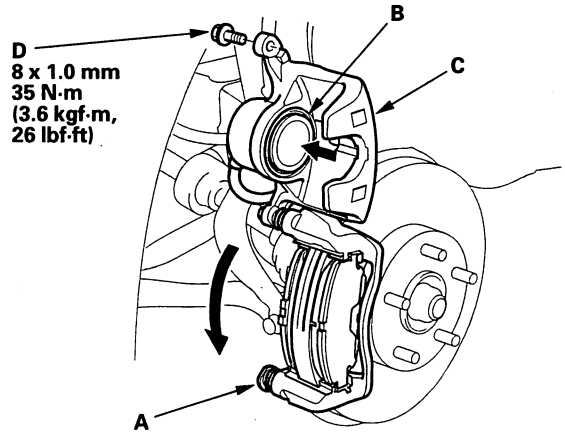

14. Pivot the caliper (C) down into position. Install the flange bolt (D), and tighten it to the specified torque while holding the pin A with a wrench being careful not to damage the pin boot.

15. Install the brake hose mounting bolt, and tighten it to the specified torque.

16. Press the brake pedal several times to make sure the brakes work.

    NOTE: Engagement of the brake may require a greater pedal stroke immediately after the brake pads have been replaced as a set. Several applications of the brake pedal will restore the normal pedal stroke.

17. After installation, check for leaks at hose and line joints or connections, and retighten if necessary. Then test-drive the vehicle.

Protected by AR

Front Brake Disc Inspection

Runout

1. Raise the front of the vehicle, and support it with safety stands in the proper locations (see page 1-14).
2. Remove the front wheels.
3. Remove the brake pads (see page 19-12).
4. Inspect the brake disc surface for damage and cracks. Clean the brake disc thoroughly, and remove all rust.
5. Install suitable flat washers (A) and wheel nuts, and tighten the nuts to the specified torque to hold the brake disc securely against the hub.

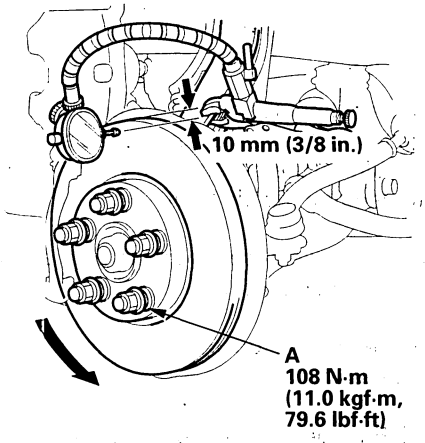

6. Set up the dial gauge against the brake disc as shown, and measure the runout at 10 mm (3/8 in.) from the outer edge of the brake disc.

   Brake disc runout:
   Service limit: 0.10 mm (0.004 in.)

7. If the brake disc is beyond the service limit, refinish the brake disc with an on-car brake lathe. The Kwik-Lathe produced by Kwik-way Manufacturing Co. and the "Front Brake Disc Lathe" offered by Snap-on Tools Co. are approved for this operation.

   Max. refinish limit: 21.0 mm (0.83 in.)

   NOTE:
   - If the brake disc is beyond the service limit for refinishing, replace it (see step 3 on page 18-13).
   - A new disc should be refinished if its runout is greater than 0.10 mm (0.004 in.).

Thickness and Parallelism

1. Raise the front of the vehicle, and support it with safety stands in the proper locations (see page 1-14).
2. Remove the front wheels.
3. Remove the brake pads (see page 19-12).
4. Using a micrometer, measure brake disc thickness at eight points, approximately 45 ° apart and 10 mm (3/8 in.) in from the outer edge of the brake disc. Replace the brake disc if the smallest measurement is less than the max. refinishing limit.

   Brake disc thickness:
   Standard: 22.9—23.1 mm (0.90—0.91 in.)
   Max. refinishing limit: 21.0 mm (0.83 in.)
   Brake disc parallelism: 0.015 mm (0.0006 in.) max.

   NOTE: This is the maximum allowable difference between the thickness measurements.

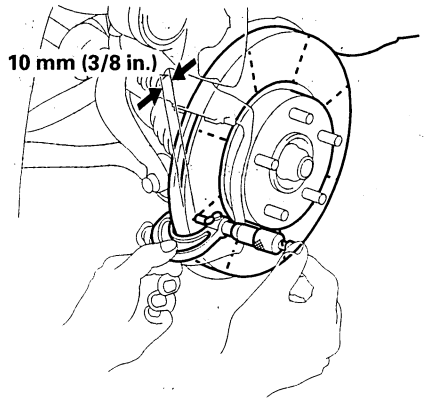

5. If the smallest measurement is less than the max. refinishing limit, replace the brake disc (see step 3 on page 18-13).
6. If the brake disc is beyond the service limit for parallelism, refinish the brake disc with an on-car brake lathe. The Kwik-Lathe produced by Kwik-way Manufacturing Co. and the "Front Brake Disc Lathe" offered by Snap-on Tools Co. are approved for this operation.

BACK

Protected by AR

Front Brake Caliper Overhaul

⚠CAUTION

Frequent inhalation of brake pad dust, regardless of material composition, could be hazardous to your health.
- Avoid breathing dust particles.
- Never use an air hose or brush to clean brake assemblies. Use an OSHA-approved vacuum cleaner.

Remove, disassemble, inspect, reassemble, and install the caliper, and note these items:

NOTE: Make sure that the caliper pins are installed correctly.
The upper and lower caliper pins are different. If the caliper pins are installed in the wrong location, it will cause uneven tire wear, vibration, and or uneven or rapid pad wear.

- Do not spill brake fluid on the vehicle; it may damage the paint; if brake fluid gets on the paint, wash it off immediately with water.
- To prevent dripping brake fluid, cover disconnected hose joints with rags or shop towels.
- Clean all parts in brake fluid and air dry; blow out all passages with compressed air.
- Before reassembling, check that all parts are free of dust and other foreign particles.
- Replace parts with new ones as specified in the illustration.
- Make sure no dirt or other foreign matter gets in the brake fluid.
- Make sure no grease or oil gets on the brake discs or pads.
- When reusing brake pads, always reinstall them in their original positions to prevent loss of braking efficiency.
- Do not reuse drained brake fluid. Use only clean Honda DOT 3 Brake Fluid from an unopened container. Using a non-Honda brake fluid can cause corrosion and shorten the life of the system.
- Do not mix different brands of brake fluid as they may not be compatible.
- Coat the pistons, piston seals grooves, and caliper bore with clean brake fluid.
- Replace all rubber parts with new ones whenever disassembled.
- After installing the caliper, check the brake hose and line for leaks, interference, and twisting.

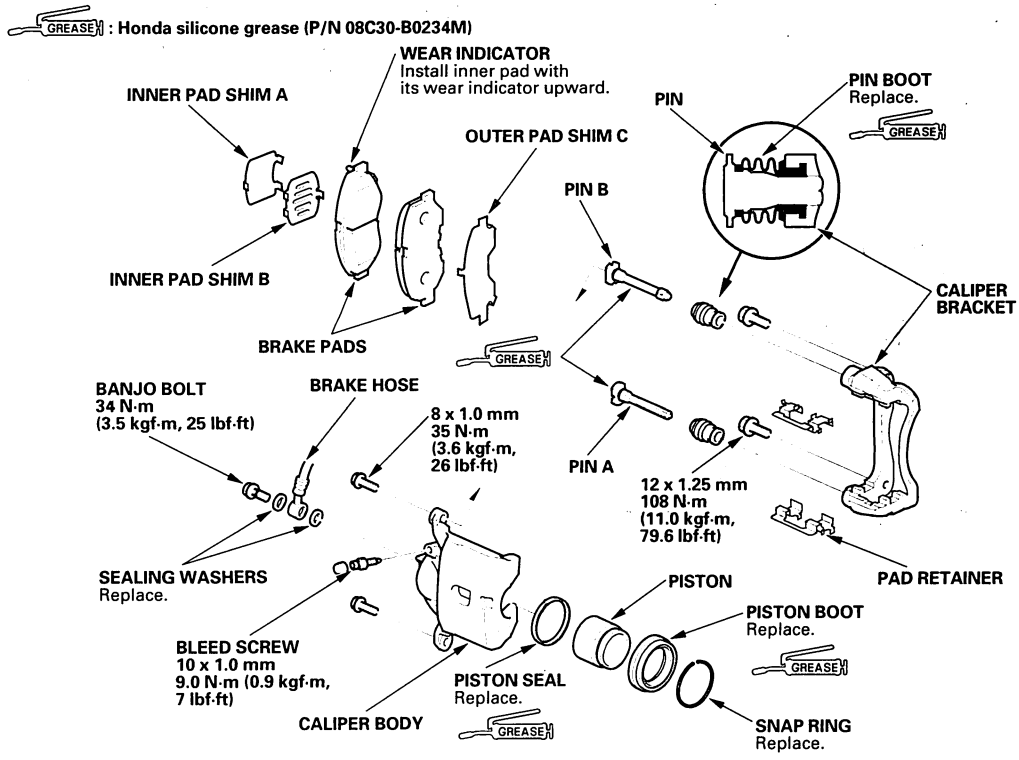

Protected by AR

Master Cylinder Replacement

NOTE: Do not spill brake fluid on the vehicle; it may damage the paint; if brake fluid does contact the paint, wash it off immediately with water.

1. Remove the cable clamps from the body.

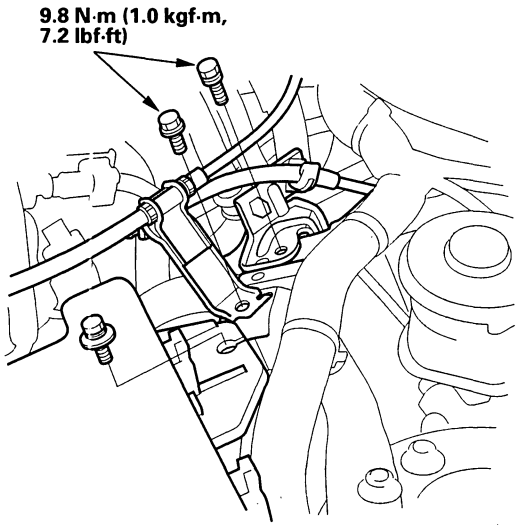

2. Remove the access panel (A), then remove the right strut brace (B).

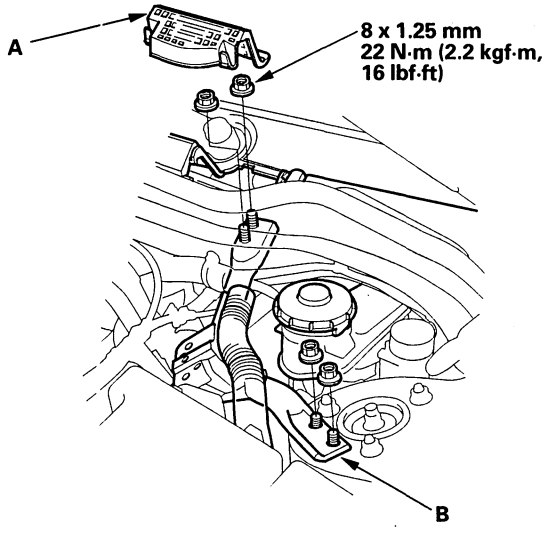

3. Remove the reservoir cap and brake fluid from the master cylinder reservoir.

4. Disconnect the brake fluid level switch connector (A).

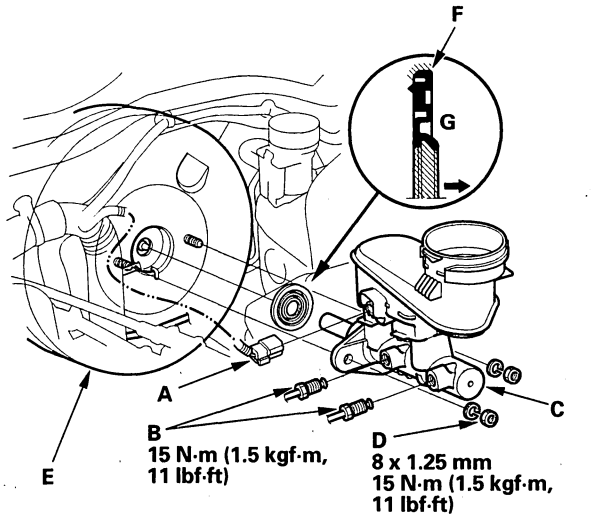

5. Disconnect the brake lines (B) from the master cylinder (C). To prevent spills, cover the hose joints with rags or shop towels.

6. Remove the master cylinder mounting nuts (D) and washers.

7. Remove the master cylinder from the brake booster (E). Be careful not to bend or damage the brake lines when removing the master cylinder.

8. Remove the rod seal (F) from the master cylinder.

BACK

Protected by AR

9. Install the master cylinder in the reverse order of removal, and note these items:

   - Replace all the rubber parts with new ones whenever the master cylinder is removed.
   - Use a new rod seal on reassembly.
   - Coat the inner bore lip and outer circumference of the new rod seal with the recommended seal grease in the master cylinder set.
   - Install the rod seal onto the master cylinder with its grooved side (G) toward the master cylinder.
   - Check the brake pedal height and free play after installing the master cylinder, and adjust it if necessary (see page 19-6).

10. Bleed system (see page 19-9).

11. Spin the wheels to check for brake drag.

Master Cylinder Inspection

NOTE:

- Before reassembling, check that all parts are free of dirt and other foreign particles.
- Do not try to disassemble the master cylinder assembly. Replace the master cylinder assembly with a new part if necessary.
- Do not allow dirt or foreign matter to contaminate the brake fluid.

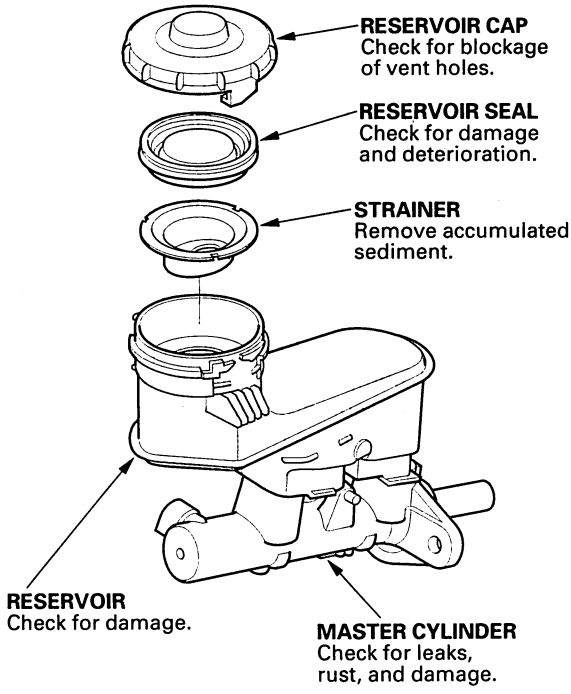

Protected by AR

Brake Booster Test

Functional Test

1. With the engine stopped, press the brake pedal several times to deplete the vacuum reservoir, then press the brake pedal hard, and hold it for 15 seconds. If the brake pedal sinks, either the master cylinder is bypassing internally, or the brake system (master cylinder, lines, modulator, or caliper) is leaking.

2. Start the engine with the brake pedal pressed. If the pedal sinks slightly, the vacuum booster is operating normally. If the brake pedal height does not vary, the booster or check valve is faulty.

3. With the engine running, press the brake pedal lightly, and shift the transmission to the D position. Apply just enough pressure to hold back automatic transmission creep. If the brake pedal sinks more than 10 mm (3/8 in.) in 3 minutes, the master cylinder is faulty. A slight change in pedal height when the A/C compressor cycles on and off is normal. (The A/C compressor load changes the vacuum available to the booster.)

Leak Test

1. Press the brake pedal with the engine running, then stop the engine. If the brake pedal height does not vary while pressed for 30 seconds, the vacuum booster is OK. If the pedal rises, the booster is faulty.

2. Turn the engine off, and wait 30 seconds. Press the brake pedal several times using normal pressure. When the brake pedal is first pressed, it should be low. On consecutive applications, the pedal height should gradually rise. If the brake pedal position does not vary, check the booster check valve.

3. Disconnect the brake booster vacuum hose at the booster (A). The check valve (B) is built into the hose.

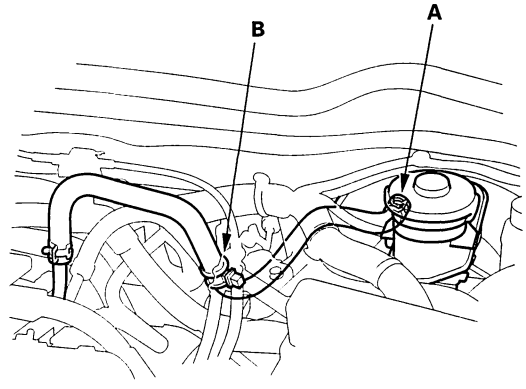

4. Start the engine, and let it idle. There should be vacuum available. If no vacuum is available, the check valve is not working properly. Replace the brake booster vacuum hose and check valve, and retest.

5. Start the engine, and then pinch the brake booster vacuum hose between the check valve and the booster.

6. Turn the engine off and wait 30 seconds. Press the brake pedal several times using normal pressure. When the brake pedal is first pressed, it should be low. On consecutive applications, the brake pedal height should gradually rise.

   - If the brake pedal position does not vary, replace the brake booster.
   - If the brake pedal position varies, replace the brake booster vacuum hose/check valve assembly.

BACK

Protected by AR

Brake Booster Replacement

1. Make sure you have the anti-theft codes for the radio and navigation system, then write down the frequencies for the radio's preset buttons.
2. Disconnect the negative cable from the battery.
3. Remove the master cylinder (see page 19-16).
4. Disconnect the vacuum hose (A) from the brake booster (B).

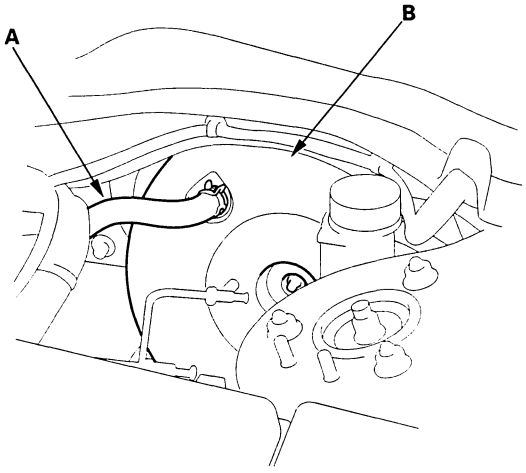

5. Remove the under-hood fuse/relay box cover.
6. Disconnect (+) and (−) terminals (A) of the under-hood fuse/relay box (B).

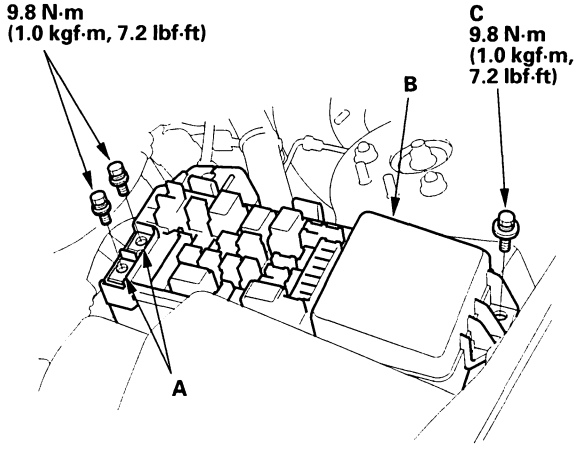

7. Remove the under-hood fuse/relay box mounting bolt (C), then remove the under-hood fuse/relay box from the body.
8. Remove the air cleaner assembly (A).

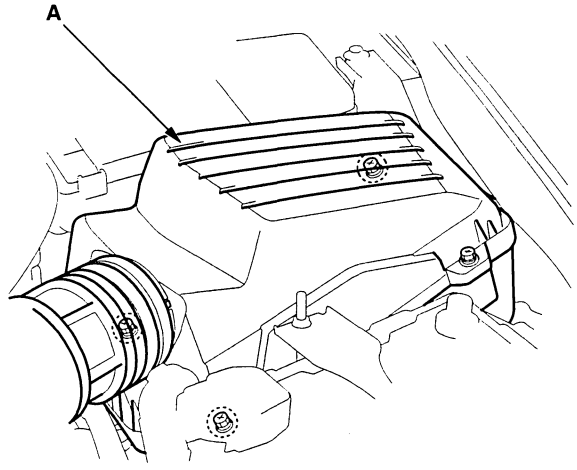

9. Remove the primary and secondary brake lines from the hose clamp (A).

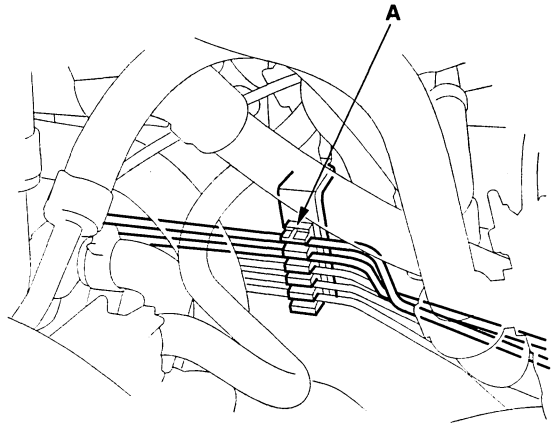

(cont'd)

Protected by AR

Brake Booster Replacement (cont'd)

10. Remove the lock pin (A) and the joint pin (B), then disconnect the yoke from the brake pedal.

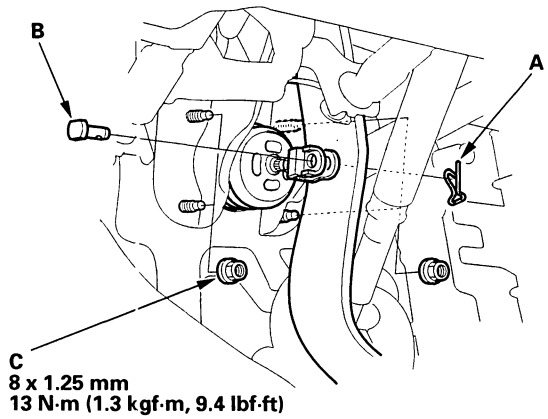

11. Remove the brake booster mounting nuts (C).

12. Remove the brake booster (A) from the engine compartment.

NOTICE

- Be careful not to damage the booster surfaces and threads of the booster stud bolts.
- Be careful not to bend or damage the brake lines.

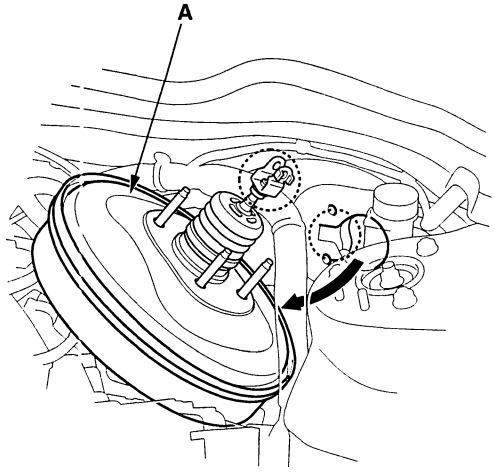

13. Install the brake booster in the reverse order of removal, and note these items:

- Use a new lock pin whenever installing.
- After installing the brake booster and master cylinder, fill the reservoir with new brake fluid, bleed the brake system (see page 19-9), and adjust the brake pedal height and free play (see page 19-6).

BACK

Protected by AR

Rear Brake Pad Inspection and Replacement

⚠CAUTION

Frequent inhalation of brake pad dust, regardless of material composition, could be hazardous to your health.
- Avoid breathing dust particles.
- Never use an air hose or brush to clean brake assemblies. Use an OSHA-approved vacuum cleaner.

Inspection

1. Raise the rear of the vehicle, and support it with safety stands in the proper locations (see page 1-14).
2. Remove the rear wheels.
3. Check the thickness of the inner pad (A) and outer pad (B). Do not include the thickness of the backing plate.

Brake pad thickness:
Standard: 8.9—9.1 mm (0.350—0.358 in.)
Service limit: 1.6 mm (0.06 in.)

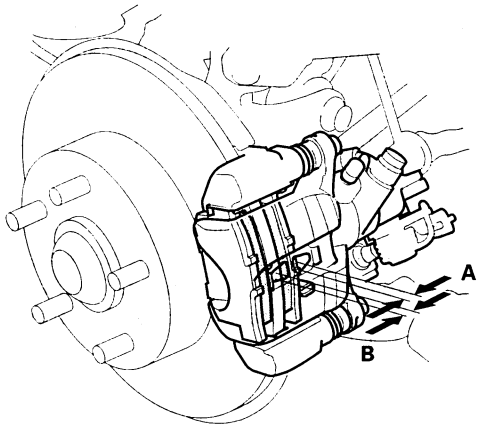

4. If the brake pad thickness is less than the service limit, replace all the rear brake pads as a set.

Replacement

1. Raise the rear of the vehicle, and support it with safety stands in the proper locations (see page 1-14).
2. Remove the rear wheels.
3. Remove the flange bolts (C) while holding the pin A and pin B with a wrench being careful not to damage the pin boots, and remove the caliper (D). Check the hose and pin boots for damage and deterioration.

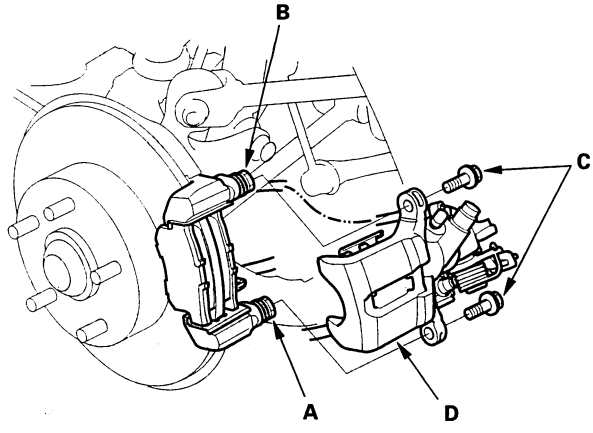

4. Remove the pad shim (A) and brake pads (B).

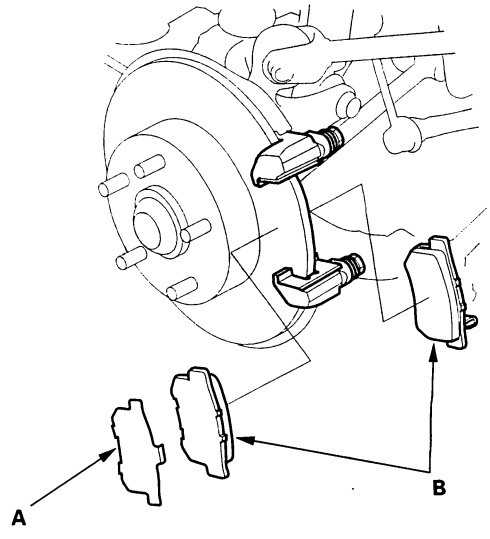

(cont'd)

Protected by AR

Rear Brake Pad Inspection and Replacement (cont'd)

5. Remove the pad retainers (A).

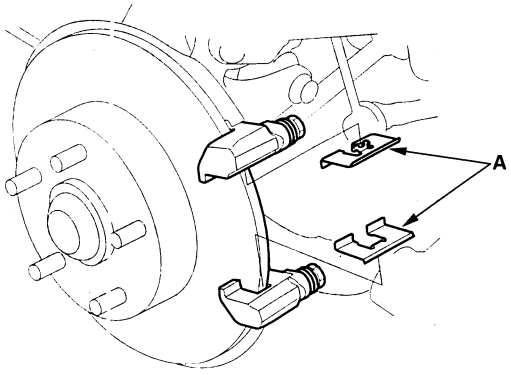

6. Clean the caliper thoroughly; remove any rust and check for grooves and cracks.

7. Check the brake disc for damage and cracks.

8. Install the pad retainers.

9. Apply a thin coat of M-77 assembly paste (P/N 08798-9010) to both sides of the pad shim (A), the back of brake pads (B), and the other areas indicated by the arrows. Wipe excess assembly paste off the pad shims and brake pads. Contaminated brake discs or pads reduce stopping ability. Keep assembly paste off the brake discs and pad material.

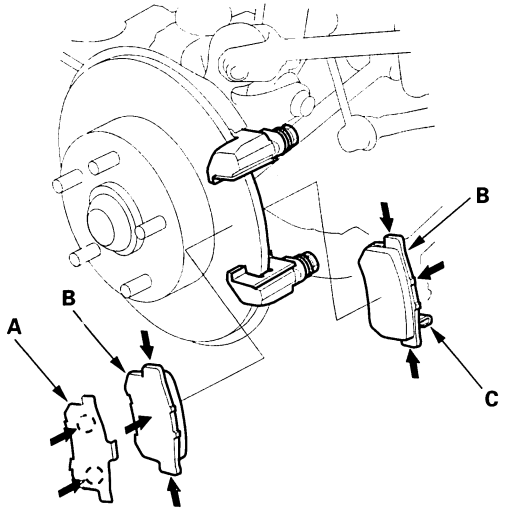

10. Install the brake pads and pad shims correctly. Install the brake pad with the wear indicator (C) on the inside bottom.
If you are reusing the brake pads, always reinstall the brake pads in their original positions to prevent a momentary loss of braking efficiency.

11. Rotate the caliper piston (C) clockwise into the cylinder, then align the cutout (D) in the piston with the tab (E) on the inner pad by turning the piston back. Lubricate the boot with rubber grease to avoid twisting the piston boot. If the piston boot is twisted, back it out so it is positioned properly.

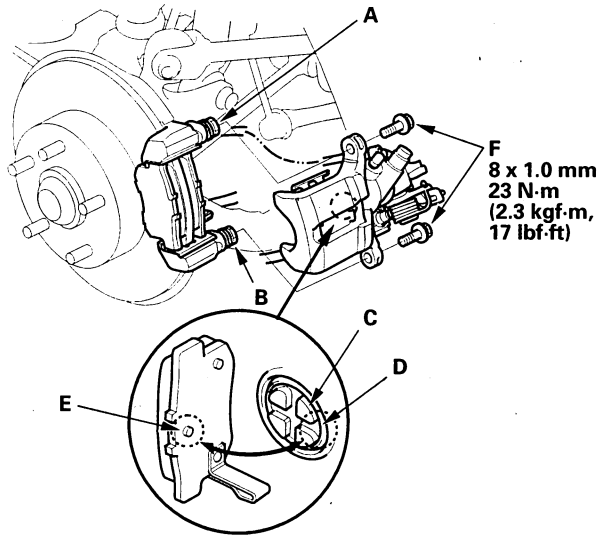

12. Install the caliper. Install the flange bolts (F), and tighten it to the specified torque while holding the pin A and pin B with a wrench. Be careful not to damage the pin boots.

13. Press the brake pedal several times to make sure the brakes work.

    NOTE: Engagement of the brake may require a greater pedal stroke immediately after the brake pads have been replaced as a set. Several applications of the brake pedal will restore the normal pedal stroke.

14. After installation, check for leaks at hose and line joints or connections, and retighten if necessary. Then test-drive the vehicle.

BACK

Protected by AR

Rear Brake Disc Inspection

Runout

1. Raise the rear of the vehicle, and support it with safety stands in the proper locations (see page 1-14).
2. Remove the rear wheels.
3. Remove the brake pads (see page 19-21).
4. Inspect the brake disc surface for damage and cracks. Clean the brake disc thoroughly, and remove all rust.
5. Install suitable flat washers (A) and wheel nuts, and tighten the wheel nuts to the specified torque to hold the brake disc securely against the hub.

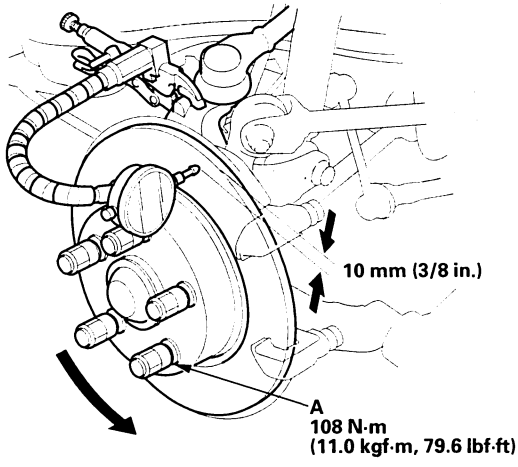

6. Set up the dial gauge against the brake disc as shown, and measure the runout at 10 mm (3/8 in.) from the outer edge of the brake disc.

   Brake disc runout:
   Service limit: 0.10 mm (0.004 in.)

7. If the brake disc is beyond the service limit, refinish the brake disc with an on-car brake lathe. The Kwik-Lathe produced by Kwik-way Manufacturing Co. and the "Front Brake Disc Lathe" offered by Snap-on Tools Co. are approved for this operation.

   Max. refinish limit: 8.0 mm (0.31 in.)

   NOTE:
   - If the brake disc is beyond the service limit for refinishing, replace it (see step 3 on page 18-31).
   - A new disc should be refinished if its runout is greater than 0.10 mm (0.004 in.).

Thickness and Parallelism

1. Raise the rear of the vehicle, and support it with safety stands in the proper locations (see page 1-14).
2. Remove the rear wheels.
3. Remove the brake pads (see page 19-21).
4. Using a micrometer, measure disc thickness at eight points, about 45 ° apart and 10 mm (3/8 in.) in from the outer edge of the brake disc. Replace the brake disc if the smallest measurement is less than the max. refinishing limit.

   Brake disc thickness:
   Standard: 8.9—9.1 mm (0.35—0.36 in.)
   Max. refinishing limit: 8.0 mm (0.31 in.)
   Brake disc parallelism: 0.015 mm (0.0006 in.) max.

   NOTE: This is the maximum allowable difference between the thickness measurements.

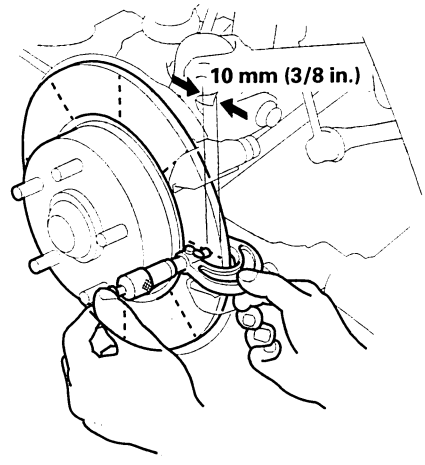

5. If the brake disc is beyond the service limit for parallelism, refinish the brake disc with an on-car brake lathe. The Kwik-Lathe produced by Kwik-way Manufacturing Co. and the "Front Brake Disc Lathe" offered by Snap-on Tools Co. are approved for this operation.

   NOTE: If the brake disc is beyond the service limit for refinishing, replace it (see step 3 on page 18-31).

Protected by AR

Conventional Brake Components

Rear Brake Caliper Overhaul

⚠CAUTION

Frequent inhalation of brake pad dust, regardless of material composition, could be hazardous to your health.
- Avoid breathing dust particles.
- Never use an air hose or brush to clean brake assemblies. Use an OSHA-approved vacuum cleaner.

Remove, disassemble, inspect, reassemble, and install the caliper, and note these items:

- Do not spill brake fluid on the vehicle; it may damage the paint; if brake fluid gets on the paint, wash it off immediately with water.
- To prevent dripping brake fluid, cover disconnected hose joints with rags or shop towels.
- Clean all parts in brake fluid and air dry; blow out all passages with compressed air.
- Before reassembling, check that all parts are free of dirt and other foreign particles.
- Replace parts with new ones as specified in the illustration.
- Make sure no dirt or other foreign matter gets into the brake fluid.
- Make sure no grease or oil gets on the brake discs or pads.
- When reusing brake pads, always reinstall them in their original positions to prevent loss of braking efficiency.
- Do not reuse drained brake fluid. Use only clean Honda DOT 3 Brake Fluid from an unopened container. Using a non-Honda brake fluid can cause corrosion and shorten the life of the system.
- Do not mix different brands of brake fluid as they may not be compatible.
- Coat the piston, piston seal groove, and caliper bore with clean brake fluid.
- Replace all rubber parts with new ones whenever disassembled.
- After installing the caliper, check the brake hose and line for leaks, interference, and twisting.

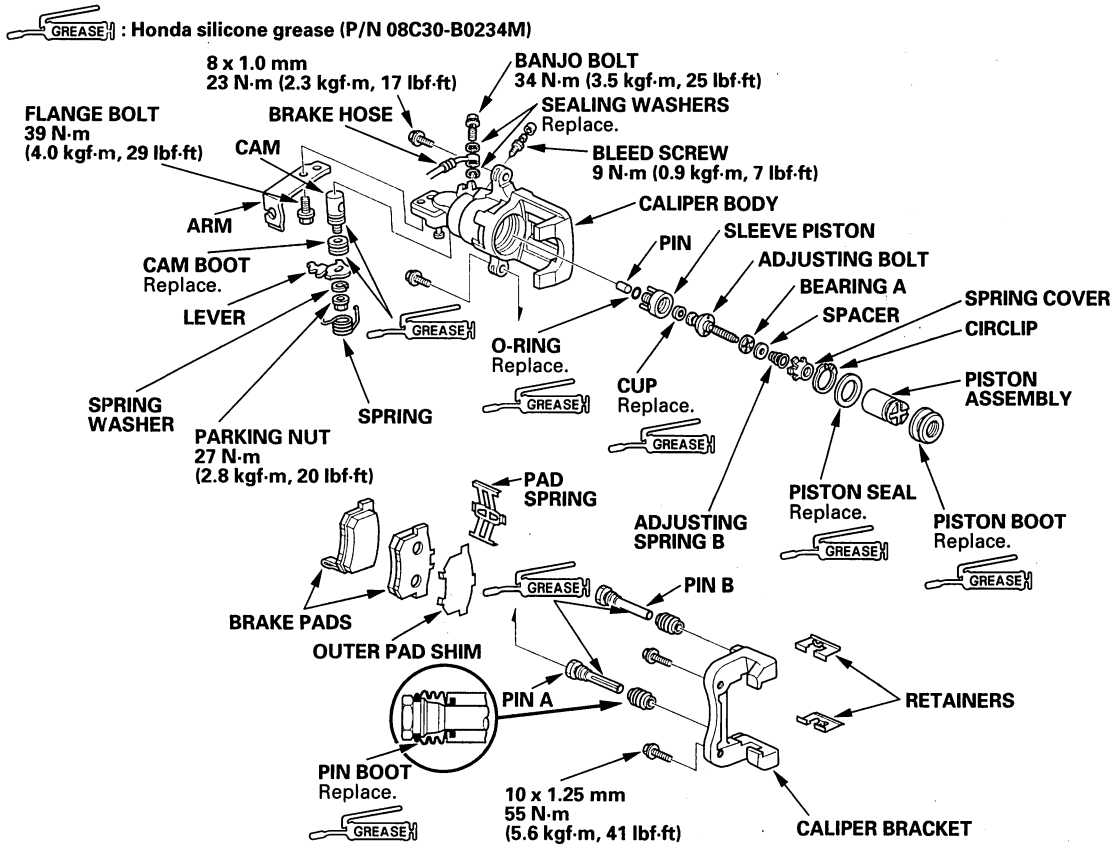

BACK

Protected by AR

Rear Drum Brake Inspection

⚠CAUTION

Frequent inhalation of brake pad dust, regardless of material composition, could be hazardous to your health.
- Avoid breathing dust particles.
- Never use an air hose or brush to clean brake assemblies. Use an OSHA-approved vacuum cleaner.

NOTE:
- Contaminated brake linings or drums reduce stopping ability.
- Block the front wheels before jacking up the rear of the vehicle.

1. Raise the rear of the vehicle, and support it with safety stands in the proper locations (see page 1-14).
2. Remove the rear wheels.
3. Release the parking brake, and remove the rear brake drum (see step 5 on page 18-33).

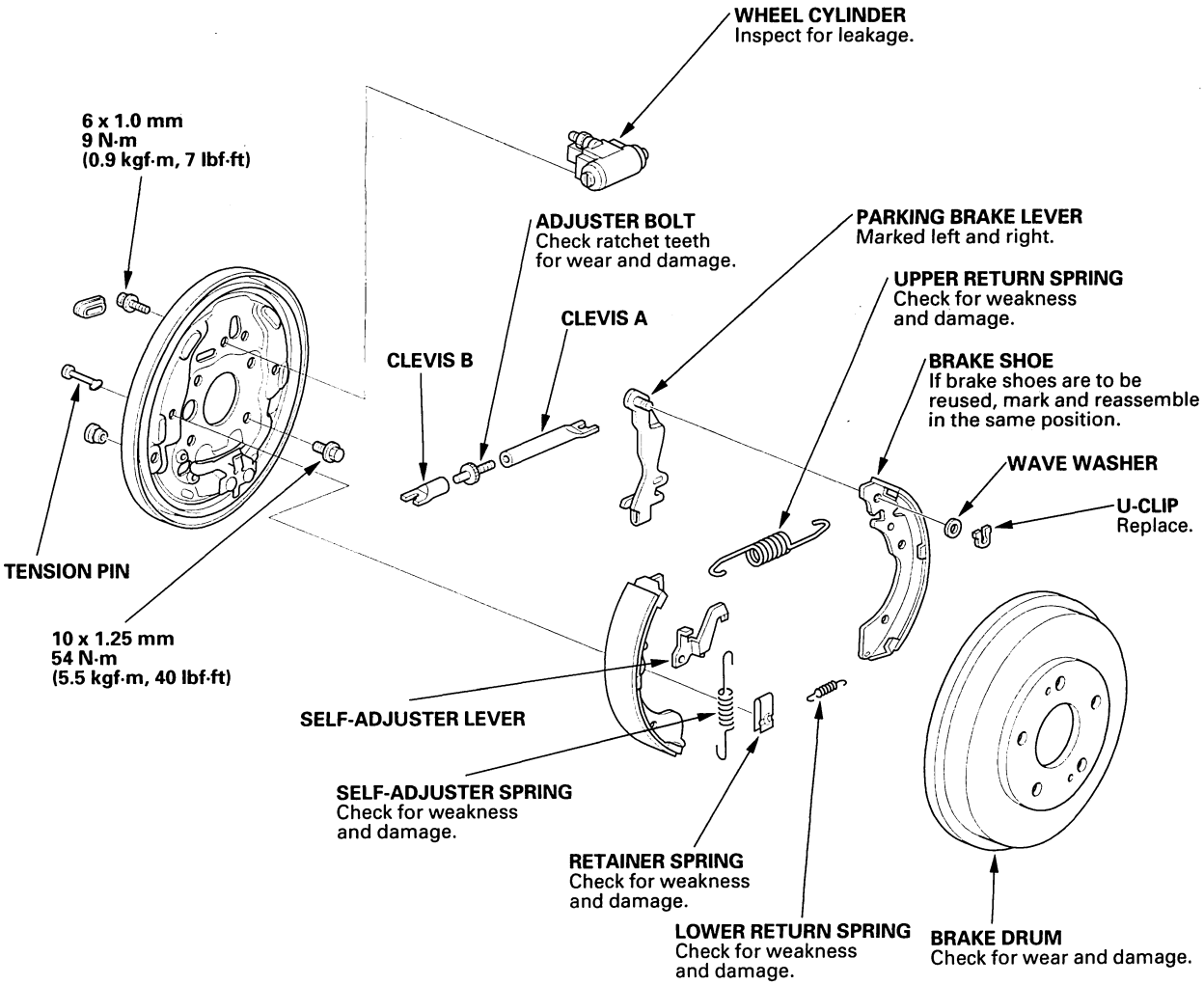

(cont'd)

Protected by AR

Rear Drum Brake Inspection (cont'd)

4. Check the wheel cylinder (A) for leakage.

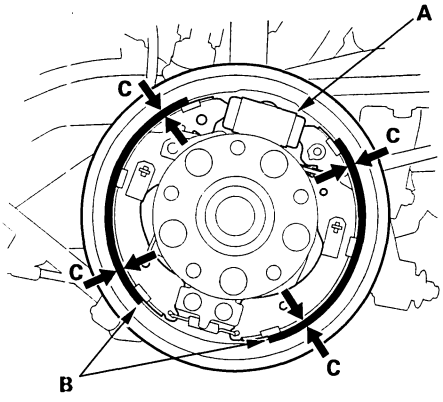

5. Check the brake linings (B) for cracking, glazing, wear, and contamination.

6. Measure the brake lining thickness (C). Measurement does not include brake shoe thickness.

   Brake lining thickness:
   Standard: 4.5 mm (0.18 in.)
   Service limit: 2.0 mm (0.08 in.)

7. If the brake lining thickness is less than the service limit, replace the brake shoes as a set.

8. Check the hub bearing for smooth operation. If it requires servicing, replace it (see page 18-33).

9. Measure the inside diameter of the brake drum with inside vernier calipers.

   Drum inside diameter:
   Standard: 219.9—220 mm (8.657—8.661 in.)
   Service limit: 221 mm (8.701 in.)

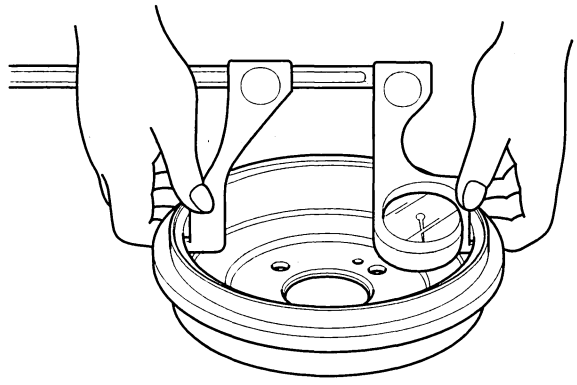

10. If the inside diameter of the brake drum is more than the service limit, replace the brake drum.

11. Check the brake drum for scoring, grooves, corrosion, and cracks.

BACK

Protected by AR

Rear Brake Shoe Replacement

Special Tools Required
Brake spring installer 07LAF-SM40200

Removal/Disassembly

1. Remove the brake drum (see step 1 on page 18-33).

2. Unhook the upper return spring (A) from the rearward shoe using the special tool (B).

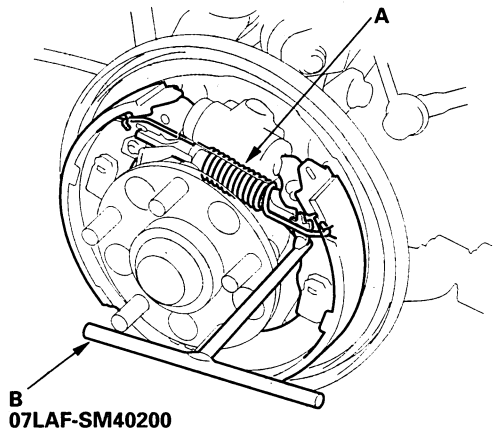

3. Remove the tension pins (A) by pushing each retainer spring (B) and turning the pins.

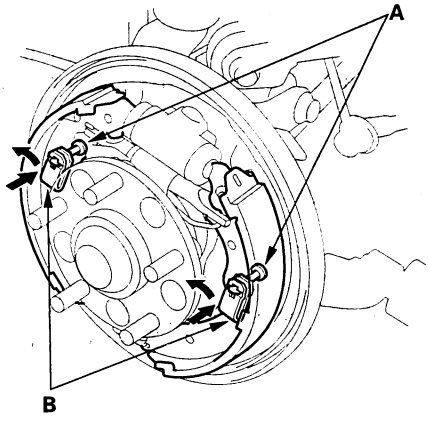

4. Lower the brake shoe assembly, and remove the lower return spring (A). Be careful not to damage the wheel cylinder dust cover.

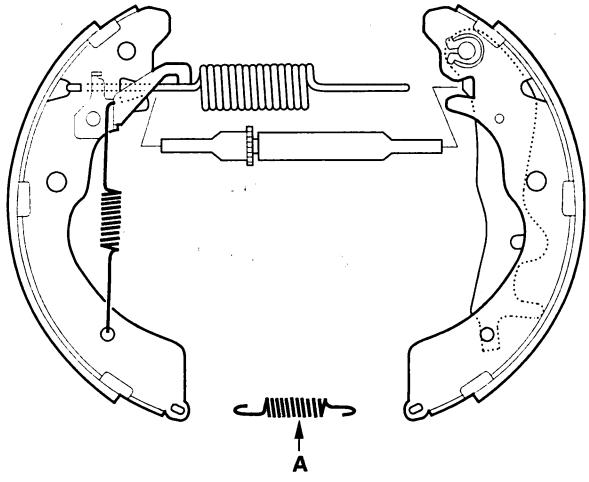

5. Remove the brake shoe assembly from the backing plate, and disassemble the brake shoe assembly.

6. Disconnect the parking brake cable from the parking brake lever, and remove the brake shoe.

7. Remove the U-clip (A), and wave washer (B), and separate the parking brake lever (C) from the brake shoe (D).

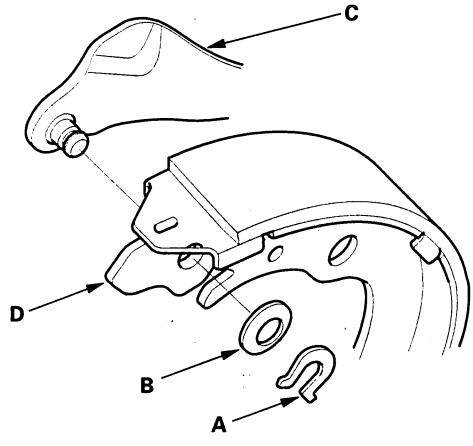

(cont'd)

Protected by AR

Rear Brake Shoe Replacement (cont'd)

Reassembly

1. Apply a thin coat of 44 MA assembly paste onto the sliding surfaces as illustrated. Wipe off any excess assembly paste. Do not get assembly paste on the brake lining material.

→• Sliding surfaces

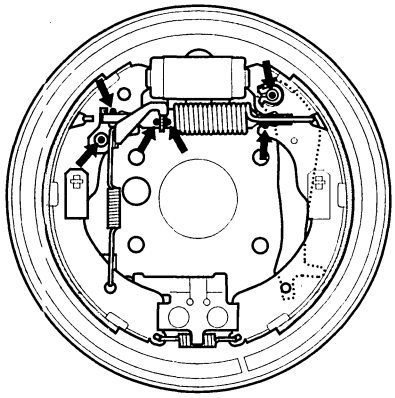

2. Install the parking brake lever (A) to the rearward brake shoe (B), and secure it with the wave washer (C), and a new U-clip (D). Pinch the U-clip securely to prevent it from coming off.

NOTE: Install the wave washer with its convex side facing outside.

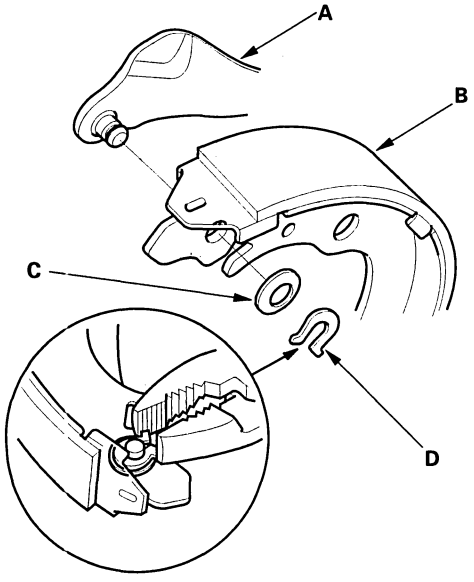

3. Connect the parking brake cable to the rearward brake shoe.

4. Install the self-adjuster lever (C) and self-adjuster spring (D) on the front side brake shoe (E).

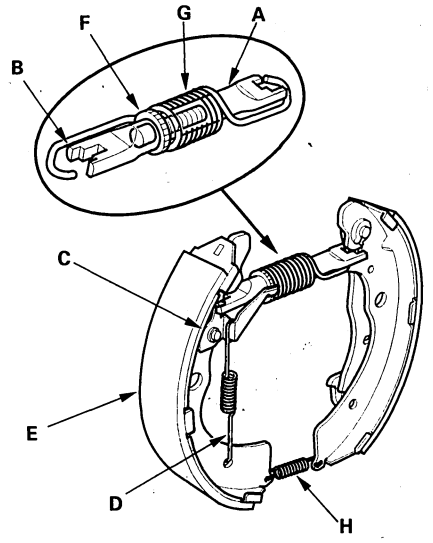

5. Assemble the brake shoes with the clevis A, adjuster bolt (F), clevis B, upper return spring (G), and lower return spring (H).

NOTE: Fully turn the adjuster bolt into the clevis A.

6. Apply a thin coat of 44 MA assembly paste onto the sliding surfaces as illustrated. Wipe off any excess assembly paste. Do not get assembly paste on the brake lining material.

→• Sliding surfaces

⇨○ Backside edge of the brake shoe

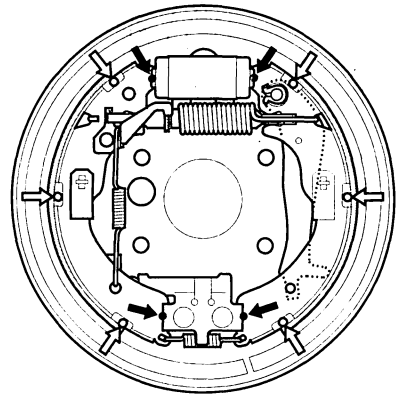

7. Install the brake shoe assembly on the backing plate fitting the top of the brake shoes onto the wheel cylinder pistons and the bottom of the brake shoes onto the locating plate.

BACK

Protected by AR

8. Install the tension pins (A), and secure with the retainer springs (B) by pushing it and turning each pin.

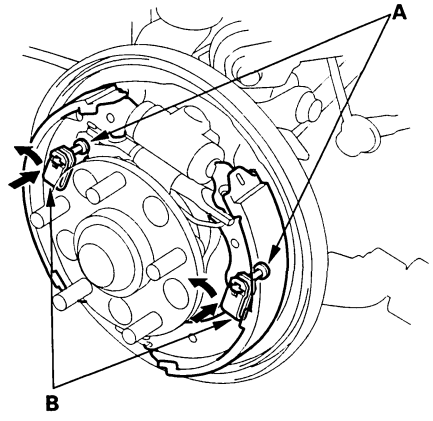

9. Hook the end (A) of the upper return spring (B) with the special tool.

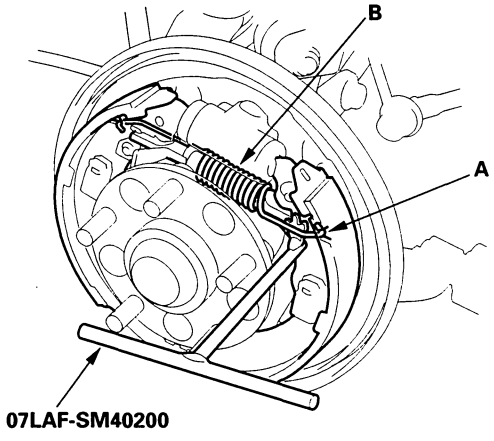

10. Install the brake drum and rear wheel.

11. If the wheel cylinder has been removed, bleed the brake system (see page 19-9).

12. Press the brake pedal several times to set the self-adjusting brake.

13. Adjust the parking brake (see page 19-7).

Rear Wheel Cylinder Replacement

NOTE:
- Do not spill brake fluid on the vehicle; it may damage the paint; if brake fluid does contact the paint, wash it off immediately with water.
- To prevent spills, cover the hose joints with rags or shop towels.
- Use only a Honda wheel cylinder special bolt.

1. Remove the brake shoes (see page 19-27).

2. Disconnect the brake line (A) from the wheel cylinder (B).

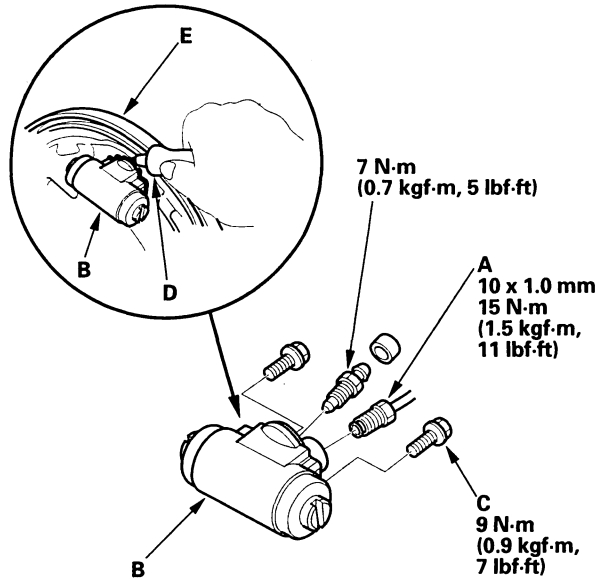

3. Remove the bolt (C) and the wheel cylinder from the backing plate.

4. Apply Three Bond 1109G sealant or equivalent (D) between the wheel cylinder and backing plate (E), and install the wheel cylinder.

5. Install the removed parts in the reverse order of removal.

6. Bleed the brake system (see page 19-9).

7. Check for leaks at the line joint and bleed screw, and retighten if necessary.

BACK

Protected by AR

Conventional Brake Components

Brake Pedal Replacement

1. Remove the lock pin (A) and pin (B).

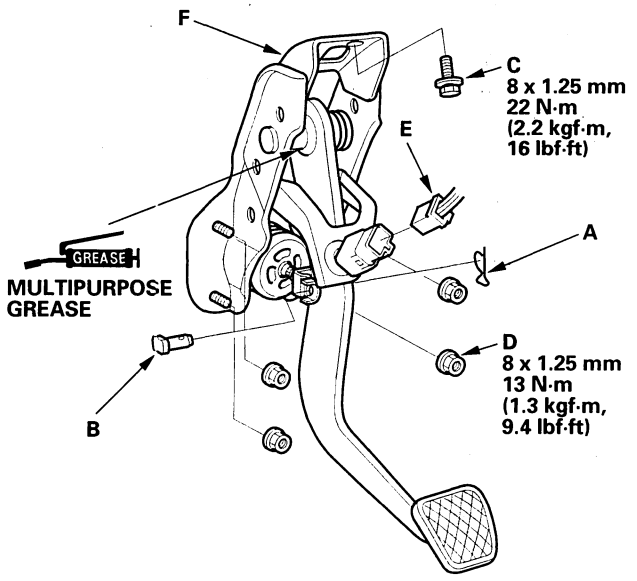

2. Remove the brake pedal bracket mounting bolt (C) and nuts (D).
3. Disconnect the brake pedal position switch connector (E).
4. Remove the brake pedal with bracket (F).
5. Install in the reverse order of removal.
6. Do the brake pedal and brake pedal position switch adjustment (see page 19-6).

   NOTE: Replace the lock pin whenever the brake pedal is replaced.

BACK

Protected by AR

Brake Hose and Line Inspection

1. Inspect the brake hoses for damage, deterioration, leaks, interference, and twisting.
2. Check the brake lines for damage, rusting, and leaks. Also check for bent brake lines.
3. Check for leaks at hose and line joints and connections, and retighten if necessary.
4. Check the master cylinder and ABS modulator-control unit for damage and leakage.

NOTE: Replace the brake hose clip whenever the brake hose is serviced.

Connection Point	Component	Connected to	Specified Torque Value	Note
A	Front brake caliper	Brake hose	34 N·m (3.5 kgf·m, 25 lbf·ft)	Banjo bolt
		Breed screw	9.0 N·m (0.9 kgf·m, 7.0 lbf·ft)	
B	Rear brake caliper	Brake hose	34 N·m (3.5 kgf·m, 25 lbf·ft)	Banjo bolt
		Breed screw	9.0 N·m (0.9 kgf·m, 7.0 lbf·ft)	
C	Rear wheel cylinder	Brake line	15 N·m (1.5 kgf·m, 11 lbf·ft)	Flare nut
		Breed screw	7.0 N·m (0.7 kgf·m, 5.0 lbf·ft)	
D	Brake hose	Brake line	15 N·m (1.5 kgf·m, 11 lbf·ft)	Flare nut
E	Master cylinder	Brake line	15 N·m (1.5 kgf·m, 11 lbf·ft)	Flare nut
F	ABS modulator-control unit	Brake line (12 mm nut)	22 N·m (2.2 kgf·m, 16 lbf·ft)	Flare nut
		Brake line (10 mm nut)	15 N·m (1.5 kgf·m, 11 lbf·ft)	Flare nut

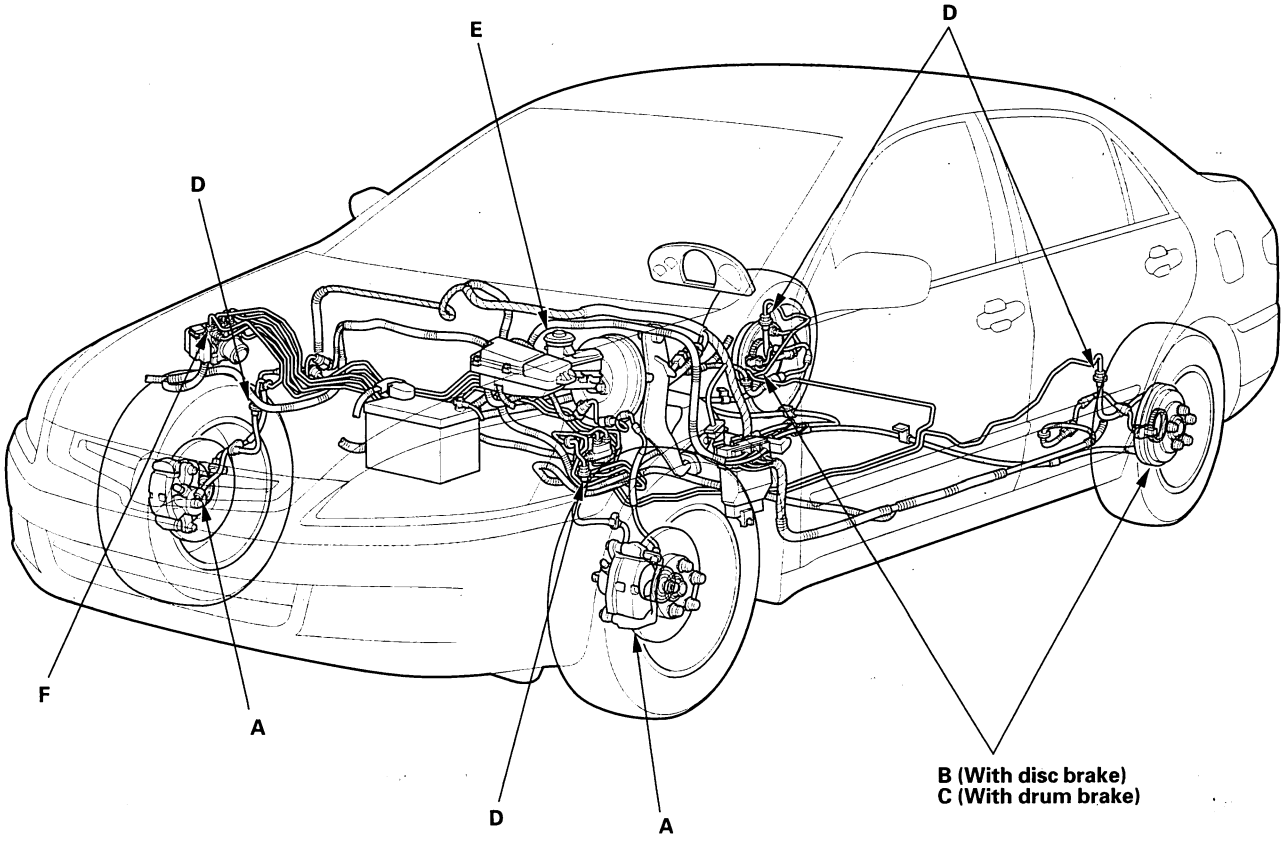

Protected by AR

Brake Hose Replacement

NOTE:
- Before reassembling, check that all parts are free of dirt and other foreign particles.
- Replace parts with new ones whenever specified to do so.
- Do not spill brake fluid on the vehicle; it may damage the paint; if brake fluid gets on the paint, wash it off immediately with water.
- To prevent dripping, cover disconnecting line joints with rags or shop towels.

1. Replace the brake hose (A) if the hose is twisted, cracked, or if it leaks.

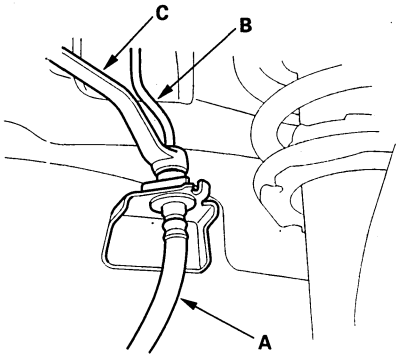

2. Disconnect the brake hose from the brake line (B) using a 10 mm flare-nut wrench (C).

3. Remove and discard the brake hose clip (A) from the brake hose (B).

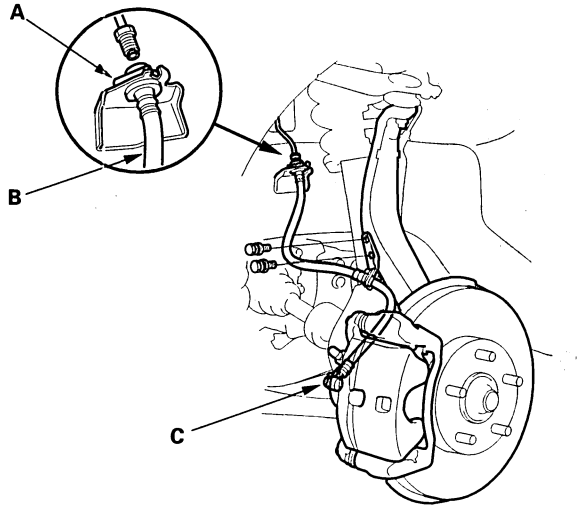

4. Remove the banjo bolt (C), and disconnect the brake hose from the caliper.

5. Remove the brake hose from the knuckle.

6. Install the brake hose (A) on the damper with flange bolts (B) first, then connect the brake hose to the caliper with the banjo bolt (C) and new sealing washers (D).

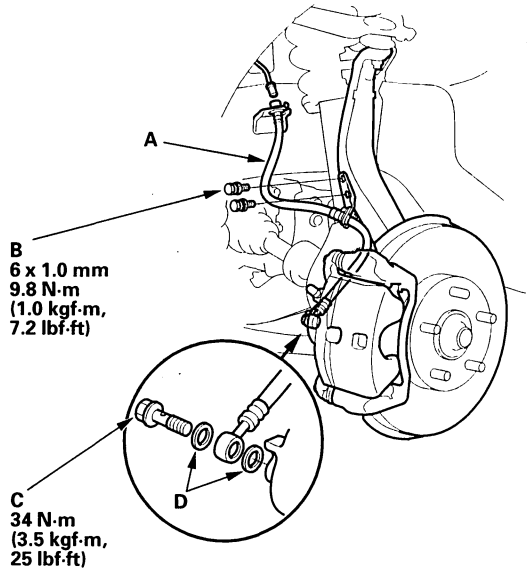

7. Install the brake hose (A) on the upper brake hose bracket (B) with a new brake hose clip (C).

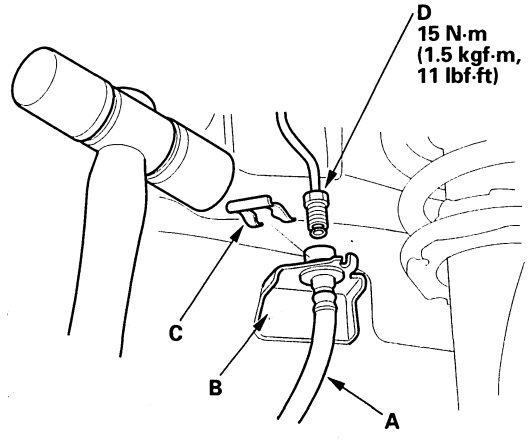

8. Connect the brake line (D) to the brake hose.

9. After installing the brake hose, bleed the brake system (see page 19-9).

10. Do the following checks:
    - Check the brake hose and line joint for leaks, and tighten if necessary.
    - Check the brake hoses for interference and twisting.

BACK

Protected by AR

Parking Brake Cable Replacement

Exploded View

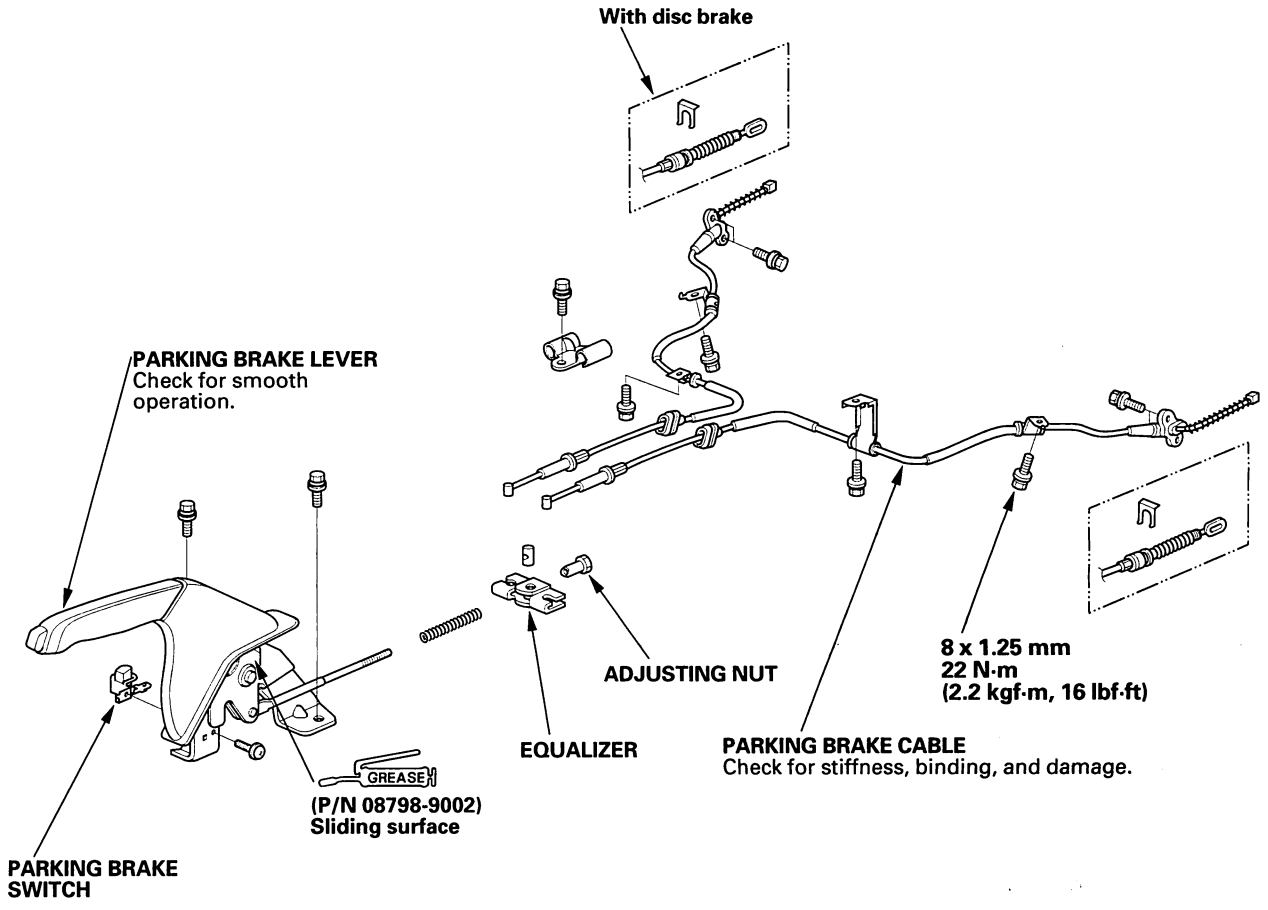

(cont'd)

Protected by AR

Parking Brake Cable Replacement (cont'd)

NOTE: The parking brake cable must not be bent or distorted. This will lead to stiff operation and premature cable failure. Refer to the Exploded View as needed during this procedure.

1. Remove the brake drum and shoes, and disconnect the parking brake cable from the brake shoe (see page 19-27).

2. Remove the flange bolts (A) and parking brake cable (B) from the backing plate (C).

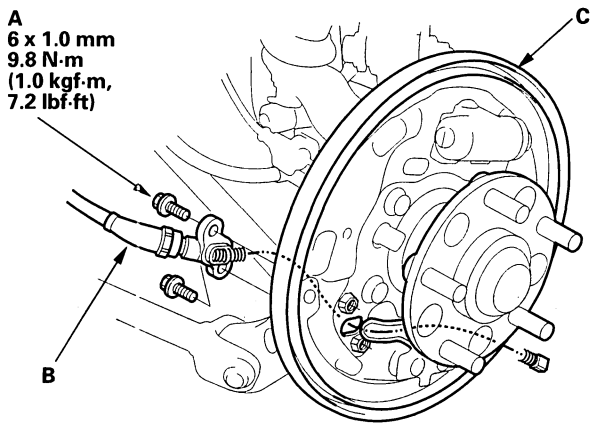

3. Reinstall the parking brake cable in the reverse order of removal, and note these items:

   - Before installing the brake drum, clean the mating surface of the rear hub and the inside of the brake drum.
   - Before installing the wheel, clean the mating surfaces on the brake drum and inside of the wheel.
   - Adjust the parking brake (see page 19-7). Apply the parking brake firmly 10 times then adjust it again.

BACK

Protected by AR

Brakes

Conventional Brake Components 19-1

ABS (Anti-lock Brake System) Components

Component Location Index 19-36
General Troubleshooting Information 19-37
DTC Troubleshooting Index 19-39
Symptom Troubleshooting Index 19-40
System Description 19-41
Circuit Diagram 19-48
DTC Troubleshooting 19-51
Symptom Troubleshooting 19-60
ABS Modulator-Control Unit
Removal and Installation 19-65
Wheel Sensor Inspection 19-67
Wheel Sensor Replacement 19-68



Protected by AR

ABS Components

Component Location Index

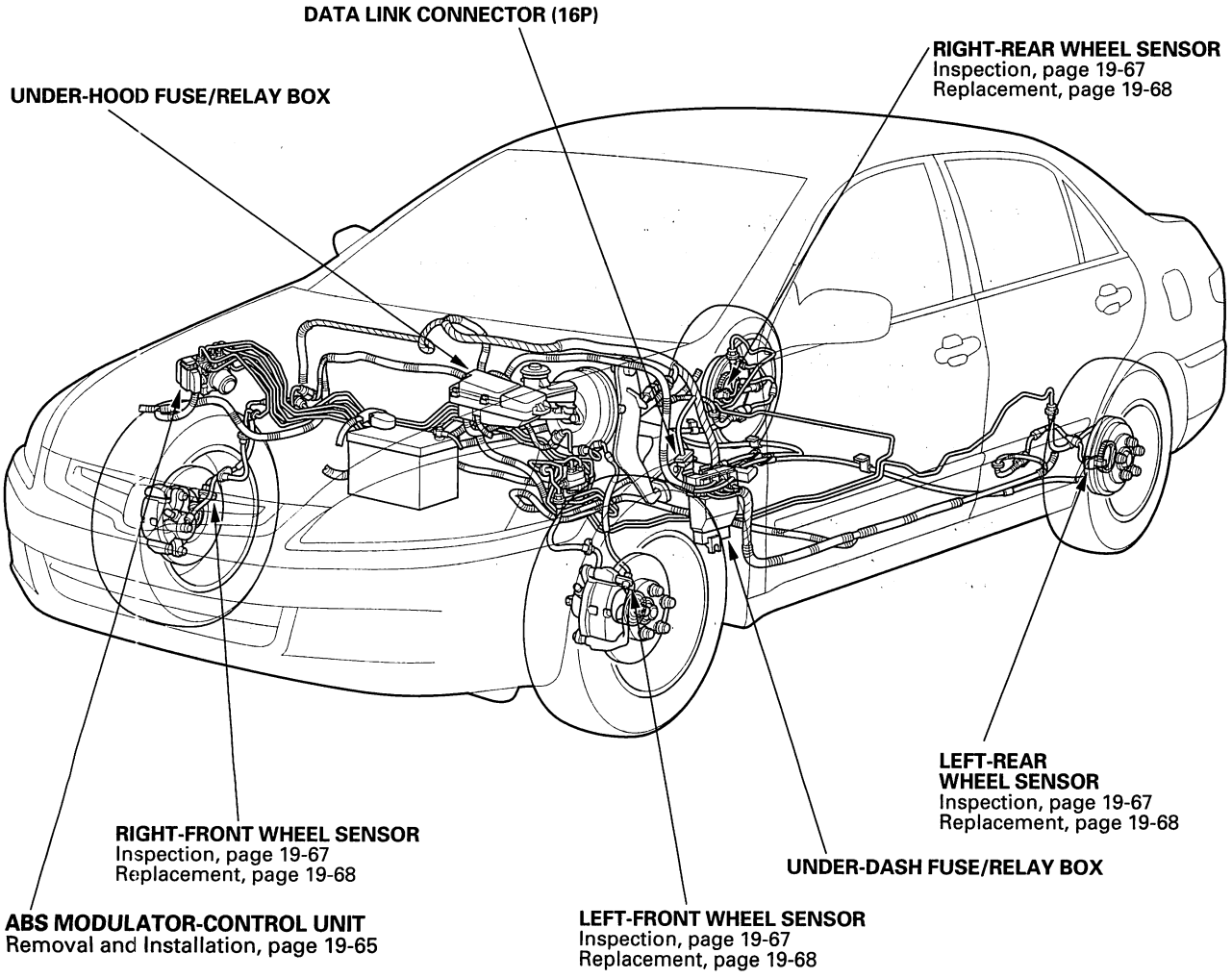

BACK

Protected by AR

General Troubleshooting Information

ABS Indicator

- If the system is OK, the ABS indicator goes off 2 seconds after turning the ignition switch ON (II).
- The ABS indicator comes on when the ABS modulator-control unit detects a problem in the system. However, even though the system is operating properly, the indicator will come on under these conditions:
  - Only the drive wheels rotate
  - One drive wheel is stuck
  - The vehicle goes into a spin
  - The ABS continues to operate for a long time
  - The vehicle is subjected to an electrical signal disturbance

To determine the actual cause of the problem, question the customer about the problem, taking the conditions into consideration.

- When a problem is detected and the ABS indicator comes on, there are cases when the indicator stays on until the ignition switch is turned OFF, and cases when the indicator goes off automatically when the system returns to normal.
  - DTC 61 or 62: The ABS indicator goes off automatically when the system returns to normal.
  - DTC 11, 13, 15, 17, 31, 32, 33, 34, 35, 36, 37, 38, 54, 71, or 81: The ABS indicator stays on until the ignition switch is turned OFF whether or not the system returns to normal.
  - DTC 12, 14, 16, 18, 21, 22, 23, 24, 41, 42, 43, 44, 51, 52, or 53: The ABS indicator goes off after the ignition switch is turned OFF and then back ON (II), the vehicle is driven, and the system is OK.

Brake System Indicator

The brake system indicator in the gauge control module will come on under these conditions:

- Parking brake lever pulled up
- Low brake fluid in the brake master cylinder reservoir
- ABS modulator-control unit detects a problem that affects the EBD

Diagnostic Trouble Code (DTC)

- The memory can hold any number of DTCs. However, when the same DTC is detected more than once, the more recent DTC is written over the earlier one. Therefore, when the same problem is detected repeatedly, it is memorized as a single DTC.
- The DTCs are indicated in the order they occurred, beginning with the most recent.
- The DTCs are memorized in the EEPROM (non-volatile memory). Therefore, the memorized DTCs are not cleared when the battery is disconnected, the ignition switch is turned off, or the system returns to normal. Do the specified procedures to clear the DTCs.

Self-diagnosis

- Self-diagnosis can be classified into two categories:
  - Initial diagnosis:
    Done right after the ignition switch is turned ON (II) and until the ABS indicator goes off
  - Regular diagnosis:
    Done right after the initial diagnosis until the ignition switch is turned OFF
- When a problem is detected by self-diagnosis, the system does the following:
  - Turns the ABS indicator and possibly the brake system indicator on
  - Memorizes the DTC
  - Stops ABS operation

Kickback

The pump motor operates when the ABS modulator-control unit is functioning, and the fluid in the reservoir is forced back to the master cylinder, causing kickback at the brake pedal.

Pump Motor

- The pump motor operates when the ABS modulator-control unit is functioning.
- The ABS modulator-control unit checks the pump motor operation when the vehicle is driven the first time after the ignition switch is turned ON (II). You may hear the motor operate at this time, but it is normal.

(cont'd)

Protected by AR

General Troubleshooting Information (cont'd)

How to Troubleshoot DTCs

The troubleshooting flowchart procedures assume that the cause of the problem is still present, and the ABS indicator and possibly the brake system indicator are still on. Following the flowchart when the ABS indicator does not come on can result in incorrect diagnosis. The connector illustrations show the female terminal connectors with a single outline and the male terminal connectors with a double outline.

1. Question the customer about the conditions when the problem occurred, and try to reproduce the same conditions for troubleshooting. Find out when the ABS indicator and possibly the brake system indicator came on, such as during ABS control, after ABS control, when the vehicle was at a certain speed, etc.
2. Clear the code and, test-drive the vehicle. If the code resets immediately, refer to the code troubleshooting chart.
3. When the ABS indicator and possibly the brake system indicator does not come on during the test-drive, but troubleshooting is done based on the DTC, check for loose connectors, poor terminal contact, etc., before you start troubleshooting.
4. After troubleshooting, clear the DTC, and test-drive the vehicle. Make sure the ABS indicator and possibly the brake system indicator does not come on.

How to Retrieve DTCs

1. With the ignition switch OFF, connect the Honda Diagnostic System (HDS) to the 16P data link connector (DLC) (A) under the left side of the dashboard.

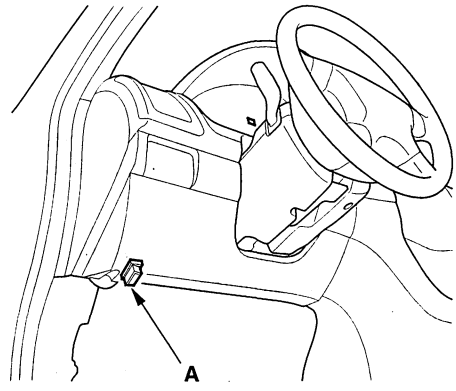

2. Turn the ignition switch ON (II), and follow the prompts on the HDS to display the ABS DTC(s) on the screen. After determining the DTC, refer to the ABS DTC Troubleshooting.

   NOTE: See the HDS Help menu for specific instructions.

How to Clear DTCs

1. With the ignition switch OFF, connect the HDS to the 16P data link connector (DLC) (A) under the left side of the dashboard.

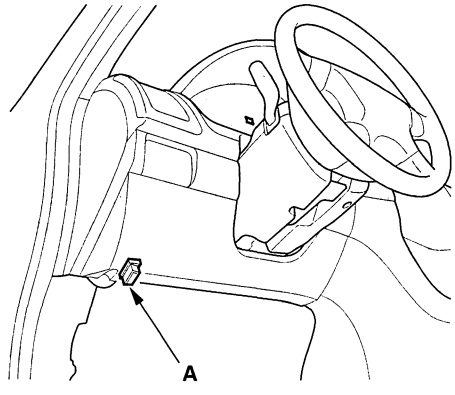

2. Turn the ignition switch ON (II), and clear the DTC(s) by following the screen prompts on the HDS.

   NOTE: See the HDS Help menu for specific instructions.

BACK

Protected by AR

DTC Troubleshooting Index

DTC	ABS indicator	Brake system indicator	Detection Item	Troubleshooting
11	ON	OFF	Right-front wheel sensor (open/short to body ground/ short to power)	(see page 19-51)
12	ON	ON or OFF	Right-front wheel sensor (electrical noise/intermittent interruption)	(see page 19-54)
13	ON	OFF	Left-front wheel sensor (open/short to body ground/ short to power)	(see page 19-51)
14	ON	ON or OFF	Left-front wheel sensor (electrical noise/intermittent interruption)	(see page 19-54)
15	ON	OFF	Right-rear wheel sensor (open/short to body ground/ short to power)	(see page 19-51)
16	ON	ON or OFF	Right-rear wheel sensor (electrical noise/intermittent interruption)	(see page 19-54)
17	ON	OFF	Left-rear wheel sensor (open/short to body ground/ short to power)	(see page 19-51)
18	ON	ON or OFF	Left-rear wheel sensor (electrical noise/intermittent interruption)	(see page 19-54)
21	ON	OFF	Right-front magnetic encoder	(see page 19-55)
22	ON	OFF	Left-front magnetic encoder	(see page 19-55)
23	ON	OFF	Right-rear pulser	(see page 19-55)
24	ON	OFF	Left-rear pulser	(see page 19-55)
31	ON	ON	Solenoid	(see page 19-55)
32	ON	ON	Solenoid	(see page 19-55)
33	ON	ON	Solenoid	(see page 19-55)
34	ON	ON	Solenoid	(see page 19-55)
35	ON	ON	Solenoid	(see page 19-55)
36	ON	ON	Solenoid	(see page 19-55)
37	ON	ON	Solenoid	(see page 19-55)
38	ON	ON	Solenoid	(see page 19-55)
41	ON	ON or OFF	Right-front wheel lock	(see page 19-56)
42	ON	ON or OFF	Left-front wheel lock	(see page 19-56)
43	ON	ON or OFF	Right-rear wheel lock	(see page 19-56)
44	ON	ON or OFF	Left-rear wheel lock	(see page 19-56)
51	ON	ON or OFF	Motor lock	(see page 19-56)
52	ON	ON or OFF	Motor stuck OFF	(see page 19-56)
53	ON	ON or OFF	Motor stuck ON	(see page 19-57)
54	ON	ON	ABS fail-safe relay	(see page 19-58)
61	ON	ON or OFF	Low +B-FSR voltage	(see page 19-58)
62	ON	ON	High +B-FSR voltage	(see page 19-58)
71	ON	ON or OFF	Different diameter tire	(see page 19-59)
81	ON	ON	Central processing unit (CPU) diagnosis, and ROM/RAM diagnosis	(see page 19-59)

Protected by AR

Symptom Troubleshooting Index

Symptom	Diagnostic procedure	Also check for
ABS indicator does not come on	ABS Indicator Circuit Troubleshooting (see page 19-60)	
ABS indicator does not go off, and no DTCs are stored	ABS Indicator Circuit Troubleshooting (see page 19-61)	
Brake system indicator does not come on	Brake System Indicator Circuit Troubleshooting (see page 19-62)	
Brake system indicator does not go off, and no DTCs are stored	Brake System Indicator Circuit Troubleshooting (see page 19-64)	

BACK

Protected by AR

System Description

ABS Modulator-Control Unit Inputs and Outputs for 25P Connector

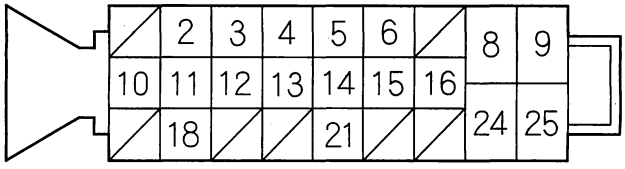

Wire side of female terminals

Terminal number	Wire color	Terminal sign	Description	Measurement (Disconnect the ABS modulator-control unit 25P connector)			
				Terminals	Conditions		Voltage
2	GRN/BLK	FR +B	Detects right-front wheel sensor signal	———	———		———
3	BRN/WHT	FL-GND	Detects left-front wheel sensor signal	———	———		———
4	WHT/BLK	STOP	Detects brake switch signal	4—GND	Brake pedal	Pressed	Battery Voltage
						Released	Below 0.3 V
5	RED	RL-GND	Detects left-rear wheel sensor signal	———	———		———
6	GRN/YEL	RR +B	Detects right-rear wheel sensor signal	———	———		———
8	WHT	+B-FSR	Power source for the fail-safe relay	8—GND	At all times		Battery Voltage
9	WHT/RED	+B-MR	Power source for the motor relay	9—GND	At all times		Battery Voltage

(cont'd)

Protected by AR

ABS Components

System Description (cont'd)

ABS Modulator-Control Unit Inputs and Outputs for 25P Connector (cont'd)

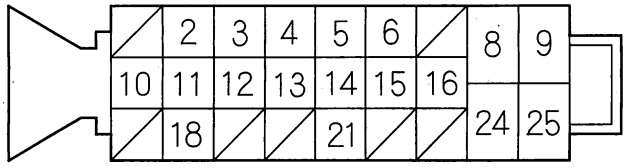

Wire side of female terminals

Terminal number	Wire color	Terminal sign	Description	Measurement (Disconnect the ABS modulator-control unit 25P connector)			
				Terminals	Conditions		Voltage
10	BLU	K-LINE	Communications with HDS	———	———		———
11	BLK/RED BLK/YEL*	EBD	Drives brake system indicator	11—GND	Brake system indicator	OFF	Battery Voltage
						ON	Battery Voltage (via brake fluid level switch or parking brake switch)
						ON	Below 0.3 V (via ABS modulator-control unit)
12	BLU/WHT	FL +B	Detects left-front wheel sensor signal	———	———		———
13	BRN	SCS	DTC indication	———	———		———
14	YEL/RED	RL +B	Detects left-rear wheel sensor signal	———	———		———
15	BLU/YEL	RR-GND	Detects right-rear wheel sensor signal	———	———		———
16	BLK/RED	IG1	Power source for activating the system	16—GND	Ignition switch ON (II)		Battery Voltage
18	PNK	FR-GND	Detects right-front wheel sensor signal	———	———		———
21	BLU/RED	ABS	Drives ABS indicator	21—GND	ABS indicator (Ignition switch ON (II))	ON	About 6 V
						OFF	Below 0.3 V
24	BLK	GND	Ground for the ABS modulator-control unit	24—GND	At all times		0 V
25	BLK	MR-GND	Ground for the pump motor	25—GND	At all times		0 V

*: '06 model

BACK

Protected by AR

Features

When the brake pedal is pressed during driving, the wheels can lock before the vehicle comes to a stop. In such an event, the maneuverability of the vehicle is reduced if the front wheels are locked, and the stability of the vehicle is reduced if the rear wheels are locked, creating an extremely unstable condition. The ABS precisely controls the slip rate of the wheels to ensure maximum grip force from the tires, thereby ensuring the maneuverability and stability of the vehicle.
The ABS calculates the slip rate of the wheels based on the vehicle speed and the wheel speed, then it controls the brake fluid pressure to reach the target slip rate.

Grip Force of Tire and Road Surface

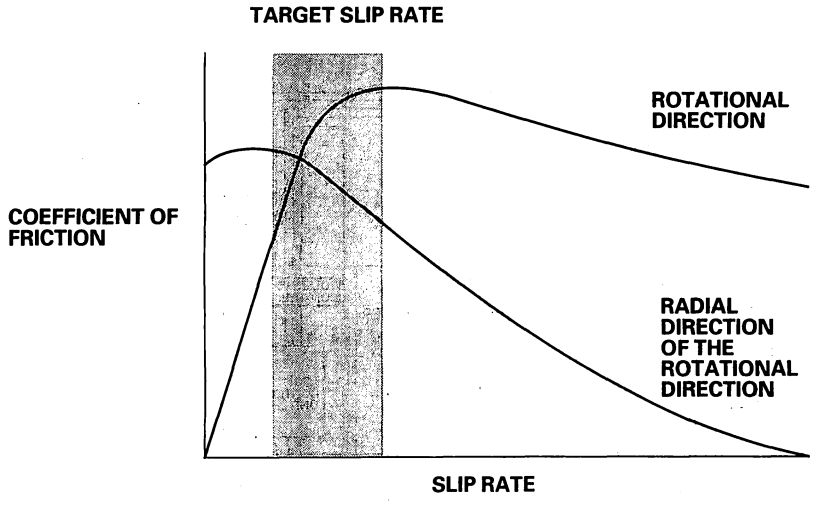

(cont'd)

Protected by AR

ABS Components

System Description (cont'd)

COMPONENTS		MAIN FUNCTION
Wheel sensor		The wheel sensor outputs the speed signal to the ABS control unit according to the pulser's rotation speed.
ABS modulator-control unit	ABS control unit	The ABS control unit processes the signal from the wheel sensors, then outputs the ABS control signal to the modulator unit.
	Modulator unit	The modulator unit receives the control signal, then controls brake fluid pressure for each wheel.
Motor relay (inside of the ABS control unit)		The motor relay drives the ABS pump motor.
ABS fail-safe relay (inside of the ABS control unit)		The ABS fail-safe relay cuts the power to the solenoid valves when a problem is detected.

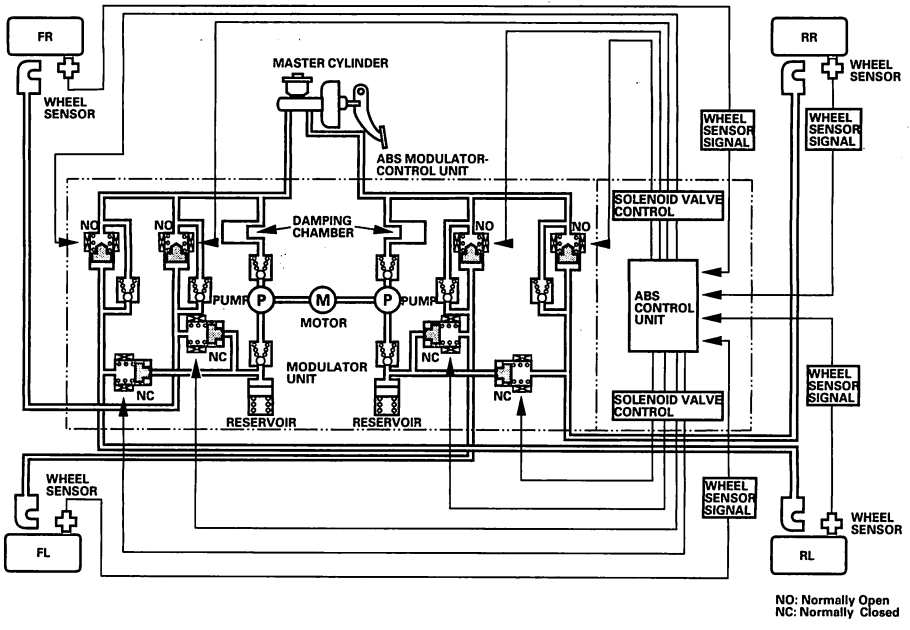

BACK

Protected by AR

ABS Control Unit

Main Control

The ABS control unit detects the wheel speed based on the wheel sensor signal it received, then it calculates the vehicle speed based on the detected wheel speed. The control unit detects the vehicle speed during deceleration based on the rate of deceleration.

The ABS control unit calculates the slip rate of each wheel, and transmits the control signal to the modulator unit solenoid valve when the slip rate is high.

The hydraulic control has three modes: Pressure reducing, pressure retaining, and pressure intensifying.

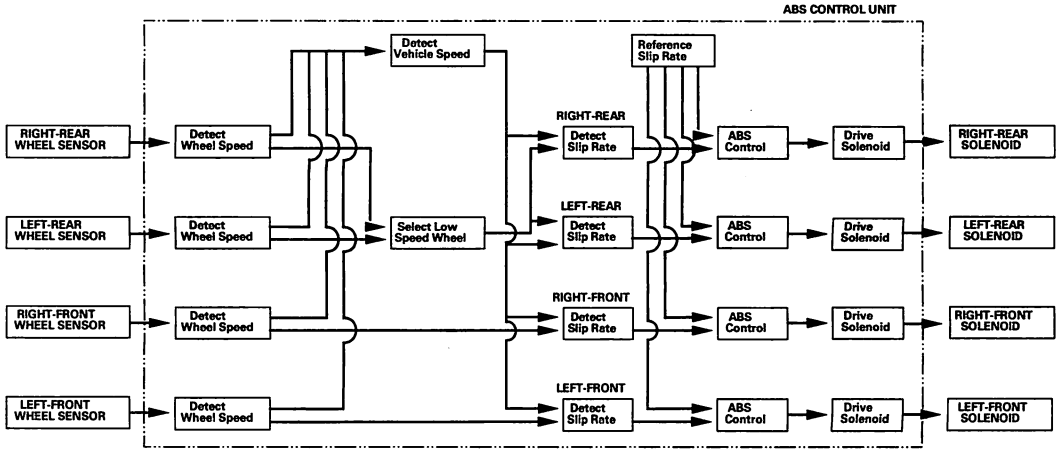

Electronic Brake Distribution (EBD) Control

The electronic brake distribution (EBD) function helps control vehicle braking by adjusting the rear brake force before the ABS operates. Based on wheel sensor signals, the ABS control unit uses the modulator to control the rear brakes individually. When the rear wheel speed is less than the front wheel speed, the ABS control unit retains the current rear brake fluid pressure by closing the inlet valve in the modulator. As the rear wheel speed increases and approaches the front wheel speed, the control unit increases the rear brake fluid pressure by momentarily opening the inlet valve. This whole process is repeated very rapidly. While this is happening, there is kickback at the brake pedal.

During self-diagnosis, if the ABS control unit detects a problem that affects the EBD, it turns on the brake system indicator and the ABS indicator.

Self-diagnosis Function

1. The ABS control unit is equipped with a CPU and a monitor IC. They check each other for problems.
2. The CPU check the system circuits.
3. The ABS control unit turns on the ABS and possibly the brake system indicator when the unit detects a problem, and the unit stops ABS operation.
4. The self-diagnosis can be classified into these two categories:
   - Initial diagnosis
   - Regular diagnosis

On-board Diagnosis Function

The ABS can be diagnosed with the HDS.
The ALB Checker cannot be used with this system. For air bleeding, and checking wheel sensor signals, use the HDS. See the HDS Help menu for specific operating instructions.

(cont'd)

Protected by AR

ABS Components

System Description (cont'd)

ABS Modulator

The ABS modulator consists of the inlet solenoid valve, outlet solenoid valve, reservoir, pump, and the pump motor. The modulator reduces the caliper fluid pressure directly. It is a circulating-type modulator because the brake fluid circulates through the caliper, reservoir, and the master cylinder. The hydraulic control has three modes; normal braking, pressure retaining, and pressure reducing. The hydraulic circuit is an independent four channel type, one channel for each wheel.

Shown in normal braking mode

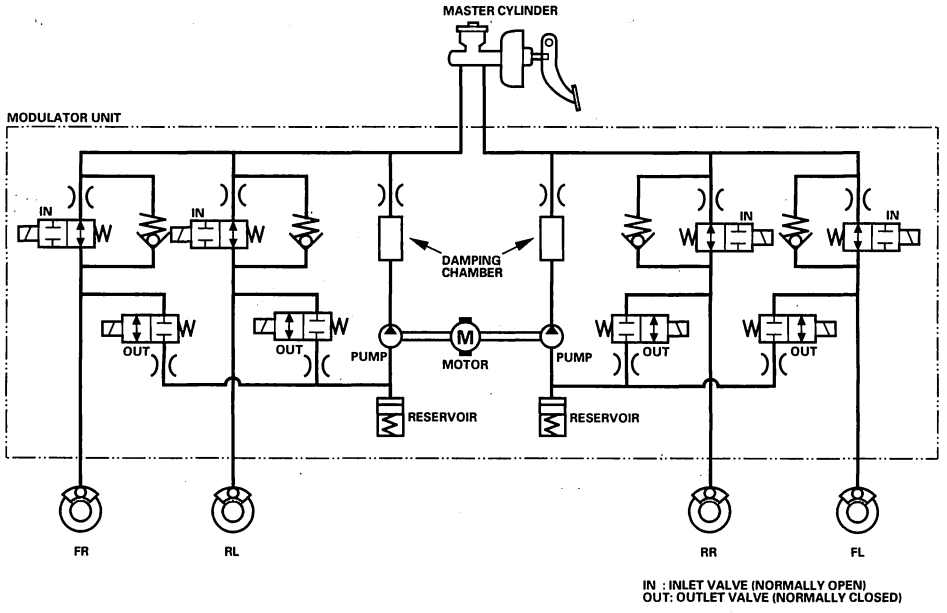

Normal braking mode: Inlet valve open, outlet valve closed:
Master cylinder fluid is pumped out to the caliper.

Pressure retaining mode: Inlet valve closed, outlet valve closed:
Caliper fluid is retained by the inlet valve and outlet valve.

Pressure reducing mode: Inlet valve closed, outlet valve open:
Caliper fluid flows through the outlet valve to the reservoir.
When in pressure reducing mode, the pump motor is ON.
The reservoir fluid is pumped out by the pump, through the damping chamber, to the master cylinder.
When stopping ABS operation, the pump motor is OFF.

BACK

Protected by AR

Wheel Sensors

The wheel sensors are the magnetic contactless type. The wheel sensors detect changing of magnetic polarity on the magnetic encoder contained inside the front wheel bearings. The ABS modulator-control unit calculates the wheel speed based on signals sent from the wheel sensor.

NOTE: The front wheel bearings are directional.

Wheel Speed and Modulator Control

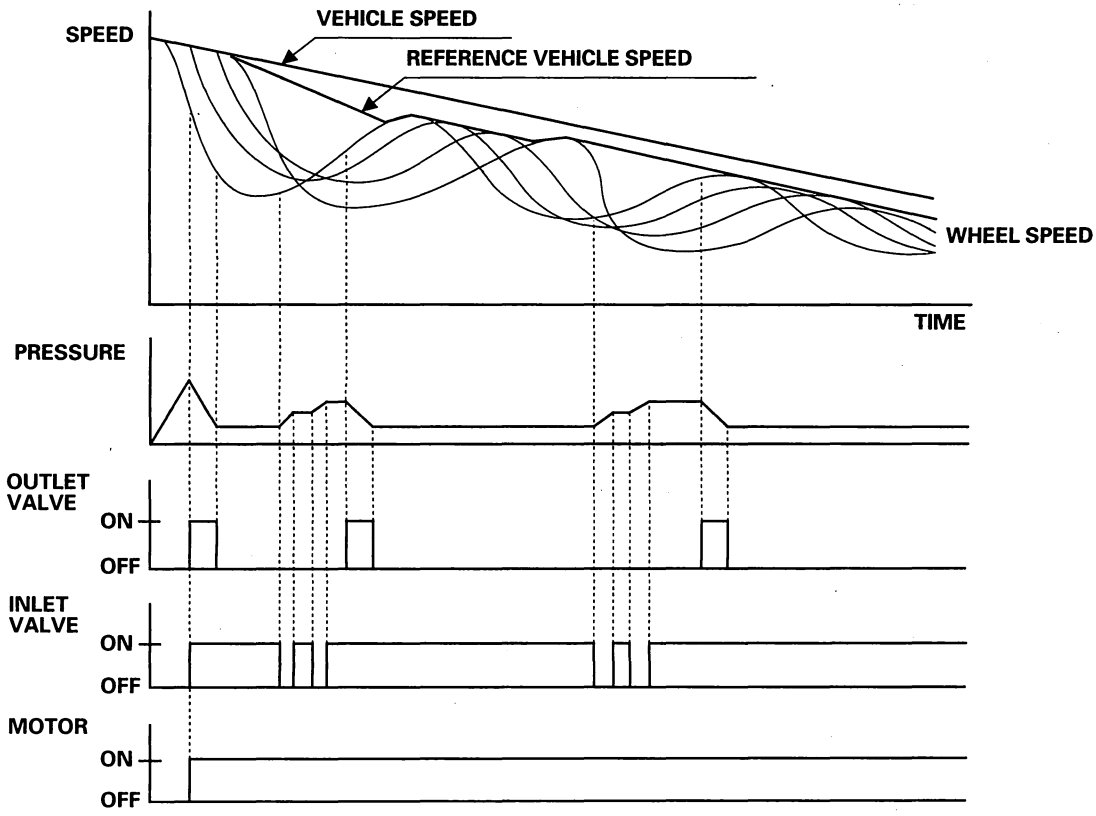

When the wheel speed drops sharply below the vehicle speed, the outlet valve opens momentarily to reduce the caliper fluid pressure. The pump motor starts at this time. As the wheel speed is restored, the inlet valve opens momentarily to increase the caliper fluid pressure.

Protected by AR

ABS Components

Circuit Diagram

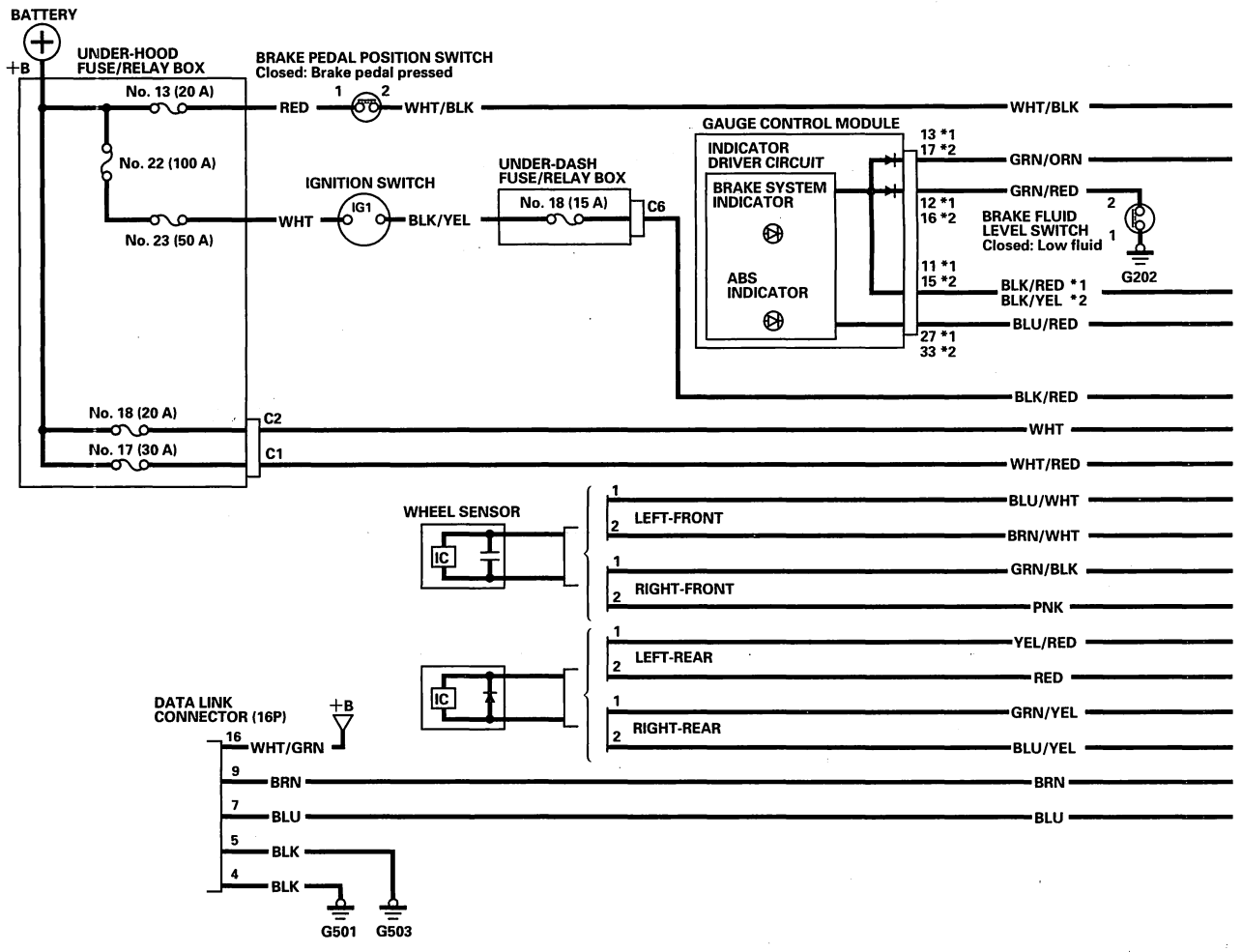

BACK

Protected by AR

* 1 : '03-05 models
* 2 : '06 model

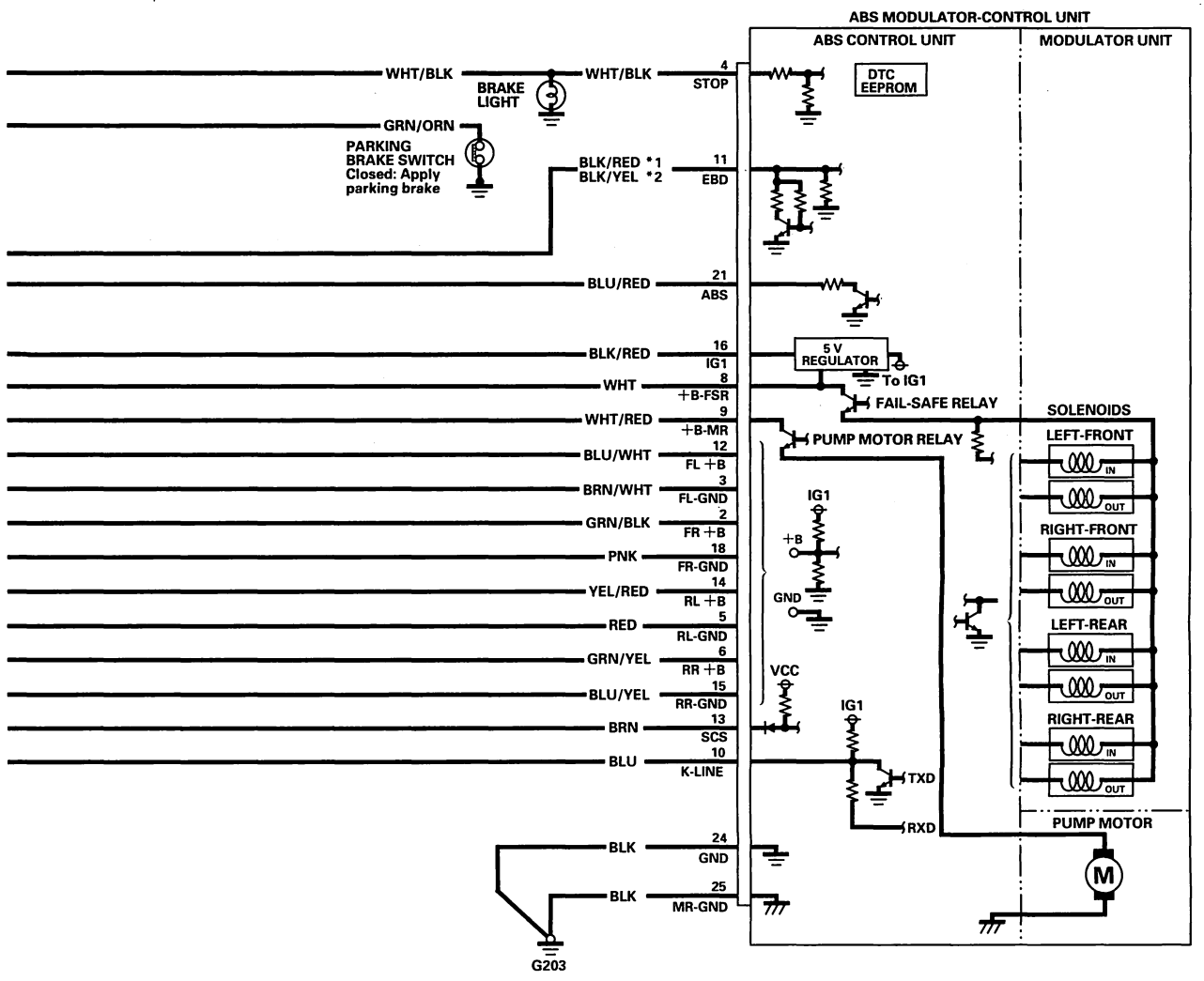

(cont'd)

BACK

Protected by AR

ABS Components

Circuit Diagram (cont'd)

UNDER-HOOD FUSE/RELAY BOX CONNECTOR C (2P)



BRAKE PEDAL POSITION SWITCH 4P CONNECTOR

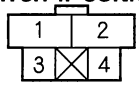

BRAKE FLUID LEVEL SWITCH 2P CONNECTOR



UNDER-DASH FUSE/RELAY BOX CONNECTOR C (12P)

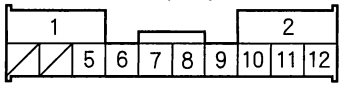

GAUGE CONTROL MODULE CONNECTOR (30P) ('03-05 models)

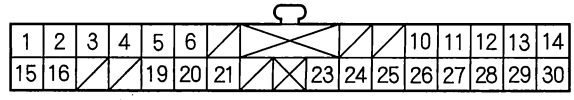

ABS MODULATOR-CONTROL UNIT 25P CONNECTOR

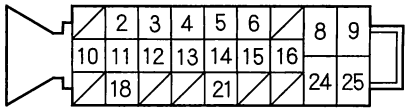

GAUGE CONTROL MODULE CONNECTOR (36P) ('06 model)

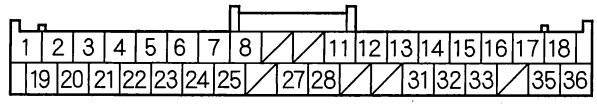

Wire side of female terminals

DATA LINK CONNECTOR (16P)

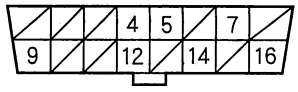

Terminal side of female terminals

WHEEL SENSOR 2P CONNECTOR FRONT/REAR



Terminal side of male terminals

BACK

Protected by AR

DTC Troubleshooting

DTC 11, 13, 15, 17: Wheel Sensor (Open/Short to Body Ground/Short to Power)

1. Disconnect the ABS modulator-control unit 25P connector.
2. Start the engine.
3. Measure the voltage between body ground and the appropriate wheel sensor +B and GND terminals of the ABS modulator-control unit 25P connector individually (see table).

DTC	Appropriate Terminal	
	+B	GND
11 (Right-front)	FR +B: No. 2	FR-GND: No. 18
13 (Left-front)	FL +B: No. 12	FL-GND: No. 3
15 (Right-rear)	RR +B: No. 6	RR-GND: No. 15
17 (Left-rear)	RL +B: No. 14	RL-GND: No. 5

ABS MODULATOR-CONTROL UNIT 25P CONNECTOR

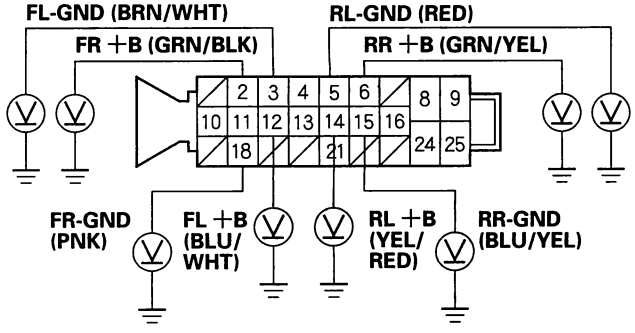

Wire side of female terminals

Is there battery voltage?

YES—Repair short to power in the wire between the ABS modulator-control unit and the appropriate wheel sensor. ■

NO—Go to step 4.

4. Turn the ignition switch OFF.
5. Check for continuity between body ground and the appropriate wheel sensor +B and GND terminals of the ABS modulator-control unit 25P connector individually (see table).

DTC	Appropriate Terminal	
	+B	GND
11 (Right-front)	FR +B: No. 2	FR-GND: No. 18
13 (Left-front)	FL +B: No. 12	FL-GND: No. 3
15 (Right-rear)	RR +B: No. 6	RR-GND: No. 15
17 (Left-rear)	RL +B: No. 14	RL-GND: No. 5

ABS MODULATOR-CONTROL UNIT 25P CONNECTOR

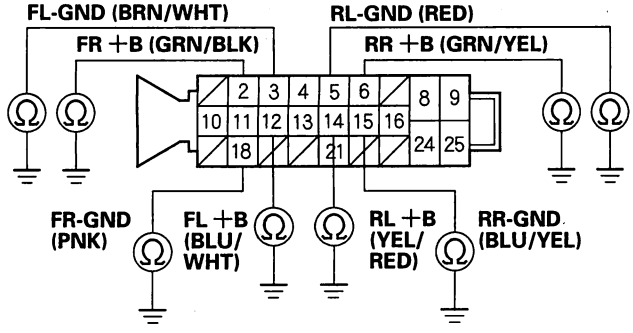

Wire side of female terminals

Is there continuity?

YES—Go to step 6.

NO—Go to step 8.

6. Disconnect the appropriate wheel sensor 2P connector.

(cont'd)

Protected by AR

DTC Troubleshooting (cont'd)

7. Check for continuity between body ground and the appropriate wheel sensor +B and GND terminals of the ABS modulator-control unit 25P connector individually (see table).

DTC	Appropriate Terminal	
	+B	GND
11 (Right-front)	FR +B: No. 2	FR-GND: No. 18
13 (Left-front)	FL +B: No. 12	FL-GND: No. 3
15 (Right-rear)	RR +B: No. 6	RR-GND: No. 15
17 (Left-rear)	RL +B: No. 14	RL-GND: No. 5

ABS MODULATOR-CONTROL UNIT 25P CONNECTOR

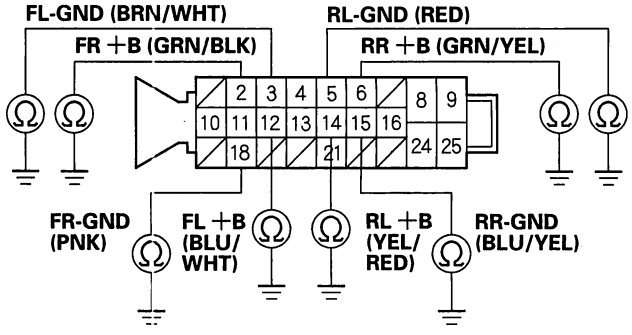

Wire side of female terminals

Is there continuity?

YES—Repair short to body ground in the wire between the ABS modulator-control unit and the wheel sensor.■

NO—Replace the wheel sensor (see page 19-68).■

8. Measure the resistance between the appropriate wheel sensor +B and GND terminals of the ABS modulator-control unit 25P connector (see table), then measure the resistance between the same terminals and reverse the positive and negative tester probes.

DTC	Appropriate Terminal	
	+B	GND
11 (Right-front)	FR +B: No. 2	FR-GND: No. 18
13 (Left-front)	FL +B: No. 12	FL-GND: No. 3
15 (Right-rear)	RR +B: No. 6	RR-GND: No. 15
17 (Left-rear)	RL +B: No. 14	RL-GND: No. 5

ABS MODULATOR-CONTROL UNIT 25P CONNECTOR

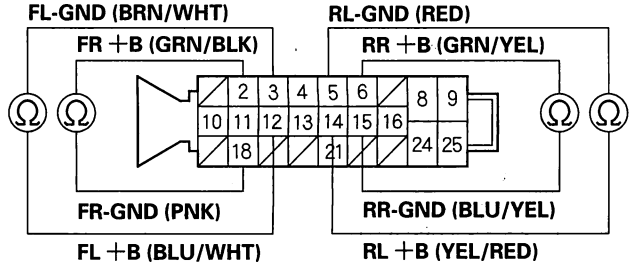

Wire side of female terminals

Is the resistance infinity (open circuit) in both directions?

YES—Go to step 9.

NO—Go to step 11.

9. Disconnect the appropriate wheel sensor 2P connector.

BACK

Protected by AR

10. Measure the resistance between the appropriate wheel sensor 2P connector terminals, then measure the resistance between the same terminals and reverse the positive and negative tester probes.

WHEEL SENSOR 2P CONNECTOR

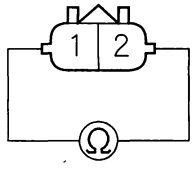

Terminal side of female terminals

Is the resistance infinity (open circuit) in both directions?

YES—Replace the wheel sensor (see page 19-68). ■

NO—Repair open in the wire between the ABS modulator-control unit and the wheel sensor. ■

11. Disconnect the appropriate wheel sensor 2P connector.

12. Check for continuity between the appropriate wheel sensor +B and GND terminals of the ABS modulator-control unit 25P connector (see table), then check for continuity between the same terminals and reverse the positive and negative tester probes.

DTC	Appropriate Terminal	
	+B	GND
11 (Right-front)	FR +B: No. 2	FR-GND: No. 18
13 (Left-front)	FL +B: No. 12	FL-GND: No. 3
15 (Right-rear)	RR +B: No. 6	RR-GND: No. 15
17 (Left-rear)	RL +B: No. 14	RL-GND: No. 5

ABS MODULATOR-CONTROL UNIT 25P CONNECTOR

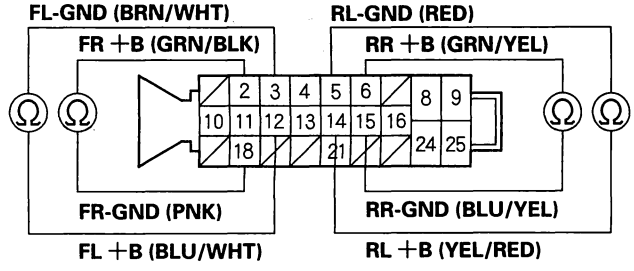

Wire side of female terminals

Is there continuity in both directions?

YES—Repair the wires between the ABS modulator-control unit and the wheel sensor that are shorted to each other. ■

NO—Check for loose or poor connections at the ABS modulator-control unit 25P connector and the appropriate wheel sensor 2P connector. If the connections are good, replace the appropriate wheel sensor and recheck for DTCs. If the DTC returns, replace the ABS modular-control unit (see page 19-65). ■

BACK

Protected by AR

DTC Troubleshooting (cont'd)

DTC 12, 14, 16, 18: Wheel Sensor (Electrical Noise/Intermittent Interruption)

NOTE: If the ABS indicator comes on because of electrical noise, the indicator will go off when you drive the vehicle over 19 mph (30 km/h) and the noise is gone.

1. Inspect the appropriate wheel sensor and magnetic encoder (front) and pulser (rear) (see page 19-67).

DTC	Appropriate Wheel Sensor
12	Right-front
14	Left-front
16	Right-rear
18	Left-rear

Are they OK?

YES—Go to step 2.

NO—Reinstall or replace the appropriate wheel sensor or magnetic encoder (front) and pulser (rear) (see page 19-68).■

2. Disconnect the ABS modulator-control unit 25P connector.

3. Check for continuity between the appropriate wheel sensor GND terminal and other wheel sensor GND terminals (see table).

DTC	Appropriate Terminal	Other Terminals		
12	FR-GND: No. 18	No. 3	No. 15	No. 5
14	FL-GND: No. 3	No. 18	No. 15	No. 5
16	RR-GND: No. 15	No. 18	No. 3	No. 5
18	RL-GND: No. 5	No. 18	No. 3	No. 15

ABS MODULATOR-CONTROL UNIT 25P CONNECTOR

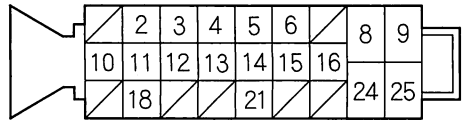

Wire side of female terminals

Is there continuity?

YES—Repair short in the wires between the appropriate wheel sensor and the other wheel sensor.■

NO—Clear the DTC, and test-drive the vehicle. If the ABS indicator comes on and the same DTC is indicated, replace the ABS modulator-control unit (see page 19-65).■

BACK

Protected by AR

DTC 21, 22: Magnetic Encoder (Front)

DTC 23, 24: Pulser (Rear)

1. Clear the DTC (see page 19-38).
2. Test-drive the vehicle at 19 mph (30 km/h) or more.

   Does the ABS indicator come on, and are DTCs 21, 22, 23, 24 indicated?

   YES—Go to step 3.

   NO—The system is OK at this time. ■
3. Inspect the appropriate encoder or pulser (see table) (see page 19-67).

DTC	Appropriate Encoder or Pulser
21	Right-front
22	Left-front
23	Right-rear
24	Left-rear

   Is the sensor OK?

   YES—Go to step 4.

   NO—Replace the magnetic encoder or pulser. ■
4. Check that the front encoder is installed correctly (see step 7 on page 18-17), or rear pulser for damage.

   Are they installed correctly?

   YES—Check for loose terminals in the ABS modulator-control unit 25P connector. If necessary, substitute a known-good ABS modulator-control unit, and recheck. ■

   NO—Reinstall or replace the appropriate encoder or pulser. ■

DTC 31, 32, 33, 34, 35, 36, 37, 38: Solenoid

1. Clear the DTC (see page 19-38).
2. Turn the ignition switch ON (II).
3. Verify the DTC.

   Does the ABS indicator come on, and are DTCs 31, 32, 33, 34, 35, 36, 37, 38 indicated?

   YES—Check for loose terminals in the ABS modulator-control unit 25P connector. If necessary, substitute a known-good ABS modulator-control unit. ■

   NO—The system is OK at this time. ■

Protected by AR

DTC Troubleshooting (cont'd)

DTC 41, 42, 43, 44: Wheel Lock

1. Check for brake drag when the brakes are hot.

   Do the brakes drag?

   YES—Repair the brake drag. ■

   NO—Go to step 2.

2. Check the installation of the appropriate wheel sensor (see table).

DTC	Appropriate Wheel Sensor
41	Right-front
42	Left-front
43	Right-rear
44	Left-rear

   Is it correct?

   YES—The probable cause was the vehicle spun during cornering. If the code reoccurs during normal driving, replace the ABS modulator-control unit (see page 19-65). ■

   NO—Reinstall the wheel sensor correctly. ■

DTC 51: Motor Lock

DTC 52: Motor Stuck OFF

1. Check the No. 17 (30 A) fuse in the under-hood fuse/relay box.

   Is the fuse OK?

   YES—Reinstall the fuse, and go to step 2.

   NO—Replace the fuse, and recheck. If the fuse is blown, check for a short to body ground in this fuse circuit. If the circuit is OK, replace the ABS modulator-control unit (see page 19-65). ■

2. Disconnect the ABS modulator-control unit 25P connector.

3. Measure the voltage between the ABS modulator-control unit 25P connector terminal No. 9 and body ground.

ABS MODULATOR-CONTROL UNIT 25P CONNECTOR

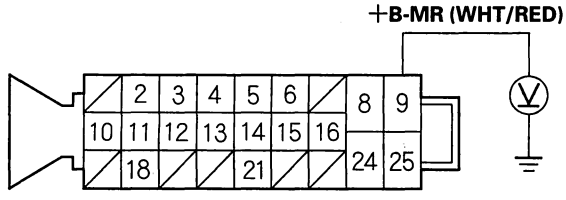

Wire side of female terminals

   Is there battery voltage?

   YES—Reconnect the ABS modulator-control unit 25P connector, then go to step 4.

   NO—Repair open in the wire between the No. 17 (30 A) fuse and the ABS modulator-control unit. ■

BACK

Protected by AR

4. Measure the voltage between the ABS modulator-control unit 25P connector terminal No. 25 and body ground.

ABS MODULATOR-CONTROL UNIT 25P CONNECTOR

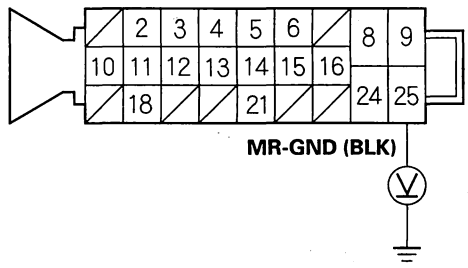

Wire side of female terminals

Is there less than 0.1 voltage?

YES—Go to step 5.

NO—Repair open in the wire between the ABS control unit and body ground (G203).■

5. Clear the DTC (see page 19-38).

6. Test-drive the vehicle at 6 mph (10 km/h) or more.

Does the ABS indicator come on, and are DTC 51 or DTC 52 indicated?

YES—Check for loose terminals in the ABS modulator-control unit 25P connector. If connections are OK, replace the ABS modulator-control unit (see page 19-65).■

NO—The system is OK at this time.■

DTC 53: Motor Stuck ON

1. Clear the DTC (see page 19-38).

2. Test-drive the vehicle.

Does the ABS indicator come on, and is DTC 53 indicated?

YES—Replace the ABS modulator-control unit (see page 19-65).■

NO—The system is OK at this time.■

Protected by AR

DTC Troubleshooting (cont'd)

DTC 54: ABS Fail-safe Relay

DTC 61: Low +B-FSR Voltage

1. Check the No. 18 (20 A) fuse in the under-hood fuse/relay box.

   Is the fuse OK?

   YES—Reinstall the fuse, and go to step 2.

   NO—Replace the fuse, and recheck.

2. Clear the DTC (see page 19-38).

3. Test-drive the vehicle.

   Does the ABS indicator come on, and are DTC 54 or DTC 61 indicated?

   YES—Go to step 4.

   NO—Intermittent failure; the vehicle is OK at this time.■

4. Disconnect the ABS modulator-control unit 25P connector.

5. Measure the voltage between the ABS modulator-control unit 25P connector terminal No. 8 and body ground.

ABS MODULATOR-CONTROL UNIT 25P CONNECTOR

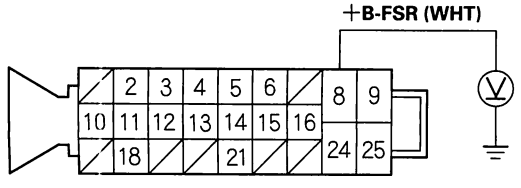

Wire side of female terminals

Is there battery voltage?

YES—Check for loose terminals in the ABS modulator-control unit 25P connector. If connections are OK, replace the ABS modulator-control unit (see page 19-65).■

NO—Repair open in the wire between the No. 18 (20 A) fuse in the under-hood fuse/relay box and the ABS modulator-control unit.■

DTC 62: High +B-FSR Voltage

1. Clear the DTC (see page 19-38).

2. Test-drive the vehicle at 6 mph (10 km/h) or more.

   Does the ABS indicator come on?

   YES—Go to step 3.

   NO—The system is OK at this time.■

3. Verify the DTC.

   Is DTC 62 indicated?

   YES—Go to step 4.

   NO—Do the appropriate troubleshooting for the DTC.■

4. Check the charging system.

   Is the charging system OK?

   YES—Replace the ABS modulator-control unit (see page 19-65).■

   NO—Repair the charging system, and retest.■

BACK

Protected by AR

DTC 71: Different Diameter Tire

1. Clear the DTC (see page 19-38).
2. Test-drive the vehicle.

   Does the ABS indicator come on, and is DTC 71 indicated?

   YES—Go to step 3.

   NO—Intermittent failure; confirm that tire inflation is set to spec. The vehicle is OK at this time. ■
3. Check that all four tires are the specified size and are inflated to the proper specification.

   Are all four tires the correct size and properly inflated?

   YES—Go to step 4.

   NO—Install the correct tires or set the tires to the correct inflation, and retest. ■
4. With the vehicle on level ground, mark each tire with a small spot of grease. Roll the vehicle until each of the tires makes two grease spots on the floor.
5. Measure and record the distance between the two grease spots.

   Is the difference between the shortest and the longest measurement more than 10 %?

   YES—Replace the tire/tires that is smaller or larger than the others. ■

   NO—Replace the ABS modulator-control unit (see page 19-65). ■

DTC 81: Central Processing Unit (CPU) Diagnosis, and ROM/RAM Diagnosis

1. Check for other DTCs.

   Is another DTC present?

   YES—Do the appropriate troubleshooting for the other DTC. ■

   NO—Go to step 2.
2. Clear the DTC (see page 19-38).
3. Test-drive the vehicle.

   Does the ABS indicator come on, and is DTC 81 indicated?

   YES—Replace the ABS modulator-control unit (see page 19-65). ■

   NO—Intermittent failure; the vehicle is OK at this time. ■

Protected by AR

Symptom Troubleshooting

ABS indicator does not come on

1. Turn the ignition switch ON (II), and watch the ABS indicator.

   Does the ABS indicator come on?

   YES—The system is OK at this time.■

   NO—Go to step 2.

2. Apply the parking brake.

   Does the brake system indicator come on?

   YES—Go to step 3.

   NO—Repair open in the indicator power source circuit. If necessary, substitute a known-good gauge control module, and recheck.■

3. Turn the ignition switch OFF.

4. Disconnect the ABS modulator-control unit 25P connector.

5. Turn the ignition switch ON (II).

   Does ABS indicator come on?

   YES—Check for loose terminals in the ABS modulator-control unit 25P connector. If necessary, substitute a known-good ABS modulator-control unit, and recheck.■

   NO—Go to step 6.

6. Turn the ignition switch OFF.

7. Remove the gauge control module (see page 22-276).

8. Disconnect the gauge control module connector (30P) ('03-05 models), (36P) ('06 model).

9. Check for continuity between the gauge control module connector and body ground.

   - '03-05 models: Check between the gauge control module connector (30P) terminal No. 27 and body ground.
   - '06 model: Check between the gauge control module connector (36P) terminal No. 33 and body ground.

'03-05 models

GAUGE CONTROL MODULE CONNECTOR (30P)

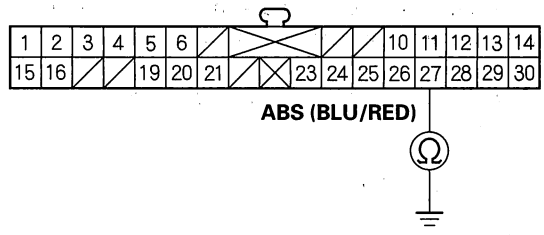

Wire side of female terminals

'06 model

GAUGE CONTROL MODULE CONNECTOR (36P)

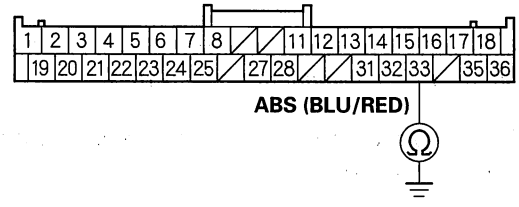

Wire side of female terminals

Is there continuity?

YES—Repair short to body ground in the wire between the gauge control module and the ABS modulator-control unit.■

NO—Check for loose terminals in the gauge control module connector. If connector is OK, replace the gauge control module (see page 22-276).■

BACK

Protected by AR

ABS indicator does not go off, and no DTCs are stored

1. Disconnect the ABS modulator-control unit 25P connector.
2. Turn the ignition switch ON (II).
3. Measure the voltage between the ABS modulator-control unit 25P connector terminal No. 16 and body ground.

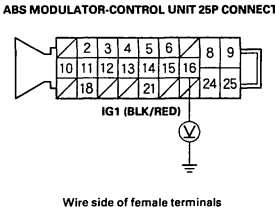

Is there battery voltage?

YES—Go to step 4.

NO—Check fuse No. 18 (15 A) in the under-dash fuse/relay box. If the fuse is good, repair open in the wire between the No. 18 (15 A) fuse and the ABS modulator-control unit. ■

4. Turn the ignition switch OFF.
5. Reconnect the ABS modulator-control unit 25P connector.
6. Turn the ignition switch ON (II).
7. Measure the voltage between the ABS modulator-control unit 25P connector terminal No. 24 and body ground.

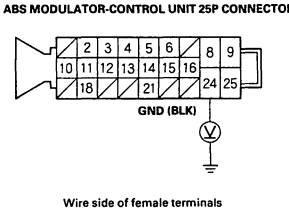

Is there less than 0.1V?

YES—Go to step 8.

NO—Repair open in the wire between the ABS modulator-control unit and body ground (G203). ■

8. Turn the ignition switch OFF.
9. Disconnect the ABS modulator-control unit 25P connector.
10. Turn the ignition switch ON (II).
11. Connect the ABS modulator-control unit 25P connector terminal No. 21 and body ground with a jumper wire.

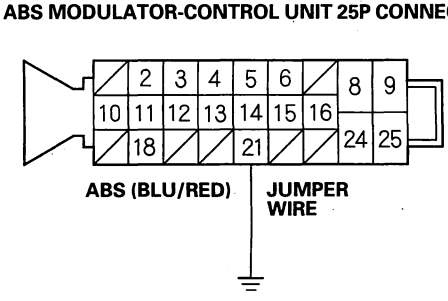

Does the ABS indicator go off?

YES—Check for loose terminals in the ABS modulator-control unit 25P connector. If necessary, substitute a known-good ABS modulator-control unit, and recheck. ■

NO—Go to step 12.

12. Turn the ignition switch OFF.
13. Remove the gauge control module, and leave the connector connected.

(cont'd)

Protected by AR

Symptom Troubleshooting (cont'd)

14. Connect the gauge control module connector to body ground with a jumper wire. Turn the ignition switch ON (II).

    - '03-05 models: Connect a jumper wire between the gauge control module connector (30P) terminal No. 27 and body ground.
    - '06 model: Connect a jumper wire between the gauge control module connector (36P) terminal No. 33 and body ground.

'03-05 models

GAUGE CONTROL MODULE CONNECTOR (30P)

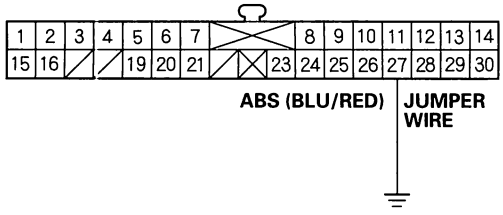

Wire side of female terminals

'06 model

GAUGE CONTROL MODULE CONNECTOR (36P)

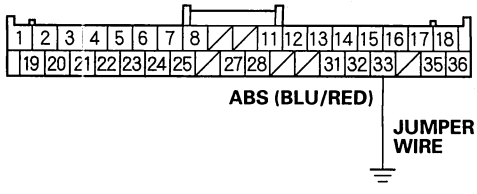

Wire side of female terminals

Does the ABS indicator go off?

YES—Repair open in the wire between the gauge control module and the ABS modulator-control unit. ■

NO—Check for loose terminal in the gauge control module connectors. If connections are OK, replace the gauge control module (see page 22-276). ■

Brake system indicator does not come on

1. With the parking brake applied, turn the ignition switch ON (II), and watch the brake system indicator.

   Does the brake system indicator come on?

   YES—The system is OK at this time ■.

   NO—Go to step 2.

2. Turn the ignition switch OFF.

3. Remove the gauge control module (see page 22-276).

4. Connect the gauge control module connector to body ground with a jumper wire.

   - '03-05 models: Connect a jumper wire between the gauge control module connector (30P) terminal No. 11 and body ground.
   - '06 model: Connect a jumper wire between the gauge control module connector (36P) terminal No. 15 and body ground.

'03-05 models

GAUGE CONTROL MODULE CONNECTOR (30P)

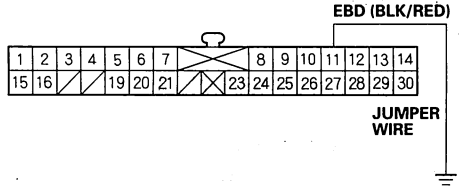

Wire side of female terminals

'06 model

GAUGE CONTROL MODULE CONNECTOR (36P)

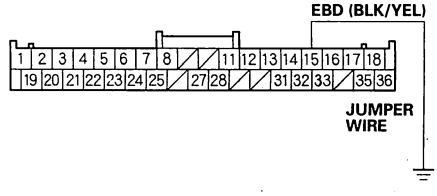

Wire side of female terminals

BACK

Protected by AR

5. Turn the ignition switch ON (II).

   Does the brake system indicator come on and stay on?

   YES—Replace the gauge control module (see page 22-276).■

   NO—Go to step 6.

6. Turn the ignition switch OFF.

7. Disconnect the ABS modulator-control unit 25P connector.

8. Connect the ABS modulator-control unit 25P connector terminal No. 11 and body ground with a jumper wire.

   '03-05 models

   ABS MODULATOR-CONTROL UNIT 25P CONNECTOR

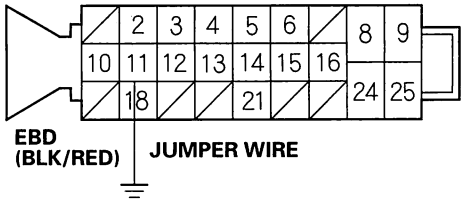

   Wire side of female terminals

   '06 model

   ABS MODULATOR-CONTROL UNIT 25P CONNECTOR

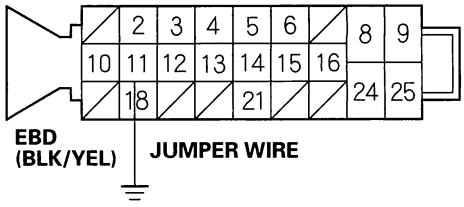

   Wire side of female terminals

9. Turn the ignition switch ON (II).

   Does the brake system indicator come on?

   YES—Check for loose terminals in the ABS modulator-control unit 25P connector. If connections are OK, replace the ABS modulator-control unit (see page 19-65).■

   NO—Repair open in the wire between the ABS modulator-control unit and the gauge control module.■

Protected by AR

Symptom Troubleshooting (cont'd)

Brake system indicator does not go off, and no DTCs are stored

1. Turn the ignition switch ON (II).
2. Release the parking brake.

   Does the brake system indicator go off after several seconds?

   YES—The system is OK at this time.■

   NO—Go to step 3.
3. Check the brake fluid level.

   Is the level OK?

   YES—Go to step 4.

   NO—Inspect the brake system for fluid leaks.■
4. Check the ABS indicator.

   Does the ABS indicator stay on?

   YES—Read the ABS DTC (see page 19-38), and do the applicable troubleshooting for the DTC.■

   NO—Go to step 5.
5. Turn the ignition switch OFF.
6. Disconnect the ABS modulator-control unit 25P connector.
7. Turn the ignition switch ON (II), and check the brake system indicator.

   Does the brake system indicator go off?

   YES—Replace the ABS modulator-control unit (see page 19-65).■

   NO—Go to step 8.
8. Turn the ignition switch OFF.
9. Remove the gauge control module (see page 22-276).
10. Disconnect the gauge control module connector (30P) ('03-05 models), (36P) ('06 model).
11. Check for continuity between the ABS modulator-control unit 25P connector terminal No. 21 and body ground.

ABS MODULATOR-CONTROL UNIT 25P CONNECTOR

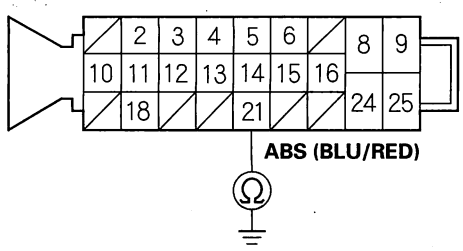

Wire side of female terminals

Is there continuity?

YES—Repair short to body ground in the wire between the gauge control module and the ABS modulator-control unit.■

NO—Check for a short to body ground in the brake system indicator circuit (see page 19-10).■

BACK

Protected by AR

ABS Modulator-Control Unit Removal and Installation

NOTE:
- Do not spill brake fluid on the vehicle; it may damage the paint; if brake fluid gets on the paint, wash it off immediately with water.
- Be careful not to damage or deform the brake lines during removal and installation.
- To prevent the brake fluid from flowing, plug and cover the hose ends and joints with a shop towel or equivalent material.

Removal

1. Pull up the lock (A) of the ABS modulator-control unit 25P connector (B), and the connector disconnects itself.

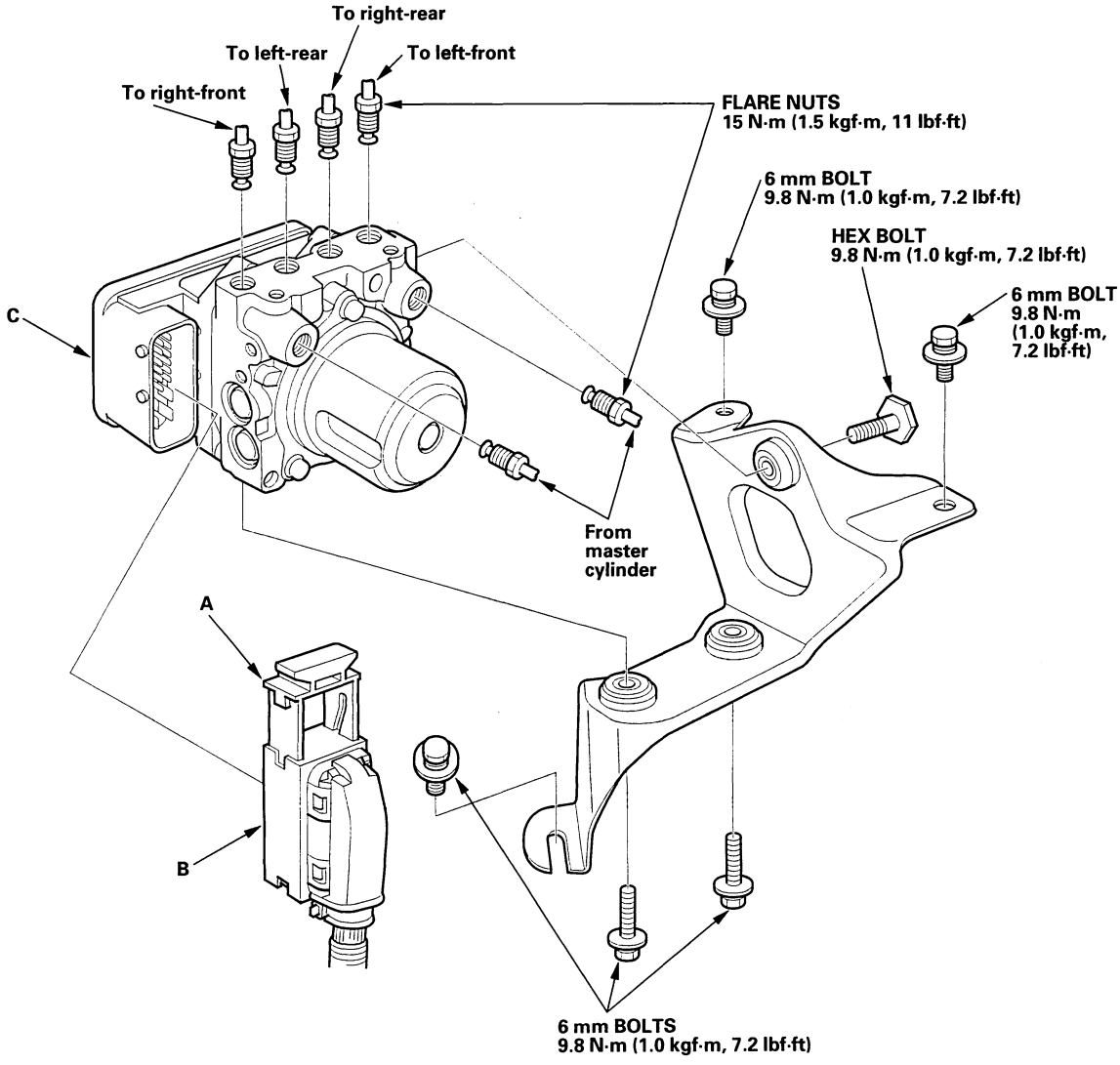

2. Disconnect the six brake lines from the ABS modulator-control unit (C).
3. Remove the five 6 mm bolts and the one hex bolt.
4. Remove the ABS modulator-control unit.

(cont'd)

Protected by AR

ABS Modulator-Control Unit Removal and Installation (cont'd)

Installation

1. Install the ABS modulator-control unit, then tighten the five 6 mm bolts and the one hex bolt.
2. Reconnect the six brake lines, then tighten the flare nuts to the specified torque.
3. Align the connecting surface of the ABS modulator-control unit 25P connector to the ABS modulator-control unit.
4. Push in the lock (A) of the ABS modulator-control unit 25P connector (B) until you hear it click into place.

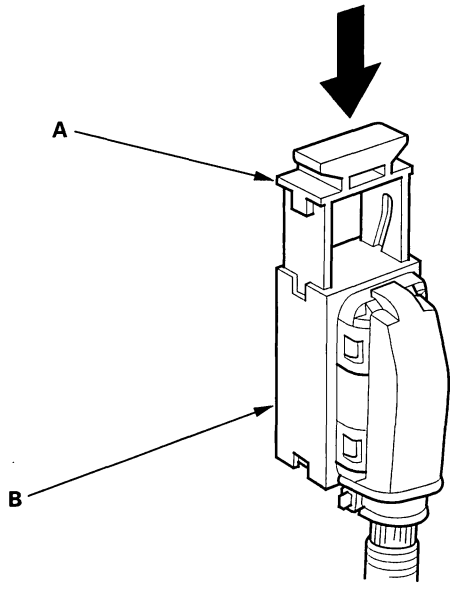

5. Bleed the brake system, starting with the front wheels (see page 19-9).
6. Start the engine, and check that the ABS indicator goes off.
7. Test-drive the vehicle, check the ABS operation, and check that the ABS indicator does not come on.
8. If the brake pedal is now spongy, there may be air trapped in the modulator and then induced into the normal brake system during modulation. Exercise the ABS then bleed the brake system again, starting with the front wheels (see page 19-9).

BACK

Protected by AR

Wheel Sensor Inspection

1. Check the magnetic encoder (A) and pulser (B) after cleaning. If necessary, replace the encoder or pulser.

Front

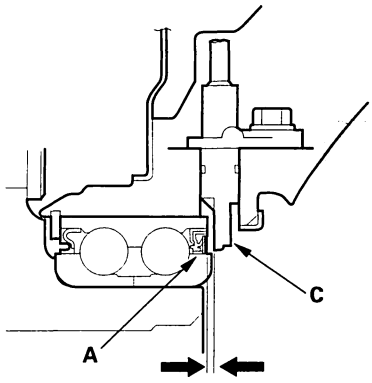

Rear

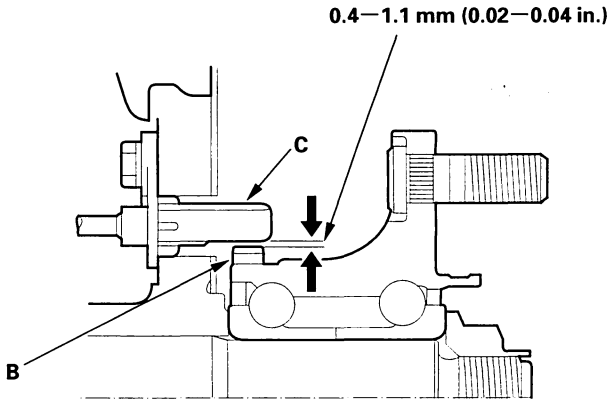

2. Measure the air gap between the wheel sensor (C) and the magnetic encoder or pulser all the way around while rotating the encoder or pulser.

Standard:
Front: 0.5—1.2 mm (0.02—0.05 in.)
Rear: 0.4—1.1 mm (0.02—0.04 in.)

Protected by AR

Wheel Sensor Replacement

NOTE: Install the sensor carefully to avoid twisting the wires.

Front

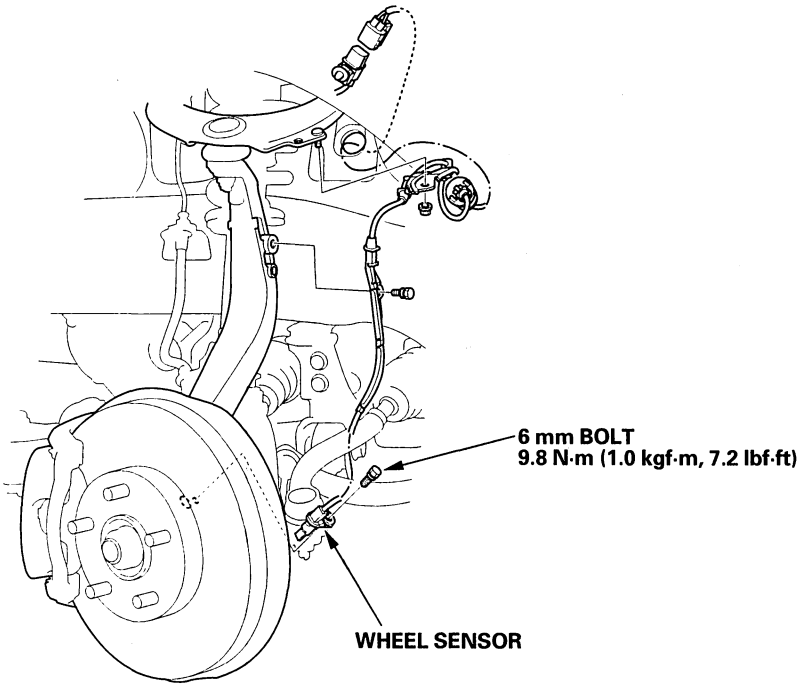

Rear

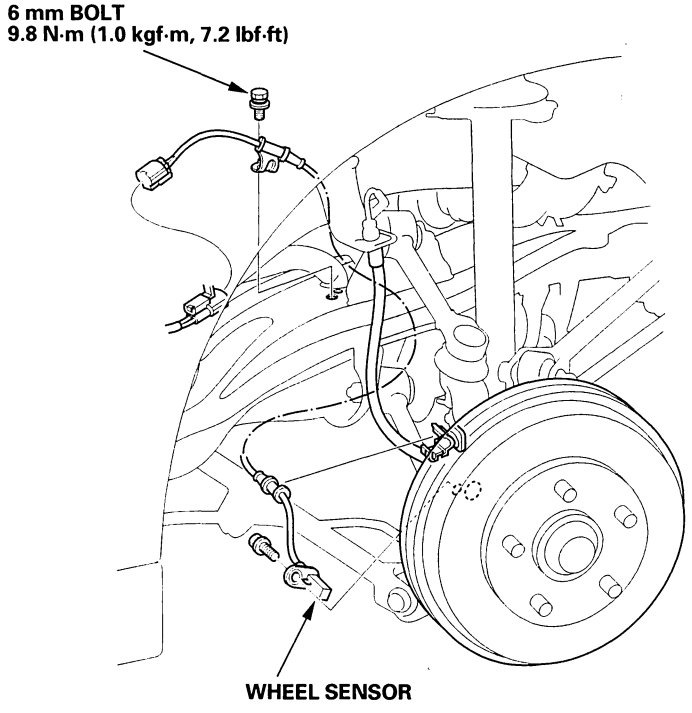

BACK

Protected by AR

SUPPLEMENTAL RESTRAINT SYSTEM (SRS) (If body maintenance is required)

The Accord SRS includes a driver's airbag in the steering wheel hub, a passenger's airbag in the dashboard above the glove box, seat belt tensioners in the front seat belt retractors, side curtain airbags in the sides of the roof, and side airbags in the front seat-backs. Information necessary to safely service the SRS is included in this Service Manual. Items marked with an asterisk (*) on the contents page include or are located near SRS components. Servicing, disassembling, or replacing these items require special precautions and tools, and should be done only by an authorized Honda dealer.

- To avoid rendering the SRS inoperative, which could lead to personal injury or death in the event of a severe frontal or side collision, all SRS service work must be performed by an authorized Honda dealer.
- Improper service procedures, including incorrect removal and installation of the SRS, could lead to personal injury caused by unintentional deployment of the airbags and/or side airbags.
- Do not bump or impact the SRS unit, front impact sensors, or side impact sensors when the ignition switch is ON (II), or for at least 3 minutes after the ignition switch is turned OFF; otherwise, the system may fail in a collision, or the airbags may deploy.
- SRS electrical connectors are identified by yellow color coding. Related components are located in the steering column, front console, dashboard, dashboard lower panel, in the dashboard above the glove box, in the front seats, in the roof side, and around the floor. Do not use electrical test equipment on these circuits.



BACK

Protected by AR

Body

Special Tools 20-2

Doors

Component Location Index 20-3
Door Panel Removal/Installation 20-9
Front Door Panel Removal/Installation 20-10
Door Outer Handle Replacement 20-12
Front Door Outer Handle Replacement 20-14
Door Latch Replacement 20-16
Front Door Latch Replacement 20-17
Front Door Glass and Regulator Replacement 20-19
Door Sash Trim Replacement 20-20
Front Door Glass Outer Weatherstrip Replacement 20-21
Front Door Outer Molding Replacement 20-23
Front Door Weatherstrip Replacement 20-24
Rear Door Panel Removal/Installation 20-25
Rear Door Outer Handle Replacement 20-27
Rear Door Latch Replacement 20-28
Rear Door Glass and Regulator Replacement 20-30
Rear Door Glass Outer Weatherstrip Replacement 20-32
Rear Door Outer Molding Replacement ... 20-33
Rear Door Weatherstrip Replacement 20-34
Rear Door Hook Pin and Catch Replacement 20-35
Front and Rear Door Glass Adjustment ... 20-35
Front and Rear Door Position Adjustment 20-37
Front and Rear Door Striker Adjustment 20-38

Mirrors

Component Location Index 20-39
Power Mirror/Manual Mirror Replacement 20-41
Mirror Holder Replacement 20-42
Mirror Housing Cover Replacement 20-43
Rearview Mirror Replacement 20-43

Glass

Component Location Index 20-44
Windshield Replacement 20-46
Rear Window Replacement 20-51
Quarter Glass Replacement 20-59

Moonroof

Component Location Index 20-65
Symptom Troubleshooting Index 20-67
Glass Height Adjustment 20-69
Glass Replacement 20-70
Wind Deflector Replacement 20-71
Drain Channel Replacement 20-72
Sunshade Replacement 20-74
Motor Replacement 20-77
* Frame and Drain Tube Replacement 20-78
Inner Cable Replacement 20-81
Drain Channel Slider and Cable Assembly Replacement 20-84
Limit Switch Adjustment 20-86
Closing Force and Opening Drag Check ... 20-87

Interior Trim

Component Location Index 20-88
Trim Removal/Installation-Door Area 20-90
Trim Removal/Installation-Pillar Area -without Side Curtain Airbags 20-94
* Trim Removal/Installation-Pillar Area -with Side Curtain Airbags 20-99
Trim Removal/Installation -Rear Side Area 20-106
* Trim Removal/Installation -Rear Shelf Area 20-108
Trim Removal/Installation-Trunk Area 20-112
Trim Removal/Installation-Trunk Lid 20-115
* Headliner Removal/Installation 20-117
* Carpet Replacement 20-122

Consoles

Center Console Removal/Installation 20-125
Center Console Armrest Disassembly/Reassembly 20-126
Center Console Rear Cover Replacement 20-128

Dashboard

Instrument Panel Removal/Installation 20-129
Instrument Upper Visor Removal/Installation 20-129
Driver's Dashboard Lower Cover Removal/Installation 20-130
Driver's Dashboard Under Cover Removal/Installation 20-130
Upper Panel Removal/Installation 20-131
* Center Pocket Removal/Installation 20-132
* Glove Box Removal/Installation 20-132
Glove Box Lock Cylinder Replacement 20-133
Passenger's Dashboard Lower Cover Removal/Installation 20-134
Dashboard Side Vent Removal/Installation 20-135
* Dashboard/Steering Hanger Beam Removal/Installation 20-136
Dashboard Replacement 20-140

Protected by AR

Seats

Component Location Index 20-142
* Front Seat Removal/Installation 20-144
* Front Seat Disassembly/Reassembly -Manual 20-149
* Front Seat Disassembly/Reassembly -Manual Height Adjustable 20-153
* Front Seat Disassembly/Reassembly -2-Way Power 20-154
* Front Seat Disassembly/Reassembly -8-Way Power 20-155
Front Seat Linkage Disassembly/ Reassembly-Manual 20-156
Front Seat Linkage Disassembly/ Reassembly-Manual Height Adjustable 20-159
Front Seat Linkage Disassembly/ Reassembly-2-Way Power 20-160
Front Seat Linkage Disassembly/ Reassembly-8-Way Power 20-161
* Front Seat Recline Motor Replacement 20-162
* Front Seat Lumbar Support Replacement 20-163
* Rear Seat Access Cable Replacement 20-165
* Front Seat Cover Replacement 20-166
Rear Seat Removal/Installation 20-173
Rear Seat-back Latch Replacement 20-175
Rear Seat-back Lock Cylinder Replacement 20-176
Rear Seat Armrest/Trunk Pass-through Cover Replacement 20-177
Trunk Pass-through Cover Key Cylinder Replacement 20-178
Rear Seat-back Cover Replacement 20-179
Rear Seat Side Bolster Cover Replacement 20-182
Rear Seat Cushion Cover Replacement 20-182

Bumpers

Front Bumper Removal/Installation 20-184
Lower Grille Replacement 20-186
Front Bumper Side Cover Replacement ... 20-187
Rear Bumper Removal/Installation 20-188

Hood

Adjustment 20-190
Hood Seal and Hood Molding Replacement 20-192
Hood Insulator Replacement 20-192

Trunk Lid

Adjustment 20-193
Trunk Lid Torsion Bar Replacement 20-194
Trunk Lid Weatherstrip Replacement..... 20-195

Fuel Fill Door

Adjustment 20-196

Exterior Trim

Front Grille Replacement 20-197
Front Fender Trim Replacement 20-198
Cowl Cover Replacement 20-199
Roof Molding Replacement 20-200
Door Molding Replacement 20-204
Side Sill Panel Replacement 20-205
Rear License Trim Replacement 20-206
Trunk Lid Spoiler Replacement 20-207
Emblem/Sticker Replacement 20-208

Fenderwell

Front Inner Fender Replacement 20-211
Splash Shield Replacement 20-212
Front Fender Fairing Replacement 20-213
Fuel Pipe Protector Replacement 20-214
Rear Inner Fender Replacement 20-214
Rear Air Outlet Replacement 20-215

Openers

Component Location Index 20-216
Hood Opener Cable Replacement 20-217
* Trunk Lid Opener Cable/Fuel Fill Door Opener Cable Replacement 20-218
Hood Latch Replacement 20-221
Hood Release Handle Replacement 20-222
Trunk Lid Opener/Fuel Fill Door Opener Replacement 20-223
Trunk Lid Latch Replacement 20-224
Trunk Lid Lock Cylinder Replacement 20-225

Frame

Middle Cross-member Gusset Replacement 20-226
Frame Stiffener Replacement 20-227
Subframe Replacement 20-228
Frame Repair Chart 20-232



Protected by AR

Special Tools

Ref. No.	Tool Number	Description	Qty
①	SOJATP2014	KTC Trim Tool Set	1
②	07AAC-SDAA100	Upper Panel/Vent Removal Tool	1
③	08M10-SM4-100 or 07AAE-SDAA100	Torsion Bar Assembly Tool	1

①: Available through the American Honda Tool and Equipment Program; call 888-424-6857.

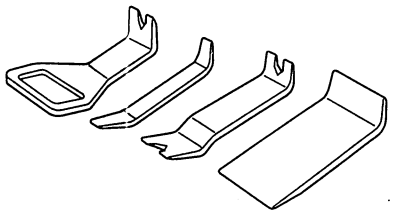

①

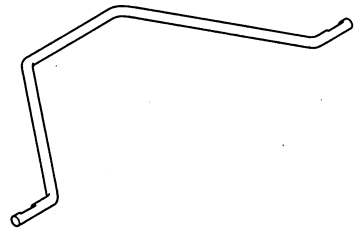

②

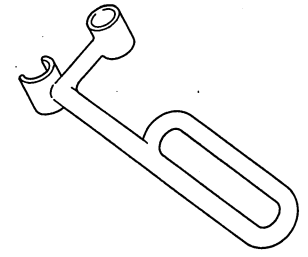

③

BACK

Protected by AR

Component Location Index

2-door

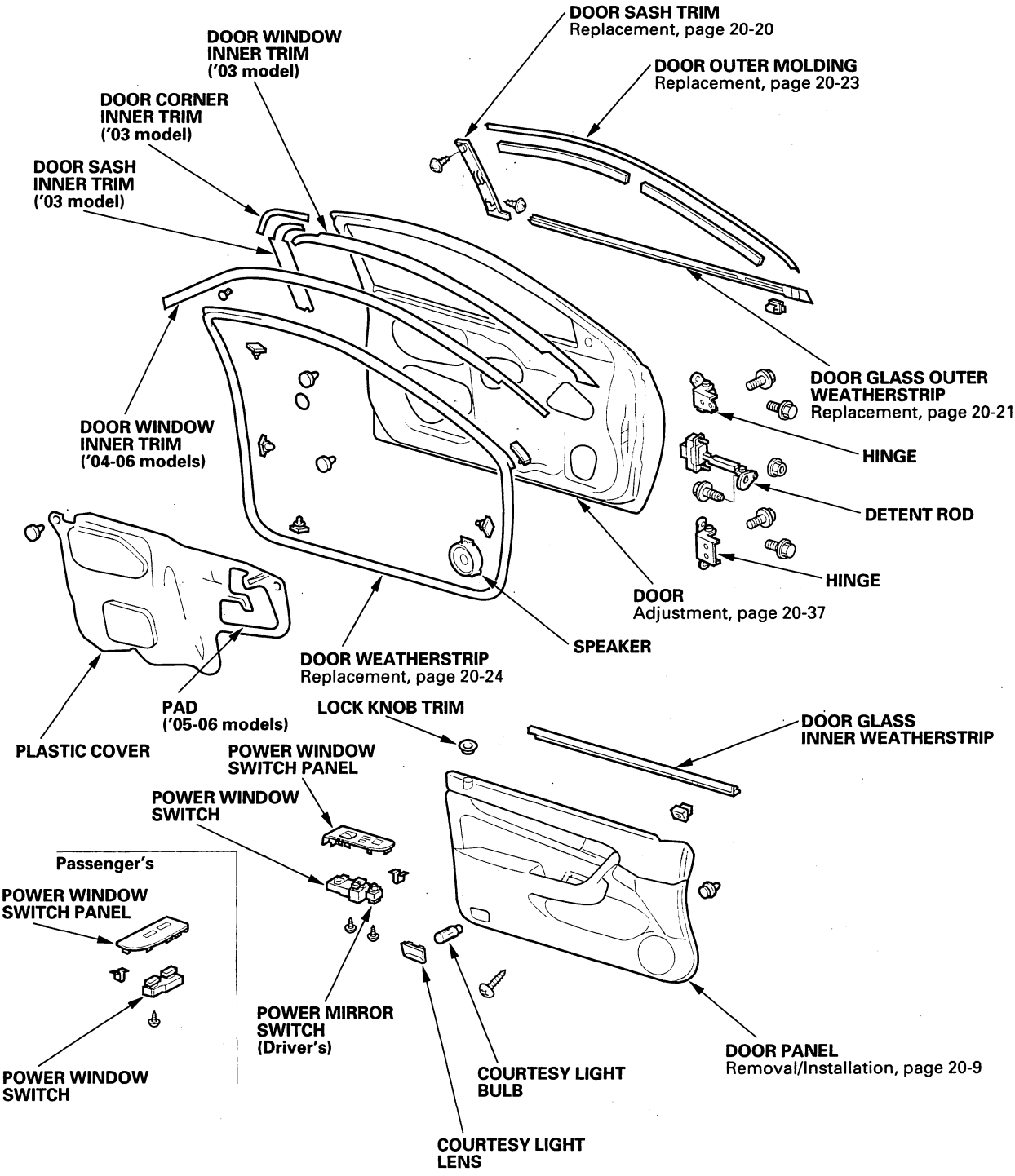

(cont'd)

BACK

Protected by AR

Component Location Index (cont'd)

2-door (cont'd)

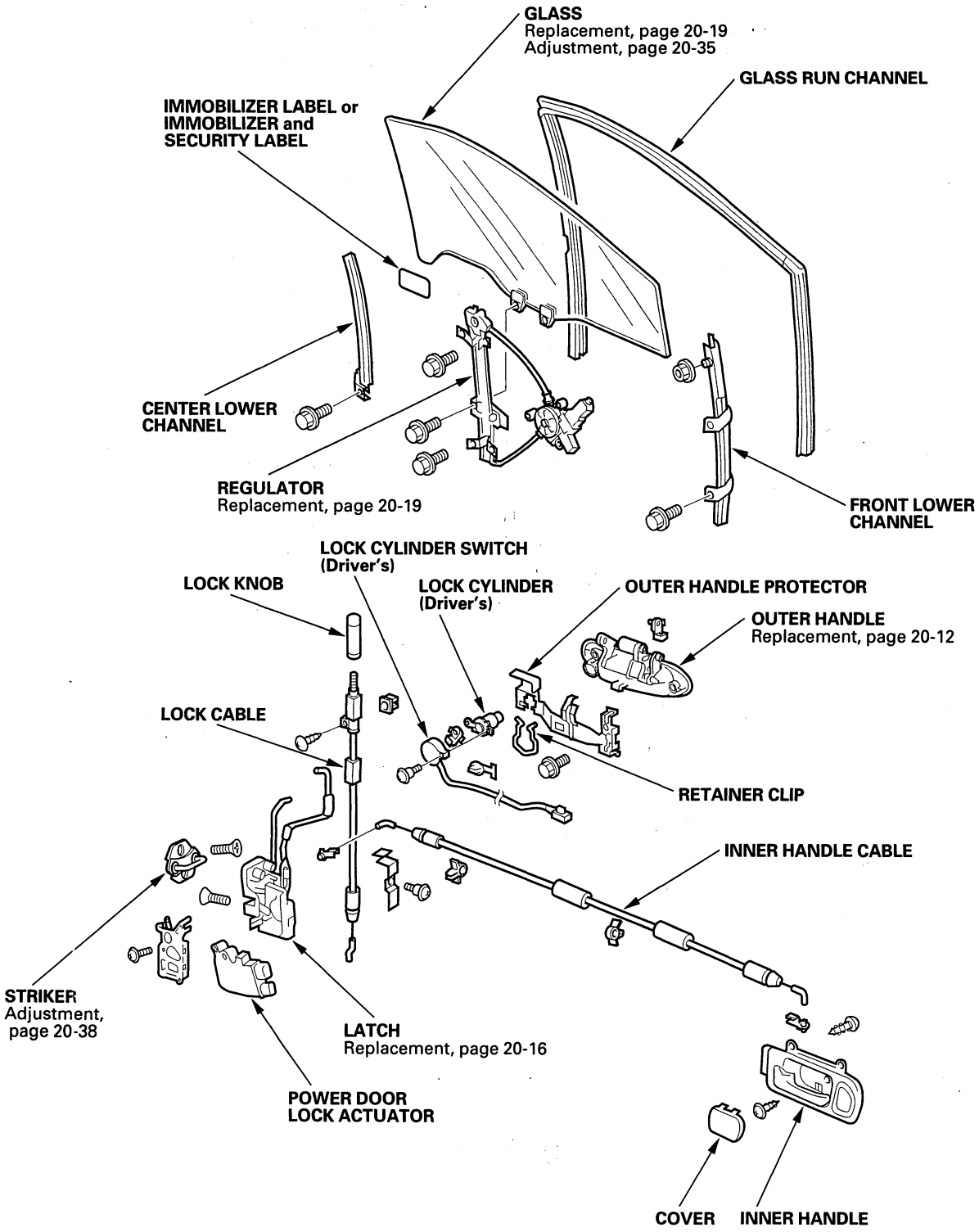

BACK

Protected by AR

Component Location Index - Front Door

4-door

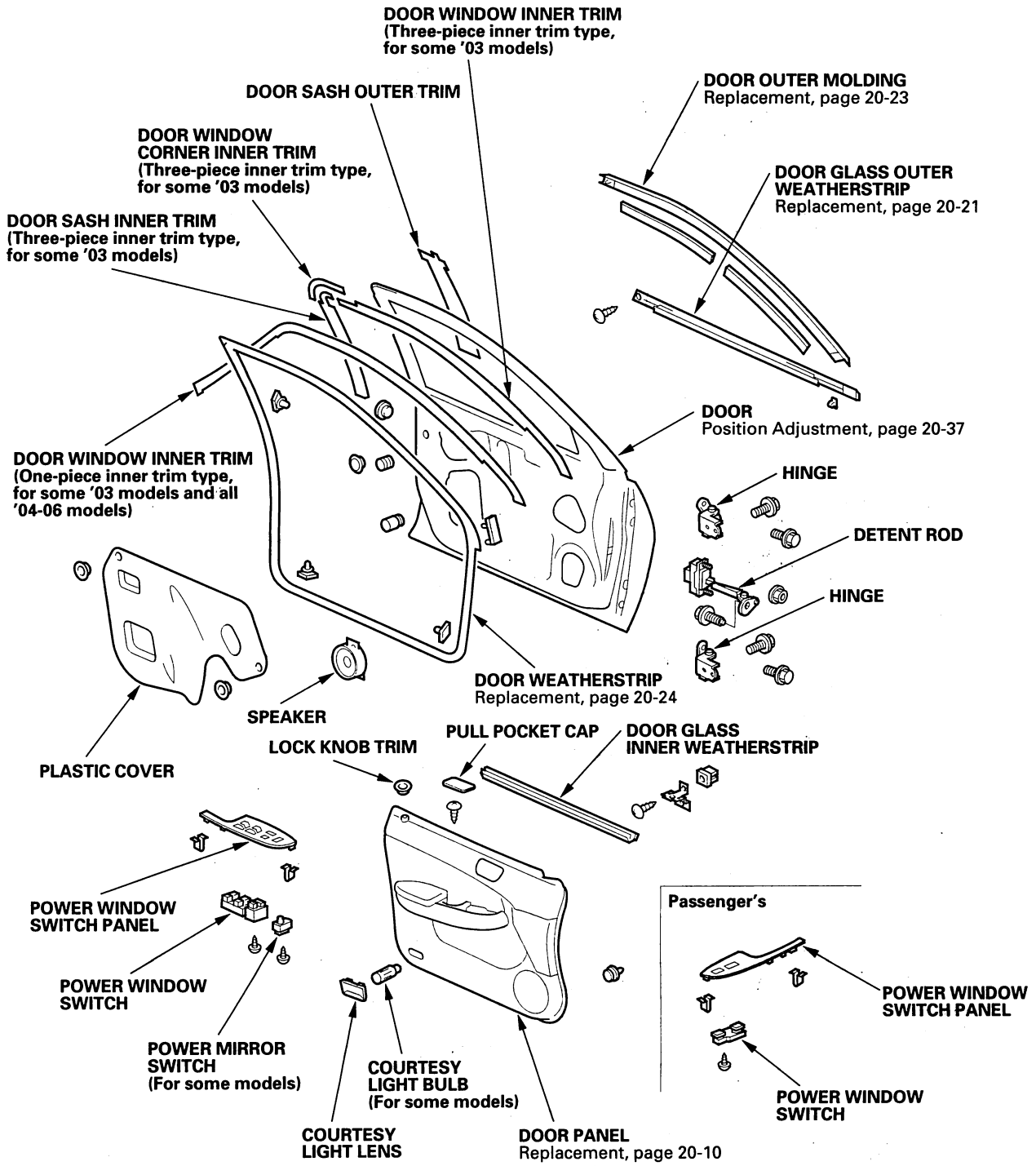

(cont'd)

BACK

Protected by AR

Component Location Index - Front Door (cont'd)

4-door (cont'd)

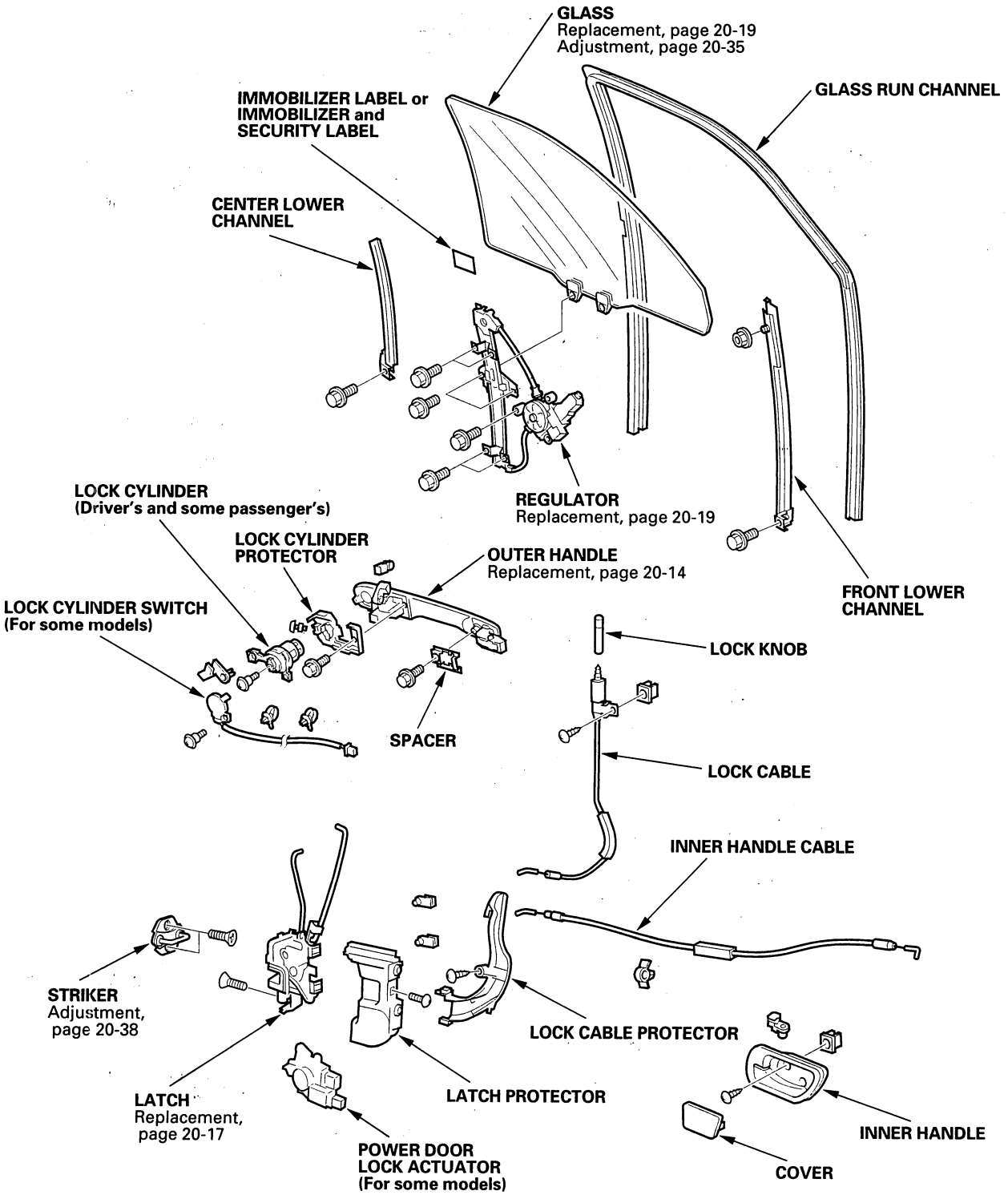

BACK

Protected by AR

Component Location Index - Rear Door

4-door

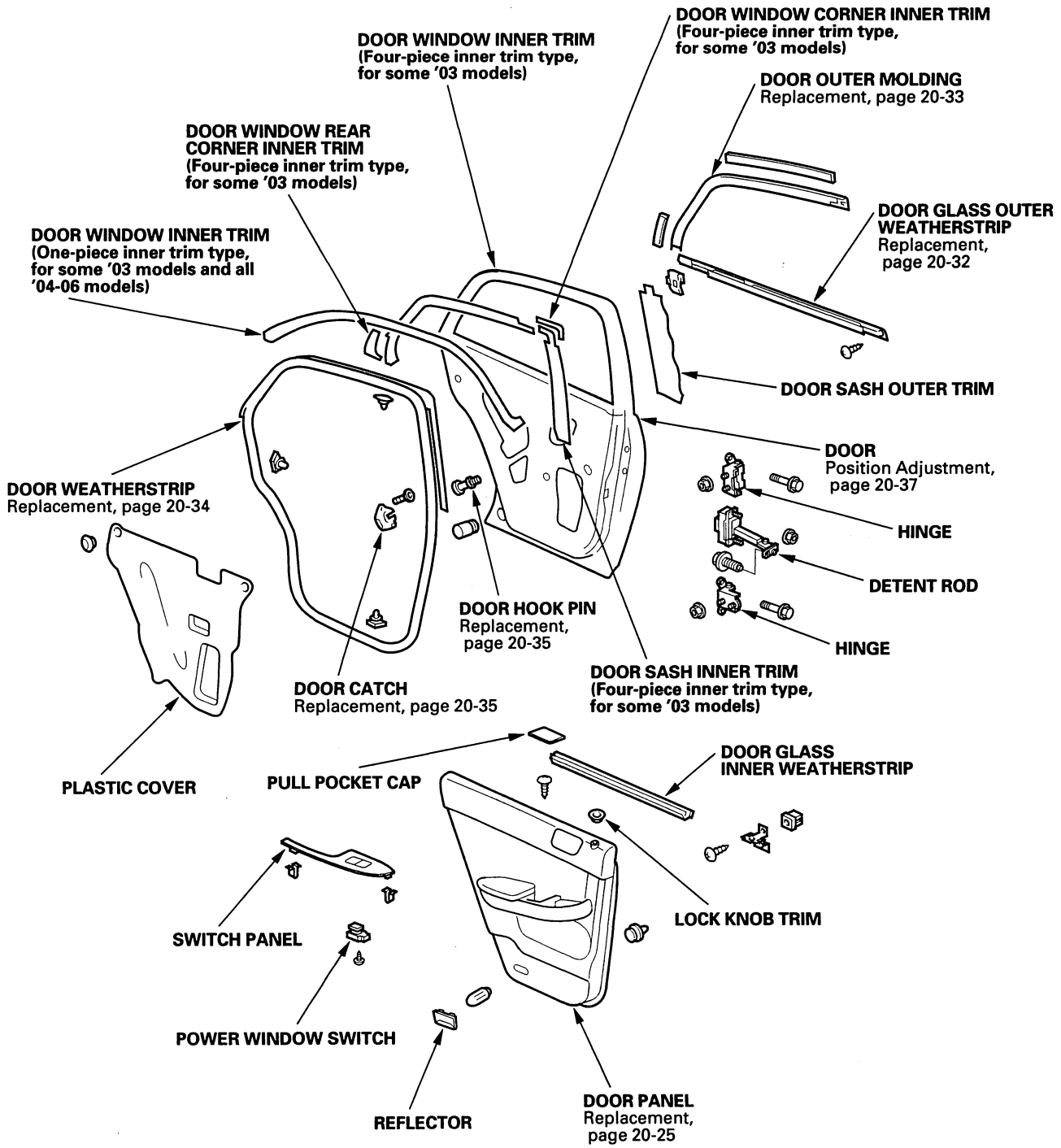

(cont'd)

BACK

Protected by AR

Component Location Index - Rear Door (cont'd)

4-door (cont'd)

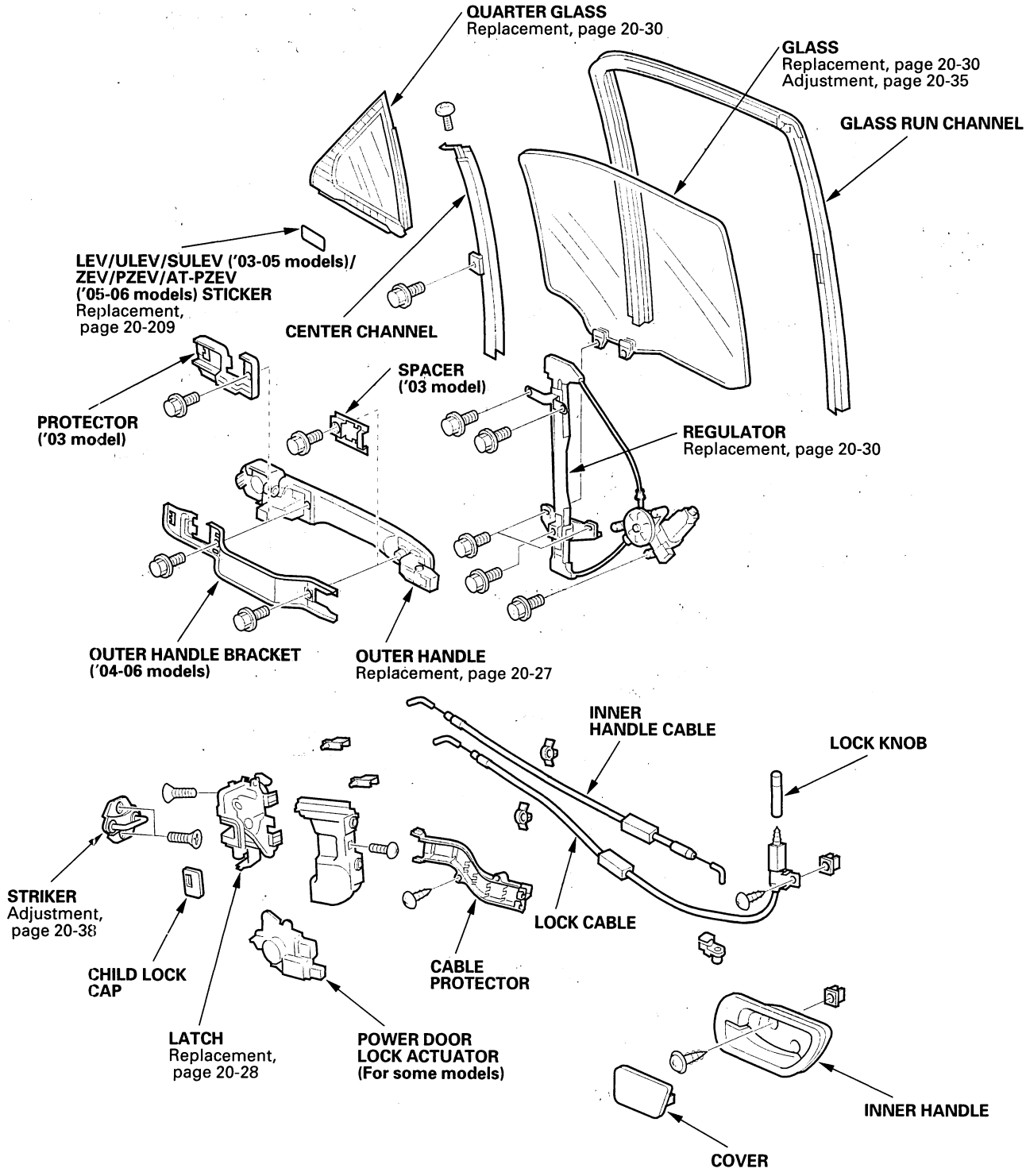

BACK

Protected by AR

Door Panel Removal/Installation

Special Tools Required
- KTC trim tool set SOJATP2014
- Trim pad remover, Snap-on A 177A or equivalent, commercially available

2-door

NOTE: Use the appropriate tool from the KTC trim tool set to avoid damage when prying components.

1. Lower the glass fully.

2. Using a trim tool, pry out on the lower portion of the cover (A) to release the hooks (B, C), then remove the cover and the screws.

Fastener Locations

▶: Screw, 2

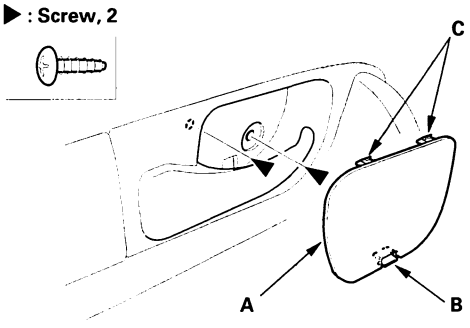

3. Remove the power window switch panel (A).

   –1 Insert a flat-tip screwdriver wrapped with protective tape through the hole under the armrest, and push up the bottom of the power window switch (B) to release the panel.
   –2 Pull out along the edge of the panel to release the hook (C) and clips (D).
   –3 Disconnect the power mirror switch connector (E) (driver's) and the power window switch connector (F).

Fastener Locations

D▷: Clip, 2 G▶: Screw, 2

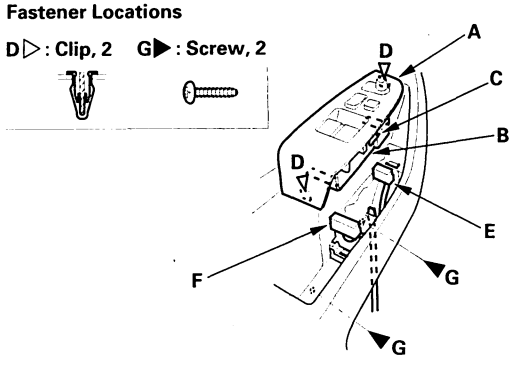

4. Remove the screws (G) from under the armrest.

5. Remove the mirror mount cover (see step 2 on page 20-41).

6. Remove the door panel (A) with as little bending as possible to avoid creasing or breaking it.

   –1 Start at the bottom edge of the door panel, release the clips that are just above the marks (B) on the edge of the panel with a commercially available trim pad remover.
   –2 Detach the upper clips.
   –3 Starting at the rear, pull the door panel upward and over the lock knob (C).

   NOTE: The inner handle cable (D) and the courtesy light bulb socket (E) are connected to the door panel. Do not pull the door panel up too far, or the inner handle cable will be damaged.

Fastener Locations

▷: Clip, 8

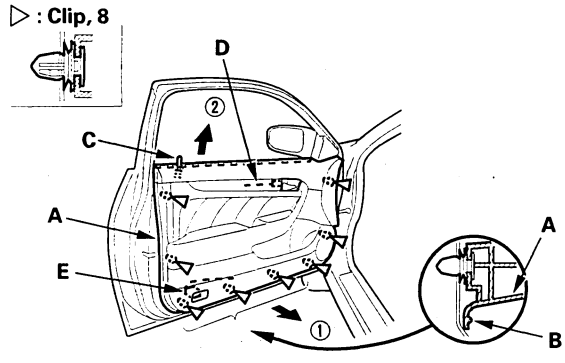

(cont'd)

Protected by AR

Door Panel Removal/Installation (cont'd)

7. While holding the door panel (A) away from the door, disconnect the inner handle cable (B) and courtesy light bulb socket (C), and detach the harness clip (D) from the panel, then remove the panel.

Back view

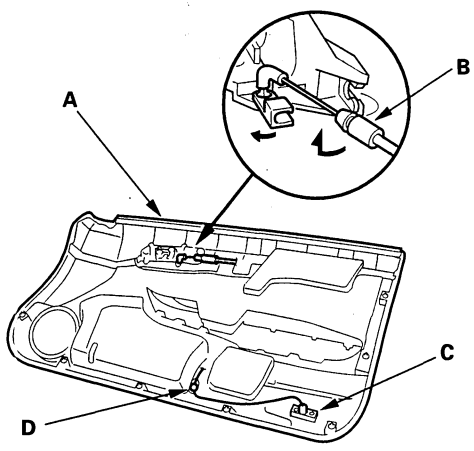

8. If necessary, remove the door glass inner weatherstrip (A) from the door panel (B) by pulling it down.

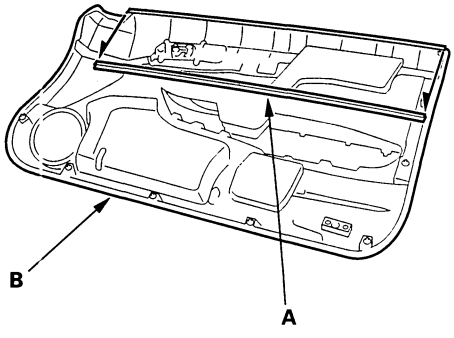

9. Install the panel in the reverse order of removal, and note these items:

- Check the clips for damage or stress-whitening, and replace them with new ones.
- Make sure the connectors are plugged in properly, and the cable and the bulb socket are connected properly.
- Make sure the window and power door lock operate properly.
- Driver's: Perform the power window control unit reset procedure (see page 22-232).

Front Door Panel Removal/ Installation

Special Tools Required
- KTC trim tool set SOJATP2014
- Trim pad remover, Snap-on A 177A or equivalent, commercially available

4-door

NOTE: Use the appropriate tool from the KTC trim tool set to avoid damage when prying components.

1. Lower the glass fully.

2. Using a trim tool, pry out on the rear portion of the cover (A) to release the hooks (B, C), then remove the cover and the screws securing the inner handle (D).

Fastener Locations
▶ : Screw, 2

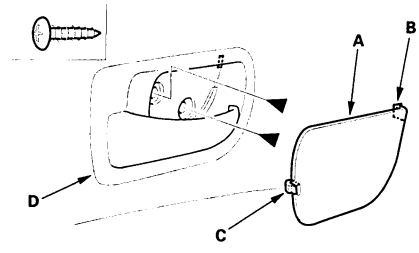

3. Remove the power window switch panel (A).

–1 Pry up on the rear edge of the switch panel with a trim tool to release the rear clip.
–2 Pull out along the edge of the panel to release the hooks (B) and front clip.
–3 Disconnect the power mirror switch connector (C) (driver's) and the power window switch connector (D).

Driver's

Fastener Locations
▷ : Clip, 2

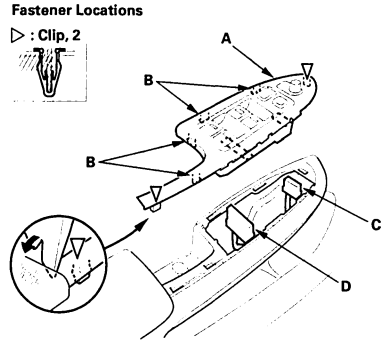

BACK

Protected by AR

Passenger's

Fastener Locations

▷ : Clip, 2

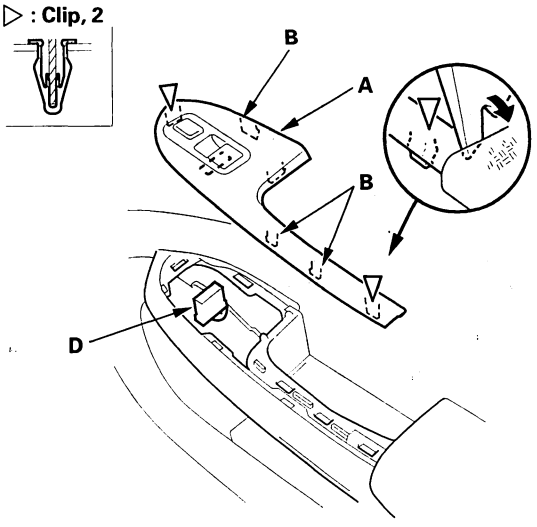

4. Remove the screw from under the pull pocket cap (A).

Fastener Location

▶ : Screw, 1

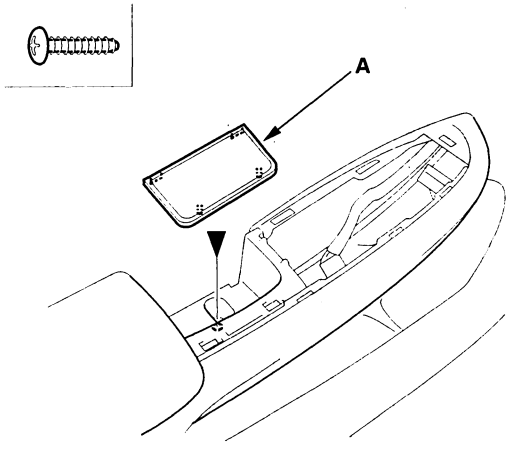

5. Remove the mirror mount cover (see step 2 on page 20-41).

6. Remove the door panel (A) with as little bending as possible to avoid creasing or breaking it.

–1 Start at the bottom edge of the door panel, release the clips that are just above the marks (B) on the edge of the panel with a commercially available trim pad remover.
–2 Detach the upper clips.
–3 Starting at the rear, pull the door panel upward and over the lock knob (C).

NOTE: The inner handle cable (D) and the courtesy light bulb socket (E) are connected to the door panel. Do not pull the door panel up too far, or the inner handle cable will be damaged.

Fastener Locations

▷ : Clip, 7

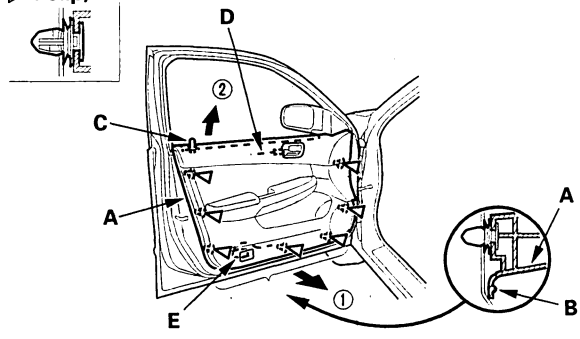

7. While holding the door panel (A) away from the door, disconnect the inner handle cable (B), and if equipped, courtesy light bulb socket (C), and detach the harness clip (D), then remove the panel. If necessary, remove the inner handle (E) by releasing the hooks (F, G).

Back view

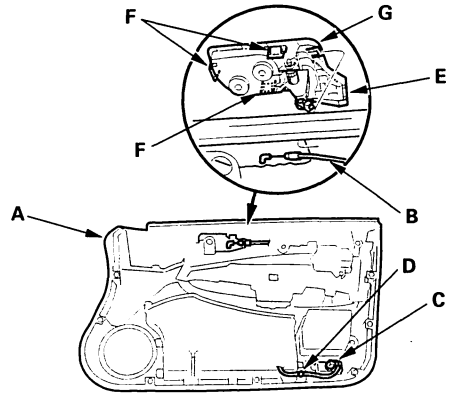

(cont'd)

BACK

Protected by AR

Front Door Panel Removal/ Installation (cont'd)

8. If necessary, remove the door glass inner weatherstrip (A) from the door panel (B) by pulling it down.

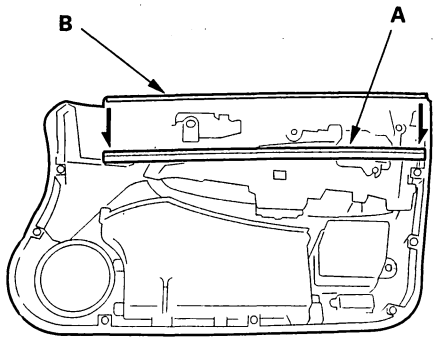

9. Install the door panel in the reverse order of removal, and note these items:

- Check the clips for damage or stress-whitening, and replace them with new ones.
- Make sure the connectors are plugged in properly, and the cable and the bulb socket are connected properly.
- If equipped, make sure the window and power door lock operate properly.
- Driver's: Perform the power window control unit reset procedure (see page 22-232).

Door Outer Handle Replacement

2-door

NOTE: Put on gloves to protect your hands.

1. Remove these items:

   - Door panel (see page 20-9)
   - Plastic cover, as necessary (see page 20-3)

2. Raise the glass fully.

3. Disconnect the outer handle rod (A) and cylinder rod (B) from the joint bushings (C).

   NOTE: Check the joint bushing for damage and replace if necessary.

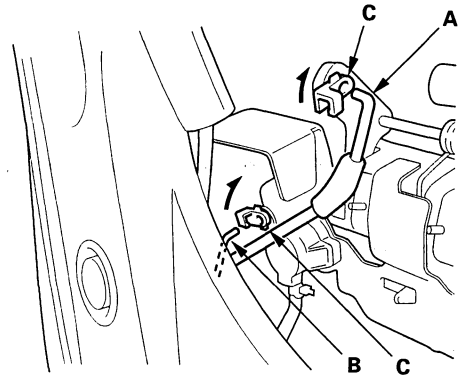

4. Release the retainer clip (A), then remove the lock cylinder (B).

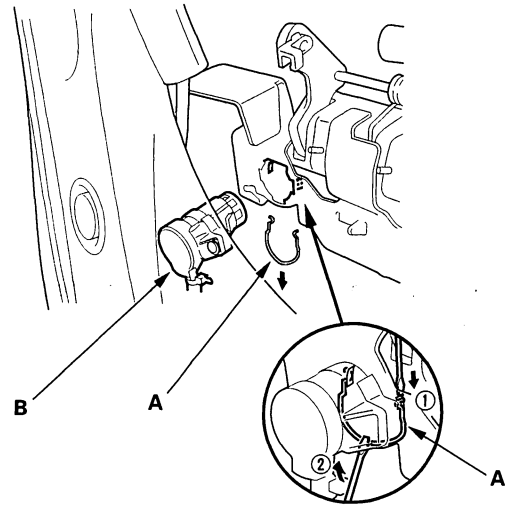

BACK

Protected by AR

5. Remove the screw, then separate the lock cylinder (A) and lock cylinder switch (B).

Fastener Location

▶ : Screw, 1

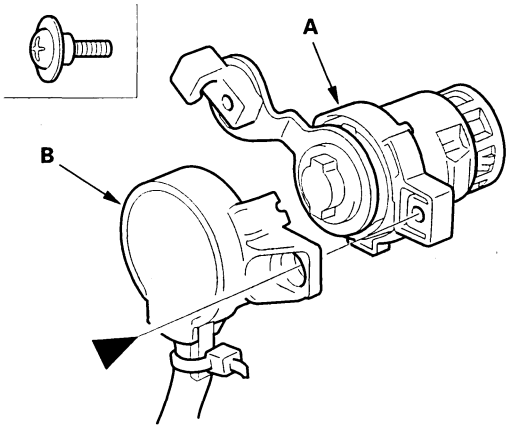

6. Disconnect the lock cylinder switch connector (A), and detach the harness clip (B), then remove the lock cylinder switch (C).

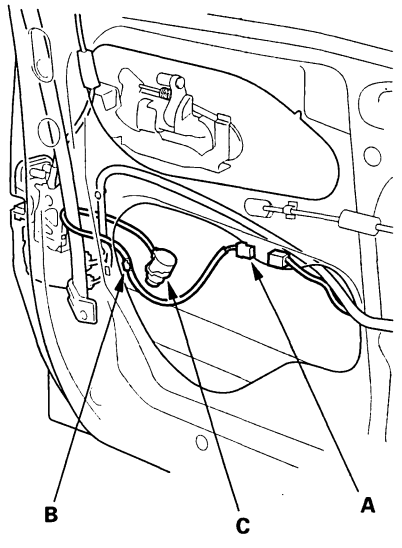

7. Remove the maintenance cap (A). While holding the outer handle (B) from the outside of the door, remove the bolts, then remove the outer handle protector (C) by sliding it forward to release the hook (D).

Fastener Locations

▶ : Bolt, 2

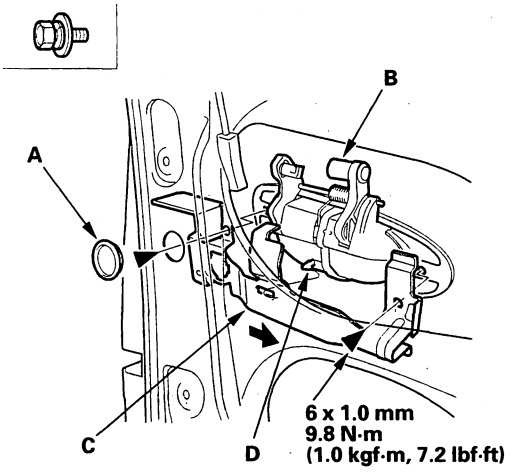

8. Pull out the outer handle (A) in the numbered sequence, and remove it.

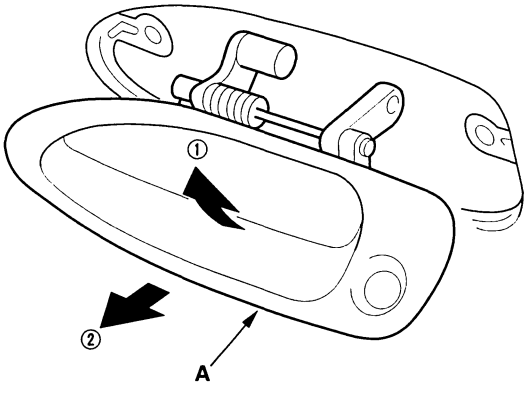

(cont'd)

Protected by AR

Door Outer Handle Replacement (cont'd)

9. Install the handle in the reverse order of removal, and note these items:

   - Make sure the lock cylinder switch harness is routed properly.
   - Make sure the lock cylinder switch connector is plugged in properly, and each rod is connected securely.
   - Be sure that the end of the lock cylinder is engaged with the lock cylinder switch correctly.
   - Make sure the door locks and opens properly.
   - When installing the lock cylinder, leave the outer door handle bolts loose so the inner protector does not interfere with the lock cylinder, then tighten the handle bolts.
   - Install the lock cylinder retaining clip on the handle, then install the lock cylinder. Be sure the clip is fully seated in the slot on the lock cylinder.
   - When reinstalling the door panel, make sure the plastic cover is installed properly and sealed around its outside perimeter to seal out water.
   - Driver's: Perform the power window control unit reset procedure (see page 22-232).

Front Door Outer Handle Replacement

4-door

NOTE: Put on gloves to protect your hands.

1. Remove these items:

   - Door panel (see page 20-10)
   - Plastic cover, as necessary (see page 20-5)

2. Raise the glass fully.

3. Pull the glass run channel (A) away as necessary, and remove the bolt, then remove the center lower channel (B) by pulling it downward.

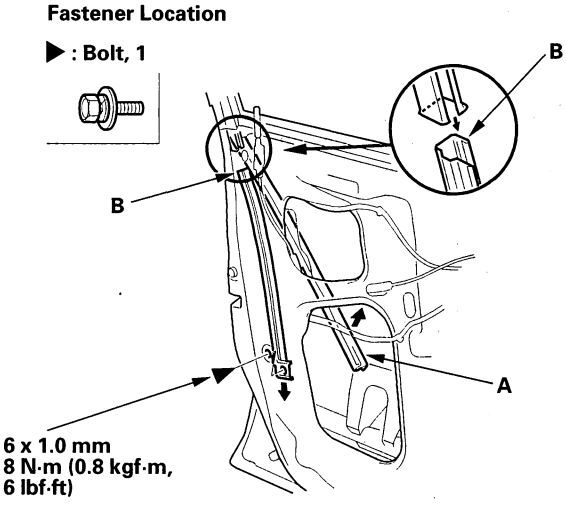

4. Remove the maintenance cap (A), then disconnect the outer handle rod (B), and cylinder rod (C) from the joint bushings (D).

   NOTE: Check the joint bushing for damage and replace if necessary.

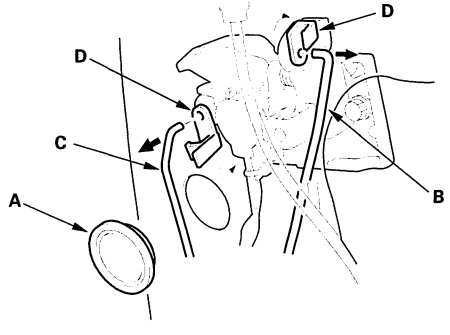

BACK

Protected by AR

5. Driver's and some passenger's: Remove the maintenance cap (A) from the rear of the door, then loosen the screw securing the lock cylinder protector (B) and the outer handle (C).

   NOTE: Because of the tape (D) on the middle of threads, the screw will stay on the protector after it is loosened.

Fastener Location

▶ : Screw, 1

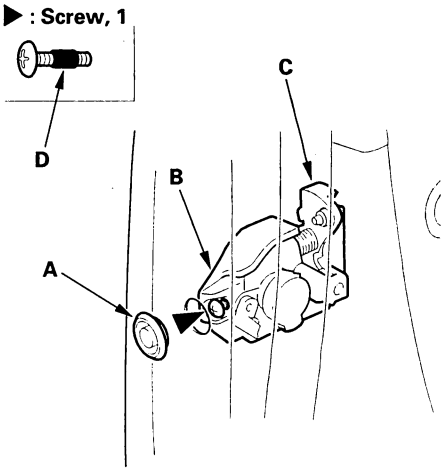

6. Remove the bolt, slide the lock cylinder protector (A) rearward, then remove the lock cylinder switch (for some models), lock cylinder, and lock cylinder protector as an assembly.

Fastener Location

▶ : Bolt, 1

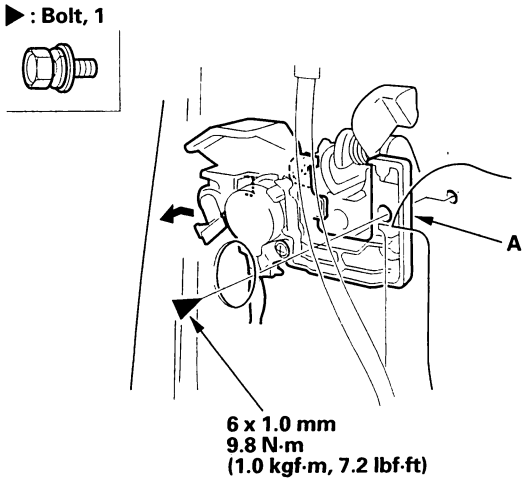

7. With lock cylinder switch: Disconnect the lock cylinder switch connector (A), and detach the harness clips (B), then remove the lock cylinder switch (C).

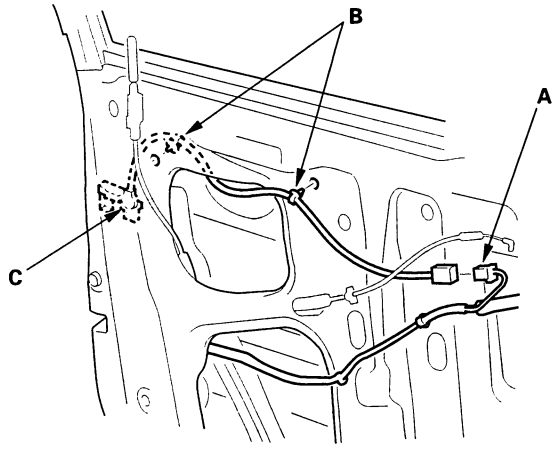

8. Remove the screws, then separate the lock cylinder (A), lock cylinder switch (B) (for some models), and lock cylinder protector (C).

Fastener Locations

▶ : Screw, 2

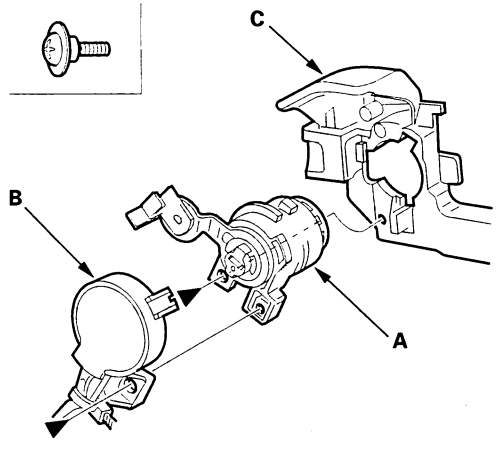

(cont'd)

Protected by AR

Front Door Outer Handle Replacement (cont'd)

9. Remove the bolt, then remove the spacer (A).

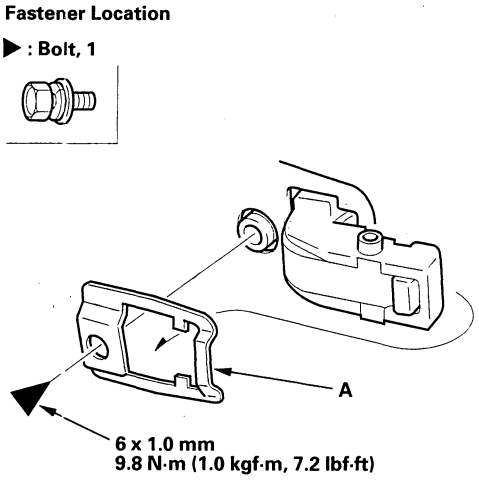

10. While pulling the outer handle (A), remove the handle from the holes in the door panel. Take care not to scratch the door.

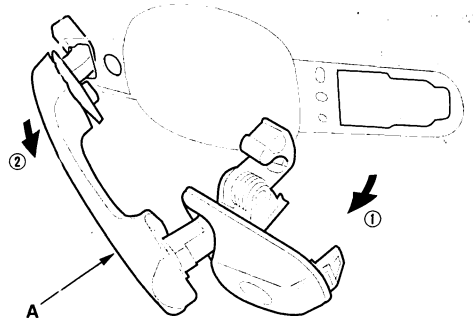

11. Install the handle in the reverse order of removal, and note these items:

- Make sure the lock cylinder switch harness is routed properly (for some models).
- Make sure the lock cylinder switch connector is plugged in properly (for some models), and each rod is connected securely.
- Be sure that the end of the lock cylinder is engaged with the lock cylinder switch correctly.
- Make sure the door lock cylinder/door locks operate properly.
- Make sure the door handle works properly.
- When reinstalling the door panel, make sure the plastic cover is installed properly and sealed around its outside perimeter to seal out water.
- Driver's: Perform the power window control unit reset procedure (see page 22-232).

Door Latch Replacement

2-door

NOTE: Put on gloves to protect your hands.

1. Raise the glass fully.
2. Remove these items:
   - Door panel (see page 20-9)
   - Plastic cover, as necessary (see page 20-3)
3. Disconnect the cylinder rod from the lock cylinder, then disconnect the outer handle rod from the outer handle (see step 3 on page 20-12).
4. Pull the glass run channel (A) away as necessary, and remove the bolt, then remove the center lower channel (B) by pulling it downward.

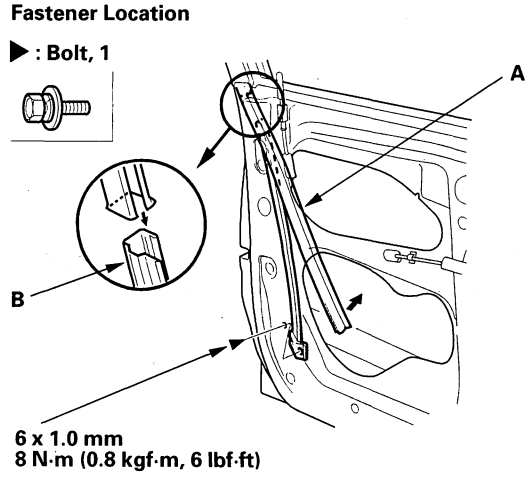

5. Remove the screw securing the lock knob (A).

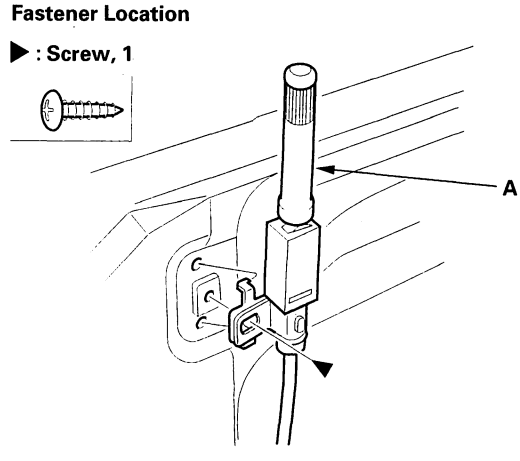

BACK

Protected by AR

6. Detach the inner handle cable clip (A), and disconnect the actuator connectors (B). Remove the screws, then remove the latch (C) through the hole in the door. Take care not to bend the outer handle rod (D), cylinder rod (E), inner handle cable (F), and lock cable (G).

Fastener Locations

▶ : Screw, 3

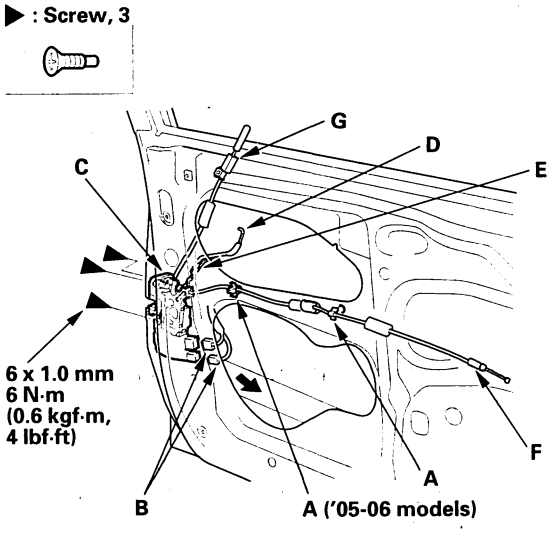

7. Install the latch in the reverse order of removal, and note these items:

- Make sure the actuator connectors are plugged in property, and each rod is connected securely.
- Make sure the door locks and opens properly.
- When reinstalling the door panel, make sure the plastic cover is installed properly and sealed around its outside perimeter to seal out water.
- Driver's: Perform the power window control unit reset procedure (see page 22-232).

4-door

NOTE: Put on gloves to protect your hands.

1. Raise the glass fully.

2. Remove these items:

- Door panel (see page 20-10)
- Plastic cover, as necessary (see page 20-5)
- Center lower channel (see step 3 on page 20-14)

3. Disconnect the cylinder rod from the lock cylinder, and disconnect the outer handle rod from the outer handle (see step 4 on page 20-14).

4. Remove the screw securing the lock knob (A).

Fastener Location

▶ : Screw, 1

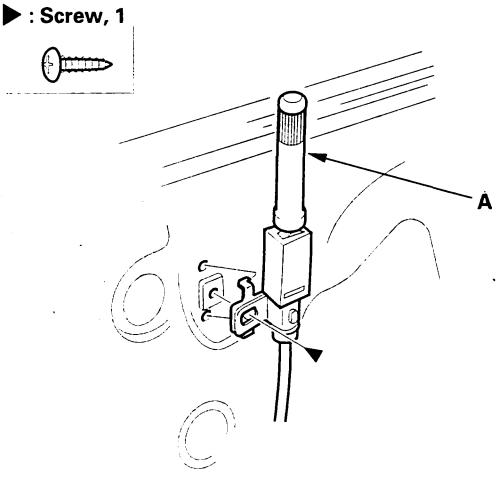

(cont'd)

Protected by AR

Front Door Latch Replacement (cont'd)

5. Disconnect the actuator connectors (A) (for some models), and detach the inner handle cable clip (B). Remove the screws (C, D) securing the latch (E) and the lock cable protector.

Fastener Locations

C▶: Screw, 3 D▶: Screw, 1

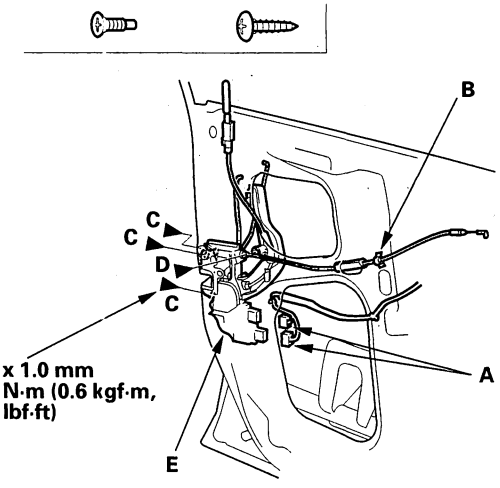

6. Release the hooks (A) of the lock cable protector (B) from the door, then remove the latch (C) with the protector through the hole in the door. Take care not to bend the outer handle rod (D), cylinder rod (E), lock cable (F), and inner handle cable (G).

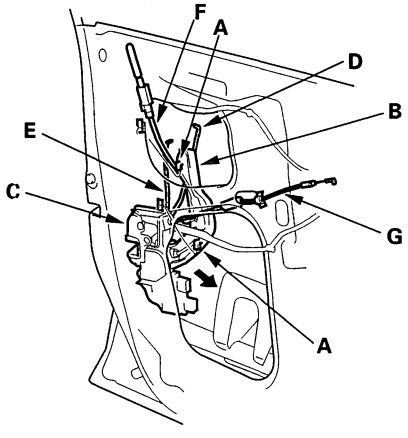

7. Remove the lock cable protector (A) from the latch protector (B) by releasing the hook (C).

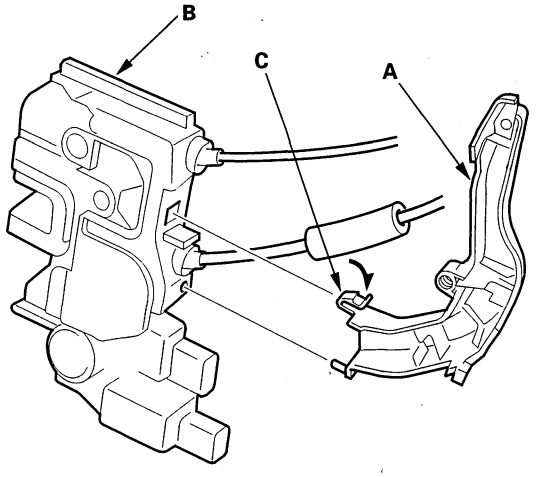

8. Install the latch in the reverse order of removal, and note these items:

- If equipped, make sure the actuator connectors are plugged in properly and each rod is connected securely.
- Make sure the door locks and opens properly.
- When reinstalling the door panel, make sure the plastic cover is installed properly and sealed around its outside perimeter to seal out water.
- Driver's: Perform the power window control unit reset procedure (see page 22-232).

BACK

Protected by AR

Front Door Glass and Regulator Replacement

NOTE: Put on gloves to protect your hands.

1. Remove the door panel, 2-door (see page 20-9), 4-door (see page 20-10).
2. 4-door: Remove the screws, then remove the panel bracket (A).

Fastener Locations

▶ : Screw, 2

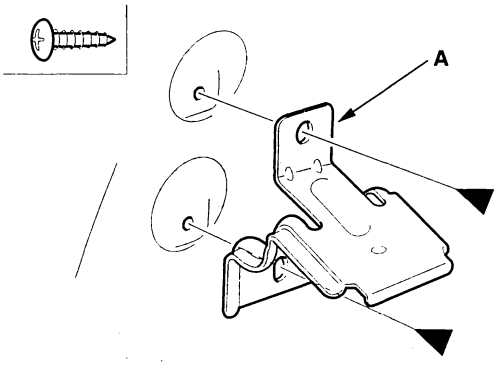

3. Remove the plastic cover, 2-door (see page 20-3), 4-door (see page 20-5).
4. Carefully raise the glass (A) until you can see the bolts, then remove them. Carefully pull the glass out through the window slot. Take care not to drop the glass inside the door.

2-door

Fastener Locations

▶ : Bolt, 2

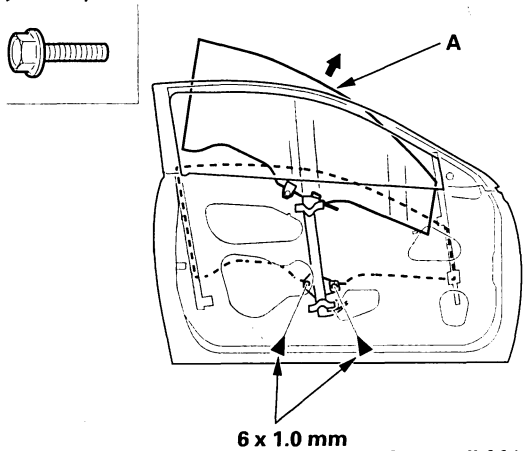

4-door

Fastener Locations

▶ : Bolt, 2

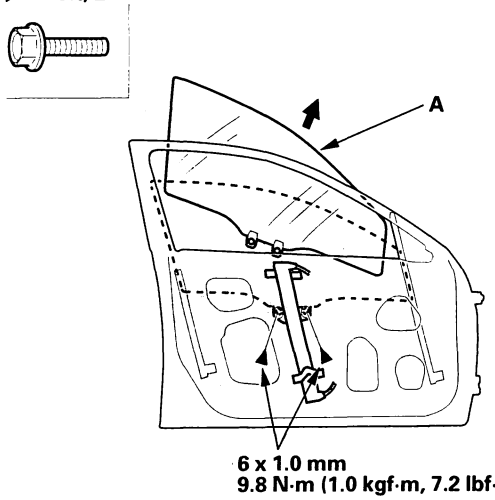

5. Disconnect the connector (A) from the regulator (B).

2-door

Fastener Locations

C ▶ : Bolt, 4 D ▶ : Bolt, 3

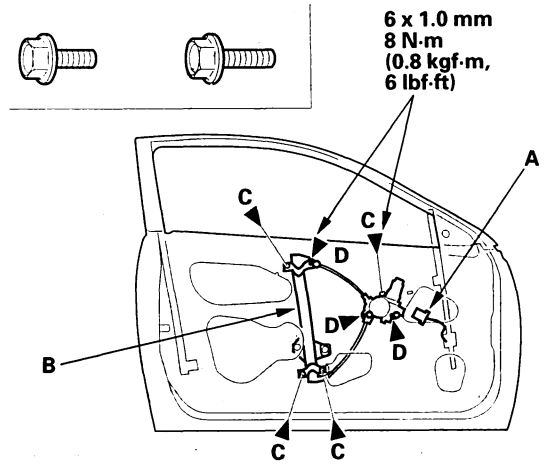

(cont'd)

Protected by AR

Front Door Glass and Regulator Replacement (cont'd)

4-door

Fastener Locations

C▶: Bolt, 4 D▶: Bolt, 3

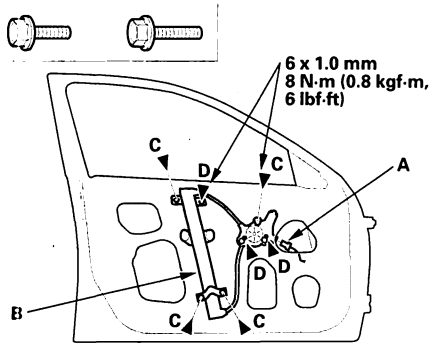

6. Remove the bolts (C), and loosen the bolts (D), then remove the regulator through the hole in the door.

7. Apply multipurpose grease to all the sliding surfaces of the regulator (A) where shown.

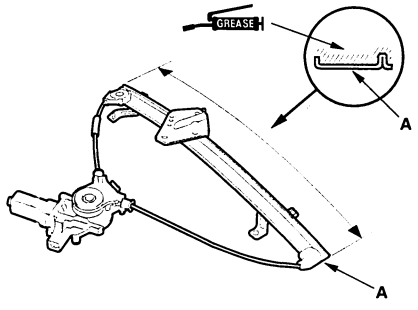

8. Install the glass and regulator in the reverse order of removal, and note these items:

- Roll the glass up and down to see if it moves freely without binding.
- Make sure that there is no clearance between the glass and glass run channel when the glass is closed.
- Adjust the position of the glass as necessary (see page 20-35).
- Check for water leaks (see step 7 on page 20-36).
- Test-drive and check for wind noise and rattles.
- When reinstalling the door panel, make sure the plastic cover is installed properly and sealed around its outside perimeter to seal out water.
- Make sure the power door locks, windows, and power mirror operate properly.
- Driver's: Perform the power window control unit reset procedure (see page 22-232).

Door Sash Trim Replacement

2-door

NOTE: Take care not to scratch the door.

1. Lower the glass fully.

2. Remove the mirror (see page 20-41).

3. Slide the door glass outer weatherstrip (A) forward to release the hook (B) on bottom of the door sash trim (C) from under the rear end of the weatherstrip.

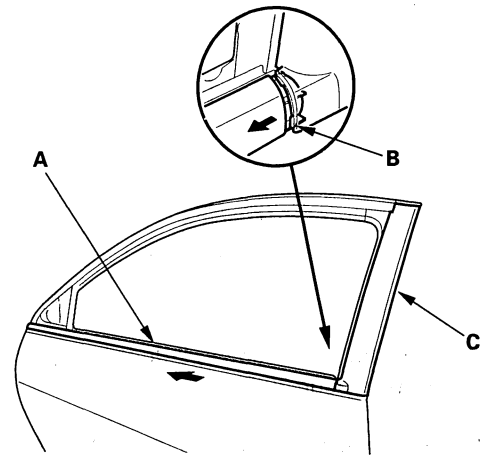

4. Pull back the door weatherstrip (A) at the rear upper corner, and pull the glass run channel (B) away as needed, then remove the screws.

Fastener Locations

▶: Screw, 2

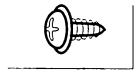

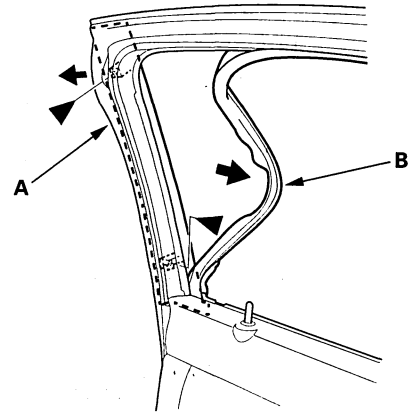

BACK

Protected by AR

5. Pull up the door sash trim (A) to release the hooks (B) from the holes in the sash, then remove the trim.

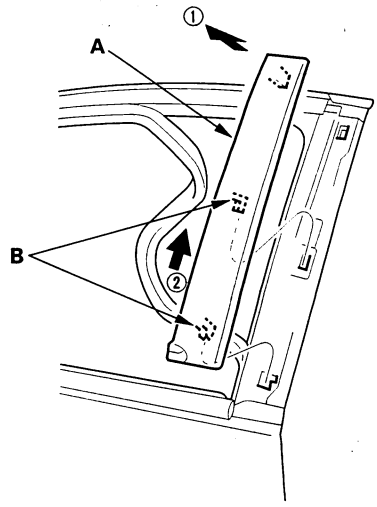

6. Install the trim in the reverse order of removal.

Front Door Glass Outer Weatherstrip Replacement

Special Tools Required
KTC trim tool set SOJATP2014

NOTE:
- If you remove the door glass outer weatherstrip, replace it with a new one because it will bend.
- Put on gloves to protect your hands.
- Take care not to scratch the door.
- Use the appropriate tool from the KTC trim tool set to avoid damage when prying components.

1. Remove these items:
   - Door panel, 2-door (see page 20-9), 4-door (see page 20-10)
   - Mirror (see page 20-41)
   - Door sash trim, 2-door (see page 20-20)

2. 4-door: Remove the screw from the rear edge of the door.

Fastener Location

▶ : Screw, 1

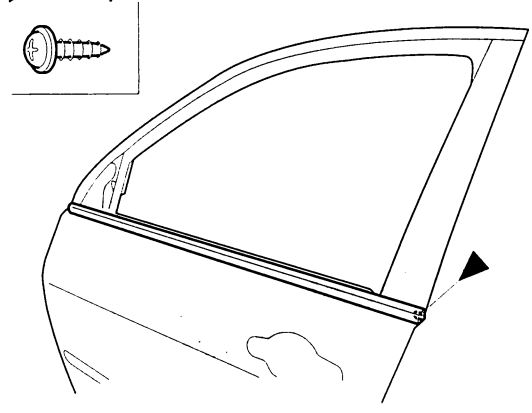

(cont'd)

Protected by AR

Front Door Glass Outer Weatherstrip Replacement (cont'd)

3. Starting at the rear, pull the door glass outer weatherstrip (A) up at each portion where the inner molding (B) catches the inside edge of the window slot.

2-door

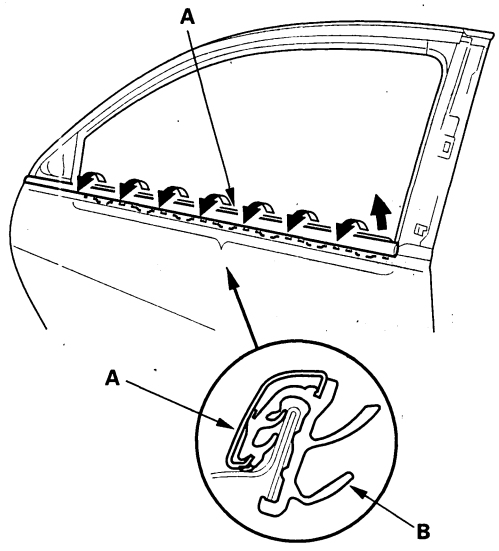

4-door

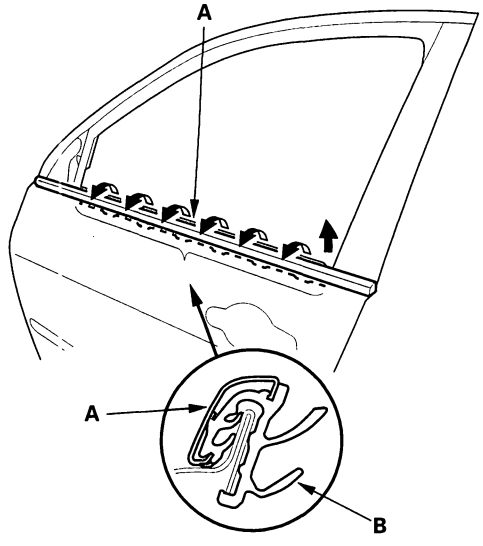

4. Pull the rear of the glass outer weatherstrip (A) away from the door, then release the front clip (B) from the mounting hole in the door. If necessary, pry the clip, then remove the weatherstrip.

Fastener Location

B ▷ : Clip, 1



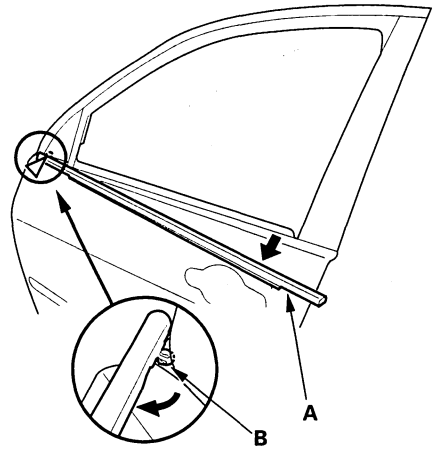

5. Install new weatherstrip in the reverse order of removal, and perform the power window control unit reset procedure (driver's) (see page 22-232).

BACK

Protected by AR

Front Door Outer Molding Replacement

Special Tools Required
KTC trim tool set SOJATP2014

NOTE:
- If you remove the door outer molding, replace it with a new one because it will bend during removal.
- Put on gloves to protect your hands.
- Take care not to scratch the door.
- Use the appropriate tool from the KTC trim tool set to avoid damage when prying components.

1. Remove these items:
   - Mirror (see page 20-41)
   - Door sash trim, 2-door (see page 20-20)

2. Remove the door outer molding (A).
   –1 4-door: Pry the rear clip with a trim tool.
   –2 While removing the upper edge of the door outer molding from the edge of the sash, cut the double-sided adhesive tapes (B) with a utility knife, then remove the molding.

'03 model 2-door

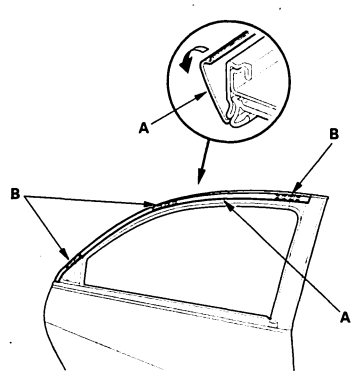

'04-06 models 2-door

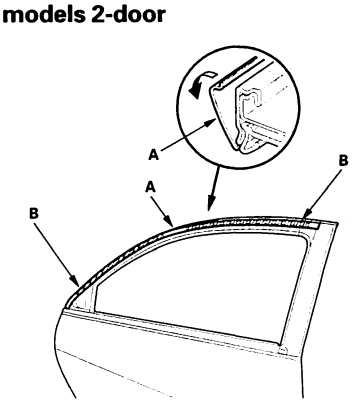

'03 model 4-door

Fastener Location
▷: Clip, 1

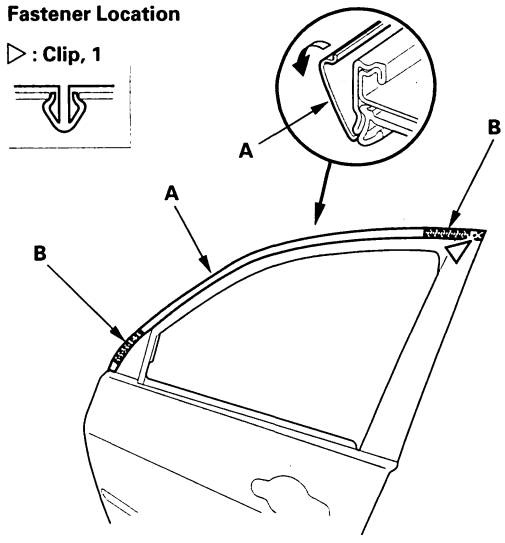

'04-06 models 4-door

Fastener Location
▷: Clip, 1

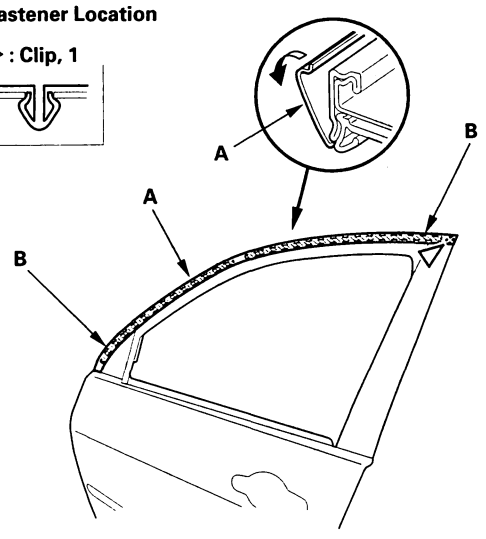

3. Scrape off the remaining double-sided adhesive tape from the sash, then clean the sash surface with a sponge dampened in alcohol.

4. Install new door outer molding in the reverse order of removal, and note these items:
   - Push the clip and the adhesive portions into place securely.
   - Make sure the upper and lower sides of the molding are catching the edges of the sash properly.

Protected by AR

Front Door Weatherstrip Replacement

NOTE:
- Take care not to scratch the door.
- Use a clip remover to remove the clips.

1. At the A-pillar, remove the detent rod mounting bolt (A).

2-door

Fastener Locations

A▶: Bolt, 1 B▷: Clip, 34 C▷: Clip, 1

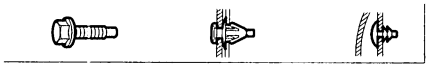

From outside

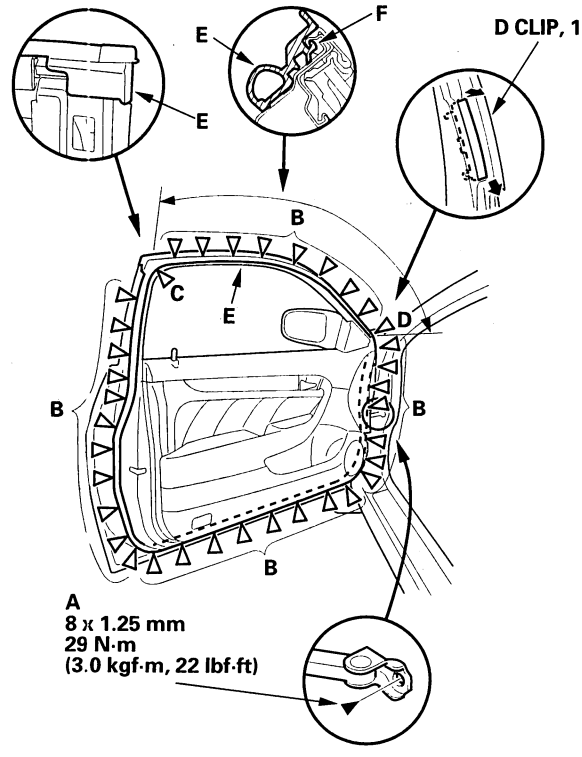

4-door

Fastener Locations

A▶: Bolt, 1 B▷: Clip, 30

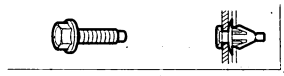

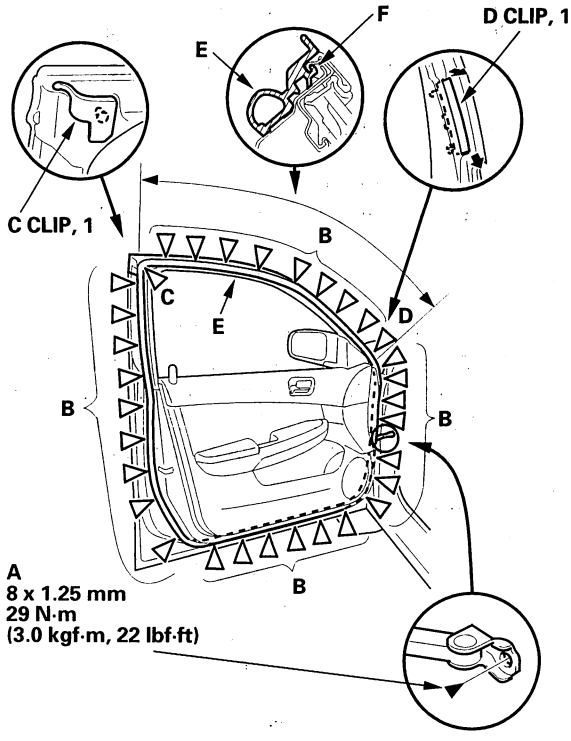

2. Detach the clips (B, C, D), then remove the door weatherstrip (E).

3. Install the weatherstrip in the reverse order of removal, and note these items:

- Check the clips for damage or stress-whitening, and replace them with new ones.
- Make sure the weatherstrip is installed in the holder (F) securely.
- Apply medium strength liquid thread lock to detent rod mounting bolt before installation.
- Test-drive and check for wind noise.

BACK

Protected by AR

Rear Door Panel Removal/Installation

Special Tools Required
- KTC trim tool set SOJATP2014
- Trim pad remover, Snap-on A 177A or equivalent, commercially available

4-door

NOTE: Use the appropriate tool from the KTC trim tool set to avoid damage when prying components.

1. Lower the glass fully.

2. Using a trim tool, pry out on the rear portion of the cover (A) to release the hooks (B, C), then remove the cover and the screws securing the inner handle (D).

Fastener Locations

▶ : Screw, 2

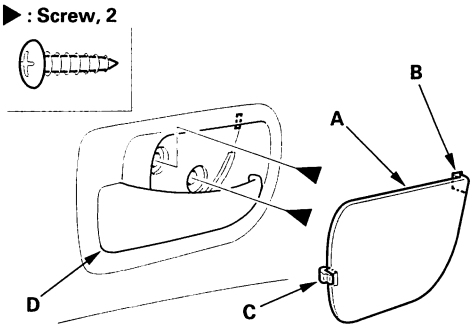

3. Remove the switch panel (A).

   –1 Pry up on the rear edge of the switch panel with a trim tool to release the rear clip.
   –2 Pull out along the edge of the panel to release the hooks (B) and clip.
   –3 Disconnect the power window switch connector (C).

Fastener Locations

▷ : Clip, 2

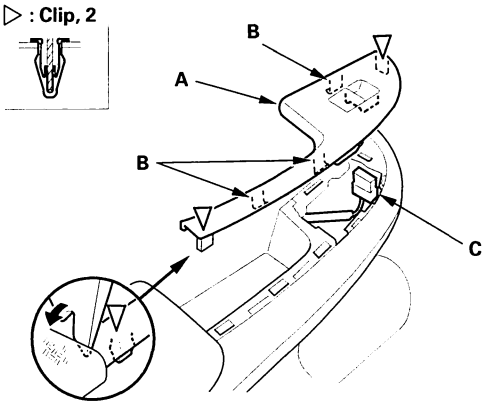

4. Remove the screw from under the pull pocket cap (A).

Fastener Location

▶ : Screw, 1

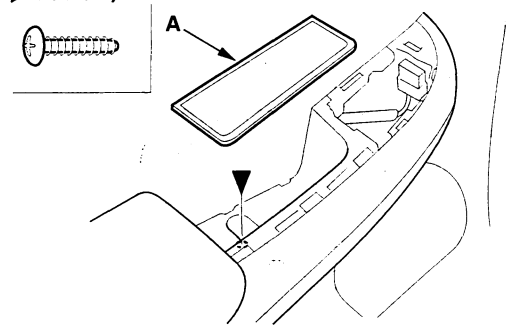

5. Remove the door panel (A) with as little bending as possible to avoid creasing or breaking it.

   –1 Start at the bottom edge of the door panel, release the clips that are just above the marks (B) on the edge of the panel with a commercially available trim pad remover.
   –2 Detach the upper clips.
   –3 Starting at the front, pull the door panel upward and over the lock knob (C).

   NOTE: The inner handle cable (D) is connected to the door panel. Do not pull the door panel up too far, or the inner handle cable will be damaged.

Fastener Locations

▷ : Clip, 7

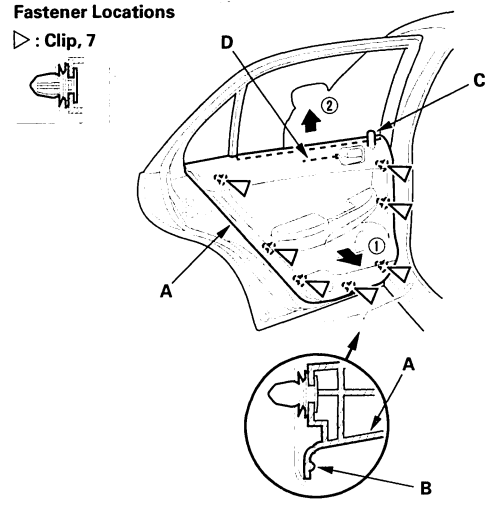

(cont'd)

Protected by AR

Rear Door Panel Removal/Installation (cont'd)

6. While holding the door panel away from the door, disconnect the inner handle cable (A), then remove the door panel. If necessary, remove the inner handle (B) by releasing the hooks (C, D).

Back view

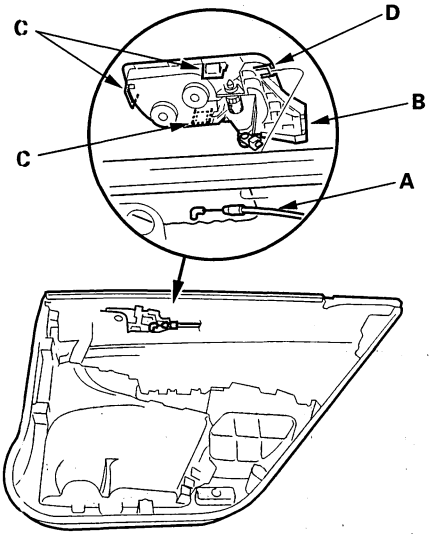

7. If necessary, remove the door glass inner weatherstrip (A) from the door panel (B).

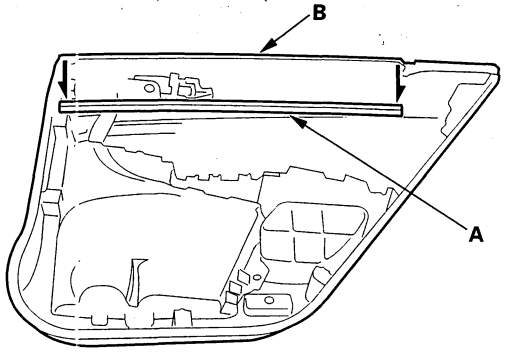

8. Install the panel in the reverse order of removal, and note these items:

- Check the clips for damage or stress-whitening, and replace them with new ones.
- Make sure the connector is plugged in properly and the cable is connected securely.
- If equipped, make sure the window and power door lock operate properly.

BACK

Protected by AR

Rear Door Outer Handle Replacement

4-door

NOTE: Put on gloves to protect your hands.

1. Remove these items:
   - Door panel (see page 20-25)
   - Plastic cover, as necessary (see page 20-7)
2. Raise the glass fully.
3. Remove the screws (A, B) securing the latch (C) and the cable protector (D).

Fastener Locations

A ▶ : Screw, 3 B ▶ : Screw, 2

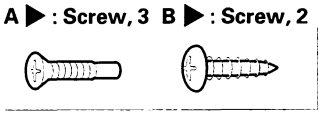

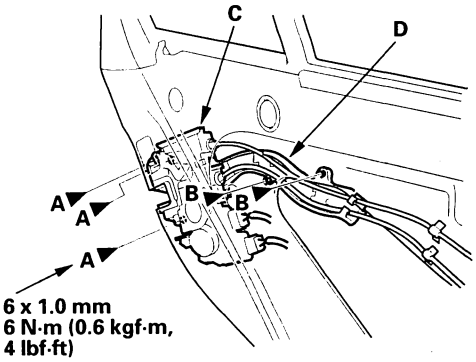

4. Detach the cable clips (A) and the hook (B) of the cable protector (C), then pull the latch (D) and the cable protector forward. Take care not to bend any of the cables.

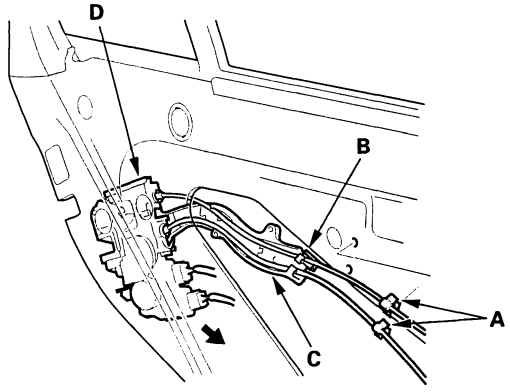

5. Remove the maintenance hole seal (A) and bolts, slide the protector (B) ('03 model) or the outer handle bracket (C) ('04-06 models) rearward, then remove it.

'03 model

Fastener Locations

▶ : Bolt, 2

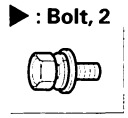

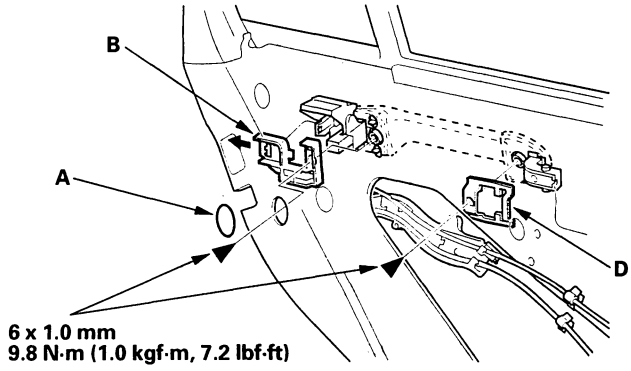

'04-06 models

Fastener Locations

▶ : Bolt, 2

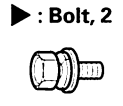

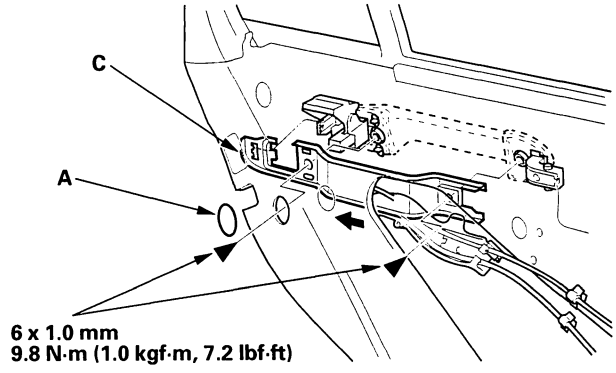

6. '03 model: Remove the spacer (D).

(cont'd)

Protected by AR

Rear Door Outer Handle Replacement (cont'd)

7. While pulling the outer handle (A), remove the handle from the holes in the door panel. Take care not to scratch the door.

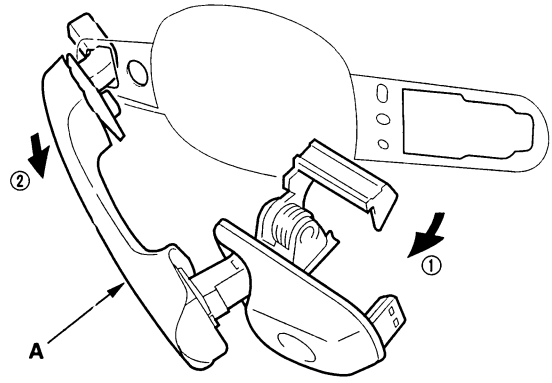

8. Install the handle in the reverse order of removal, and note these items:

   - Make sure the door locks and opens properly.
   - When reinstalling the door panel, make sure the plastic cover is installed properly and sealed around its outside perimeter to seal out water.

Rear Door Latch Replacement

4-door

NOTE: Put on gloves to protect your hands.

1. Remove the door panel (see page 20-25).
2. Raise the glass fully.
3. Remove the screw securing the lock knob (A).

Fastener Location

▶ : Screw, 1

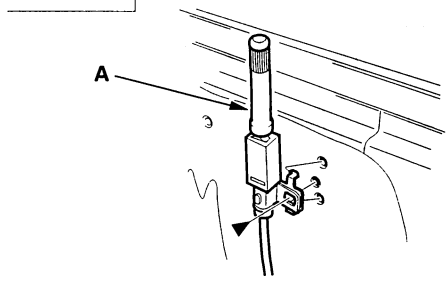

4. Remove the plastic cover, as needed (see page 20-7).
5. Disconnect the actuator connector(s) (A) (for some models). Remove the screws (B, C) securing the latch (D) and the cable protector (E).

Fastener Locations

B ▶ : Screw, 3 C ▶ : Screw, 2

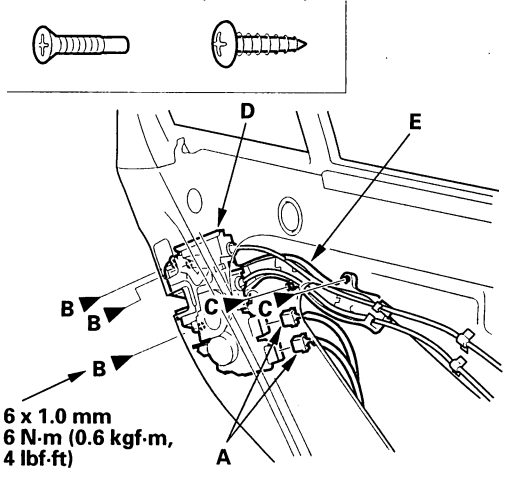

BACK

Protected by AR

6. Detach the cable clips (A) and the hook (B) of the cable protector (C), then remove the latch (D) with the cable protector through the hole in the door. Take care not to bend any of the cables.

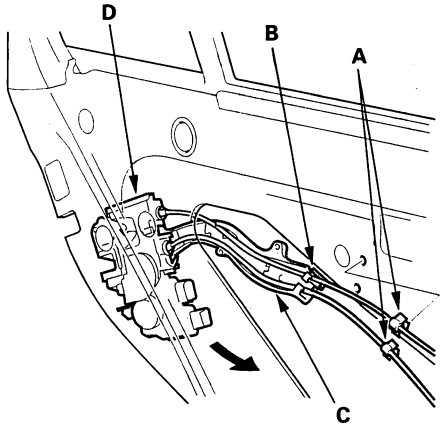

7. Remove the cable protector (A) from the latch protector (B) by releasing the hook (C).

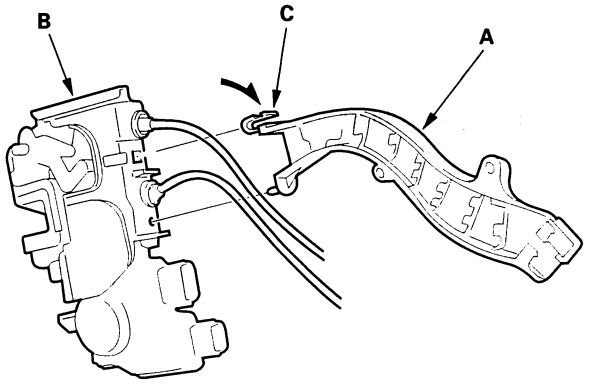

8. Install the latch in the reverse order of removal, and note these items:

- If equipped, make sure the actuator connector(s) are plugged in properly.
- Make sure the door locks and the window operates properly.
- When reinstalling the door panel, make sure the plastic cover is installed properly and sealed around its outside perimeter to seal out water.

Protected by AR

Rear Door Glass and Regulator Replacement

4-door

NOTE: Put on gloves to protect your hands.

1. Remove these items:
   - Door panel (see page 20-25)
   - Panel bracket (see step 2 on page 20-19)
   - Plastic cover, as necessary (see page 20-7)

2. Carefully move the glass (A) until you can see the bolts, then remove them. Remove the glass from the regulator (B), and carefully lower the glass. Take care not to drop the glass inside the door.

Fastener Locations

▶ : Bolt, 2

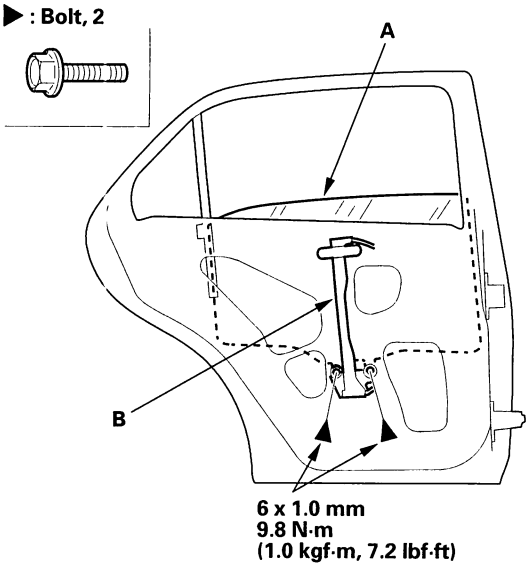

3. Pull the glass run channel (A) away as needed. Pull the door weatherstrip (B) away as needed, then remove the screw (C). Remove the bolt (D) securing the center channel (E).

Fastener Locations

C ▶ : Screw, 1 D ▶ : Bolt, 1

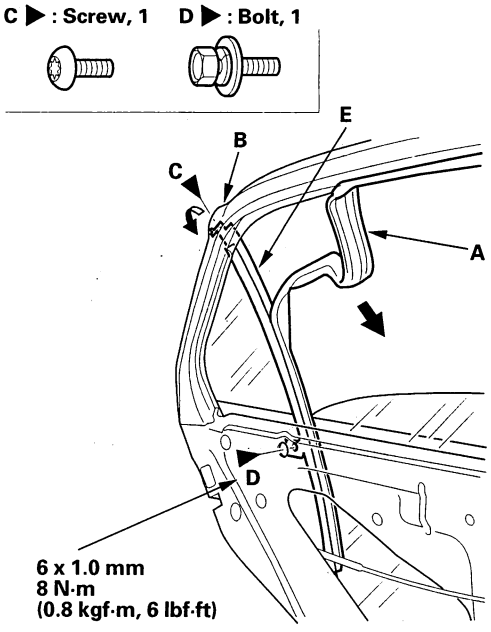

BACK

Protected by AR

4. Pull the upper portion of the center channel (A) forward to remove it from the door quarter glass seal (B), then pull up and remove the center channel out through the window slot. Take care not to damage the outer weatherstrip (C).

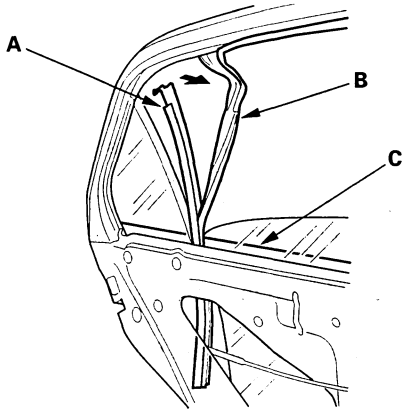

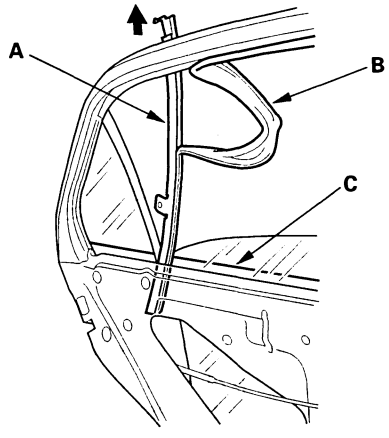

5. Remove the quarter glass (A). Take care not to damage the outer weatherstrip (B).

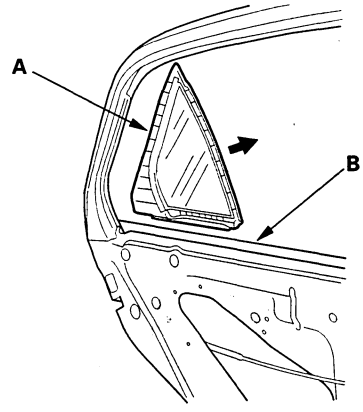

6. Carefully remove the glass (A) out through the window slot. Take care not to drop the glass inside the door.

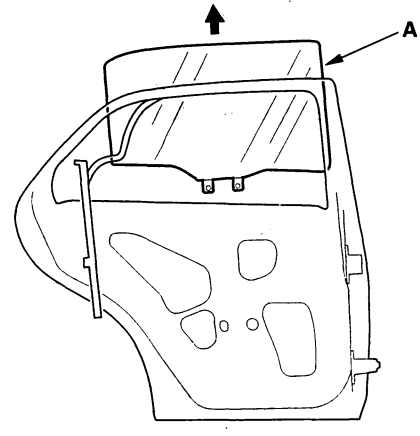

(cont'd)

Protected by AR

Rear Door Glass and Regulator Replacement (cont'd)

7. Disconnect the connector (A) from the regulator (B).

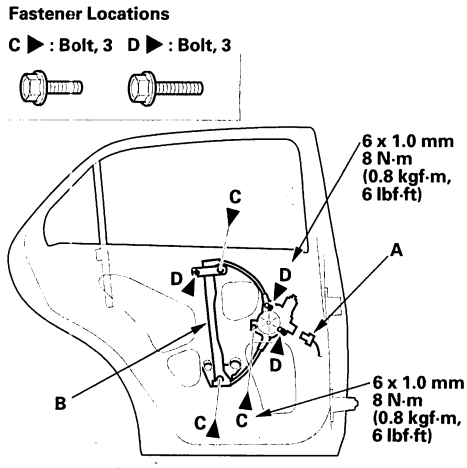

8. Remove the bolts (C), and loosen the bolts (D), then remove the regulator through the hole in the door.

9. Apply multipurpose grease to all the sliding surfaces of the regulator (A) where shown.

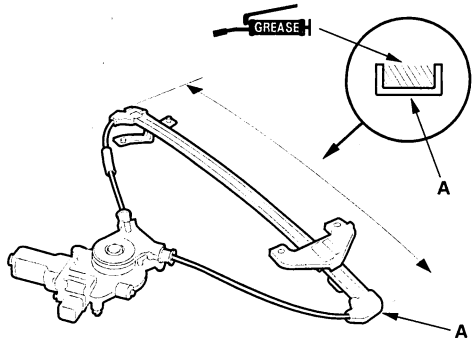

10. Install the glass and regulator in the reverse order of removal, and note these items:

- Roll the glass up and down to see if it moves freely without binding.
- Make sure that there is no clearance between the glass and glass run channel when the glass is closed.
- Adjust the position of the glass as necessary (see page 20-35).
- Check for water leaks (see step 7 on page 20-36).
- Test-drive and check for wind noise and rattles.
- When reinstalling the door panel, make sure the plastic cover is installed properly and sealed around its perimeter.

Rear Door Glass Outer Weatherstrip Replacement

Special Tools Required
KTC trim tool set SOJATP2014

4-door

NOTE:
- Once you remove the door glass outer weatherstrip, replace it with a new one because it will bend.
- Put on gloves to protect your hands.
- Take care not to scratch the door.
- Use the appropriate tool from the KTC trim tool set to avoid damage when prying components.

1. Remove the door panel (see page 20-25).

2. Remove the screw from the front edge of the door.

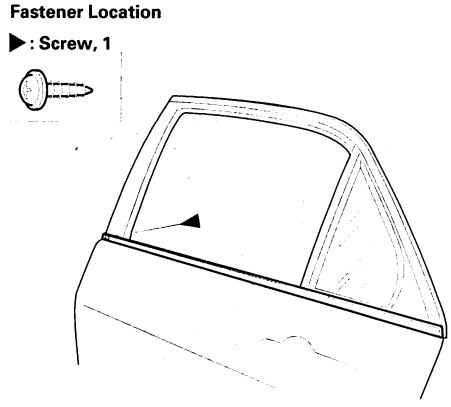

3. Starting at the front, pull the door glass outer weatherstrip (A) up at each portion where the inner molding (B) catches the inside edge of the window slot.

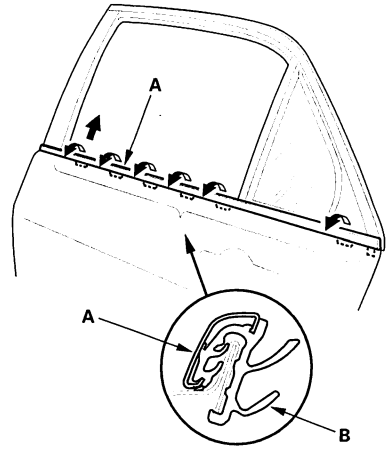

BACK

Protected by AR

4. Detach the rear clip (A), then remove the door glass outer weatherstrip (B).

Fastener Location
A ▷: Clip, 1

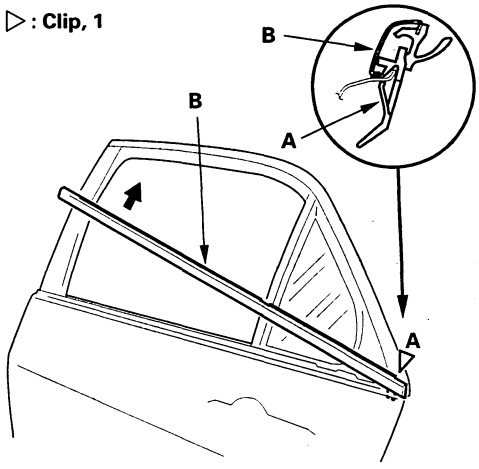

5. Install a new weatherstrip in the reverse order of removal.

Rear Door Outer Molding Replacement

Special Tools Required
KTC trim tool set SOJATP2014

4-door

NOTE:
- If you remove the door outer molding, replace it with a new one because it will bend during removal.
- Put on gloves to protect your hands.
- Take care not to scratch the door.
- Use the appropriate tool from the KTC trim tool set to avoid damage when prying components.

1. Pry the front clip (A) with a trim tool.

'03 model

Fastener Location
A ▷: Clip, 1

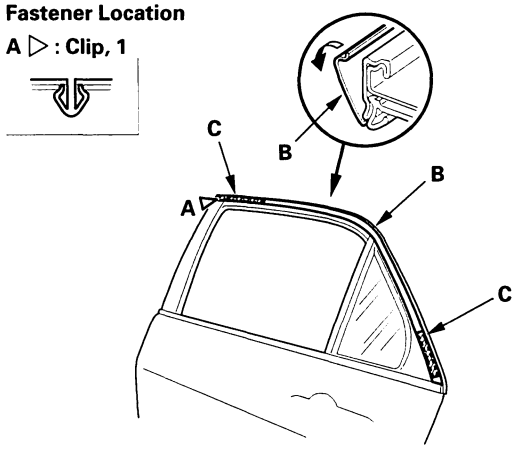

'04-06 models

Fastener Location
A ▷: Clip, 1

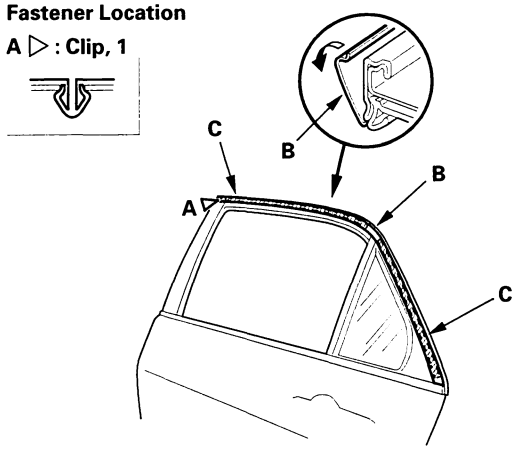

(cont'd)

Protected by AR

Rear Door Outer Molding Replacement (cont'd)

2. While removing the upper edge of the door outer molding (B) from the edge of the sash, cut the double-sided adhesive tapes (C) with a utility knife, then remove the molding.

3. Scrape off the remaining double-sided adhesive tape from the sash, then clean the sash surface with a sponge dampened in alcohol.

4. Install new door outer molding in the reverse order of removal, and note these items.

   - Push the clip and the adhesive portions into place securely.
   - Make sure the upper and lower sides of the molding are catching the edges of the sash properly.

Rear Door Weatherstrip Replacement

4-door

NOTE:
- Take care not to scratch the door.
- Use a clip remover to remove the clips.

1. At the B-pillar, remove the detent rod mounting bolt (A).

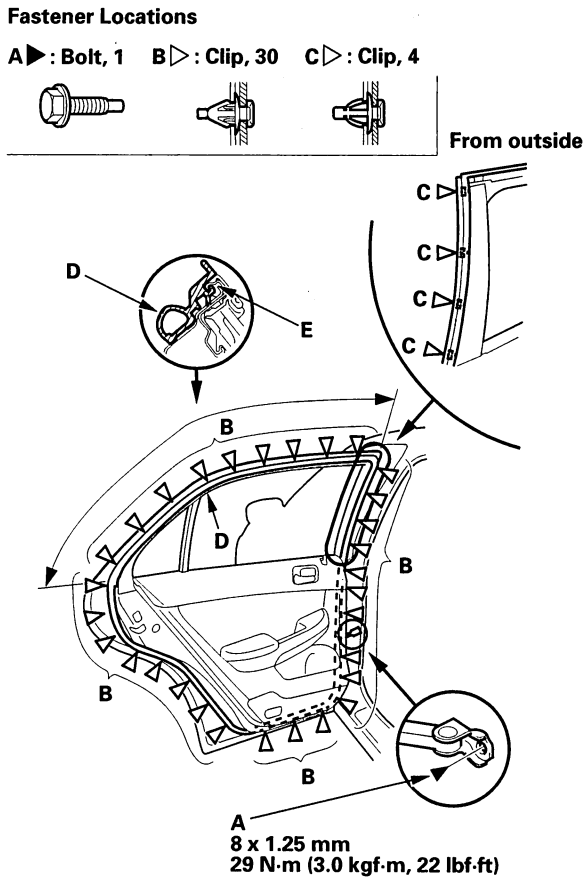

2. Detach the clips (B, C), then remove the door weatherstrip (D).

3. Install the weatherstrip in the reverse order of removal, and note these items:

   - Check the clips for damage or stress-whitening, and replace them with new ones.
   - Make sure the weatherstrip is installed in the holder (E) securely.
   - Apply medium strength liquid thread lock to the detent rod mounting bolt before installation.
   - Test-drive and check for wind noise.

BACK

Protected by AR

Rear Door Hook Pin and Catch Replacement

4-door

1. With a T40 Torx bit, remove the door hook pin (A) from the door.

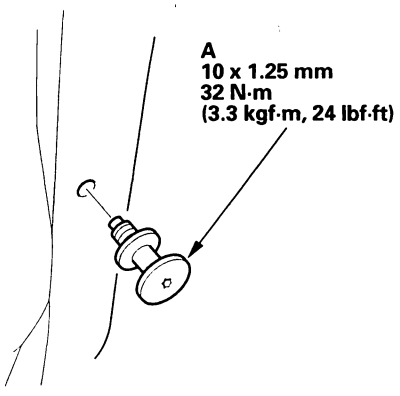

2. With a T40 Torx bit, remove the bolts, then remove the door catch (A) from the body.

Fastener Locations

▶: Bolt, 2

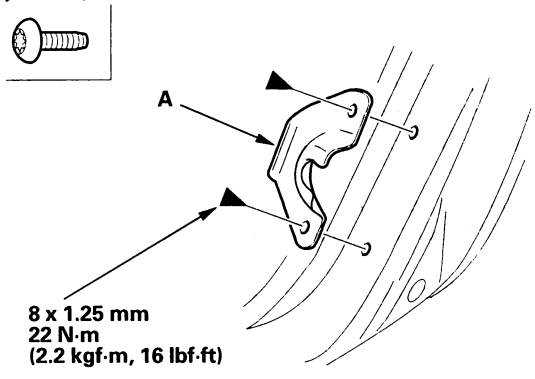

3. Install the hook pin and catch in the reverse order of removal, and apply medium strength liquid thread lock to the threads of the door hook pin.

Front and Rear Door Glass Adjustment

NOTE:
- Check the weatherstrips and glass run channel for damage or deterioration, and replace them if necessary.
- Wipe the run channel clean with a shop towel.
- Lubricate the run channel with Shin-Etsu silicone grease P/N 08798-9013.

1. Place the vehicle on a firm, level surface.

2. Remove these items:
   - Door panel, 2-door (see page 20-9), 4-door front door (see page 20-10), 4-door rear door (see page 20-25)
   - Plastic cover, 2-door (see page 20-3), 4-door front door (see page 20-5), 4-door rear door (see page 20-7)

3. Carefully move the glass (A) until you can see the glass mounting bolts (B), then loosen them.

2-door

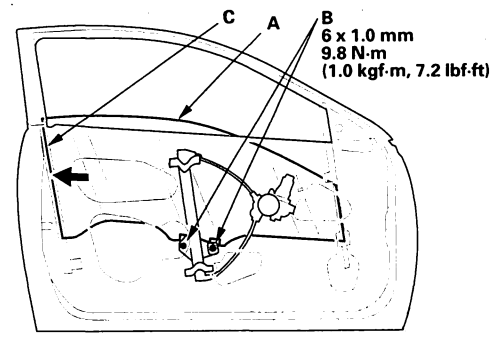

4-door front door

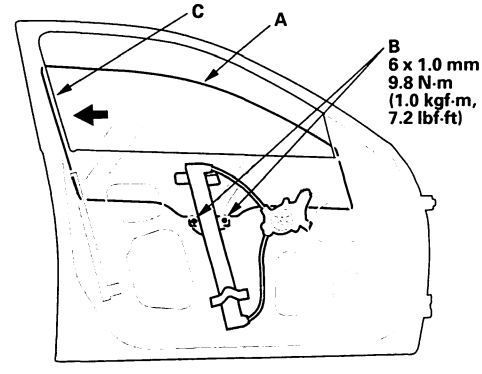

(cont'd)

Protected by AR

Front and Rear Door Glass Adjustment (cont'd)

4-door rear door

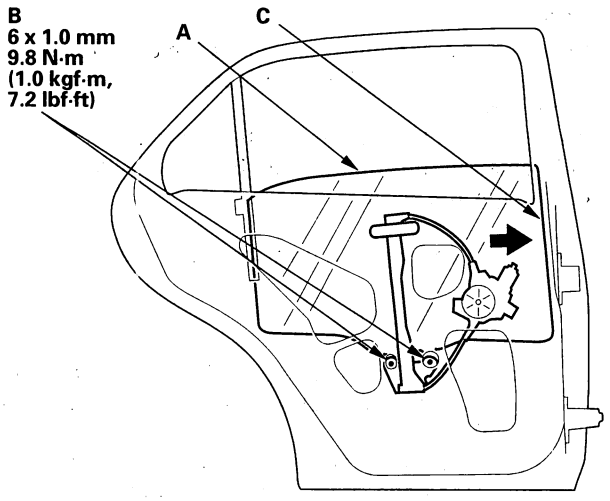

4. Push the glass against the channel (C), then tighten the glass mounting bolts.

5. Check that the glass moves smoothly.

6. Raise the glass fully, and check for gaps. Also check that the glass (A) contacts the glass run channel (B) evenly.

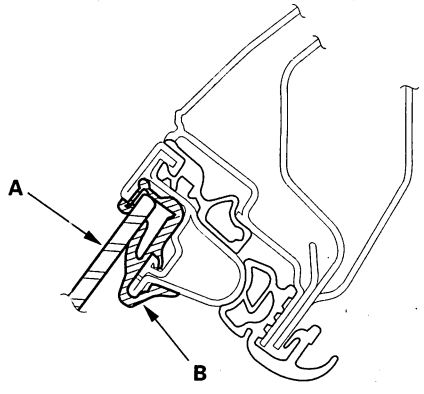

7. Check for water leaks. Run water over the roof and on the sealing area as shown, and note these items:

   - Use a 12 mm (1/2 in.) diameter hose (A).
   - Adjust the rate of water flow as shown (B).
   - Do not use a nozzle.
   - Hold the hose about 300 mm (12 in.) away from the door (C).

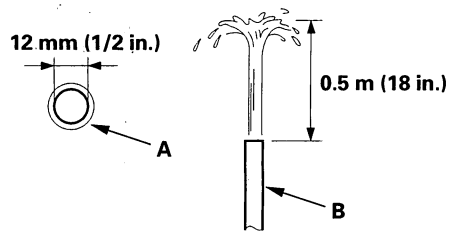

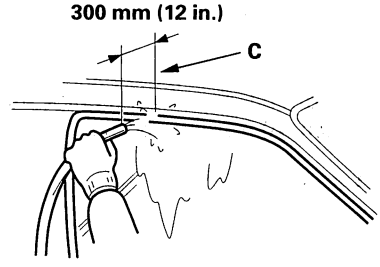

8. Attach the plastic cover, and install the door panel, 2-door (see page 20-9), 4-door front door (see page 20-10), 4-door rear door (see page 20-25).

9. Driver's: Perform the power window control unit reset procedure (see page 22-232).

10. Test-drive and check for wind noise.

BACK

Protected by AR

Front and Rear Door Position Adjustment

SRS components are located in this area. Review the SRS component locations (see page 23-17) and the precautions and procedures (see page 23-19) before performing repairs or service.

NOTE: Check for a flush fit with the body, then check for equal gaps between the front, rear, and bottom door edges and the body. Check that the door and body edges are parallel.

1. Place the vehicle on a firm, level surface when adjusting the doors.

2. Adjust at the hinges (A):

   - On the front door: Remove the front inner fender (see page 20-211) and front fender fairing (see page 20-213). Loosen the hinge mounting bolts (B) slightly, and move the door backward or forward, up or down as necessary to equalize the gaps. Place a shop towel (C) on the jack (D) to prevent damage when adjusting the door.
   - On the rear door: Remove the B-pillar lower trim, without side curtain airbags (see page 20-96), with side curtain airbags (see page 20-102) and remove the front seat belt and retractor (see page 23-5), and the plug seal from the body. Loosen the hinge mounting nuts (E) slightly, and move the door backward or forward, up or down as necessary to equalize the gaps. Place a shop towel on the jack to prevent damage when adjusting the door.

2-door and 4-door front door

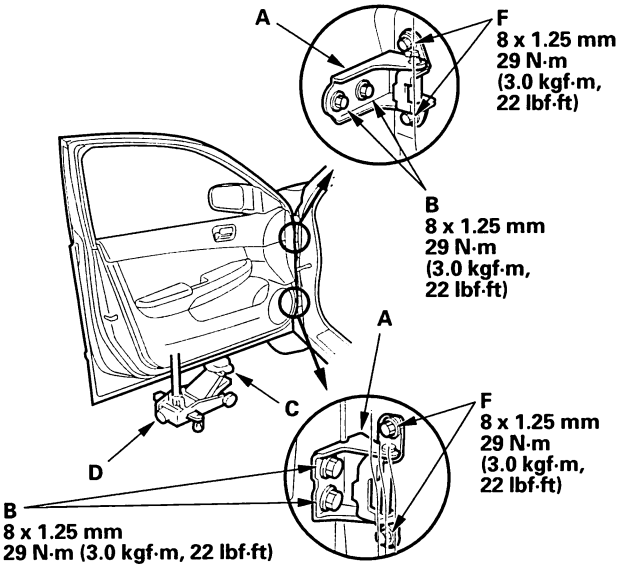

4-door rear door

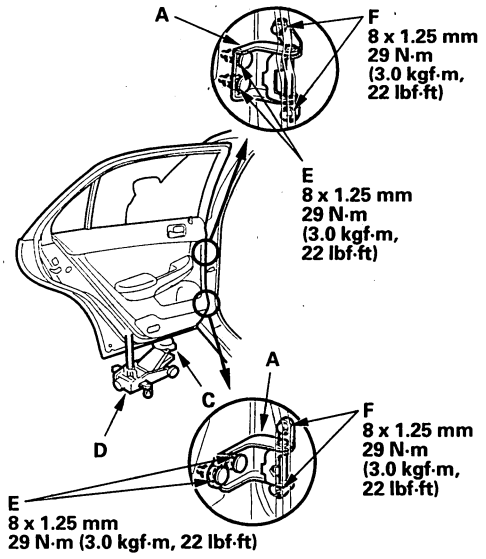

3. If necessary, replace the door mounting bolts (F) with the adjusting bolts (P/N 90102-SFA-305) made specifically for door adjustment, then adjust at the door: Loosen the adjusting bolts slightly, move the door in or out until it's flush with the body, and up or down as necessary to equalize the gaps.

4. Check that the door and body edges are parallel. If necessary, adjust the door cushions (A) to make the rear of the doors flush with the body.

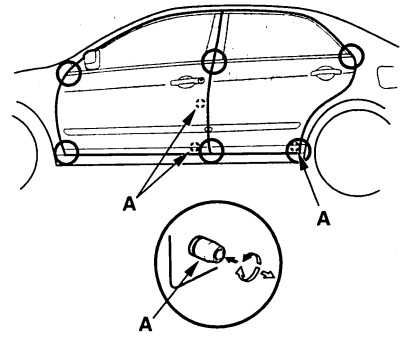

5. Apply touch-up paint to the hinge mounting bolts, and around the hinges.

6. Check for water leaks (see step 7 on page 20-36).

7. Test-drive and check for wind noise.

8. Reinstall all remaining removed parts.

BACK

Protected by AR

Front and Rear Door Striker Adjustment

Make sure the door latches securely without slamming it. If necessary, adjust the striker (A): The striker can be adjusted slightly up or down, and in or out.

1. Loosen the screws (B), then insert a shop towel (C) between the body and striker.

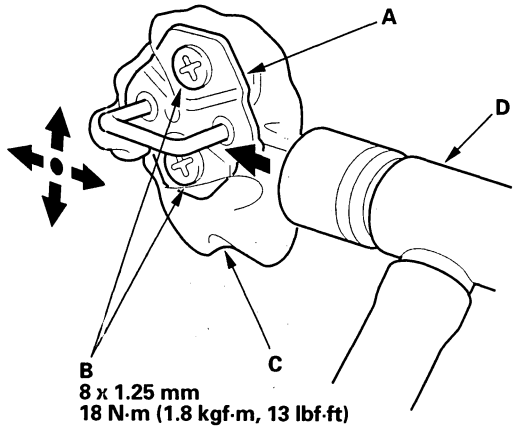

2. Lightly tighten the screws.
3. Wrap the striker with a shop towel, then adjust the striker by tapping it with a plastic hammer (D). Do not tap the striker too hard.
4. Loosen the screws, and remove the shop towel.
5. Lightly tighten the screws.
6. Hold the outer handle out, and push the door against the body to be sure the striker allows a flush fit. If the door latches properly, tighten the screws and recheck.

BACK

Protected by AR

Component Location Index

2-door and Japan-Produced 4-door

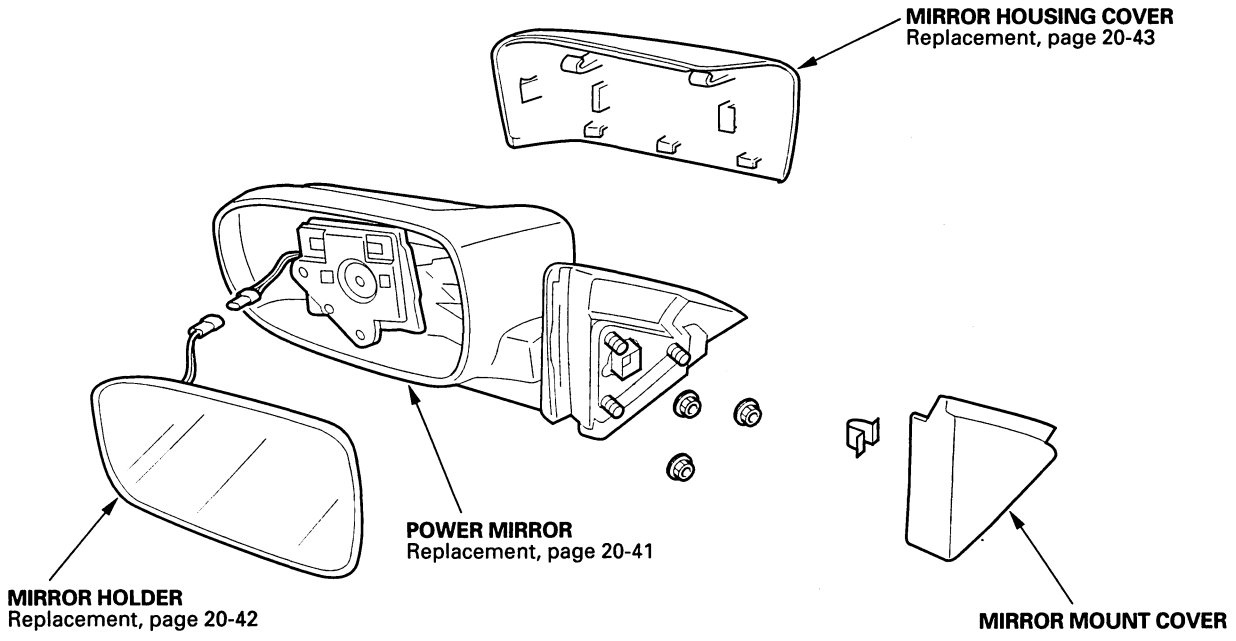

U.S.A-Produced 4-door

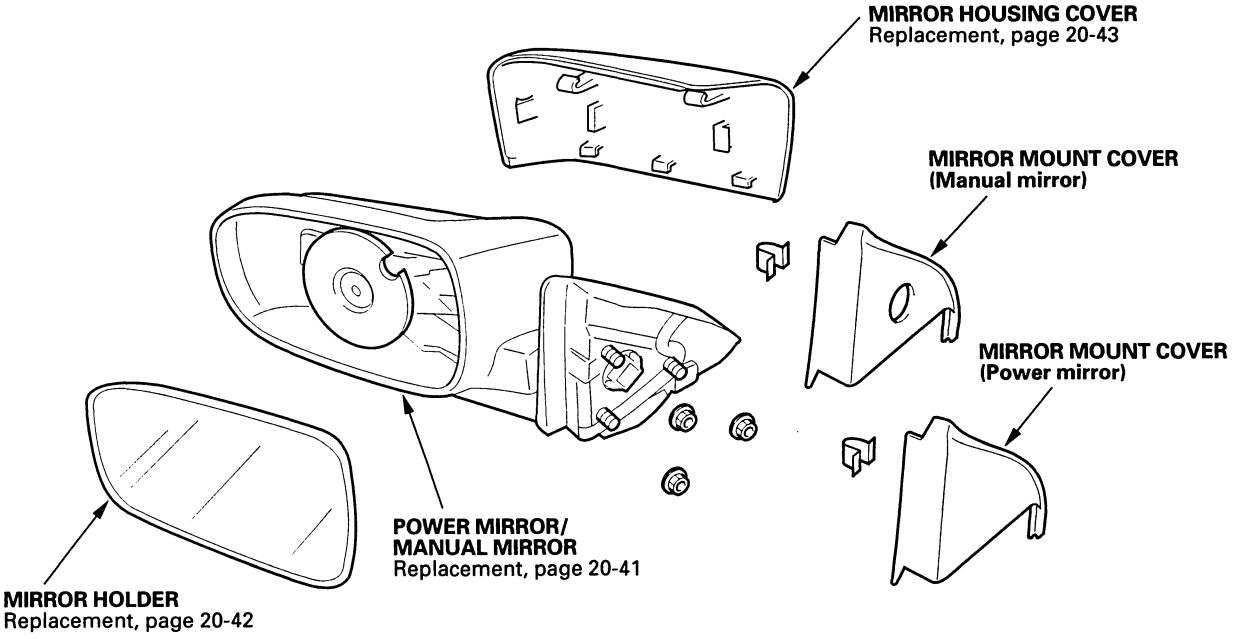

(cont'd)

Protected by AR

Component Location Index (cont'd)

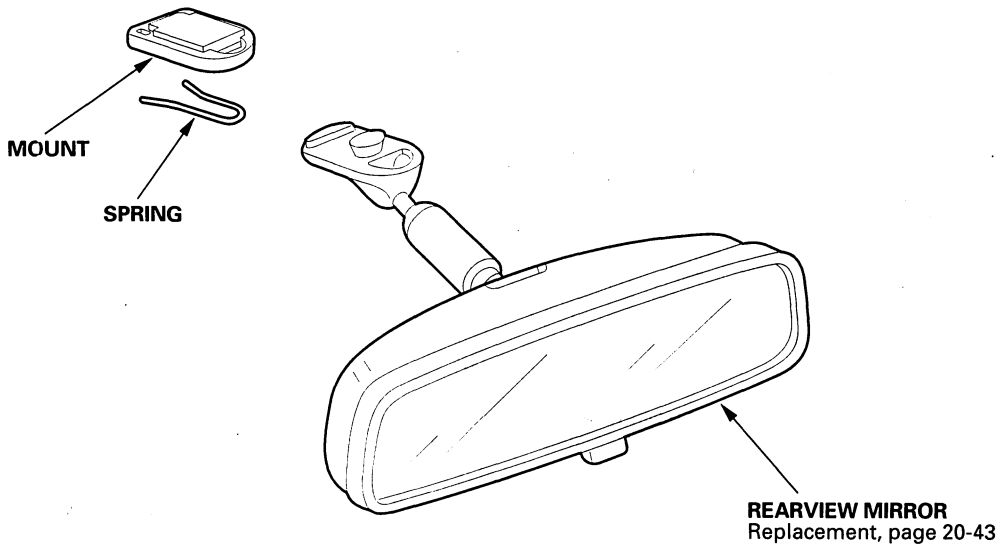

BACK

Protected by AR

Power Mirror/Manual Mirror Replacement

NOTE: The 4-door model is shown, the 2-door model is similar.

1. Lower the door glass fully.
2. Carefully pry out the mirror mount cover (A) by hand in the sequence shown.

Fastener Location

▷: Clip, 1

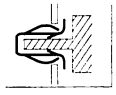

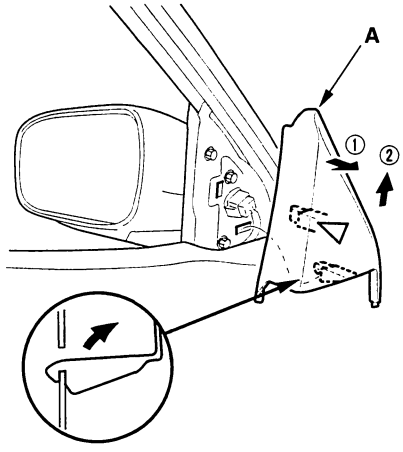

3. On power mirror models: Disconnect the connector (A).

Fastener Locations

●: Nut, 3

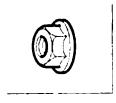

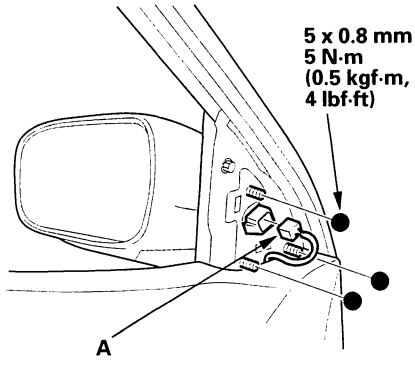

4. While holding the mirror, remove the nuts securing the mirror, and remove the mirror (manual mirror models).
5. On power mirror models: While holding the mirror, push in on the connector clip tabs (A), then push out to remove the mirror (B). Take care not to scratch the door.

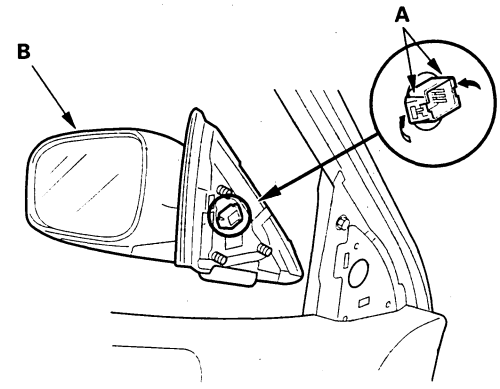

6. Install the mirror in the reverse order of removal, and make sure the connector is plugged in properly (power mirror models).

Protected by AR

Mirror Holder Replacement

2-door and Japan-Produced 4-door

1. Carefully insert a flat-tip screwdriver wrapped with a shop towel under the mirror holder (A) next to the lower clips (B), then pry out on the clip portions. Take care not to scratch the mirror.

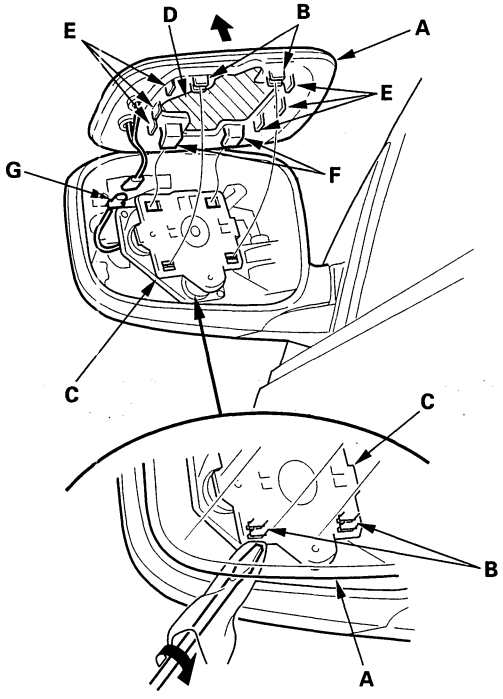

2. Separate the mirror holder from the actuator (C) by slowly pulling them apart while separating the adhesive portion (D) and releasing the hooks (E, F). If equipped, disconnect the mirror defogger connector (G).

3. If equipped, reconnect the mirror defogger connector.

4. Reattach the hooks of the mirror holder to the actuator, then position the mirror holder on the actuator. Carefully push on the clip portions of the mirror holder until the mirror holder locks into place.

5. Check the operation of the actuator.

U.S.A-Produced 4-door

1. Adjust the mirror fully to the inward position.

2. Insert a long, thin flat-tipped screwdriver along the ribs (A) on the mirror holder (B). Slide the tip of the screwdriver between the mirror holder and the actuator (C).

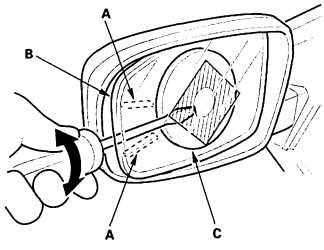

3. Quickly twist the screwdriver to separate the mirror holder from the mirror actuator.

4. Insert the screwdriver further under the mirror holder and twist it again.

   NOTE: Do not pry up on the mirror holder to separate the two parts, as this can cause either the mirror glass or actuator to break.

5. Separate the mirror holder (A) from the actuator (B) by slowly pulling them apart while separating the adhesive (C). If equipped, disconnect the mirror defogger connectors (D) from the heater pad terminals.

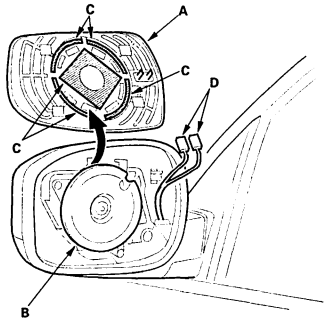

6. Remove any remaining adhesive from the actuator.

7. If equipped, reconnect the mirror defogger connectors.

8. Reattach the mirror holder to the actuator, then position the mirror holder on the actuator. Carefully push on the mirror holder until the mirror holder snaps into place.

9. Check the operation of the actuator.

BACK

Protected by AR

Mirror Housing Cover Replacement

1. Remove the mirror holder (see page 20-42).
2. From the mirror holder opening, release the hooks (A) of the mirror housing cover (B).

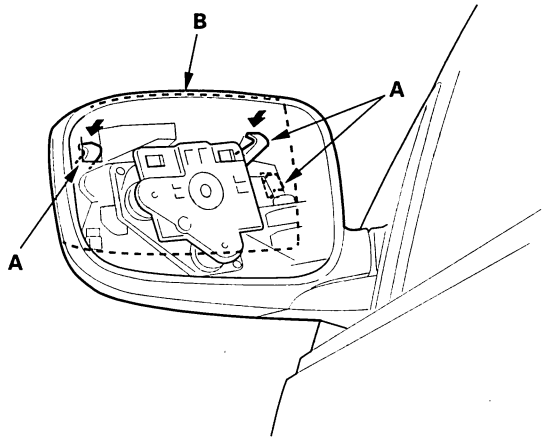

3. Release the hooks (A), then remove the mirror housing cover (B).

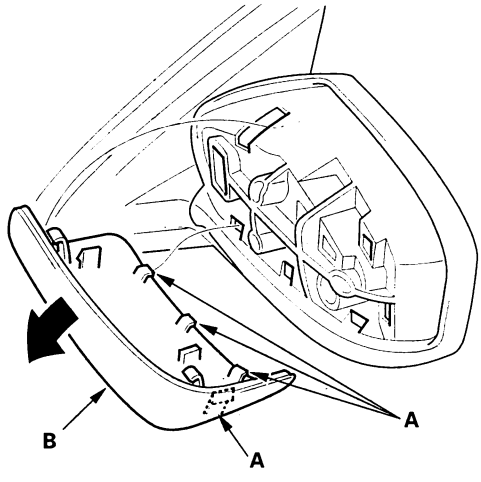

4. Install the mirror housing cover in the reverse order of removal.

Rearview Mirror Replacement

1. Turn the rearview mirror base (A) 90 °.

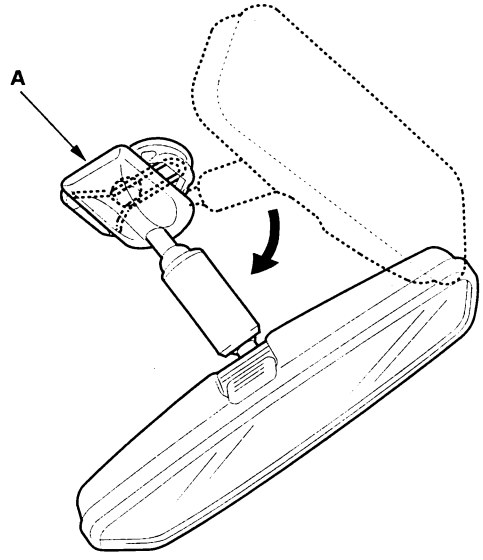

2. Slide the rearview mirror (A) down toward the bottom of the windshield to detach it from the spring (B) in the mount (C).

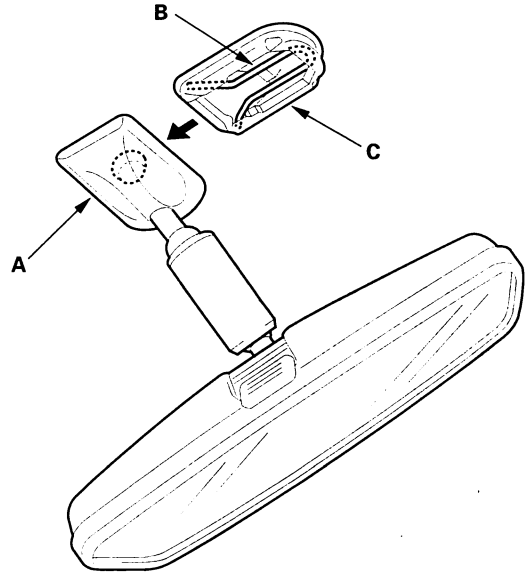

3. If necessary, remove the spring from the mount.
4. Install the rearview mirror in the reverse order of removal.

BACK

Protected by AR

Glass

Component Location Index

2-door

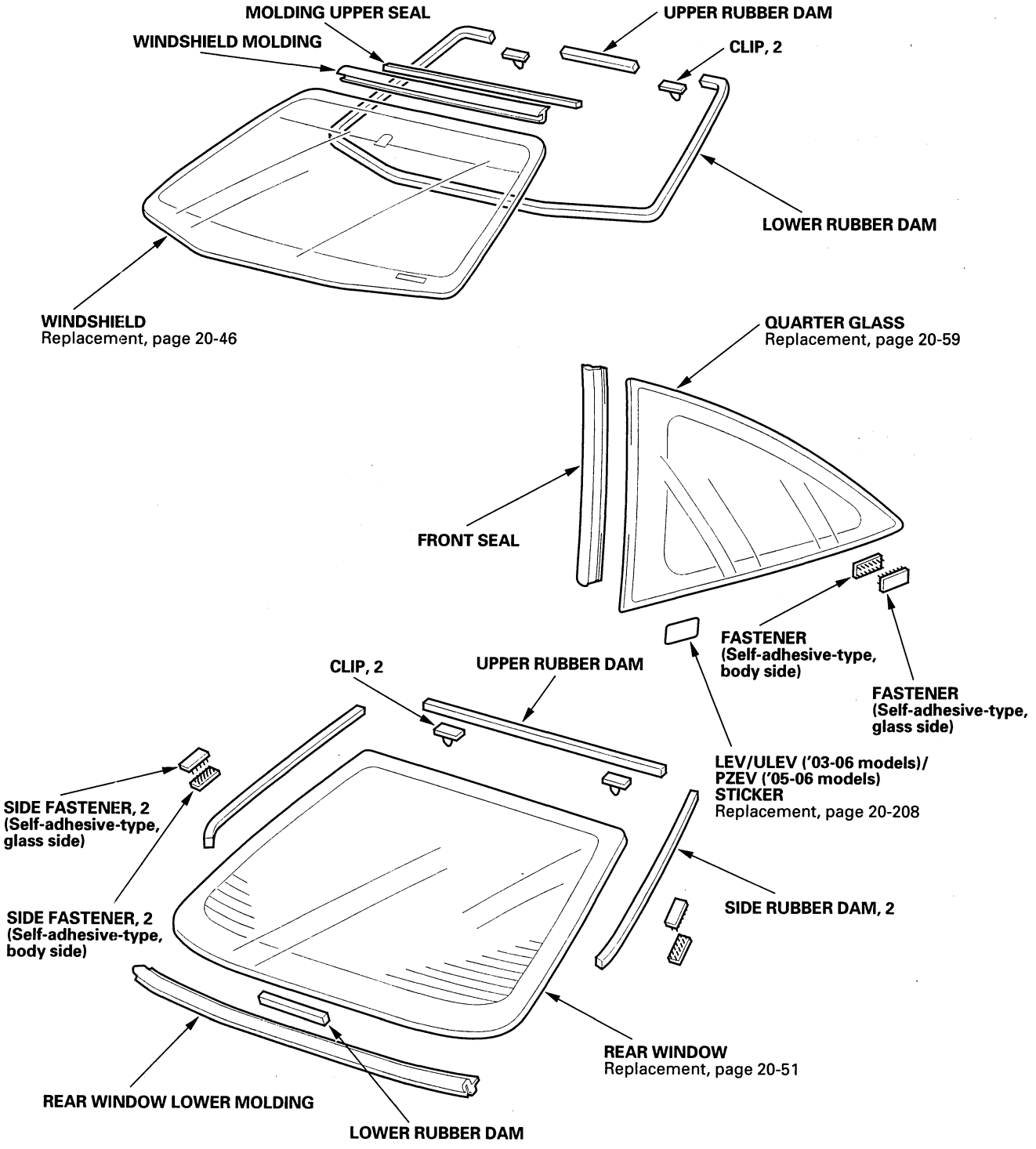

BACK

Protected by AR

4-door

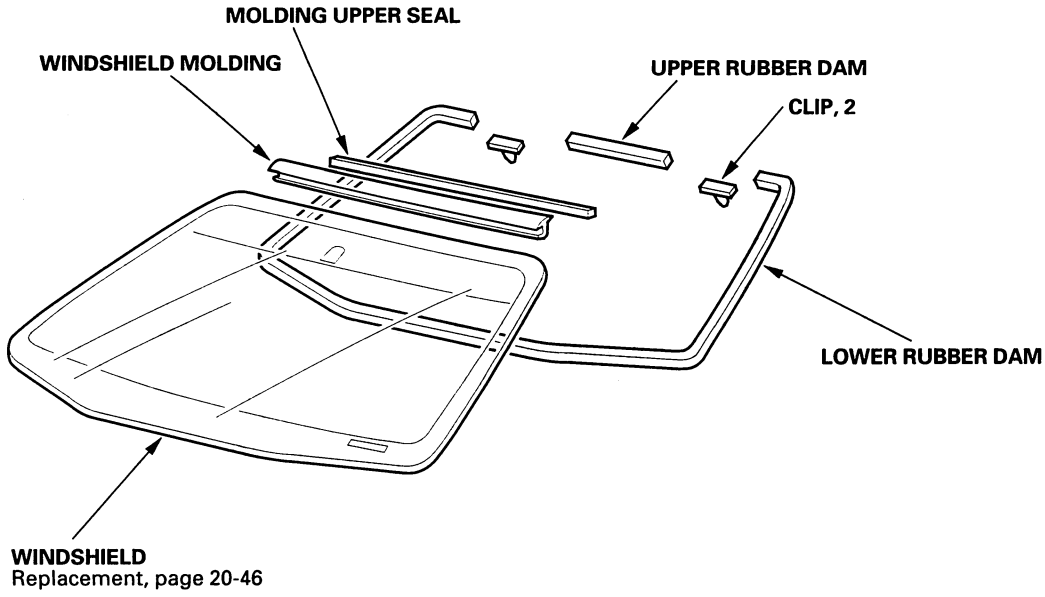

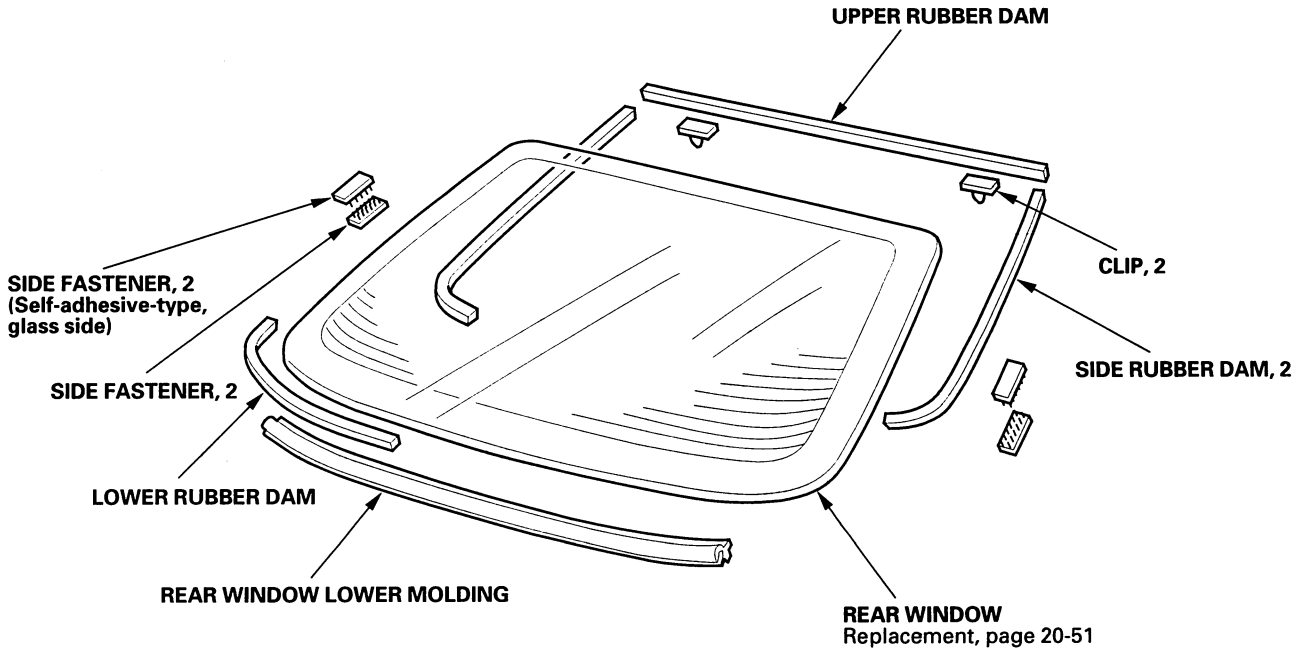

Protected by AR

Windshield Replacement

NOTE:
- Put on gloves to protect your hands.
- Wear eye protection while cutting the glass adhesive with piano wire.
- Use seat covers to avoid damaging the seat.

1. Remove these items:
   - Windshield wiper arms (see page 22-253)
   - Cowl covers (see page 20-199)
   - Rearview mirror (see page 20-43)
   - A-pillar trim, both sides, 2-door without side curtain airbags (see page 20-94), 2-door with side curtain airbags (see page 20-99), 4-door without side curtain airbags (see page 20-94), 4-door with side curtain airbags (see page 20-99)
   - Roof moldings (see page 20-200)

2. Remove the molding (A) from the upper edge of the windshield (B). If necessary, cut the molding with a utility knife.

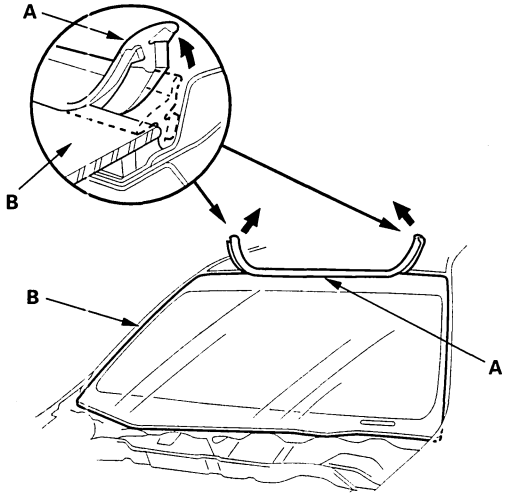

3. If the old windshield is to be reinstalled, make alignment marks across the glass and body with a grease pencil.

4. Pull down the front portion of the headliner (see page 20-117). Take care not to bend the headliner excessively, as you may crease or break it.

5. Apply protective tape along the edge of the dashboard and body. Using an awl, make a hole through the rubber dam and adhesive from inside the vehicle at the corner portion of the windshield. Push a piece of piano wire through the hole, and wrap each end around a piece of wood.

6. With a helper on the outside, pull the piano wire (A) back and forth in a sawing motion. Hold the piano wire as close to the windshield (B) as possible to prevent damage to the body and dashboard. Carefully cut through the rubber dam and adhesive (C) around the entire windshield.

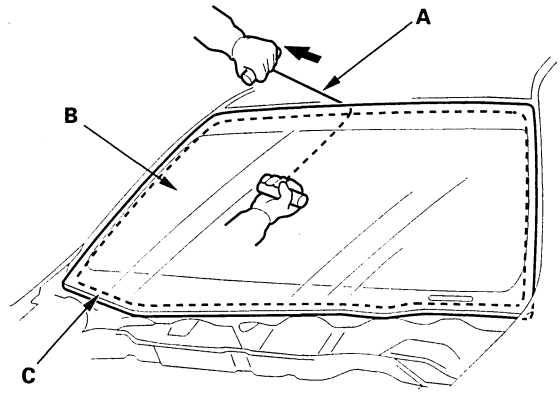

Cutting positions

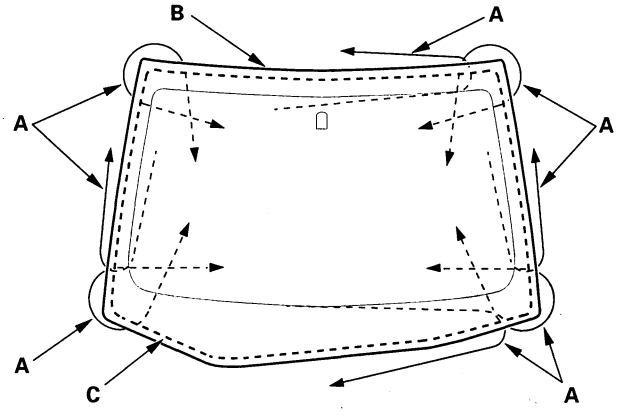

7. Carefully remove the windshield.

BACK

Protected by AR

8. With a knife, scrape the old adhesive smooth to a thickness of about 2 mm (0.08 in.) on the bonding surface around the entire windshield opening flange:

   - Do not scrape down to the painted surface of the body; damaged paint will interfere with proper bonding.
   - Remove the rubber dam and fasteners from the body.
   - Replace the dashboard seal with a new one.

9. Clean the body bonding surface with a sponge dampened in alcohol. After cleaning, keep oil, grease and water from getting on the clean surface.

10. If the old windshield is to be reinstalled, use a putty knife to scrape off all of the old adhesive, the fasteners and the rubber dam from the windshield. Clean the inside face and the edge of the windshield with alcohol where new adhesive is to be applied. Make sure the bonding surface is kept free of water, oil and grease.

11. Attach the upper rubber dam (A), lower rubber dam (B), and clips (C) with adhesive tape to the inside face of the windshield (D) as shown:

    - Be sure the rubber dam and clips line up with the alignment marks (E).
    - Be careful not to touch the windshield where adhesive will be applied.

    Rubber dams adhesive tape:
    Thickness 0.16 mm (0.0063 in.)
    Width 3.5 mm (0.14 in.)
    Clips adhesive tape:
    Thickness 0.4 mm (0.016 in.)
    Width 10 mm (0.39 in.)

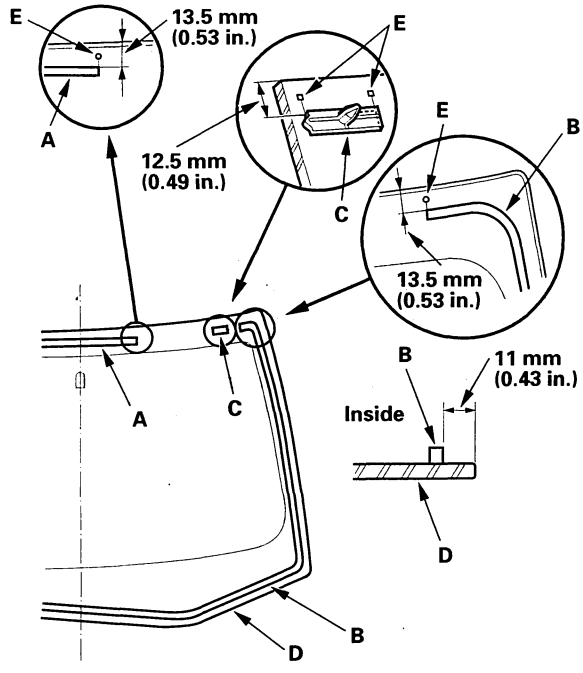

(cont'd)

Protected by AR

Windshield Replacement (cont'd)

12. Attach the molding (A) with adhesive tape (B) to the upper edge of the windshield (C). Be careful not to touch the windshield where adhesive will be applied.

Molding adhesive tape: Thickness 0.8 mm (0.03 in.)
Width 4 mm (0.16 in.)

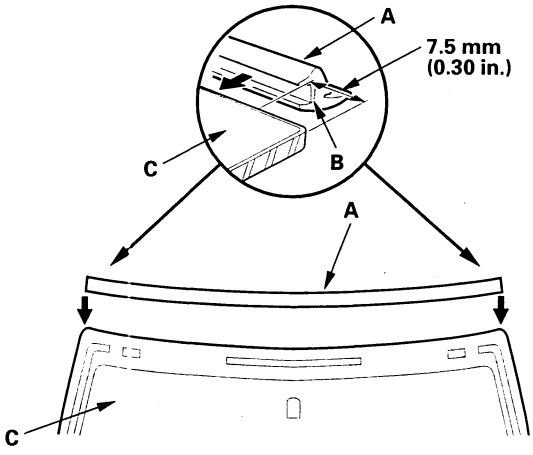

13. Apply primer to the molding (A), then attach the molding upper seal (B) with adhesive tape to the inside surface of the molding as shown.

Seals adhesive tape: Thickness 0.16 mm (0.0063 in.)
Width 7 mm (0.28 in.)

: **Apply primer here.**

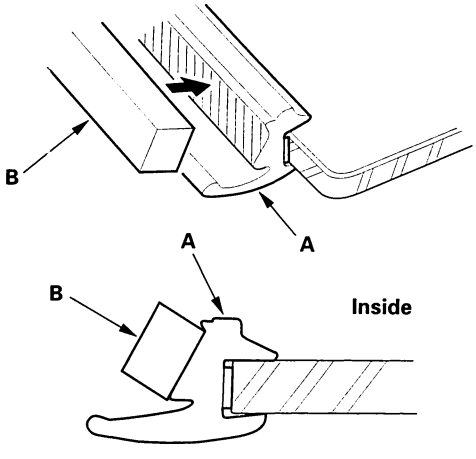

14. Set the windshield in the opening, and center it. Make alignment marks (A) across the windshield and body with a grease pencil at the four points shown. Make sure both clips (B) contact with the edge of the body holes. Be careful not to touch the windshield where adhesive will be applied.

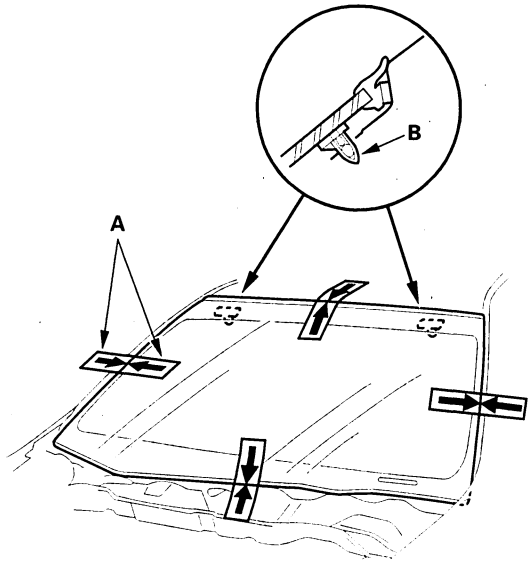

15. Remove the windshield.

BACK

Protected by AR

16. With a sponge, apply a light coat of glass primer around the edge of the windshield (A) between the dams (B) and molding (C) as shown, then lightly wipe it off with gauze or cheesecloth:

    - Apply glass primer to the molding.
    - Do not apply body primer to the windshield, and do not get body and glass primer sponges mixed up.
    - Never touch the primed surfaces with your hands. If you do, the adhesive may not bond to the windshield properly, causing a leak after the windshield is installed.
    - Keep water, dust, and abrasive materials away from the primed surfaces.

    : **Apply glass primer here.**

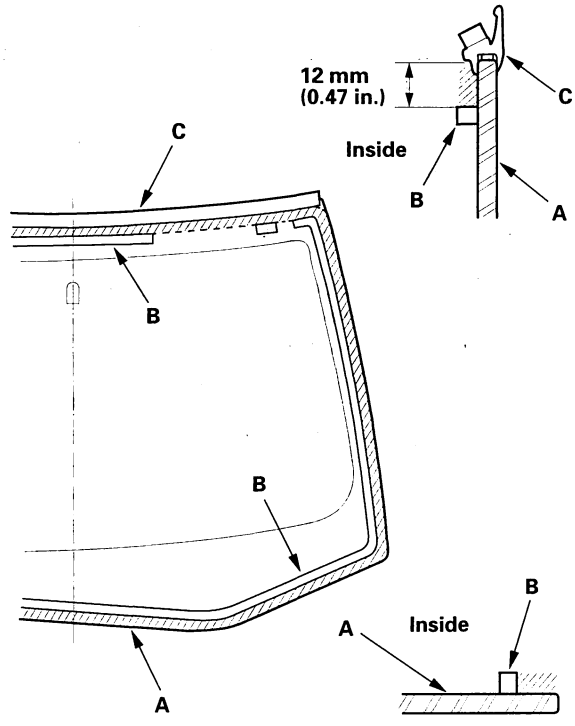

17. With a sponge, carefully apply a light coat of body primer to any exposed paint or metal around the flange where new adhesive will be applied. Let the primer dry for at least 10 minutes:

    - Do NOT apply body primer to any remaining original adhesive on the flange.
    - Be careful not to mix up the body and glass primer sponges.
    - Never touch the primed surfaces with your hands.

    : **Apply body primer to exposed paint as shown.**

2-door

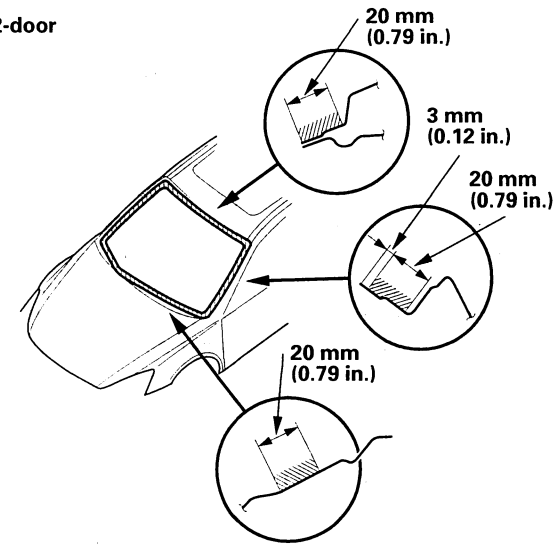

4-door

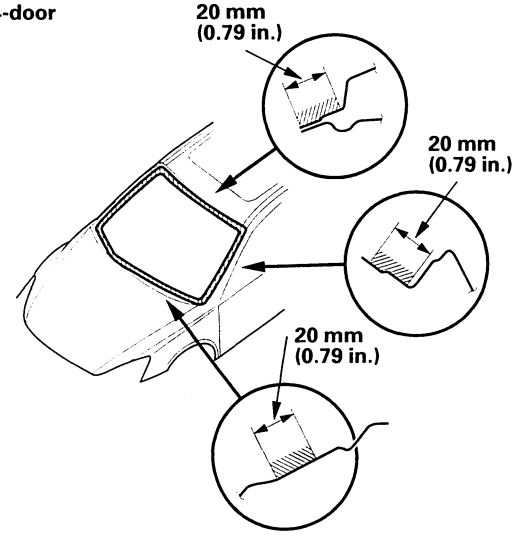

(cont'd)

Protected by AR

Windshield Replacement (cont'd)

18. Cut a "V" in the end of the nozzle (A) on the adhesive cartridge as shown.

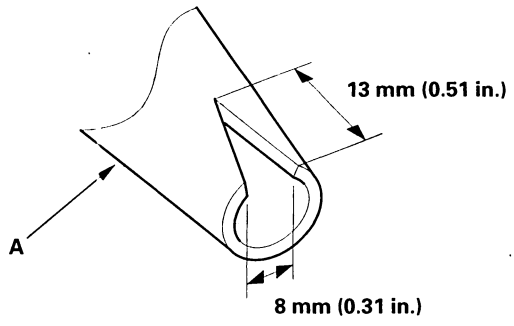

19. Pack adhesive into the cartridge without air pockets to ensure continuous delivery. Put the cartridge in a caulking gun, and run a bead of adhesive (A) around the edge of the windshield (B) between the dams (C) and molding (D) as shown. Apply the adhesive within 30 minutes after applying the glass primer. Make a slightly thicker bead at each corner.

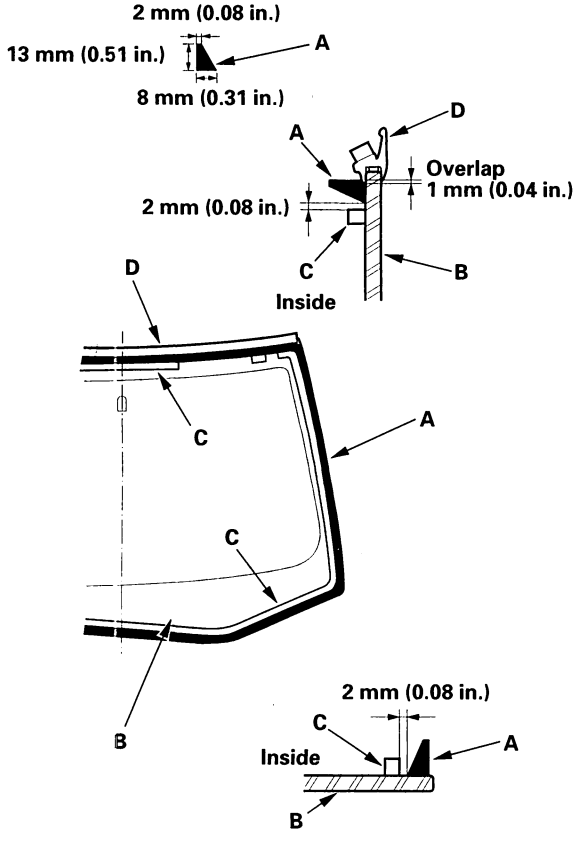

20. Use suction cups to hold the windshield over the opening, align it with the alignment marks made in step 14, and set it down on the adhesive. Lightly push on the windshield until its edges are fully seated on the adhesive all the way around. Do not open or close the doors until the adhesive is dry.

21. Scrape or wipe the excess adhesive off with a putty knife or towel. To remove adhesive from a painted surface or the windshield, wipe with a soft shop towel dampened with alcohol.

22. Let the adhesive dry for at least 1 hour, then spray water over the windshield and check for leaks. Mark leaking areas, and let the windshield dry, then seal with sealant:

    - Let the vehicle stand for at least 4 hours after windshield installation. If the vehicle has to be used within the first 4 hours, it must be driven slowly.
    - Keep the windshield dry for the first hour after installation.

23. Reinstall all remaining removed parts.

    NOTE: Advise the customer not to do the following things for 2 to 3 days:
    - Slam the doors with all the windows rolled up.
    - Twist the body excessively (such as when going in and out of driveways at an angle or driving over rough, uneven roads).

BACK

Protected by AR

Rear Window Replacement

NOTE:
- Put on gloves to protect your hands.
- Wear eye protection while cutting the glass adhesive with piano wire.
- Use seat covers to avoid damaging any surfaces.
- Do not damage the rear window defogger grid lines, window antenna grid lines, and terminals.

1. Remove these items:
   - Trunk lid
   - Rear shelf, 2-door (see page 20-108), 4-door (see page 20-110)

2. Disconnect the window antenna connectors (A) and rear window defogger connectors (B).

2-door

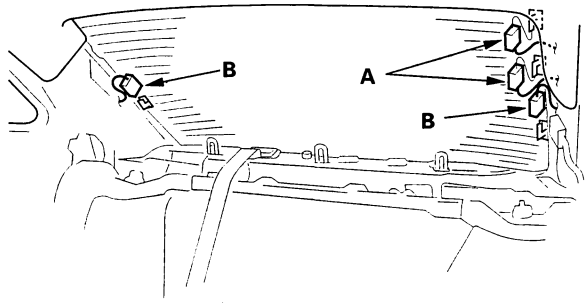

4-door

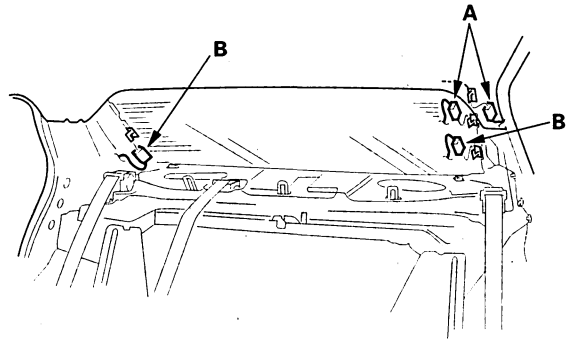

3. If the old rear window is to be reinstalled, make alignment marks across the glass and body with a grease pencil.

4. Pull down the rear portion of the headliner (A) by detaching the clips (B). Take care not to bend the headliner excessively, as you may crease or break it.

Fastener Locations

B ▷ : Clip,
2-Door, 4
4-Door, 2

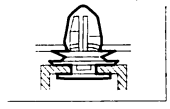

2-door

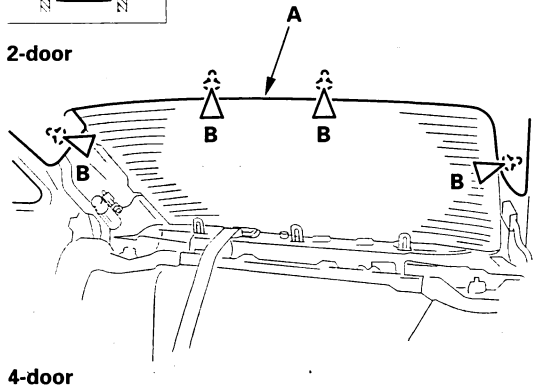

4-door

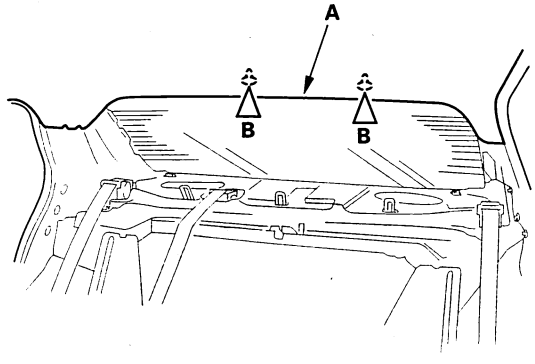

5. Apply protective tape along the inside and outside edges of the body. Using an awl, make a hole through the adhesive from inside the vehicle at the corner portion of the rear window. Push a piece of piano wire through the hole, and wrap each end around a piece of wood.

(cont'd)

Protected by AR

Rear Window Replacement (cont'd)

6. Remove the molding (A) from the lower edge of the rear window (B). If necessary, cut the molding with a utility knife.

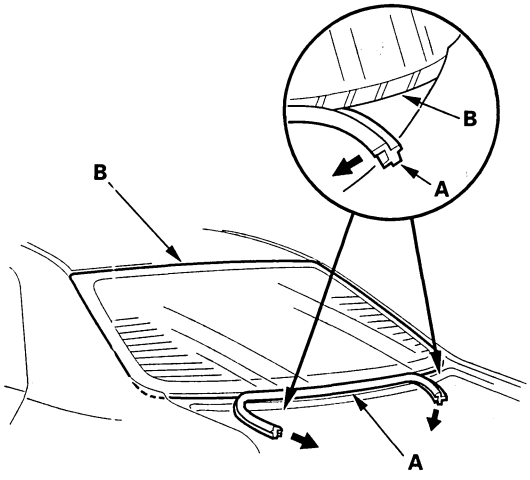

7. With a helper on the outside, pull the piano wire (A) back and forth in a sawing motion. Hold the piano wire as close to the rear window (B) as possible to prevent damage to the body, and carefully cut through the adhesive (C) around the entire rear window.

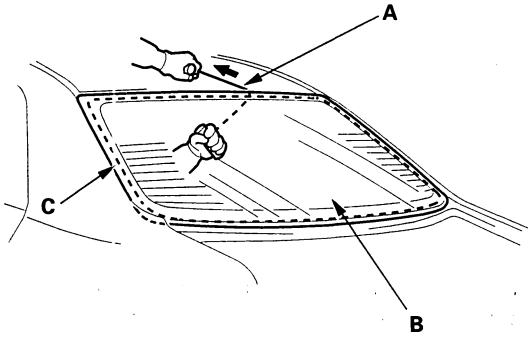

Cutting positions

2-door

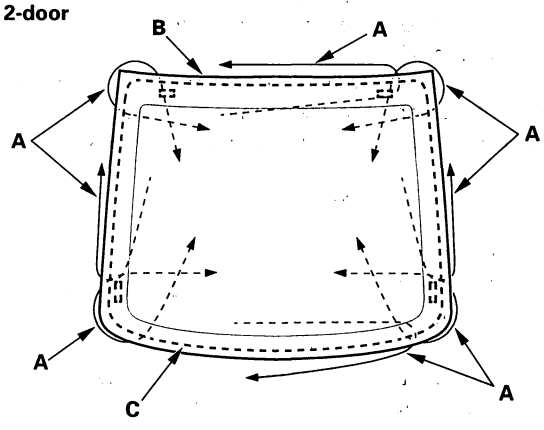

4-door

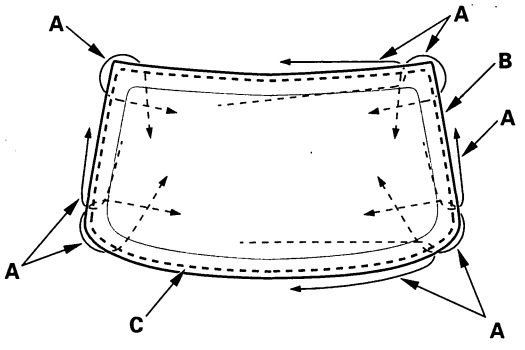

8. Carefully remove the rear window.

9. With a putty knife, scrape the old adhesive smooth to a thickness of about 2 mm (0.08 in.) on the bonding surface around the entire rear window opening flange:

   - Do not scrape down to the painted surface of the body; damaged paint will interfere with proper bonding.
   - Remove the fasteners from the body.

10. Clean the body bonding surface with a sponge dampened in alcohol. After cleaning, keep oil, grease and water from getting on the surface.

11. If the old rear window is to be reinstalled, use a putty knife to scrape off all of the old adhesive, the moldings and the fasteners from the rear window. Clean the inside face and the edge of the rear window with alcohol where new adhesive is to be applied. Make sure the bonding surface is kept free of water, oil and grease.

BACK

Protected by AR

12. Attach the upper rubber dam (A), side rubber dam (B), lower rubber dam (C), clips (D), and fasteners (E) with adhesive tape to the inside face of the rear window (F) as shown:

- First attach the upper rubber dam, then attach the side rubber dams around the edge of the rear window. Be sure top of the side rubber dam contacts with bottom of the upper rubber dam. If necessary, cut the rubber dam.
- Be sure the side rubber dam, clips, and fasteners line up with the alignment marks (G).
- Attach the lower rubber dam, around the edge of the windshield (H).
- Be careful not to touch the windshield where adhesive will be applied.

Rubber dams adhesive tape:
Thickness 0.16 mm (0.0063 in.)
Width 4 mm (0.16 in.)
Clips adhesive tape:
Thickness 0.4 mm (0.016 in.)
Width 10 mm (0.39 in.)
Fasteners adhesive tape:
Thickness 0.8 mm (0.03 in.)
Width 7 mm (0.28 in.)

2-door

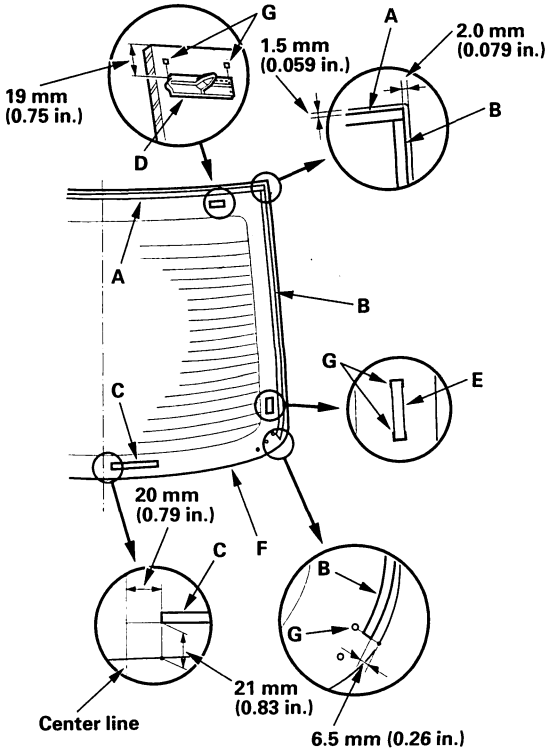

4-door

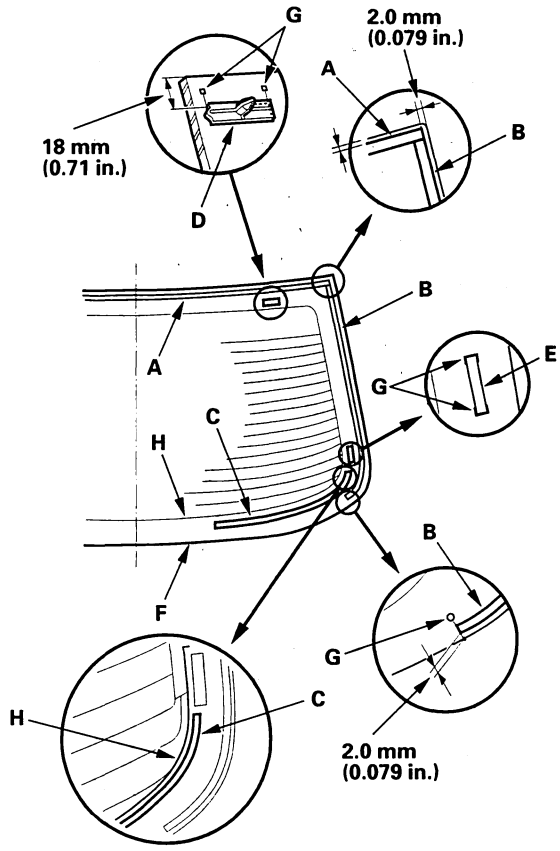

(cont'd)

Protected by AR

Rear Window Replacement (cont'd)

13. 4-door: Apply primer to the edge of the rear window (A) where the molding adhesive tape will be attached as shown. Attach the molding (B) with adhesive tape (C) to the lower edge of the rear window:

    - Be sure both ends of the molding line up with the alignment marks (D) of the rear window.
    - After installing the molding, cut the ends (E) of the molding as shown.
    - Be careful not to touch the windshield where adhesive will be applied.

    Molding adhesive tape:
    Thickness 0.2 mm (0.0079 in.)
    Width 4 mm (0.16 in.)

    : **Apply primer here.**

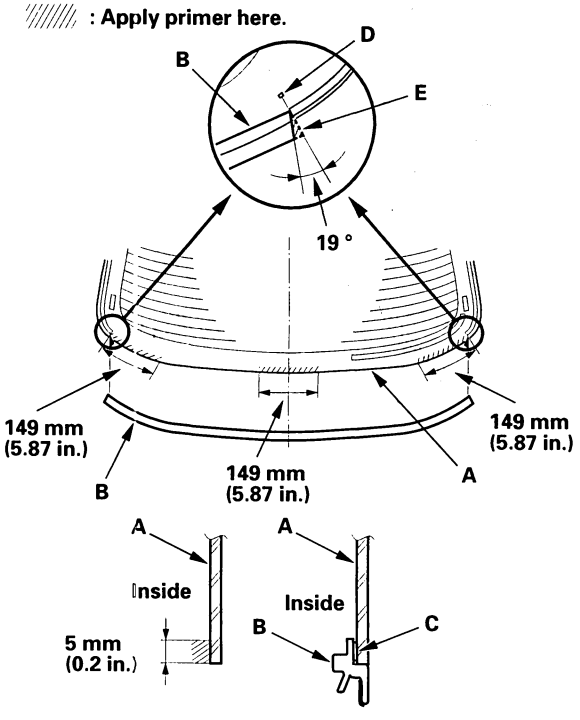

14. Attach the fasteners (A) with adhesive tape to the rear window opening flange (B) of the body on both sides.

    Fasteners adhesive tape:
    Thickness 0.8 mm (0.031 in.)
    Width 9 mm (0.35 in.)

    2-door

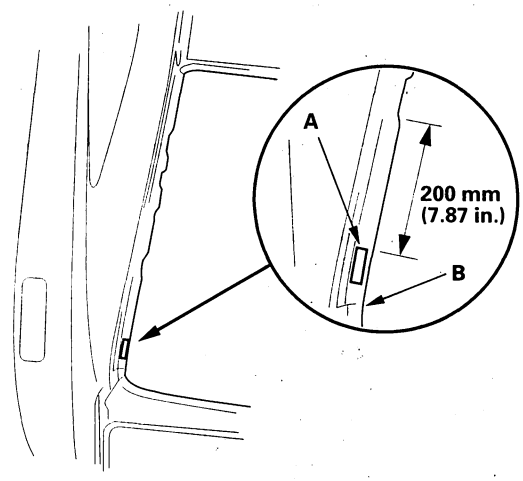

    4-door

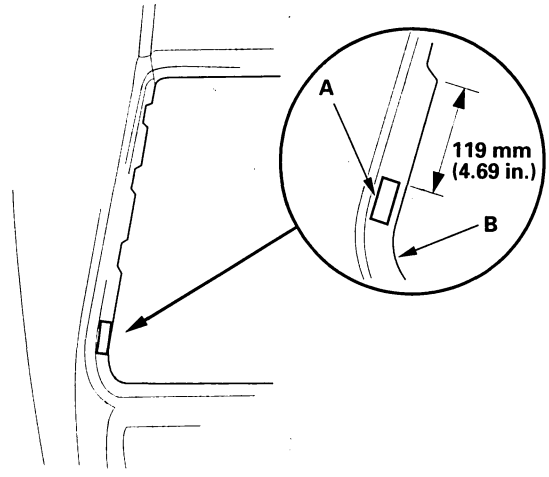

BACK

Protected by AR

15. Set the rear window in the opening, and center it. Make alignment marks (A) across the rear window and body with a grease pencil at the four points shown. Make sure both upper clips (B) are in the body holes. Be careful not to touch the rear window where adhesive will be applied.

2-door

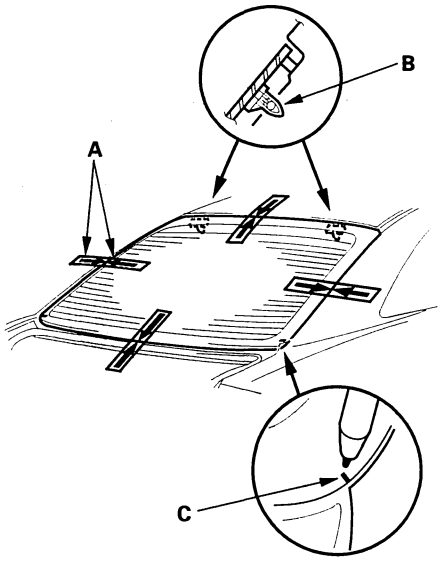

4-door

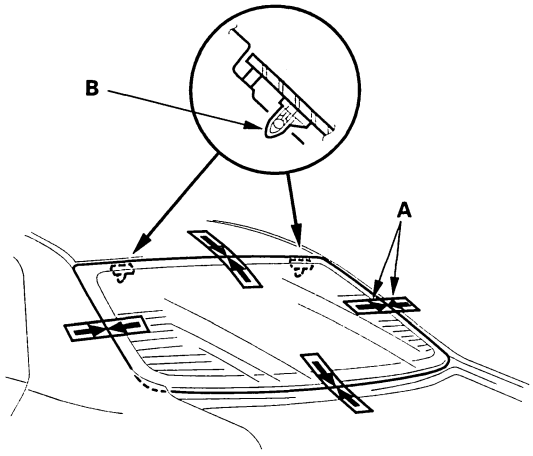

16. 2-door: Make alignment marks (C) to the rear window with a grease pencil as shown where the molding will be installed.

17. Remove the rear window.

18. 2-door: Apply primer to the edge of the rear window (A) where the molding adhesive tape will be attached as shown. Attach the molding (B) with adhesive tape (C) to the lower edge of the rear window:

- Be sure both ends of the molding line up with the alignment marks (D) you made in step 16.
- After installing the molding, cut the ends (E) of the molding as shown.
- Be careful not to touch the windshield where adhesive will be applied.

Molding adhesive tape:
Thickness 0.2 mm (0.0079 in.)
Width 4 mm (0.16 in.)

: **Apply primer here.**

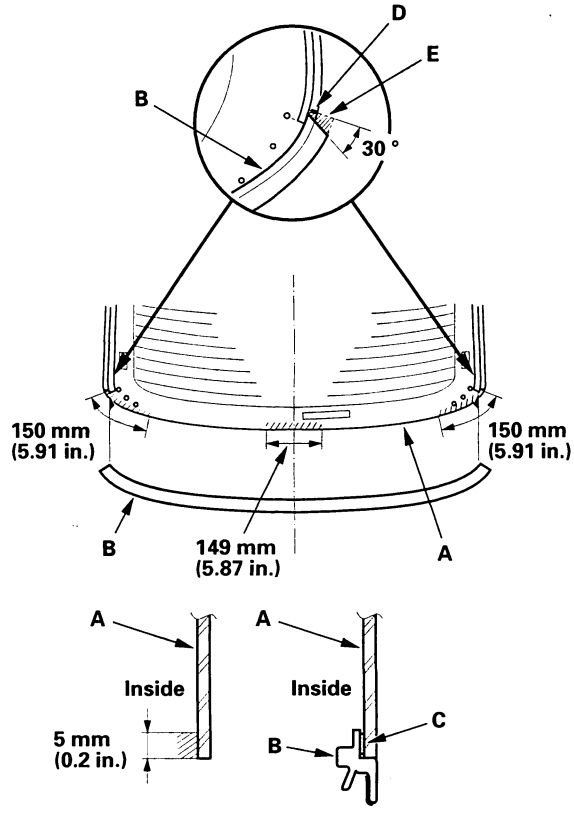

(cont'd)

Protected by AR

Rear Window Replacement (cont'd)

19. With a sponge, apply a light coat of glass primer along the edge of the rear window (A) between the dams (B) and molding (C) as shown, then lightly wipe it off with gauze or cheesecloth:

    - 2-door: With the printed dots (D) on the rear window as a guide, apply the glass primer to both lower corner portions of the rear window.
    - Do not apply body primer to the rear window, and do not get body and glass primer sponges mixed up.
    - Never touch the primed surfaces with your hands. If you do, the adhesive may not bond to the rear window properly, causing a leak after the rear window is installed.
    - Keep water, dust, and abrasive materials away from the primed surfaces.

2-door

: Apply glass primer here.

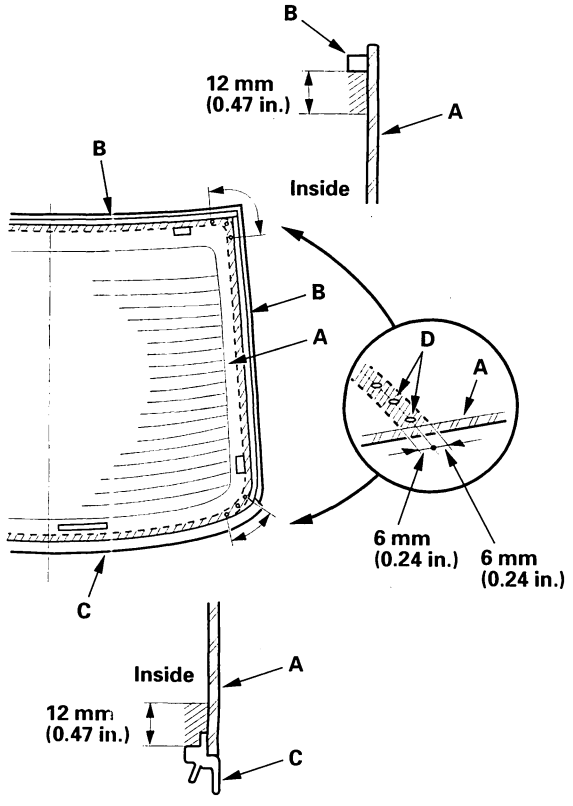

4-door

: Apply glass primer here.

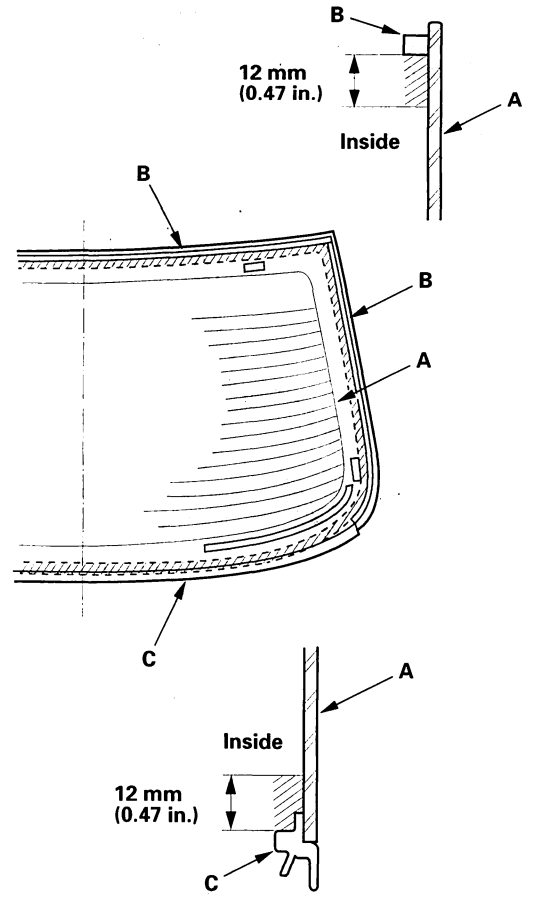

BACK

Protected by AR

20. With a sponge, carefully apply a light coat of body primer to any exposed paint or metal around the flange where new adhesive will be applied. Let the primer dry for at least 10 minutes:

    - Do NOT apply body primer to any remaining original adhesive on the flange.
    - Be careful not to mix up the body and glass primer sponges.
    - Never touch the primed surfaces with your hands.

    : **Apply body primer to exposed paint as shown.**

2-door

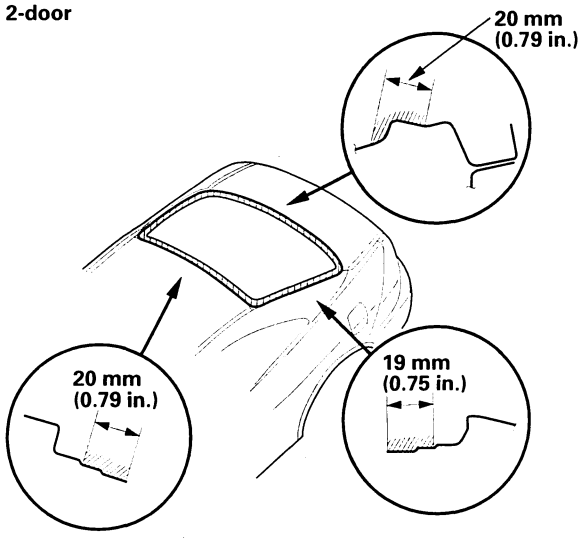

4-door

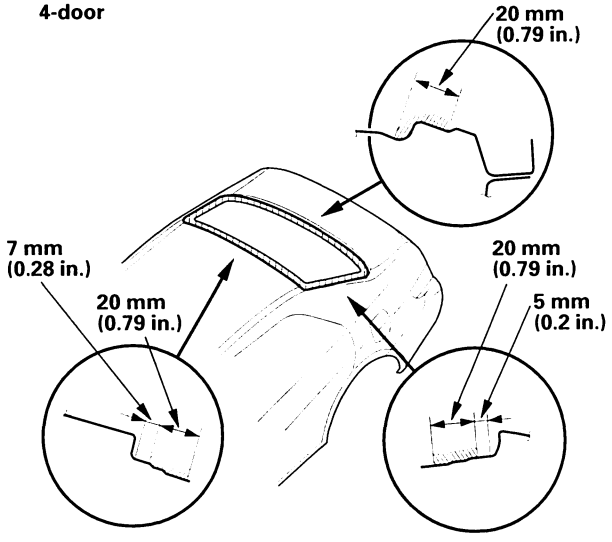

21. Cut a "V" in the end of the nozzle (A) on the adhesive cartridge as shown.

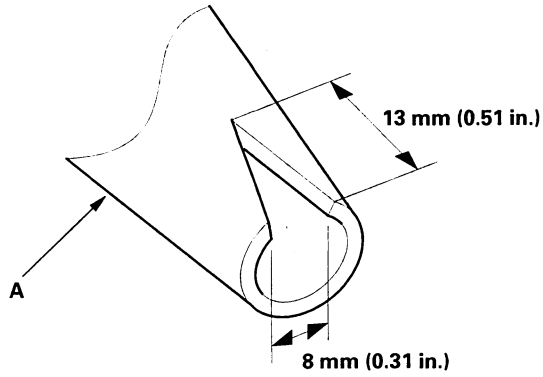

(cont'd)

Protected by AR

Rear Window Replacement (cont'd)

22. Pack adhesive into the cartridge without air pockets to ensure continuous delivery. Put the cartridge in a caulking gun, and run a bead of adhesive (A) around the edge of the rear window (B) between the dams (C) and molding (D) as shown:

    - 2-door: With the printed dots (E) on the rear window as a guide, apply the adhesive to both side portions of the rear window.
    - Apply the adhesive within 30 minutes after applying the glass primer. Make a slightly thicker bead at each corner.

2-door

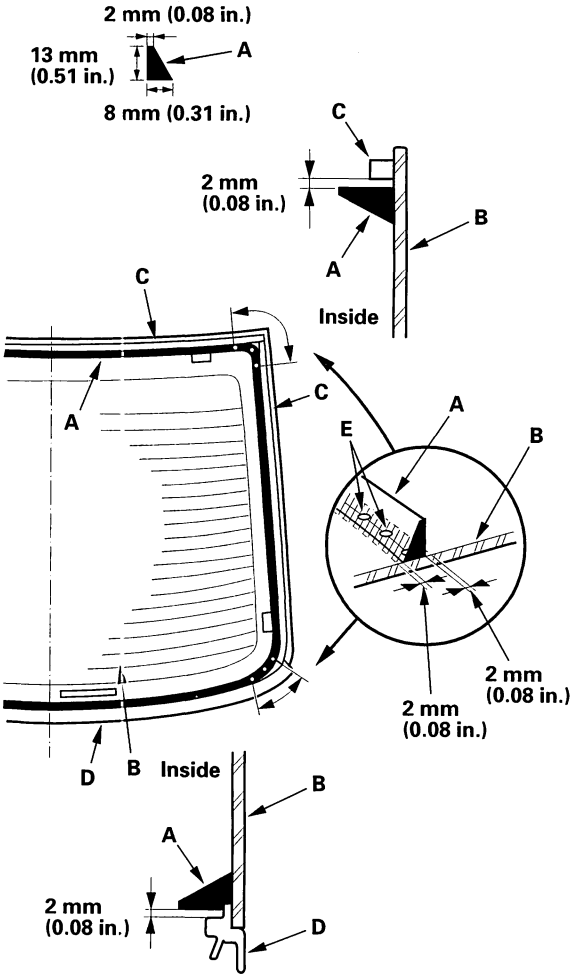

4-door

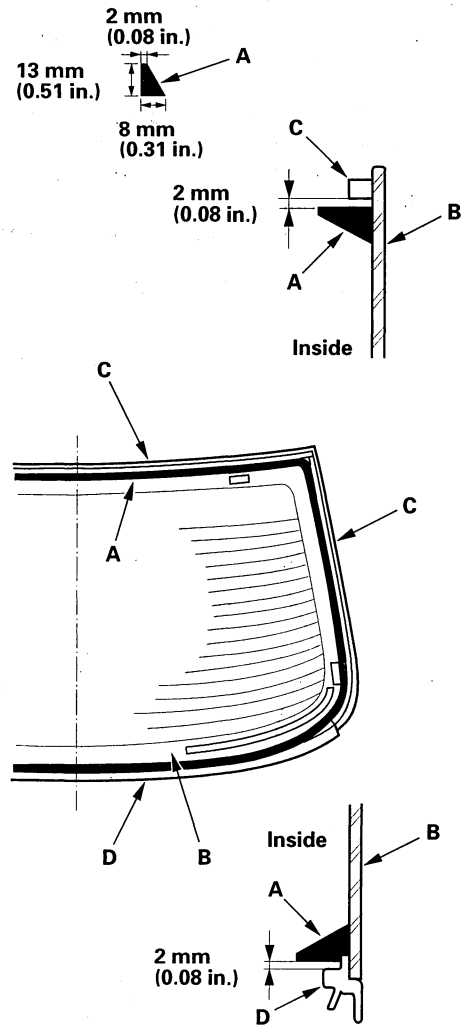

BACK

Protected by AR

23. Use suction cups to hold the rear window over the opening, align it with the alignment marks you made in step 15, and set it down on the adhesive. Lightly push on the rear window until its edges are fully seated on the adhesive all the way around. Do not open or close the doors until the adhesive is dry.

24. Scrape or wipe the excess adhesive off with a putty knife or towel. To remove adhesive from a painted surface or the rear window, use a soft shop towel dampened with alcohol.

25. Let the adhesive dry for at least 1 hour, then spray water over the rear window and check for leaks. Mark the leaking areas, let the rear window dry, then seal with sealant. Let the vehicle stand for at least 4 hours after rear window installation. If the vehicle has to be used within the first 4 hours, it must be driven slowly.

26. Reinstall all remaining removed parts.

    NOTE: Advise the customer not to do the following things for 2 to 3 days:
    - Slam the doors with all the windows rolled up.
    - Twist the body excessively (such as when going in and out of driveways at an angle or driving over rough, uneven roads).

Quarter Glass Replacement

2-door

NOTE:
- Put on gloves to protect your hands.
- Use seat covers to avoid damaging any surface.

1. Remove these items:

    - C-pillar trim, without side curtain airbags (see page 20-97), with side curtain airbags (see page 20-104)
    - Side trim panel, as necessary (see page 20-106)
    - Front seat belt upper anchor (see step 6 on page 23-6)
    - B-pillar upper trim, without side curtain airbags (see page 20-95), with side curtain airbags (see page 20-100)

2. Apply protective tape along the inside and outside edges of the body, and along the edge of the headliner. Using an awl, make a hole through the adhesive from inside the vehicle. Push a piece of piano wire through the hole, and wrap each end around a piece of wood.

3. Remove the front seal (A) from the front edge of the quarter glass (B). If necessary, cut the front seal with a utility knife.

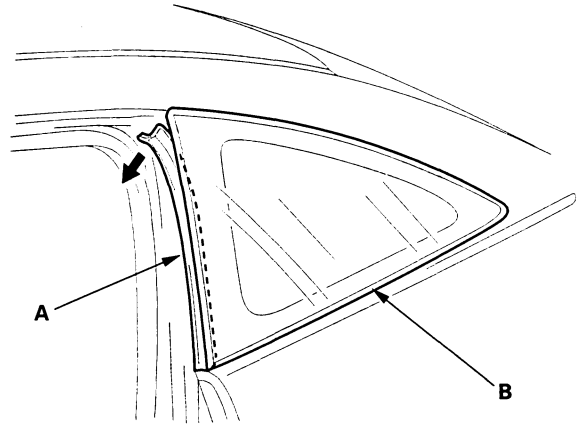

(cont'd)

Protected by AR

Quarter Glass Replacement (cont'd)

4. Carefully cut through the adhesive (A) at the rear corner portion of the quarter glass (B) with a utility knife. With a helper on the outside, pull the piano wire (C) back and forth in a sawing motion. Hold the piano wire as close to the quarter glass as possible to prevent damage to the body, and carefully cut through the adhesive around the entire quarter glass:

   - If the quarter glass is to be reinstalled, take care not to damage the molding (D).
   - If the molding is damaged, replace the quarter glass, molding, and clips (E) as an assembly.
   - If any of the clips are broken, the quarter glass can be reinstalled using butyl tape (refer to step 9).

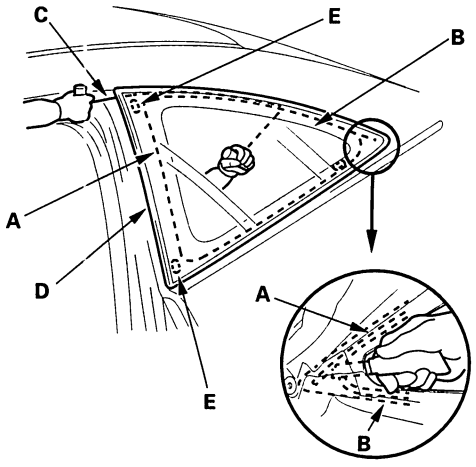

Cutting positions

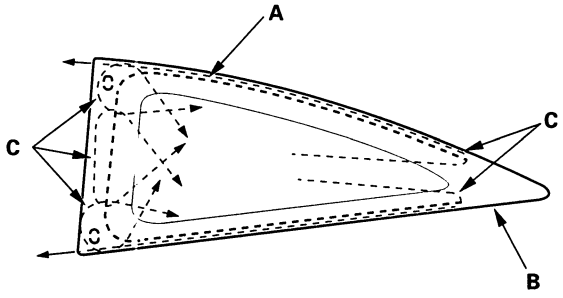

5. Carefully remove the quarter glass.

6. With a putty knife, scrape the old adhesive smooth to a thickness of about 2 mm (0.08 in.) on the bonding surface around the entire quarter glass opening flange:

   - Do not scrape down to the painted surface of the body; damaged paint will interfere with proper bonding.
   - Remove the clips and fastener from the body.

7. Clean the body bonding surface with a sponge dampened in alcohol. After cleaning, keep oil, grease, and water from getting on the surface.

8. If the old quarter glass is to be reinstalled, use a putty knife to scrape off all of the old adhesive, any broken clips, and the fastener from the glass. Clean the inside face and the edge of the glass with alcohol where new adhesive is to be applied. Make sure the bonding surface is kept free of water, oil, and grease.

BACK

Protected by AR

9. If the old quarter glass is to be reinstalled (and either clip is broken off the molding), apply a light coat of primer, then apply butyl tape (A) to the molding (B) as shown. Attach the fastener (C) with adhesive tape to the inside face of the quarter glass (D):

   - Be careful not to touch the quarter glass where adhesive will be applied.
   - Do not peel the separator off the butyl tape.

   Fastener adhesive tape:
   Thickness 0.8 mm (0.031 in.)

   : **Apply glass primer here.**

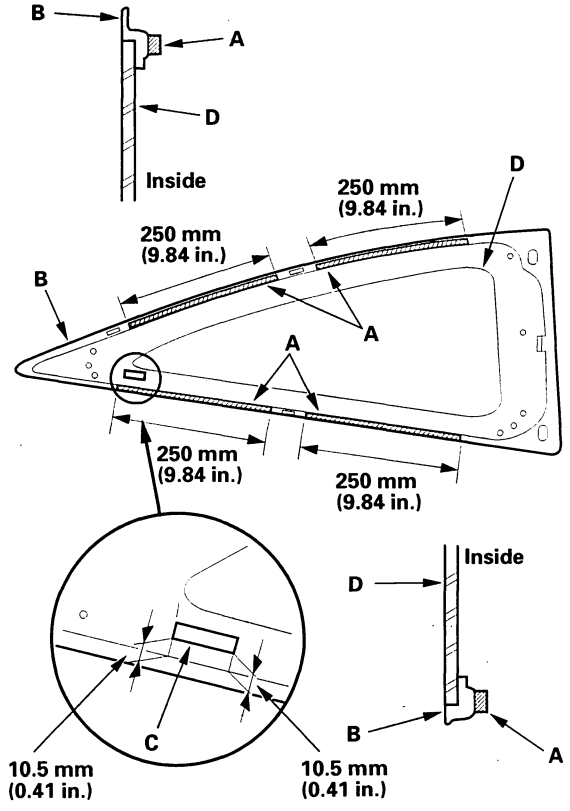

10. Attach the front seal (A) with adhesive tape (B) onto the molding (C).

    Seal adhesive tape: **Thickness 0.8 mm (0.031 in.)**
    Width 7 mm (0.28 in.)

    : **Apply primer here.**

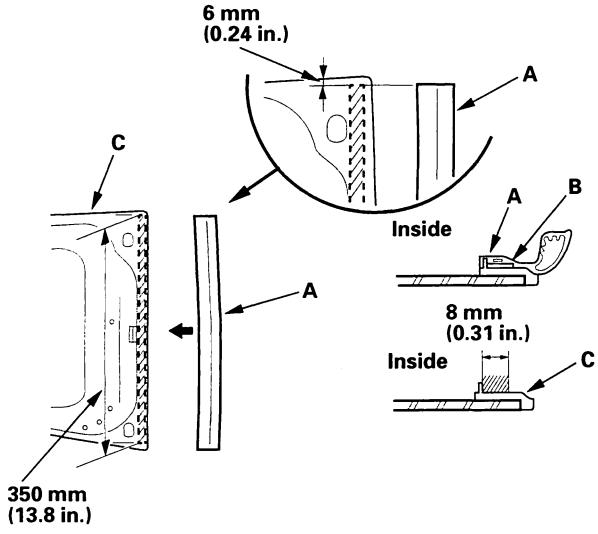

11. Attach the fastener (A) to the body. Be sure the fastener lines up with the alignment marks (B).

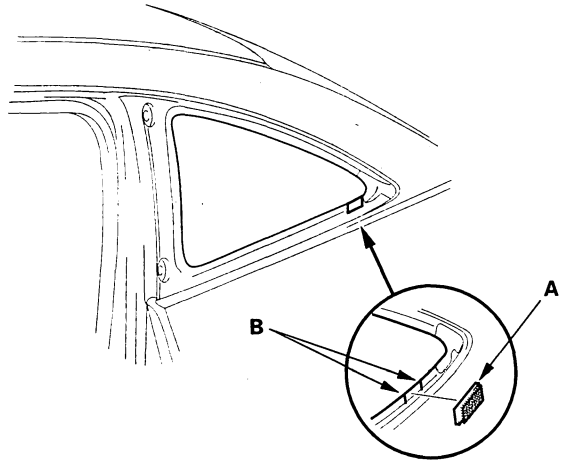

(cont'd)

Protected by AR

Quarter Glass Replacement (cont'd)

12. If the old quarter glass is to be reinstalled (and either clip is broken off the molding), seal the body holes with pieces of urethane tape (A). Then set the quarter glass upright in the opening, and make alignment marks (B) across the quarter glass and body with a grease pencil at the three points shown. Be careful not to touch the quarter glass where adhesive will be applied.

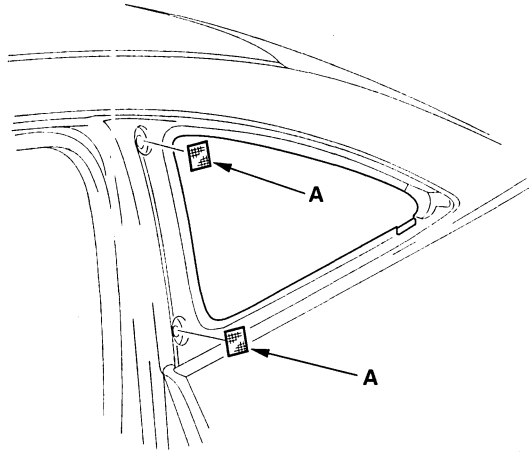

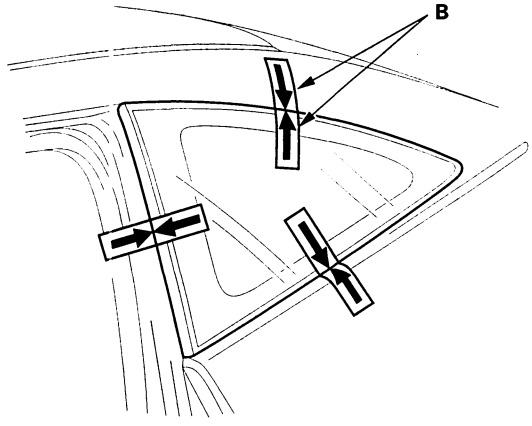

13. Remove the quarter glass.

14. With a sponge, apply a light coat of glass primer along the edge of the front seal (A) and molding (B) as shown, then lightly wipe it off with gauze or cheesecloth:

- With the printed dots (C) on the quarter glass (D) as a guide, apply the glass primer to the front portion of the quarter glass.
- Do not apply body primer to the quarter glass, and do not get body and glass primer sponges mixed up.
- Never touch the primed surfaces with your hands. If you do, the adhesive may not bond to the quarter glass properly, causing a leak after the quarter glass is installed.
- Keep water, dust, and abrasive materials away from the primed surfaces.

: **Apply glass primer here.**

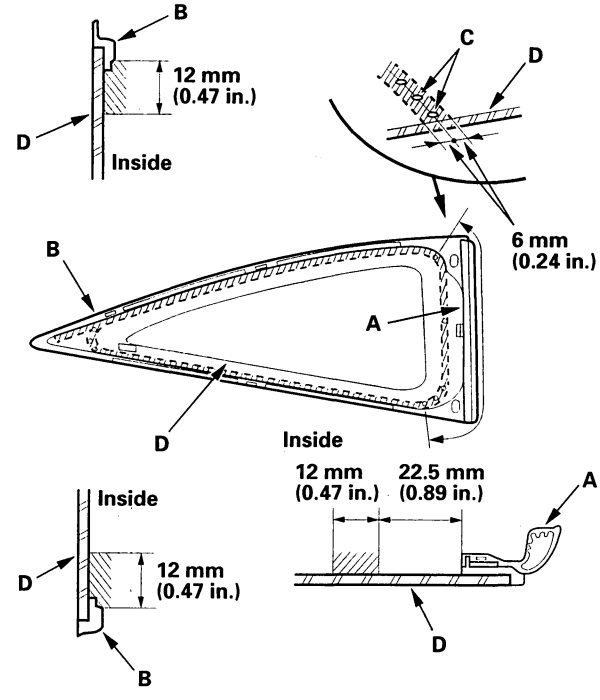

BACK

Protected by AR

15. With a sponge, carefully apply a light coat of body primer to any exposed paint or metal around the flange where new adhesive will be applied. Let the primer dry for at least 10 minutes:

    - Do NOT apply body primer to any remaining original adhesive on the flange.
    - Be careful not to mix up the body and glass primer sponges.
    - Never touch the primed surfaces with your hands.

    : **Apply body primer to exposed paint as shown.**

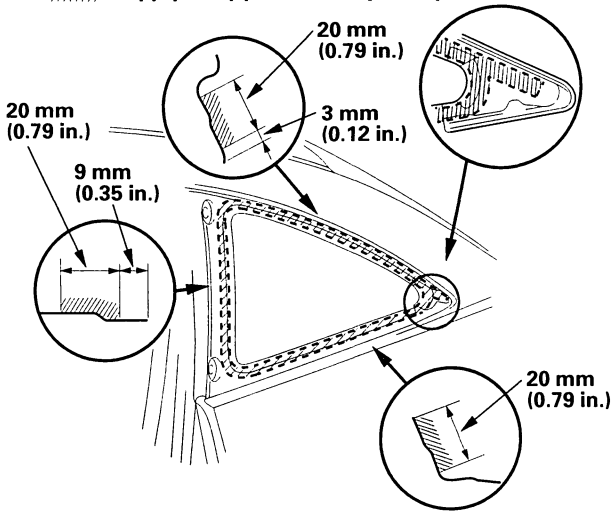

16. Cut a "V" in the end of the nozzle (A) on the adhesive cartridge as shown.

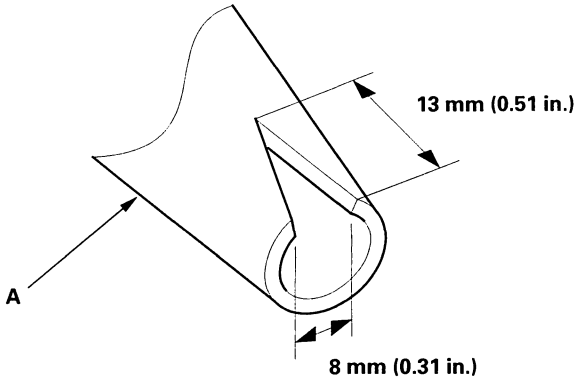

17. Pack adhesive into the cartridge without air pockets to ensure continuous delivery. Put the cartridge in a caulking gun, and run a bead of adhesive (A) around the edge of the front seal (B) and molding (C) as shown. With the glass primer (D) you applied in step 14 on the quarter glass (E) as a guide, apply the adhesive to the upper and lower corner portions of the quarter glass. Apply the adhesive within 30 minutes after applying the glass primer. Make a slightly thicker bead at each corner.

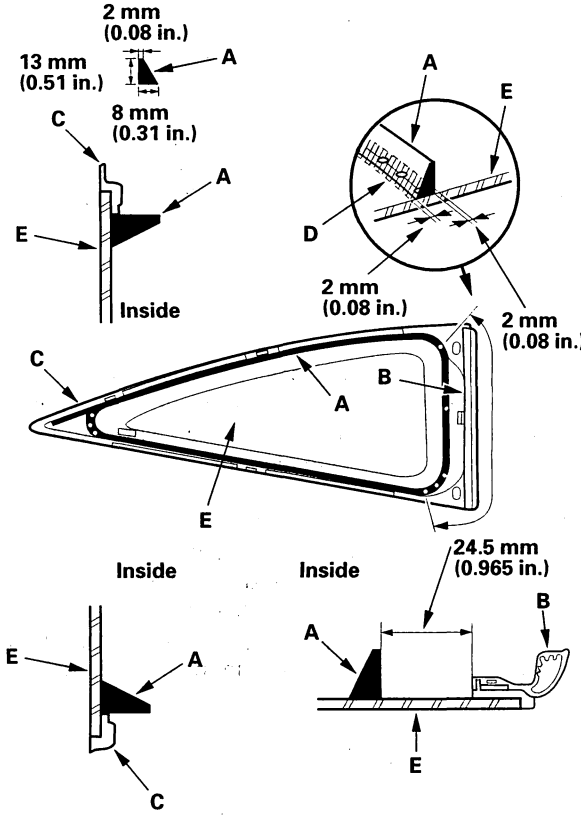

(cont'd)

Protected by AR

Quarter Glass Replacement (cont'd)

18. Use suction cups (A) to hold the quarter glass (B) over the opening, align the clips or the alignment marks (C) made in step 12, and set it down on the adhesive. Lightly push on the quarter glass until its edges are fully seated on the adhesive all the way around. Do not open or close the doors until the adhesive is dry.

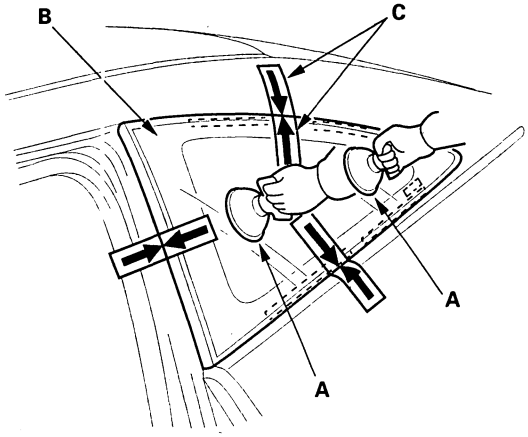

19. Scrape or wipe the excess adhesive off with a putty knife or towel. To remove adhesive from a painted surface or the quarter glass, wipe with a soft shop towel dampened with alcohol.

20. Let the adhesive dry for at least 1 hour, then spray water over the quarter glass and check for leaks. Mark the leaking areas and let the quarter glass dry, then seal with sealant. Let the vehicle stand for at least 4 hours after quarter glass installation. If the vehicle has to be used within the first 4 hours, it must be driven slowly.

21. Reinstall all remaining removed parts.

    NOTE: Advise the customer not to do the following things for 2 to 3 days:
    - Slam the doors with all the windows rolled up.
    - Twist the body excessively (such as when going in and out of driveways at an angle or driving over rough, uneven roads).

BACK

Protected by AR

Moonroof

Component Location Index

2-door

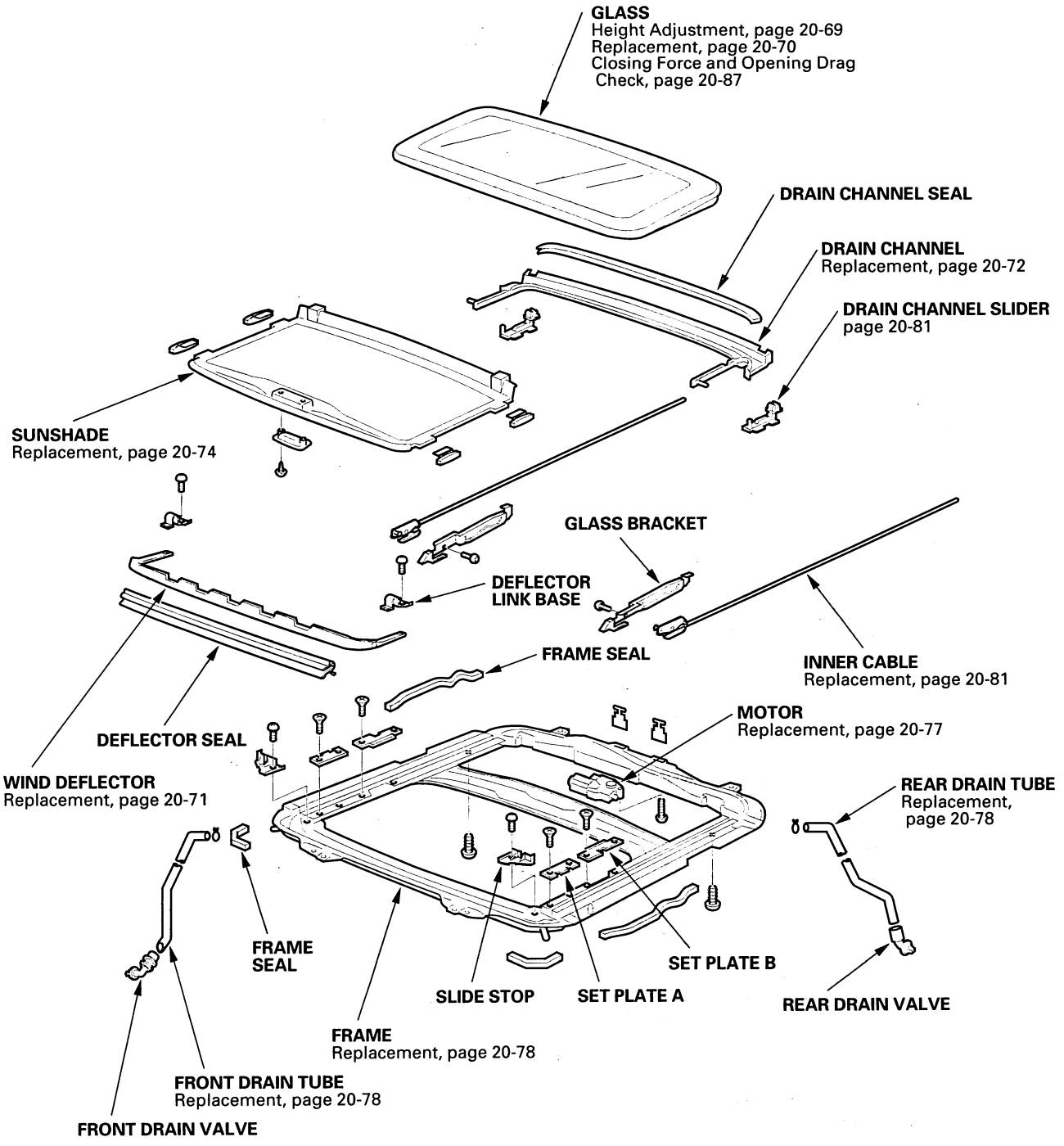

BACK

Protected by AR

Component Location Index (cont'd)

4-door

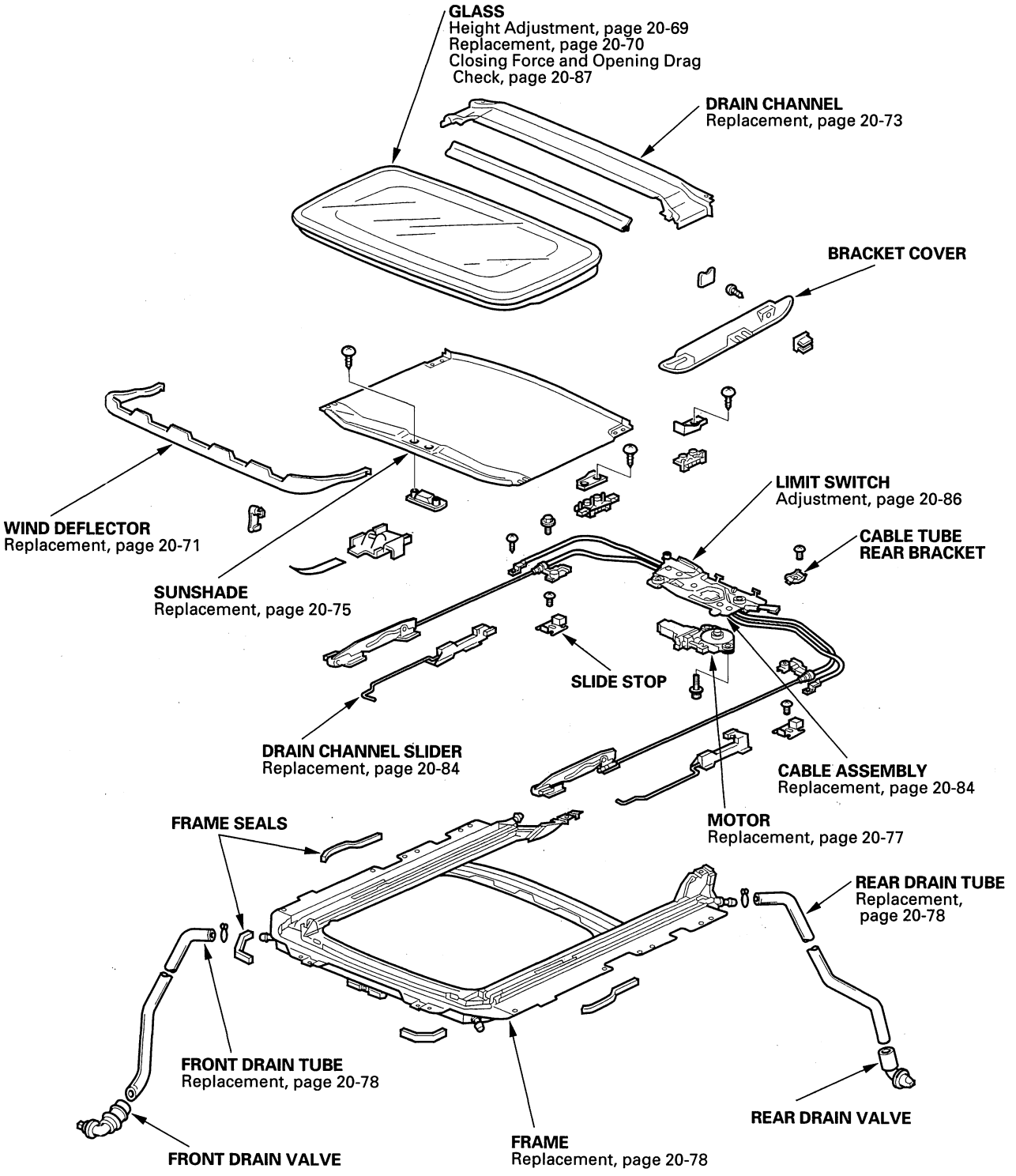

BACK

Protected by AR

Symptom Troubleshooting Index

2-door

Symptom	Diagnostic procedure	Also check for
Water leaks from moonroof	1. Check for a clogged drain tube. 2. Check for a gap between the glass weatherstrip and the roof panel. 3. Check for a defective or an improperly installed glass weatherstrip or drain channel. 4. Check for a gap between the drain seal and the roof panel.	
Wind noise from moonroof	Check for excessive clearance between the glass weatherstrip and the roof panel.	
Motor noise from moonroof	1. Check for a loose motor. 2. Check for a worn gear or bearing. 3. Check for a deformed cable assembly.	
Moonroof glass does not move, but motor turns	1. Check for a defective gear or inner cable. 2. Check for foreign matter stuck between the guide rail and the slider. 3. Check for a loose inner cable. 4. Make sure the cable assembly is attached properly.	
Moonroof glass does not move and motor does not turn (glass can be moved with moonroof wrench)	1. Check for a blown fuse. 2. Check for a faulty moonroof switch. 3. Check for a run down battery. 4. Check for a defective motor control unit.	
Moonroof glass does not stop at proper flush closed position	1. Perform moonroof calibration. 2. Check glass height adjustment.	
Moonroof glass moves in a jerking motion (moves 40 mm, stops for 0.4 seconds, and repeats)	Perform moonroof calibration.	
During auto close operation, moonroof glass reverses when no object is trapped	Check for dirt and debris in the track. Perform moonroof calibration.	
Moonroof glass moves, but there is no Auto function	Reprogram moonroof motor (see page 22-307).	

(cont'd)

BACK

Protected by AR

Symptom Troubleshooting Index (cont'd)

4-door

Symptom	Diagnostic procedure	Also check for
Water leaks from moonroof	1. Check for a clogged drain tube. 2. Check for a gap between the glass weatherstrip and the roof panel. 3. Check for a defective or an improperly installed glass weatherstrip or drain channel. 4. Check for a gap between the drain seal and the roof panel.	
Wind noise from moonroof	Check for excessive clearance between the glass weatherstrip and the roof panel.	
Motor noise from moonroof	1. Check for a loose motor. 2. Check for a worn gear or bearing. 3. Check for a deformed cable assembly.	
Moonroof glass does not move, but motor turns	1. Check for a defective gear or inner cable. 2. Check for foreign matter stuck between the guide rail and the slider. 3. Check for a loose inner cable. 4. Make sure the cable assembly is attached properly.	
Moonroof glass does not move and motor does not turn (glass can be moved with moonroof wrench)	1. Check for a blown fuse. 2. Check for a faulty moonroof switch. 3. Check the limit switch. 4. Check for a run down battery. 5. Check for a defective motor. 6. Check for a faulty relay.	

BACK

Protected by AR

Glass Height Adjustment

The roof panel (A) should be even with the glass weatherstrip (B), to within 0+1/−1 mm (0+0.04/−0.04 in.) all the way around. If not, make the following adjustment:

2-door

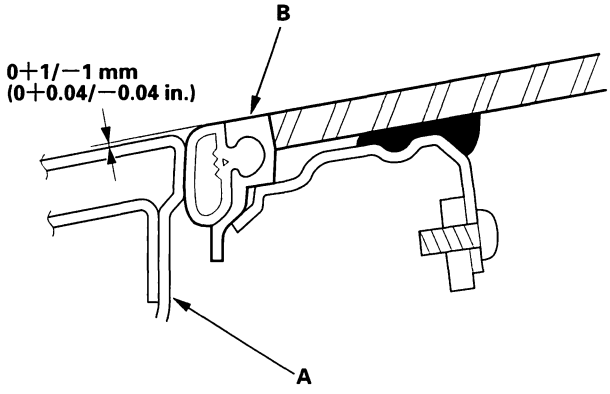

4-door

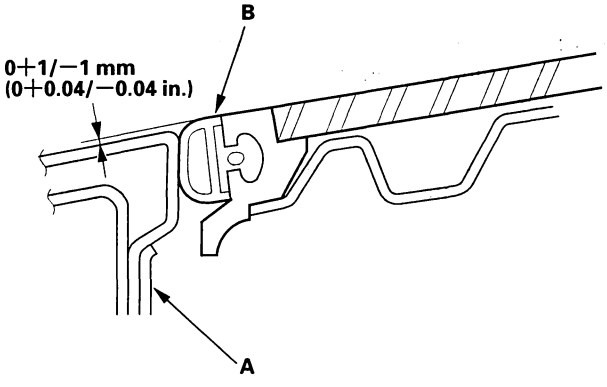

1. 4-door: Remove the bracket cover from each side (see step 3 on page 20-70).
2. Using a T25 Torx bit, loosen the bolts on each side, and adjust the glass (A).

2-door

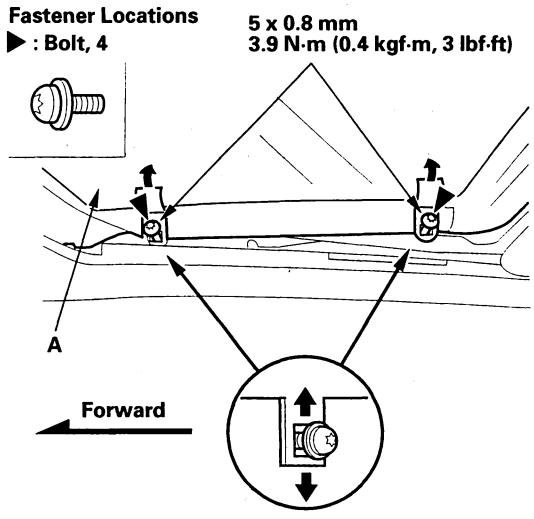

4-door

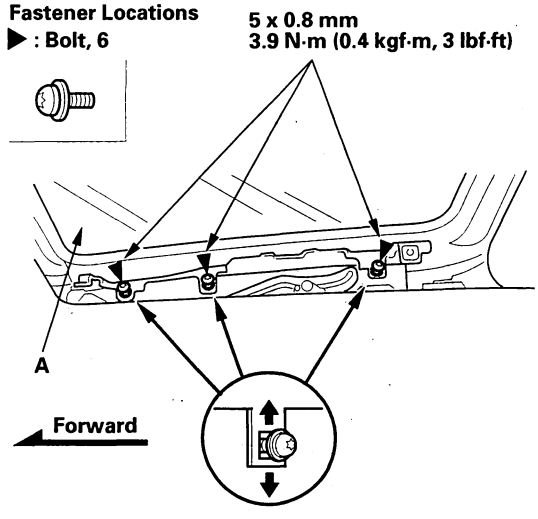

3. If necessary, repeat on the opposite side.

BACK

Protected by AR

Glass Replacement

1. Close the glass fully.
2. Slide the sunshade all the way back.
3. 2-door: Turn the slit portions of the molding (A) up.
   4-door: Pry out the lid (B), remove the screws (C), and release the hooks (D), then remove both bracket covers (E).

2-door

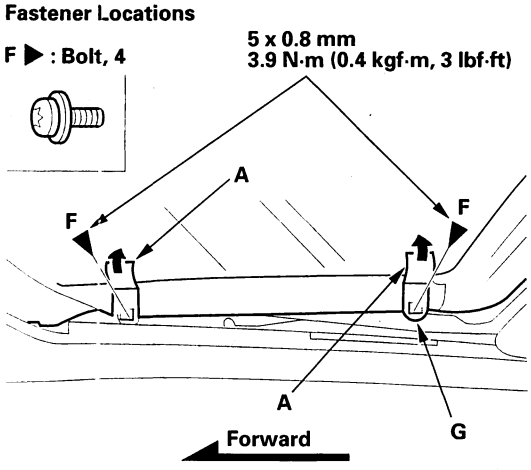

4-door

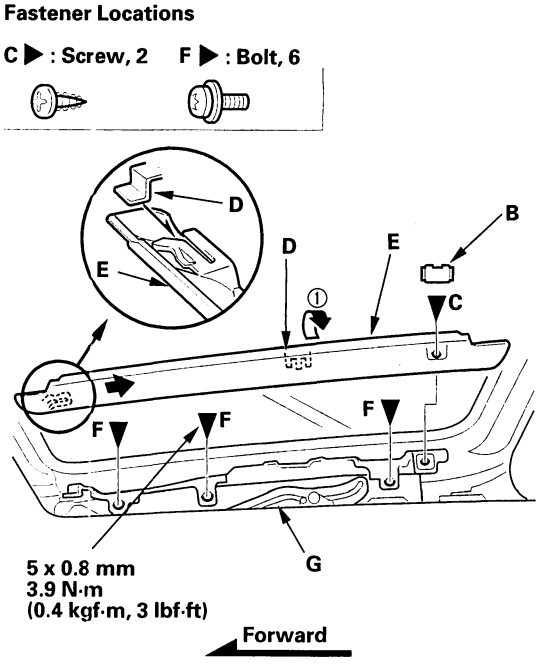

4. Using a T25 Torx bit, remove the bolts (F) from both glass brackets (G).
5. Remove the glass (A) by lifting it up. Do not damage the roof panel.

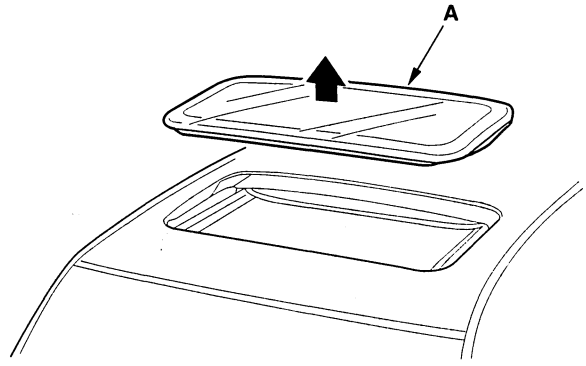

6. Install the glass in the reverse order of the removal, and note these items:
   - 2-door: Apply medium strength liquid thread lock to the glass mounting bolts before reinstallation.
   - Adjust the glass height alignment.
7. Check for water leaks. Use free-flowing water from a hose without a nozzle. Do not use high-pressure water.

   NOTE: It is normal for some water to seep past the moonroof into the moonroof frame, and exit out through the drains.

BACK

Protected by AR

Wind Deflector Replacement

2-door

1. Open the glass fully.
2. Remove the screws securing the wind deflector (A).

Fastener Locations

▶ : Screw, 2

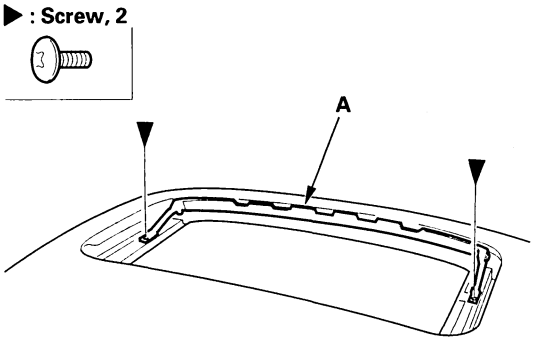

3. Remove the deflector link bases (A) from each side. Twist the wind deflector (B) forward and push it down, and pass the deflector spring (C) out through the slot of the slide stop (D) on each side, then remove the wind deflector.

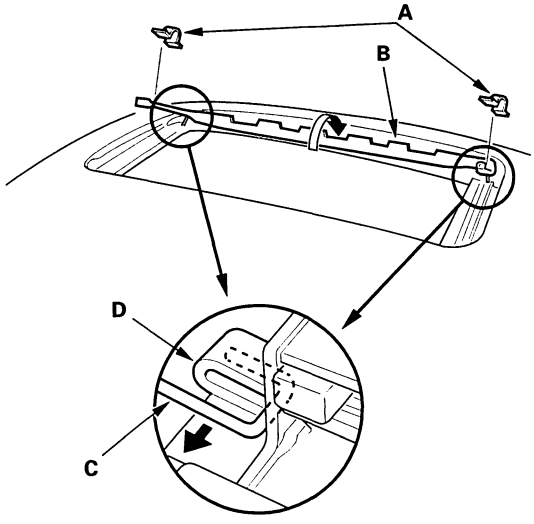

4. Install the deflector in the reverse order of removal, and apply multipurpose grease to both slots where the deflector springs are installed.

4-door

1. Open the glass fully.
2. Remove the links (A) from both sides.

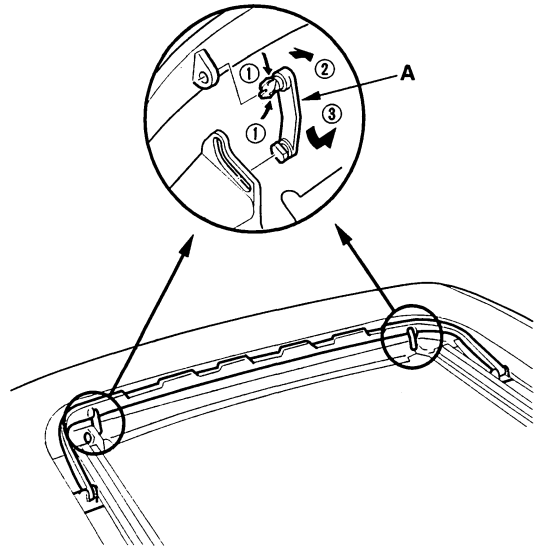

3. Remove the wind deflector (A).

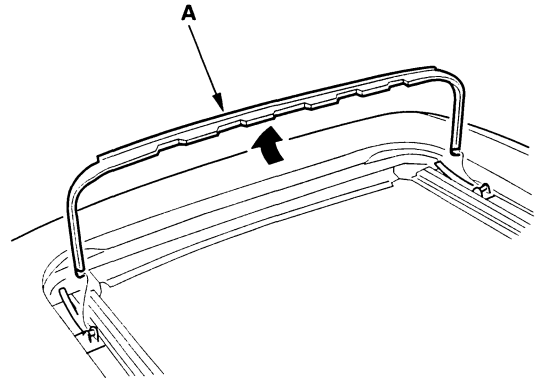

(cont'd)

Protected by AR

Wind Deflector Replacement (cont'd)

4. Pry up on the deflector bases (A) and release the hooks (B), then remove the bases with springs (C) from both sides.

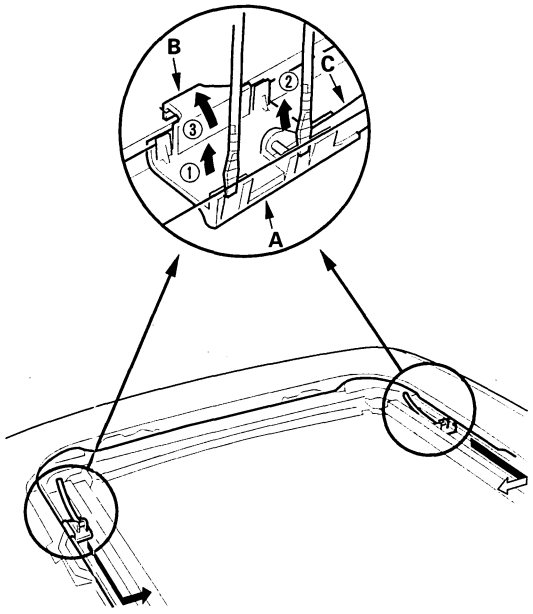

5. Install the deflector in the reverse order of removal.

Drain Channel Replacement

2-door

1. Remove the glass (see page 20-70).

2. Move both glass brackets (A) to detach the pins (B) inside from both glass brackets.

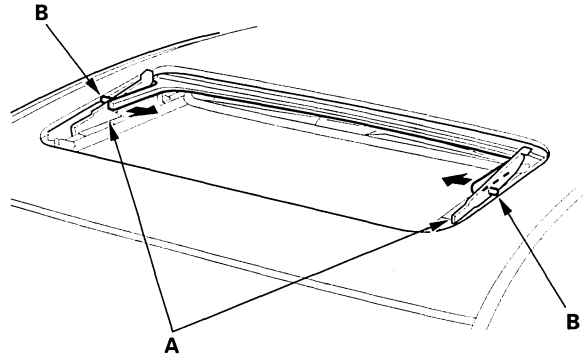

3. Turn the drain channel (A) up while sliding it forward to release it from the pins (B) on both drain channel sliders (C).

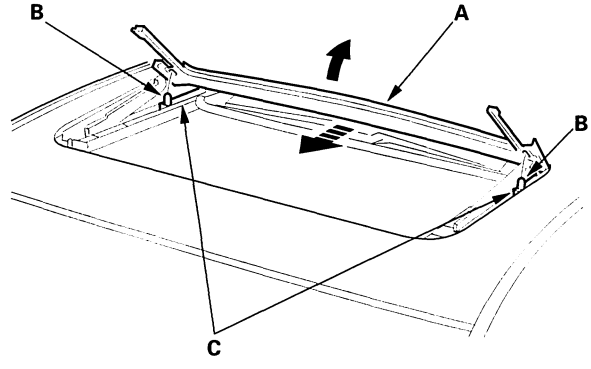

BACK

Protected by AR

4. Stand the drain channel (A) upright, and pull up the channel to remove it from both drain channel sliders (B).

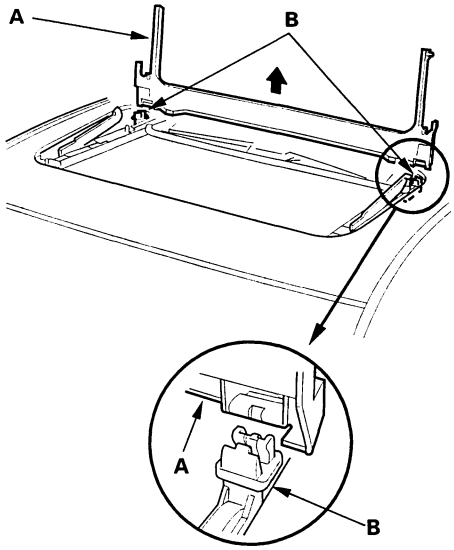

5. Install the channel in the reverse order of removal, and check the glass height adjustment (see page 20-69).

6. Check for water leaks. Let the water run freely from a hose without a nozzle. Do not use a high-pressure spray.

4-door

1. Remove the glass (see page 20-70).

2. With the moonroof wrench, move both glass brackets (A) to the position where the moonroof normally tilts up and disconnect the drain channel rods (B) on both sides.

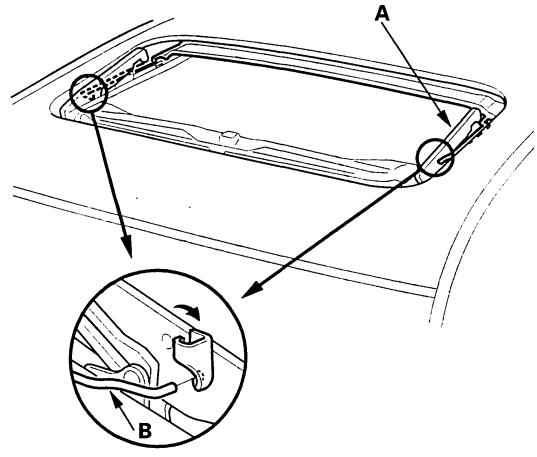

3. Slide the drain channel (A) forward.

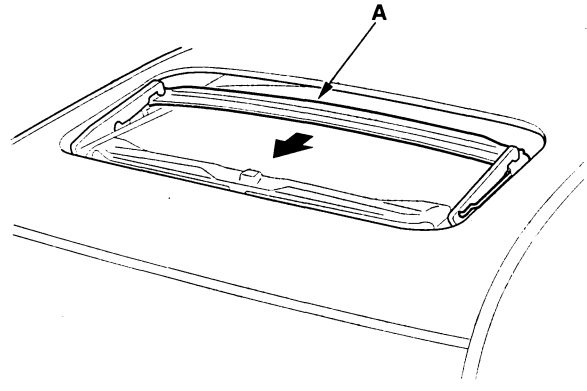

(cont'd)

Protected by AR

Drain Channel Replacement (cont'd)

4. Pull the rear edge of the drain channel (A) up while pushing both clips (B), and release the channel from both hooks (C) of the drain channel slider by pulling it rearward.

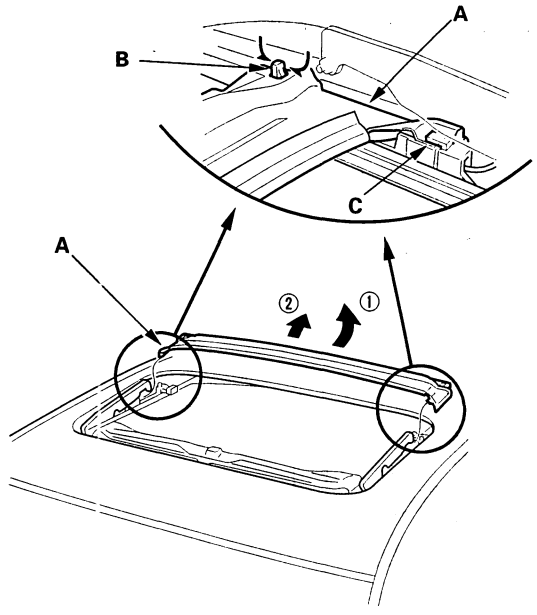

5. Remove the drain channel.

6. Install the channel in the reverse order of removal, and note these items:

   - Push the clip portions into place securely.
   - Check the glass height adjustment (see page 20-69).

7. Check for water leaks. Let the water run freely from a hose without a nozzle. Do not use a high-pressure spray.

Sunshade Replacement

2-door

1. Remove the drain channel (see page 20-72).

2. Remove the screws, then remove the set plate (A) from each side.

Fastener Locations

▶ : Screw, 4

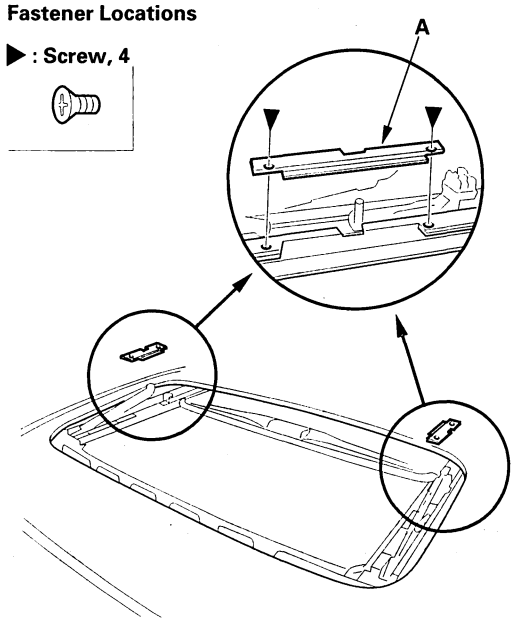

3. Slide the sunshade (A) until you can see both front sunshade base sliders (B).

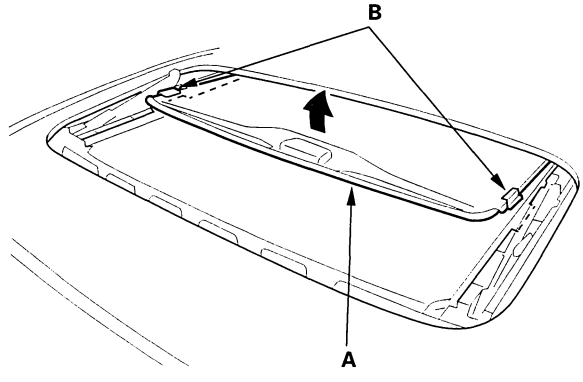

BACK

Protected by AR

4. While lifting the front portion of the sunshade (A), move the sunshade forward until you can see both rear sunshade base sliders (B). Do not damage the sunshade.

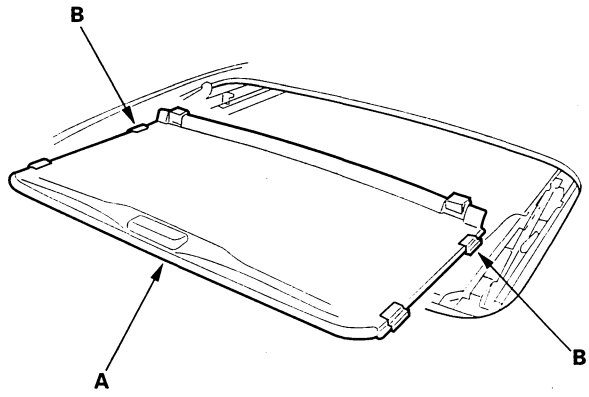

5. Release both rear sunshade base sliders from the guide rail portions of the frame, then remove the sunshade.

6. Install the sunshade in the reverse order of removal, and note these items:

   - Apply medium strength liquid thread lock to the set plate mounting screws before reinstallation.
   - Check the glass height adjustment (see page 20-69).

7. Check for water leaks. Let the water run freely from a hose without a nozzle. Do not use a high-pressure spray.

4-door

1. Remove the drain channel (see page 20-73).

2. Slide the sunshade (A) until you can see both sunshade slider spacers (B).

Fastener Locations

▶ : Screw, 4

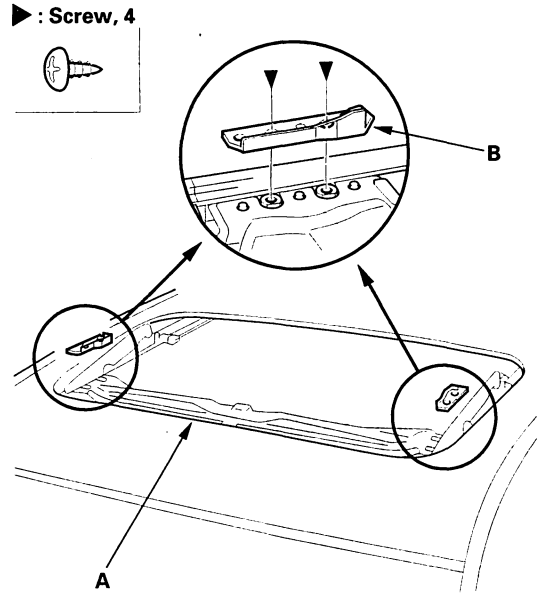

3. Remove the screws, then remove both spacers.

(cont'd)

Protected by AR

Sunshade Replacement (cont'd)

4. While lifting the front portion of the sunshade (A), move the sunshade forward until you can see both sunshade rear hooks (B). Do not damage the sunshade and hooks.

Fastener Locations

▶ : Screw, 4

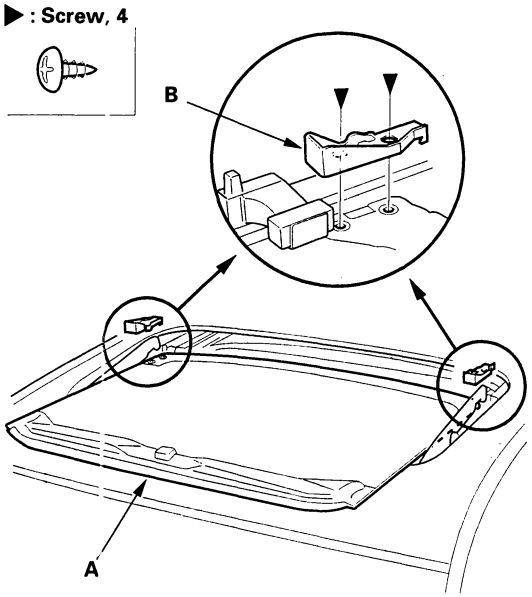

5. Remove the screws, then remove both hooks.

6. Remove the sunshade (A).

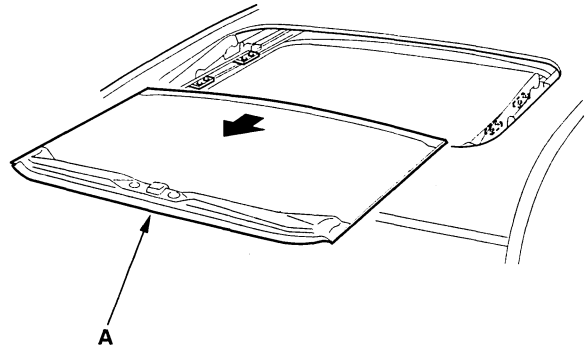

7. Remove both front sunshade base sliders (A) and both rear sunshade base sliders (B).

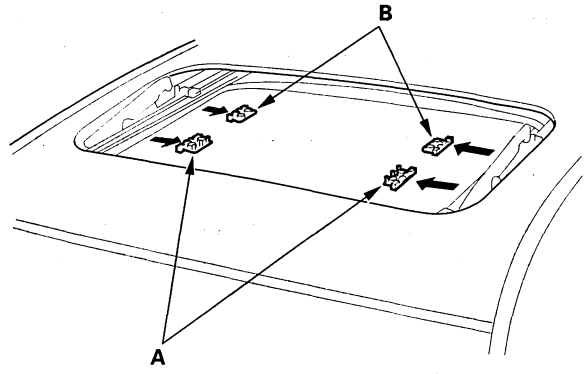

8. Install the sunshade in the reverse order of removal, and check the glass height adjustment (see page 20-69).

9. Check for water leaks. Let the water run freely from a hose without a nozzle. Do not use a high-pressure spray.

BACK

Protected by AR

Motor Replacement

2-door

1. Remove the headliner (see page 20-117).
2. Put on gloves to protect your hands. Disconnect the connector (A), and using a T25 Torx bit, remove the bolts, then remove the motor (B). Do not operate the motor before reinstallation.

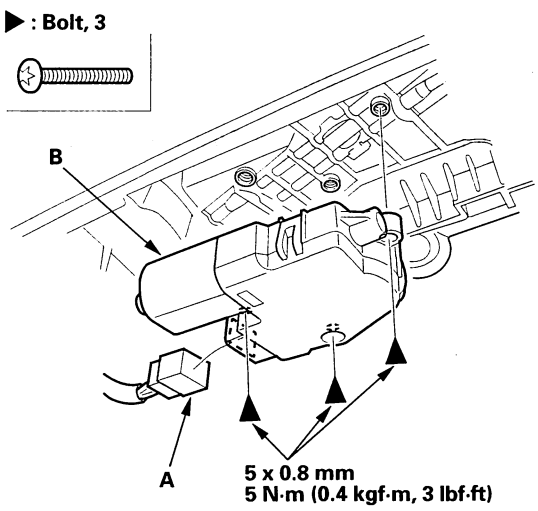

3. Install the motor in the reverse order of removal, and note these items:
   - Apply medium strength liquid thread lock to the motor mounting bolts before reinstallation.
   - Make sure the connector is plugged in properly.
   - Do the moonroof motor reprogram procedure (see page 22-307).
   - Check the motor operation.

4-door

1. Remove the headliner (see page 20-117).
2. Put on gloves to protect your hands. Disconnect the connector (A), and remove the bolts, then remove the motor (B).

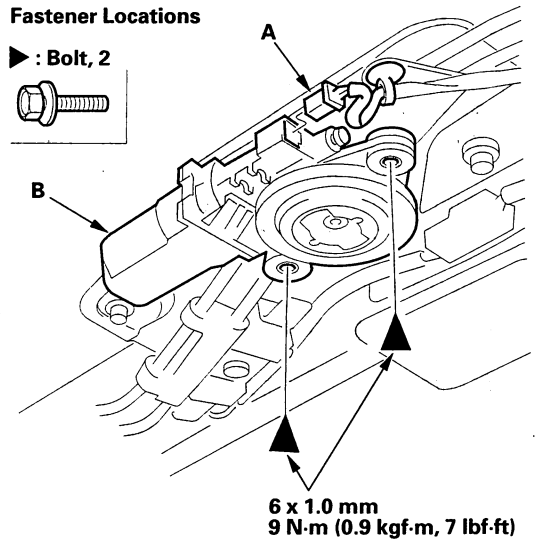

3. Install the motor in the reverse order of removal, and note these items:
   - Make sure the connector is plugged in properly.
   - Check the motor operation.

Protected by AR

Frame and Drain Tube Replacement

SRS components are located in this area. Review the SRS component locations (see page 23-17) and the precautions and procedures (see page 23-19) before performing repairs or service.

1. Remove these items:

   - Headliner (see page 20-117)
   - Moonroof glass (see page 20-70)

2. 2-door: Remove the moonroof frame (A). Put on gloves to protect your hands.

   –1 Disconnect the motor connector (B), and the drain tubes (C).
   –2 Remove the interior harness (D) by detaching the harness clips (E) and removing the cushion tape (F).
   –3 With an assistant holding the frame, remove the bolts (G, H) starting at the rear, and release the rear hooks (I) by moving the frame forward, then remove the frame.
   –4 With the help of an assistant, carefully remove the frame through the door opening. Take care not to damage the interior trim, body, or seat covers.

Fastener Locations

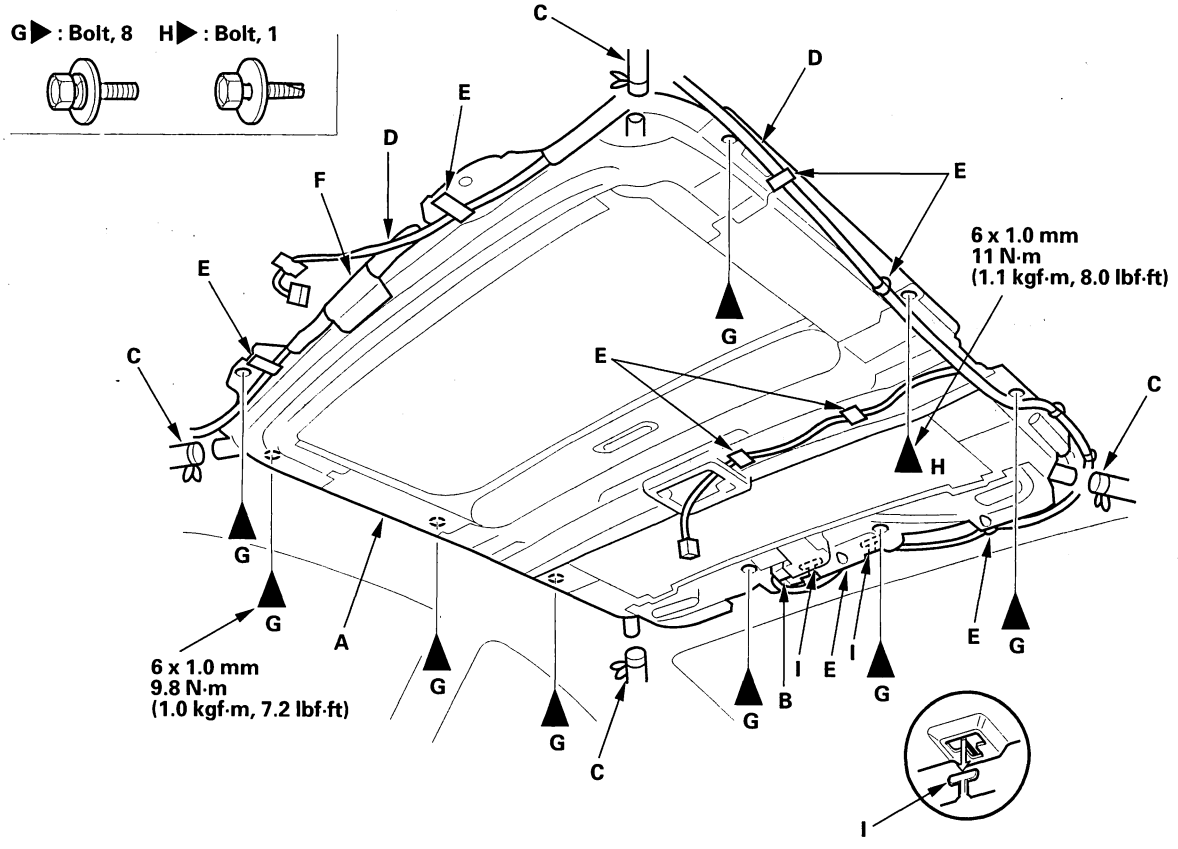

BACK

Protected by AR

3. 4-door: Remove the moonroof frame (A). Put on gloves to protect your hands.

–1 Disconnect the motor connector (B), open/close-tilt/close switch connector (C), and the drain tubes (D), and remove the moonroof relays (E).
–2 Remove the interior harness (F) by detaching the harness clips (G) and removing the tapes (H).
–3 With an assistant holding the frame, remove the bolts starting at the rear, and release the rear hooks (I) by moving the frame forward, then remove the frame.
–4 With the help of an assistant, carefully remove the frame through the front door opening. Take care not to damage the interior trim, body, or seat covers.

Fastener Locations

▶: Bolt, 9

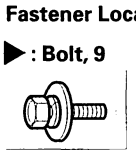

(cont'd)

Protected by AR

Frame and Drain Tube Replacement (cont'd)

4. To remove a front drain valve (A) from the body, remove the kick panel, left or right, 2-door (see page 20-90), 4-door (see page 20-91). Tie a string to the top end of the drain tube, then pull the front drain tube (B) down out of the front pillar.

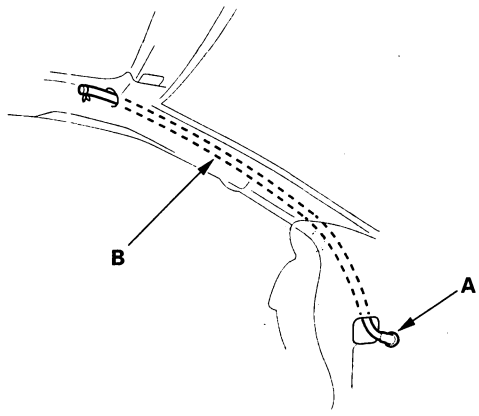

5. To remove a rear drain valve (A) from the body, remove these parts, 2-door (see page 20-112), 4-door (see page 20-113):

   - Spare tire lid
   - Trunk rear trim panel
   - Jack lid

   Tie a string to the top end of the rear drain tube (B), then pull back the trunk side trim panel and pull the drain tube down out of the pillar.

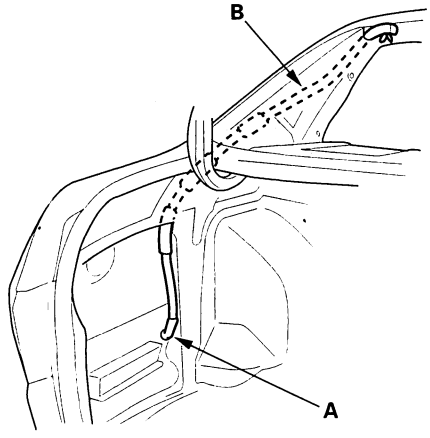

6. Install the frame and drain tube in the reverse order of removal, and note these items:

   - Before installing the frame, clear the drain tubes and drain valves using compressed air.
   - Check the frame seal.
   - Clean the surface of the frame.
   - To install a drain tube, tie the top of the tube to the string that was pulled through when the tube was removed. Use the string to pull the tube up into the roof.
   - When installing the frame, first attach the rear hooks into the body holes.
   - Make sure the connectors are plugged in properly.
   - When installing the rear drain tube at the rear pillar, make sure the cushion on the tube aligns with the hole in the body, and that the alignment mark on the tube aligns with the upper clip.
   - When connecting the drain tube, slide it over the frame nozzle at least 10 mm (0.39 in.).
   - Install the tube clip (A) on the drain tube (B) as shown.

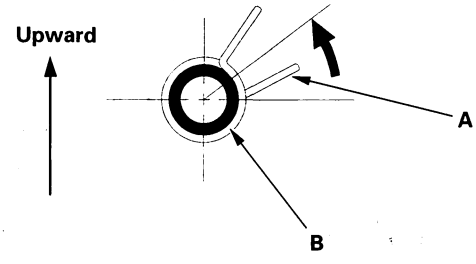

7. Check for water leaks. Let the water run freely from a hose without a nozzle. Do not use a high-pressure spray.

BACK

Protected by AR

Inner Cable Replacement

2-door

1. Remove the frame (see page 20-78).
2. Remove these items:
   - Wind deflector (see page 20-71)
   - Moonroof motor (see page 20-77)
3. Tilt the glass bracket (A) up by sliding the link lifter (B) forward fully.

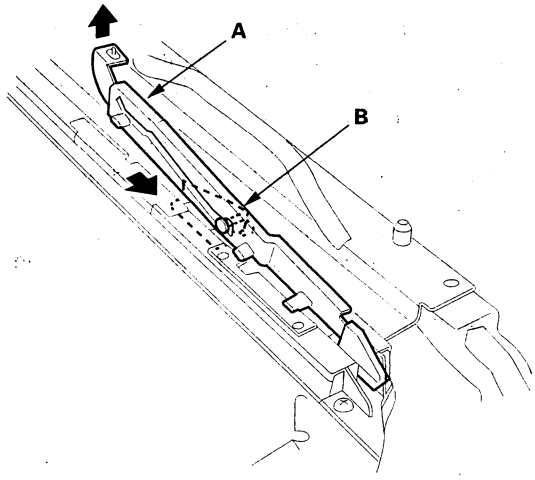

4. Remove the screws (A, B), then remove the slide stop (C) and the plate (D).

Fastener Locations

A▶ : Screw, 1 B▶ : Screw, 2

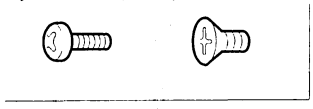

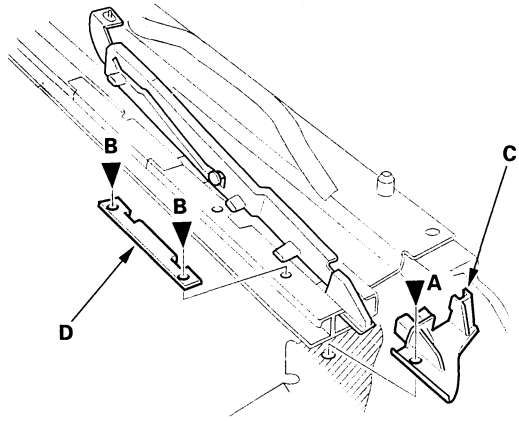

5. Slide the glass bracket (A) forward to remove the front slider portion (B) of the bracket out of the guide rail (C).

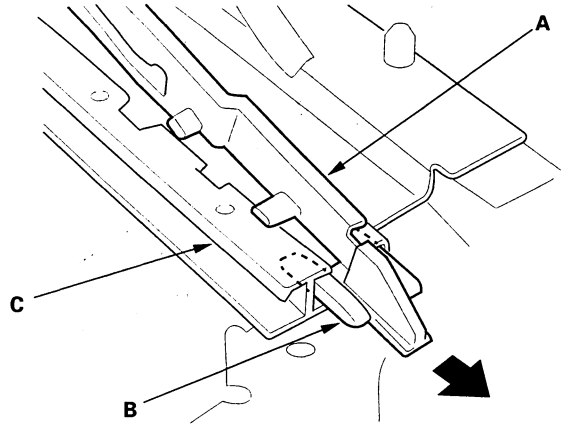

6. Remove the glass bracket (A) from the link lifter (B).

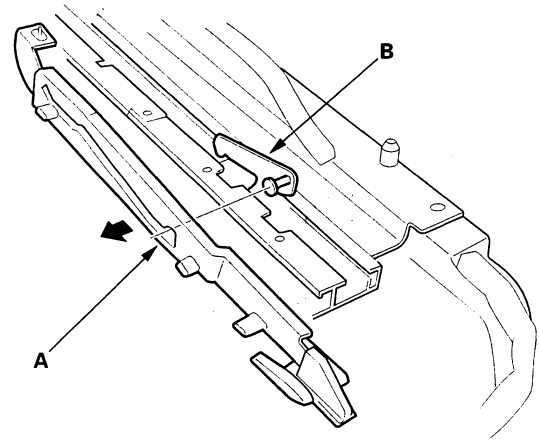

(cont'd)

Protected by AR

Inner Cable Replacement (cont'd)

7. Pull the slider portion (A) of the inner cable (B) out of the slide rail (C), then remove the inner cable.

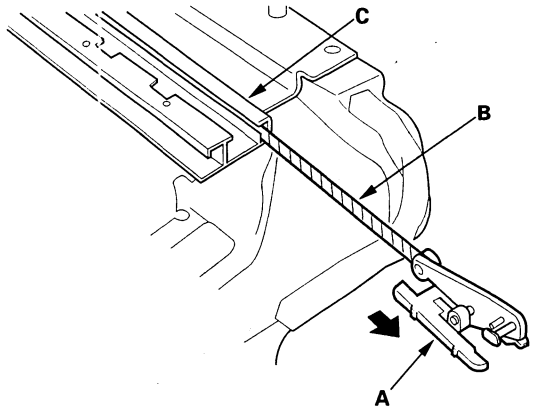

8. If necessary, remove the drain channel slider (A) by sliding it forward.

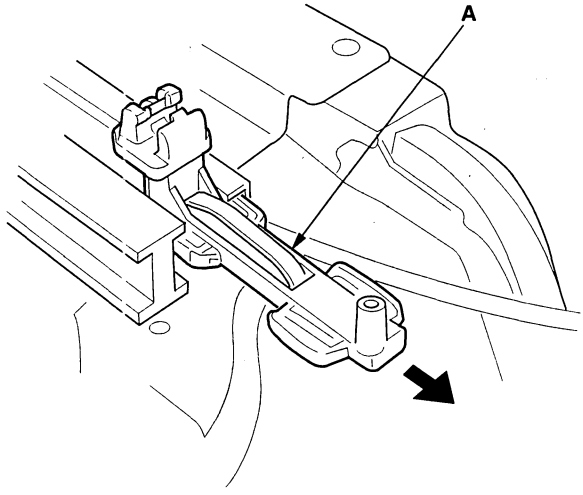

9. Install the slider and cable in the reverse order of removal, and note these items:

- Damaged parts should be replaced.
- Apply multipurpose grease to the glass bracket (A) and guide rail portion of the frame (B) indicated by the arrows.
- Apply butyl sealant (C) to the frame (D) where the slide stops (E) will be reinstalled with screws (F).
- Apply medium strength liquid thread lock to the set plate (G) mounting screws (H) before reinstallation.
- Before reinstalling the motor, slide both glass brackets rearward fully until the slider portions (I) of the inner cable contact with the screws (J) on the guide rail to align both glass brackets.
- Before reinstalling the motor, install the frame and glass, then check the opening drag (see page 20-87).
- After reinstalling the motor, do the moonroof motor reprogram procedure (see page 22-307).

Grease application

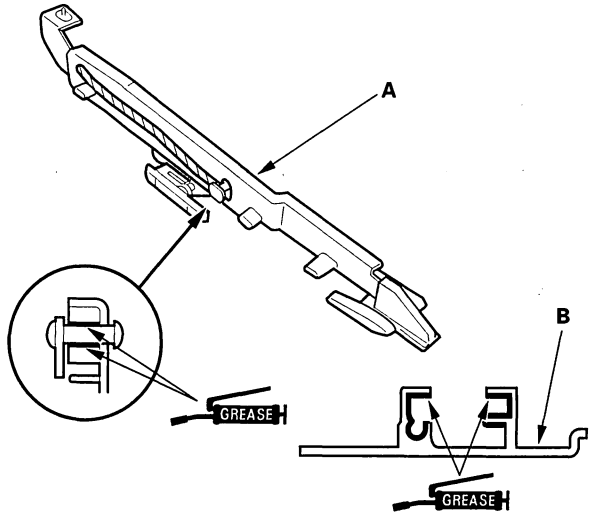

BACK

Protected by AR

Butyl sealant application

Fastener Locations

F ▶ : Screw,1 H ▶ : Screw, 2



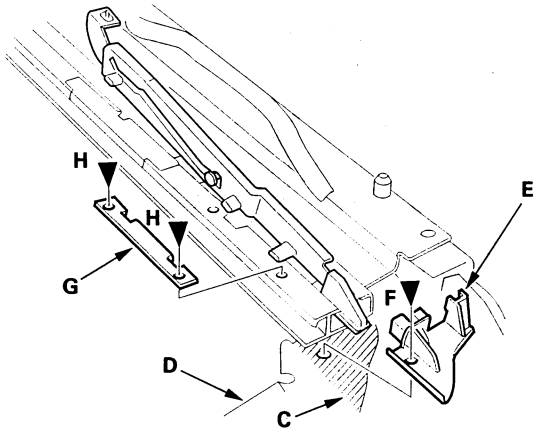

Glass bracket alignment

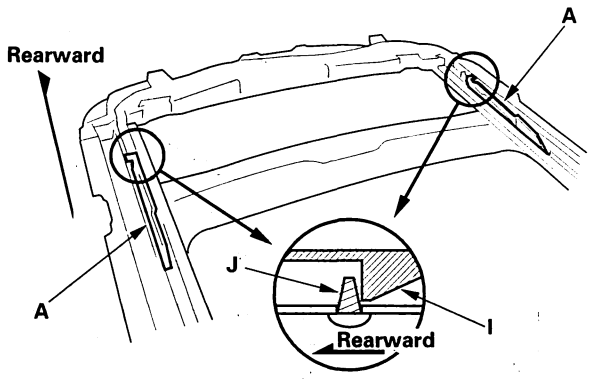

Protected by AR

Drain Channel Slider and Cable Assembly Replacement

4-door

1. Remove the frame (see page 20-78).

2. Remove these parts from the frame:

   - Sunshade (see page 20-75)
   - Moonroof motor (see page 20-77)

3. Put on gloves to protect your hands. Remove the screws (A, B) securing the slide stops (C), and cable tube rear brackets (D), cable tube side bracket mounting bolts (E) and the cable tube mounting screws (F) from both sides of the frame (G).

Fastener Locations

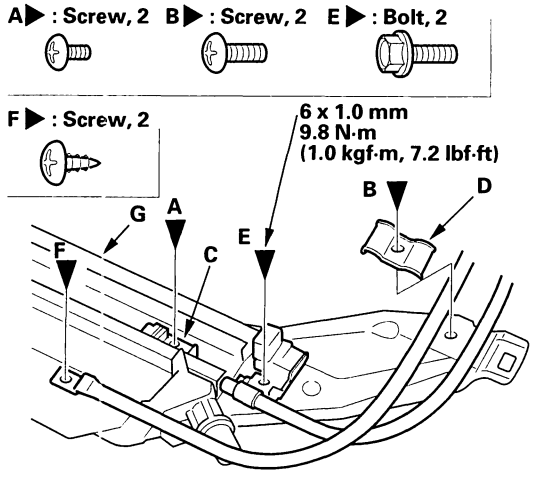

4. Turn both cable tube side brackets (A) up to release the hooks (B) from the holes in both sides of the frame.

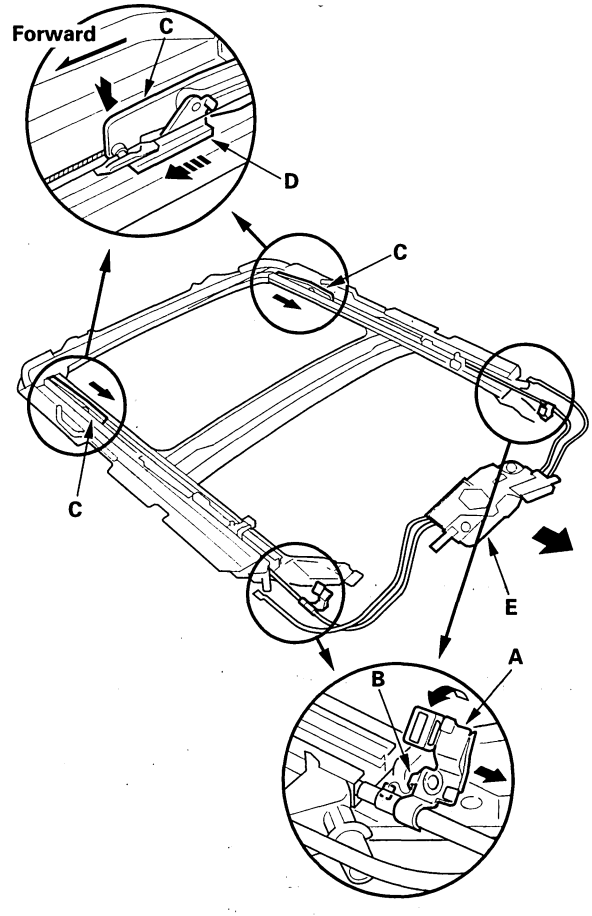

5. Pivot the glass brackets (C) down by sliding the lift up sliders (D) back, then slide both glass brackets back with the lift up sliders.

6. Slide the cable assembly (E) half-way.

BACK

Protected by AR

7. Remove the slide stops (A) and the drain channel sliders (B) from both sides.

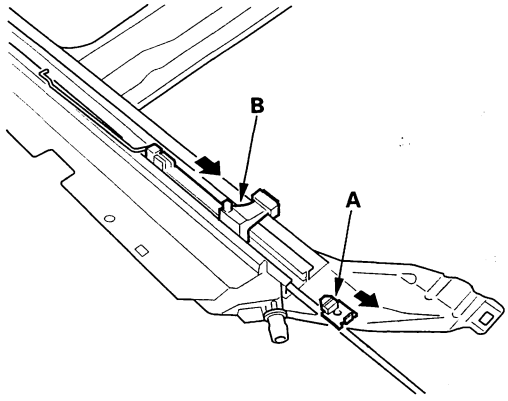

8. Slide the cable assembly (A) and both glass brackets (B) back, remove the deflector sliders (C) from both glass brackets, then remove them from the frame (D).

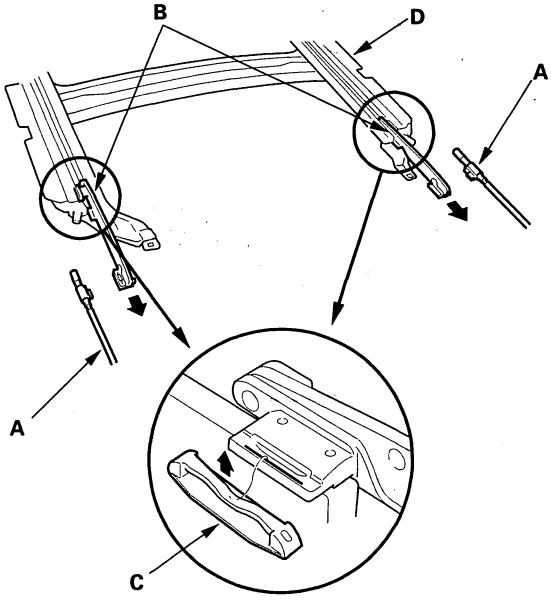

9. Install the slider and cable assembly in the reverse order of removal, and note these items:

- Damaged parts should be replaced.
- Apply multipurpose grease to the glass bracket (A) and guide rail portion of the frame (B) indicated by the arrows.
- Before reinstalling the motor, make sure both link lifters are parallel, and in the fully closed position.
- Before reinstalling the motor, install the frame and glass, then check the opening drag (see page 20-87).

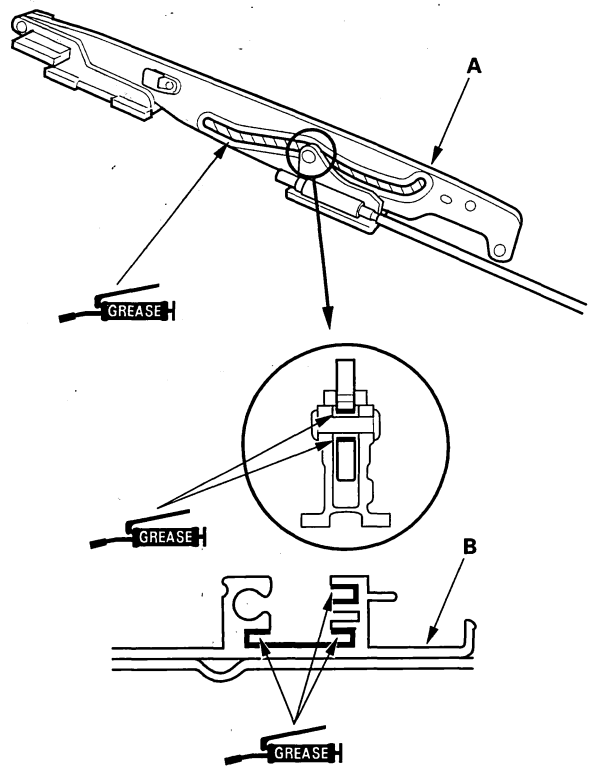

Protected by AR

Moonroof

Limit Switch Adjustment

4-door

1. Remove the headliner (see page 20-117).
2. With the moonroof wrench, close the glass (A) fully:
   - Make sure both link lifters (B) are parallel, and in the position shown.
   - Check the glass fit to the roof panel and the glass height (see page 20-69).

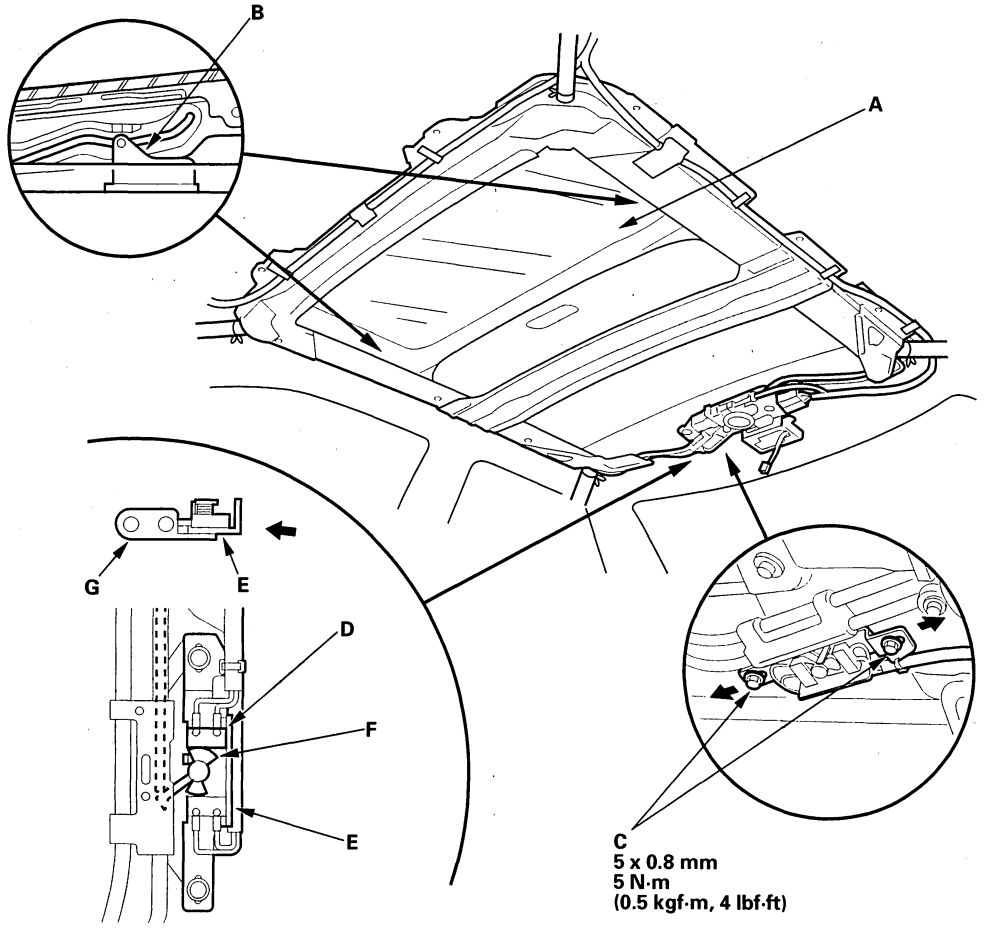

3. With an open-end wrench, loosen the limit switch mounting bolts (C).
4. Adjust the limit switch (D):
   - Move the switch plate (E) a little at a time, then secure it at the position where you hear a faint click when the switch cam (F) pushes the limit switch (open/close).
   - Check that the switch plate contacts the switch bracket (G).
5. Check the operation of the glass (from the tilt-up position to fully closed position, from the fully open position to the fully closed position) by operating the moonroof switch: Adjust the switch plate until the glass opens and closes correctly.
6. Reinstall all remaining parts in the reverse order of removal.

BACK

Protected by AR

Closing Force and Opening Drag Check

1. Remove the headliner (see page 20-117).

2. Closing force check:

   - With a shop towel (A) on the leading edge of the glass (B), attach a spring scale (C) as shown.
   - Have an assistant hold the switch to close the glass while you measure the force required to stop it.
   - Read the force as soon as the glass stops moving, then immediately release the switch and spring scale.

   Closing force: 200—290 N (20—30 kgf, 44—66 lbf)

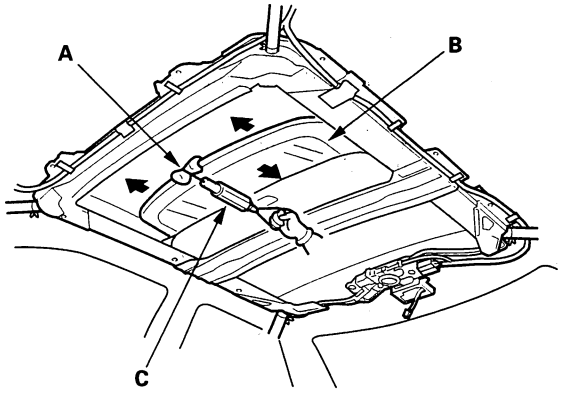

3. If the force in not within specification, remove the moonroof motor, 2-door (see page 20-77), 4-door (see page 20-77), then check:

   - The gear portion and the inner cable for breakage and damage. If the gear portion is broken, replace the motor. If the inner cable is damaged, remove the frame (see page 20-78), and replace the cable, 2-door (see page 20-81), 4-door (see page 20-84).
   - The moonroof motor, 2-door (see page 22-308), 4-door (see page 22-306). If the motor fails to run or doesn't turn smoothly, replace it.
   - The opening drag. Go to step 4.

4. Opening drag check: Protect the leading edge of the glass with a shop towel (A). Measure the effort required to open the glass using a spring scale (B) as shown.

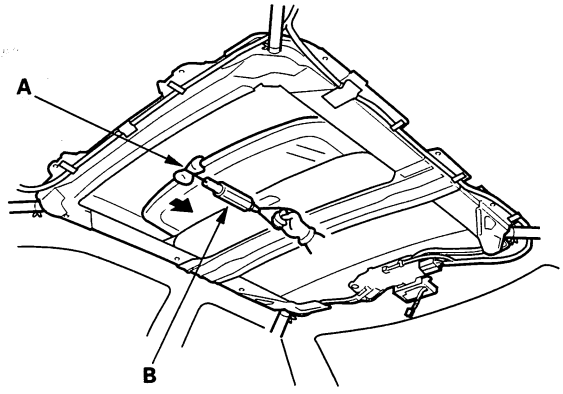

5. If the load is over 40 N (4 kgf, 9 lbf), check:

   - The side clearance and glass height adjustment (see page 20-69).
   - For broken or damaged sliding parts. If any sliding parts are damaged, replace them.

6. 2-door: Do the moonroof motor reprogram procedure (see page 22-307) after reinstalling the moonroof motor.

Protected by AR

Component Location Index

2-door

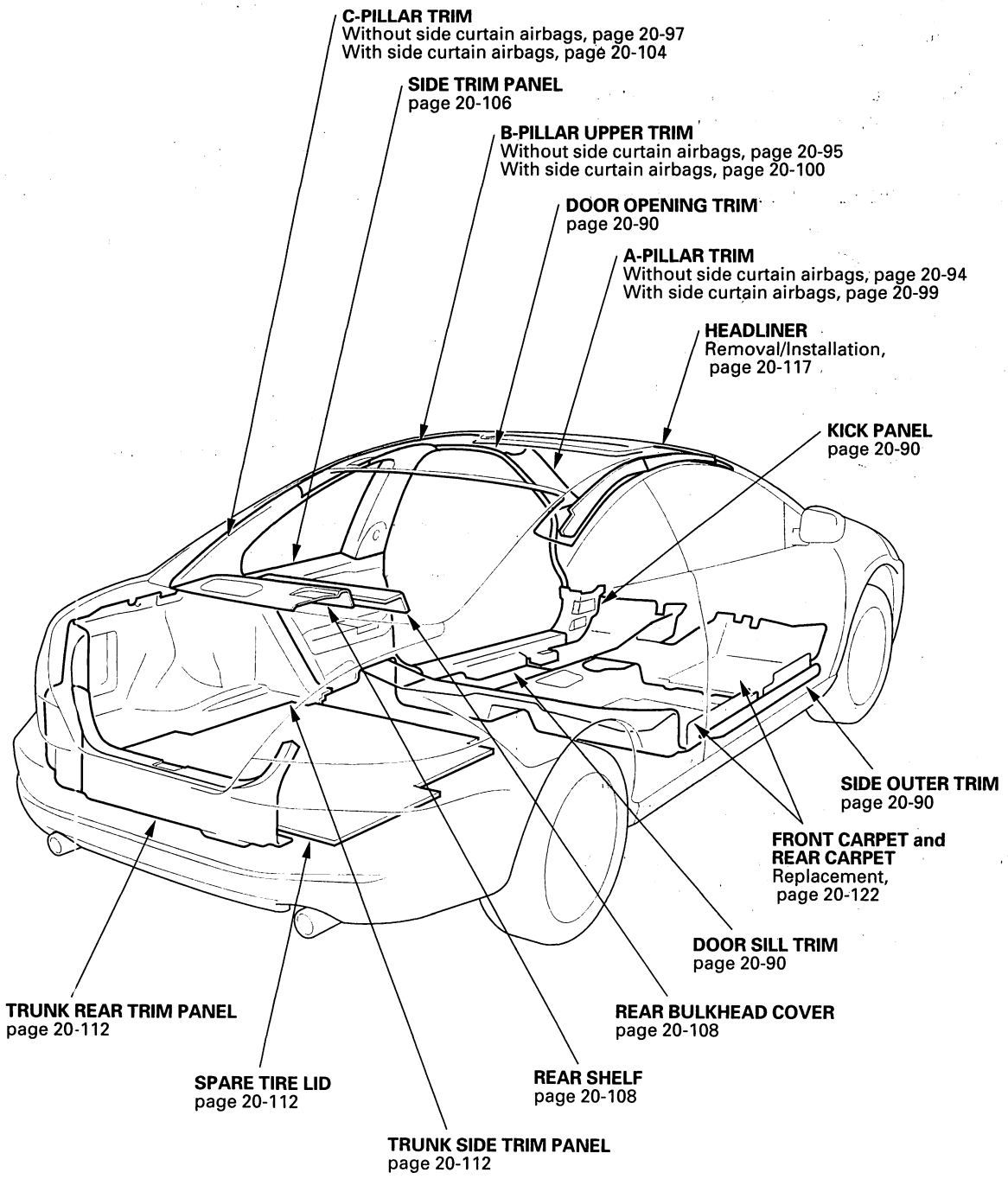

BACK

Protected by AR

4-door

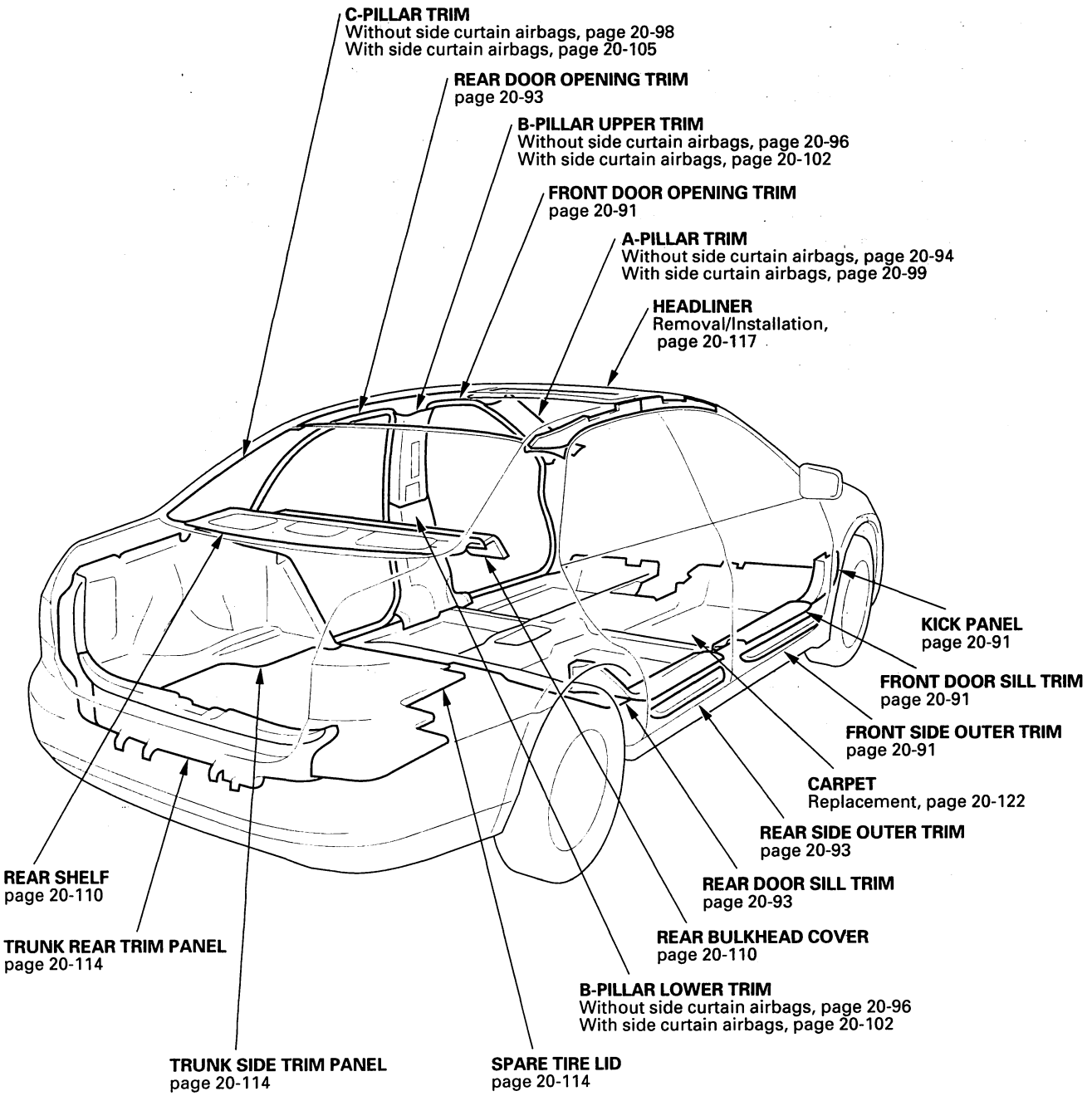

Protected by AR

Trim Removal/Installation - Door Areas

Special Tools Required
KTC trim tool set SOJATP2014

2-door - Door Sill Area

NOTE:
- Put on gloves to protect your hands.
- Take care not to bend or scratch the trim and panels.
- Use the appropriate tool from the KTC trim tool set to avoid damage when prying components.

1. Left side: Remove the footrest (see step 5 on page 20-123).

2. Left side: Remove the front side cap from the door sill trim, and remove the opener lock cylinder and bolt (see page 20-223).

3. Detach the hooks (A) and tabs (B) from the kick panel (C) and side trim panel (D), and pull the door sill trim (E) up by hand to detach the clips (F), then remove it.

Fastener Locations
F ▷: Clip, 6 (White) J ▷: Clip, 4

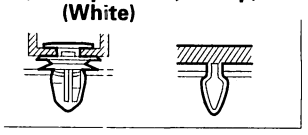

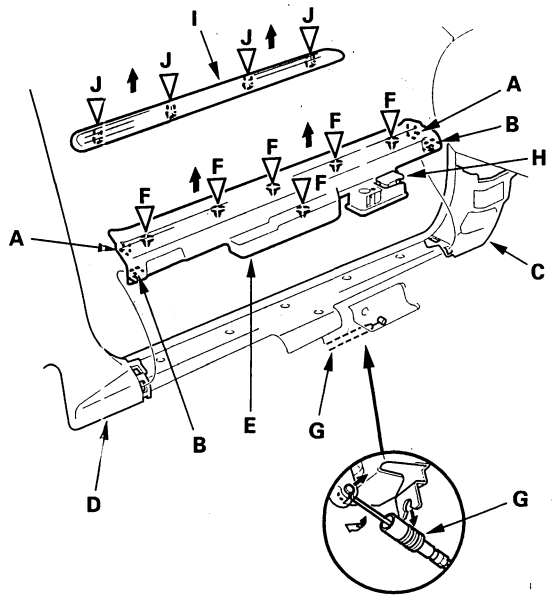

4. Disconnect the trunk lid opener/fuel fill door opener cable (G) from the opener (H).

5. If necessary, pull the side outer trim (I) up to detach the clips (J), then remove the trim.

6. Remove the left kick panel (A) or the right kick panel (B).

–1 Pull out the door opening trim (C) as needed from the kick panel hooks (D) and the door opening flange.
–2 Left side: Pull the hood release handle, and hold it.
–3 Pull the kick panel back by hand to detach the clips (E, F, G), then remove it.

Fastener Locations
E ▷: Clip, 1 (Black) F ▷: Clip, 2 (Light Blue) G ▷: Clip, 1 (White)

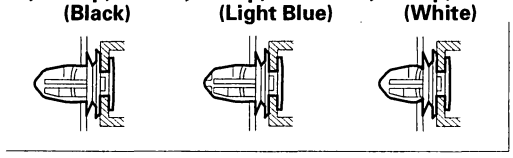

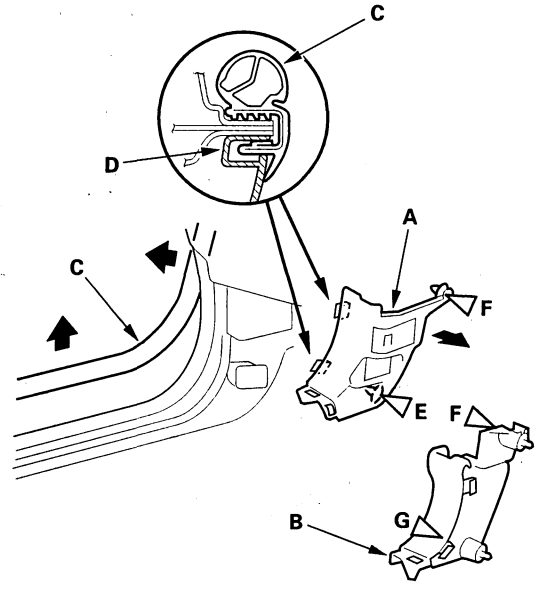

BACK

Protected by AR

7. Pull out the door opening trim (A) from the trim hooks (B) and around the door opening flange, then remove the trim.

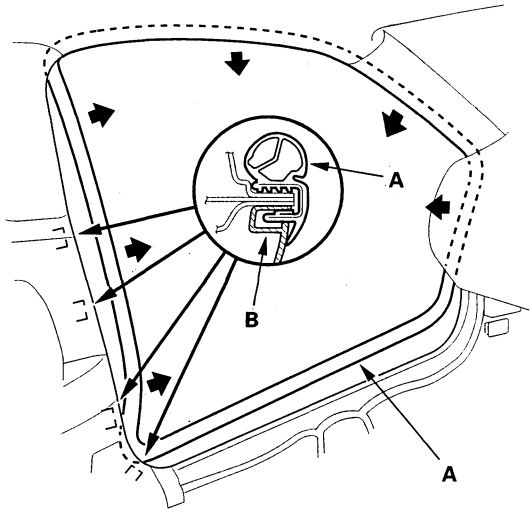

8. Install the trim in the reverse order of removal, and note these items:

- Check the clips for damage or stress-whitening, and replace them with new ones.
- Push the clips and hooks into place securely.
- Make sure the trunk lid opener/fuel fill door opener cable is connected securely.

Special Tools Required
KTC trim tool set SOJATP2014

4-door - Front Door Sill Area

NOTE:
- Put on gloves to protect your hands.
- Take care not to bend or scratch the trim and panels.
- Use the appropriate tool from the KTC trim tool set to avoid damage when prying components.

1. Left side: Remove the footrest (see step 5 on page 20-123).

2. Left side: Remove the front side cap from the front door sill trim, and remove the opener lock cylinder and bolt (see page 20-223).

3. Detach the hooks (A) and tabs (B) from the kick panel (C) and B-pillar lower trim (D), and pull the front door sill trim (E) up by hand to detach the clips (F) or (G), then remove it.

Fastener Locations

F ▷: Clip, 5 (White) G ▷: Clip, 1 (Canada) K ▷: Clip, 4

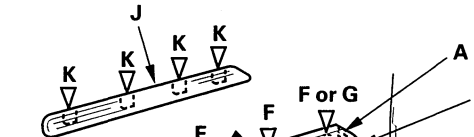

4. Disconnect the trunk lid opener/fuel fill door opener cable (H) from the opener (I).

5. If necessary, pull the front side outer trim (J) up to detach the clips (K), then remove the trim.

(cont'd)

Protected by AR

Trim Removal/Installation - Door Areas (cont'd)

6. Remove the left kick panel (A) or the right kick panel (B).

   –1 Pull out the door opening trim (C) as needed from the kick panel hooks (D) and the door opening flange.
   –2 Left side: Pull the hood release handle, and hold it.
   –3 Pull the kick panel back by hand to detach the clips (E, F, G), then remove it.

Fastener Locations

E ▷: Clip, 1 (Black) F ▷: Clip, 2 (Light Blue) G ▷: Clip, 1 (White)

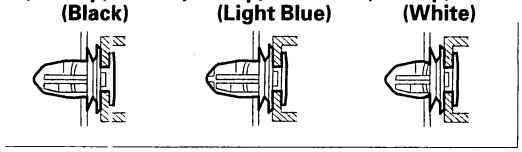

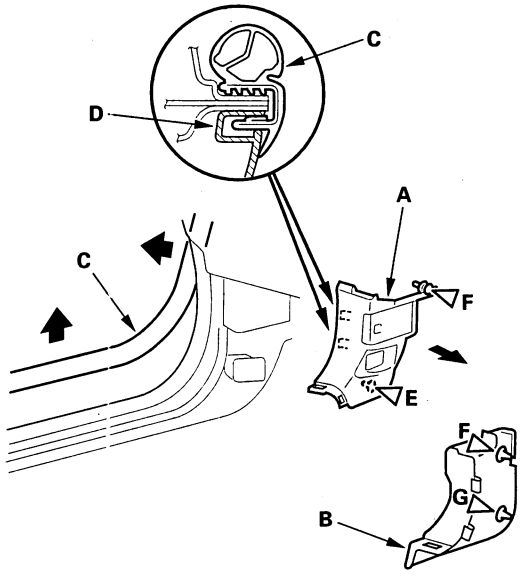

7. Pull out the front door opening trim (A) from the trim hooks (B) and around the front door opening flange, then remove the trim.

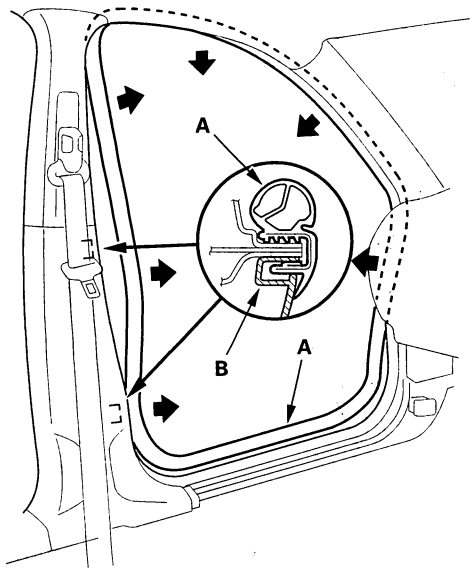

8. Install the trim in the reverse order of removal, and note these items:

   - Check the clips for damage or stress-whitening, and replace them with new ones.
   - Push the clips and hooks into place securely.
   - Make sure the trunk lid opener/fuel fill door opener cable is connected securely.

BACK

Protected by AR

Special Tools Required
KTC trim tool set SOJATP2014

4-door - Rear Door Sill Area

NOTE:
- Put on gloves to protect your hands.
- Take care not to bend or scratch the trim and panels.
- Use the appropriate tool from the KTC trim tool set to avoid damage when prying components.

1. Detach the hook (A) and tab (B) from the B-pillar lower trim (C), and pull the rear door sill trim (D) up by hand to detach the clips (E), then remove it.

Fastener Locations

E ▷ : Clip, 3 (White) **G ▷ : Clip, 2**

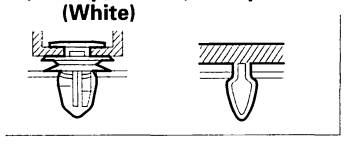

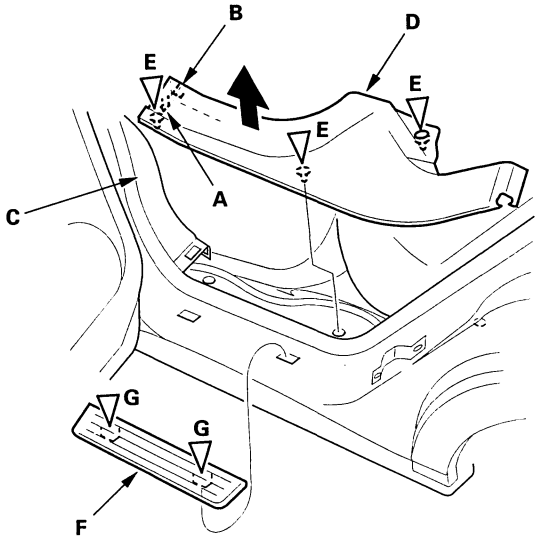

2. If necessary, pull the rear side outer trim (F) up to detach the clips (G), then remove the trim.

3. Pull out the rear door opening trim (A) from the trim hooks (B) and around the rear door opening flange, then remove the trim.

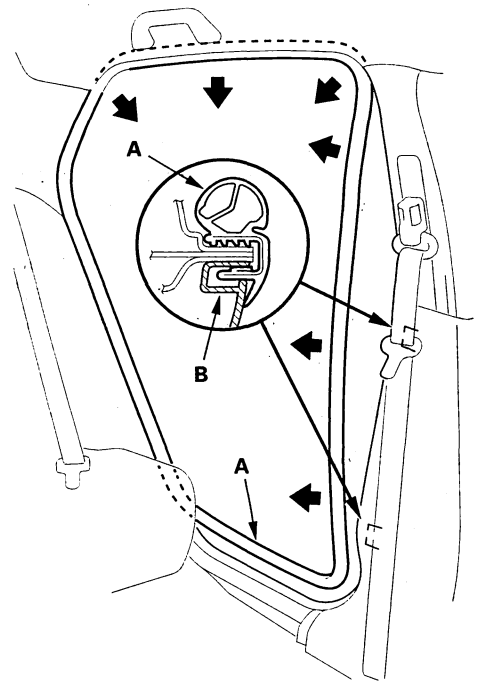

4. Install the trim in the reverse order of removal, and note these items:

   - Check the clips for damage or stress-whitening, and replace them with new ones.
   - Push the clips and hooks into place securely.

Protected by AR

Trim Removal/Installation - Pillar Areas

Special Tools Required
KTC trim tool set SOJATP2014

A-pillar - Without Side Curtain Airbags ('03-04 models)

NOTE:
- Put on gloves to protect your hands.
- Take care not to bend or scratch the trim and panels.
- Use the appropriate tool from the KTC trim tool set to avoid damage when prying components.

1. Pull out the door opening trim (A) as needed. Pull the upper portion of the A-pillar trim (B) back by hand to detach the clips, and pull the trim up, then remove it from the dashboard (C).

   NOTE: The 2-door is shown, the 4-door is similar.

Fastener Locations

▷: **Clip, 2 (White)**

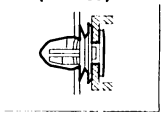

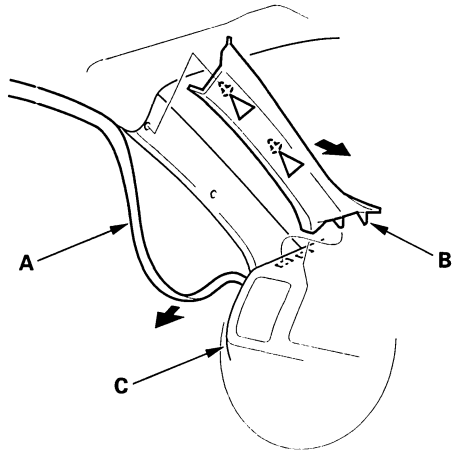

2. Install the trim in the reverse order of removal, and note these items:

   - Check the clips for damage or stress-whitening, and replace them with new ones.
   - Push the clips into place securely.

BACK

Protected by AR

Special Tools Required
KTC trim tool set SOJATP2014

2-door-B-pillar - Without Side Curtain Airbags ('03-04 models)

NOTE:
- Put on gloves to protect your hands.
- Take care not to bend or scratch the trim and panels.
- Use the appropriate tool from the KTC trim tool set to avoid damage when prying components.

1. Remove these items:
   - C-pillar trim, front portion as needed (see page 20-97)
   - Side trim panel, upper portion as needed (see page 20-106)
   - Door opening trim, as needed (see step 7 on page 20-91)

2. Remove the front seat belt upper anchor bolt (see step 6 on page 23-6).

3. Remove the B-pillar upper trim (A).
   –1 Remove the clip (B) from the seat belt guide (C).
   –2 Pull out the trim by hand to detach the clips (D), and to release the hooks (E) in the numbered sequence.

Fastener Locations
B ▷: Clip, 1 D ▷: Clip, 3 (White)

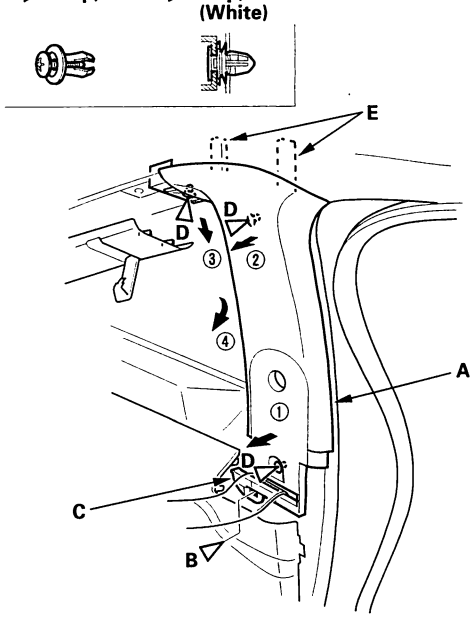

4. Install the trim in the reverse order of removal, and note these items:
   - Check the clips for damage or stress-whitening, and replace them with new ones.
   - Push the clips into place securely.
   - Apply medium strength liquid thread lock to the front seat belt upper anchor bolt before reinstallation (see step 9 on page 23-6).
   - Before installing the anchor bolt, make sure there are no twists or kinks in the seat belt.
   - When installing the side trim panel, make sure the seat belt is not pinched.

Protected by AR

Trim Removal/Installation - Pillar Areas (cont'd)

Special Tools Required
KTC trim tool set SOJATP2014

4-door-B-pillar - Without Side Curtain Airbags ('03-04 models)

SRS components are located in this area. Review the SRS component locations (see page 23-17) and the precautions and procedures (see page 23-19) before performing repairs or service.

NOTE:
- Put on gloves to protect your hands.
- Take care not to bend or scratch the trim and panels.
- Use the appropriate tool from the KTC trim tool set to avoid damage when prying components.

1. Remove these items:
   - Front door sill trim (see page 20-91)
   - Rear door sill trim (see page 20-93)
   - Front door opening trim, as needed (see step 7 on page 20-92)
   - Rear door opening trim, as needed (see step 3 on page 20-93)

2. Remove the B-pillar lower trim (A).
   -1 Detach the lower clips by pulling the bottom of the trim back by hand.
   -2 Pull the trim down to release the upper hooks (B).

Fastener Locations

▷: **Clip, 2 (Black)**

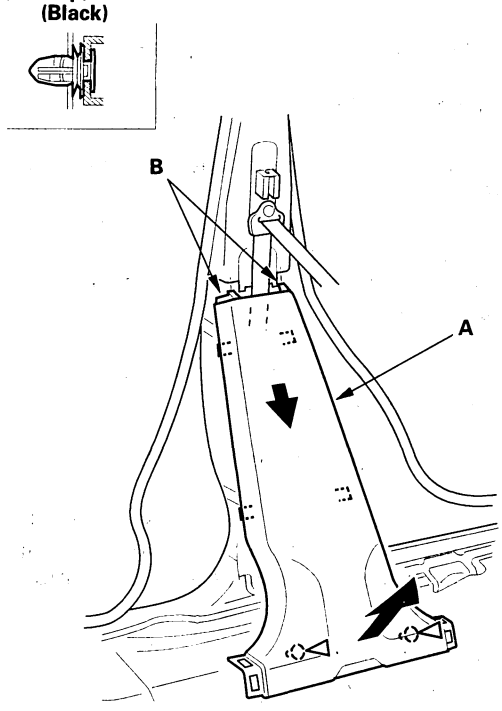

3. Remove the upper anchor cover, and remove the upper anchor bolt (see step 7 on page 23-8).

BACK

Protected by AR

4. Remove the B-pillar upper trim (A).

   –1 Pull the bottom of the trim back by hand to detach the lower clip.
   –2 Detach the upper clip by pulling the top of the trim.
   –3 Pull the trim down to release the upper hooks (B).

Fastener Locations

▷: **Clip, 2 (Black)**

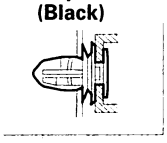

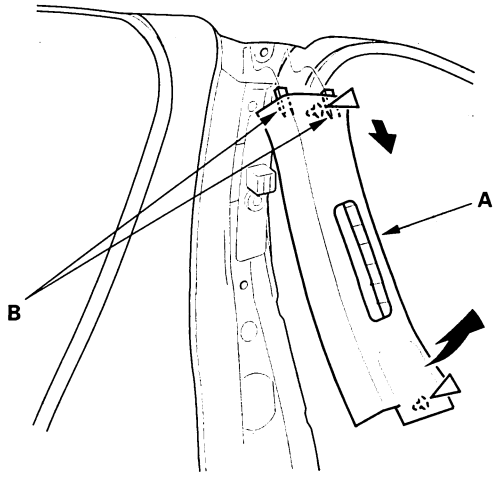

5. Install the trim in the reverse order of removal, and note these items:

   - Check the clips for damage or stress-whitening, and replace them with new ones.
   - Push the clips into place securely.
   - Apply medium strength liquid thread lock to the front seat belt upper anchor bolt before reinstallation (see step 12 on page 23-9).
   - Before installing the anchor bolt, make sure there are no twists or kinks in the seat belt.

Special Tools Required
KTC trim tool set SOJATP2014

2-door-C-pillar - Without Side Curtain Airbags ('03-04 models)

NOTE:
- Put on gloves to protect your hands.
- Take care not to bend or scratch the trim and panels.
- Use the appropriate tool from the KTC trim tool set to avoid damage when prying components.

1. Remove the rear seat cushion (see page 20-173).

2. Remove the rear seat belt lower anchor bolt (see step 2 on page 23-12).

3. Left side: Pull the coat hanger (A) down, and remove the coat hanger cover (B) by releasing the hook (C), then remove the screw (D).
   Right side: Remove the right C-pillar cap (E) by releasing the hooks (F), then remove the screw (G).

Left side

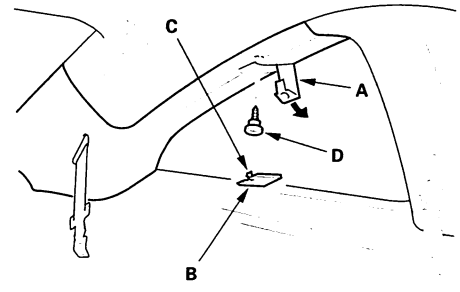

Right side

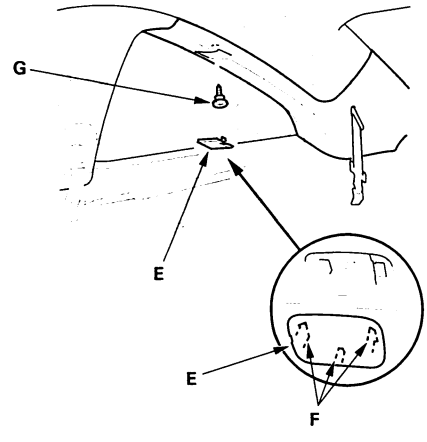

(cont'd)

Protected by AR

Trim Removal/Installation - Pillar Areas (cont'd)

4. Remove the C-pillar trim (A).

   –1 Pull the front edge of the trim down to detach the hooks (B) and clips (C) from the B-pillar upper trim (D).
   –2 Pull out the trim to detach the clips (E).
   –3 Pull out the bottom portion of the trim to detach the hooks (F) from the rear shelf (G) and the side trim panel (H).
   –4 Pass the rear seat belt (I) out through the slit in the trim.

Fastener Locations

C ▷ : Clip, 2 E ▷ : Clip, 3 (White)

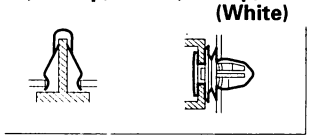

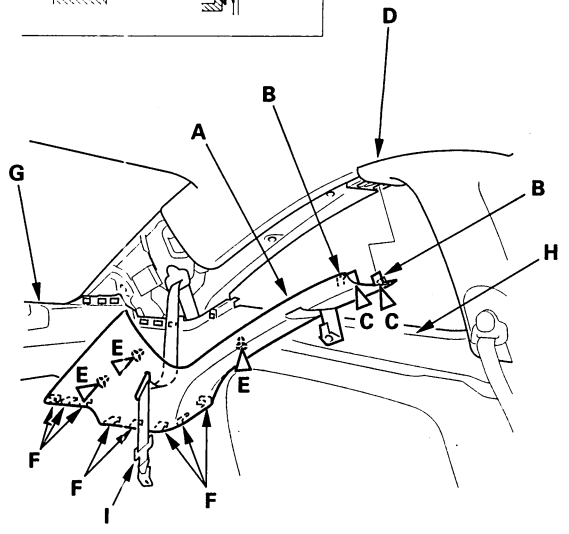

5. Install the trim in the reverse order of removal, and note these items:

   • Check the clips for damage or stress-whitening, and replace them with new ones.
   • Push the clips and hooks into place securely.
   • Apply medium strength liquid thread lock to the anchor bolt before reinstallation (see step 6 on page 23-13).
   • Before installing the anchor bolt, make sure there are no twists or kinks in the belt.

Special Tools Required
KTC trim tool set SOJATP2014

4-door-C-pillar - Without Side Curtain Airbags ('03-04 models)

NOTE:
• Put on gloves to protect your hands.
• Take care not to bend or scratch the trim and panels.
• Use the appropriate tool from the KTC trim tool set to avoid damage when prying components.

1. Remove these items:

   • Rear seat side bolster (see page 20-174)
   • Rear door opening trim, as needed (see step 3 on page 20-93)

2. Pull the C-pillar trim (A) back by hand to detach the clips, then remove it.

Fastener Locations

▷ : Clip, 5 (White)

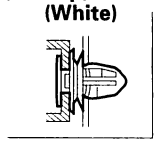

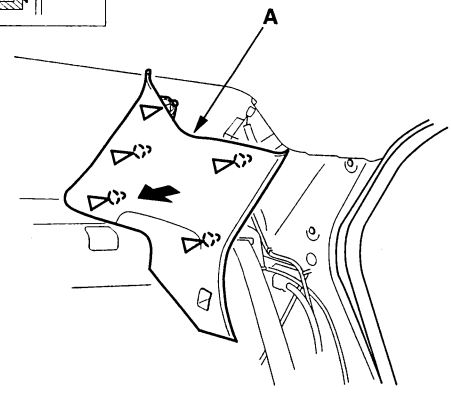

3. Install the trim in the reverse order of removal, and note these items:

   • Check the clips for damage or stress-whitening, and replace them with new ones.
   • Push the clips into place securely.

BACK

Protected by AR

Special Tools Required
KTC trim tool set SOJATP2014

A-pillar - With Side Curtain Airbags ('04-06 models)

SRS components are located in this area. Review the SRS component locations (see page 23-17) and the precautions and procedures (see page 23-19) before performing repairs or service.

NOTE:
- Put on gloves to protect your hands.
- Take care not to bend or scratch the trim and panels.
- Use the appropriate tool from the KTC trim tool set to avoid damage when prying components.

1. Remove the A-pillar trim (A).

   –1 Pull out the door opening trim (B) as needed.
   –2 Pry the A-pillar cap (C) out until it is stopped by the hooks (D). Release the hooks and pull the cap out of the grommet (E). Discard the cap.
   –3 Pull the trim back by hand to detach the clip, then pull the trim up.

   NOTE: The 2-door is shown, the 4-door is similar.

Fastener Location
▷: **Clip, 1 (White)**

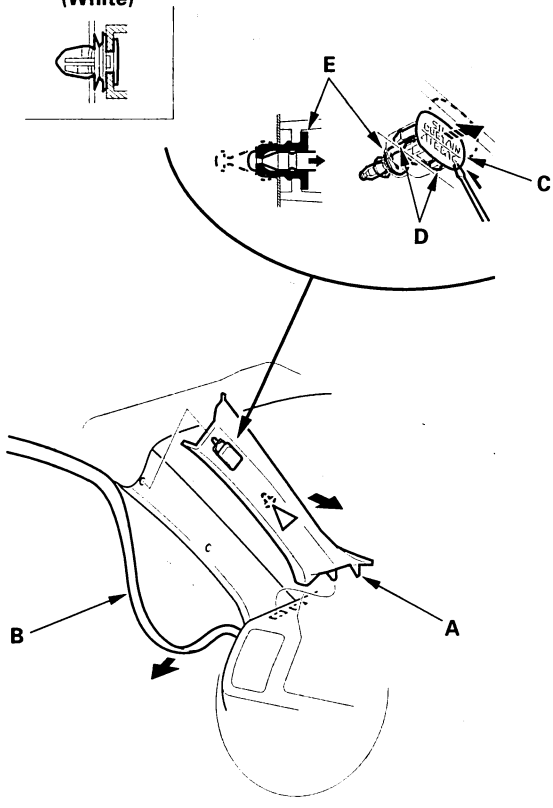

(cont'd)

Protected by AR

Trim Removal/Installation - Pillar Areas (cont'd)

2. Install the trim in the reverse order of removal, and note these items:

   - Check the clips for damage or stress-whitening, and replace them with new ones.
   - Do not reuse the A-pillar cap; always replace it.
   - If the side curtain airbag has deployed, replace the A-pillar trim with a new one.
   - To prevent the side curtain airbag from accidentally deploying, removed trim pieces should be checked for these types of damage:
     - Any cracks, deformations, or press-whitenings in the A-pillar trim (A)
     - Any cracks, or press-whitenings in the grommet and clip seating surfaces (B)
     - Bent or broken grommet (C)
   - Replace any damaged parts with new ones.
   - Make sure the top of the trim overlaps with the headliner correctly (see page 23-196).
   - Push the clips into place securely.

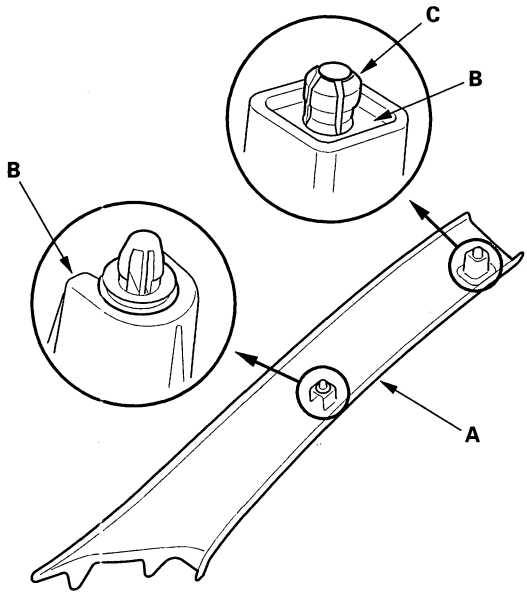

Special Tools Required
KTC trim tool set SOJATP2014

2-door-B-pillar - With Side Curtain Airbags ('04-06 models)

SRS components are located in this area. Review the SRS component locations (see page 23-17) and the precautions and procedures (see page 23-19) before performing repairs or service.

NOTE:
- Put on gloves to protect your hands.
- Take care not to bend or scratch the trim and panels.
- Use the appropriate tool from the KTC trim tool set to avoid damage when prying components.

1. Remove these items:

   - C-pillar trim, front portion as needed (see page 20-104)
   - Side trim panel, upper portion as needed (see page 20-106)
   - Door opening trim, as needed (see step 7 on page 20-91)

2. Remove the front seat belt upper anchor bolt (see step 6 on page 23-6).

BACK

Protected by AR

3. Remove the B-pillar upper trim (A).

   –1 Remove the clip (B) from the seat belt guide (C).
   –2 Pull out the trim by hand to detach the clips (D), and to release the hooks (E) from the side curtain airbag B-pillar bracket (F) in the numbered sequence.

Fastener Locations

B ▷ : Clip, 1 D ▷ : Clip, 3 (White)

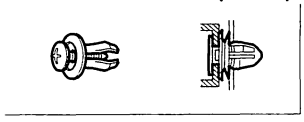

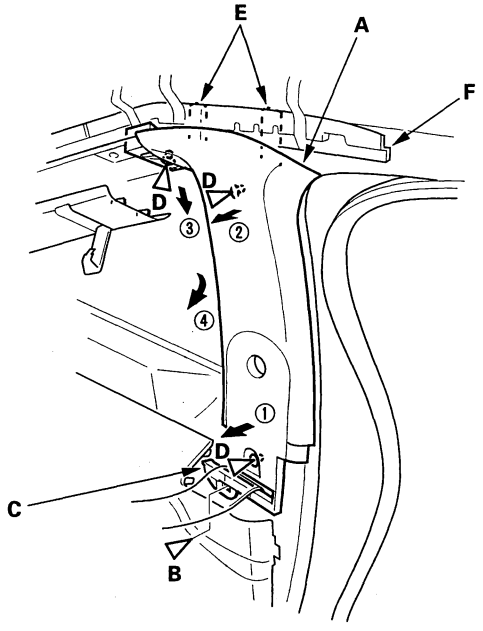

4. Install the trim in the reverse order of removal, and note these items:

   - Check the clips for damage or stress-whitening, and replace them with new ones.
   - If the side curtain airbag has deployed, replace the B-pillar upper trim with new one.
   - To prevent the side curtain airbag from accidentally deploying, removed trim pieces should be checked for these types of damage:
     – Any cracks or deformations in the B-pillar upper trim (A) and the upper hooks (B), and any press-whitenings in the upper part of the trim
     – Any cracks or press-whitenings in the clip seating surface (C)
   - Replace any damaged parts with new ones.
   - Make sure the top of the trim overlaps with the headliner correctly (see page 23-196).
   - Make sure the trim hooks are installed into the holes in the side curtain airbag B-pillar bracket securely.
   - Push the clips into place securely.
   - Apply medium strength liquid thread lock to the front seat belt upper anchor bolt before reinstallation (see step 9 on page 23-6).
   - Before installing the anchor bolt, make sure there are no twists or kinks in the seat belt.
   - When installing the side trim panel, make sure the seat belt is not pinched.

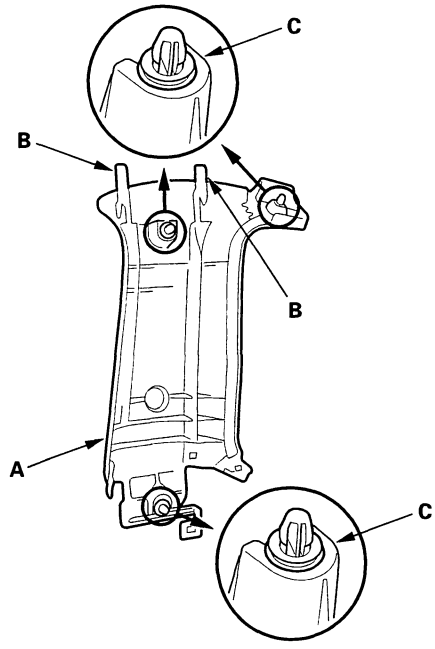

Protected by AR

Trim Removal/Installation - Pillar Areas (cont'd)

Special Tools Required
KTC trim tool set SOJATP2014

4-door-B-pillar - With Side Curtain Airbags ('04-06 models)

SRS components are located in this area. Review the SRS component locations (see page 23-17) and the precautions and procedures (see page 23-19) before performing repairs or service.

NOTE:
- Put on gloves to protect your hands.
- Take care not to bend or scratch the trim and panels.
- Use the appropriate tool from the KTC trim tool set to avoid damage when prying components.

1. Remove these items:
   - Front door sill trim (see page 20-91)
   - Rear door sill trim (see page 20-93)
   - Front door opening trim, as needed (see step 7 on page 20-92)
   - Rear door opening trim, as needed (see step 3 on page 20-93)

2. Remove the B-pillar lower trim (A).
   -1 Detach the lower clips by pulling the bottom of the trim back by hand.
   -2 Pull the trim down to release the upper hooks (B).

Fastener Locations
▷: **Clip, 2 (Black)**

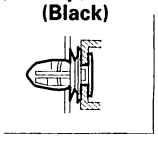

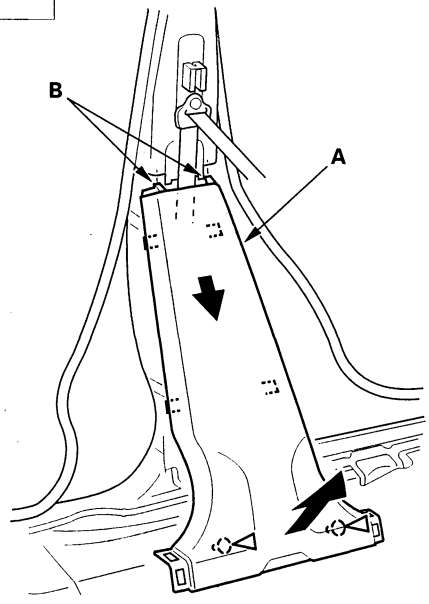

3. Remove the upper anchor cover, and remove the upper anchor bolt (see step 7 on page 23-8).

BACK

Protected by AR

4. Remove the B-pillar upper trim (A).

   –1 Pull the bottom of the trim back by hand to detach the lower clip.
   –2 Detach the upper clip by pulling the top of the trim.
   –3 Pull the trim down to release the upper hooks (B) from the side curtain airbag B-pillar bracket (C).

Fastener Locations

▷: Clip, 2 (Black)

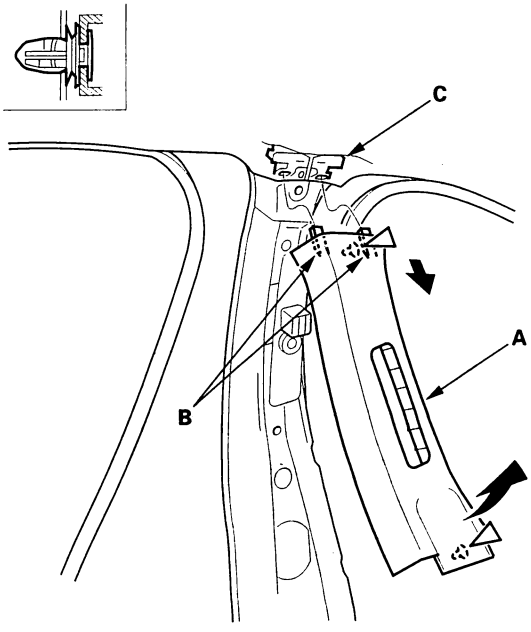

5. Install the trim in the reverse order of removal, and note these items:

   - Check the clips for damage or stress-whitening, and replace them with new ones.
   - If the side curtain airbag has deployed, replace the B-pillar upper trim with a new one.
   - To prevent the side curtain airbag from accidentally deploying, removed trim pieces should be checked for these kinds of damage:
     – Any cracks or deformations in the B-pillar upper trim (A) and the upper hooks (B), and any press-whitenings in the upper part of the trim
     – Any cracks or deformations in the B-pillar lower trim (C), and any breakages in the part (D) fitted with the B-pillar upper trim
     – Any cracks or press-whitenings in the clip seating surfaces (E)
   - Check the clips for damage or stress-whitening, and if necessary, replace them with new ones.
   - Make sure the top of the trim overlaps with the headliner correctly (see page 23-196).
   - Make sure the trim hooks are installed into the holes in the side curtain airbag B-pillar bracket securely.
   - Push the clips into place securely.
   - Apply medium strength liquid thread lock to the front seat belt upper anchor bolt before reinstallation (see step 12 on page 23-9).
   - Before installing the anchor bolt, make sure there are no twists or kinks in the seat belt.

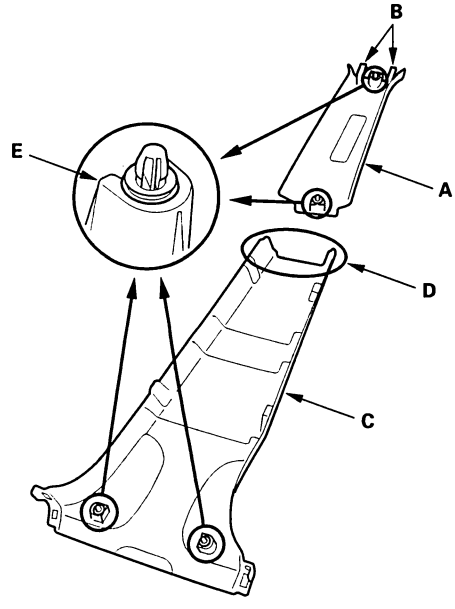

BACK

Protected by AR

Trim Removal/Installation - Pillar Areas (cont'd)

Special Tools Required
KTC trim tool set SOJATP2014

2-door-C-pillar - With Side Curtain Airbags ('04-06 models)

SRS components are located in this area. Review the SRS component locations (see page 23-17) and the precautions and procedures (see page 23-19) before performing repairs or service.

NOTE:
- Put on gloves to protect your hands.
- Take care not to bend or scratch the trim and panels.
- Use the appropriate tool from the KTC trim tool set to avoid damage when prying components.

1. Remove the rear seat cushion (see page 20-173).

2. Remove the rear seat belt lower anchor bolt (see step 2 on page 23-12).

3. Left side: Pull the coat hanger (A) down, and remove the coat hanger cover (B) by releasing the hook (C), then remove the screw (D).
   Right side: Remove the right C-pillar cap (E) by releasing the hooks (F), then remove the screw (G).

Left side

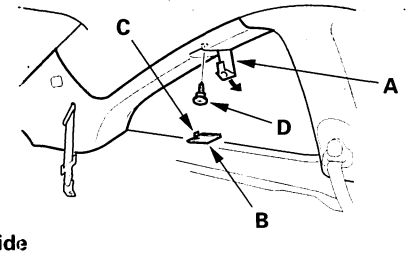

Right side

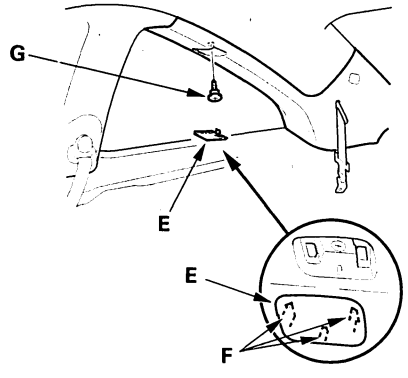

4. Remove the C-pillar trim (A).

   –1 Pry the C-pillar cap (B) out until it is stopped by the hooks (C). Release the hooks and pull the cap out of the grommet (D). Discard the cap.
   –2 Pull the front edge of the trim down to detach the hooks (E) and clips (F) from the B-pillar upper trim (G).
   –3 Pull out the trim to detach the clips (H).
   –4 Pull out the bottom portion of the trim to detach the hooks (I) from the rear shelf (J) and the side trim panel (K).
   –5 Pass the rear seat belt (L) out though a slit in the trim.

Fastener Locations
F ▷ : Clip, 2 H ▷ : Clip, 2 (White)

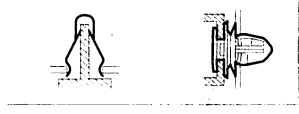

BACK

Protected by AR

5. Install the trim in the reverse order of removal, and note these items:

- Check the clips for damage or stress-whitening, and replace them with new ones.
- Do not reuse the C-pillar cap; always replace it.
- If the side curtain airbag has deployed, replace the C-pillar trim with new one.
- To prevent the side curtain airbag from accidentally deploying, removed trim pieces should be checked for these types of damage:
  - Any cracks, deformations, or press-whitenings in the C-pillar trim (A)
  - Any cracks, or press-whitenings in the grommet and clip seating surfaces (B)
  - Bent or broken grommet (C)
- Replace any damaged parts with new ones.
- Make sure the top of the trim overlaps with the headliner correctly (see page 23-196).
- Push the clips and hooks into place securely.
- Apply medium strength liquid thread lock to the anchor bolt before reinstallation (see step 6 on page 23-13).
- Before installing the anchor bolt, make sure there are no twists or kinks in the seat belt.

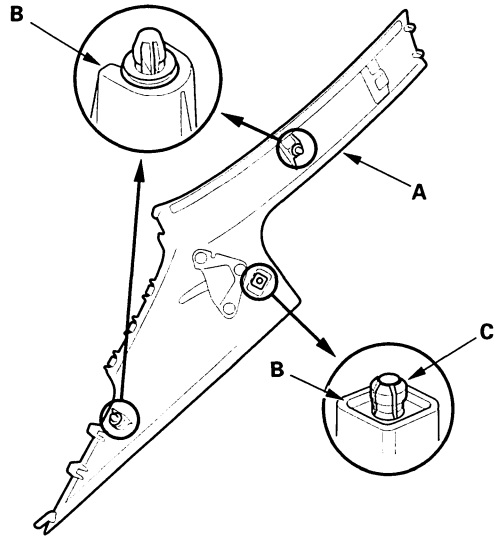

Special Tools Required
KTC trim tool set SOJATP2014

4-door-C-pillar - With Side Curtain Airbags ('04-06 models)

SRS components are located in this area. Review the SRS component locations (see page 23-17) and the precautions and procedures (see page 23-19) before performing repairs or service.

NOTE:
- Put on gloves to protect your hands.
- Take care not to bend or scratch the trim and panels.
- Use the appropriate tool from the KTC trim tool set to avoid damage when prying components.

1. Remove these items:

- Rear seat side bolster (see page 20-174)
- Rear door opening trim, as needed (see step 3 on page 20-93)

2. Remove the C-pillar trim (A).

–1 Pry the C-pillar cap (B) out until it is stopped by the hooks (C). Release the hooks and pull the cap out of the grommet (D). Discard the cap.
–2 Pull the C-pillar trim back by hand to detach the clips, then remove the trim.

Fastener Locations

▷: **Clip, 4 (White)**

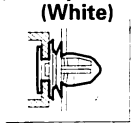

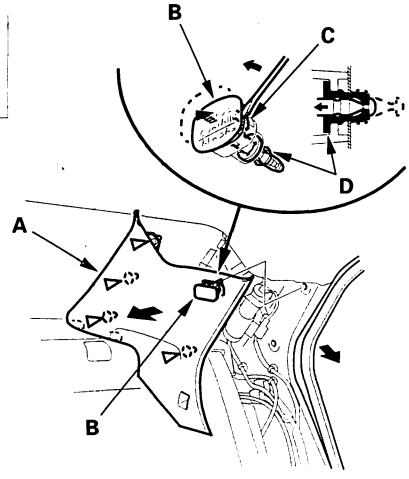

(cont'd)

Protected by AR

Trim Removal/Installation - Pillar Areas (cont'd)

3. Install the trim in the reverse order of removal, and note these items:

   - Check the clips for damage or stress-whitening, and replace them with new ones.
   - Do not reuse the C-pillar cap; always replace it.
   - If the side curtain airbag has deployed, replace the C-pillar trim with new one.
   - To prevent the side curtain airbag from accidentally deploying, removed trim pieces should be checked for these kinds of damage:
     - Any cracks, deformations, or press-whitenings in the C-pillar trim (A)
     - Any cracks, or press-whitenings in the grommet and clip seating surfaces (B)
     - Bent or broken grommet (C)
   - Replace any damaged parts with new ones.
   - Make sure the top of the trim overlaps with the headliner correctly (see page 23-196).
   - Push the clips into place securely.

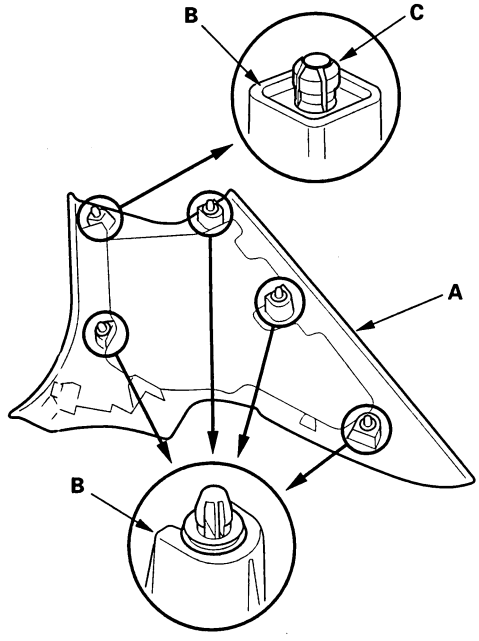

Trim Removal/Installation - Rear Side Area

Special Tools Required
KTC trim tool set SOJATP2014

2-door

NOTE:
- Put on gloves to protect your hands.
- Take care not to bend or scratch the trim and panels.
- Use the appropriate tool from the KTC trim tool set to avoid damage when prying components.

1. Remove these items:

   - Rear seat-back and seat cushion (see page 20-173)
   - Door sill trim, as needed (see page 20-90)
   - C-pillar trim, without side curtain airbags (see page 20-97), with side curtain airbags (see page 20-104)
   - Rear bulkhead cover (see step 2 on page 20-108)
   - Rear speaker grille (see step 4 on page 20-108)
   - Rear shelf, as needed (see step 5 on page 20-109)

BACK

Protected by AR

2. Remove the side trim panel (A).

   –1 Remove the clip (B).
   –2 Pull out the front upper edge of the trim panel by hand to release the hooks (C) from the B-pillar upper trim (D).
   –3 Pull the trim panel back by hand to detach the clips (E).
   –4 While pulling the rear shelf (F) up, pull the trim panel out and forward to release it from the rear clip (G).

Fastener Locations

B ▷ : Clip, 1 E, G ▷ : Clip, 8 (White)

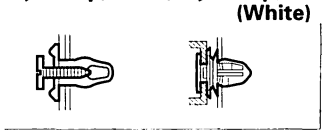

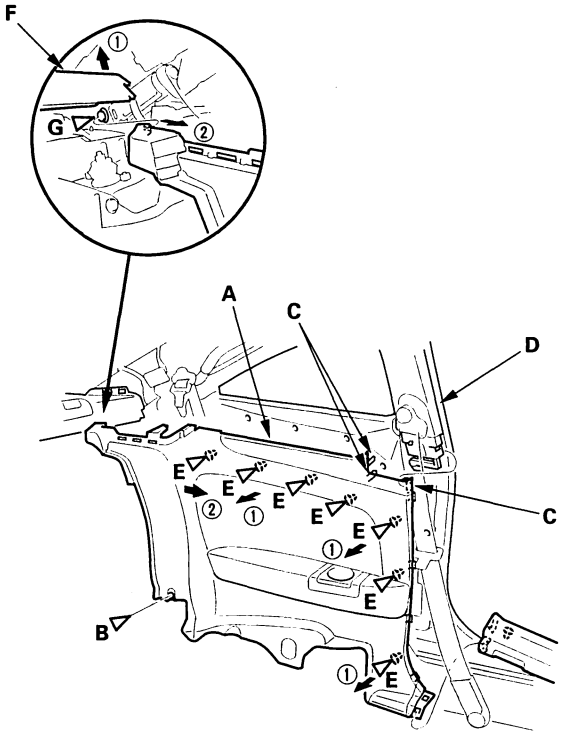

3. Install the panel in the reverse order of removal, and note these items:

   • Before reinstalling the side trim panel, remove the remaining rear clip from the body, and install in on the side trim panel.
   • Check the clips for damage or stress-whitening, and replace them with new ones.
   • Make sure there are no twists or kinks in the seat belt and that it is not pinched by the side trim panel.
   • Push the clips and hooks into place securely.

BACK

Protected by AR

Trim Removal/Installation - Rear Shelf Area

Special Tools Required
KTC trim tool set SOJATP2014

2-door

SRS components are located in this area. Review the SRS component locations (see page 23-17) and the precautions and procedures (see page 23-19) before performing repairs or service.

NOTE:
- Put on gloves to protect your hands.
- Take care not to bend or scratch the trim and panels.
- Use the appropriate tool from the KTC trim tool set to avoid damage when prying components.

1. Remove the C-pillar trim from both sides, without side curtain airbags (see page 20-97), with side curtain airbags (see page 20-104).

2. Remove the rear bulkhead cover (A).

   –1 Pull the upper edge of the cover back to detach the hooks (B) and clips.
   –2 Pull the bottom edge of the cover back to detach the hooks (C) from the body flange.

Fastener Locations
▷: Clip, 4

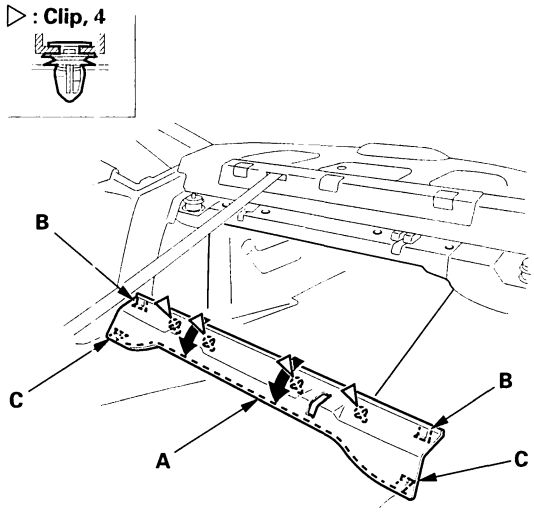

3. '03-05 models: Remove the high mount brake light (A).

   –1 From the trunk compartment, disconnect the high mount brake light bulb socket (B).
   –2 Push the high mount brake light towards the rear window, and gently pry up at the back to release the front hooks (C).
   –3 Release the rear hooks (D), then remove the high mount brake light.

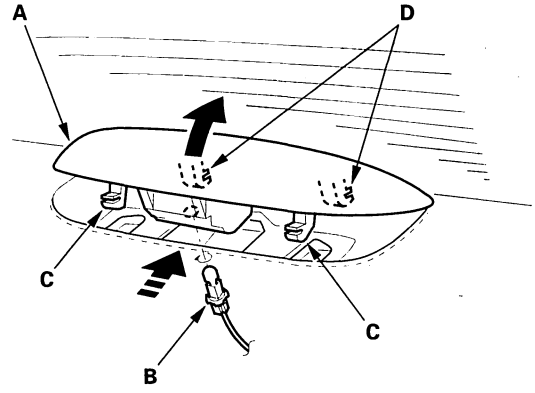

4. From both sides, pull the rear speaker grille (A) up to detach the clips, then remove the rear speaker grille.

Fastener Locations
▷: Clip, 8

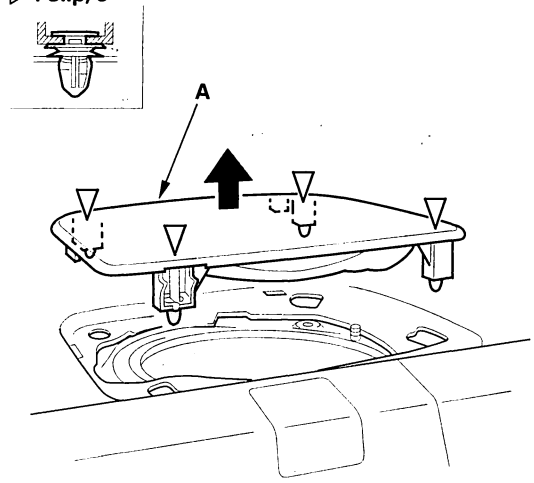

BACK

Protected by AR

5. Remove the rear shelf (A).

–1 From the trunk compartment, release the hooks (B) from the rear seat-back lock cylinder (C), then remove the lock cylinder trim (D).
–2 Lift the rear shelf to detach the clips.
–3 Release both rear corner edges (E) of the rear shelf from the rear window opening flange (F), and pull the rear shelf toward the front of the vehicle.

'03-05 models

Fastener Locations

▷: Clip, 2 (White)

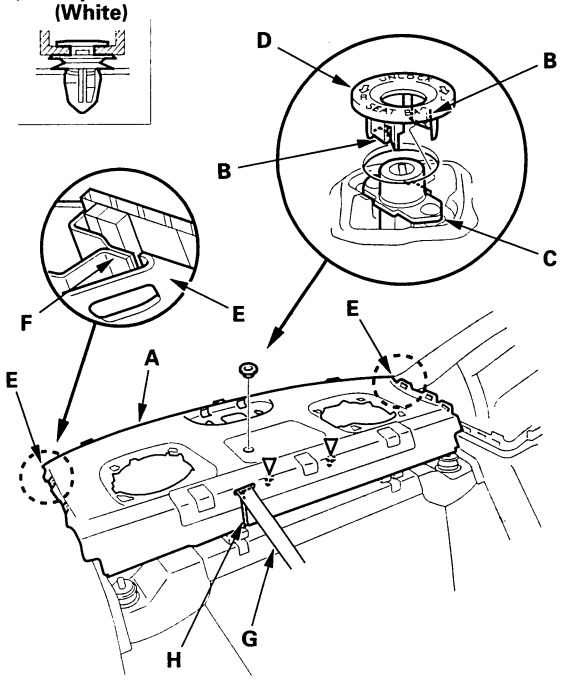

'06 model

Fastener Locations

▷: Clip, 2 (White)

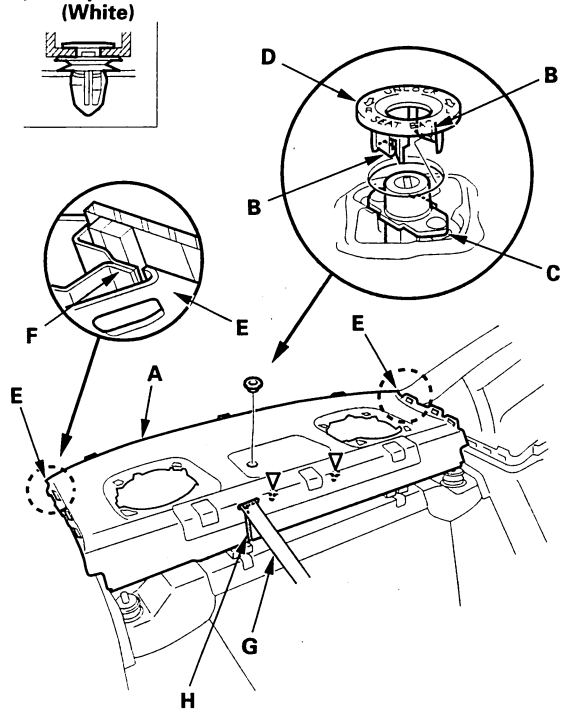

6. Pull the rear center seat belt (G) out through the slit (H) in the rear shelf.

7. Install the shelf in the reverse order of removal, and note these items:

- Check the clips for damage or stress-whitening, and replace them with new ones.
- When installing the rear shelf, slip the rear center seat belt through the slit in the rear shelf.
- Push the clips and hooks into place securely.
- Make sure the high mount brake light bulb socket is connected securely.

Protected by AR

Trim Removal/Installation - Rear Shelf Area (cont'd)

Special Tools Required
KTC trim tool set SOJATP2014

4-door

SRS components are located in this area. Review the SRS component locations (see page 23-17) and the precautions and procedures (see page 23-19) before performing repairs or service.

NOTE:
- Put on gloves to protect your hands.
- Take care not to bend or scratch the trim and panels.
- Use the appropriate tool from the KTC trim tool set to avoid damage when prying components.

1. Remove the C-pillar trim from both sides, without side curtain airbags (see page 20-98), with side curtain airbags (see page 20-105).

2. Remove the rear bulkhead cover (A).

   –1 Pull the upper edge of the cover back to detach the hooks (B) and clips.
   –2 Pull the bottom edge of the cover back to release the cover from the body flange.

Fastener Locations
▷ : Clip, 2

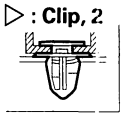

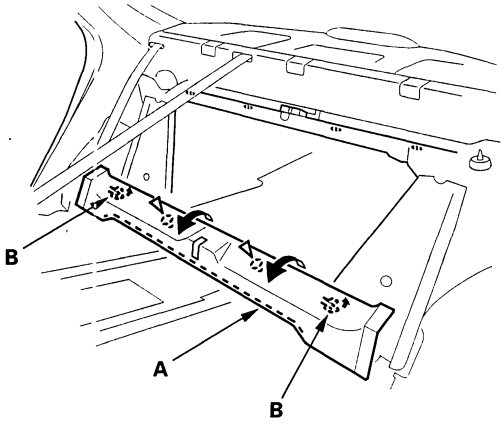

3. '03-05 models: Remove the high mount brake light (A).

   –1 From the trunk compartment, disconnect the high mount brake light bulb socket (B).
   –2 Push the high mount brake light towards the rear window, and gently pry up at the back to release the front hooks (C).
   –3 Release the rear hooks (D), then remove the high mount brake light.

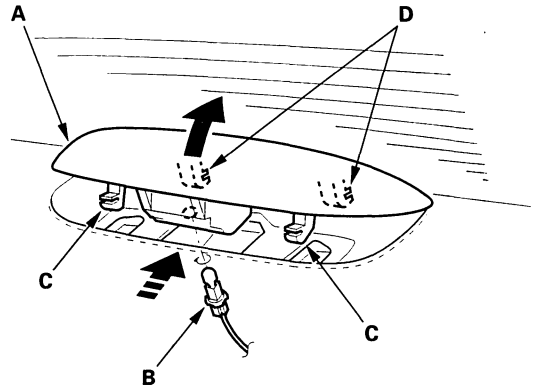

4. From both sides, pull the rear speaker grille (A) up to detach the clips (B, C), then remove the rear speaker grille.

Fastener Locations
B ▷ : Clip, 6 C ▷ : Clip, 2

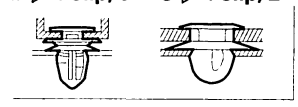

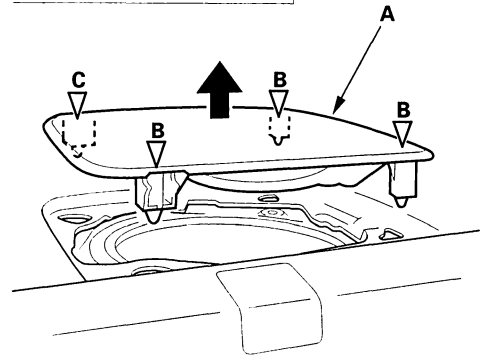

BACK

Protected by AR

5. Remove the rear shelf (A).

–1 Pull the lock cylinder trim (B) up to release the hooks (C), then remove the trim from the rear seat-back lock cylinder (D).
–2 Lift the rear shelf to detach the clips.
–3 Pull the rear shelf toward the front of the vehicle.

'03-05 models

Fastener Locations

▷: **Clip, 6 (White)**

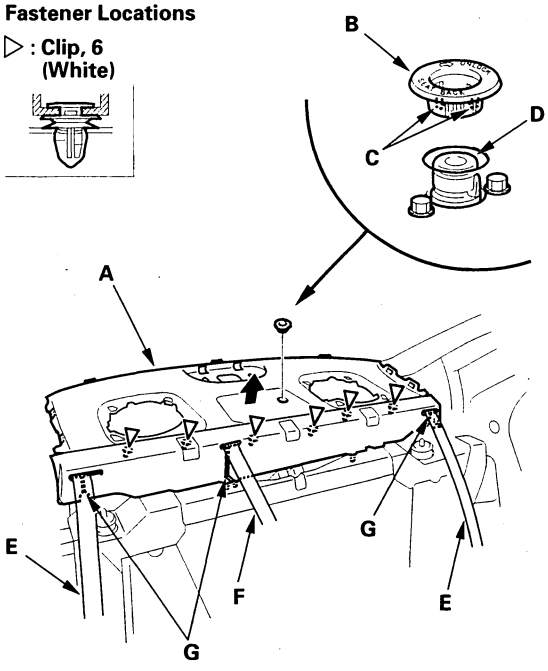

'06 model

Fastener Locations

▷: **Clip, 6 (White)**

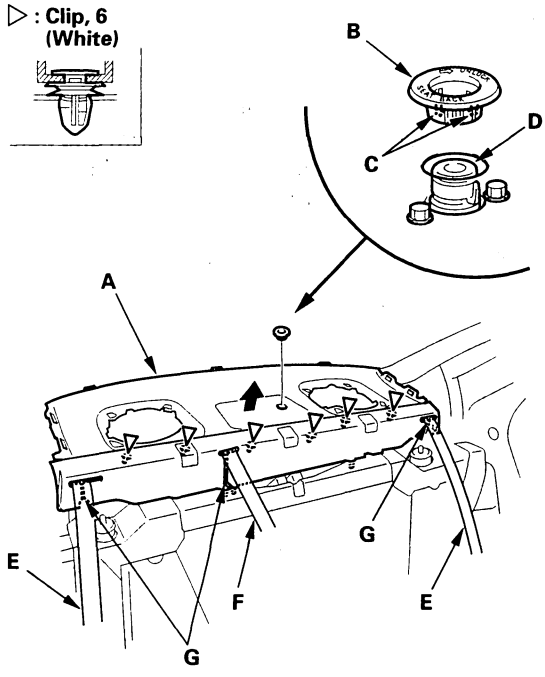

6. Pull both rear seat belts (E) and rear center seat belt (F) out through the slits (G) in the rear shelf.

7. Install the shelf in the reverse order of removal, and note these items:

- Check the clips for damage or stress-whitening, and replace them with new ones.
- When installing the rear shelf, slip the rear seat belts and center seat belt through the slits in the rear shelf.
- Push the clips and hooks into place securely.
- Make sure the high mount brake light bulb socket is connected securely.

Protected by AR

Trim Removal/Installation - Trunk Area

Special Tools Required
KTC trim tool set SOJATP2014

2-door

NOTE:
- Put on gloves to protect your hands.
- Take care not to bend or scratch the trim and panels.
- Use the appropriate tool from the KTC trim tool set to avoid damage when prying components.

1. Remove the clip, then remove the spare tire lid (A).

Fastener Location
▷ : **Clip, 1**

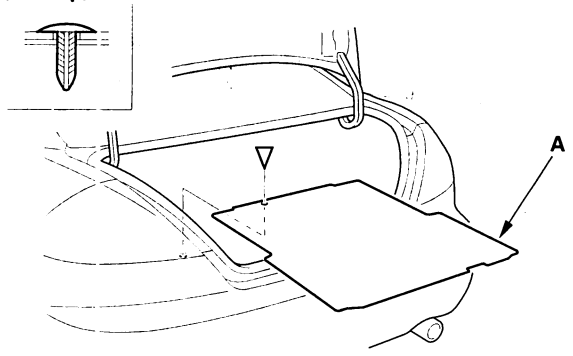

2. Detach the clips, and release the hooks (A) by pulling the trunk rear trim panel (B) up, then remove it.

Fastener Locations
▷ : **Clip, 4**

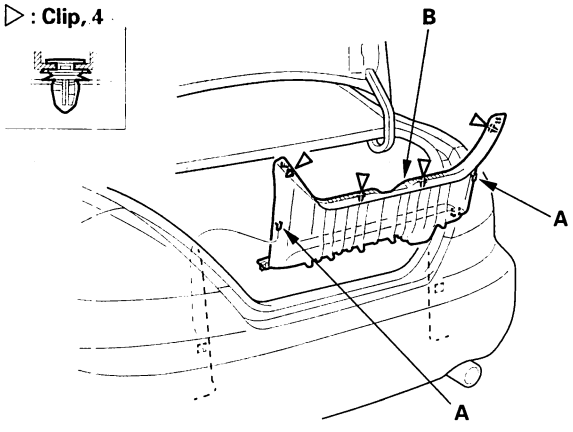

3. Remove the left trunk side trim panel (A) and the right trunk side trim panel (B).

–1 Right side: Remove the trunk hook (C), the jack cover (D), and the jack (E).
–2 Remove the hook bolts (F) and clips.
–3 Remove the trim panels from the trunk compartment. Left side: Release the trunk lid opener cable (G) from the slit (H) in the trim panel.

Fastener Locations
▷ : **Clip, 2**

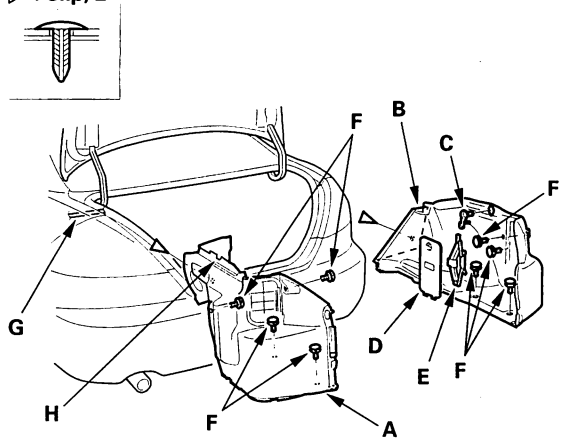

4. Install the trim in the reverse order of removal, and note these items:

- Check the clips for damage or stress-whitening, and replace them with new ones.
- Push the clips into place securely.

BACK

Protected by AR

Special Tools Required
KTC trim tool set SOJATP2014

'03-05 Models 4-door

NOTE:
- Put on gloves to protect your hands.
- Take care not to bend or scratch the trim and panels.
- Use the appropriate tool from the KTC trim tool set to avoid damage when prying components.

1. Remove the clip, then remove the spare tire lid (A).

Fastener Location
▷ : **Clip, 1**

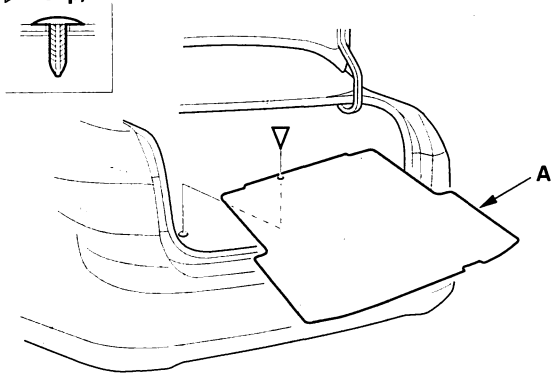

2. Detach the clips, and release the hooks (A) by pulling the trunk rear trim panel (B) up, then remove it.

Fastener Locations
▷ : **Clip, 4**

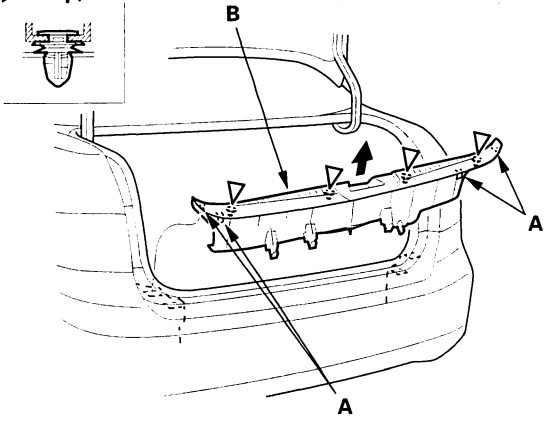

3. Remove the left trunk side trim panel (A) and the right trunk side trim panel (B).

–1 Right side: Remove the trunk hook (C), the jack cover (D), and the jack (E).
–2 Remove the clips.
–3 Remove the trim panels from the trunk compartment. Left side: Release the trunk lid opener cable (F) from the slit (G) in the trim panel.

Fastener Locations
▷ : **Clip, 9**

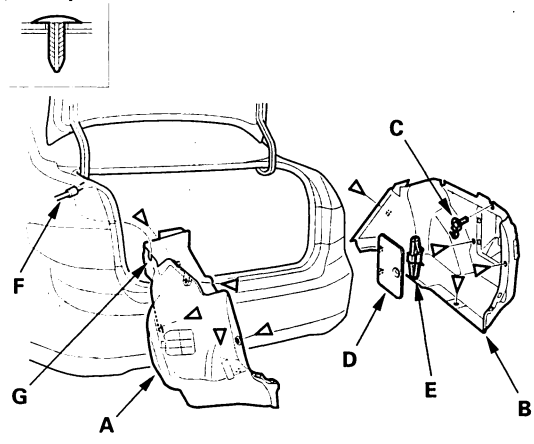

4. Install the trim in the reverse order of removal, and note these items:

- Check the clips for damage or stress-whitening, and replace them with new ones.
- Push the clips into place securely.

Protected by AR

Trim Removal/Installation - Trunk Area (cont'd)

Special Tools Required
KTC trim tool set SOJATP2014

'06 Model 4-door

NOTE:
- Put on gloves to protect your hands.
- Take care not to bend or scratch the trim and panels.
- Use the appropriate tool from the KTC trim tool set to avoid damage when prying components.

1. Remove the clip, then remove the spare tire lid (A).

Fastener Location
▷ : **Clip, 1**

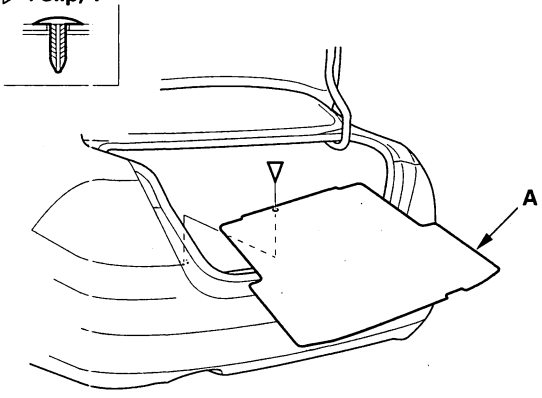

2. Detach the clips (A, B), and release the hooks (C) by pulling the trunk rear trim panel (D) up, then remove it.

Fastener Locations
A ▷ : **Clip, 4** B ▷ : **Clip, 2**

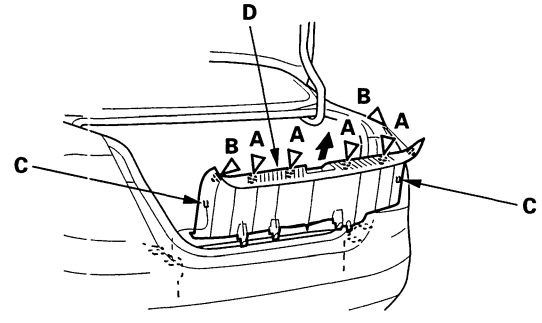

3. Remove the left trunk side trim panel (A) and the right trunk side trim panel (B).

–1 Right side: Remove the trunk hook (C), the jack cover (D), and the jack (E).
–2 Remove the clips.
–3 Remove the trim panels from the trunk compartment. Left side: Release the trunk lid opener cable (F) from the slit (G) in the trim panel.

Fastener Locations
▷ : **Clip, 9**

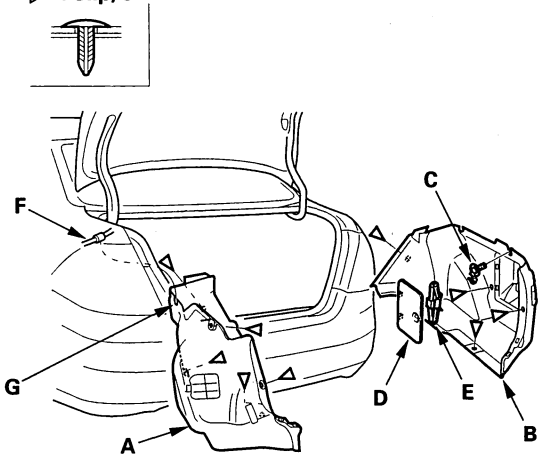

4. Install the trim in the reverse order of removal, and note these items:

- Check the clips for damage or stress-whitening, and replace them with new ones.
- Push the clips into place securely.

BACK

Protected by AR

Trim Removal/Installation - Trunk Lid

2-door

NOTE:
- Put on gloves to protect your hands.
- Take care not to bend or scratch the trim.

1. Using the appropriate tool from the KTC tool set, detach the clips (A, B, C), then remove the trunk lid trim (D). Take care not to scratch the trunk lid.

Fastener Locations

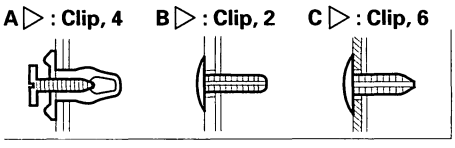

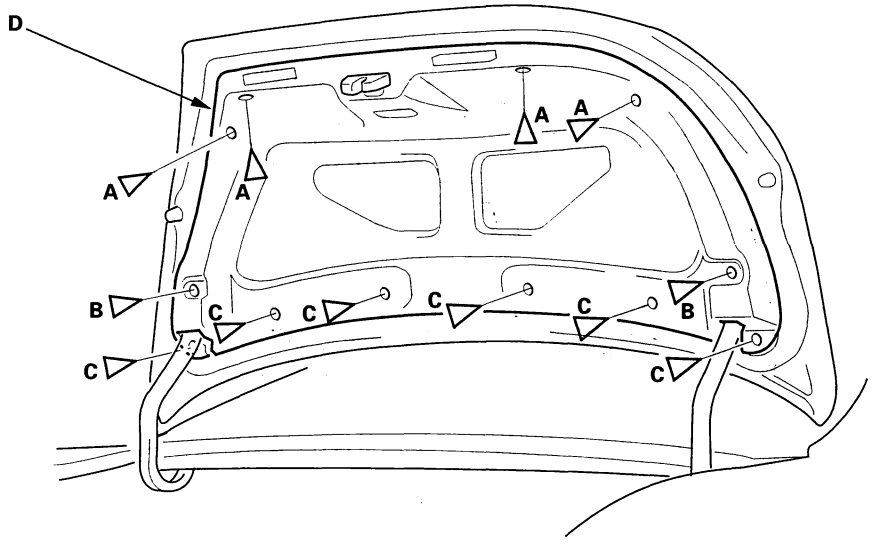

2. Install the trim in the reverse order of removal, and note these items:

- Check the clips for damage or stress-whitening, and replace them with new ones.
- Push the clips into place securely.

Protected by AR

Trim Removal/Installation - Trunk Lid (cont'd)

4-door

NOTE:
- Put on gloves to protect your hands.
- Take care not to bend or scratch the trim.

1. Using the appropriate tool from the KTC tool set, detach the clips (A, B, C), then remove the trunk lid trim (D). Take care not to scratch the trunk lid.

Fastener Locations

A ▷ : Clip, 2 B ▷ : Clip, 2 C ▷ : Clip, 8

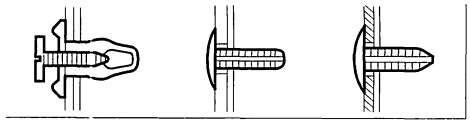

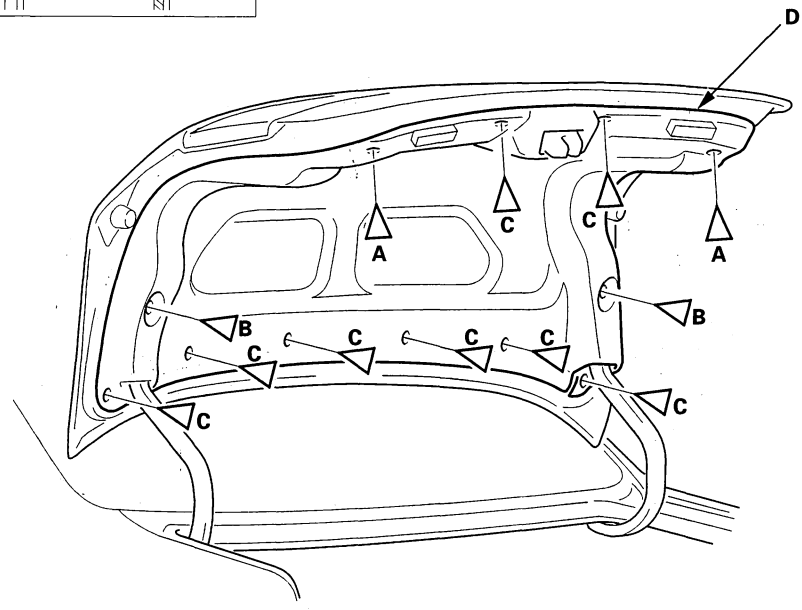

2. Install the trim in the reverse order of removal, and note these items:

- Check the clips for damage or stress-whitening, and replace them with new ones.
- Push the clips into place securely.

BACK

Protected by AR

Headliner Removal/Installation

Special Tools Required
KTC trim tool set SOJATP2014

SRS components are located in this area. Review the SRS component locations (see page 23-17) and the precautions and procedures (see page 23-19) before performing repairs or service.

NOTE:
- Use the appropriate tool from the KTC trim tool set to avoid damage when prying components.
- When prying with a flat-tip screwdriver, wrap it with protective tape to prevent damage.
- Take care not to bend or scratch the headliner.
- Be careful not to damage the dashboard and other interior trim.

1. Remove these items:

   - A-pillar trim, both sides, 2-door without side curtain airbag (see page 20-94), 2-door with side curtain airbag (see page 20-99), 4-door without side curtain airbag (see page 20-94), 4-door with side curtain airbag (see page 20-99)
   - Ceiling light (see page 22-221)
   - Front seat belt upper anchor, both sides, 2-door (see step 7 on page 23-6), 4-door (see step 7 on page 23-8)
   - B-pillar lower trim, 4-door without side curtain airbags (see page 20-96), 4-door with side curtain airbags (see page 20-102)
   - B-pillar upper trim, both sides, 2-door without side curtain airbags (see page 20-95), 2-door with side curtain airbags (see page 20-100), 4-door without side curtain airbags (see page 20-96), 4-door with side curtain airbags (see page 20-102)
   - C-pillar trim, both sides, 2-door without side curtain airbags (see page 20-97), 2-door with side curtain airbags (see page 20-104), 4-door without side curtain airbags (see page 20-98), 4-door with side curtain airbags (see page 20-105)

2. From both sides, using a trim tool, release the tabs (A), then turn the sunvisor cap (B), and remove it from the bracket (C).

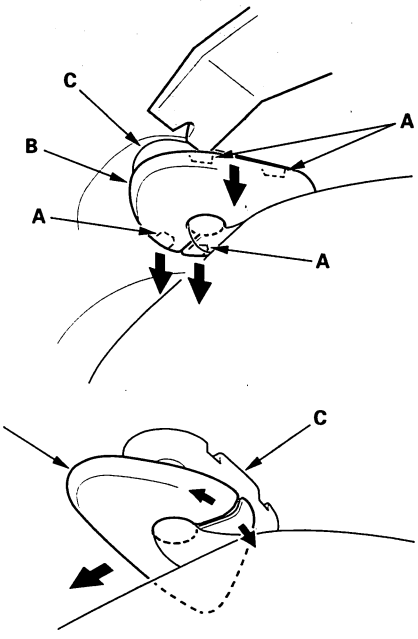

3. From both sides, remove the sunvisor (A) and holder (B).

   –1 Remove the self-tapping ET screws.
   –2 Remove the sunvisor from the body and holder.
   –3 If equipped, disconnect the vanity mirror light connector (C).
   –4 Using a flat-tip screwdriver, push the hook (D), turn the holder 90 °, and then pull it out.

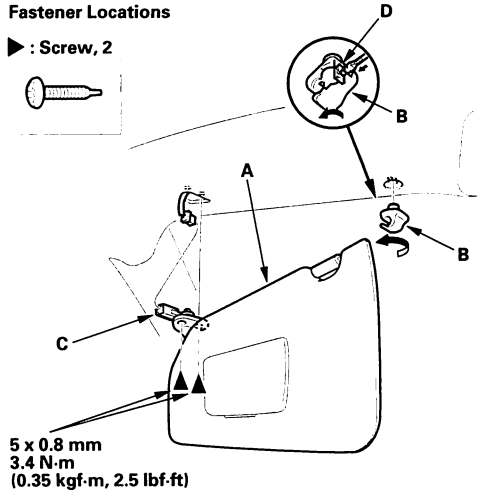

(cont'd)

Protected by AR

Headliner Removal/Installation (cont'd)

4. Remove the roof console (A).
   - –1 Remove the lens (B).
   - –2 Remove the bolts (C, D).
   - –3 Pull out the roof console, and front individual map light (E). Disconnect the front individual map light connector (F), and if equipped, ambient light connector (G).

Fastener Locations

C ▶ : Bolt, 2 D ▶ : Bolt, 2

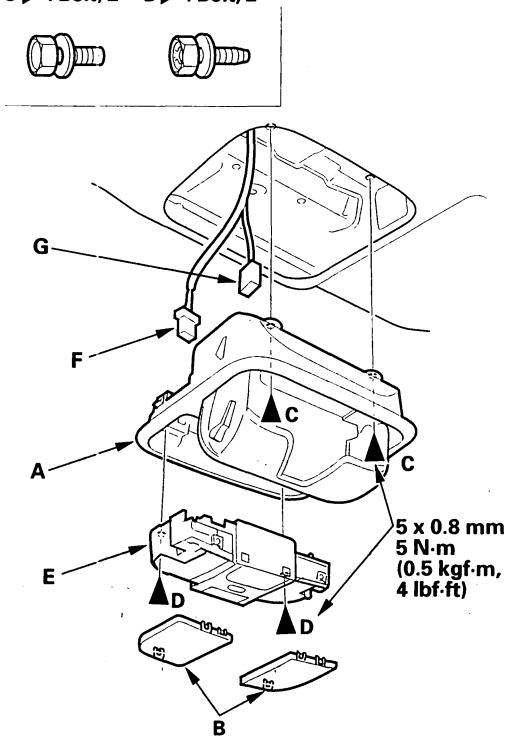

5. 4-door: Lower the grab handle, then pry out the lids (A). Remove the self-tapping ET screws, then remove the grab handle (B). Remove the remaining grab handles.

Fastener Locations

▶ : Screw, 8

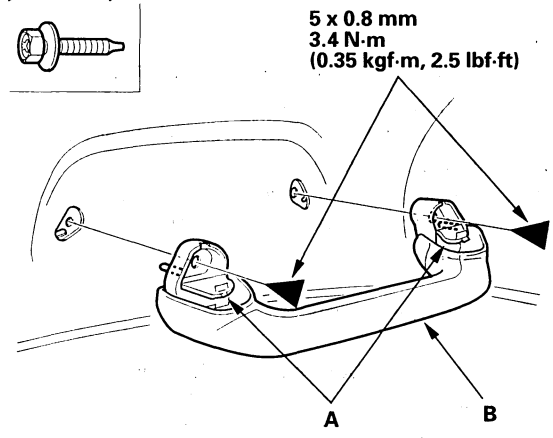

BACK

Protected by AR

6. With moonroof: Remove the headliner.

–1 4-door: Remove the socket plug (A).
–2 Remove the front door opening trim (B) and rear door opening trim (C) from each roof portion.
–3 Detach the clip (D) (4-door), and release the fasteners (E) by pulling the front portion of the headliner (F) down.
–4 With the help of an assistant, detach the rear clips (G) by pulling the rear portion of the headliner down, and release the headliner from the moonroof frame (H) by sliding the headliner rearward, and lowering it.
–5 Remove the headliner through the front passenger's door opening.

2-door

Fastener Locations

G ▷ : Clip, 4

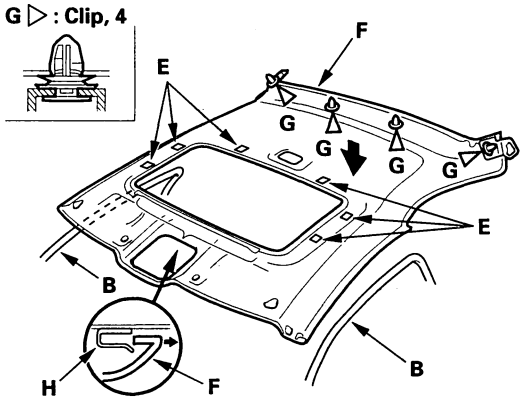

4-door

Fastener Locations

G ▷ : Clip, 2

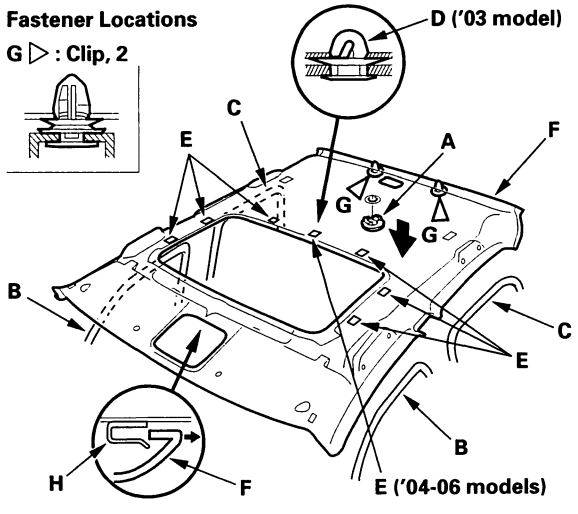

7. Without moonroof: Remove the headliner.

–1 Remove the front door opening trim (A) and rear door opening trim (B) from each roof portion.
–2 With the help of an assistant, detach the rear clips (C) by pulling the rear portion of the headliner (D) down.
–3 Remove the cushion tape (E), then remove the roof harness (F) from the headliner.
–4 Remove the headliner through the front passenger's door opening.

2-door

Fastener Locations

C ▷ : Clip, 4 E ▷ : Cushion tape, 8

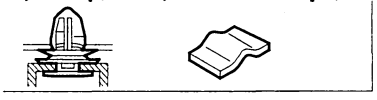

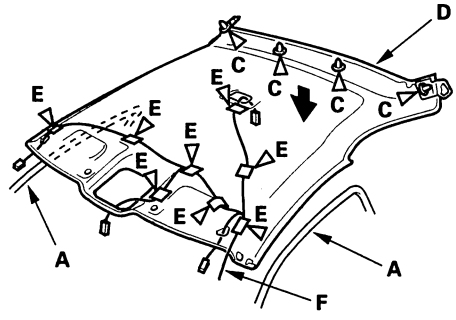

4-door

Fastener Locations

C ▷ : Clip, 2 E ▷ : Cushion tape, 8

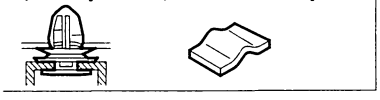

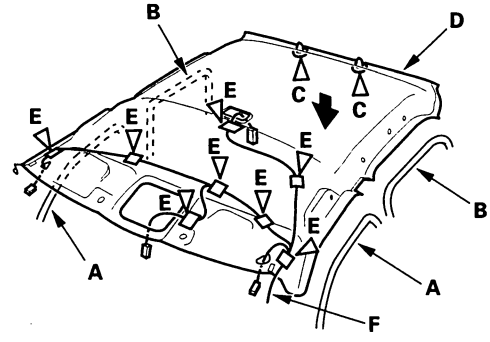

(cont'd)

Protected by AR

Headliner Removal/Installation (cont'd)

8. 4-door without side curtain airbag: If necessary, remove the bolts, then remove the front grab handle bracket (A) and rear grab handle brackets (B) from both sides by releasing the hooks (C).

Fastener Locations

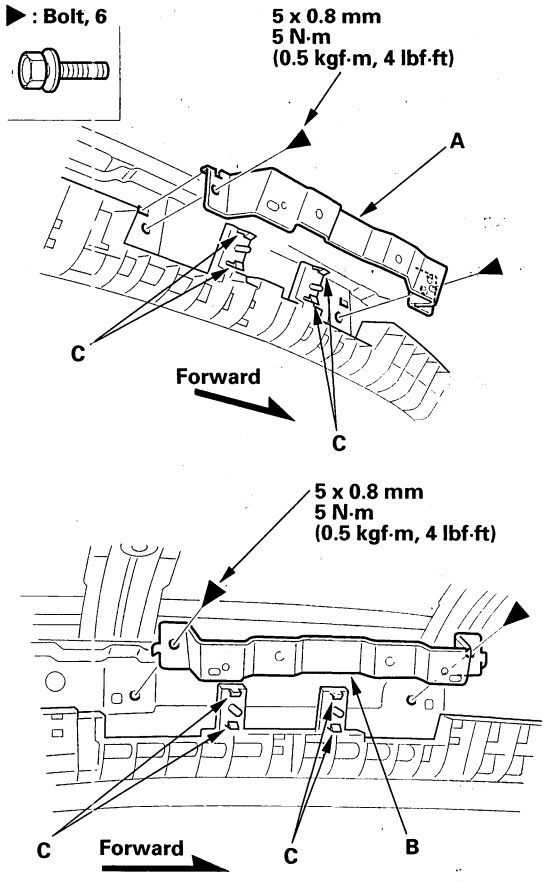

9. Without side curtain airbag: If necessary, detach the hooks (A) and the clip (B), then remove the front roof side pad (C) and rear roof side pad (D).

2-door

Fastener Locations

A▷ : Hook, 8 B▷ : Clip, 1

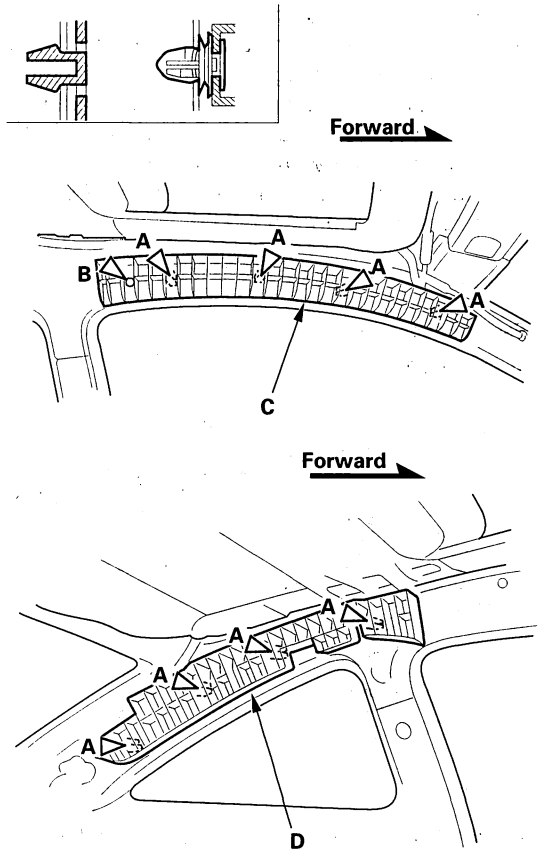

BACK

Protected by AR

4-door

Fastener Locations

A▷: Hook, 10

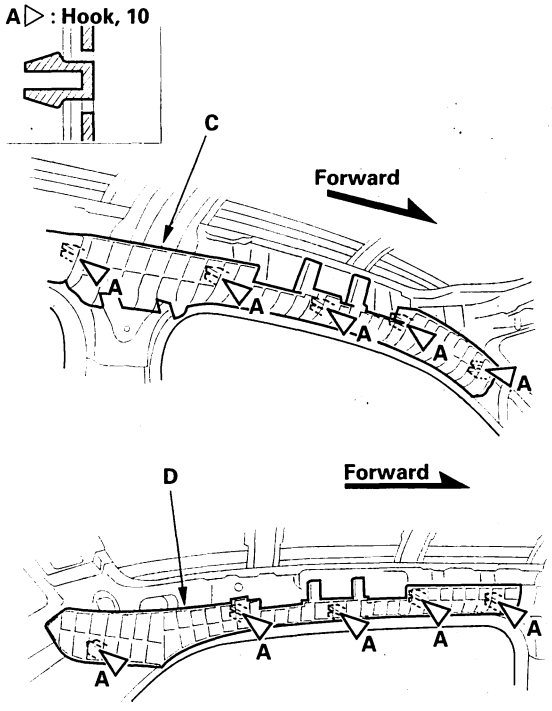

10. 4-door with moonroof: If necessary, pull down the roof console bracket (A) to release the clip.

Fastener Location

▷: Clip, 1

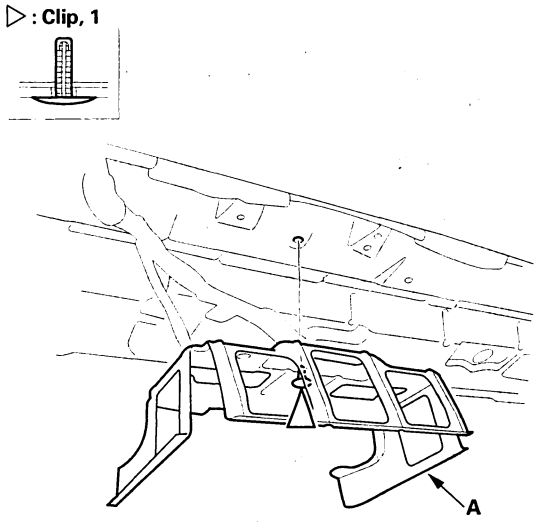

11. Install the headliner in the reverse order of removal, and note these items:

- If the side curtain airbag has been deployed, replace the headliner and front grab handle (4-door) on deployed side with new ones.
- To prevent the side curtain airbag from accidentally deploying, being damaged when deploying, and injuring persons when deploying, removed trim pieces should be checked for these kinds of damage:
  - Any creases or tears in the headliner (A)
  - Any fasteners (B) or clip bases (C) which have come off the headliner
  - Any damage around the grab handle holes (D) (4-door) or sunvisor holes (E) in the headliner
  - Any deformations in the grab handle (F) (4-door)
  - Any cracks in the sunvisor stay base (G)
  - Any bends or cracks in the sunvisor stay shaft (H)
  - Any cracks in the sunvisor base (I)
  - Any cracks in the vanity mirror base (J)
  - Any deformations in the grab handle bracket (4-door)
- Replace any damaged parts with new ones.
- Make sure the top of the headliner overlaps with the trim pieces correctly (see page 23-196).
- When passing the headliner through the door opening, be careful not to fold or bend it. Also, be careful not to scratch the body.
- 4-door: If the threads on a visor or grab handle screw are worn out, use an oversized self-tapping ET screw made specifically for this application:

  Visor: P/N 90137-S30-003
  Grab handle: P/N 90137-S0A-003

- Check that both sides of the headliner are securely attached to the trim.

(cont'd)

Protected by AR

Headliner Removal/Installation (cont'd)

Headliner (2-door)

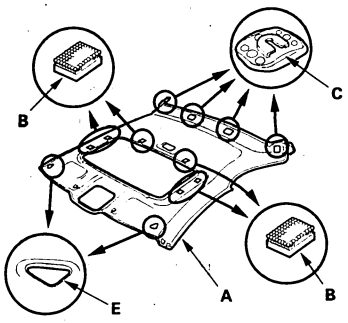

Headliner (4-door)

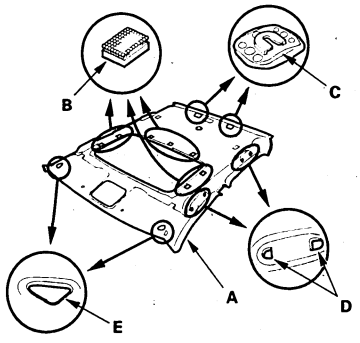

Grab handle (4-door)

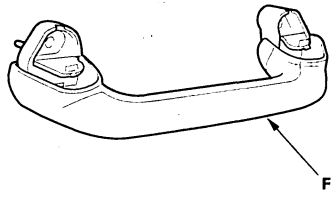

Sunvisor

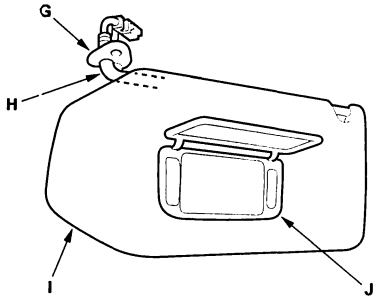

Carpet Replacement

SRS components are located in this area. Review the SRS component locations (see page 23-17) and the precautions and procedures (see page 23-19) before performing repairs or service.

NOTE:
- Put on gloves to protect your hands.
- Take care not to damage, wrinkle or twist the carpet.
- Be careful not to damage the dashboard or other interior trim pieces.

1. With side curtain airbag: Make sure you have the anti-theft codes for the radio and the navigation system, then write down the frequencies for the preset buttons.

2. With side curtain airbag: Disconnect the negative cable from the battery, and wait at least 3 minutes before beginning work.

3. Remove these items:

   - Front seats, both sides (see page 20-144)
   - Rear seat cushion, 2-door (see page 20-173), 4-door (see page 20-174)
   - Rear seat side bolsters, both sides, 4-door (see page 20-174)
   - Front door sill trim, both sides, 2-door (see page 20-90), 4-door (see page 20-91)
   - Kick panels, both sides, 2-door (see page 20-90), 4-door (see page 20-91)
   - Rear door sill trim, both sides, 4-door (see page 20-93)
   - B-pillar lower trim, 4-door without side curtain airbags (see page 20-96), 4-door with side curtain airbags (see page 20-102)
   - Center console (see page 20-125)
   - Driver's dashboard center lower cover (see page 20-136)
   - Passenger's dashboard center lower cover (see step 4 on page 20-136)
   - '04-06 models: Driver's dashboard under cover (see page 20-130)
   - '04-06 models: Passenger's dashboard lower cover (see page 20-134)
   - Parking brake lever (see page 19-33)

4. Remove the front seat belt lower anchor bolt, both sides ('03 model) or passenger's side ('04-06 models), 2-door (see step 4 on page 23-5), 4-door (see step 4 on page 23-7).

BACK

Protected by AR

5. Detach the clips, then remove the footrest (A).

Fastener Locations

▷ : Clip, 2

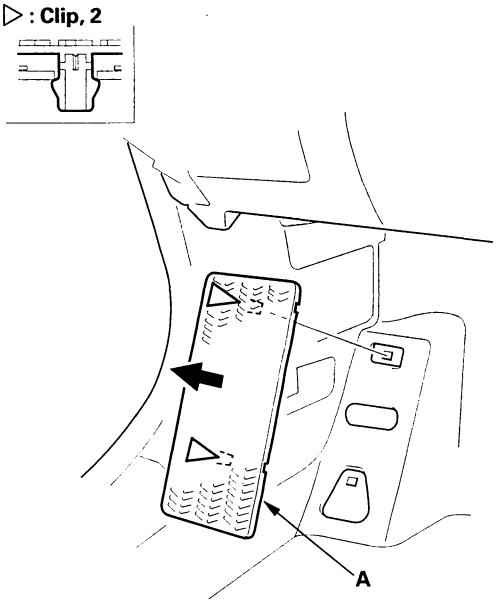

6. M/T model: Remove the bolts, then remove the center console bracket (A).

Fastener Locations

▶ : Bolt, 2

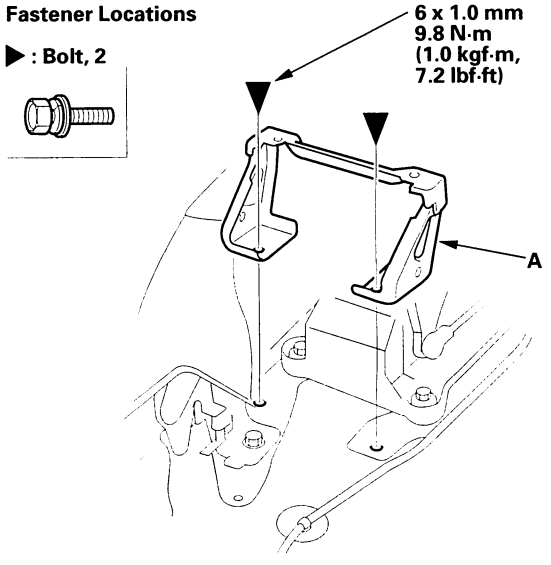

7. Disconnect the antenna lead (A) and antenna connector (B). If equipped, disconnect the side curtain airbag subharness connector (C). Detach the harness clips (D), and using a T30 Torx bit, remove the ground bolt (E).

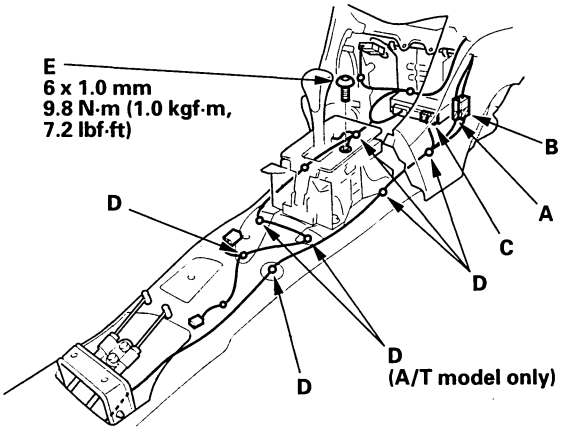

8. Remove the bolts securing the change lever bracket or select lever bracket (A).

Fastener Locations

▶ : Bolt, 4

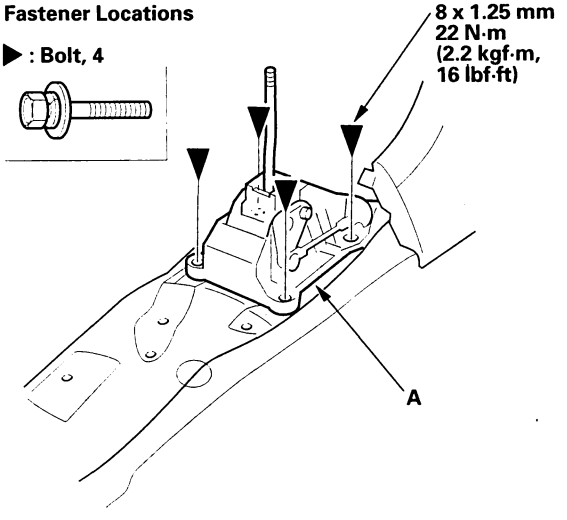

(cont'd)

Protected by AR

Carpet Replacement (cont'd)

9. Two-piece type: Release the clips (A) fastening the front carpet (B) and rear carpet (C).
   One-piece type: Release the clip (A) from middle of the carpet (D).

Two-piece type

Fastener Locations

A ▷ : Clip, 4 E ▷ : Hook, 4

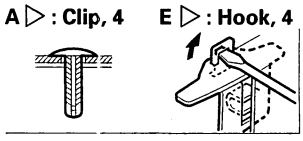

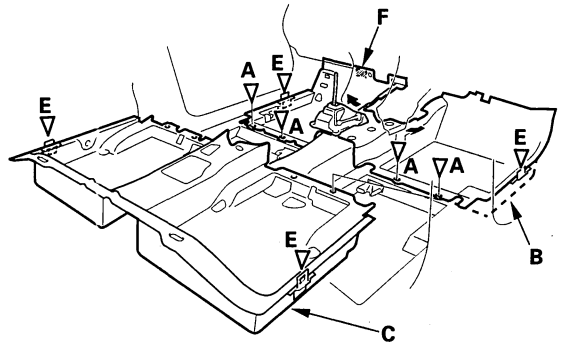

One-piece type

Fastener Locations

A ▷ : Clip, 1 E ▷ : Hook, 4

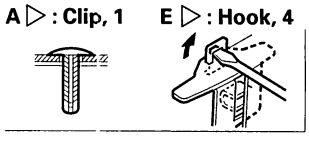

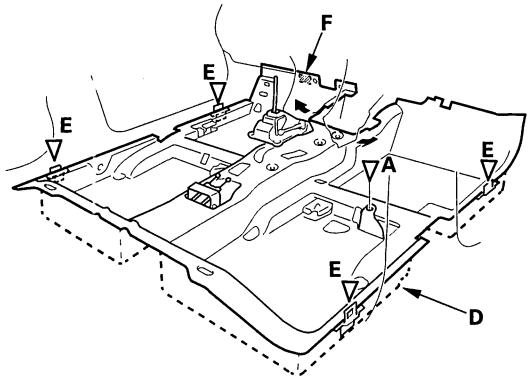

10. Release the hooks (E) with a flat-tip screwdriver; push the screwdriver toward the door, then lift upward. Remove the fastener (F), and then remove the carpet (one-piece type) or the front and rear carpets (two-piece type).

11. Install the carpet(s) in the reverse order of removal, and note these items:

- Take care not to damage, wrinkle or twist the carpet.
- Make sure the seat harnesses are routed correctly.
- Replace the clip if it is damaged.

With side curtain airbags:
- Reconnect the negative cable to the battery.
- Enter the anti-theft codes for the radio and the navigation system, then enter the customer's radio station presets.
- Reset the clock.

BACK

Protected by AR

Center Console Removal/Installation

Special Tools Required
KTC trim tool set SOJATP2014

NOTE:
- Take care not to scratch the front seat, dashboard, and related parts.
- Use the appropriate tool from the KTC trim tool set to avoid damage when prying components.

1. M/T model: Remove the shift knob (A).
   - –1 Lower the shift lever boot (B) to release the hooks (C) from the knob.
   - –2 Remove the shift knob.

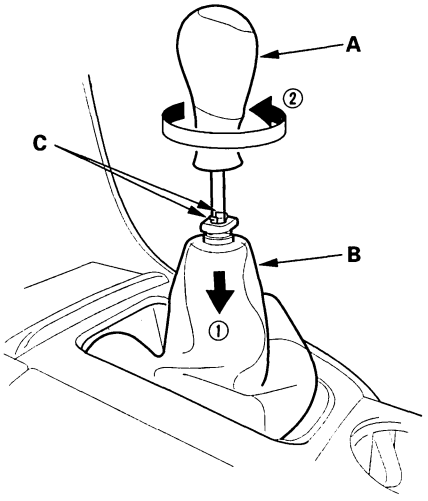

2. Detach the clips (A, B) by pulling the center console front panel (C) up. If equipped, disconnect the seat heater switch connectors (D).

Fastener Locations
A▷: Clip, 2 B▷: Clip, 4



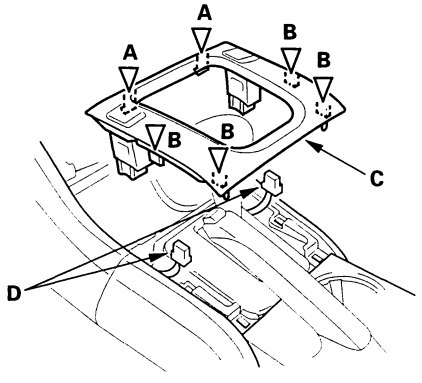

3. Pry up on the right of the console pocket (A) with a trim tool, and detach the clips, then remove the pocket.

Fastener Locations
▷: Clip, 2

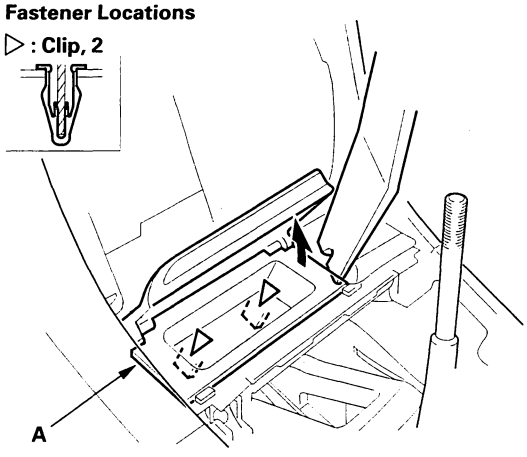

4. Remove the screws (A), detach the clips (B) and hook (C) by pulling the center holder (D) up, and disconnect the front accessory power socket connector (E).

Fastener Locations
A▶: Screw, 2 B▷: Clip, 2 C▷: Hook, 1



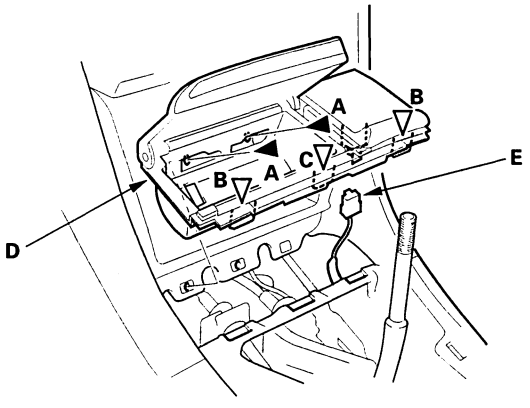

(cont'd)

Protected by AR

Center Console Removal/ Installation (cont'd)

5. Detach the clips (A, B) by pulling the center console rear panel (C) up.

Fastener Locations

A ▷: Clip, 5 B ▷: Clip, 2

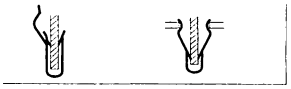

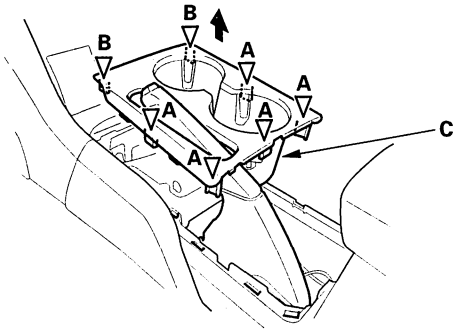

6. Remove the center console (A).

–1 Open the console box lid (B) then remove the console mat (C).
–2 If equipped, disconnect the rear accessory power socket connector (D), and detach the clip (E).
–3 Remove the screws (F, G), then pull the rear portion of the console up to release the hooks (H), then remove it.

Fastener Locations

F ▶: Screw, 4 G ▶: Screw, 2

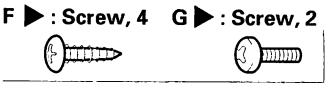

7. Install the console in the reverse order of removal, and check the clips for damage or stress-whitening, and replace them with new ones.

Center Console Armrest Disassembly/Reassembly

NOTE:
- When prying with a flat-tip screwdriver, wrap it with protective tape to prevent damage.
- Take care not to scratch armrest.

1. Remove the center console armrest (see step 2 on page 20-128).

2. Remove the screws, then remove the armrest hinge (A) and the console tray (B) as an assembly.

Fastener Locations

▶: Screw, 2

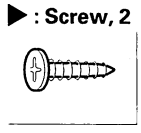

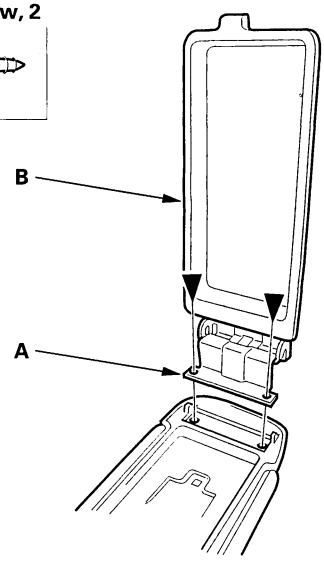

3. Slide the console armrest forward fully.

BACK

Protected by AR

4. Insert a large flat-tip screwdriver wrapped with protective tape into the center of the gap between the console armrest (A) and the console armrest base (B), and gently push it straight down until both inside hooks (C) of the console armrest come off the stop portions (D) of the console base.

   NOTE: Apply protective tape (E) to the projection in the back surface of the console armrest to prevent damage.

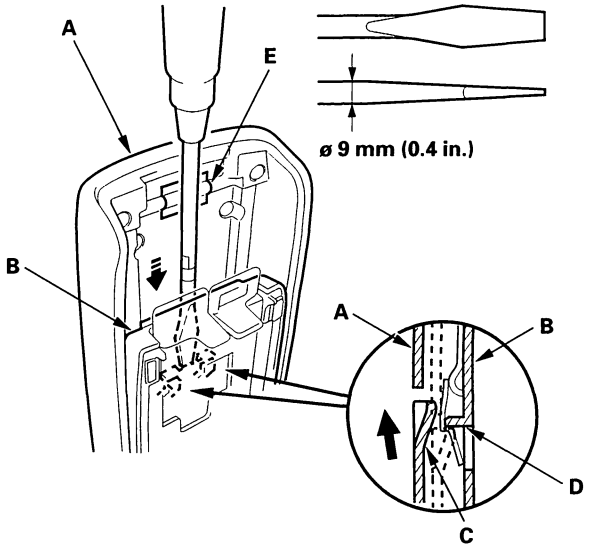

5. Slightly slide the console armrest forward to get the inside hooks over the stop portions, then remove the flat-tip screwdriver from the gap.

6. Remove the console armrest (A) from the guide rails of the console armrest base (B).

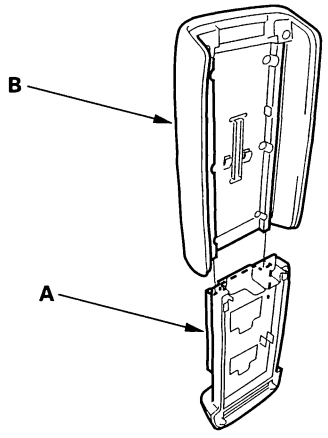

7. Remove the screws, then remove the slide bracket (A).

Fastener Locations

▶ : Screw, 4

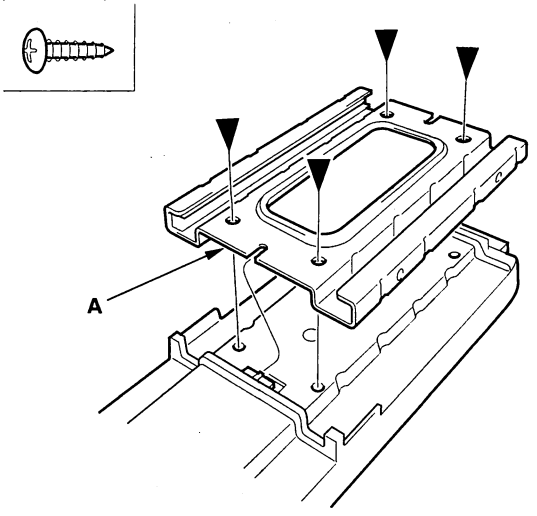

8. Separate the console armrest upper base (A) from the lower base (B). Remove the screws, then remove the armrest lock (C) and the tray lock (D) from the upper base.

Fastener Locations

▶ : Screw, 3

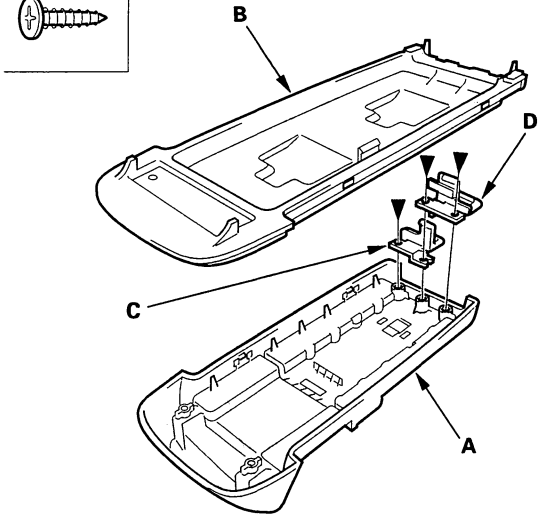

9. Reassemble the console armrest in the reverse order of disassembly.

BACK

Protected by AR

Center Console Rear Cover Replacement

NOTE: Take care not to scratch the center console.

1. Remove the center console (see page 20-125).
2. Open the center console armrest (A) and remove the hinge mounting screws, then remove the armrest.

Fastener Locations

▶ : Screw, 2

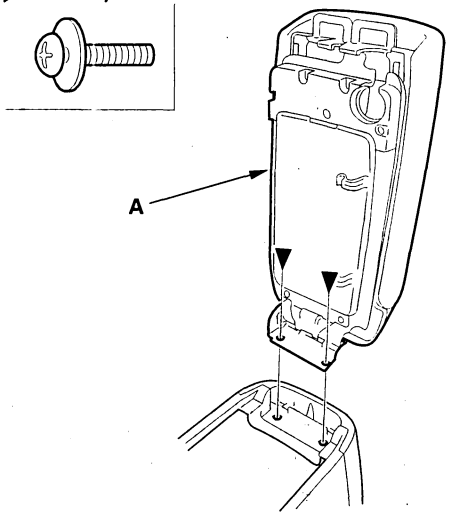

3. Remove the screws (A) and detach the clips (B) then remove the center console rear cover (C).

Fastener Locations

A ▶ : Screw, 2 B ▷ : Clip, 2

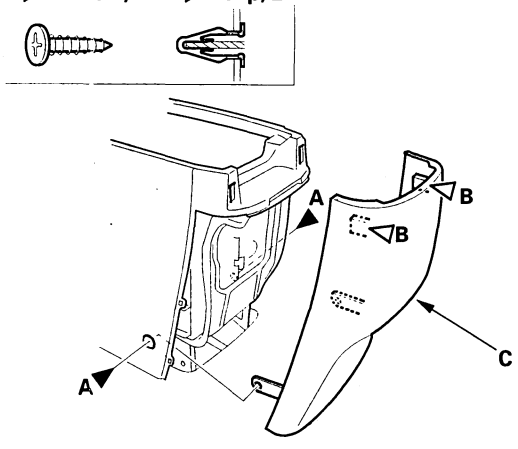

4. Install the cover the reverse order of removal.

BACK

Protected by AR

Instrument Panel Removal/ Installation

Special Tools Required
KTC trim tool set SOJATP2014

NOTE:
- Take care not to scratch the dashboard and related parts.
- Use the appropriate tool from the KTC trim tool set to avoid damage when prying components.

1. Tilt the steering column down.

2. Remove the instrument panel (A).

   –1 Remove the screws (B).
   –2 Gently pull out along the bottom to release the clips (C) and hooks (D).
   –3 Gently pull out the upper portion of the panel.
   –4 With auto A/C: Disconnect the in-car temperature sensor connector (E) and the air hose (F).

Fastener Locations

B ▶ : Screw, 2 C ▷ : Clip, 2

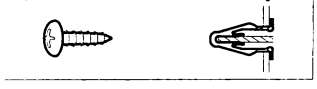

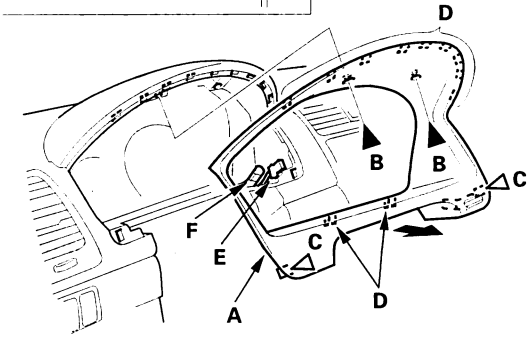

3. Install the panel in the reverse order of removal. If equipped, make sure the in-car temperature sensor connector is plugged in properly, and the air hose is connected securely.

Instrument Upper Visor Removal/ Installation

NOTE: Take care not to scratch the dashboard and related parts.

1. Remove these items:

   - Instrument panel (see page 20-129)
   - Gauge control module

2. Remove the screws, then remove the instrument upper visor (A).

Fastener Locations

▶ : Screw, 7

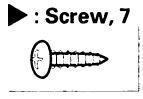

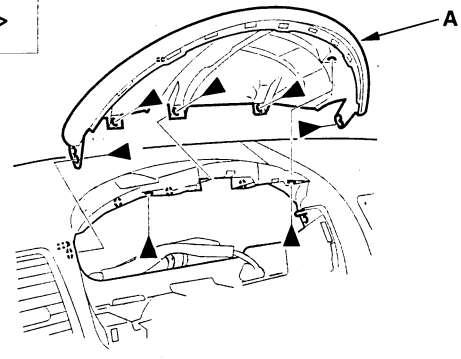

3. Install the visor in the reverse order of removal.

Protected by AR

Driver's Dashboard Lower Cover Removal/Installation

NOTE:
- Take care not to scratch the dashboard and related parts.
- When prying with a flat-tip screwdriver, wrap it with protective tape to prevent damage.

1. Adjust the steering column upward.
2. Remove the screw (A).

Fastener Locations

A▶ : Screw, 1 C, D ▷ : Clip, 7

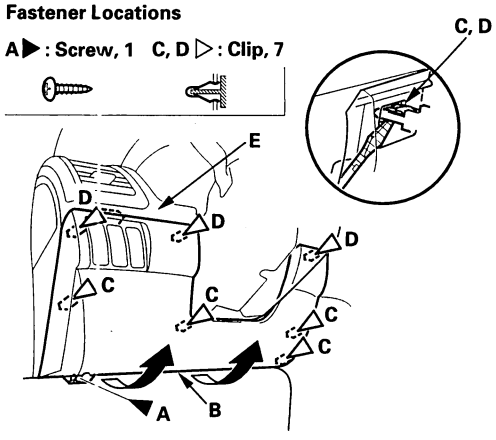

3. Pull out the bottom of the driver's dashboard lower cover (B) to detach the lower clips (C).
4. Detach the upper clips (D) and a hook (E) by pulling the driver's dashboard lower cover back.
5. If any of the clips (C, D) securing the driver's dashboard lower cover is hard to detach, pry it with a flat-tip screwdriver.
6. Remove the driver's dashboard lower cover (A). If equipped, disconnect the moonroof switch connector (B).

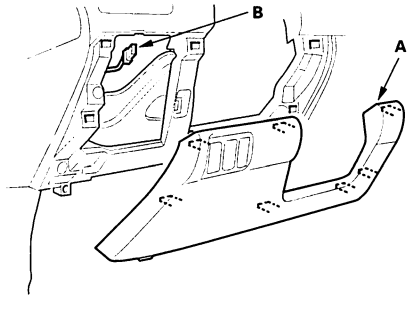

7. Install the cover in the reverse order of removal, and make sure each connector is plugged in properly.

Driver's Dashboard Under Cover Removal/Installation

'04-06 Models

NOTE: Take care not to scratch the dashboard and related parts.

1. Remove the driver's dashboard lower cover (see page 20-130).
2. Remove the driver's dashboard under cover (A).
   - –1 Gently pull down the rear edge to detach the clips.
   - –2 Pull the cover away to release the pins (B) from the holders (C).

Fastener Locations

▷ : Clip, 3

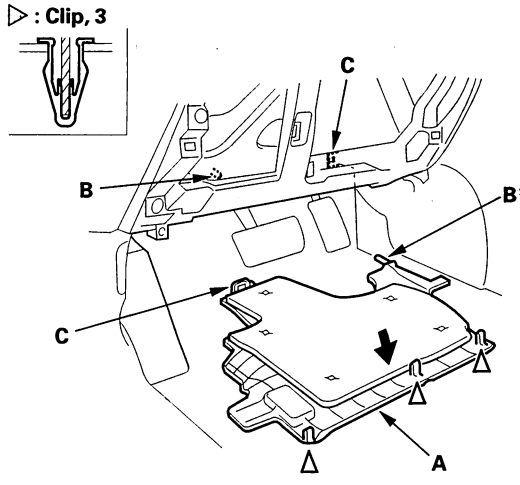

3. Install the cover in the reverse order of removal.

BACK

Protected by AR

Upper Panel Removal/Installation

Special Tools Required
Upper panel/vent removal tool 07AAC-SDAA100

NOTE: Take care not to scratch the dashboard and related parts.

1. Push the hazard warning switch button (A). Carefully insert a flat-tip screwdriver into the slot (B) below the button, and push down on the center clip.

Fastener Location

▷ : Clip, 1

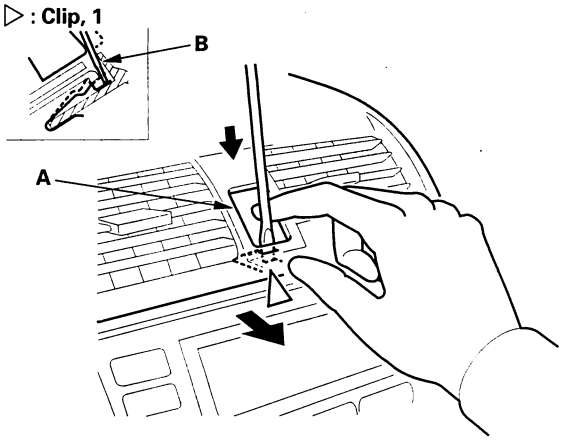

With the special tool and a flat-tip screwdriver

2. Set both ends of the special tool in the center vent openings (A) as shown. While pressing the center clip (B) down, pull the upper panel (C) back with the tool to detach the clips (D).

Fastener Locations

B▷ : Clip, 1 D▷ : Clip, 2

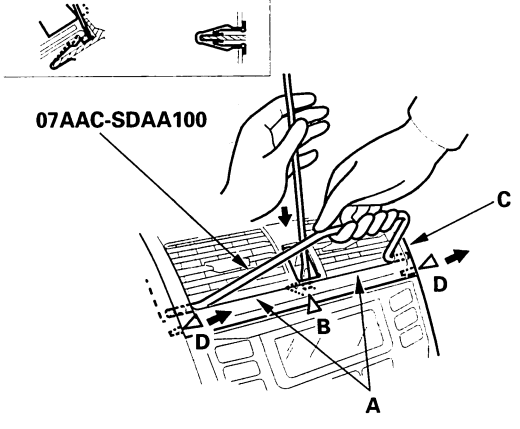

With two flat-tip screwdrivers

3. Carefully insert a flat-tip screwdriver wrapped with tape into the slot (A) on one side of the upper panel (B). While pressing down on the center clip (C), carefully pull out on the side of the panel to detach the clips (D). Repeat this operation on the other side of the panel.

Fastener Locations

C ▷ : Clip, 1 D ▷ : Clip, 2

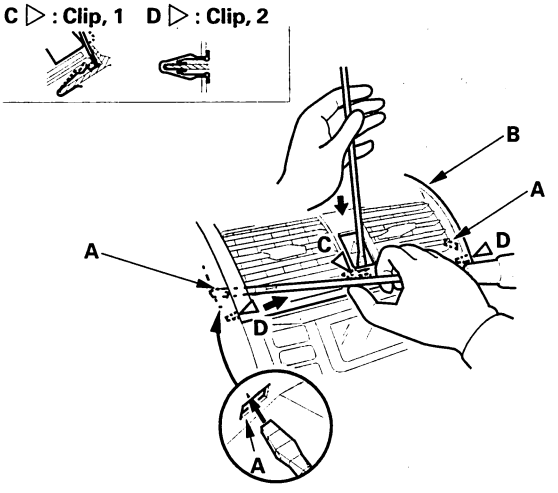

4. Pull the upper panel (A) in the direction shown to release the remaining clips, disconnect the hazard warning switch connector (B), and if equipped, sunlight sensor connector (C) and navigation subdisplay connector (D). Detach the harness clips (E), then remove the upper panel.

Fastener Locations

▷ : Clip, 4

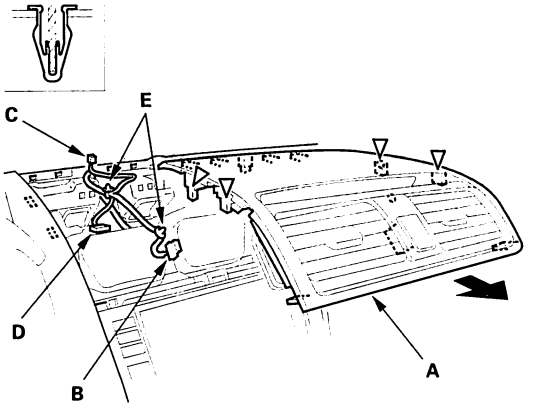

5. Install the panel in the reverse order of removal, and make sure each connector is plugged in properly.

BACK

Protected by AR

Center Pocket Removal/Installation

SRS components are located in this area. Review the SRS component locations (see page 23-17) and the precautions and procedures (see page 23-19) before performing repairs or service.

NOTE:
- Put on gloves to protect your hands.
- Take care not to scratch the dashboard and related parts.

1. Remove the center holder (see page 20-125).

2. Remove the center pocket (A).

   –1 Remove the screws (B).
   –2 Open the lid, then pull the pocket back by hand to detach the clips (C).
   –3 Close the lid, then remove the pocket.

Fastener Locations

B ▶ : Screw, 2 C ▷ : Clip, 2

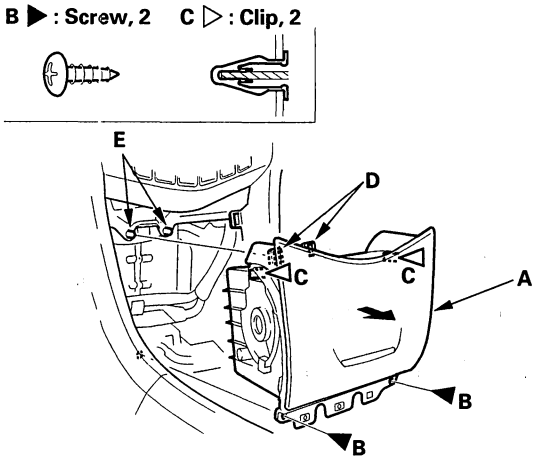

3. Install the pocket in the reverse order of removal, and note these items:

   - Make sure the holders (D) are installed onto the pins (E) properly.
   - Push the clipped portions into place securely.
   - Make sure the center pocket lid opens smoothly.

Glove Box Removal/Installation

Special Tools Required
KTC trim tool set SOJATP2014

SRS components are located in this area. Review the SRS component locations (see page 23-17) and the precautions and procedures (see page 23-19) before performing repairs or service.

NOTE:
- Take care not to scratch the dashboard and related parts.
- Use the appropriate tool from the KTC trim tool set to avoid damage when prying components.

1. Detach the hook (A) of the glove box damper (B), and remove the screws.

Fastener Locations

▶ : Screw, 2

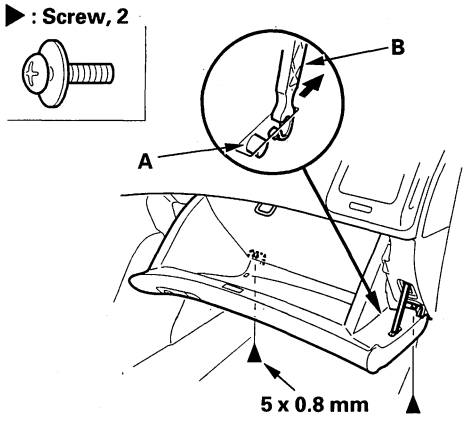

2. While holding the glove box (A), release the glove box stop (B) on each side from the dashboard by pushing them in, then remove the glove box.

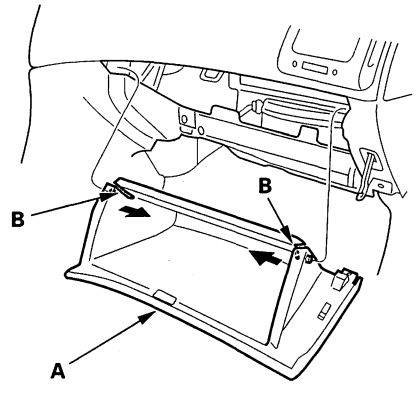

BACK

Protected by AR

3. Open the passenger's door, and gently pull out on the front of the dashboard side cover (A) to release the hooks (B), and remove the cover.

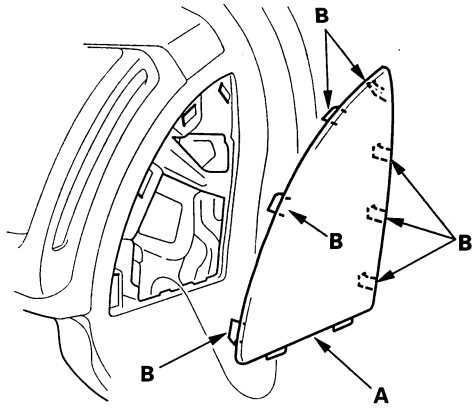

4. Remove the screw, then remove the glove box damper (A).

Fastener Location

▶ : Screw, 1

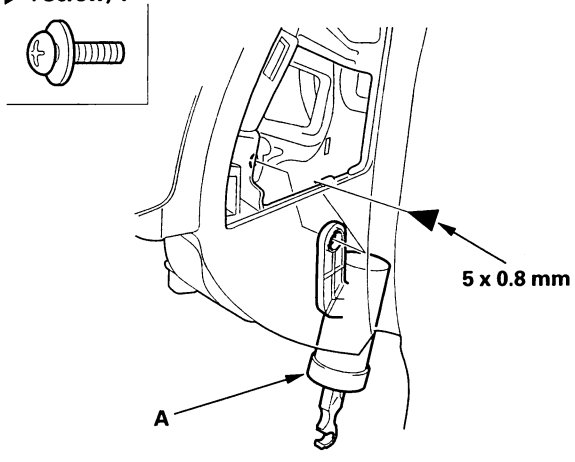

5. Install the glove box in the reverse order of removal.

Glove Box Lock Cylinder Replacement

NOTE: Take care not to scratch the glove box.

1. Remove the glove box (see page 20-132).

2. Pull out the glove box knob (A) and use a hooked-shaped tool to pull the top end of the retainer (B) out of its slot (C).

   NOTE: Do not remove the retainer entirely. Leave the other side of it in the original position when removing and installing the lock cylinder.

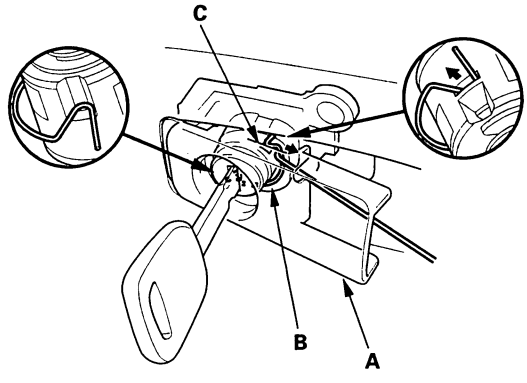

3. Remove the glove box lock cylinder (A).

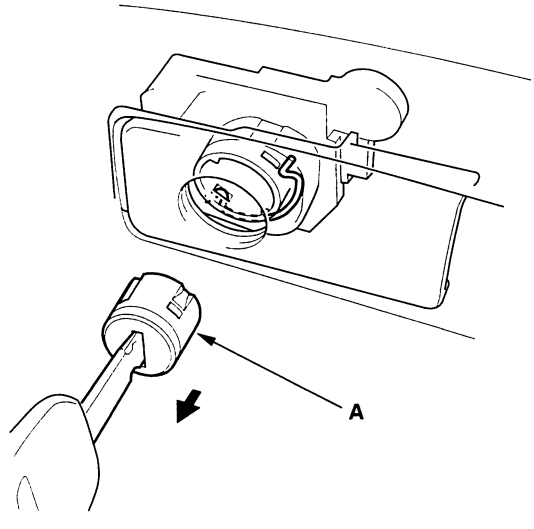

(cont'd)

Protected by AR

Glove Box Lock Cylinder Replacement (cont'd)

4. Reinstall the top of the retainer (A) in its original position, then reinstall the lock cylinder (B). Push the cylinder into place securely until the retainer snaps into place.

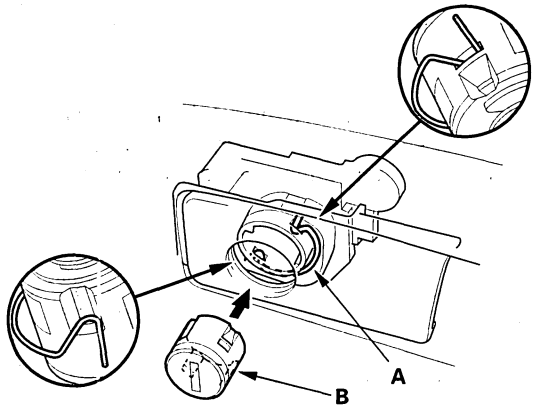

Passenger's Dashboard Lower Cover Removal/Installation

NOTE: Take care not to scratch the dashboard and related parts.

1. Remove the passenger's dashboard lower cover (A).
   - –1 Gently pull down the edge nearest the glove box to detach the clips.
   - –2 Pull the cover away to release the pins (B) from the holders (C).

Fastener Locations

▷: **Clip, 3**

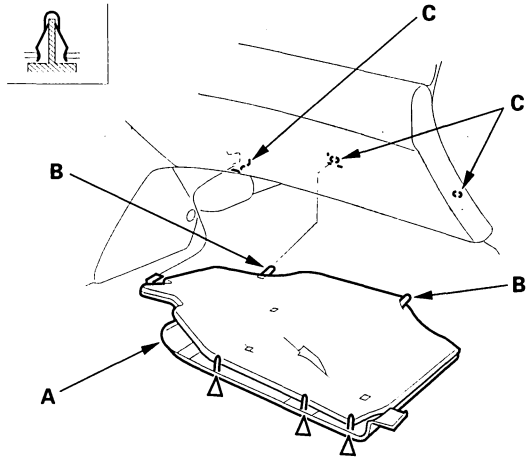

2. Install the cover in the reverse order of removal.

BACK

Protected by AR

Dashboard Side Vent Removal/Installation

Special Tools Required
KTC trim tool set SOJATP2014

Driver's

NOTE:
- Take care not to scratch the dashboard and related parts.
- Put on gloves to protect your hands.
- Use the appropriate tool from the KTC trim tool set to avoid damage when prying components.

1. Remove the driver's dashboard lower cover (see page 20-130).

2. Push up the lower clips by hand, then push out the driver's side vent (A) by releasing the upper and side tabs (B).

Fastener Locations

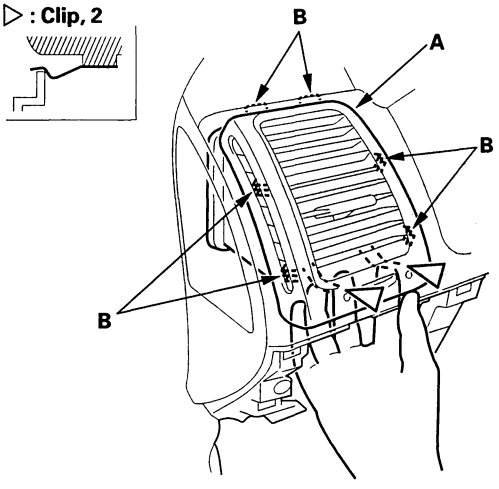

3. Reinstall the tab portions of the vent first, then push the clip portions into place securely.

Passenger's

NOTE:
- Take care not to scratch the dashboard and related parts.
- Use the appropriate tool from the KTC trim tool set to avoid damage when prying components.

1. Detach the hook of the glove box damper, then lower the glove box (see page 20-132).

2. Carefully insert a flat-tip screwdriver under the clip, and push it up.

3. Pull out along the edge of the passenger's side vent (A) by hand to release the lower clips and the upper and side tabs (B). Then remove the vent.

Fastener Locations

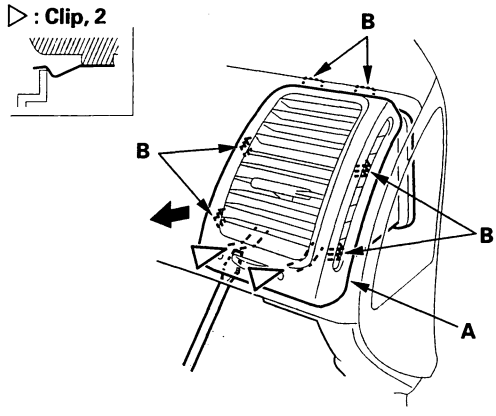

4. Reinstall the tab portions of the vent first, then push the clip portions into place securely.

Protected by AR

Dashboard/Steering Hanger Beam Removal/Installation

SRS components are located in this area. Review the SRS component locations (see page 23-17) and the precautions and procedures (see page 23-19) before performing repairs or service.

NOTE:
- When prying with a flat-tip screwdriver, wrap it with protective tape, and apply protective tape around the related parts to prevent damage.
- Have an assistant help you when removing and installing the dashboard/steering hanger beam.
- Take care not to scratch the dashboard, body and other related parts.
- Put on gloves to protect your hands.

1. Make sure you have the anti-theft codes for the radio and the navigation system, then write down the frequencies for the preset buttons.

2. Disconnect the negative cable from the battery, and wait at least 3 minutes before beginning work.

3. Remove these items:
   - Center console (see page 20-125)
   - Driver's dashboard lower cover (see page 20-130)
   - Passenger's dashboard lower cover (see page 20-134)
   - Center pocket (see page 20-132)
   - Glove box (see page 20-132)
   - Driver's dashboard under cover (see page 20-130)
   - Kick panels, both sides, 2-door (see page 20-90), 4-door (see page 20-91)
   - A-pillar trim, both sides, 2-door without side curtain airbags (see page 20-94), 2-door with side curtain airbags (see page 20-99), 4-door without side curtain airbags (see page 20-94), 4-door with side curtain airbags (see page 20-99)
   - Steering column (see page 17-25)

4. Remove the screw (A) and release the clip (B), then remove the driver's center lower cover (C) by releasing the hooks (D).

Fastener Locations

A▶: Screw, 1 B▷: Clip, 1



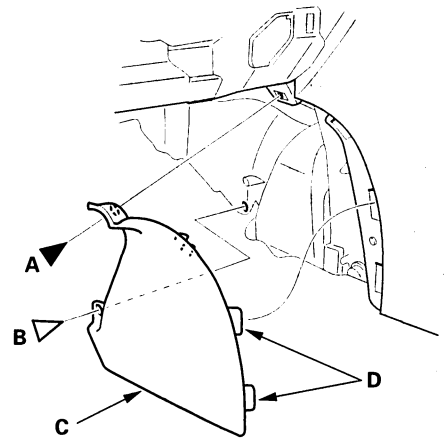

5. Release the clip, then remove the passenger's center lower cover (A) and the rear vent duct (B) by releasing the hooks (D) and the hook (E) ('04-06 models).

Fastener Location

▷: Clip, 1

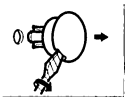

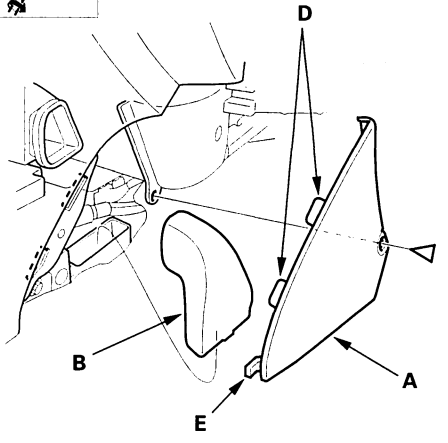

6. Remove the SRS control unit (see page 23-213).

BACK

Protected by AR

Driver's side

7. From under the dash, disconnect the interior wire harness connector (A) (with moonroof), clutch switch connectors (B) (on M/T model), and brake switch connector (C), floor wire harness connectors (D), engine compartment wire harness connectors (E), and disconnect the dashboard wire harness connectors (F) from the under-dash fuse/relay box (G), then release the wire harness clip (H). On auto A/C model, disconnect the air hose (I).

   NOTE: Lift the white wire harness connector locks (J) before trying to remove the connectors from the fuse box.

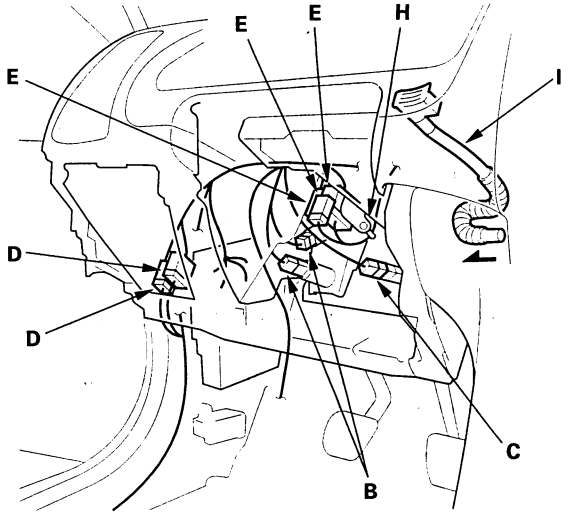

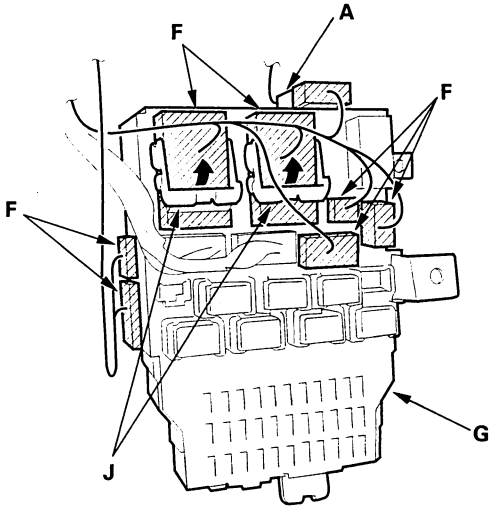

Middle portion (shift lever portion)

8. Disconnect the parking brake switch connector (A), radio antenna connector (B), antenna lead (C), and A/C subharness connector (D), then release the wire harness clips (E).
   Using a T30 Torx bit, remove the ground bolt (F).
   On A/T model, disconnect the parking pin switch connector (G) and shift lock solenoid connector (H).

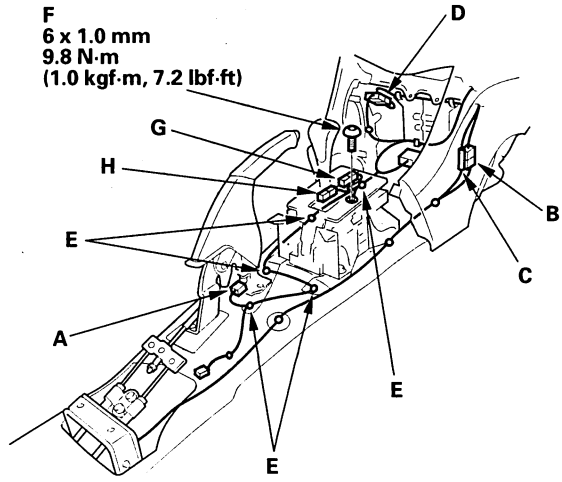

(cont'd)

Protected by AR

Dashboard/Steering Hanger Beam Removal/Installation (cont'd)

Middle portion (passenger's side)

9. From under the dash, disconnect the ECM/PCM connector (A), power transistor connector (B), and engine wire harness connector (C), then release the wire harness clips (D).

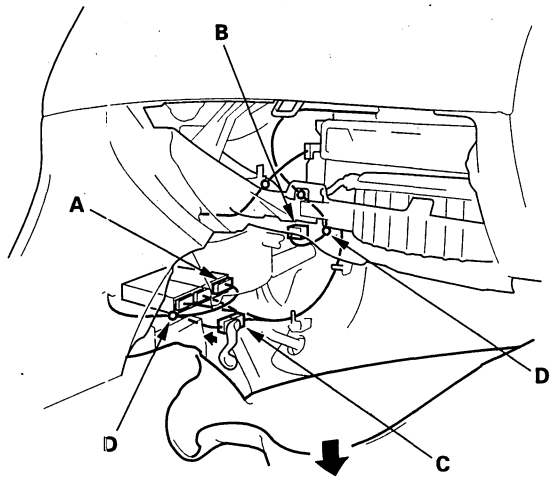

Passenger's side

10. From under the dash, disconnect the passenger's door wire harness connectors (A), floor wire harness connector (B), and blower motor connector (C). On vehicles with navigation system, disconnect connectors (D).

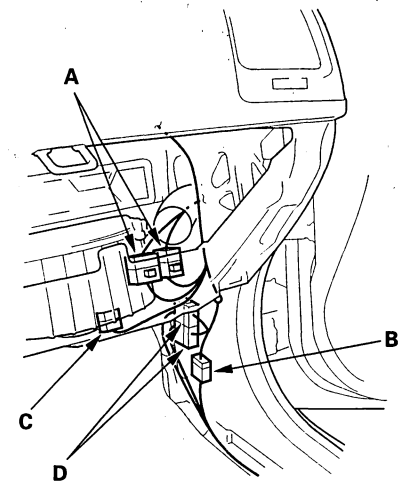

11. Detach all of the harness and connector clips.

12. Remove bolts, then remove the brake pedal support member (A).

Fastener Locations

▶ : Bolt, 2

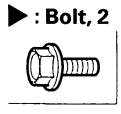

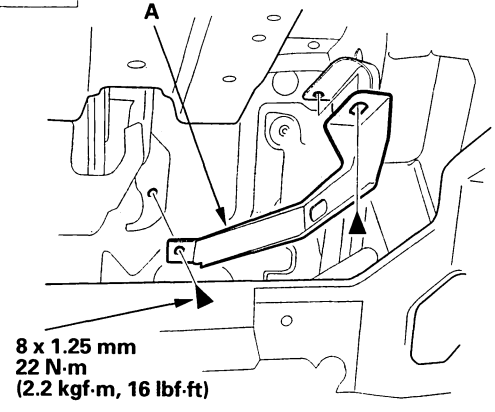

13. Cover the parking brake handle to protect it.

BACK

Protected by AR

14. Open the driver's door, and remove the caps (A), then remove the bolts (B, C, D), and clips (E) and lift up on the dashboard (F)/steering hanger beam to release it from the guide pins (G, H).

    NOTE: Before removing the dashboard/steering hanger beam, make sure all the harnesses have been disconnected.

Fastener Locations

B ▶ : Bolt, 4 C ▶ : Bolt, 3 D ▶ : Bolt, 6 E ▷ : Clip, 2

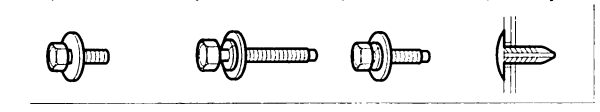

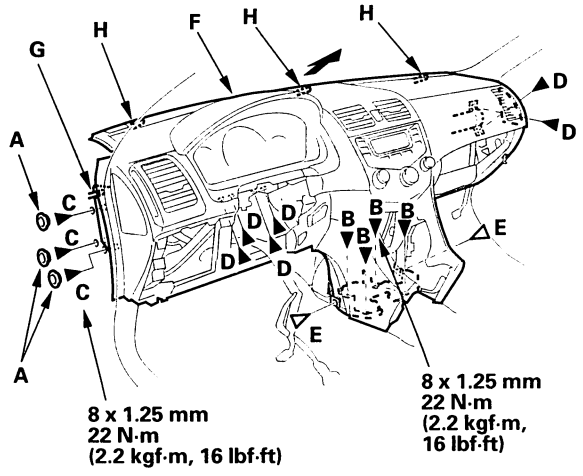

15. Carefully remove the dashboard/steering hanger beam through the front door opening.

    NOTE: Lay the dashboard/steering hanger beam on its front or back. Do not stand it on the lower console opening or you may damage it.

16. Remove the bolts (A), then remove the center bracket (B).

Fastener Locations

A ▶ : Bolt, 2

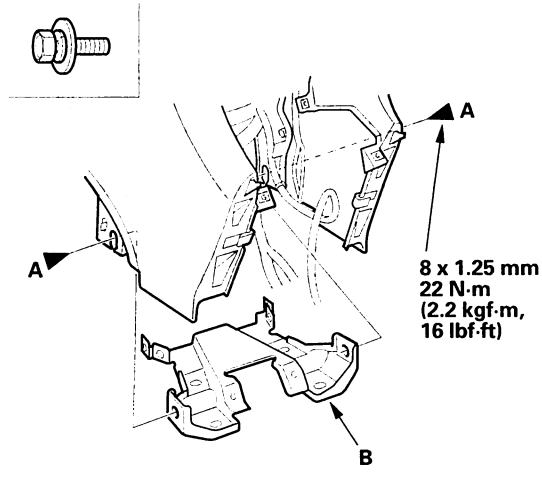

17. Install the dashboard/steering hanger beam in the reverse order of removal, and note these items:

- Apply medium strength liquid thread lock to the bolts securing the center bracket and the dashboard center frame before reinstallation.
- Reinstall the center bracket on the center frame, and slightly tighten the mounting bolts. Reinstall the dashboard/steering hanger beam on the body. After tightening both dashboard/steering hanger beam mounting bolts, tighten the center bracket mounting bolts and center frame mounting bolts.
- Make sure the dashboard/steering hanger beam fits onto the guide pins correctly.
- Before tightening the bolts, make sure none of the wire harnesses are pinched.
- Make sure the connectors are plugged in properly, and the antenna lead and air hose are connected properly.
- Reconnect the negative cable to the battery.
- Enter the anti-theft codes for the radio and the navigation system, then enter the customer's radio station presets.
- Reset the clock.

Protected by AR

Dashboard Replacement

NOTE: Put on gloves to protect your hands.

1. Remove the dashboard (see page 20-136).
2. Remove these items from the dashboard:
   - Upper panel (see page 20-131)
   - Instrument panel (see page 20-129)
   - Gauge control module (see page 22-276)
   - Audio-HVAC-Display module (see page 22-371)
   - Passenger's airbag (see page 23-198)
   - Glove box damper (see step 4 on page 20-133)
3. Detach the hooks by pulling both blind covers (A) back, release the hooks (B), then remove the covers.

Fastener Locations

▷ : **Hook, 2**

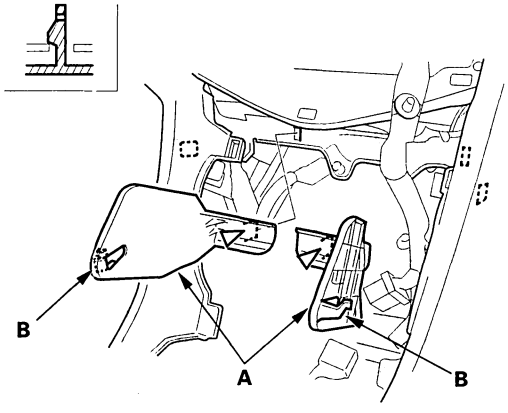

4. On both sides, detach the clips and release the hooks (A), then remove the tweeters (B) or tweeter grille. Disconnect the tweeter connectors (C).

Fastener Locations

▷ : **Clip, 4**

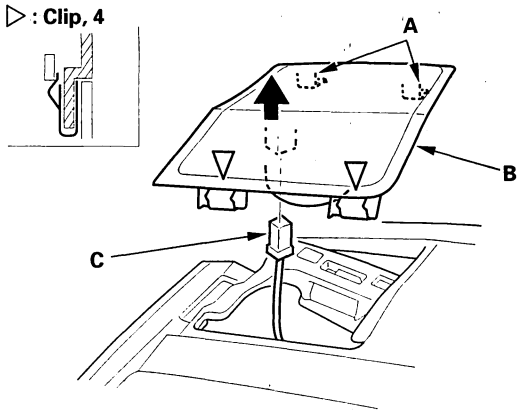

5. From the front of the dashboard, detach the harness clips (A, B).

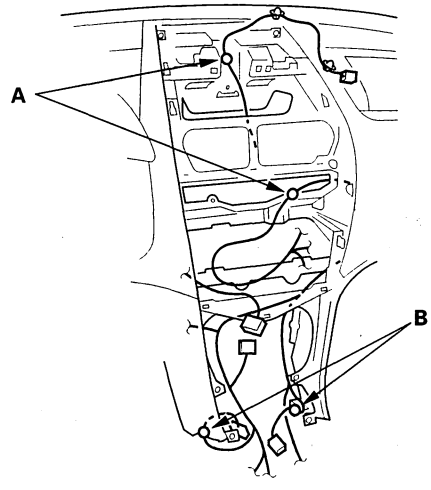

BACK

Protected by AR

6. From the back of the dashboard, Detach the harness clips (A) from both sides.

Driver's side

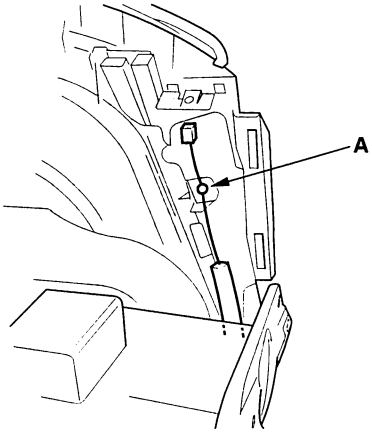

Passenger's side

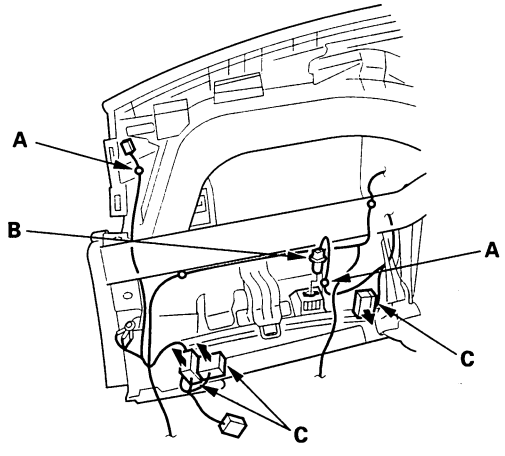

7. On passenger's side disconnect the glove box light bulb socket (B), and detach the connectors (C).

8. Remove the screws (A, B) securing the dashboard (C) and steering hanger beam (D), and detach the clips (E), then separate the dashboard and steering hanger beam.

Fastener Locations

A ▶ : Screw
Except U.S.A.-produced '04-06 models, 9
U.S.A.-produced '04-06 models, 10

B ▶ : Screw
Except U.S.A.-produced '04-06 models, 8
U.S.A.-produced '04-06 models, 7



E ▷ : Clip, 2

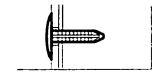

Except U.S.A.-produced '04-06 models

U.S.A.-produced '04-06 models

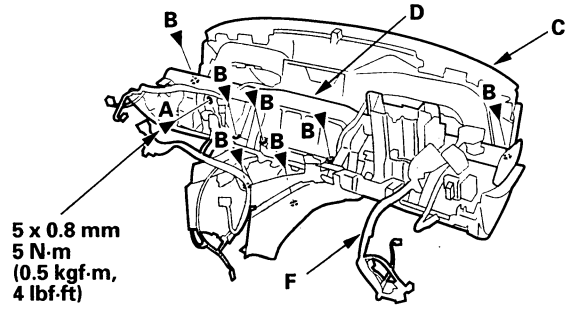

9. Install the dashboard in the reverse order of removal, and note these items:

- Make sure the dashboard wire harness (F) is not pinched.
- Make sure the connectors are plugged in properly, and the glove box light bulb socket is connected securely.

BACK

Protected by AR

Component Location Index

2-door

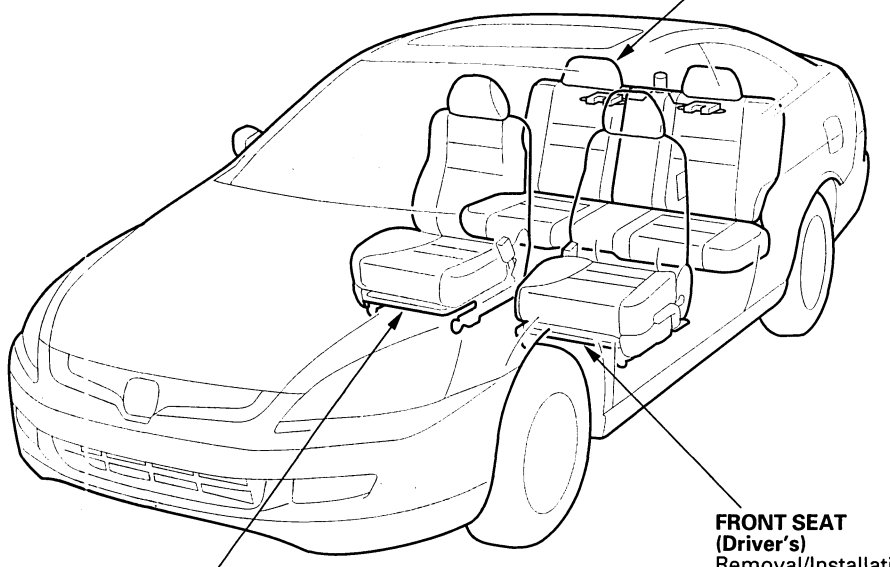

REAR SEAT
Removal/Installation, page 20-173
Seat-back Latch Replacement, page 20-175
Seat-back Lock Cylinder Replacement, page 20-176
Seat-back Cover Replacement, page 20-179
Seat Cushion Cover Replacement, page 20-182

FRONT SEAT
(Driver's)
Removal/Installation, page 20-144
Disassembly/Reassembly-Manual Height Adjustable, page 20-153
Disassembly/Reassembly-2-Way Power, page 20-154
Disassembly/Reassembly-8-Way Power, page 20-155
Linkage Disassembly/Reassembly -Manual Height Adjustable, page 20-159
Linkage Disassembly/Reassembly -2-Way Power, page 20-160
Linkage Disassembly/Reassembly -8-Way Power, page 20-161
Recline Motor Replacement, page 20-162
Lumbar Support Replacement, page 20-163
Rear Seat Access Cable Replacement, page 20-165
Seat Cover Replacement, page 20-166

FRONT SEAT
(Passenger's)
Removal/Installation, page 20-144
Disassembly/Reassembly-Manual, page 20-149
Linkage Disassembly/Reassembly-Manual, page 20-156
Seat Cover Replacement, page 20-166

BACK

Protected by AR

4-door

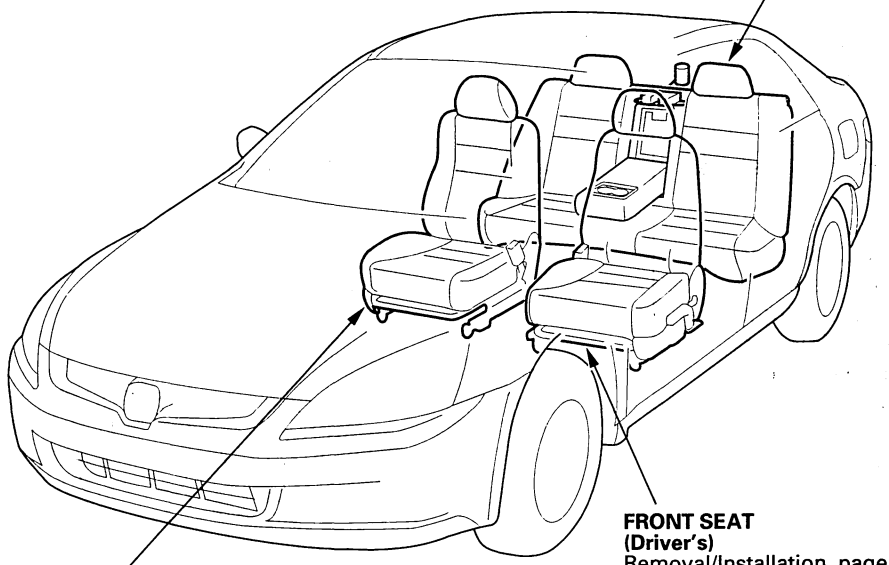

REAR SEAT
Removal/Installation, page 20-174
Seat-back Latch Replacement, page 20-175
Seat-back Lock Cylinder Replacement, page 20-176
Rear Seat Armrest/Trunk Pass-through Cover Replacement, page 20-177
Trunk Pass-through Cover Key Cylinder Replacement, page 20-178
Seat-back Cover Replacement, page 20-179
Seat Side Bolster Cover Replacement, page 20-182
Seat Cushion Cover Replacement, page 20-182

FRONT SEAT
(Passenger's)
Removal/Installation, page 20-144
Disassembly/Reassembly-Manual, page 20-151
Linkage Disassembly/Reassembly-Manual, page 20-156
Seat Cover Replacement, page 20-166

FRONT SEAT
(Driver's)
Removal/Installation, page 20-144
Disassembly/Reassembly-Manual Height Adjustable, page 20-153
Disassembly/Reassembly-2-Way Power, page 20-154
Disassembly/Reassembly-8-Way Power, page 20-155
Linkage Disassembly/Reassembly -Manual Height Adjustable, page 20-159
Linkage Disassembly/Reassembly -2-Way Power, page 20-160
Linkage Disassembly/Reassembly -8-Way Power, page 20-161
Recline Motor Replacement, page 20-162
Lumbar Support Replacement, page 20-163
Seat Cover Replacement, page 20-166

Protected by AR

Front Seat Removal/Installation

Special Tools Required
KTC trim tool set SOJATP2014

SRS components are located in this area. Review the SRS component locations (see page 23-17) and the precautions and procedures (see page 23-19) before performing repairs or service.

NOTE
- Put on gloves to protect your hands.
- When prying with a flat-tip screwdriver, wrap it with protective tape to prevent damage.
- Take care not to scratch the body or tear the seat covers.
- Use the appropriate tool from the KTC trim tool set to avoid damage when prying components.

1. Make sure you have the anti-theft codes for the radio and the navigation system, then write down the frequencies for the preset buttons.

2. Tilt the steering wheel all the way up and telescope it all the way in.

3. '04-06 models passenger's seat: Carefully insert the tip of a small screwdriver (A) through the hole in the back of the front seat belt lower anchor cover (B) and into the hole in the front seat belt lower anchor (C). Unlock the lower anchor by pushing in on the screwdriver. Remove the screwdriver, and then detach the front seat belt anchor plate (D) and anchor cover from the lower anchor.

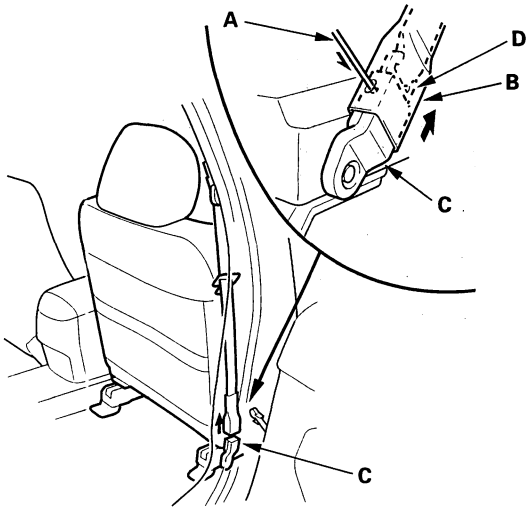

4. Slide the seat all the way forward, then remove the seat track end covers (A) from the back of both seat tracks.

Manual/Manual height adjustable/2-way power ('03 model)

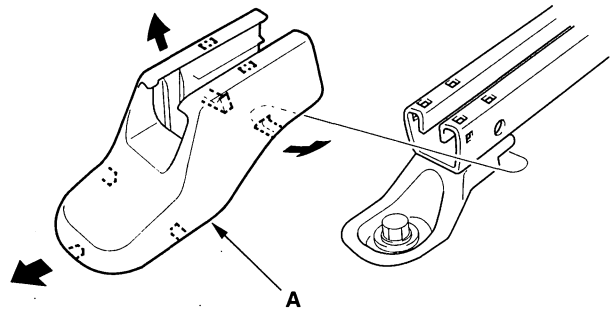

Manual ('04-06 models 2-door)

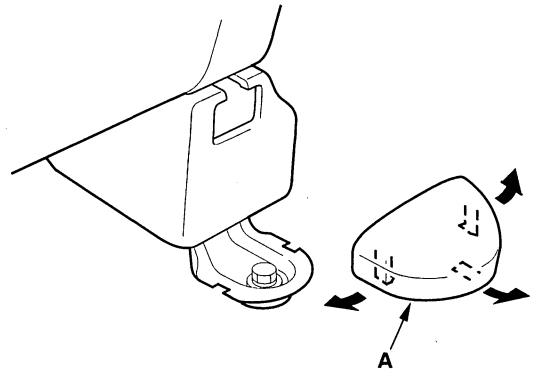

Manual ('04-06 models 4-door)

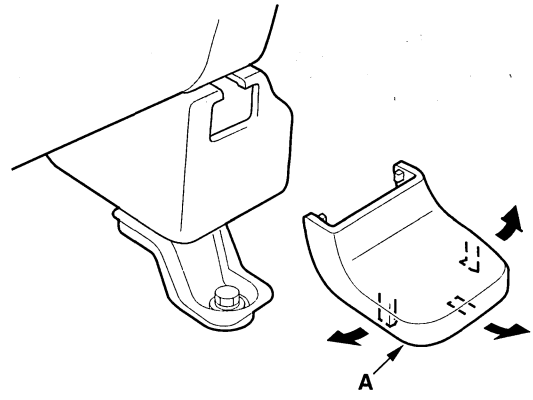

BACK

Protected by AR

8-way power

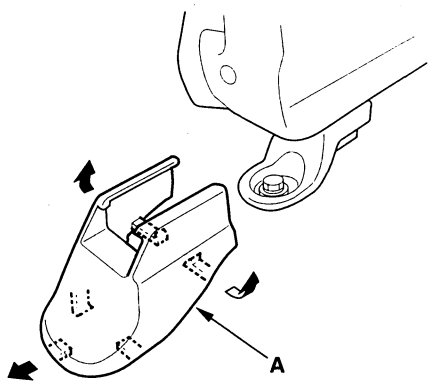

5. Slide the seat about half way to the rear so you can access the seat mounting bolts. If equipped with the 8-way power seat, fully raise the seat.

6. If equipped with a side airbag, disconnect the negative cable from the battery, and wait at least 3 minutes before removing the seat.

7. Remove the bolts securing the front seat (A).

Fastener Locations

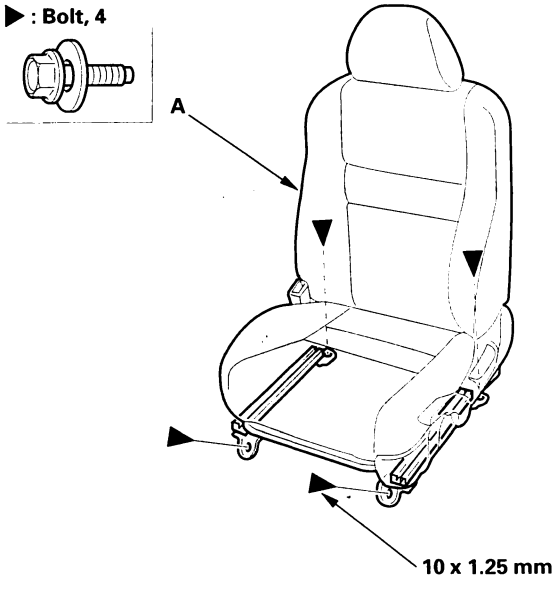

8. Lift up the front seat, then detach the harness clip (A), and disconnect the connector.

   - Seat belt switch connector (B) except on the 8-way power seat.
   - Power seat harness connector (C) on the driver's and passenger's power seats.
   - If equipped, the seat heater connector (D) on the 2-way power seat and passenger's manual seat.
   - Side airbag connector (E) on the driver's and passenger's seat.
   - OPDS/ODS unit connector (F) on the passenger's seat.
   - '04-06 models, disconnect the seat position sensor subharness connector (G) on the driver's manual height adjustable seat and the 8-way power seat.
   - Weight sensor unit connector (H) ('04-05 models), weight sensor connector (I) ('06 model) on the passenger's seat.

Manual seat ('03 model passenger's)

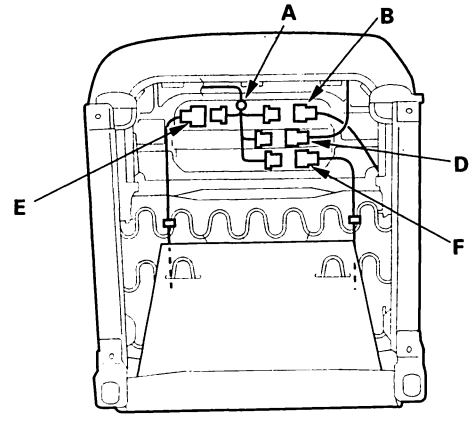

(cont'd)

Protected by AR

Front Seat Removal/Installation (cont'd)

Manual seat ('04-05 models passenger's)

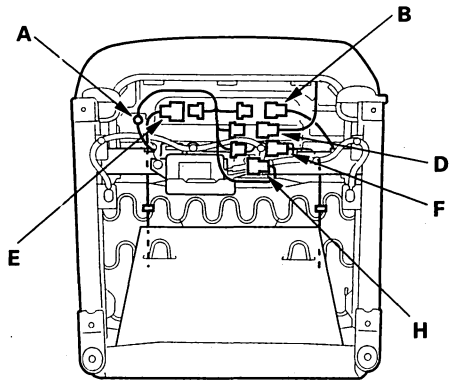

Manual seat ('06 model passenger's)

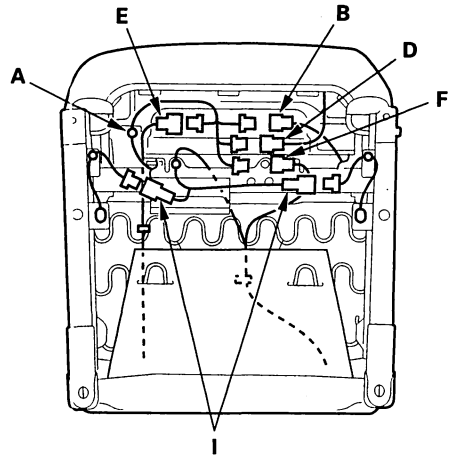

Manual seat ('03 model driver's)/Manual height adjustable seat ('03 model)

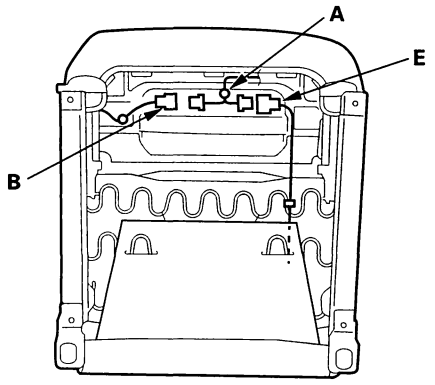

Manual height adjustable seat ('04-06 models)

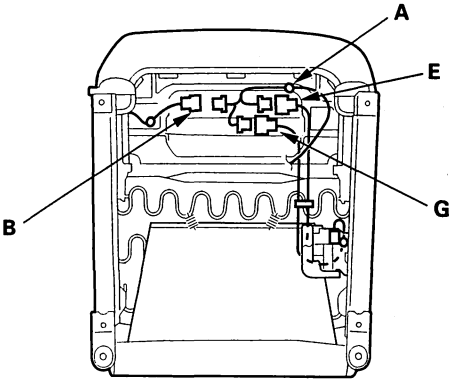

2-way power seat ('03 model)

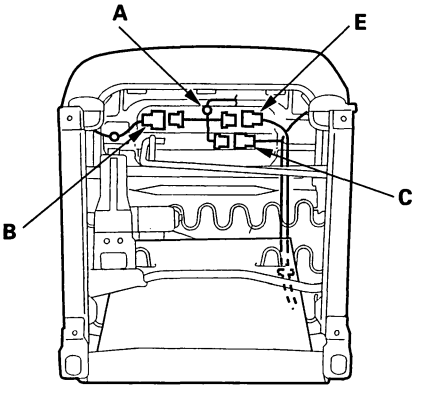

BACK

Protected by AR

2-way power seat ('04-06 models)

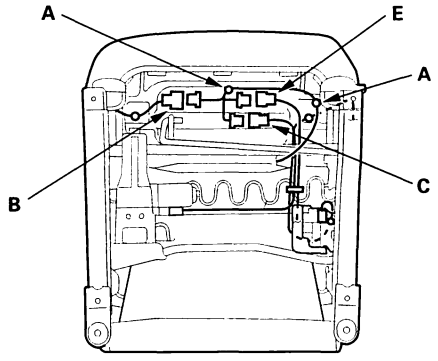

8-way power seat ('03 model)

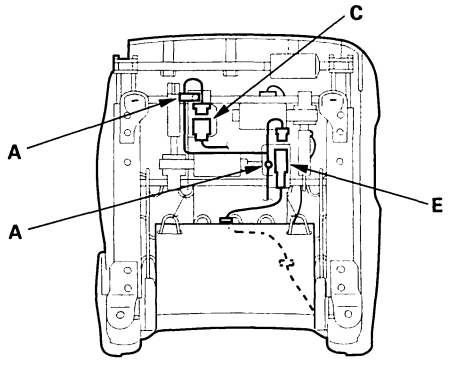

8-way power seat ('04-06 models)

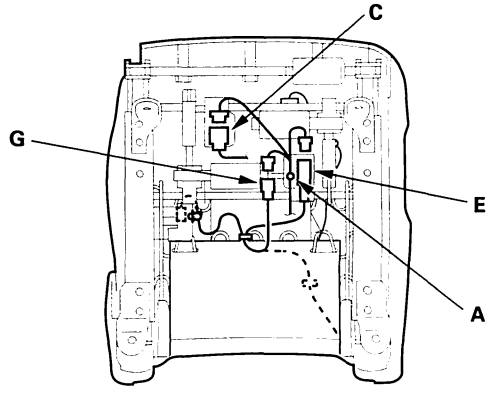

9. With the help of an assistant, carefully remove the front seat through the front door opening.

10. Install the seat in the reverse order of removal, and note these items:

- Apply medium strength liquid thread lock to the front seat mounting bolts before reinstallation.
- Make sure each connector is plugged in properly.
- Tighten the seat mounting bolts to the specified torque in the sequence shown. Slide the seat all the way back and tighten ① and ②, then slide it forward and tighten ③ and ④.
- Before attaching the lower anchor bolts, make sure there are no twists or kinks in the seat belts.
- '04-06 models passenger's seat: The triangle marks (A) on the anchor plate (B) and the lower anchor (C) must face the same side. Insert the anchor plate into the lower anchor, and make sure that it is locked securely.
- If equipped with a side airbag, reconnect the negative cable to the battery.
- Enter the anti-theft codes for the radio and navigation system, then enter the customer's radio station presets.
- Reset the clock.

Seat mounting bolts tightening sequence

Fastener Locations

▶ : Bolt, 4

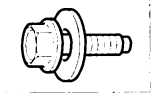

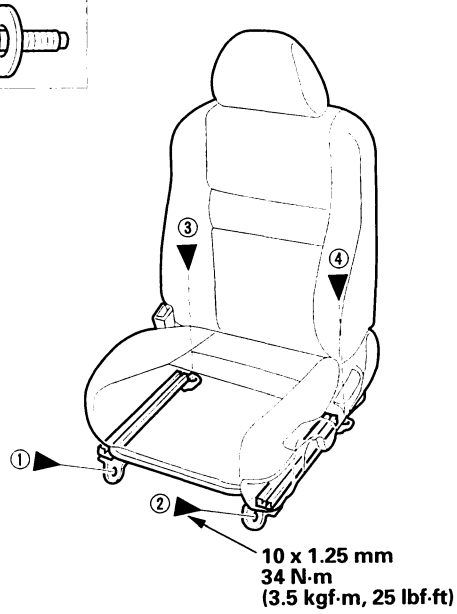

(cont'd)

Protected by AR

Front Seat Removal/Installation (cont'd)

Front seat belt lower anchor installation ('04-06 models passenger's)

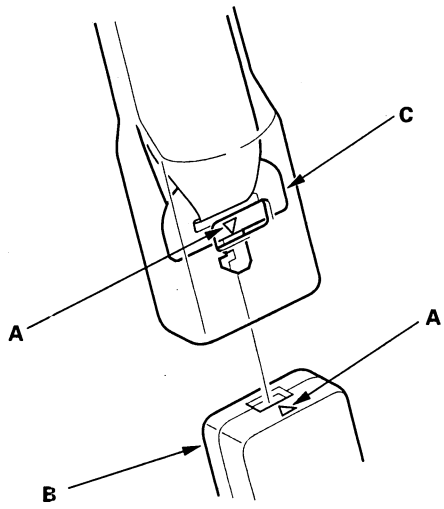

BACK

Protected by AR

Front Seat Disassembly/Reassembly - Manual

Special Tools Required
KTC trim tool set SOJATP2014

'03 Model 2-door

SRS components are located in this area. Review the SRS component locations (see page 23-17) and the precautions and procedures (see page 23-19) before performing repairs or service.

NOTE:
- Take care not to tear the seams or damage the seat covers.
- Put on gloves to protect your hands.
- Use the appropriate tool from the KTC trim tool set to avoid damage when prying components.
- Apply multipurpose grease to the moving parts of the seat track.
- To prevent wrinkles in the seat cushion cover, stretch the material evenly over the pad.

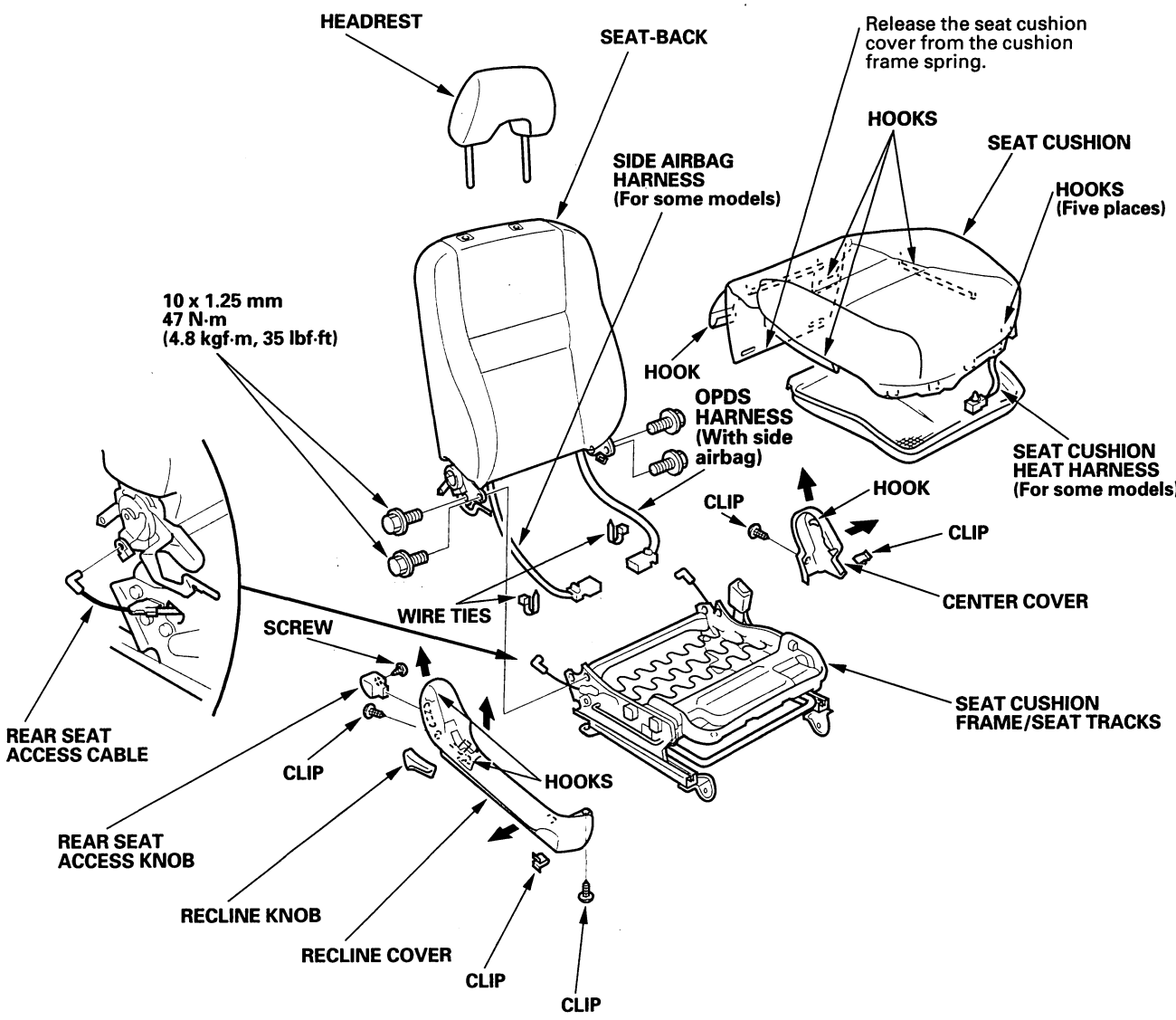

Protected by AR

Front Seat Disassembly/Reassembly - Manual (cont'd)

Special Tools Required
KTC trim tool set SOJATP2014

'04-06 Models 2-door

- SRS components are located in this area. Review the SRS component locations (see page 23-17) and the precautions and procedures (see page 23-19) before performing repairs or service.
- '04-05 models: The front passenger's weight sensor (SWS) unit must be calibrated after any of these actions (see page 23-33):
  - Front passenger's seat replacement (including any seat components)
  - Replacement of the seat weight sensors
  - Replacement of the seat weight sensor unit
- '06 model: The front passenger's weight sensor (SWS) must be calibrated after any of these actions (see page 23-33):
  - Front passenger's seat replacement (including any seat components)
  - Replacement of the seat weight sensors

NOTE:
- Take care not to tear the seams or damage the seat covers.
- Put on gloves to protect your hands.
- Use the appropriate tool from the KTC trim tool set to avoid damage when prying components.
- Apply multipurpose grease to the moving parts of the seat track.
- To prevent wrinkles in the seat cushion cover, stretch the material evenly over the pad.

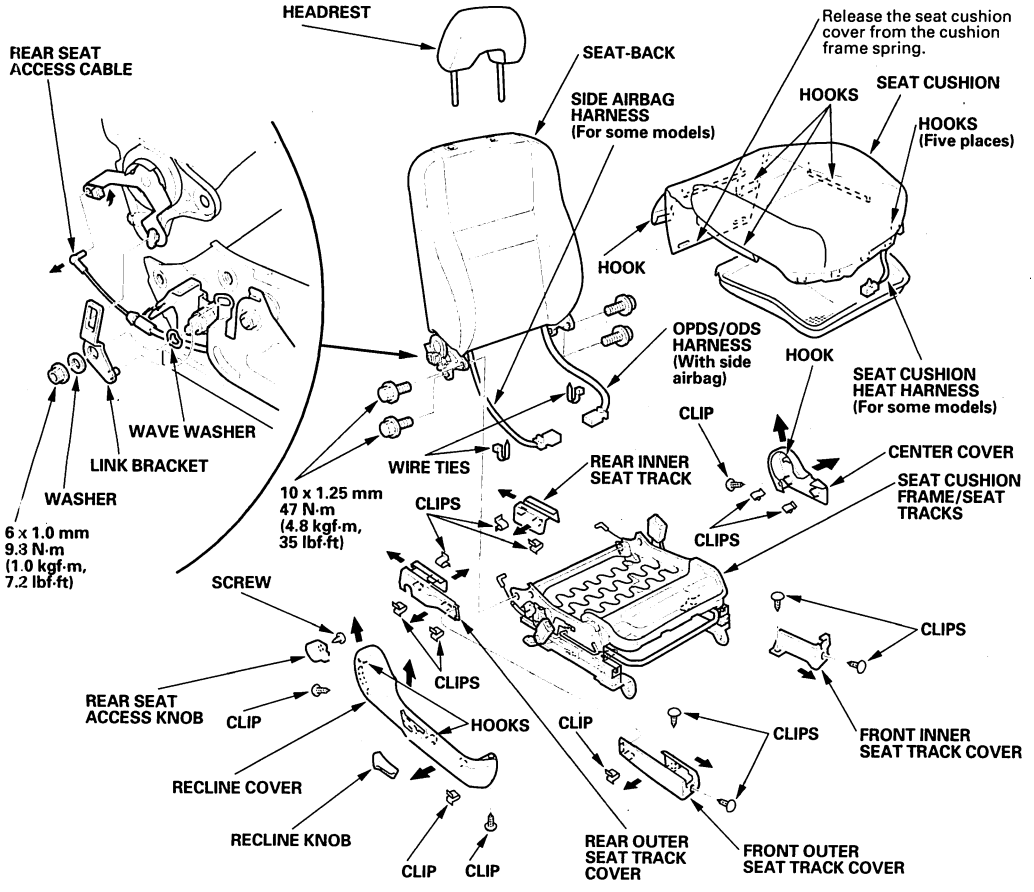

BACK

Protected by AR

Special Tools Required
KTC trim tool set SOJATP2014

'03 Model 4-door

SRS components are located in this area. Review the SRS component locations (see page 23-17) and the precautions and procedures (see page 23-19) before performing repairs or service.

NOTE:
- Take care not to tear the seams or damage the seat covers.
- Put on gloves to protect your hands.
- Use the appropriate tool from the KTC trim tool set to avoid damage when prying components.
- Apply multipurpose grease to the moving parts of the seat track.
- To prevent wrinkles in the seat cushion cover, stretch the material evenly over the pad.
- The passenger's seat is shown; the driver's seat is similar except it has no OPDS unit.

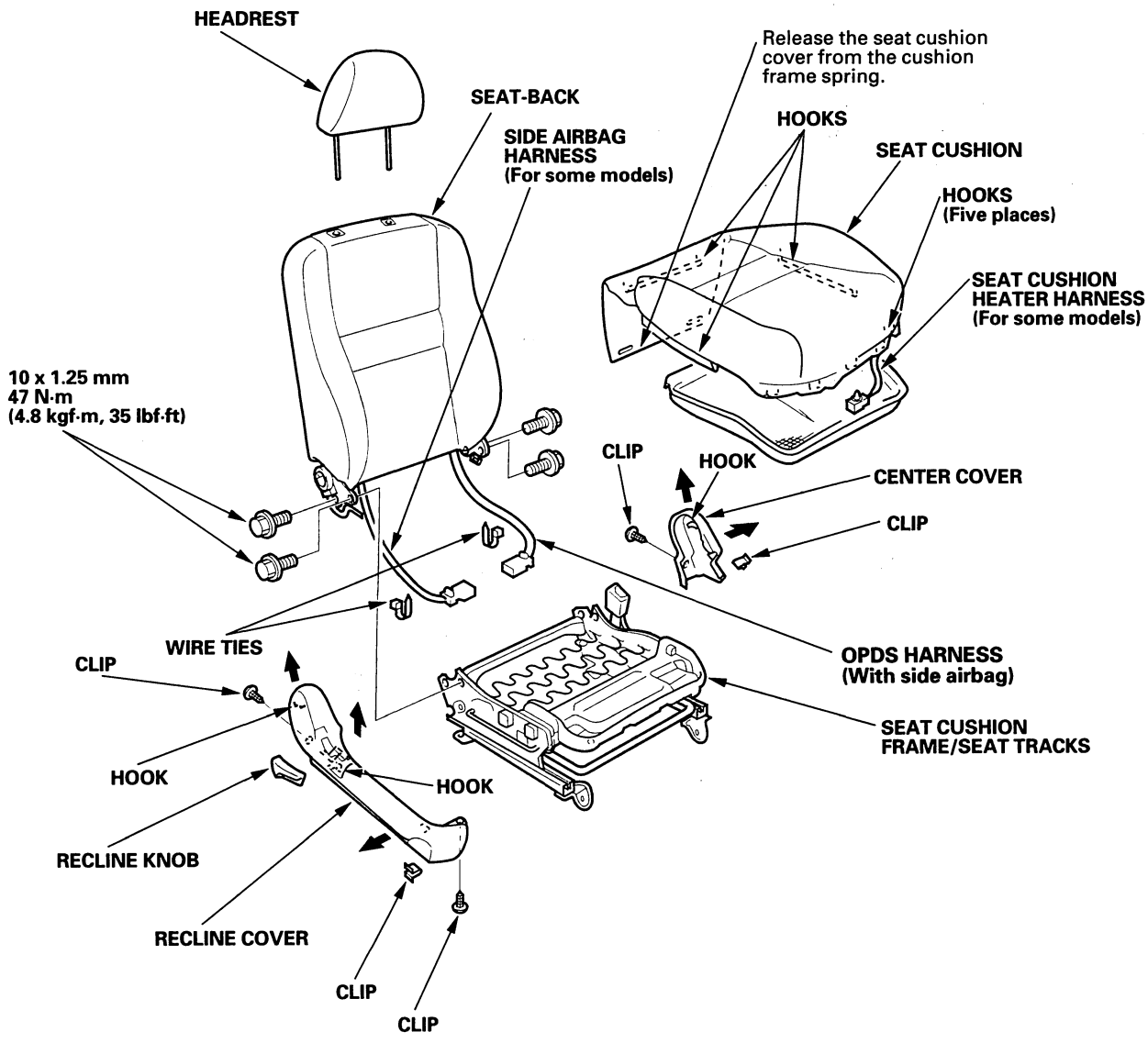

Protected by AR

Front Seat Disassembly/Reassembly - Manual (cont'd)

Special Tools Required
KTC trim tool set SOJATP2014

'04-06 Models 4-door Passenger's

- SRS components are located in this area. Review the SRS component locations (see page 23-17) and the precautions and procedures (see page 23-19) before performing repairs or service.
- '04-05 models: The front passenger's weight sensor (SWS) unit must be calibrated after any of these actions (see page 23-33):
  - Front passenger's seat replacement (including any seat components)
  - Replacement of the seat weight sensors
  - Replacement of the seat weight sensor unit
- '06 model: The front passenger's seat weight sensor (SWS) must be calibrated after any of these actions (see page 23-33):
  - Front passenger's seat replacement (including any seat components)
  - Replacement of the seat weight sensors

NOTE:
- Take care not to tear the seams or damage the seat covers.
- Put on gloves to protect your hands.
- Use the appropriate tool from the KTC trim tool set to avoid damage when prying components.
- Apply multipurpose grease to the moving parts of the seat track.
- To prevent wrinkles in the seat cushion cover, stretch the material evenly over the pad.

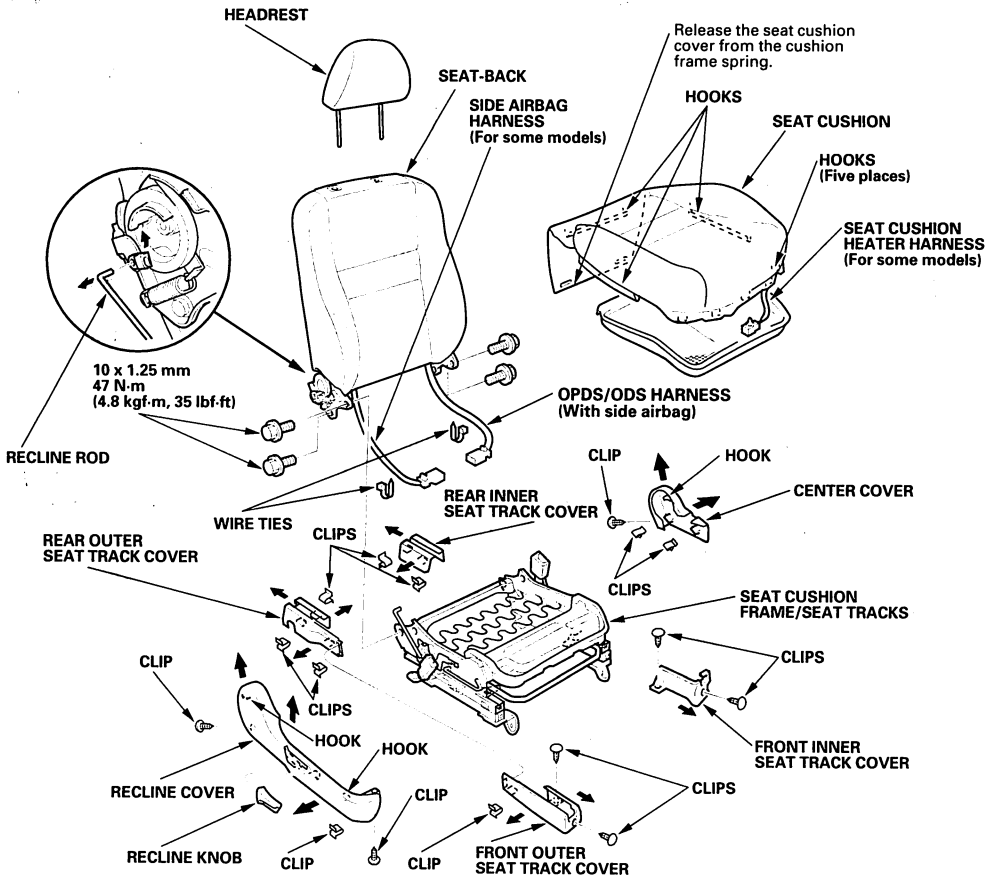

BACK

Protected by AR

Front Seat Disassembly/Reassembly - Manual Height Adjustable

Special Tools Required
KTC trim tool set SOJATP2014

- SRS components are located in this area. Review the SRS component locations (see page 23-17) and the precautions and procedures (see page 23-19) before performing repairs or service.
- '04-06 models: The operation of the driver's seat position sensor must be checked after any of these actions (see page 23-37):
  - Driver's seat position sensor replacement
  - Cover plate (front side of driver's seat slide rail) replacement

NOTE:
- Take care not to tear the seams or damage the seat covers.
- Put on gloves to protect your hands.
- Use the appropriate tool from the KTC trim tool set to avoid damage when prying components.
- Apply multipurpose grease to the moving parts of the height ratchet unit and seat track.
- To prevent wrinkles in the seat cushion cover, stretch the material evenly over the pad.

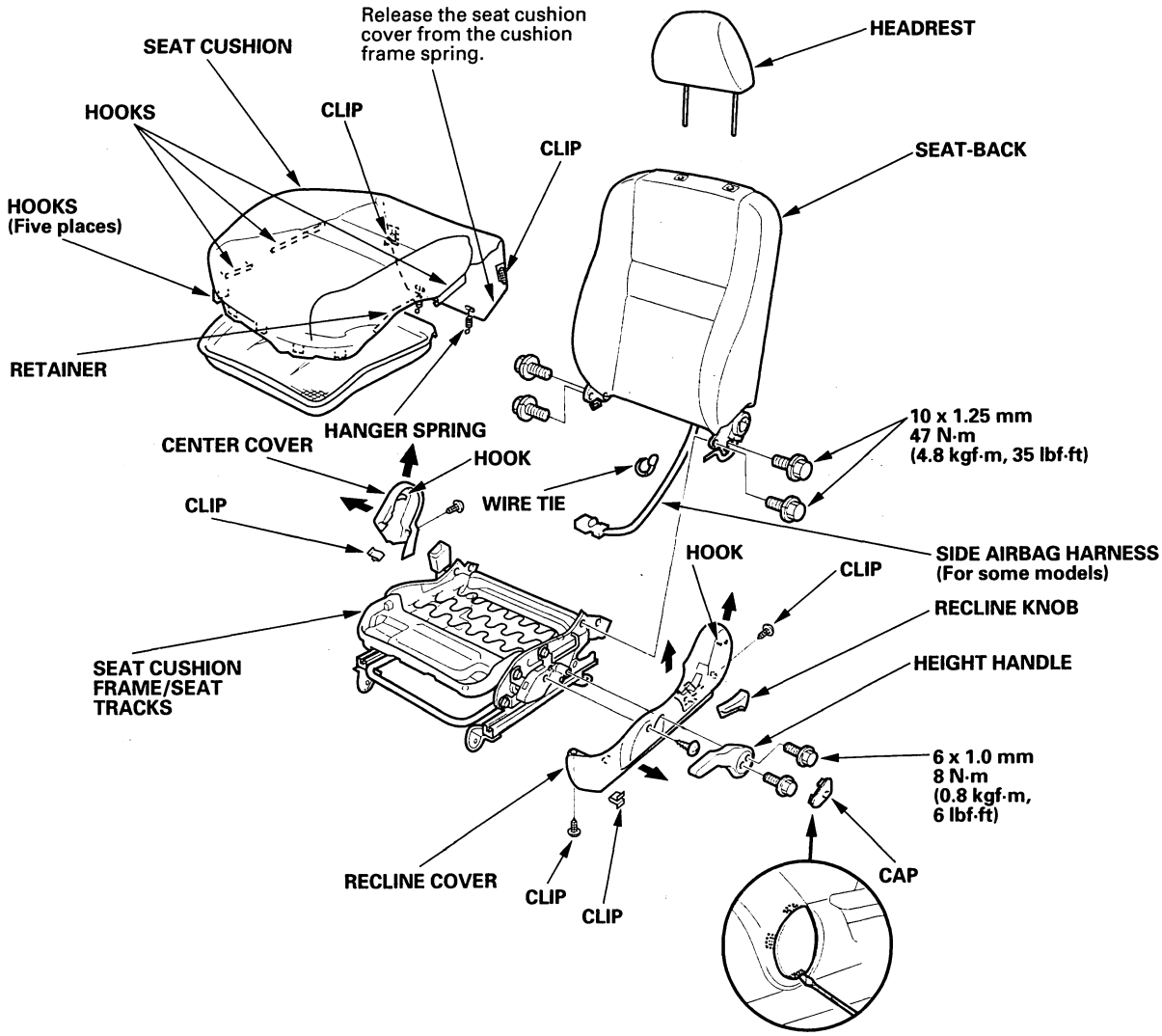

Protected by AR

Front Seat Disassembly/Reassembly - 2-Way Power

Special Tools Required
KTC trim tool set SOJATP2014

- SRS components are located in this area. Review the SRS component locations (see page 23-17) and the precautions and procedures (see page 23-19) before performing repairs or service.
- '04-06 models: The operation of the driver's seat position sensor must be checked after any of these actions (see page 23-37):
  - Driver's seat position sensor replacement
  - Cover plate (front side of driver's seat slide rail) replacement

NOTE:
- Take care not to tear the seams or damage the seat covers.
- Put on gloves to protect your hands.
- Use the appropriate tool from the KTC trim tool set to avoid damage when prying components.
- Apply multipurpose grease to the moving parts of the seat track.
- To prevent wrinkles in the seat cushion cover, stretch the material evenly over the pad.

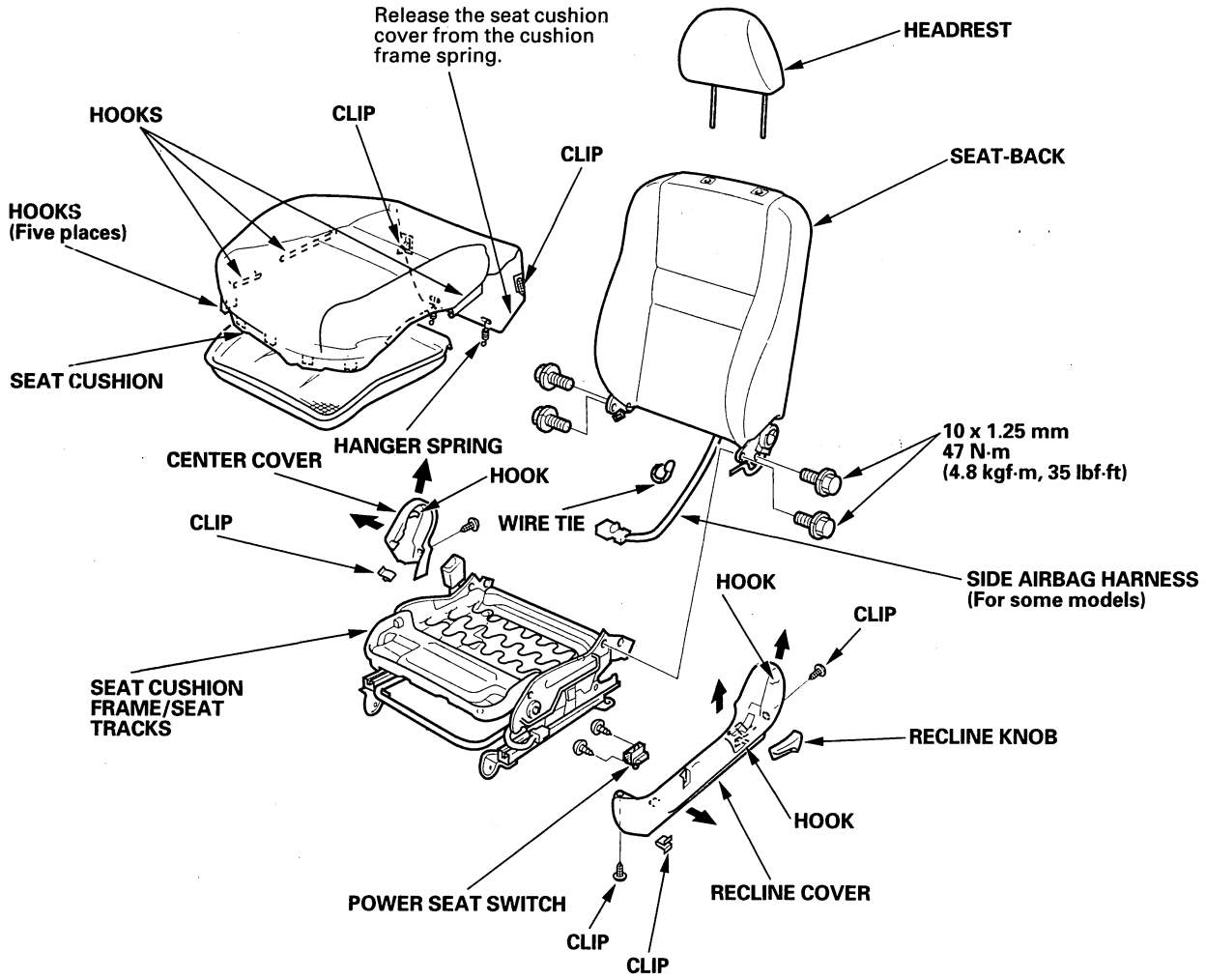

BACK

Protected by AR

Front Seat Disassembly/Reassembly - 8-Way Power

Special Tools Required
KTC trim tool set SOJATP2014

- SRS components are located in this area. Review the SRS component locations (see page 23-17) and the precautions and procedures (see page 23-19) before performing repairs or service.
- '04-06 models: The operation of the driver's seat position sensor must be checked after any of these actions (see page 23-37):
  - Driver's seat position sensor replacement
  - Cover plate (front side of driver's seat slide rail) replacement

NOTE:
- Take care not to tear the seams or damage the seat covers.
- Put on gloves to protect your hands.
- Use the appropriate tool from the KTC trim tool set to avoid damage when prying components.
- Apply multipurpose grease to the moving parts of the seat track.
- To prevent wrinkles in the seat cushion cover, stretch the material evenly over the pad.

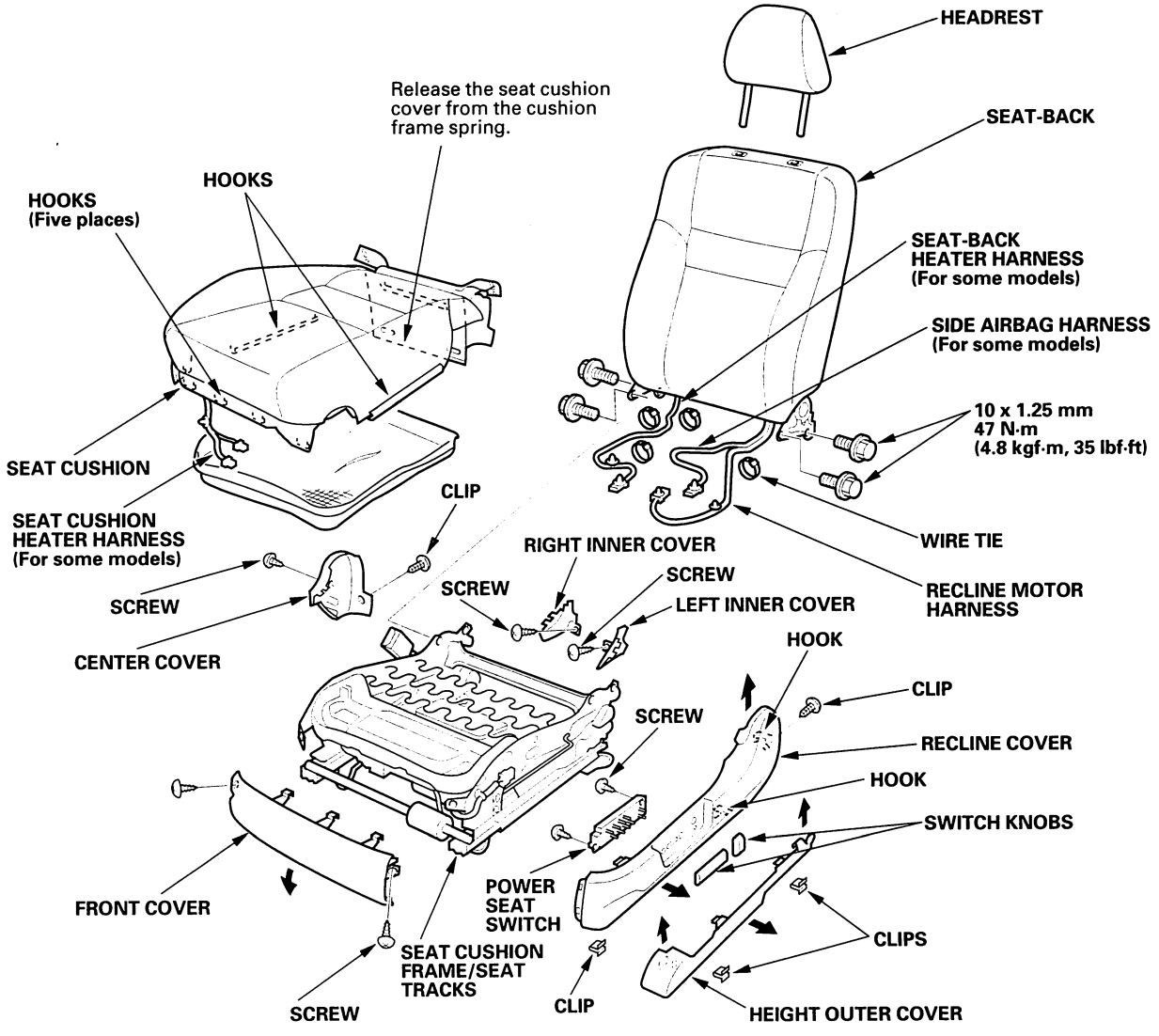

Protected by AR

Front Seat Linkage Disassembly/Reassembly - Manual

'03 Model

NOTE:
- Put on gloves to protect your hands.
- Apply oil to the pivot portions of the slide locks.
- Apply multipurpose grease to the sliding portions of the seat tracks.
- 4-door model is shown; 2-door model is similar.

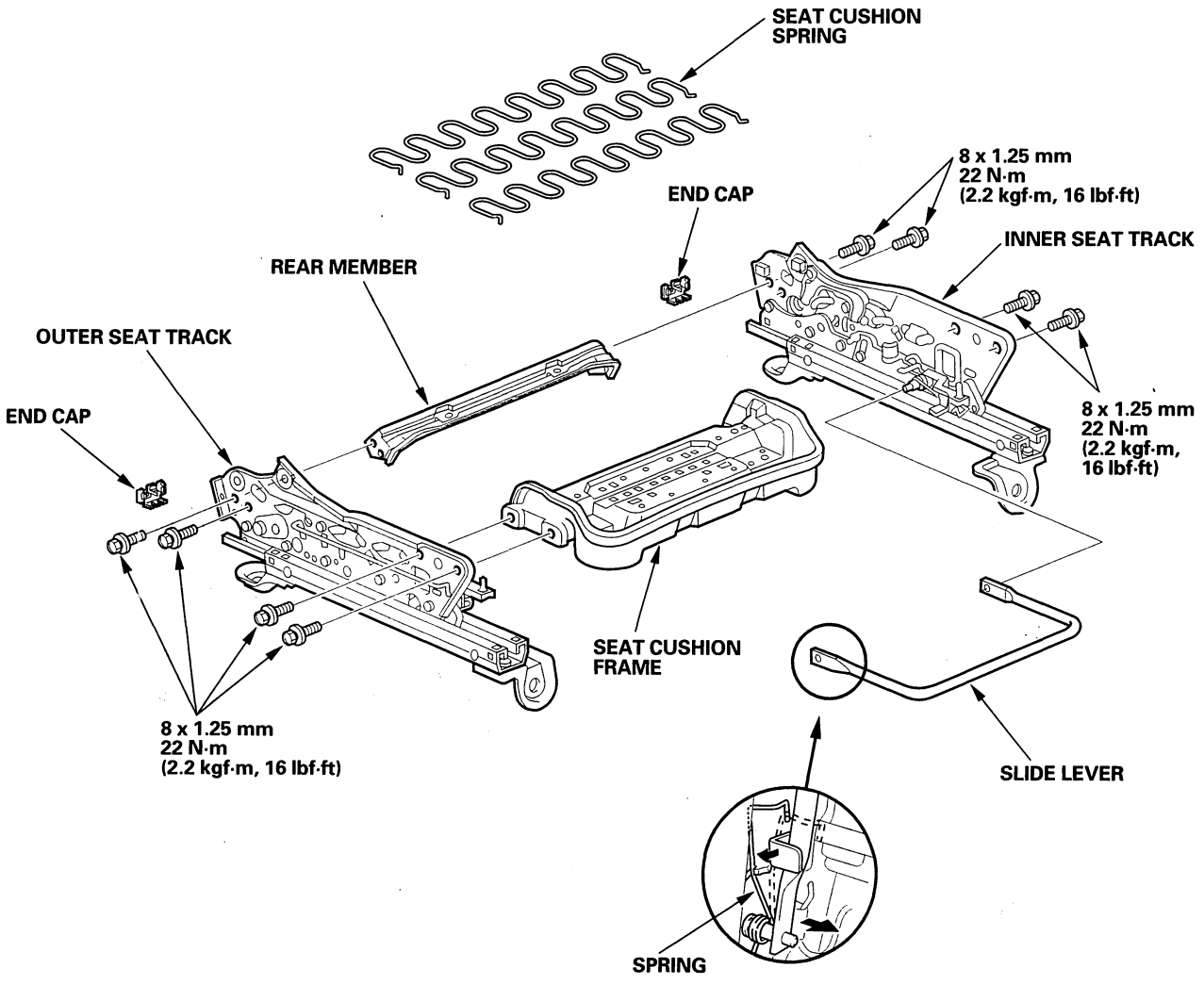

BACK

Protected by AR

'04-06 Models 2-door

- '04-05 models: The front passenger's weight sensor (SWS) unit must be calibrated after any of these actions (see page 23-33):
  - Front passenger's seat replacement (including any seat components)
  - Replacement of the seat weight sensors
  - Replacement of the seat weight sensor unit
- '06 model: The front passenger's weight sensor (SWS) must be calibrated after any of these actions (see page 23-33):
  - Front passenger's seat replacement (including any seat components)
  - Replacement of the seat weight sensors

NOTE:
- Put on gloves to protect your hands.
- Apply oil to the pivot portions of the slide locks.
- Apply multipurpose grease to the sliding portions of the seat tracks.
- When tightening the weight sensor mounting bolts, tighten the bolts in the sequence shown. Improper tightening could cause the front passenger's airbag system to malfunction.
- Make sure the weight sensor unit ('04-05 models) connectors are plugged in properly.
- Make sure the weight sensor wires are routed properly so they are not pinched and do not interfere with other parts.

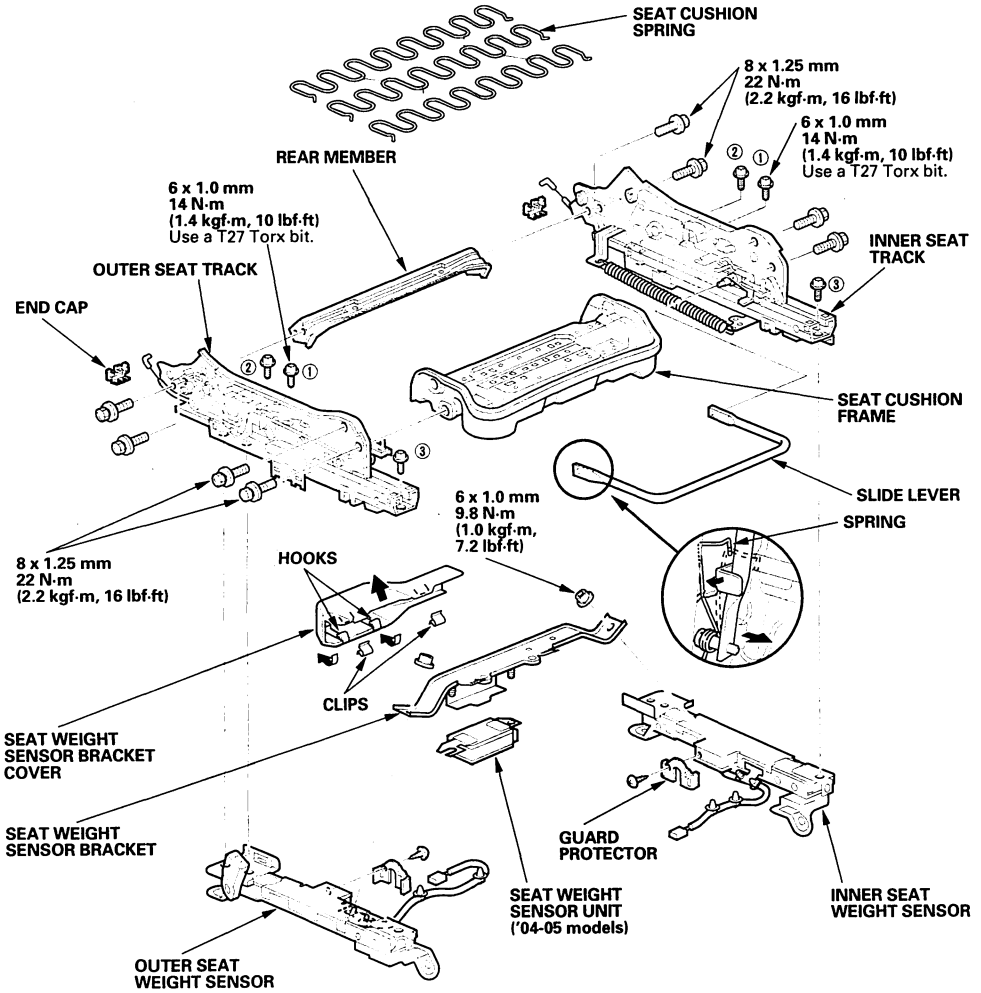

Protected by AR

Front Seat Linkage Disassembly/Reassembly - Manual (cont'd)

'04-06 Models 4-door

- '04-05 models: The front passenger's weight sensor (SWS) unit must be calibrated after any of these actions (see page 23-33):
  - Front passenger's seat replacement (including any seat components)
  - Replacement of the seat weight sensors
  - Replacement of the seat weight sensor unit
- '06 model: The front passenger's weight sensor (SWS) must be calibrated after any of these actions (see page 23-33):
  - Front passenger's seat replacement (including any seat components)
  - Replacement of the seat weight sensors

NOTE:
- Put on gloves to protect your hands.
- Apply oil to the pivot portions of the slide locks.
- Apply multipurpose grease to the sliding portions of the seat tracks.
- When tightening the weight sensor mounting bolts, tighten the bolts in the sequence shown. Improper tightening could cause the front passenger's airbag system to malfunction.
- Make sure the weight sensor unit ('04-05 models) connectors are plugged in properly.
- Make sure the weight sensor wires are routed properly so they are not pinched and do not interfere with other parts.

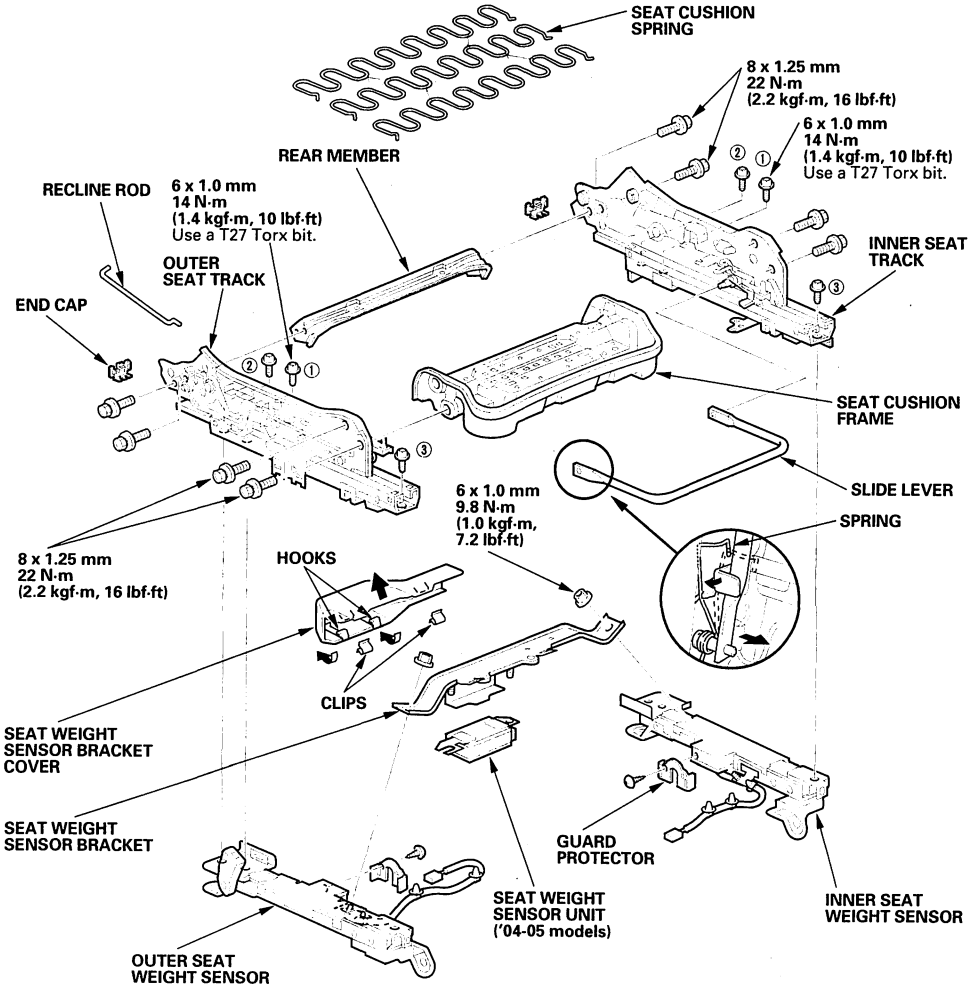

BACK

Protected by AR

Front Seat Linkage Disassembly/Reassembly - Manual Height Adjustable

- '04-06 models: The operation of the driver's seat position sensor must be checked after any of these actions (see page 23-37):
  - Driver's seat position sensor replacement
  - Cover plate (front side of driver's seat slide rail) replacement

NOTE:
- Put on gloves to protect your hands.
- Apply oil to the pivot portions of the slide lock.
- Apply multipurpose grease to the sliding portions and pivot portions of the seat tracks.

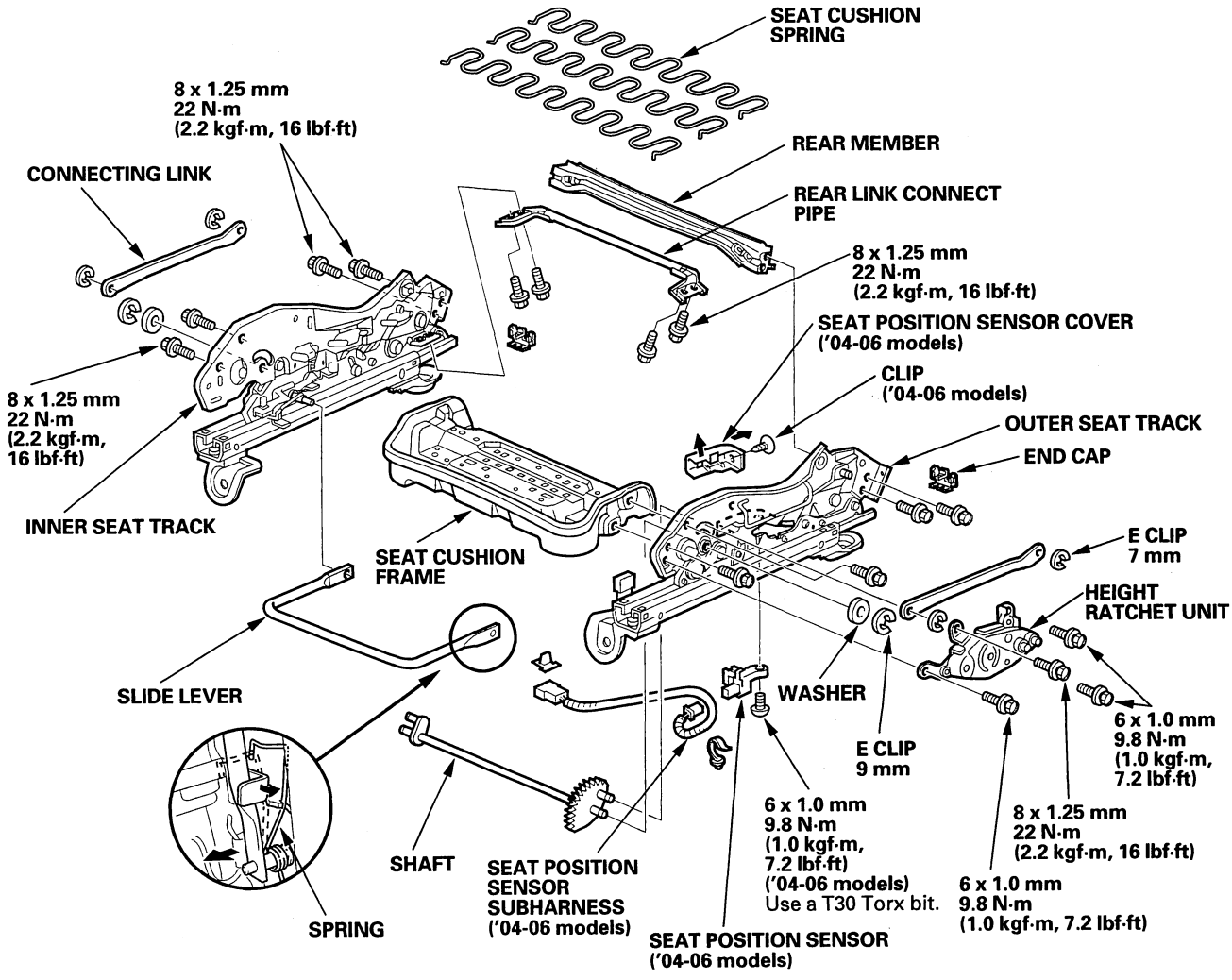

Protected by AR

Front Seat Linkage Disassembly/Reassembly - 2-Way Power

- '04-06 models: The operation of the driver's seat position sensor must be checked after any of these actions (see page 23-37):
  - Driver's seat position sensor replacement
  - Cover plate (front side of driver's seat slide rail) replacement

NOTE:
- Put on gloves to protect your hands.
- Apply oil to the pivot portions of the slide lock.
- Apply multipurpose grease to the sliding portions and pivot portions of the seat tracks.
- Replace the bushing on the up-down motor with a new one.

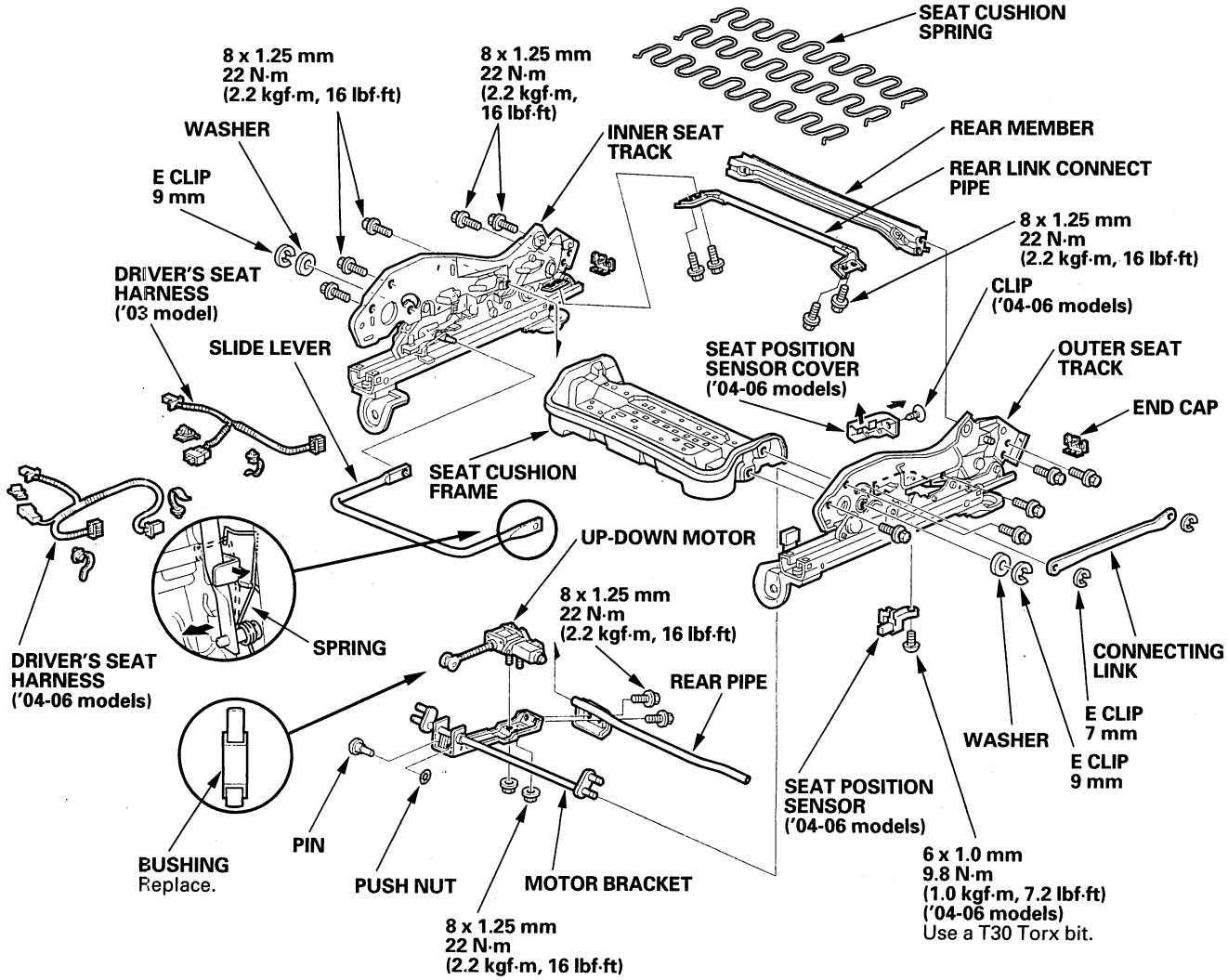

BACK

Protected by AR

Front Seat Linkage Disassembly/Reassembly - 8-Way Power

- '04-06 models: The operation of the driver's seat position sensor must be checked after any of these actions (see page 23-37):
  - Driver's seat position sensor replacement
  - Cover plate (front side of driver's seat slide rail) replacement

NOTE: Apply multipurpose grease to the sliding and pivot portions.

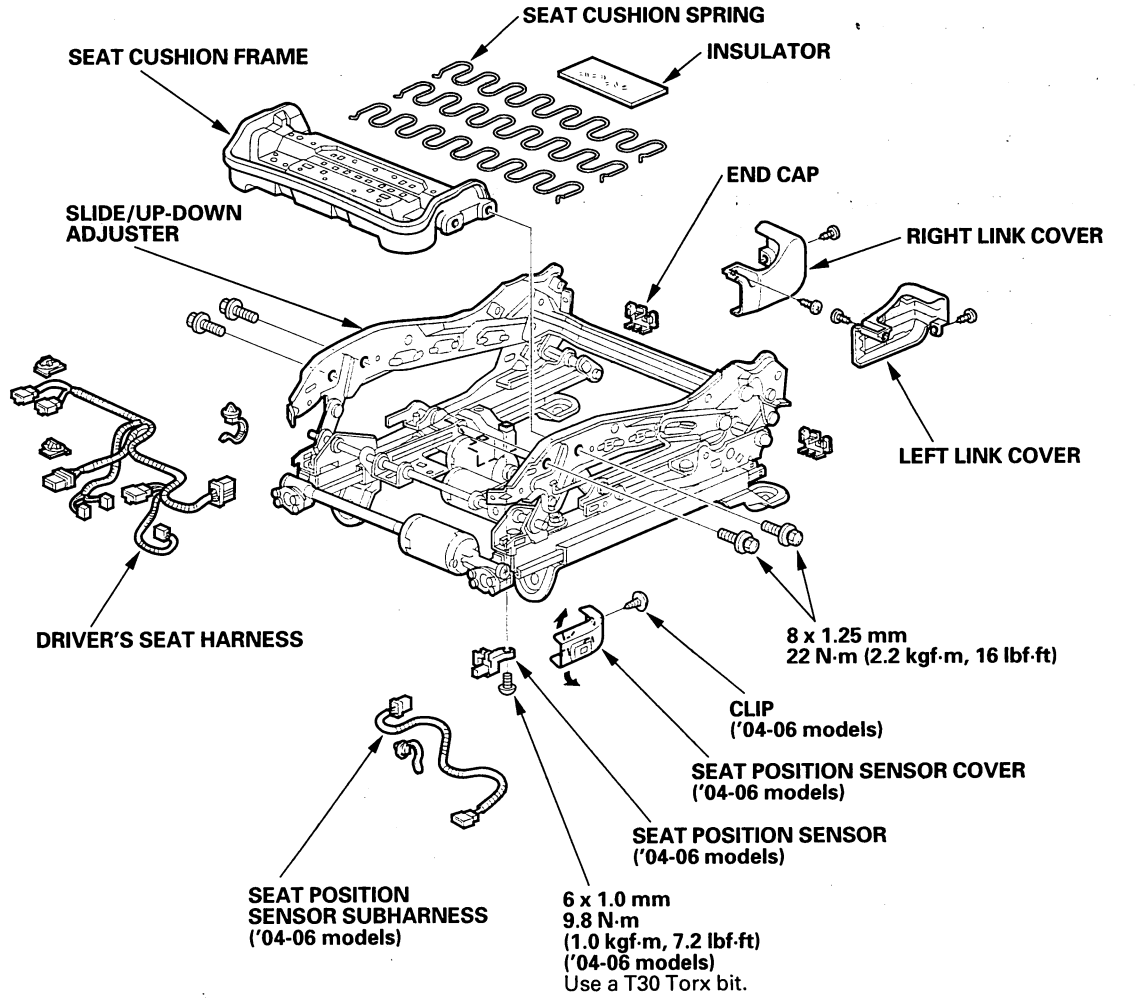

Protected by AR

Front Seat Recline Motor Replacement

8-Way Power Seat

SRS components are located in this area. Review the SRS component locations (see page 23-17) and the precautions and procedures (see page 23-19) before performing repairs or service.

NOTE: Put on gloves to protect your hands.

1. Remove the front seat (see page 20-144).
2. Remove the seat-back cover/pad from the seat-back frame (see page 20-166).
3. Remove the recline motor (A).
   - –1 Release the push nut (B) from the motor side end of the connecting rod (C).
   - –2 Gently tap on the motor side of the connecting rod to remove it from the recline motor and both recline adjusters (D).
   - –3 Remove the rod cover (E).
   - –4 Remove the motor mounting bolt, then remove the recline motor.

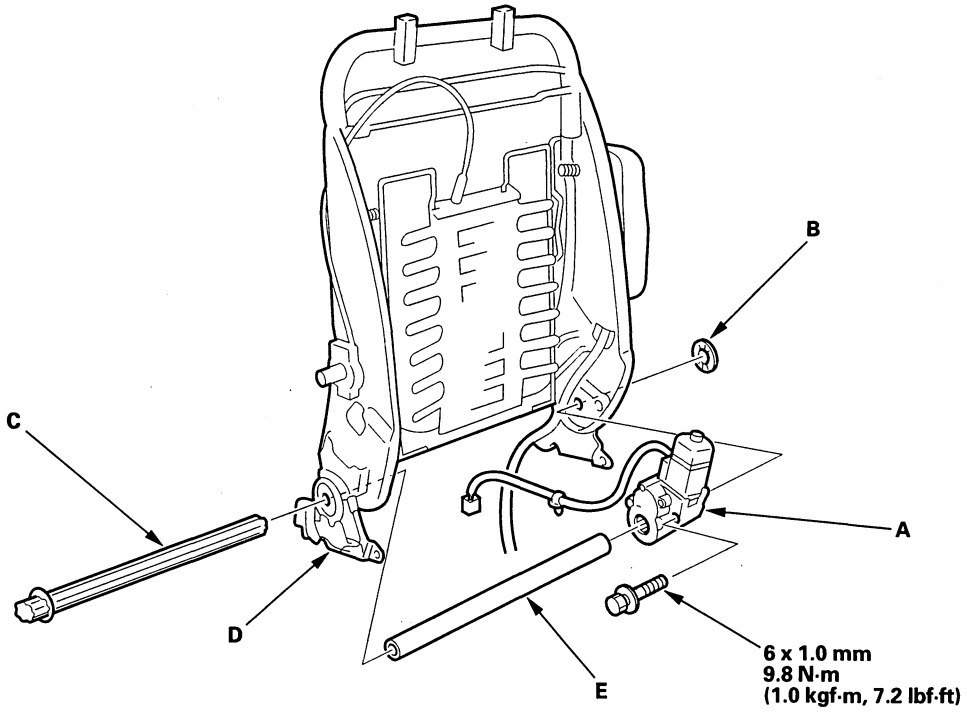

4. Install the motor in the reverse order of removal, and note these items:
   - Replace the push nut with a new one. Make sure the push nut is installed correctly.
   - Apply medium strength liquid thread lock to the motor mounting bolt before reinstallation.

BACK

Protected by AR

Front Seat Lumbar Support Replacement

Special Tools Required
KTC trim tool set SOJATP2014

For Some Models (Driver's seat)

SRS components are located in this area. Review the SRS component locations (see page 23-17) and the precautions and procedures (see page 23-19) before performing repairs or service.

NOTE:
- Use the appropriate tool from the KTC trim tool set to avoid damage when prying components.
- Take care not to bend the cable.
- Take care not to tear the seams or damage the seat covers.
- Put on gloves to protect your hands.

1. Remove these items:
   - Lumbar support knob (see step 6 on page 20-167)
   - Back panel (see step 8 on page 20-168)
2. Release the hook strips on the inside of the seat-back (see step 9 on page 20-168).
3. Remove the screws securing the lumbar support actuator (A).

Fastener Locations

▶ : Screw, 2

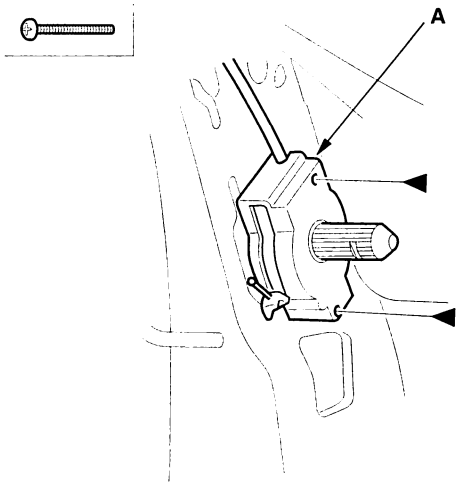

4. Release the hook of the yoke wire (A) from top of the basket (B) to loosen the lumbar support cable (C), then disconnect it.

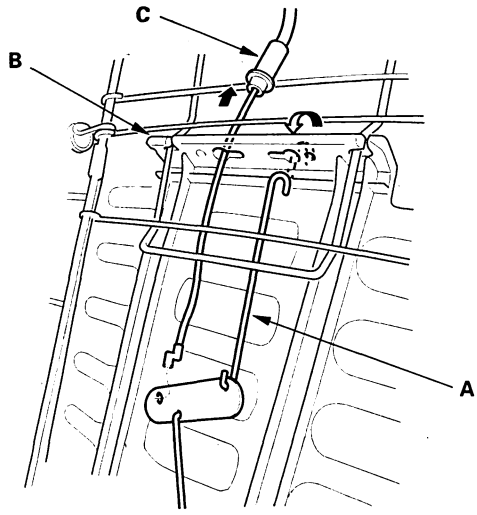

5. Release the wire tie (A), then remove the lumbar support cable (B) and actuator (C) as an assembly.

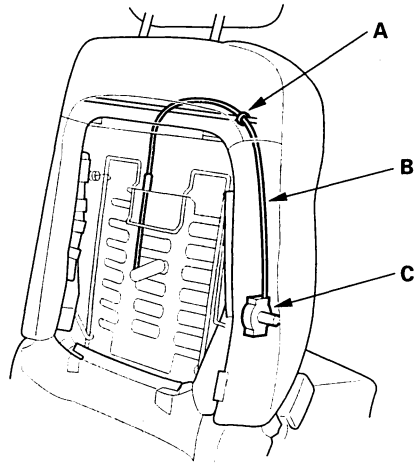

(cont'd)

Protected by AR

Front Seat Lumbar Support Replacement (cont'd)

6. Disconnect the lumbar support cable (A) from the lumbar support actuator (B).

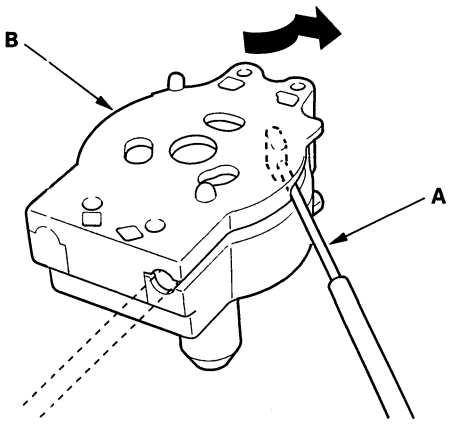

7. Remove the lumbar support (A).

   –1 Release both lower springs (B) from inside the seat-back.
   –2 Release the lumbar support from both upper springs (C).

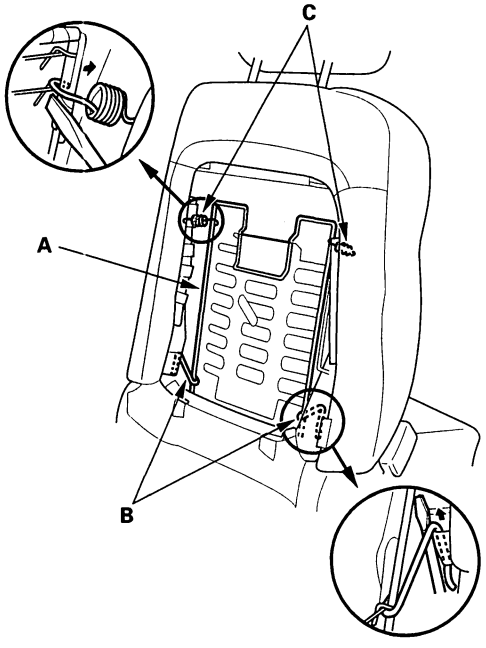

8. Install the lumbar support in the reverse order of removal, and note these items:

   - Make sure the cable is connected securely.
   - To prevent wrinkles when installing a seat-back cover, make sure the material is stretched evenly over the pad before securing the hook strips.
   - Replace the back panel clips with new ones.

BACK

Protected by AR

Rear Seat Access Cable Replacement

2-door Driver's Seat

SRS components are located in this area. Review the SRS component locations (see page 23-17) and the precautions and procedures (see page 23-19) before performing repairs or service.

NOTE:
- Take care not to tear the seams or damage the seat covers.
- Take care not to bend the cable.
- Put on glove protect your hands.

1. Remove the front driver's seat (see page 20-144).
2. Remove the seat-back (see page 20-155).
3. Remove the seat-back cover/pad as an assembly from the seat-back frame (see page 20-166).
4. Detach the cable clip (A), and disconnect the rear seat access cable (B) from the rear seat access lever (C) and both recline adjusters (D). Release the wire ties (E), then remove the cable.

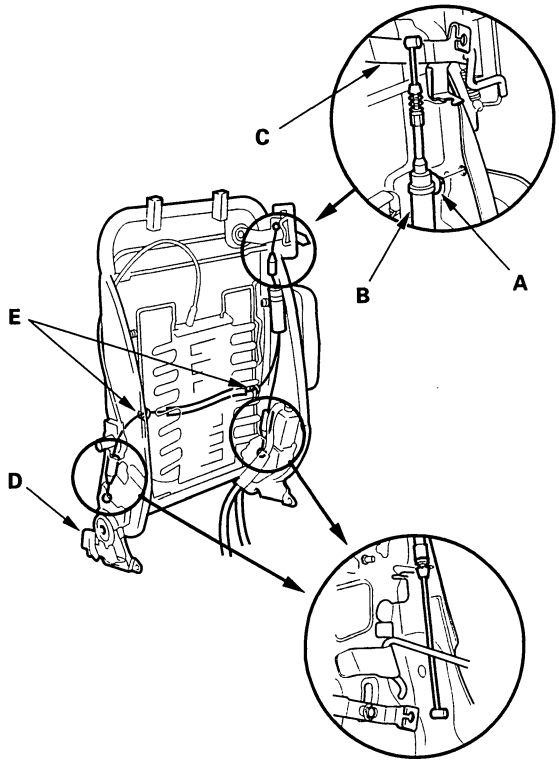

5. Install the cable in the reverse order of removal, and note these items:
   - Replace any wire ties you removed with new ones.
   - To prevent wrinkles when installing a seat-back cover, make sure the material is stretched evenly over the pad before securing the hooks.

Protected by AR

Front Seat Cover Replacement

- SRS components are located in this area. Review the SRS component locations (see page 23-17) and the precautions and procedures (see page 23-19) before performing repairs or service.
- '04-06 models: The operation of the driver's seat position sensor must be checked after any of these actions (see page 23-37):
  - Driver's seat position sensor replacement
  - Cover plate (front side of driver's seat slide rail) replacement
- '04-05 models: The front passenger's weight sensor (SWS) unit must be calibrated after any of the these actions (see page 23-33):
  - Front passenger's seat replacement (including any seat components)
  - Replacement of the seat weight sensors
  - Replacement of the seat weight sensor unit
- '06 model: The front passenger's weight sensor must be calibrated after any for this action (see page 23-33):
  - Replacement of the seat weight sensors

NOTE:
- With side airbag: Seats with a side airbag have a "SIDE AIRBAG" label on the seat-back. Because the component parts (seat-back cover, cushion, etc.) of seats with and without airbags are different, make sure you install only the correct replacement parts.
- With side airbag: Do not repair any tears or frayed spots of the seat-back cover. If necessary, replace the seat-back cover.
- Take care not to tear the seams or damage the seat covers.
- On the passenger's seat with side airbag, do not touch the OPDS sensor in the seat-back pad, and keep it away from oil. Oil can corrode the sensor causing it to fail.
- Put on gloves to protect your hands.

Seat-back Cover

1. Remove the front seat (see page 20-144).
2. Remove the headrest.
3. With recline motor and/or side airbag: From under the seat cushion, disconnect the recline motor connector (A), and if equipped, the seat-back heater connector (B) on the driver's 8-way power seat. Detach the side airbag connector clip (C), the OPDS/ODS unit connector clip (D) on the passenger's seat, and harness clips (E). Release the hook springs (F) (on some driver's seat) and seat cushion cover (G) from the seat cushion frame spring (H), release the hook strips (I) on 2-door passenger's seat, then pull the cover back, and remove the wire ties (J).
   The manual height adjustable seat is similar to the 2-way power seat.

8-way power seat

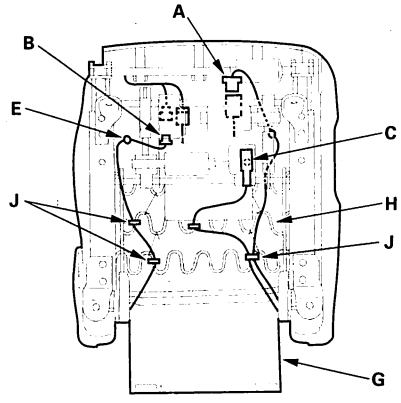

Manual seat

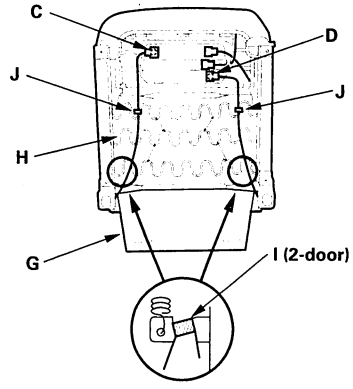

BACK

Protected by AR

Manual height adjustable seat/2-way power seat ('03 model)

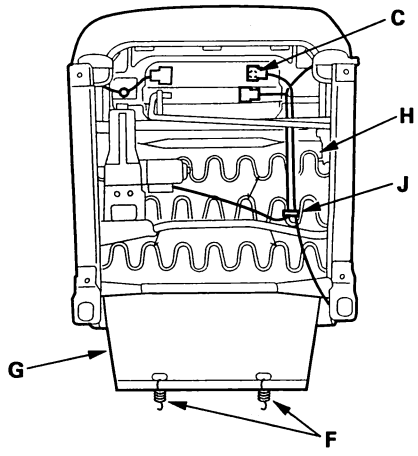

Manual height adjustable seat ('04-06 models) / 2-way power seat ('04-05 models)

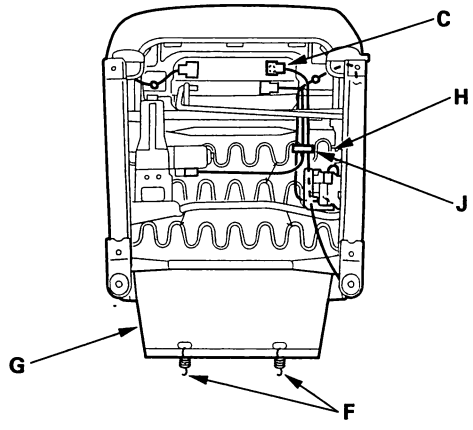

4. Remove these items from the front seat, then remove the seat-back, '03 model 2-door manual seat (see page 20-149), '04-06 models 2-door manual seat (see page 20-150), '03 model 4-door manual seat (see page 20-151), '04-06 models 4-door manual seat (see page 20-152), manual height adjustable seat (see page 20-153), 2-way power seat (see page 20-154), 8-way power seat (see page 20-155):

   - Recline cover
   - Center cover

5. Remove the screws (A, B), then remove the rear seat access knob (C), and rear seat access trim (D).

Fastener Locations

A▶: Screw, 1 B▶: Screw, 1

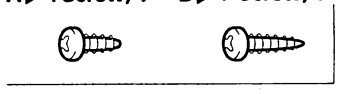

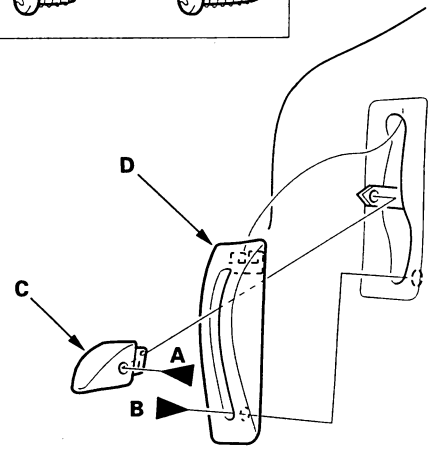

6. If equipped with a lumbar support, remove the clip (A), then remove the lumbar support handle (B).

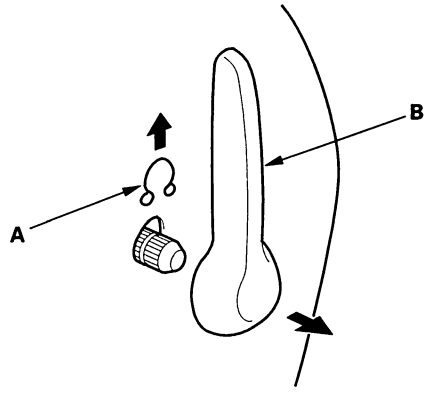

(cont'd)

Protected by AR

Front Seat Cover Replacement (cont'd)

7. Without side airbag: Release the hook (A), and unzip the seat-back cover (B).

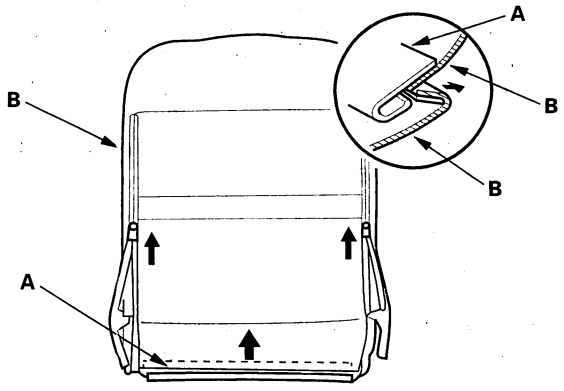

8. With side airbag: Detach the clips and hooks (A) by pulling the bottom of the back panel (B) back, then pull the panel downward to release the hooks (C) from the seat back frame, and remove the panel.

Fastener Locations

▷ : **Clip, 2**

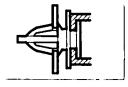

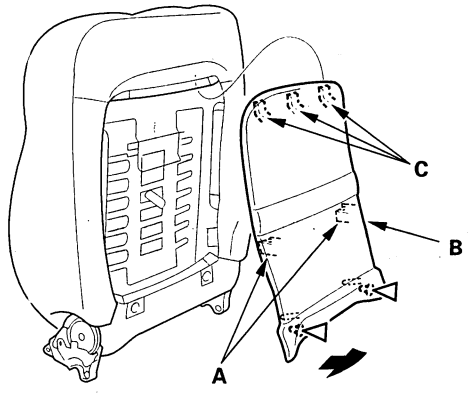

9. Release the hook strips (A), then loosen the seat-back cover (B).

Without side airbag

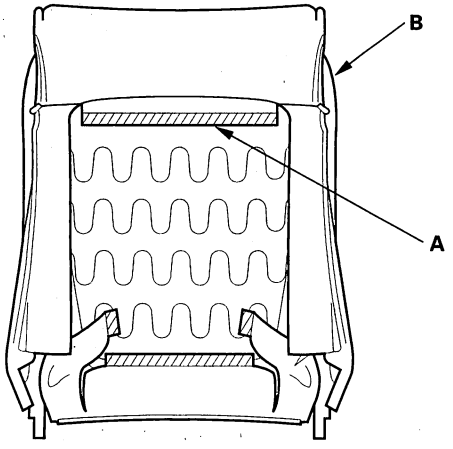

With side airbag

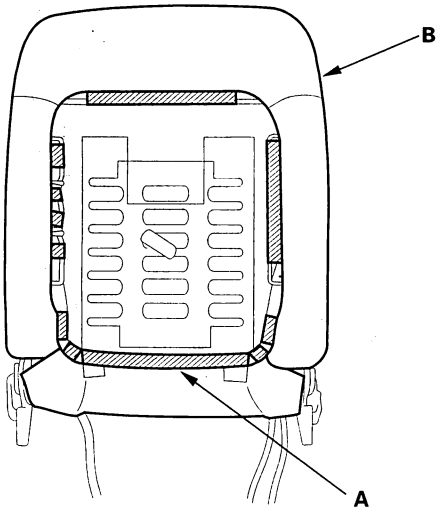

BACK

Protected by AR

10. With recline motor and/or side airbag: Pull the recline motor harness (A), seat-back heater harness (B) (some driver's seat), side airbag harness (C) and the OPDS/ODS harness (D) (passenger's seat) out through the holes (E) in the seat-back cover.

Driver's seat-back

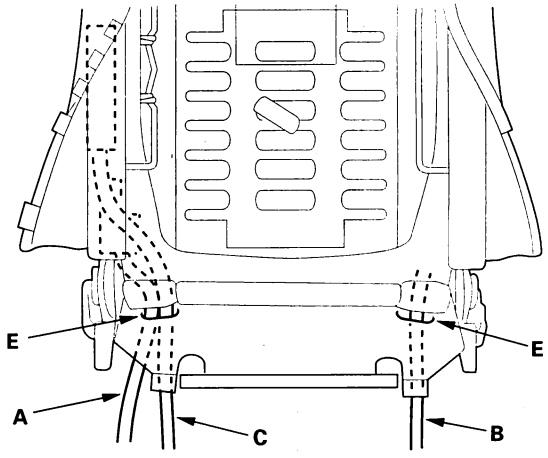

Passenger's seat-back

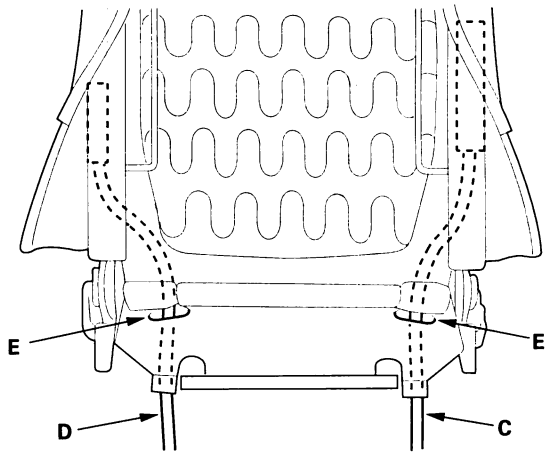

11. With side airbag: Release the front hook (A) and rear hook (B) of the reinforcing cloth (C) from seat-back frame (D).

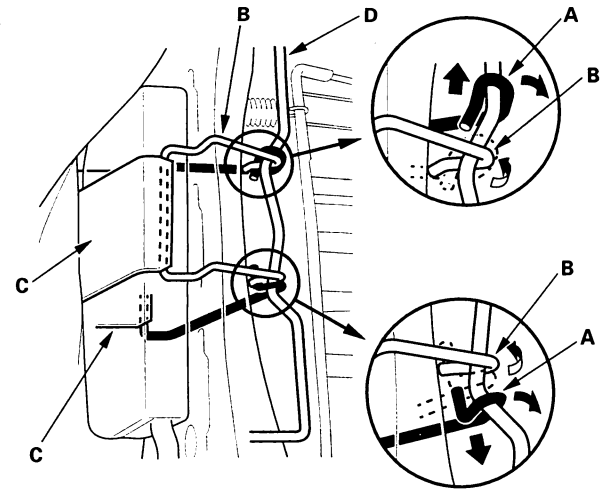

12. Pull out the headrest guides (A) while pinching the tabs on the ends of the guides, and remove them.

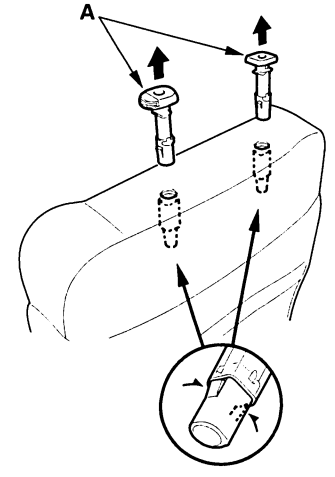

(cont'd)

Protected by AR

Front Seat Cover Replacement (cont'd)

13. From the back of the seat-back, pass both lower retainers (A) through the slots in the seat-back pad, and on passenger's seat with side airbag release all of the clips (B).

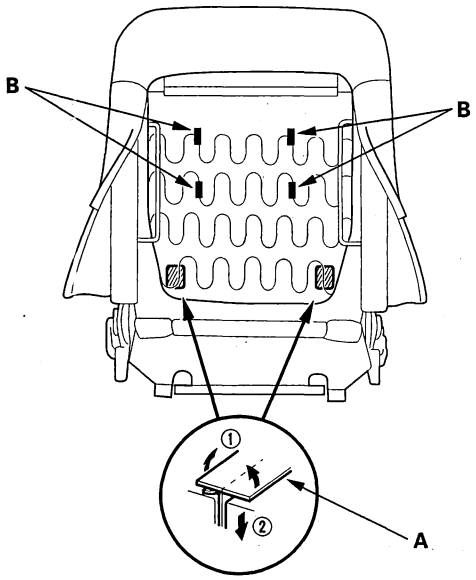

14. Pull back the edge of the seat-back cover all the way around, and release the clips (A), then remove the seat-back cover.

Driver's and passenger's without side airbag

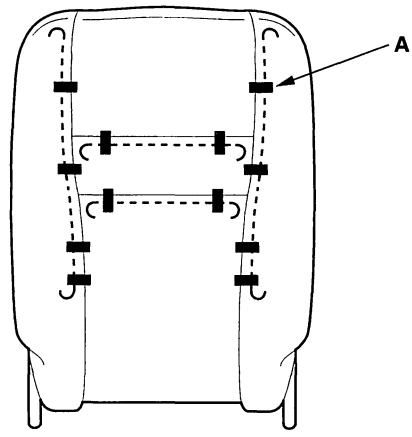

Passenger's with side airbag

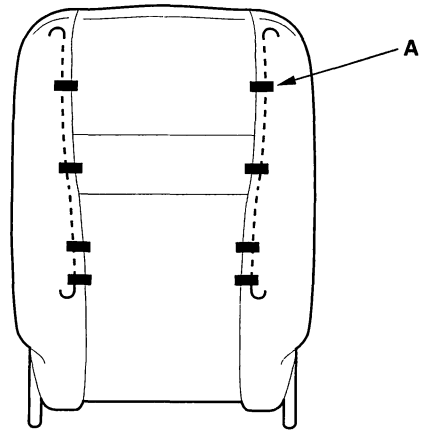

BACK

Protected by AR

15. Install the cover in the reverse order of removal, and note these items:

    - Reinitialize the OPDS/ODS control unit (see page 23-32).
    - To prevent wrinkles when installing a seat-back cover, make sure the material is stretched evenly over the pad before securing the clips, hooks, and hook strips.
    - Replace any clips you removed with new ones (A). Install them with commercially available upholstery ring pliers (B).
    - Reinstall the front hook (C) and rear hook (D) of the reinforcing cloth (E) securely.
    - Use only original Honda replacement seat-back covers.
    - If equipped, make sure the recline motor harness, side airbag harness, and OPDS/ODS harness (passenger's seat) are routed properly.

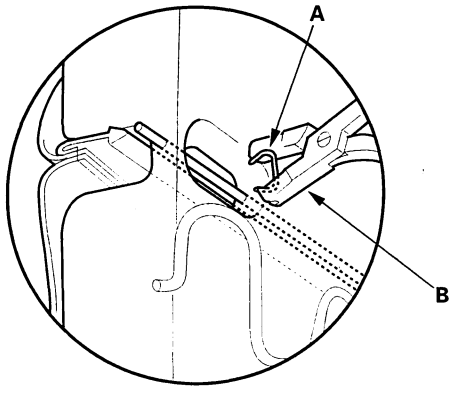

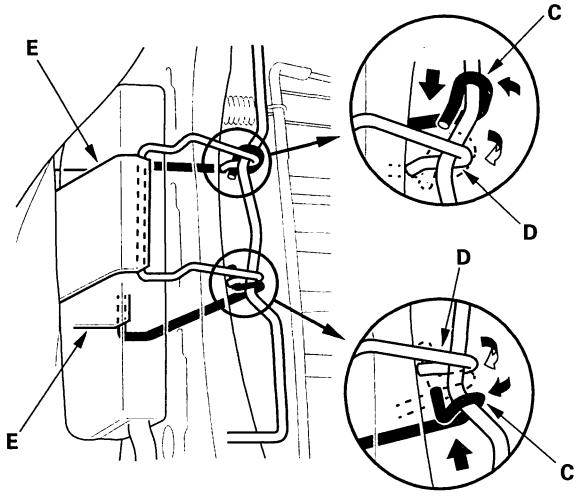

Seat Cushion Cover

1. Remove the front seat (see page 20-144).

2. With recline motor and/or side airbag: From under the seat cushion, detach the recline motor connector clip, the side airbag connector clip, and on the passenger's seat, the OPDS/ODS unit connector clip. Release the hook springs (on some driver's seats) and the seat cushion cover from the seat cushion frame spring, then pull the cover back, and remove the wire ties.

3. Remove these items from the front seat, then remove the seat-back, '03 model 2-door manual seat (see page 20-149), '04-06 models 2-door manual seat (see page 20-150), '03 model 4-door manual seat (see page 20-151), '04-06 models 4-door manual seat (see page 20-152), manual height adjustable seat (see page 20-153), 2-way power seat (see page 20-154), 8-way power seat (see page 20-155):

    - Recline cover
    - Center cover

4. Release the hook strips (A) and retainers (B) (manual height adjustable seat) from both sides the seat cushion.

    NOTE : Manual height adjustable seat is shown; other seats are similar, except for the height ratchet unit portion.

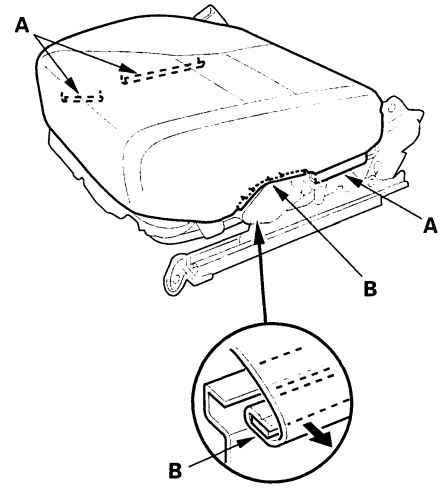

(cont'd)

Protected by AR

Front Seat Cover Replacement (cont'd)

5. Pull back the seat cushion cover (A), and release the hooks (B) from under the seat cushion. On manual height adjustable/2-way power seat, detach the clips from the seat cushion frame (C).

Fastener Locations

▷ : **Clip, 2**



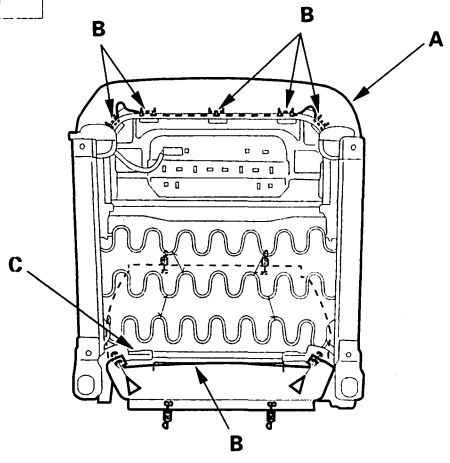

6. Remove the cushion cover/pad from the seat cushion frame.

7. Release the clips (A) from under the seat cushion (B).

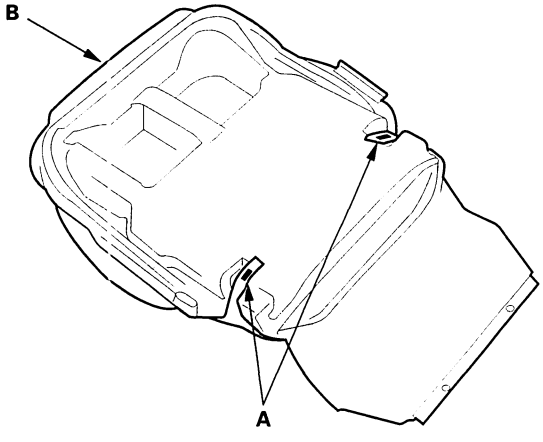

8. Pull back the edge of the seat cushion cover all the way around, and release the clips (A), then remove the seat cushion cover.

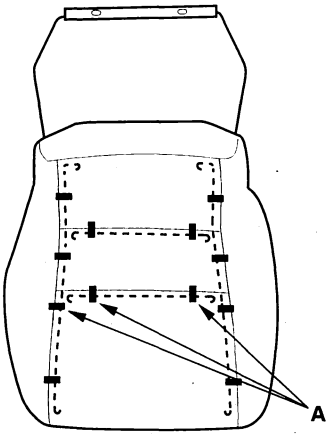

9. Install the cover in the reverse order of removal, and note these items:

- To prevent wrinkles when installing a seat cushion cover, make sure the material is stretched evenly over the pad before securing the clips and hook strips.
- Replace any clips you removed with new ones (A). Install them with commercially available upholstery ring pliers (B).

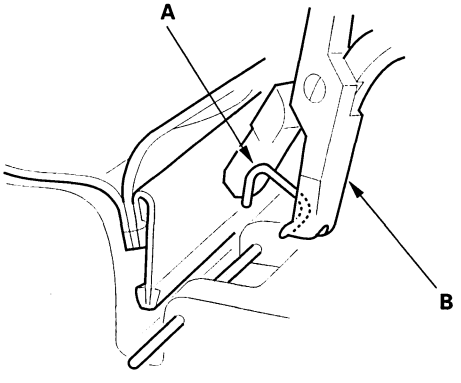

BACK

Protected by AR

Rear Seat Removal/Installation

2-door

NOTE: Take care not to scratch the body or tear the seat covers.

1. Remove the rear seat as shown.

2. Install the seat in the reverse order of removal, and note these items:

   - Before attaching the rear seat-back and cushion, make sure there are no twists or kinks in the seat belts.
   - When installing the seat cushion, slip the seat belt buckles through the slits in the seat cushion.
   - Make sure the seat-back locks securely.

Fastener Locations

A ▶ : Bolt, 2 B ▶ : Bolt, 1 C ▶ : Bolt, 1 D ▶ : Bolt, 2 E ▷ : Clip, 2

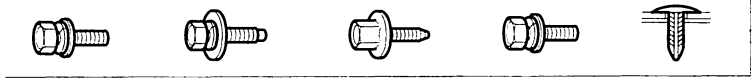

F ▷ : Hook, 2

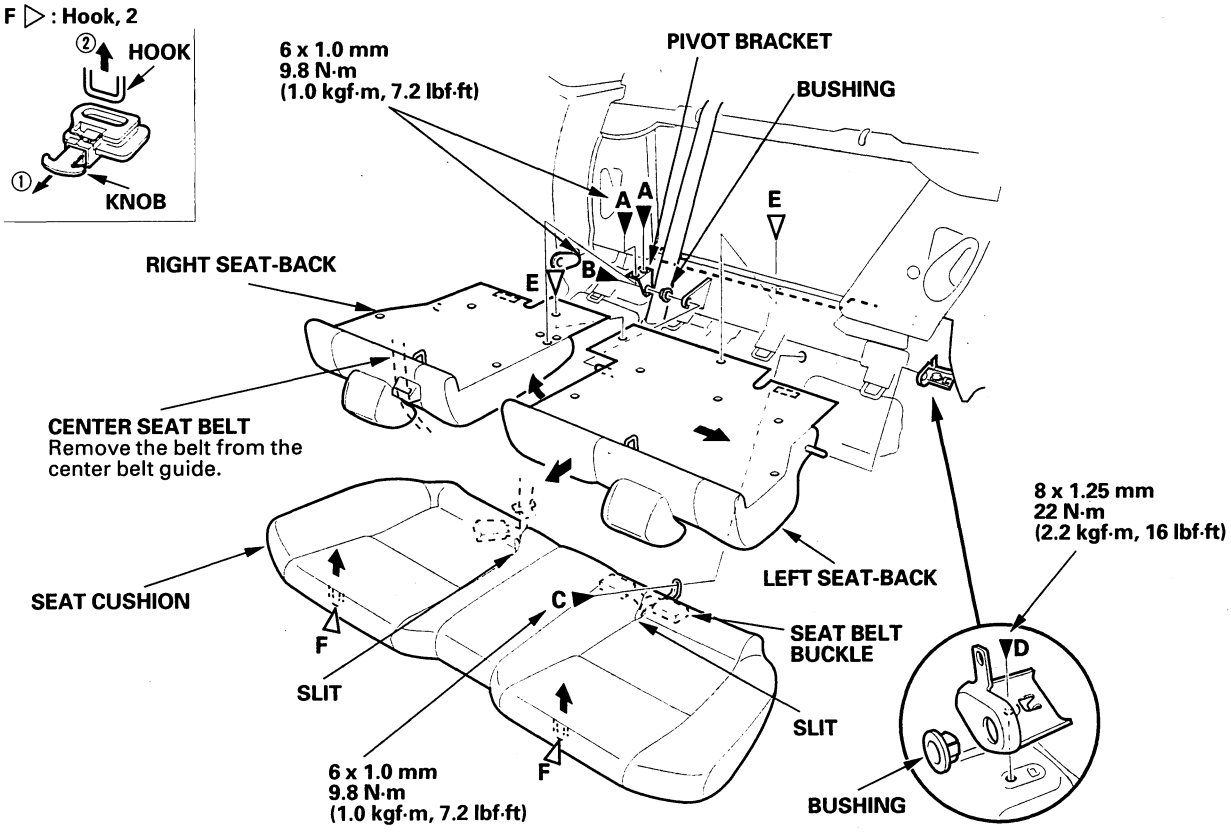

Protected by AR

Rear Seat Removal/Installation (cont'd)

4-door

NOTE: Take care not to scratch the body or tear the seat covers.

1. To remove the seat side bolster, remove the rear door sill trim (see page 20-93).
2. Remove the rear seat as shown.
3. Install the seat in the reverse order of removal, and note these items:
   - Before attaching the rear seat-back and cushion, make sure there are no twists or kinks in the seat belts.
   - When installing the seat cushion, slip the seat belt buckles through the slits in the seat cushion.
   - Make sure the seat-back locks securely.

Fastener Locations

A ▶ : Bolt, 2 B ▶ : Bolt, 2 C ▶ : Bolt, 1 D ▷ : Clip, 3

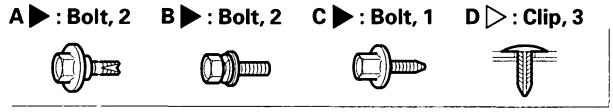

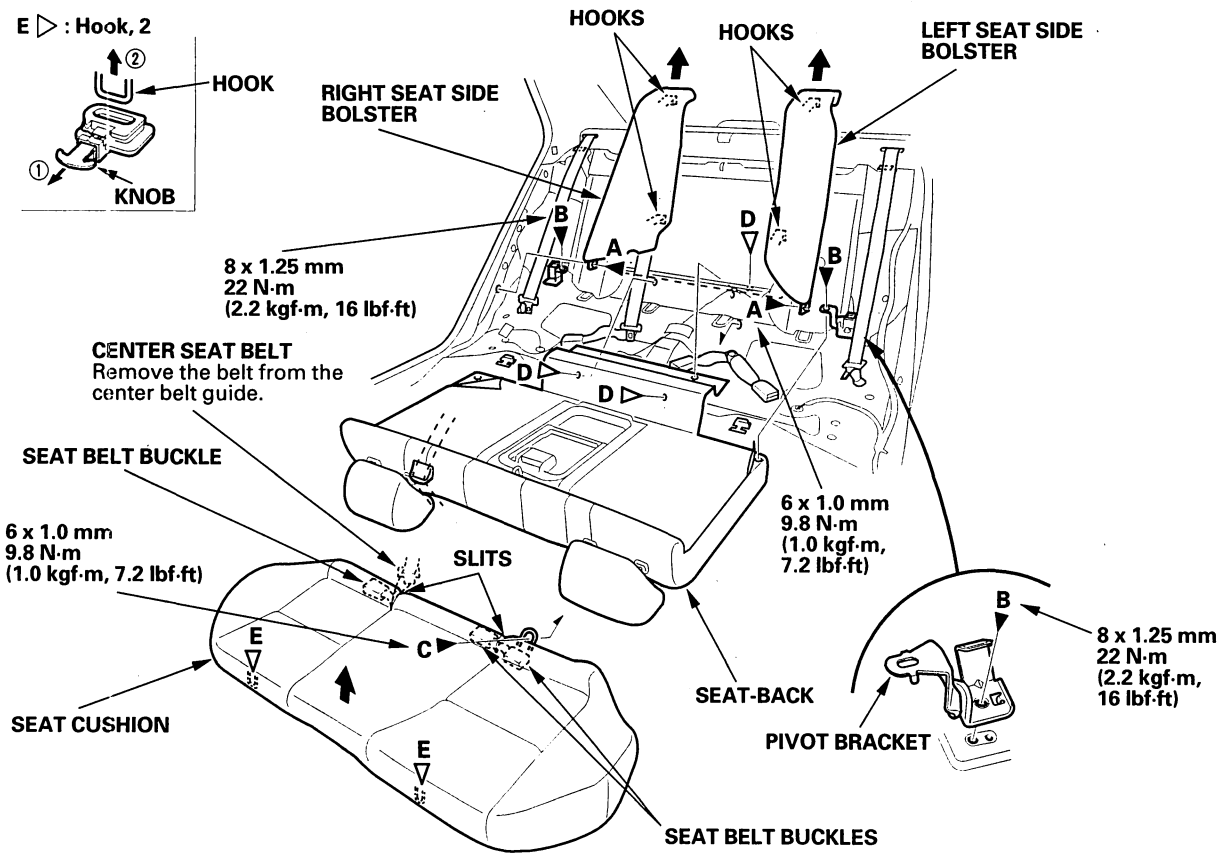

BACK

Protected by AR

Rear Seat-back Latch Replacement

Special Tools Required
KTC trim tool set SOJATP2014

2-door

NOTE:
- Use the appropriate tool from the KTC trim tool set to avoid damage when prying components.
- Take care not to bend or scratch the interior trim.

1. Remove the rear bulkhead cover (see page 20-108).
2. Disconnect the cylinder rod (A), remove the bolts, then remove the seat-back latch (B).

Fastener Locations

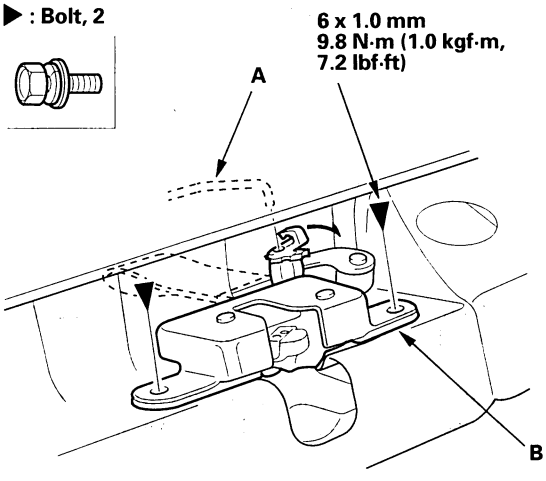

3. Install the latch in the reverse order of removal, and note these items:
   - Make sure the cylinder rod is connected securely.
   - Make sure the seat-back locks securely and unlocks properly.

Special Tools Required
KTC trim tool set SOJATP2014

4-door

NOTE:
- Use the appropriate tool from the KTC trim tool set to avoid damage when prying components.
- Take care not to bend or scratch the interior trim.

1. Remove these items:
   - Rear door sill trim, both sides (see page 20-93)
   - Seat side bolster, both sides (see page 20-174)
   - Rear bulkhead cover (see page 20-110)
2. Disconnect the cylinder rod (A).

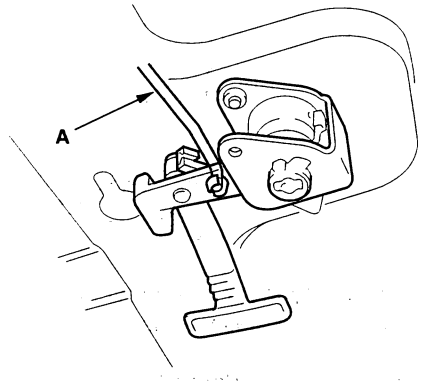

3. Remove the bolts, then remove the seat-back latch.

Fastener Locations

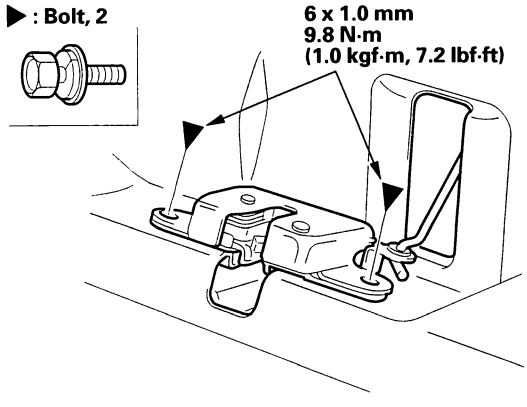

4. Install the latch in the reverse order of removal, and note these items:
   - Make sure the cylinder rod is connected securely.
   - Make sure the seat-back locks securely and unlocks properly.

Protected by AR

Rear Seat-back Lock Cylinder Replacement

2-door

NOTE: Take care not to scratch the interior trim.

1. Remove the rear shelf (see page 20-108).
2. Disconnect the cylinder rods from both seat-back latches (see page 20-175).
3. Remove the self-tapping ET screws, then remove the seat-back lock cylinder (A) and cylinder rods (B).

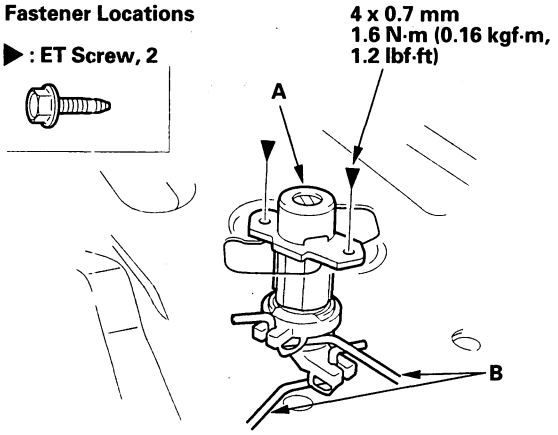

4. Install the lock cylinder in the reverse order of removal, and note these items:
   - Make sure the cylinder rod is connected securely.
   - Make sure the seat-back unlocks properly.

4-door

NOTE: Take care not to bend or scratch the interior trim.

1. Remove the rear shelf (see page 20-110).
2. Disconnect the cylinder rod (see page 20-175).
3. Remove the bolts, then remove the seat-back lock cylinder.

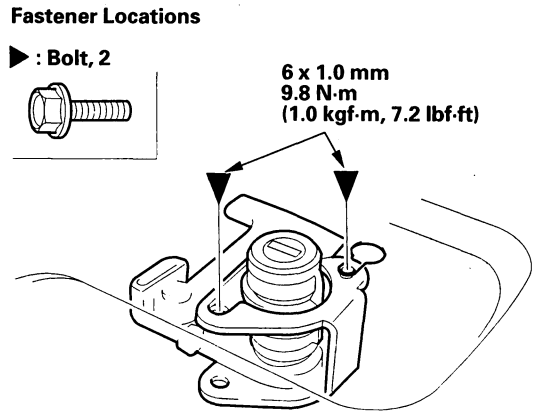

4. Install the lock cylinder in the reverse order of removal, and note these items:
   - Make sure the cylinder rod is connected securely.
   - Make sure the seat-back unlocks properly.

BACK

Protected by AR

Rear Seat Armrest/Trunk Pass-through Cover Replacement

4-door

NOTE: Take care not to tear the seams or damage the seat covers.

1. Remove the clip (A) from the left portion of the armrest pivot.

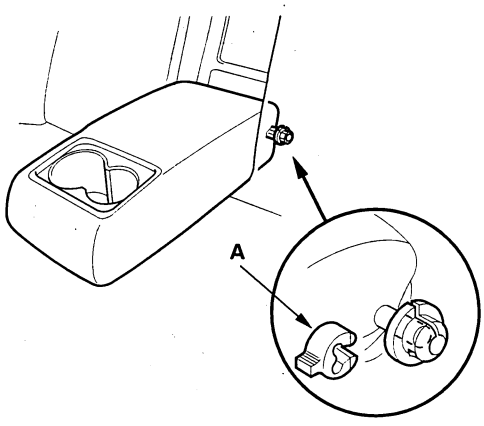

2. Remove the armrest.
   - –1 Slide the armrest (A) toward the driver's side of the vehicle.
   - –2 Remove the pivot shaft (B) from the collar (C) on the passenger's side of the vehicle by pulling up on the armrest, and remove the pivot shaft from the collar (D) by pulling up on the armrest.

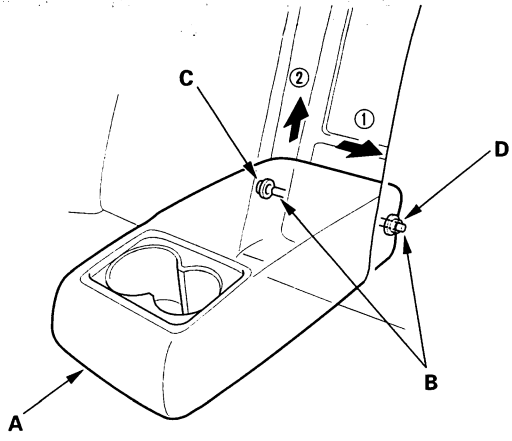

3. Remove the beverage holder.

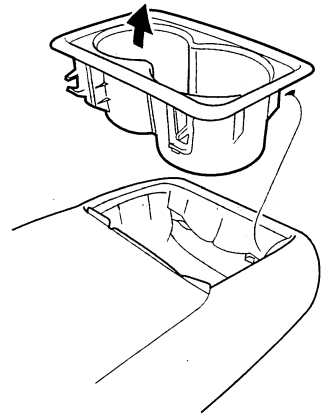

4. Fold the seat-back forward.

5. Remove the screws, and detach the hooks (A), then remove the trunk pass-through cover (B).

Fastener Locations

▶ : Screw, 2

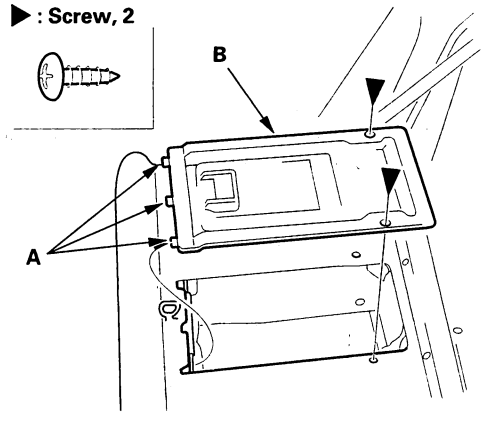

6. Install the armrest and trunk pass-through cover in the reverse order of removal.

Protected by AR

Trunk Pass-through Cover Key Cylinder Replacement

4-door

NOTE:
- When prying with a flat-tip screwdriver, wrap it with protective tape to prevent damage.
- Take care not to scratch the cover.

1. Using a flat-tip screwdriver, pry the rear seat handle (A) up at both hook portions (B) on the forward side of the trunk pass through cover (C). Then slide the handle half-way up.

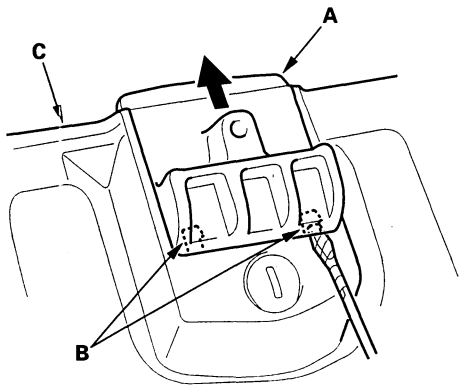

2. From the trunk compartment side of the cover, insert a small screwdriver through the access hole (A) and press down on the hook (B).

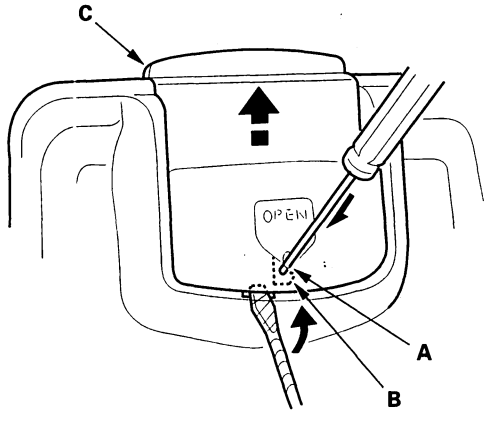

3. While pressing the hook, pry the trunk-side handle (C) up with a flat-tip screwdriver.

4. Remove the trunk-side handle (A) and rear seat handle (B) together.

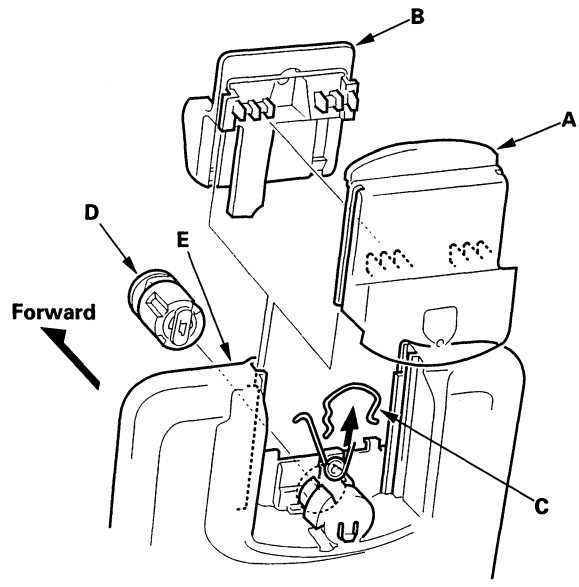

5. Remove the retainer clip (C), then remove the trunk pass-through cover key cylinder (D) from the cover (E).

6. Install the key cylinder in the reverse order of removal, and note these items:

   - Put the two handles together before installing them on the trunk pass-through cover.
   - Make sure the trunk pass-through cover opens properly and locks securely.

BACK

Protected by AR

Rear Seat-back Cover Replacement

NOTE:
- Take care not to tear the seams or damage the seat covers.
- Put on gloves to protect your hands.

1. Remove the seat-back, 2-door (see page 20-173), 4-door (see page 20-174).

2. Remove these items:
   - Armrest and trunk pass-through cover, 4-door (see page 20-177)
   - Headrest

3. Remove the screws, then remove the center belt guide.

Fastener Locations

▶ : Screw, 2

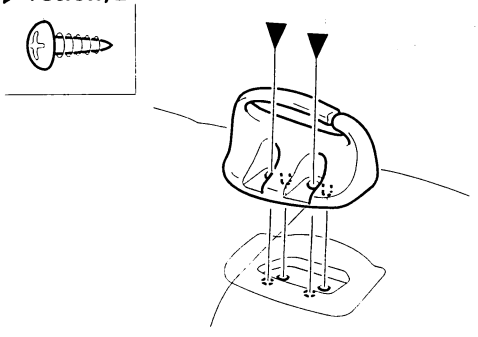

4. Remove the clips and release the fasteners (A) (4-door), then pull back the seat-back mat (B).

2-door left seat-back

Fastener Locations

▷ : Clip, 5

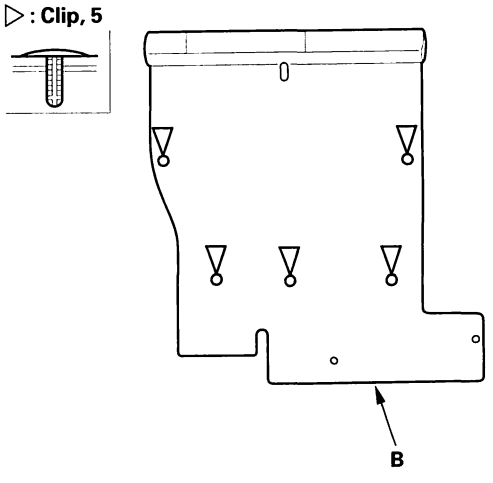

2-door right seat-back

Fastener Locations

▷ : Clip, 4

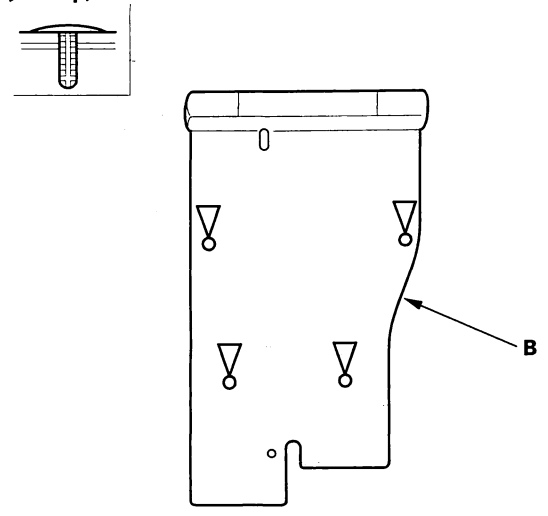

4-door

Fastener Locations

▷ : Clip
With armrest, 6
Without armrest, 8

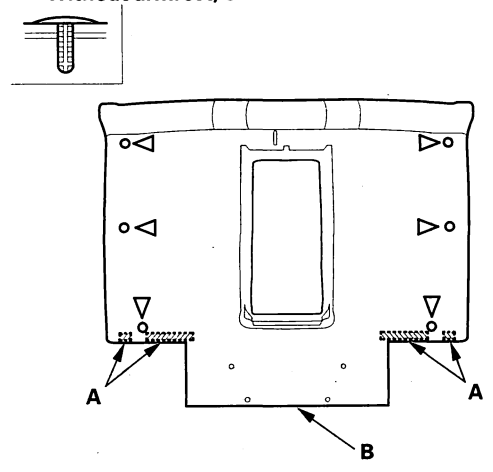

(cont'd)

Protected by AR

Rear Seat-back Cover Replacement (cont'd)

5. Release all the clips (A), and hook strips (B), and fold back the seat-back cover (C).

2-door left seat-back

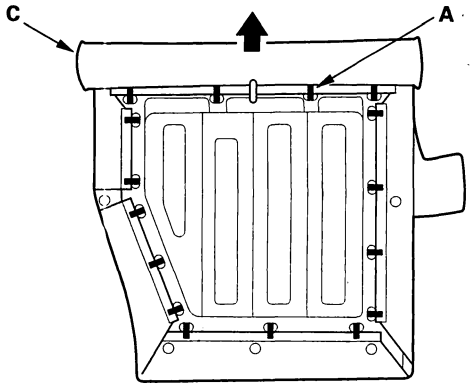

2-door right seat-back

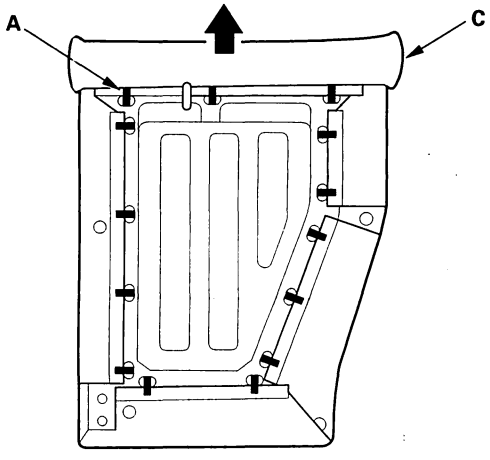

4-door

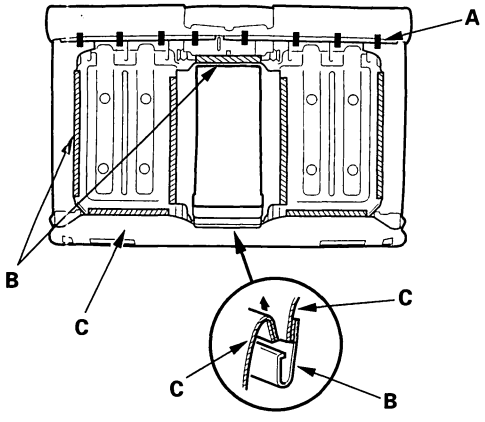

6. Pull out the seat-back pad (A) from the frame (B), then pull out the headrest guides (C) while pinching the end of the guides, and remove them.

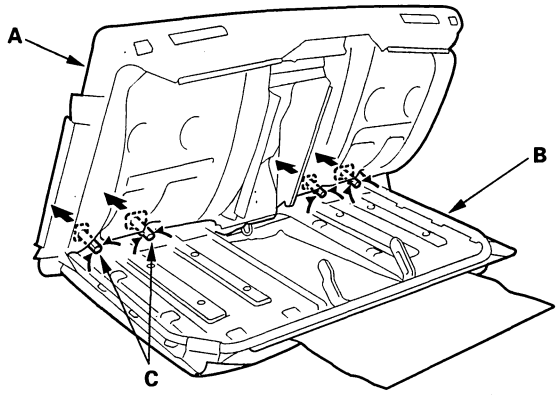

7. Remove the seat-back cover and pad from the seat-back frame.

BACK

Protected by AR

8. Pull back the edge of the seat-back cover (A) all the way around, and release the hooks (B) of the horizontal wires (C) from the vertical wires (D) on the pad (4-door), and remove the clips (E), then remove the seat-back cover.

2-door left seat-back

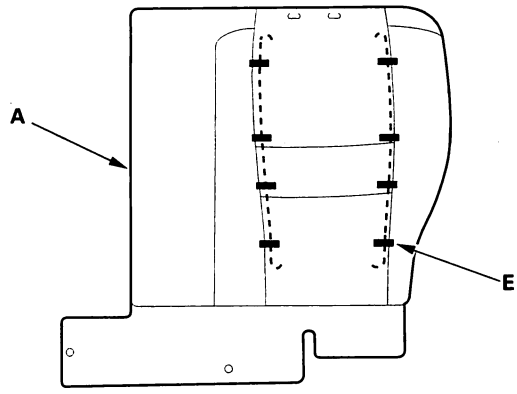

2-door right seat-back

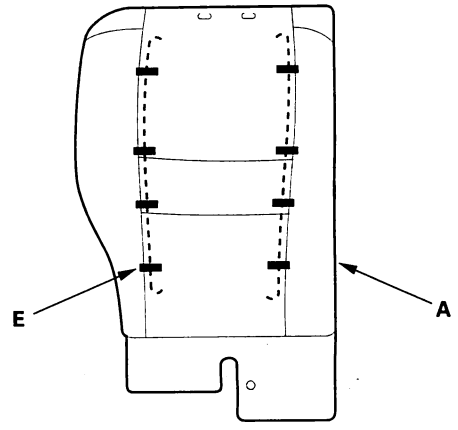

4-door

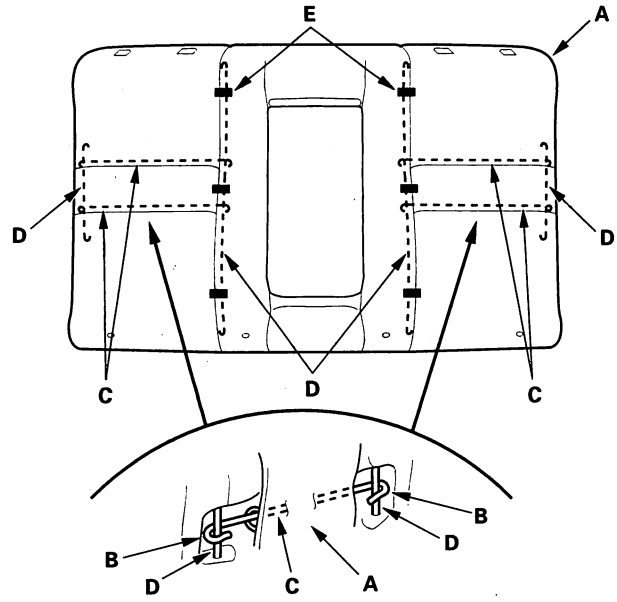

9. Install the cover in the reverse order of removal, and note these items:

- To prevent wrinkles when installing a seat-back cover, make sure the material is stretched evenly over the pad before securing the fasteners, hook strips, and clips.
- Replace any clips you removed with new ones. Install them with commercially available upholstery ring pliers.

Protected by AR

Rear Seat Side Bolster Cover Replacement

4-door

1. Remove the seat side bolster (see page 20-174).
2. Release all the hook strips (A), fold back the seat side bolster cover (B), and release the cover from the hooks (C) to remove it.

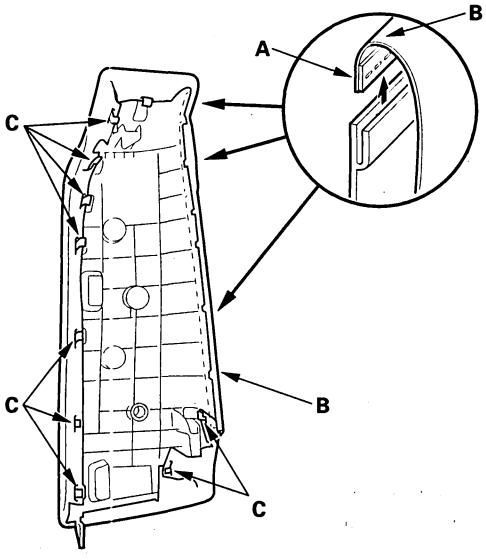

3. Install the cover in the reverse order of removal, and to prevent wrinkles, make sure the material is stretched evenly over the pad before securing the hook strips.

Rear Seat Cushion Cover Replacement

1. Remove the seat-backs and seat cushion, 2-door (see page 20-173), 4-door (see page 20-174).
2. Release all the clips (A) from under the seat cushion, and fold back the seat cushion cover.

2-door

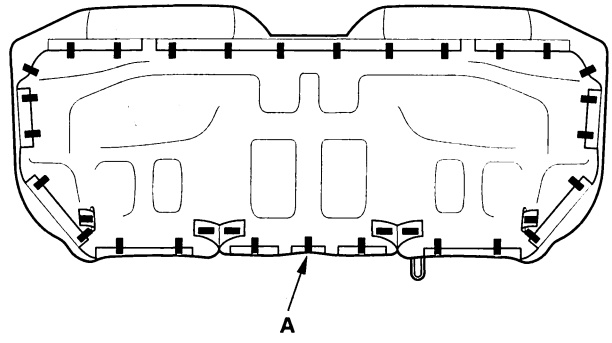

4-door

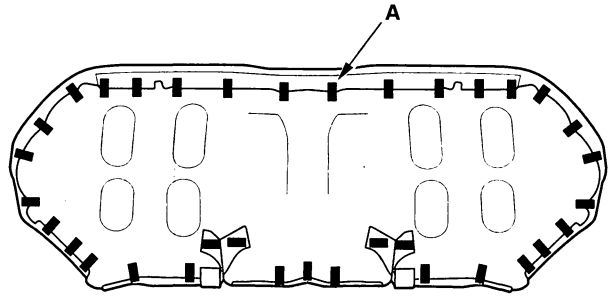

BACK

Protected by AR

3. Pull back the edge of the seat cushion cover all the way around, and release the clips (A), then remove the seat cushion cover.

2-door

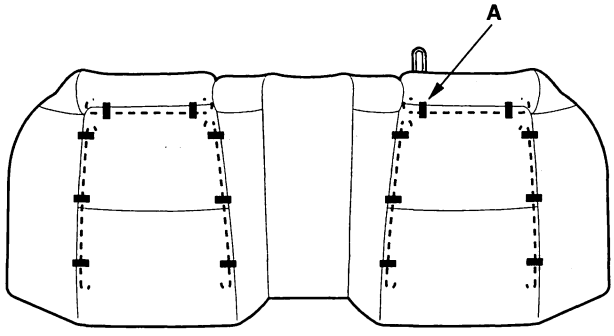

4-door

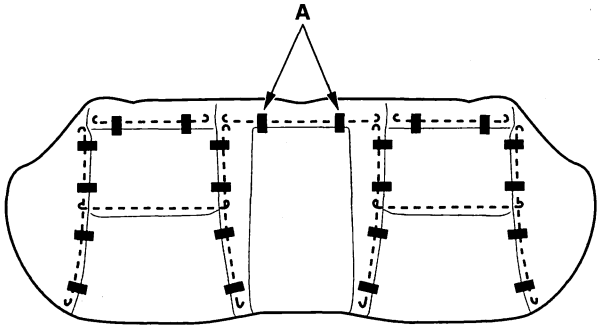

4. Install the cover in the reverse order of removal, and note these items:

- To prevent wrinkles, make sure the material is stretched evenly over the pad before securing the clips.
- Replace any clips (A) you removed with new ones. Install them with commercially available upholstery ring pliers (B).

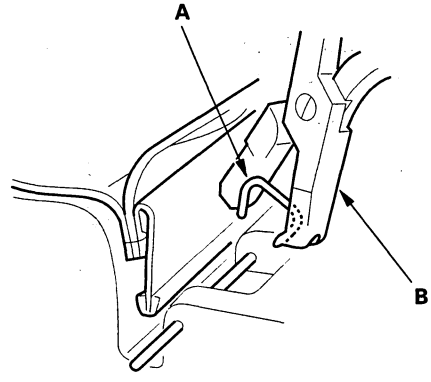

Protected by AR

Bumpers

Front Bumper Removal/Installation

2-door

NOTE:
- Have an assistant help you when removing and installing the front bumper.
- Take care not to scratch the front bumper and body.
- Put on gloves to protect your hands.

1. Remove the front bumper as shown.

2. Install the bumper in the reverse order of removal, and note these items:

   - Make sure the front bumper engages the hooks of the side spacers and upper beams on both sides securely.
   - Check the clips for damage or stress-whitening, and replace them with new ones.

Fastener Locations

A ▶ : Bolt, 4 B ▶ : Screw, 2 C ▷ : Clip, 14 D ▷ : Clip, 2 E ▷ : Hook, 4



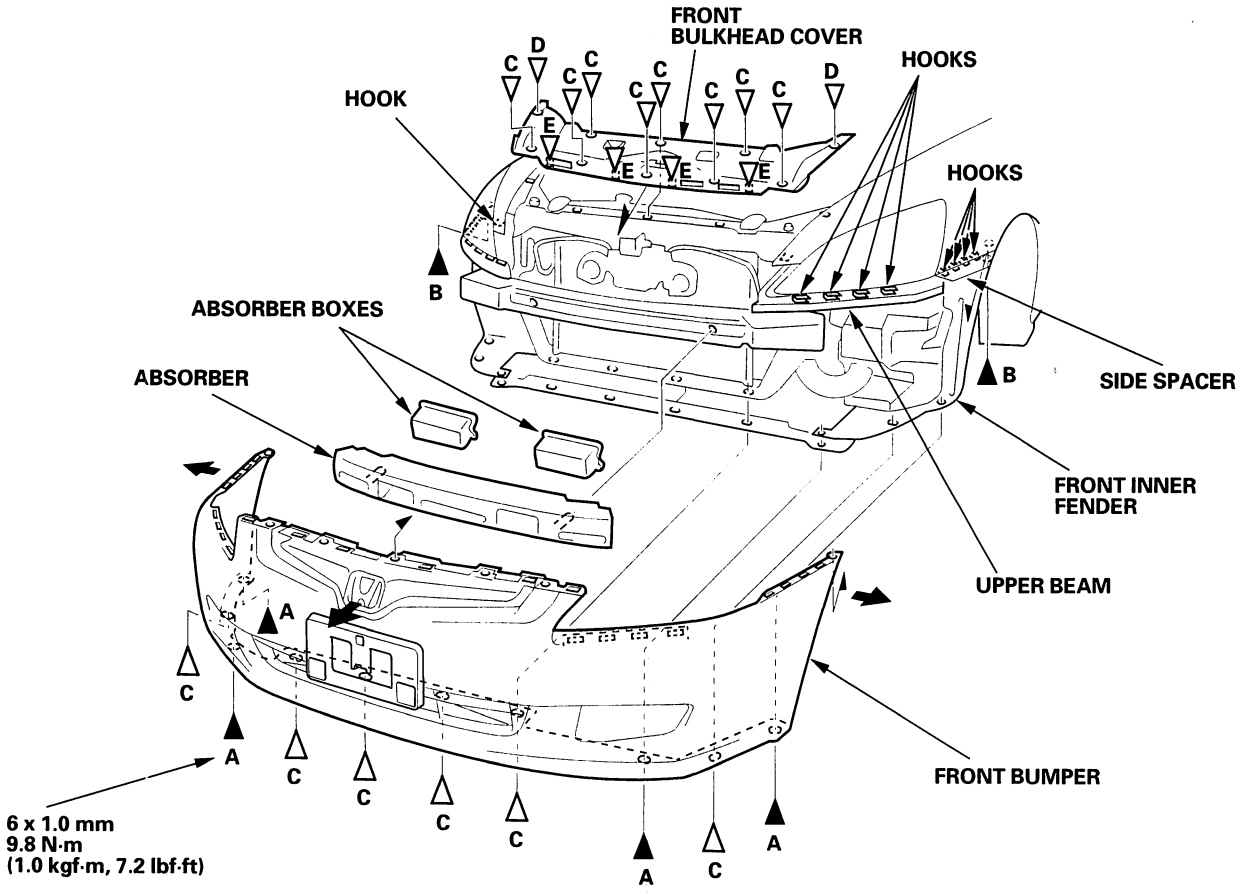

BACK

Protected by AR

4-door

NOTE:
- Have an assistant help you when removing and installing the front bumper.
- Take care not to scratch the front bumper and body.
- Put on gloves to protect your hands.

1. Remove the front bumper as shown.

2. Install the bumper in the reverse order of removal, and note these items:

   - Make sure the front bumper engages the hooks of the side spacers and upper beams on both sides securely.
   - Check the clips for damage or stress-whitening, and replace them with new ones.

Fastener Locations

A ▶ : Bolt, 4 B ▶ : Screw, 2 C ▷ : Clip, 14 D ▷ : Clip, 2 E ▷ : Hook, 4

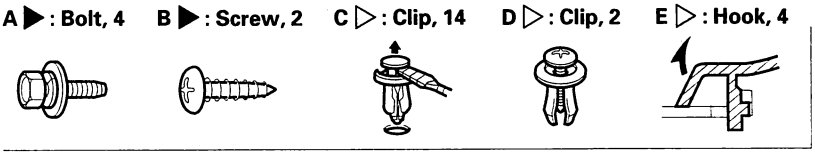

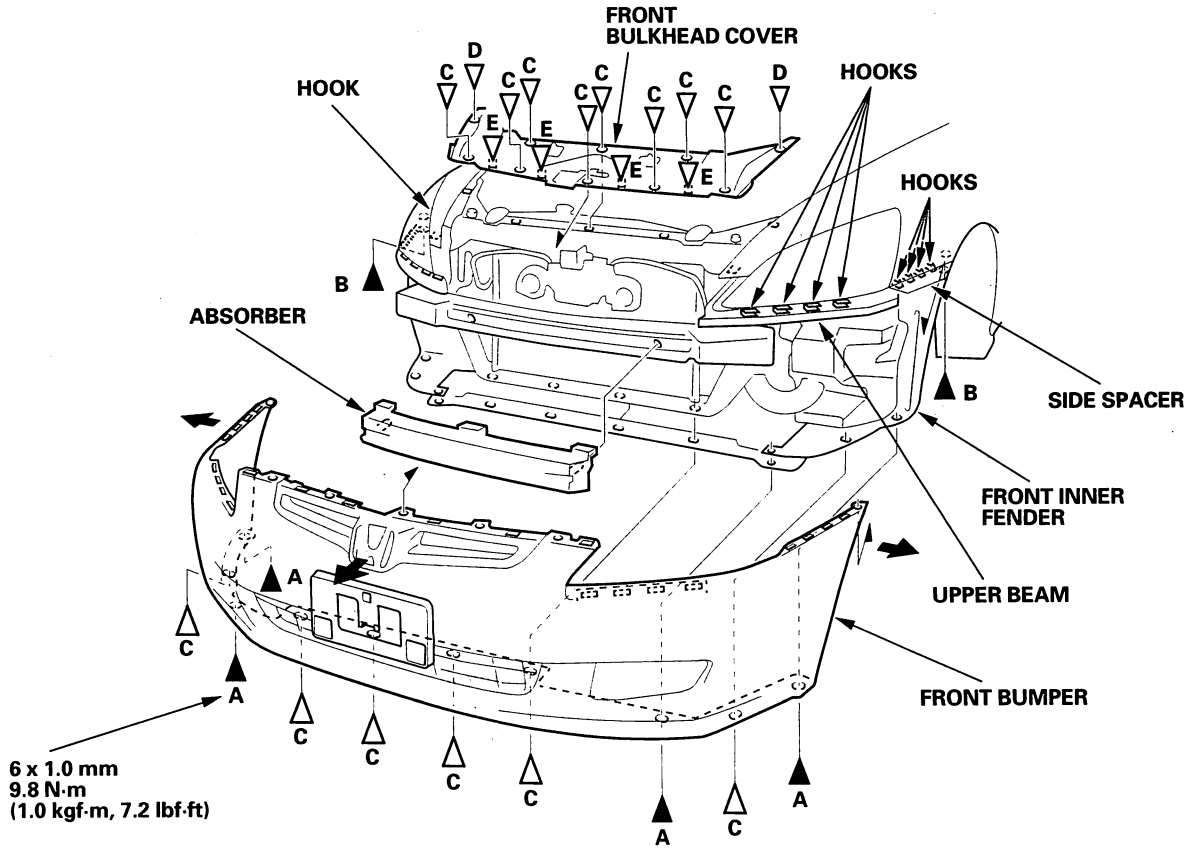

Protected by AR

Lower Grille Replacement

Special Tools Required
KTC trim tool set SOJATP2014

'06 Model

NOTE:
- Put on gloves to protect your hands.
- Use the appropriate tool from the KTC trim tool set to avoid damage when prying components.
- Take care not to scratch the front bumper.

1. Remove the front bumper (see page 20-184).
2. Remove the license plate.
3. Remove the bolts (A) and screw (B), then remove the license plate base (C) from the front bumper (D).

Fastener Locations
A ▶ : Bolt, 2 **B ▶ : Screw, 1**

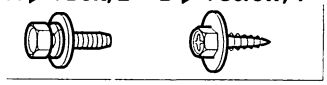

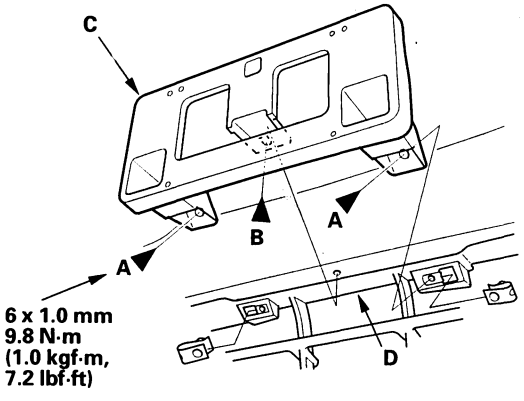

4. From the back of the front bumper (A), remove the screws (B), securing the front bumper lower grille (C).

Fastener Locations
B ▶ : Screw, 2

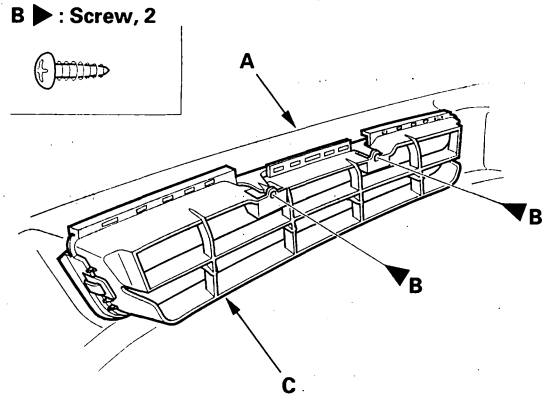

5. Detach the hooks (A) on the bottom of the front bumper lower grille (B), then remove the grille from the front bumper (C).

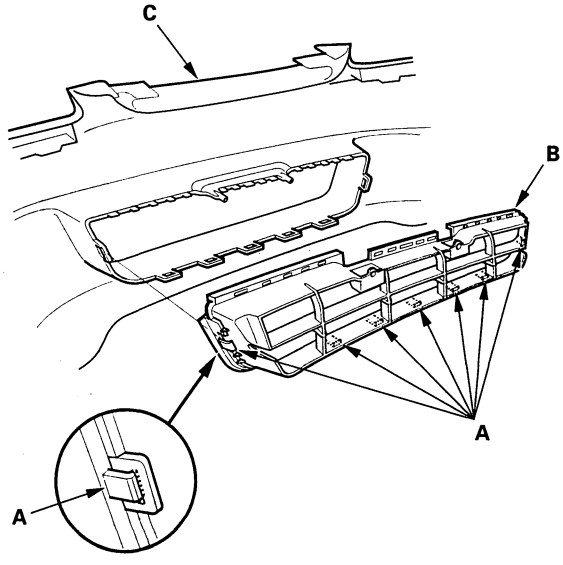

6. Install the grille in the reverse order of removal, and note these items: Push the hooks into place securely.

BACK

Protected by AR

Front Bumper Side Cover Replacement

Special Tools Required
KTC trim tool set SOJATP2014

'06 Model

NOTE:
- Put on gloves to protect your hands.
- Use the appropriate tool from the KTC trim tool set to avoid damage when prying components.
- Take care not to scratch the front bumper.

1. Remove the front bumper (see page 20-184).

2. From the back of the front bumper (A), release the hooks (B), and pull out the front bumper side cover (C), then remove the cover.

4-door

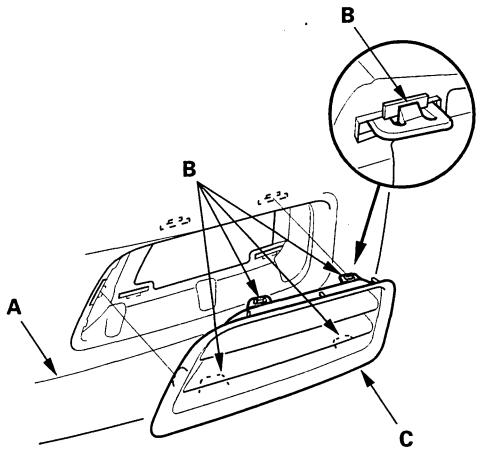

2-door

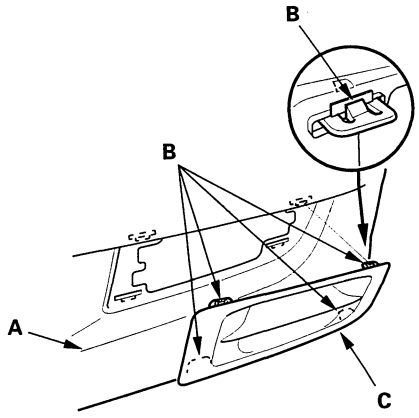

3. Install the cover in the reverse order of removal, and push the hooks into place securely.

Protected by AR

Rear Bumper Removal/Installation

Special Tools Required
KTC trim tool set SOJATP2014

2-door

NOTE:
- Have an assistant help you when removing and installing the rear bumper.
- Use the appropriate tool from the KTC trim tool set to avoid damage when prying components.
- Take care not to scratch the rear bumper and body.
- Put on gloves to protect your hands.

1. Remove the rear bumper as shown.

2. Install the bumper in the reverse order of removal, and note these items:

   - Make sure the rear bumper engages the hooks of the side spacers and upper brackets on both sides securely.
   - Check the clips for damage or stress-whitening, and replace them with new ones.

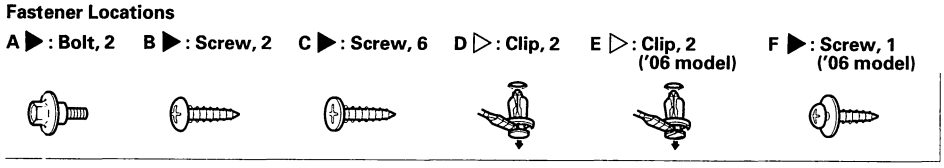

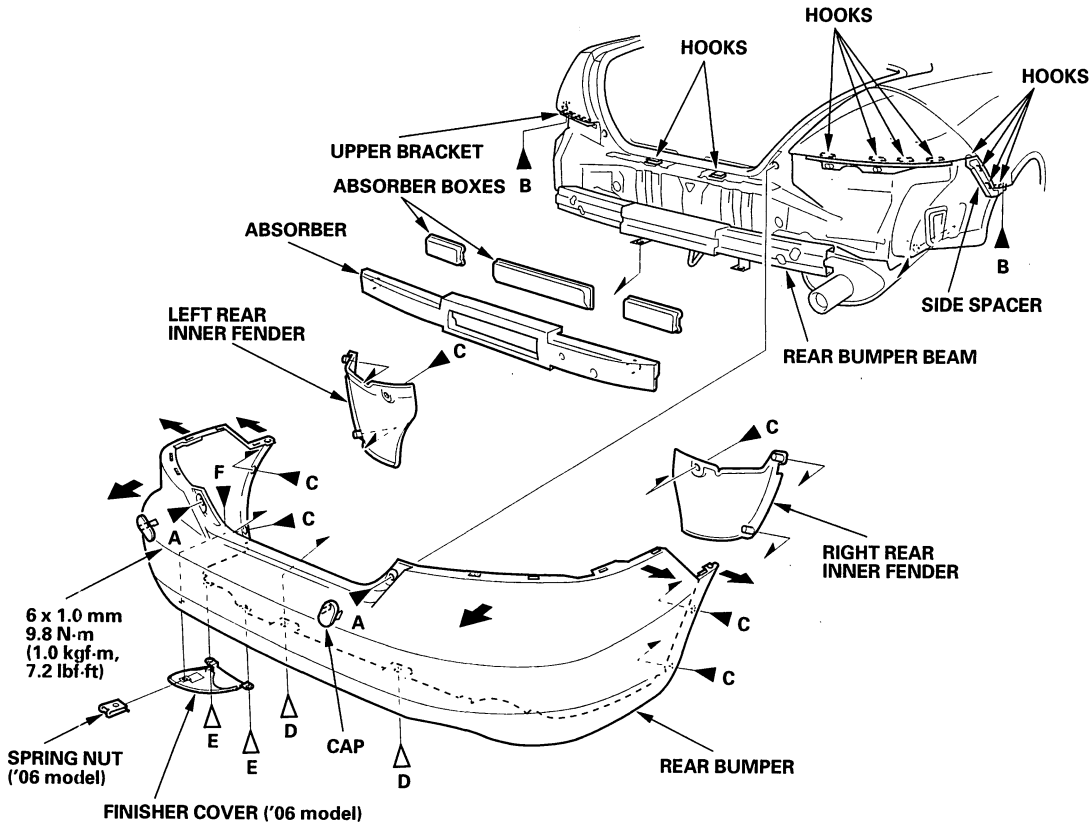

BACK

Protected by AR

Special Tools Required
KTC trim tool set SOJATP2014

4-door

NOTE:
- Have an assistant help you when removing and installing the rear bumper.
- Use the appropriate tool from the KTC trim tool set to avoid damage when prying components.
- Take care not to scratch the rear bumper and body.
- Put on gloves to protect your hands.

1. Remove the rear bumper as shown.

2. Install the bumper in the reverse order of removal, and note these items:

   - Make sure the rear bumper engages the hooks of the side spacers and upper brackets on both sides securely.
   - Check the clips for damage or stress-whitening, and replace them with new ones.

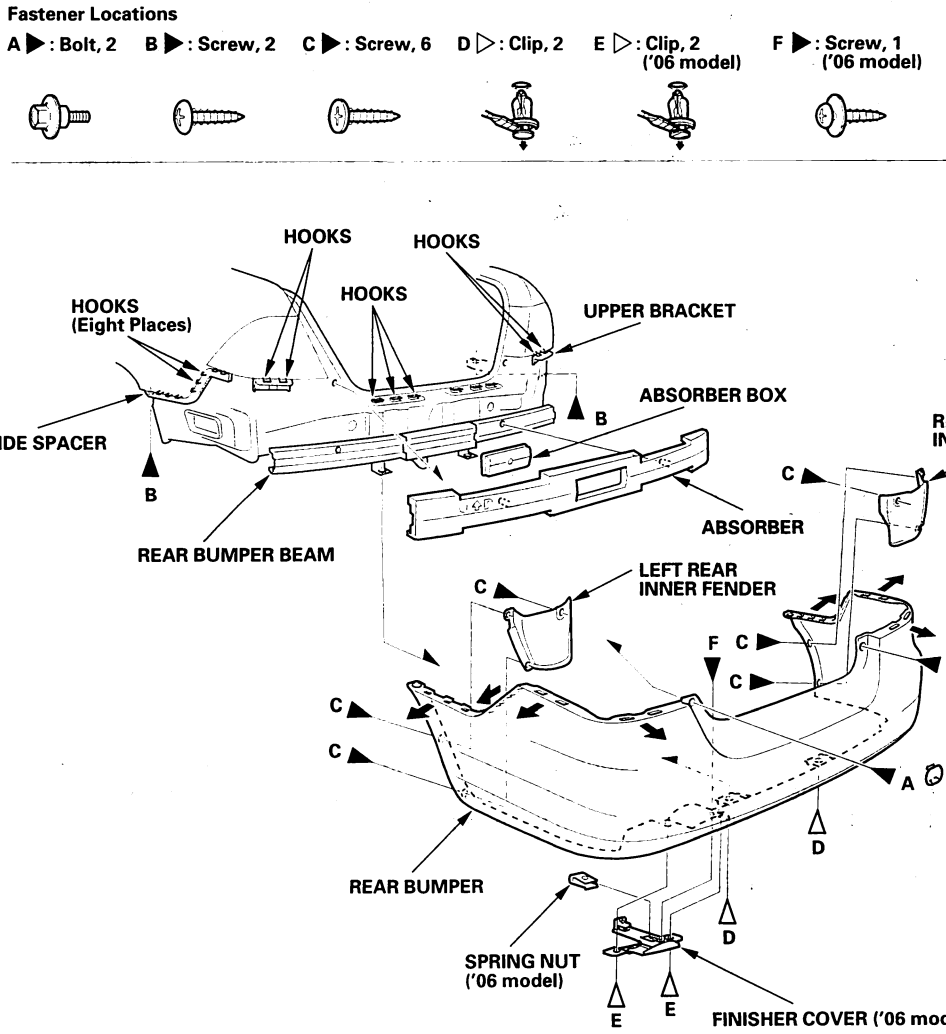

Protected by AR

Hood

Adjustment

1. Slightly loosen each hood hinge bolt.
2. Adjust the hood (A) alignment in this sequence.
   - Adjust the hood right and left, as well as forward and rearward, by using the elongated holes on the hood hinges (B).
   - Turn the hood edge cushions (C), as necessary, to make the hood fit flush with the body at the front and side edges.

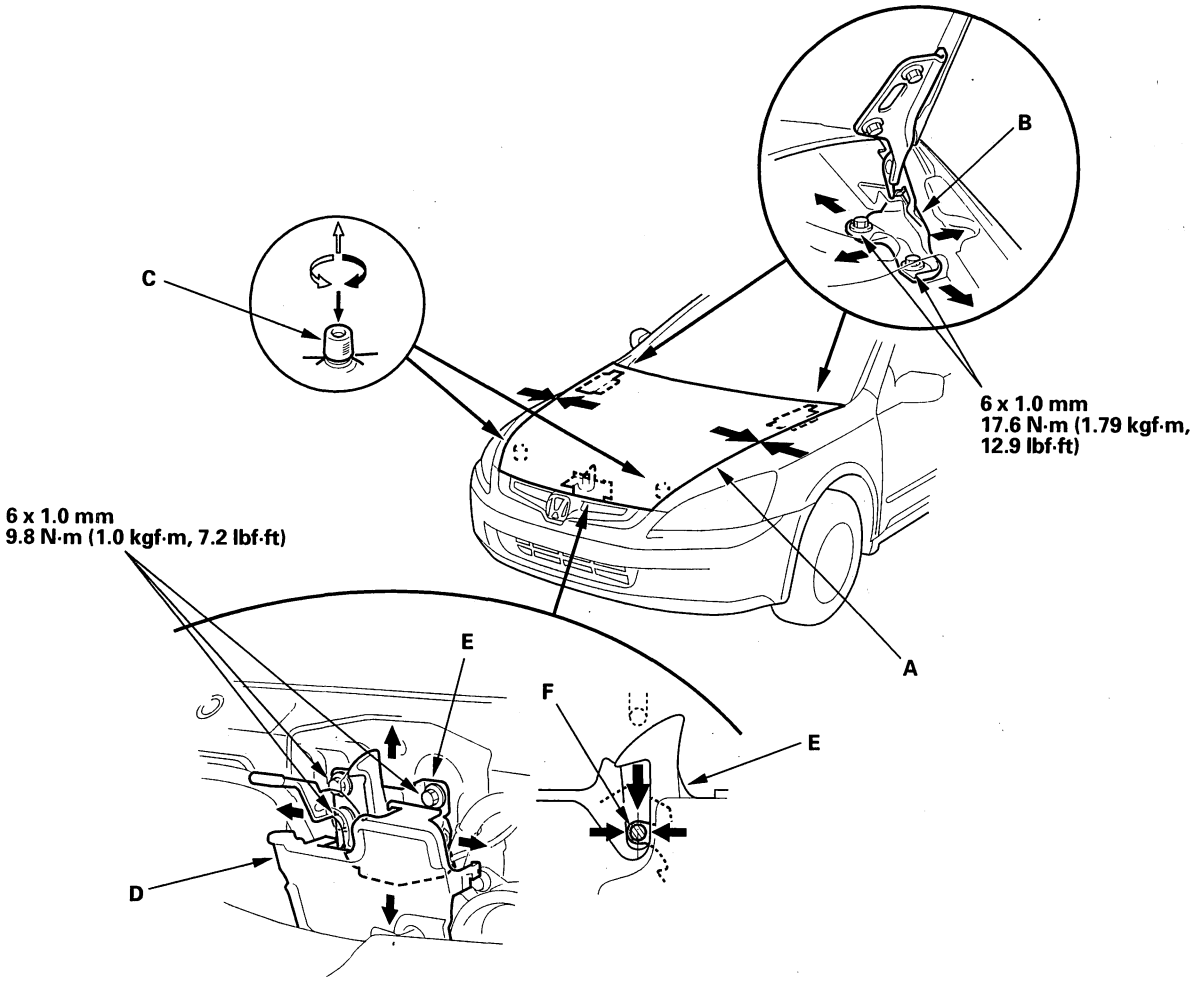

3. Remove the front bulkhead cover (see step 1 on page 20-197), and release the upper portion of the hood latch cover (D) as necessary. Adjust the hood latch (E) to obtain the proper height at the forward edge, and move the hood latch right or left until the striker (F) is centered in the hood latch.
4. Tighten the bolts to the specified torque.

BACK

Protected by AR

5. Check that the hood opens properly and closes securely.
6. Apply touch-up paint to the hinge mounting bolts and around the hinges.
7. Apply multipurpose grease to the hood latch and hood hinge as indicated by the arrows.

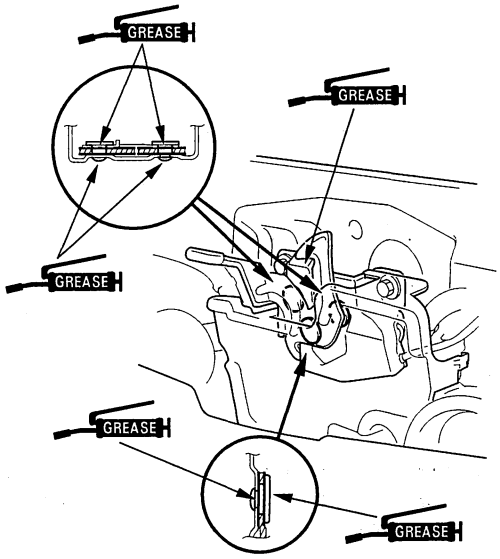

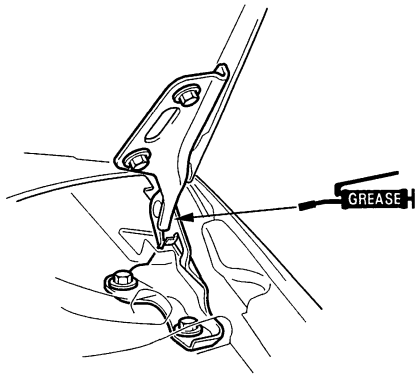

8. Reinstall the front bulkhead cover.

Protected by AR

Hood

Hood Seal and Hood Molding Replacement

1. Using a clip remover, detach the clips (A, B), then remove the hood seal (C) and hood corner seals (D). On Canadian models; remove the hood molding (E). Take care not to scratch the hood.

Fastener Locations

A ▷: Clip, 11 B ▷: Clip, 9

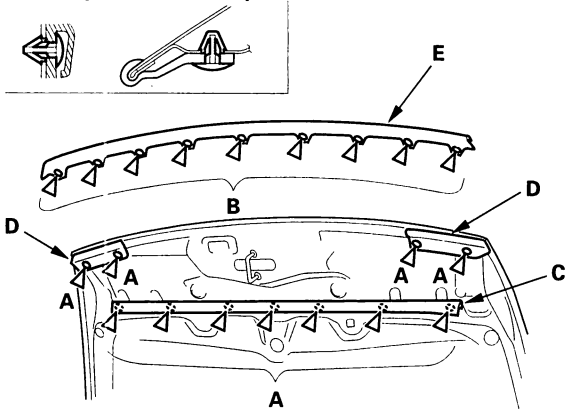

2. Install the seals in the reverse order of removal, and check the clips for damage or stress-whitening, and replace them with new ones.

Hood Insulator Replacement

1. Using a clip remover, detach the clips. Release the hooks (A), then remove the hood insulator (B). Take care not to scratch the hood.

Fastener Locations

▷: Clip, 10

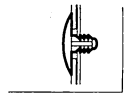

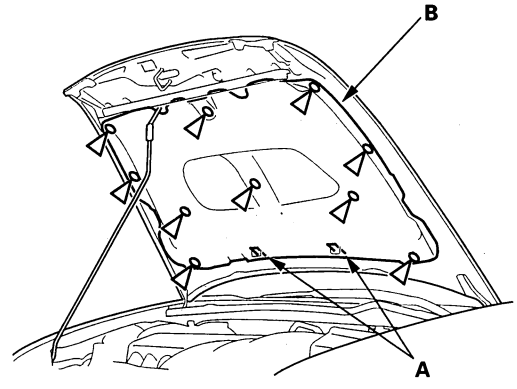

2. Install the insulator in the reverse order of removal, and check the clips for damage or stress-whitening, and replace them with new ones.

BACK

Protected by AR

Trunk Lid

Adjustment

1. Remove these items:
   - Rear shelf, 2-door (see page 20-108), 4-door (see page 20-110)
   - Trunk rear trim panel, 2-door (see page 20-112), 4-door (see page 20-113)
2. Slightly loosen each bolt.
3. Adjust the trunk lid (A) alignment in the following sequence.
   - Adjust the trunk lid hinges (B) right and left, as well as forward and rearward, by using the elongated holes. Take care not to hit the rear window when loosening the bolts (C).
   - Turn the trunk lid edge cushions (D), in or out as necessary, to make the trunk lid fit flush with the body at the rear and side edges.
   - Adjust the fit between the trunk lid and the trunk lid opening by moving the striker (E).

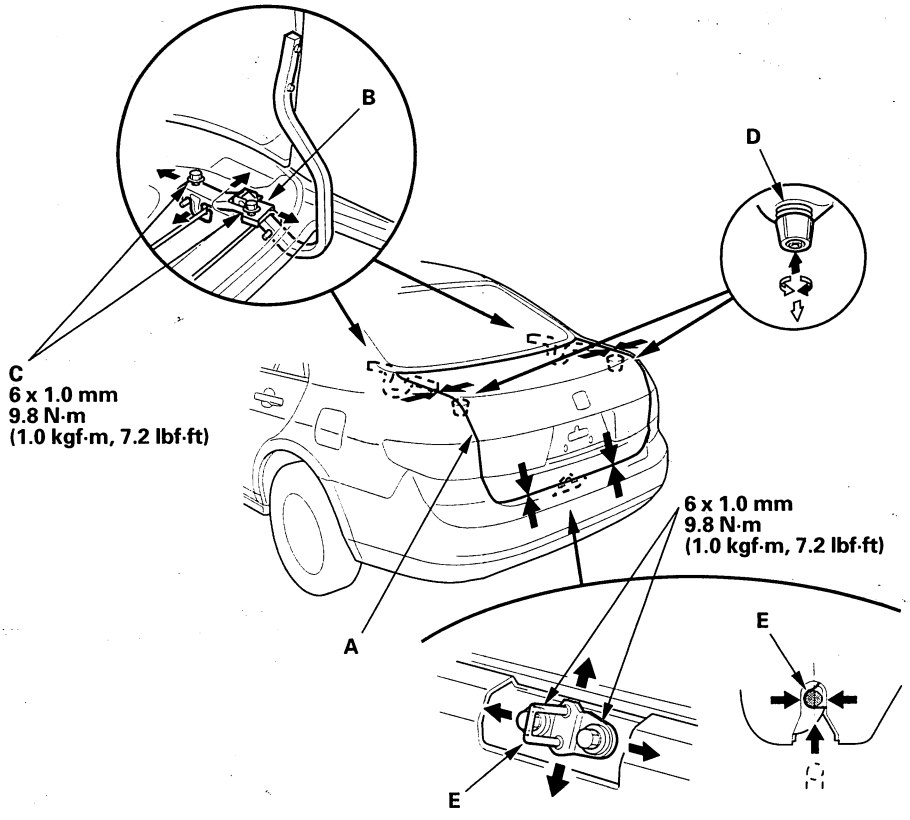

4. Tighten the bolts to the specified torque.
5. Make sure the trunk lid opens properly and closes securely.
6. Reinstall all remaining removed parts.

Protected by AR

Trunk Lid Torsion Bar Replacement

Special Tools Required
Torsion bar assembly tool 08M10-SM4-100
or 07AAE-SDAA100

NOTE: Put on gloves to protect your hands.

1. Remove the torsion bars (A) from the torsion bar center clip (B).

2-door

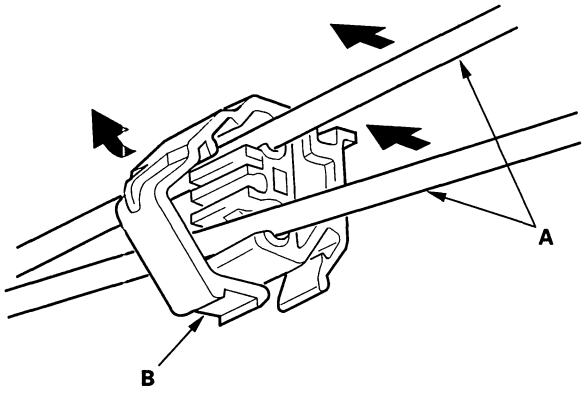

4-door

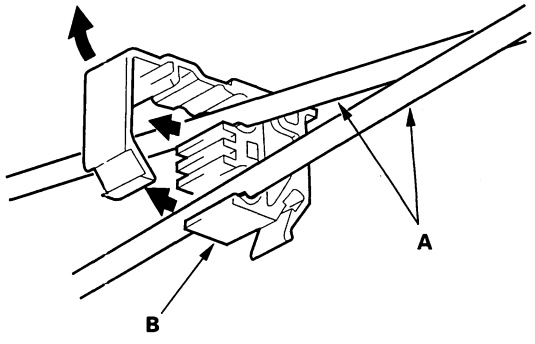

2. Use the torsion bar tool to remove the torsion bars from both trunk lid hinges.

NOTE:
- 2-door: First remove the left torsion bar (A), then remove the right torsion bar (B).
- 4-door: First remove the right torsion bar (A), then remove the left torsion bar (B).

2-door

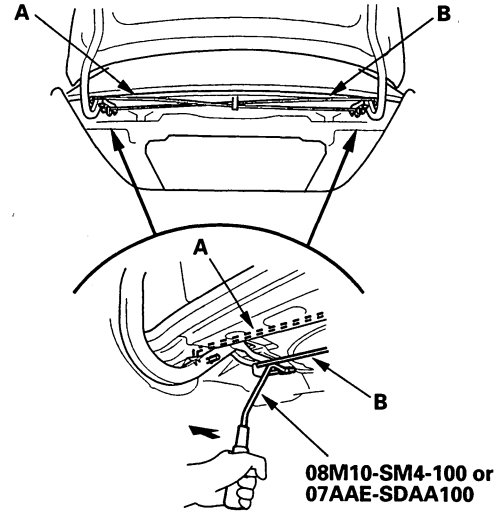

4-door

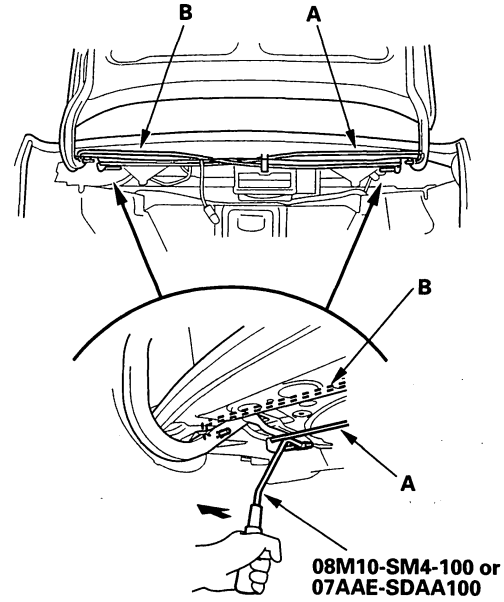

BACK

Protected by AR

3. Remove the torsion bar center clip from the body.

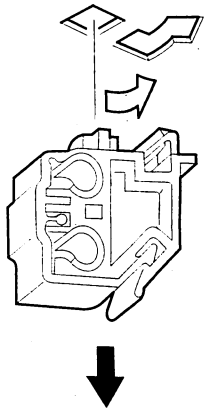

4. Install the torsion bars in the reverse order of removal, and note these items:

   - The shapes of the left torsion bar (A) and right torsion bar (B) are shown. Install the torsion bars properly.
   - Adjust the torsion bars forward or rearward with the torsion bar assembly tool. The standard torsion bar positions are:
     Left torsion bar: Higher tension
     Right torsion bar: Normal position
   - Make sure the trunk lid opens properly and locks securely.

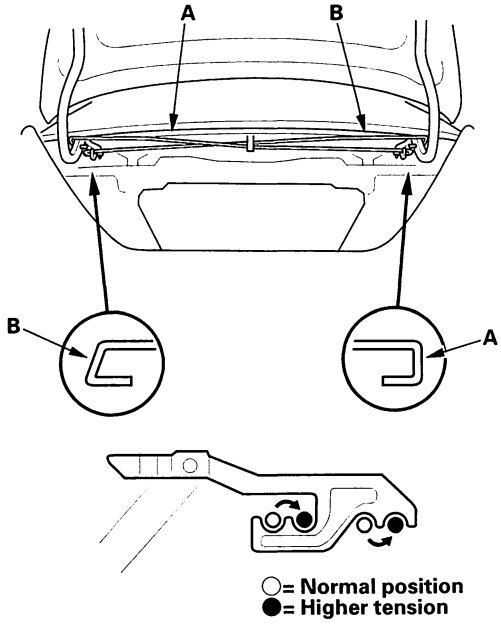

Trunk Lid Weatherstrip Replacement

1. Remove the trunk lid weatherstrip (A) by pulling it off.

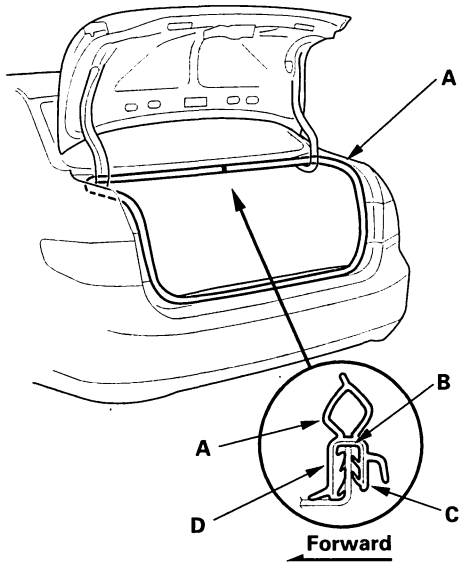

2. Apply clear sealant (B) into the channel of the trunk lid weatherstrip all the way around.

   Sealant: Cemedine P/N 08712-0004, or equivalent

3. Locate the painted alignment mark (C or D) on the trunk lid weatherstrip. Align the painted mark with the center of the tailgate opening, and install the trunk lid weatherstrip all the way around in the direction shown. Make sure there are no wrinkles in the weatherstrip.

4. Check for water leaks.

Protected by AR

Fuel Fill Door

Adjustment

1. Slightly loosen the hinge mounting bolts (A).

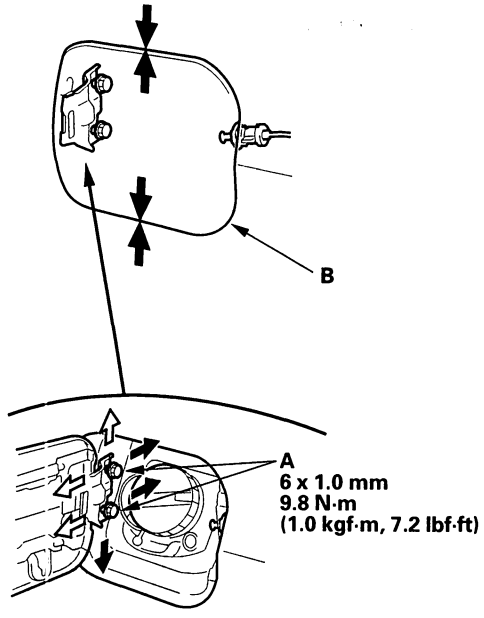

2. Adjust the fuel fill door (B) in or out until it's flush with the body, and up or down as necessary to equalize the gaps.
3. Tighten the hinge mounting bolts.
4. Check that the fuel fill door opens properly and locks securely, and check that the rear of the door is flush with the body.
5. Apply multipurpose grease to each location indicated by the arrows.

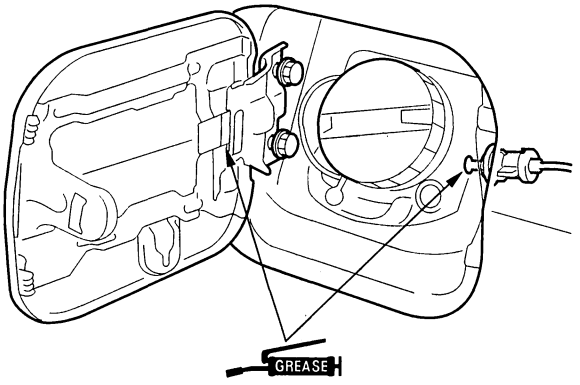

6. Apply touch-up paint to the hinge mounting bolts and around the hinges.

BACK

Protected by AR

Front Grille Replacement

Special Tools Required
KTC trim tool set SOJATP2014

2-door

NOTE: Use the appropriate tool from the KTC trim tool set to avoid damage when prying components.

1. Remove the front bumper (see page 20-184).
2. '03-05 models: Remove the screws and release the hooks (A), and remove the front grille (B) from the front bumper (C) by pulling it out. Take care not to scratch the front bumper.

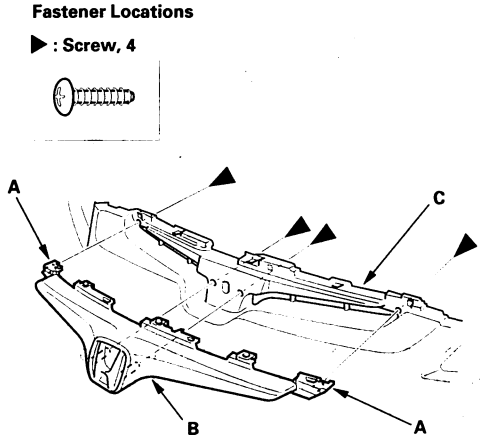

3. '06 model: Remove the clips (A) and screws (B), and remove the front grille (C) from the front bumper (D) by pulling it out. Take care not to scratch the front bumper.

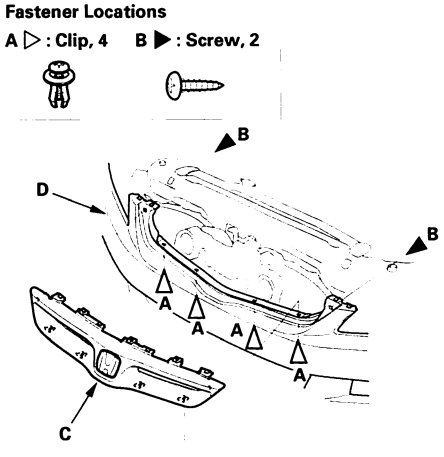

4. Install the grille in the reverse order of removal.

Special Tools Required
KTC trim tool set SOJATP2014

4-door

NOTE:
- Use the appropriate tool from the KTC trim tool set to avoid damage when prying components.
- Take care not to scratch the front bulkhead cover and front grille.

1. Remove the clips (A, B) and detach the hooks (C), then remove the front bulkhead cover (D).

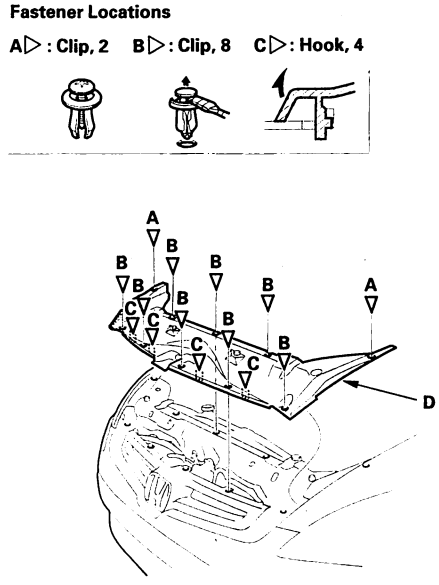

2. '03-05 models: Remove the clips, then remove the front grille (A). Take care not to drop the clips inside the front bumper.

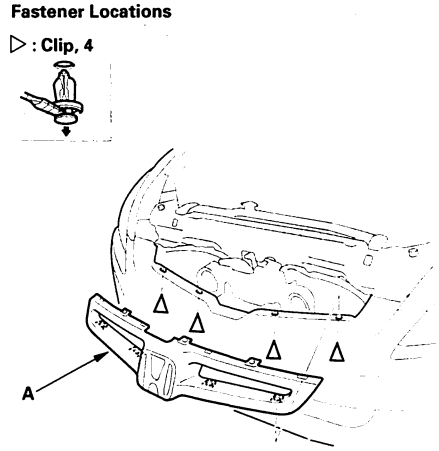

(cont'd)

Protected by AR

Front Grille Replacement (cont'd)

3. '06 model: Remove the clips (A) and screws (B), then remove the front grille (C). Take care not to drop the clips and screws inside the front bumper (D).

Fastener Locations
A ▷ : Clip, 4 B ▶ : Screw, 2

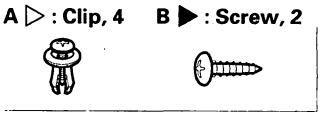

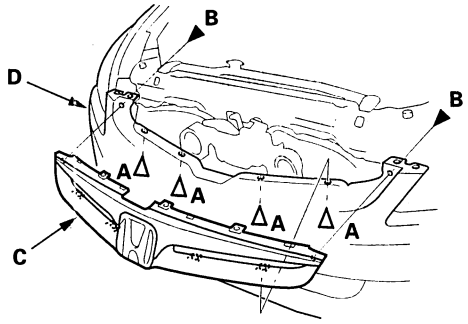

4. '06 model: If necessary, remove the screws, then remove the upper grille molding (A) from the front grille.

Fastener Locations
▶ : Screw, 6

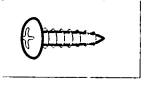

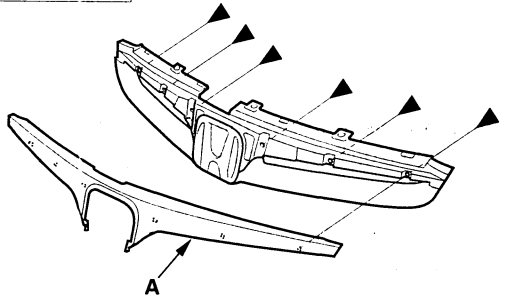

5. Install the front grille in the reverse order of removal, and note these items:

- Check the clips for damage or stress-whitening, and replace them with new ones.
- Push the front hook portions into place securely.

Front Fender Trim Replacement

NOTE: Take care not to scratch the body.

1. Remove the clips fastening the front bulkhead cover (A) and the front fender trim (B).

Fastener Locations
▷ : Clip, 3



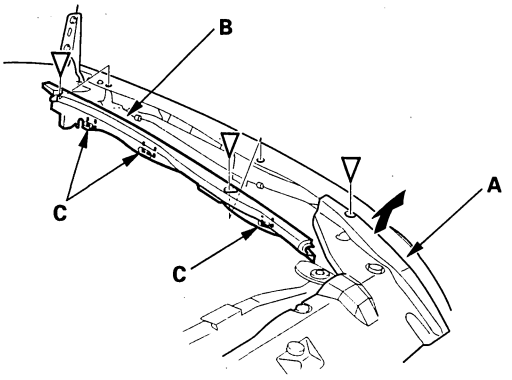

2. Pull up the rear of the front bulkhead cover, then remove the front fender trim by releasing the hooks (C) from the body.

3. Install the trim in the reverse order of removal, and check the clips for damage or stress-whitening, and replace them with new ones.

BACK

Protected by AR

Cowl Cover Replacement

1. Remove the windshield wiper arms (see page 22-253).

2. Remove the hood rear seal (A) by pulling it out. Using a clip remover, detach the clips (B) from the cowl covers. Take care not to scratch the cowl covers.

Fastener Locations

B ▷ : Clip, 4 C ▷ : Clip, 7 D ▷ : Clip, 2 H ▷ : Clip, 1

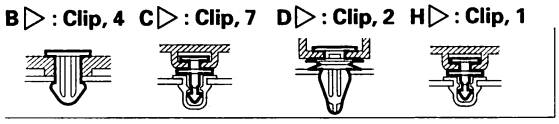

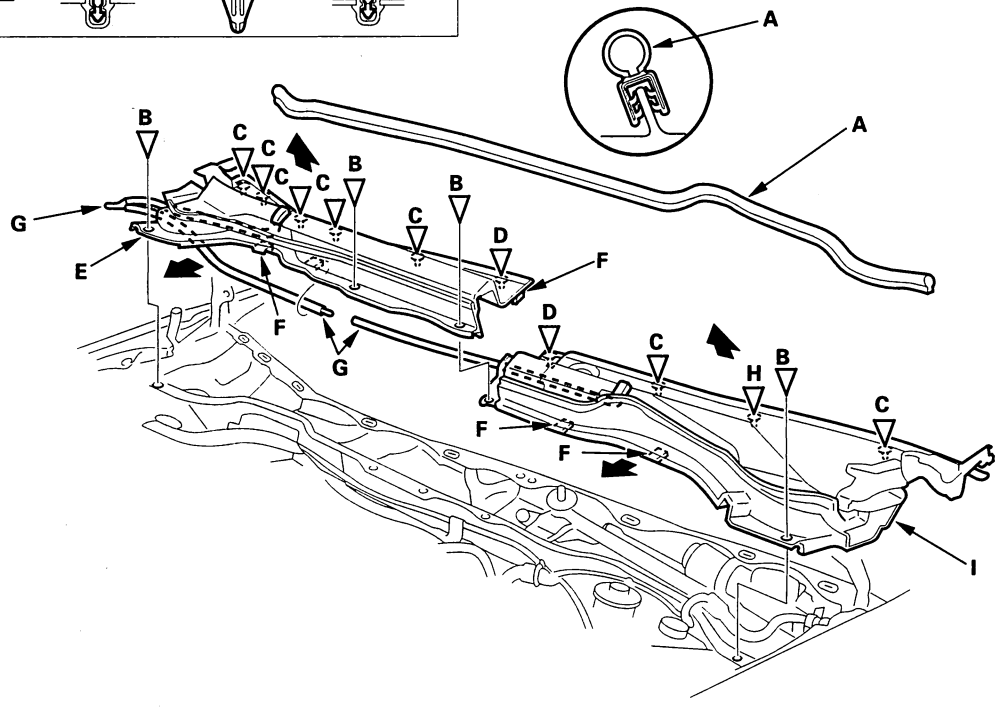

3. Detach the clips (C, D) by carefully pulling the passenger's cowl cover (E) upward, and release the hooks (F) on the passenger's cowl cover from the driver's side, then remove the cover. Take care not to scratch the body.

4. Disconnect the windshield washer tubes (G).

5. Detach the clips (C, D, H) by carefully pulling the driver's cowl cover (I) upward, then remove the cover. Take care not to scratch the body.

6. Install the covers in the reverse order of removal, and note these items:

   - Check the clips for damage or stress-whitening, and replace them with new ones.
   - Make sure the washer tubes are connected securely.

Protected by AR

Roof Molding Replacement

Special Tools Required
KTC trim tool set SOJATP2014

NOTE:
- Put on gloves to protect your hands.
- Take care not to damage the windshield.
- Do not use any of metallic tools to remove the roof molding, or you may chip the edge of the windshield and cracks in the windshield will occur.
- Use the appropriate tool from the KTC trim tool set to avoid damage when prying components.
- Take care not to bend the roof molding.

Molding Replacement

1. Remove the cowl cover (see page 20-199).
2. Remove the windshield portion of the roof molding (A).
   - –1 Carefully insert a plastic trim tool (B) under the molding next to the clip (C).
   - –2 While pulling the clip portion of the molding up by hand, push each of the eight small hooks (D) in the numbered sequence shown to release the clip from the retainer (E).
     Do not try to pry up the clip even if it is hard to release from the retainer.
   - –3 Gradually work your way up to release each of the upper clips (F, G, H).
   - –4 Slide the molding off the lower clip (I).
   - –5 Rotate the lower clip to remove it.

Fastener Locations

C ▷: Green
F ▷: Yellow
G ▷: Red
H ▷: Blue
I ▷ (Left): Dark Blue
I ▷ (Right): White

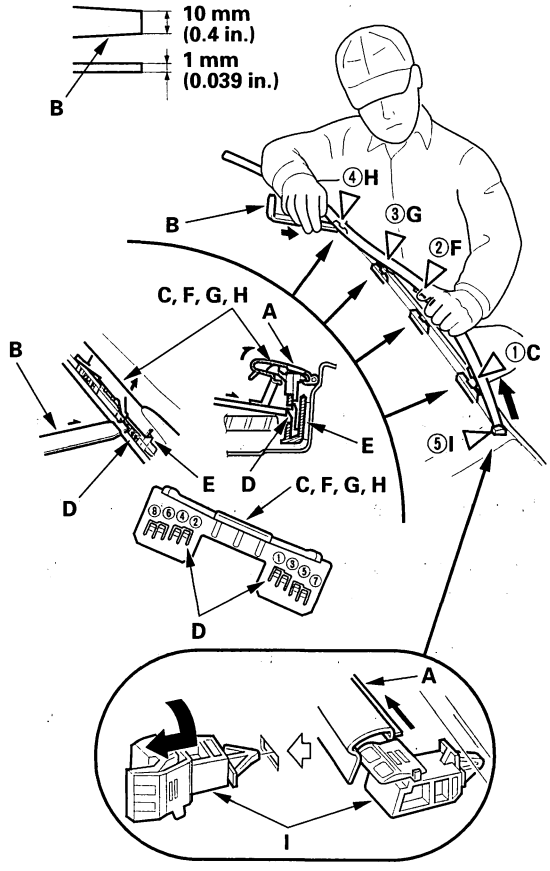

BACK

Protected by AR

3. Pull up and slide the middle portion (A) of the roof molding to release it from the retainers (B).

2-door

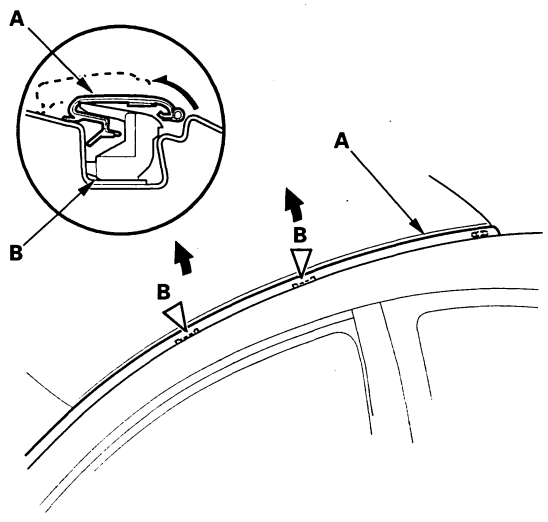

4-door

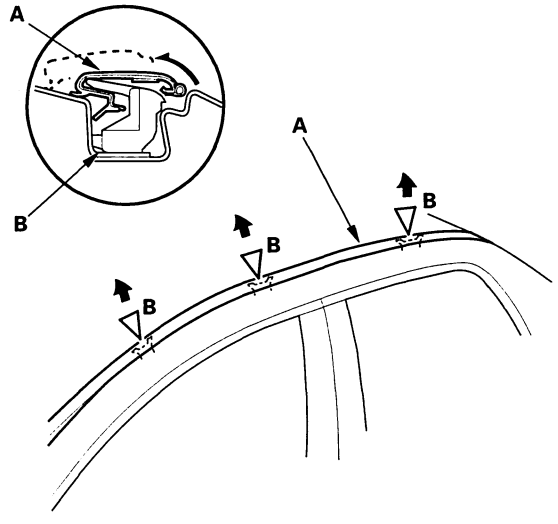

4. Pull up the front portion of roof molding.

5. Pull up and release the rear end of the roof molding (A) from the pin (B), then remove the roof molding (C).

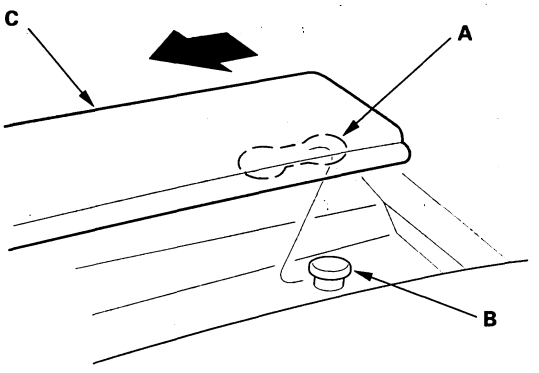

6. Install the molding in the reverse order of removal, and note these items:

- Make sure the roof molding is installed securely.
- Check the clips for damage or stress-whitening, and replace them with new ones.

(cont'd)

Protected by AR

Roof Molding Replacement (cont'd)

Retainer Replacement (4-door Adhesive type)

1. Gradually scrape off the adhesive tape (A) under the retainers (B) while heating it with a heat gun.

   NOTE:
   - Do not heat the painted body surface around the retainers too much.
   - To keep the exterior resin parts near the A-pillar from being overheated by the heat gun, wrap them with aluminum foil.

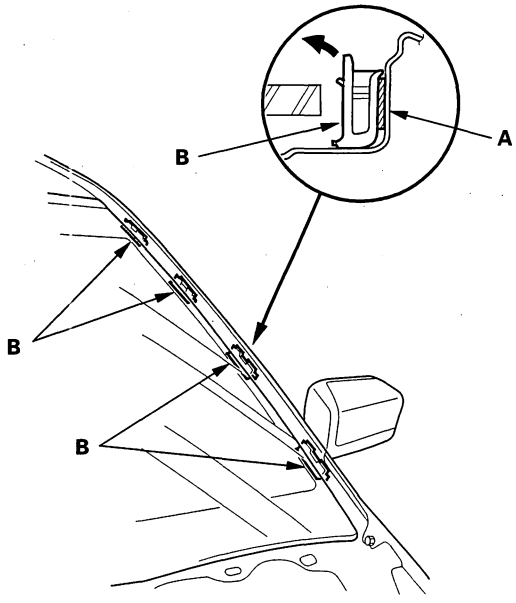

2. Clean the body bonding surface with a sponge dampened in alcohol. After cleaning, keep oil, grease, and water from getting on the surface.

3. Install the upper retainers (A) and the lower retainers (B).

   –1 Peel the adhesive backing away from the upper and lower retainers.
   –2 Line up the retainers with the alignment marks (C) on the body, and attach the retainers with adhesive tape (D) (3M 9259, or equivalent).
   –3 Apply epoxy two-part mixing adhesive (E) around the edge of the retainers as shown.

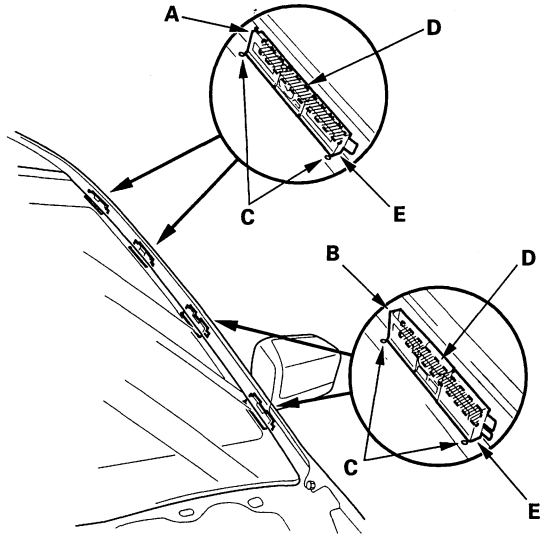

BACK

Protected by AR

Retainer Replacement (T-stud type)

1. While prying the middle hooks (A) with a flat-tip screwdriver, slide the upper retainers (B) and lower retainers (C) upward to release them from the T-studs (D) on the A-pillar. Take care not to scratch the body.

2-door

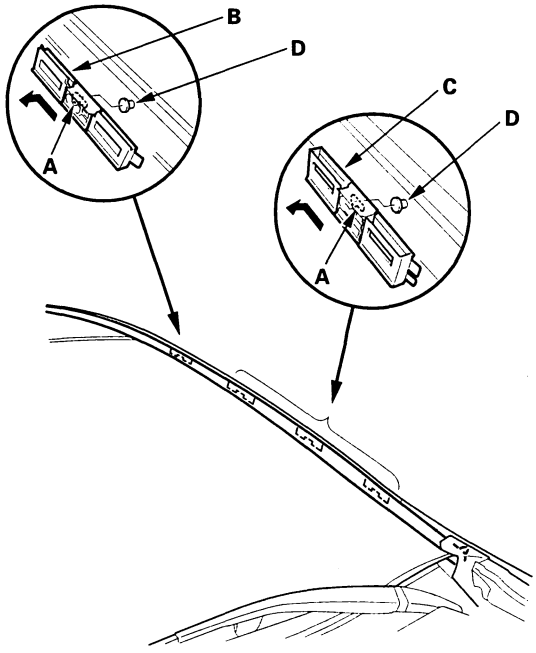

4-door

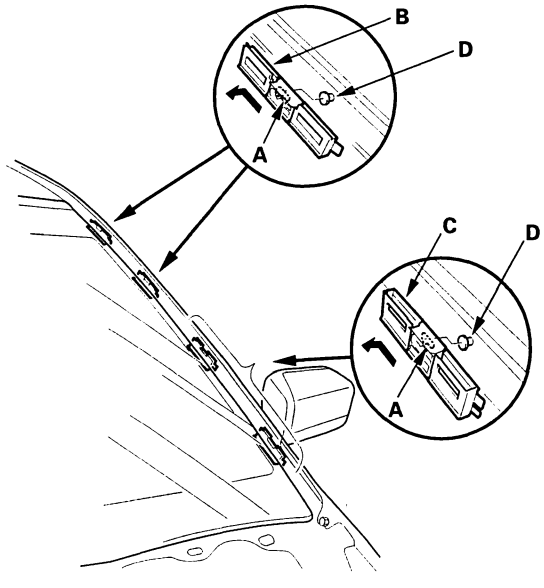

2. Install the retainers in the reverse order of removal.

Protected by AR

Door Molding Replacement

Special Tools Required
KTC trim tool set SOJATP2014

4-door

NOTE:
- Use the appropriate tool from the KTC trim tool set to avoid damage when prying components.
- Be careful not to pry too far or you may bend the molding.
- Put on gloves to protect your hands.

1. Prepare to release the molding clips from inside the vehicle.

   - To remove the front door molding, remove the front door panel (see page 20-10) and plastic cover.
   - To remove the rear door molding, remove the rear door panel (see page 20-25) and plastic cover.

2. Release the clips (A) and gently pry the front door molding (B) or rear door molding (C) away from the door while separating the adhesive tape (D, E, F).

   Adhesive tape (D): Thickness 1.2 mm (0.047 in.), Width 18 mm (0.71 in.)
   Adhesive tape (E): Thickness 1.2 mm (0.047 in.), Width 5 mm (0.2 in.)
   Adhesive tape (F): Thickness 0.4 mm (0.016 in.), Width 5 mm (0.2 in.)

Fastener Locations
A▷: Clip, 10

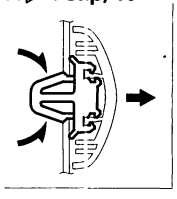

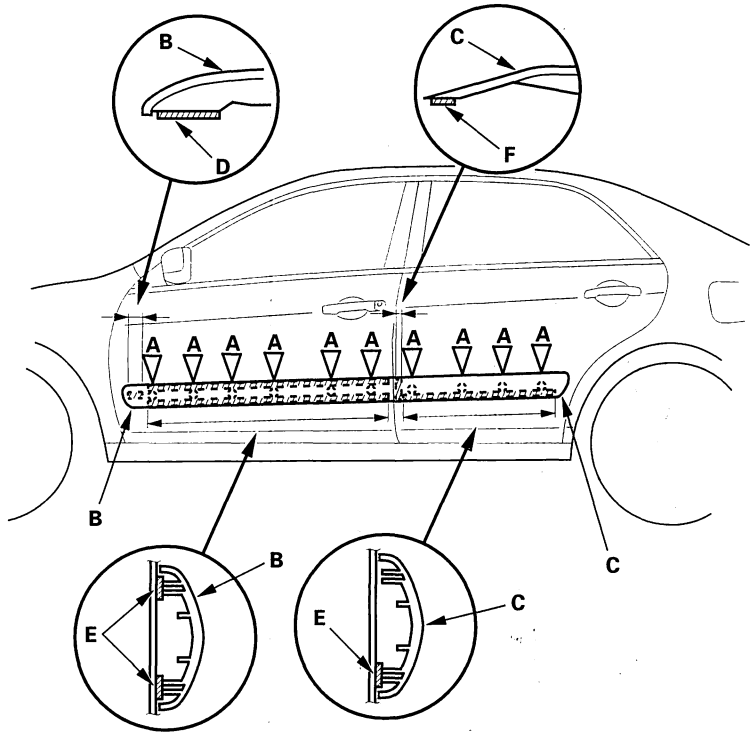

3. Install the moldings in the reverse order of removal, and check the clips for damage or stress-whitening, and replace them with new ones and adhesive tape.

BACK

Protected by AR

Side Sill Panel Replacement

1. Remove the side sill panel.

   –1 On the back of the wheel Arch, remove the screws. If equipped, remove the front splash guard (A).
   –2 Remove the expansion clips (B).
   –3 Pull the inner fender (C) back as necessary, and slide the side sill panel (D) forward, and remove it. The side clips (E) will stay in the body.
   –4 Remove the side clips from the body.

Fastener Locations

▶ : Screw, 3 B ▷ : Clip, 3 E ▷ : Clip, 9

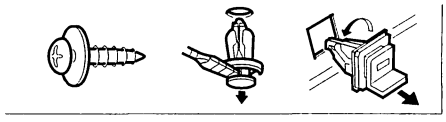

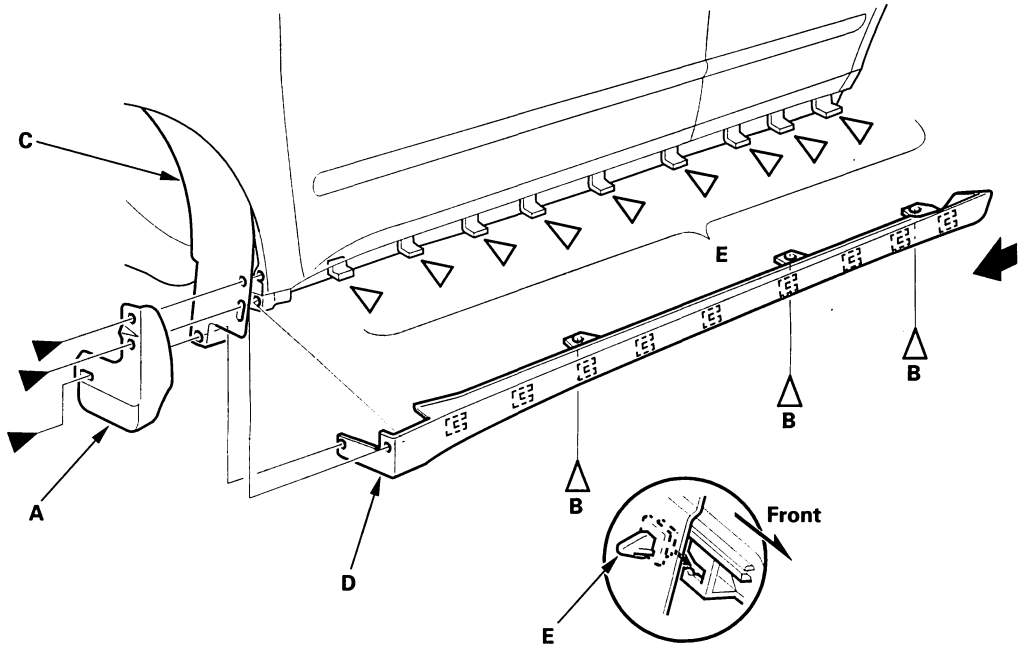

2. Check the clips for damage or stress-whitening, and replace them with new ones.
3. Install the side clips on the side sill panel.
4. Hold the panel up, and fit all the side clips into the holes in the body, then push on the panel until the clips snap into place.
5. Install all the expansion clips.
6. Reinstall the inner fender (and splash guard).

Protected by AR

Rear License Trim Replacement

'03-06 Models 2-door

1. On the inside of the trunk lid, remove the nuts (A), and release the clips (B, C, D), then remove the rear license trim (E). Take care not to scratch the trunk lid.

Fastener Locations

A● : Nut, 2 B ▷ : Clip, 1 C ▷ : Clip, 2 D ▷ : Clip, 1

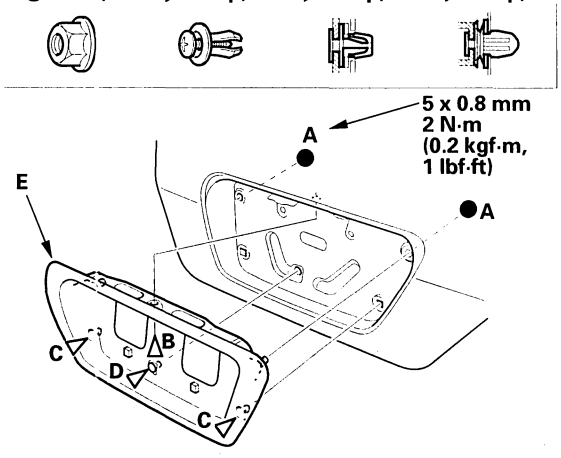

2. Install the trim in the reverse order of removal, and check the clips for damage or stress-whitening, and replace them with new ones.

'06 Model 4-door

NOTE: Put on gloves to protect your hands.

1. Remove the trunk lid trim (see page 20-116).
2. From inside the trunk lid, disconnect back-up connectors (A), then remove the nuts.

Fastener Locations

● : Nut, 2

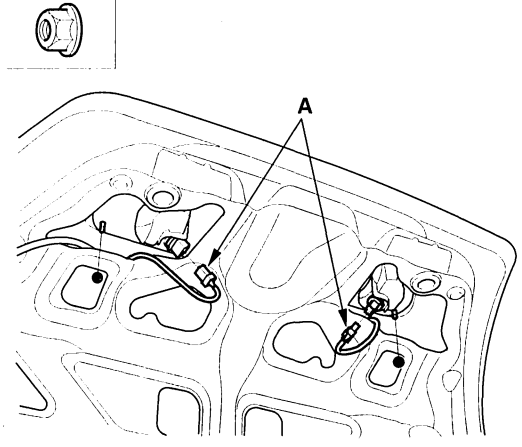

3. On the inside of the trunk lid, release the clips (A, B, C), then remove the rear license trim (D). Take care not to scratch the trunk lid.

Fastener Locations

A ▷ : Clip, 1 B ▷ : Clip, 2 C ▷ : Clip, 1

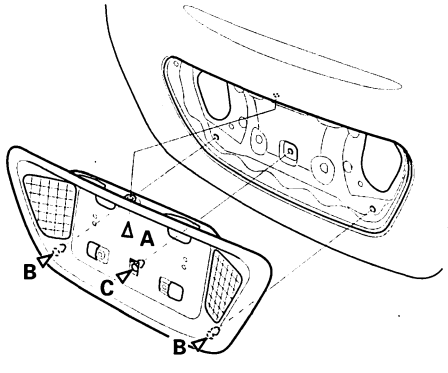

BACK

Protected by AR

Trunk Lid Spoiler Replacement

'05 Model 2-door (Canada)

NOTE: Put on gloves to protect your hands.

1. Remove the trunk trim panel (see page 20-115).
2. From inside the trunk, remove the bolts and nuts.

Fastener Locations

▶ : Bolt, 2 ● : Nut, 2

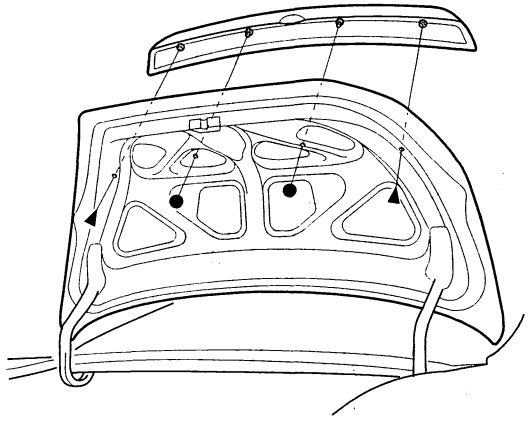

3. Install the spoiler in the order of removal.

Protected by AR

Exterior Trim

Emblem/Sticker Replacement

2-door

NOTE: When removing the emblems/sticker, take care not to scratch the body.

1. Clean the body surface with a sponge dampened in alcohol. After cleaning, keep oil, grease, and water from getting on the surface.
2. Apply the emblems/sticker where shown. When installing the LEV/ULEV/PZEV ('05-06 models) sticker on the inside surface of the quarter glass, align the sticker application tape with the edge of the black ceramic and the alignment mark on the quarter glass, then press the sticker into place, and remove the application tape.

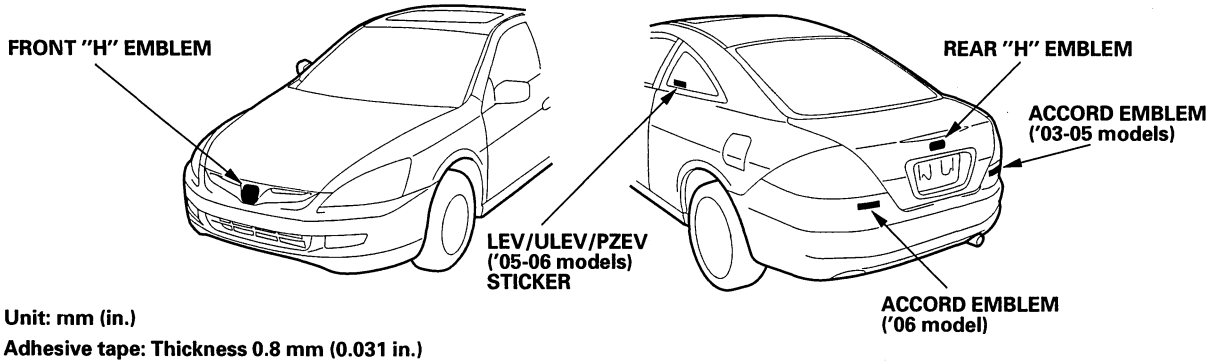

Unit: mm (in.)

Adhesive tape: Thickness 0.8 mm (0.031 in.)

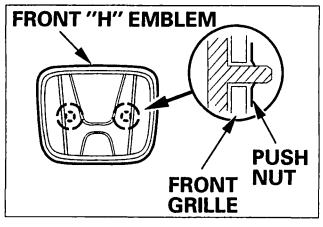

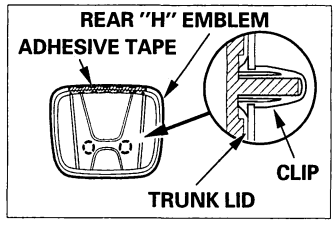

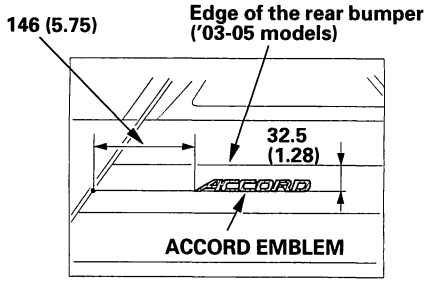

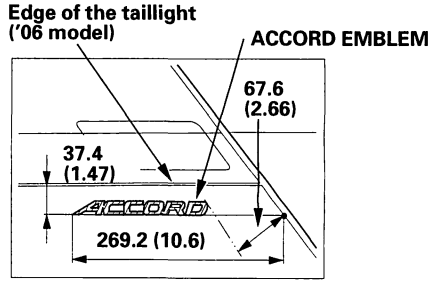

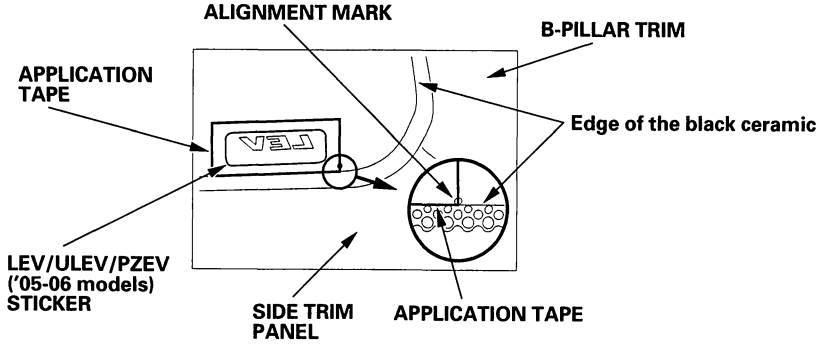

BACK

Protected by AR

'03-05 models 4-door

NOTE: When removing the emblems/sticker, take care not to scratch the body.

1. Clean the body surface with a sponge dampened in alcohol. After cleaning, keep oil, grease, and water from getting on the surface.

2. Apply the emblems/sticker where shown. When installing the LEV/ULEV/SULEV ('03-05 models)/ ZEV/PZEV/ AT-PZEV ('05-06 models) sticker on the inside surface of the rear door quarter glass, align the rear edge of the application tape and bottom of the sticker with the glass mark, then press the sticker into place, and remove the application tape.

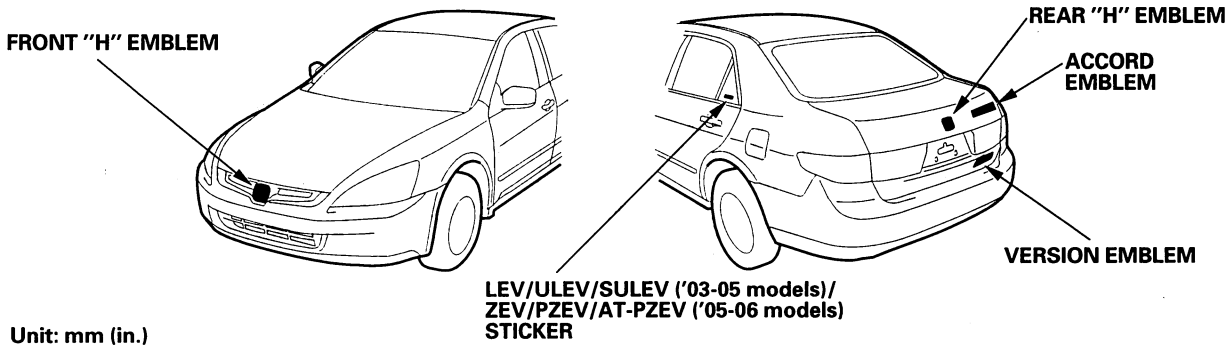

Unit: mm (in.)

Adhesive tape: Thickness 0.8 mm (0.031 in.)

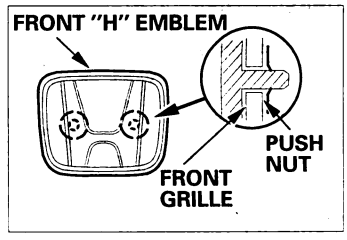

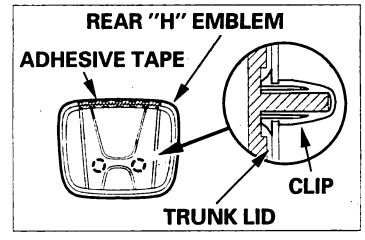

Version: EX, LX, DX

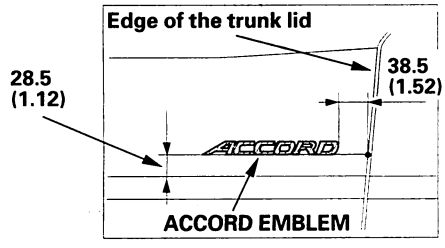

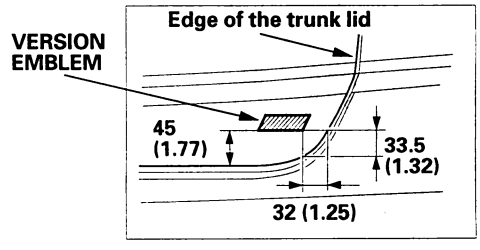

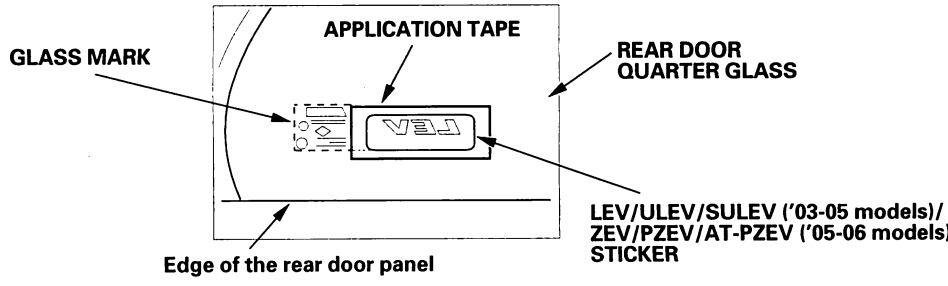

Protected by AR

Emblem/Sticker Replacement (cont'd)

'06 Model 4-door

NOTE: When removing the emblems/sticker, take care not to scratch the body.

1. Clean the body surface with a sponge dampened in alcohol. After cleaning, keep oil, grease, and water from getting on the surface.
2. Apply the emblems/sticker where shown. When installing the LEV/ZEV/PZEV/AT-PZEV sticker on the inside surface of the rear door quarter glass, align the rear edge of the application tape and bottom of the sticker with the glass mark, then press the sticker into place, and remove the application tape.

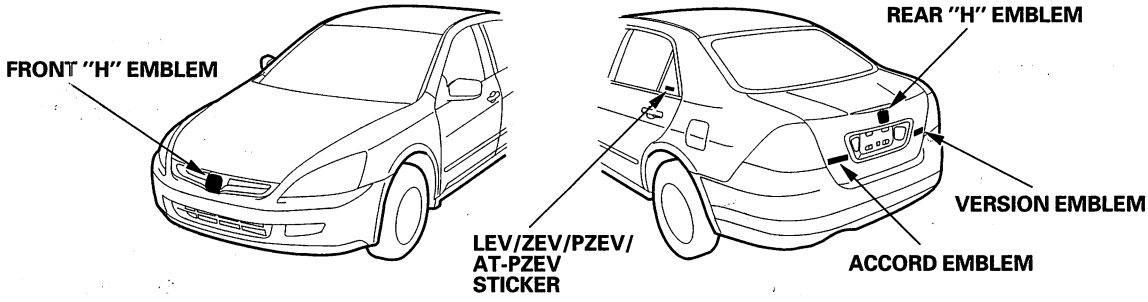

Unit: mm (in.)

Adhesive tape: Thickness 0.8 mm (0.031 in.)

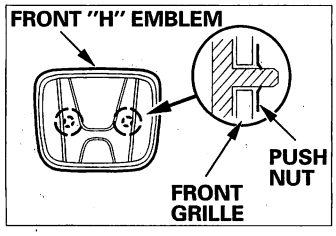

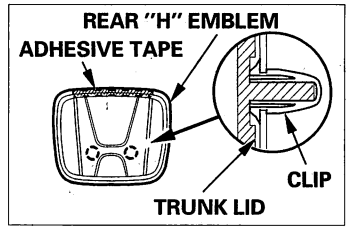

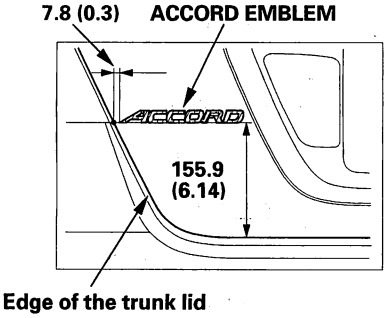

Version: SE (KC ONLY)

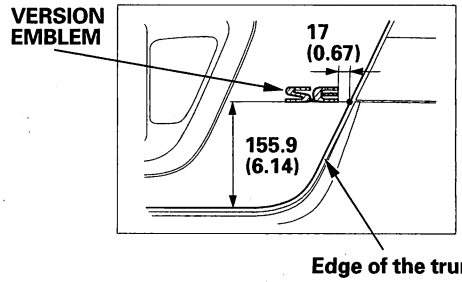

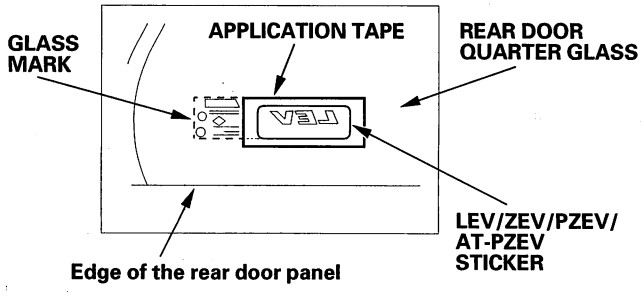

BACK

Protected by AR

Front Inner Fender Replacement

NOTE: Take care not to scratch the body.

1. Remove the front inner fender (A).
   - –1 On the back of the wheel arch, remove the screws (B). If equipped, remove the front splash guard (C).
   - –2 From under the front bumper (D), remove the bolts (E) securing the front bumper, splash shield (F), and front inner fender, and remove the clip (G) securing the front bumper and front inner fender.
   - –3 From the wheel arch, remove the clips (H, I) securing the front inner fender (and splash shield) to the body.
   - –4 Release the hook (J) of the splash shield, then remove the front inner fender.

Fastener Locations

B ▶ : Screw, 4 E ▶ : Bolt, 2 G, H ▷ : Clip, 2 I ▷ : Clip, 7

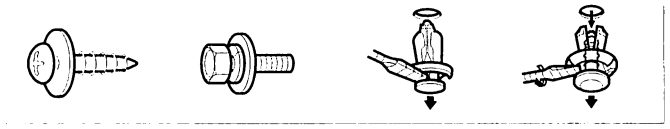

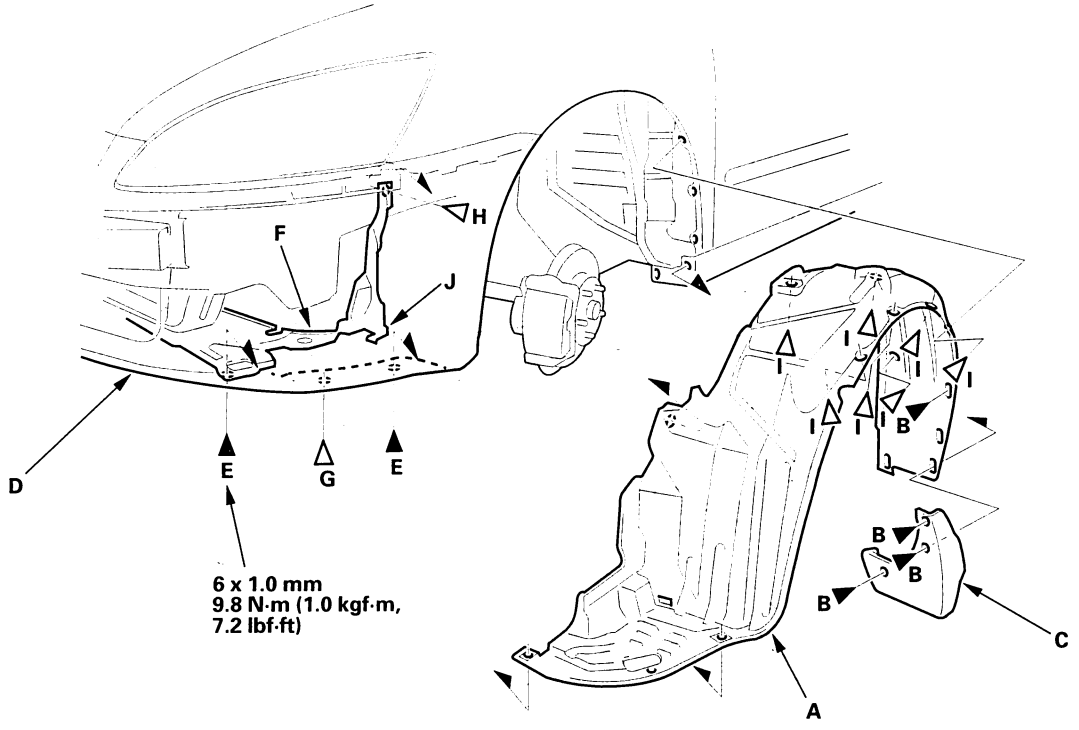

2. Install the inner fender in the reverse order of removal, and check the clips for damage or stress-whitening, and replace them with new ones.

Protected by AR

Splash Shield Replacement

NOTE: Take care not to scratch the body.

1. Remove the splash shield (A).
   - –1 From both wheel arches, remove the bolts (B) and clips (C) securing the front inner fender (D) and splash shield to the body.
   - –2 From under the front bumper (E), remove the clips (F).
   - –3 Pull the splash shield out.

Fastener Locations

B ▶ : Bolt, 2 C, F ▷ : Clip, 9

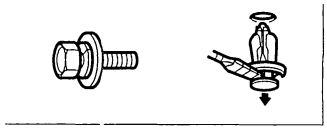

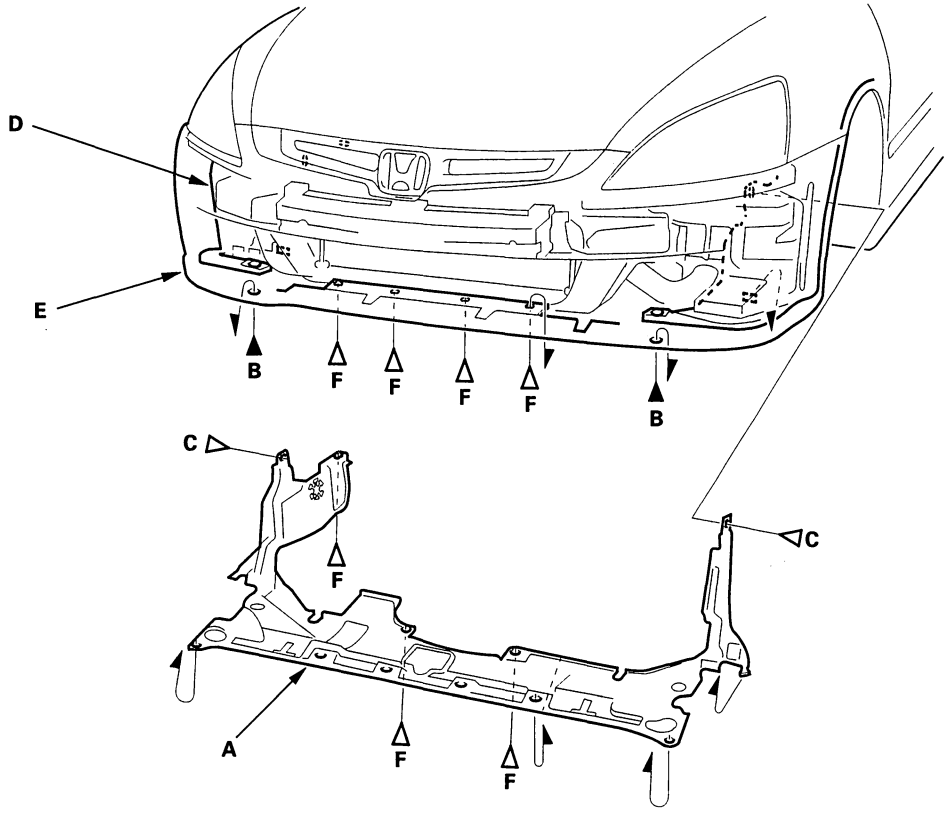

2. Install the splash shield in the reverse order of removal, and check the clips for damage or stress-whitening, and replace them with new ones.

BACK

Protected by AR

Front Fender Fairing Replacement

1. Remove the front inner fender as necessary (see page 20-211).

2. Open the front door. Remove the upper clip (A), and from inside the door, remove the lower clip (A) securing the front fender fairing (B) and front fender (C).

Fastener Locations

A ▷ : Clip, 2

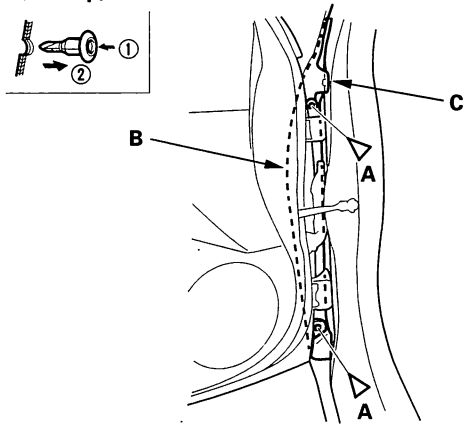

3. From the wheel arch, remove the clip (A), and then release the clip (B).

Fastener Locations

A ▷ : Clip, 1 **B ▷ : Clip, 1**

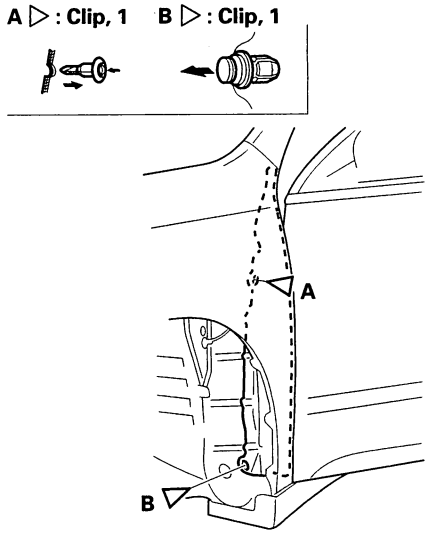

4. Remove the front fender fairing (A).

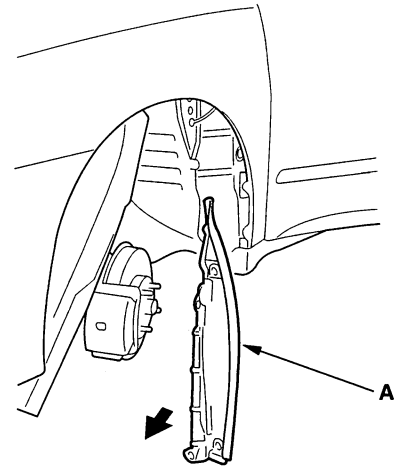

5. Install the fender fairing in the reverse order of removal, and note these items:

- Check the clips for damage or stress-whitening, and replace them with new ones.
- Before installing the clips in the door opening area, install the front fender fairing (A) to the front fender (B) properly as shown.

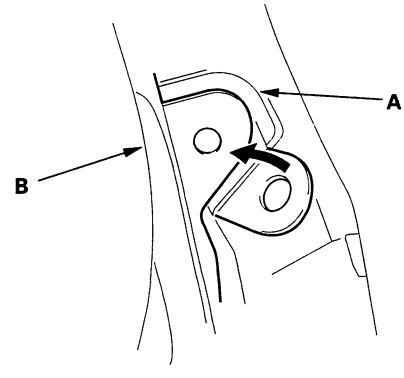

Protected by AR

Fuel Pipe Protector Replacement

1. Remove the clips, then remove the fuel pipe protector (A). Take care not to scratch the body.

Fastener Locations

▷ : **Clip, 3**

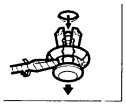

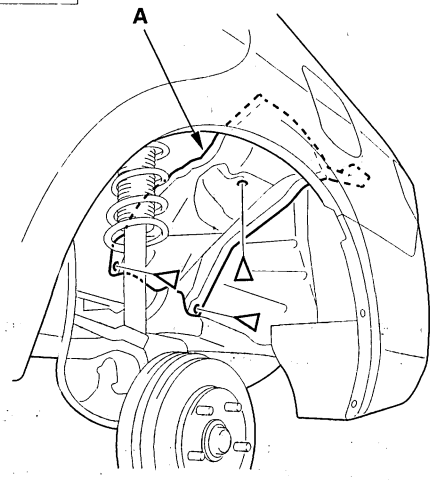

2. Install the protector in the reverse order of removal, and check the clips for damage or stress-whitening, and replace them with new ones.

Rear Inner Fender Replacement

NOTE: Take care not to scratch the body.

1. Remove the screws, then remove rear inner fender (A) from the rear bumper (B) and body.

Fastener Locations

▶ : **Screw, 3**

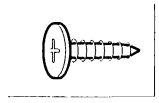

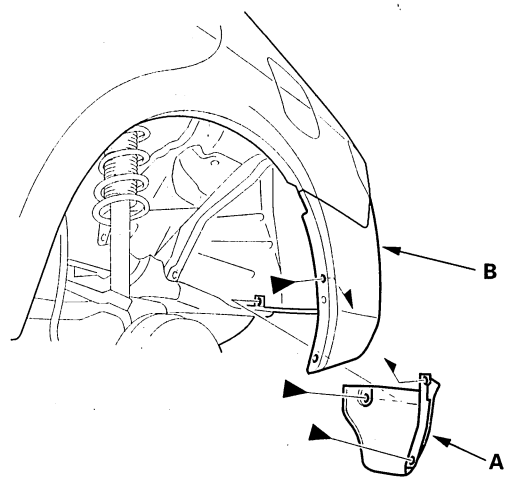

2. Install the inner fender in the reverse order of removal, and check the clips for damage or stress-whitening, and replace them with new ones.

BACK

Protected by AR

Rear Air Outlet Replacement

1. Remove the rear bumper, 2-door (see page 20-188), 4-door (see page 20-189).
2. Detach the hooks (A), then remove the rear air outlet (B). Take care not to scratch the body.

Left

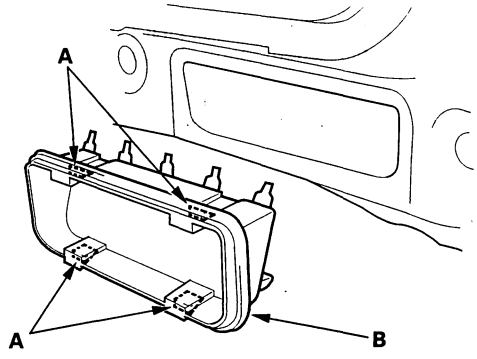

Right (2-door)

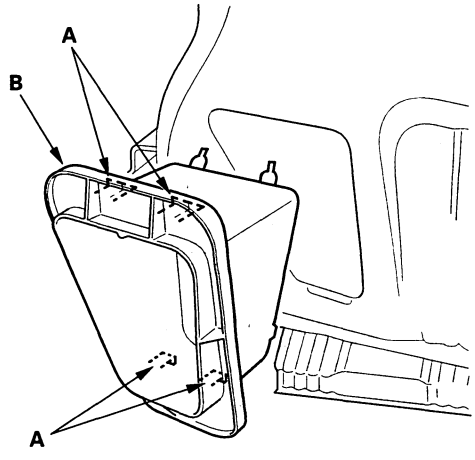

3. Install the air outlet by pushing on the hook portions until the hooks snap into place.

Protected by AR

Component Location Index

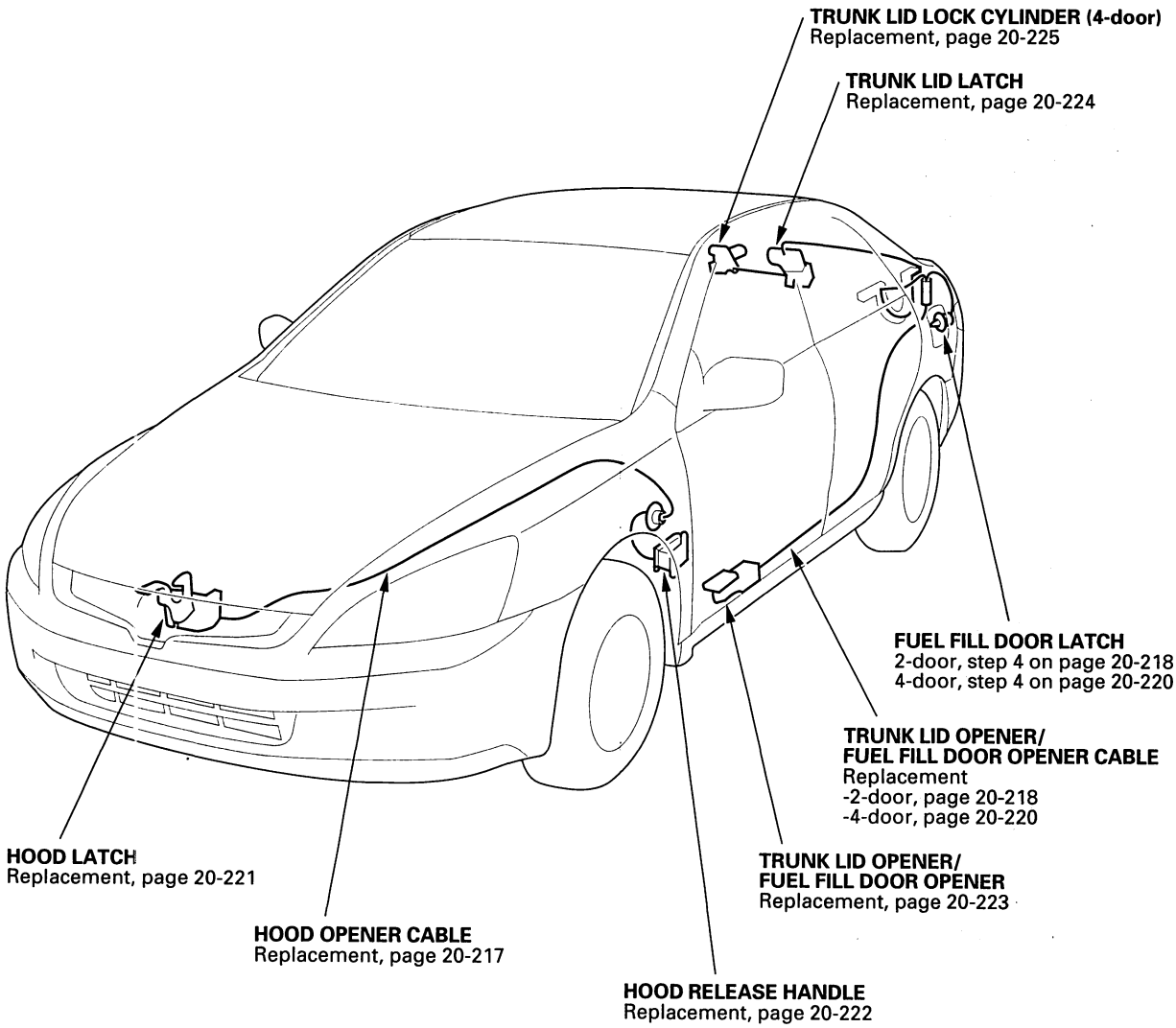

BACK

Protected by AR

Hood Opener Cable Replacement

NOTE:
- Put on gloves to protect your hands.
- Take care not to scratch the body and related parts.

1. Remove these items:

   - Front bumper, 2-door (see page 20-184)
   - Front grille, 4-door (see page 20-197)
   - Inner fender (see page 20-211)
   - Kick panel, 2-door (see page 20-90), 4-door (see page 20-91)

2. Remove the bolts (A) then remove the radiator upper brackets (B).

Fastener Locations

A ▶ : Bolt, 2 F ▷ : Clip, 7

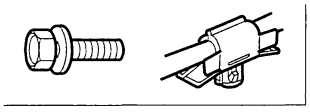

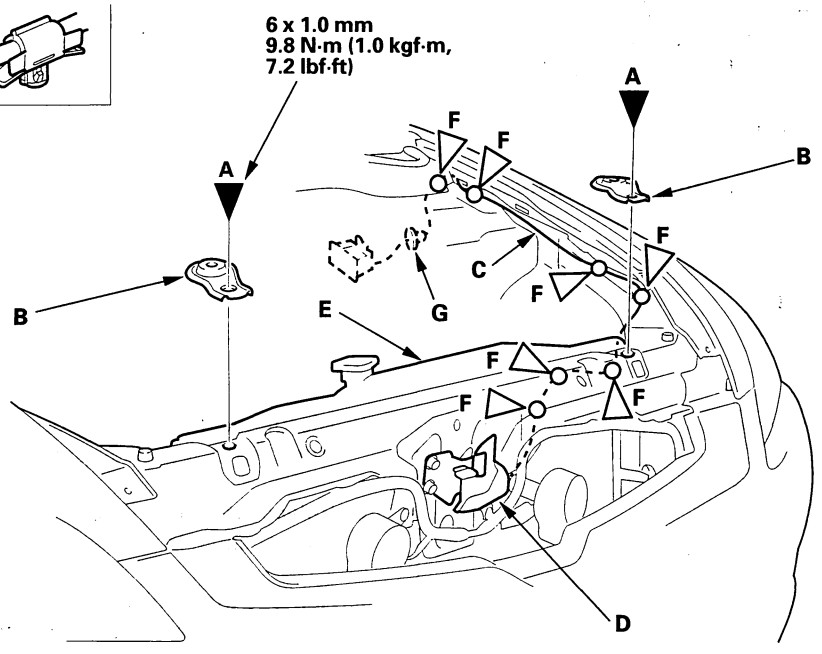

3. Disconnect the hood opener cable (C) from the hood latch (D) (see page 20-221).

4. Move the radiator (E) as necessary. Using a clip remover, detach the clips (F), and remove the grommet (G) from the body, then remove the hood opener cable from the vehicle. Take care not to bend the cable.

5. Install the cable in the reverse order of removal, and check the clips for damage or stress-whitening, and replace them with new ones.

Protected by AR

Trunk Lid Opener Cable/Fuel Fill Door Opener Cable Replacement

2-door

SRS components are located in this area. Review the SRS component locations (see page 23-17) and the precautions and procedures (see page 23-19) before performing repairs or service.

NOTE:
- Put on gloves to protect your hands.
- Take care not to scratch the body and related parts.

1. Remove these items form the left side of the vehicle:
   - Door sill trim (see page 20-90)
   - Side trim panel (see page 20-106)
   - Trunk rear trim panel (see page 20-112)
   - Trunk side trim panel, left side (see page 20-112)
2. Pull the carpet back as necessary.
3. Detach the clip (A) with a clip remover, and release the opener cable (B) from the clip (C).

Fastener Locations

A▷: Clip, 1 C▷: Clip, 1

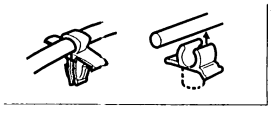

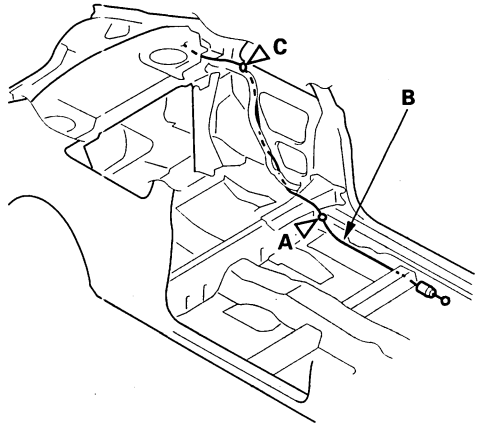

4. Release the fuel fill door/trunk lid opener cable (A) from the clip (B). Remove the fuel fill door latch (C) by turning it 90 °, and detach the opener cable junction box (D) from the body.

Fastener Locations

B▷: Clip, 1 G▷: Clip, 5

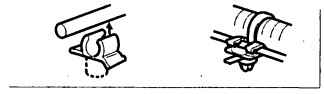

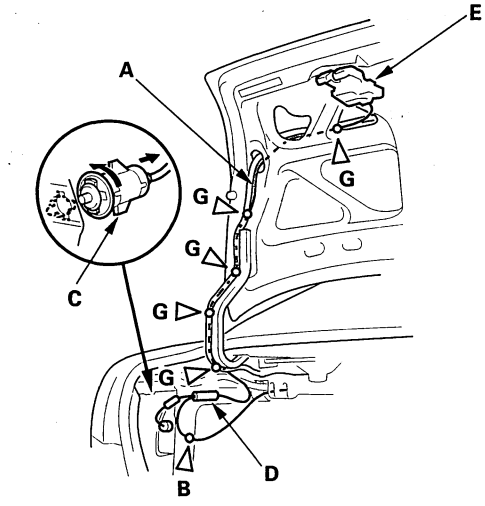

5. Disconnect the trunk lid opener cable from the trunk lid latch (E) (see page 20-224).
6. Release the fuel fill door opener cable/trunk lid opener cable from the clips (G).
7. Remove the trunk lid opener/fuel fill door opener cable from the vehicle. Take care not to bend or kink the cable.

BACK

Protected by AR

8. Install the opener cable in the reverse order of removal, and note these items:

   - Route the opener cable (A) beside the floor wire harness clips (B) correctly.
   - Align the marks (C) on the cable with the cable clips (D) as shown.
   - Check the clips for damage or stress-whitening, and replace them with new ones.

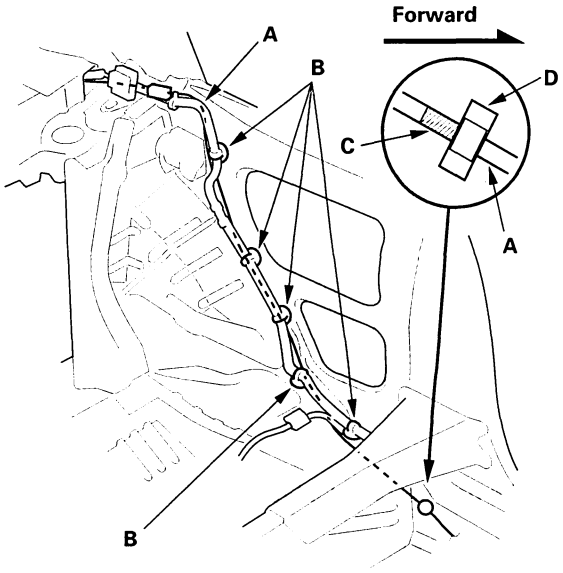

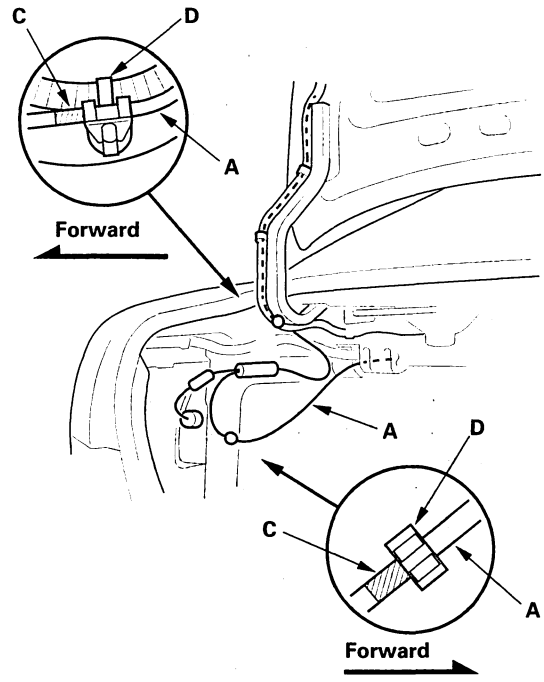

Protected by AR

Trunk Lid Opener Cable/Fuel Fill Door Opener Cable Replacement (cont'd)

4-door

SRS components are located in this area. Review the SRS component locations (see page 23-17) and the precautions and procedures (see page 23-19) before performing repairs or service.

NOTE:
- Put on gloves to protect your hands.
- Take care not to scratch the body and related parts.

1. Remove these items from the left side of the vehicle:
   - Front door sill trim (see page 20-91)
   - Rear door sill trim (see page 20-93)
   - B-pillar lower trim, without side curtain airbags (see page 20-96), with side curtain airbags (see page 20-105)
   - Left rear seat side bolster (see page 20-174)
   - Trunk rear trim panel (see page 20-113)
   - Trunk side trim panel, left side (see page 20-113)
2. Pull back the carpet as necessary.
3. Release the trunk lid opener/fuel fill door opener cable (A) from the clip (B). Remove the cushion tape (C).

Fastener Locations
B ▷ : Clip, 1 C ▷ : Cushion tape, 1

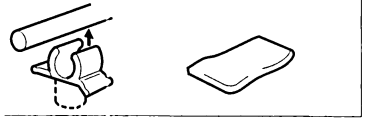

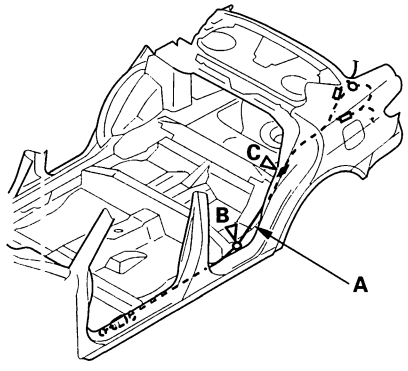

4. Remove the fuel fill door latch (A) by turning it 90 °, and detach the opener cable junction box (B) from the body.

Without power trunk lid latch

Fastener Locations
E ▷ : Clip, 1 F ▷ : Clip, 3



With power trunk lid latch

Fastener Locations
E ▷ : Clip, 1 F ▷ : Clip, 3 G ▷ : Clip, 2

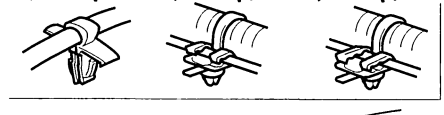

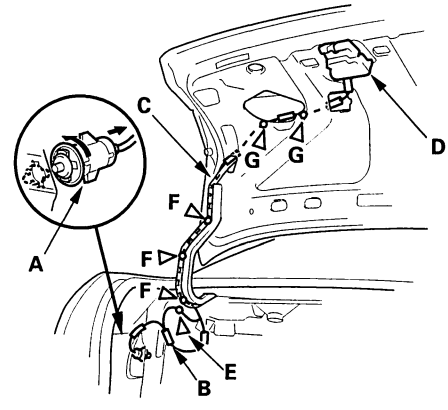

5. Disconnect the trunk lid opener cable (C) from the trunk lid latch (D) (see page 20-224).
6. Using a clip remover, detach clip (E). Release the trunk lid opener/fuel fill door opener cable from the clips (F, G).

BACK

Protected by AR

7. Remove the trunk lid opener/fuel fill door opener cable from the vehicle. Take care not to bend or kink the cable.

8. Install the opener cable in the reverse order of removal, and note these items:

   - Align the marks (A) on the opener cable (B) with the cable clips (C) as shown.
   - Check the clips for damage or stress-whitening, and replace them with new ones.

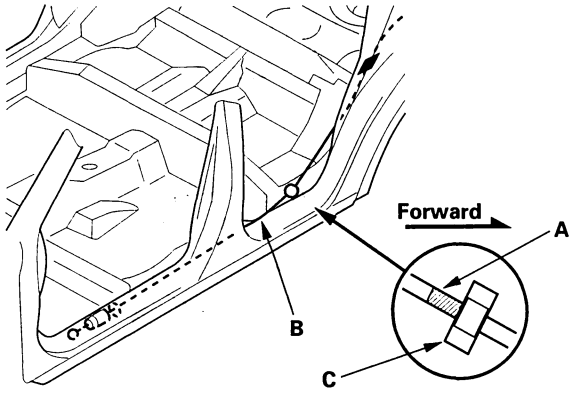

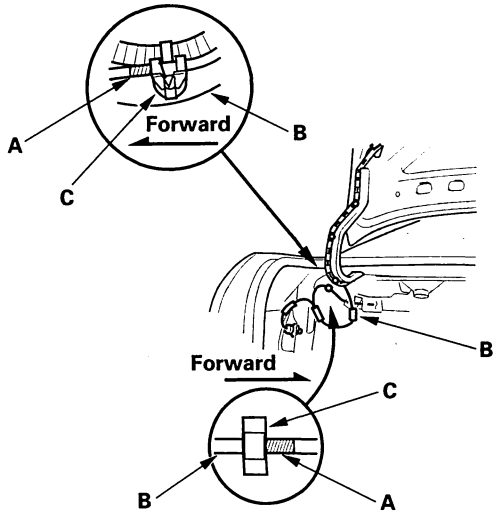

Hood Latch Replacement

1. Remove these items:

   - Front bumper, 2-door (see page 20-184)
   - Front grille, 4-door (see page 20-197)

2. Remove the cover (A) from the hood latch (B).

Fastener Location

▷ : **Clip, 1**

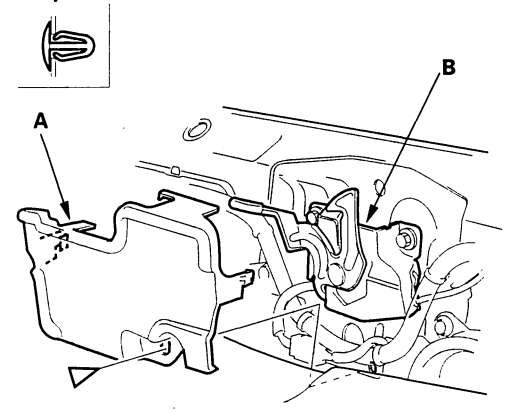

3. If equipped, disconnect the hood latch switch connector (A).

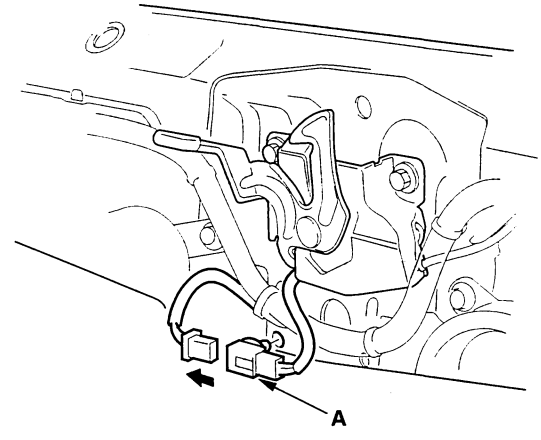

(cont'd)

Protected by AR

Hood Latch Replacement (cont'd)

4. Remove the bolts, then remove the hood latch (A) from the body.

Fastener Locations

▶: Bolt, 3

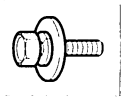

5. Disconnect the hood opener cable (B) from the hood latch. Take care not to bend the cable.

6. Install the latch in the reverse order of removal, and note these items:

- Apply multipurpose grease to each location indicated by the arrows.
- Make sure the hood opener cable is connected properly and hood latch switch connector is plugged in properly (for some models).
- Adjust the hood latch alignment (see step 3 on page 20-190).
- Make sure the hood opens properly and locks securely.

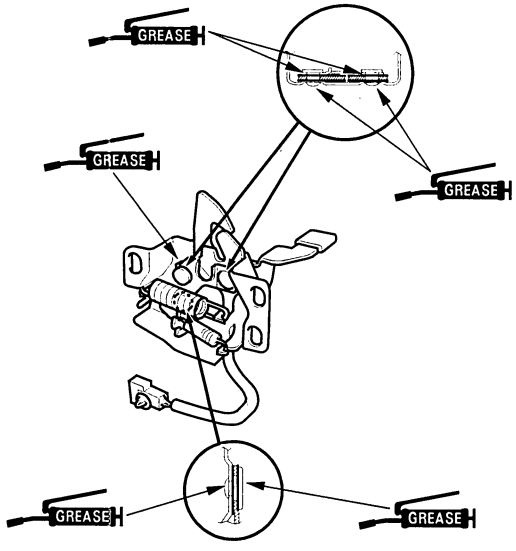

Hood Release Handle Replacement

1. Remove the kick panel, 2-door (see page 20-90), 4-door (see page 20-91).

2. Remove the bolts, then remove the hood release handle (A).

Fastener Locations

▶: Bolt, 2

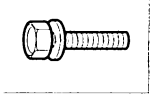

3. Disconnect the hood opener cable (B) from the hood release handle. Take care not to bend the cable.

4. Install the hood release handle in the reverse order of removal, and note these items:

- Make sure the hood opener cable is connected properly.
- Make sure the hood opens properly.

BACK

Protected by AR

Trunk Lid Opener/Fuel Fill Door Opener Replacement

Special Tools Required
KTC trim tool set SOJATP2014

NOTE: Use the appropriate tool from the KTC trim tool set to avoid damage when prying components.

1. Using a trim tool, detach the hooks (A) by prying the front side cap (B), then remove it from the front door sill trim (C), and if equipped, remove the opener lock cylinder (D).

Fastener Location

E ▶ : Bolt, 1

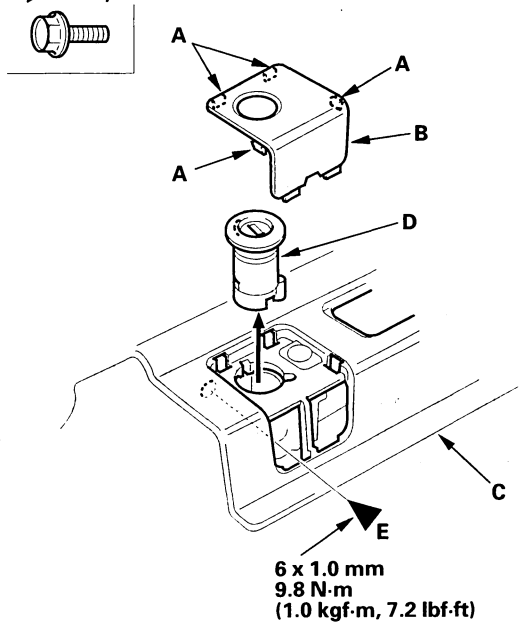

2. Remove the bolt (E).

3. Remove the front door sill trim, 2-door (see page 20-90), 4-door (see page 20-91).

4. Remove the screw, then remove the trunk lid opener/fuel fill door opener (A) from the front door sill trim (B).

Fastener Location

▶ : Screw, 1

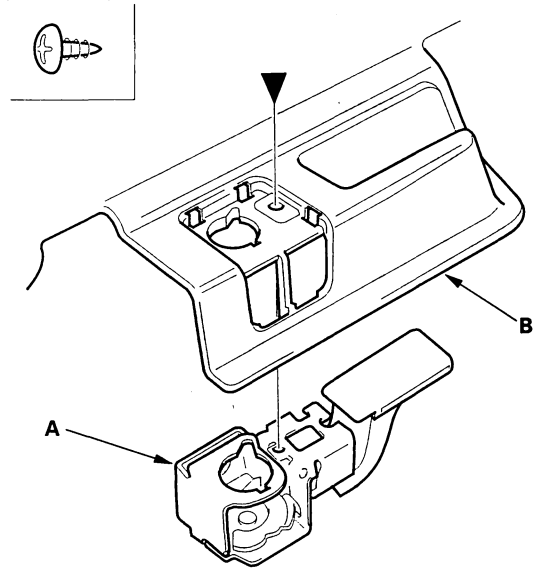

5. Install the opener in the reverse order of removal, and note these items:

- Make sure the opener cable is connected properly.
- Make sure the trunk lid and fuel fill door open properly and lock securely.

Protected by AR

Trunk Lid Latch Replacement

1. 4-door: Disconnect the cylinder rod from the lock cylinder (see page 20-225).

2. Disconnect the trunk lid opener cable (A) and trunk lid latch switch connector (B). If equipped with a power trunk lid latch, detach the trunk lid latch switch connector from the trunk lid. Take care not to bend the opener cable.

With power trunk lid latch

Fastener Locations

▶ : Bolt, 2

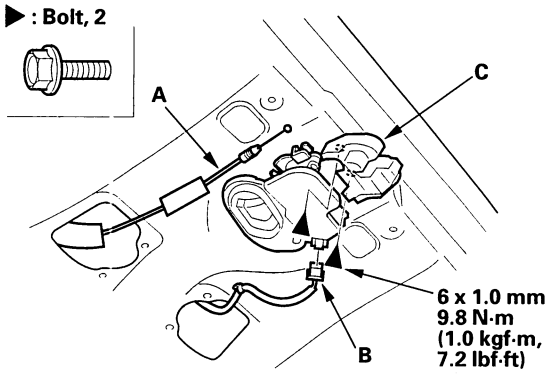

Without power trunk lid latch

Fastener Locations

▶ : Bolt, 2

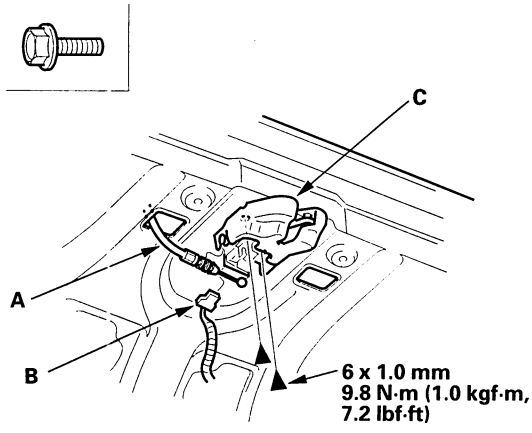

3. Remove the bolts from the trunk lid latch (C).

4. Pull the trunk lid latch (A) out, and on 4-door, disconnect the cylinder rod (B) from the trunk lid latch. Take care not to bend the cylinder rod.

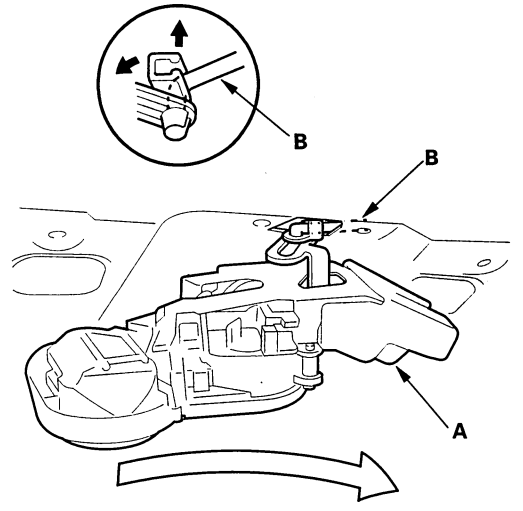

5. Install the latch in the reverse order of removal, and note these items:

- Make sure the connector is plugged in properly and the opener cable is connected properly.
- Make sure the trunk lid opens properly and locks securely.

BACK

Protected by AR

Trunk Lid Lock Cylinder Replacement

4-door

1. Disconnect the cylinder rod (A), and if equipped, disconnect the cylinder switch connector (B).

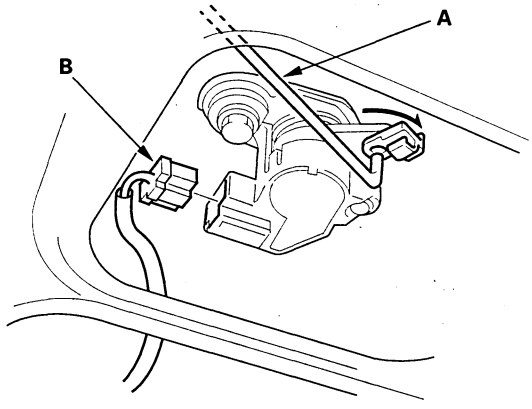

2. Remove the bolt securing the lock cylinder (A). Then turn the trunk lid lock cylinder clockwise, and remove it.

Fastener Location

▶ : Bolt, 1

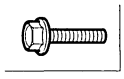

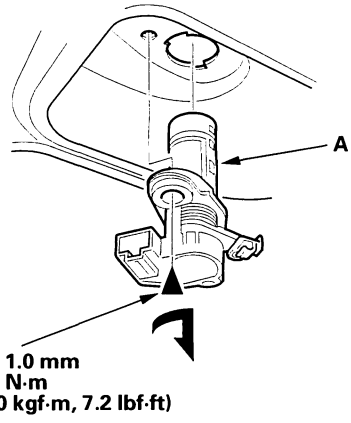

3. Install the lock cylinder in the reverse order of removal, and note these items:

- Make sure the cylinder switch connector is plugged in properly (if equipped) and the cylinder rod is connected properly.
- Make sure the trunk lid opens properly and locks securely.

Protected by AR

Middle Cross-member Gusset Replacement

2-door

NOTE: Take care not to scratch the body.

1. Remove the side trim panel (see page 20-106).
2. Pull back the rear part of the carpet, as necessary.
3. Detach the floor wire harness clip (A), and remove seat cushion clip (B).

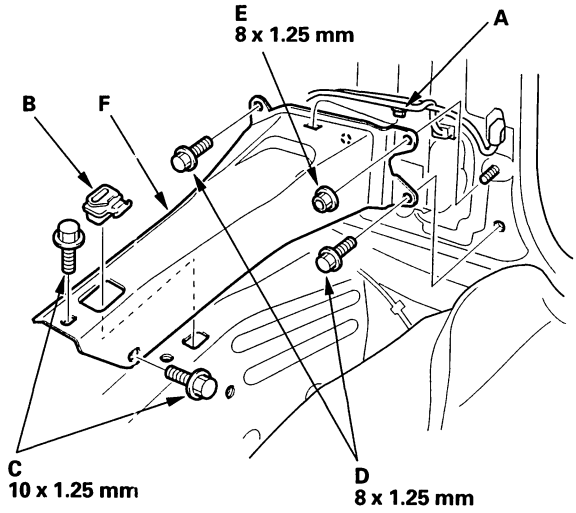

4. Remove the bolts (C, D) and nut (E), then remove the middle cross-member gusset (F).
5. Install the gusset in the reverse order of removal. When installing the mounting bolts for the middle cross-member gusset (A), torque the mounting hardware in the sequence shown. If the mounting bolts are not torqued in this sequence, damage to the quarter panel will occur.

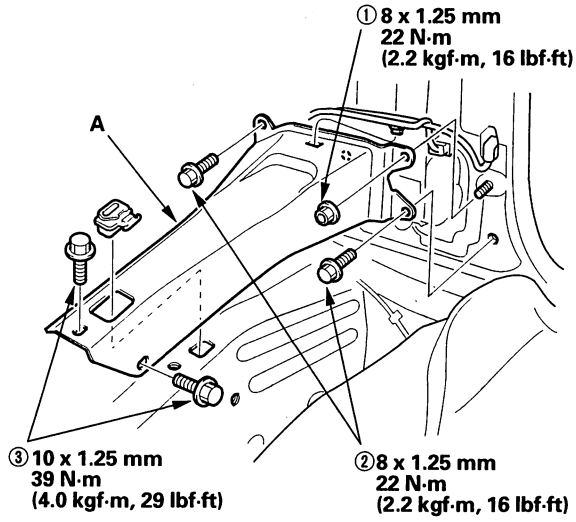

BACK

Protected by AR

Frame Stiffener Replacement

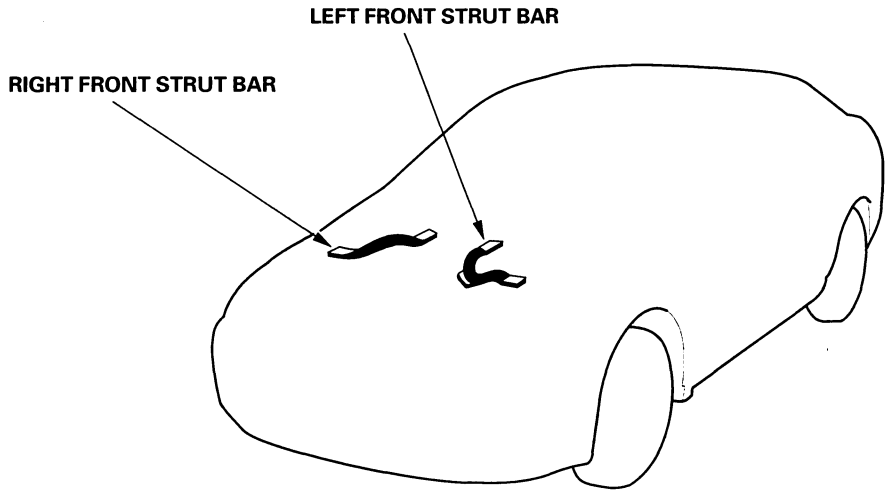

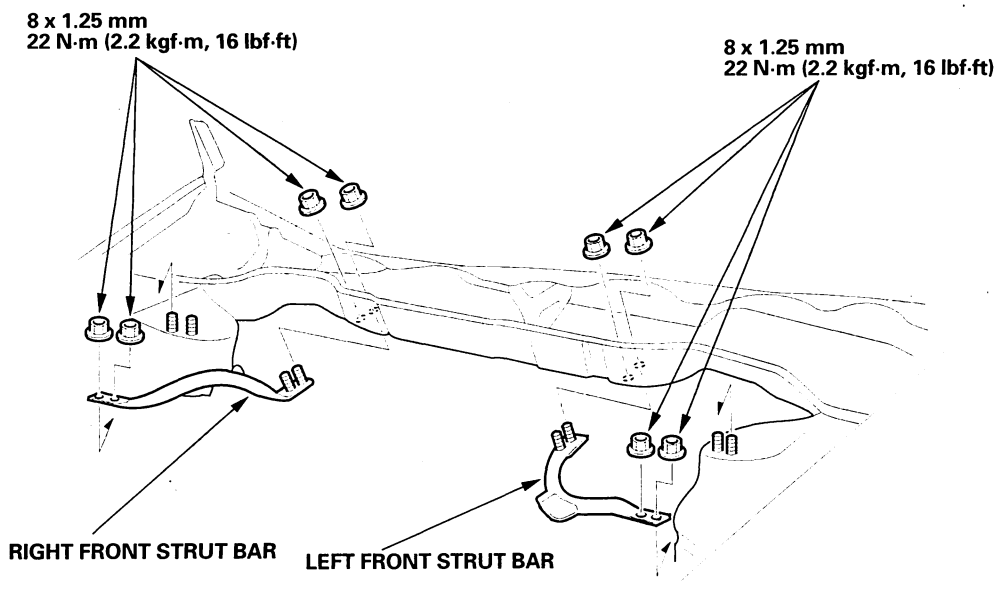

Protected by AR

Subframe Replacement

Front Subframe Torque

After removing the subframe mounting bolts, front suspension subframe middle mounting rubber mounting bolts, front suspension subframe rear bracket mounting bolts, and front suspension subframe rear damper front mounting bolt, be sure to replace them with new ones.

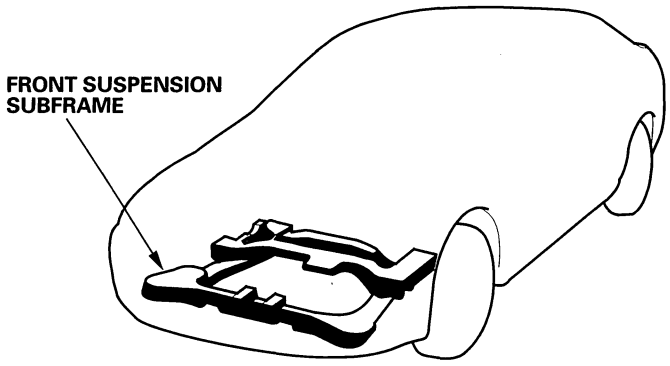

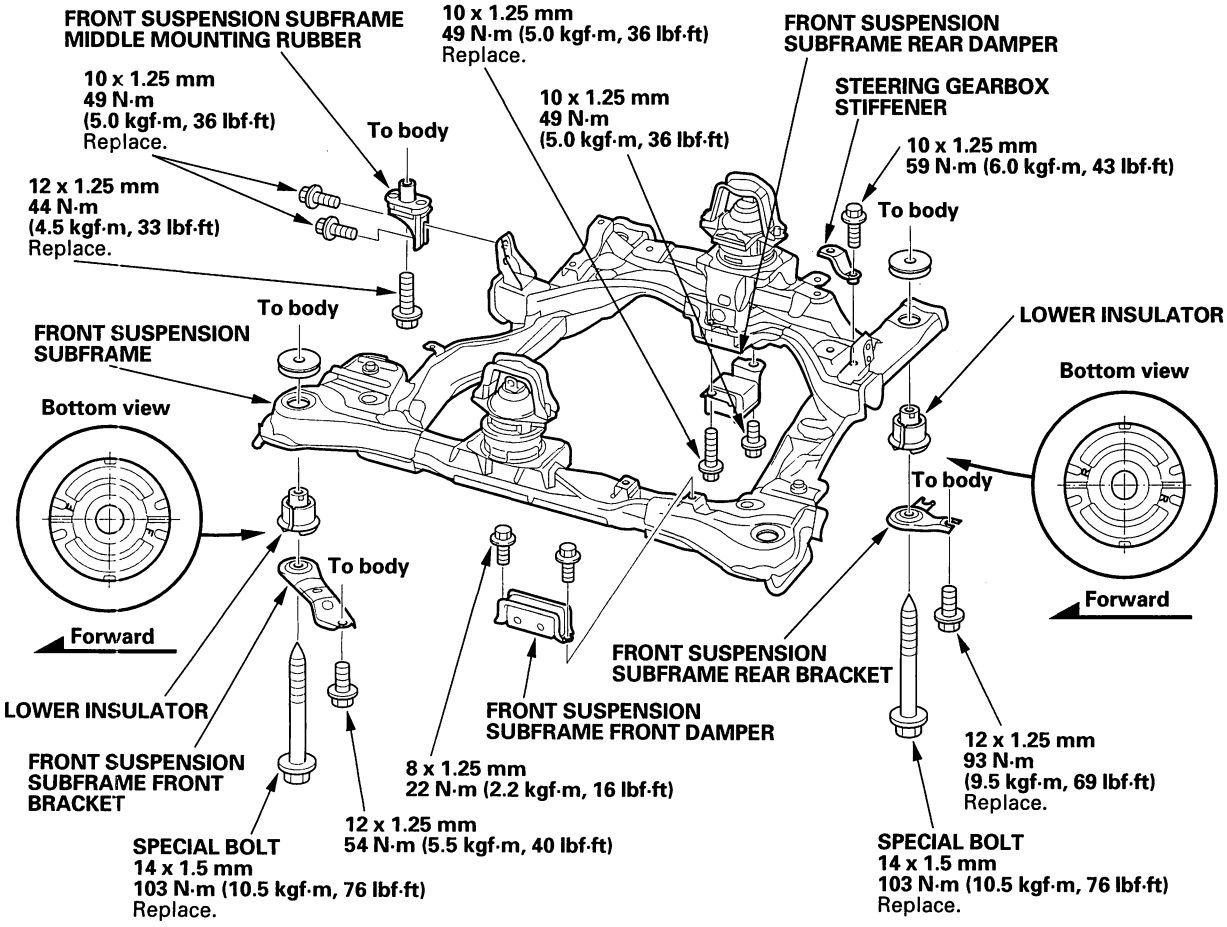

BACK

Protected by AR

Front Subframe Alignment

NOTE:
- Before removing the subframe, make an alignment mark for the front suspension subframe rear bracket as shown.
- When installing, align both installation reference holes in the subframe with both reference holes in the body using a screwdriver or tapered punch as a guide.
- After mounting the subframe and brackets loosely, align the reference marks with the edge of the rear brackets then tighten all bolts.

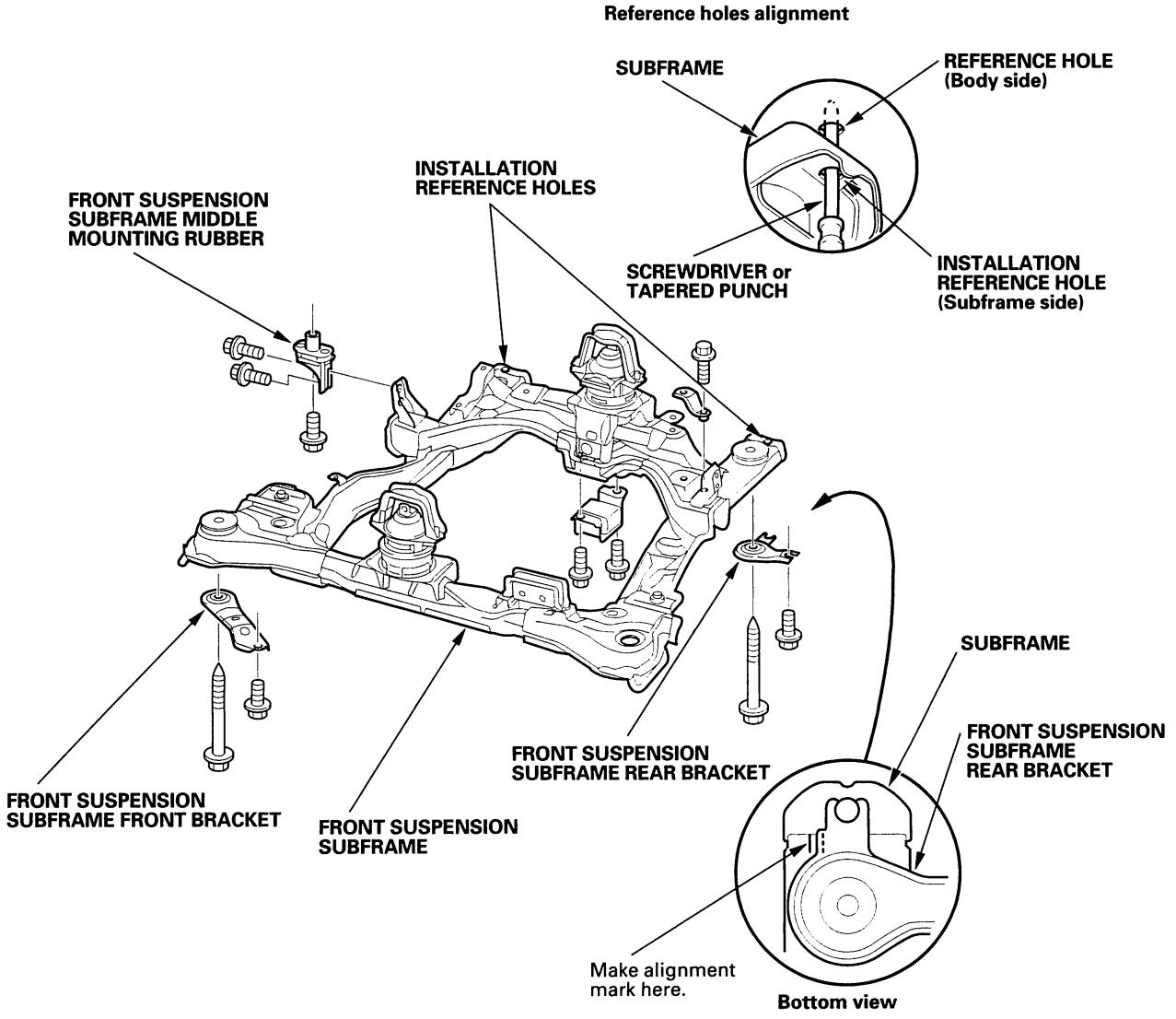

(cont'd)

Protected by AR

Subframe Replacement (cont'd)

Rear Subframe Torque

After removing the subframe mounting bolts, be sure to replace them with new ones.

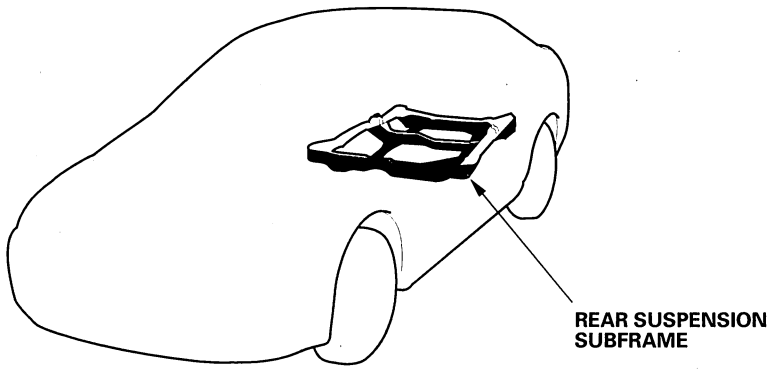

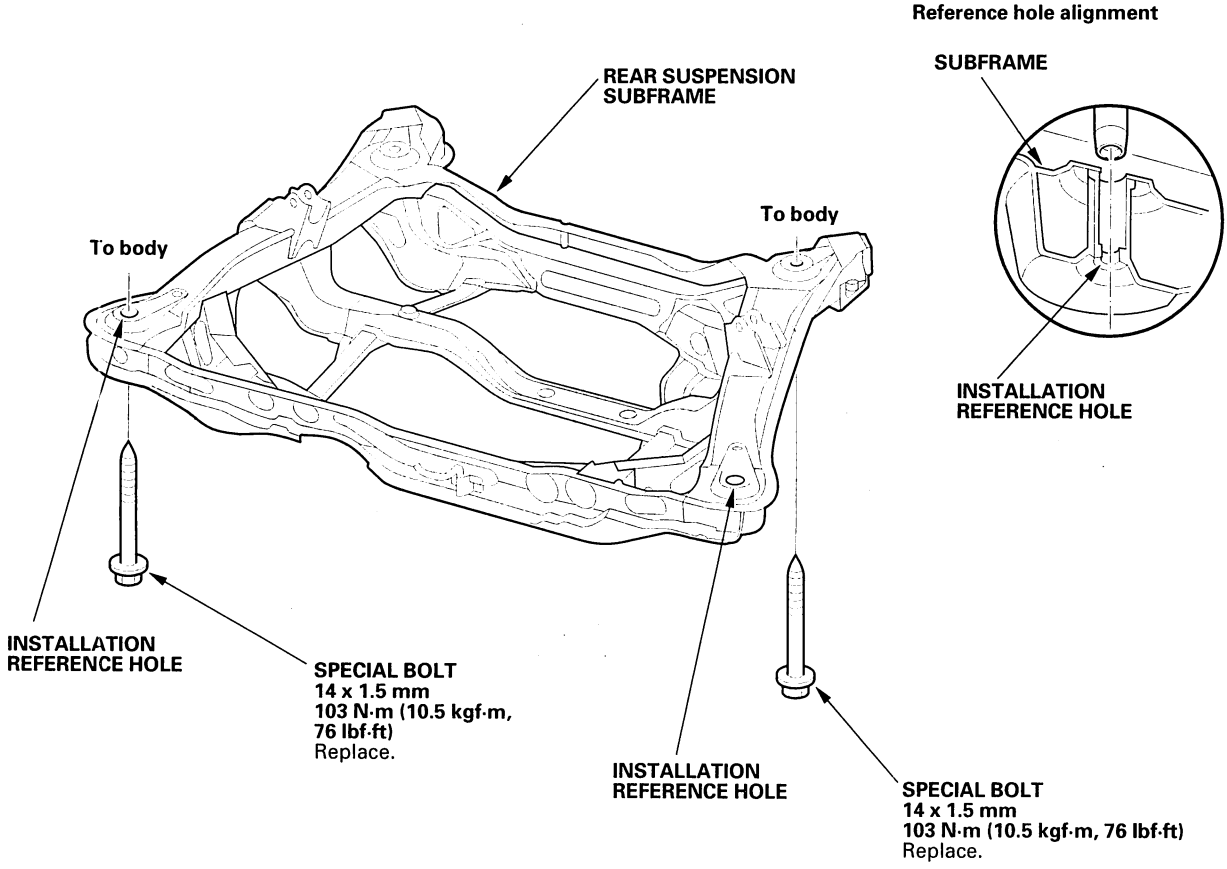

BACK

Protected by AR

Protected by AR

Frame Repair Chart

2-door Top View

Unit: mm (in.)
ø: Inner diameter

a	For front subframe ø16 (0.63)		e	For front upper arm ø13 (0.51)	
b1	For transmission mount ø13 (0.51)	Left side	f	For front upper arm ø13 (0.51)	
b2	For transmission mount ø15 (0.59)	Left side	g	For front subframe ø15 (0.59)	
b3	For transmission mount ø13 (0.51)	Left side	h	For front subframe ø16 (0.63)	
c1	For engine side mount ø15 (0.59)	Right side	i	Locating hole ø25 (0.98)	
c2	For engine side mount ø15 (0.59)	Right side	j	Locating hole ø25 (0.98)	
d	Front damper center ø50 (1.97)		k	Locating hole ø15 (0.59)	

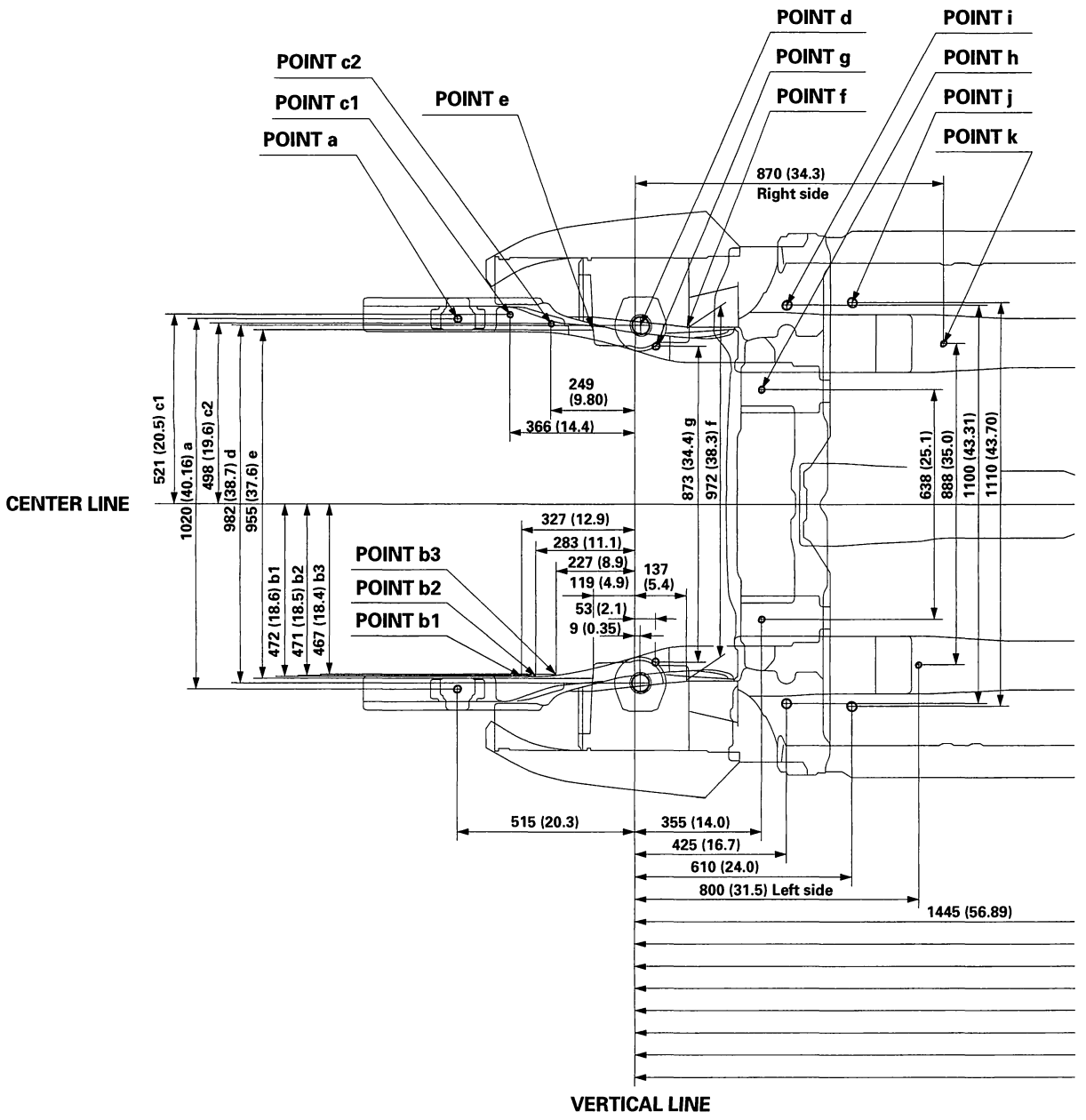

BACK

Protected by AR

l	Locating hole ø25 (0.98)	p	For rear subframe ø17 (0.67)
m	Locating hole ø20 (0.79)	q	Locating hole ø15 (0.59)
n	For rear subframe ø14.4 (0.57)	r	Locating hole ø25 (0.98)
o	Rear damper center ø52 (2.05)	s	Locating hole ø11 (0.43)

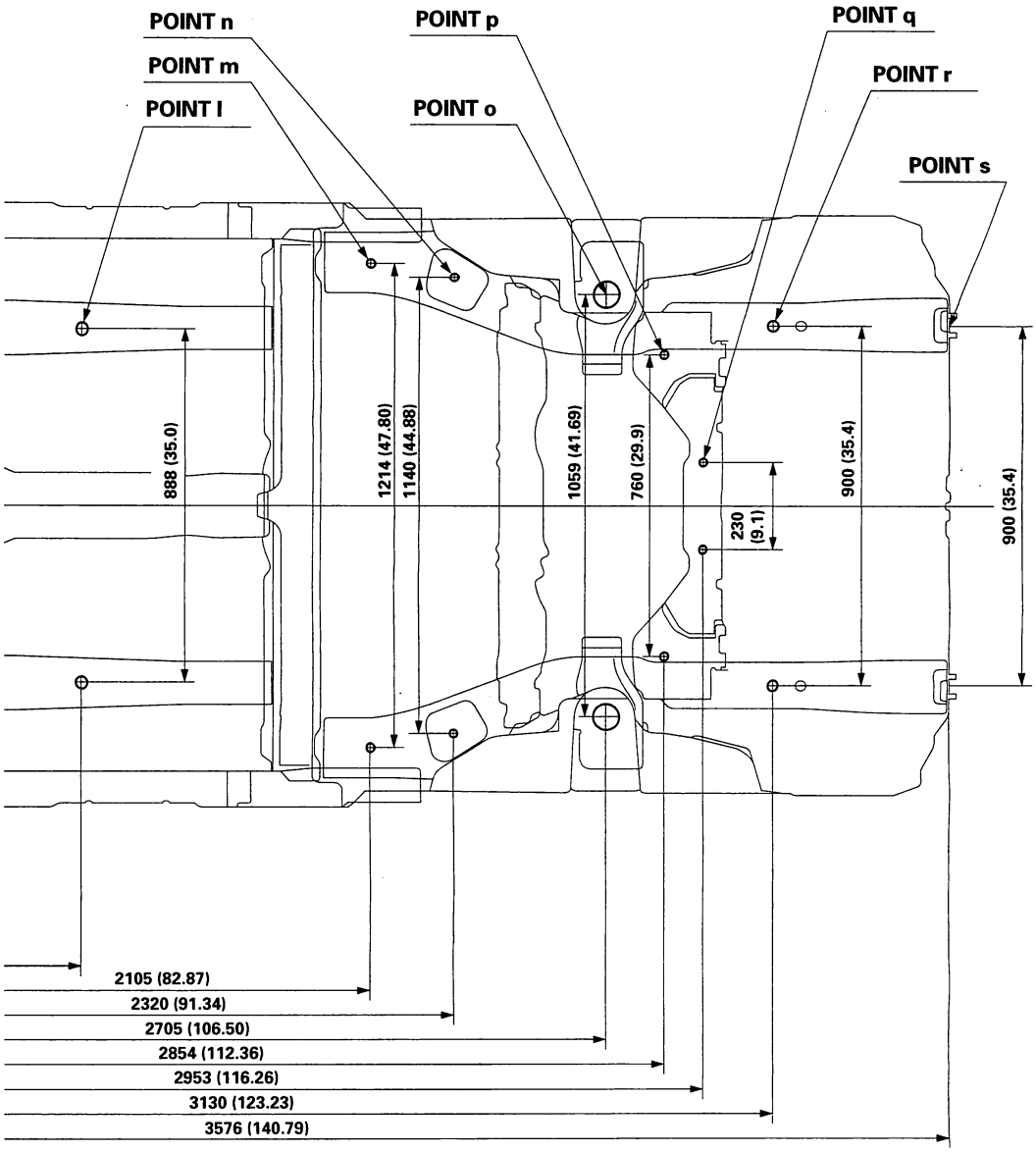

(cont'd)

Protected by AR

Frame Repair Chart (cont'd)

4-door Top View

Unit: mm (in.)
ø: Inner diameter

a	For front subframe ø16 (0.63)		e	For front upper arm ø13 (0.51)
b1	For transmission mount ø13 (0.51) Left side		f	For front upper arm ø13 (0.51)
b2	For transmission mount ø15 (0.59) Left side		g	For front subframe ø15 (0.59)
b3	For transmission mount ø13 (0.51) Left side		h	For front subframe ø16 (0.63)
c1	For engine side mount ø15 (0.59) Right side		i	Locating hole ø25 (0.98)
c2	For engine side mount ø15 (0.59) Right side		j	Locating hole ø25 (0.98)
d	Front damper center ø50 (1.97)		k	Locating hole ø15 (0.59)

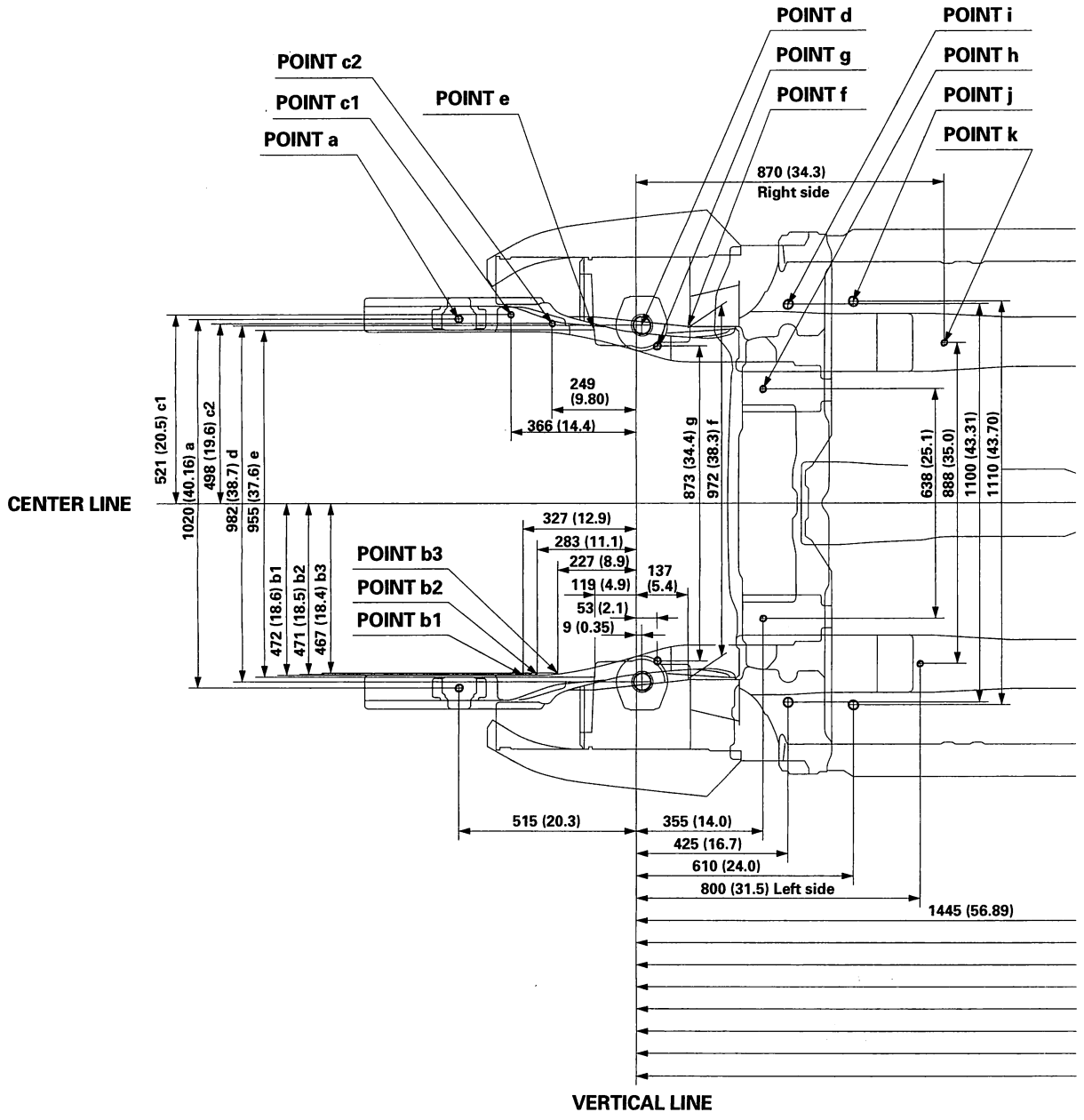

BACK

Protected by AR

l	Locating hole ø25 (0.98)	p	For rear subframe ø17 (0.67)
m	Locating hole ø20 (0.79)	q	Locating hole ø15 (0.59)
n	For rear subframe ø14.4 (0.57)	r	Locating hole ø25 (0.98)
o	Rear damper center ø52 (2.05)	s	Locating hole ø11 (0.43)

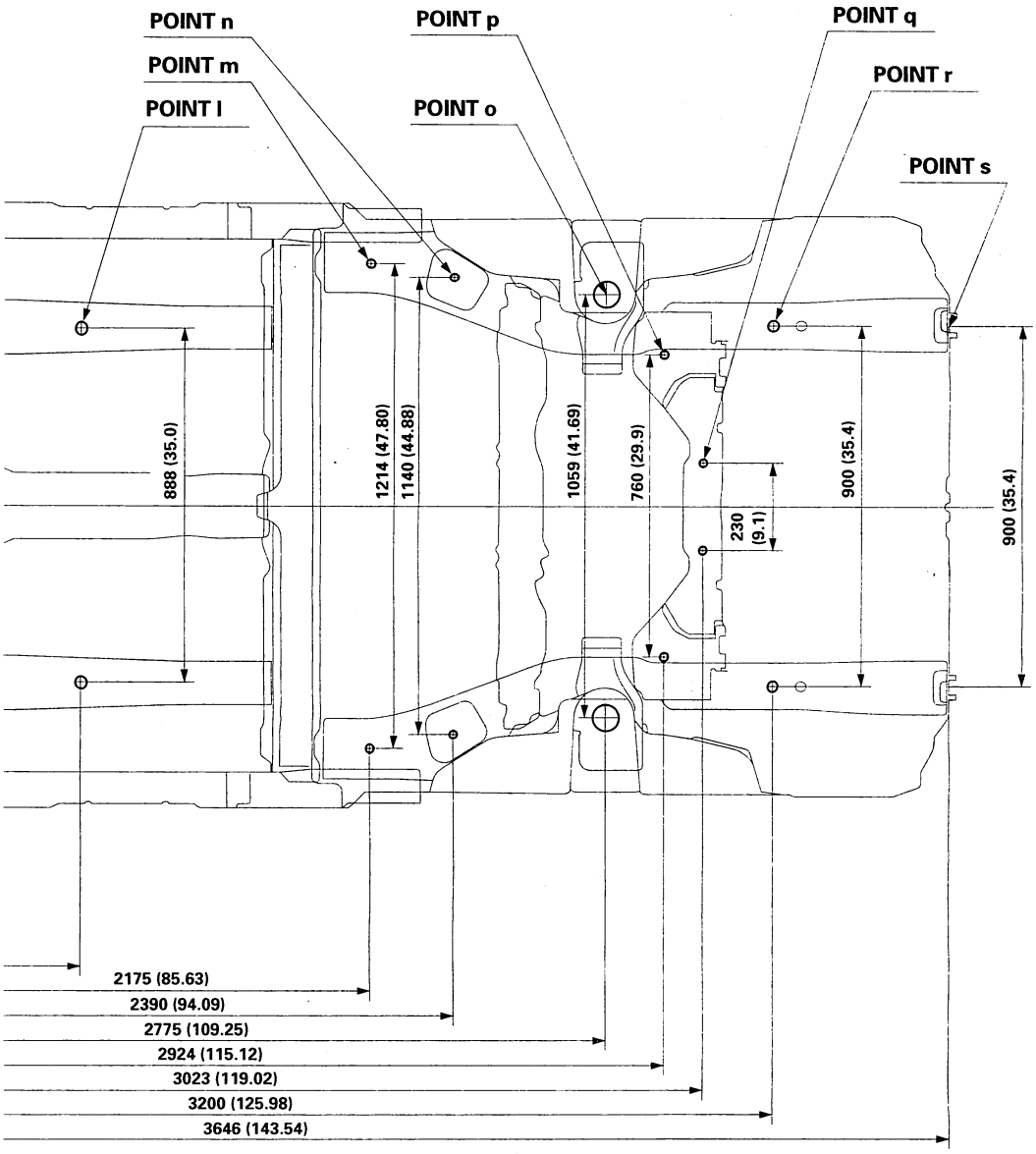

(cont'd)

BACK

Protected by AR

Frame Repair Chart (cont'd)

Side View

Unit: mm (in.)
ø: Inner diameter

a	For subframe ø16 (0.63)		e	For upper arm ø13 (0.51)
b1	For transmission mount ø13 (0.51) Left side		f	For upper arm ø13 (0.51)
b2	For transmission mount ø15 (0.59) Left side		g	For subframe ø15 (0.59)
b3	For transmission mount ø13 (0.51) Left side		h	For subframe ø16 (0.63)
c1	For engine side mount ø15 (0.59) Right side		i	Locating hole ø25 (0.98)
c2	For engine side mount ø15 (0.59) Right side		j	Locating hole ø25 (0.98)
d	Damper center ø50 (1.97)		k	Locating hole ø15 (0.59)

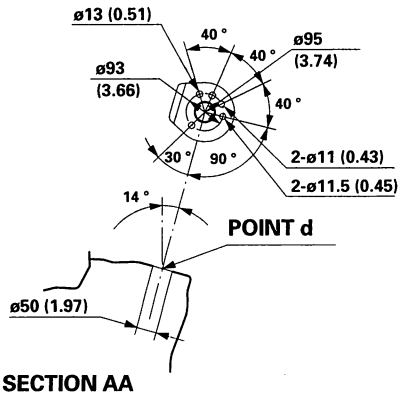

SECTION AA

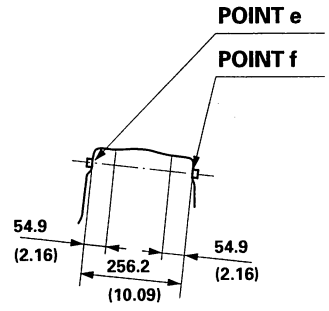

SECTION BB

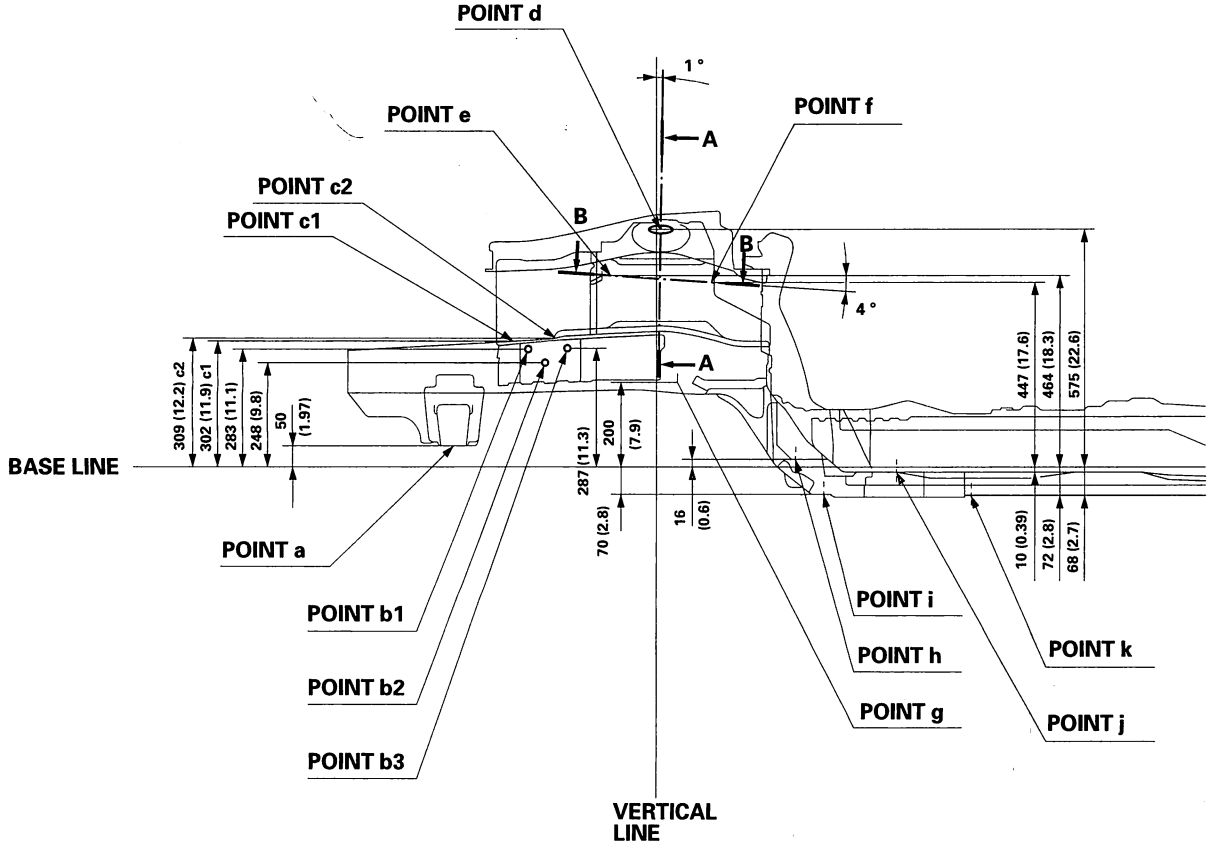

BACK

Protected by AR

l	Locating hole ø25 (0.98)	p	For subframe ø17 (0.67)
m	Locating hole ø20 (0.79)	q	Locating hole ø15 (0.59)
n	For subframe ø14.4 (0.57)	r	Locating hole ø25 (0.98)
o	Rear damper center ø52 (2.05)	s	Locating hole ø11 (0.43)

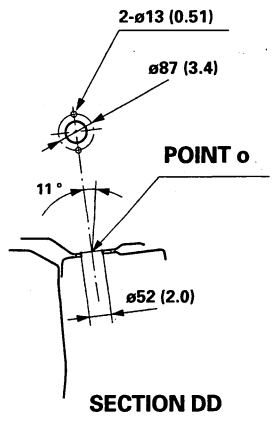

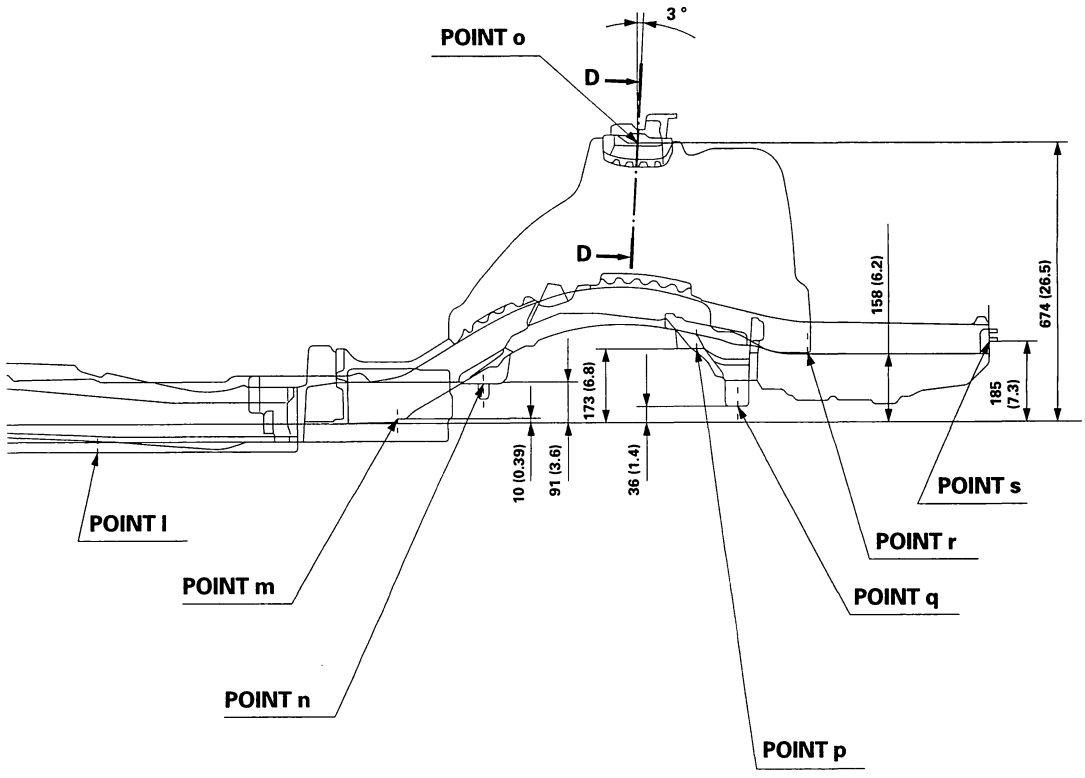

Protected by AR

SUPPLEMENTAL RESTRAINT SYSTEM (SRS) (If HVAC maintenance is required)

The Accord SRS includes a driver's airbag in the steering wheel hub, a passenger's airbag in the dashboard above the glove box, seat belt tensioners in the front seat belt retractors, side curtain airbags in the sides of the roof, and side airbags in the front seat-backs. Information necessary to safely service the SRS is included in this Service Manual. Items marked with an asterisk (*) on the contents page include or are located near SRS components. Servicing, disassembling, or replacing these items require special precautions and tools, and should be done only by an authorized Honda dealer.

- To avoid rendering the SRS inoperative, which could lead to personal injury or death in the event of a severe frontal or side collision, all SRS service work must be performed by an authorized Honda dealer.
- Improper service procedures, including incorrect removal and installation of the SRS, could lead to personal injury caused by unintentional deployment of the airbags and/or side airbags.
- Do not bump or impact the SRS unit, front impact sensors, or side impact sensors when the ignition switch is ON (II), or for at least 3 minutes after the ignition switch is turned OFF; otherwise, the system may fail in a collision, or the airbags may deploy.
- SRS electrical connectors are identified by yellow color coding. Related components are located in the steering column, front console, dashboard, dashboard lower panel, in the dashboard above the glove box, in the front seats, in the roof side, and around the floor. Do not use electrical test equipment on these circuits.

BACK

Protected by AR

HVAC (Heating, Ventilation, and Air Conditioning)

HVAC (Heating, Ventilation, and Air Conditioning)

Special Tools 21-2

Heating/Air Conditioning

Component Location Index 21-3
A/C Service Tips and Precautions 21-8
A/C Refrigerant Oil Replacement 21-8
General Troubleshooting Information 21-11
DTC Troubleshooting Index 21-12
Symptom Troubleshooting Index 21-13
System Description 21-16
Circuit Diagram 21-20
DTC Troubleshooting 21-22
Recirculation Control Motor Circuit Troubleshooting 21-33
Audio-HVAC Display Panel Power and Ground Circuit Troubleshooting 21-35
A/C Condenser Fan Circuit Troubleshooting 21-36
Radiator and A/C Condenser Fan Common Circuit Troubleshooting 21-37
A/C Compressor Clutch Circuit Troubleshooting 21-38
A/C Pressure Switch Circuit Troubleshooting 21-41
Air Mix Control Motor Test 21-43
Air Mix Control Motor Replacement 21-44
Mode Control Motor Test 21-45
Mode Control Motor Replacement 21-46
Recirculation Control Motor Test 21-47
Recirculation Control Motor Replacement 21-48
Evaporator Temperature Sensor Test 21-49
Evaporator Temperature Sensor Replacement 21-49
Power Transistor Test 21-50
Dust and Pollen Filter Replacement 21-51
Blower Unit Removal and Installation 21-52
Blower Unit Component Replacement 21-53
* Heater Unit/Core Replacement 21-53
Heater Valve Cable Adjustment 21-56
Evaporator Core Replacement 21-57
A/C Compressor Replacement 21-59
A/C Compressor Clutch Check 21-60
A/C Compressor Clutch Overhaul 21-61
A/C Compressor Relief Valve Replacement 21-62
A/C Condenser Replacement 21-62
Receiver/Dryer Desiccant Replacement 21-64
Refrigerant Recovery 21-65
System Evacuation 21-66
System Charging 21-67
Refrigerant Leak Test 21-68
A/C System Test 21-69

Climate Control

Component Location Index 21-72
General Troubleshooting Information 21-77
DTC Troubleshooting Index 21-82
Symptom Troubleshooting Index 21-83
System Description 21-86
Circuit Diagram 21-92
DTC Troubleshooting 21-94
Recirculation Control Motor Circuit Troubleshooting 21-117
Climate Control Power and Ground Circuit Troubleshooting 21-119
A/C Pressure Switch Circuit Troubleshooting 21-120
In-car Temperature Sensor Test 21-122
In-car Temperature Sensor Replacement 21-122
Outside Air Temperature Sensor Test 21-123
Outside Air Temperature Sensor Replacement 21-123
Sunlight Sensor Test 21-124
Sunlight Sensor Replacement 21-124
Passenger's Air Mix Control Motor Test 21-125
Passenger's Air Mix Control Motor Replacement 21-126

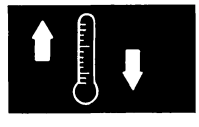

Protected by AR

Special Tools

Ref. No.	Tool Number	Description	Qty
①	07SAZ-001000A	Backprobe Set	2

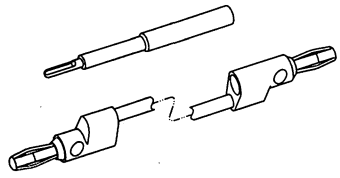

①

BACK

Protected by AR

Component Location Index

4-door

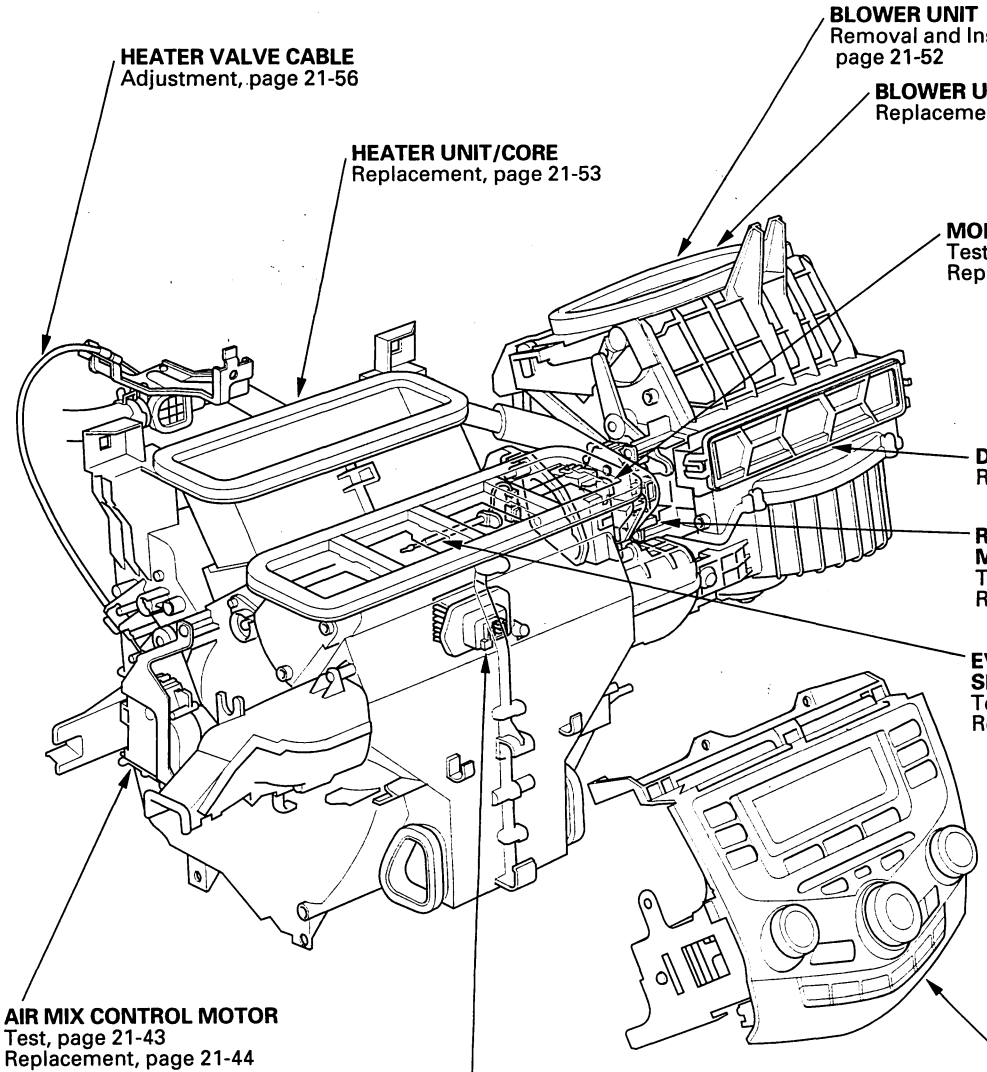

(cont'd)

Protected by AR

Component Location Index (cont'd)

2-door

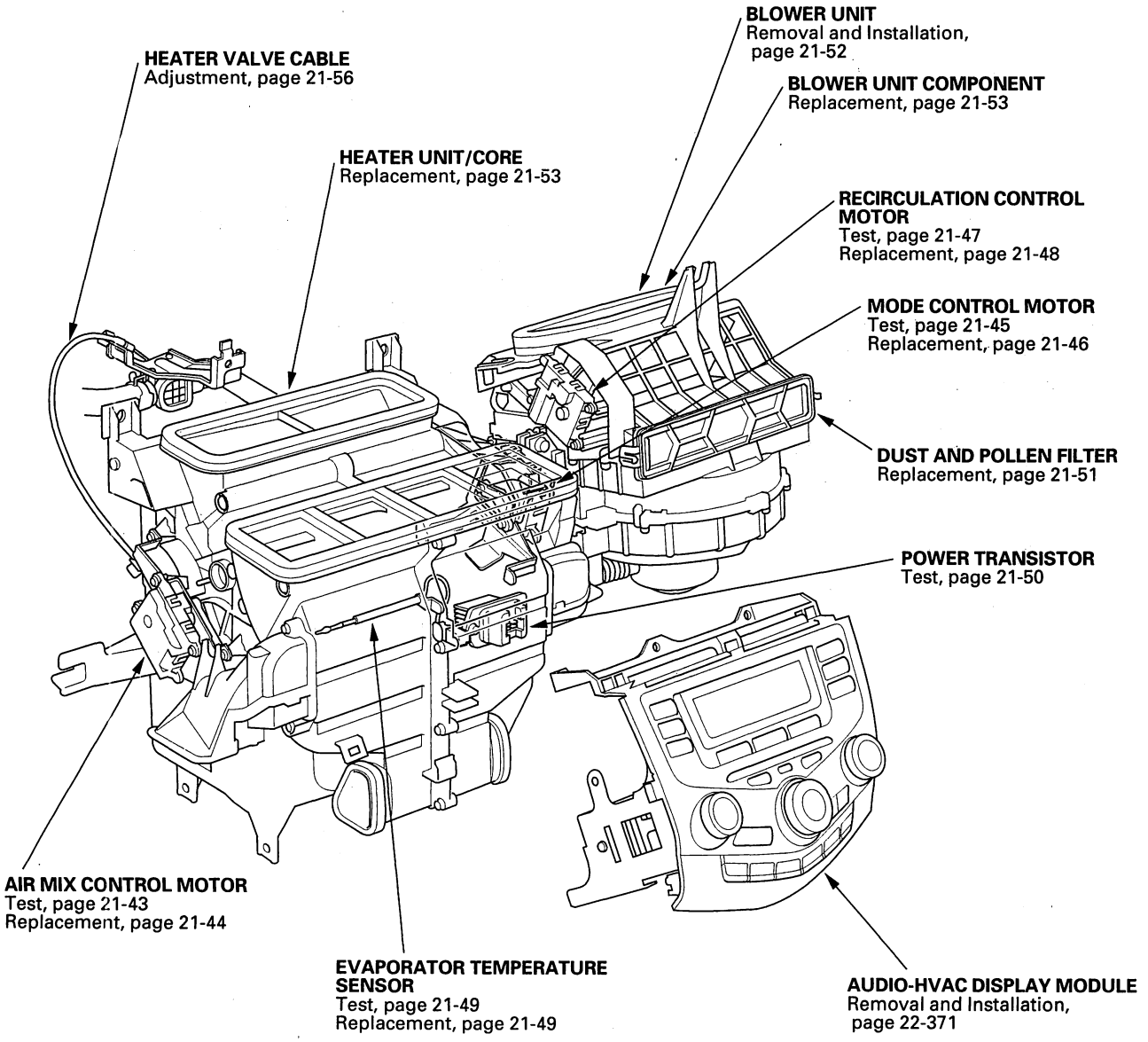

BACK

Protected by AR

4-door

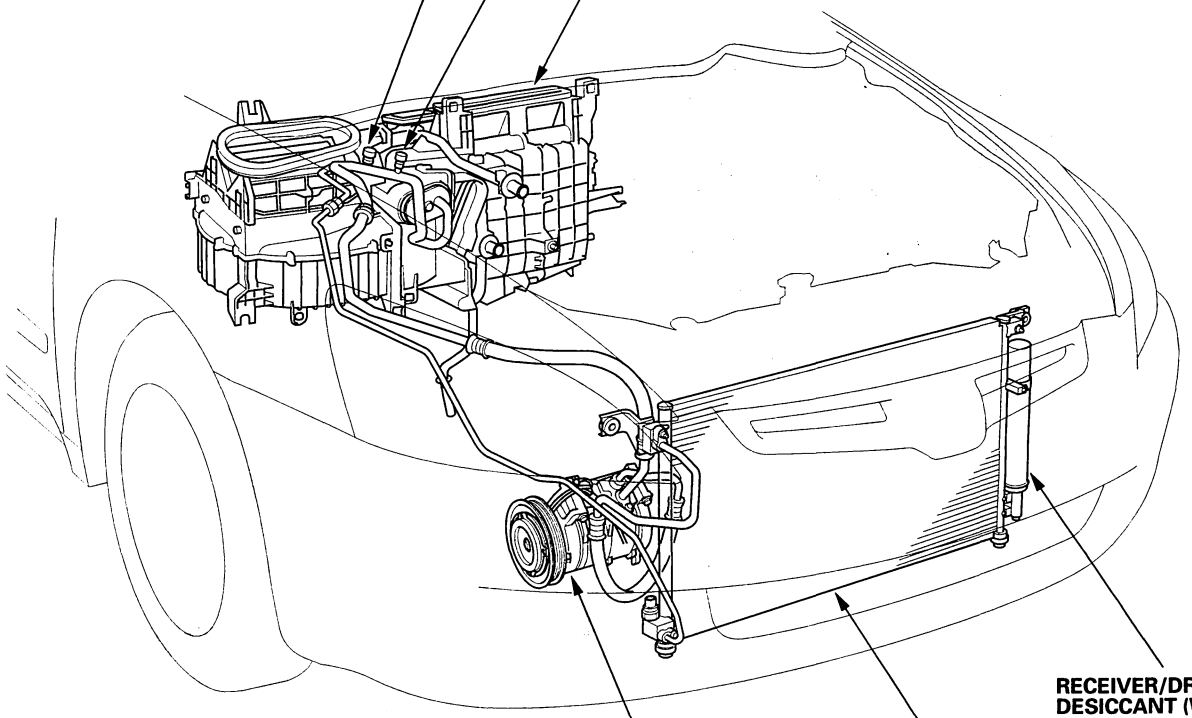

(cont'd)

Protected by AR

Component Location Index (cont'd)

2-door

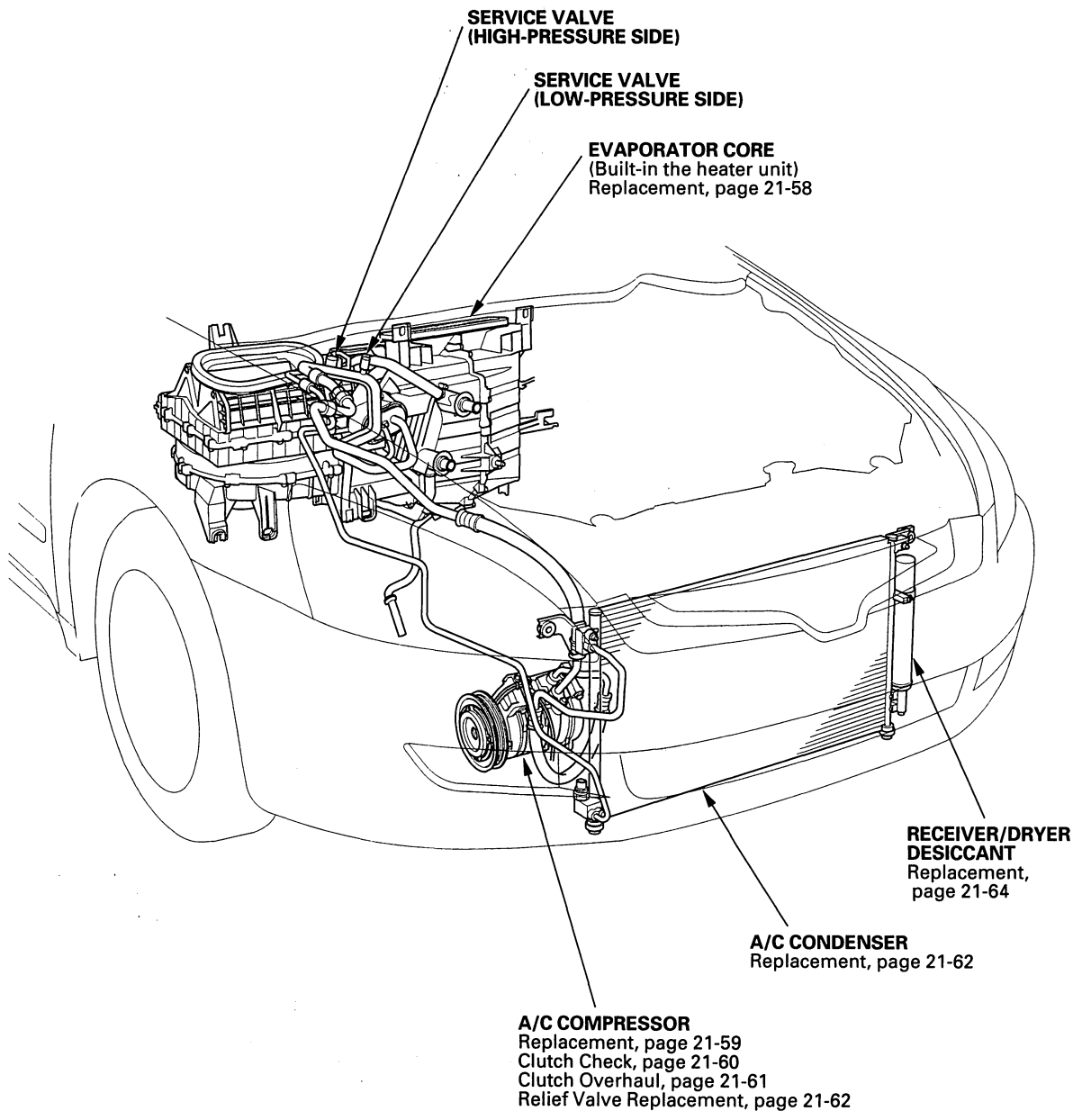

BACK

Protected by AR

4-door/2-door

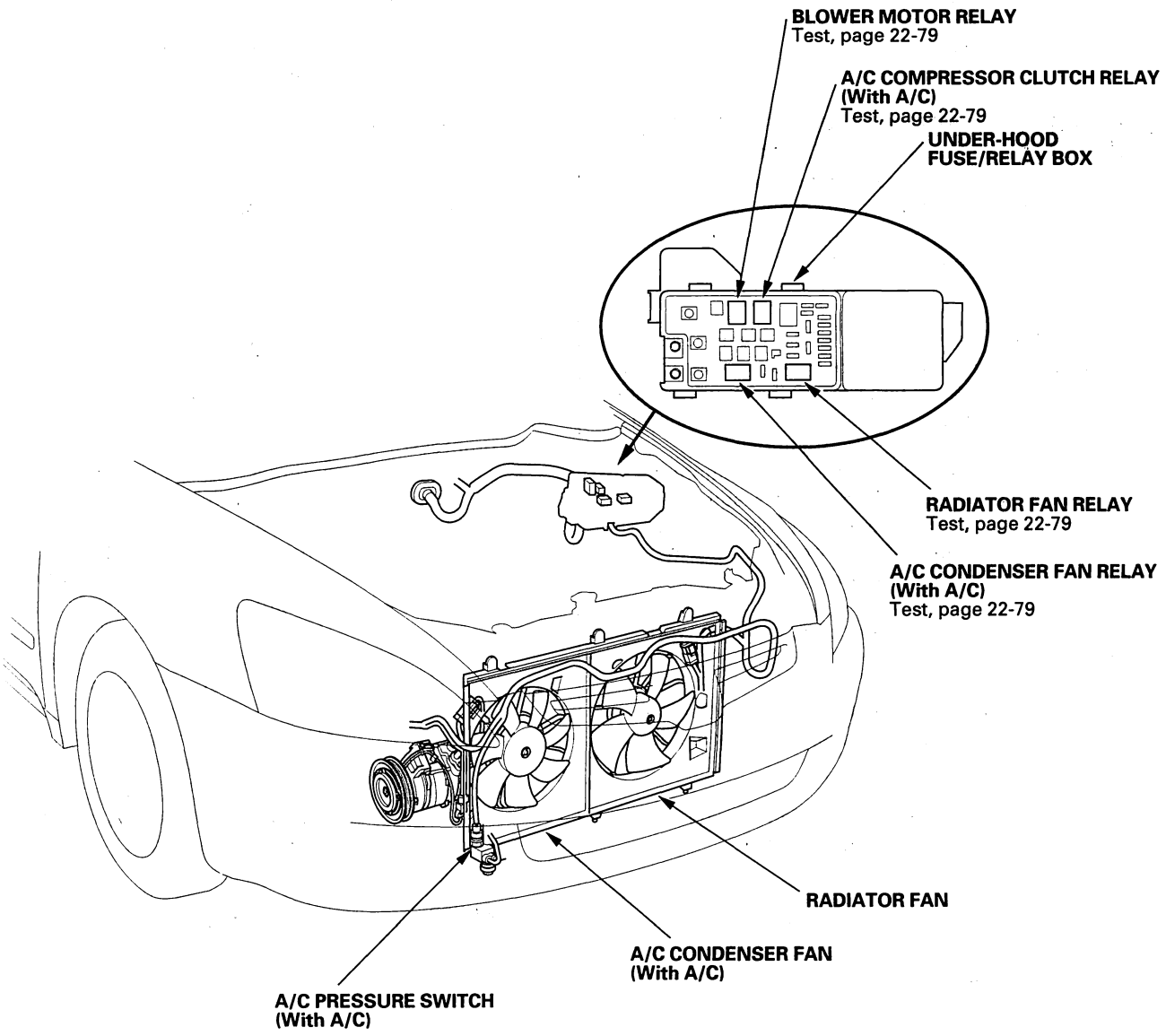

BACK

Protected by AR

A/C Service Tips and Precautions

⚠ WARNING

- Compressed air mixed with R-134a forms a combustible vapor.
- The vapor can burn or explode causing serious injury.
- Never use compressed air to pressure test R-134a service equipment or vehicle air conditioning systems.

⚠ CAUTION

- Air conditioning refrigerant or lubricant vapor can irritate your eyes, nose, or throat.
- Be careful when connecting service equipment.
- Do not breathe refrigerant or vapor.

The air conditioning system uses HFC-134a (R-134a) refrigerant and polyalkyleneglycol (PAG) refrigerant oil, which are not compatible with CFC-12 (R-12) refrigerant and mineral oil. Do not use R-12 refrigerant or mineral oil in this system, and do not attempt to use R-12 servicing equipment; damage to the air conditioning system or your servicing equipment will result.
Use only service equipment that is U.L.-listed and is certified to meet the requirements of SAE J2210 to remove R-134a from the air conditioning system.

If accidental system discharge occurs, ventilate work area before resuming service.

R-134a service equipment or vehicle air conditioning systems should not be pressure tested or leak tested with compressed air.

Additional health and safety information may be obtained from the refrigerant and lubricant manufacturers.

- *Always* disconnect the negative cable from the battery whenever replacing air conditioning parts.
- Keep moisture and dirt out of the system. When disconnecting any lines, plug or cap the fittings immediately; don't remove the caps or plugs until just before you reconnect each line.
- Before connecting any hose or line, apply a few drops of refrigerant oil to the O-ring.
- When tightening or loosening a fitting, use a second wrench to support the matching fitting.
- When discharging the system, use a R-134a refrigerant recovery/recycling/charging station; don't release refrigerant into the atmosphere.

A/C Refrigerant Oil Replacement

Recommended PAG oil: DENSO ND-OIL 8

- P/N 38897-PR7-A01AH: 120 mL (4 fl·oz)
- P/N 38899-PR7-A01: 40 mL (1 1/3 fl·oz)

Add the recommended refrigerant oil in the amount listed if you replace any of the following parts.

- To avoid contamination, do not return the oil to the container once dispensed, and never mix it with other refrigerant oils.
- Immediately after using the oil, reinstall the cap on the container, and seal it to avoid moisture absorption.
- Do not spill the refrigerant oil on the vehicle; it may damage the paint; if it gets on the paint, wash it off immediately.

A/C condenser .....25 mL (5/6 fl·oz)
Evaporator .....45 mL (1 1/2 fl·oz)
Line or hose .....10 mL (1/3 fl·oz)
Receiver/Dryer .....10 mL (1/3 fl·oz)
Leakage repair .....25 mL (5/6 fl·oz)
A/C compressor .....For A/C compressor replacement, subtract the volume of oil drained from the removed A/C compressor from 160 mL (5 1/3 fl·oz), and drain the calculated volume of oil from the new A/C compressor: 160 mL (5 1/3 fl·oz) — Volume of removed A/C compressor = Volume to drain from new A/C compressor.

NOTE: Even if no oil is drained from the removed A/C compressor, don't drain more than 50 mL (1 2/3 fl·oz) from the new A/C compressor.

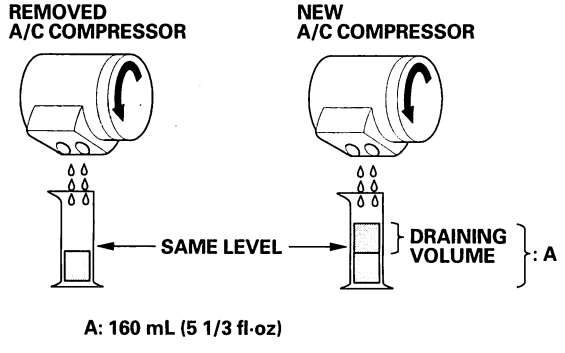

A: 160 mL (5 1/3 fl·oz)

BACK

Protected by AR

4-door

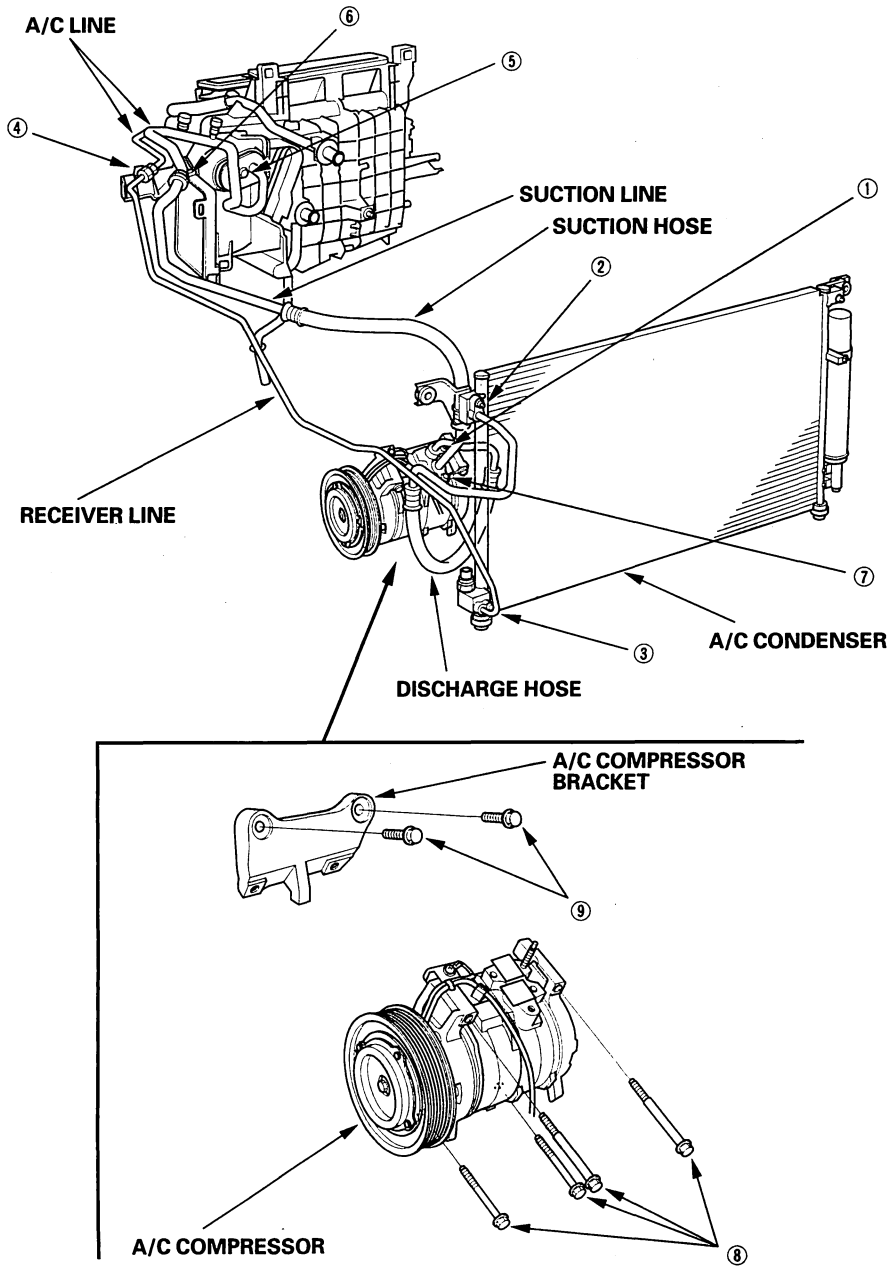

① Discharge hose to the A/C compressor (6 x 1.0 mm): 9.8 N·m (1.0 kgf·m, 7.2 lbf·ft)
② Discharge hose to the A/C condenser (6 x 1.0 mm): 9.8 N·m (1.0 kgf·m, 7.2 lbf·ft)
③ Receiver line to the A/C condenser (6 x 1.0 mm): 9.8 N·m (1.0 kgf·m, 7.2 lbf·ft)
④ Receiver line to the A/C line: 13 N·m (1.3 kgf·m, 9.4 lbf·ft)
⑤ A/C line to the evaporator (6 x 1.0 mm): 9.8 N·m (1.0 kgf·m, 7.2 lbf·ft)
⑥ Suction line to the A/C line: 31 N·m (3.2 kgf·m, 23 lbf·ft)
⑦ Suction hose to the A/C compressor (6 x 1.0 mm): 9.8 N·m (1.0 kgf·m, 7.2 lbf·ft)
⑧ A/C compressor to the A/C compressor bracket (8 x 1.25 mm): 22 N·m (2.2 kgf·m, 16 lbf·ft)
⑨ A/C compressor bracket to the engine block (10 x 1.25 mm): 44 N·m (4.5 kgf·m, 33 lbf·ft)

(cont'd)

BACK

Protected by AR

A/C Refrigerant Oil Replacement (cont'd)

2-door

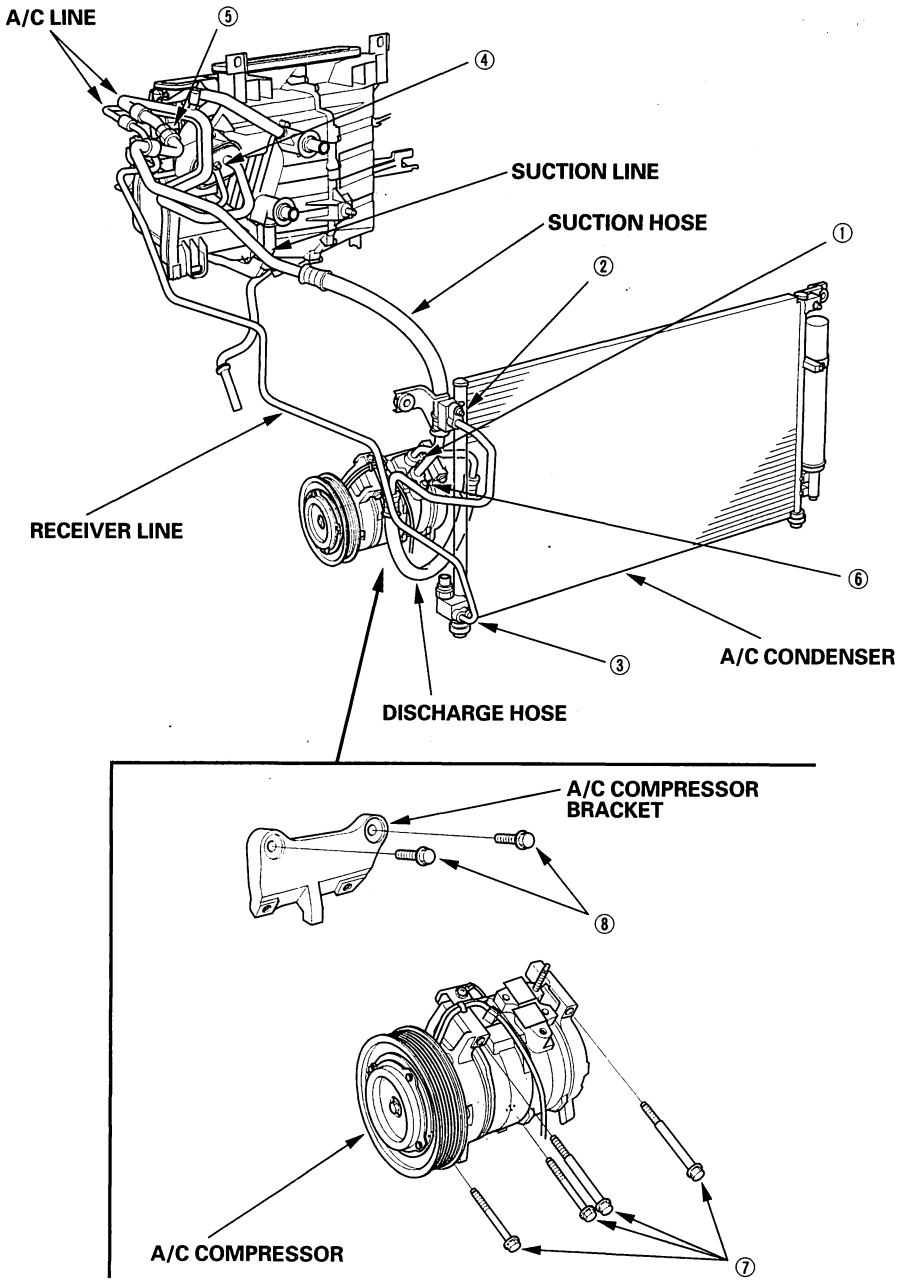

① Discharge hose to the A/C compressor (6 x 1.0 mm): 9.8 N·m (1.0 kgf·m, 7.2 lbf·ft)
② Discharge hose to the A/C condenser (6 x 1.0 mm): 9.8 N·m (1.0 kgf·m, 7.2 lbf·ft)
③ A/C line to the A/C condenser (6 x 1.0 mm): 9.8 N·m (1.0 kgf·m, 7.2 lbf·ft)
④ A/C line to the evaporator (6 x 1.0 mm): 9.8 N·m (1.0 kgf·m, 7.2 lbf·ft)
⑤ Suction line to the A/C line: 31 N·m (3.2 kgf·m, 23 lbf·ft)
⑥ Suction hose to the A/C compressor (6 x 1.0 mm): 9.8 N·m (1.0 kgf·m, 7.2 lbf·ft)
⑦ A/C compressor to the A/C compressor bracket (8 x 1.25 mm): 22 N·m (2.2 kgf·m, 16 lbf·ft)
⑧ A/C compressor bracket to the engine block (10 x 1.25 mm): 44 N·m (4.5 kgf·m, 33 lbf·ft)

BACK

Protected by AR

General Troubleshooting Information

How to Retrieve a DTC

The audio-HVAC display panel has a self-diagnostic function for heating, ventilation, and air conditioning system. To run the self-diagnostic function, do the following:

1. Turn the ignition switch OFF.
2. Turn the fan switch OFF.
3. Set the temperature control dial on Max Cool, then push the mode control button to select Vent.
4. Turn the ignition switch ON (II).
5. Press and hold the recirculation control button.
6. While holding the button down, press the rear window defogger button five times within 10 seconds. The recirculation indicator blinks two times, then the self-diagnostic will begin.
   - If there is any problem in the system after self-diagnostic is finished, the recirculation indicator will blink Diagnostic Trouble Code (DTC) 1 through 6. If there are any problems in the evaporator temperature sensor circuit, the A/C indicator will blink DTC 7 or 8.
   - If no DTC's are found, the indicator will not blink.

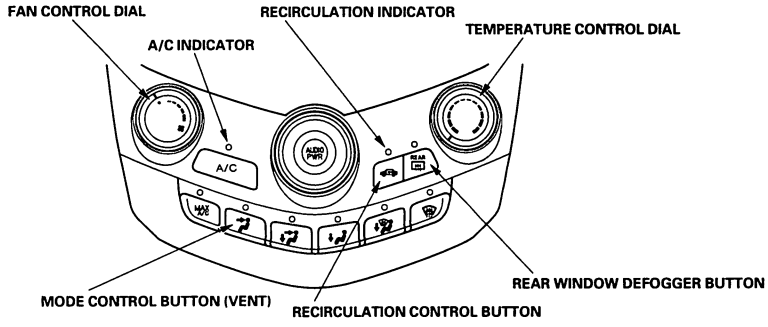

Example of DTC indication Pattern (DTC 3)

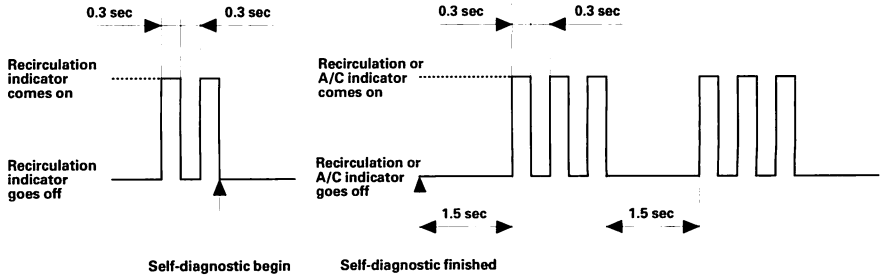

Cancelling the Self-diagnostic Function

7. Turn the ignition switch OFF to cancel the self-diagnostic function. After completing repair work, run the self-diagnostic function again to make sure that there are no other malfunctions.

Max Cool Position Function

When the mode control button is in the MAX COOL position, the audio-HVAC display panel will automatically select the recirculation mode and turn the A/C on. The recirculation switch and A/C switch are disabled and cannot be turned off in this mode. If the audio-HVAC display panel fails to function as described, replace it.

Protected by AR

DTC Troubleshooting Index

DTC (Recirculation Indicator Blinks)	Detection Item	Page
1	An open in the air mix control motor circuit	(see page 21-22)
2	A short in the air mix control motor circuit	(see page 21-23)
3	A problem in the air mix control linkage, door, or motor	(see page 21-24)
4	An open or short in the mode control motor circuit	(see page 21-24)
5	A problem in the mode control linkage, doors, or motor	(see page 21-26)
6	A problem in the blower motor circuit	(see page 21-27)

DTC (A/C Indicator Blinks)	Detection Item	Page
7	An open in the evaporator temperature sensor circuit	(see page 21-31)
8	A short in the evaporator temperature sensor circuit	(see page 21-32)

In case of multiple problems, the recirculation indicator will indicate only the DTC with the least number of blinks.

BACK

Protected by AR

Symptom Troubleshooting Index

Symptom	Diagnostic procedure	Also check for
Recirculation control doors do not change between Fresh and Recirculate	Recirculation control motor circuit troubleshooting (see page 21-33)	• HVAC DTCs (see page 21-11) • Blown fuse No. 30 (7.5A) in the under-dash fuse/relay box • Cleanliness and tightness of all connectors
Blower, heater controls, and A/C do not work	Audio-HVAC display panel power and ground circuit troubleshooting (see page 21-35)	• HVAC DTCs (see page 21-11) • Blown fuse No. 30 (7.5A) in the under-dash fuse/relay box • Poor ground at G503 • Cleanliness and tightness of all connectors
The A/C condenser fan does not run at all (but radiator fan runs with the A/C on)	A/C condenser fan circuit troubleshooting (see page 21-36)	• HVAC DTCs (see page 21-11) • Blown fuse No. 9 (20A) in the under-hood fuse/relay box, and No. 30 (7.5A) in the under-dash fuse/relay box • Poor ground at G201 • Cleanliness and tightness of all connectors
Both fans do not run with the A/C on (but the A/C compressor runs with the A/C on)	Radiator and A/C condenser fan common circuit troubleshooting (see page 21-37)	• HVAC DTCs (see page 21-11) • Blown fuse No. 9 (20A) and No. 11 (20A) in the under-hood fuse/relay box, and No. 30 (7.5A) in the under-dash fuse/relay box • Cleanliness and tightness of all connectors
The A/C compressor clutch does not engage (but both fans run with the A/C on)	A/C compressor clutch circuit troubleshooting (see page 21-38)	• HVAC DTCs (see page 21-11) • Blown fuse No. 12 (7.5A) in the under-hood fuse/relay box, and No. 30 (7.5A) in the under-dash fuse/relay box • Cleanliness and tightness of all connectors
A/C system does not come on (both fans and the A/C compressor do not work); heater is OK	A/C pressure switch circuit troubleshooting (see page 21-41)	• Body DTCs in test mode A of the MICS (see page 22-91) • HVAC DTCs (see page 21-11) • Cleanliness and tightness of all connectors • Blown fuse No. 30 (7.5A) in the under-dash fuse/relay box

(cont'd)

Protected by AR

Symptom Troubleshooting Index (cont'd)

Symptom	Diagnostic procedure	Also check for
Recirculation button does not work	1. Turn the ignition switch ON (II). 2. Press the recirculation button several times and check the button's LED. The LED should toggle on and off as the button is pressed. • If the LED turns on and off, go to recirculation control motor test, 4-door (see page 21-47), 2-door (see page 21-47). • If the LED does not turn on or off, replace the audio-HVAC display panel.	
Defroster button does not work	1. Turn the ignition switch ON (II). 2. Press the defroster button several times and check the button's LED. The LED should toggle on and off as the button is pressed. • If the LED turns on and off, go to self-diagnostic (see page 21-11). • If the LED does not turn on or off, replace the audio-HVAC display panel.	
Rear window defogger button does not work	1. Turn the ignition switch ON (II). 2. Press the rear window defogger button several times and check the button's LED. The LED should toggle on and off as the button is pressed. • If the LED turns on and off, go to rear window defogger troubleshooting (see page 22-299). • If the LED does not turn on or off, replace the audio-HVAC display panel.	
A/C button does not work	1. Turn the ignition switch ON (II). 2. Turn the fan control dial ON. 3. Press the A/C button several times and check the button's LED. The LED should toggle on and off as the button is pressed. • If the LED turns on and off, go to self-diagnostic (see page 21-11). • If the LED does not turn on or off, replace the audio-HVAC display panel.	
MAX A/C button does not work	1. Turn the ignition switch ON (II). 2. Turn the fan control dial ON. 3. Press the MAX A/C button several times and check the button's LED. The LED should toggle on and off as the button is pressed. • If the LED turns on and off, go to self-diagnostic (see page 21-11). • If the LED does not turn on or off, replace the audio-HVAC display panel.	
Mode button (VENT) does not work	1. Turn the ignition switch ON (II). 2. Press the MODE (VENT) button several times and check the button's LED. The LED should toggle on and off as the button is pressed. • If the LED turns on and off, go to self-diagnostic (see page 21-11). • If the LED does not turn on or off, replace the audio-HVAC display panel.	

BACK

Protected by AR

Symptom	Diagnostic procedure	Also check for
Mode button (VENT/FLOOR) does not work	1. Turn the ignition switch ON (II). 2. Press the MODE (VENT/FLOOR) button several times and check the button's LED. The LED should toggle on and off as the button is pressed. • If the LED turns on and off, go to self-diagnostic (see page 21-11). • If the LED does not turn on or off, replace the audio-HVAC display panel.	
Mode button (FLOOR) does not work	1. Turn the ignition switch ON (II). 2. Press the MODE (FLOOR) button several times and check the button's LED. The LED should toggle on and off as the button is pressed. • If the LED turns on and off, go to self-diagnostic (see page 21-11). • If the LED does not turn on or off, replace the audio-HVAC display panel.	
Mode button (DEFROSTER/FLOOR) does not work	1. Turn the ignition switch ON (II). 2. Press the MODE (DEFROSTER/FLOOR) button several times and check the button's LED. The LED should toggle on and off as the button is pressed. • If the LED turns on and off, go to self-diagnostic (see page 21-11). • If the LED does not turn on or off, replace the audio-HVAC display panel.	
Audio-HVAC display panel will not run self-diagnosis	1. Turn the ignition switch ON (II). 2. Press the A/C button, and then OFF button and check the display. • If the display turns on and off as the buttons are pressed, there are no DTCs stored, troubleshoot the individual symptoms. • If the display does not respond as the buttons are pressed, check for loose or poor connections at the audio-HVAC display panel. If the connections are OK, replace the audio-HVAC display panel.	

Protected by AR

System Description

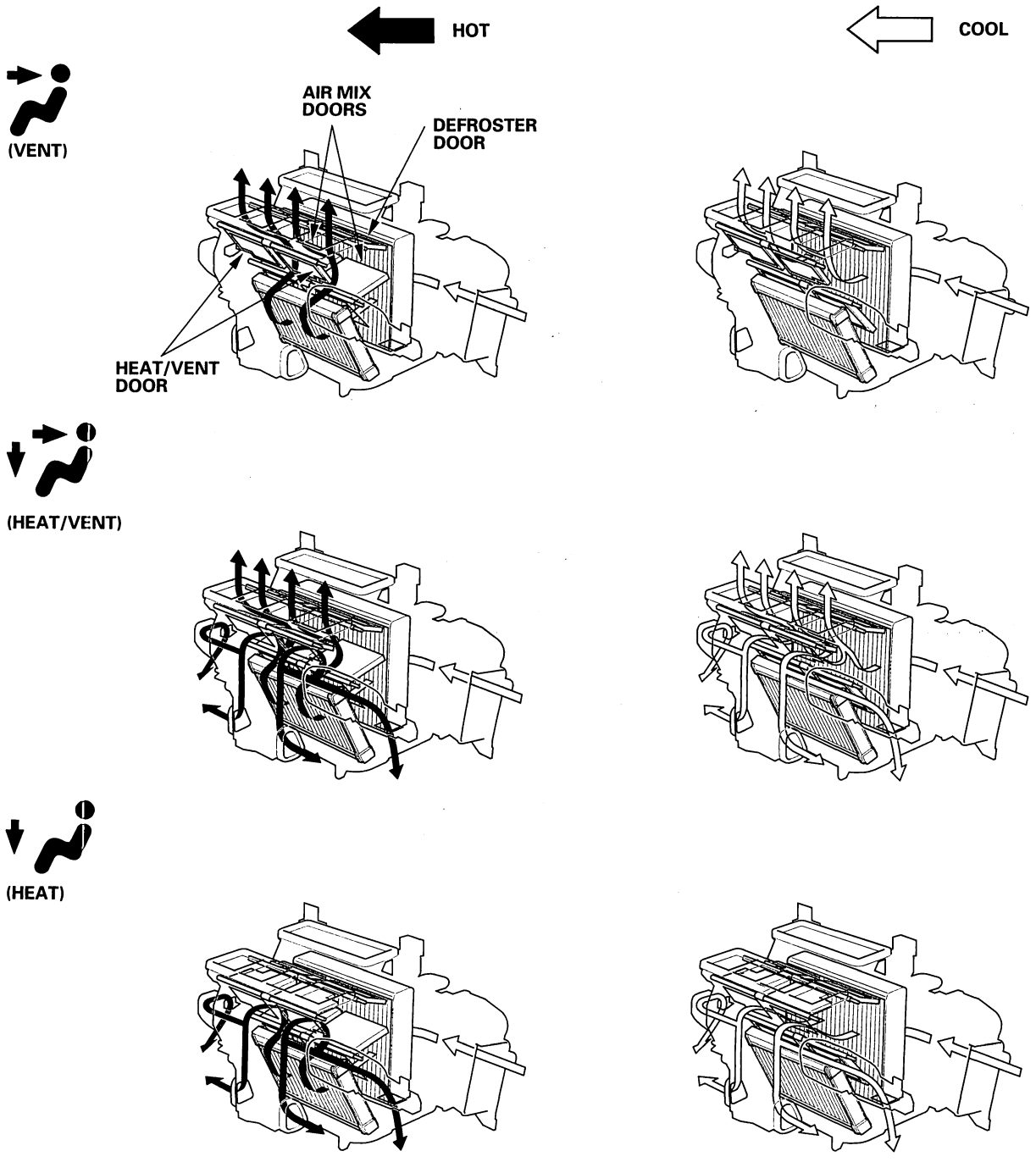

BACK

Protected by AR

(HEAT/DEF)

HOT

COOL

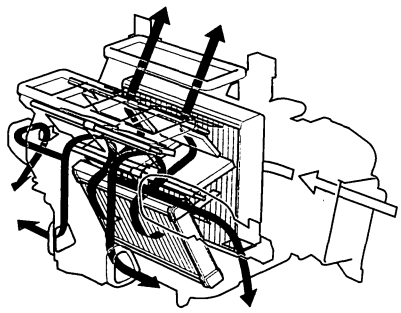

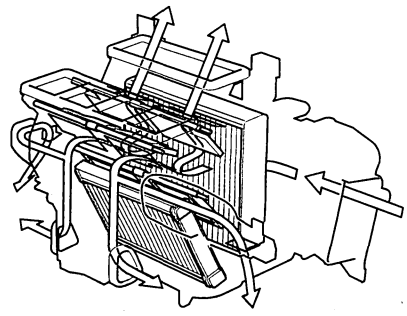

(DEF)

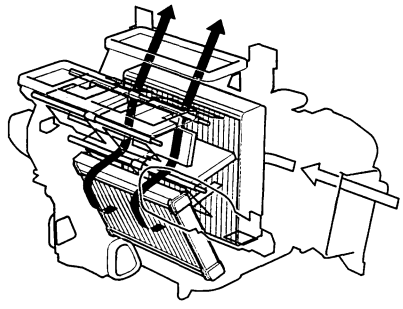

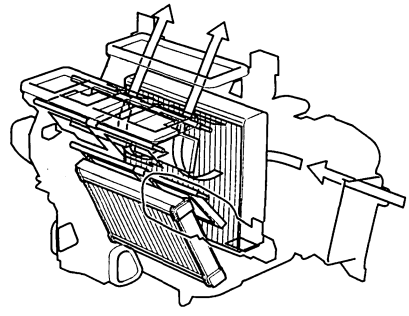

(cont'd)

Protected by AR

System Description (cont'd)

The air conditioning system removes heat from the passenger compartment by circulating refrigerant through the system.

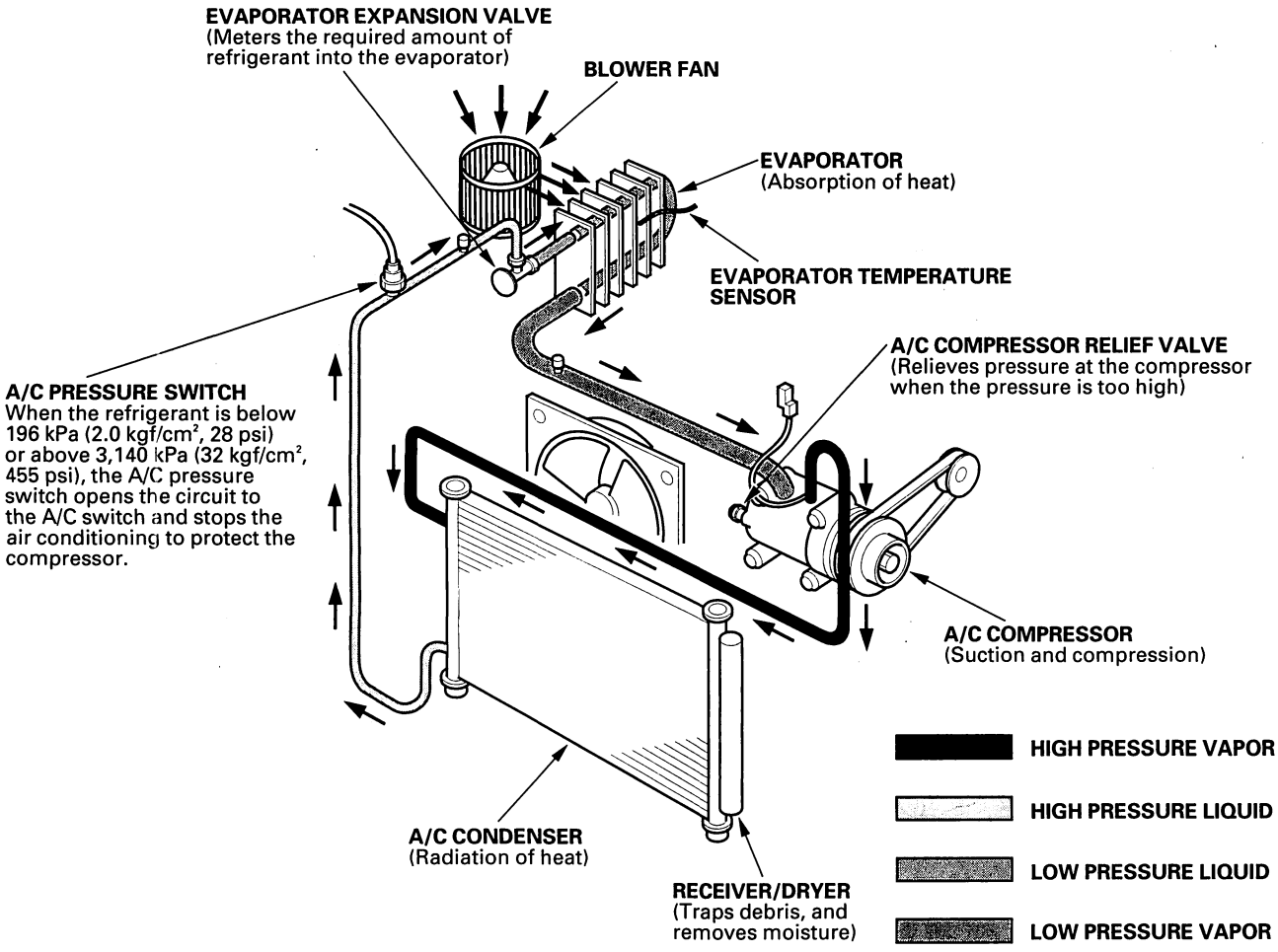

This vehicle uses HFC-134a (R-134a) refrigerant which does not contain chlorofluorocarbons. Pay attention to the following service items:

- Do not mix refrigerants CFC-12 (R-12) and HFC-134a (R-134a). They are not compatible.
- Use only the recommended polyalkyleneglycol (PAG) refrigerant oil (DENSO ND-OIL 8) designed for the R-134a compressor. Intermixing the recommended (PAG) refrigerant oil with any other refrigerant oil will result in compressor failure.
- All A/C system parts (compressor, discharge line, suction line, evaporator, condenser, receiver/dryer, expansion valve, O-rings for joints) are designed for refrigerant R-134a. Do not exchange with R-12 parts.
- Use a halogen gas leak detector designed for refrigerant R-134a.
- R-12 and R-134a refrigerant servicing equipment are not interchangeable. Use only a recovery/recycling/charging station that is U.L.-listed and is certified to meet the requirements of SAE J2210 to service the R-134a air conditioning systems.
- Always recover the refrigerant R-134a with an approved recovery/recycling/charging station before disconnecting any A/C fitting.

BACK

Protected by AR

Audio-HVAC Display Panel Inputs and Outputs

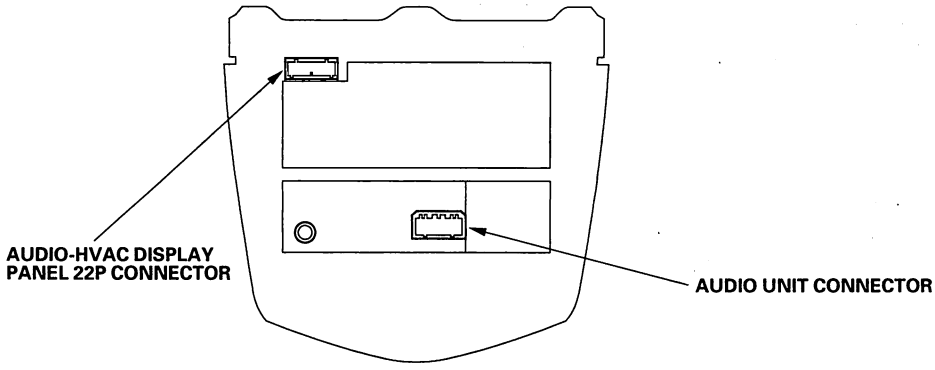

AUDIO-HVAC DISPLAY PANEL 22P CONNECTOR

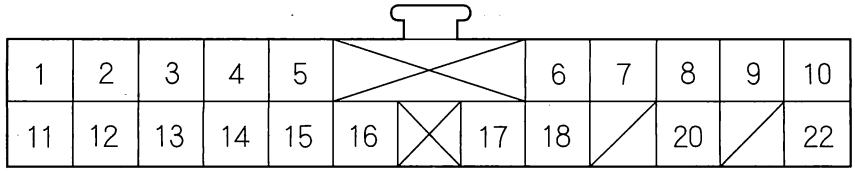

Wire side of female terminals

Cavity	Wire color	Signal	
1*	BLU	A/C PRESSURE SWITCH	OUTPUT
2	RED/YEL	MODE 1	INPUT
3	RED/BLU	MODE 2	INPUT
4	WHT/BLU	MODE 3	INPUT
5	YEL/GRN	MODE 4	INPUT
6	YEL/BLK	REAR WINDOW DEFOGGER RELAY	OUTPUT
7	LT GRN/RED	RECIRCULATE	OUTPUT
8	GRN/WHT	FRESH	OUTPUT
9	RED/BLK	SENSOR COMMON GROUND	OUTPUT
10*	BRN	EVAPORATOR TEMPERATURE SENSOR	INPUT
11	YEL/RED	MODE VENT	OUTPUT
12	YEL/BLU	MODE DEF	OUTPUT
13	PNK/BLU	AIR MIX HOT	OUTPUT
14	GRN	AIR MIX COOL	OUTPUT
15	BLU/RED	BLOWER FEEDBACK	INPUT
16	BLU/YEL	POWER TRANSISTOR CONTROL	OUTPUT
17	PNK/BLK	AIR MIX POTENTIAL	INPUT
18	GRY	AIR MIX POTENTIAL +5 V	OUTPUT
19	———	———	———
20	BLK/YEL	IG2 (Power)	INPUT
21	———	———	———
22	BLK	GROUND (G503)	INPUT

*: With Air Conditioning

BACK

Protected by AR

Heating/Air Conditioning

Circuit Diagram

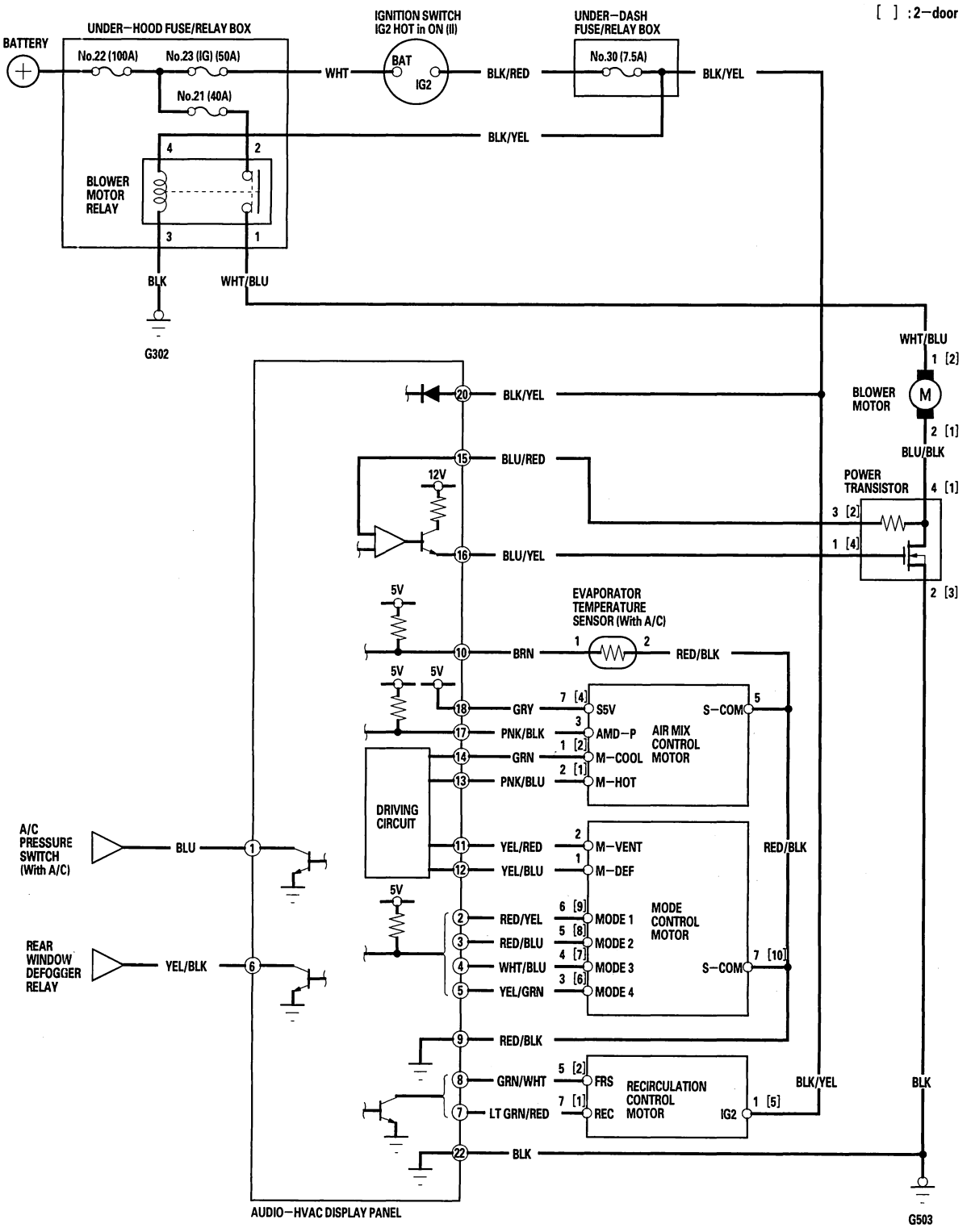

BACK

Protected by AR

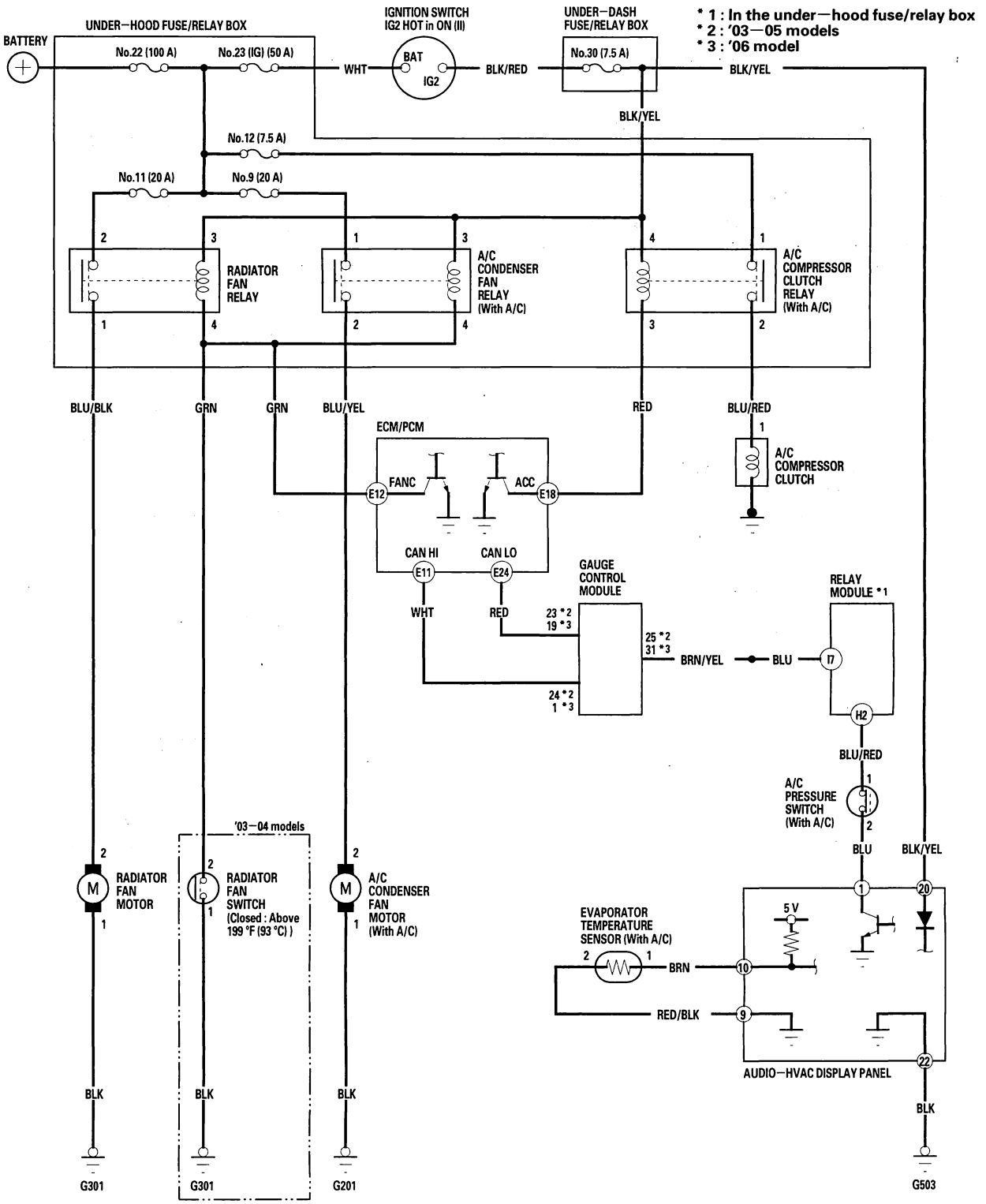

BACK

Protected by AR

DTC Troubleshooting

DTC 1: An Open in the Air Mix Control Motor Circuit

1. Disconnect the air mix control motor 7P (4-door) or 5P (2-door) connector.
2. Disconnect audio-HVAC display panel 22P connector.
3. Check for continuity between the following terminals of audio-HVAC display panel 22P connector and the air mix control motor 7P (4-door) or 5P (2-door) connector.

4-door:

22P:	7P:
No. 9	No. 5
No. 13	No. 2
No. 14	No. 1
No. 17	No. 3
No. 18	No. 7

AUDIO-HVAC DISPLAY PANEL 22P CONNECTOR

Wire side of female terminals

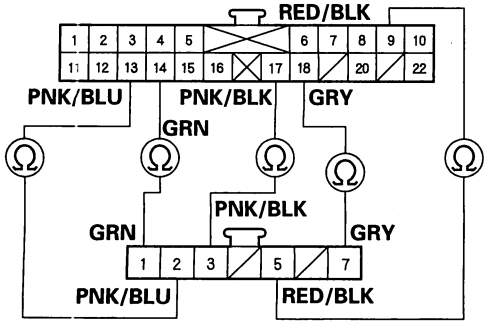

AIR MIX CONTROL MOTOR 7P CONNECTOR

Wire side of female terminals

2-door:

22P:	5P:
No. 9	No. 5
No. 13	No. 1
No. 14	No. 2
No. 17	No. 3
No. 18	No. 4

AUDIO-HVAC DISPLAY PANEL 22P CONNECTOR

Wire side of female terminals

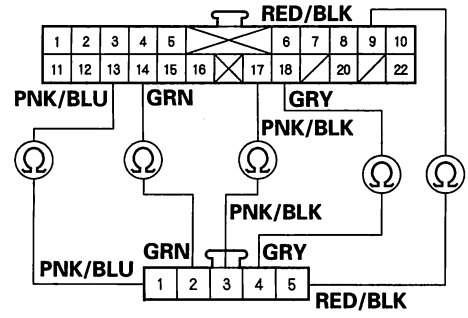

AIR MIX CONTROL MOTOR 5P CONNECTOR

Wire side of female terminals

Is there continuity?

YES—Check for loose wires or poor connections at audio-HVAC display panel 22P connector and at the air mix control motor 7P (4-door) or 5P (2-door) connector. If the connections are good, test the air mix control motor, 4-door (see page 21-43), 2-door (see page 21-43). If the air mix control motor is OK, substitute a known-good audio-HVAC display panel, and recheck. If the symptom/indication goes away, replace the original audio-HVAC display panel. ■

NO—Repair any open in the wire(s) between the audio-HVAC display panel and the air mix control motor. ■

BACK

Protected by AR

DTC 2: A Short in the Air Mix Control Motor Circuit

1. Disconnect the air mix control motor 7P (4-door) or 5P (2-door) connector.
2. Disconnect audio-HVAC display panel 22P connector.
3. Check for continuity between body ground and audio-HVAC display panel 22P connector terminals No. 9, 13, 14, 17, and 18 individually.

AUDIO-HVAC DISPLAY PANEL 22P CONNECTOR

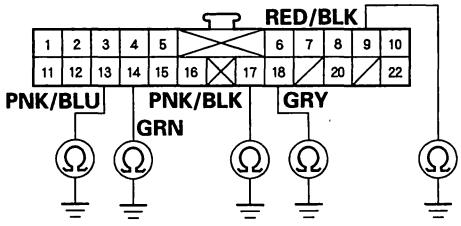

Wire side of female terminals

Is there continuity?

YES—Repair any short to body ground in the wire(s) between the audio-HVAC display panel and the air mix control motor. ■

NO—Go to step 4.

4. Turn the ignition switch ON (II), and check the same terminals for voltage.

AUDIO-HVAC DISPLAY PANEL 22P CONNECTOR

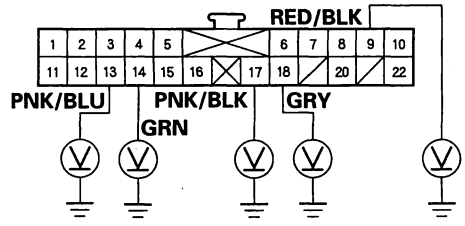

Wire side of female terminals

Is there any voltage?

YES—Repair any short to power in the wire(s) between the audio-HVAC display panel and the air mix control motor. This short may also damage the audio-HVAC display panel. Repair the short to power before replacing the audio-HVAC display panel. ■

NO—Test the air mix control motor, 4-door (see page 21-43), 2-door (see page 21-43). If the air mix control motor is OK, substitute a known-good audio-HVAC display panel, and recheck. If the symptom/indication goes away, replace the original audio-HVAC display panel. ■

Protected by AR

DTC Troubleshooting (cont'd)

DTC 3: A Problem in the Air Mix Control Linkage, Door, or Motor

1. Test the air mix control motor.

   - 4-door (see page 21-43)
   - 2-door (see page 21-43)

   Is the air mix control motor OK?

   YES—Substitute a known-good audio-HVAC display panel, and recheck. If the symptom/indication goes away, replace the original audio-HVAC display panel. ■

   NO—Replace the air mix control motor, or repair the linkage and doors. ■

DTC 4: An Open or Short in the Mode Control Motor Circuit

1. Disconnect the mode control motor 7P (4-door) or 10P (2-door) connector.
2. Disconnect audio-HVAC display panel 22P connector.
3. Check for continuity between body ground and audio-HVAC display panel 22P connector terminals No. 2, 3, 4, 5, 9, 11, and 12 individually.

AUDIO-HVAC DISPLAY PANEL 22P CONNECTOR

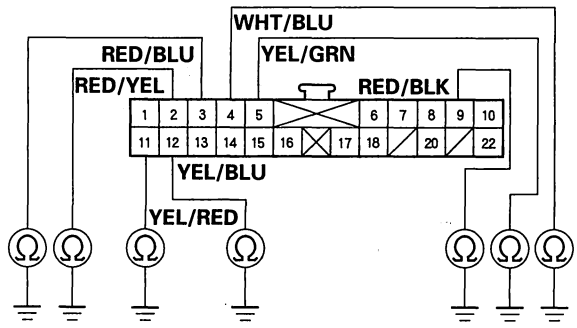

Wire side of female terminals

Is there continuity?

YES—Repair any short to body ground in the wire(s) between the audio-HVAC display panel and the mode control motor. ■

NO—Go to step 4.

BACK

Protected by AR

4. Turn the ignition switch ON (II), and check the same terminals for voltage.

AUDIO-HVAC DISPLAY PANEL 22P CONNECTOR

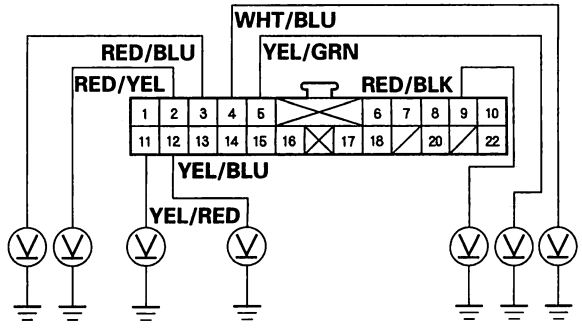

Wire side of female terminals

Is there any voltage?

YES—Repair any short to power in the wire(s) between the audio-HVAC display panel and the mode control motor. This short may also damage the audio-HVAC display panel. Repair the short to power before replacing the audio-HVAC display panel. ■

NO—Go to step 5.

5. Turn the ignition switch OFF, and check for continuity between the following terminals of audio-HVAC display panel 22P connector and the mode control motor 7P (4-door) or 10P (2-door) connector.

4-door:

22P:	7P:
No. 2	No. 6
No. 3	No. 5
No. 4	No. 4
No. 5	No. 3
No. 9	No. 7
No. 11	No. 2
No. 12	No. 1

AUDIO-HVAC DISPLAY PANEL 22P CONNECTOR

Wire side of female terminals

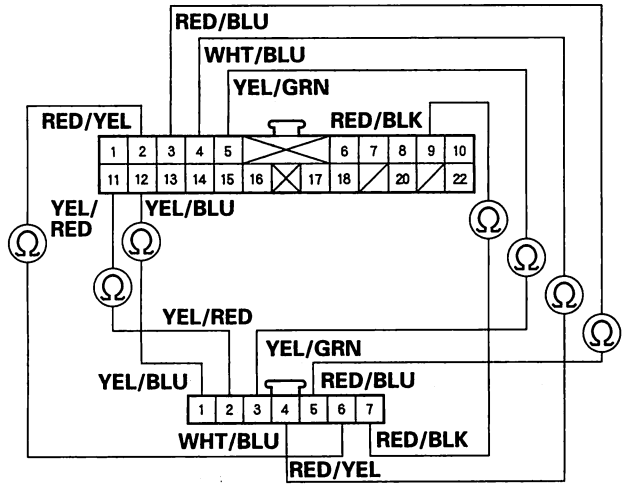

MODE CONTROL MOTOR 7P CONNECTOR

Wire side of female terminals

(cont'd)

Protected by AR

DTC Troubleshooting (cont'd)

2-door:

22P:	10P:
No. 2	No. 9
No. 3	No. 8
No. 4	No. 7
No. 5	No. 6
No. 9	No. 10
No. 11	No. 2
No. 12	No. 1

AUDIO-HVAC DISPLAY PANEL 22P CONNECTOR

Wire side of female terminals

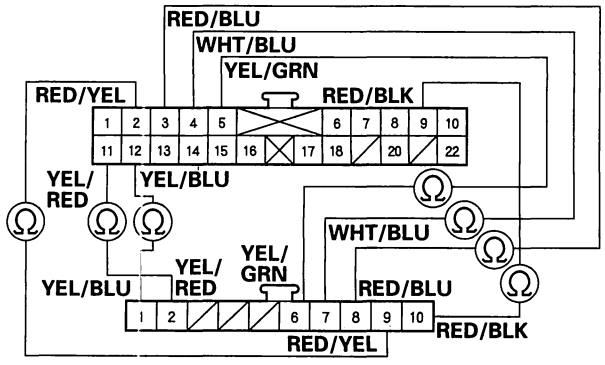

MODE CONTROL MOTOR 10P CONNECTOR

Wire side of female terminals

Is there continuity?

YES—Check for loose wires or poor connections at audio-HVAC display panel 22P connector and at the mode control motor 7P (4-door) or 10P (2-door) connector. If the connections are good, test the mode control motor, 4-door (see page 21-45), 2-door (see page 21-45). If the mode control motor is OK, substitute a known-good audio-HVAC display panel, and recheck. If the symptom/ indication goes away, replace the original audio-HVAC display panel. ■

NO—Repair any open in the wire(s) between the audio-HVAC display panel and the mode control motor. ■

DTC 5: A Problem in the Mode Control Linkage, Doors, or Motor

1. Test the mode control motor, 4-door (see page 21-45), 2-door (see page 21-45).

Is the mode control motor OK?

YES—Substitute a known-good audio-HVAC display panel, and recheck. If the symptom/ indication goes away, replace the original audio-HVAC display panel. ■

NO—Replace the mode control motor, or repair the linkage and doors. ■

BACK

Protected by AR

DTC 6: A Problem in the Blower Motor Circuit

1. Check the No. 21 (40A) fuse in the under-hood fuse/relay box, and the No. 30 (7.5A) fuse in the under-dash fuse/relay box.

   Are the fuses OK?

   YES—Go to step 2.

   NO—Replace the fuse(s), and recheck.■

2. Connect the No. 2 (4-door) or No. 1 (2-door) terminal of the blower motor 2P connector to body ground with a jumper wire.

   4-door:

   BLOWER MOTOR 2P CONNECTOR

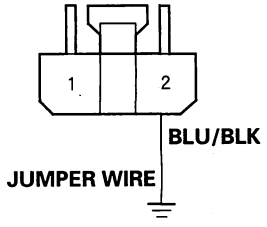

   Wire side of female terminals

   2-door:

   BLOWER MOTOR 2P CONNECTOR

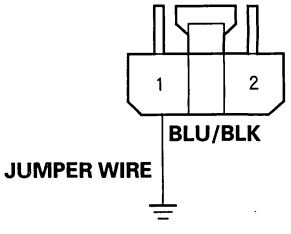

   Wire side of female terminals

3. Turn the ignition switch ON (II).

   Does the blower motor run?

   YES—Go to step 4.

   NO—Go to step 17.

4. Turn the ignition switch OFF.

5. Disconnect the jumper wire.

6. Disconnect the power transistor 4P connector.

7. Check for continuity between the No. 2 (4-door) or No. 3 (2-door) terminal of the power transistor 4P connector and body ground.

   4-door:

   POWER TRANSISTOR 4P CONNECTOR

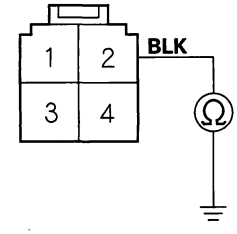

   Wire side of female terminals

   2-door:

   POWER TRANSISTOR 4P CONNECTOR

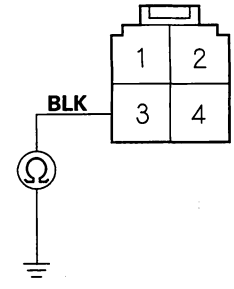

   Wire side of female terminals

   Is there continuity?

   YES—Go to step 8.

   NO—Check for an open in the wire between the power transistor and body ground. If the wire is OK, check for poor ground at G503.■

(cont'd)

Protected by AR

DTC Troubleshooting (cont'd)

8. Connect the No. 2 and No. 4 (4-door) or No. 1 and No. 3 (2-door) terminals of the power transistor 4P connector with a jumper wire.

4-door:

POWER TRANSISTOR 4P CONNECTOR

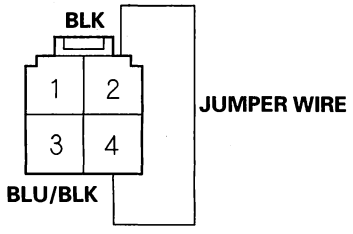

Wire side of female terminals

2-door:

POWER TRANSISTOR 4P CONNECTOR

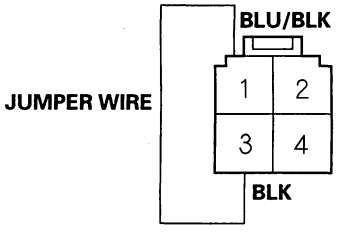

Wire side of female terminals

9. Turn the ignition switch ON (II).

Does the blower motor run at high speed?

YES—Go to step 10.

NO—Repair open in the BLU/BLK wire between the power transistor and the blower motor.■

10. Turn the ignition switch OFF.

11. Disconnect the jumper wire.

12. Disconnect audio-HVAC display panel 22P connector.

13. Check for continuity between the No. 15 and No. 16 terminals of audio-HVAC display panel 22P connector and body ground individually.

AUDIO-HVAC DISPLAY PANEL 22P CONNECTOR

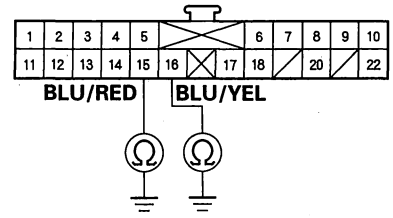

Wire side of female terminals

Is there continuity?

YES—Repair any short to body ground in the wire(s) between the audio-HVAC display panel and the power transistor.■

NO—Go to step 14.

BACK

Protected by AR

14. Check the continuity between the following terminals of audio-HVAC display panel 22P connector and the power transistor 4P connector.

4-door:

22P:	4P:
No. 15	No. 3
No. 16	No. 1

AUDIO-HVAC DISPLAY PANEL 22P CONNECTOR

Wire side of female terminals

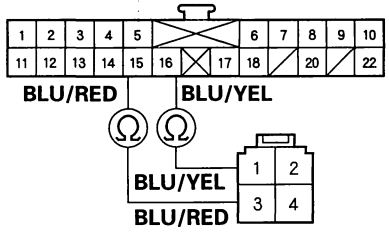

POWER TRANSISTOR 4P CONNECTOR

Wire side of female terminals

2-door:

22P:	4P:
No. 15	No. 2
No. 16	No. 4

AUDIO-HVAC DISPLAY PANEL 22P CONNECTOR

Wire side of female terminals

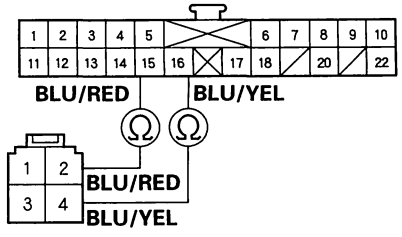

POWER TRANSISTOR 4P CONNECTOR

Wire side of female terminals

Is there continuity?

YES—Go to step 15.

NO—Repair any open in the wire(s) between the audio-HVAC display panel and the power transistor. ■

15. Reconnect audio-HVAC display panel 22P connector.

16. Test the power transistor (see page 21-50).

Is the power transistor OK?

YES—Check for loose wires or poor connections at audio-HVAC display panel 22P connector and at the power transistor 4P connector. If the connections are good, substitute a known-good audio-HVAC display panel, and recheck. If the symptom/ indication goes away, replace the original audio-HVAC display panel. ■

NO—Replace the power transistor. ■

17. Disconnect the jumper wire.

18. Disconnect the blower motor 2P connector.

19. Measure the voltage between the No. 1 (4-door) or No. 2 (2-door) terminal of the blower motor 2P connector and body ground.

4-door:

BLOWER MOTOR 2P CONNECTOR

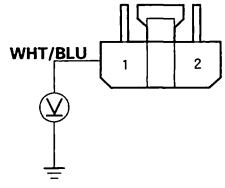

Wire side of female terminals

2-door:

BLOWER MOTOR 2P CONNECTOR

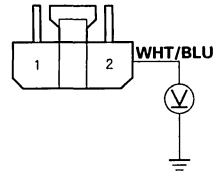

Wire side of female terminals

Is there battery voltage?

YES—Replace the blower motor. ■

NO—Go to step 20.

(cont'd)

Protected by AR

DTC Troubleshooting (cont'd)

20. Turn the ignition switch OFF.

21. Remove the blower motor relay from the under-hood fuse/relay box, and test it (see page 22-79).

    Is the relay OK?

    YES—Go to step 22.

    NO—Replace the blower motor relay.■

22. Measure the voltage between the No. 2 terminal of the blower motor relay 4P socket and body ground.

BLOWER MOTOR RELAY 4P SOCKET

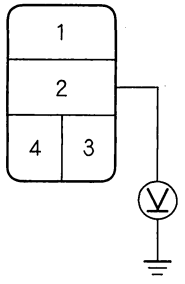

Is there battery voltage?

YES—Go to step 23.

NO—Replace the under-hood fuse/relay box.■

23. Turn the ignition switch ON (II).

24. Measure the voltage between the No. 4 terminal of the blower motor relay 4P socket and body ground.

BLOWER MOTOR RELAY 4P SOCKET

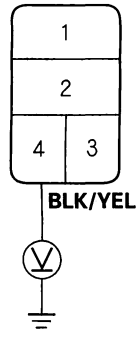

Is there battery voltage?

YES—Go to step 25.

NO—Repair open in the wire between the No. 30 fuse in the under-dash fuse/relay box and the blower motor relay.■

BACK

Protected by AR

25. Turn the ignition switch OFF.

26. Check for continuity between the No. 3 terminal of the blower motor relay 4P socket and body ground.

BLOWER MOTOR RELAY 4P SOCKET

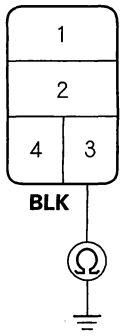

Is there continuity?

YES—Repair open in the WHT/BLU wire between the blower motor relay and the blower motor. ■

NO—Check for an open in the wire between the blower motor relay and body ground. If the wire is OK, check for poor ground at G302. ■

DTC 7: An Open in the Evaporator Temperature Sensor Circuit

1. Remove the evaporator temperature sensor (see page 21-49) and test it (see page 21-49).

   Does the evaporator temperature sensor test OK?

   YES—Go to step 2.

   NO—Replace the evaporator temperature sensor. ■

2. Disconnect the audio-HVAC display panel 22P connector.

3. Check for continuity between the No. 10 terminal of audio-HVAC display panel 22P connector and the No. 1 terminal of the evaporator temperature sensor 2P connector.

AUDIO-HVAC DISPLAY PANEL 22P CONNECTOR
Wire side of female terminals

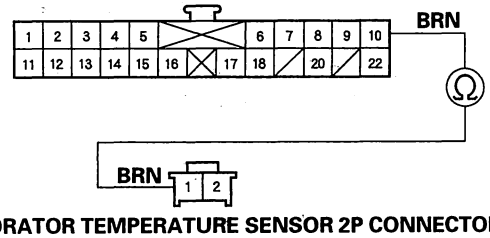

EVAPORATOR TEMPERATURE SENSOR 2P CONNECTOR
Wire side of female terminals

Is there continuity?

YES—Go to step 4.

NO—Repair open in the wire between the audio-HVAC display panel and the evaporator temperature sensor. ■

(cont'd)

Protected by AR

DTC Troubleshooting (cont'd)

4. Check for continuity between the No. 9 terminal of audio-HVAC display panel 22P connector and the No. 2 terminal of the evaporator temperature sensor 2P connector.

AUDIO-HVAC DISPLAY PANEL 22P CONNECTOR
Wire side of female terminals

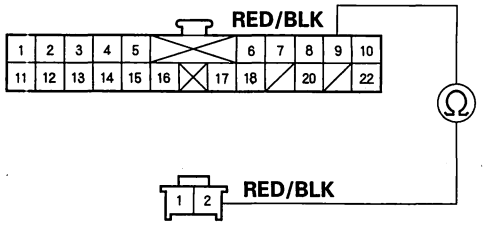

EVAPORATOR TEMPERATURE SENSOR 2P CONNECTOR
Wire side of female terminals

Is there continuity?

YES—Check for loose wires or poor connections at audio-HVAC display panel 22P connectors and at the evaporator temperature sensor 2P connector. If the connections are good, substitute a known-good audio-HVAC display panel, and recheck. If the symptom/indication goes away, replace the original audio-HVAC display panel. ■

NO—Repair open in the wire between the audio-HVAC display panel and the evaporator temperature sensor. ■

DTC 8: A Short in the Evaporator Temperature Sensor Circuit

1. Remove the evaporator temperature sensor (see page 21-49) and test it (see page 21-49).

Is the resistance within the specifications shown on the graph?

YES—Go to step 2.

NO—Replace the evaporator temperature sensor. ■

2. Disconnect the audio-HVAC display panel 22P connector.

3. Check for continuity between the No. 10 terminal of audio-HVAC display panel 22P connector and body ground.

AUDIO-HVAC DISPLAY PANEL 22P CONNECTOR

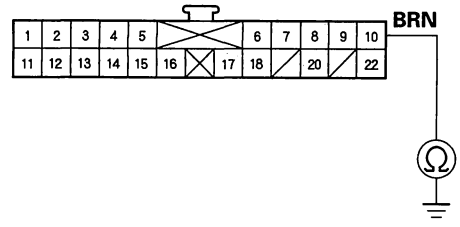

Wire side of female terminals

Is there continuity?

YES—Repair short to body ground in the wire between the audio-HVAC display panel and the evaporator temperature sensor. ■

NO—Substitute a known-good audio-HVAC display panel, and recheck. If the symptom/indication goes away, replace the original audio-HVAC display panel. ■

BACK

Protected by AR

Recirculation Control Motor Circuit Troubleshooting

1. Check the No. 30 (7.5A) fuse in the under-dash fuse/relay box.

   Is the fuse OK?

   YES—Go to step 2.

   NO—Replace the fuse, and recheck. ■

2. Disconnect the recirculation control motor 7P (4-door) or 5P (2-door) connector.

3. Turn the ignition switch ON (II).

4. Measure the voltage between the No. 1 (4-door) or No. 5 (2-door) terminal of the recirculation control motor 7P (4-door) or 5P (2-door) connector and body ground.

   4-door:

   RECIRCULATION CONTROL MOTOR 7P CONNECTOR

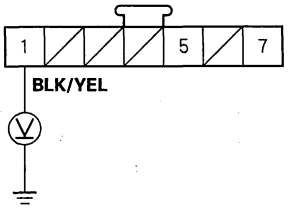

   Wire side of female terminals

   2-door:

   RECIRCULATION CONTROL MOTOR 5P CONNECTOR

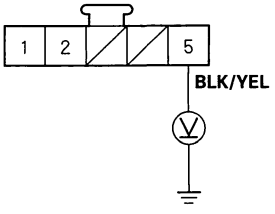

   Wire side of female terminals

   Is there battery voltage?

   YES—Go to step 5.

   NO—Repair open in the wire between the No. 30 fuse in the under-dash fuse/relay box and the recirculation control motor. ■

5. Turn the ignition switch OFF.

6. Test the recirculation control motor.

   - 4-door (see page 21-47)
   - 2-door (see page 21-47)

   Is the recirculation control motor OK?

   YES—Go to step 7.

   NO—Replace the recirculation control motor. ■

7. Disconnect the audio-HVAC display panel 22P connector.

8. Check for continuity between the No. 7 and No. 8 terminals of audio-HVAC display panel 22P connector and body ground individually.

   AUDIO-HVAC DISPLAY PANEL 22P CONNECTOR

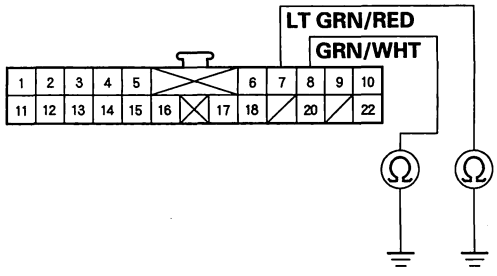

   Wire side of female terminals

   Is there continuity?

   YES—Repair any short to body ground in the wire(s) between the audio-HVAC display panel and the recirculation control motor. ■

   NO—Go to step 9.

(cont'd)

Protected by AR

Recirculation Control Motor Circuit Troubleshooting (cont'd)

9. Turn the ignition switch ON (II), and check the same wires for voltage.

AUDIO-HVAC DISPLAY PANEL
22P CONNECTOR

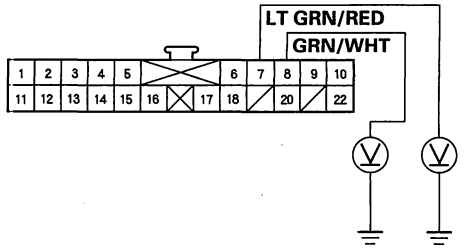

Wire side of female terminals

Is there any voltage?

YES—Repair any short to power in the wire(s) between the audio-HVAC display panel and the recirculation control motor. This short may also damage the audio-HVAC display panel. Repair the short to power before replacing the audio-HVAC display panel. ■

NO—Go to step 10.

10. Turn the ignition switch OFF.

11. Check for continuity between the following terminals of audio-HVAC display panel 22P connector and the recirculation control motor 7P (4-door) or 5P (2-door) connector.

4-door:

22P:	7P:
No. 7	No. 7
No. 8	No. 5

AUDIO-HVAC DISPLAY PANEL
22P CONNECTOR

Wire side of female terminals

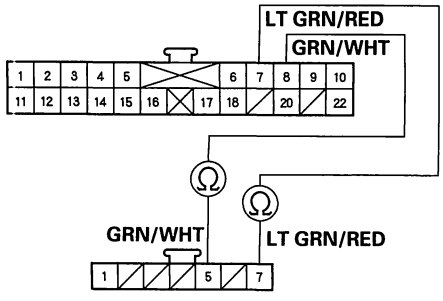

RECIRCULATION CONTROL MOTOR 7P CONNECTOR

Wire side of female terminals

2-door:

22P:	5P:
No. 7	No. 1
No. 8	No. 2

AUDIO-HVAC DISPLAY PANEL
22P CONNECTOR

Wire side of female terminals

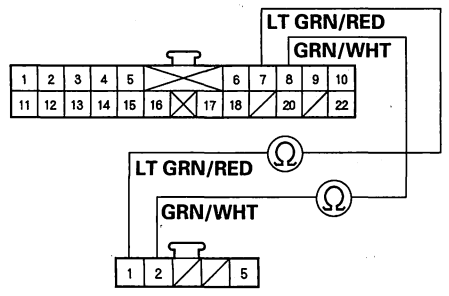

RECIRCULATION CONTROL MOTOR 5P CONNECTOR

Wire side of female terminals

Is there continuity?

YES—Check for loose wires or poor connections at audio-HVAC display panel 22P connector and at the recirculation control motor 7P (4-door) or 5P (2-door) connector. If the connections are good, substitute a known-good audio-HVAC display panel, and recheck. If the symptom/indication goes away, replace the original audio-HVAC display panel. ■

NO—Repair any open in the wire(s) between the audio-HVAC display panel and the recirculation control motor. ■

BACK

Protected by AR

Audio-HVAC Display Panel Power and Ground Circuit Troubleshooting

1. Check the No. 30 (7.5A) fuse in the under-dash fuse/relay box.

   Is the fuse OK?

   YES—Go to step 2.

   NO—Replace the fuse, and recheck. ■

2. Disconnect audio-HVAC display panel 22P connector.

3. Turn the ignition switch ON (II).

4. Measure the voltage between the No. 20 terminal of audio-HVAC display panel 22P connector and body ground.

AUDIO-HVAC DISPLAY PANEL 22P CONNECTOR

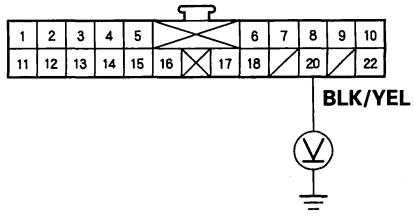

Wire side of female terminals

Is there battery voltage?

YES—Go to step 5.

NO—Repair open in the wire between the No. 30 fuse in the under-dash fuse/relay box and the audio-HVAC display panel. ■

5. Turn the ignition switch OFF.

6. Check for continuity between the No. 22 terminal of audio-HVAC display panel 22P connector and body ground.

AUDIO-HVAC DISPLAY PANEL 22P CONNECTOR

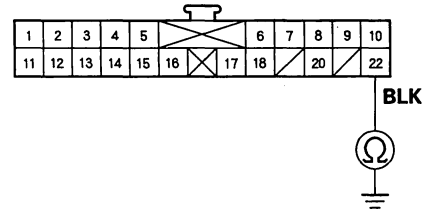

Wire side of female terminals

Is there continuity?

YES—Check for loose wires or poor connections at audio-HVAC display panel 22P connector. If the connections are good, substitute a known-good audio-HVAC display panel, and recheck. If the symptom/indication goes away, replace the original audio-HVAC display panel. ■

NO—Check for an open in the wire between the audio-HVAC display panel and body ground. If the wire is OK, check for poor ground at G503. ■

Protected by AR

A/C Condenser Fan Circuit Troubleshooting

NOTE: Do not use this troubleshooting procedure if the radiator fan and/or the A/C compressor is inoperative. Refer to the symptom troubleshooting index.

1. Check the No. 9 (20A) fuse in the under-hood fuse/relay box, and the No. 30 (7.5A) fuse in the under-dash fuse/relay box.

   Are the fuses OK?

   YES—Go to step 2.

   NO—Replace the fuse(s), and recheck. ■

2. Remove the A/C condenser fan relay from the under-hood fuse/relay box, and test it (see page 22-79).

   Is the relay OK?

   YES—Go to step 3.

   NO—Replace the A/C condenser fan relay. ■

3. Measure the voltage between the No. 1 terminal of the A/C condenser fan relay 4P socket and body ground.

   A/C CONDENSER FAN RELAY 4P SOCKET

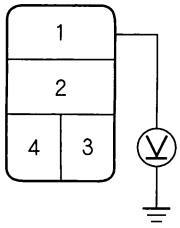

   Is there battery voltage?

   YES—Go to step 4.

   NO—Replace the under-hood fuse/relay box. ■

4. Connect the No. 1 and No. 2 terminals of the A/C condenser fan relay 4P socket with a jumper wire.

   A/C CONDENSER FAN RELAY 4P SOCKET

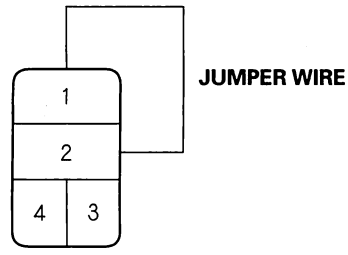

   Does the A/C condenser fan run?

   YES—Go to step 5.

   NO—Go to step 8.

5. Disconnect the jumper wire.

6. Turn the ignition switch ON (II).

7. Measure the voltage between the No. 3 terminal of the A/C condenser fan relay 4P socket and body ground.

   A/C CONDENSER FAN RELAY 4P SOCKET

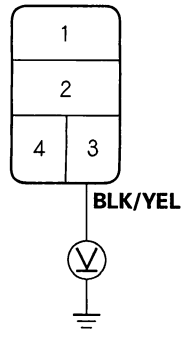

   Is there battery voltage?

   YES—Replace the under-hood fuse/relay box. ■

   NO—Repair open in the wire between the No. 30 fuse in the under-dash fuse/relay box and the A/C condenser fan relay. ■

8. Disconnect the jumper wire.

BACK

Protected by AR

9. Disconnect the A/C condenser fan 2P connector.

10. Check for continuity between the No. 2 terminal of the A/C condenser fan relay 4P socket and the No. 2 terminal of the A/C condenser fan 2P connector.

A/C CONDENSER FAN RELAY 4P SOCKET

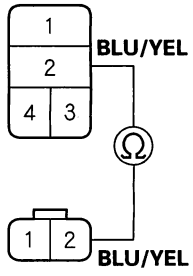

A/C CONDENSER FAN 2P CONNECTOR
Wire side of female terminals

Is there continuity?

YES—Go to step 11.

NO—Repair open in the wire between the A/C condenser fan relay and the A/C condenser fan.■

11. Check for continuity between the No. 1 terminal of the A/C condenser fan 2P connector and body ground.

A/C CONDENSER FAN 2P CONNECTOR

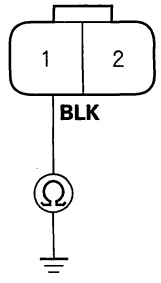

Wire side of female terminals

Is there continuity?

YES—Replace the A/C condenser fan motor.■

NO—Check for an open in the wire between the A/C condenser fan and body ground. If the wire is OK, check for poor ground at G201.■

Radiator and A/C Condenser Fan Common Circuit Troubleshooting

NOTE:
- Do not use this troubleshooting procedure if only one fan is inoperative, or if the A/C compressor is inoperative. Refer to the symptom troubleshooting index.
- Before performing symptom troubleshooting, check for powertrain DTCs (see page 11-3).

1. Check the No. 9 (20A) and No. 11 (20A) fuses in the under-hood fuse/relay box, and the No. 30 (7.5A) fuse in the under-dash fuse/relay box.

Are the fuses OK?

YES—Go to step 2.

NO—Replace the fuse(s), and recheck.■

2. Remove the A/C condenser fan relay from the under-hood fuse/relay box.

3. Turn the ignition switch ON (II).

4. Measure the voltage between the No. 3 terminal of the A/C condenser fan relay 4P socket and body ground.

A/C CONDENSER FAN RELAY 4P SOCKET

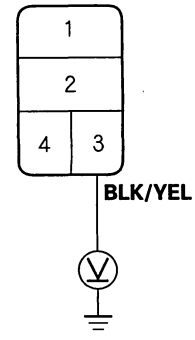

Is there battery voltage?

YES—Go to step 5.

NO—Repair open in the wire between the No. 30 fuse in the under-dash fuse/relay box and the A/C condenser fan relay.■

(cont'd)

Protected by AR

Radiator and A/C Condenser Fan Common Circuit Troubleshooting (cont'd)

5. Turn the ignition switch OFF.
6. Reinstall the A/C condenser fan relay.
7. Make sure the A/C switch is OFF, and the engine coolant temperature is below 199°F (93°C).
8. Turn the ignition switch ON (II).
9. Using a backprobe set, measure the voltage between the No. 12 terminal of ECM/PCM connector E (31P) and body ground with the ECM/PCM connectors connected.

ECM/PCM CONNECTOR E (31P)

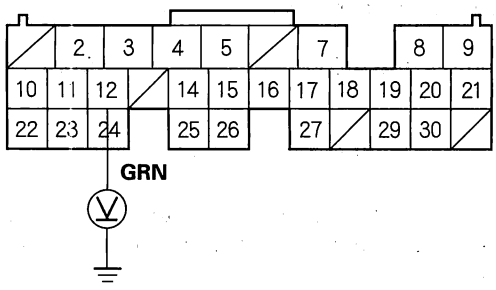

Wire side of female terminals

Is there battery voltage?

YES—Check for loose wires or poor connections at terminal E12 of the ECM/PCM connector E (31P). If the connections are good, substitute a known-good ECM/PCM, and recheck. If the symptom/indication goes away, replace the original ECM/PCM.■

NO—Repair open in the wire between the radiator fan relay, the A/C condenser fan relay, and the ECM/PCM.■

NOTE: After replacing the ECM/PCM, do the following items:
- ECM/PCM idle learn procedure (see page 11-316).
- Reset the power window control unit (see page 22-232).
- Enter the anti-theft codes for the radio and navigation system, then enter the customer's radio station presets.

A/C Compressor Clutch Circuit Troubleshooting

NOTE:
- Do not use this troubleshooting procedure if the fans are also inoperative. Refer to the symptom troubleshooting index.
- Before performing symptom troubleshooting, check for powertrain DTCs (see page 11-3).

1. Check the No. 12 (7.5A) fuse in the under-hood fuse/relay box, and the No. 30 (7.5A) fuse in the under-dash fuse/relay box.

   Are the fuses OK?

   YES—Go to step 2.

   NO—Replace the fuse(s), and recheck.■

2. Check the engine coolant temperature, throttle position, and idle speed (use the HDS PGM-FI data list if possible).

ECT Sensor	169—194°F (76—90°C)
TPS	About 0.5 V
RPM	MT: More than 700 AT: More than 800

   Is the coolant temperature, throttle position, and idle speed OK?

   YES—Go to step 3.

   NO—Troubleshoot and repair the cause of the high engine coolant temperature, low idle, or excessively high throttle position sensor reading.■

3. Remove the A/C compressor clutch relay from the under-hood fuse/relay box, and test it (see page 22-79).

   Is the relay OK?

   YES—Go to step 4.

   NO—Replace the A/C compressor clutch relay.■

BACK

Protected by AR

4. Measure the voltage between the No. 1 terminal of the A/C compressor clutch relay 4P socket and body ground.

A/C COMPRESSOR CLUTCH RELAY 4P SOCKET

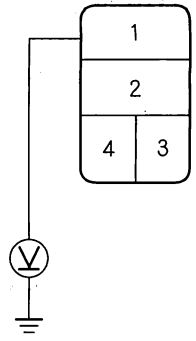

Is there battery voltage?

YES—Go to step 5.

NO—Replace the under-hood fuse/relay box.■

5. Connect the No. 1 and No. 2 terminals of the A/C compressor clutch relay 4P socket with a jumper wire.

A/C COMPRESSOR CLUTCH RELAY 4P SOCKET

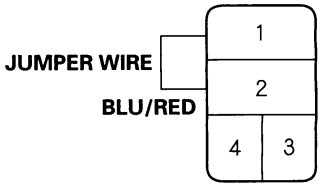

Does the A/C compressor clutch click ?

YES—Go to step 6.

NO—Go to step 14.

6. Disconnect the jumper wire.

7. Turn the ignition switch ON (II).

8. Measure the voltage between the No. 4 terminal of the A/C compressor clutch relay 4P socket and body ground.

A/C COMPRESSOR CLUTCH RELAY 4P SOCKET

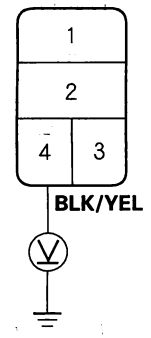

Is there battery voltage?

YES—Go to step 9.

NO—Repair open in the wire between the No. 30 fuse in the under-dash fuse/relay box and the A/C compressor clutch relay.■

9. Turn the ignition switch OFF.

10. Reinstall the A/C compressor clutch relay.

11. Make sure the A/C switch is OFF.

12. Turn the ignition switch ON (II).

(cont'd)

Protected by AR

A/C Compressor Clutch Circuit Troubleshooting (cont'd)

13. Using a backprobe set, measure the voltage between the No. 18 terminal of ECM/PCM connector E (31P) and body ground with the ECM/PCM connectors connected.

ECM/PCM CONNECTOR E (31P)

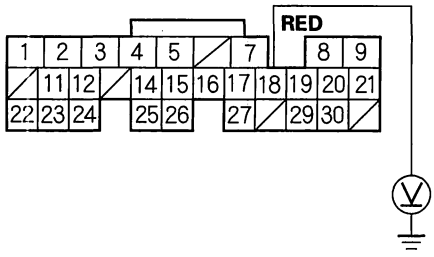

Wire side of female terminals

Is there battery voltage?

YES—Check for loose wires or poor connections at terminal E18 of the ECM/PCM connector E (31P). If the connections are good, substitute a known-good ECM/PCM, and recheck. If the symptom/indication goes away, replace the original ECM/PCM.■

NO—Repair open in the wire between the A/C compressor clutch relay and the ECM/PCM.■

14. Disconnect the jumper wire.

15. Disconnect the A/C compressor clutch 1P connector.

16. Check for continuity between the No. 2 terminal of the A/C compressor clutch relay 4P socket and the No. 1 terminal of the A/C compressor clutch 1P connector.

A/C COMPRESSOR CLUTCH RELAY 4P SOCKET

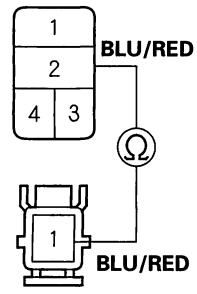

A/C COMPRESSOR CLUTCH 1P CONNECTOR
Terminal side of male terminals

Is there continuity?

YES—Check the A/C compressor clutch clearance, and the A/C compressor clutch field coil (see page 21-60). Repair as needed.■

NO—Repair open in the wire between the A/C compressor clutch relay and the A/C compressor clutch.■

BACK

Protected by AR

A/C Pressure Switch Circuit Troubleshooting

NOTE:
- Do not use this troubleshooting procedure if the following items are operative; A/C condenser fan, radiator fan, A/C compressor, or if the heater is inoperative. Refer to the symptom troubleshooting index.
- Before performing symptom troubleshooting, check for powertrain DTCs (see page 11-3).

1. Check for body DTCs in test mode A of the MICS (see page 22-91).

   Are the any DTCs indicated?

   YES—Do the appropriate troubleshooting for the DTC indicated. ■

   NO—Go to step 2.

2. Disconnect the A/C pressure switch 2P connector.
3. Turn the ignition switch ON (II).
4. Measure the voltage between the No. 1 terminal of the A/C pressure switch 2P connector and body ground.

A/C PRESSURE SWITCH 2P CONNECTOR

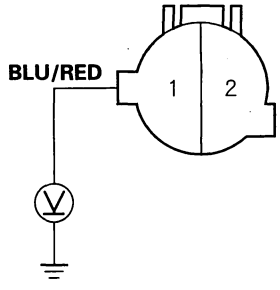

Wire side of female terminals

Is there 5 V or more?

YES—Go to step 5.

NO—Go to step 13.

5. Turn the ignition switch OFF.
6. Check for continuity between the No. 1 and No. 2 terminals of the A/C pressure switch.

A/C PRESSURE SWITCH

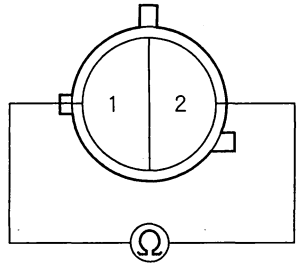

Is there continuity?

YES—Go to step 7.

NO—Go to step 14.

7. Reconnect the A/C pressure switch 2P connector.
8. Disconnect audio-HVAC display panel 22P connector.
9. Turn the ignition switch ON (II).
10. Measure the voltage between the No. 1 terminal of audio-HVAC display panel 22P connector and body ground.

AUDIO-HVAC DISPLAY PANEL 22P CONNECTOR

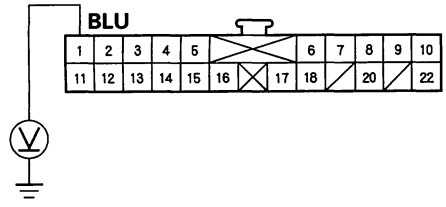

Wire side of female terminals

Is there 5 V or more?

YES—Go to step 11.

NO—Repair open in the wire between the audio-HVAC display panel and the A/C pressure switch. ■

(cont'd)

Protected by AR

A/C Pressure Switch Circuit Troubleshooting (cont'd)

11. Turn the ignition switch OFF.

12. Measure the resistance between the No. 9 and No. 10 terminals of the audio-HVAC display panel 22P connector.

AUDIO-HVAC DISPLAY PANEL 22P CONNECTOR

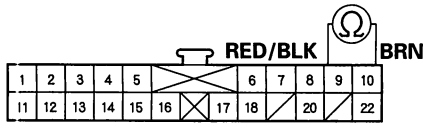

Wire side of female terminals

Is the resistance less than 24 k ohms?

YES—Check for loose wires or poor connections at audio-HVAC display panel 22P connector and at the A/C pressure switch 2P connector. If the connections are good, substitute a known-good audio-HVAC display panel, and recheck. If the symptom/indication goes away, replace the original audio-HVAC display panel. ■

NO—Repair cause of high resistance in the evaporator temperature circuit. ■

13. Measure the voltage between the No. 2 terminal of under-hood fuse/relay box connector H (14P) and body ground with the under-hood fuse/relay box connectors connected.

UNDER-HOOD FUSE/RELAY BOX CONNECTOR H (14P)

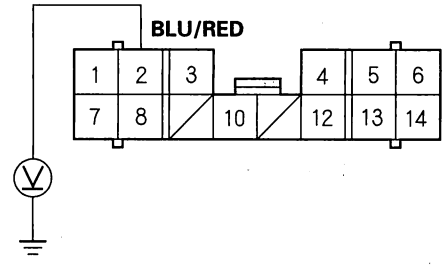

Wire side of female terminals

Is there 5 V or more?

YES—Repair open in the wire between the under-hood fuse/relay box and the A/C pressure switch. ■

NO—Check for loose or poor connections at the No. 2 terminal of the under-hood fuse/relay box. If the connections are OK, replace the under-hood fuse/relay box. ■

14. Check for proper A/C system pressure.

Is the pressure within specifications?

YES—Replace the A/C pressure switch. ■

NO—Repair the A/C pressure problem. ■

BACK

Protected by AR

Air Mix Control Motor Test

4-door

1. Disconnect the 7P connector from the air mix control motor.

   NOTICE
   Incorrectly applying power and ground to the air mix control motor will damage it. Follow the instructions carefully.

2. Connect battery power to the No. 1 terminal of the air mix control motor, and ground the No. 2 terminal; the air mix control motor should run, and stop at Max Cool. If it doesn't, reverse the connections; the air mix control motor should run, and stop at Max Hot.

3. If the air mix control motor did not run in step 2, remove it, then check the air mix control linkage and door for smooth movement.

   - If the linkage and door move smoothly, replace the air mix control motor.
   - If the linkage or door sticks or binds, repair them as needed.
   - If the air mix control motor runs smoothly, go to step 4.

AIR MIX CONTROL MOTOR

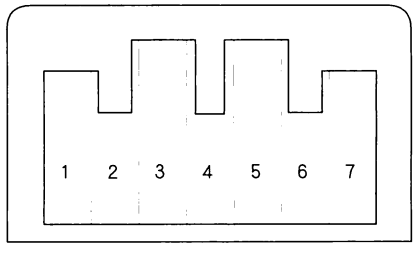

4. Measure the resistance between the No. 5 and No. 7 terminals. It should be between 4.2 to 7.8 kΩ.

5. Reconnect the air mix control motor 7P connector, then turn the ignition switch ON (II).

6. Using the backprobe set, measure the voltage between the No. 3 and No. 5 terminals.

   Max Cool—about 0.5 V
   Max Hot—about 4.5 V

7. If either the resistance or voltage readings are not as specified, replace the air mix control motor.

2-door

1. Disconnect the 5P connector from the air mix control motor.

   NOTICE
   Incorrectly applying power and ground to the air mix control motor will damage it. Follow the instructions carefully.

2. Connect battery power to the No. 1 terminal of the air mix control motor, and ground the No. 2 terminal; the air mix control motor should run, and stop at Max Hot. If it doesn't, reverse the connections; the air mix control motor should run, and stop at Max Cool.

3. If the air mix control motor did not run in step 2, remove it, then check the air mix control linkage and door for smooth movement.

   - If the linkage and door move smoothly, replace the air mix control motor.
   - If the linkage or door sticks or binds, repair them as needed.
   - If the air mix control motor runs smoothly, go to step 4.

AIR MIX CONTROL MOTOR

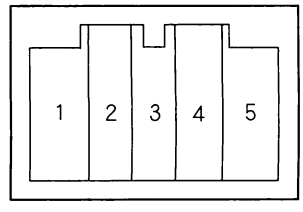

4. Measure the resistance between the No. 4 and No. 5 terminals. It should be between 4.2 to 7.8 kΩ.

5. Reconnect the air mix control motor 5P connector, then turn the ignition switch ON (II).

6. Using the backprobe set, measure the voltage between the No. 3 and No. 5 terminals.

   Max Cool—about 1.0 V
   Max Hot—about 4.0 V

7. If either the resistance or voltage readings are not as specified, replace the air mix control motor.

Protected by AR

Air Mix Control Motor Replacement

4-door

1. Disconnect the 7P connector (A) from the air mix control motor (B). Remove the self-tapping screws and the air mix control motor from the heater unit.

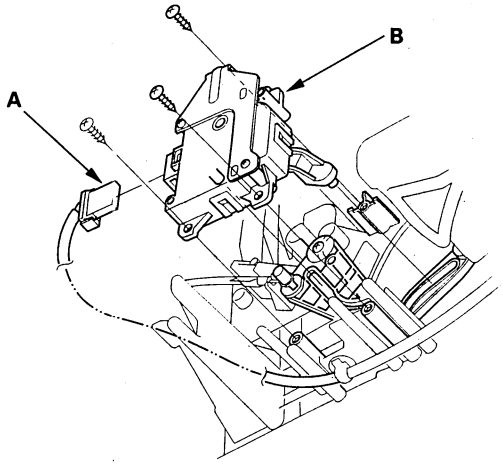

2. Install the motor in the reverse order of removal. Make sure the pin on the motor is properly engaged with the linkage. After installation, make sure the motor runs smoothly.

2-door

1. Disconnect the 5P connector (A) from the air mix control motor (B). Remove the self-tapping screws and the air mix control motor from the heater unit.

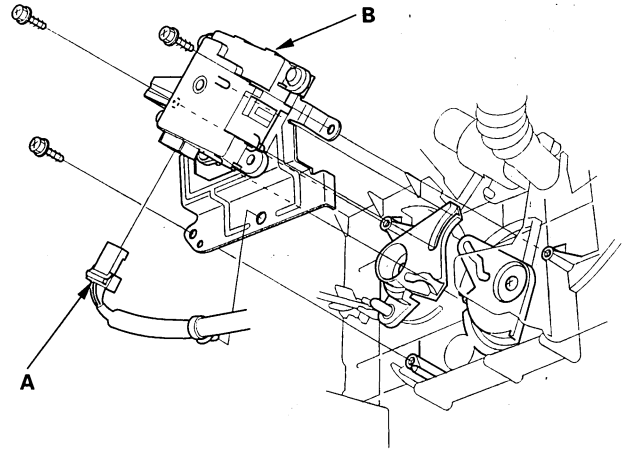

2. Install the motor in the reverse order of removal. Make sure the pin on the motor is properly engaged with the linkage. After installation, make sure the motor runs smoothly.

BACK

Protected by AR

Mode Control Motor Test

4-door

1. Disconnect the 7P connector from the mode control motor.

   NOTICE
   Incorrectly applying power and ground to the mode control motor will damage it. Follow the instructions carefully.

2. Connect battery power to the No. 2 terminal of the mode control motor, and ground the No. 1 terminal; the mode control motor should run smoothly, and stop at Vent. If it doesn't, reverse the connections; the mode control motor should run smoothly, and stop at Defrost. When the mode control motor stops running, disconnect battery power immediately.

MODE CONTROL MOTOR

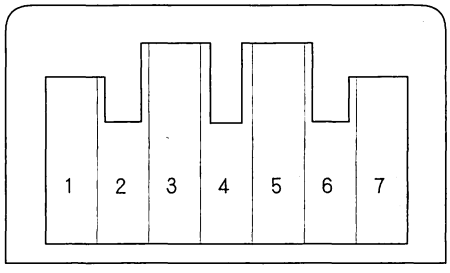

3. If the mode control motor did not run in step 2, remove it, then check the mode control linkage and doors for smooth movement.

   - If the linkage and doors move smoothly, replace the mode control motor.
   - If the linkage or doors stick or bind, repair them as needed.
   - If the mode control motor runs smoothly, go to step 4.

4. Use a digital multimeter with an output of 1 mA or less at the 20 kΩ range. With the mode control motor running as in step 2, check for continuity between the No. 3, 4, 5 and 6 terminals and the No. 7 terminal individually. There should be continuity for a moment at each terminal as the motor moves past the switch's terminal.

5. If there is no continuity for a moment at each terminal, replace the mode control motor.

2-door

1. Disconnect the 10P connector from the mode control motor.

   NOTICE
   Incorrectly applying power and ground to the mode control motor will damage it. Follow the instructions carefully.

2. Connect battery power to the No. 2 terminal of the mode control motor, and ground the No. 1 terminal; the mode control motor should run smoothly, and stop at Vent. If it doesn't, reverse the connections; the mode control motor should run smoothly, and stop at Defrost. When the mode control motor stops running, disconnect battery power immediately.

MODE CONTROL MOTOR

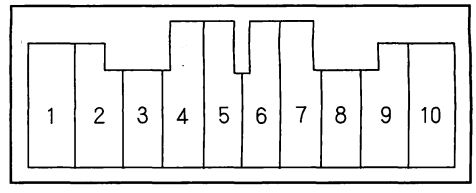

3. If the mode control motor did not run in step 2, remove it, then check the mode control linkage and doors for smooth movement.

   - If the linkage and doors move smoothly, replace the mode control motor.
   - If the linkage or doors stick or bind, repair them as needed.
   - If the mode control motor runs smoothly, go to step 4.

4. Use a digital multimeter with an output of 1 mA or less at the 20 kΩ range. With the mode control motor running as in step 2, check for continuity between the No. 6, 7, 8 and 9 terminals and the No. 10 terminal individually. There should be continuity for a moment at each terminal as the motor moves past the switch's terminal.

5. If there is no continuity for a moment at each terminal, replace the mode control motor.

BACK

Protected by AR

Mode Control Motor Replacement

4-door

1. Open the glove box. Remove the damper from the glove box, then let the glove box hang down (see page 20-132).
2. Disconnect the 7P connector (A) from the mode control motor (B). Remove the self-tapping screws and the mode control motor from the heater unit.

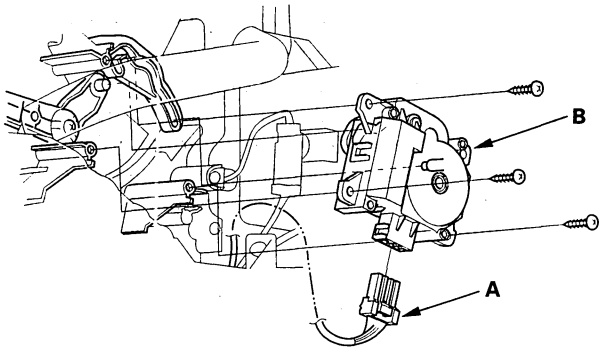

3. Install the motor in the reverse order of removal. After installation, make sure the motor runs smoothly.

2-door

1. Open the glove box. Remove the damper from the glove box, then let the glove box hang down (see page 20-132).
2. Disconnect the 10P connector (A) from the mode control motor (B). Remove the self-tapping screws and the mode control motor from the heater unit.

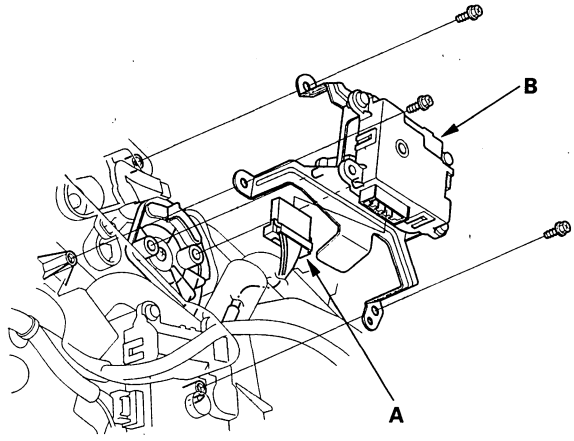

3. Install the motor in the reverse order of removal. After installation, make sure the motor runs smoothly.

BACK

Protected by AR

Recirculation Control Motor Test

4-door

1. Disconnect the 7P connector from the recirculation control motor.

   NOTICE
   Incorrectly applying power and ground to the recirculation control motor will damage it. Follow the instructions carefully.

2. Connect battery power to the No. 1 terminal of the recirculation control motor, and ground the No. 5 or No. 7 terminals; the recirculation control motor should run smoothly. To avoid damaging the recirculation control motor, do not reverse power and ground. Disconnect the No. 5 or No. 7 terminals from ground; the recirculation control motor should stop at Fresh (when the No. 7 terminal is disconnected) or Recirculate (when the No. 5 terminal is disconnected). Don't cycle the recirculation control motor for a long time.

RECIRCULATION CONTROL MOTOR

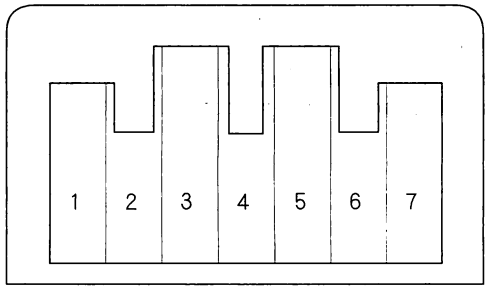

3. If the recirculation control motor did not run in step 2, remove it, then check the recirculation control linkage and doors for smooth movement.

   - If the linkage and doors move smoothly, replace the recirculation control motor.
   - If the linkage or doors stick or bind, repair them as needed.

2-door

1. Disconnect the 5P connector from the recirculation control motor.

   NOTICE
   Incorrectly applying power and ground to the recirculation control motor will damage it. Follow the instructions carefully.

2. Connect battery power to the No. 5 terminal of the recirculation control motor, and ground the No. 1 or No. 2 terminals; the recirculation control motor should run smoothly. To avoid damaging the recirculation control motor, do not reverse power and ground. Disconnect the No. 1 or No. 2 terminals from ground; the recirculation control motor should stop at Fresh (when the No. 1 terminal is disconnected) or Recirculate (when the No. 2 terminal is disconnected). Don't cycle the recirculation control motor for a long time.

RECIRCULATION CONTROL MOTOR

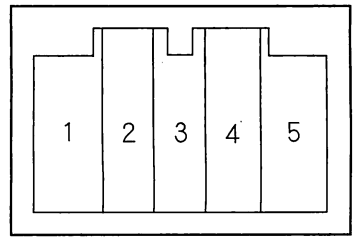

3. If the recirculation control motor did not run in step 2, remove it, then check the recirculation control linkage and doors for smooth movement.

   - If the linkage and doors move smoothly, replace the recirculation control motor.
   - If the linkage or doors stick or bind, repair them as needed.

Protected by AR

Recirculation Control Motor Replacement

4-door

1. Open the glove box. Remove the damper from the glove box, then let the glove box hang down (see page 20-132).
2. Disconnect the 7P connector (A) from the recirculation control motor (B). Remove the self-tapping screws and the recirculation control motor from the blower unit.

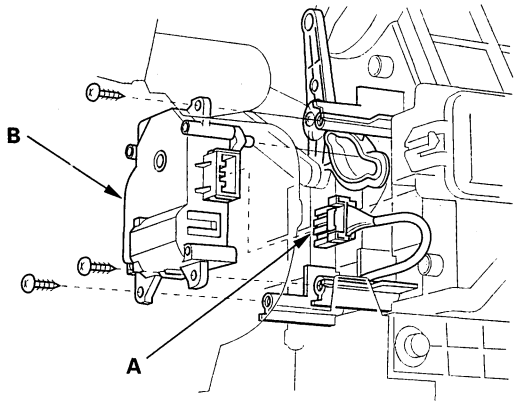

3. Install the motor in the reverse order of removal. Make sure the pin on the motor is properly engaged with the linkage. After installation, make sure the motor runs smoothly.

2-door

1. Open the glove box. Remove the damper from the glove box, then let the glove box hang down (see page 20-132).
2. Disconnect the 5P connector (A) from the recirculation control motor (B). Remove the self-tapping screws and the recirculation control motor from the blower unit.

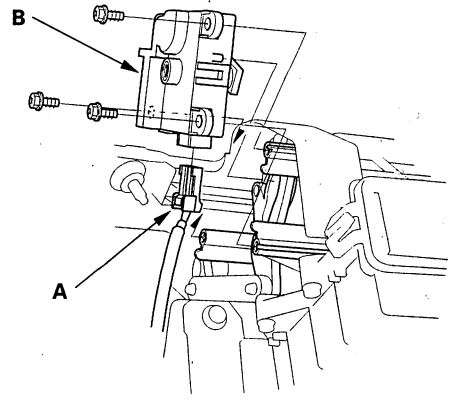

3. Install the motor in the reverse order of removal. Make sure the pin on the motor is properly engaged with the linkage. After installation, make sure the motor runs smoothly.

BACK

Protected by AR

Evaporator Temperature Sensor Test

1. First, dip the sensor in ice water (32°F) (0°C) and measure the resistance between its terminals.

EVAPORATOR TEMPERATURE SENSOR

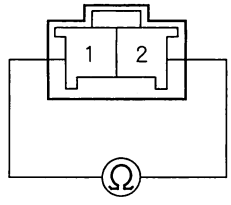

Terminal side of male terminals

2. Next, pour warm water on the sensor and check for a change in resistance.

3. Compare the resistance readings with the specifications shown in the graph; the resistance should be within the specifications.

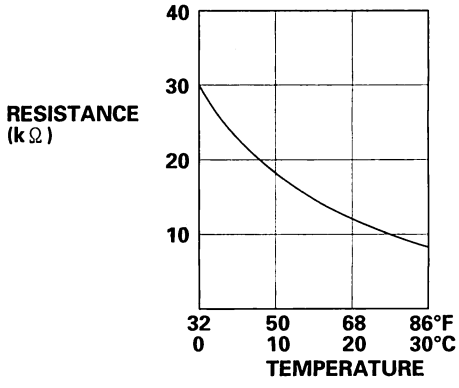

Evaporator Temperature Sensor Replacement

1. Open the glove box. Remove the damper from the glove box, then let the glove box hang down (see page 20-132).

2. Disconnect the 2P connector (A) from the evaporator temperature sensor (B), then remove the connector clip (C). Remove the self-tapping screw, and carefully pull out the evaporator temperature sensor.

4-door:

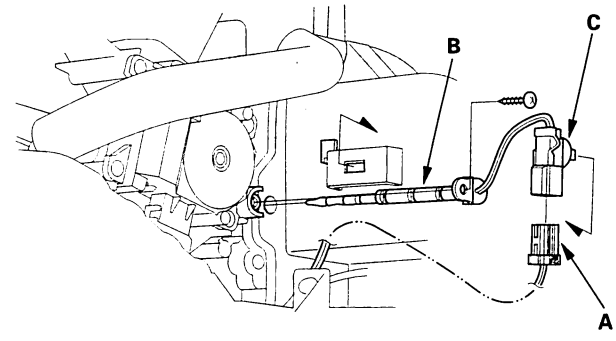

2-door:

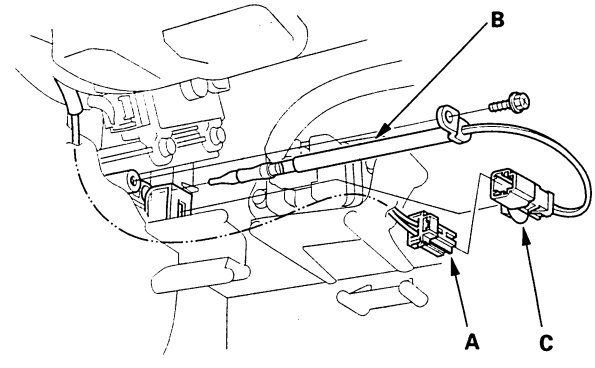

3. Install the sensor in the reverse order of removal.

Protected by AR

Power Transistor Test

1. Disconnect the 4P connector from the power transistor.
2. Measure the resistance between the No. 3 and No. 4 (4-door) or No. 1 and No. 2 (2-door) terminals of the power transistor. It should be about 1.4—1.5 kΩ.
   - If the resistance is within the specifications, go to step 3.
   - If the resistance is not within the specifications, replace the power transistor.

4-door:

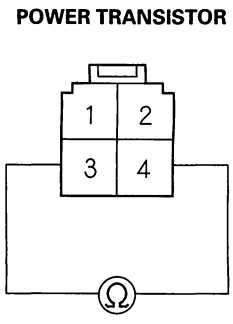

2-door:

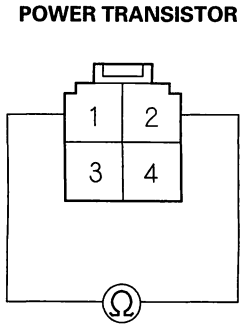

3. Carefully release the lock tab on the No. 1 (4-door) or No. 4 (2-door) terminal (BLU/YEL) (A) in the 4P connector, then remove the terminal and insulate it from body ground.

4-door:

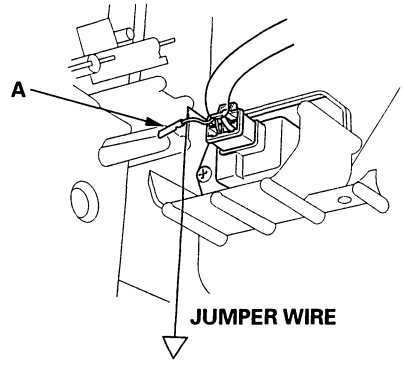

2-door:

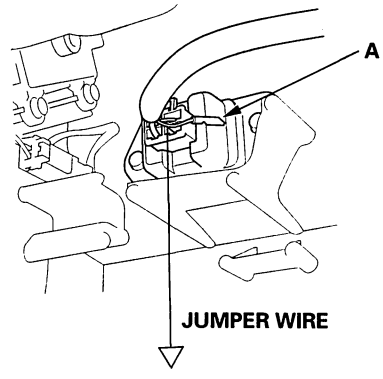

4. Reconnect the 4P connector to the power transistor.
5. Supply 12 volts to the No. 1 (4-door) or No. 4 (2-door) cavity of the power transistor connector with a jumper wire.
6. Turn the ignition switch ON (II), and check that the blower motor runs.
   - If the blower motor does not run, replace the power transistor.
   - If the blower motor runs, the power transistor is OK.

BACK

Protected by AR

Dust and Pollen Filter Replacement

The dust and pollen filter should be replaced every 30,000 miles (48,000 km) or 24 months, whichever comes first. Replace the filter more often if the airflow is less than usual, or if the vehicle is driven in areas that have high concentrations of soot from industry or diesel powered vehicles.

1. Open the glove box. Remove the damper from the glove box then let the glove box hang down (see page 20-132).

2. Remove the dust and pollen filter assembly from the evaporator case.

4-door:

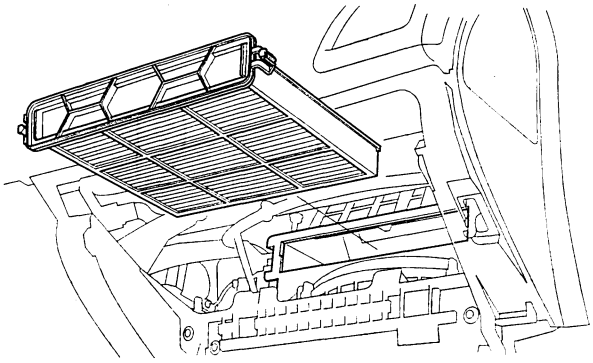

2-door:

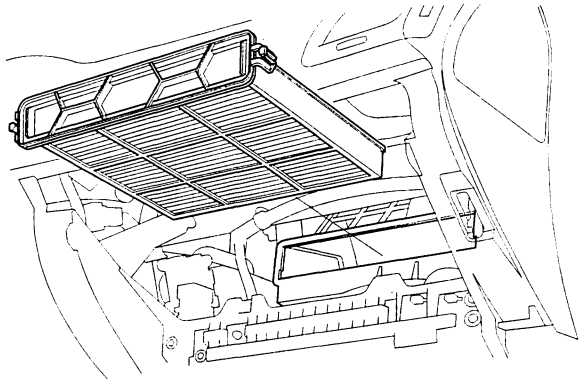

3. Remove the filter (A) from the housing (B), and replace the filter.

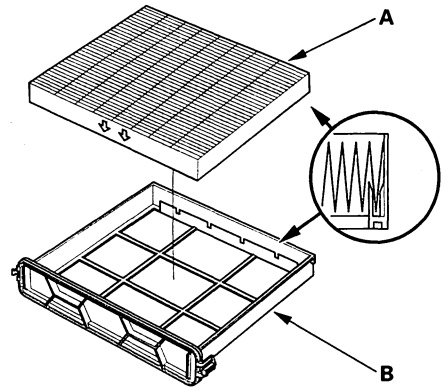

4. Install the filter in the reverse order of removal. Make sure that there is no air leaking out of the evaporator.

Protected by AR

Blower Unit Removal and Installation

4-door

1. Remove the glove box (see page 20-132), and the passenger's kick panel (see page 20-91).

2. Remove the connector clips (A), the wire harness clip (B), and bolt. Cut the plastic cross brace (C) in the glove box opening with diagonal cutters in the area shown. Retain these parts to be reinstalled later.

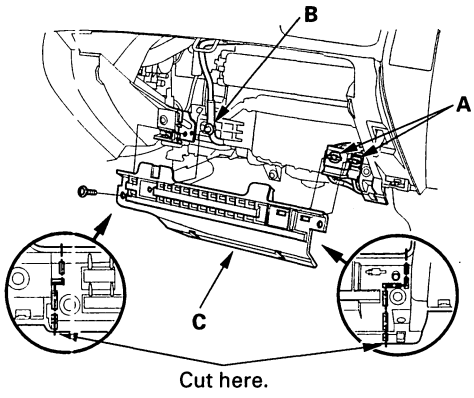

3. Disconnect the connectors (A) from the blower motor, and the recirculation control motor, then remove the wire harness clip (B). Remove the mounting nuts, the mounting bolts and the blower unit (C).

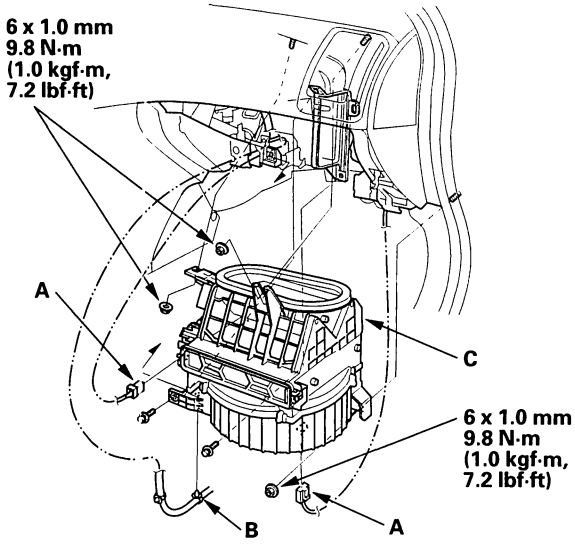

4. Install the unit in the reverse order of removal. Make sure that there is no air leakage.

2-door

1. Remove the glove box (see page 20-132), and the passenger's kick panel (see page 20-90).

2. Remove the connector clips (A), the wire harness clip (B), and bolt. Cut the plastic cross brace (C) in the glove box opening with diagonal cutters in the area shown. Retain these parts to be reinstalled later.

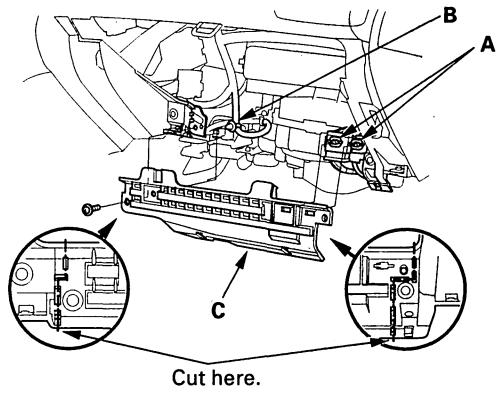

3. Disconnect the connectors (A) from the blower motor, and the recirculation control motor. Remove the mounting nuts, the mounting bolts and the blower unit (B).

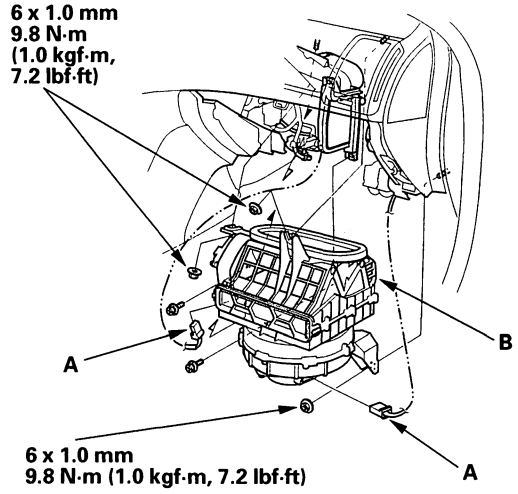

4. Install the unit in the reverse order of removal. Make sure that there is no air leakage.

BACK

Protected by AR

Blower Unit Component Replacement

Note these items when overhauling the blower unit:

- The recirculation control motor (A), blower motor cooling hose (B) (2-door), blower motor cover (C) (2-door), the blower motor (D) and the dust and pollen filter (E) can be replaced without removing the blower unit.
- Before reassembly, make sure the recirculation control linkage and doors move smoothly without binding.
- After reassembly, make sure the recirculation control motor runs smoothly, 4-door (see page 21-47), 2-door (see page 21-47).

4-door:

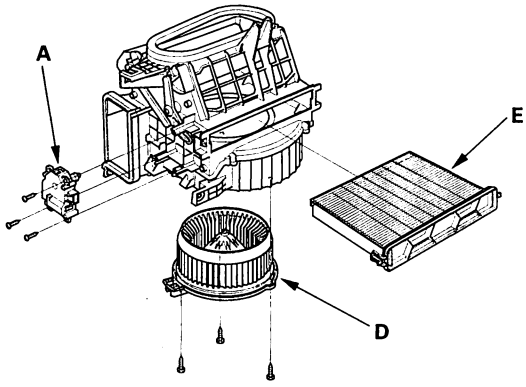

2-door:

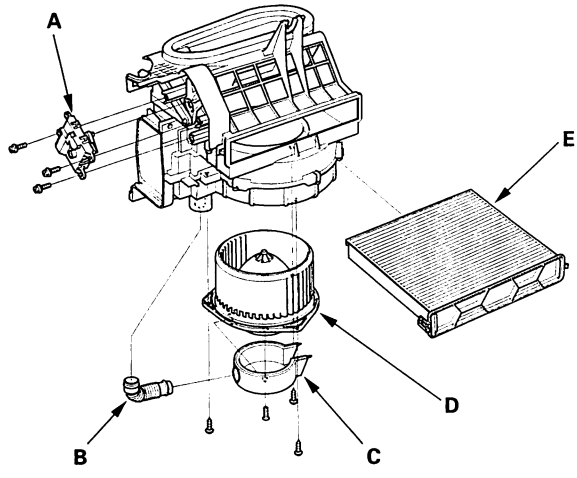

Heater Unit/Core Replacement

SRS components are located in this area. Review the SRS component locations (see page 23-17) and the precautions and procedures (see page 23-19) before performing repairs of service.

1. Make sure you have the anti-theft codes for the radio and the navigation system, then write down the frequencies for the radio's preset buttons.
2. Disconnect the negative cable from the battery.
3. With air conditioning; disconnect the suction and receiver lines from the evaporator core, 4-door (see page 21-57), 2-door (see page 21-58).
4. From under the hood, open the cable clamp (A), then disconnect the heater valve cable (B) from the heater valve arm (C). Turn the heater valve arm to the fully opened position as shown.

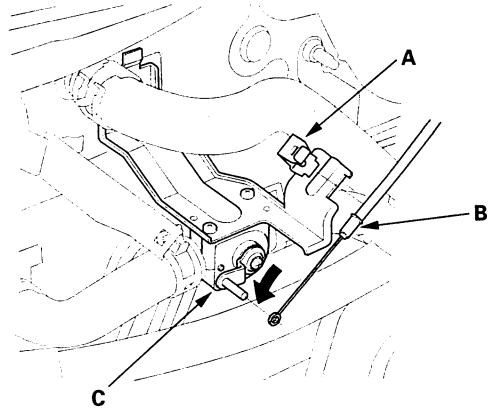

5. When the engine is cool, drain the engine coolant from the radiator (see page 10-6).

(cont'd)

Protected by AR

Heater Unit/Core Replacement (cont'd)

6. Slide the hose clamps (A) back, then disconnect the inlet heater hose (B) and the outlet heater hose (C) from the heater unit. Engine coolant will run out when the hoses are disconnected; drain it into a clean drip pan. Be sure not to let coolant spill on the electrical parts or the painted surfaces. If any coolant spills, rinse it off immediately.

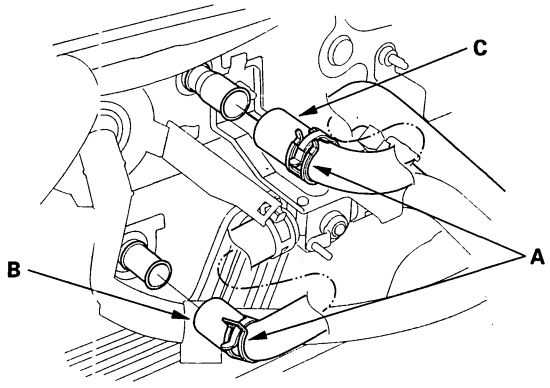

7. Remove the mounting nut from the heater unit. *Take care not to damage or bend the fuel lines and the brake lines, etc.*

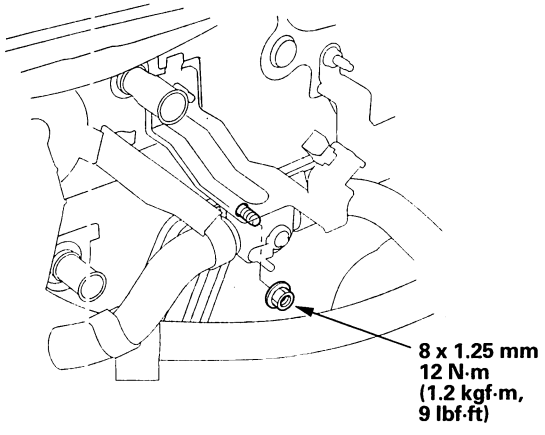

8. Remove the dashboard (see page 20-136).

9. Disconnect the connectors (A) from the air mix control motor, the evaporator temperature sensor, the power transistor, and the recirculation control motor, then remove the wire harness clips (B), the connector clip (C) and the wire harness (D). Remove the heater ducts (E), then remove the mounting nuts and the blower-heater unit (F).

4-door:

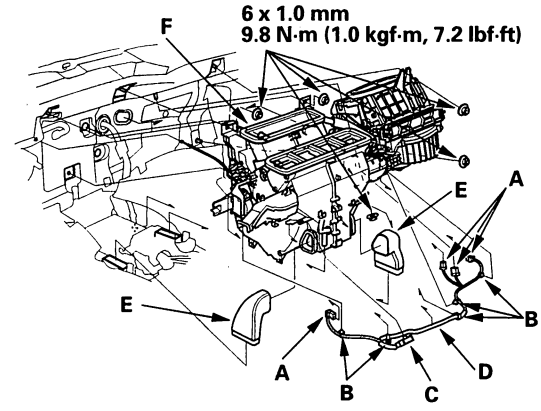

2-door:

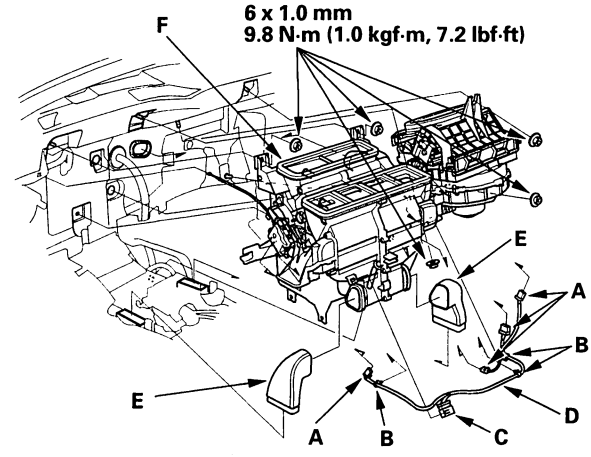

BACK

Protected by AR

10. Remove the self-tapping screws, the evaporator temperature sensor (C) and the joint duct A, then remove the self-tapping screws and the joint duct B (4-door). Remove the self-tapping screws, then remove the passenger's heater outlet (D), and the heater core cover (E). Remove the self-tapping screws and the mode control motor (F) (2-door). Remove the self-tapping screws, the heater pipe brackets (G), the grommets (H) and carefully pull out the heater core (I) so you don't bend the inlet and outlet pipes.

4-door:

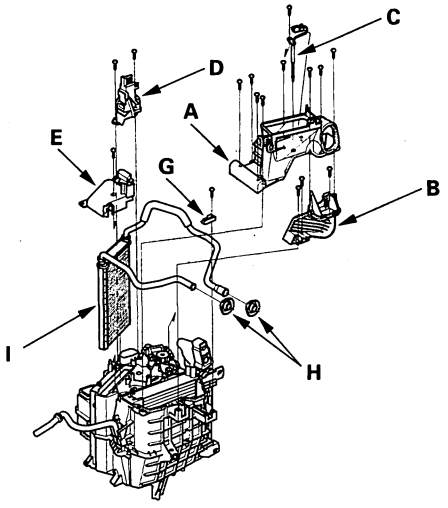

2-door:

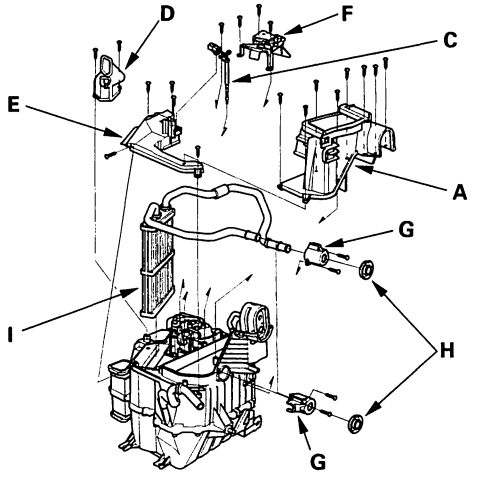

11. Install the heater core and the evaporator core (with A/C) in the reverse order of removal.

12. Install the heater unit in the reverse order of removal, and note these items:

- Do not interchange the inlet and outlet heater hoses, and install the hose clamps securely.
- Refill the cooling system with engine coolant (see page 10-6).
- Adjust the heater valve cable (see page 21-56).
- Make sure that there is no coolant leakage.
- Make sure that there is no air leakage.
- With air conditioning: refer to evaporator core replacement (see page 21-57).
- Reset the power window control unit (see page 22-232).
- Enter the anti-theft codes for the radio and the navigation system, then enter the customer's radio station presets.

Protected by AR

Heater Valve Cable Adjustment

1. From under the hood, open the cable clamp (A), then disconnect the heater valve cable (B) from the heater valve arm (C).

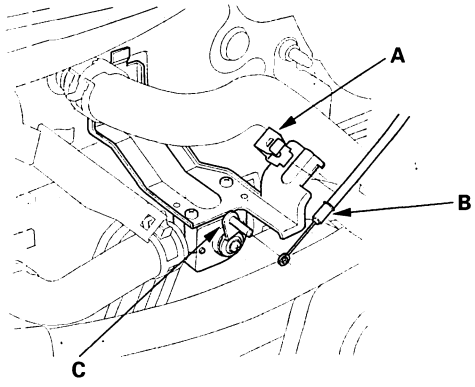

2. From under the dash, disconnect the heater valve cable housing from the cable clamp (A), and disconnect the heater valve cable (B) from the air mix control linkage (C).

4-door:

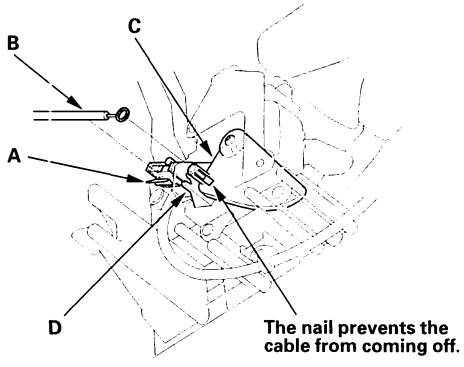

2-door:

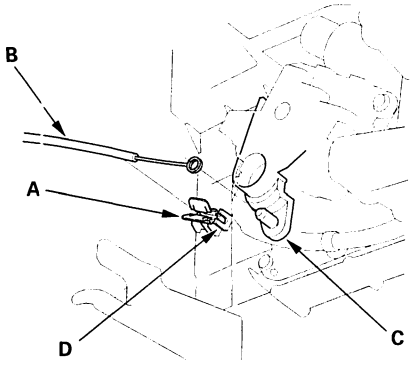

3. Set the temperature control dial to Max Cool (LO) with the ignition switch ON (II).

4. Attach the heater valve cable (B) to the air mix control linkage (C) as shown step 2. Hold the end of the heater valve cable housing against the stop (D), then snap the heater valve cable housing into the cable clamp (A).

   NOTE:
   - Insert the ring from the end of the cable securely to the linkage pin.
   - 4-door: Insert the ring over the nail, making sure it is correctly attached.
   - 2-door: Insert the ring all the way to the base of the pin.

5. From under the hood, turn the heater valve arm (C) to the fully closed position as shown, and hold it. Attach the heater valve cable (B) to the heater valve arm, and gently pull on the heater valve cable housing to take up any slack, then install the heater valve cable housing into the cable clamp (A).

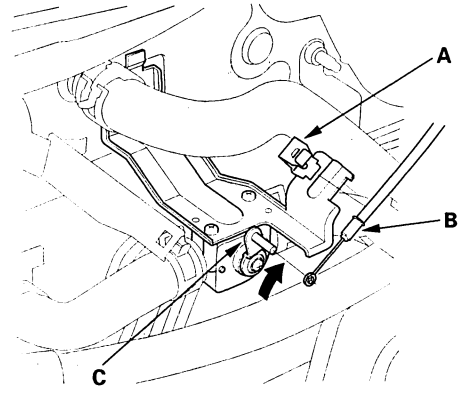

BACK

Protected by AR

Evaporator Core Replacement

4-door

1. Recover the refrigerant with a recovery/recycling/charging station (see page 21-65).

2. Remove the bolt, then disconnect the suction line (A) and the receiver line (B) from the evaporator core.

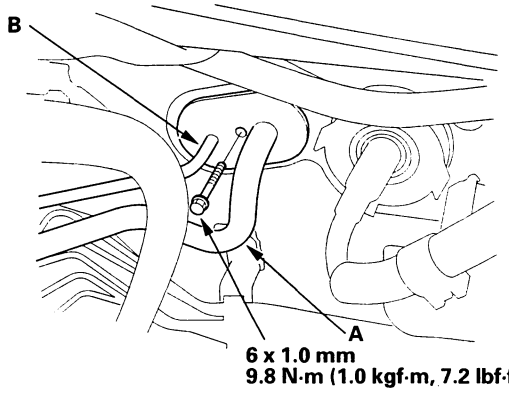

3. Remove the blower unit, 4-door (see page 21-52), 2-door (see page 21-52).

4. Remove the evaporator temperature sensor (see page 21-49).

5. Disconnect the connector (A) from the power transistor, then remove the self-tapping screws, and the expansion valve cover (B).

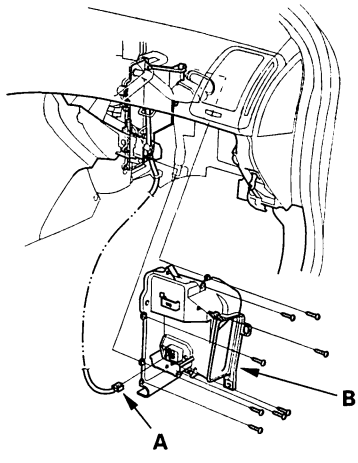

6. Carefully pull out the evaporator core (A) and the plate (B) without bending the pipes.

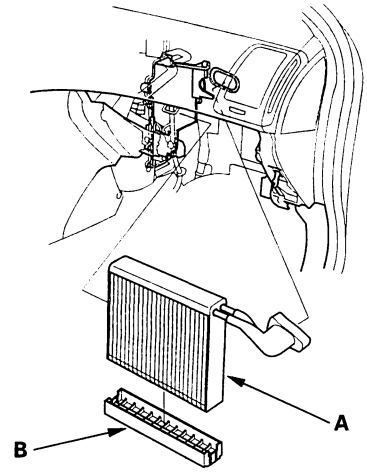

7. Install the core in the reverse order of removal, and note these items:

- If you're installing a new evaporator core, add refrigerant oil (DENSO ND-OIL 8) (see page 21-8).
- Replace the O-rings with new ones at each fitting, and apply a thin coat of refrigerant oil before installing them. Be sure to use the correct O-rings for HFC-134a (R-134a) to avoid leakage.
- Immediately after using the oil, reinstall the cap on the container, and seal it to avoid moisture absorption.
- Do not spill the refrigerant oil on the vehicle; it may damage the paint; if the refrigerant oil contacts the paint, wash it off immediately.
- Make sure that there is no air leakage.
- Charge the system (see page 21-67).

Protected by AR

Evaporator Core Replacement (cont'd)

2-door

1. Recover the refrigerant with a recovery/recycling/charging station (see page 21-65).

2. Remove the bolt, then disconnect the suction line (A) and the receiver line (B) from the evaporator core.

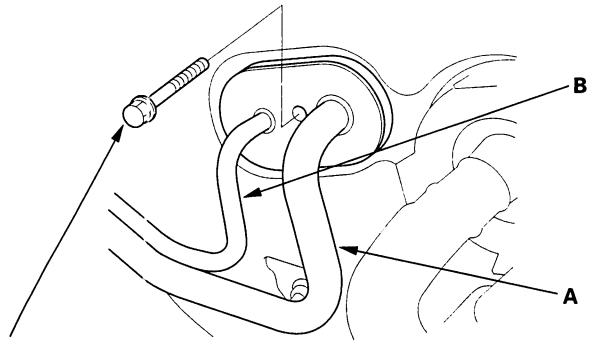

6 x 1.0 mm
9.8 N·m (1.0 kgf·m, 7.2 lbf·ft)

3. Remove the blower unit, 4-door (see page 21-52), 2-door (see page 21-52).

4. Remove the evaporator temperature sensor (see page 21-49).

5. Disconnect the connector (A) from the power transistor, then remove the self-tapping screws, and the expansion valve cover (B).

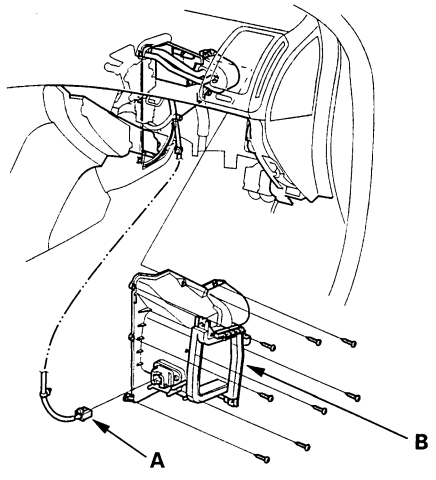

6. Carefully pull out the evaporator core without bending the pipes.

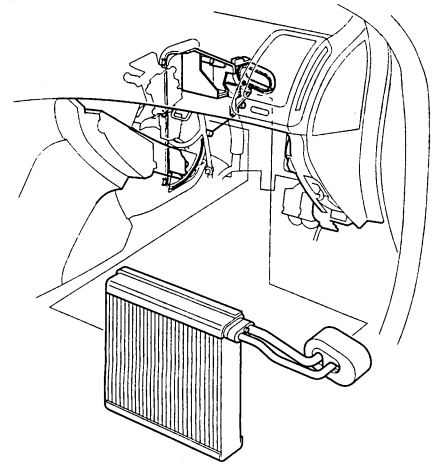

7. Install the core in the reverse order of removal, and note these items:

- If you're installing a new evaporator core, add refrigerant oil (DENSO ND-OIL 8) (see page 21-8).
- Replace the O-rings with new ones at each fitting, and apply a thin coat of refrigerant oil before installing them. Be sure to use the correct O-rings for HFC-134a (R-134a) to avoid leakage.
- Immediately after using the oil, reinstall the cap on the container, and seal it to avoid moisture absorption.
- Do not spill the refrigerant oil on the vehicle; it may damage the paint; if the refrigerant oil contacts the paint, wash it off immediately.
- Make sure that there is no air leakage.
- Charge the system (see page 21-67).

BACK

Protected by AR

A/C Compressor Replacement

1. If the A/C compressor is marginally operable, run the engine at idle speed, and let the air conditioning work for a few minutes, then shut the engine off.
2. Make sure you have the anti-theft codes for the radio and the navigation system, then write down the frequencies for the radio's preset buttons.
3. Disconnect the negative cable from the battery.
4. Recover the refrigerant with a recovery/recycling/charging station (see page 21-65).
5. Remove the alternator (see page 4-40).
6. Remove the A/C compressor clutch connector (A) from the A/C condenser fan shroud, then disconnect the connector. Remove the bolt and the nut, then disconnect the suction line (B) and discharge line (C) from the A/C compressor. Plug or cap the lines immediately after disconnecting them to avoid moisture and dust contamination.

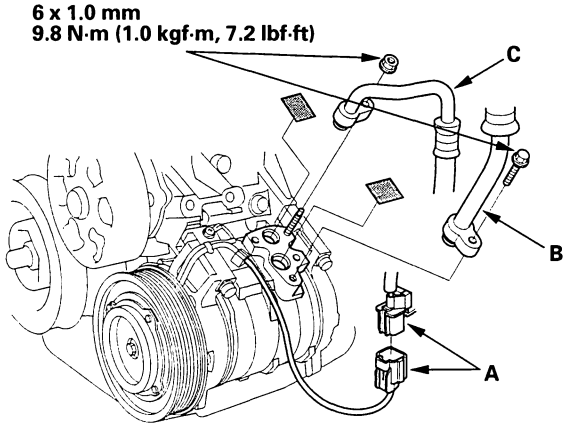

7. Remove the mounting bolts and the A/C compressor. Be careful not to damage the radiator fins when removing the A/C compressor.

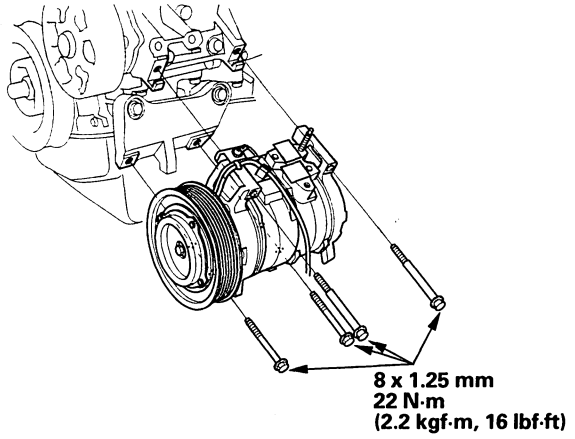

8. Install the A/C compressor in the reverse order of removal, and note these items:

- If you're installing a new A/C compressor, you must calculate the amount of refrigerant oil to be removed from it (see page 21-8).
- Replace the O-rings with new ones at each fitting, and apply a thin coat of refrigerant oil before installing them. Be sure to use the correct O-rings for HFC-134a (R-134a) to avoid leakage.
- Use refrigerant oil (DENSO ND-OIL 8) for HFC-134a DENSO piston type A/C compressor only.
- To avoid contamination, do not return the oil to the container once dispensed, and never mix it with other refrigerant oils.
- Immediately after using the oil, reinstall the cap on the container, and seal it to avoid moisture absorption.
- Do not spill the refrigerant oil on the vehicle; it may damage the paint; if the refrigerant oil contacts the paint, wash it off immediately.
- Be careful not to damage the radiator fins when installing the A/C compressor and the A/C condenser fan shroud.
- Charge the system (see page 21-67).
- Reset the power window control unit (see page 22-232).
- Enter the anti-theft codes for the radio, and the navigation system, then enter the customer's radio station presets.

Protected by AR

A/C Compressor Clutch Check

1. Check the pressure plate for discoloration, peeling, or other damage. If there is damage, replace the clutch set (see page 21-61).

2. Check the pulley bearing play and drag by rotating the pulley by hand. Replace the clutch set with a new one if it is noisy or has excessive play/drag (see page 21-61).

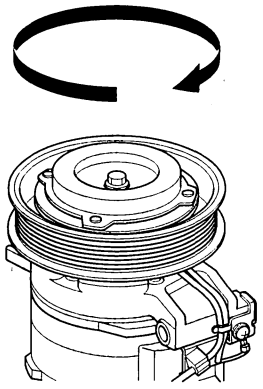

3. Measure the clearance between the pulley (A) and the pressure plate (B) with a dial indicator. Zero out the indicator, then apply battery voltage to the A/C compressor clutch. Measure the movement of the pressure plate when the voltage is applied. If the clearance is not within the specified limits, the pressure plate must be reshimmed (see page 21-61).

Clearance: 0.35—0.6 mm (0.014—0.024 in.)

NOTE: The shims are available in three thicknesses: 0.1 mm, 0.3 mm and 0.5 mm.

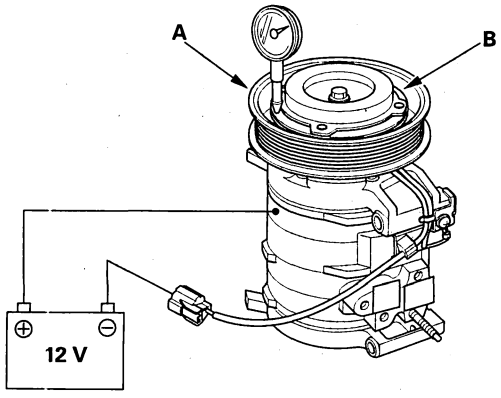

4. Check resistance of the field coil. If resistance is not within specifications, replace the field coil (see page 21-61).

Field Coil Resistance: 3.9—4.3 ohms at 68°F (20°C)

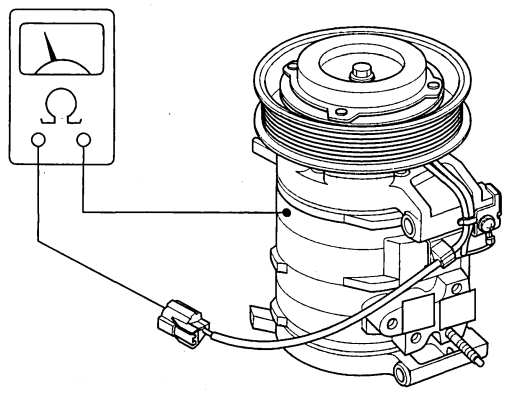

BACK

Protected by AR

A/C Compressor Clutch Overhaul

Special Tools Required
A/C clutch holder, Robinair 10204 or Kent-Moore J37872, or Honda Tool and Equipment KMT-J33939, commercially available

1. Remove the center bolt (A) while holding the pressure plate with a commercially available A/C clutch holder (B).

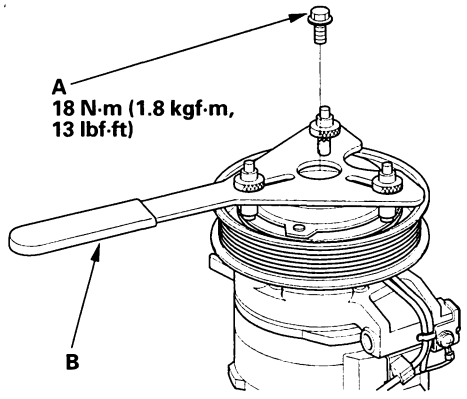

2. Remove the pressure plate (A) and shim(s) (B), taking care not to lose the shim(s). If the clutch needs adjustment, increase or decrease the number and thickness of shims as necessary, then reinstall the pressure plate, and recheck its clearance (see page 21-60).

   NOTE: The shims are available in three thicknesses: 0.1 mm, 0.3 mm and 0.5 mm.

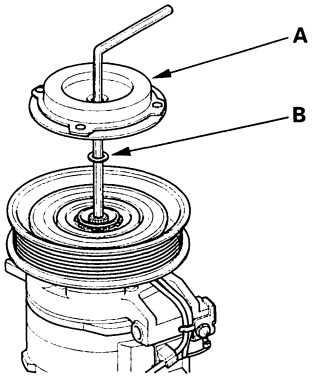

3. If you are replacing the field coil, remove the snap ring (A) with snap ring pliers, then remove the pulley (B). Be careful not to damage the pulley or the A/C compressor.

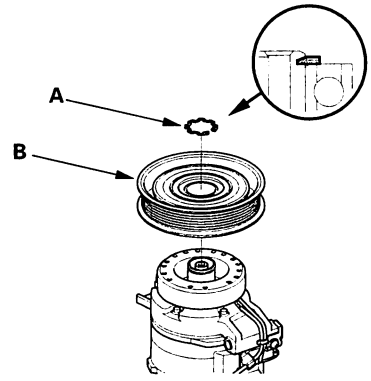

4. Remove the screw, the wire harness clip (A), and the holder (B). Remove the snap ring (C) with snap ring pliers, then remove the field coil (D). Be careful not to damage the field coil or the A/C compressor.

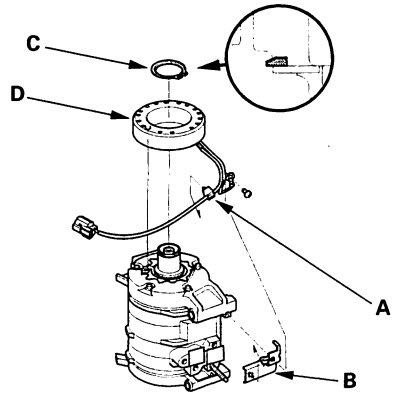

5. Reassemble the clutch in the reverse order of disassembly, and note these items:

   - Install the field coil with the wire side facing down, and align the boss on the field coil with the hole in the A/C compressor.
   - Clean the pulley and A/C compressor sliding surfaces with contact cleaner or other non-petroleum solvent.
   - Install new snap rings, note the installation direction, and make sure they are fully seated in the groove.
   - Make sure that the pulley turns smoothly after it's reassembled.
   - Route and clamp the wires properly or they can be damaged by the pulley.

BACK

Protected by AR

A/C Compressor Relief Valve Replacement

1. Recover the refrigerant with a recovery/recycling/charging station (see page 21-65).
2. Remove the relief valve (A) and the O-ring (B). Plug the opening to keep foreign matter from entering the system and the A/C compressor oil from running out.

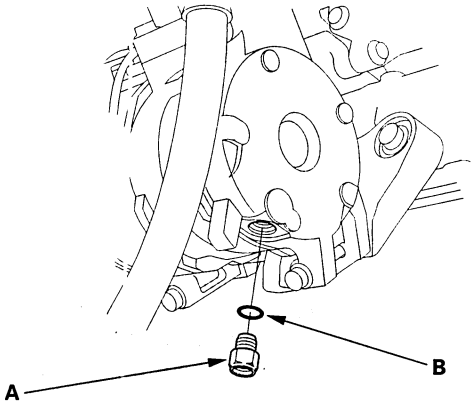

3. Clean the mating surfaces.
4. Replace the O-ring with a new one at the relief valve, and apply a thin coat of refrigerant oil before installing it.
5. Remove the plug, and install and tighten the relief valve.
6. Charge the system (see page 21-67).

A/C Condenser Replacement

1. Recover the refrigerant with a recovery/recycling/charging station (see page 21-65).
2. Remove the front bulkhead cover.
   - 4-door (see page 20-185)
   - 2-door (see page 20-184)
3. Remove the clips (A), then remove the air intake cover (B) and the air intake tube or duct (C).

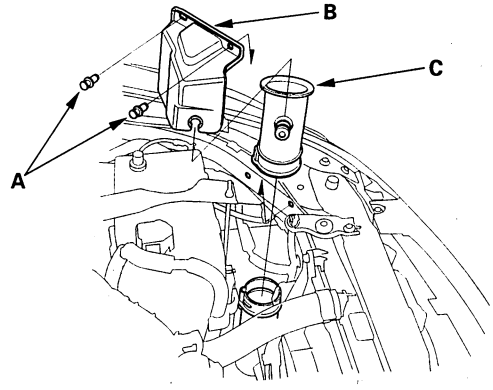

4. Remove the bolts and radiator upper mount brackets.

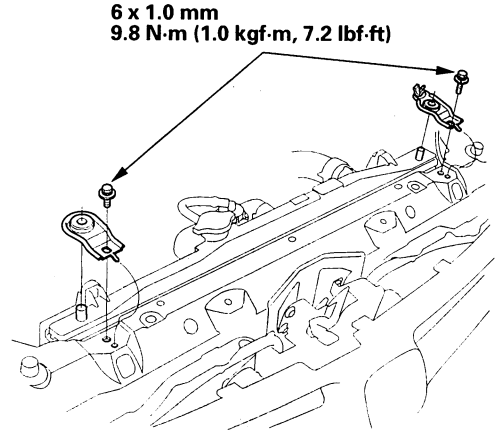

BACK

Protected by AR

5. Remove the bolt, then disconnect the receiver line (A) from the A/C condenser. Disconnect the A/C pressure switch connector (B).

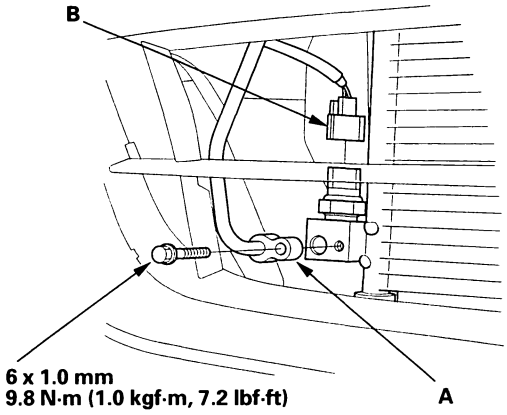

6. Remove the bolts from the A/C condenser.

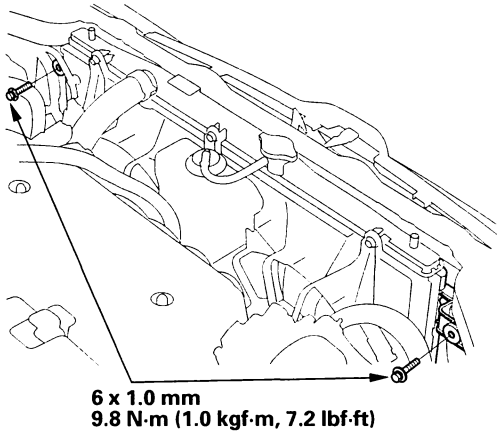

7. Remove the nut, then disconnect the discharge line from the A/C condenser.

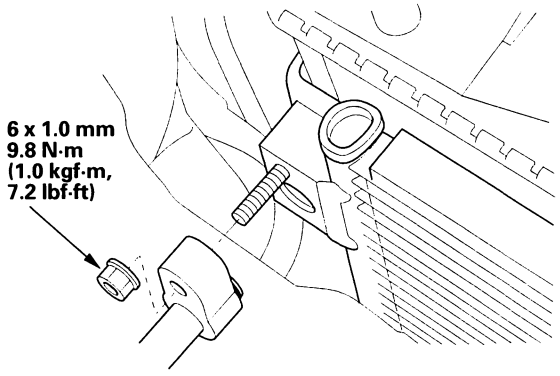

8. Remove the A/C condenser by lifting it up. Be careful not to damage the radiator and A/C condenser fins when removing the A/C condenser.

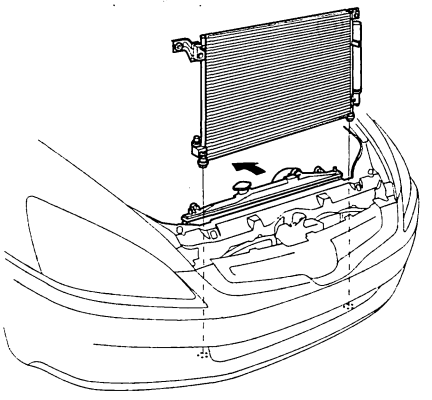

9. Install the A/C condenser in the reverse order of removal, and note these items:

- If you're installing a new A/C condenser, add refrigerant oil (DENSO ND-OIL 8) (see page 21-8).
- Replace the O-rings with new ones at each fitting, and apply a thin coat of refrigerant oil before installing them. Be sure to use the correct O-rings for HFC-134a (R-134a) to avoid leakage.
- Immediately after using the oil, reinstall the cap on the container, and seal it to avoid moisture absorption.
- Do not spill the refrigerant oil on the vehicle; it may damage the paint; if the refrigerant oil contacts the paint, wash it off immediately.
- Be careful not to damage the radiator or the A/C condenser fins when installing the A/C condenser.
- Charge the system (see page 21-67).

Protected by AR

Receiver/Dryer Desiccant Replacement

1. Remove the A/C condenser (see page 21-62).

2. Remove the bolts from the A/C condenser, then remove the receiver/dryer (A), the bracket (B) and the O-rings (C).

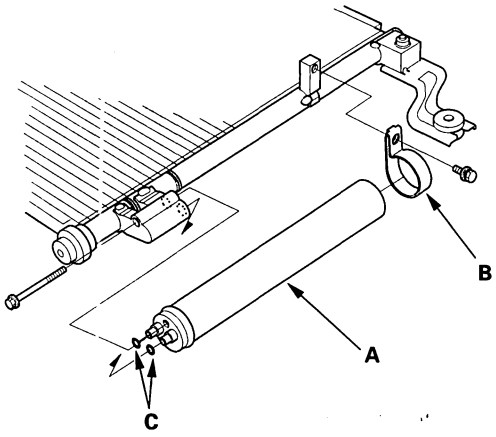

3. Install the receiver/dryer in the reverse order of removal, and note these items:

   Replace the O-rings with new ones, and apply a thin coat of refrigerant oil (DENSO ND-OIL 8) before installing them. Be sure to use the correct O-rings for HFC-134a (R-134a) to avoid leakage.

BACK

Protected by AR

Refrigerant Recovery

⚠CAUTION

- Air conditioning refrigerant or lubricant vapor can irritate your eyes, nose, or throat.
- Be careful when connecting service equipment.
- Do not breathe refrigerant or vapor.

Use only service equipment that is U.L.-listed and is certified to meet the requirements of SAE J2210 to remove HFC-134a (R-134a) from the air conditioning system.

If accidental system discharge occurs, ventilate work area before resuming service.

Additional health and safety information may be obtained from the refrigerant and lubricant manufacturers.

1. Connect a R-134a refrigerant recovery/recycling/charging station (A) to the high-pressure service port (B) and the low-pressure service port (C), as shown, following the equipment manufacturer's instructions.

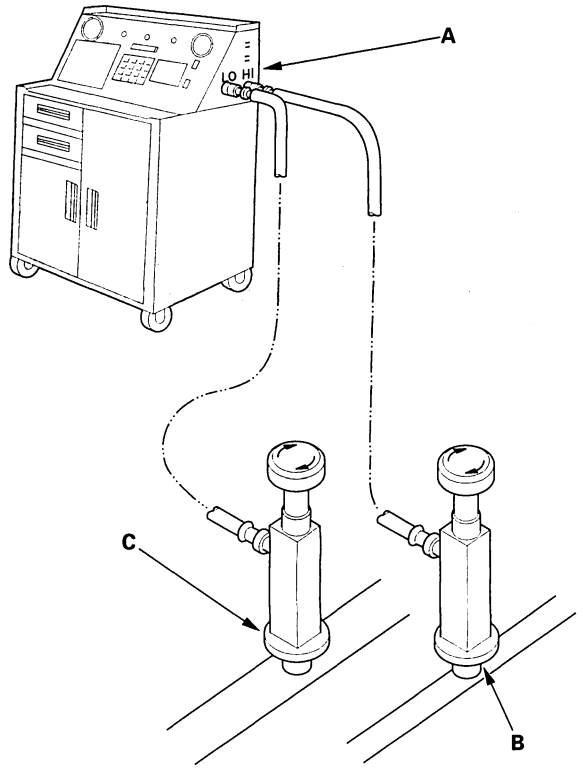

2. Measure the amount of refrigerant oil removed from the A/C system after the recovery process is completed. Be sure to put the same amount of new refrigerant oil back into the A/C system before charging.

Protected by AR

System Evacuation

⚠CAUTION

- Air conditioning refrigerant or lubricant vapor can irritate your eyes, nose, or throat.
- Be careful when connecting service equipment.
- Do not breathe refrigerant or vapor.

Use only service equipment that is U.L.-listed and is certified to meet the requirements of SAE J2210 to remove HFC-134a (R-134a) from the air conditioning system.

If accidental system discharge occurs, ventilate work area before resuming service.

Additional health and safety information may be obtained from the refrigerant and lubricant manufacturers.

1. When an A/C System has been opened to the atmosphere, such as during installation or repair, it must be evacuated using a R-134a refrigerant recovery/recycling/charging station. (If the system has been open for several days, the receiver/dryer should be replaced, and the system should be evacuated for several hours.)
2. Connect a R-134a refrigerant recovery/recycling/charging station (A) to the high-pressure service port (B) and the low-pressure service port (C), as shown, following the equipment manufacturer's instructions. Evacuate the system.

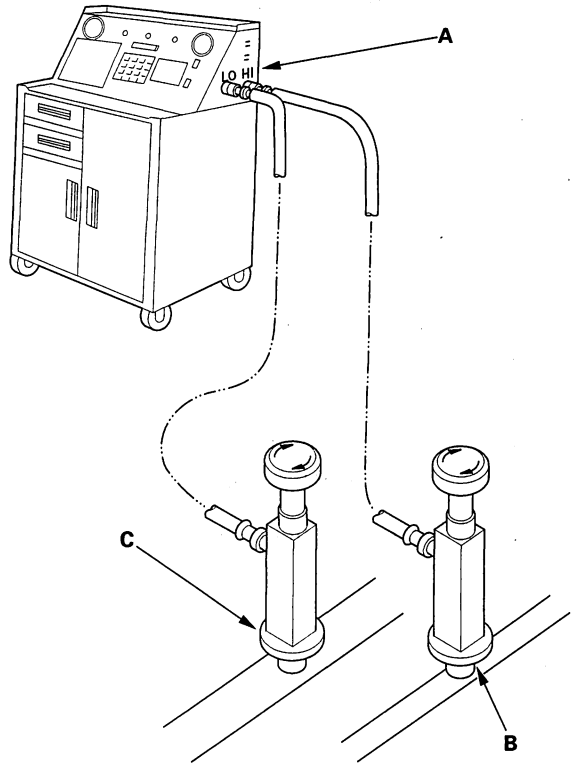

3. If the low-pressure does not reach more than 93.3 kPa (700 mmHg, 27.6 in.Hg) in 15 minutes, there is probably a leak in the system. Partially charge the system, and check for leaks (see step 3 on page 21-68).

BACK

Protected by AR

System Charging

⚠CAUTION

- Air conditioning refrigerant or lubricant vapor can irritate your eyes, nose, or throat.
- Be careful when connecting service equipment.
- Do not breathe refrigerant or vapor.

Use only service equipment that is U.L.-listed and is certified to meet the requirements of SAE J2210 to remove HFC-134a (R-134a) from the air conditioning system.

If accidental system discharge occurs, ventilate work area before resuming service.

Additional health and safety information may be obtained from the refrigerant and lubricant manufacturers.

1. Connect a R-134a refrigerant recovery/recycling/charging station (A) to the high-pressure service port (B) and the low-pressure service port (C), as shown, following the equipment manufacturer's instructions.

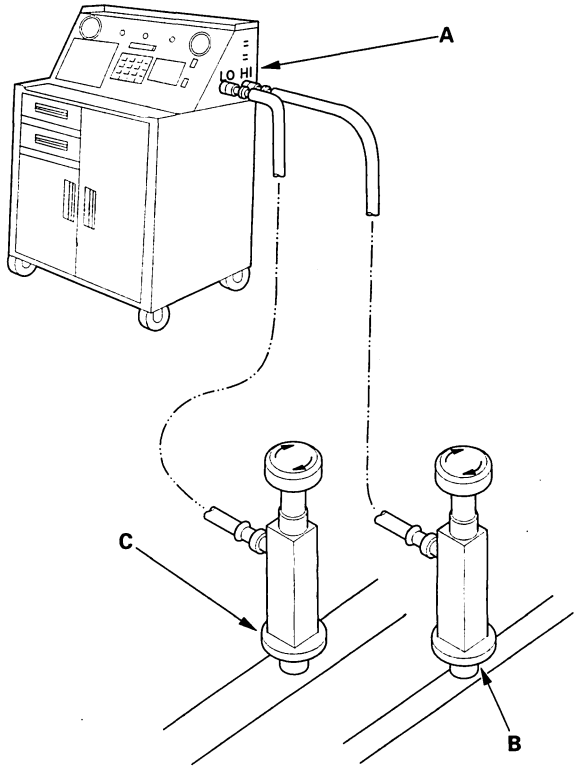

2. Evacuate the system (see page 21-66).
3. Add the same amount of new refrigerant oil to the system that was removed during recovery. Use only DENSO ND-OIL 8 refrigerant oil.
4. Charge the system with the specified amount of R-134a refrigerant. Do not overcharge the system; the compressor will be damaged.

   Select the appropriate units of measure for your refrigerant charging station.

   Refrigerant Capacity:
   500 to 550 g
   0.50 to 0.55 kg
   1.1 to 1.2 lbs
   17.6 to 19.4 oz
5. Check for refrigerant leaks (see page 21-68).
6. Check for system performance (see page 21-69).

Protected by AR

Refrigerant Leak Test

Special Tools Required
Leak detector, Honda Tool and Equipment YGK-H-10PM commercially available

⚠WARNING

- Compressed air mixed with R-134a forms a combustible vapor.
- The vapor can burn or explode causing serious injury.
- Never use compressed air to pressure test R-134a service equipment or vehicle air conditioning system.

⚠CAUTION

- Air conditioning refrigerant or lubricant vapor can irritate your eyes, nose, or throat.
- Be careful when connecting service equipment.
- Do not breathe refrigerant or vapor.

Use only service equipment that is U.L.-listed and is certified to meet the requirements of SAE J2210 to remove HFC-134a (R-134a) from the air conditioning system.

If accidental system discharge occurs, ventilate work area before resuming service.

R-134a service equipment or vehicle air conditioning systems should not be pressure tested or leak tested with compressed air.

Additional health and safety information may be obtained from the refrigerant and lubricant manufacturers.

1. Connect a R-134a refrigerant recovery/recycling/charging station (A) to the high-pressure service port (B) and the low-pressure service port (C), as shown, following the equipment manufacturer's instructions.

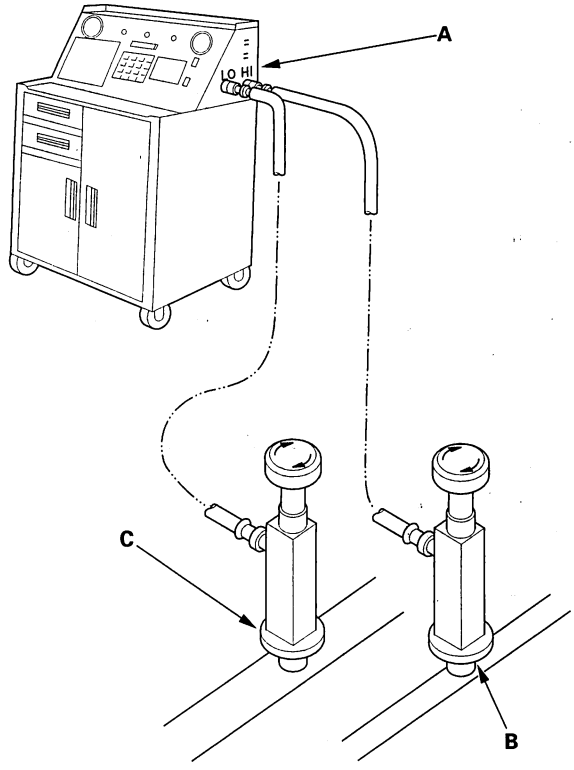

2. Open high pressure valve to charge the system to the specified capacity, then close the supply valve, and disconnect the charging station fittings.

   Select the appropriate units of measure for your refrigerant charging station.

   Refrigerant Capacity:
   500 to 550 g
   0.50 to 0.55 kg
   1.1 to 1.2 lbs
   17.6 to 19.4 oz

3. Check the system for leaks using a R-134a refrigerant leak detector with an accuracy of 14 g (0.5 oz) per year or better.

4. If you find leaks that require the system to be opened (to repair or replace hoses, fittings, etc.), recover the system.

5. After checking and repairing leaks, the system must be evacuated.

BACK

Protected by AR

A/C System Test

Performance Test

⚠ WARNING

- Compressed air mixed with R-134a forms a combustible vapor.
- The vapor can burn or explode causing serious injury.
- Never use compressed air to pressure test R-134a service equipment or vehicle air conditioning systems.

⚠ CAUTION

- Air conditioning refrigerant or lubricant vapor can irritate your eyes, nose, or throat.
- Be careful when connecting service equipment.
- Do not breathe refrigerant or vapor.

The performance test will help determine if the air conditioner system is operating within specifications.

Use only service equipment that is U.L.-listed and is certified to meet the requirements of SAE J2210 to remove HFC-134a (R-134a) from the air conditioning system.

If accidental system discharge occurs, ventilate work area before resuming service.

R-134a service equipment or vehicle air conditioning systems should not be pressure tested or leak tested with compressed air.

Additional health and safety information may be obtained from the refrigerant and lubricant manufacturers.

1. Connect a R-134a refrigerant recovery/recycling/charging station to the high-pressure service port and the low-pressure service port, following the equipment manufacturer's instructions.

2. Determine the relative humidity and air temperature.

3. Open the glove box. Remove the damper from the glove box, then let the glove box hang down (see page 20-132).

4. Insert a thermometer (A) in the center vent.

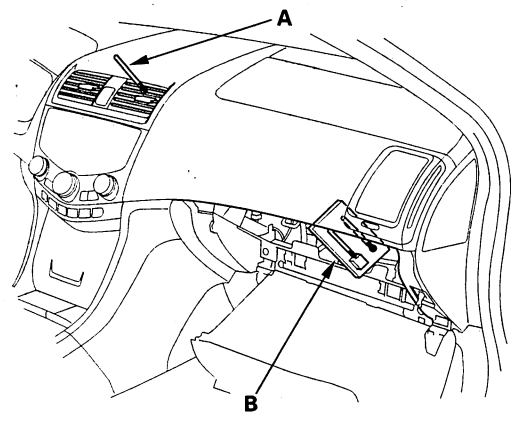

5. Place a thermometer (B) near the blower unit.

6. Test conditions:

   - Avoid direct sunlight.
   - Open hood.
   - Open front doors.
   - Set the temperature control dial to Max Cool, the mode control switch to Vent and the recirculation control switch to Recirculate.
   - Turn the A/C switch on and the fan switch to Max.
   - Run the engine at 1,500 rpm.
   - No driver or passengers in vehicle.

7. After running the air conditioning for 10 minutes under the above test conditions, read the delivery temperature from the thermometer in the center vent, the intake temperature near the blower unit, and the high and low system pressure from the A/C gauges.

(cont'd)

Protected by AR

A/C System Test (cont'd)

8. To complete the charts:

- Mark the delivery temperature along the vertical line.
- Mark the intake temperature (ambient air temperature) along the bottom line.
- Draw a line straight up from the air temperature to the humidity.
- Mark a point 10 % above and 10 % below the humidity level.
- From each point, draw a horizontal line across the delivery temperature.
- The delivery temperature should fall between the two lines.
- Complete the low-side pressure test and high-side pressure test in the same way.
- Any measurements outside the line may indicate the need for further inspection.

Example	Intake temperature (dry):	86°F (30°C) Humidity level 70 %
	Intake temperature (wet):	77.9°F (25.5°C)
	Intake pressure:	255 kPa (2.6 kgf/cm²) (37.0 psi)
	Delivery temperature:	65.5°F (18.6°C)
	Delivery pressure:	1716 kPa (17.5 kgf/cm²) (248.9 psi)
Results:	Within normal range	

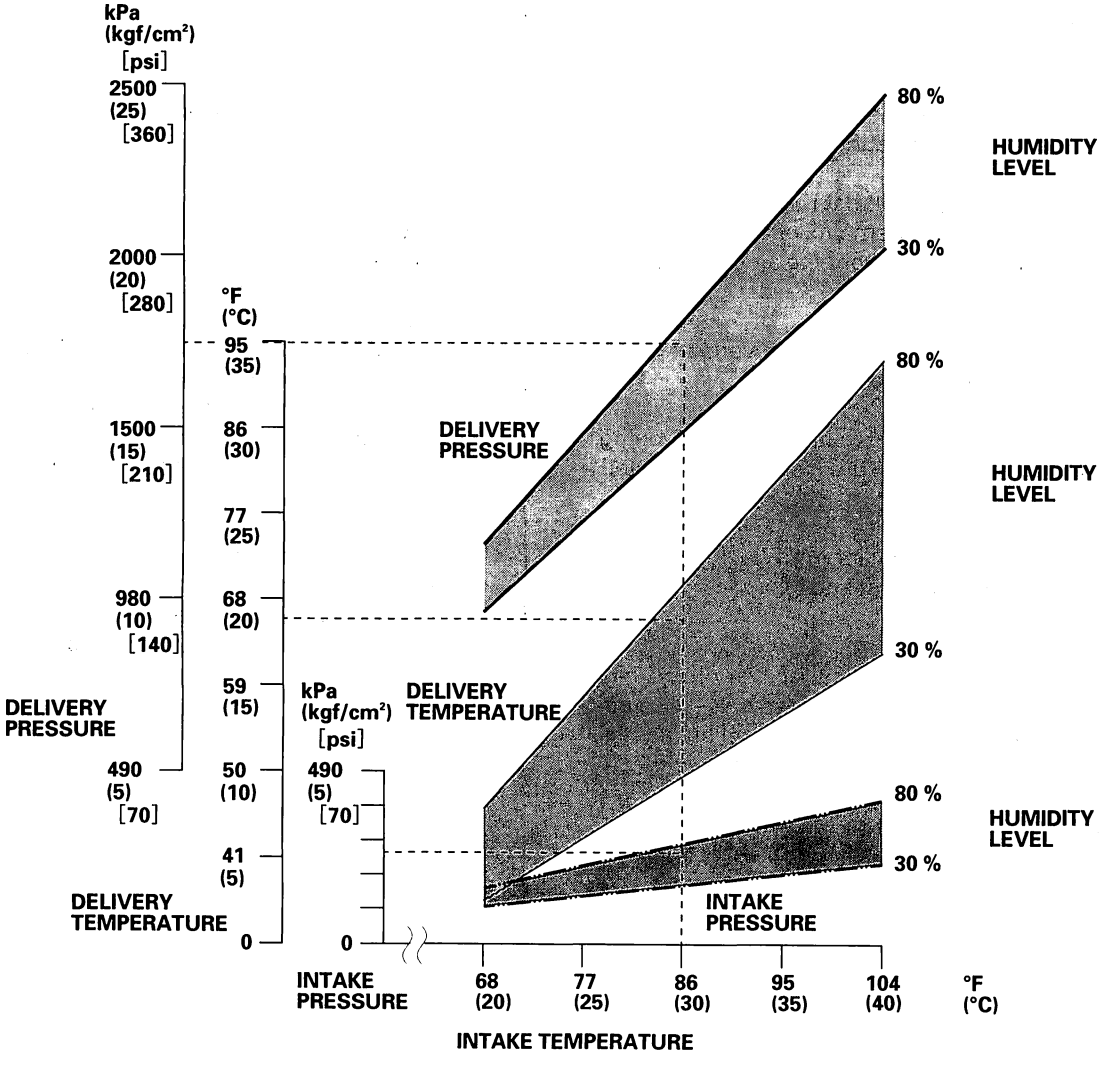

BACK

Protected by AR

Pressure Test

Test results	Related symptoms	Probable cause	Remedy
Discharge (high) pressure abnormally high	After stopping A/C compressor, pressure drops about 196 kPa (2.0 kgf/cm², 28 psi) quickly, and then falls gradually.	Air in system	Recover, evacuate (see page 21-66), and recharge with specified amount (see page 21-67).
	Reduced or no air flow through A/C condenser.	• Clogged A/C condenser or radiator fins • A/C condenser or radiator fan not working properly	• Clean • Check voltage and fan rpm. • Check fan direction.
	Line to A/C condenser is excessively hot.	Restricted flow of refrigerant in system	Restricted lines
Discharge pressure abnormally low	High and low-pressures are balanced soon after stopping A/C compressor. Low side is higher than normal.	• Faulty A/C compressor discharge valve • Faulty A/C compressor seal	Replace the A/C compressor.
	Outlet of expansion valve is not frosted, low-pressure gauge indicates vacuum.	• Faulty expansion valve • Moisture in system	• Replace • Recover, evacuate, and recharge with specified amount.
Suction (low) pressure abnormally low	Expansion valve is not frosted, and low-pressure line is not cold. Low-pressure gauge indicates vacuum.	• Frozen expansion valve (Moisture in system) • Faulty expansion valve	• Recover, evacuate, and recharge with specified amount. • Replace the expansion valve.
	Discharge temperature is low, and the air flow from vents is restricted.	Frozen evaporator	Run the fan with A/C compressor off, then check evaporator temperature sensor.
	Expansion valve is frosted.	Clogged expansion valve	Clean or replace.
Suction pressure abnormally high	Low-pressure hose and check joint are cooler than the temperature around evaporator.	Expansion valve open too long	Repair or replace.
	Suction pressure is lowered when A/C condenser is cooled by water.	Excessive refrigerant in system	Recover, evacuate, and recharge with specified amount.
	High and low-pressures are equalized as soon as the A/C compressor is stopped, and both gauges fluctuate while running.	• Faulty gasket • Faulty high-pressure valve • Foreign particle stuck in high-pressure valve	Replace the A/C compressor.
Suction and discharge pressures abnormally high	Reduced air flow through A/C condenser.	• Clogged A/C condenser or radiator fins • A/C condenser or radiator fan not working properly	• Clean • Check voltage and fan rpm. • Check fan direction.
Suction and discharge pressures abnormally low	Low-pressure hose and metal end areas are cooler than evaporator.	Clogged or kinked low-pressure hose parts	Repair or replace.
	Temperature around expansion valve is too low compared with that around receiver/dryer.	Clogged high-pressure line	Repair or replace.
Refrigerant leaks	A/C compressor clutch is dirty.	A/C compressor shaft seal leaking	Replace the A/C compressor.
	A/C compressor bolt(s) are dirty.	Leaking around bolt(s)	Tighten bolt(s) or replace the A/C compressor.
	A/C compressor gasket is wet with oil.	Gasket leaking	Replace the A/C compressor.
	A/C fitting is dirty.	Leaking O-ring.	Clean A/C fitting and replace O-ring.

Protected by AR

Component Location Index

4-door

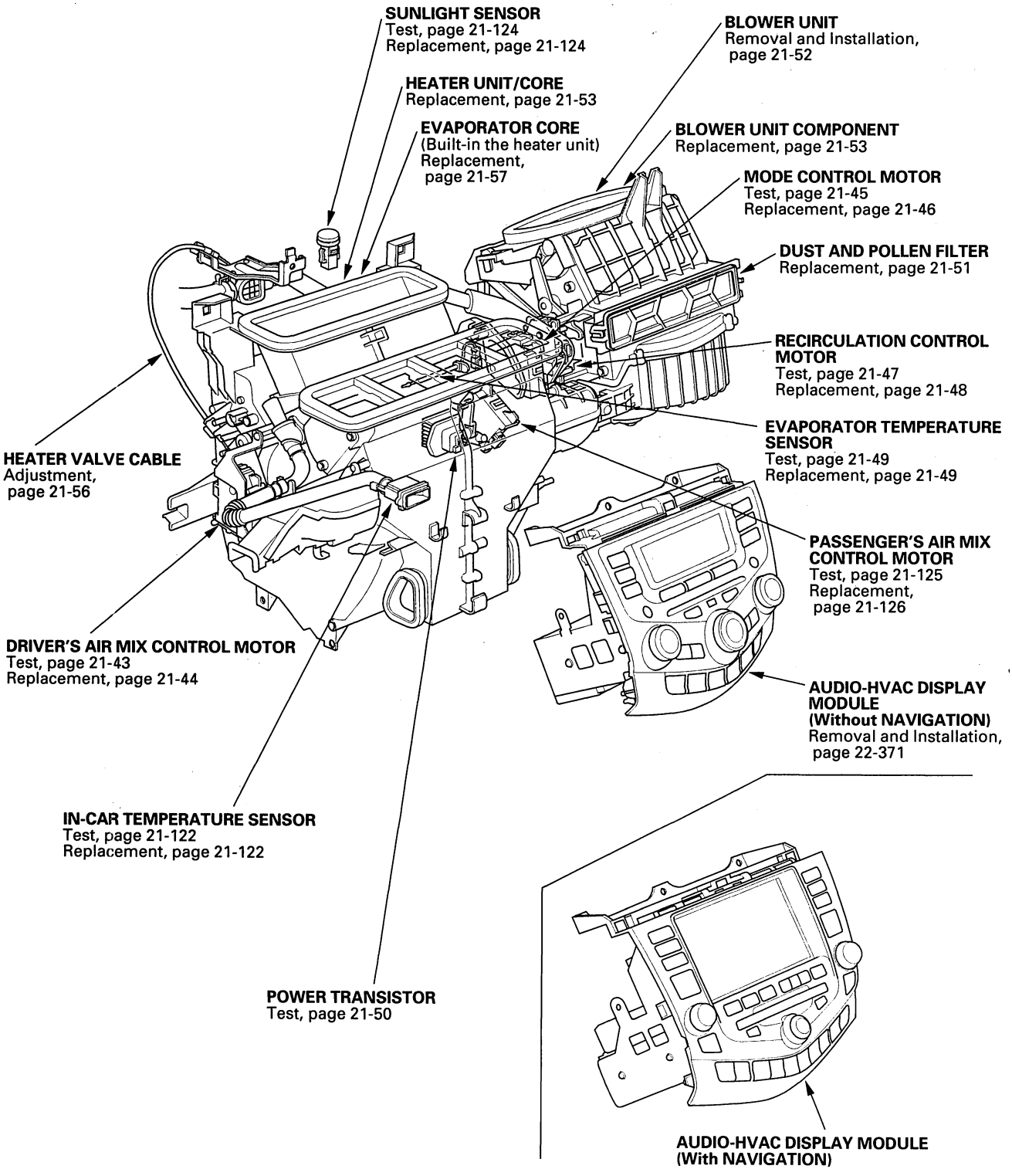

BACK

Protected by AR

2-door

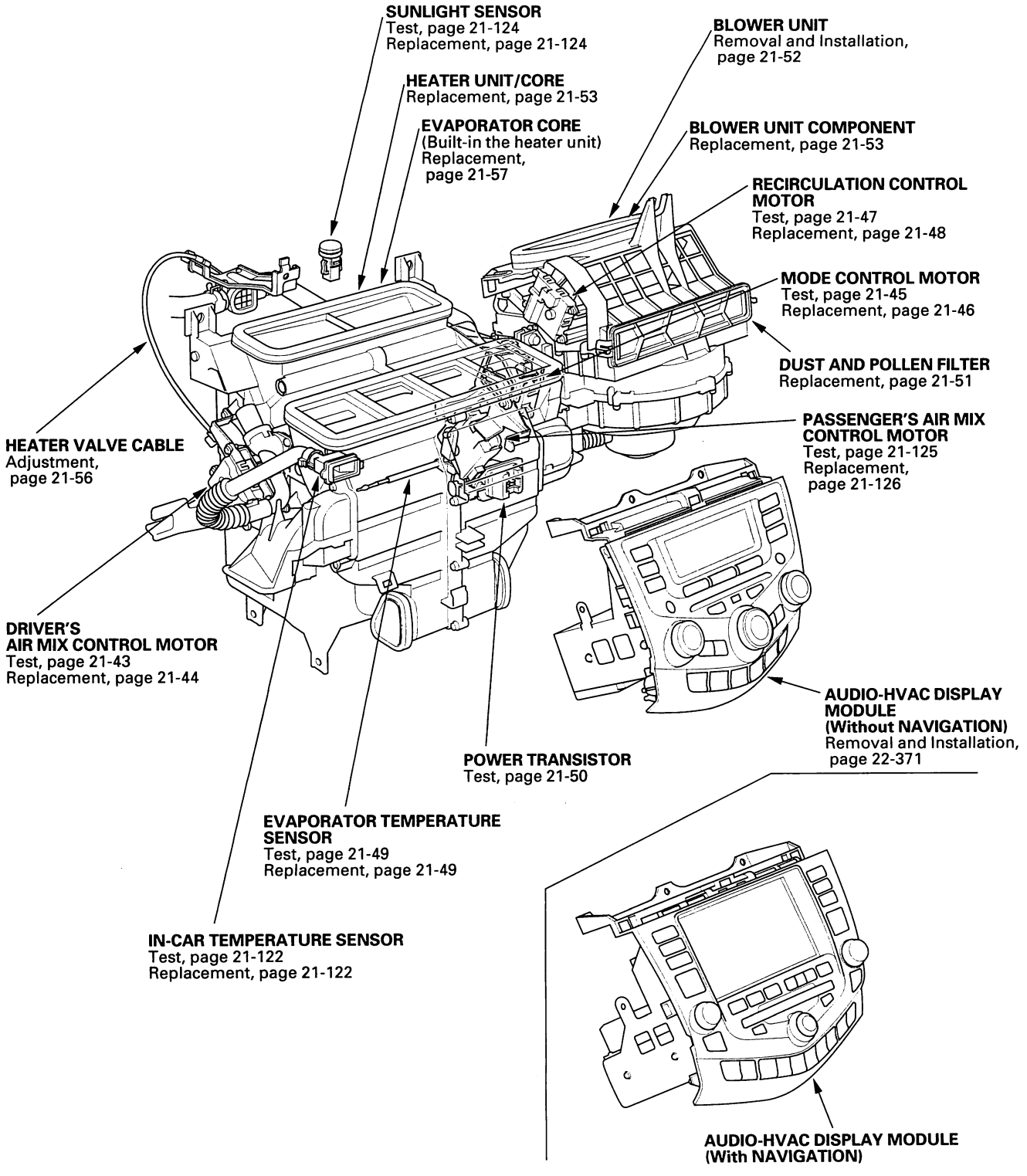

(cont'd)

BACK

Protected by AR

Component Location Index (cont'd)

4-door

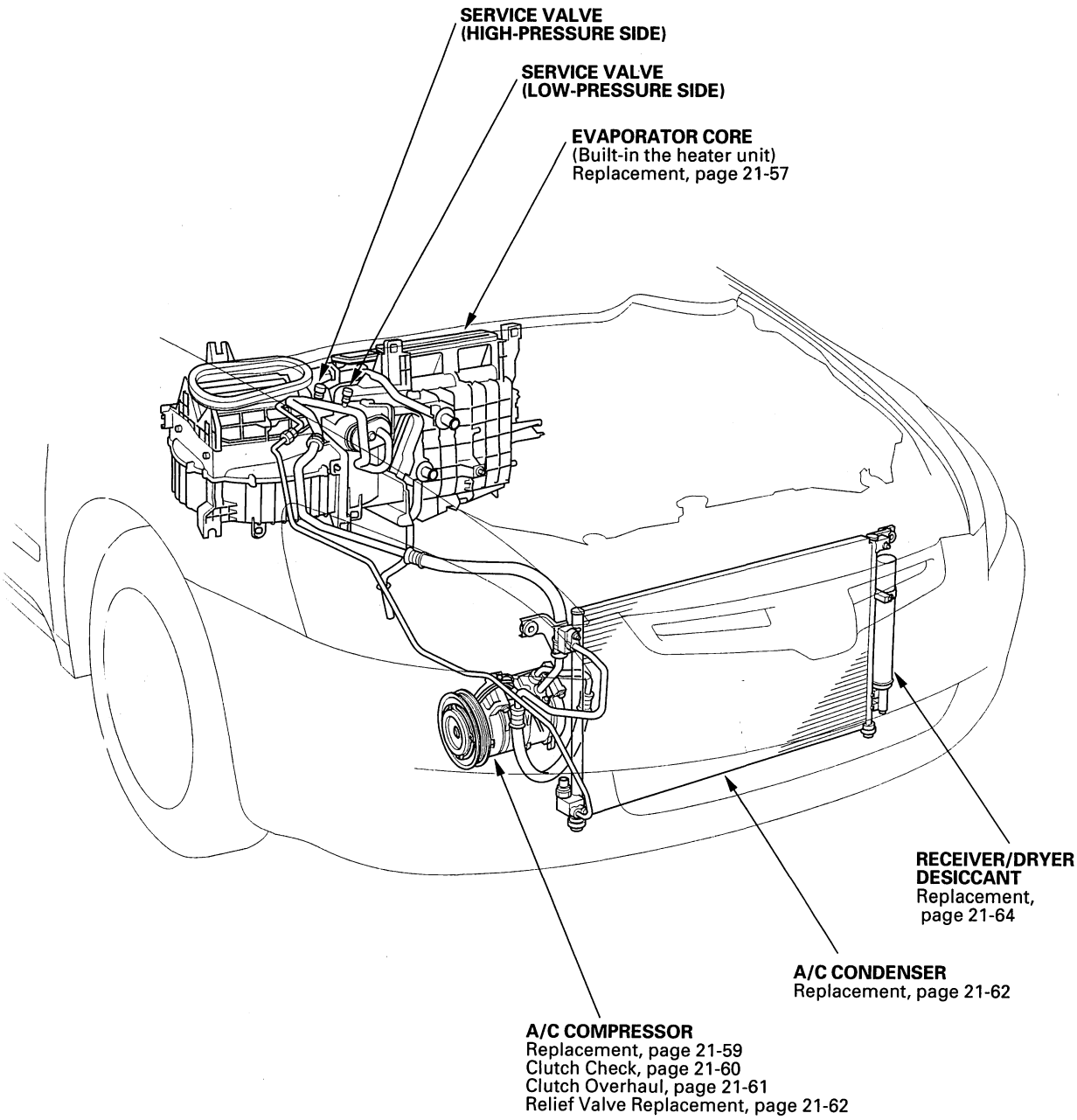

BACK

Protected by AR

2-door

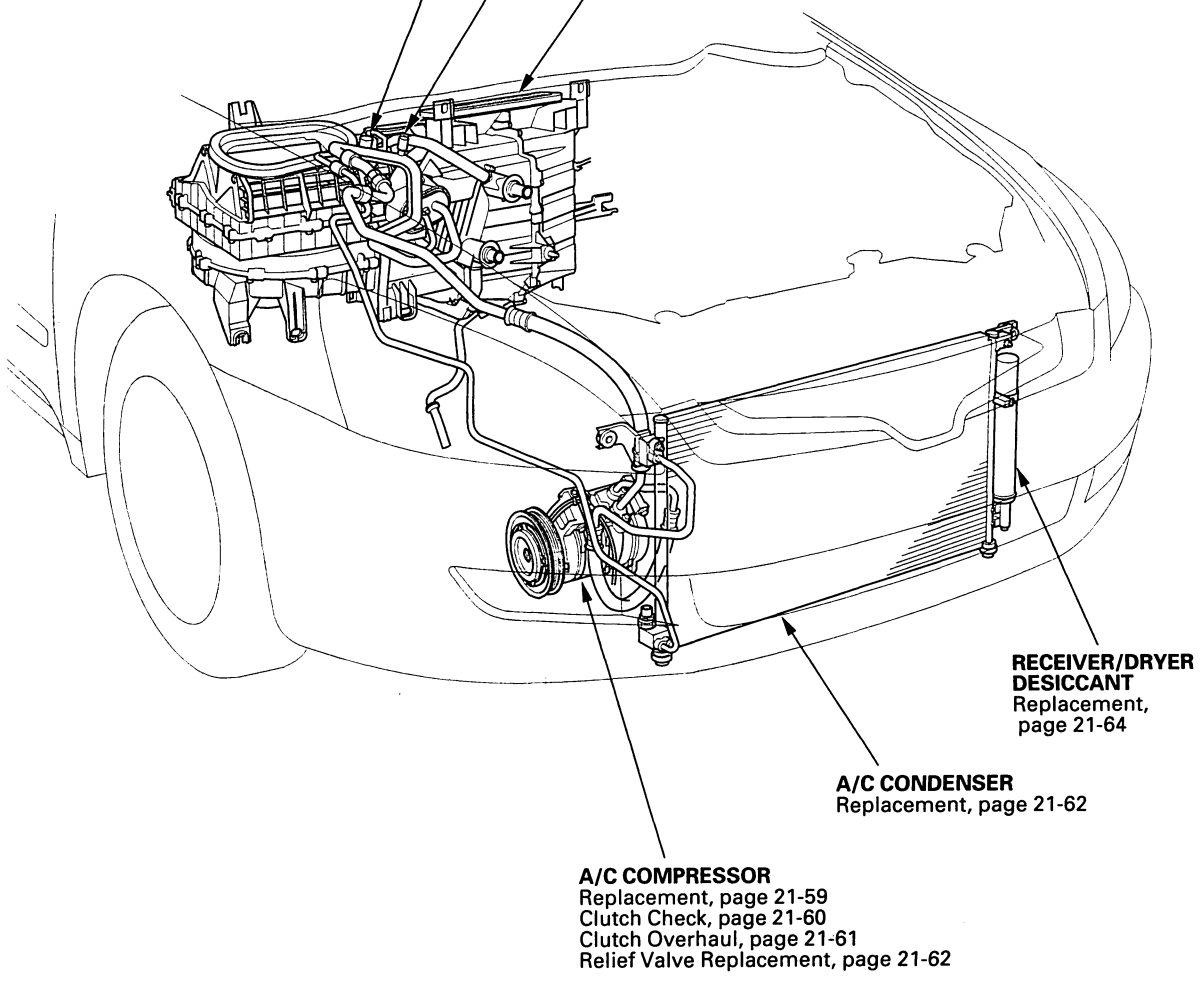

(cont'd)

Protected by AR

Component Location Index (cont'd)

4-door/2-door

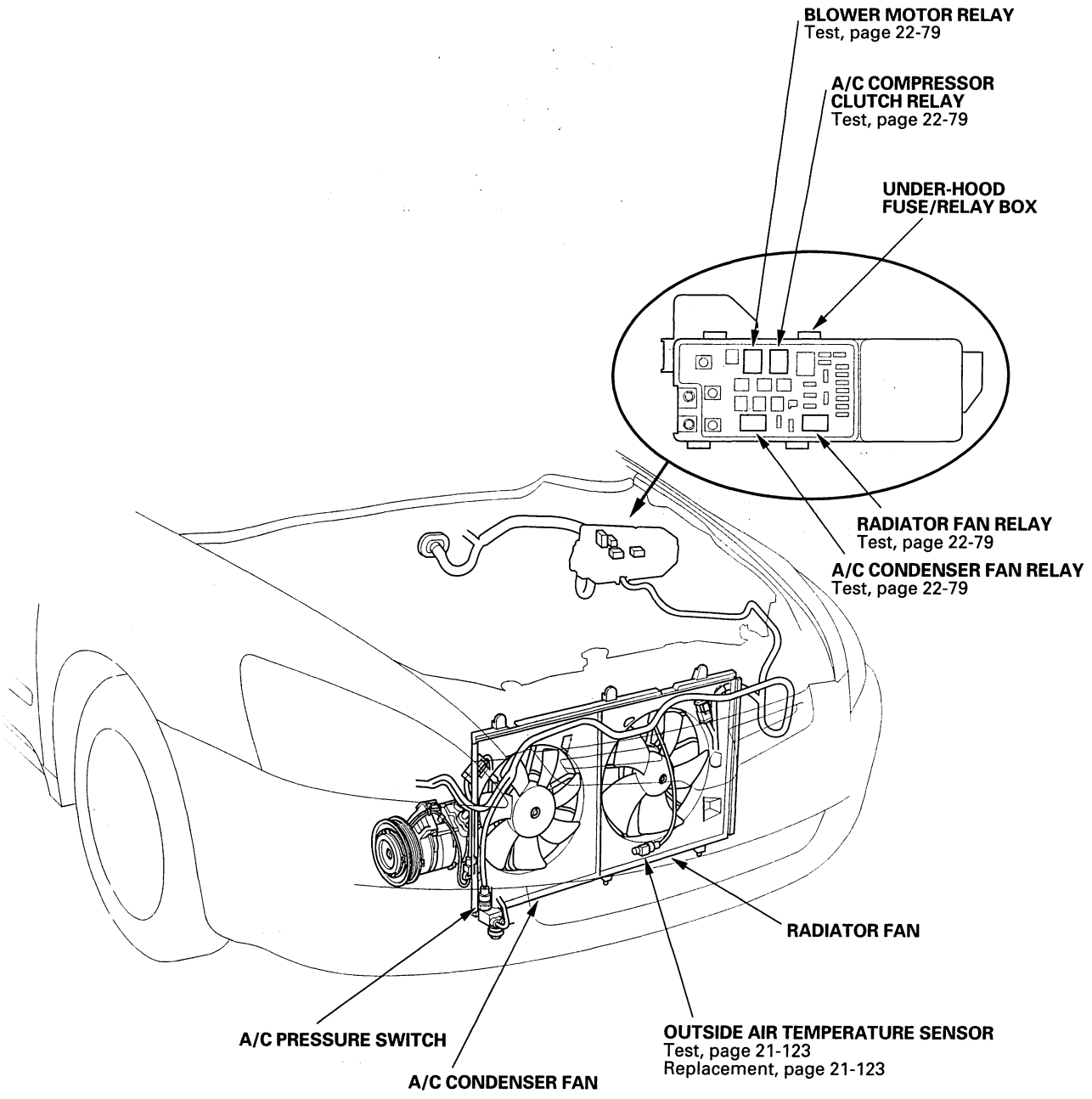

BACK

Protected by AR

General Troubleshooting Information

How to Check for DTCs with the HDS

NOTE: Before troubleshooting the climate control system, refer to the multiplex integrated control system test mode A (see page 22-91).

1. Make sure the ignition switch is OFF.
2. Connect the HDS to the Data Link Connector (DLC) (A) located under the driver's side of the dashboard.

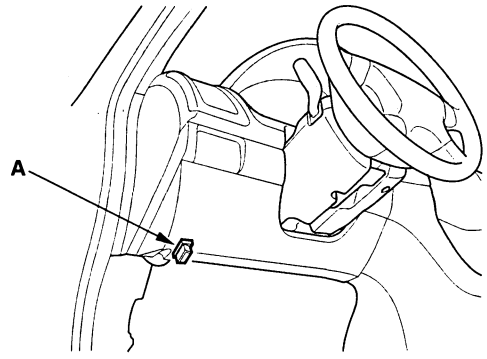

3. Turn the ignition switch ON (II).
4. Select DTCs in the body electrical climate control mode MENU of the HDS.
5. Check for DTCs. If a DTC is indicated, go to the next step. If no DTC(s) is indicated, refer to symptom troubleshooting.
6. Turn the ignition switch OFF.
7. Disconnect the HDS from the DLC.
8. Do the troubleshooting procedure for the DTC indicated.

(cont'd)

Protected by AR

General Troubleshooting Information (cont'd)

How to Retrieve a DTC (Without HDS)

The audio-HVAC display panel has a self-diagnosis function for climate control. To run the self-diagnosis function, do the following:

NOTE: Before troubleshooting the climate control system, refer to the multiplex integrated control system test mode A (see page 22-91).

1. Turn the ignition switch ON (II).
2. Press the AUTO button and then the OFF button. Continue to hold both buttons down for 1 minute.

Without Navigation System:

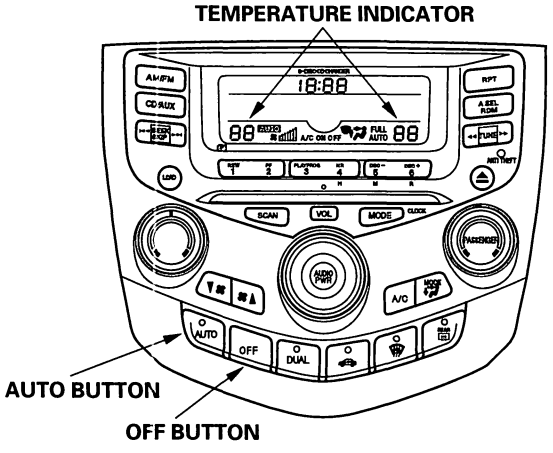

With Navigation System:

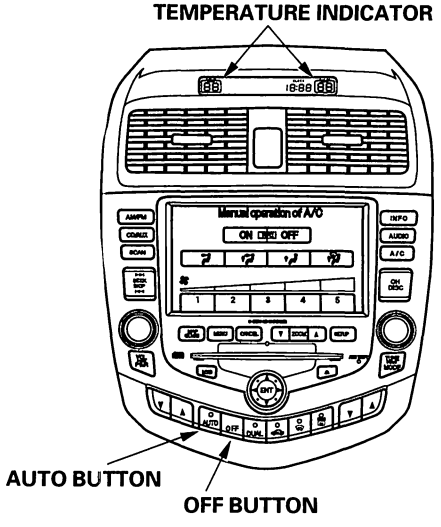

If there are any problems in the system, the temperature indicator will light up the segment (A through Q) corresponding to the error. The temperature indicator will then alternate every second between displaying "88" (all segments lit) and the error code segment (A through Q).

NOTE: The system will only display the DTC when the AUTO and OFF buttons are pressed. If you release the buttons, the display will go blank. To return the display, simply press the AUTO then the OFF buttons again.

To determine the meaning of the DTC, refer to the DTC Troubleshooting Index. If no segments light up, the system is still not operating properly, check the sensor inputs to the climate control unit, or refer to symptom troubleshooting.

DRIVER'S TEMPERATURE INDICATOR

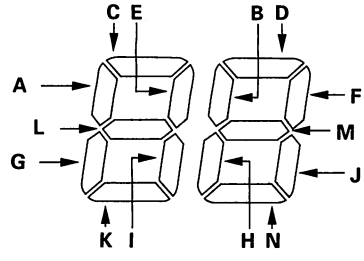

PASSENGER'S TEMPERATURE INDICATOR

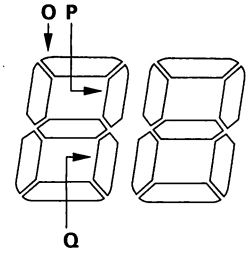

Cancelling the Self-diagnostic Function

3. Turn the ignition switch OFF to cancel the self-diagnostic function. After completing repair work, run the self-diagnostic function again to make sure that there are no other malfunctions.

BACK

Protected by AR

Checking the DTCs by DTC Indicator

NOTE: Before troubleshooting the climate control system, refer to the multiplex integrated control system test mode A (see page 22-91).

To retrieve the DTC, you must run the self-diagnostic function. In the case of multiple problems, the respective indicator segments will come on. If indicator segments A, C, E, G, I, L, and O come on at the same time, there may be an open in the common ground wire of the sensors.

DRIVER'S TEMPERATURE INDICATOR

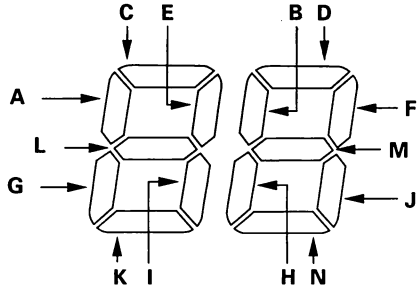

PASSENGER'S TEMPERATURE INDICATOR

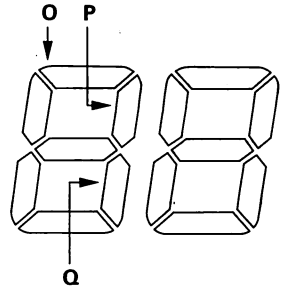

DTC (Temperature Indicator segment)	Detection Item	Page
A	An open in the in-car temperature sensor circuit	(see page 21-94)
B	A short in the in-car temperature sensor circuit	(see page 21-95)
C	An open in the outside air temperature sensor circuit	(see page 21-96)
D	A short in the outside air temperature sensor circuit	(see page 21-97)
E	An open in the sunlight sensor circuit	(see page 21-98)
F	A short in the sunlight sensor circuit	(see page 21-99)
G	An open in the evaporator temperature sensor circuit	(see page 21-100)
H	A short in the evaporator temperature sensor circuit	(see page 21-101)
I	An open in the driver's air mix control motor circuit	(see page 21-102)
J	A short in the driver's air mix control motor circuit	(see page 21-103)
K	A problem in the driver's air mix control linkage, door, or motor	(see page 21-104)
L	An open or short in the mode control motor circuit	(see page 21-105)
M	A problem in the mode control linkage, doors, or motor	(see page 21-107)
N	A problem in the blower motor circuit	(see page 21-107)
O	An open in the passenger's air mix control motor circuit	(see page 21-112)
P	A short in the passenger's air mix control motor circuit	(see page 21-114)
Q	A problem in the passenger's air mix control linkage, door, or motor	(see page 21-105)

(cont'd)

Protected by AR

General Troubleshooting Information (cont'd)

Displaying Sensor Inputs at the Climate Control Unit

The climate control unit has a mode that displays sensor inputs it receives. This mode shows you what the climate control unit is receiving from each of the sensors, one at a time, and it can help you determine if a sensor is faulty.

Check these items before using the sensor input display mode

1. Turn the ignition switch ON (II), and check the recirculation door function; press the recirculation button to switch from FRESH to RECIRC. The air volume and sound should change slightly.

2. Set the temperature control knob to the desired test temperature. When selecting the test temperature, note these items:

   - "LO" temperature setting will default to MAX COOL, VENT, and RECIRC.
   - "HI" temperature setting will default to MAX HOT, FLOOR, and FRESH.
   - 61 through 89°F settings will use the automatic climate control logic.

3. Turn the ignition switch OFF.

To run the sensor input display mode, follow these steps

1. Turn the ignition switch OFF.

2. Press and hold both the AUTO and DUAL buttons, then start the engine.

3. After the engine starts, release the buttons. The audio-HVAC display panel will flash the sensor number and then the value for that sensor. Record the value displayed.

4. To advance to the next sensor, press the rear window defogger button.

Sensor	Item	Displayed Value
1	In-car Temperature Sensor	°C
2	Ambient Temperature	°C
3	Solar Radiation Sensor Value: Dark = 00, Flashlight = 04, Cloudy =10, Sunny =65	Kcal/m²·h
4	Engine Coolant Temperature	°C
5	Evaporator Outlet Air Temperature	°C
6	Driver's Air Mix Opening (Low value indicates cooler air distribution, higher value indicates warmer air distribution)	% of opening
7	Passenger's Air Mix Opening (Low value indicates cooler air distribution, higher value indicates warmer air distribution)	% of opening
8	Vehicle Speed (Vehicle must be driven to display speed)	Km/h
9	Vent Temperature Air Out (TAO)	°C

NOTE:
- The sensor values will be displayed in degrees Celsius (°C) or an alphanumeric code. Use the chart to convert the value to degrees Fahrenheit (°F).
- If the sensor value displays "Er", this indicates there is an open or short in the circuit or sensor. Check for DTCs using the HDS, or refer to checking DTCs by DTC indication to check for DTCs.
- If necessary, compare the sensor input display to an alike, known-good vehicle under the same test conditions.
- If the sensor is out of the normal range, refer to the sensor test, or substitute with a known-good sensor, and recheck.

5. To cancel the sensor input display mode, press the AUTO button, or turn the ignition off.

BACK

Protected by AR

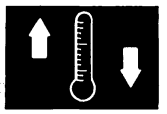

Celsius to Fahrenheit Conversion Table

°C	°F	°C	°F	°C	°F	°C	°F	°C	°F
0	32	10	50	20	68	30	86	40	104
1	34	11	52	21	70	31	88	41	106
2	36	12	54	22	72	32	90	42	108
3	37	13	55	23	73	33	91	43	109
4	39	14	57	24	75	34	93	44	111
5	41	15	59	25	77	35	95	45	113
6	43	16	61	26	79	36	97	46	115
7	45	17	63	27	81	37	99	47	117
8	46	18	64	28	82	38	100	48	118
9	48	19	66	29	84	39	102	49	120

°C	°F	°C	°F	°C	°F	°C	°F	°C	°F
50	122	60	140	70	158	80	176	90	194
51	124	61	142	71	160	81	178	91	196
52	126	62	144	72	162	82	180	92	198
53	127	63	145	73	163	83	181	93	199
54	128	64	147	74	165	84	183	94	201
55	131	65	149	75	167	85	185	95	203
56	133	66	151	76	169	86	187	96	205
57	135	67	152	77	170	87	188	97	207
58	136	68	154	78	172	88	190	98	208
59	139	69	158	79	174	89	192	99	210

Alphanumeric Conversion Table

Display Reading (Alphanumeric)	°C	°F	%
A1 thru A9	−1 thru −9	30 thru 16	−1 thru −9
B0 thru B9	−10 thru −19	14 thru −2	−10 thru −19
C0 thru C9	−20 thru −29	−4 thru −20	−20 thru −29
D0 thru D9	−30 thru −39	−22 thru −38	−30 thru −39
E0 thru E9	−40 thru −49	−40 thru −58	−
F0 thru F9	−50 thru −59	−58 thru −74	+100 thru +109

BACK

Protected by AR

DTC Troubleshooting Index

Checking the DTCs by HDS

DTC	Detection Item or Symptom	ECU	DTC type	Page
B1200	Communication circuit error (BUS Off)	Climate control unit	Loss of communication	(see page 22-116)
B1202	Climate control unit internal error	Climate control unit	Internal error	(see page 21-115)
B1205	Climate control unit lost communication with the gauge control module (VSP/NE message)	Climate control unit	Loss of communication	(see page 21-116)
B1206	Climate control unit lost communication with the gauge control module (ECT message)	Climate control unit	Loss of communication	(see page 21-116)
B1207	Climate control unit lost communication with the gauge control module (ILLUMI message)	Climate control unit	Loss of communication	(see page 21-116)
B1225	An open in the in-car temperature sensor circuit	Climate control unit	Signal error	(see page 21-94)
B1226	A short in the in-car temperature sensor circuit	Climate control unit	Signal error	(see page 21-95)
B1227	An open in the outside air temperature sensor circuit	Climate control unit	Signal error	(see page 21-96)
B1228	A short in the outside air temperature sensor circuit	Climate control unit	Signal error	(see page 21-97)
B1229	An open in the sunlight sensor circuit	Climate control unit	Signal error	(see page 21-98)
B1230	A short in the sunlight sensor circuit	Climate control unit	Signal error	(see page 21-99)
B1231	An open in the evaporator temperature sensor circuit	Climate control unit	Signal error	(see page 21-100)
B1232	A short in the evaporator temperature sensor circuit	Climate control unit	Signal error	(see page 21-101)
B1233	An open in the driver's air mix control motor circuit	Climate control unit	Signal error	(see page 21-102)
B1234	A short in the driver's air mix control motor circuit	Climate control unit	Signal error	(see page 21-103)
B1235	A problem in the driver's air mix control linkage, door, or motor	Climate control unit	Signal error	(see page 21-104)
B1236	An open in the passenger's air mix control motor circuit	Climate control unit	Signal error	(see page 21-112)
B1237	A short in the passenger's air mix control motor circuit	Climate control unit	Signal error	(see page 21-114)
B1238	A problem in the passenger's air mix control linkage, door, or motor	Climate control unit	Signal error	(see page 21-115)
B1239	An open or short in the mode control motor circuit	Climate control unit	Signal error	(see page 21-105)
B1240	A problem in the mode control linkage, doors, or motor	Climate control unit	Signal error	(see page 21-107)
B1241	A problem in the blower motor circuit	Climate control unit	Signal error	(see page 21-107)

BACK

Protected by AR

Symptom Troubleshooting Index

Symptom	Diagnostic procedure	Also check for
Recirculation control doors do not change between Fresh and Recirculate	Recirculation control motor circuit troubleshooting (see page 21-117)	• HVAC DTCs (see page 21-77) • Blown fuse No. 30 (7.5A) in the under-dash fuse/relay box • Cleanliness and tightness of all connectors
Blower, heater controls, and A/C do not work	Climate control power and ground circuit troubleshooting (see page 21-119)	• HVAC DTCs (see page 21-77) • Blown fuse No. 30 (7.5A) in the under-dash fuse/relay box • Poor ground at G503 • Cleanliness and tightness of all connectors
The A/C condenser fan does not run at all (but the radiator fan runs with the A/C on)	A/C condenser fan circuit troubleshooting (see page 21-36)	• HVAC DTCs (see page 21-77) • Blown fuse No. 9 (20A) in the under-hood fuse/relay box, and No. 30 (7.5A) in the under-dash fuse/relay box • Poor ground at G201 • Cleanliness and tightness of all connectors
Both fans do not run with the A/C on (but the A/C compressor runs with the A/C on)	Radiator and A/C condenser fan common circuit troubleshooting (see page 21-37)	• HVAC DTCs (see page 21-77) • Blown fuse No. 9 (20A) and No. 11 (20A) in the under-hood fuse/relay box, and No. 30 (7.5A) in the under-dash fuse/relay box • Cleanliness and tightness of all connectors
The A/C compressor clutch does not engage (but both fans run with the A/C on)	A/C compressor clutch circuit troubleshooting (see page 21-38)	• HVAC DTCs (see page 21-77) • Blown fuse No. 12 (7.5A) in the under-hood fuse/relay box, and No. 30 (7.5A) in the under-dash fuse/relay box • Cleanliness and tightness of all connectors
A/C system does not come on (both fans and the A/C compressor do not work); heater is OK	A/C pressure switch circuit troubleshooting (see page 21-120)	• HVAC DTCs (see page 21-77) • Cleanliness and tightness of all connectors
Blower fan runs slower than expected in cold weather	ECT Troubleshooting (see page 11-86) NOTE: It is normal for the blower to run slowly until the engine coolant temperature begins to rise. If the blower continues to run slowly for an abnormal length of time, continue to troubleshoot the problem.	Powertrain DTCs (see page 11-3)

(cont'd)

Protected by AR

Symptom Troubleshooting Index (cont'd)

Symptom	Diagnostic procedure	Also check for
AUTO button does not work	1. Turn the ignition switch ON (II). 2. Press the OFF button, then press the AUTO button and check the display. • If AUTO is displayed, but the climate control is not working properly, check for DTCs with the HDS (see page 21-77), or do the self-diagnostic (see page 21-78). • If AUTO is not displayed, check for poor connections at the climate control connector, if the connections are OK, replace the audio-HVAC display panel.	Climate control power and ground circuit troubleshooting (see page 21-119).
OFF button does not work	1. Turn the ignition switch ON (II). 2. Press the AUTO button, then press the OFF button and check the display. • If climate control display turns off, check for DTCs with the HDS (see page 21-77), or go to self-diagnostic (see page 21-78). • If the climate control display does not turn on, replace the audio-HVAC display panel.	
Dual button does not work	1. Turn the ignition switch ON (II). 2. Press the AUTO button, then press the DUAL button several times and check the DUAL button LED. The LED should toggle on and off as the button is pressed. • If the LED turns on and off, check for DTCs with the HDS (see page 21-77), or go to self-diagnostic (see page 21-78). • If the LED does not turn on or off, replace the audio-HVAC display panel.	
Recirculation button does not work	1. Turn the ignition switch ON (II). 2. Press the recirculation button several times and check the button's LED. The LED should toggle on and off as the button is pressed. • If the LED turns on and off go to recirculation control motor test, 4-door (see page 21-47), 2-door (see page 21-47). • If the LED does not turn on or off, replace the audio-HVAC display panel.	
Defroster button does not work	1. Turn the ignition switch ON (II). 2. Press the AUTO button, then press the defroster button several times and check the button's LED. The LED should toggle on and off as the button is pressed. • If the LED turns on and off, check for DTCs with the HDS (see page 21-77), or go to self-diagnostic (see page 21-78). • If the LED does not turn on or off, replace the audio-HVAC display panel.	
Rear window defogger button does not work	1. Turn the ignition switch ON (II). 2. Press the rear window defogger button several times and check the button's LED. The LED should toggle on and off as the button is pressed. • If the LED turns on and off ,go to rear window defogger troubleshooting (see page 22-299) • If the LED does not turn on or off, replace the audio-HVAC display panel.	

BACK

Protected by AR

Symptom	Diagnostic procedure	Also check for
MODE button does not work	1. Turn the ignition switch ON (II). 2. Press the MODE button and check the display. • If the display scrolls through the modes as the MODE button is pressed, check for DTCs with the HDS (see page 21-77), or go to self-diagnostic (see page 21-78). • If the display does not scroll the modes as the MODE button is pressed, replace the audio-HVAC display panel.	
Fan control button does not work	1. Turn the ignition switch ON (II). 2. Press the AUTO button, then adjust the fan control button up/down and check the display. • If the display indicates the fan speed selection up/down, check for DTCs with the HDS (see page 21-77), or go to self-diagnostic (see page 21-78). • If the display does not indicate the fan speed selection up/down, replace the audio-HVAC display panel.	
TEMP control dial does not work	1. Turn the ignition switch ON (II). 2. Press the AUTO button, then adjust the TEMP control dial up/down and check the display. • If the display indicates the change in temperature up/down, check for DTCs with the HDS (see page 21-77), or go to self-diagnostic (see page 21-78). • If the display does not indicate the change in temperature up/down, replace the audio-HVAC display panel.	
Passenger's TEMP dial does not work	1. Turn the ignition switch ON (II). 2. Press the AUTO button, press the DUAL button, then adjust the passenger's TEMP control dial up/down and check the display. • If the display indicates the change in temperature up/down for the passenger's side, check for DTCs with the HDS (see page 21-77), or go to self-diagnostic (see page 21-78). • If the display does not indicate the change in temperature up/down for the passenger's side, replace the audio-HVAC display panel.	
Audio-HVAC display panel will not run self-diagnosis	1. Turn the ignition switch ON (II). 2. Press the A/C button, and then OFF button and check the display. • If the display turns on and off as the buttons are pressed, there are no DTCs stored, troubleshoot the individual symptoms. • If the display does not respond as the buttons are pressed, check for loose or poor connections at the audio-HVAC display panel. If the connections are OK, replace the audio-HVAC display panel.	
More than one button is not working	Climate control power and ground circuit troubleshooting (see page 21-119).	HVAC DTCs (see page 21-77).
Audio-HVAC display/button illumination problems	Audio-HVAC display module illumination troubleshooting (see page 22-368).	

Protected by AR

System Description

Dual Air Mix Control System

Driver's side: HOT
Passenger's side: COOL

Driver's side: COOL
Passenger's side: HOT

(VENT)

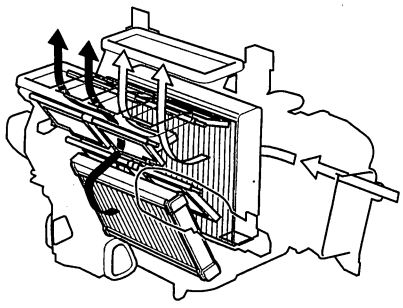

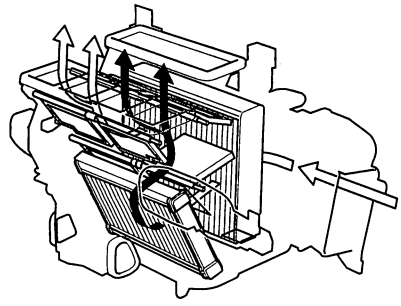

(HEAT/VENT)

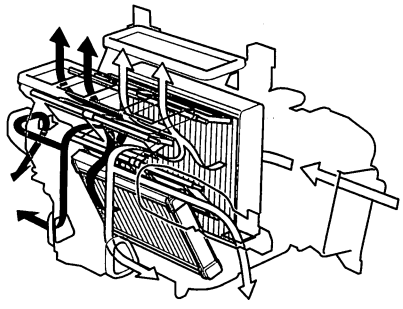

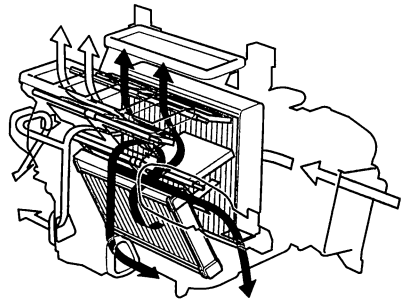

(HEAT)

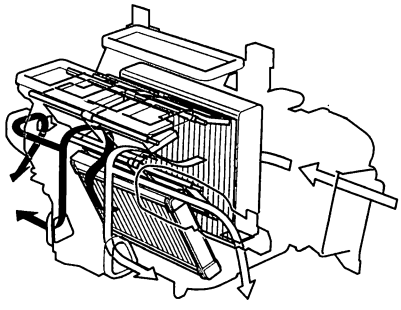

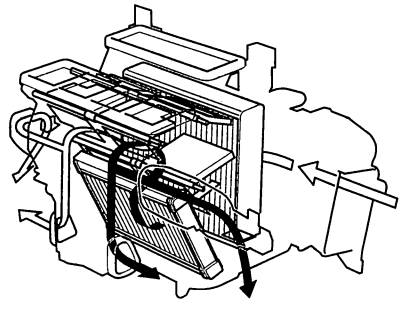

BACK

Protected by AR

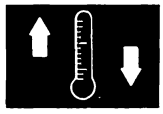

Driver's side: HOT

Passenger's side: COOL

Driver's side: COOL

Passenger's side: HOT



(HEAT/DEF)

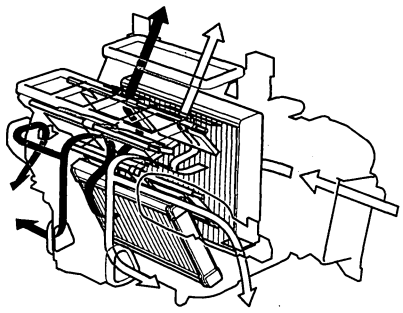

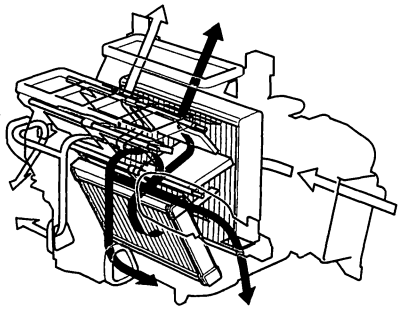



(DEF)

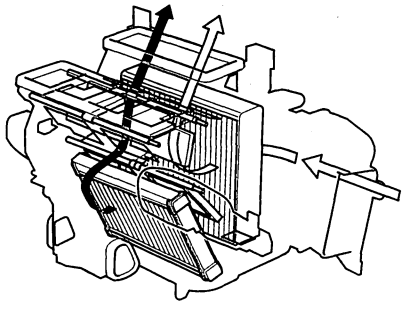

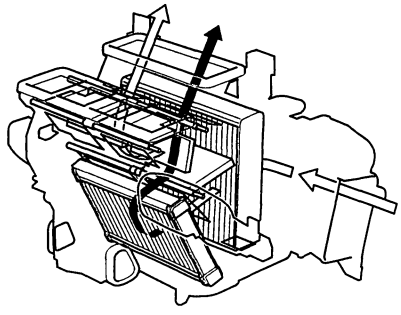

(cont'd)

Protected by AR

System Description (cont'd)

The air conditioning system removes heat from the passenger compartment by circulating refrigerant through the system.

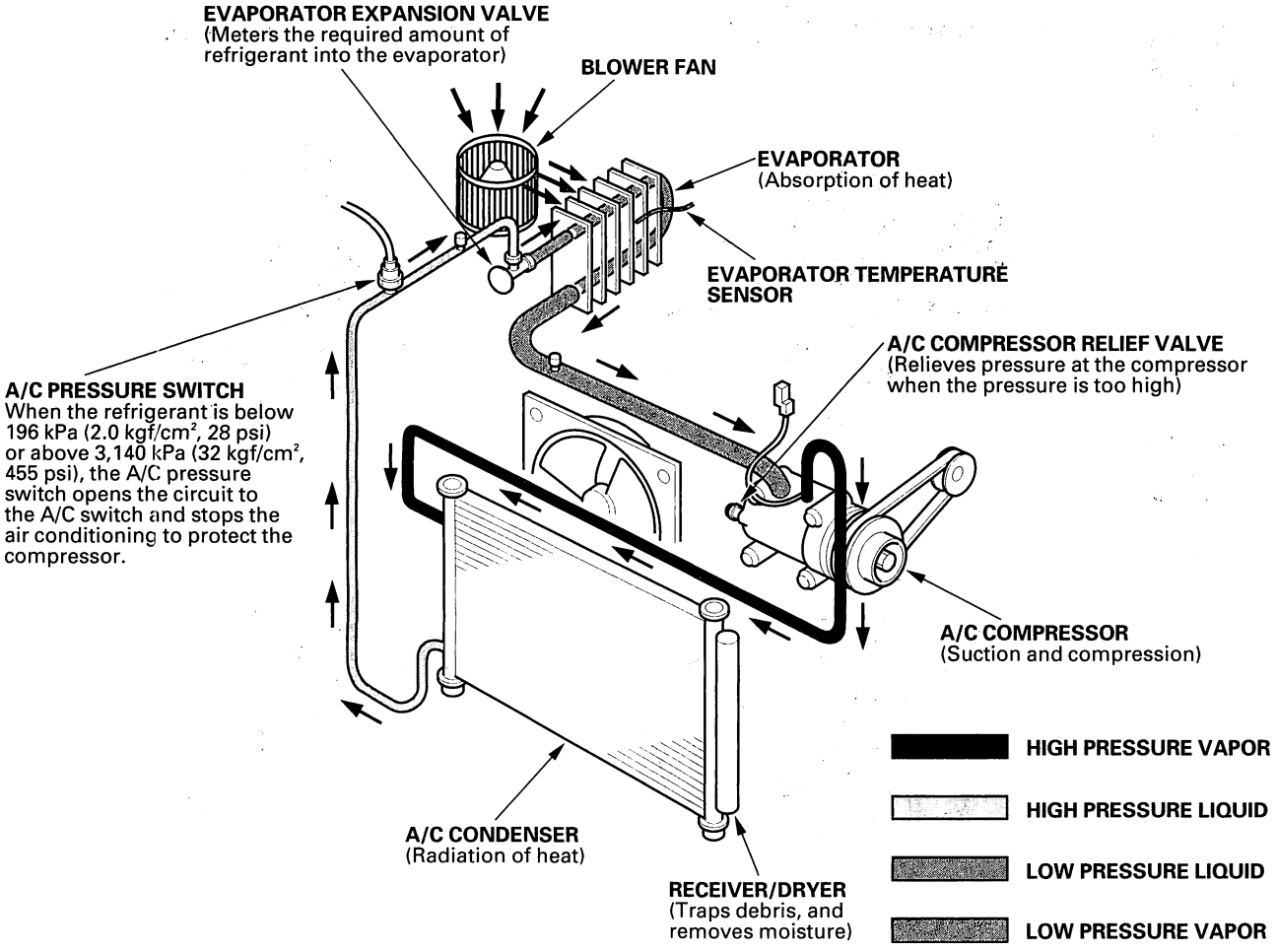

This vehicle uses HFC-134a (R-134a) refrigerant which does not contain chlorofluorocarbons. Pay attention to the following service items:

- Do not mix refrigerants CFC-12 (R-12) and HFC-134a (R-134a). They are not compatible.
- Use only the recommended polyalkyleneglycol (PAG) refrigerant oil (DENSO ND-OIL 8) designed for the R-134a compressor. Intermixing the recommended (PAG) refrigerant oil with any other refrigerant oil will result in compressor failure.
- All A/C system parts (compressor, discharge line, suction line, evaporator, condenser, receiver/dryer, expansion valve, O-rings for joints) are designed for refrigerant R-134a. Do not exchange with R-12 parts.
- Use a halogen gas leak detector designed for refrigerant R-134a.
- R-12 and R-134a refrigerant servicing equipment are not interchangeable. Use only a recovery/recycling/charging station that is U.L.-listed and is certified to meet the requirements of SAE J2210 to service the R-134a air conditioning systems.
- Always recover the refrigerant R-134a with an approved recovery/recycling/charging station before disconnecting any A/C fitting.

BACK

Protected by AR

i-Dual Climate Control System (With navigation system) 2004-2005 Models

This system automatically controls the temperature and the vent mode of the air direction to the driver and passenger's side, depending on the angle of the sun, and the direction of the vehicle. It calculates information such as date, time, longitude, and latitude from the navigation system, as well as the radiant strength of the sun from the sunlight sensor, to determine the appropriate mode position and temperature to be directed to each side.

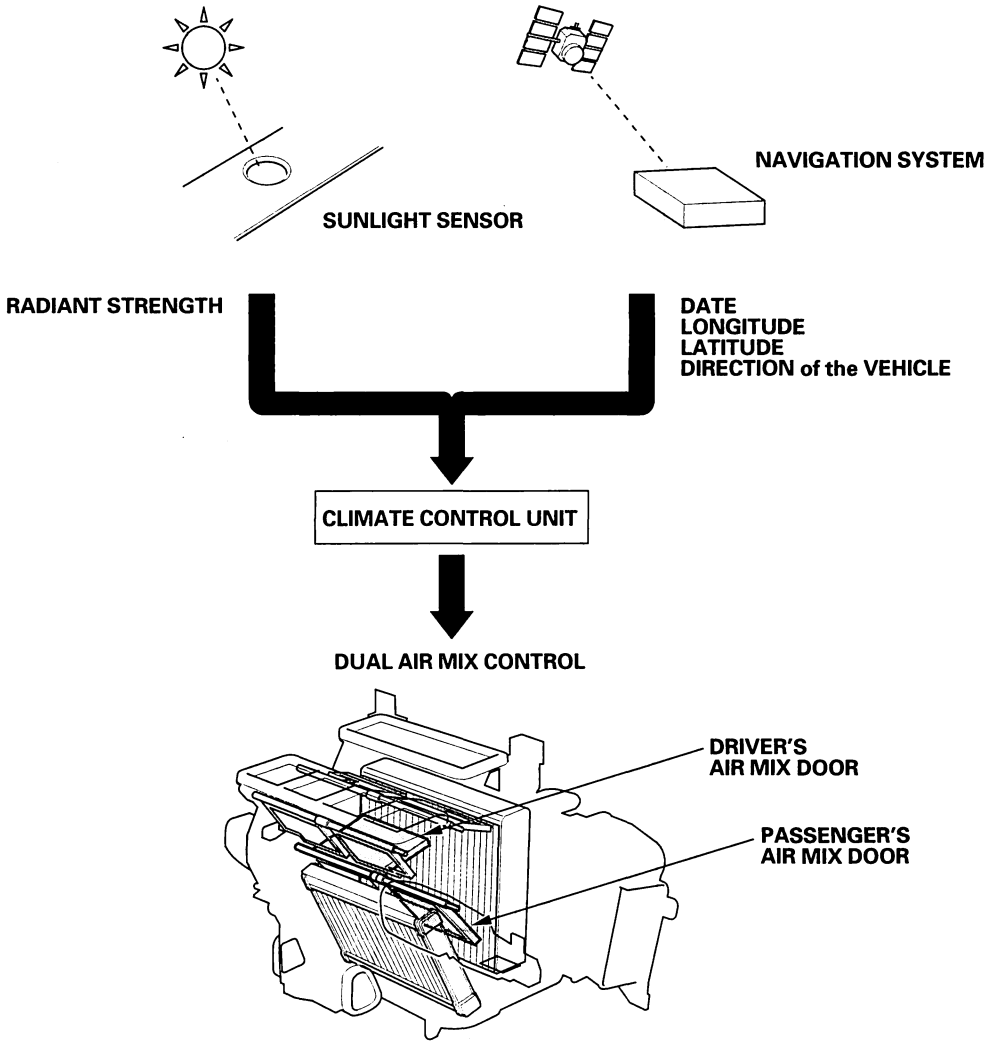

In the event that the navigation system malfunctions, or when driving in areas where the navigation cannot determine the vehicle position (non-coverage areas, tunnels, etc.), the climate control system will operate the same as a vehicle without navigation.

(cont'd)

Protected by AR

System Description (cont'd)

Climate Control Unit Inputs and Outputs

With Navigation

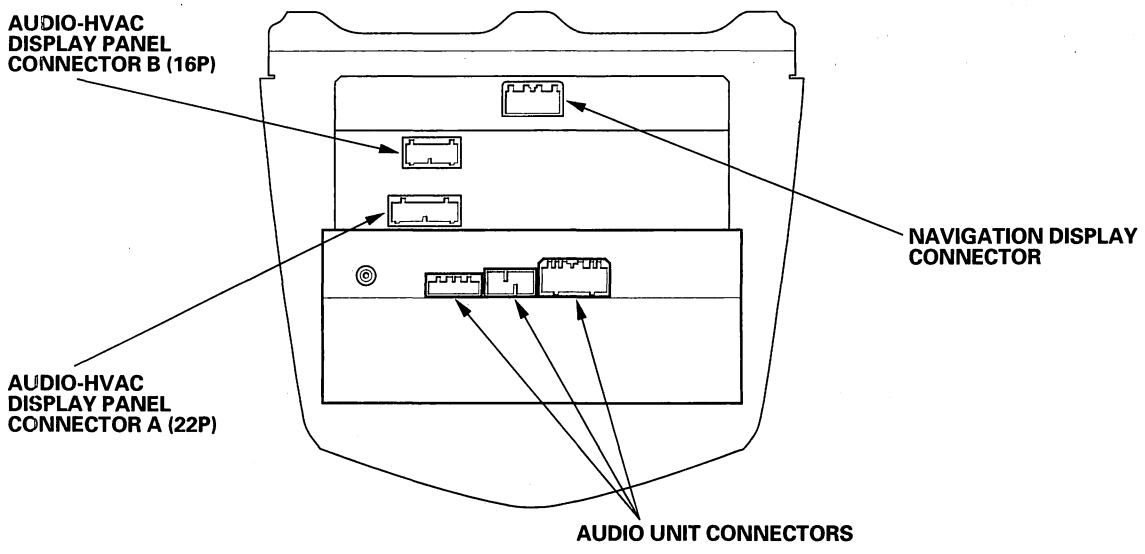

Without Navigation

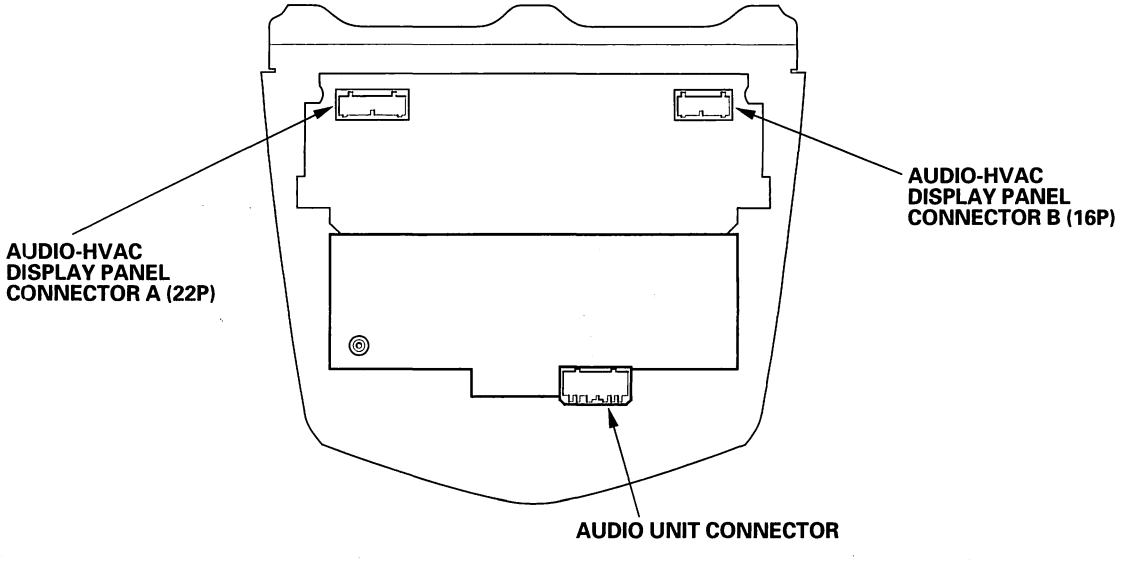

BACK

Protected by AR

AUDIO-HVAC DISPLAY PANEL CONNECTORS

CONNECTOR A (22P)

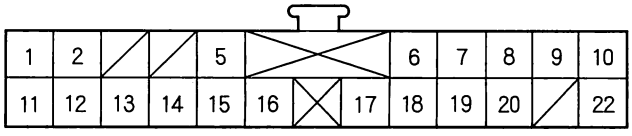

CONNECTOR B (16P)

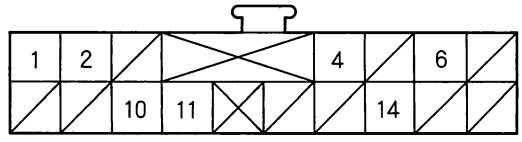

Wire side of female terminals

CONNECTOR A (○ on Circuit Diagram)

Cavity	Wire color	Signal	
1	PNK/BLK	DRIVER'S AIR MIX POTENTIAL	INPUT
2	YEL	PASSENGER'S AIR MIX POTENTIAL	INPUT
3	———	———	———
4	———	———	———
5	BLU	A/C PRESSURE SWITCH	OUTPUT
6	YEL/BLU	MODE DEF	OUTPUT
7	YEL/RED	MODE VENT	OUTPUT
8	GRN	DRIVER'S AIR MIX COOL	OUTPUT
9	PNK/BLU	DRIVER'S AIR MIX HOT	OUTPUT
10	YEL/BLK	PASSENGER'S AIR MIX COOL	OUTPUT
11	LT BLU	IN-CAR TEMPERATURE SENSOR	INPUT
12	PNK	OUTSIDE AIR TEMPERATURE SENSOR	INPUT
13	ORN	SUNLIGHT SENSOR	INPUT
14	BRN	EVAPORATOR TEMPERATURE SENSOR	INPUT
15	RED/BLK	SENSOR COMMON GROUND	OUTPUT
16	YEL/GRN	MODE 4	INPUT
17	WHT/BLU	MODE 3	INPUT
18	RED/BLU	MODE 2	INPUT
19	RED/YEL	MODE 1	INPUT
20	GRY	DRIVER'S AIR MIX POTENTIAL +5 V	OUTPUT
21	———	———	———
22	LT GRN	PASSENGER'S AIR MIX HOT	OUTPUT

CONNECTOR B (□ on Circuit Diagram)

Cavity	Wire color	Signal	
1	BLU/YEL	POWER TRANSISTOR CONTROL	OUTPUT
2	BLU/RED	BLOWER FEEDBACK	INPUT
3	———	———	———
4	BLK/YEL	IG2 (Power)	INPUT
5	———	———	———
6	BLK	GROUND (G503)	INPUT
7	———	———	———
8	———	———	———
9	———	———	———
10	GRN/WHT	FRESH	OUTPUT
11	LT GRN/RED	RECIRCULATE	OUTPUT
12	———	———	———
13	———	———	———
14	LT BLU	MULTIPLEX INTEGRATED CONTROL UNIT	INPUT
15	———	———	———
16	———	———	———

BACK

Protected by AR

Climate Control

Circuit Diagram

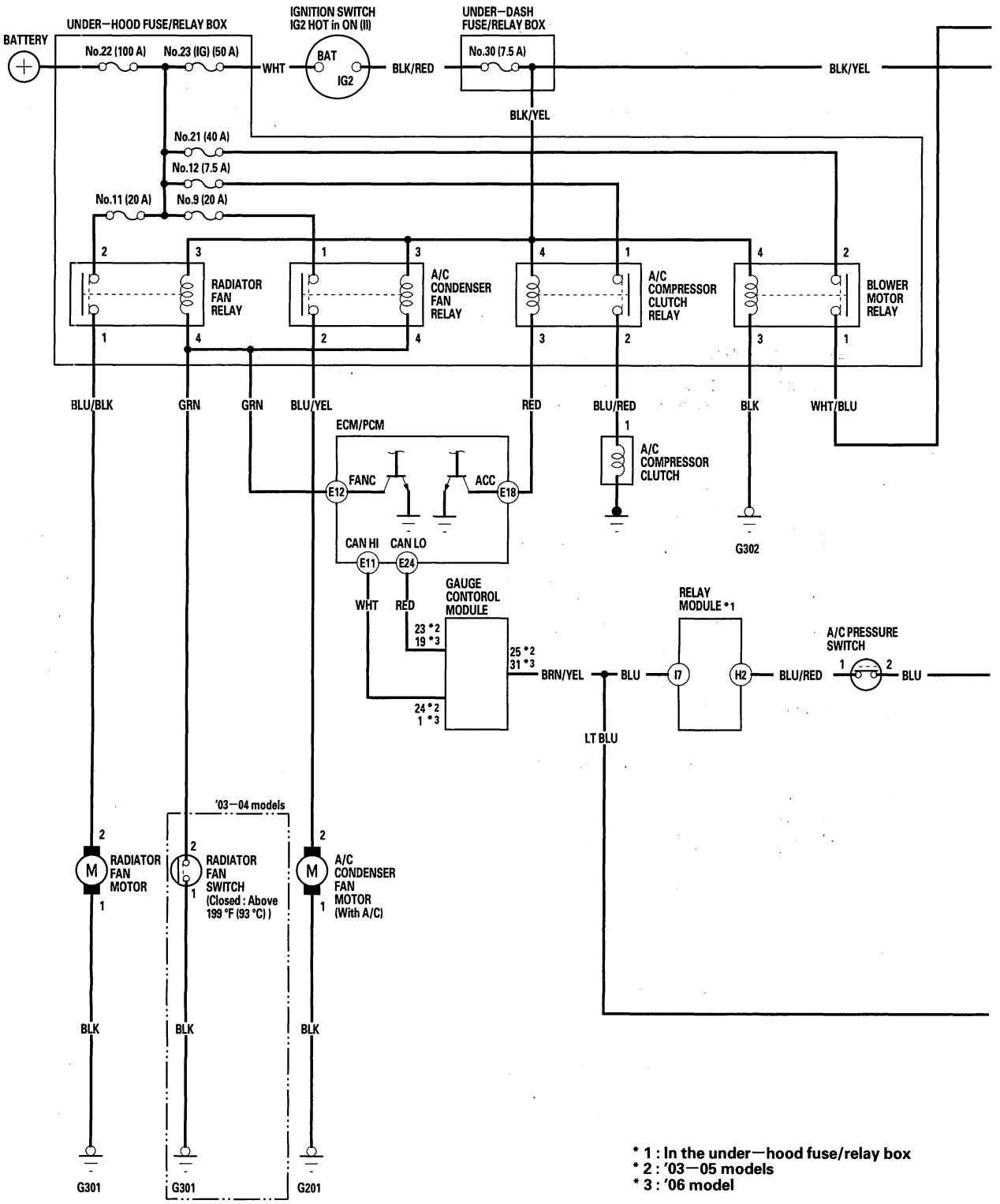

* 1 : In the under–hood fuse/relay box
* 2 : '03–05 models
* 3 : '06 model

BACK

Protected by AR

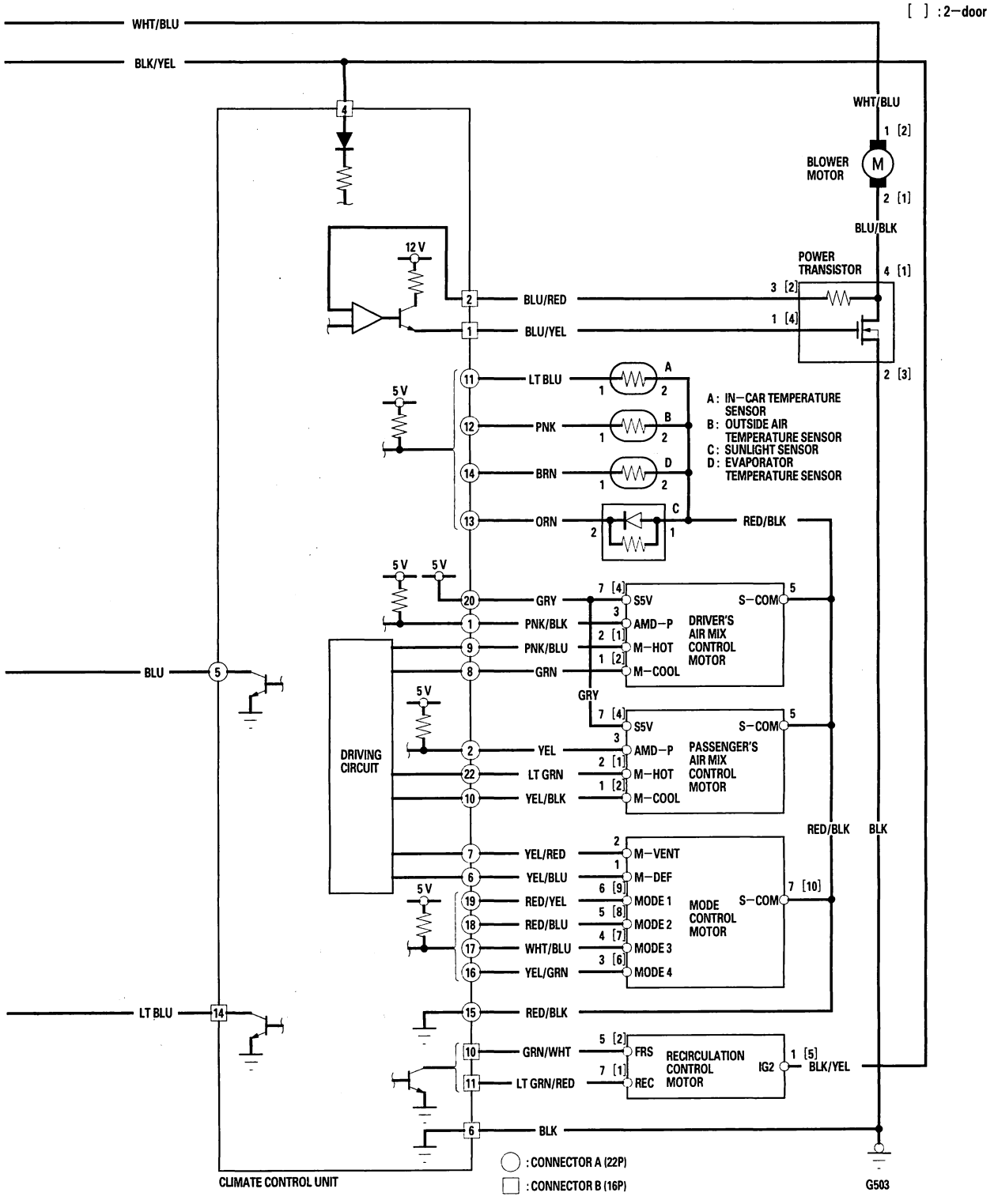

BACK

Protected by AR

DTC Troubleshooting

DTC B1225 or DTC indicator A: An Open in the In-car Temperature Sensor Circuit

1. Clear the DTC.
2. Turn the ignition switch OFF, and then ON.
3. Operate the climate control system in several modes.
4. Check the DTCs.

   Is DTC B1225 or A indicated?

   YES—Go to step 5.

   NO—Intermittent failure, check for loose wires or poor connections in the in-car temperature sensor circuit. ■
5. Remove the in-car temperature sensor (see page 21-122) and test it (see page 21-122).

   Does the in-car temperature sensor test OK?

   YES—Go to step 6.

   NO—Replace the in-car temperature sensor. ■
6. Disconnect audio-HVAC display panel connector A (22P).
7. Check for continuity between the No. 11 terminal of audio-HVAC display panel connector A (22P) and the No. 1 terminal of the in-car temperature sensor 2P connector.

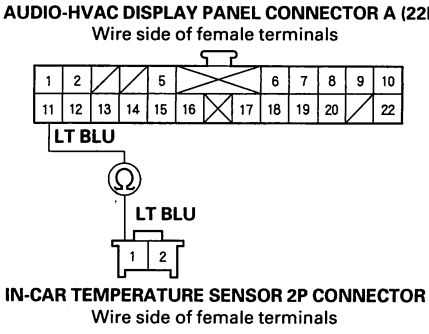

   Is there continuity?

   YES—Go to step 8.

   NO—Repair open in the wire between the climate control unit and the in-car temperature sensor. ■
8. Check for continuity between the No. 15 terminal of audio-HVAC display panel connector A (22P) and the No. 2 terminal of the in-car temperature sensor 2P connector.

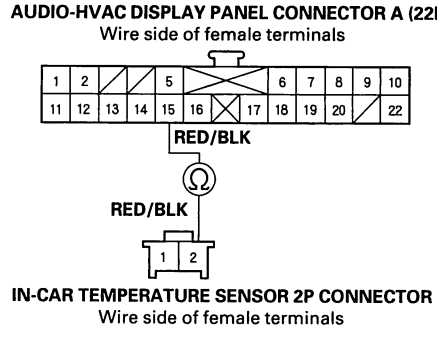

   Is there continuity?

   YES—Check for loose wires or poor connections at audio-HVAC display panel connector A (22P) and at the in-car temperature sensor 2P connector. If the connections are good, substitute a known-good audio-HVAC display panel, and recheck. If the symptom/indication goes away, replace the original audio-HVAC display panel. ■

   NO—Repair open in the wire between the climate control unit and the in-car temperature sensor. ■

BACK

Protected by AR

DTC B1226 or DTC indicator B: A Short in the In-car Temperature Sensor Circuit

1. Clear the DTC.
2. Turn the ignition switch OFF, and then ON.
3. Operate the climate control system in several modes.
4. Check the DTCs.

   Is DTC B1226 or B indicated?

   YES—Go to step 5.

   NO—Intermittent failure. ■
5. Remove the in-car temperature sensor (see page 21-122).
6. Test the in-car temperature sensor (see page 21-122).

   Is the resistance within the specifications shown on the graph?

   YES—Go to step 7.

   NO—Replace the in-car temperature sensor. ■
7. Disconnect audio-HVAC display panel connector A (22P).
8. Check for continuity between the No. 11 terminal of audio-HVAC display panel connector A (22P) and body ground.

AUDIO-HVAC DISPLAY PANEL CONNECTOR A (22P)

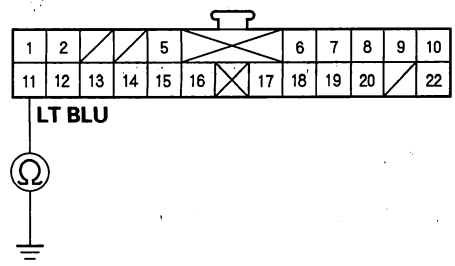

Wire side of female terminals

Is there continuity?

YES—Repair short to body ground in the wire between the climate control unit and the in-car temperature sensor. ■

NO—Substitute a known-good audio-HVAC display panel, and recheck. If the symptom/indication goes away, replace the original audio-HVAC display panel. ■

Protected by AR

DTC Troubleshooting (cont'd)

DTC B1227 or DTC indicator C: An Open in the Outside Air Temperature Sensor Circuit

1. Clear the DTC.
2. Turn the ignition switch OFF, and then ON.
3. Operate the climate control system in several modes.
4. Check the DTCs.

   Is DTC B1227 or C indicated?

   YES—Go to step 5.

   NO—Intermittent failure, check for loose wires or poor connections on the outside air temperature sensor circuit. ■

5. Remove the outside air temperature sensor (see page 21-123) and test it (see page 21-123).

   Does the outside air temperature sensor test OK?

   YES—Go to step 6.

   NO—Replace the outside air temperature sensor. ■

6. Disconnect audio-HVAC display panel connector A (22P).
7. Check for continuity between the No. 12 terminal of audio-HVAC display panel connector A (22P) and the No. 1 terminal of the outside air temperature sensor 2P connector.

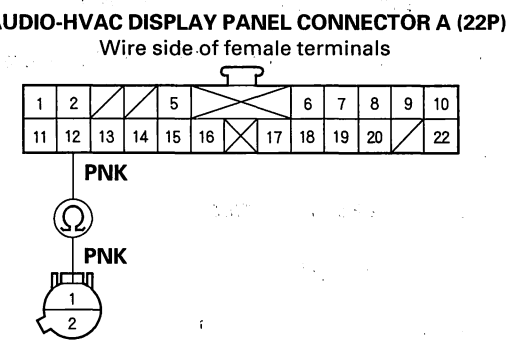

Is there continuity?

YES—Go to step 8.

NO—Repair open in the wire between the climate control unit and the outside air temperature sensor. ■

BACK

Protected by AR

8. Check for continuity between the No. 15 terminal of audio-HVAC display panel connector A (22P) and the No. 2 terminal of the outside air temperature sensor 2P connector.

AUDIO-HVAC DISPLAY PANEL CONNECTOR A (22P)
Wire side of female terminals

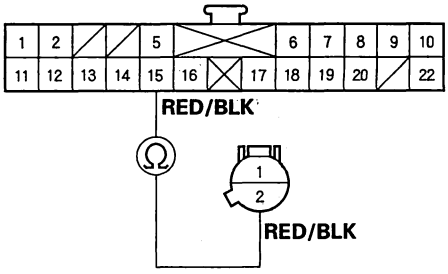

OUTSIDE AIR TEMPERATURE SENSOR 2P CONNECTOR
Wire side of female terminals

Is there continuity?

YES—Check for loose wires or poor connections at audio-HVAC display panel connector A (22P) and at the outside air temperature sensor 2P connector. If the connections are good, substitute a known-good audio-HVAC display panel, and recheck. If the symptom/indication goes away, replace the original audio-HVAC display panel. ■

NO—Repair open in the wire between the climate control unit and the outside air temperature sensor. ■

DTC B1228 or DTC indicator D: A Short in the Outside Air Temperature Sensor Circuit

1. Clear the DTC.
2. Turn the ignition switch OFF, and then ON.
3. Operate the climate control system in several modes.
4. Check the DTCs.

   Is DTC B1228 or D indicated?
   YES—Go to step 5.
   NO—Intermittent failure. ■
5. Remove the outside air temperature sensor (see page 21-123).
6. Test the outside air temperature sensor (see page 21-123).

   Is the resistance within the specifications shown on the graph?
   YES—Go to step 7.
   NO—Replace the outside air temperature sensor. ■
7. Disconnect audio-HVAC display panel connector A (22P).
8. Check for continuity between the No. 12 terminal of audio-HVAC display panel connector A (22P) and body ground.

AUDIO-HVAC DISPLAY PANEL CONNECTOR A (22P)

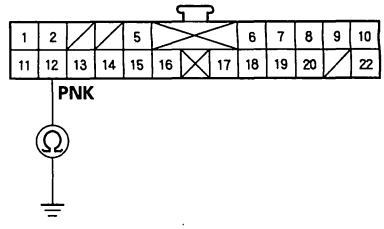

Wire side of female terminals

Is there continuity?
YES—Repair short to body ground in the wire between the climate control unit and the outside air temperature sensor. ■
NO—Substitute a known-good audio-HVAC display panel, and recheck. If the symptom/indication goes away, replace the original audio-HVAC display panel. ■

Protected by AR

DTC Troubleshooting (cont'd)

DTC B1229 or DTC indicator E: An Open in the Sunlight Sensor Circuit

1. Clear the DTC.
2. Turn the ignition switch OFF, and then ON.
3. Operate the climate control system in several modes.
4. Check the DTCs.

   Is DTC B1229 or E indicated?

   YES—Go to step 5.

   NO—Intermittent failure, check for loose wires or poor connections on the sunlight sensor circuit. ■
5. Disconnect the sunlight sensor 2P connector.
6. Disconnect audio-HVAC display panel connector A (22P).
7. Check for continuity between the No. 13 terminal of audio-HVAC display panel connector A (22P) and the No. 2 terminal of the sunlight sensor 2P connector.

AUDIO-HVAC DISPLAY PANEL CONNECTOR A (22P)
Wire side of female terminals

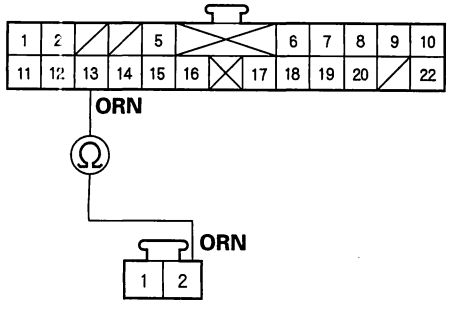

SUNLIGHT SENSOR 2P CONNECTOR
Wire side of female terminals

Is there continuity?

YES—Go to step 8.

NO—Repair open in the wire between the climate control unit and the sunlight sensor. ■

8. Check for continuity between the No. 15 terminal of audio-HVAC display panel connector A (22P) and the No. 1 terminal of the sunlight sensor 2P connector.

AUDIO-HVAC DISPLAY PANEL CONNECTOR A (22P)
Wire side of female terminals

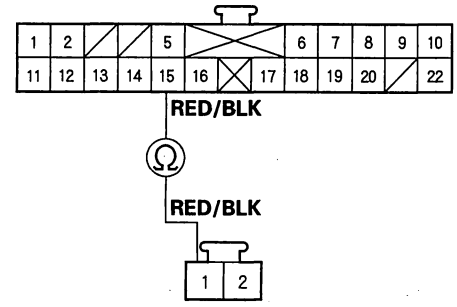

SUNLIGHT SENSOR 2P CONNECTOR
Wire side of female terminals

Is there continuity?

YES—Go to step 9.

NO—Repair open in the wire between the climate control unit and the sunlight sensor. ■

9. Reconnect the sunlight sensor 2P connector.
10. Reconnect audio-HVAC display panel connector A (22P).
11. Test the sunlight sensor (see page 21-124).

    Is the sunlight sensor OK?

    YES—Check for loose wires or poor connections at audio-HVAC display panel connector A (22P) and at the sunlight sensor 2P connector. If the connections are good, substitute a known-good audio-HVAC display panel, and recheck. If the symptom/indication goes away, replace the original audio-HVAC display panel. ■

    NO—Replace the sunlight sensor. ■

BACK

Protected by AR

DTC B1230 or DTC indicator F: A Short in the Sunlight Sensor Circuit

1. Clear the DTC.
2. Turn the ignition switch OFF, and then ON.
3. Operate the climate control system in several modes.
4. Check the DTCs.

   Is DTC B1230 or F indicated?

   YES—Go to step 5.

   NO—Intermittent failure. ■
5. Disconnect the sunlight sensor 2P connector.
6. Disconnect audio-HVAC display panel connector A (22P).
7. Check for continuity between the No. 13 terminal of audio-HVAC display panel connector A (22P) and body ground.

AUDIO-HVAC DISPLAY PANEL CONNECTOR A (22P)

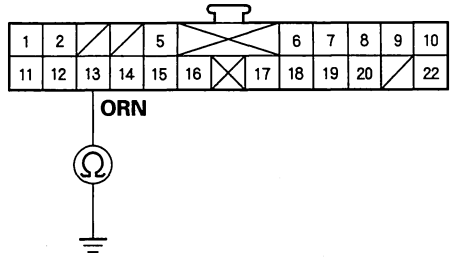

Wire side of female terminals

Is there continuity?

YES—Repair short to body ground in the wire between the climate control unit and the sunlight sensor. ■

NO—Go to step 8.

8. Reconnect the sunlight sensor 2P connector.
9. Reconnect audio-HVAC display panel connector A (22P).
10. Test the sunlight sensor (see page 21-124).

    Is the sunlight sensor OK?

    YES—Substitute a known-good audio-HVAC display panel, and recheck. If the symptom/ indication goes away, replace the original audio-HVAC display panel. ■

    NO—Replace the sunlight sensor. ■

Protected by AR

DTC Troubleshooting (cont'd)

DTC B1231 or DTC indicator G: An Open in the Evaporator Temperature Sensor Circuit

1. Clear the DTC.
2. Turn the ignition switch OFF, and then ON.
3. Operate the climate control system in several modes.
4. Check the DTCs.

   Is DTC B1231 or G indicated?

   YES—Go to step 5.

   NO—Intermittent failure, check for loose wires or poor connections on the evaporator temperature sensor circuit. ■
5. Remove the evaporator temperature sensor (see page 21-49) and test it (see page 21-49).

   Does the evaporator temperature sensor test OK?

   YES—Go to step 6.

   NO—Replace the evaporator temperature sensor. ■
6. Disconnect audio-HVAC display panel connector A (22P).
7. Check for continuity between the No. 14 terminal of audio-HVAC display panel connector A (22P) and the No. 1 terminal of the evaporator temperature sensor 2P connector.

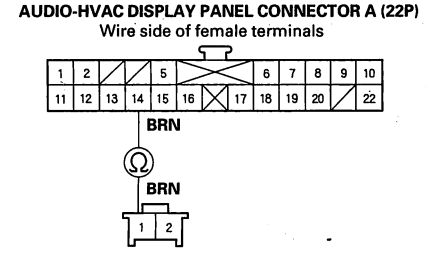

   Is there continuity?

   YES—Go to step 8.

   NO—Repair open in the wire between the climate control unit and the evaporator temperature sensor. ■
8. Check for continuity between the No. 15 terminal of audio-HVAC display panel connector A (22P) and the No. 2 terminal of the evaporator temperature sensor 2P connector.

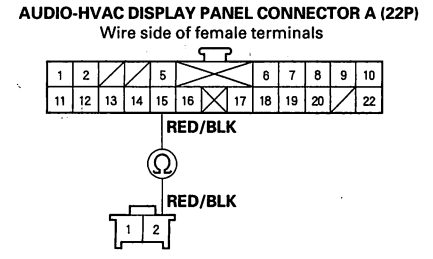

   Is there continuity?

   YES—Check for loose wires or poor connections at audio-HVAC display panel connector A (22P) and at the evaporator temperature sensor 2P connector. If the connections are good, substitute a known-good audio-HVAC display panel, and recheck. If the symptom/indication goes away, replace the original audio-HVAC display panel. ■

   NO—Repair open in the wire between the climate control unit and the evaporator temperature sensor. ■

BACK

Protected by AR

DTC B1232 or DTC indicator H: A Short in the Evaporator Temperature Sensor Circuit

1. Clear the DTC.
2. Turn the ignition switch OFF, and then ON.
3. Operate the climate control system in several modes.
4. Check the DTCs.

   Is DTC B1232 or H indicated?

   YES—Go to step 5.

   NO—Intermittent failure. ■
5. Remove the evaporator temperature sensor (see page 21-49).
6. Test the evaporator temperature sensor (see page 21-49).

   Is the resistance within the specifications shown on the graph?

   YES—Go to step 7.

   NO—Replace the evaporator temperature sensor. ■
7. Disconnect audio-HVAC display panel connector A (22P).
8. Check for continuity between the No. 14 terminal of audio-HVAC display panel connector A (22P) and body ground.

AUDIO-HVAC DISPLAY PANEL CONNECTOR A (22P)

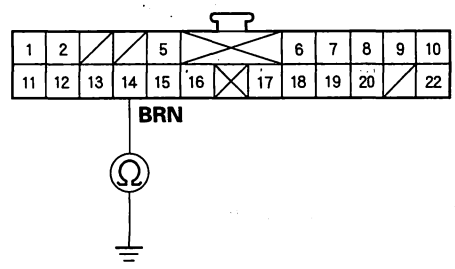

Wire side of female terminals

Is there continuity?

YES—Repair short to body ground in the wire between the climate control unit and the evaporator temperature sensor. ■

NO—Substitute a known-good audio-HVAC display panel, and recheck. If the symptom/indication goes away, replace the original audio-HVAC display panel. ■

Protected by AR

DTC Troubleshooting (cont'd)

DTC B1233 or DTC indicator I: An Open in the Driver's Air Mix Control Motor Circuit

1. Clear the DTC.
2. Turn the ignition switch OFF, and then ON.
3. Operate the climate control system in several modes.
4. Check the DTCs.

   Is DTC B1233 or I indicated?

   YES—Go to step 5.

   NO—Intermittent failure, check for loose wires or poor connections on the driver's air mix control motor circuit. ■
5. Test the driver's air mix control motor.

   - 4-door (see page 21-43)
   - 2-door (see page 21-43)

   Is the driver's air mix control motor OK?

   YES—Go to step 6.

   NO—Replace the driver's air mix control motor. ■

   - 4-door (see page 21-44)
   - 2-door (see page 21-44)
6. Disconnect the driver's air mix control motor 7P (4-door) or 5P (2-door) connector.
7. Disconnect audio-HVAC display panel connector A (22P).
8. Check for continuity between the following terminals of audio-HVAC display panel connector A (22P) and the driver's air mix control motor 7P (4-door) or 5P (2-door) connector.

4-door:

22P:	7P:
No. 1	No. 3
No. 8	No. 1
No. 9	No. 2
No. 15	No. 5
No. 20	No. 7

AUDIO-HVAC DISPLAY PANEL CONNECTOR A (22P)
Wire side of female terminals

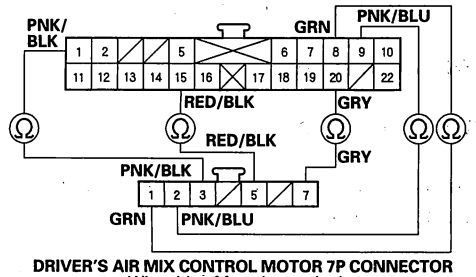

DRIVER'S AIR MIX CONTROL MOTOR 7P CONNECTOR
Wire side of female terminals

2-door:

22P:	5P:
No. 1	No. 3
No. 8	No. 2
No. 9	No. 1
No. 15	No. 5
No. 20	No. 4

AUDIO-HVAC DISPLAY PANEL CONNECTOR A (22P)
Wire side of female terminals

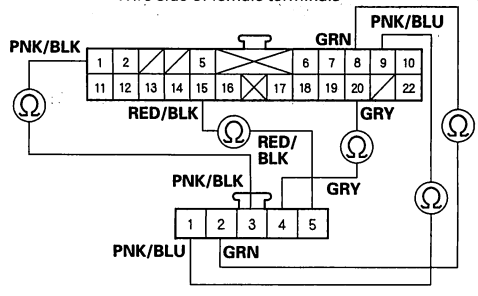

DRIVER'S AIR MIX CONTROL MOTOR 5P CONNECTOR
Wire side of female terminals

Is there continuity?

YES—Check for loose wires or poor connections at audio-HVAC display panel connector A (22P) and at the driver's air mix control motor 7P (4-door) or 5P (2-door) connector. If the connections are good, substitute a known-good audio-HVAC display panel, and recheck. If the symptom/indication goes away, replace the original audio-HVAC display panel. ■

NO—Repair any open in the wire(s) between the climate control unit and the driver's air mix control motor. ■

BACK

Protected by AR

DTC B1234 or DTC indicator J: A Short in the Driver's Air Mix Control Motor Circuit

1. Clear the DTC.
2. Turn the ignition switch OFF, and then ON.
3. Operate the climate control system in several modes.
4. Check the DTCs.

   Is DTC B1234 or J indicated?

   YES—Go to step 5.

   NO—Intermittent failure. ■
5. Test the driver's air mix control motor.

   - 4-door (see page 21-43)
   - 2-door (see page 21-43)

   Is the driver's air mix control motor OK?

   YES—Go to step 6.

   NO—Replace the driver's air mix control motor. ■

   - 4-door (see page 21-44)
   - 2-door (see page 21-44)
6. Disconnect the driver's air mix control motor 7P (4-door) or 5P (2-door) connector.
7. Disconnect audio-HVAC display panel connector A (22P).
8. Check for continuity between body ground and audio-HVAC display panel connector A (22P) terminals No. 1, 8, 9, 15 and 20 individually.

AUDIO-HVAC DISPLAY PANEL CONNECTOR A (22P)

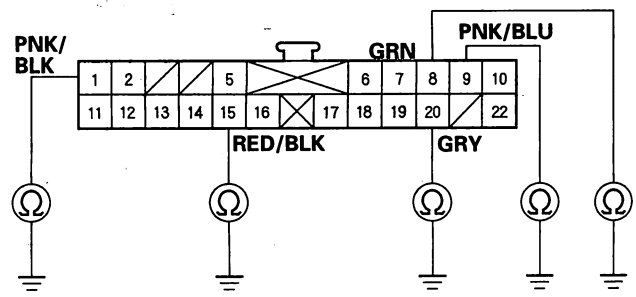

Wire side of female terminals

Is there continuity?

YES—Repair any short to body ground in the wire(s) between the climate control unit and the driver's air mix control motor. ■

NO—Go to step 9.

(cont'd)

Protected by AR

DTC Troubleshooting (cont'd)

9. Turn the ignition switch ON (II), and check the same terminals for voltage.

AUDIO-HVAC DISPLAY PANEL CONNECTOR A (22P)

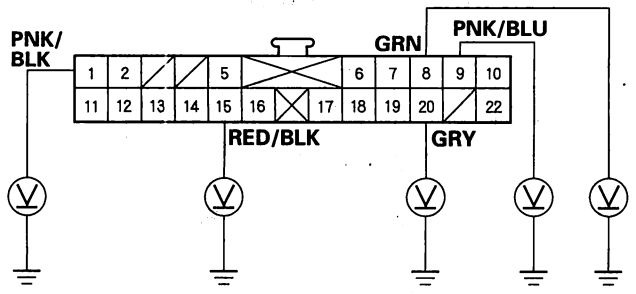

Wire side of female terminals

Is there any voltage?

YES—Repair any short to power in the wire(s) between the climate control unit and the driver's air mix control motor. This short may also damage the climate control unit. Repair the short to power before replacing the audio-HVAC display panel. ■

NO—Substitute a known-good audio-HVAC display panel, and recheck. If the symptom/indication goes away, replace the original audio-HVAC display panel. ■

DTC B1235 or DTC indicator K: A Problem in the Driver's Air Mix Control Linkage, Door, or Motor

1. Clear the DTC.
2. Turn the ignition switch OFF, and then ON.
3. Operate the climate control system in several modes.
4. Check the DTCs.

Is DTC B1235 or K indicated?

YES—Go to step 5.

NO—Intermittent failure. ■

5. Test the driver's air mix control motor.

- 4-door (see page 21-43)
- 2-door (see page 21-43)

Are the driver's air mix control motor and linkage OK?

YES—Substitute a known-good audio-HVAC display panel, and recheck. If the symptom/indication goes away, replace the original audio-HVAC display panel. ■

NO—Replace the driver's air mix control motor, 4-door (see page 21-44), 2-door (see page 21-44), or repair the driver's air mix control linkage or door. ■

BACK

Protected by AR

DTC B1239 or DTC indicator L: An Open or Short in the Mode Control Motor Circuit

1. Clear the DTC.
2. Turn the ignition switch OFF, and then ON.
3. Operate the climate control system in several modes.
4. Check the DTCs.

   Is DTC B1239 or L indicated?

   YES—Go to step 5.

   NO—Intermittent failure, check for loose wires or poor connections on the mode control motor circuit. ■
5. Test the mode control motor.

   - 4-door (see page 21-45)
   - 2-door (see page 21-45)

   Is the mode control motor OK?

   YES—Go to step 6.

   NO—Replace the mode control motor. ■

   - 4-door (see page 21-46)
   - 2-door (see page 21-46)
6. Disconnect the mode control motor 7P (4-door) or 10P (2-door) connector.
7. Disconnect audio-HVAC display panel connector A (22P).
8. Check for continuity between body ground and audio-HVAC display panel connector A (22P) terminals No. 6, 7, 15, 16, 17, 18, and 19 individually.

AUDIO-HVAC DISPLAY PANEL CONNECTOR A (22P)

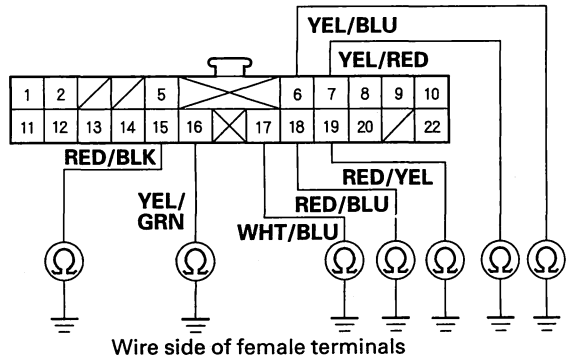

Is there continuity?

YES—Repair any short to body ground in the wire(s) between the climate control unit and the mode control motor. ■

NO—Go to step 9.

9. Turn the ignition switch ON (II), and check the same terminals for voltage.

AUDIO-HVAC DISPLAY PANEL CONNECTOR A (22P)

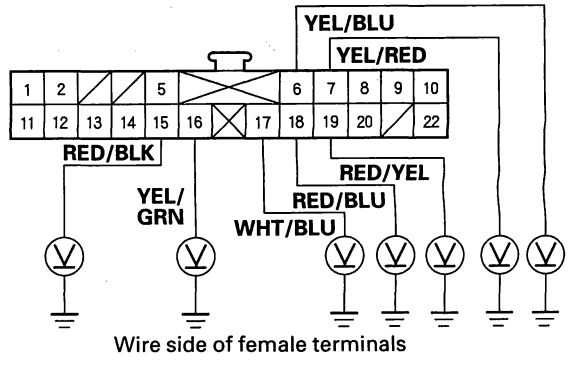

Is there any voltage?

YES—Repair any short to power in the wire(s) between the climate control unit and the mode control motor. This short may also damage the climate control unit. Repair the short to power before replacing the audio-HVAC display panel. ■

NO—Go to step 10.

(cont'd)

Protected by AR

DTC Troubleshooting (cont'd)

10. Turn the ignition switch OFF, and check for continuity between the following terminals of audio-HVAC display panel connector A (22P) and the mode control motor 7P (4-door) or 10P (2-door) connector.

4-door:

22P:	7P:
No. 6	No. 1
No. 7	No. 2
No. 15	No. 7
No. 16	No. 3
No. 17	No. 4
No. 18	No. 5
No. 19	No. 6

AUDIO-HVAC DISPLAY PANEL CONNECTOR A (22P)
Wire side of female terminals

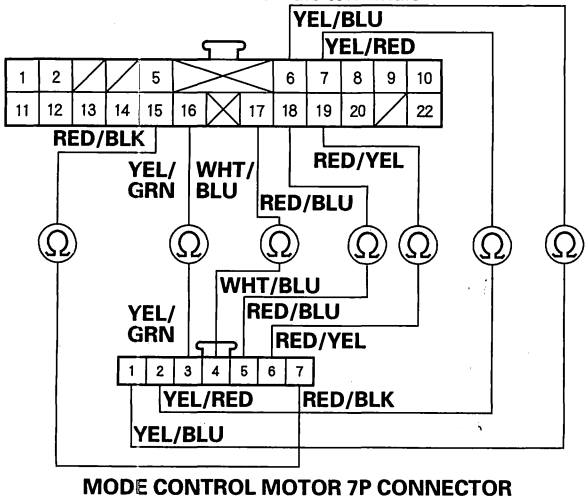

MODE CONTROL MOTOR 7P CONNECTOR
Wire side of female terminals

2-door:

22P:	10P:
No. 6	No. 1
No. 7	No. 2
No. 15	No. 10
No. 16	No. 6
No. 17	No. 7
No. 18	No. 8
No. 19	No. 9

AUDIO-HVAC DISPLAY PANEL CONNECTOR A (22P)
Wire side of female terminals

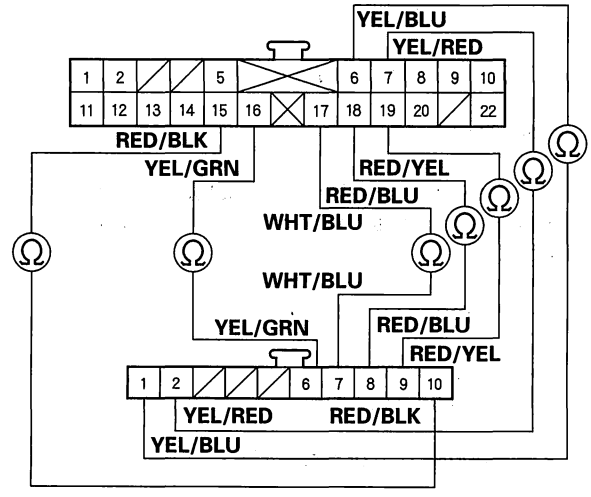

MODE CONTROL MOTOR 10P CONNECTOR
Wire side of female terminals

Is there continuity?

YES—Check for loose wires or poor connections at audio-HVAC display panel connector A (22P) and at the mode control motor 7P (4-door) or 10P (2-door) connector. If the connections are good, substitute a known-good audio-HVAC display panel, and recheck. If the symptom/indication goes away, replace the original audio-HVAC display panel. ■

NO—Repair any open in the wire(s) between the climate control unit and the mode control motor. ■

BACK

Protected by AR

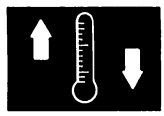

DTC B1240 or DTC indicator M: A Problem in the Mode Control Linkage, Doors, or Motor

1. Clear the DTC.
2. Turn the ignition switch OFF, and then ON.
3. Operate the climate control system in several modes.
4. Check the DTCs.

   Is DTC B1240 or M indicated?

   YES—Go to step 5.

   NO—Intermittent failure. ■
5. Test the mode control motor.

   - 4-door (see page 21-45)
   - 2-door (see page 21-45)

   Are the mode control motor and linkage OK?

   YES—Substitute a known-good audio-HVAC display panel, and recheck. If the symptom/indication goes away, replace the original audio-HVAC display panel. ■

   NO—Replace the mode control motor, 4-door (see page 21-46), 2-door (see page 21-46), or repair the mode control linkage or doors. ■

DTC B1241 or DTC indicator N: A Problem in the Blower Motor Circuit

1. Clear the DTC.
2. Turn the ignition switch OFF, and then ON.
3. Operate the climate control system in several modes.
4. Check the DTCs.

   Is DTC B1241 or N indicated?

   YES—Go to step 5.

   NO—Intermittent failure, check for loose wires or poor connections on the blower motor circuit. ■
5. Check the No. 21 (40A) fuse in the under-hood fuse/relay box, and the No. 30 (7.5A) fuse in the under-dash fuse/relay box.

   Are the fuses OK?

   YES—Go to step 6.

   NO—Replace the fuse(s), and recheck. ■

(cont'd)

Protected by AR

DTC Troubleshooting (cont'd)

6. Connect the No. 2 (4-door) or No. 1 (2-door) terminal of the blower motor 2P connector to body ground with a jumper wire.

4-door:

BLOWER MOTOR 2P CONNECTOR

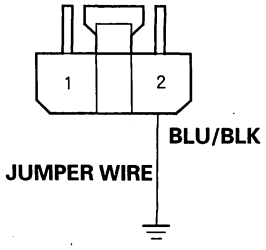

Wire side of female terminals

2-door:

BLOWER MOTOR 2P CONNECTOR

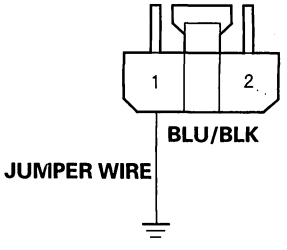

Wire side of female terminals

7. Turn the ignition switch ON (II).

Does the blower motor run?

YES—Go to step 8.

NO—Go to step 21.

8. Turn the ignition switch OFF.

9. Disconnect the jumper wire.

10. Disconnect the power transistor 4P connector.

11. Check for continuity between the No. 2 (4-door) or No. 3 (2-door) terminal of the power transistor 4P connector and body ground.

4-door:

POWER TRANSISTOR 4P CONNECTOR

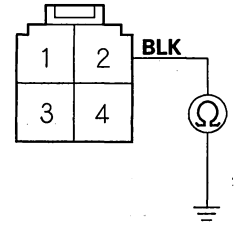

Wire side of female terminals

2-door:

POWER TRANSISTOR 4P CONNECTOR

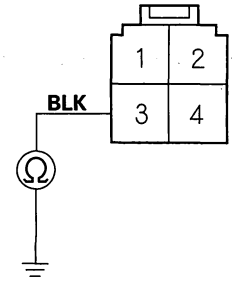

Wire side of female terminals

Is there continuity?

YES—Go to step 12.

NO—Check for an open in the wire between the power transistor and body ground. If the wire is OK, check for poor ground at G503. ■

BACK

Protected by AR

12. Connect the No. 2 and No. 4 (4-door) or No. 1 and No. 3 (2-door) terminals of the power transistor 4P connector with a jumper wire.

4-door:

POWER TRANSISTOR 4P CONNECTOR

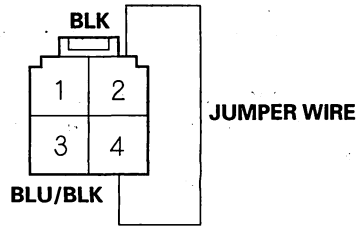

Wire side of female terminals

2-door:

POWER TRANSISTOR 4P CONNECTOR

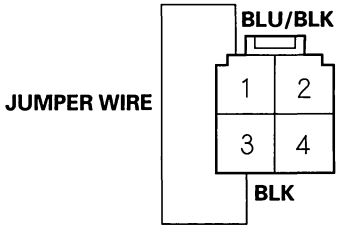

Wire side of female terminals

13. Turn the ignition switch ON (II).

Does the blower motor run at high speed?

YES—Go to step 14.

NO—Repair open in the BLU/BLK wire between the power transistor and the blower motor. ■

14. Turn the ignition switch OFF.

15. Disconnect the jumper wire.

16. Disconnect the audio-HVAC display panel connector B (16P).

17. Check for continuity between the No. 1 and No. 2 terminals of audio-HVAC display panel connector B (16P) and body ground individually.

AUDIO-HVAC DISPLAY PANEL CONNECTOR B (16P)

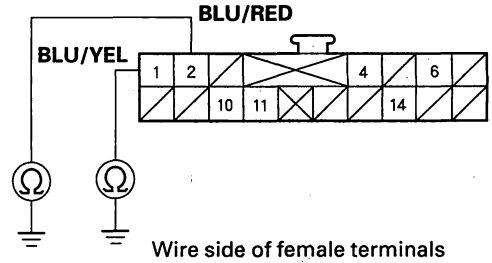

Wire side of female terminals

Is there continuity?

YES—Repair any short to body ground in the wire(s) between the climate control unit and the power transistor. ■

NO—Go to step 18.

(cont'd)

Protected by AR

DTC Troubleshooting (cont'd)

18. Check the continuity between the following terminals of audio-HVAC display panel connector B (16P) and the power transistor 4P connector.

4-door:

16P:	4P:
No. 1	No. 1
No. 2	No. 3

AUDIO-HVAC DISPLAY PANEL CONNECTOR B (16P)
Wire side of female terminals

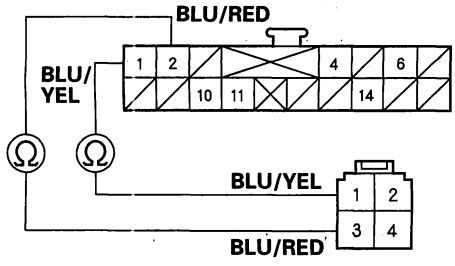

POWER TRANSISTOR 4P CONNECTOR
Wire side of female terminals

2-door:

16P:	4P:
No. 1	No. 4
No. 2	No. 2

AUDIO-HVAC DISPLAY PANEL CONNECTOR B (16P)
Wire side of female terminals

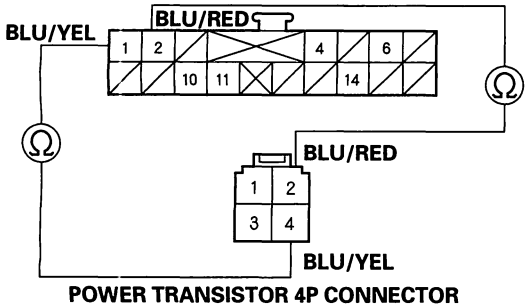

POWER TRANSISTOR 4P CONNECTOR
Wire side of female terminals

Is there continuity?

YES—Go to step 19.

NO—Repair any open in the wire(s) between the climate control unit and the power transistor. ■

19. Reconnect audio-HVAC display panel connector B (16P).

20. Test the power transistor (see page 21-50).

Is the power transistor OK?

YES—Check for loose wires or poor connections at audio-HVAC display panel connector B (16P) and at the power transistor 4P connector. If the connections are good, substitute a known-good audio-HVAC display panel, and recheck. If the symptom/indication goes away, replace the original audio-HVAC display panel. ■

NO—Replace the power transistor. ■

BACK

Protected by AR

21. Disconnect the jumper wire.

22. Disconnect the blower motor 2P connector.

23. Measure the voltage between the No. 1 (4-door) or No. 2 (2-door) terminal of the blower motor 2P connector and body ground.

4-door:

BLOWER MOTOR 2P CONNECTOR

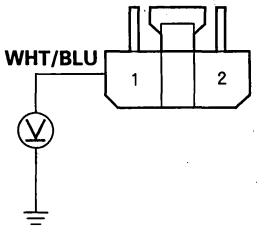

Wire side of female terminals

2-door:

BLOWER MOTOR 2P CONNECTOR

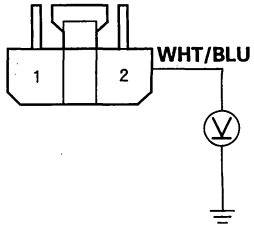

Wire side of female terminals

Is there battery voltage?

YES—Replace the blower motor.■

NO—Go to step 24.

24. Turn the ignition switch OFF.

25. Remove the blower motor relay from the under-hood fuse/relay box, and test it (see page 22-79).

Is the relay OK?

YES—Go to step 26.

NO—Replace the blower motor relay.■

26. Measure the voltage between the No. 2 terminal of the blower motor relay 4P socket and body ground.

BLOWER MOTOR RELAY 4P SOCKET

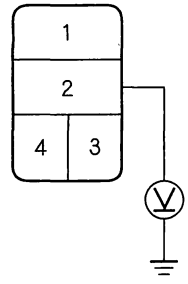

Is there battery voltage?

YES—Go to step 27.

NO—Replace the under-hood fuse/relay box.■

27. Turn the ignition switch ON (II).

28. Measure the voltage between the No. 4 terminal of the blower motor relay 4P socket and body ground.

BLOWER MOTOR RELAY 4P SOCKET

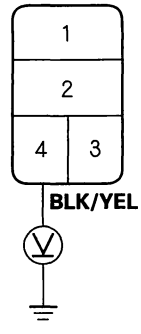

Is there battery voltage?

YES—Go to step 29.

NO—Repair open in the wire between the No. 30 fuse in the under-dash fuse/relay box and the blower motor relay.■

(cont'd)

Protected by AR

DTC Troubleshooting (cont'd)

29. Turn the ignition switch OFF.

30. Check for continuity between the No. 3 terminal of the blower motor relay 4P socket and body ground.

BLOWER MOTOR RELAY 4P SOCKET

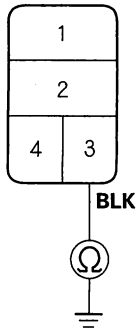

Is there continuity?

YES—Repair open in the WHT/BLU wire between the blower motor relay and the blower motor. ■

NO—Check for an open in the wire between the blower motor relay and body ground. If the wire is OK, check for poor ground at G302. ■

DTC B1236 or DTC indicator O: An Open in the Passenger's Air Mix Control Motor Circuit

1. Clear the DTC.

2. Turn the ignition switch OFF, and then ON.

3. Operate the climate control system in several modes.

4. Check the DTCs.

   Is DTC B1236 or O indicated?

   YES—Go to step 5.

   NO—Intermittent failure, check for loose wires or poor connections on the passenger's air mix control motor circuit. ■

5. Test the passenger's air mix control motor.

   - 4-door (see page 21-125)
   - 2-door (see page 21-125)

   Is the passenger's air mix control motor OK?

   YES—Go to step 6.

   NO—Replace the passenger's air mix control motor. ■

   - 4-door (see page 21-126)
   - 2-door (see page 21-126)

6. Disconnect the passenger's air mix control motor 7P (4-door) or 5P (2-door) connector.

7. Disconnect audio-HVAC display panel connector A (22P).

BACK

Protected by AR

8. Check for continuity between the following terminals of audio-HVAC display panel connector A (22P) and the passenger's air mix control motor 7P (4-door) or 5P (2-door) connector.

4-door:

22P:	7P:
No. 2	No. 3
No. 10	No. 1
No. 15	No. 5
No. 20	No. 7
No. 22	No. 2

AUDIO-HVAC DISPLAY PANEL CONNECTOR A (22P)
Wire side of female terminals

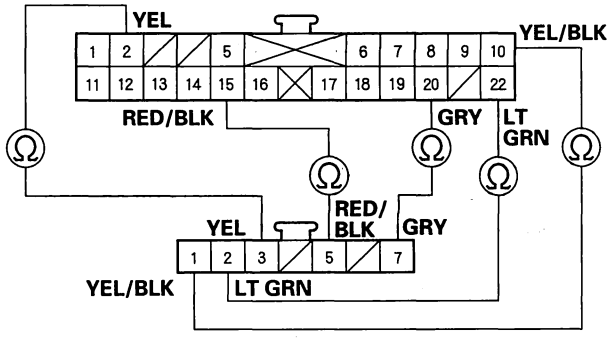

PASSENGER'S AIR MIX CONTROL MOTOR 7P CONNECTOR
Wire side of female terminals

2-door:

22P:	5P:
No. 2	No. 3
No. 10	No. 2
No. 15	No. 5
No. 20	No. 4
No. 22	No. 1

AUDIO-HVAC DISPLAY PANEL CONNECTOR A (22P)
Wire side of female terminals

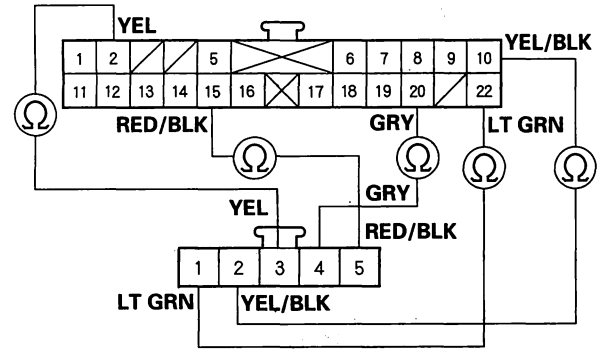

PASSENGER'S AIR MIX CONTROL MOTOR 5P CONNECTOR
Wire side of female terminals

Is there continuity?

YES—Check for loose wires or poor connections at audio-HVAC display panel connector A (22P) and at the passenger's air mix control motor 7P (4-door) or 5P (2-door) connector. If the connections are good, substitute a known-good audio-HVAC display panel, and recheck. If the symptom/indication goes away, replace the original audio-HVAC display panel. ■

NO—Repair any open in the wire(s) between the climate control unit and the passenger's air mix control motor. ■

Protected by AR

DTC Troubleshooting (cont'd)

DTC B1237 or DTC indicator P: A Short in the Passenger's Air Mix Control Motor Circuit

1. Clear the DTC.
2. Turn the ignition switch OFF, and then ON.
3. Operate the climate control system in several modes.
4. Check the DTCs.

   Is DTC B1237 or P indicated?

   YES—Go to step 5.

   NO—Intermittent failure. ■
5. Test the passenger's air mix control motor.

   - 4-door (see page 21-125)
   - 2-door (see page 21-125)

   Is the passenger's air mix control motor OK?

   YES—Go to step 6.

   NO—Replace the passenger's air mix control motor. ■

   - 4-door (see page 21-126)
   - 2-door (see page 21-126)
6. Disconnect the passenger's air mix control motor 7P (4-door) or 5P (2-door) connector.
7. Disconnect audio-HVAC display panel connector A (22P).
8. Check for continuity between body ground and audio-HVAC display panel connector A (22P) terminals No. 2, 10, 15, 20 and 22 individually.

   AUDIO-HVAC DISPLAY PANEL CONNECTOR A (22P)

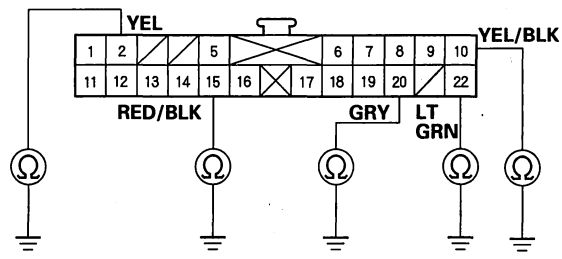

   Wire side of female terminals

   Is there continuity?

   YES—Repair any short to body ground in the wire(s) between the climate control unit and the passenger's air mix control motor. ■

   NO—Go to step 9.
9. Turn the ignition switch ON (II), and check the same terminals for voltage.

   AUDIO-HVAC DISPLAY PANEL CONNECTOR A (22P)

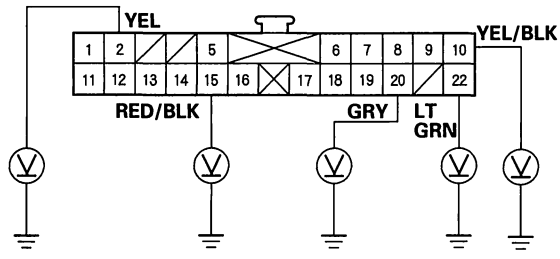

   Wire side of female terminals

   Is there any voltage?

   YES—Repair any short to power in the wire(s) between the climate control unit and the passenger's air mix control motor. This short may also damage the climate control unit. Repair the short to power before replacing the audio-HVAC display panel. ■

   NO—Substitute a known-good audio-HVAC display panel, and recheck. If the symptom/indication goes away, replace the original audio-HVAC display panel. ■

BACK

Protected by AR

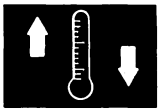

DTC B1238 or DTC indicator Q: A Problem in the Passenger's Air Mix Control Linkage, Door, or Motor

1. Clear the DTC.
2. Turn the ignition switch OFF, and then ON.
3. Operate the climate control system in several modes.
4. Check the DTCs.

   Is DTC B1238 or Q indicated?

   YES—Go to step 5.

   NO—Intermittent failure. ■
5. Test the passenger's air mix control motor.

   - 4-door (see page 21-125)
   - 2-door (see page 21-125)

   Is the passenger's air mix control motor and linkage OK?

   YES—Substitute a known-good audio-HVAC display panel, and recheck. If the symptom/indication goes away, replace the original audio-HVAC display panel. ■

   NO—Replace the passenger's air mix control motor, 4-door (see page 21-126), 2-door (see page 21-126), or repair the passenger's air mix control linkage or door. ■

DTC B1202: Climate Control Unit Internal Error

1. Clear the DTCs using the HDS.
2. Turn the ignition switch OFF, and then ON.
3. Turn the climate control system on and operate several functions. (A/C on/off, air mix and blend door operations, temperature settings etc..)
4. Check for DTCs by selecting the DTC MENU (DTCs) from the HDS.

   Is DTC B1202 indicated?

   YES—The climate control unit is faulty; replace the audio-HVAC display panel. ■

   NO—Intermittent failure, the climate control unit is OK at this time. ■

Protected by AR

DTC Troubleshooting (cont'd)

DTC B1205: Climate Control Unit Lost Communication with the Gauge Control Module (VSP/NE message)

DTC B1206: Climate Control Unit Lost Communication with the Gauge Control Module (ECT message)

DTC B1207: Climate Control Unit Lost Communication with the Gauge Control Module (ILLUMI message)

1. Turn the ignition switch ON (II).
2. Push the AUTO button.

   Does the climate control turn on?

   YES—Go to step 3.

   NO—Go to climate control power and ground circuit troubleshooting (see page 21-119).
3. Clear the DTCs using the HDS.
4. Turn the ignition switch OFF, and then ON.
5. Turn the climate control system on and operate several functions. (A/C on/off, air mix and blend door operations, temperature settings etc..)
6. Check for DTCs by selecting the DTCs MENU (DTCs) from the HDS.

   Is DTC B1205, B1206 and/or B1207 indicated?

   YES—Go to step 7.

   NO—Intermittent failure, the gauge control module and climate control unit are OK at this time. ■
7. Check the DTCs by selecting the DTCs MENU (DTCs) from the HDS.

   Is DTC B1008, B1060 and/or B1061 indicated?

   YES—Perform the gauge control module input test (see page 22-259). ■

   NO—Go to step 8.
8. Disconnect audio-HVAC display panel connector B (16P).
9. Disconnect the under-dash fuse/relay box connector N (45P) from the fuse/relay box.
10. Check for continuity between the No. 22 terminal of under-dash fuse/relay box connector N (45P) and the No. 14 terminal of the audio-HVAC display panel connector B (16P).

UNDER-DASH FUSE/RELAY BOX CONNECTOR N (45P)
Wire side of female terminals

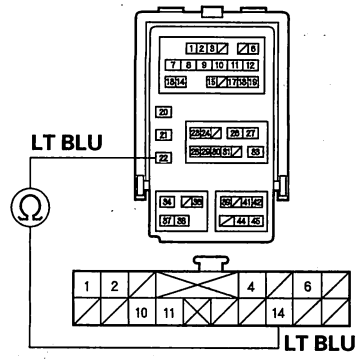

AUDIO-HVAC DISPLAY PANEL CONNECTOR B (16P)
Wire side of female terminals

Is there continuity?

YES—The gauge control module and/or climate control unit faulty. Substitute one component at a time and recheck. Replace the component that eliminates the DTC/symptom. ■

NO—Repair open in the wire between the gauge control module and the climate control unit. ■

BACK

Protected by AR

Recirculation Control Motor Circuit Troubleshooting

1. Check the No. 30 (7.5A) fuse in the under-dash fuse/relay box.

   Is the fuse OK?

   YES—Go to step 2.

   NO—Replace the fuse, and recheck. ■

2. Disconnect the recirculation control motor 7P (4-door) or 5P (2-door) connector.

3. Turn the ignition switch ON (II).

4. Measure the voltage between the No. 1 terminal of the recirculation control motor 7P (4-door) or No. 5 terminal of the 5P (2-door) connector and body ground.

   4-door:

   RECIRCULATION CONTROL MOTOR 7P CONNECTOR

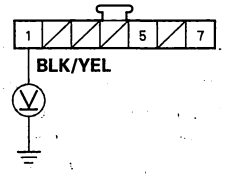

   Wire side of female terminals

   2-door:

   RECIRCULATION CONTROL MOTOR 5P CONNECTOR

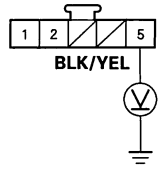

   Wire side of female terminals

   Is there battery voltage?

   YES—Go to step 5.

   NO—Repair open in the wire between the No. 30 fuse in the under-dash fuse/relay box and the recirculation control motor. ■

5. Turn the ignition switch OFF.

6. Test the recirculation control motor.

   - 4-door (see page 21-47)
   - 2-door (see page 21-47)

   Is the recirculation control motor OK?

   YES—Go to step 7.

   NO—Replace the recirculation control motor, 4-door (see page 21-48), 2-door (see page 21-48), or repair the recirculation control linkage or doors. ■

7. Disconnect audio-HVAC display panel connector B (16P).

8. Check for continuity between the No. 10 and No. 11 terminals audio-HVAC display panel connector B (16P) and body ground individually.

   AUDIO-HVAC DISPLAY PANEL CONNECTOR B (16P)

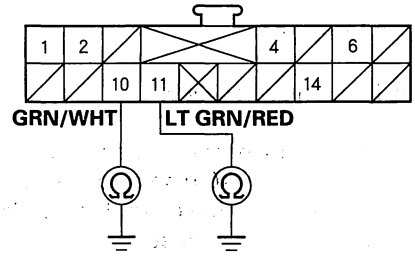

   Wire side of female terminals

   Is there continuity?

   YES—Repair any short to body ground in the wire(s) between the climate control unit and the recirculation control motor. ■

   NO—Go to step 9.

(cont'd)

Protected by AR

Recirculation Control Motor Circuit Troubleshooting (cont'd)

9. Turn the ignition switch ON (II), and check the same wires for voltage.

AUDIO-HVAC DISPLAY PANEL CONNECTOR B (16P)

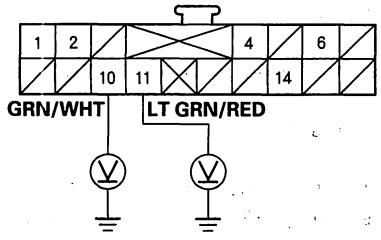

Wire side of female terminals

Is there any voltage?

YES—Repair any short to power in the wire(s) between the climate control unit and the recirculation control motor. This short may also damage the climate control unit. Repair the short to power before replacing the audio-HVAC display panel. ■

NO—Go to step 10.

10. Turn the ignition switch OFF.

11. Check for continuity between the following terminals of audio-HVAC display panel connector B (16P) and the recirculation control motor 7P (4-door) or 5P (2-door) connector.

4-door:

16P:	7P:
No. 10	No. 5
No. 11	No. 7

AUDIO-HVAC DISPLAY PANEL CONNECTOR B (16P)
Wire side of female terminals

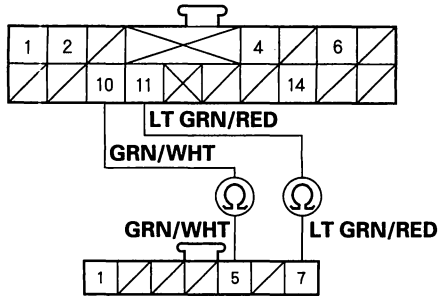

RECIRCULATION CONTROL MOTOR 7P CONNECTOR
Wire side of female terminals

2-door:

16P:	5P:
No. 10	No. 2
No. 11	No. 1

AUDIO-HVAC DISPLAY PANEL CONNECTOR B (16P)
Wire side of female terminals

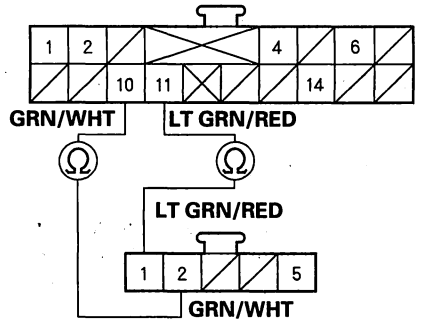

RECIRCULATION CONTROL MOTOR 5P CONNECTOR
Wire side of female terminals

Is there continuity?

YES—Check for loose wires or poor connections at audio-HVAC display panel connector B (16P) and at the recirculation control motor 7P (4-door) or 5P (2-door) connector. If the connections are good, substitute a known-good audio-HVAC display panel, and recheck. If the symptom/indication goes away, replace the original audio-HVAC display panel. ■

NO—Repair any open in the wire(s) between the climate control unit and the recirculation control motor. ■

BACK

Protected by AR

Climate Control Power and Ground Circuit Troubleshooting

1. Check the No. 30 (7.5A) fuse in the under-dash fuse/relay box.

   Is the fuse OK?

   YES—Go to step 2.

   NO—Replace the fuse, and recheck.■

2. Disconnect audio-HVAC display panel connector B (16P).

3. Turn the ignition switch ON (II).

4. Measure the voltage between the No. 4 terminal of audio-HVAC display panel connector B (16P) and body ground.

AUDIO-HVAC DISPLAY PANEL CONNECTOR B (16P)

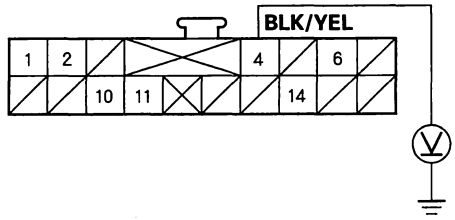

Wire side of female terminals

Is there battery voltage?

YES—Go to step 5.

NO—Repair open in the wire between the No. 30 fuse in the driver's under-dash fuse/relay box and the climate control unit.■

5. Turn the ignition switch OFF.

6. Check for continuity between the No. 6 terminal of audio-HVAC display panel connector B (16P) and body ground.

AUDIO-HVAC DISPLAY PANEL CONNECTOR B (16P)

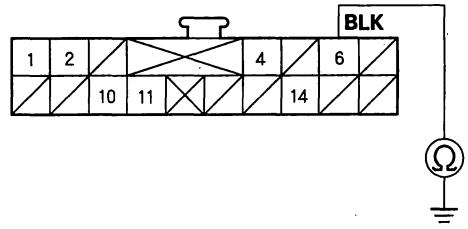

Wire side of female terminals

Is there continuity?

YES—Check for loose wires or poor connections at audio-HVAC display panel connector B (16P). If the connections are good, substitute a known-good audio-HVAC display panel, and recheck. If the symptom/indication goes away, replace the original audio-HVAC display panel.■

NO—Check for an open in the wire between the climate control unit and body ground. If the wire is OK, check for poor ground at G503.■

Protected by AR

A/C Pressure Switch Circuit Troubleshooting

NOTE:
- Do not use this troubleshooting procedure if the following items are operative; condenser fan, A/C compressor, or if the heater is inoperative. Refer to the symptom troubleshooting index.
- Before performing symptom troubleshooting, check for powertrain DTCs (see page 11-3).

1. Check for body DTCs in test mode A of the multiplex integrated control system (see page 22-91).

   Are there any DTC indicated?

   YES—Do the appropriate troubleshooting for the DTC indicated.■

   NO—Go to step 2.

2. Disconnect the A/C pressure switch 2P connector.
3. Turn the ignition switch ON (II).
4. Measure the voltage between the No. 1 terminal of the A/C pressure switch 2P connector and body ground.

A/C PRESSURE SWITCH 2P CONNECTOR

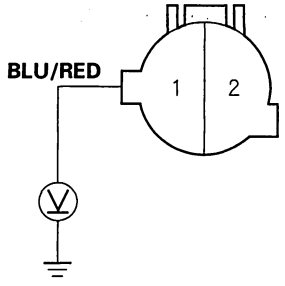

Wire side of female terminals

Is there 5 V or more?

YES—Go to step 5.

NO—Go to step 13.

5. Turn the ignition switch OFF.
6. Check for continuity between the No. 1 and No. 2 terminals of the A/C pressure switch.

A/C PRESSURE SWITCH

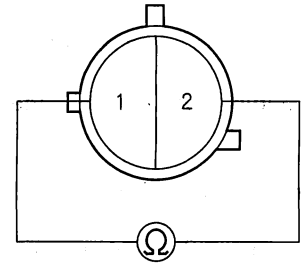

Is there continuity?

YES—Go to step 7.

NO—Go to step 14.

7. Reconnect the A/C pressure switch 2P connector.
8. Disconnect audio-HVAC display panel connector A (22P).
9. Turn the ignition switch ON (II).
10. Measure the voltage between the No. 5 terminal of the audio-HVAC display panel connector A (22P) and body ground.

AUDIO-HVAC DISPLAY PANEL CONNECTOR A (22P)

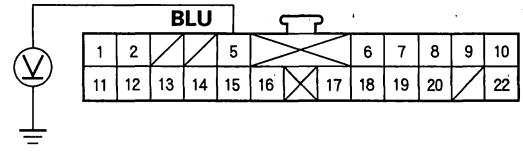

Wire side of female terminals

Is there 5 V or more?

YES—Go to step 11.

NO—Repair open in the wire between the climate control unit and the A/C pressure switch.■

BACK

Protected by AR

11. Turn the ignition switch OFF.

12. Measure the resistance between the No. 14 and No. 15 terminals of the audio-HVAC display panel connector A (22P).

AUDIO-HVAC DISPLAY PANEL CONNECTOR A (22P)

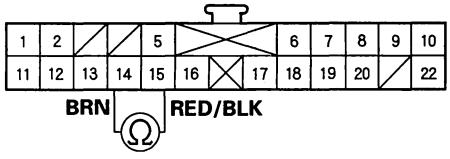

Wire side of female terminals

Is the resistance less than 24 k ohms?

YES—Check for loose wires or poor connections at audio-HVAC display panel connector A (22P) and at the A/C pressure switch 2P connector. If the connections are good, substitute a known-good audio-HVAC display panel, and recheck. If the symptom/indication goes away, replace the original audio-HVAC display panel. ■

NO—Repair cause of high resistance in the evaporator temperature circuit. ■

13. Measure the voltage between the No. 2 terminal of under-hood fuse/relay box connector H (14P) and body ground with the under-hood fuse/relay box connectors connected.

UNDER-HOOD FUSE/RELAY BOX CONNECTOR H (14P)

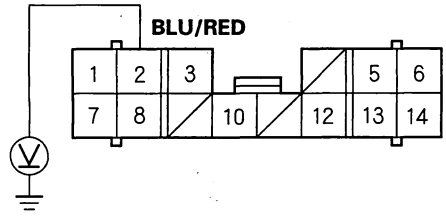

Wire side of female terminals

Is there 5 V or more?

YES—Repair open in the wire between the under-hood fuse/relay box and the A/C pressure switch. ■

NO—Check for loose or poor connections at the No. 2 terminal of the under-hood fuse/relay box. If the connections are OK, replace the under-hood fuse/relay box. ■

14. Check for proper A/C system pressure.

Is the pressure within specifications?

YES—Replace the A/C pressure switch. ■

NO—Repair the A/C pressure problem. ■

BACK

Protected by AR

In-car Temperature Sensor Test

Check for a change in resistance by heating or cooling the sensor with a hair drier.

Compare the resistance reading between the No. 1 and No. 2 terminals of the in-car temperature sensor with the specifications shown in the graph; the resistance should be within the specifications.

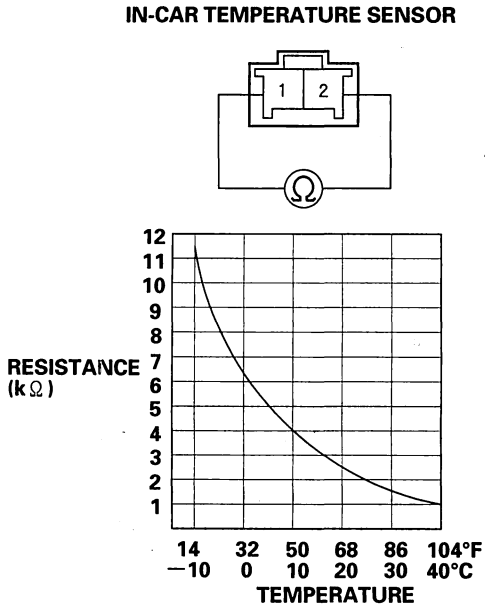

In-car Temperature Sensor Replacement

1. Remove the instrument panel (see page 20-129).
2. Remove the self-tapping screw and the in-car temperature sensor (A) from the instrument panel (B).

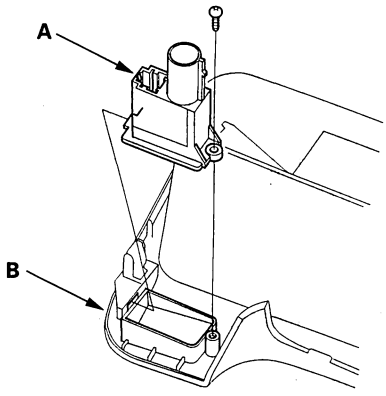

3. Install the sensor in the reverse order of removal. Be sure to connect the air hose securely.

BACK

Protected by AR

Outside Air Temperature Sensor Test

Dip the sensor in ice water, and measure the resistance. Then pour warm water on the sensor, and check for a change in resistance.

Compare the resistance reading between the No. 1 and No. 2 terminals of the outside air temperature sensor with the specifications shown in the graph; the resistance should be within the specifications.

OUTSIDE AIR TEMPERATURE SENSOR

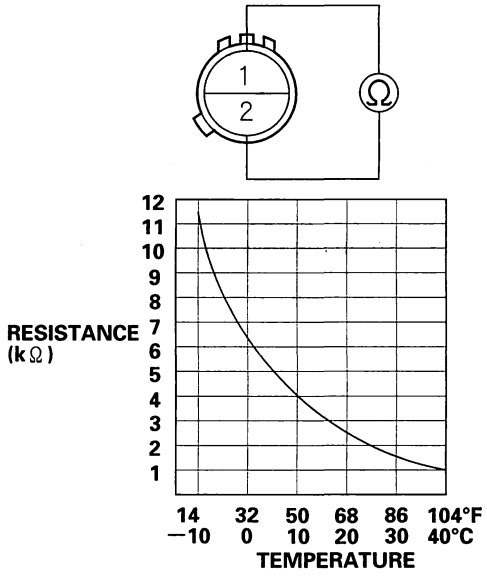

Outside Air Temperature Sensor Replacement

1. Lift the tab (A) to release the lock, and remove the outside air temperature sensor (B) from the back of the front bumper beam. Disconnect the 2P connector (C) from the outside air temperature sensor.

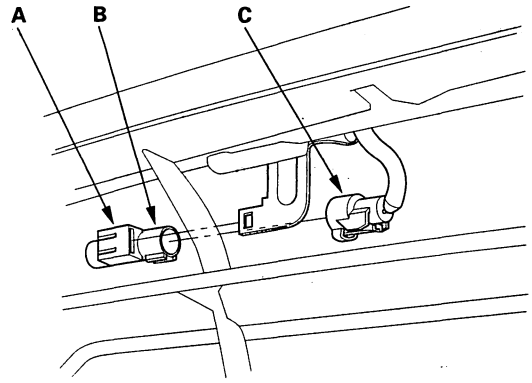

2. Install the sensor in the reverse order of removal.

Protected by AR

Sunlight Sensor Test

1. Remove the sunlight sensor, and reconnect the connector.
2. Turn the ignition switch ON (II). Measure the voltage between the terminals with the (+) probe on the No. 1 terminal and the (−) probe on the No. 2 terminal with the 2P connector connected. The voltage readings will not change under the light of a flashlight or a fluorescent lamp. Voltage should be:
   - 3.6—3.7 V or more with the sensor out of direct sunlight.
   - 3.3—3.5 V or less with the sensor in direct sunlight.

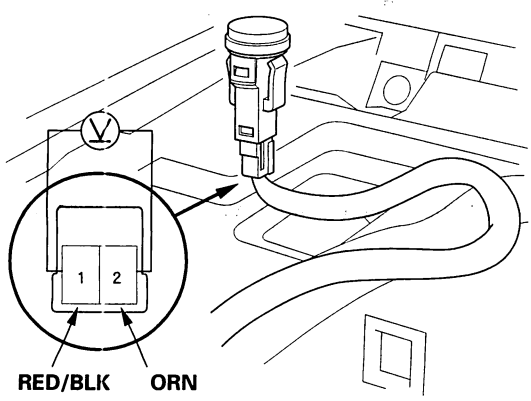

Sunlight Sensor Replacement

1. Remove the upper panel from the dashboard (see page 20-131).
2. Remove the sunlight sensor (A) from the upper panel (B). Be careful not to damage the sensor.

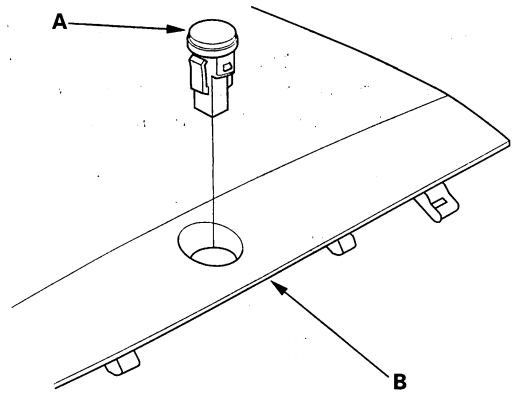

3. Install the sensor in the reverse order of removal.

BACK

Protected by AR

Passenger's Air Mix Control Motor Test

4-door

1. Disconnect the 7P connector from the passenger's air mix control motor.

   NOTICE
   Incorrectly applying power and ground to the passenger's air mix control motor will damage it. Follow the instructions carefully.

2. Connect battery power to the No. 1 terminal of the passenger's air mix control motor, and ground the No. 2 terminal; the passenger's air mix control motor should run, and stop at Max Cool. If it doesn't, reverse the connections; the passenger's air mix control motor should run, and stop at Max Hot.

3. If the passenger's air mix control motor did not run in step 2, remove it, then check the passenger's air mix control linkage and door for smooth movement.

   - If the linkage and door move smoothly, replace the passenger's air mix control motor.
   - If the linkage or door sticks or binds, repair them as needed.
   - If the passenger's air mix control motor runs smoothly, go to step 4.

PASSENGER'S AIR MIX CONTROL MOTOR

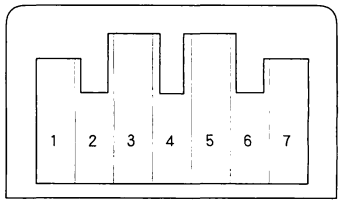

4. Measure the resistance between the No. 5 and No. 7 terminals. It should be between 4.2 to 7.8 kΩ.

5. Reconnect the passenger's air mix control motor 7P connector, then turn the ignition switch ON (II).

6. Using the backprobe set, measure the voltage between the No. 3 and No. 5 terminals.

   Max Cool—about 1.5 V
   Max Hot—about 4.5 V

7. If either the resistance or voltage readings are not as specified, replace the passenger's air mix control motor (see page 21-126).

2-door

1. Disconnect the 5P connector from the passenger's air mix control motor.

   NOTICE
   Incorrectly applying power and ground to the passenger's air mix control motor will damage it. Follow the instructions carefully.

2. Connect battery power to the No. 1 terminal of the passenger's air mix control motor, and ground the No. 2 terminal; the passenger's air mix control motor should run, and stop at Max Hot. If it doesn't, reverse the connections; the passenger's air mix control motor should run, and stop at Max Cool.

3. If the passenger's air mix control motor did not run in step 2, remove it, then check the passenger's air mix control linkage and door for smooth movement.

   - If the linkage and door move smoothly, replace the passenger's air mix control motor.
   - If the linkage or door sticks or binds, repair them as needed.
   - If the passenger's air mix control motor runs smoothly, go to step 4.

PASSENGER'S AIR MIX CONTROL MOTOR

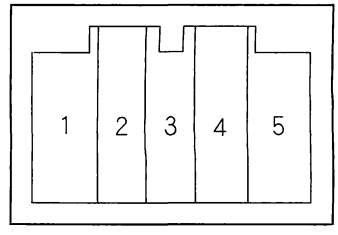

4. Measure the resistance between the No. 4 and No. 5 terminals. It should be between 4.2 to 7.8 kΩ.

5. Reconnect the passenger's air mix control motor 5P connector, then turn the ignition switch ON (II).

6. Using the backprobe set, measure the voltage between the No. 3 and No. 5 terminals.

   Max Cool—about 1.0 V
   Max Hot—about 4.0 V

7. If either the resistance or voltage readings are not as specified, replace the passenger's air mix control motor (see page 21-126).

Protected by AR

Passenger's Air Mix Control Motor Replacement

4-door

1. Disconnect the 2P connector (A) from the evaporator temperature sensor. Disconnect the 7P connector (B) from the passenger's air mix control motor (C). Remove the self-tapping screws and the passenger's air mix control motor from the heater unit.

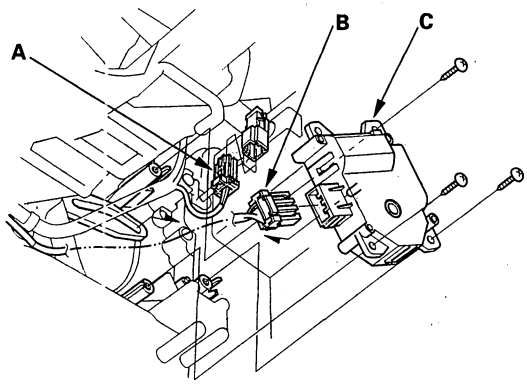

2. Install the motor in the reverse order of removal. Make sure the pin on the motor is properly engaged with the linkage. After installation, make sure the motor runs smoothly.

2-door

1. Disconnect the 10P connector (A) from the mode control motor. Disconnect the 2P connector (B) from the evaporator temperature sensor. Disconnect the 5P connector (C) from the passenger's air mix control motor (D). Remove the self-tapping screws and the passenger's air mix control motor from the heater unit.

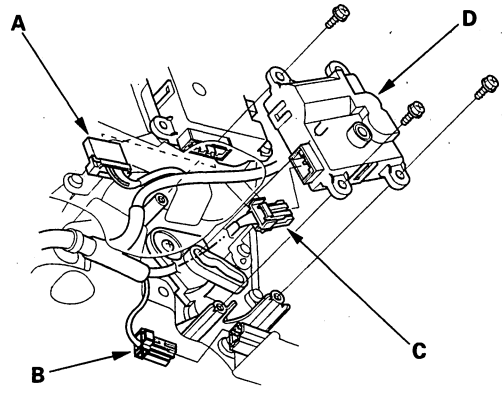

2. Install the motor in the reverse order of removal. Make sure the pin on the motor is properly engaged with the linkage. After installation, make sure the motor runs smoothly.

BACK

Protected by AR

SUPPLEMENTAL RESTRAINT SYSTEM (SRS) (If electrical maintenance required)

The Accord SRS includes a driver's airbag in the steering wheel hub, a passenger's airbag in the dashboard above the glove box, seat belt tensioners in the front seat belt retractors, side curtain airbags in the sides of the roof, and side airbags in the front seat-backs. Information necessary to safely service the SRS is included in this Service Manual. Items marked with an asterisk (*) on the contents page include or are located near SRS components. Servicing, disassembling, or replacing these items require special precautions and tools, and should be done only by an authorized Honda dealer.

- To avoid rendering the SRS inoperative, which could lead to personal injury or death in the event of a severe frontal or side collision, all SRS service work must be performed by an authorized Honda dealer.
- Improper service procedures, including incorrect removal and installation of the SRS, could lead to personal injury caused by unintentional deployment of the airbags and/or side airbags.
- Do not bump or impact the SRS unit, front impact sensors, or side impact sensors when the ignition switch is ON (II), or for at least 3 minutes after the ignition switch is turned OFF; otherwise, the system may fail in a collision, or the airbags may deploy.
- SRS electrical connectors are identified by yellow color coding. Related components are located in the steering column, front console, dashboard, dashboard lower panel, in the dashboard above the glove box, in the front seats, in the roof side, and around the floor. Do not use electrical test equipment on these circuits.



BACK

Protected by AR

Body Electrical

Body Electrical
- Special Tools 22-2
- General Troubleshooting Information 22-3

Relay and Control Unit Locations 22-7

Connectors and Harnesses 22-13

Fuse/Relay Boxes 22-68

Power Distribution 22-71

Ground Distribution 22-74

Under-hood Fuse/Relay Box
- Removal and Installation 22-75
- DTC Troubleshooting 22-76

Under-dash Fuse/Relay Box 22-77

Battery 22-78

Relays 22-79

Ignition Switch
- Test 22-81

Multiplex Integrated Control System
- Component Location Index 22-82
- System Description 22-84
- Troubleshooting - B-CAN System Diagnosis Test Mode A 22-91
- Troubleshooting - B-CAN System Diagnosis Test Mode B 22-93
- Troubleshooting - B-CAN System Diagnosis Test Mode C 22-94
- Troubleshooting - B-CAN System Diagnosis Test Mode D 22-95
- Troubleshooting - B-CAN System Diagnosis Test Mode 1 and Test Mode 2 (Troubleshooting without the HDS) 22-96
- Gauge Control Module DTC Display 22-99
- DTC Troubleshooting Index 22-100
- Description 22-106
- Circuit Diagram 22-114
- DTC Troubleshooting 22-116
- Multiplex Integrated Control Unit Input Test 22-124
- Gauge Control Module Input Test 22-127
- Door Multiplex Control Unit Input Test 22-129
- Combination Switch Control Unit Input Test 22-131
- Relay Module Input Test 22-132

Keyless/Power Door Locks/Security System
- Component Location Index 22-133
- System Description 22-135
- Circuit Diagram 22-137
- Door Lock Actuator Test 22-140
- Door Lock Knob Switch Test 22-141
- Door Key Cylinder Switch Test 22-142
- Control Unit Input Test 22-143
- DTC Troubleshooting 22-149
- Tripped Sensor History 22-155
- Trunk Lid Opener Solenoid Test 22-156
- Trunk Key Cylinder Switch Test 22-156
- Door Lock Switch Test 22-157
- Hood Switch Test 22-157
- Transmitter Test 22-158
- Transmitter Programming 22-159

Horns
- Component Location Index 22-160
- Circuit Diagram 22-161
- Horn Test/Replacement 22-161
- Horn Switch Test 22-162

Exterior Lights
- Component Location Index 22-163
- Circuit Diagram 22-170
- DTC Troubleshooting 22-187
- Daytime Running Lights Control Unit Input Test 22-194
- Brake Pedal Position Switch Test 22-195
- Headlight Adjustment 22-196
- Headlight Replacement 22-197
- Bulb Replacement 22-198
- Taillight Replacement 22-199
- License Plate Light Replacement 22-201
- Taillight/Brake Light LED Replacement 22-202
- Back-up Light Bulb Replacement 22-203
- Back-up Light Replacement 22-203
- High Mount Brake Light Replacement 22-204
- Combination Light Switch Test/Replacement 22-206

Dash Lights Brightness Controller
- Circuit Diagram 22-208

Turn Signal/Hazard Flasher
- Component Location Index 22-210
- Circuit Diagram 22-212
- Turn Signal/Hazard Relay Input Test 22-214
- Hazard Warning Switch Test 22-216

Interior Lights
- Component Location Index 22-217
- Circuit Diagram 22-218
- Front Individual Map Light Replacement 22-220
- Ambient Light Replacement 22-221
- Ceiling Light Replacement 22-221
- Trunk Light Test/Replacement 22-222
- Trunk Lid Latch Switch Test 22-222
- Vanity Mirror Light Test 22-223
- Courtesy Light Replacement 22-223

Entry Lights Control System
- Component Location Index 22-224
- Circuit Diagram 22-225
- Control Unit Input Test 22-226
- Ignition Key Switch Test 22-229
- Ignition Key Light Test 22-229

Power Windows
- Component Location Index 22-230
- System Description 22-231
- Resetting the Power Window Control Unit 22-232
- Circuit Diagram 22-234
- Master Switch Input Test 22-236
- Driver's Window Motor Test 22-239
- Passenger's Window Motor Test 22-240
- Master Switch Replacement 22-241
- Passenger's Window Switch Test/Replacement 22-241
- DTC Troubleshooting 22-242

Protected by AR

Wipers/Washers
- Component Location Index 22-243
- Circuit Diagram 22-244
- DTC Troubleshooting 22-246
- Wiper/Washer Switch Test/Replacement 22-250
- Wiper/Washer Switch Input Test 22-251
- Wiper Motor Test 22-252
- Washer Motor Test 22-252
- Wiper Motor Replacement 22-253
- Washer Reservoir Replacement 22-254
- Washer Fluid Level Switch Test 22-254
- Washer Tube Replacement 22-255

Gauges
- Component Location Index 22-256
- Self-diagnostic Function 22-259
- Circuit Diagram 22-261
- Gauge Control Module Replacement 22-276
- Rewriting the ODO Data on a New Gauge Control Module 22-276
- Outside Air Temperature Indicator Test 22-277
- Resetting Maintenance Required Indicator 22-278
- DTC Troubleshooting 22-279

Safety Indicator System
- Component Location Index 22-286
- Circuit Diagram 22-287
- Safety Indicator Input Test 22-289

Reminder Systems, Key Light Timer, and Engine Oil Pressure Indicator Systems
- Circuit Diagram 22-291
- Control Unit Input Test 22-293

Rear Window Defogger
- Component Location Index 22-296
- Circuit Diagram 22-297
- Function Test 22-299
- Defogger Wire Repair 22-300

Moonroof
- Component Location Index 22-301
- Circuit Diagram 22-303
- Limit Switch Test 22-305
- Limit Switch Replacement 22-305
- Switch Test 22-306
- Motor Test 22-306
- Moonroof Calibration 22-307
- Moonroof Control Unit Input Test 22-308

Moonr Audio System
- Component Location Index 22-310
- System Description 22-312
- Circuit Diagram 22-325
- Self-diagnostic Function 22-328
- Error Codes 22-332
- Symptom Troubleshooting Index 22-333
- Symptom Troubleshooting 22-334
- Sound Quality Diagnosis 22-362

Audio System (cont'd)
- Audio-HVAC Display Module Illumination Troubleshooting 22-368
- XM Antenna Troubleshooting 22-370
- Audio-HVAC Display Module Removal/ Installation 22-371
- Audio-HVAC Display Panel and Audio Unit Removal/Installation 22-372
- Audio-HVAC Display Panel Disassembly/Reassembly 22-374
- Audio-HVAC Subdisplay/Clock Replacement 22-377
- Speaker Replacement 22-378
- Radio Remote Switch Test 22-379
- Window Antenna Coil Replacement 22-380
- Window Antenna Test 22-381
- Window Antenna Repair 22-381
- XM Antenna Replacement 22-382
- XM Receiver Replacement 22-382

Accessory Power Sockets
- Component Location Index 22-383
- Circuit Diagram 22-384
- Front Accessory Power Socket Test/Replacement 22-385
- Rear Accessory Power Socket Test/Replacement 22-386

Power Seat
- Component Location Index 22-387
- Circuit Diagram 22-388
- Switch Test/Replacement 22-390
- Motor Test 22-392

Seat Heaters
- Component Location Index 22-394
- Circuit Diagram 22-395
- Seat Heater Test 22-396
- Switch Test 22-397

Power Mirrors
- Component Location Index 22-398
- Circuit Diagram 22-399
- Function Test 22-400
- Power Mirror Switch Test/Replacement 22-401
- Power Mirror Actuator Test 22-401
- Power Mirror Actuator Replacement 22-402

Immobilizer System
- Component Location Index 22-404
- System Description 22-405
- Circuit Diagram 22-406
- Troubleshooting 22-407
- System Check 22-412
- Status Log 22-413
- Immobilizer Control Unit-Receiver Replacement 22-414

Navigation System ('03-05 models)..... 22-415

Navigation System ('06 model)..... 22-415

Protected by AR

Body Electrical

Special Tools

Ref. No.	Tool Number	Description	Qty
①	07AAZ-SDAA100	Radio Test Harness Breakout Box	1
②	07WAZ-001010A	MPCS (MCIC) Service Connector	1
③	07LAJ-PT3020A	Test Harness	1
④	07TAZ-001020A	Back Probe Adaptor	1
⑤	070AZ-SDAA100	Test Harness A and B (Alpine)	1
⑥	070AZ-SDAA200	Test Harness (Stanley)	1
⑦	07AAZ-SDBA100	Diagnostics CD	1
⑧	07AAZ-SDBA200 (ABEX TCD-725B)	Skip Test CD	1
⑨	07AAZ-SDBA300 (ABEX TCD-721)	Skip Test CD	1

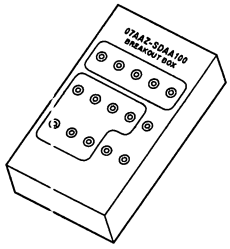

①

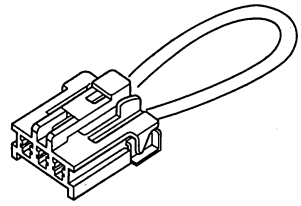

②

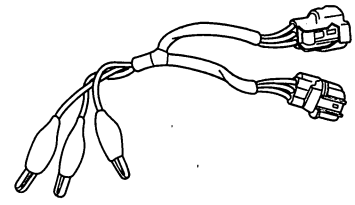

③

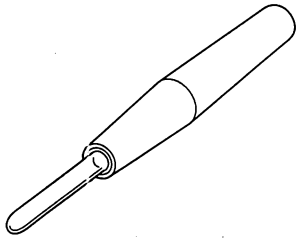

④

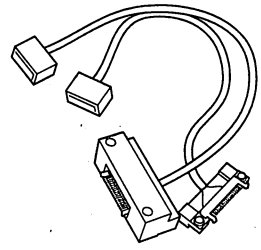

⑤

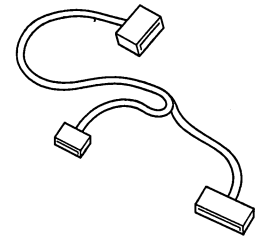

⑥

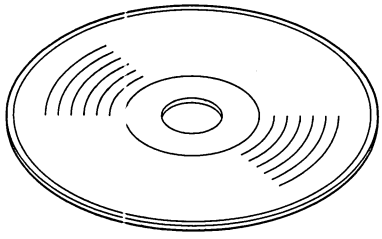

⑦, ⑧, ⑨

BACK

Protected by AR

General Troubleshooting Information

Tips and Precautions

Before Troubleshooting

1. Check applicable fuses in the appropriate fuse/relay box.

2. Check the battery for damage, state of charge, and clean and tight connections.

NOTICE

- Do not quick-charge a battery unless the battery ground cable has been disconnected, otherwise you will damage the alternator diodes.
- Do not attempt to crank the engine with the battery ground cable loosely connected or you will severely damage the wiring.

Handling Connectors

- Make sure the connectors are clean and have no loose wire terminals.
- Make sure multiple cavity connectors are packed with dielectric grease (except watertight connectors).
- All connectors have push-down release type locks (A).

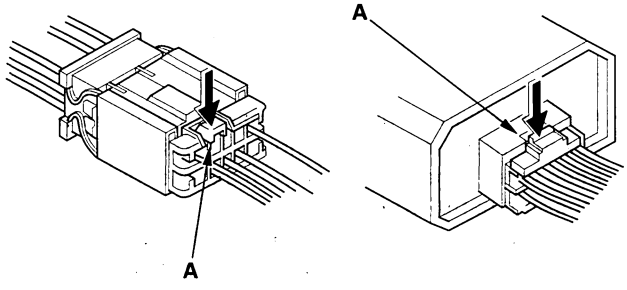

- Some connectors have a clip on their side used to attach them to a mount bracket on the body or on another component. This clip has a pull type lock.
- Some mounted connectors cannot be disconnected unless you first release the lock and remove the connector from its mount bracket (A).

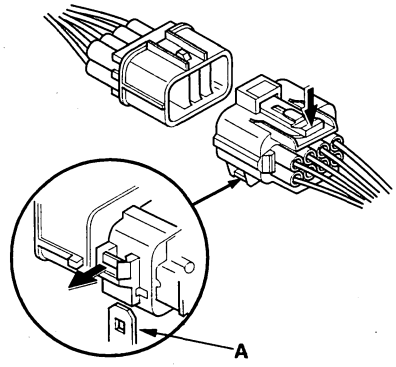

- Never try to disconnect connectors by pulling on their wires; pull on the connector halves instead.
- Always reinstall plastic covers.

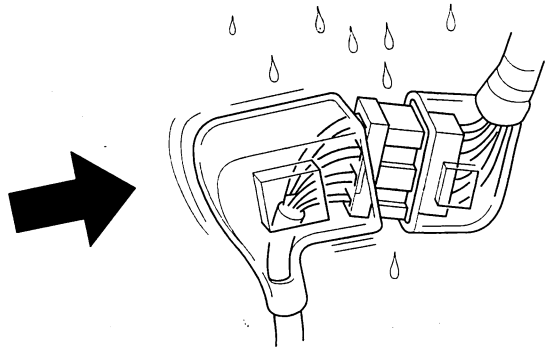

- Before connecting connectors, make sure the terminals (A) are in place and not bent.

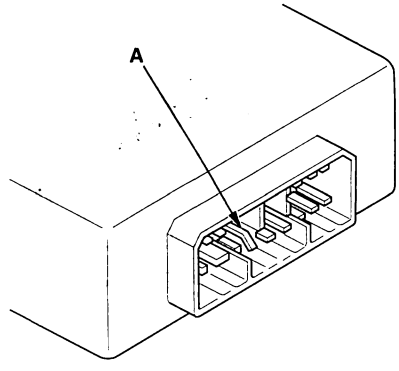

(cont'd)

Protected by AR

General Troubleshooting Information (cont'd)

- Check for loose retainer (A) and rubber seals (B).

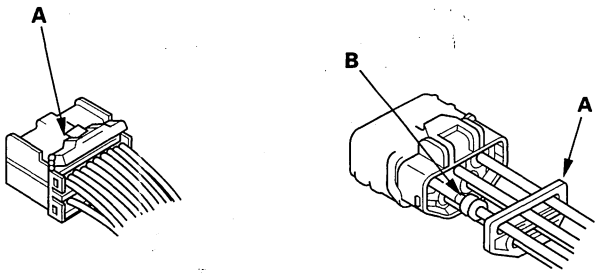

- The backs of some connectors are packed with dielectric grease. Add grease if necessary. If the grease is contaminated, replace it.

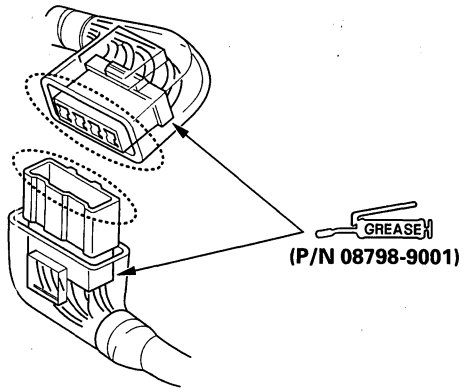

- Insert the connector all the way and make sure it is securely locked.
- Position wires so that the open end of the cover faces down.

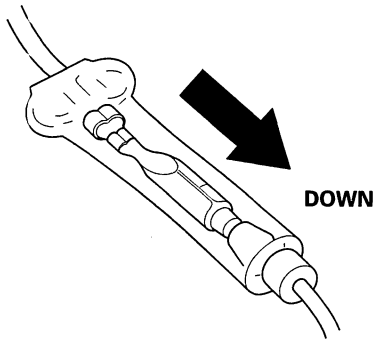

Handling Wires and Harnesses

- Secure wires and wire harnesses to the frame with their respective wire ties at the designated locations.
- Remove clips carefully; don't damage their locks (A).

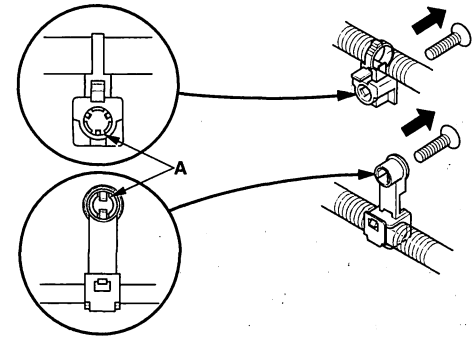

- Slip pliers (A) under the clip base and through the hole at an angle, then squeeze the expansion tabs to release the clip.

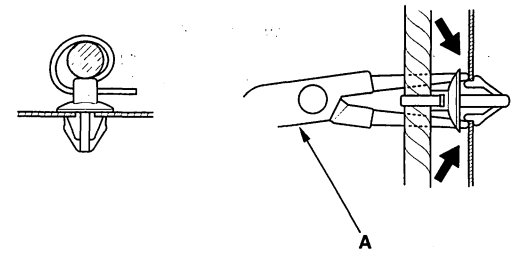

- After installing harness clips, make sure the harness doesn't interfere with any moving parts.
- Keep wire harnesses away from exhaust pipes and other hot parts, from sharp edges of brackets and holes, and from exposed screws and bolts.
- Seat grommets in their grooves properly (A). Do not leave grommets distorted (B).

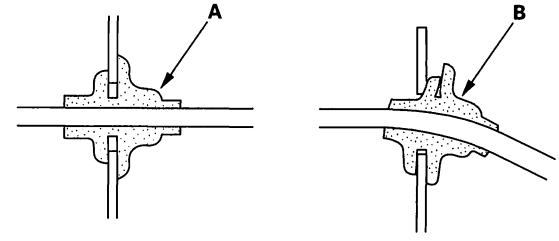

BACK

Protected by AR

Testing and Repairs

- Do not use wires or harnesses with broken insulation. Replace them or repair them by wrapping the break with electrical tape.
- Never attempt to modify, splice, or repair SRS wiring. If there is an open or damage is SRS wiring or terminals, replace the harness.
- After installing parts, make sure that no wires are pinched under them.
- When using electrical test equipment, follow the manufacturer's instructions and those described in this manual.
- If possible, insert the probe of the tester from the wire side (except waterproof connector).

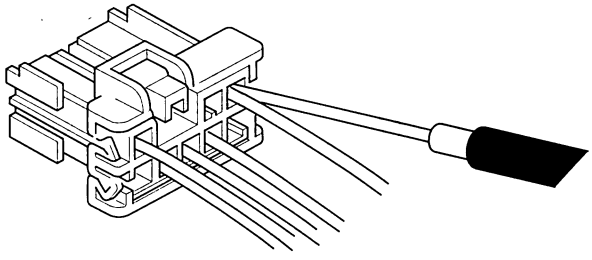

- Use back probe adaptor 07TAZ-001020A.

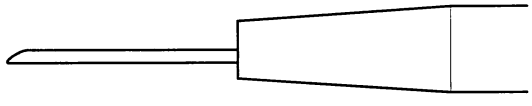

- Refer to the instructions in the Honda Terminal Kit for identification and replacement of connector terminals.

Five-step Troubleshooting

1. Verify The Complaint:
   Turn on all the components in the problem circuit to verify the customer complaint. Note the symptoms. Do not begin disassembly or testing until you have narrowed down the problem area.

2. Analyze The Schematic:
   Look up the schematic for the problem circuit. Determine how the circuit is supposed to work by tracing the current paths from the power feed through the circuit components to ground. If several circuits fail at the same time, the fuse or a ground is a likely cause.

   Based on the symptoms and your understanding of the circuit operation, identify one or more possible causes of the problem.

3. Isolate The Problem By Testing The Circuit:
   Make circuit tests to check the diagnosis you made in step 2. Keep in mind that a logical, simple procedure is the key to efficient troubleshooting. Test for the most likely cause of failure first. Try to make tests at points that are easily accessible.

4. Fix The Problem:
   Once the specific problem is identified, make the repair. Be sure to use proper tools and safe procedures.

5. Make Sure The Circuit Works:
   Turn on all components in the repaired circuit in all modes to make sure you've fixed the entire problem. If the problem was a blown fuse, be sure to test all of the circuits on the fuse. Make sure no new problems turn up and the original problem does not recur.

(cont'd)

Protected by AR

General Troubleshooting Information (cont'd)

Wire Color Codes

The following abbreviations are used to identify wire colors in the circuit schematics:

WHT	White
YEL	Yellow
BLK	Black
BLU	Blue
GRN	Green
RED	Red
ORN	Orange
PNK	Pink
BRN	Brown
GRY	Gray
PUR	Purple
LT BLU	Light Blue
LT GRN	Light Green

The wire insulation has one color or one color with another color stripe. The second color is the stripe.

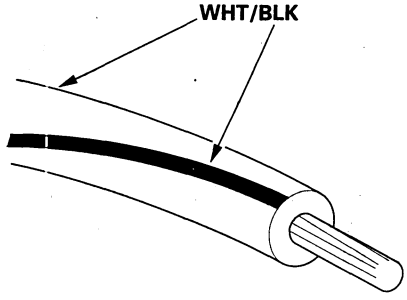

How to Check for DTCs with the Honda Diagnostic System (HDS)

1. Connect the Honda Diagnostic System (HDS) to the Data Link Connector (DLC) (A) located under the driver's side of the dashboard.

   NOTE: For specific operations, refer to the user's manual that came with the Honda Diagnostic System (HDS).

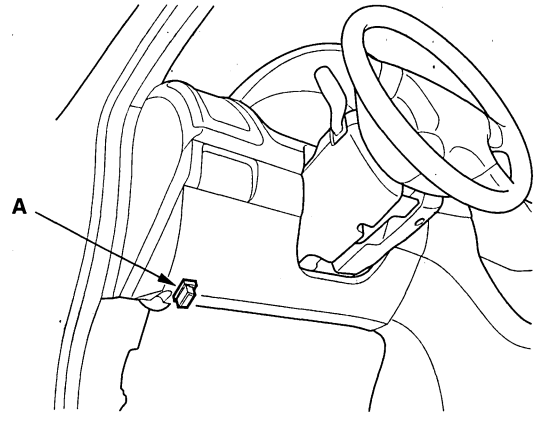

2. Select the TEST MODE MENU and check for Diagnostic Trouble Code (DTCs), and note them. Refer to the Troubleshooting Index and begin the appropriate troubleshooting procedure.

BACK

Protected by AR

Relay and Control Unit Locations

Engine Compartment

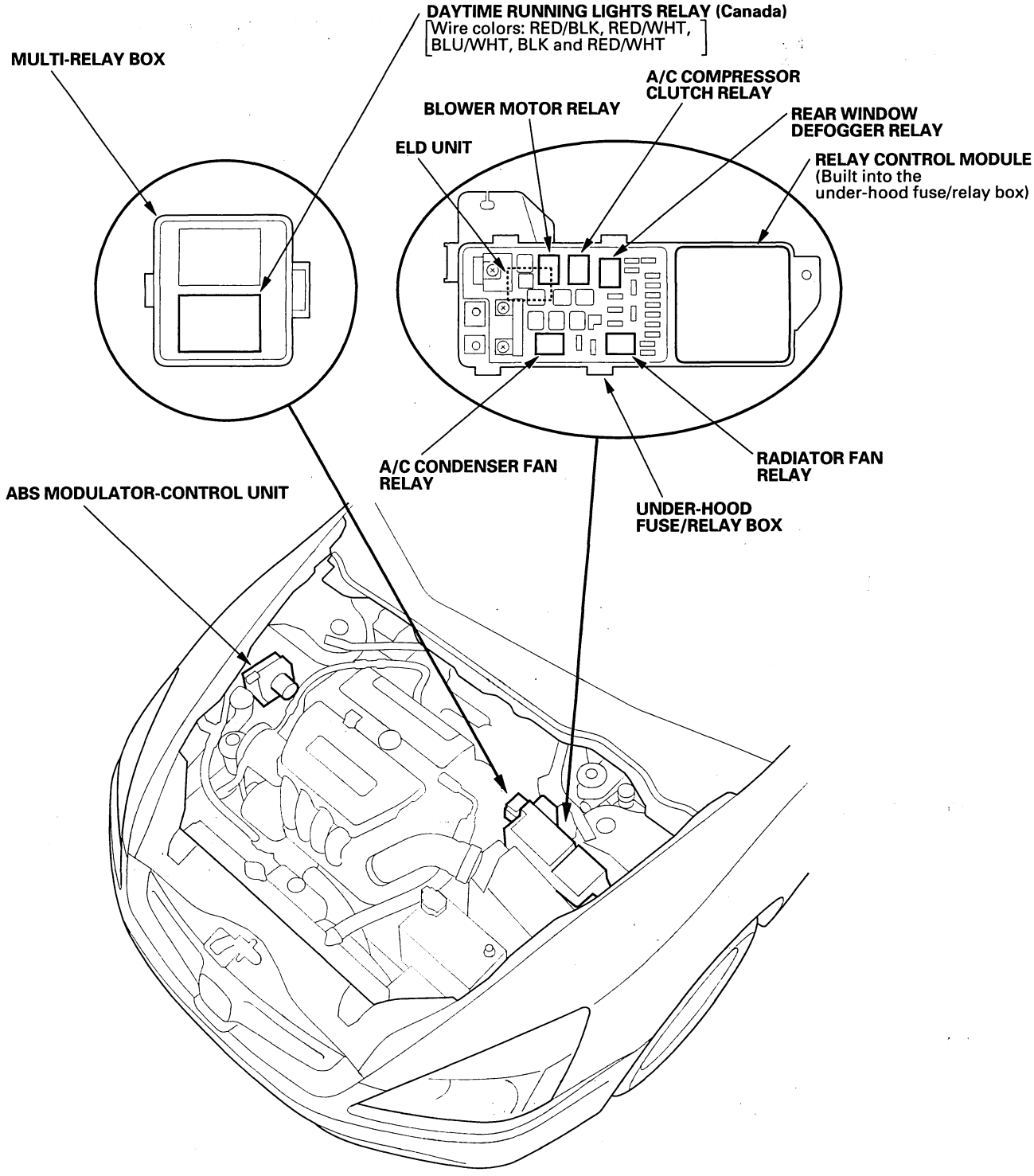

Protected by AR

Relay and Control Unit Locations

Dashboard

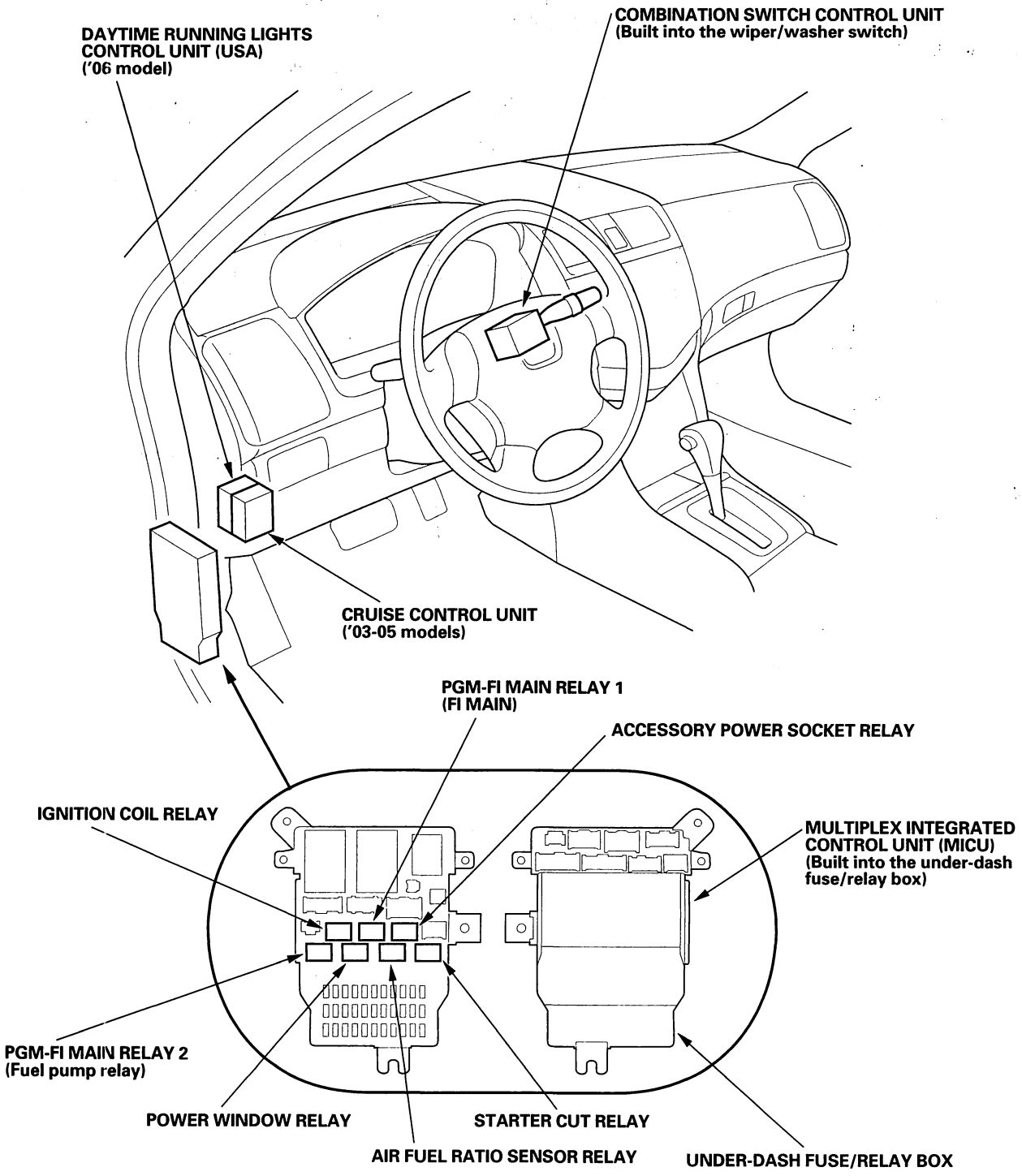

BACK

Protected by AR

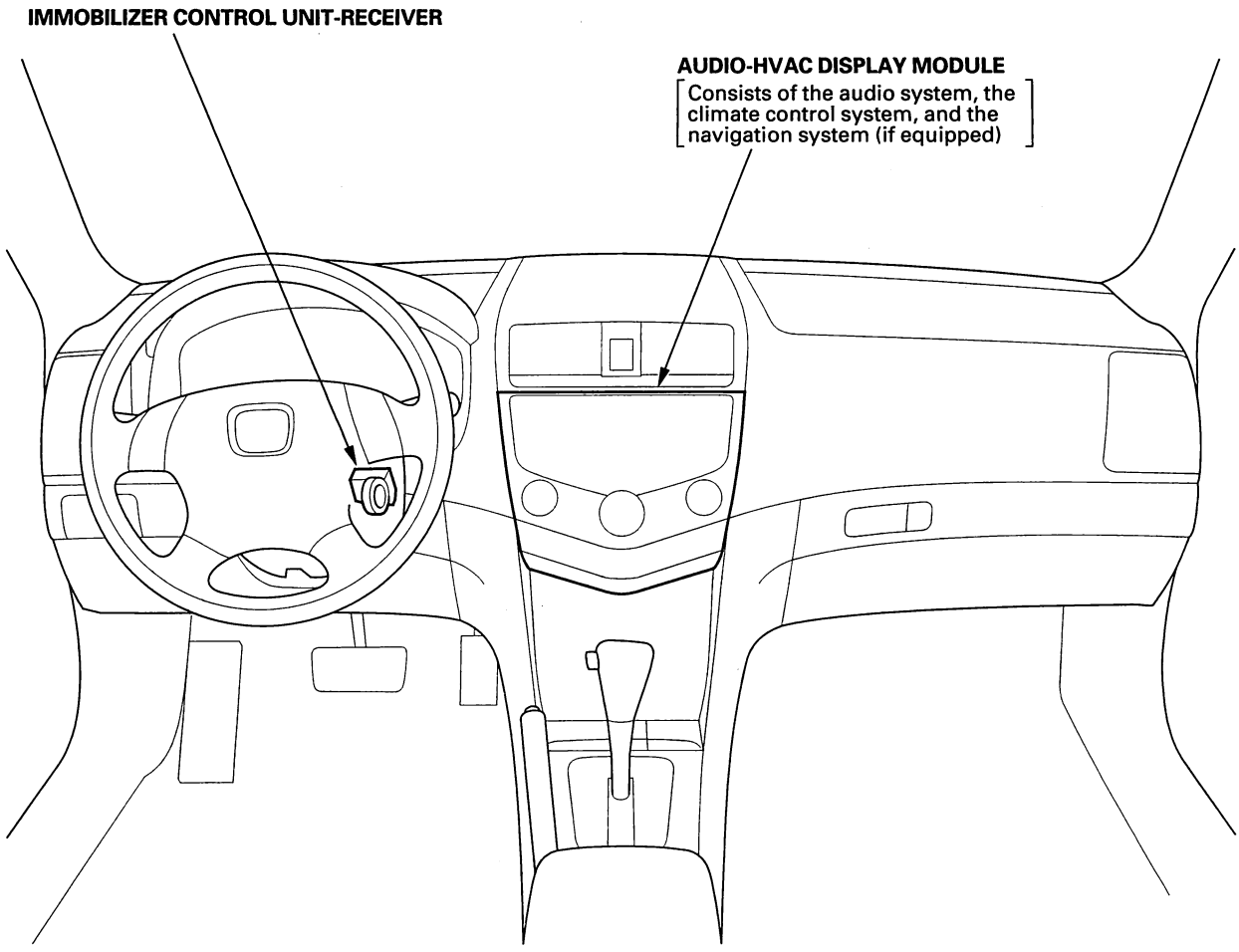

(cont'd)

Protected by AR

Relay and Control Unit Locations

Dashboard (cont'd)

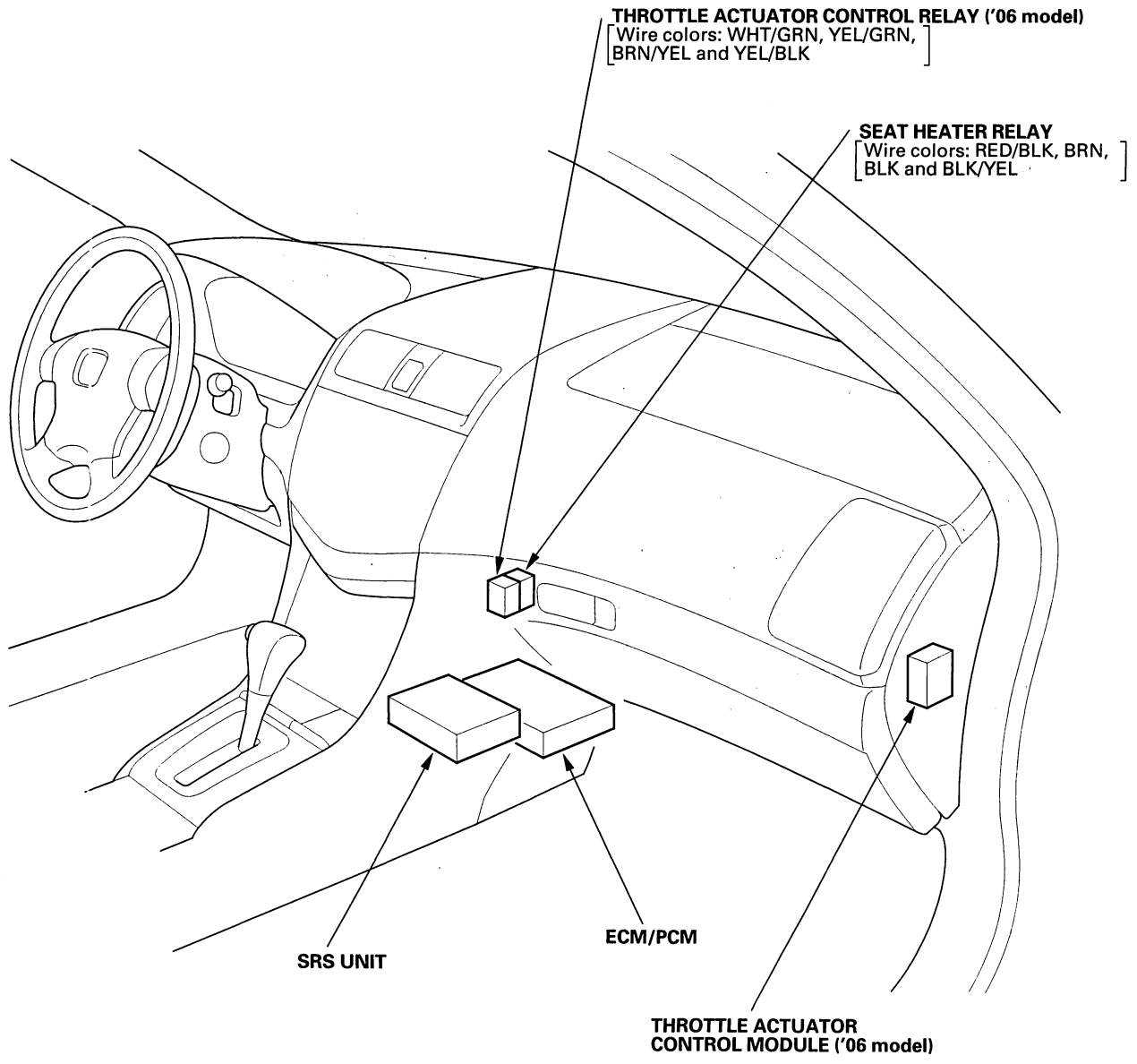

BACK

Protected by AR

Roof and Trunk

4-door:

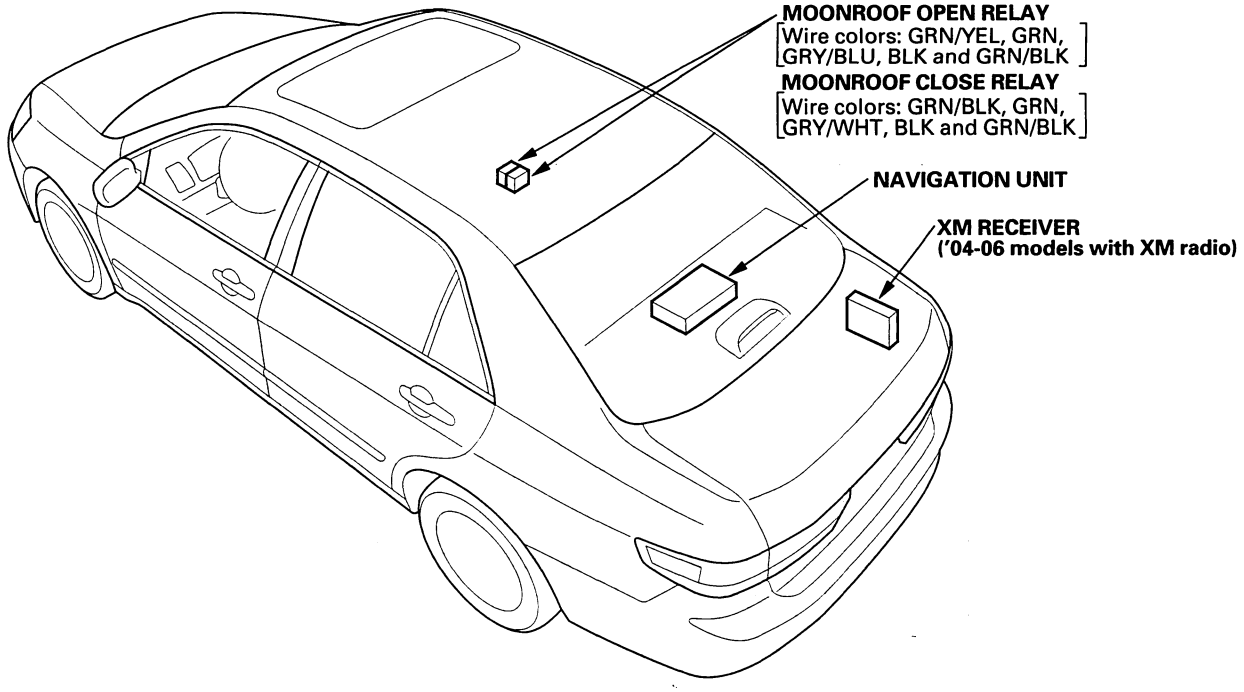

2-door:

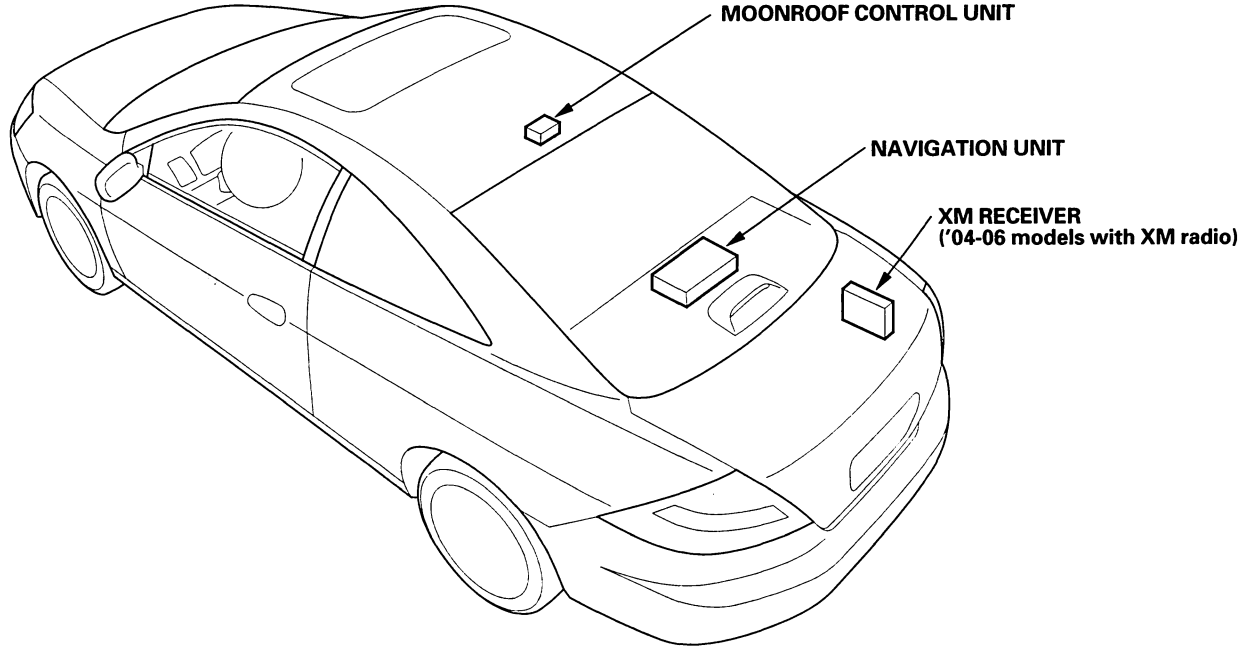

Protected by AR

Relay and Control Unit Locations

Door and Seat

Driver's Door:

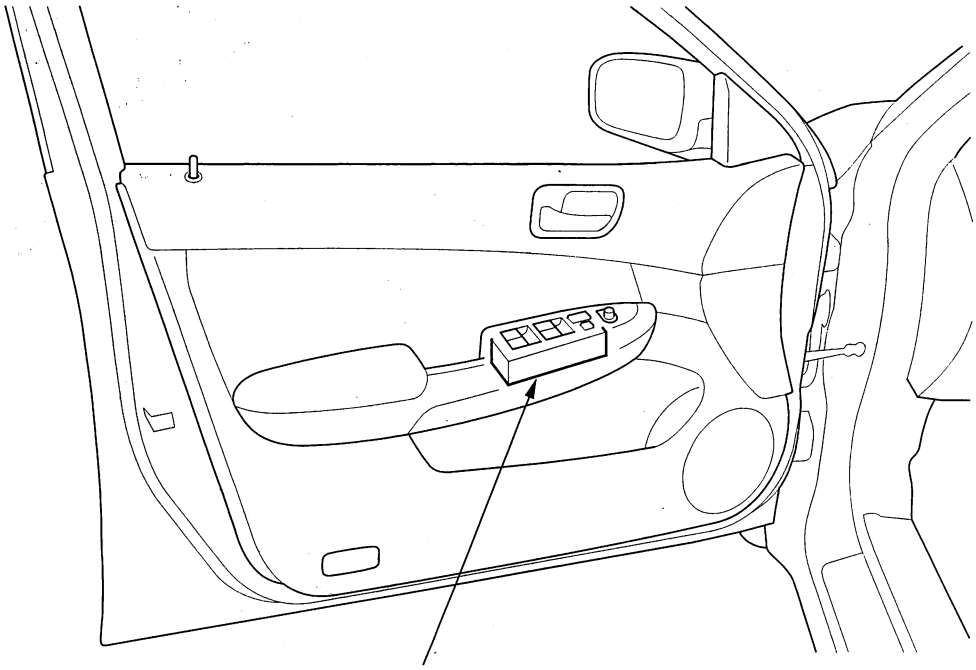

Front Passenger's Seat:

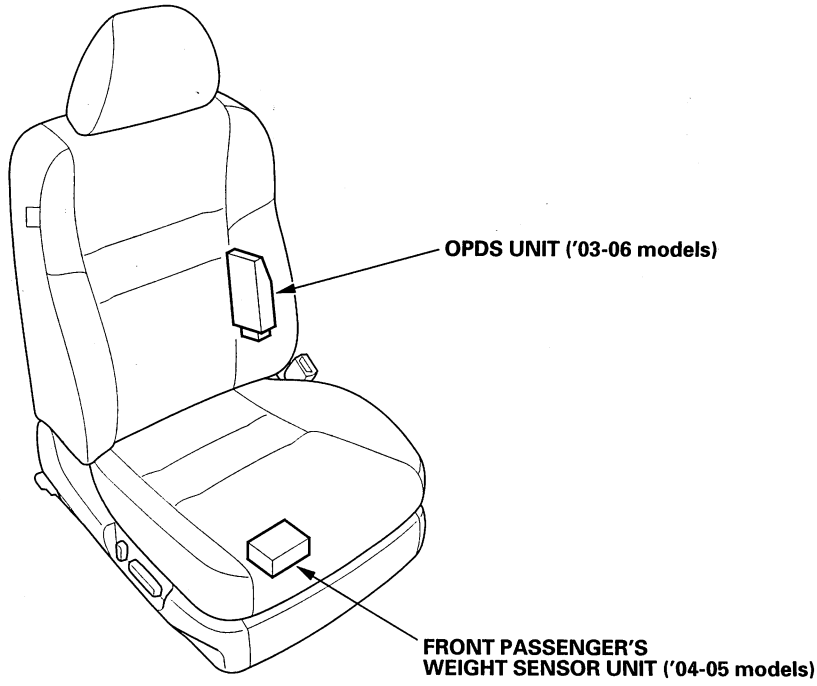

BACK

Protected by AR

Connector Index

Identification numbers have been assigned to in-line connectors, junction connectors, and terminals. The number is preceded by the letter "C" for connectors, "G" for ground terminals or "T" for non-ground terminals.

Harness	Location			
	Engine Compartment	Dashboard	Others (Floor, Door, Trunk, and Roof)	Notes
Battery ground cable	(−) G1			(see page 22-14)
Engine ground cable A	T1 G2			(see page 22-14)
Engine ground cable B	T2 G3			(see page 22-14)
Starter subharness	C101, C153 (+) T101 through T104			(see page 22-15)
Engine wire harness	C101 through C103, C108 C152, C201 through C203 T10 through T13 G101			(see page 22-16)
Front engine compartment wire harness (left branch)	C301 G301			(see page 22-22)
Front engine compartment wire harness (right branch)	G201			(see page 22-20)
Engine compartment wire harness (left branch)	C153, C301, C310, C415 G302	C401 through C403		(see page 22-26)
Engine compartment wire harness (right branch)	G202 and G203			(see page 22-24)
Transmission range switch subharness	C152			(see page 22-16)
Dashboard wire harness (left branch)		C401 through C408, C411, C416 C501 and C502, C601 G501 and G502, G504		(see page 22-28)
Dashboard wire harness (right branch)		C251, C551 through C557 C731 and C732, C851 G503, G506	G505	(see page 22-32)
ECM/PCM wire harness	C201 through C203	C251and C281		(see page 22-60)
Throttle actuator control module subharness ('06 model)		C281		(see page 22-60)
Cable reel subharness				(see page 22-61)
Floor wire harness (left branch)		C501 and C502	C531, C701, C751 and C752 C901 and C903 G601 and G603	• 4-door (see page 22-36) • 2-door (see page 22-40)
Floor wire harness (right branch)		C551 through C553 C651	C781, C801 G602	• 4-door (see page 22-38) • 2-door (see page 22-40)
EVAP canister vent shut valve subharness (SULEV)			C531	• 4-door (see page 22-36) • 2-door (see page 22-42)
Rear window defogger ground wire			G604	• 4-door (see page 22-38) • 2-door (see page 22-42)
XM Radio Subharness ('04-06 models)				• 4-door (see page 22-38) • 2-door (see page 22-42)
Rear wire harness			C701 through C704 G701 and G702	(see page 22-44)
Roof wire harness		C601, C651	C602	(see page 22-52)
ODS/OPDS unit wire harness			C801	(see page 22-62)
Seat position sensor harness ('04-06 models)			C901 and C903	(see page 22-62)
Side curtain airbag harness ('04-06 models)				(see page 22-64)
Driver's door wire harness			C631 and C632	(see page 22-54)
Driver's door subharness			C631 and C632	(see page 22-54)
Front passenger's door wire harness		C731 and C732		(see page 22-56)
Left rear door wire harness (4-door)			C751	(see page 22-58)
Right rear door wire harness (4-door)			C781	(see page 22-59)
Driver's seat wire harness			C901	(see page 22-65)
A/C wire harness		C851		(see page 22-67)

Protected by AR

Connectors and Harnesses

Connector to Harness Index

Battery Ground Cable

Connector or Terminal	Ref	Cavities	Location	Connects to	Notes
G1	6		Left side of engine compartment	Body ground, via battery ground cable	
(—)	5		Battery	Battery negative terminal	

Engine Ground Cable A

Connector or Terminal	Ref	Cavities	Location	Connects to	Notes
T1	2		Right side of engine compartment	Body ground, via battery ground cable	
G2	1		Right side of engine compartment	Body ground, via engine ground cable A	

Engine Ground Cable B

Connector or Terminal	Ref	Cavities	Location	Connects to	Notes
T2	3		Left side of engine compartment	Transmission housing	
G3	4		Left side of engine compartment	Body ground, via engine ground cable B	

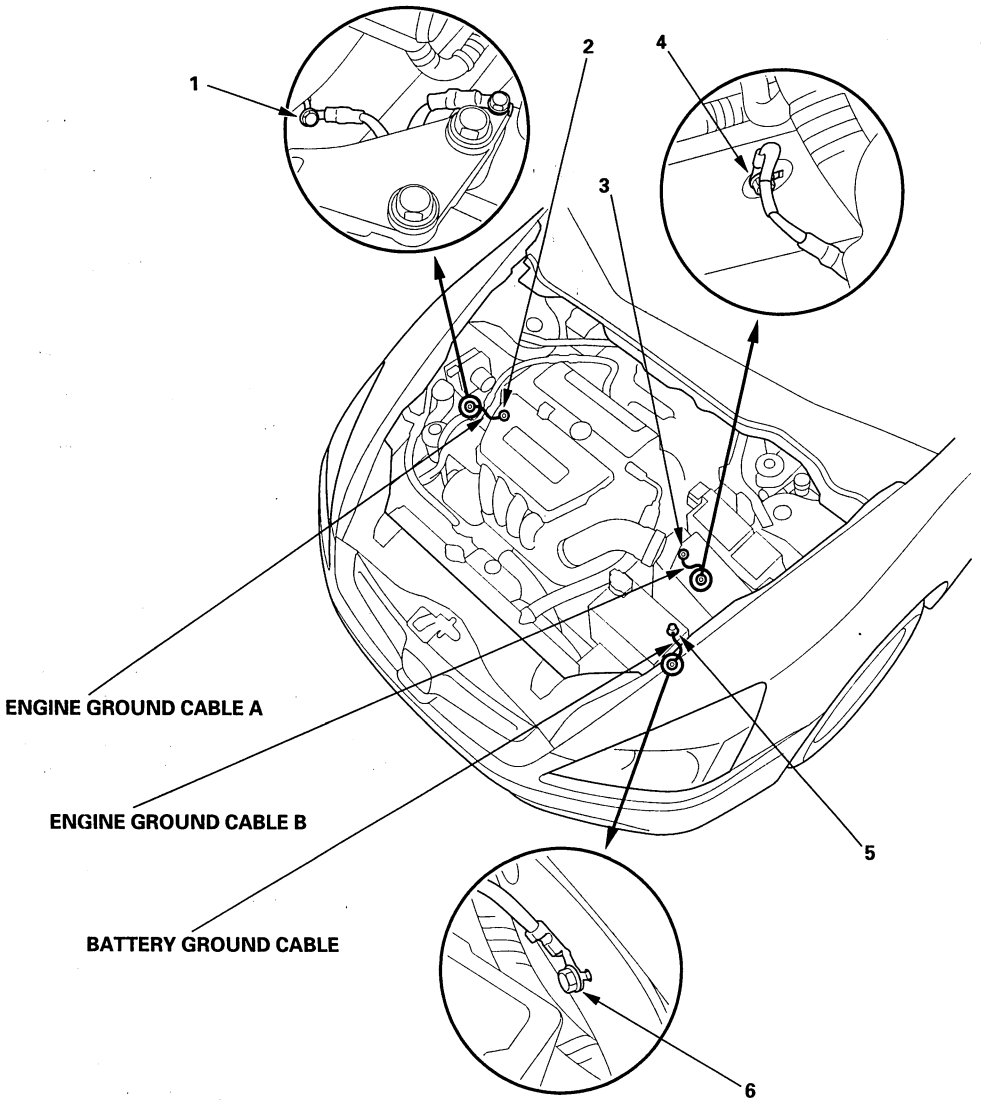

BACK

Protected by AR

Starter Subharness

Connector or Terminal	Ref	Cavities	Location	Connects to	Notes
Alternator	1	4	Middle of engine compartment		
Knock sensor	3	1	Middle of engine compartment		
Starter solenoid	5	1	Middle of engine compartment		
C101	10	6	Left side of engine compartment	Engine wire harness (see page 22-16)	
C153	8	1	Left side of engine compartment	Engine compartment wire harness (see page 22-26)	
T101	7		Left side of engine compartment	Under-hood fuse/relay box	
T102	6		Left side of engine compartment	Under-hood fuse/relay box	
T103	2		Alternator		
T104	4		Middle of engine compartment	Starter motor	
(+)	9		Battery	Battery positive terminal	

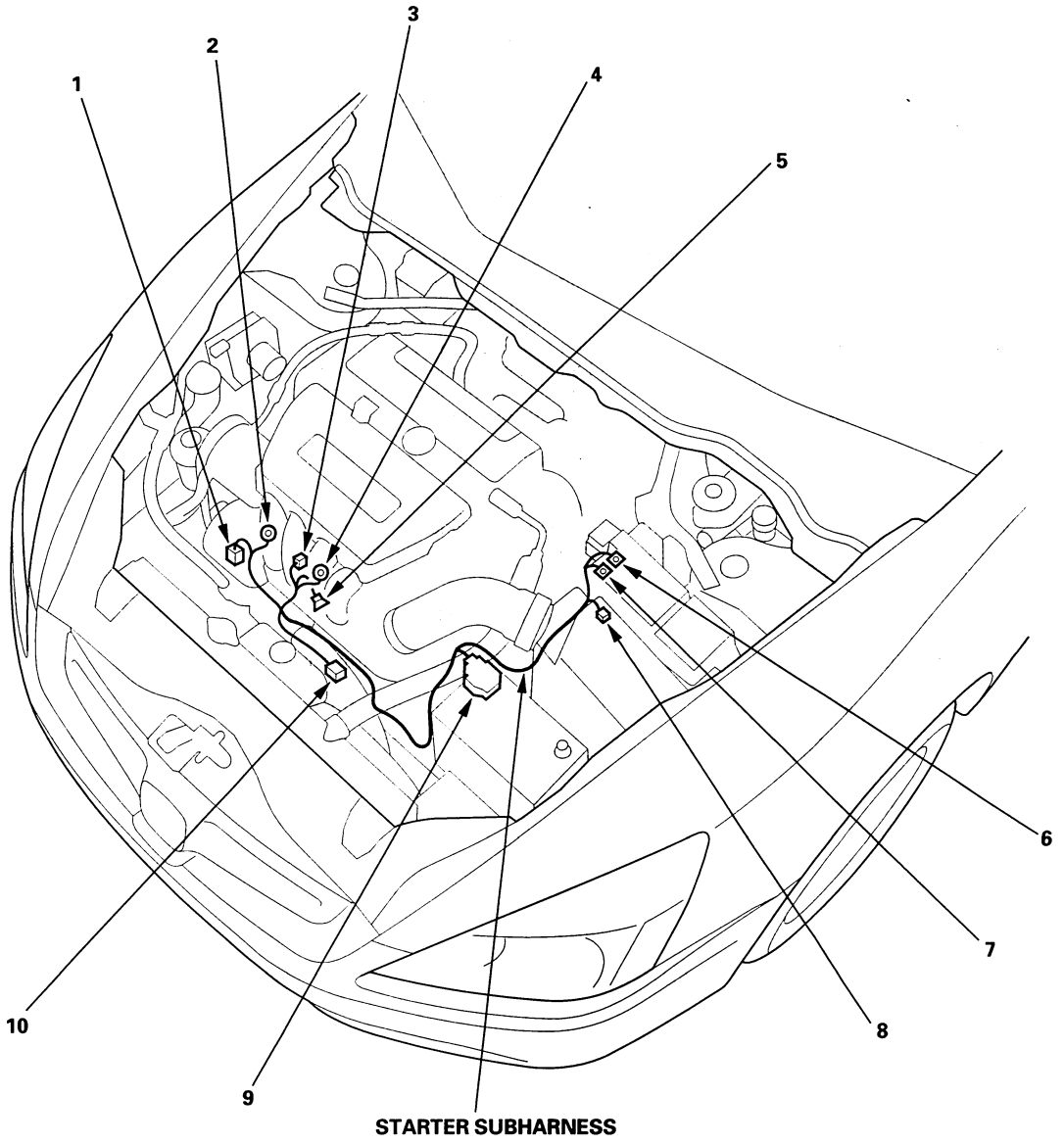

BACK

Protected by AR

Connector to Harness Index (cont'd)

Engine Wire Harness

Connector or Terminal	Ref	Cavities	Location	Connects to	Notes
A/F sensor 1	18	4	Left side of engine compartment		A/T
A/F sensor 1	23	4	Left side of engine compartment		M/T
A/T clutch pressure control solenoid valve connector A	24	2	Left side of engine compartment		
A/T clutch pressure control solenoid valve connector B	31	2	Left side of engine compartment		
A/T clutch pressure control solenoid valve connector C	30	2	Left side of engine compartment		
Back-up light switch	33	2	Left side of engine compartment		M/T
CMP sensor A	5	3	Left side of engine compartment		
CMP sensor B	8	3	Left side of engine compartment		
CKP sensor	45	3	Right side of engine compartment		
EGR valve and EGR valve position sensor	7	6	Left side of engine compartment		
EVAP canister purge valve	12	2	Left side of engine compartment		
Engine coolant temperature (ECT) sensor	13	2	Left side of engine compartment		
Engine mount control solenoid valve	44	2	Right side of engine compartment		A/T
Engine oil pressure switch	47	1	Right side of engine compartment		
Idle air control (IAC) valve	34	3	Left side of engine compartment		
Ignition coil No. 1	1	3	Middle of engine compartment		
Ignition coil No. 2	2	3	Middle of engine compartment		
Ignition coil No. 3	3	3	Middle of engine compartment		
Ignition coil No. 4	4	3	Middle of engine compartment		
Injector No. 1	43	2	Middle of engine compartment		
Injector No. 2	42	2	Middle of engine compartment		
Injector No. 3	41	2	Middle of engine compartment		
Injector No. 4	39	2	Middle of engine compartment		
Intake air temperature (IAT) sensor	35	2	Left side of engine compartment		Except SULEV
Input shaft (mainshaft) speed sensor	23	3	Left side of engine compartment		A/T
MAP sensor	37	3	Left side of engine compartment		
Mass air flow (MAF) sensor/Intake air temperature (IAT) sensor	20	5	Left side of engine compartment		* 1
Output shaft (countershaft) speed sensor	19	3	Left side of engine compartment		
Throttle position (TP) sensor	36	3	Left side of engine compartment		
Throttle body	5	10	Left side of engine compartment		
VTC oil control solenoid valve	46	2	Right side of engine compartment		
Rocker arm oil pressure switch (VTEC oil pressure switch)	48	2	Right side of engine compartment		
Rocker arm oil control solenoid (VTEC solenoid valve)	49	2	Right side of engine compartment		
2nd clutch transmission fluid pressure switch	29	1	Left side of engine compartment		A/T
3rd clutch transmission fluid pressure switch	28	1	Left side of engine compartment		A/T

* 1: '03-04 SULEV, LX-P models, '05-06 models

BACK

Protected by AR

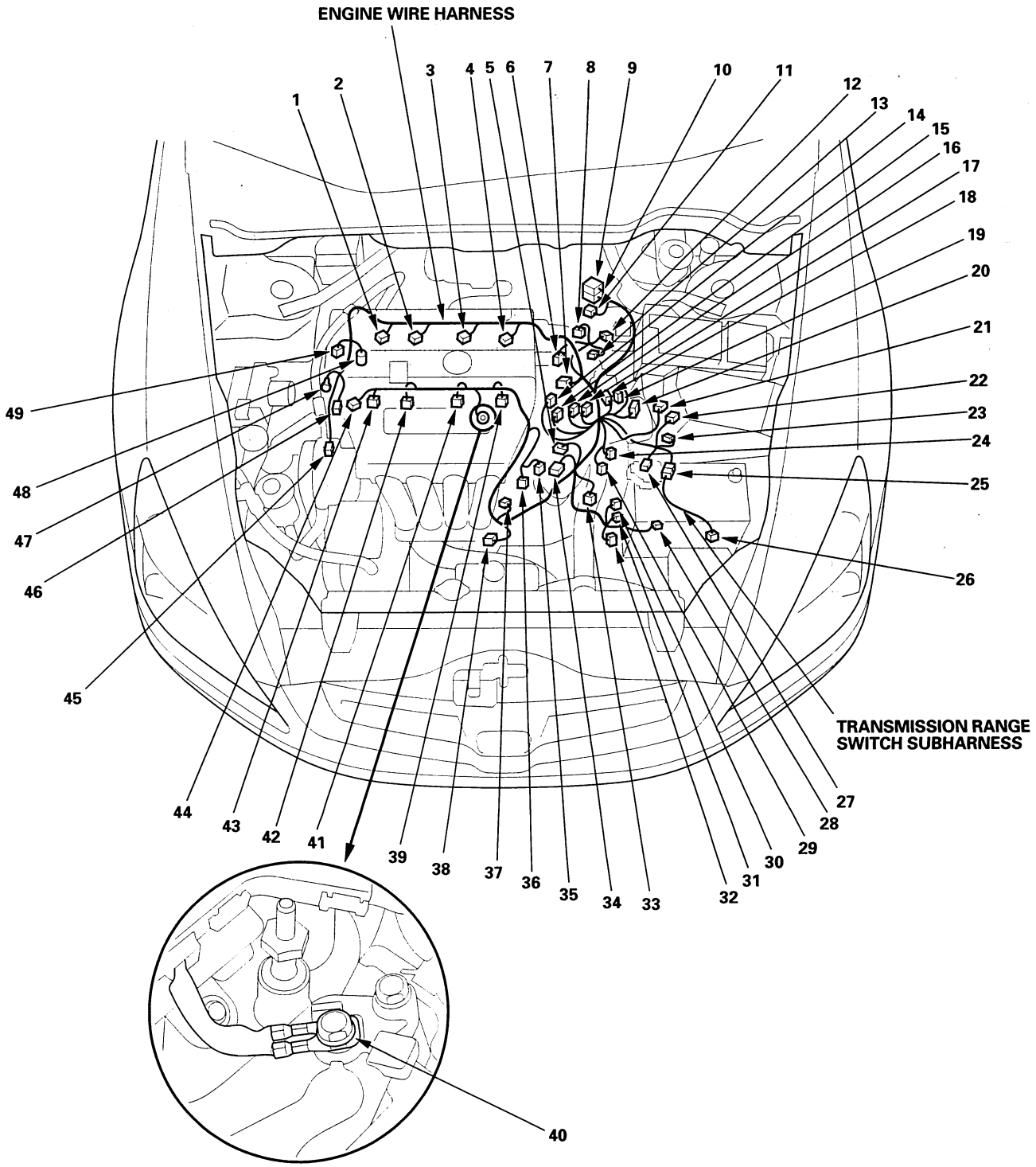

(cont'd)

BACK

Protected by AR

Connector to Harness Index (cont'd)

Engine Wire Harness (cont'd)

Connector or Terminal	Ref	Cavities	Location	Connects to	Notes
C101	38	6	Left side of engine compartment	Starter subharness (see page 22-15)	
C102 (Junction connector)	21	24	Left side of engine compartment		
C103 (Junction connector)	22	5	Left side of engine compartment		
C108	32	8	Left side of engine compartment		
C152	25	10	Transmission housing	Transmission range switch subharness	
C201	9	33	Left side of engine compartment	ECM/PCM wire harness (see page 22-60)	
C202	10	33	Left side of engine compartment	ECM/PCM wire harness (see page 22-60)	A/T
C202	10	23	Left side of engine compartment	ECM/PCM wire harness (see page 22-60)	M/T
C203	11	1	Left side of engine compartment	ECM/PCM wire harness (see page 22-60)	SULEV*1
C203	11	6	Left side of engine compartment	ECM/PCM wire harness (see page 22-60)	*2
T10 (Terminal joint)	17		Left side of engine compartment		
T11 (Terminal joint)	16		Left side of engine compartment		
T12 (Terminal joint)	15		Left side of engine compartment		
T13 (Terminal joint)	14		Left side of engine compartment		
G101	40		Middle of engine compartment	Engine ground, via engine wire harness	

* 1: '03-05 models
* 2: '06 A/T model

Transmission Range Switch Subharness

Connector or Terminal	Ref	Cavities	Location	Connects to	Notes
Transmission range switch	26	10	Transmission housing		
C152	25	10	Transmission housing	Engine wire harness	

BACK

Protected by AR

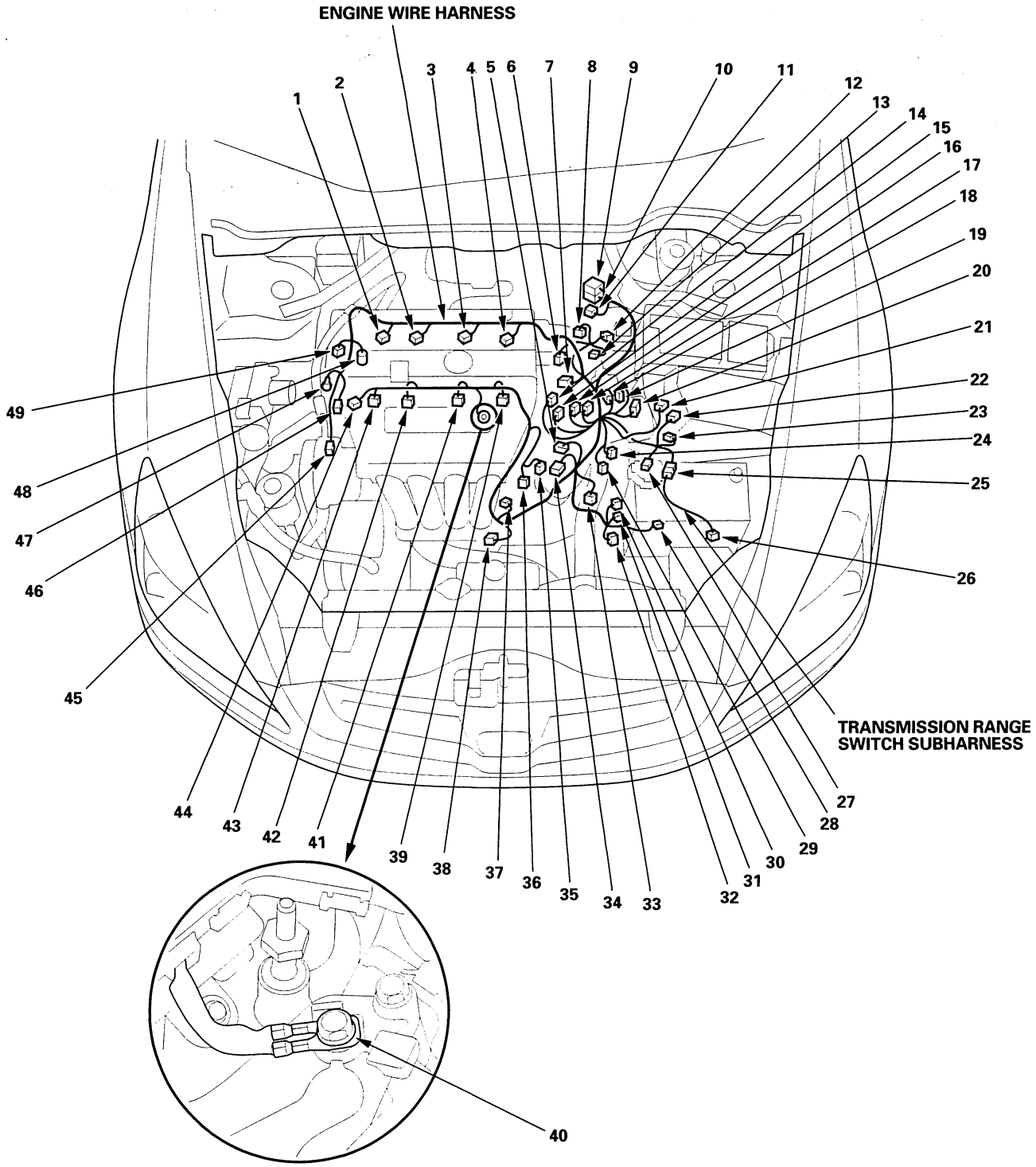

BACK

Protected by AR

Connector to Harness Index (cont'd)

Front Engine Compartment Wire Harness (Right branch)

Connector or Terminal	Ref	Cavities	Location	Connects to	Notes
A/C compressor clutch	7	1	Right side of engine compartment		
A/C pressure switch	6	2	Right side of engine compartment		
A/C condenser fan motor	5	2	Right side of engine compartment		
Right front turn signal/side marker light	1	3	Behind right headlight		
Right headlight (high)	4	2	Behind right headlight		
Right headlight (low)	2	2	Behind right headlight		
G201	3		Right side of engine compartment	Body ground, via front engine compartment wire harness	

BACK

Protected by AR

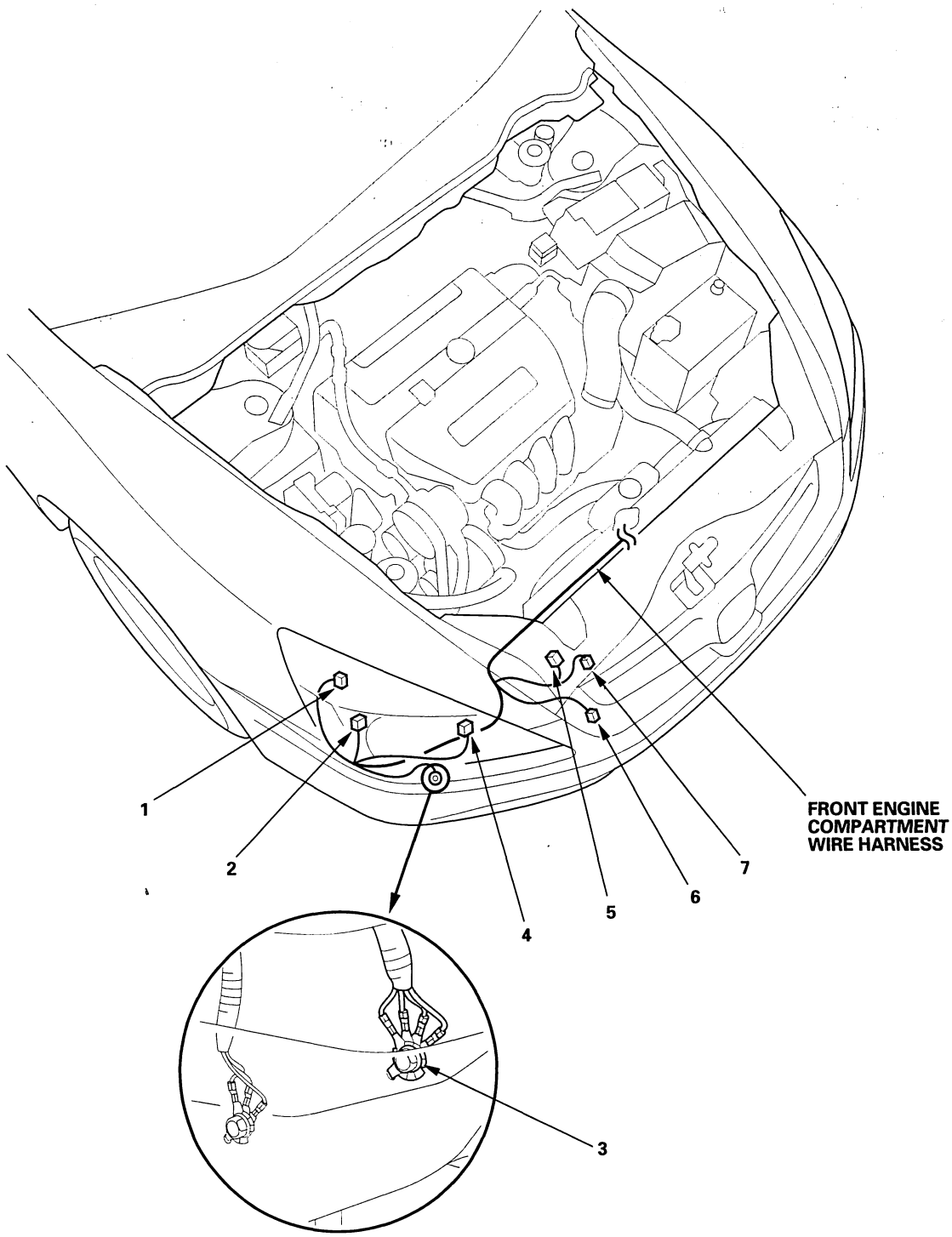

BACK

Protected by AR

Connector to Harness Index

Front Engine Compartment Wire Harness (Left branch) (cont'd)

Connector or Terminal	Ref	Cavities	Location	Connects to	Notes
Hood switch	13	2	Behind middle of front bumper		* 4
Horn (high)	11	1	Behind middle of front bumper		
Horn (low)	14	1	Behind middle of front bumper		
Left front turn signal/side marker light	4	3	Behind left headlight		
Left headlight (high)	8	2	Behind left headlight		
Left headlight (low)	5	2	Behind left headlight		
Outside air temperature sensor	12	2	Middle of engine compartment		Climate control
Radiator fan motor	9	2	Left side of engine compartment		
Radiator fan switch	10	2	Left side of engine compartment		* 2
Under-hood fuse/relay box connector F (see page 22-68)	2	20	Behind under-hood fuse/relay box		
Under-hood fuse/relay box connector H (see page 22-68)	3	14	Behind under-hood fuse/relay box		
Daytime running lights relay	1	5	In multi-relay box		Canada
C301	6	2	Left side of engine compartment	Engine compartment wire harness (see page 22-26)	* 1
C301	6	4	Left side of engine compartment	Engine compartment wire harness (see page 22-26)	* 3
G301	7		Left side of engine compartment	Body ground, via front engine compartment wire harness	

* 1: '03-04 Canada models
* 2: '03-04 models
* 3: '05-06 models
* 4: EX, EXL, Canada LX, '06 model Canada SE

BACK

Protected by AR

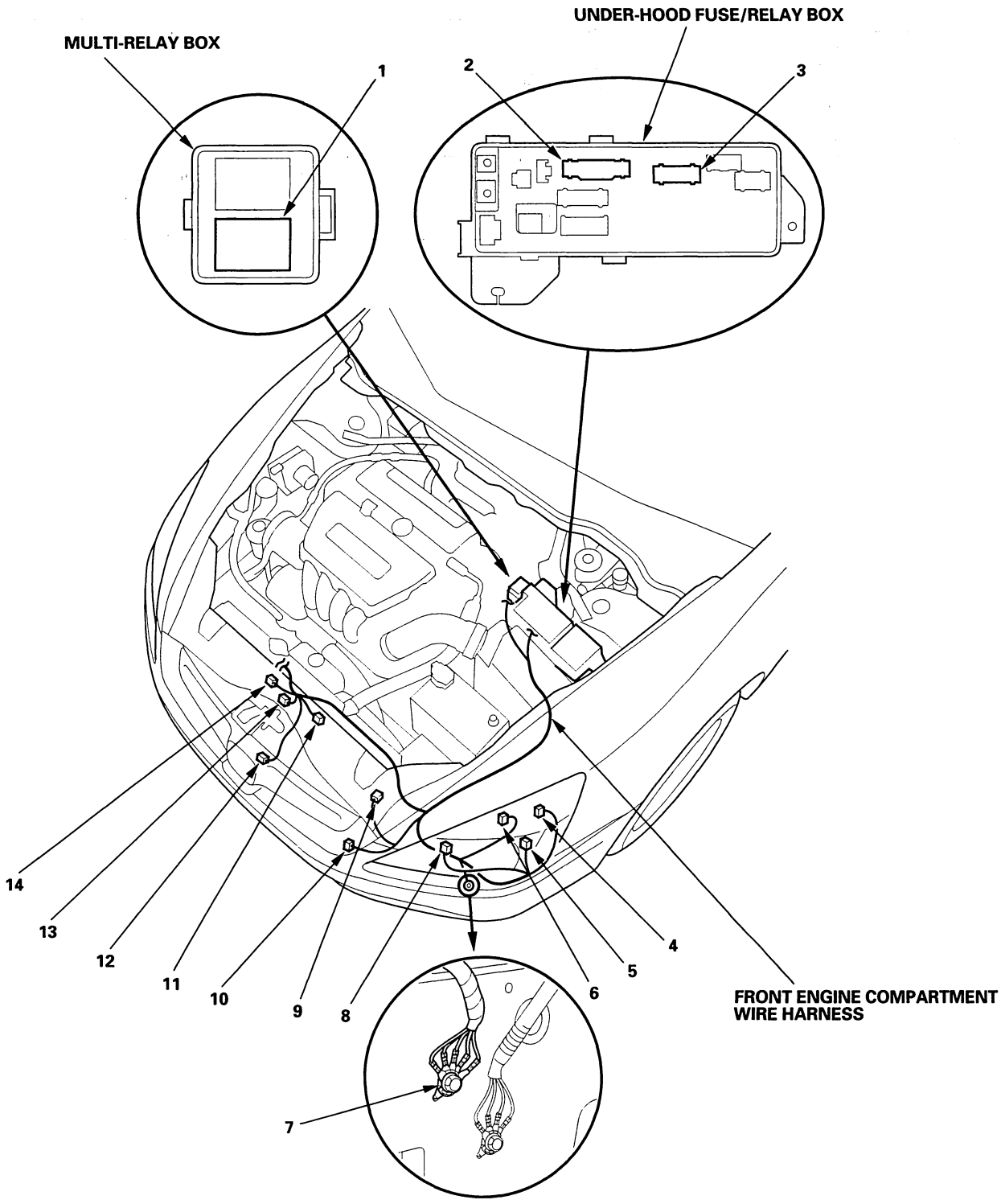

Protected by AR

Connector to Harness Index (cont'd)

Engine Compartment Wire Harness (Right branch)

Connector or Terminal	Ref	Cavities	Location	Connects to	Notes
ABS modulator-control unit	4	25	Right side of engine compartment		
Cruise control actuator	1	4	Right side of engine compartment		* 1
Power steering pressure (PSP) switch	3	2	Right side of engine compartment		
Right front impact sensor	9	2	Right side of engine compartment		
Right front wheel sensor	2	2	Right side of engine compartment		
Washer fluid level switch	7	2	Behind right of front bumper		Canada
Windshield washer motor	6	2	Behind right of front bumper		
G202	8		Right side of engine compartment	Body ground, via engine compartment wire harness	
G203	5		Right side of engine compartment	Body ground, via engine compartment wire harness	

* 1: '03-05 models

BACK

Protected by AR

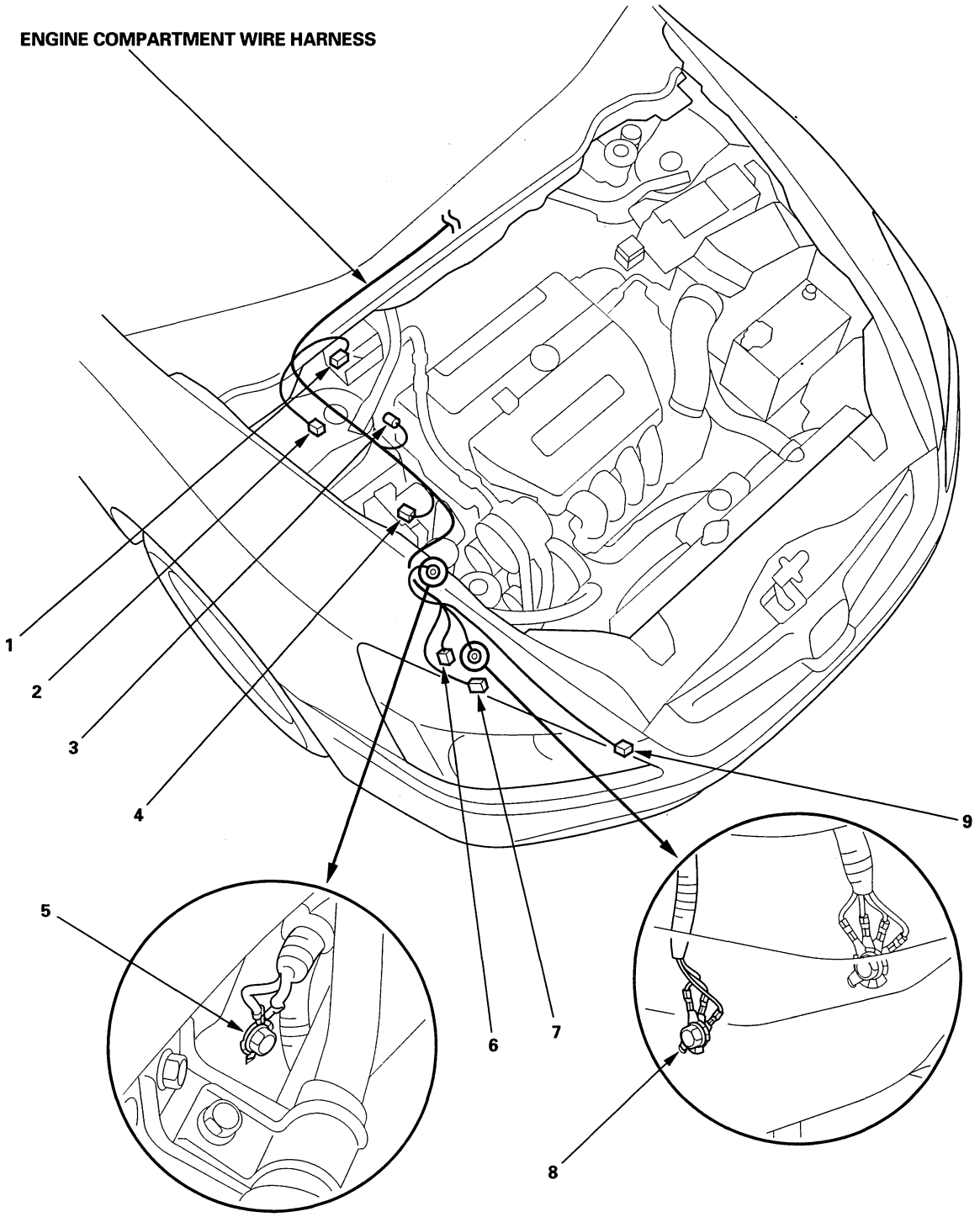

Protected by AR

Connector to Harness Index

Engine Compartment Wire Harness (Left branch) (cont'd)

Connector or Terminal	Ref	Cavities	Location	Connects to	Notes
Brake fluid level switch	8	2	Left side of engine compartment		
Left front impact sensor	21	2	Left side of engine compartment		
Left front wheel sensor	17	2	Left side of engine compartment		
Under-dash fuse/relay box connector B (see page 22-70)	15	6	Under left side of dash		
Under-dash fuse/relay box connector C (see page 22-70)	14	12	Under left side of dash		
Under-dash fuse/relay box connector D (see page 22-70)	16	17	Under left side of dash		
Under-hood fuse/relay box connector A (ELD unit) (see page 22-68)	6	3	In under-hood fuse/relay box		
Under-hood fuse/relay box connector C (see page 22-68)	1	2	Behind under-hood fuse/relay box		
Under-hood fuse/relay box connector D (see page 22-68)	7	9	Behind under-hood fuse/relay box		
Under-hood fuse/relay box connector E (see page 22-68)	2	16	Behind under-hood fuse/relay box		
Under-hood fuse/relay box connector G (see page 22-68)	5	2	Behind under-hood fuse/relay box		
Under-hood fuse/relay box connector I (see page 22-68)	4	10	Behind under-hood fuse/relay box		
Under-hood fuse/relay box connector J (see page 22-68)	3	5	Behind under-hood fuse/relay box		
Windshield wiper motor	9	5	Left side of engine compartment		
C153	22	1	Left side of engine compartment	Starter subharness (see page 22-15)	
C301	21	2	Left side of engine compartment	Front engine compartment wire harness (see page 22-22)	* 1
C301	20	4	Left side of engine compartment	Front engine compartment wire harness (see page 22-22)	* 2
C310 (Optional connector A)	10	3	Left side of engine compartment		
C401	11	20	Under left side of dash	Dashboard wire harness (see page 22-28)	
C402	12	5	Under left side of dash	Dashboard wire harness (see page 22-28)	* 3
C402	12	12	Under left side of dash	Dashboard wire harness (see page 22-28)	* 4
C403	13	4	Under left side of dash	Dashboard wire harness (see page 22-28)	
C415 (Optional connector B)	18	3	Left side of engine compartment		
G302	19		Left side of engine compartment	Body ground, via engine compartment wire harness	

* 1: '03-04 Canada models
* 2: '05-06 models
* 3: '03-05 models
* 4: '06 model

BACK

Protected by AR

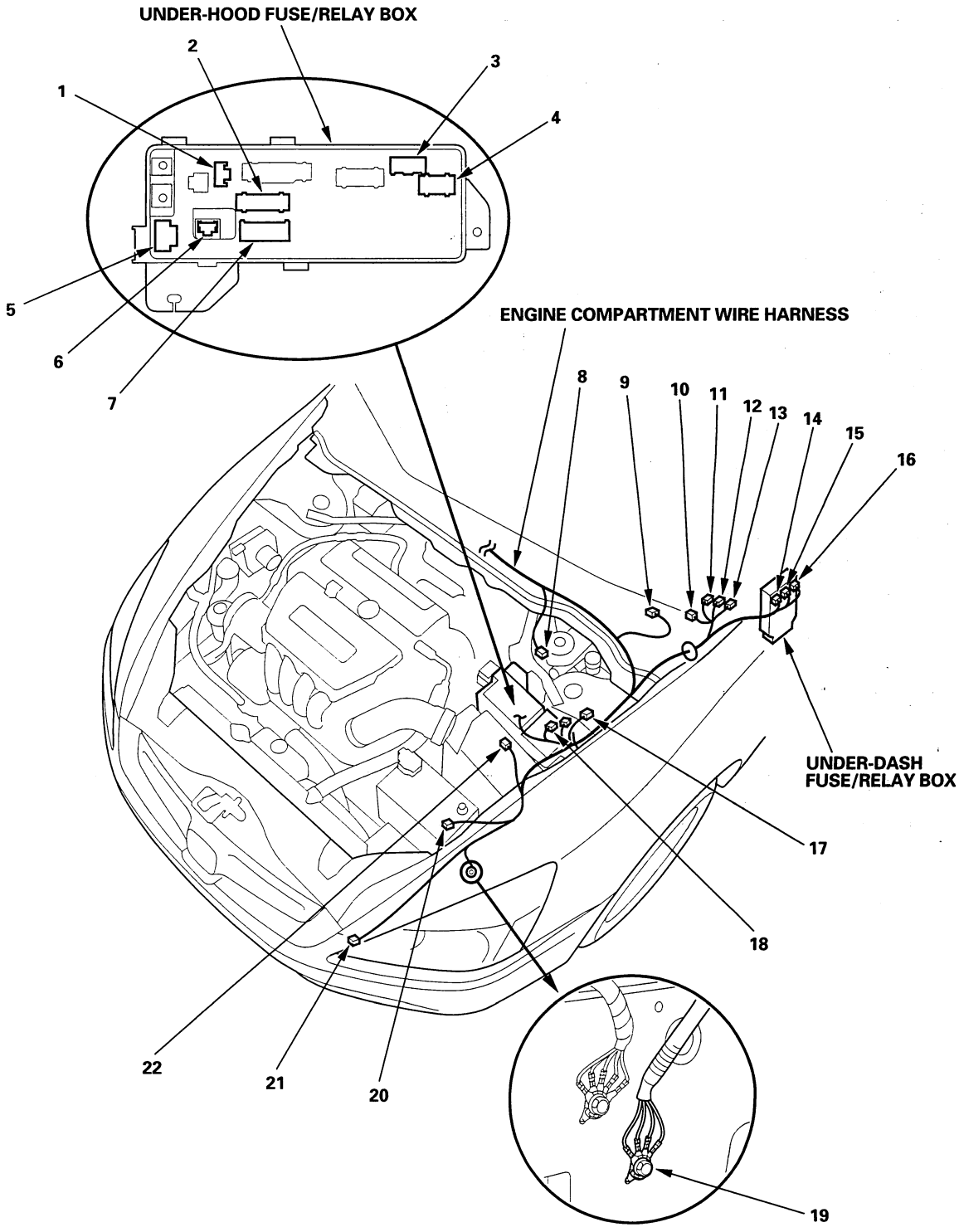

BACK

Protected by AR

Connector to Harness Index (cont'd)

Dashboard Wire Harness (Left branch)

Connector or Terminal	Ref	Cavities	Location	Connects to	Notes
Audio unit connector A	15	20	Under middle of dash		
Audio unit connector B	16	14	Under middle of dash		* 1
Brake pedal position switch	7	4	Under left side of dash		
Cable reel connector A	24	4	Under left side of dash		
Cable reel connector B	25	5	In steering column cover	Cable reel connector C (see page 22-61)	* 2
Cable reel connector B	25	13	In steering column cover	Cable reel connector C (see page 22-61)	* 3
Clutch interlock switch	27	2	Under left side of dash		Interlock M/T
Clutch pedal position switch	28	3	Under left side of dash		M/T
Cruise control unit	32	14	Under left side of dash		* 6
Daytime running lights control unit	32	14	Under left side of dash		* 7
Data link connector (DLC)	33	16	Under left side of dash		
Gauge control module	10	30	Behind gauges assembly		* 4
Gauge control module	10	36	Behind gauges assembly		* 5
Ignition switch	26	7	In steering column cover		
Immobilizer control unit-receiver	23	7	In steering column cover		
In-car temperature sensor	11	2	Under middle of dash		Climate control
Ignition key switch/key light	22	6	In steering column cover		
Moonroof switch	9	6	Behind left side of dash		
Navigation display unit connector A	17	10	Under middle of dash		Navigation
Left tweeter	3	2	Under left side of dash		
Under-dash fuse/relay box connector A (see page 22-70)	40	6	Left kick panel		
Under-dash fuse/relay box connector N (see page 22-70)	39	45	Left kick panel		
Under-dash fuse/relay box connector P [Multiplex integrated control unit (MICU)] (see page 22-70)	36	30	Left kick panel		
Under-dash fuse/relay box connector Q [Multiplex integrated control unit (MICU)] (see page 22-70)	37	14	Left kick panel		
Under-dash fuse/relay box connector R (see page 22-70)	41	2	Left kick panel		
Under-dash fuse/relay box connector S (see page 22-70)	42	2	Left kick panel		
Under-dash fuse/relay box connector X (see page 22-70)	38	39	Left kick panel		
Wiper/washer switch connector A	21	8	In steering column cover		

* 1: '03-05 models with navigation system, '04-05 models with XM radio, '06 model
* 2: '03-04 models except USA DX and LX, '05 model DX
* 3: '03-04 models USA DX and LX, '05 model except USA DX and LX, '06 model
* 4: '03-05 models
* 5: '06 model
* 6: '03-05 models except USA DX
* 7: '06 model USA

BACK

Protected by AR

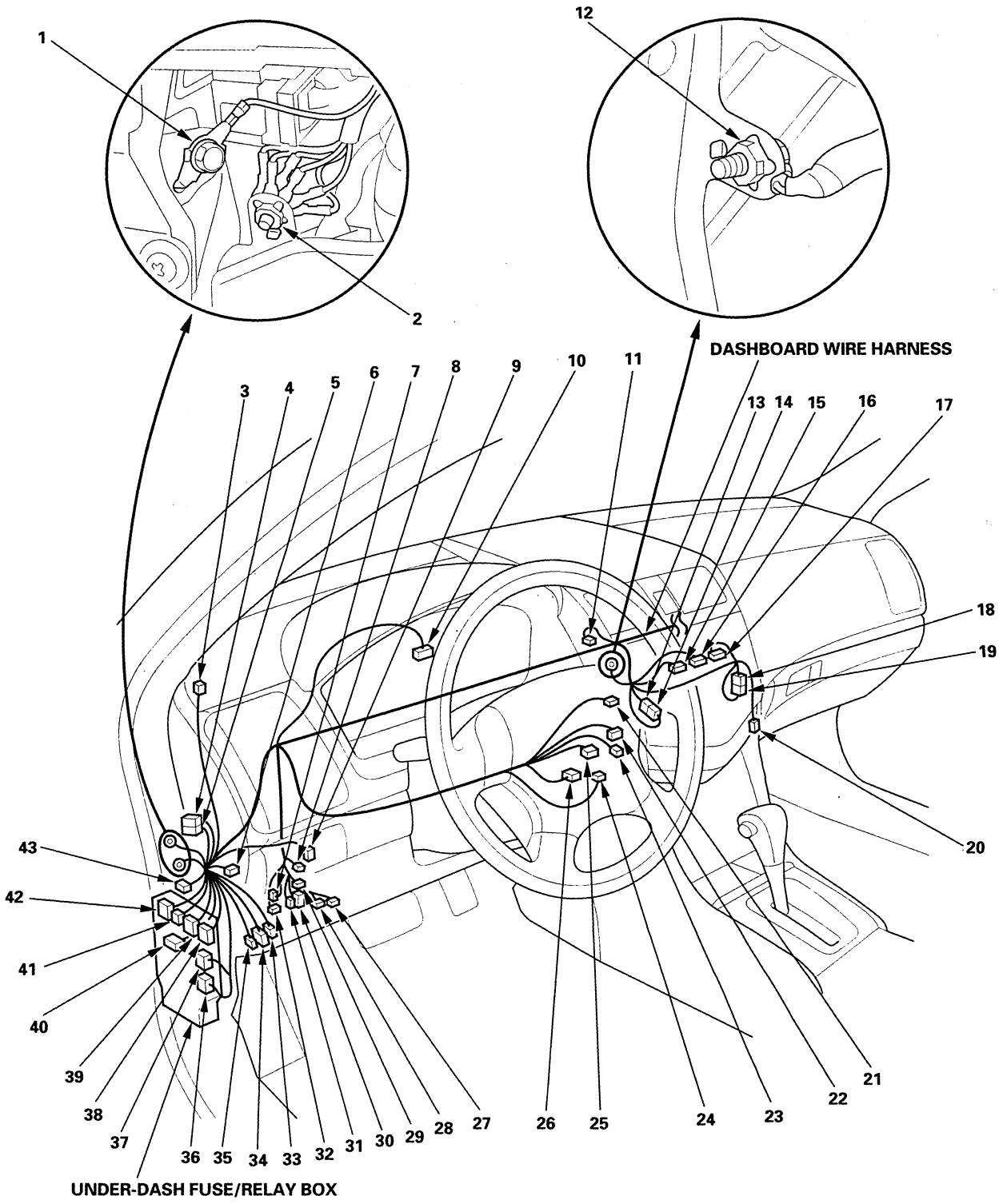

(cont'd)

BACK

Protected by AR

Connector to Harness Index (cont'd)

Dashboard Wire Harness (Left branch) (cont'd)

Connector or Terminal	Ref	Cavities	Location	Connects to	Notes
C401	30	20	Under left side of dash	Engine compartment wire harness (see page 22-26)	
C402	31	5	Under left side of dash	Engine compartment wire harness (see page 22-26)	* 6
C402	31	12	Under left side of dash	Engine compartment wire harness (see page 22-26)	* 7
C403	29	4	Under left side of dash	Engine compartment wire harness (see page 22-26)	
C404 (Junction connector)	6	28	Behind left side of dash		
C405 (Junction connector)	4	28	Behind left side of dash		
C406 (Junction connector)	5	28	Behind left side of dash		
C407 (Junction connector)	18	14	Under middle of dash		* 1
C407 (Junction connector)	13	14	Under middle of dash		* 2
C408 (Junction connector)	19	14	Under middle of dash		* 1
C408 (Junction connector)	14	14	Under middle of dash		* 2
C411	20	1	Under middle of dash		4-door
C416 (Optional connector)	8	2	Left side of dash		
C501	34	24	Under left side of dash	Floor wire harness • 4-door (see page 22-36) • 2-door (see page 22-40)	
C502	35	4	Under left side of dash	Floor wire harness • 4-door (see page 22-36) • 2-door (see page 22-40)	* 6
C502	35	6	Under left side of dash	Floor wire harness • 4-door (see page 22-36) • 2-door (see page 22-40)	* 7
C601	43	8	Under left side of dash	Roof wire harness (see page 22-52)	* 3
C601	41	10	Under left side of dash	Roof wire harness (see page 22-52)	* 4
C601	41	3	Under left side of dash	Roof wire harness (see page 22-52)	* 5
G501	2		Behind left side of dash	Body ground, via dashboard wire harness	
G502	1		Behind left side of dash	Body ground, via dashboard wire harness	
G504	12		Under middle of dash	Body ground, via dashboard wire harness	

* 1: '04 model with XM radio
* 2: '05 model with XM radio
* 3: '03-04 models
* 4: '05-06 models with moonroof
* 5: '05-06 models without moonroof
* 6: '03-05 models
* 7: '06 model

BACK

Protected by AR

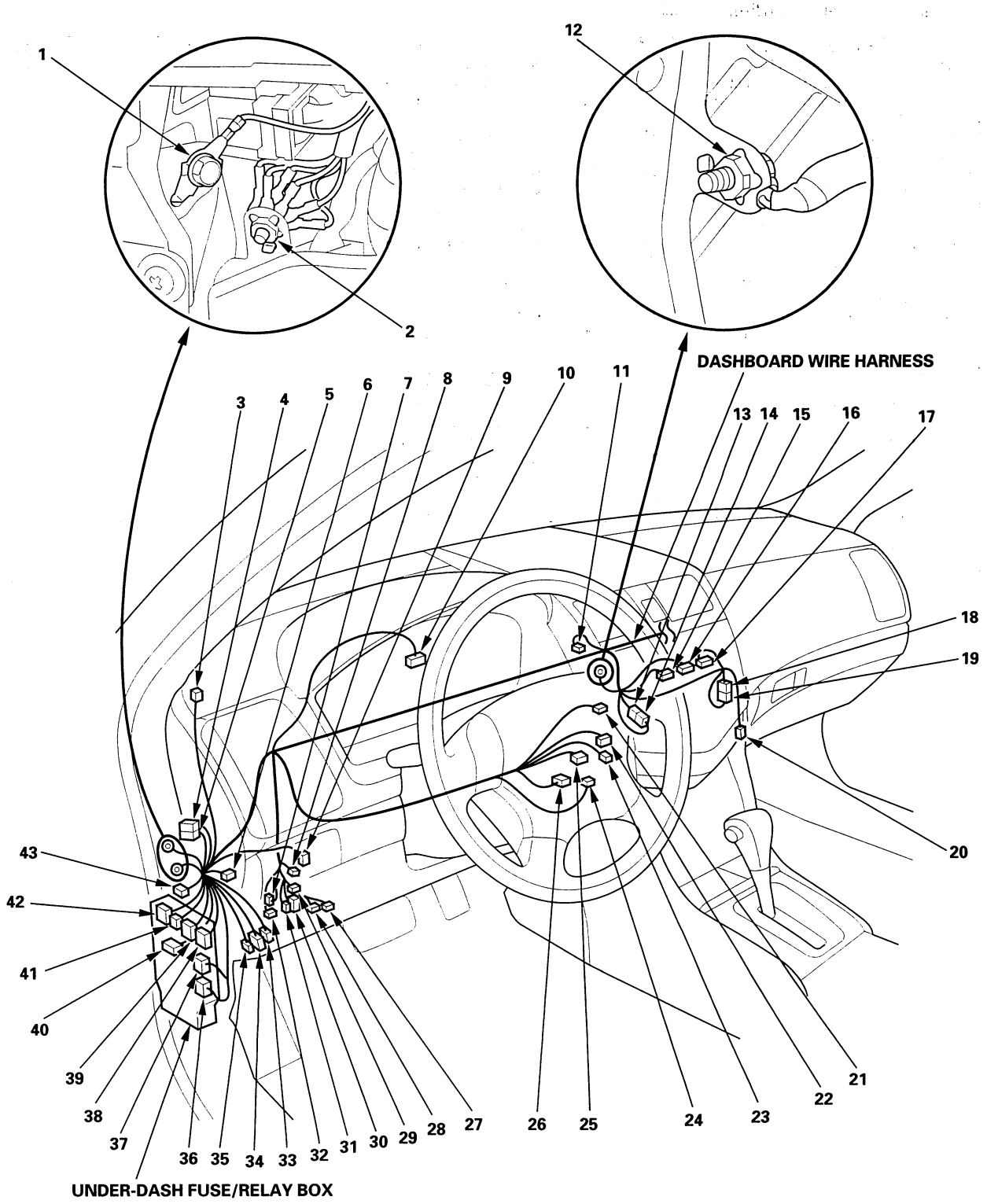

Protected by AR

Connector to Harness Index (cont'd)

Dashboard Wire Harness (Right branch)

Connector or Terminal	Ref	Cavities	Location	Connects to	Notes
Audio-HVAC subdisplay/clock	5	10	Middle of dash		Navigation
Audio-HVAC display panel connector A	7	22	Under middle of dash		
Audio-HVAC display panel connector B	4	16	Under middle of dash		Climate control
Blower motor	18	2	Under right side of dash		
Blower power transistor	21	4	Under right side of dash		
Driver's seat heater switch	36	6	Under console panel		
ECM/PCM connector E	28	31	Under middle of dash		
Front accessory power socket	30	2	Under console panel		
Front passenger's airbag inflator	24	4	Under right side of dash		
Front passenger's seat heater switch	31	6	Under console panel		
Glove box light	22	2	Under right side of dash		
Hazard warning switch	6	5	Middle of dash		* 1
Hazard warning switch/passenger's airbag cutoff indicator	6	6	Middle of dash		* 2
Navigation display unit connector B	25	20	Middle of dash		
Park pin switch/A/T gear position console light	2	4	Under console panel		A/T
Parking brake switch	34	1	Behind rear console		
PCM connector D	29	17	Under middle of dash		
Rear accessory power socket	35	2	Behind rear console		
Right tweeter	13	2	Right side of dash		
SRS unit connector A	32	28	Under left side of dash		
Seat heater relay	23	4	Under right side of dash		
Shift lock solenoid	33	2	Under console panel		A/T
Sunlight sensor	8	2	Middle of dash		Climate control
Throttle actuator control module relay	23	4	Under right side of dash		* 3

* 1: '03 model
* 2: '04-06 models
* 3: '06 model

BACK

Protected by AR

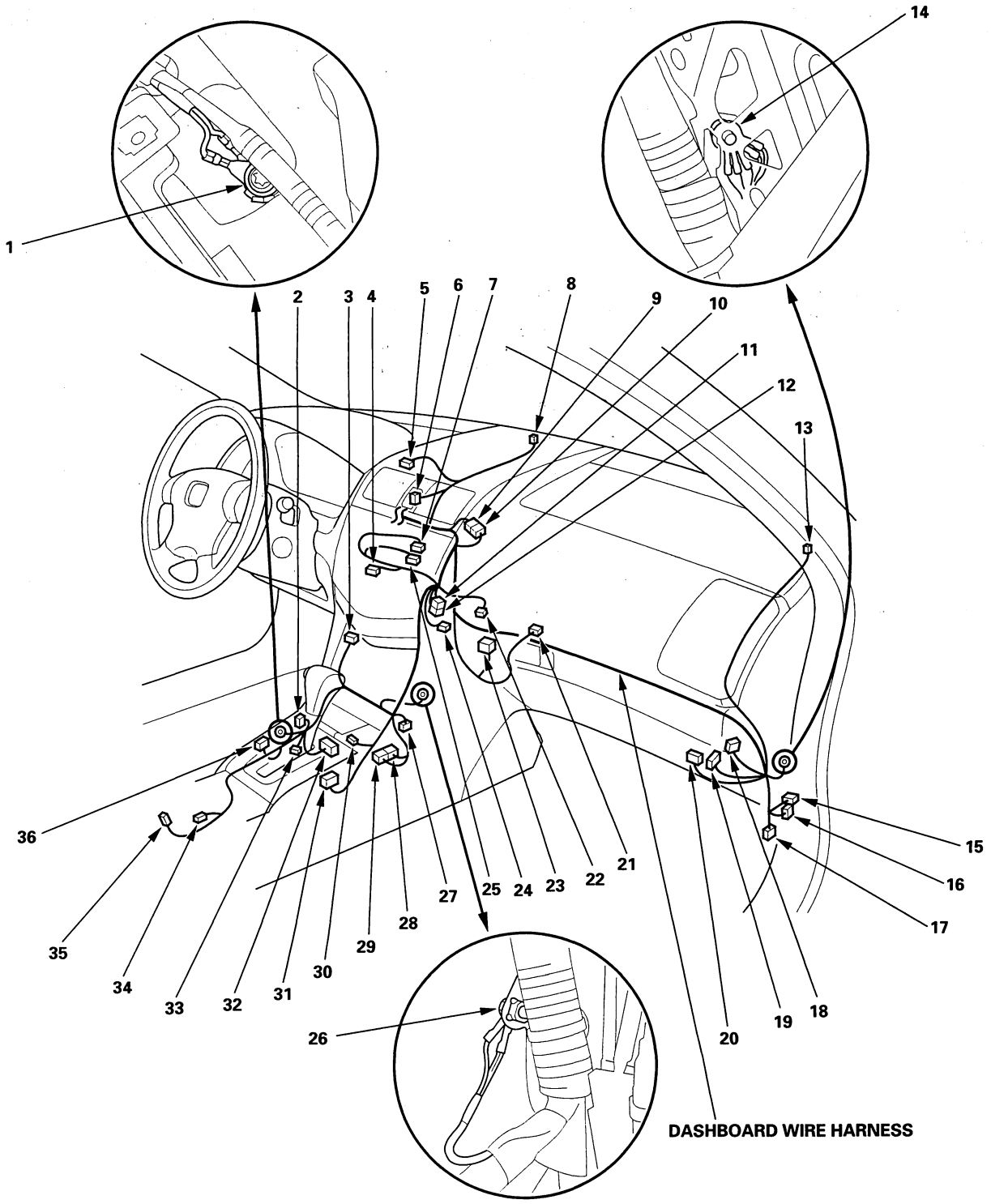

(cont'd)

Protected by AR

Connector to Harness Index (cont'd)

Dashboard Wire Harness (Right branch) (cont'd)

Connector or Terminal	Ref	Cavities	Location	Connects to	Notes
C251	27	13	Under middle of dash	ECM/PCM wire harness (see page 22-60)	
C551	17	4	Under right side of dash	Floor wire harness • 4-door (see page 22-38) • 2-door (see page 22-42)	* 1
C551	17	17	Under right side of dash	Floor wire harness • 4-door (see page 22-38) • 2-door (see page 22-42)	* 2
C552	16	13	Under right side of dash	Floor wire harness • 4-door (see page 22-38) • 2-door (see page 22-42)	With navigation
C553	15	6	Under right side of dash	Floor wire harness • 4-door (see page 22-38) • 2-door (see page 22-42)	With navigation
C554 (Junction connector)	9	28	Under right side of dash		
C555 (Junction connector)	10	28	Under right side of dash		
C556 (Junction connector)	12	28	Under right side of dash		
C557 (Junction connector)	11	28	Under right side of dash		
C731	19	13	Under right side of dash	Front passenger's door wire harness (see page 22-56)	
C732	20	12	Under right side of dash	Front passenger's door wire harness (see page 22-56)	
C851	3	21	Under middle of dash	A/C wire harness (see page 22-67)	
G503	14		Behind right side of dash	Body ground, via dashboard wire harness	
G505	1		Under middle of dash	Body ground, via dashboard wire harness	
G506	26		Under middle of dash	Body ground, via dashboard wire harness	

* 1: '03 model, '04-06 models without XM radio, '04-06 models without navigation
* 2: '04-06 models with XM radio or '04-06 models with navigation

BACK

Protected by AR

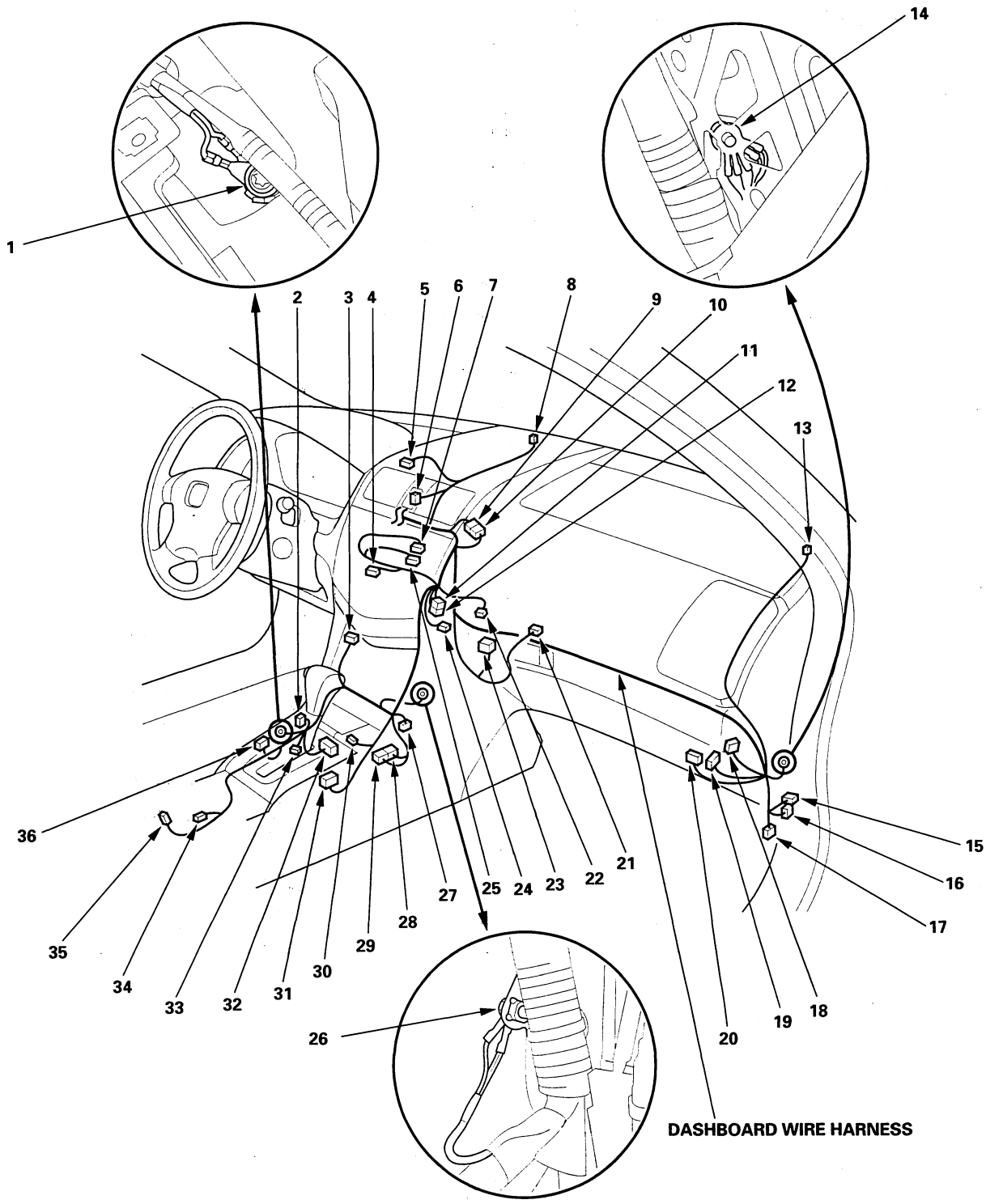

Protected by AR

Connector to Harness Index (cont'd)

Floor Wire Harness (Left branch) (4-door)

Connector or Terminal	Ref	Cavities	Location	Connects to	Notes
Driver's door switch	23	1	Left B-pillar		
Driver's seat belt switch	19	3	Under driver's seat		* 1
Driver's seat belt tensioner	21	4	Left B-pillar		
Driver's side airbag inflator	20	2	Under driver's seat		
Driver's side impact sensor	25	2	Under driver's seat		
EVAP canister vent shut valve	16	2	Left side of trunk		* 6
Fuel pump/fuel gauge sending unit	10	5	Fuel tank		
Fuel tank pressure (FTP) sensor	17	3	Left side of trunk		
Left rear door switch	14	1	Left C-pillar		
Left rear wheel sensor	15	2	Under rear floor		
SRS unit connector B	6	28	Under middle of dash		
Under-dash fuse/relay box connector E (see page 22-70)	2	16	Under left side of dash		
Under-dash fuse/relay box connector F (see page 22-70)	1	14	Under left side of dash		
Under-dash fuse/relay box connector H (see page 22-70)	3	14	Under left side of dash		
Window antenna coil connector A	11	1	Left C-pillar		
C501	5	24	Under left side of dash	Dashboard wire harness (see page 22-28)	
C502	4	4	Under left side of dash	Dashboard wire harness (see page 22-28)	* 7
C502	4	6	Under left side of dash	Dashboard wire harness (see page 22-28)	* 8
C531	7	2	Left side of trunk	EVAP canister vent shut valve subharness	* 5
C701	12	8	Left side of trunk	Rear wire harness • '03-05 models (see page 22-44) • '06 model (see page 22-46)	
C751	22	10	Left B-pillar	Left rear door wire harness (see page 22-58)	
C752 (Junction connector)	13	18	Left C-pillar	Rear wire harness connectors C702 and C703 via junction connector • '03-05 models (see page 22-44) • '06 model (see page 22-46)	
C901	18	10	Under driver's seat	Driver's seat wire harness (see page 22-65)	* 2
C901	18	5	Under driver's seat	Driver's seat wire harness (see page 22-66)	* 1
C901	18	5	Under driver's seat	Seat position sensor harness (see page 22-62)	* 3
C903	26	2	Under driver's seat	Seat position sensor harness (see page 22-62)	* 4
G601	24		Left side of floor	Body ground, via floor wire harness	
G603	9		Left front of trunk	Body ground, via floor wire harness	

* 1: Power seat 2-way adjustable
* 2: Power seat 8-way adjustable
* 3: '04-06 models without power seat
* 4: '04-06 models power seat 8-way adjustable
* 5: With SULEV
* 6: Except SULEV
* 7: '03-05 models
* 8: '06 model

EVAP Canister Vent Shut Valve Subharness (SULEV)

Connector or Terminal	Ref	Cavities	Location	Connects to	Notes
EVAP canister vent shut valve	8	2	Left side of trunk		
C531	7	2	Left side of trunk	Floor wire harness	

BACK

Protected by AR

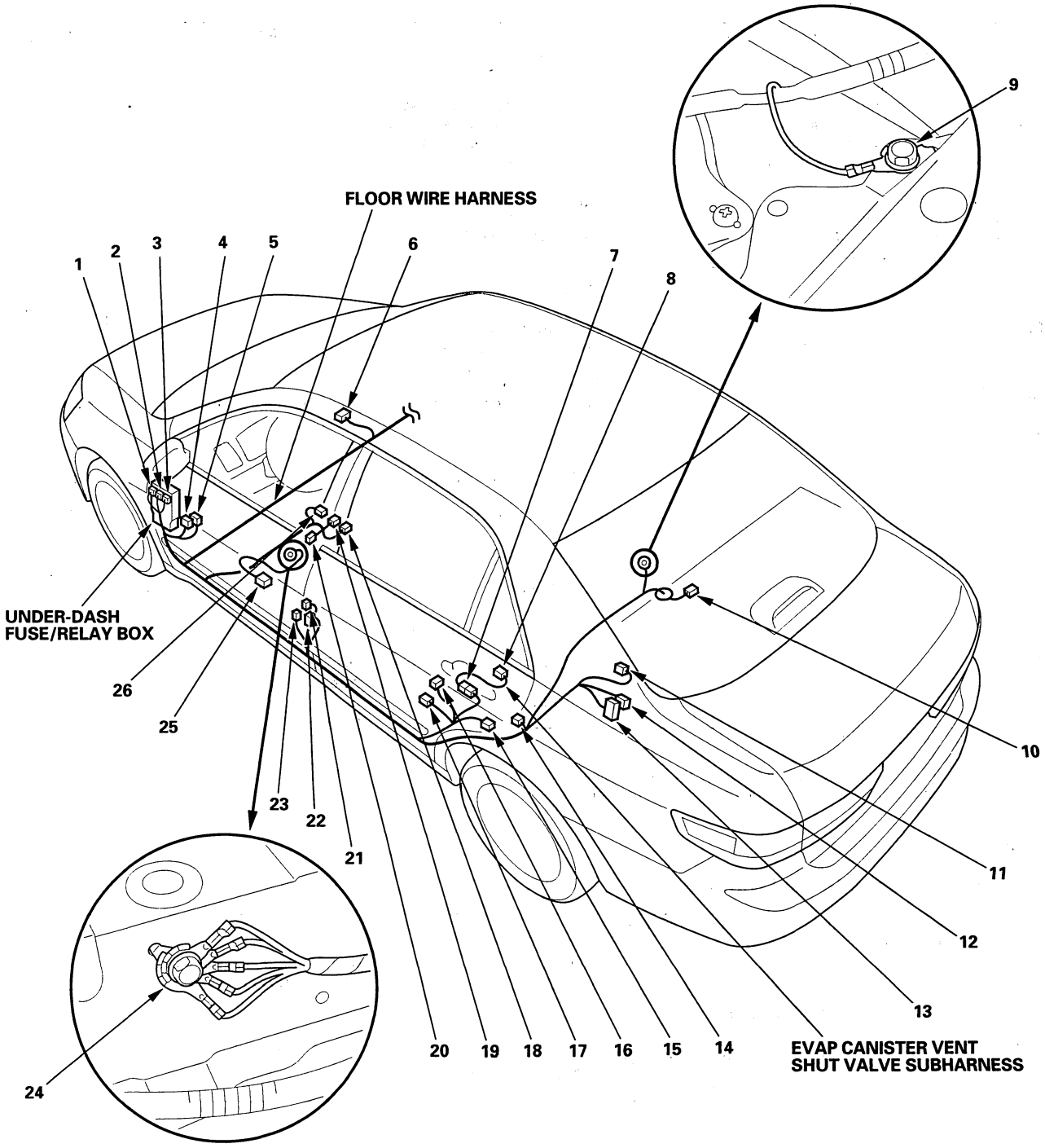

BACK

Protected by AR

Connector to Harness Index

Floor Wire Harness (Right branch) (4-door) (cont'd)

Connector or Terminal	Ref	Cavities	Location	Connects to	Notes
Front passenger's door switch	14	1	Right B-pillar		
Front passenger's seat belt switch	5	3	Under front passenger's seat		
Front passenger's seat belt tensioner	15	4	Right B-pillar		
Front passenger's seat heater	4	4	Under front passenger's seat		
Front passenger's side airbag inflator	17	2	Under front passenger's seat		
Front passenger's side impact sensor	12	2	Under front passenger's seat		
Front passenger's weight sensor unit connector C	10	6	Under front passenger's seat		* 5
Navigation inspection connector	25	2	Right side of rear shelf		
Navigation unit connector A	27	20	Middle of rear shelf		
Navigation unit connector B	28	14	Middle of rear shelf		
Navigation unit connector C	26	8	Middle of rear shelf		
Right rear door switch	19	1	Right C-pillar		
Right rear speaker	24	2	Right side of rear shelf		With navigation
Right rear wheel sensor	18	2	Under rear floor		
Secondary heated oxygen sensor	11	4	Under front passenger's seat		
XM receiver connector A	23	14	Right side of trunk		* 1
XM receiver connector A	22	14	Right side of trunk		* 2
C551	6	4	Under right side of dash	Dashboard wire harness (see page 22-32)	* 3
C551	6	17	Under right side of dash	Dashboard wire harness (see page 22-32)	* 4
C552	8	13	Under right side of dash	Dashboard wire harness (see page 22-32)	With navigation
C553	7	6	Under right side of dash	Dashboard wire harness (see page 22-32)	With navigation
C651	9	6	Under right side of dash	Roof wire harness (see page 22-52)	With navigation
C781	16	10	Right B-pillar	Right rear door wire harness (see page 22-59)	
C801	3	4	Under front passenger's seat	OPDS unit harness (see page 22-62)	* 6
C801	9	4	Under front passenger's seat	ODS unit harness (see page 22-62)	* 7
G602	13		Right side of floor	Body ground, via floor wire harness	

* 1: '04-06 models with navigation
* 2: '04-06 models without navigation
* 3: '03 model, '04-06 models without XM radio, '04-06 models without navigation
* 4: '04-06 models with XM radio or '04-06 models with navigation
* 5: '04-05 models
* 6: '03-05 models
* 7: '06 model

Rear Window Defogger Ground Wire (4-door)

Connector or Terminal	Ref	Cavities	Location	Connects to	Notes
Rear window defogger connector B	2	1	Right C-pillar		
G604	1		Right C-pillar	Body ground, via rear window defogger ground wire	

XM Radio Subharness ('04-06 models)

Connector or Terminal	Ref	Cavities	Location	Connects to	Notes
XM receiver connector B	21	2	Right side of trunk		
XM radio antenna	20	2	Right C-pillar		

BACK

Protected by AR

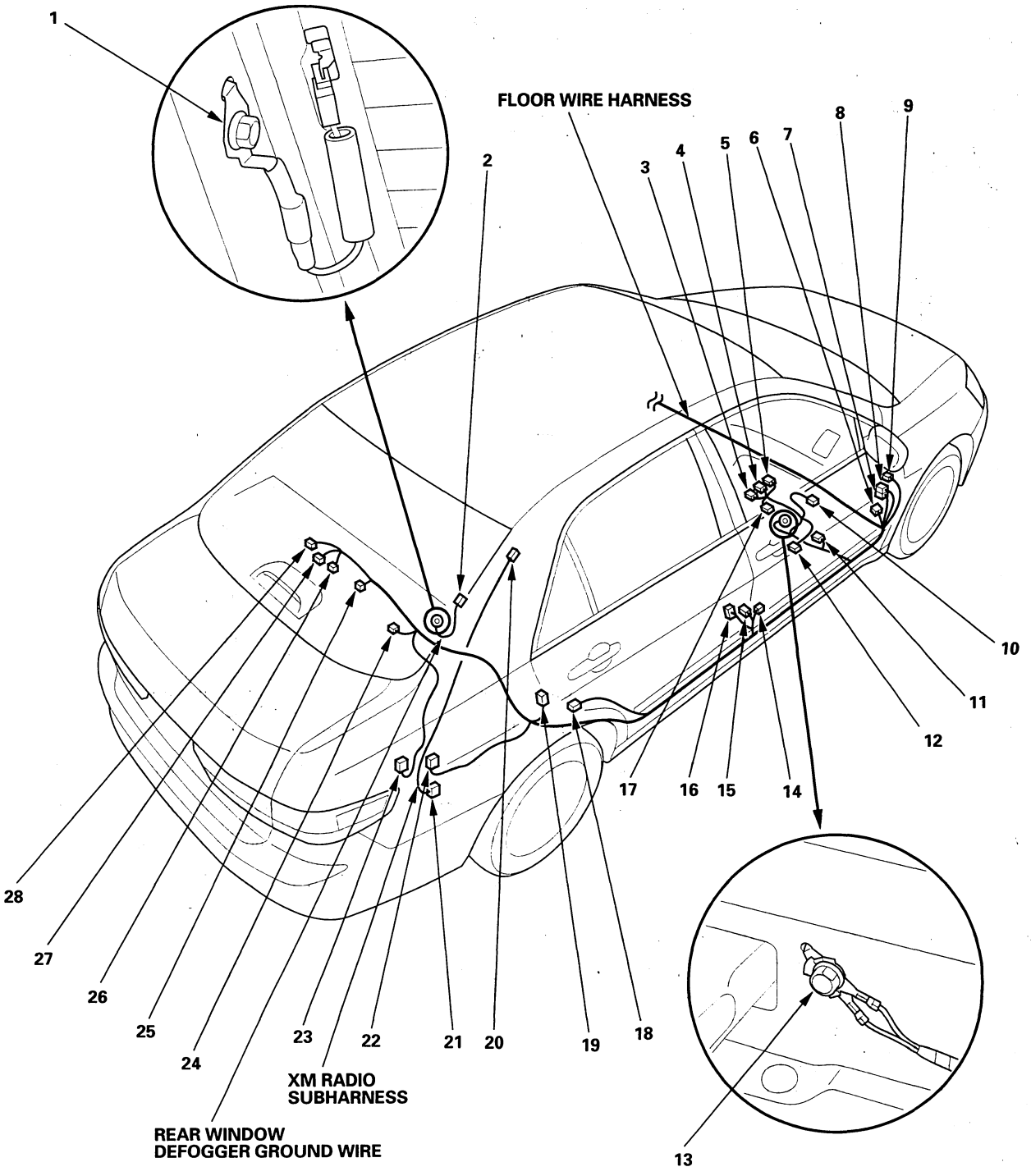

Protected by AR

Connector to Harness Index (cont'd)

Floor Wire Harness (Left branch) (2-door)

Connector or Terminal	Ref	Cavities	Location	Connects to	Notes
Driver's door switch	18	1	Left B-pillar		
Driver's seat belt switch	20	3	Under driver's seat		* 1
Driver's seat belt tensioner	17	4	Left B-pillar		
Driver's side airbag inflator	21	2	Under driver's seat		
Driver's side impact sensor	23	2	Under driver's seat		
EVAP canister vent shut valve	15	2	Left side of trunk		* 6
Fuel pump/fuel gauge sending unit	10	5	Fuel tank		
Fuel tank pressure (FTP) sensor	16	3	Left side of trunk		
Left rear wheel sensor	14	2	Under rear floor		
SRS unit connector B	6	28	Under middle of dash		
Under-dash fuse/relay box connector E (see page 22-70)	2	16	Under left side of dash		
Under-dash fuse/relay box connector F (see page 22-70)	1	14	Under left side of dash		
Under-dash fuse/relay box connector H (see page 22-70)	3	14	Under left side of dash		
Window antenna coil connector A	11	1	Left C-pillar		
C501	5	24	Under left side of dash	Dashboard wire harness (see page 22-28)	
C502	4	4	Under left side of dash	Dashboard wire harness (see page 22-28)	* 7
C502	4	6	Under left side of dash	Dashboard wire harness (see page 22-28)	* 8
C531	7	2	Left side of trunk	EVAP canister vent shut valve subharness	* 5
C701	12	8	Left side of trunk	Rear wire harness • '03-05 models (see page 22-48) • '06 model (see page 22-50)	
C752 (Junction connector)	13	18	Left C-pillar	Rear wire harness connectors C702 and C703 via junction connector • '03-05 models (see page 22-48) • '06 model (see page 22-50)	
C901	19	10	Under driver's seat	Driver's seat wire harness (see page 22-65)	* 2
C901	19	5	Under driver's seat	Driver's seat wire harness (see page 22-66)	* 1
C901	19	5	Under driver's seat	Seat position sensor harness (see page 22-62)	* 3
C903	24	2	Under driver's seat	Seat position sensor harness (see page 22-62)	* 4
G601	22		Left side of floor	Body ground, via floor wire harness	
G603	9		Left front of trunk	Body ground, via floor wire harness	

EVAP Canister Vent Shut Valve Subharness (with SULEV)

Connector or Terminal	Ref	Cavities	Location	Connects to	Notes
EVAP canister vent shut valve	8	2	Left side of trunk		
C531	7	2	Left side of trunk	Floor wire harness	

* 1: Power seat 2-way adjustable
* 2: Power seat 8-way adjustable
* 3: '04-06 models without power seat
* 4: '04-06 models power seat 8-way adjustable
* 5: With SULEV
* 6: Except SULEV
* 7: '03-05 models
* 8: '06 model

BACK

Protected by AR

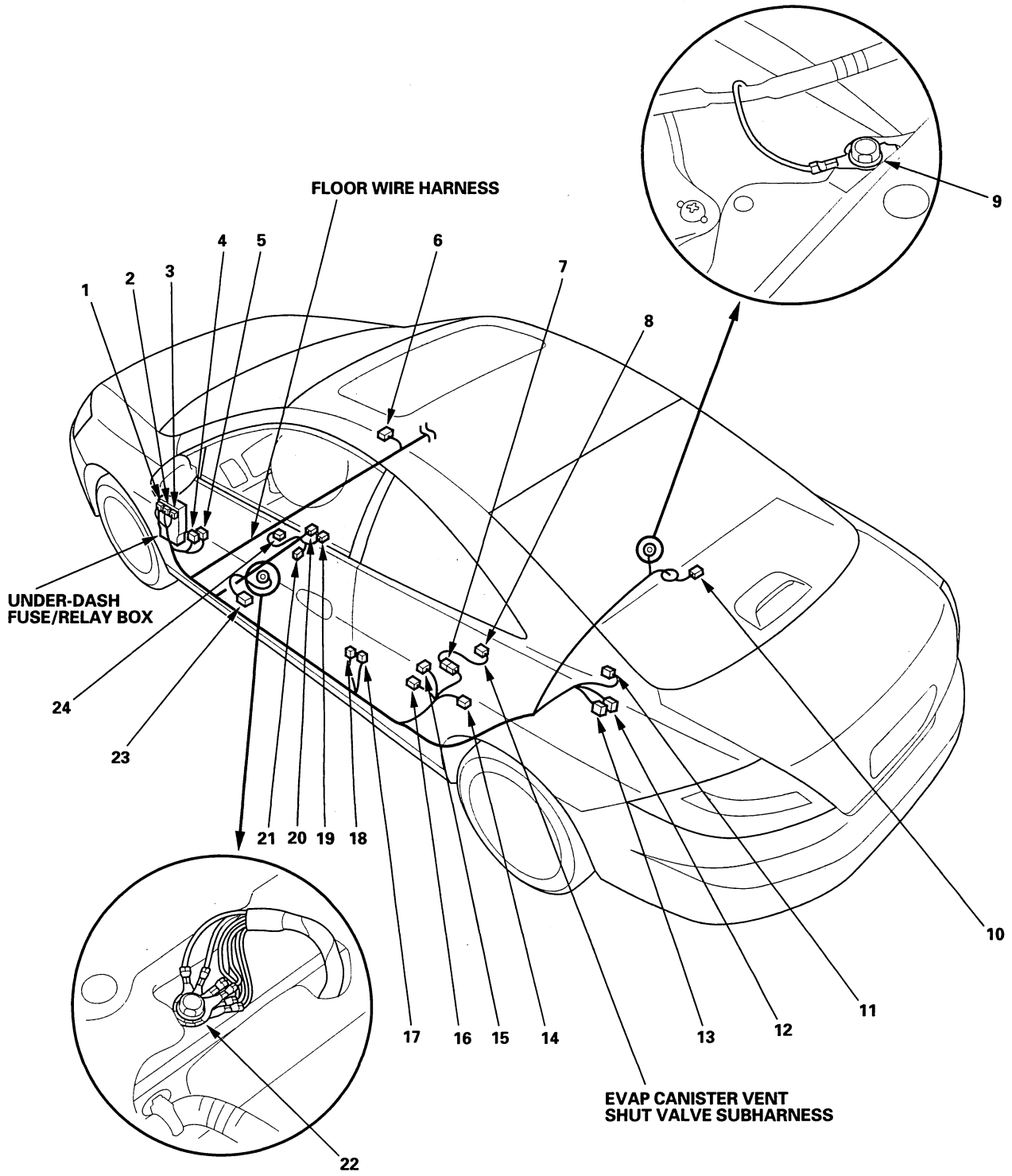

BACK

Protected by AR

Connector to Harness Index (cont'd)

Floor Wire Harness (Right branch) (2-door) (cont'd)

Connector or Terminal	Ref	Cavities	Location	Connects to	Notes
Front passenger's seat belt switch	5	3	Under front passenger's seat		
Front passenger's seat belt tensioner	15	4	Right B-pillar		
Front passenger's seat heater	4	4	Under front passenger's seat		
Front passenger's side airbag inflator	16	2	Under front passenger's seat		
Front passenger's side impact sensor	12	2	Under front passenger's seat		
Front passenger's weight sensor unit	10	6	Under front passenger's seat		* 3
Navigation inspection connector	22	2	Right side of rear shelf		
Navigation unit connector A	24	20	Middle of rear shelf		
Navigation unit connector B	25	14	Middle of rear shelf		
Navigation unit connector C	23	8	Middle of rear shelf		
Passenger's door switch	14	1	Right B-pillar		
Right rear speaker	21	2	Right side of rear shelf		With navigation
Right rear wheel sensor	17	2	Under rear floor		
Secondary heated oxygen sensor	11	4	Under front passenger's seat		
XM receiver connector A	20	14	Right side of trunk		
C551	6	4	Under right side of dash	Dashboard wire harness (see page 22-32)	* 1
C551	6	17	Under right side of dash	Dashboard wire harness (see page 22-32)	* 2
C552	8	13	Under right side of dash	Dashboard wire harness (see page 22-32)	With navigation
C553	7	6	Under right side of dash	Dashboard wire harness (see page 22-32)	With navigation
C651	9	6	Under right side of dash	Roof wire harness (see page 22-53)	With navigation
C801	3	4	Under front passenger's seat	OPDS unit harness (see page 22-62)	* 4
C801	9	4	Under front passenger's seat	ODS unit harness (see page 22-62)	* 5
G602	13		Right side of floor	Body ground, via floor wire harness	

* 1: '03 model, '04-06 models without XM radio, '04-06 models without navigation
* 2: '04-06 models with XM radio or '04-06 models with navigation
* 3: '04-05 models
* 4: '03-05 models
* 5: '06 model

Rear Window Defogger Ground Wire (2-door)

Connector or Terminal	Ref	Cavities	Location	Connects to	Notes
Rear window defogger connector B	2	1	Right C-pillar		
G604	1		Right C-pillar	Body ground, via rear window defogger ground wire	

XM Radio Subharness ('04-06 models)

Connector or Terminal	Ref	Cavities	Location	Connects to	Notes
XM receiver connector B	19	2	Right side of trunk		
XM radio antenna	18	2	Right rear corner of roof		

BACK

Protected by AR

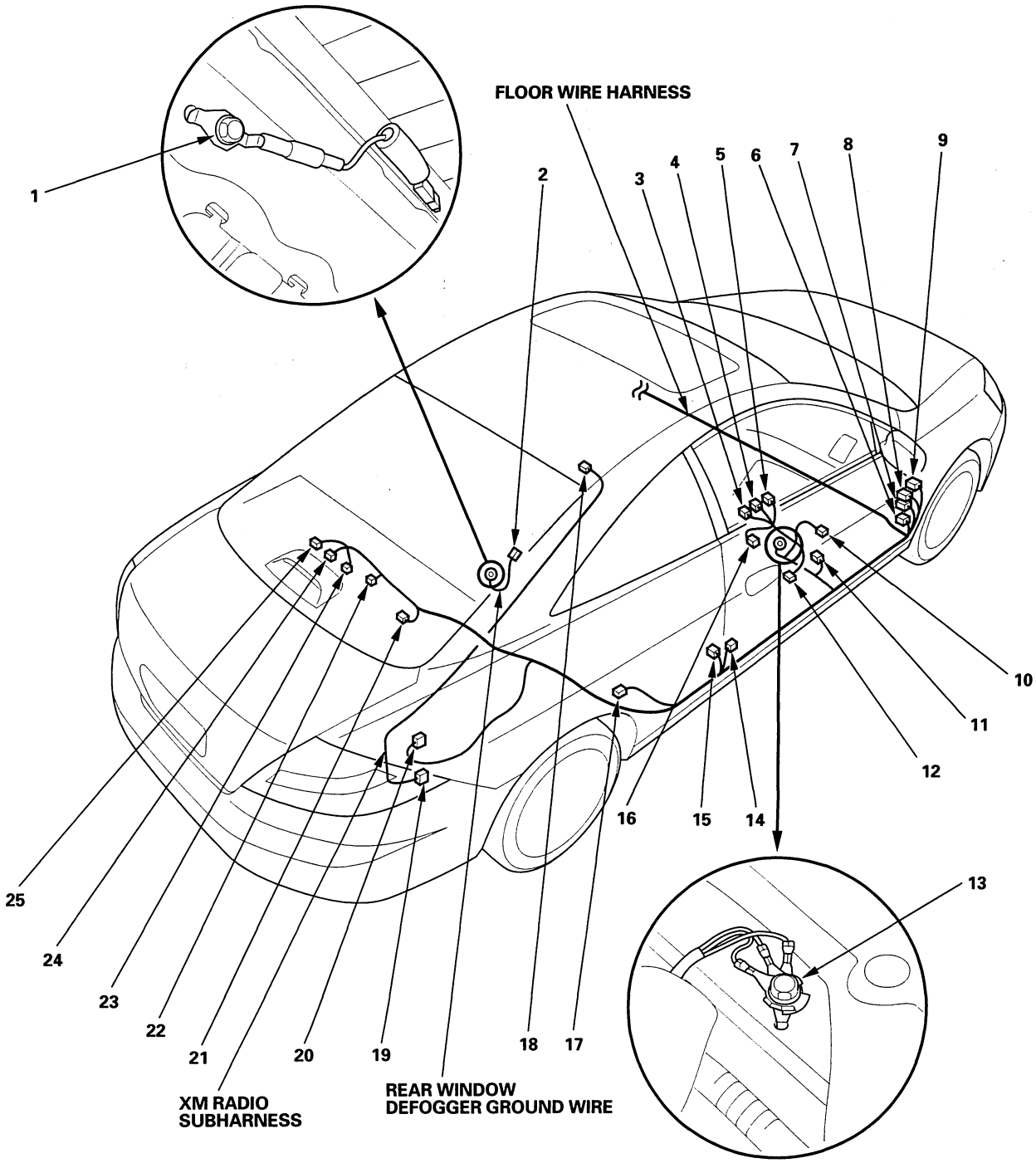

BACK

Protected by AR

Connector to Harness Index (cont'd)

Rear Wire Harness (4-door) ('03-05 models)

Connector or Terminal	Ref	Cavities	Location	Connects to	Notes
High mount brake light	6	2	Middle of rear shelf		
Left back-up light	16	3	Left side of trunk		
Left inner brake light/taillight	17	2	Left side of trunk		
Left rear speaker	4	2	Left side of rear shelf		
Left rear turn signal light	19	3	Left side of trunk		
Left taillight	20	4	Left side of trunk		
License plate light	13	2	Behind middle of trunk lid		
Right back-up light	11	3	Right side of trunk		
Right inner brake light/taillight	10	2	Right side of trunk		
Right rear speaker	5	2	Right side of rear shelf		Without navigation
Right rear turn signal light	9	3	Right side of trunk		
Right taillight	8	4	Right side of trunk		
Trunk key cylinder switch	12	3	Behind right side of trunk lid		
Trunk latch switch/trunk lid opener solenoid	14	3	Behind middle of trunk lid		Keyless
Trunk latch switch	14	2	Behind middle of trunk lid		Without keyless
Trunk light	7	2	Under middle of rear shelf		
C701	3	8	Left side of trunk	Floor wire harness (see page 22-36)	
C702 (Junction connector)	2	14	Left side of trunk	Floor wire harness connector C752 via junction connector (see page 22-36)	
C703 (Junction connector)	1	10	Left side of trunk	Floor wire harness connector C752 via junction connector (see page 22-36)	
C704	18	2	Left side of trunk		
G701	15		Left side of trunk	Body ground, via rear wire harness	

BACK

Protected by AR

'03-05 models

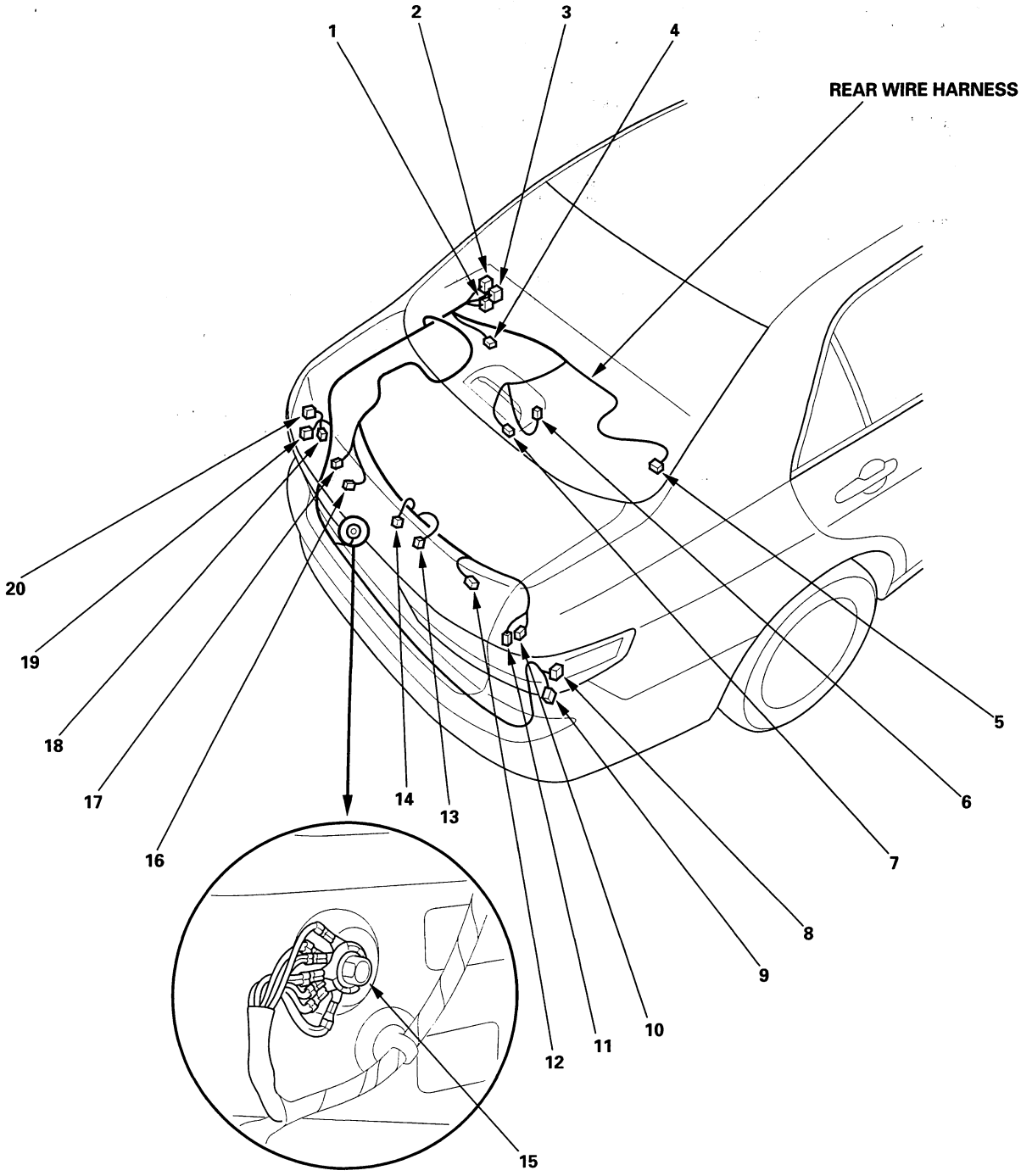

Protected by AR

Connector to Harness Index (cont'd)

Rear Wire Harness (4-door) ('06 model)

Connector or Terminal	Ref	Cavities	Location	Connects to	Notes
High mount brake light	12	3	Middle of rear shelf		
Left back-up light	15	2	Left side of trunk		
Left rear speaker	4	2	Left side of rear shelf		
Left rear turn signal light	16	3	Left side of trunk		
Left taillight	17	4	Left side of trunk		
Left license plate light	13	2	Behind middle of trunk lid		
Right back-up light	9	2	Right side of trunk		
Right rear speaker	5	2	Right side of rear shelf		Without navigation
Right rear turn signal light	8	3	Right side of trunk		
Right taillight	7	4	Right side of trunk		
Right license plate light	10	2	Behind middle of trunk lid		
Trunk latch switch/trunk lid opener solenoid	11	3	Behind middle of trunk lid		Keyless
Trunk light	6	2	Under middle of rear shelf		
C701	3	8	Left side of trunk	Floor wire harness (see page 22-36)	
C702 (Junction connector)	2	14	Left side of trunk	Floor wire harness connector C752 via junction connector (see page 22-36)	
C703 (Junction connector)	1	10	Left side of trunk	Floor wire harness connector C752 via junction connector (see page 22-36)	
G701	14		Left side of trunk	Body ground, via rear wire harness	

BACK

Protected by AR

'06 model

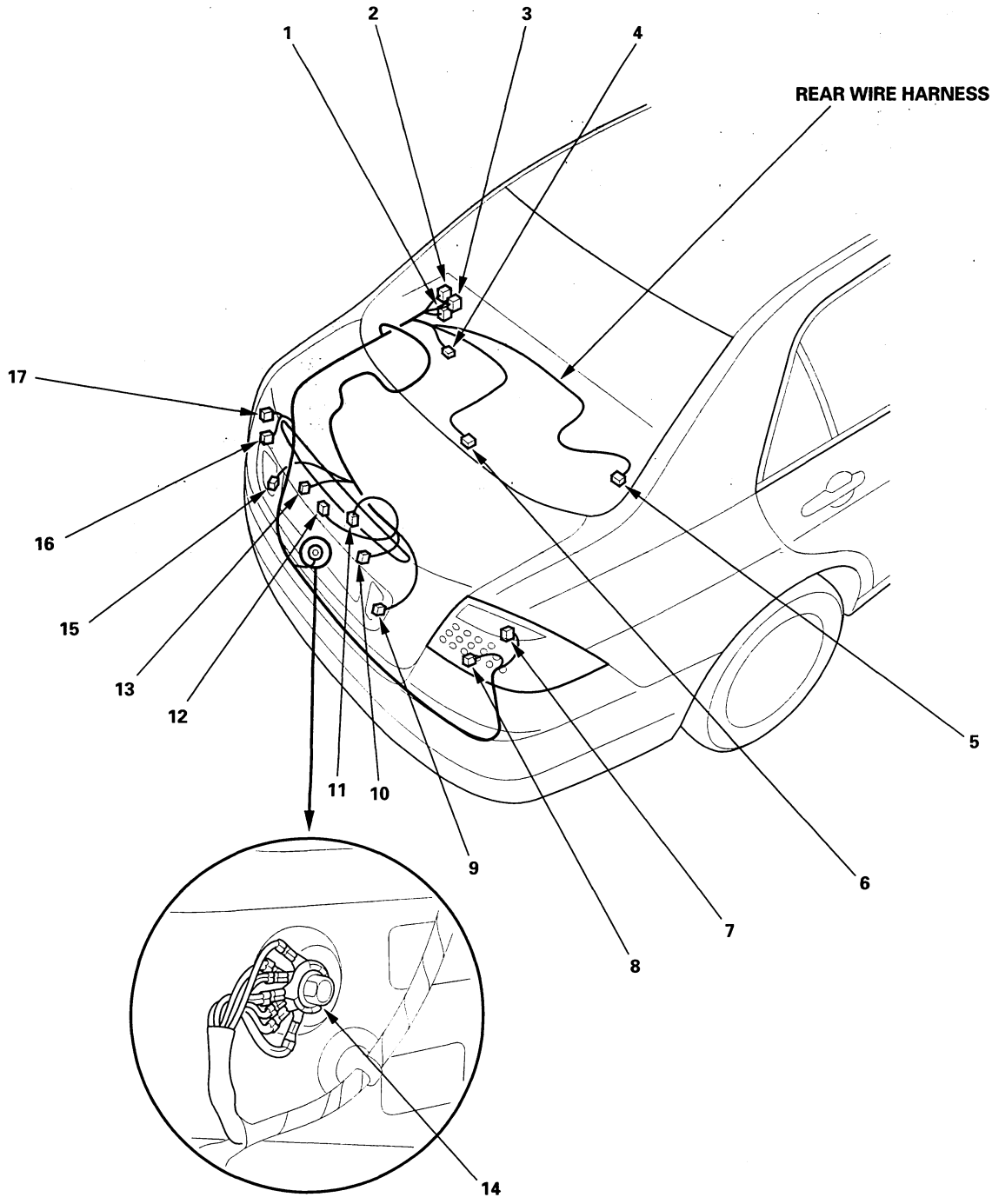

Protected by AR

Connector to Harness Index (cont'd)

Rear Wire Harness (2-door) ('03-05 models)

Connector or Terminal	Ref	Cavities	Location	Connects to	Notes
High mount brake light	11	2	Middle of rear shelf		
Left back-up light	2	2	Left side of trunk		
Left rear speaker	9	2	Left side of rear shelf		
Left rear turn signal light	3	2	Left side of trunk		
Left brake light/taillight	1	3	Left side of trunk		
License plate light connector A	16	2	Behind middle of trunk lid		
License plate light connector B	18	2	Behind middle of trunk lid		
Right back-up light	14	2	Right side of trunk		
Right rear speaker	10	2	Right side of rear shelf		Without navigation
Right rear turn signal light	13	2	Right side of trunk		
Right brake light/taillight	15	3	Right side of trunk		
Trunk latch switch/trunk lid opener solenoid	17	3	Behind middle of trunk lid		
Trunk light	12	2	Under middle of rear shelf		
C701	8	8	Left side of trunk	Floor wire harness (see page 22-40)	
C702 (Junction connector)	7	10	Left side of trunk	Floor wire harness connector C752 via junction connector (see page 22-40)	
C703 (Junction connector)	6	14	Left side of trunk	Floor wire harness connector C752 via junction connector (see page 22-40)	
C704	4	2	Left side of trunk		
G701	19		Left side of trunk	Body ground, via rear wire harness	
G702	5		Behind middle of trunk lid	Body ground, via rear wire harness	

BACK

Protected by AR

'03-05 models

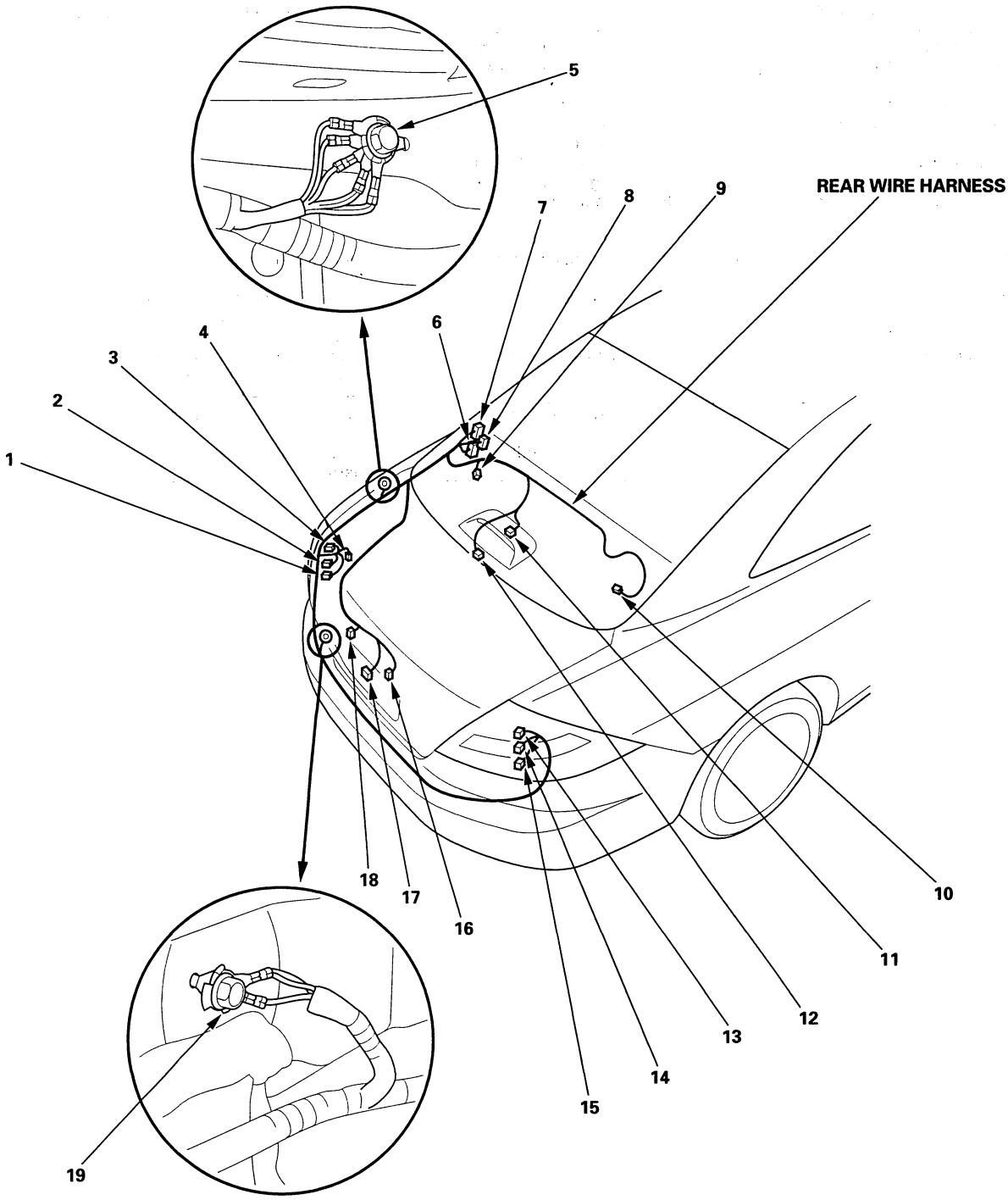

Protected by AR

Connector to Harness Index (cont'd)

Rear Wire Harness (2-door) ('06 model)

Connector or Terminal	Ref	Cavities	Location	Connects to	Notes
High mount brake light	14	3	Middle of rear shelf		
Left rear speaker	7	2	Left side of rear shelf		
Left rear turn signal light	3	2	Left side of trunk		
Left brake light/taillight	1	4	Left side of trunk		
License plate light connector A	12	2	Behind middle of trunk lid		
License plate light connector B	15	2	Behind middle of trunk lid		
Right rear speaker	8	2	Right side of rear shelf		Without navigation
Right rear turn signal light	10	2	Right side of trunk		
Right brake light/taillight	11	4	Right side of trunk		
Trunk latch switch/trunk lid opener solenoid	13	3	Behind middle of trunk lid		
Trunk light	9	2	Under middle of rear shelf		
C701	6	8	Left side of trunk	Floor wire harness (see page 22-40)	
C702 (Junction connector)	4	10	Left side of trunk	Floor wire harness connector C752 via junction connector (see page 22-40)	
C703 (Junction connector)	3	14	Left side of trunk	Floor wire harness connector C752 via junction connector (see page 22-40)	
G701	1		Left side of trunk	Body ground, via rear wire harness	
G702	5		Behind middle of trunk lid	Body ground, via rear wire harness	

BACK

Protected by AR

'06 model

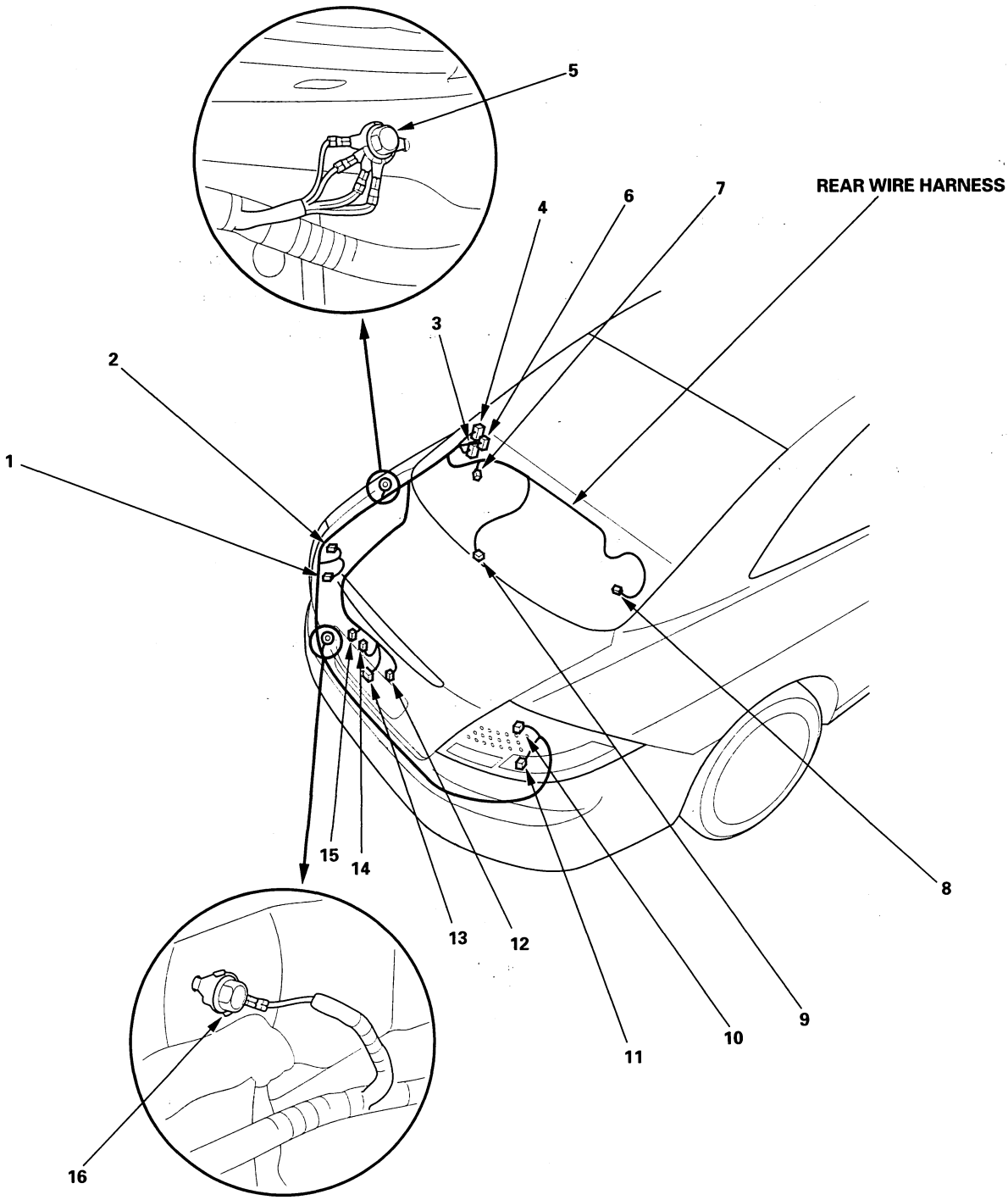

Protected by AR

Connector to Harness Index (cont'd)

Roof Wire Harness (4-door)

Connector or Terminal	Ref	Cavities	Location	Connects to	Notes
Ambient light	3	10	Roof		With moonroof
Ceiling light	7	3	Roof		Without moonroof
Ceiling light	8	3	Roof		With moonroof
Driver's vanity mirror light	6	2	Roof		
Front passenger's vanity mirror light	2	2	Roof		
Individual map light	4	3	Roof		
Moonroof close relay	11	5	Roof		With moonroof
Moonroof motor	9	2	Roof		With moonroof
Moonroof open relay	12	5	Roof		With moonroof
Moonroof limit switch	10	4	Roof		With moonroof
Under-dash fuse/relay box connector I (see page 22-70)	13	5	Under left side of dash		
C601	14	8	Under left side of dash	Dashboard wire harness (see page 22-28)	* 2
C601	14	10	Under left side of dash	Dashboard wire harness (see page 22-28)	* 1
C601	14	3	Under left side of dash	Dashboard wire harness (see page 22-28)	* 3
C602 (Optional connector)	5	3	Behind rearview mirror		* 4
C651	1	6	Under right side of dash	Floor wire harness (see page 22-38)	With navigation

* 1: '05-06 models with moonroof
* 2: '03-04 models
* 3: '05-06 models without moonroof
* 4: '05-06 models

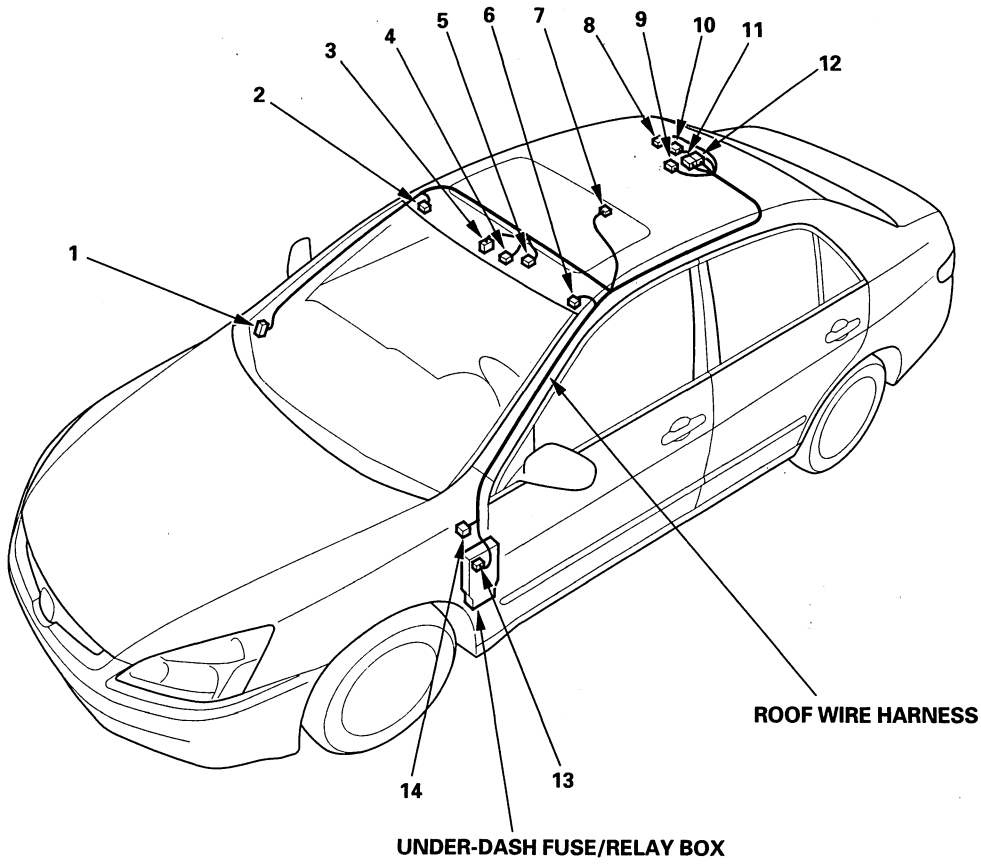

BACK

Protected by AR

Roof Wire Harness (2-door)

Connector or Terminal	Ref	Cavities	Location	Connects to	Notes
Ambient light	3	10	Roof		With moonroof
Ceiling light	6	3	Roof		Without moonroof
Ceiling light	7	3	Roof		With moonroof
Driver's vanity mirror light	9	2	Roof		
Front passenger's vanity mirror light	2	2	Roof		
Individual map light	4	3	Roof		
Moonroof control unit	8	10	Roof		With moonroof
Under-dash fuse/relay box connector I (see page 22-70)	10	5	Under left side of dash		
C601	11	8	Under left side of dash	Dashboard wire harness (see page 22-28)	* 2
C601	11	10	Under left side of dash	Dashboard wire harness (see page 22-28)	* 1
C601	11	3	Under left side of dash	Dashboard wire harness (see page 22-28)	* 3
C602 (Optional connector)	5	3	Behind rear view mirror		* 4
C651	1	6	Under right side of dash	Floor wire harness (see page 22-42)	With navigation

* 1: '05-06 models with moonroof
* 2: '03-04 models
* 3: '05-06 models without moonroof
* 4: '05-06 models

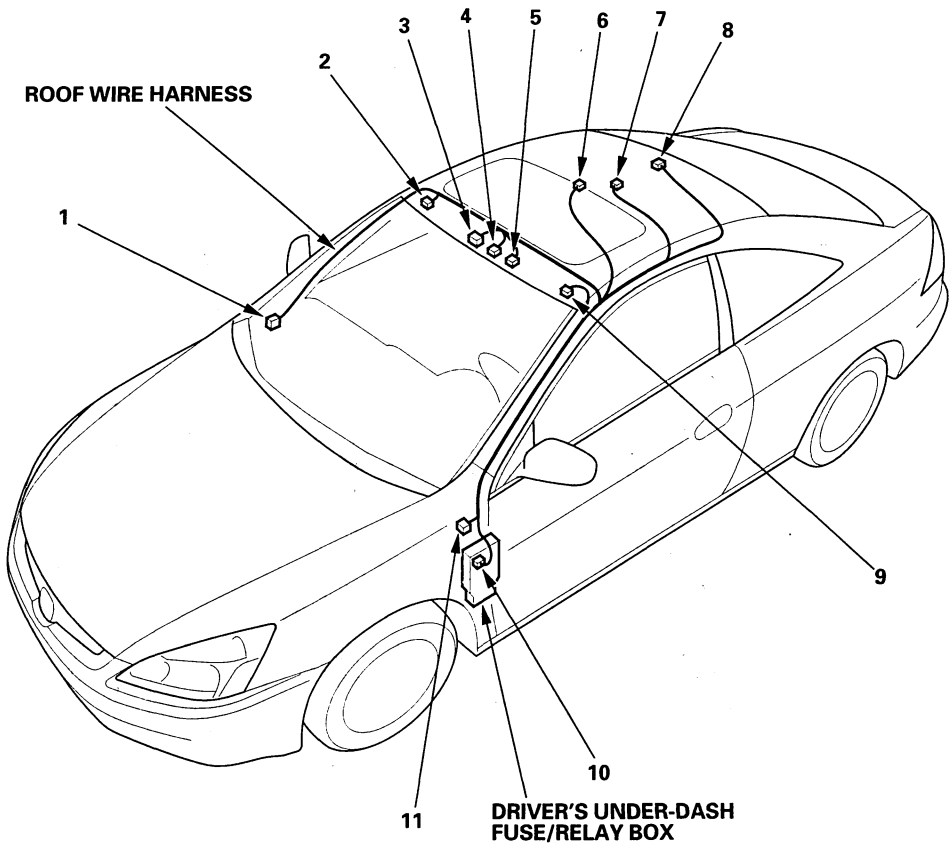

Protected by AR

Connectors and Harnesses

Connector to Harness Index (cont'd)

Driver's Door Wire Harness (4-door)

Connector or Terminal	Ref	Cavities	Location	Connects to	Notes
Driver's door courtesy light	11	2	Driver's door		
Driver's door key cylinder switch	1	3	Driver's door		
Driver's door lock actuator	12	2	Driver's door		
Driver's door lock knob switch	13	3	Driver's door		
Driver's door speaker	9	2	Driver's door		
Driver's power window motor	10	6	Driver's door		
Left power mirror	4	8	Driver's door		
Power mirror switch	3	13	Driver's door		
Power window master switch (door multiplex control unit)	2	23	Driver's door		
C631	5	20	Driver's door	Driver's door subharness	
C632	8	17	Driver's door	Driver's door subharness	

Driver's Door Subharness (4-door)

Connector or Terminal	Ref	Cavities	Location	Connects to	Notes
Under-dash fuse/relay box connector J (see page 22-70)	6	21	Left kick panel		
Under-dash fuse/relay box connector K (see page 22-70)	7	12	Left kick panel		
C631	5	20	Driver's door	Driver's door wire harness	
C632	8	17	Driver's door	Driver's door wire harness	

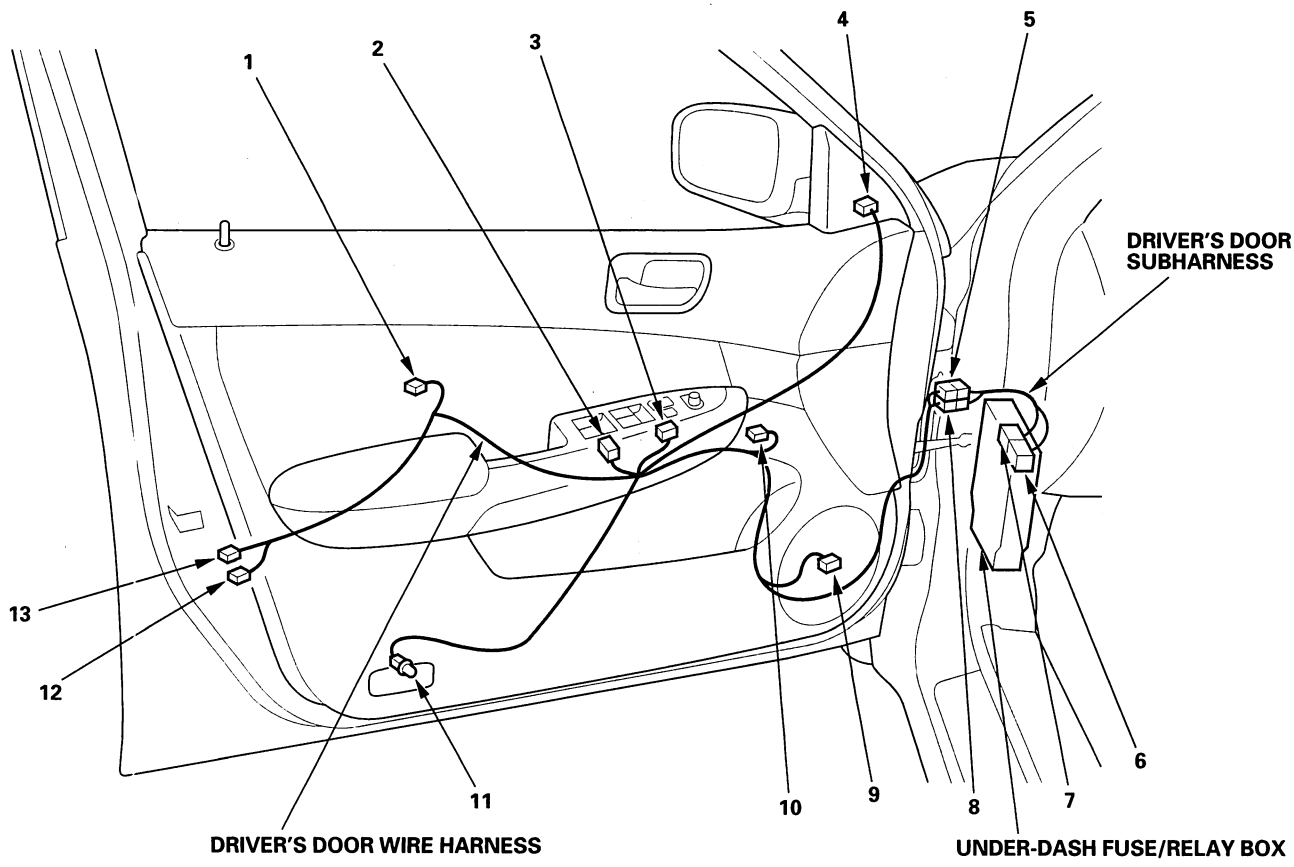

BACK

Protected by AR

Driver's Door Wire Harness (2-door)

Connector or Terminal	Ref	Cavities	Location	Connects to	Notes
Driver's door courtesy light	11	2	Driver's door		
Driver's door key cylinder switch	1	3	Driver's door		
Driver's door lock actuator	12	2	Driver's door		
Driver's door lock knob switch	13	3	Driver's door		
Driver's door speaker	9	2	Driver's door		
Driver's power window motor	10	6	Driver's door		
Left power mirror	4	8	Driver's door		
Power mirror switch	3	13	Driver's door		
Power window master switch (door multiplex control unit)	2	23	Driver's door		
C631	5	20	Driver's door	Driver's door subharness	
C632	8	17	Driver's door	Driver's door subharness	

Driver's Door Subharness (2-door)

Connector or Terminal	Ref	Cavities	Location	Connects to	Notes
Under-dash fuse/relay box connector J (see page 22-70)	6	21	Left kick panel		
Under-dash fuse/relay box connector K (see page 22-70)	7	12	Left kick panel		
C631	5	20	Driver's door	Driver's door harness	
C632	8	17	Driver's door	Driver's door harness	

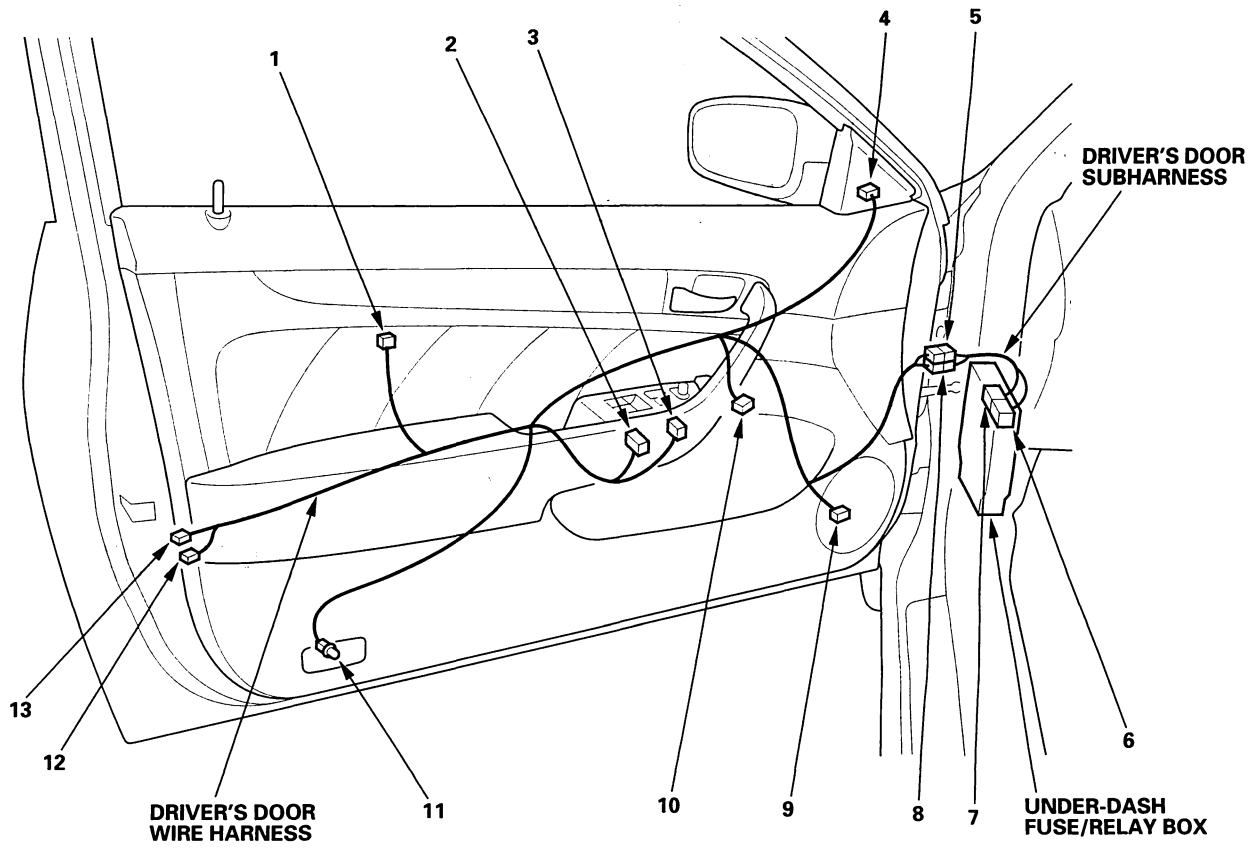

Protected by AR

Connector to Harness Index (cont'd)

Front Passenger's Door Wire Harness (4-door)

Connector or Terminal	Ref	Cavities	Location	Connects to	Notes
Front passenger's door courtesy light	6	2	Front passenger's door		
Front passenger's door lock actuator	5	2	Front passenger's door		
Front passenger's door lock knob switch	4	3	Front passenger's door		
Front passenger's door speaker	8	2	Front passenger's door		
Front passenger's power window motor	7	6	Front passenger's door		
Front passenger's power window switch	3	10	Front passenger's door		
Right power mirror	2	8	Front passenger's door		
C731	9	13	Under right side of dash	Dashboard wire harness (see page 22-32)	
C732	1	12	Under right side of dash	Dashboard wire harness (see page 22-32)	

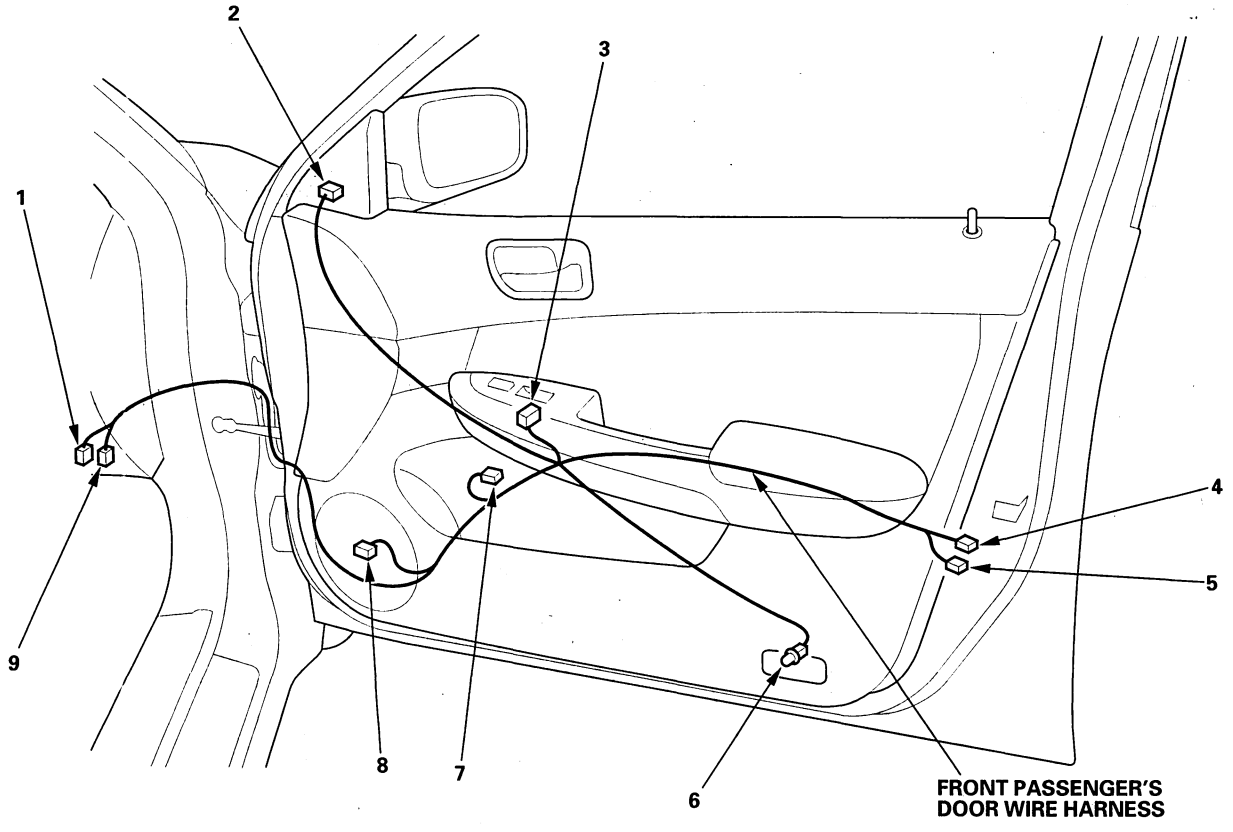

BACK

Protected by AR

Front Passenger's Door Wire Harness (2-door)

Connector or Terminal	Ref	Cavities	Location	Connects to	Notes
Front passenger's door courtesy light	5	2	Front passenger's door		
Front passenger's door lock actuator	4	2	Front passenger's door		
Front passenger's door lock knob switch	3	3	Front passenger's door		
Front passenger's door speaker	8	2	Front passenger's door		
Front passenger's power window motor	7	6	Front passenger's door		
Front passenger's power window switch	6	10	Front passenger's door		
Right power mirror	2	8	Front passenger's door		
C731	9	13	Under right side of dash	Dashboard wire harness (see page 22-32)	
C732	1	12	Under right side of dash	Dashboard wire harness (see page 22-32)	

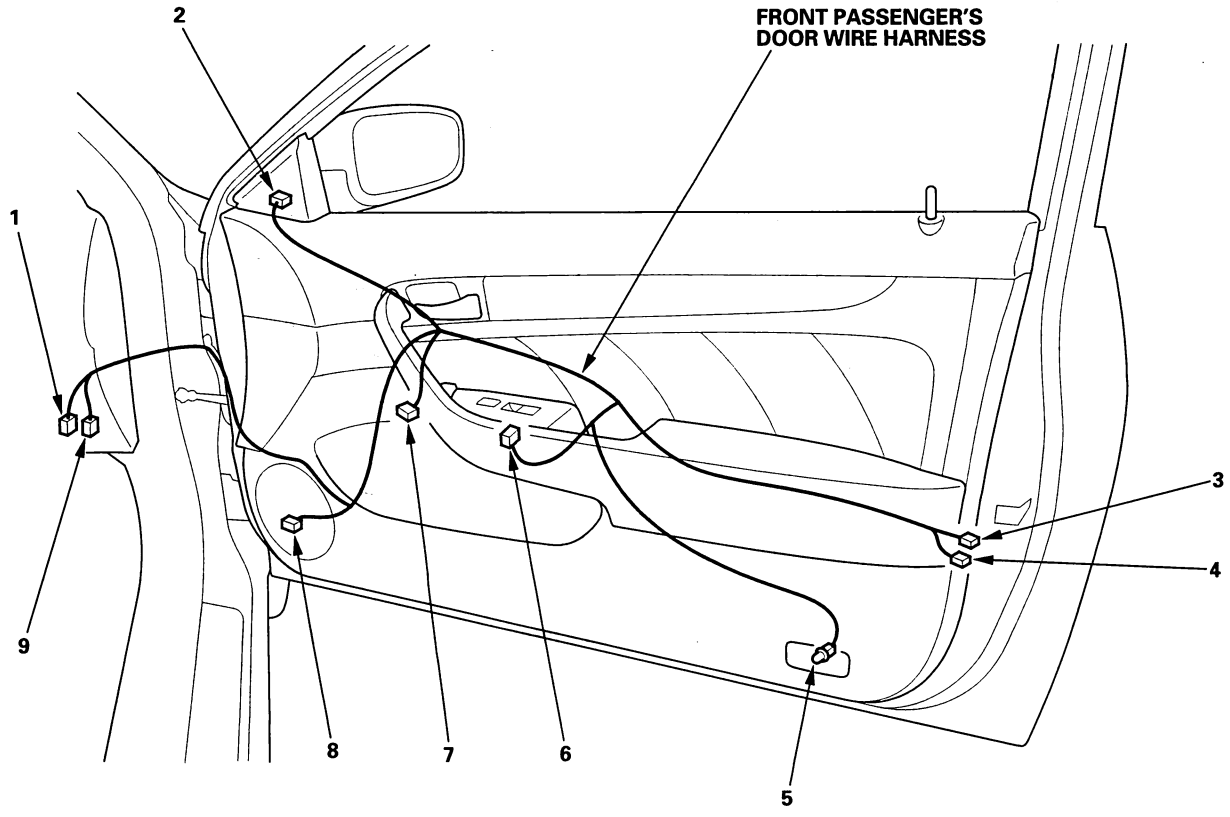

Protected by AR

Connector to Harness Index (cont'd)

Left Rear Door Wire Harness (4-door)

Connector or Terminal	Ref	Cavities	Location	Connects to	Notes
Left rear power door lock actuator	4	2	Left rear door		
Left rear power door lock knob switch	5	3	Left rear door		
Left rear power window motor	2	6	Left rear door		
Left rear power window switch	1	6	Left rear door		
C751	3	10	Left B-pillar	Floor wire harness (see page 22-36)	

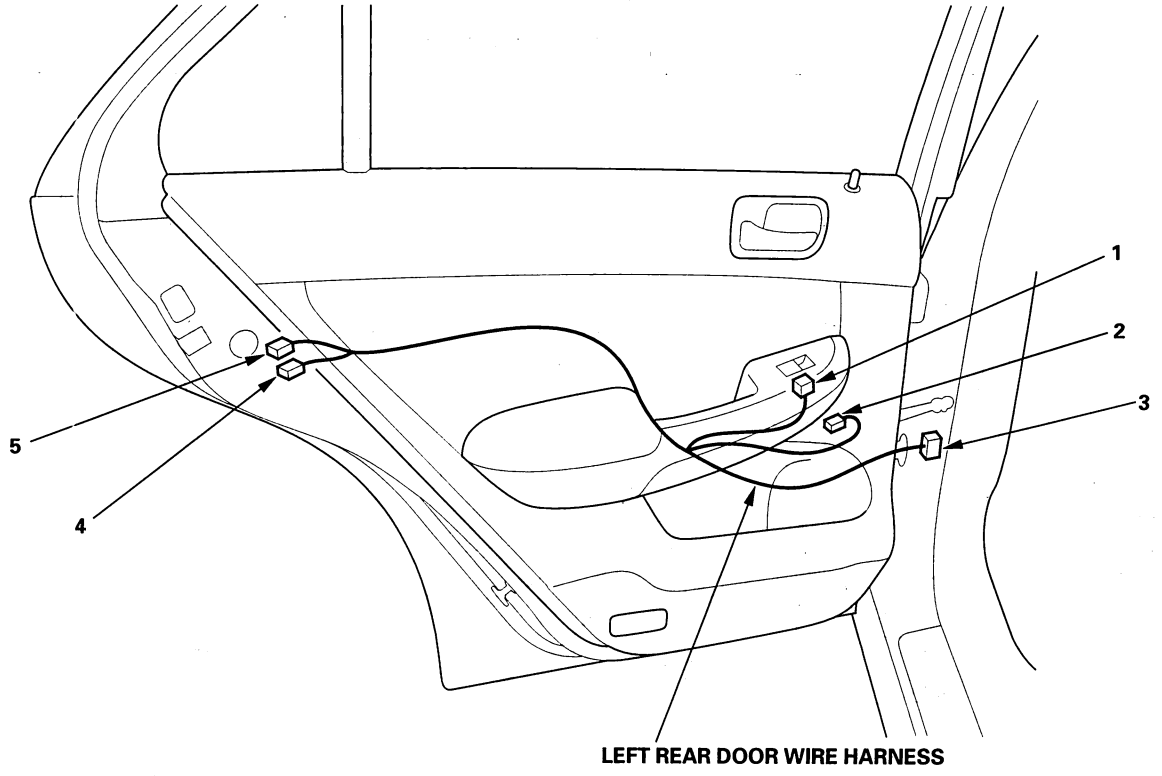

BACK

Protected by AR

Right Rear Door Wire Harness (4-door)

Connector or Terminal	Ref	Cavities	Location	Connects to	Notes
Right rear power door lock actuator	2	2	Right rear door		
Right rear power door lock knob switch	1	3	Right rear door		
Right rear power window motor	4	6	Right rear door		
Right rear power window switch	5	6	Right rear door		
C781	3	10	Right B-pillar	Floor wire harness (see page 22-38)	

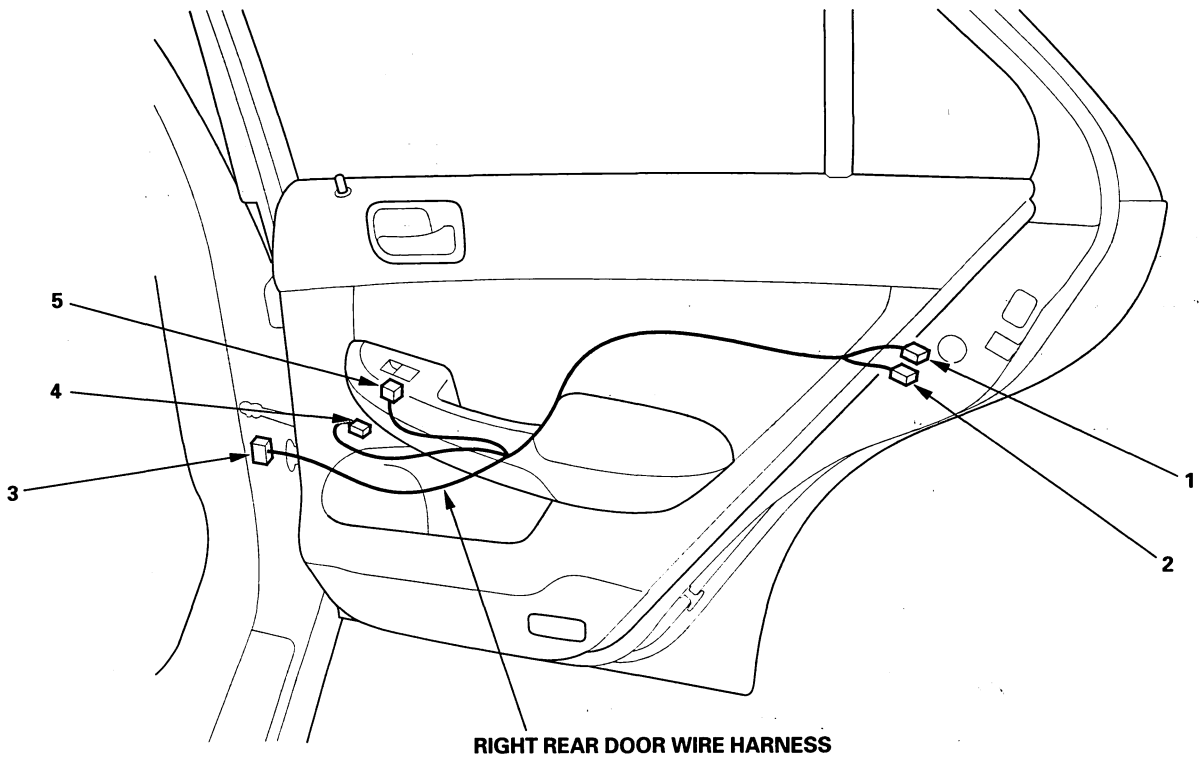

RIGHT REAR DOOR WIRE HARNESS

Protected by AR

Connector to Harness Index (cont'd)

ECM/PCM Wire Harness

Connector or Terminal	Ref	Cavities	Location	Connects to	Notes
ECM/PCM connector A	8	31	Under middle of dash		
ECM/PCM connector B	9	24	Under middle of dash		
ECM connector C	10	22	Under middle of dash		'05 model M/T
PCM connector C	10	22	Under middle of dash		A/T
C201	1	33	Left side of engine compartment	Engine wire harness (see page 22-16)	
C202	2	33	Left side of engine compartment	Engine wire harness (see page 22-16)	A/T
C202	2	23	Left side of engine compartment	Engine wire harness (see page 22-16)	M/T
C203	3	1	Left side of engine compartment	Engine wire harness (see page 22-16)	SULEV*1
C203	3	6	Left side of engine compartment	Engine wire harness (see page 22-16)	*2
C251	7	13	Under middle of dash	Dashboard wire harness (see page 22-32)	
C281	6	13	Under right side of dash	Throttle actuator control module subharness	

*1: '03-05 models
*2: '06 model A/T

Throttle Actuator Control Module Subharness ('06 model)

Connector or Terminal	Ref	Cavities	Location	Connects to	Notes
APP sensor	4	6	Right side of engine compartment		
Throttle actuator control module	5	16	Under right side of dash		
C281	6	13	Under right side of dash	ECM/PCM wire harness	

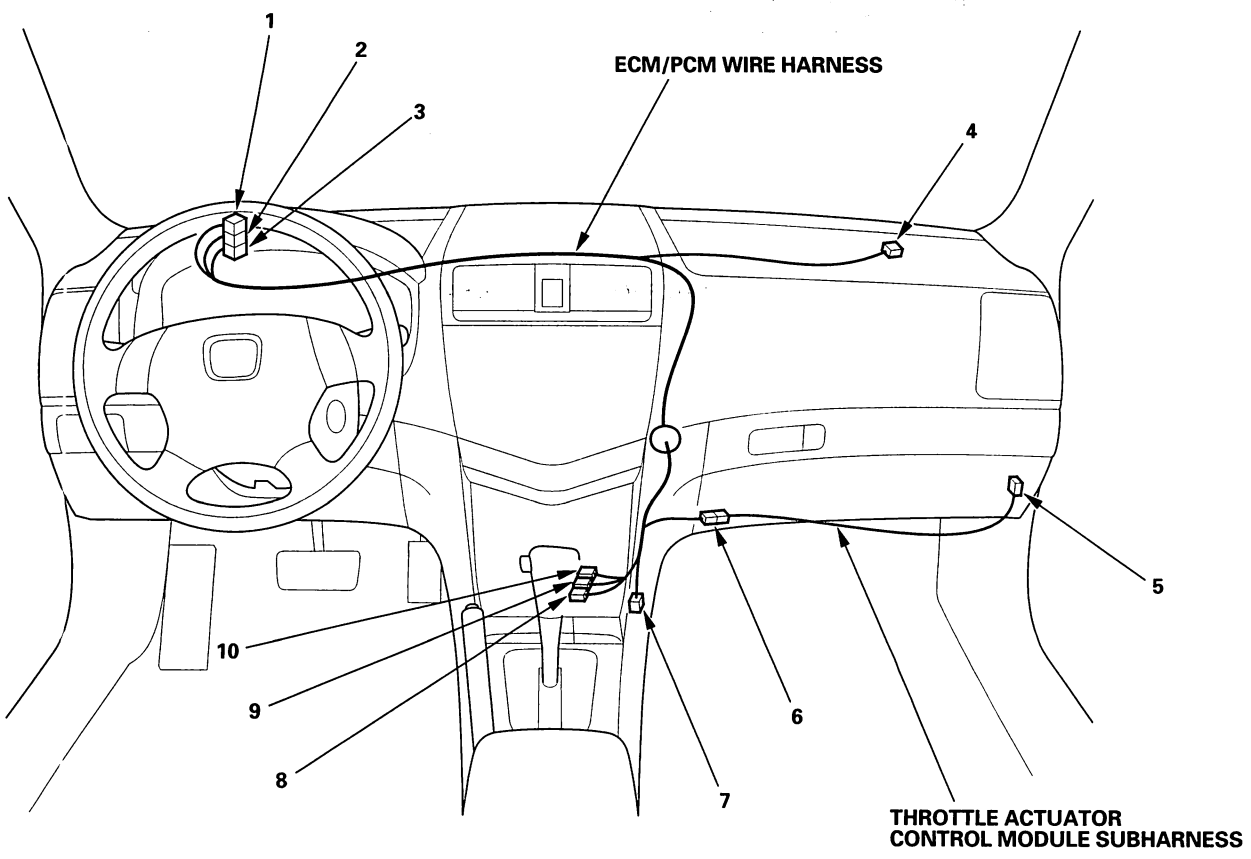

BACK

Protected by AR

Cable Reel Subharness

Connector or Terminal	Ref	Cavities	Location	Connects to	Notes
Cable reel connector C	4	5	In steering column cover	Cable reel connector B (see page 22-28)	* 1
Cable reel connector C	4	13	In steering column cover	Cable reel connector B (see page 22-28)	* 2
Cruise control combination switch	5	5	In steering column cover		
Horn switch	3	1	In steering column cover		
Radio remote switch	2	4	In steering column cover		
Voice control switch	1	4	In steering column cover		

* 1: '03-04 models except USA DX and LX, '05 model DX
* 2: '03-04 models USA DX and LX, '05 model except USA DX and LX, '06 model

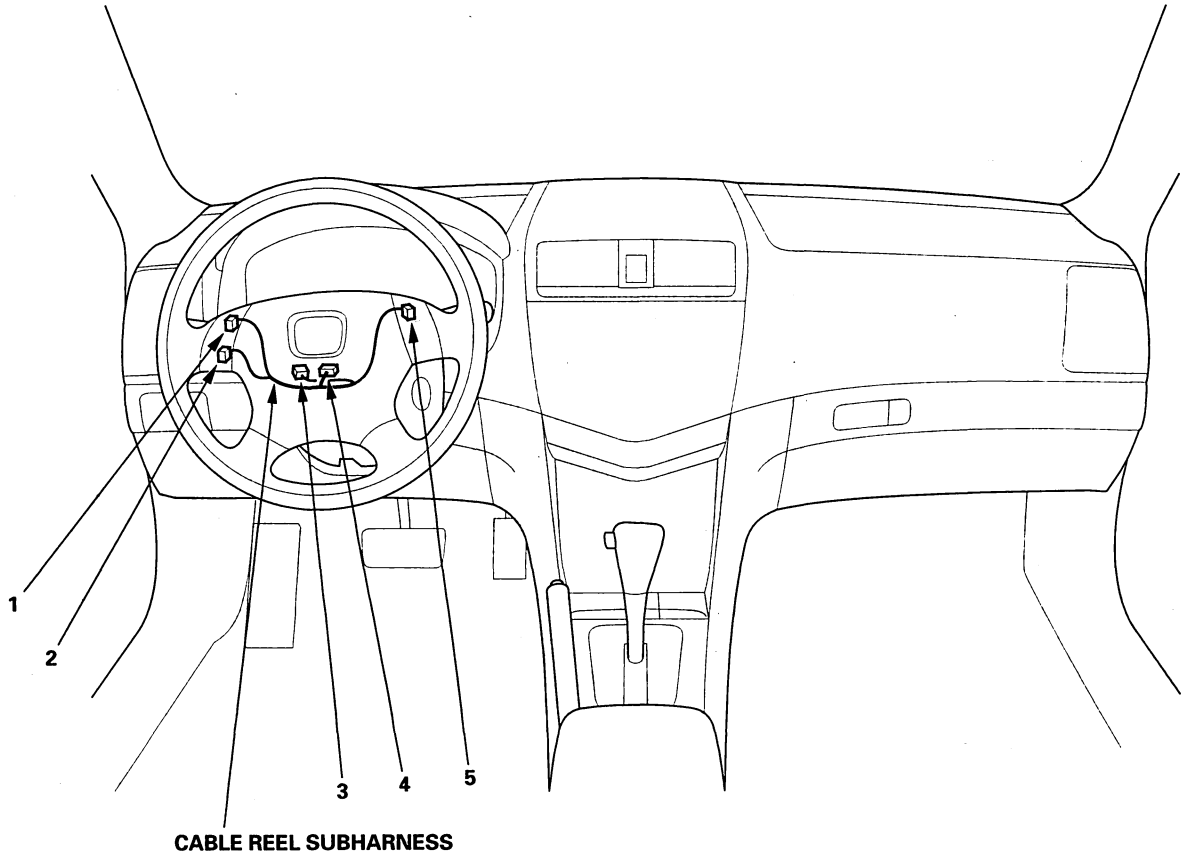

Protected by AR

Connector to Harness Index (cont'd)

Dashboard Wire Harness (SRS branch)

Connector or Terminal	Ref	Cavities	Location	Connects to	Notes
Cable reel connector A	23	4	Under left side of dash		
Front passenger's airbag inflator	6	4	Under right side of dash		
Hazard warning switch/passenger's airbag cutoff indicator	3	6	Middle of dash		* 1
SRS unit connector A	2	28	Under middle of dash		
Under-dash fuse/relay box connector R (see page 22-70)	25	2	Under left side of dash		
Under-dash fuse/relay box connector S (see page 22-70)	26	2	Under left side of dash		
C403	1	4	Under left side of dash	Engine compartment wire harness (see page 22-26)	
C501	24	24	Under left side of dash	Floor wire harness • 4-door (see page 22-36) • 2-door (see page 22-40)	
G505	19			Body ground, via dashboard wire harness	

Floor Wire Harness (SRS branch)

Connector or Terminal	Ref	Cavities	Location	Connects to	Notes
Driver's seat belt tensioner	17	4	Left B-pillar		
Driver's side airbag inflator	22	2	Under left side of dash		
Driver's side impact sensor (First)	20	2	Under driver's seat		
Front passenger's seat belt tensioner	12	4	Right B-pillar		
Front passenger's side airbag inflator	10	2	Under front passenger's seat		
Front passenger's side impact sensor (First)	13	2	Under front passenger's seat		
Front passenger's weight sensor unit	8	6	Under front passenger's seat		* 4
SRS unit connector B	4	28	Under middle of dash		
C501	24	24	Under left side dash	Dashboard wire harness (see page 22-28)	
C801	9	4	Under front passenger's seat	OPDS unit harness	* 6
C801	9	4	Under front passenger's seat	ODS wire harness	* 5
C901	21	5	Under driver's seat	Seat position sensor harness	* 2
C903	7	2	Under driver's seat	Seat position sensor harness	* 3

OPDS Unit Harness ('03-05 models)

Connector or Terminal	Ref	Cavities	Location	Connects to	Notes
OPDS unit connector D	14	18	In front passenger's seat		
Seat weight sensor (Inside)	15	3	Under front passenger's seat		* 4
Seat weight sensor (Outside)	11	2	Under front passenger's seat		* 4
C801	9	4	Under front passenger's seat	Floor wire harness	

ODS Unit Harness ('06 model)

Connector or Terminal	Ref	Cavities	Location	Connects to	Notes
ODS unit connector D	13	8	In front passenger's seat		
Seat weight sensor (Inside)	15	3	Under front passenger's seat		
Seat weight sensor (Outside)	11	2	Under front passenger's seat		
C801	9	4	Under front passenger's seat	Floor wire harness	

Seat Position Sensor Harness ('04-06 models)

Connector or Terminal	Ref	Cavities	Location	Connects to	Notes
Driver's seat position sensor	18	2	Under driver's seat		* 2
Driver's seat position sensor	16	2	Under driver's seat		* 3
C901	21	5	Under driver's seat	Floor wire harness	* 2
C903	7	2	Under driver's seat	Floor wire harness	* 3

Side Curtain Airbag Harness ('04-06 models)

Connector or Terminal	Ref	Cavities	Location	Connects to	Notes
SRS unit connector C	5	16	Under middle of dash		

* 1: '04-06 models
* 2: '04-06 models without power seat
* 3: '04-06 models power seat 8-way adjustable
* 4: '04-05 models
* 5: '06 model
* 6: '03-05 models

BACK

Protected by AR

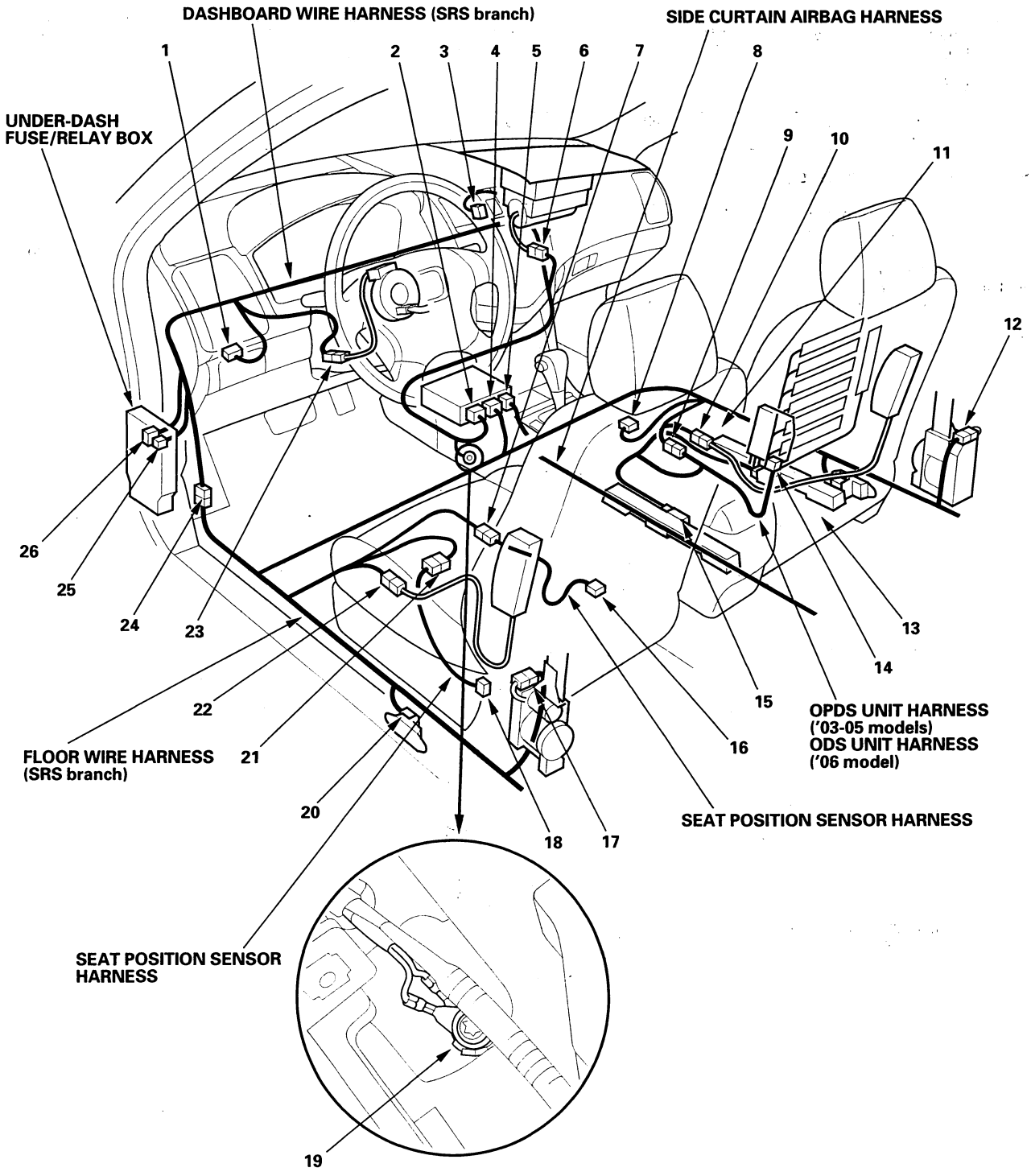

Protected by AR

Connector to Harness Index (cont'd)

Dashboard Wire Harness (SRS branch)

Connector or Terminal	Ref	Cavities	Location	Connects to	Notes
SRS unit connector A	1	28	Under middle of dash		

Floor Wire Harness (SRS branch)

Connector or Terminal	Ref	Cavities	Location	Connects to	Notes
SRS unit connector B	2	28	Under middle of dash		

Side Curtain Airbag Harness ('04-06 models)

Connector or Terminal	Ref	Cavities	Location	Connects to	Notes
Left side impact sensor (Second)	6	2	Left quarter panel		4-door, '05-06 models 2-door
Left side curtain airbag	7	2	Left C-pillar		
Right side curtain airbag	4	2	Right quarter panel		
Right side impact sensor (Second)	5	2	Right C-pillar		4-door, '05-06 models 2-door
SRS unit connector C	3	16	Under middle of dash		

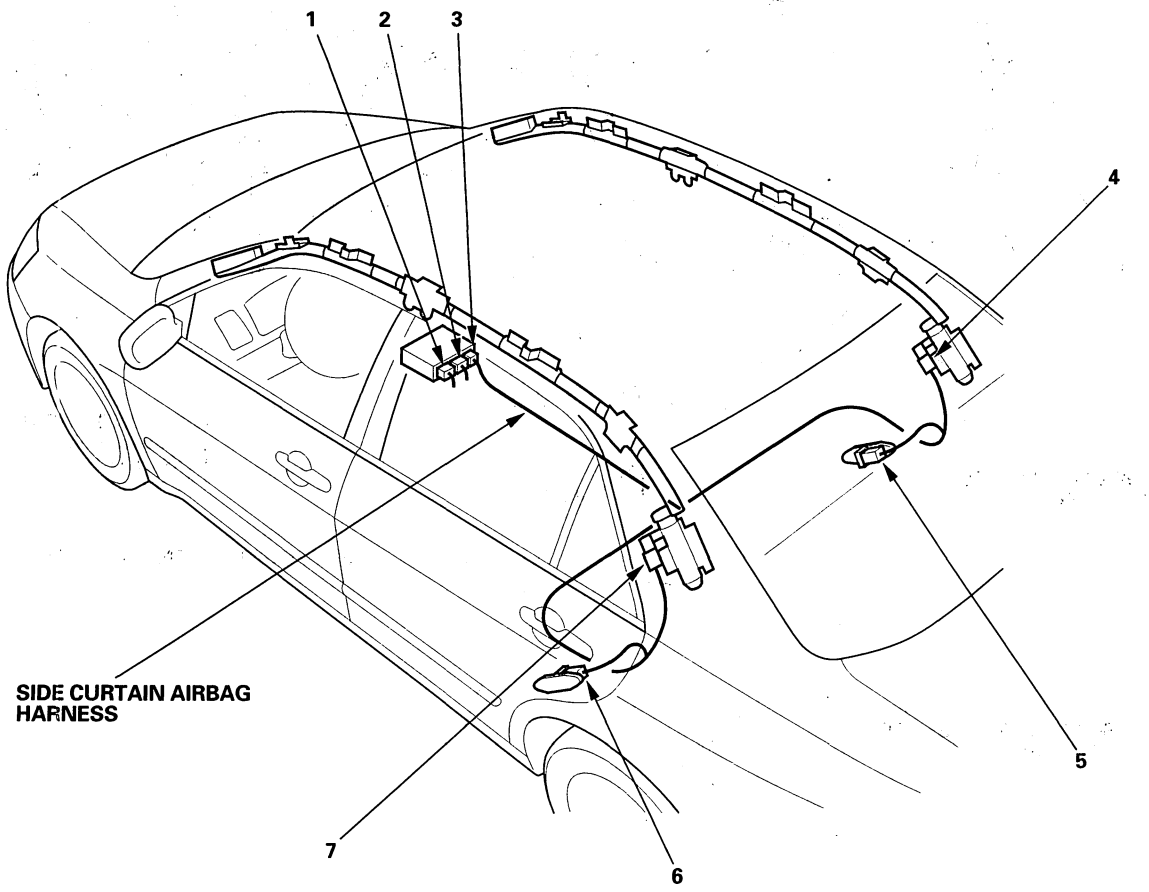

BACK

Protected by AR

Driver's Seat Wire Harness (8-way adjustable)

Connector or Terminal	Ref	Cavities	Location	Connects to	Notes
Driver's power seat adjustment switch	6	12	Left side of driver's seat		
Driver's seat belt switch	4	3	Under driver's seat		
Driver's seat heater	5	4	Under driver's seat		
Front up-down motor	7	2	Under driver's seat		
Rear up-down motor	1	2	Under driver's seat		
Recline motor	8	5	Under driver's seat		
Slide motor	2	2	Under driver's seat		
C901	3	10	Under driver's seat	Floor wire harness • 4-door (see page 22-36) • 2-door (see page 22-40)	

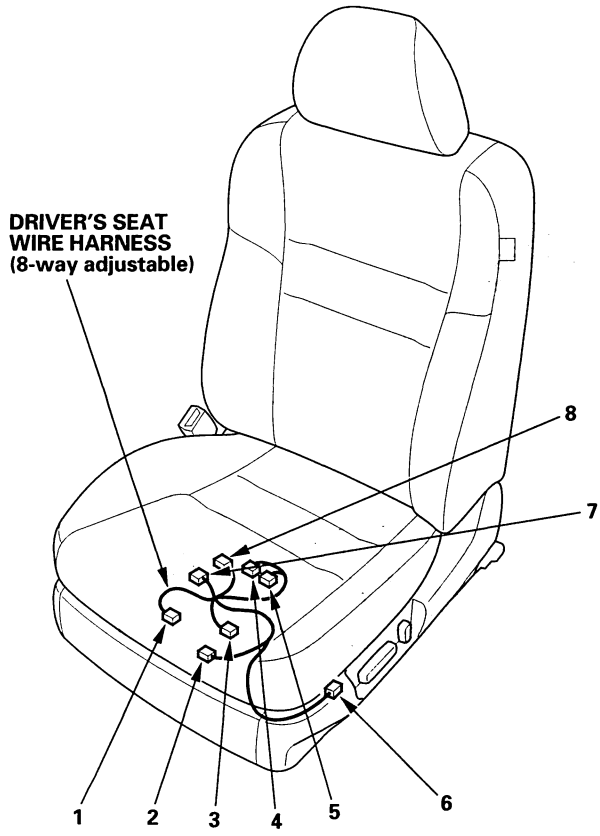

Protected by AR

Connector to Harness Index (cont'd)

Driver's Seat Wire Harness (2-way adjustable)

Connector or Terminal	Ref	Cavities	Location	Connects to	Notes
Driver's power seat adjustment switch	3	5	Left side of driver's seat		
Driver's seat position sensor	4	2	Under driver's seat		* 1
Up-down motor	1	2	Under driver's seat		
C901	2	5	Under driver's seat	Floor wire harness • 4-door (see page 22-36) • 2-door (see page 22-40)	

* 1: '04-06 models

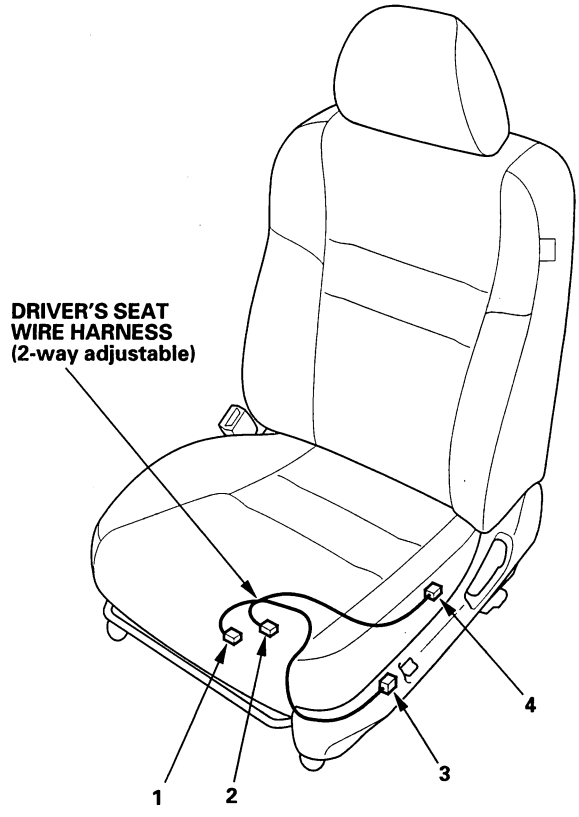

BACK

Protected by AR

A/C Wire Harness

Connector or Terminal	Ref	Cavities	Location	Connects to	Notes
Air mix control motor	1	7	Under middle of dash		Manual A/C 4-door
Air mix control motor	1	5	Under middle of dash		Manual A/C 2-door
Driver's air mix control motor	1	7	Under middle of dash		Auto A/C 4-door
Driver's air mix control motor	1	5	Under middle of dash		Auto A/C 2-door
Evaporator temperature sensor	2	2	Under middle of dash		
Front passenger's air mix control motor	5	7	Under middle of dash		Auto A/C 4-door
Front passenger's air mix control motor	5	5	Under middle of dash		Auto A/C 2-door
Mode control motor	3	7	Under middle of dash		4-door
Mode control motor	3	10	Under middle of dash		2-door
Recirculation control motor	4	7	Under middle of dash		4-door
Recirculation control motor	4	5	Under middle of dash		2-door
C851	6	21	Under middle of dash	Dashboard wire harness (see page 22-32)	

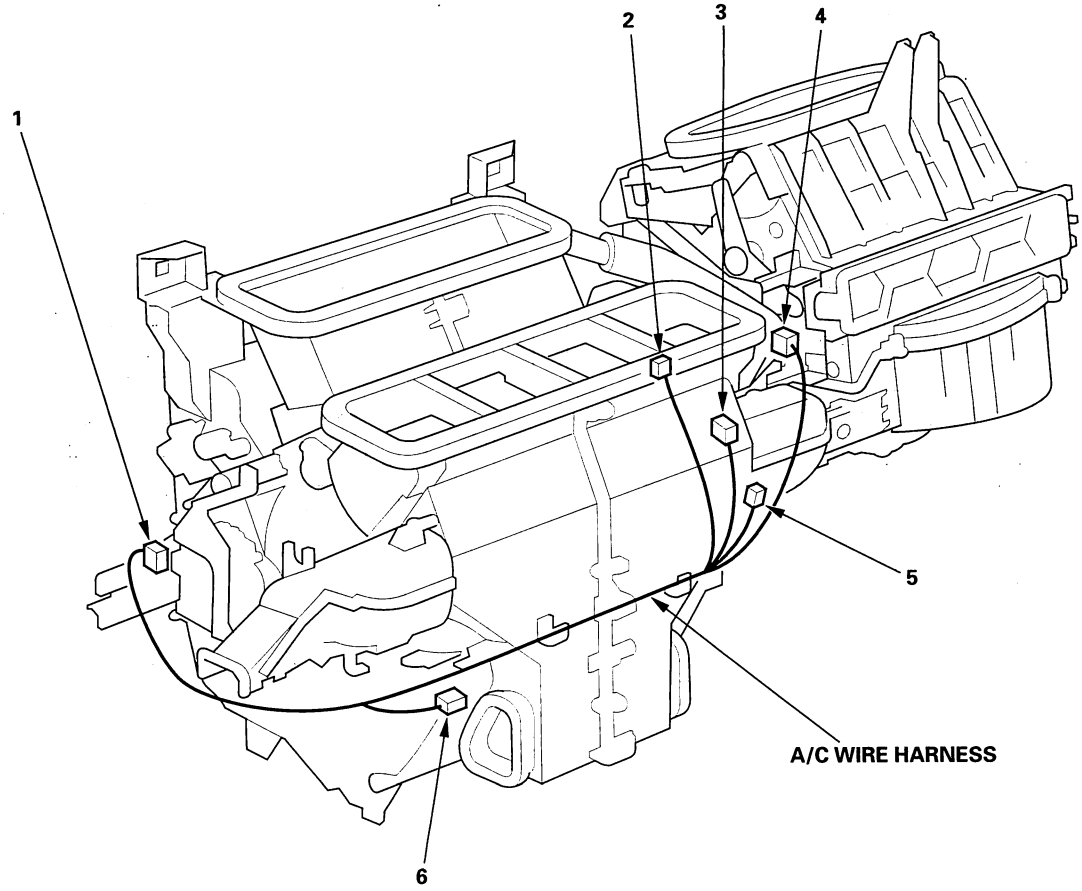

Protected by AR

Fuse/Relay Boxes

Connector to Fuse/Relay Box Index

Under-hood Fuse/Relay Box

Socket	Ref	Terminal	Connects to
A/C compressor clutch relay	2	4	
A/C condenser fan relay	15	4	
A (ELD unit)	5	3	Engine compartment wire harness (see page 22-26)
B	7		Not used
Blower motor relay	1	4	
C	8	2	Engine compartment wire harness (see page 22-26)
D	4	9	Engine compartment wire harness (see page 22-26)
E	9	16	Engine compartment wire harness (see page 22-26)
F	10	20	Front engine compartment wire harness (see page 22-22)
G	6	2	Engine compartment wire harness (see page 22-26)
H	11	14	Front engine compartment wire harness (see page 22-22)
I	13	10	Engine compartment wire harness (see page 22-26)
J	12	5	Engine compartment wire harness (see page 22-26)
Radiator fan relay	14	4	
Rear window defogger relay	3	4	
T101	16		Starter subharness (see page 22-15)
T102	17		Starter subharness (see page 22-15)

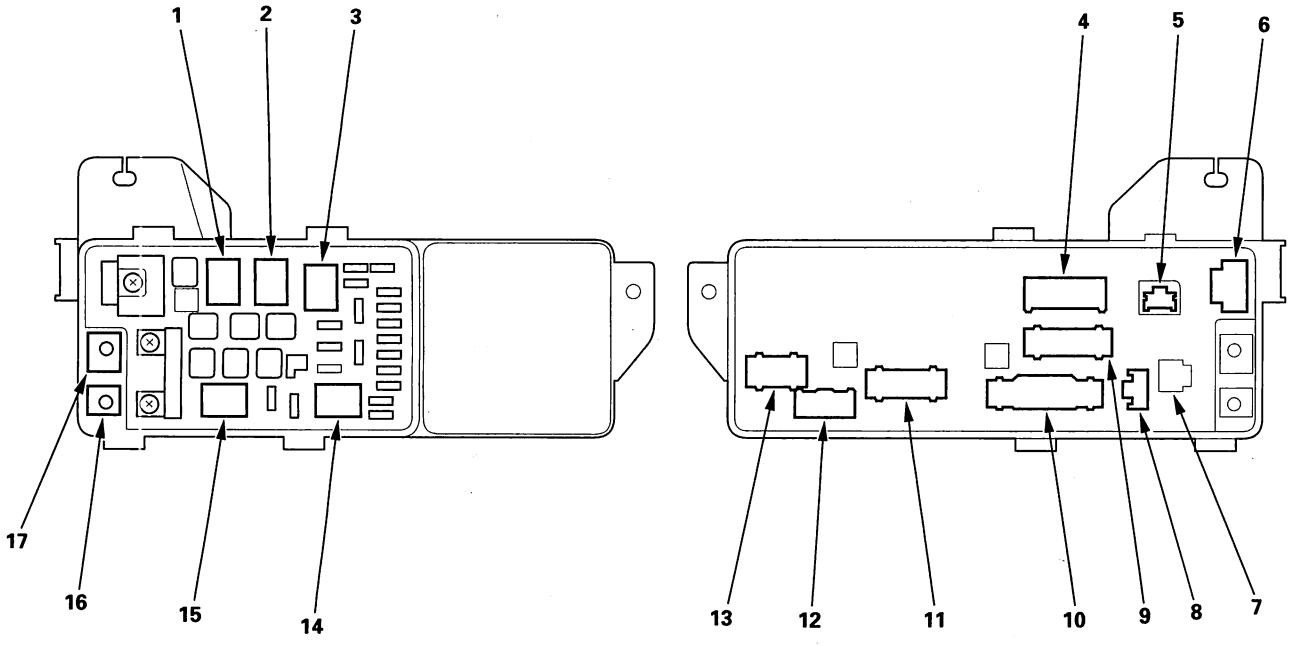

BACK

Protected by AR

Under-hood Multi-relay Box (Canada)

Socket	Ref	Terminal	Connects to
Daytime running lights relay (Canada)	1	5	Front engine compartment wire harness (see page 22-22)

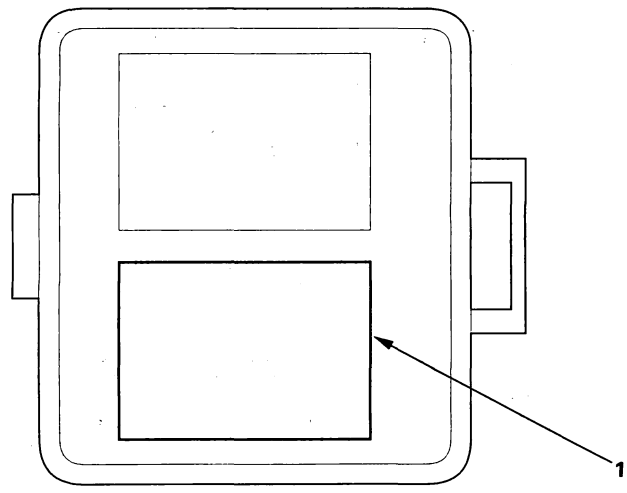

Protected by AR

Fuse/Relay Boxes

Connector to Fuse/Relay Box Index (cont'd)

Under-dash Fuse/Relay Box

Socket	Ref	Terminal	Connects to
A	6	6	Dashboard wire harness (see page 22-28)
Accessory power socket relay	19	4	
A/F sensor relay	20	4	
B	12	6	Engine compartment wire harness (see page 22-26)
C	11	12	Engine compartment wire harness (see page 22-26)
D	13	17	Engine compartment wire harness (see page 22-26)
E	8	16	Floor wire harness • 4-door (see page 22-36) • 2-door (see page 22-40)
F	9	14	Floor wire harness • 4-door (see page 22-36) • 2-door (see page 22-40)
G	14	6	Not used
H	15	14	Floor wire harness • 4-door (see page 22-36) • 2-door (see page 22-40)
I	10	5	Roof wire harness (see page 22-52)
Ignition coil relay	23	4	
J	27	21	Driver's door subharness (see page 22-54)
K	26	12	Driver's door subharness (see page 22-54)
M	25	3	MICS (MPCS) service check connector
N	2	45	Dashboard wire harness (see page 22-28)
P	17	30	Dashboard wire harness (see page 22-28)
PGM-FI main relay 1	21	4	
PGM-FI main relay 2	24	4	
Power window relay	22	4	
Q	16	14	Dashboard wire harness (see page 22-28)
R	3	2	Dashboard wire harness (see page 22-28)
S	5	2	Dashboard wire harness (see page 22-28)
Starter cut relay	18	4	
T	7	6	Optional connector
Turn signal/hazard relay	4	6	
X	1	39	Dashboard wire harness (see page 22-28)

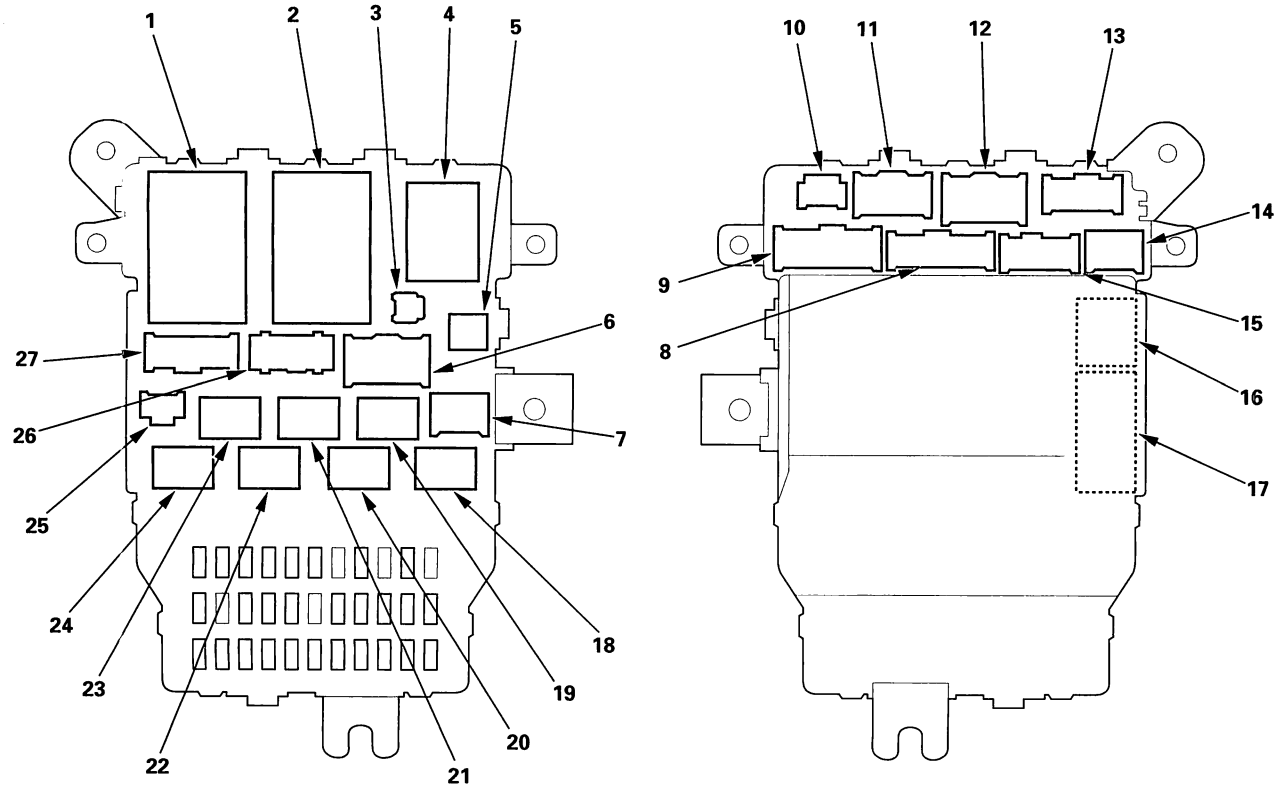

BACK

Protected by AR

Power Distribution

Fuse to Components Index

Under-hood Fuse/Relay Box

Fuse Number	Amps	Wire Color	Component(s) or Circuit(s) Protected
1	10 A	RED/YEL	Left headlight (low beam)
2	30 A	Internal connection	Relay control module (with climate control)
3	10 A	WHT/RED	Left headlight (high beam)
4	15 A	Internal connection	Audio-HVAC display module light, A/T gear position console light, Front side marker lights, Glove box light, Hazard warning switch light, License plate light, Moonroof switch light, Navigation unit, Relay control module, Seat heater switches light, Taillights
5	10 A	WHT	Right headlight (high beam)
6	10 A	RED/GRN	Right headlight (low beam)
7	7.5 A	Internal connection	Relay control module
8	15 A	WHT/RED	CMP sensor B, CKP sensor, ECM/PCM (2 wires), IAC valve, Injectors, Mass air flow meter, PGM-FI main relay
9	20 A	BLU/YEL	Condenser fan motor (via condenser fan relay)
10	—	—	Not used
11	20 A	BLU/BLK	Radiator fan motor (via radiator fan relay)
12	7.5 A	BLU/RED	A/C compressor clutch (via A/C compressor clutch relay)
13	20 A	RED	ABS modulator-control unit, Brake lights, ECM/PCM, High mount brake light, Ignition key light, Multiplex integrated control unit (MICU)
		Internal connection	Horns (via relay module), Relay module
14	40 A	BLK/YEL	Rear window defogger (via rear window defogger relay)
15	40 A	YEL	No. 5 through No. 9 fuses in the under-dash fuse/relay box
		Internal connection	No. 7 fuse in the under-hood fuse/relay box
16	15 A	WHT/BLK	Turn signal/hazard relay
17	30 A	WHT/RED	ABS modulator-control unit (MR +B)
18	20 A	WHT/GRN	ABS modulator-control unit (+B FSR)
19	40 A	GRN/WHT	No. 1 through No. 4 fuses in the under-dash fuse/relay box
20	40 A	BLU	No. 12 and No. 14 through No. 16 fuses in the under-dash fuse/relay box
21	40 A	WHT/BLU	Blower motor (via blower motor relay)
22	100 A	—	Battery, Power distribution
23	50 A (IG)	WHT	Ignition switch (BAT)
	50 A (P/W)	WHT/BLU	Power window relay, No. 24 through No. 28 fuses in the under-dash fuse/relay box

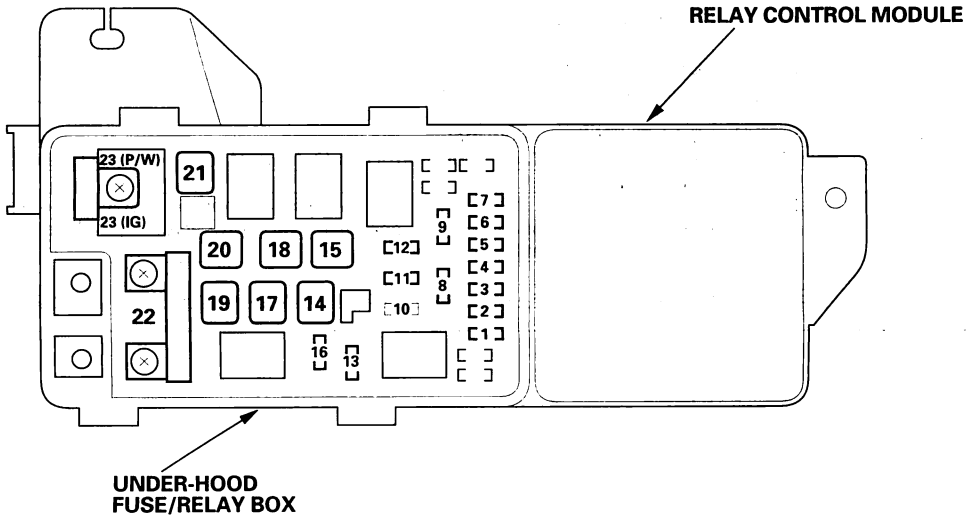

(cont'd)

Protected by AR

Power Distribution

Fuse to Components Index (cont'd)

Under-dash Fuse/Relay Box

Fuse Number	Amps	Wire Color	Component(s) or Circuit(s) Protected
1	—	—	Not used ('03-05 models)
	15 A	BLU/WHT	Throttle actuator control module ('06 model)
2	15 A	Internal connection	Ignition coil (IG) relay
		BLK/WHT	Ignition coils (via Ignition coil (IG) relay)
3	10 A	RED/WHT	Daytime running lights relay (Canada)
4	15 A	BLU/WHT	Air fuel ratio sensor
5	10 A	WHT/GRN	Audio unit, XM receiver ('04-06 models)
6	7.5 A	WHT/BLU	Ambient light, Ceiling light, Courtesy lights, Map lights, Trunk light, Vanity mirror lights
7	10 A	WHT/RED	Combination switch control unit, Door multiplex control unit, Gauge control module, Immobilizer control unit-receiver, Navigation display unit, Navigation unit
		Internal connection	Multiplex integrated control unit (MICU)
8	20 A	Internal connection	Multiplex integrated control unit (MICU)
9	15 A	WHT/RED	Front accessory power socket, Rear accessory power socket
10	7.5 A	WHT	Front passenger's weight sensor unit ('04-05 models), OPDS/ODS unit, SRS unit
11	30 A	GRN	Windshield wiper motor
12	—	—	Not used
13	—	—	Not used
14	20 A	WHT/BLU	Driver's power seat slide motor and front up-down motor (8-way adjustable), Driver's power seat up-down motor (2-way adjustable)
15	20 A	RED/BLK	Seat heaters and seat heater switches indicator light
16	20 A	WHT/RED	Driver's power seat recline motor and rear up-down motor (8-way adjustable)
17	—	—	Not used
18	15 A	BLK/RED	Alternator, CMP sensor A, Cruise control unit, ELD unit, Engine mount control solenoid, EVAP purge cut solenoid valve, EVAP vent shut solenoid valve, Mass air flow sensor, Secondary heated oxygen sensor
19	15 A	BLK/YEL	ECM/PCM, Immobilizer control unit-receiver
		YEL/GRN	Fuel pump (via PGM-FI main relay 2)
20	7.5 A	YEL/GRN	Windshield washer motor
21	7.5 A	YEL	Back-up lights, Combination switch control unit, Door multiplex control unit, Front passenger's power window switch indicator, Multiplex integrated control unit (MICU), Gauge control module, Relay control module, Navigation unit, Passenger's airbag cutoff indicator ('04-06 models), Shift lock solenoid (A/T)
22	10 A	WHT/RED	SRS unit
23	7.5 A	Internal connection	ECM/PCM (via A/F sensor relay)
24	20 A	YEL/RED	Left rear power window motor (4-door)
25	20 A	YEL/BLU	Right rear power window motor (4-door)
26	20 A	GRN/BLK	Front passenger's power window motor
27	20 A	GRN/WHT	Driver's power window motor
28	20 A	GRN	Moonroof motor, Moonroof control unit (2-door), Moonroof open/close relays (4-door)
29	—	—	Not used
30	7.5 A	BLK/YEL	A/C compressor clutch relay, Audio-HVAC display module, Blower motor relay, Condenser fan relay, Power mirror defoggers (Canada), Power mirror actuator, Radiator fan relay, Recirculation control motor, Seat heater relay
31	—	—	Not used
32	7.5 A	YEL/RED	Accessory power socket relay, Audio unit, Navigation display unit, Navigation unit
33	—	—	Not used

BACK

Protected by AR

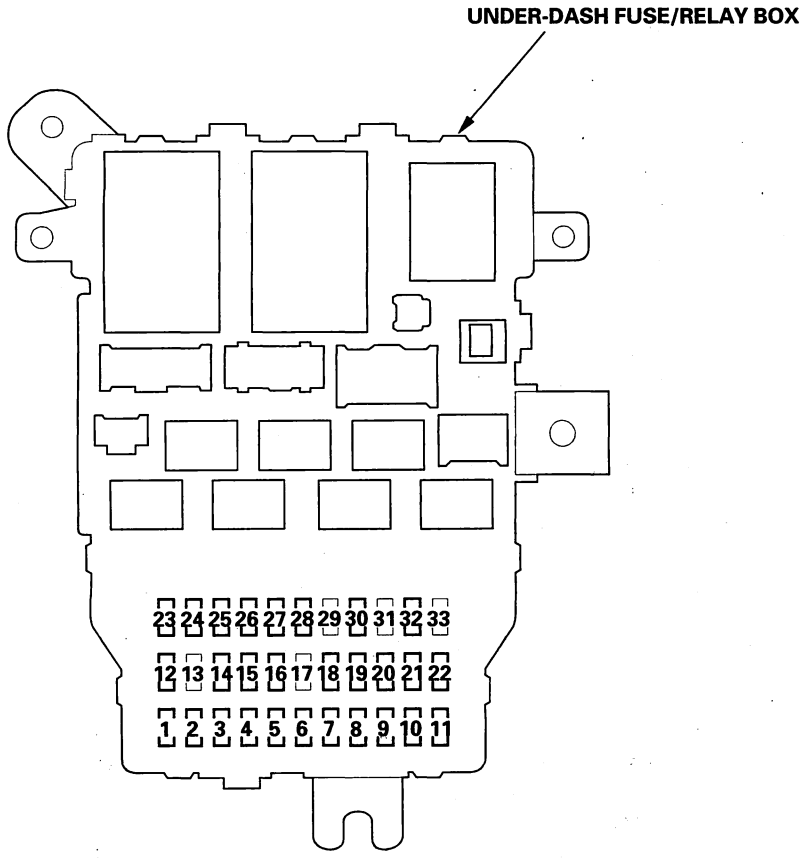

Protected by AR

Ground Distribution

Ground to Components Index

Ground	Component or circuit grounded
G1	Battery-terminal
G2	Engine mount bracket
G3	Transmission housing
G101	ECM/PCM (PG1 and PG2 are BLK; LG1 and LG2 are BRN/YEL), CMP sensor A, CKP sensor, Countershaft speed sensor (A/T), CMP sensor B, EGR valve, IAC valve, Ignition coils, Mainshaft speed sensor (A/T), Thermal joints, A/T clutch pressure control solenoid valve A (A/T), A/T clutch pressure control solenoid valve B (A/T), A/T clutch pressure control solenoid valve C (A/T), Transmission range switch (A/T), Rocker arm oil pressure switch (VTEC oil pressure switch), Rocker arm oil control solenoid (VTEC solenoid valve)
	Shielding between the ECM/PCM and knock sensor has BRN/YEL wire
G201	A/C condenser fan motor, Hood switch (with security), Right headlights, Right front turn signal/side marker lights
G202	Brake fluid level switch, Cruise control actuator, Power steering pressure (PSP) switch, Washer fluid level switch (Canada)
G203	ABS modulator-control unit
G301	Daytime running lights relay (Canada), Left headlights, Left front turn signal/side marker lights, Radiator fan motor, Radiator fan switch ('03-04 models)
G302	Blower motor relay, ELD unit, Relay control module, Windshield wiper motor
G401	Daytime running lights control unit (2 wires)
G501	Accessory power socket relay, Ambient light (with moonroof), Clutch interlock switch (M/T), Clutch pedal position switch (M/T with cruise control), Combination switch control unit, Cruise control unit, Data link connector (DLC), Driver's door lock knob switch, Driver's door key cylinder switch, Gauge control module, Ignition key switch, Key interlock solenoid, Moonroof switch, Moonroof control unit (2-door), Moonroof open and close relays (4-door), Power window master switch, Relay control module, Vanity mirror lights (G501 connects to G601 via under-dash fuse/relay box)
G502	Multiplex integrated control unit (MICU)
G503	Audio-HVAC subdisplay (with navigation), Audio-HVAC display module, Data link connector (DLC), Front accessory power socket, Front passenger's door lock knob switch, Front passenger's power window switch, Gauge control module, Glove box light, Memory erase signal (MES) connector, Navigation display unit, Power transistor, Rear accessory power socket, Right power mirror defogger (Canada), Park pin switch
	Shielding between the ECM/PCM, Gauge control module, and Navigation unit have BRN wire.
G504	Audio unit
G505	SRS unit
G506	Driver's seat heater switch, Front passenger's seat heater switch, Seat heater relay
G601	Driver's power seat switch (2 wires for 8-way adjustable, 1 wire for 2-way adjustable), Driver's seat belt switch, Driver's seat heater, Door multiplex control unit, Left power mirror defogger (Canada), Left rear door lock knob switch (with security) (4-door), Left rear power window switch (4-door), Multiplex integrated control unit (MICU), MICU service check connector, Power mirror switch, Turn signal/hazard relay (G601 connects to G501 via under-dash fuse/relay box.)
G602	Front passenger's seat belt switch, Front passenger's seat heater, Front passenger's weight sensor unit ('04-05 models), Navigation unit, OPDS/ODS unit, Right rear door lock knob switch (with security) (4-door), Right rear power window switch (4-door)
G603	Fuel pump
G701 (4-door)	Back-up lights, Brake lights, High mount brake light, License plate light, Taillights, Turn signal lights, Trunk latch switch, Trunk key cylinder switch
G701 (2-door)	High mount brake light, Left back-up light, Left brake light, Left taillight, Left turn signal light, License plate light, Trunk latch switch
G702 (2-door)	Right back-up light, Right brake light, Right taillight, Right turn signal light

BACK

Protected by AR

Under-hood Fuse/Relay Box

Removal and Installation

Removal

1. Make sure you have the anti-theft codes for the radio and the navigation system, then write down the customer's audio station presets and XM radio channel presets. Make sure the ignition switch is OFF.
2. Connect the HDS to the data link connector (DLC), and ground the SCS.
3. Disconnect the battery negative cable, then disconnect the positive cable, and wait at least 3 minutes.
4. Remove the under-hood multi-relay box (Canada) from the under-hood fuse/relay box.
5. Remove the screws (A) from the alternator and battery cable terminals.
6. Remove the two mounting bolts (B) from the under-hood fuse/relay box.
7. Remove the under cover from the under-hood fuse/relay box.
8. Disconnect the connectors from the under-hood fuse/relay box.

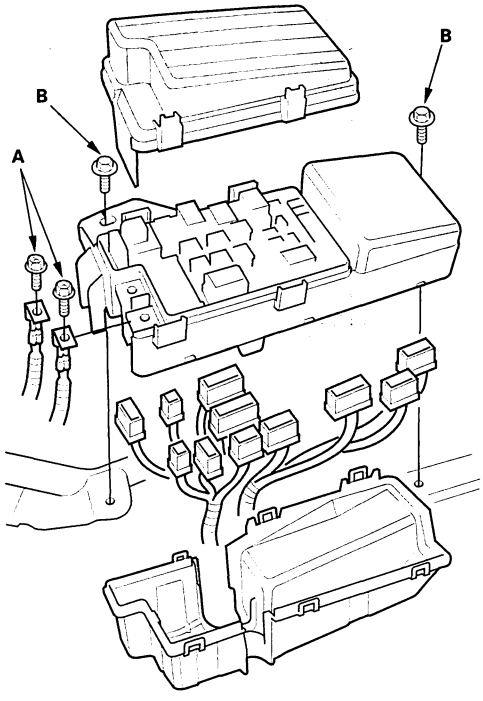

Installation

1. Connect the connectors to the under-hood fuse/relay box, then install the under-hood fuse/relay box in the reverse order of removal.
2. Install the removed parts in the reverse order of removal.
3. Connect the both positive cable and negative cable to the battery.
4. Do the ECM/PCM idle learn procedure (see page 11-316).
5. Reset the power window control unit (see page 22-232).
6. Enter the anti-theft codes for the radio and navigation system, then enter the customer's audio station presets and XM radio channel presets.
7. Confirm that all systems work properly.

Protected by AR

DTC Troubleshooting

B1055: Relay Control Module lost communication with MICU

B1056: Relay Control Module lost communication with MICU

B1057: Relay Control Module lost communication with MICU (door switch message)

B1058: Relay Control Module lost communication with Door Multiplex Control Unit (door lock switch message)

B1059: Relay Control Module lost communication with Door Multiplex Control Unit (panic message)

B1060: Relay Control Module lost communication with Gauge Control Module (VSP/NE message)

B1061: Relay Control Module lost communication with Gauge Control Module (A/T message)

B1062: Relay Control Module lost communication with Combination Switch Control Unit (headlight switch message)

B1063: Relay Control Module lost communication with Combination Switch Control Unit (wiper switch message)

1. Clear the DTCs using the HDS.
2. Cycle the ignition switch OFF then ON.
3. Check for DTCs by selecting the DTCs MENU (DTCs) from the HDS.

   Is DTC B1055, B1056, B1057, B1058, B1059, B1060, B1061, B1062 and/or B1063 indicated?

   YES—Go to step 4.

   NO—Intermittent failure, the B-CAN communication line is OK at this time.■
4. Check for DTCs other than those listed above.

   Are any other DTCs present?

   YES—Go to step 5.

   NO—Perform Relay Control Module Input Test (see page 22-132).
5. Find the chart that contains at least one retrieved DTC in column A and one retrieved DTC in column B. Perform the input test for the ECU listed in that chart.
   If no DTC from column B is found, then continue to Relay Control Module input test.■

Chart 1

A	B	ECU
B1055 B1056 B1057	B1157 B1159 B1255	MICU (see page 22-124)

Chart 2

A	B	ECU
B1058 B1059	B1006 B1010 B1160	Door Multiplex Control Unit (see page 22-129)

Chart 3

A	B	ECU
B1060 B1061	B1008 B1205 B1206 B1207	Gauge Control Module • '03-05 models, see page 22-127 • '06 model, see page 22-128

Chart 4

A	B	ECU
B1062 B1063	B1007 B1156 B1109 B1155	Combination Switch Control Unit (see page 22-131)

BACK

Protected by AR

Under-dash Fuse/Relay Box

Removal and Installation

SRS components are located in this area. Review the SRS component locations (see page 23-17) and the precautions and procedures (see page 23-19) before performing repairs or service.

Removal

1. Make sure you have the anti-theft codes for the radio and the navigation system, then write down the customer's audio station presets and XM radio channel presets. Make sure the ignition switch is OFF.
2. Connect the HDS to the data link connector (DLC), and ground the SCS.
3. Disconnect the battery negative cable, then disconnect the positive cable, and wait at least 3 minutes.
4. Remove the left front door sill trim and left kick panel (see page 20-90).
5. Disconnect the connectors from the fuse side of the under-dash fuse/relay box (A).

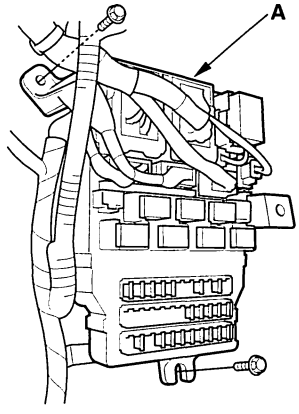

6. Remove the two mounting bolts and pull the fuse/relay box away from the body.
7. Disconnect the connectors and remove the under-dash fuse/relay box.

   NOTE: Some SRS harness connectors are spring-loaded lock type (see page 23-24).

8. Carefully remove the relays. Do not use pliers.

Installation

1. Install the removed relays.
2. Connect the connectors to the under-dash fuse/relay box, then install the under-dash fuse/relay box in the reverse order of removal.
3. Install the removed parts in the reverse order of removal.
4. Connect both the positive cable and negative cable to the battery.
5. Reset the power window control unit (see page 22-232).
6. Enter the anti-theft codes for the radio and navigation system, then enter the customer's audio station presents and XM radio channel presets.
7. Confirm that all systems work properly.

Protected by AR

Battery Test

⚠ WARNING

A battery can explode if you do not follow the proper procedure, causing serious injury to anyone nearby. Follow all procedures carefully and keep sparks and open flames away from the battery.

Use either a JCI or Bear ARBST tester, and follow the manufacturer's procedures. If you don't have one of these computerized testers, follow this conventional test procedure:

1. Be sure the temperature of the electrolyte is between 70 °F (21 °C) and 100 °F (38 °C).
2. Inspect the battery case for cracks or leaks.
   - If the case is damaged, replace the battery. ■
   - If the case looks OK, go to step 3.
3. Check the indicator EYE.
   - If the EYE indicates the battery is charged, go to step 4.
   - If the EYE indicates a low charge, go to step 7.
4. Apply a 300 amp load for 15 seconds to remove the surface charge.
5. Wait 15 seconds, then apply a test load of 280 amps for 15 seconds.
6. Record battery voltage.
   - If voltage is above 9.6 volts, the battery is OK. ■
   - If voltage is below 9.6 volts, go to step 7.
7. Charge the battery on High (40 amps) until the EYE shows the battery is charged, plus an additional 30 minutes. If the battery charge is very low, it may be necessary to bypass the charger's polarity protection circuitry.
   - If the EYE indicates the battery is charged within three hours, the battery is OK. ■
   - If the EYE indicates the battery is not charged within three hours, replace the battery. ■

BACK

Protected by AR

Power Relay Test

Use this chart to identify the type of relay, then do the test listed for it.

NOTE: For the turn signal/hazard relay input test (see page 22-214).

Relay	Test
A/C compressor clutch relay	Normally-open type
Accessory power socket relay	
Blower motor relay	
A/C condenser fan relay	
Ignition coil relay	
Air fuel ratio sensor relay	
PGM-FI main relay 1, 2	
Power window relay	
Radiator fan relay	
Rear window defogger relay	
Starter cut relay	
Throttle actuator control module relay	
Daytime running lights relay (Canada)	Five-terminal type
Moonroof close relay	
Moonroof open relay	
Seat heater relay	

Normally-open type

Check for continuity between the terminals.

- There should be continuity between the No. 1 and No. 2 terminals when power and ground are connected to the No. 3 and No. 4 terminals.
- There should be no continuity between the No. 1 and No. 2 terminals when power is disconnected.

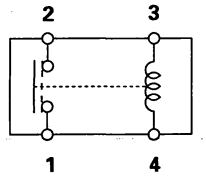

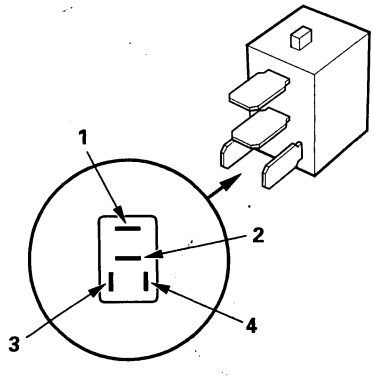

(cont'd)

Protected by AR

Power Relay Test (cont'd)

Five-terminal type B

Check for continuity between the terminals.

- There should be continuity between the No. 1 and No. 2 terminals when power and ground are connected to the No. 3 and No. 5 terminals.
- There should be continuity between the No. 1 and No. 4 terminals when power is disconnected.

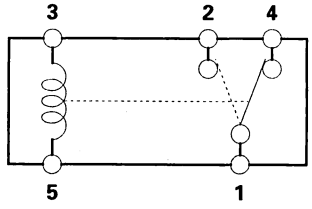

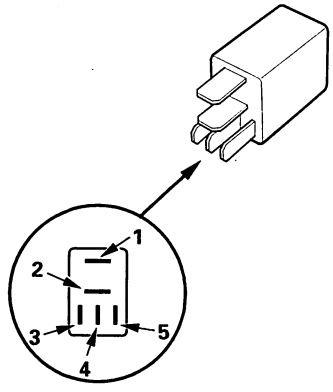

BACK

Protected by AR

Ignition Switch

Test

SRS components are located in this area. Review the SRS component locations (see page 23-17) and the precautions and procedures (see page 23-19) before performing repairs or service.

1. Make sure you have the anti-theft code for the radio and the navigation system, then write down the customer's audio station presets and XM radio channel presets. Make sure the ignition switch is OFF.
2. Connect the HDS to the date link connector (DLC), and ground the SCS.
3. Disconnect the battery negative cable.
4. Remove the left front door sill trim and left kick panel (see page 20-90).
5. Disconnect the 6P connector from the driver's under-dash fuse/relay box.

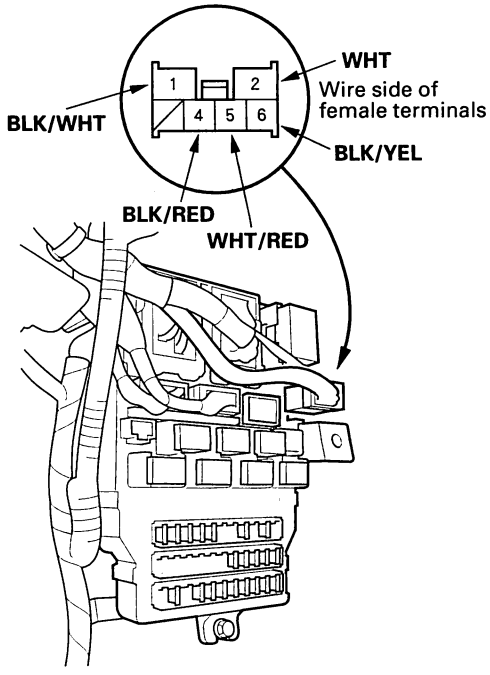

6. Check for continuity between the terminals in each switch position according to the table.

Terminal / Position	WHT/ RED (ACC)	WHT (BAT)	BLK/ YEL (IG1)	BLK/ RED (IG2)	BLK/ WHT (ST)
O (LOCK)					
I (ACC)	○——	——○			
II (ON)	○——	——○——	——○——	——○	
III (START)		○——	——○——	————	——○

7. If the continuity checks do not agree with the table, replace the steering lock.
8. After reconnecting the battery, enter the anti-theft code for the radio and the navigation system, then enter the customer's audio station presets and XM radio channel presets.
9. Do the power window control unit reset procedure (see page 22-232).

Protected by AR

Multiplex Integrated Control System (MICS)

Component Location Index

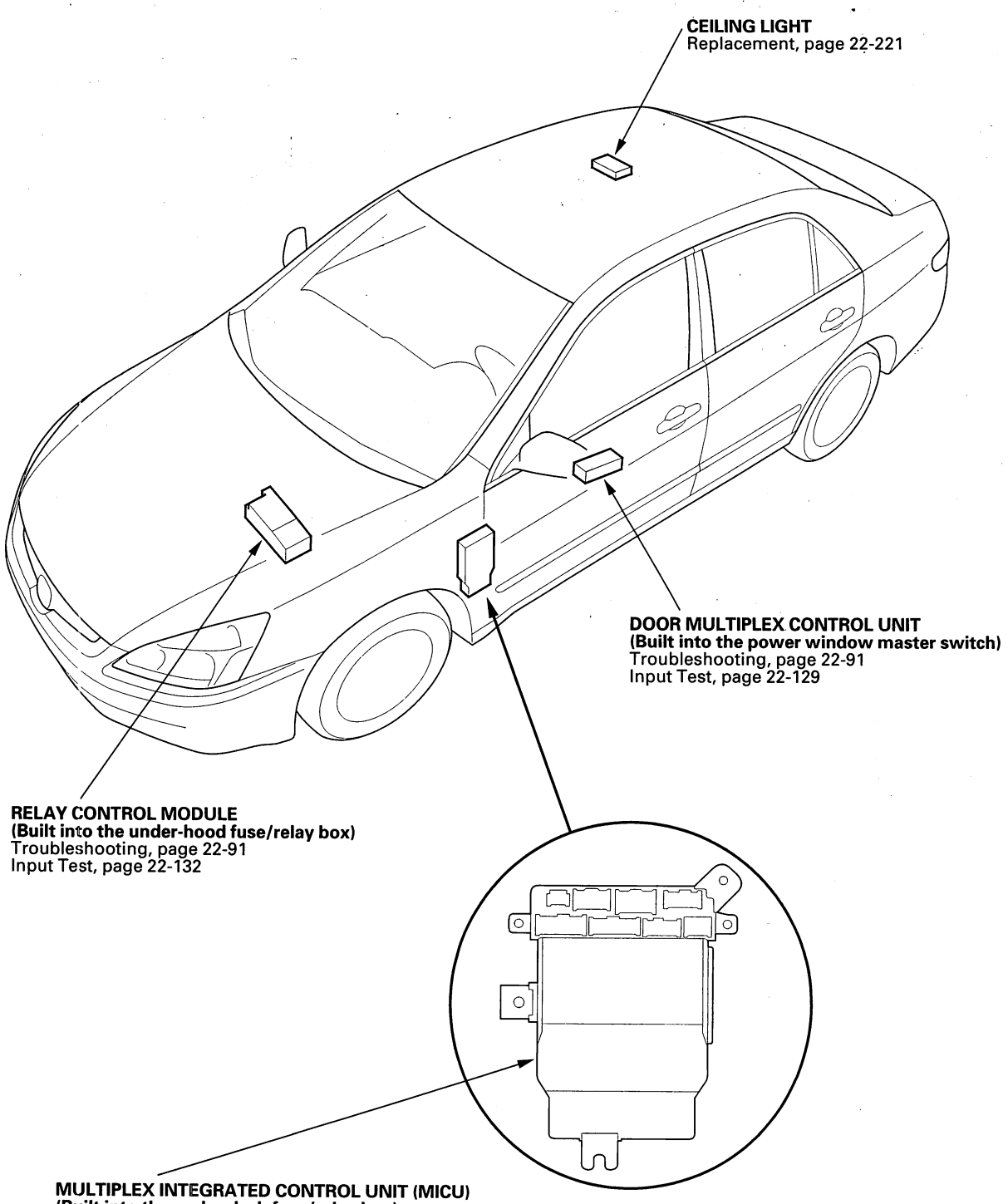

BACK

Protected by AR

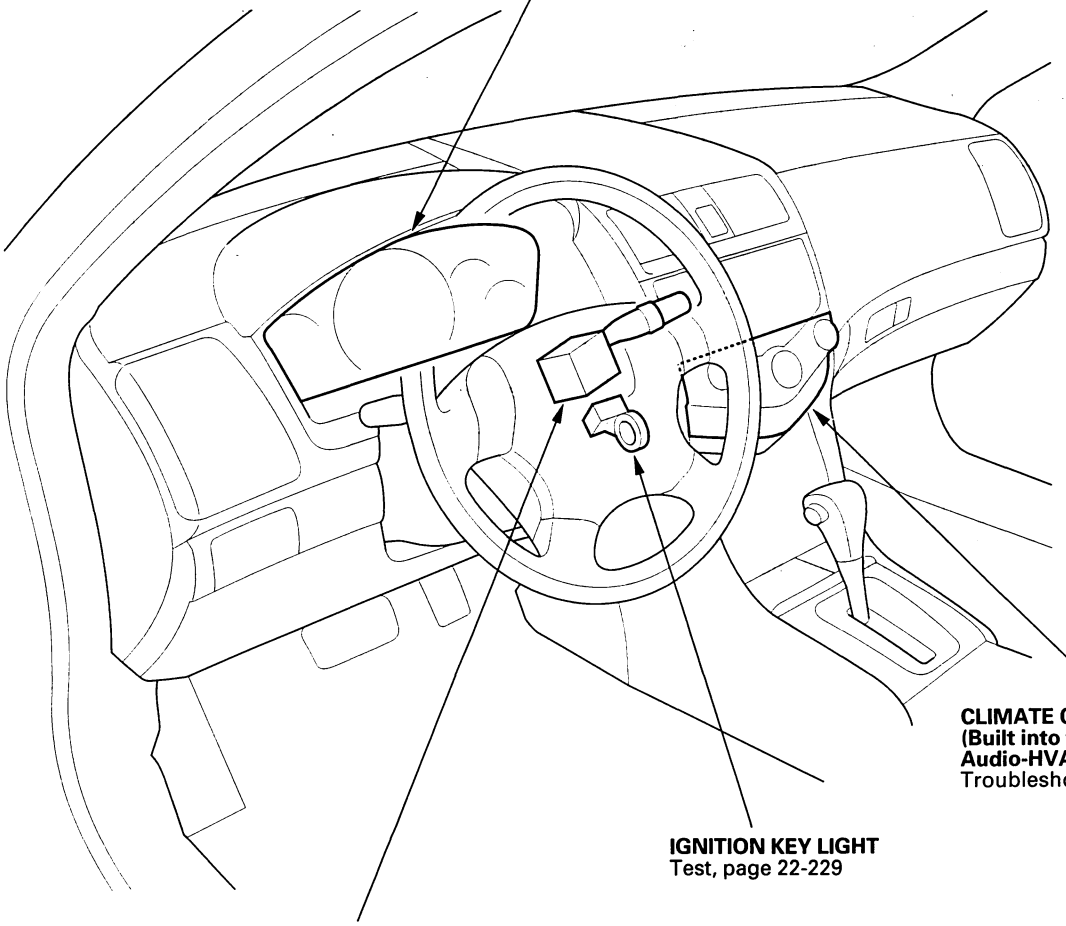

GAUGE CONTROL MODULE
Troubleshooting, page 22-91
Self-diagnostic Procedure, page 22-259
Input Test, page 22-127 ('03-05 models)
or page 22-128 ('06 model)

CLIMATE CONTROL UNIT
(Built into the
Audio-HVAC display module)
Troubleshooting, page 22-91

IGNITION KEY LIGHT
Test, page 22-229

COMBINATION SWITCH CONTROL UNIT
(Built into the wiper/washer switch)
Troubleshooting, page 22-91
Input Test, page 22-131

Protected by AR

Multiplex Integrated Control System (MICS)

System Description

Body Controller Area Network (B-CAN) and Fast Controller Area Network (F-CAN)

Fast controller Area Network (F-CAN) and Body Controller Area Network (B-CAN) share information between multiple Electronic Control Units (ECUs). B-CAN communication moves at a slower speed for convenience related items, and for other functions. F-CAN information moves at a faster speed for "real time" functions such as fuel and emissions data. To allow both systems to share information, the Gauge Control Module translates information from B-CAN to F-CAN and from F-CAN to B-CAN.

The ECUs on the B-CAN and F-CAN transmit and receive information in the form of structured messages that may be received by several different ECUs on the network at one time. These message are transmitted and received across a communication circuit that consists of a single wire that is shared by all the ECUs on the circuit. Since messages on the F-CAN network are typically of higher importance, a second wire is used for communication circuit integrity monitoring. A backup circuit is also added to the headlight and wiper circuits on the B-CAN network in the event of a network wire or ECU failure that would effect the operation of the system.

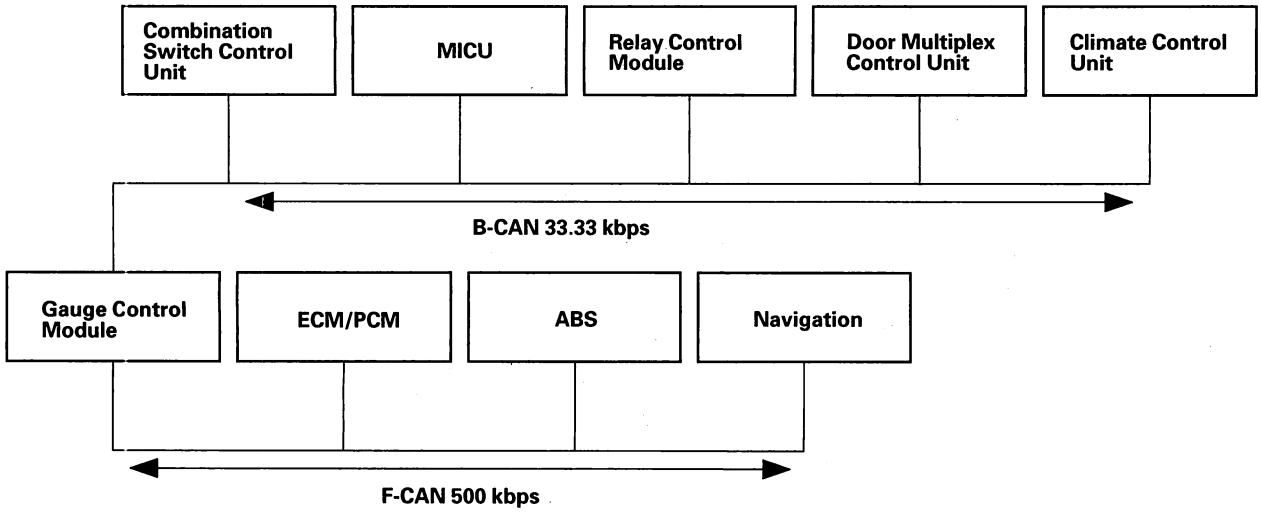

BACK

Protected by AR

Messages are transmitted by an ECU (that monitors an input) over the communication circuit. ECUs that use the message (information related to that input) are the receivers. For example, the Combination Switch Control Unit monitors the wiper switch. When the wiper switch is placed in the low speed position, the Combination Switch Control Unit transmits that message on the communication circuit. The Relay Control Module receives the message and turns on the wipers by providing a ground for the relay.

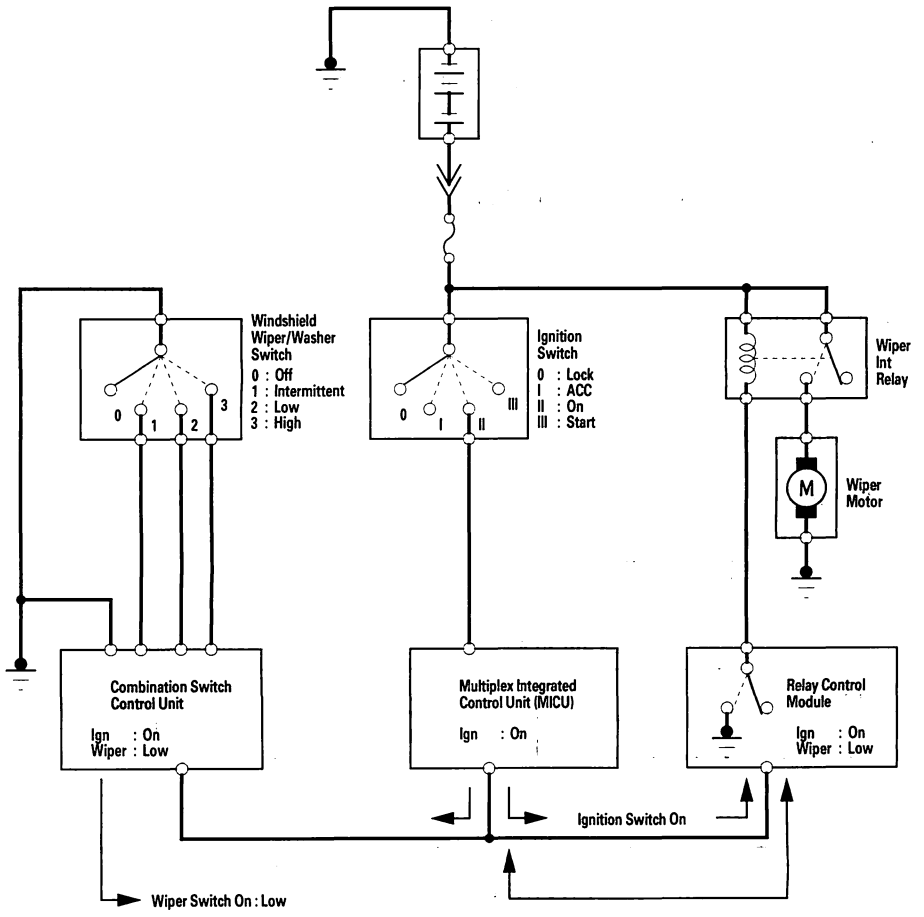

(cont'd)

Protected by AR

System Description (cont'd)

"Connected" ECUs

Several ECUs are connected to each of the two networks. The Gauge Control Module is part of both networks since it is the "Gateway" between them. Below is a list of ECUs and the network they are connected to.

B-CAN ECUs

- Gauge Control Module
- Relay Control Module
- Multiplex Integrated Control Unit (MICU)
- Door Multiplex Control Unit
- Combination Switch Control Unit
- Climate Control Unit
- Optional Security (LX model option)
- Optional Unit (B-CAN option)

F-CAN ECUs

- Gauge Control Module
- ECM/PCM
- Navigation Control Unit
- ABS

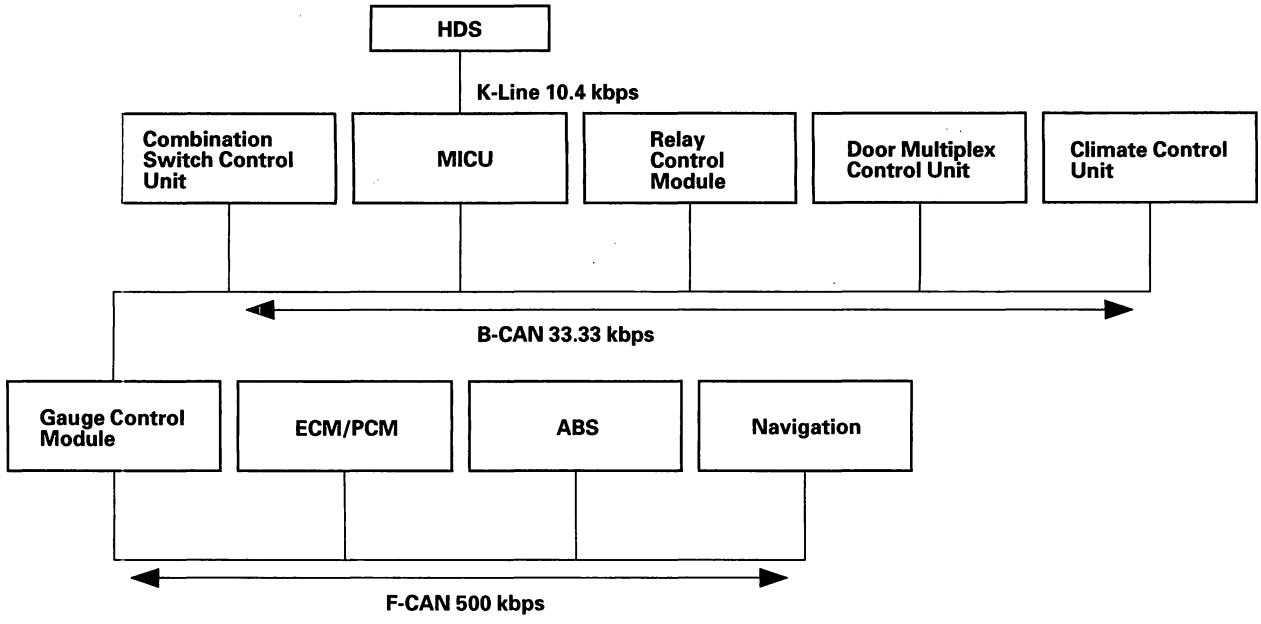

BACK

Protected by AR

Network "Loss of Communication" Error Checking

The B-CAN and F-CAN systems send messages to each other to check the integrity of the network communication circuit. They do this by sending a specific digital message out after an event. For example, turning the ignition switch to ON. After the switch to ON, all the ECUs on the communication circuit expect to receive a message from other specific units within a specified amount of time. If the message is not received, the ECU will transmit a DTC reporting that the control units did not communicate.

Example of communication circuit test

Normal circuit

1. Ignition switch turned ON.
2. The door multiplex control unit transmits a door switch signal.
3. The multiplex integrated control unit (MICU), relay control module and gauge control module receive the door lock switch signal.
4. Communication circuit test is passed.

Since the door lock switch message was received by all the ECUs expecting to receive a signal, the communication circuit between those units is OK. There are multiple signal sent and received by each ECU during this time to insure that the communication circuit is intact.

Failed circuit

5. Ignition switch is turned ON.
6. The door multiplex control unit transmits a door switch signal.
7. The multiplex integrated control unit (MICU), relay control module and gauge control module expect to receive the door lock switch signal, but since there is a break in the communication circuits, it is not received.
8. Each ECU that expects to receive the door lock switch signal from the door multiplex control unit will transmit DTCs for the signal that it did not receive.

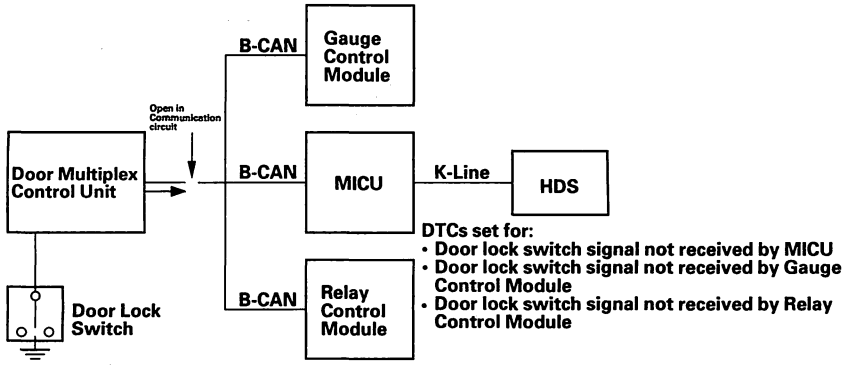

Since there is a break in the communication circuit, the door lock switch signal could not be received by the gauge control module, multiplex integrated control unit (MICU) or the relay control module. Each of these units will set "loss of communication" error codes for the signal(s) they did not receive. There may be multiple communication DTCs if the unit that has become disconnected from the network would normally transmit multiple messages during the communication line test. For example, the door multiplex control unit sends keyless panic signal and door lock switch signal during the communication circuit test.

Diagnostic Trouble Codes

There are three DTC types used by the CAN networks.

Internal error DTCs	The ECUs run internal checks. If one finds that there is an internal ECU problem, it will set an internal error DTC. Confirm that the battery and charging system are OK. If so, this indicates that the ECU needs to be replaced.
Loss of communication DTCs	Loss of communication DTCs (and Bus-off DTCs) are set when there is a problem with the communication between ECUs. This could be in the connections, the wiring, or the ECU (as called out in the DTC Troubleshooting index).
Signal error DTCs	The ECUs can run diagnostics on some input circuits to determine if that circuits is functioning properly (no opens or shorts). If a circuit falls the diagnostic test, a DTC will set (NOTE: Not all input circuits are tested for errors).

(cont'd)

Protected by AR

System Description (cont'd)

Troubleshooting the CAN circuit related problems

Using the HDS (Preferred method)

1. Go to B-CAN System Diagnosis Test Mode A to check for "Connected units" and DTCs (see page 22-91).
2. If no DTCs are retrieved, go to B-CAN System Diagnosis Test Mode C or D.

Without the HDS (Should be used only if HDS is unavailable)

3. Check for communication circuit problems using B-CAN System Diagnosis Test Mode 1 (see page 22-96).
4. Check for DTCs while in Mode 1 (see page 22-96).
5. Sort, and then troubleshoot the DTCs in the order below. Refer to the DTC troubleshooting Index for DTC descriptions.

   1st. Internal error and voltage failure DTCs

   2nd. Loss of communication DTCs

   3rd. Signal error DTCs

6. If no DTCs are retrieved, use B-CAN System Diagnosis Test Mode 2 to check all inputs related to failure (see page 22-96).

Loss of Communication DTC cross-reference chart

When an ECU is unable to communicate with the other ECUs on the circuit, the other units will set loss of communication DTCs. Use this chart to find the control unit that is not communicating.

7. Find the Transmitting Unit that is in the same row as all of the loss of communication DTCs retrieved.
8. Perform the input test for the transmitting unit.

Transmitting Unit	Message	Receiving Unit/Loss of Communication DTC					
		MICU	Relay Control Module	Door Multiplex Control unit	Gauge Control Module	Combination Switch Control Unit	Climate Control Unit
MICU	Alarm		B1056				
	MICU		B1055	RX	B1157	B1255	
	Door Switch		B1057	RX	B1159		
Relay Control Module	Relay Control Module	B1005			B1158		
Door Multiplex Control unit	Panic	B1010	B1059				
	Door Lock Switch	B1006	B1058		B1160		
Gauge Control Module	VSP/NE		B1060				B1205
	A/T	B1008	B1061				
	ENGTEMP						B1206
	ILLUMI						B1207
Combination Switch Control Unit	Headlight Switch	B1007	B1062		B1155		
	Wiper Switch	B1009	B1063		B1156		
PCM	Engine				B1168		
	A/T				B1169		

RX: Receiving unit does not set a loss of communication DTC.

BACK

Protected by AR

B-CAN System Switch Device Index

Combination Switch Control Unit	
Input signal	**Output signal/device**
Dimmer switch, Lighting switch, Passing switch, Turn signal switch, Wiper/washer switch, Intermittent dwell time controller.	None

Relay Control Module	
Input signal	**Output signal/Device**
A/C pressure switch, Climate control switch, Daytime running lights control (Canada), Hood switch, Horn switch, Windshield wiper motor.	Daytime running lights control (Canada), Headlight, Parking light, Horn, Windshield washer motor, Windshield wiper motor.

Door Multiplex Control Unit	
Input signal	**Output signal**
Driver's door key cylinder switch (lock/unlock), Driver's door lock knob switch (lock/unlock), Driver's door lock switch. Driver's power window switches (up, down, auto up, auto down), Passenger's power window switches (up, down), Driver's power window motor pulser.	Driver's power window motor, Passenger's power window switches, Power window relay control.

Multiplex Integrated Control Unit	
Input signal	**Output signal/Device**
Audio-HVAC display module security ground, Brake pedal position switch, Door switches, Ignition key cylinder switch, Park pin switch (A/T), Passenger's door lock knob switches (unlock), Passenger's door lock switch, Power window motor, Seat belt switch (unbuckled), Transmission range switch (P, R position), Trunk latch switch.	Door lock actuators, Hazard warning lights, Interior lights, Ignition key light, Key interlock solenoid, Turn signal lights, Moonroof relay, Trunk lid opener solenoid, Door courtesy lights, Daytime running lights.

(cont'd)

Protected by AR

System Description (cont'd)

Gauge Control Module	
Input signal	**Output signal/Device**
Dash lights brightness controller, Daytime running lights signal (Canada), Engine oil pressure switch signal, Washer fluid level switch signal (Canada), Parking brake switch, Brake fluid level switch, fuel level sensor, Select/Reset switch, Cruise control combination switch (set, cancel, resume, master).	Dash lights, Fuel gauge, Gauge lights, Indicator, LEDs, Speedometer, Tachometer, ECT gauge, Warning buzzer, Odometer/Outside temperature display.

Climate Control Unit	
Input signal	**Output signal/Device**
Evaporator temperature sensor, In-car temperature sensor, Outside air temperature sensor, Sunlight sensor Air mix motor position (Driver's and Passenger's), Mode motor position, Blower motor control feedback.	Air mix control motors (Driver's/Passenger's), Blower motor transistor, Mode control motor, Rear defogger relay, A/C Request, Recirculation motor.

BACK

Protected by AR

Troubleshooting - B-CAN System Diagnosis Test Mode A

NOTE:
- Check for engine DTCs (U-codes) with the HDS. If any U-codes are detected, find and repair the cause of code(s) before continuing with the diagnosis test.
- Perform this diagnosis first if the symptom is related to the B-CAN system.
- Always cycle the ignition switch within 3 seconds when prompted in the DTC troubleshooting procedures.

1. Make sure the system is related to B-CAN.

   - Gauge control module
   - Exterior lights
   - Turn signals
   - Entry light control
   - Interior lights
   - Safety indicators
   - Rear window defogger
   - Horns (security and panic)
   - Chimes (key, seatbelt and lights ON)
   - Power windows (key-off timer)
   - Moonroof timer (EX, EXL)
   - Wiper/washer
   - Security*1
   - Keyless entry
   - Power door locks
   - Climate control (EX, EXL)
   - Key interlock
   - Dash light brightness

   * 1: EX, EXL, LX-V6, Canada LX '06 model
   Canada SE

   Is the symptom related to the B-CAN system?

   YES—Go to step 2.

   NO—Go to the system troubleshooting for the system with the symptom. ■

2. Connect the Honda Diagnostic System (HDS) to the data link connector (DLC) 16P connector.

3. From BODY ELECTRICAL MENU, select connected units UNIT INFORMATION, and then select CONNECTED UNIT.

   - MICU
   - Door multiplex control unit
   - Gauge control module
   - Combination switch control unit
   - Relay control module
   - Climate control unit (EXL, EX-V6)

   NOTE:
   - If the unit is communicating with the scan tool, DETECT will be displayed.
   - If the unit is not communicating, "NOT AVAILABLE" will be displayed.

   Are all control units communicating with the HDS?

   YES—Go to step 4.

   NO—If any of them are not communicating, go to B-CAN System Diagnosis Test Mode B. If all units are not communicating, or only the MICU is communicating, go to DTC B1000troubleshooting (see page 22-116). ■

(cont'd)

Protected by AR

Troubleshooting - B-CAN System Diagnosis Test Mode A (cont'd)

4. Select the system that has the problem from the BODY ELECTRICAL DTCs MENU, then select DTCs.

   Are any DTCs indicated?

   YES—Go to step 5.

   NO—If the problem is related to one the following items, go to B-CAN System Diagnosis Test Mode C.

   - Exterior lights
   - Turn signals
   - Entry light control
   - Interior lights
   - Rear window defogger (climate control)
   - Horns (security and panic)
   - Power windows (key-off timer)
   - Moonroof timer (EX, EXL)
   - Wiper/washer
   - Power door locks

   NOTE: If the problem is related to one of the following items, go to the troubleshooting for that individual system.

   - Gauge control module
   - Safety indicators
   - Chimes (key, seat belt and lights ON)
   - Security (EX, EXL)
   - Keyless entry
   - Climate control (EX, EXL)
   - Key interlock
   - Dash light brightness
   - Audio System
   - Navigation

5. Record all DTCs and sort them by DTC type using the DTC troubleshooting Index.

6. Troubleshoot the DTC(s) in the following order:

   - Battery voltage DTCs.
   - Internal error DTCs.
   - Loss of communicator DTCs. Begin troubleshooting with the lowest number first (Example: if DTC B1006 and B1058 are retrieved, begin by troubleshooting B1006).
   - Signal error DTCs.

BACK

Protected by AR

Troubleshooting - B-CAN System Diagnosis Test Mode B

NOTE:
- Perform this diagnosis if any of the control units are not communicating (Not Available displayed in the HDS.) as found by the B-CAN system Diagnosis Test Mode A.
- Always cycle the ignition switch within 3 seconds when prompted in the DTC troubleshooting procedures.

1. Using the Honda Diagnostic System (HDS), select the system that has the symptom from the BODY ELECTRICAL MENU.

2. Select DTCs, and then check for loss of communication DTCs (use the DTC Troubleshooting Index to find the DTC type).

   Are loss of communication DTCs indicated?

   YES—Go to step 3.

   NO—Replace the MICU.■

3. Perform the input test for the unit not communicating with the HDS.

Unit not communicating
MICU (see page 22-124)
Door multiplex control unit (see page 22-129)
Gauge control module (see page 22-127 ('03-05 models) or page 22-128 ('06 models))
Relay control module (see page 22-132)
Climate control unit (see page 21-90)
Combination switch control unit (see page 22-131)

Protected by AR

Troubleshooting - B-CAN System Diagnosis Test Mode C

NOTE:
- Perform this diagnosis if a component that is controlled by the B-CAN system does not stop or does not turn off.
- If the component does not turn ON, go to B-CAN System Diagnosis Test Mode D.
- See the B-CAN system unit input/output index for a list of input and output devices and the control units that monitor the input and controls the output devices (see page 22-89).
- Always cycle the ignition switch within 3 seconds when prompted in the DTC troubleshooting procedures.

1. Check for DTCs by selecting the TEST MODE MENU from the Honda Diagnostic System (HDS).

   Are any DTCs indicated?

   YES—Go to B-CAN System Diagnosis Test Mode A. ■

   NO—Go to step 2.

2. Turn OFF the switch that controls the malfunctioning component.

3. Select DATA LIST from the TEST MODE MENU, and check the input of the switch that controls the component.

   Does the tester indicate the switch is OFF?

   YES—Go to step 4.

   NO—Go to step 6.

4. In the DATA LIST of, check the output signal of the malfunctioning component.

   Is the output signal OFF?

   YES—Go to step 5.

   NO—Replace the control unit that controls the device that will not turn OFF (see page 22-89). ■

5. Check the relay if applicable, then check for a short in the wire between the relay and the component, relay and control unit or the component and control unit.

   Are the relay and the wire harness OK?

   YES—Replace the control unit that controls the component that will not turn OFF. ■

   NO—Replace the relay or repair the wire harness. ■

6. Check the switch, then check for a short in the wire between the switch and the control unit that monitors the switch.

   Is the switch and wire harness OK?

   YES—Replace the control unit that monitors the switch. ■

   NO—Replace the switch or repair the wire harness. ■

BACK

Protected by AR

Troubleshooting - B-CAN System Diagnosis Test Mode D

NOTE:
- Perform this diagnosis a component that is controlled by the B-CAN system does not run or does not come on.
- If the component does not turn off or does not stop, go to B-CAN System Diagnosis Test Mode C.
- See the B-CAN system unit input/output index for a list of input and output devices and the control units that monitor the input and controls the output devices (see page 22-89).
- Always cycle the ignition switch within 3 seconds when prompted in the DTC troubleshooting procedures.

1. Check the fuse of the malfunctioning output device.

   Is the fuse OK?

   YES—Go to step 2.

   NO—Replace the fuse and recheck.■

2. Check for DTCs by selecting the TEST MODE MENU from the Honda Diagnostic System (HDS).

   Are any DTCs indicated ?

   YES—Go to B-CAN System Diagnosis Test Mode A.■

   NO—Go to step 3.

3. Turn ON the switch that controls the malfunctioning component.

4. Select DATA LIST from the TEST MODE MENU, and check output signal for the malfunctioning component.

   Is there an output signal?

   YES—Go to step 5.

   NO—Go to step 9.

5. Check the relay and ground, then check for an open or a short in the circuit for the malfunctioning component.

   Are the relay and circuit OK?

   YES—Go to step 6.

   NO—Replace the relay or repair the wire circuit.■

6. Perform the function test for the malfunctioning component.

   Does the output device pass the function test?

   YES—Go to step 7.

   NO—Replace the component.■

7. With the malfunctioning output device connected, connect a voltmeter between the malfunctioning output device and body ground on the wire that the control unit uses to control the output device circuit.

8. Select MISC. TEST from the TEST MODE MENU, and do the forced operation test of the malfunctioning component.

   Is there a change in voltage (12 V to 0 V or 0 V to 12 V)?

   YES—Replace the component.■

   NO—Replace the control unit that controls the malfunctioning component.■

9. Select DATA LIST from the TEST MODE MENU, and make sure the switch signal input for the malfunctioning system indicates a change when operated.

   Does the switch input indicated ON when the switch is ON?

   YES—Replace the control unit that controls the malfunctioning component.■

   NO—Go to step 10.

10. Check the switch and its ground (if applicable), then check for an open or a short in the wire between the switch and the control unit that monitors it.

    Is the switch and the wire harness OK?

    YES—Replace the control unit that monitors the switch.■

    NO—Replace the switch or repair the wire harness.■

Protected by AR

Troubleshooting - B-CAN System Diagnosis Test Mode 1 and Test Mode 2 (without the HDS)

1. Check the No. 7 (10 A) fuse and No. 21 (7.5 A) fuse in the under-dash fuse/relay box.

   Are the fuses OK?

   YES—Go to step 2.

   NO—Find and repair the cause of the blown fuse. ■

2. Remove the left kick panel (see page 20-90).

3. Turn the ignition switch ON (II).

4. Connect the MPCS Service connector (A) to the MCIC socket (B) in the under-dash fuse/relay box.

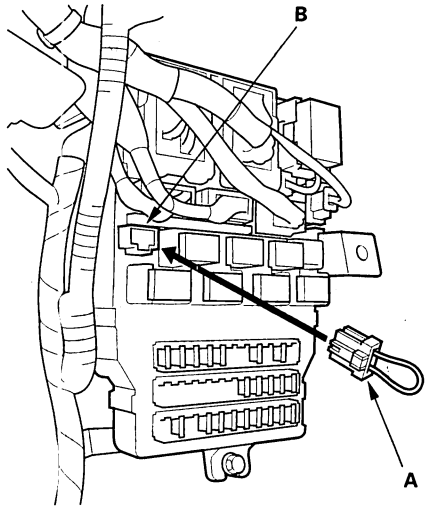

5. Wait 5 seconds, then watch the ceiling light.

6. If there is a DTC, the ceiling light and ignition switch light will blink, pause, then repeat the DTC as long as the ignition switch ON (II).

   Is there a repeating DTC?

   YES—Count the blinks, then go to step 7.

   NO—Go to step 8.

7. About 1 second after you go into self-diagnosis Mode 1, the ceiling light will indicate the DTC, and repeat it every 3 seconds. If there is more than one DTC, the system will indicate them in ascending order, beginning from the DTC with the lowest numerical value. Troubleshoot the DTCs as indicated below:

   - DTC 2, 3, 4 and 5 simultaneously: Check for an open in the BLU wire between multiplex integrated control unit D11 and relay module I7, BRN/RED wire between multiplex integrated control unit J4 and door multiplex control unit No. 16, LT GRN wire between multiplex integrated control unit X27 and combination switch control unit No. 4, BRN/YEL wire between multiplex integrated control unit N28 and gauge control module terminal No. 25. If the wire is OK, substitute a known-good under-dash fuse/relay box (multiplex integrated control unit), under-hood fuse/relay box, power window master switch, wiper/washer switch and gauge one at a time, in that order, and recheck for the DTCs after each substitution.
   - DTC 1 only: Go to MICU input test (see page 22-124).
   - DTC 2 only (no other DTCs present): Go to the relay module input test. If all inputs are OK, substitute a known-good relay module and then a MICU, one at a time, and then check for DTCs. If a DTC recurs after a substitution, replace that unit.
   - DTC 3 only (no other DTCs present): Go to the door multiplex control unit input test. If all inputs are OK, substitute a known-good door multiplex control unit and then a MICU, one at a time, and then check for DTCs. If a DTC recurs after a substitution, replace that unit.
   - DTC 4 only (no other DTCs present): Go to the combination switch control unit input test. If all inputs are OK, substitute a known-good wiper/washer switch and then a MICU, one at a time, and then check for DTCs. If a DTC recurs after a substitution, replace that unit.
   - DTC 5 only (no other DTCs present): Go to the gauge control module input test. If all inputs are OK, substitute a known-good gauge control module and then a MICU, one at a time, and then check for DTCs. If a DTC recurs after a substitution, replace that unit.

BACK

Protected by AR

DTC	Cause
1	The MICU cannot receive signals from the bus communication line.
2	The MICU cannot receive signals from the relay module communication line.
3	The MICU cannot receive signals from the power window communication line.
4	The MICU cannot receive signal from the combination switch communication line.
5	The MICU cannot receive signals from the gauge control module.

8. Check for B-CAN DTCs indicated by the gauge control module while still in Test Mode 1 (see page 22-96).

   Are any DTCs indicated?

   YES—Go to step 9.

   NO—Go to step 11.

9. Record all DTCs and sort them by type using the DTC Troubleshooting Index.

10. Troubleshoot the DTCs in the following order:

    - Battery voltage DTCs
    - Internal error DTCs
    - Loss of communication DTCs (begin with the lowest number first; for example, if B1006 and B1059 are retrieved, troubleshoot B1006 first)
    - Signal error DTCs

11. Remove the MPCS service connector from the under-dash fuse/relay box socket for 5—10 seconds, then re-insert it.

    NOTE: If the MPCS connector is disconnected for too short or too long of a time, or the ignition switch is turned OFF, the system will return to Test Mode 2.

12. In the list of circuits that can be checked in Test Mode 2. Operate the switch that is most closely related to the problem. If the circuit is OK, the ceiling light will blink once. If the circuit is faulty, there will be no indication.

MICU

Item
Driver's door switch (OPEN)
Front passenger's door switch (OPEN)
Left rear door switch (OPEN)
Right rear door switch (OPEN)
Trunk latch switch (OPEN)
Front passenger's door lock knob switch (UNLOCK)*
Left rear door lock knob switch (UNLOCK)
Right rear door lock knob switch (UNLOCK)*
Audio-HVAC display module security ground (disconnected)
Driver's seat belt switch (unbuckled)
Brake pedal position switch (ON; brake pedal pressed)
Passenger's door lock switch (LOCK/UNLOCK)

* The front passenger's and right rear door lock knob switches must be in the locked position when beginning the test.

RELAY CONTROL MODULE

Item
Windshield wiper switch (AUTO STOP/PARK)
Hood switch (open)
A/C pressure switch/thermal protector (A/C ON)

COMBINATION SWITCH CONTROL UNIT

Item
Turn signal switch (LEFT)
Turn signal switch (RIGHT)
Combination light switch (ON; each position)
Dimmer switch (ON)
Passing switch (ON)
Windshield wiper switch (ON)
Intermittent wiper dwell timer
Windshield washer switch (ON)

(cont'd)

Protected by AR

Troubleshooting - B-CAN System Diagnosis Test Mode 1 and Test Mode 2 (without the HDS) (cont'd)

POWER WINDOW MASTER SWITCH (DOOR MULTIPLEX CONTROL UNIT)

Item
Power window master switch (Driver's Window UP)
Power window master switch (Driver's Window DOWN)
Power window master switch (Driver's Window AUTO UP)
Power window master switch (Driver's Window AUTO DOWN)
Power window master switch (Front Passenger's Window UP)
Power window master switch (Front Passenger's Window DOWN)
Power window master switch (Left Rear Window UP)
Power window master switch (Left Rear Window DOWN)
Power window master switch (Right Rear Window UP)
Power window master switch (Right Rear Window DOWN)
Driver's door key cylinder switch* (LOCK)
Driver's door key cylinder switch* (UNLOCK)
Driver's door lock switch (LOCK)
Driver's door lock switch (UNLOCK)
Driver's door lock knob switch (LOCK)
Driver's door lock knob switch (UNLOCK)

* A second key is necessary to check the key cylinder inputs.
Be sure to rotate the key cylinder switch two times to each position (lock and lock, unlock and unlock) to ensure the door lock knob switch is in the appropriate position.

GAUGE CONTROL MODULE

Item
Parking brake switch (ON; parking brake applied)
Cruise control SET/RESUME/CANCEL switch (ON; switch pressed)
Transmission range switch (P, R, N, D)
Washer fluid level switch (Canada)
Brake fluid level switch (fluid removed)

Does the ceiling light indicate proper switch operation?

YES—Go to function and input test for the system related to the failure. ■

NO—Repair the open, short, or replace the faulty switch. ■

BACK

Protected by AR

Gauge Control Module DTC Display

While in Test Mode 1, the DTCs which have been detected and stored individually by various B-CAN (Body-controller Area Network) units, will be shown one by one on the odometer display (A) when the communication between the Multiplex Integrated Control Unit (MICU) and the gauge control module is normal. To scroll through the DTCs, press the RESET knob on the gauge control module.

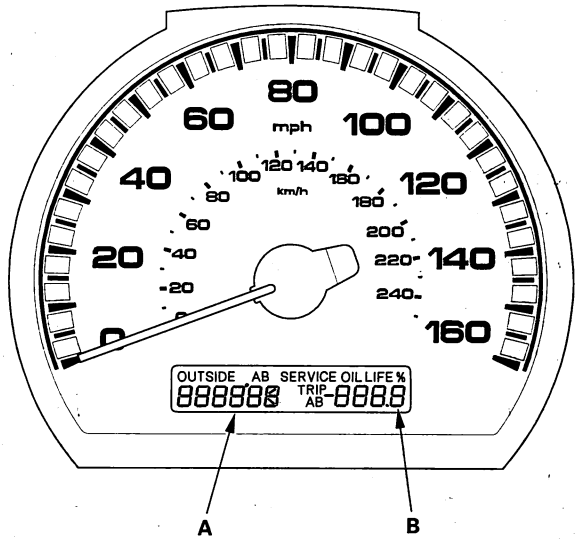

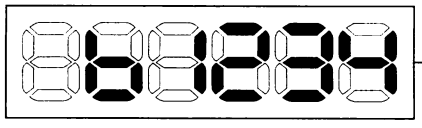

Displaying the DTC. The last four digits represent the DTC.

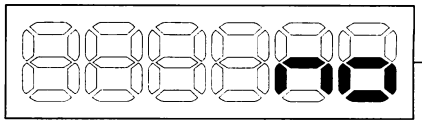

No DTCs detected.

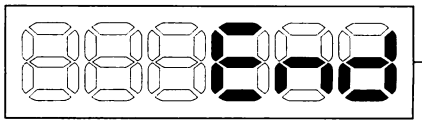

All the DTCs have been displayed.

The unit that has stored the code can be identified by the number shown on the trip meter display (B).

MICU	10
Relay Control Module	11
Door Multiplex Control Unit	30
Gauge Control Module	50
Climate Control Module	51
Combination Switch Control Unit	70

How to clear the DTC

While in Test Mode 1, press and hold down the RESET knob for more than 10 seconds.

Protected by AR

DTC Troubleshooting Index

DTC	Description	ECU	DTC type	Page
B1000	Communication circuit error (BUS Off)	MICU	Loss of Communication	(see page 22-116)
B1001	MICU Internal Error	MICU	Internal Error	(see page 22-117)
B1002	MICU Internal Error	MICU	Internal Error	(see page 22-117)
B1005	MICU lost communication with Relay Control Module	MICU	Loss of Communication	(see page 22-118)
B1006	MICU lost communication with Door Multiplex Control Unit (door lock switch message)	MICU	Loss of Communication	(see page 22-118)
B1007	MICU lost communication with Combination Switch Control Unit (headlight switch message)	MICU	Loss of Communication	(see page 22-119)
B1008	MICU lost communication with Gauge Control Module (A/T message)	MICU	Loss of Communication	(see page 22-119)
B1009	MICU lost communication with Combination Switch Control Module (wiper switch message)	MICU	Loss of Communication	(see page 22-120)
B1010	MICU lost communication with Door Multiplex Control Unit (panic message)	MICU	Loss of Communication	(see page 22-120)
B1026	Passenger's door lock switch malfunction	MICU	Signal Error	(see page 22-149)
B1027	Trunk key cylinder switch malfunction	MICU	Signal Error	(see page 22-150)
B1050	Communication circuit error (BUS Off)	Relay Control Module	Loss of Communication	(see page 22-116)

BACK

Protected by AR

DTC	Description	ECU	DTC type	Page
B1055	Relay Control Module lost communication with MICU	Relay Control Module	Loss of Communication	(see page 22-76)
B1056	Relay Control Module lost communication with MICU (alarm message)	Relay Control Module	Loss of Communication	(see page 22-76)
B1057	Relay Control Module lost communication with MICU (door switch message)	Relay Control Module	Loss of Communication	(see page 22-76)
B1058	Relay Control Module lost communication with Door Multiplex Control Unit (door lock switch message)	Relay Control Module	Loss of Communication	(see page 22-76)
B1059	Relay Control Module lost communication with Door Multiplex Control Unit (panic message)	Relay Control Module	Loss of Communication	(see page 22-76)
B1060	Relay Control Module lost communication with Gauge Control Module (VSP/NE message)	Relay Control Module	Loss of Communication	(see page 22-76)
B1061	Relay Control Module lost communication with Gauge Control Module (A/T message)	Relay Control Module	Loss of Communication	(see page 22-76)
B1062	Relay Control Module lost communication with Combination Switch Control Module (headlight switch message)	Relay Control Module	Loss of Communication	(see page 22-76)
B1063	Relay Control Module lost communication with Combination Switch Control Module (wiper switch message)	Relay Control Module	Loss of Communication	(see page 22-76)

(cont'd)

Protected by AR

DTC Troubleshooting Index (cont'd)

DTC	Description	ECU	DTC type	Page
B1075	Headlight switch malfunction	Relay Control Module	Signal Error	(see page 22-187)
B1076	Windshield wiper signal error	Relay Control Module	Signal Error	(see page 22-246)
B1077	Wiper switch (As) malfunction	Relay Control Module	Signal Error	(see page 22-247)
B1078	Daytime running lights malfunction (Canada)	Relay Control Module	Signal Error	(see page 22-188)
B1079	Daytime running lights malfunction (USA)	Relay Control Module	Signal Error	(see page 22-190)
B1080	Power supply circuit (IG1 line) input error for Relay Control Module and MICU	Relay Control Module	Signal Error	(see page 22-122)
B1100	Communication circuit error (BUS Off)	Door Multiplex Control Unit	Loss of Communication	(see page 22-116)
B1102	Door Multiplex Control Unit Internal Error	Door Multiplex Control Unit	Internal Error	(see page 22-121)
B1125	Driver's power window motor A pulse malfunction	Door Multiplex Control Unit	Signal Error	(see page 22-242)
B1126	Driver's power window motor B pulse malfunction	Door Multiplex Control Unit	Signal Error	(see page 22-242)
B1127	Driver's door lock key cylinder switch malfunction	Door Multiplex Control Unit	Signal Error	(see page 22-151)
B1128	Driver's door lock switch malfunction	Door Multiplex Control Unit	Signal Error	(see page 22-153)
B1129	Driver's door knob switch malfunction	Door Multiplex Control Unit	Signal Error	(see page 22-154)
B1140	Driver's power window position detect circuit malfunction	Door Multiplex Control Unit	Signal Error	(see page 22-242)
B1150	Communication circuit error (BUS Off)	Gauge Control Module	Loss of Communication	(see page 22-116)
B1152	Gauge Control Module Internal Error	Gauge Control Module	Internal Error	(see page 22-279)
B1155	Gauge Control Module lost communication with Combination Switch Control Module (headlight switch message)	Gauge Control Module	Loss of Communication	(see page 22-279)
B1156	Gauge Control Module lost communication with Combination Switch Control Module (wiper switch message)	Gauge Control Module	Loss of Communication	(see page 22-280)

BACK

Protected by AR

DTC	Description	ECU	DTC type	Page
B1157	Gauge Control Module lost communication with MICU	Gauge Control Module	Loss of Communication	(see page 22-281)
B1158	Gauge Control Module lost communication with Relay Control Module	Gauge Control Module	Loss of Communication	(see page 22-281)
B1159	Gauge Control Module lost communication with MICU (door switch message)	Gauge Control Module	Loss of Communication	(see page 22-282)
B1160	Gauge Control Module lost communication with Door Multiplex Control Unit (door lock switch message)	Gauge Control Module	Loss of Communication	(see page 22-282)
B1168	Gauge Control Module lost communication with ECM/PCM (engine messages)	Gauge Control Module	Loss of Communication	(see page 22-121)
B1169	Gauge Control Module lost communication with PCM (A/T messages)	Gauge Control Module	Loss of Communication	(see page 22-121)
B1175	Fuel gauge sending unit signal malfunction	Gauge Control Module	Signal Error	(see page 22-283)
B1177	Abnormal battery voltage (7.5 V)	Gauge Control Module	Signal Error	(see page 22-284)
B1178	F-CAN communication circuit error	Gauge Control Module	Loss of Communication	(see page 22-121)
B1200	Communication circuit error (BUS Off)	Climate Control Unit	Loss of Communication	(see page 22-116)
B1202	Climate Control Unit Internal Error	Climate Control Unit	Internal Error	(see page 21-115)
B1205	Climate Control Unit lost communication with Gauge Control Module (VSP/NE message)	Climate Control Unit	Loss of Communication	(see page 21-116)
B1206	Climate Control Unit lost communication with Gauge Control Module (ENGTEMP message)	Climate Control Unit	Loss of Communication	(see page 21-116)
B1207	Climate Control Unit lost communication with Gauge Control Module (ILLUMI message)	Climate Control Unit	Loss of Communication	(see page 21-116)
B1225	Open in the in-car temperature sensor circuit	Climate Control Unit	Signal Error	(see page 21-94)
B1226	Short in the in-car temperature sensor circuit	Climate Control Unit	Signal Error	(see page 21-95)
B1227	Open in the outside air temperature sensor circuit	Climate Control Unit	Signal Error	(see page 21-96)

(cont'd)

Protected by AR

DTC Troubleshooting Index (cont'd)

DTC	Description	ECU	DTC type	Page
B1228	Short in the outside air temperature sensor circuit	Climate Control Unit	Signal Error	(see page 21-97)
B1229	Open in the sunlight sensor circuit	Climate Control Unit	Signal Error	(see page 21-98)
B1230	Short in the sunlight sensor circuit	Climate Control Unit	Signal Error	(see page 21-99)
B1231	Open in the evaporator temperature sensor circuit	Climate Control Unit	Signal Error	(see page 21-100)
B1232	Short in the evaporator temperature sensor circuit	Climate Control Unit	Signal Error	(see page 21-101)
B1233	Open in the driver's air mix control motor circuit	Climate Control Unit	Signal Error	(see page 21-102)
B1234	Short in the driver's air mix control motor circuit	Climate Control Unit	Signal Error	(see page 21-103)
B1235	Problem in the driver's air mix control linkage, door, or motor	Climate Control Unit	Signal Error	(see page 21-104)
B1236	Open in the passenger's air mix control motor circuit	Climate Control Unit	Signal Error	(see page 21-112)
B1237	Short in the passenger's air mix control motor circuit	Climate Control Unit	Signal Error	(see page 21-114)
B1238	Problem in the passenger's air mix control linkage, door, or motor	Climate Control Unit	Signal Error	(see page 21-115)
B1239	Open or short in the mode control motor circuit	Climate Control Unit	Signal Error	(see page 21-105)
B1240	Problem in the mode control linkage, doors, or motor	Climate Control Unit	Signal Error	(see page 21-107)
B1241	Problem in the blower motor circuit	Climate Control Unit	Signal Error	(see page 21-107)
B1250	Communication circuit error (BUS Off)	Combination Switch Control Unit	Loss of Communication	(see page 22-116)
B1251	Combination Switch Control Unit internal error	Combination Switch Control Unit	Internal Error	(see page 22-123)
B1255	Combination Switch Control Unit lost communication with MICU	Combination Switch Control Unit	Loss of Communication	(see page 22-123)

BACK

Protected by AR

DTC	Description	ECU	DTC type	Page
B1275	Headlight switch OFF position circuit malfunction	Combination Switch Control Unit	Signal Error	(see page 22-192)
B1276	Headlight switch SMALL position circuit malfunction	Combination Switch Control Unit	Signal Error	(see page 22-192)
B1277	Headlight switch AUTO position circuit malfunction	Combination Switch Control Unit	Signal Error	(see page 22-192)
B1278	Headlight switch ON position circuit malfunction	Combination Switch Control Unit	Signal Error	(see page 22-192)
B1279	Dimmer switch circuit malfunction	Combination Switch Control Unit	Signal Error	(see page 22-193)
B1280	Turn signal switch circuit malfunction	Combination Switch Control Unit	Signal Error	(see page 22-193)
B1281	Windshield wiper switch MIST position circuit malfunction	Combination Switch Control Unit	Signal Error	(see page 22-250)
B1282	Windshield wiper switch INT (AUTO) position circuit malfunction	Combination Switch Control Unit	Signal Error	(see page 22-250)
B1283	Windshield wiper switch LOW position circuit malfunction	Combination Switch Control Unit	Signal Error	(see page 22-250)
B1284	Windshield wiper switch HIGH position circuit malfunction	Combination Switch Control Unit	Signal Error	(see page 22-250)

Protected by AR

Multiplex Integrated Control System (MICS)

Description

HDS Inputs and Commands

Input

System Menu	Data List	Data List Indication
Wiper	Brake Pedal Position Switch	Brake pedal pushed: ON Brake pedal released: OFF
	Windshield Wiper Park Switch (AUTO STOP/PARK)	Wipers in park position: ON Wipers in other position: OFF
	Windshield Wiper Switch (BACK-UP)	Wiper switch in HI position: ON Wiper switch in other position: OFF
	Windshield Wiper Switch (INTERMITTENT)	Wiper switch in INT position: ON Wiper switch in other position: OFF
	Windshield Wiper Switch (LOW)	Wiper switch in LOW position: ON Wiper switch in other position: OFF
	Windshield Wiper Switch (HIGH)	Wiper switch in HI position: ON Wiper switch in other position: OFF
	Windshield Wiper Switch (MIST)	Wiper switch in MIST position: ON Wiper switch in other position: OFF
	Windshield Washer Switch	Washer switch on: ON Washer switch off: OFF
	Windshield Wiper Motor HI Command	Wiper high speed command on: ON Wiper high speed command off: OFF
	Windshield Wiper Motor Lo Command	Wiper low speed command on: ON Wiper high low command off: OFF
	Windshield Washer Motor Command	Washer command on: ON Washer command off: OFF
	Intermittent Wiper Dwell Timer	Switch at short setting: 0.0 Switch at long setting: about 250
Power window	Driver's Door Switch	Door open: ON Door closed: OFF
	Front Passenger's Door Switch	Door open: ON Door closed: OFF
	P/W Main Switch	On: ON Off: OFF
	P/W Master Switch (Driver's window AUTO)	Auto position: ON Neutral position: OFF
	P/W Master Switch (Driver's window UP)	Up position: ON Neutral position: OFF
	P/W Master Switch (Driver's window DOWN)	Down position: ON Neutral position: OFF
	P/W Master SW. (Front Psngr's Wndw UP)	Up position: ON Neutral position: OFF
	P/W Master SW. (Front Psngr's Wndw DOWN)	Down position: ON Neutral position: OFF
	P/W Master Switch (Left Rear window UP)	UP position: ON Neutral position: OFF
	P/W Master Switch (Left Rear window DOWN)	Down position: ON Neutral position: OFF
	P/W Master Switch (Right Rear Wndw UP)	UP position: ON Neutral position: OFF
	P/W Master SW. (Right Rear Wndw DOWN)	Down position: ON Neutral position: OFF
	Driver's P/W Motor Pulse A	Window in motion: DETECT Window stopped: NONE
	Driver's P/W Motor Pulse B	Window in motion: DETECT Window stopped: NONE
	Driver's P/W Motor Command	OFF/UP/DOWN
	Front Passenger's P/W Motor Command	OFF/UP/DOWN
	Left Rear P/W Motor Command	OFF/UP/DOWN
	Right Rear P/W Motor Command	OFF/UP/DOWN
	P/W Relay Command	On command: ON Off command: OFF
	Moonroof Timer Command*	Enabled: ON Disabled: OFF

*: EX, EXL, EXSUL ('06 model), EXLSUL ('06 model)

BACK

Protected by AR

Input

System Menu	Data List	Data List Indication
Lighting	Driver's Door Switch	Door open: ON Door closed: OFF
	Ignition Switch (IG1)	Ignition ON (II): ON Other positions: OFF
	Horn Command	Horn on command: ON Horn off command: OFF
	Headlight Switch (OFF)	In off position: ON In other positions: OFF
	Headlight Switch (Parking)	In park light position: ON In other positions: OFF
	Headlight Switch (HEADLIGHT)	In headlight position: ON In other position: OFF
	Headlight Switch (BACK-UP)	In headlight position: ON In headlight position: OFF
	Headlight Switch (DIMMER)	In hi-beam position: ON In low-beam position: OFF
	Headlight Switch (PASSING)	Passing switch on: ON Passing switch off: OFF
	Turn Signal Switch (LEFT)	In left position: ON Neutral position: OFF
	Turn Signal Switch (RIGHT)	In right position: ON Neutral position: OFF
	DRL Signal (Canada)	
	Ignition Key Cylinder Light Command	Light on command: ON Light off command: OFF
	Interior Light Command	Light on command: ON Light off command: OFF
	Foot Light Command	Light on command: ON Light off command: OFF
	Left Turn Signal Command	Light on command: ON Light off command: OFF
	Right Turn Signal Command	Light on command: ON Light off command: OFF
	Hazard Signal Command	Hazard on command: ON Hazard off command: OFF
	DRL Relay command (Canada)	Relay on command: ON Relay off command: OFF
	Headlight Command	Light on command: ON Light off command: OFF
	Headlight High Beam Command	Light on command: ON Light off command: OFF
	Parking Light Command	Light on command: ON Light off command: OFF
	Fog Light Command	Light on command: ON Light off command: OFF
	Rear Defroster Command	Defroster on command: ON Defroster off command: OFF
	DRL Command (Canada)	DRL on command: ON DRL off command: OFF

(cont'd)

Protected by AR

Description (cont'd)

Input

System Menu	Data List	Data List Indication
Gauge	Driver's Door Switch	Door open: ON Door closed: OFF
	Front Passenger's Door Switch	Door open: ON Door closed: OFF
	Left Rear Door Switch	Door open: ON Door closed: OFF
	Right Rear Door Switch	Door open: ON Door closed: OFF
	Trunk Lid/Tailgate Switch*	Trunk open: ON Trunk closed: OFF
	Trunk Key Cylinder Switch (UNLOCK)*	Key turned to unlock: ON Neutral position: OFF
	Trunk Lid Release Command	Release command: ON Other: OFF
	Headlight Switch (OFF)	In off position: ON In other positions: OFF
	Headlight Switch (Parking)	In park light position: ON In other positions: OFF
	Headlight Switch (HEADLIGHT)	In headlight position: ON In other positions: OFF
	Headlight Switch (DIMMER)	In hi-beam position: ON In low-beam position: OFF
	Headlight Switch (PASSING)	Passing switch on: ON Passing switch off: OFF
	Turn Signal Switch (LEFT)	In left position: ON Neutral position: OFF
	Turn Signal Switch (RIGHT)	In right position: ON Neutral position: OFF
	DRL Signal (Canada)	
	Left Turn Signal Command	Light on command: ON Light off command: OFF
	Right Turn Signal Command	Light on command: ON Light off command: OFF
	Hazard Signal Command	Hazard on command: ON Hazard off command: OFF
	Headlight Command	N/A
	Headlight High Beam Command	Light on command: ON Light off command: OFF
	Parking Light Command	Light on command: ON Light off command: OFF
	Fog Light Command	Light on command: ON Light off command: OFF
	Brake Pedal Position Switch	Brake pedal pushed: ON Brake pedal released: OFF

*: EX, EXL

BACK

Protected by AR

Input

System Menu	Data List	Data List Indication
Gauge	Ignition Key Cylinder Switch	Key in ignition: ON Key out of ignition: OFF
	Driver's Seat Belt Buckle Switch	Unbuckled: ON Buckled: OFF
	A/T Gear Position Switch (R)	Shifter in reverse position: ON Shifter in other position: OFF
	Cruise Control Main Switch Input	Cruise main switch on: ON Cruise main switch off: OFF
	Engine Oil Pressure Switch	Engine off (low pressure): ON Engine running: OFF
	Washer Fluid Level Switch (Canada)	Fluid level low: ON Fluid level normal: OFF
	Gauge Select/Reset Switch	Reset button pushed: ON Reset button released: OFF
	Parking Brake Switch	Park brake lever pulled: ON Park brake lever released: OFF
	Brake Fluid Level Switch	Fluid level low: ON Fluid level normal: OFF
	Fuel Sending Unit Input 1	Fuel tank empty: 5 ° Fuel tank half full: 50 ° Fuel tank full: 100 °
	Fuel Sending Unit Input 2	Fuel tank empty: 4 V Fuel tank half full: 2.5 V Fuel tank full: 1 V
	ABS Indicator	Indicator command on: ON Indicator command off: OFF
	EBD (Brake Light) Indicator	Indicator command on: ON Indicator command off: OFF
	MIL Indicator	Indicator command on: ON Indicator command off: OFF
	Washer Fluid Level Indicator (Canada)	Indicator command on: ON Indicator command off: OFF
	DRL Indicator (Canada)	Indicator command on: ON Indicator command off: OFF
	Low Oil Pressure Indicator	Indicator command on: ON Indicator command off: OFF
	Charge System Indicator	Indicator command on: ON Indicator command off: OFF
	Cruise Main Switch ON Indicator	Indicator command on: ON Indicator command off: OFF
	Maintenance Required Indicator	Indicator command on: ON Indicator command off: OFF
	High Beam Indicator	Indicator command on: ON Indicator command off: OFF
	Parking Light ON Indicator	Indicator command on: ON Indicator command off: OFF
	Low Fuel Warning Indicator	Indicator command on: ON Indicator command off: OFF
	Security Indicator	Indicator command on: ON Indicator command off: OFF
	Fuel gauge Needle Command	Fuel tank empty: 5 ° Fuel tank half full: 50 ° Fuel tank full: 100 °

*: EX, EXL

(cont'd)

Protected by AR

Description (cont'd)

Input

System Menu	Data List	Data List Indication
Door lock	Driver's Door Switch	Door open: ON Door closed: OFF
	Front Passenger's Door Switch	Door open: ON Door closed: OFF
	Driver's Rear Door Switch	Door open: ON Door closed: OFF
	Passenger's Rear Door Switch	Door open: ON Door closed: OFF
	Driver's Door Lock Switch (LOCK)	Switch pushed: ON Switch released: OFF
	Driver's Door Lock Switch (UNLOCK)	Switch pushed: ON Switch released: OFF
	Front Psngr's Door Lock Switch (LOCK)	Switch pushed: ON Switch released: OFF
	Front Psngr's Door Lock Switch (UNLOCK)	Switch pushed: ON Switch released: OFF
	Driver's Door Lock Knob Switch (LOCK)	Knob up: OFF Knob down: ON
	Driver's Door Lock Knob Switch (UNLOCK)	Knob up: ON Knob down: OFF
	Front Psngr's Door Lock Knob Sw. (UNLOCK)*	Knob up: ON Knob down: OFF
	Driver's Rear Door Lock Knob Switch (UNLOCK)*	Knob up: ON Knob down: OFF
	Passenger's Rear Door Lock Knob Switch (UNLOCK)*	Knob up: ON Knob up: OFF
	Driver's Door Key Cylinder Switch (LOCK)	Key turned to lock: ON Neutral position: OFF
	Driver's Door Key Cylinder Switch (UNLOCK)	Key turned to unlock: ON Neutral position: OFF
	Door LOCK Command	Lock command: ON Other: OFF
	Door UNLOCK Command	Unlock command: ON Other: OFF
	Driver's Door UNLOCK Command	Unlock command: ON Other: OFF
Climate control	A/C Pressure Switch/Thermal Protector	A/C on: ON

*: EX, EXL

BACK

Protected by AR

Input

System Menu	Data List	Data List Indication
Keyless	Driver's Door Switch	Door open: ON Door closed: OFF
	Front Passenger's Door Switch	Door open: ON Door closed: OFF
	Driver's Rear Door Switch	Door open: ON Door closed: OFF
	Passenger's Rear Door Switch	Door open: ON Door closed: OFF
	Trunk Lid/Tailgate Switch*	Trunk open: ON Trunk closed: OFF
	Trunk Key Cylinder Switch (UNLOCK)	Key turned to unlock: ON Neutral position: OFF
	Driver's Door Lock Switch (LOCK)	Switch pushed: ON Switch released: OFF
	Driver's Door Lock Switch (UNLOCK)	Switch pushed: ON Switch released: OFF
	Front Psngr's Door Lock Sw. (LOCK)	Switch pushed: ON Switch released: OFF
	Front Psngr's Door Lock Sw. (UNLOCK)	Switch pushed: ON Switch released: OFF
	Driver's Door Lock Knob Switch (LOCK)	Knob up: OFF Knob down: ON
	Driver's Door Lock Knob Switch (UNLOCK)	Knob up: ON Knob down: OFF
	Front Psngr's Door Lock Knob Switch (UNLOCK)*	Knob up: ON Knob down: OFF
	Driver's Rear Door Lock Knob Switch (UNLOCK)*	Knob up: ON Knob down: OFF
	Passenger's Rear Door Lock Knob Switch (UNLOCK)*	Knob up: ON Knob down: OFF
	Driver's Door Key Cylinder Switch (LOCK)	Key turned to lock: ON Neutral position: OFF
	Driver's Door Key Cylinder Switch (UNLOCK)	Key turned to unlock: ON Neutral position: OFF
	Ignition Switch (IG1)	Ignition ON (II): ON Other positions: OFF
	Door LOCK Command	Lock command: ON Other: OFF
	Door UNLOCK Command	Unlock command: ON Other: OFF
	Driver's Door UNLOCK Command	Unlock command: ON Other: OFF
	Trunk Lid/Tailgate Release Command	Release command: ON Other: OFF

*: EX, EXL

(cont'd)

Protected by AR

Description (cont'd)

Input

System Menu	Data List	Data List Indication
Security	Driver's Door Switch	Door open: ON Door closed: OFF
	Front Passenger's Door Switch	Door open: ON Door closed: OFF
	Driver's Rear Door Switch	Door open: ON Door closed: OFF
	Passenger's Rear Door Switch	Door open: ON Door closed: OFF
	Trunk Lid/Tailgate Switch*	Trunk open: ON Trunk closed: OFF
	Trunk Key Cylinder Switch (UNLOCK)	Key turned to unlock: ON Neutral position: OFF
	Hood Switch*	Hood open: ON Hood closed: OFF
	Driver's Door Lock Switch (LOCK)	Switch pushed: ON Switch released: OFF
	Driver's Door Lock Switch (UNLOCK)	Switch pushed: ON Switch released: OFF
	Front Psngr's Door Lock Sw. (LOCK)	Switch pushed: ON Switch released: OFF
	Front Psngr's Door Lock Sw. (UNLOCK)	Switch pushed: ON Switch released: OFF
	Driver's Door Lock Knob Switch (LOCK)	Knob up: OFF Knob down: ON
	Driver's Door Lock Knob Switch (UNLOCK)	Knob up: ON Knob down: OFF
	Front Psngr's Lock Knob Sw. (UNLOCK)*	Knob up: ON Knob down: OFF
	Driver's Rear Door Lock Knob Switch (UNLOCK)*	Knob up: ON Knob down: OFF
	Passenger's Rear Door Lock Knob Switch (UNLOCK)*	Knob up: ON Knob down: OFF
	Ignition Switch (IG1)	Ignition ON (II): ON Other positions: OFF
	Horn Command	Horn on command: ON Horn off command: OFF
	Door LOCK Command	Lock command: ON Other: OFF
	Door UNLOCK Command	Unlock command: ON Other: OFF
	Driver's Door UNLOCK Command	Unlock command: ON Other: OFF
	Trunk Lid/Tailgate Release Command	Release command: ON Other: OFF
	Headlight Command	Light on command: ON Light off command: OFF
	Headlight High Beam Command	Light on command: ON Light off command: OFF
	Parking Light Command	Light on command: ON Light off command: OFF

*: EX, EXL

BACK

Protected by AR

Output

System	Description	Data List
Gauge	Speedometer displays value inputted	Speedometer
	Tachometer displays value inputted	Tachometer
	Fuel gauge displays value inputted	Fuel Level Gauge
	Temperature gauge displays value inputted	Engine Temperature Gauge
	Turns ABS indicator on/off	ABS Indicator
	Turns BRAKE indicator on/off	EBD Indicator
	Turns MIL on/off	MIL Status
	Turns washer level indicator on/off	Windshield Washer Fluid Level Indicator (Canada)
	Turns DRL indicator on/off	Daytime Running Lights Indicator (Canada)
	Turns Low oil pressure indicator on/off	Engine Oil Pressure Indicator
	Turns charging system indicator on/off	Charging System Indicator
	Turns cruise main switch indicator on/off	Cruise Control Main Switch Indicator
	Turns maintenance required indicator on/off	Maintenance Required Indicator
	Turns high beam indicator on/off	High Beam Indicator
	Turns light on indicator on/off	Lights On Indicator
	Turns low fuel indicator on/off	Low Fuel Indicator
	Turns security indicator on/off	Security Indicator
	Displays inputted value	Trip Meter
	Turns A/T P position indicator on/off	A/T Gear Position Indicator (P)
	Turns A/T R position indicator on/off	A/T Gear Position Indicator (R)
	Turns A/T N position indicator on/off	A/T Gear Position Indicator (N)
	Turns A/T D position indicator on/off	A/T Gear Position Indicator (D)
	Turns A/T D3 position indicator on/off	A/T Gear Position Indicator (D3)
	Turns A/T 2 position indicator on/off	A/T Gear Position Indicator (2)
	Turns A/T 1 position indicator on/off	A/T Gear Position Indicator (1)
	Turns TCS indicator on/off*	TCS Indicator
	Turns TCS activation Indicator on/off*	TCS Activation Indicator
	Controls gauge illumination brightness to inputted value	Illumination Brightness Control
	Turns key chime on/off	Key Chime
	Turns headlight chime on/off	Headlight Chime
	Turns seatbelt chime on/off	Seatbelt Reminder Chime
Lighting	Turns ignition key cylinder light on/off	Ignition Key Cylinder Light Command
	Turns interior light(s) on/off	Interior Light Command
	Turns foot light on/off	Foot Light Command
	Turns left turn signal light on/off	Left Turn Signal Command
	Turns right turn signal light on/off	Right Turn Signal Command
	Turns hazard lights on/off	Hazard Signal Command
	Turns DRL relay on/off	Daytime Running Lights Relay Command (Canada)
	Turns headlights on/off	Headlight Command
	Turns high beams on/off	Headlight High Beam Command
	Turns parking lights on/off	Parking Lights Command
	Controls DRL functions on command	Daytime Running Lights Signal (Canada)
Door lock	Controls lock and unlock functions on command	Door Lock Command
Keyless	Turns trunk lid/tailgate release command on/off	Trunk Lid/Tailgate Release Command
Climate control	Turns rear defroster on/off	Rear Defroster
Power window	Runs driver's window up	Driver's Window Up
	Runs driver's window down	Driver's Window Down
	Runs passenger's window up	Front Passenger's Window Up
	Runs passenger's window down	Front Passenger's Window Down
	Runs left rear window up	Left Rear Window Up
	Runs left rear window down	Left Rear Window Down
	Runs right rear window up	Right Rear Window Up
	Runs right rear window down	Right Rear Window Down
	Turns power window relay on/off	Power Window Relay Command
Wiper	Turns wiper low speed on/off	Windshield Wiper Motor Low Command
	Turns wiper high speed on/off	Windshield Wiper Motor High Command
	Turns washer on/off	Windshield Washer Command
	Turns wiper intermittent function on/off	Intermittent Wiper Dwell Timer
Security	Turns horns on/off	Horn Command
Climate control	Initiates climate control self test function	Climate Control Self Test (INSPECTION MENU)

*: '03-05 models

Protected by AR

Multiplex Integrated Control System (MICS)

Circuit Diagram

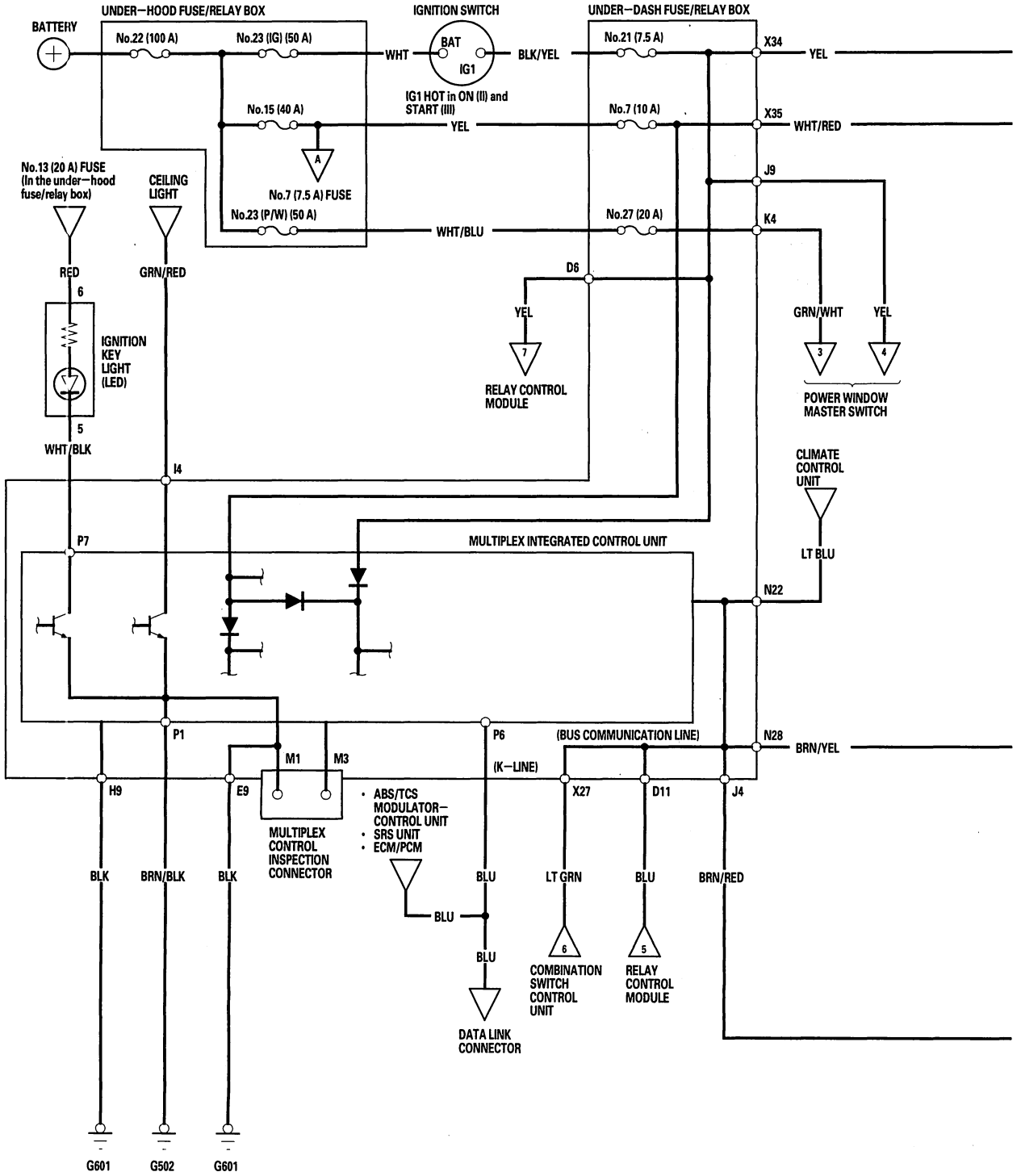

BACK

Protected by AR

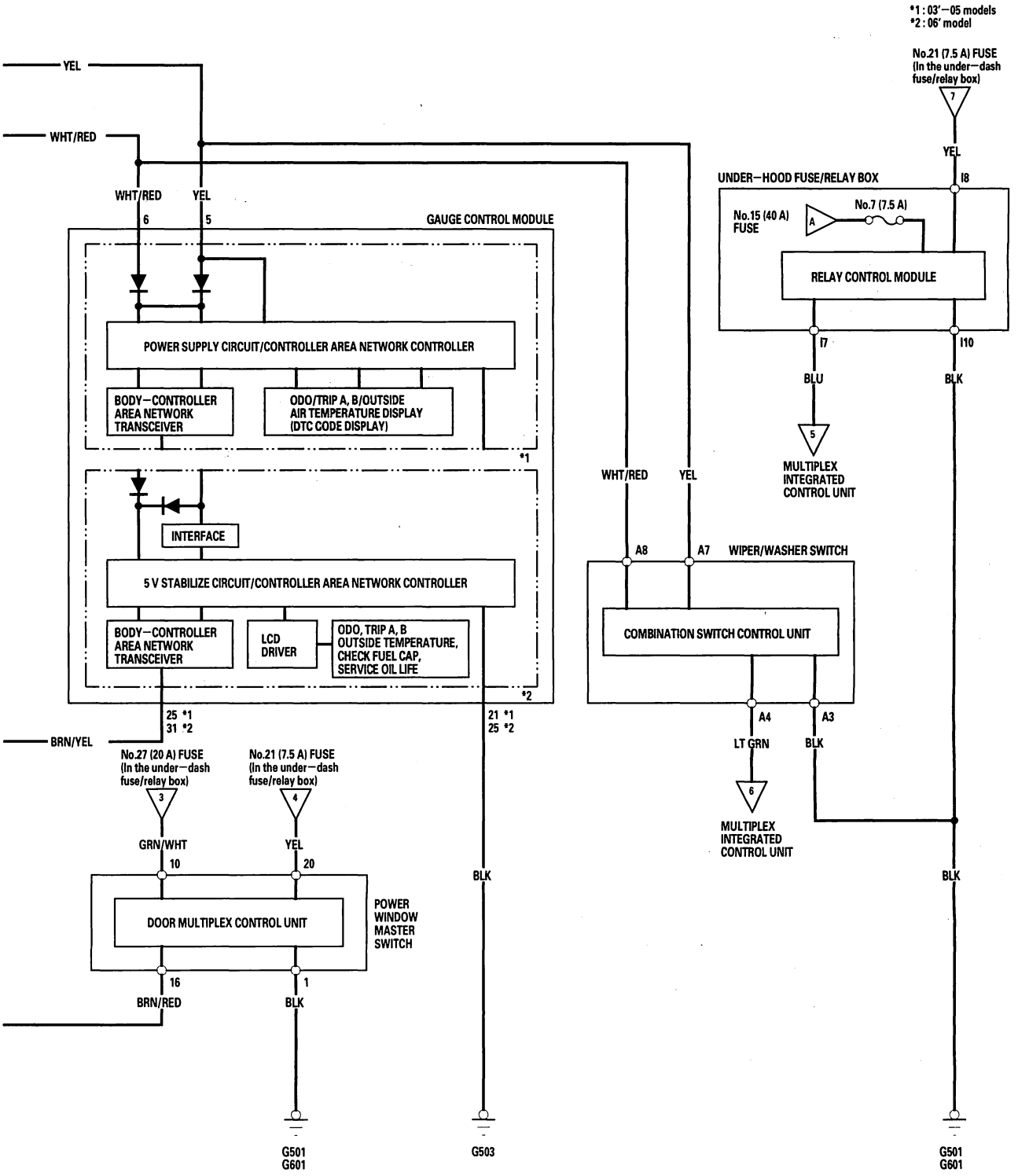

BACK

Protected by AR

DTC Troubleshooting

DTC B1000: Communication Bus Line Error

1. Clear the DTCs using the HDS.
2. Cycle the ignition switch to OFF and then back ON.
3. Check for DTCs using the HDS.

   Is DTC B1000 indicated?

   YES—Go to step 4.

   NO—Intermittent failure. The communication bus line is OK at this time. Check for loose or poor connections. If the connections are good, check the battery condition (see page 22-78) and the charging system (see page 4-34).■
4. Check for DTCs using the HDS.

   Are DTC B1005, B1006, B1007, B1008, B1009 and B1010 indicated?

   YES—Go to step 5.

   NO—Replace the MICU.■
5. Disconnect each control unit one at a time. Clear the DTC, then recheck for DTCs after each unit is disconnected.

   - Gauge control module
   - Relay control module
   - Driver's multiplex control unit
   - Climate control unit
   - Combination switch control unit

   Is DTC B1000 indicated with each unit disconnected?

   YES—Check for a short to power or ground in the communication circuit by disconnecting the harness at each control unit and testing for continuity to ground or short to power. Repair or replace the harness as necessary.■

   NO—Substitute a known-good control unit with the one that was disconnected, and did not set DTC B1000.■

DTC B1050, B1100, B1150, B1200, B1250: Communication Bus Line Error

1. Clear the DTCs using the HDS.
2. Cycle the ignition switch to OFF and then back ON.
3. Check for DTCs using the HDS.

   Are DTC(s) B1050, B1100, B1150, B1200 or B1250 indicated?

   YES—Go to step 4.

   NO—Intermittent failure, the system is OK at this time.■

B1050	Relay Control Module
B1100	Door Multiplex Control Unit
B1150	Gauge Control Module
B1200	Audio-HVAC Display Module
B1250	Combination Switch Control Unit

4. Check for DTCs using the HDS.

   Is DTC(s) B1000 indicated?

   YES—Troubleshoot DTC B1000.■

   NO—If DTC B1050 is indicated, replace the relay control module. If DTC B1100 is indicated, replace the door multiplex control unit. If DTC B1150 is indicated, replace the gauge control module (see page 22-276). If DTC B1200 is indicated, replace the climate control unit. If DTC B1250 is indicated, replace the combination switch control unit.■

BACK

Protected by AR

DTC B1001, B1002: Multiplex Integrated Control Unit (MICU) Internal Error

1. Clear the DTCs using the HDS.
2. Cycle the ignition switch to OFF and then back ON.
3. Operate the door lock (LOCK/UNLOCK).
4. Check for DTCs using the HDS.

   Is DTC B1001 or B1002 indicated?

   YES—Faulty MICU; replace the under-dash fuse/relay box. ■

   NO—Intermittent failure, the MICU is OK at this time. Check for loose or poor connections. If the connections are good, check the battery condition (see page 22-78) and the charging system (see page 4-34). ■

Protected by AR

DTC Troubleshooting (cont'd)

DTC B1005: MICU Lost Communication with Relay Control Module

1. Clear the DTCs using the HDS.
2. Cycle the ignition switch to OFF and then back ON.
3. Check for DTCs using the HDS.

   Is DTC B1005 indicated?

   YES—Go to step 4.

   NO—Intermittent failure, the relay module is OK at this time. Check for loose or poor connections. If the connections are good, check the battery condition (see page 22-78) and the charging system (see page 4-34). ■
4. Check for DTCs in the gauge control module using the HDS.

   Is DTC B1158 indicated?

   YES—Go to Relay Control Module Input Test (see page 22-132). ■

   NO—Check for an open in the communication circuit between the MICU and the relay control module. If the circuit is OK, replace the MICU. If the circuit is bad, repair the open. ■

DTC B1006: MICU Lost Communication with Door Multiplex Control Unit (Door Lock Switch Message)

1. Clear the DTCs using the HDS.
2. Cycle the ignition switch to OFF and then back ON.
3. Check for DTCs using the HDS.

   Is DTC B1006 indicated?

   YES—Go to step 4.

   NO—Intermittent failure, the door multiplex control unit is OK at this time. Check for loose or poor connections. If the connections are good, check the battery condition (see page 22-78) and the charging system (see page 4-34). ■
4. Check for DTCs in the gauge control module and relay module using the HDS.

   Is DTC B1160 and B1058 indicated?

   YES—Go to Door Multiplex Control Unit Input Test (see page 22-129). ■

   NO—Check for an open in the communication circuit between the MICU and the door multiplex control unit. If the circuit is OK, replace the MICU. If the circuit is bad, repair the open. ■

BACK

Protected by AR

DTC B1007: MICU Lost Communication with the Combination Switch Control Unit (Headlight Switch Message)

1. Clear the DTCs using the HDS.
2. Cycle the ignition switch to OFF and then back ON.
3. Check for DTCs using the HDS.

   Is DTC B1007 indicated?

   YES—Go to step 4.

   NO—Intermittent failure, the MICU is OK at this time. Check for loose or poor connections. If the connections are good, check the battery condition (see page 22-78) and the charging system (see page 4-34).■
4. Check for DTCs of the gauge control module and relay control module using the HDS.

   Is DTC B1155 and B1062 indicated?

   YES—Go to the Combination Switch Control Unit Input Test (see page 22-131).■

   NO—Check for an open in the communication circuit between the MICU and the combination switch control unit. If the circuit is OK, replace the MICU. If the circuit is bad, repair the open.■

DTC B1008: MICU Lost Communication (A/T Message) with the Gauge Control Module

1. Clear the DTCs using the HDS.
2. Cycle the ignition switch to OFF and then back ON.
3. Check for DTCs using the HDS.

   Is DTC B1008 indicated?

   YES—Go to step 4.

   NO—Intermittent failure, the gauge control module is OK at this time. Check for loose or poor connections. If the connections are good, check the battery condition (see page 22-78) and the charging system (see page 4-34).■
4. Check for DTCs in the relay control module using the HDS.

   Is DTC B1161 indicated?

   YES—Go to the Gauge Control Module Input Test.■

   - '03-05 models (see page 22-127)
   - '06 model (see page 22-128)

   NO—Check for an open in the communication circuit between the MICU and the gauge control module. If the circuit is OK, replace the MICU. If the circuit is bad, repair the open.■

Protected by AR

DTC Troubleshooting (cont'd)

DTC B1009: MICU Lost Communication with the Combination Switch Control Unit (Wiper/ Washer Switch Message)

1. Clear the DTCs using the HDS.
2. Cycle the ignition switch to OFF and then back ON.
3. Check for DTCs using the HDS.

   Is DTC B1009 indicated?

   YES—Go to step 4.

   NO—Intermittent failure, the combination switch control unit is OK at this time. Check for loose or poor connections. If the connections are good, check the battery condition (see page 22-78) and the charging system (see page 4-34).■
4. Check for DTCs of the gauge control module and relay control module using the HDS.

   Is DTC B1156 and B1063 indicated?

   YES—Go to the Combination Switch Control Unit Input Test (see page 22-131).■

   NO—Check for an open in the communication circuit between the MICU and the combination switch control unit. If the circuit is OK, replace the MICU. If the circuit is bad, repair the open.■

DTC B1010: MICU Lost Communication (Panic Message) with the Door Multiplex Control Unit

1. Clear the DTCs using the HDS.
2. Cycle the ignition switch to OFF and then back ON.
3. Check for DTCs using the HDS.

   Is DTC B1010 indicated?

   YES—Go to step 4.

   NO—Intermittent failure, the door multiplex control unit is OK at this time. Check for loose or poor connections. If the connections are good, check the battery condition (see page 22-78) and the charging system (see page 4-34).■
4. Check for DTCs of the relay control module using the HDS.

   Is DTC B1059 indicated?

   YES—Go to the Door Multiplex Control Unit Input Test (see page 22-129).■

   NO—Check for an open in the communication circuit between the MICU and the door multiplex control unit. If the circuit is OK, replace the MICU. If the circuit is bad, repair the open.■

BACK

Protected by AR

DTC B1102: Door Multiplex Control Unit Internal Error

1. Clear the DTCs using the HDS.
2. Cycle the ignition switch to OFF and then back ON.
3. Operate the power window (UP/DOWN).
4. Check for DTCs using the HDS.

   Is DTC B1102 indicated?

   YES—Faulty door multiplex control unit; replace the power window master switch. ■

   NO—Intermittent failure, the door multiplex control unit is OK at this time. Check for loose or poor connections. If the connections are good, check the battery condition (see page 22-78) and the charging system (see page 4-34). ■

DTC B1178: F-CAN Communication Line Error

DTC B1168: Gauge Control Module Lost Communication with ECM/PCM (Engine Messages)

DTC B1169: Gauge Control Module Lost Communication with the PCM (A/T Messages)

1. Clear the DTCs using the HDS.
2. Turn the ignition switch OFF then back to the ON (II).
3. Start and run the engine for at least 5 seconds then turn the engine off.
4. Check for DTCs using the HDS.

   Is DTC B1178, B1168 and/or B1169 indicated?

   YES—Go to step 5.

   NO—Intermittent failure, the F-CAN communication line is OK at this time. Check for loose or poor connections. If the connections are good, check the battery condition (see page 22-78) and the charging system (see page 4-34). ■

5. Check for DTCs in the ECM/PCM, ABS/TCS or Navigation.

   Are any DTCs indicated?

   YES—Troubleshoot the ECM/PCM, ABS/TCS or Navigation DTCs. ■

   NO—Go to step 6.

(cont'd)

Protected by AR

DTC Troubleshooting (cont'd)

6. Perform the Gauge Control Module Input Test.

   - '03-05 models (see page 22-127)
   - '06 model (see page 22-128)

   Are all inputs OK?

   YES—Go to step 7.

   NO—Repair the faulty input then recheck for DTCs. ■

7. Substitute a known-good gauge control module.
8. Clear the DTCs using the HDS.
9. Turn the ignition switch OFF then back to the ON (II).
10. Start and run the engine for at least 5 seconds then turn the engine off.
11. Check for DTCs using the HDS.

    Is DTC B1178, B1168 and/or B1169 indicated?

    YES—Substitute a known-good ECM/PCM and retest. If the system/indication goes away, replace the original ECM/PCM. ■

    NO—The original gauge control module is faulty; replace the gauge control module (see page 22-276). ■

DTC B1080: Power Supply Circuit (IG1 line) Input Error for Relay Control Module and MICU

1. Clear the DTCs using the HDS.
2. Cycle the ignition switch to OFF and then back ON.
3. Turn the ignition switch ON (II) and wait for 2 seconds or more.

   Is DTC B1080 indicated again?

   YES—Go to step 4.

   NO—Intermittent failure, the relay control module is OK at this time. Check for loose or poor connections. If the connections are good, check the battery condition (see page 22-78) and the charging system (see page 4-34). ■

4. Check the MICU IG1 power supply No. 21 (7.5 A) fuse in the under-dash fuse/relay box.

   Is the fuse OK?

   YES—Go to MICU Input Test (see page 22-124). ■

   NO—Replace the fuse and recheck for DTCs. ■

BACK

Protected by AR

DTC B1251: Combination Switch Control Unit Internal Error

1. Clear the DTCs using the HDS.
2. Cycle the ignition switch to OFF and then back ON.
3. Check for DTCs using the HDS.

   Is DTC B1251 indicated?

   YES—Faulty combination switch control unit; replace the wiper/washer switch. ■

   NO—Intermittent failure, the CPU in the combination switch control unit is OK at this time. Check for loose or poor connections. If the connections are good, check the battery condition (see page 22-78) and the charging system (see page 4-34). ■

DTC B1255: Combination Switch Control Unit Lost Communication With MICU

1. Clear the DTCs using the HDS.
2. Cycle the ignition switch to OFF and then back ON.
3. Check for DTCs using the HDS.

   Is DTC B1255 indicated?

   YES—Go to step 4.

   NO—Intermittent failure, MICU is OK at this time. Check for loose or poor connections. If the connections are good, check the battery condition (see page 22-78) and the charging system (see page 4-34). ■

4. Check for DTCs in the combination switch control using the HDS.

   Is DTC B1055 and B1157 indicated?

   YES—Go to MICU input test (see page 22-124). ■

   NO—Replace the combination switch control unit. ■

Protected by AR

MICU Input Test

1. Remove the left side kick panel.
   - 2 door (see page 20-90)
   - 4 door (see page 20-91)
2. Disconnect the under-dash fuse/relay box connectors D, E, H, I, J, K, N, P and X.

NOTE: All connectors are wire side of female terminals.

UNDER-DASH FUSE/RELAY BOX CONNECTOR D (17P)

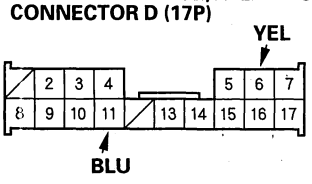

UNDER-DASH FUSE/RELAY BOX CONNECTOR E (16P)

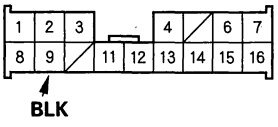

UNDER-DASH FUSE/RELAY BOX CONNECTOR H (14P)

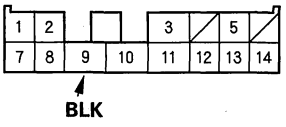

UNDER-DASH FUSE/RELAY BOX CONNECTOR I (5P)

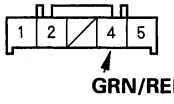

UNDER-DASH FUSE/RELAY BOX CONNECTOR K (12P)*

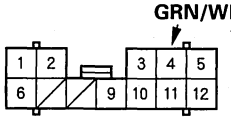

UNDER-DASH FUSE/RELAY BOX CONNECTOR J (21P)

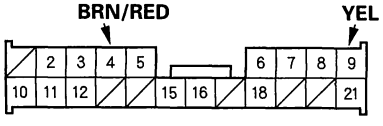

UNDER-DASH FUSE/RELAY BOX CONNECTOR P (30P)

'03-05 models

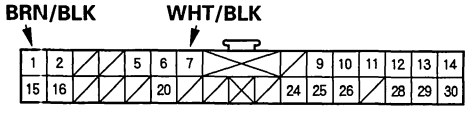

'06 model

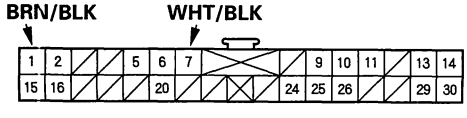

UNDER-DASH FUSE/RELAY BOX CONNECTOR N (45P)

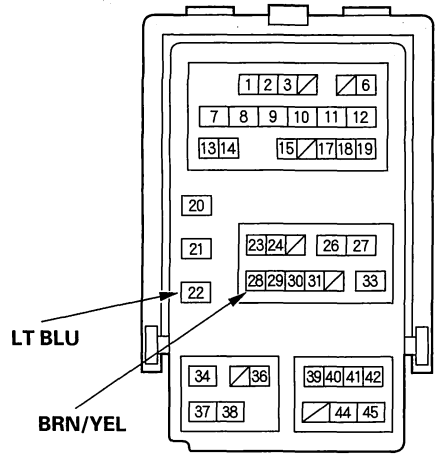

UNDER-DASH FUSE/RELAY BOX CONNECTOR X (39P)

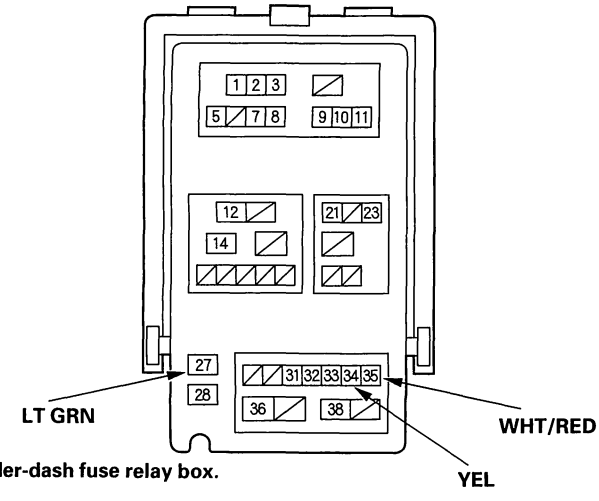

*Connector view shown rotated 180 ° from actual position in the under-dash fuse relay box.

BACK

Protected by AR

3. Inspect the connector and socket terminals to be sure they are all making good contact.

   - If the terminals are bent, loose or corroded, repair them as necessary, and recheck the system.
   - If the terminals look OK, go to step 4.

4. Reconnect the connectors to the under-dash fuse/relay box, and make sure these input tests at the appropriate connectors on the under-dash fuse/relay box.

   - If any test indicates a problem, find and correct the cause, then recheck the system.
   - If all the input tests prove OK, go to step 5.

Cavity	Wire	Test condition	Test: Desired result	Possible cause if result is not obtained
P7	WHT/BLK	Under all conditions	Attach to ground: The ignition key light should come on.	• Blown No. 13 (20 A) fuse in the under-hood fuse/relay box • Blown LED • An open in the wire
I4	GRN/RED	Ceiling light switch in the middle position, all doors closed	Attach to ground: The ceiling light should come on.	• Blown No. 6 (7.5 A) fuse in the under-dash fuse/relay box • Faulty ceiling light • An open in the wire
D6 . J9 . X34	YEL	Ignition switch ON (II)	Check for voltage to ground: There should be battery voltage.	• Blown No. 21 (7.5 A) fuse in the under-dash fuse/relay box • An open in the wire
K4	GRN/WHT	Under all conditions	Check for voltage to ground: There should be battery voltage.	• Blown No. 27 (20 A) fuse in the under-dash fuse/relay box • An open in the wire
X35	WHT/RED	Under all conditions	Check for voltage to ground: There should be battery voltage.	• Blown No. 7 (10 A) fuse in the under-dash fuse/relay box • An open in the wire
H9	BLK	Under all conditions	Check for voltage to ground: There should be less than 1 V.	• Poor ground (G601) • An open in the wire
P1	BRN/BLK	Under all conditions	Check for voltage to ground: There should be less than 1 V.	• Poor ground (G502) • An open in the wire
E9	BLK	Under all conditions	Check for voltage to ground: There should be less than 1 V.	• Poor ground (G601) • An open in the wire

(cont'd)

Protected by AR

MICU Input Test (cont'd)

5. Disconnect the under-dash fuse/relay box connectors D, J, N and X, and make these input tests at the connector(s).

- If any test indicates a problem, find and correct the cause, then recheck the system.
- If all the input tests prove OK, the multiplex integrated control unit must be faulty, replace the under-dash fuse/relay box assembly.

Cavity	Wire	Test condition	Test: Desired result	Possible cause if result is not obtained
N22	LT BLU	Under all conditions	Check for continuity between terminal N22 and the climate control unit B (16P) connector terminal No. 14: There should be continuity.	An open in the wire
		Climate control unit B (16P) connector disconnected	Check for continuity to ground: There should be no continuity.	Short to ground
J4	BRN/RED	Under all conditions	Check for continuity between terminal J4 and power window master switch 23P connector terminal No. 16: There should be continuity.	An open in the wire
		Power window master switch 23P connector disconnected	Check for continuity to ground: There should be no continuity.	Short to ground
D11	BLU	Under all conditions	Check for continuity between terminal D11 and relay control module I (10P) connector terminal No. 7: There should be continuity.	An open in the wire
		Relay control module I (10P) connector disconnected	Check for continuity to ground: There should be no continuity.	Short to ground
X27	LT GRN	Under all conditions	Check for continuity between terminal X27 and wiper/washer switch 8P connector terminal No. 4: There should be continuity.	An open in the wire
		Wiper/washer switch 8P connector disconnected	Check for continuity to ground: There should be no continuity.	Short to ground
N28	BRN/YEL	Under all conditions	Check for continuity between terminal N28 and gauge assembly (30P) connector terminal No. 25: There should be continuity.	An open in the wire
		Gauge control module 30P connector disconnected	Check for continuity to ground: There should be no continuity.	Short to ground

BACK

Protected by AR

Gauge Control Module Input Test

'03-05 models

1. Remove the gauge control module (see page 22-276).
2. Disconnect the 30P connector from the gauge control module.
3. Inspect the connector and socket terminals to be sure they are all making good contact.
   - If the terminals are bent, loose or corroded, repair them as necessary, and recheck the system.
   - If the terminals look OK, go to step 4.

GAUGE CONTROL MODULE CONNECTOR (30P)

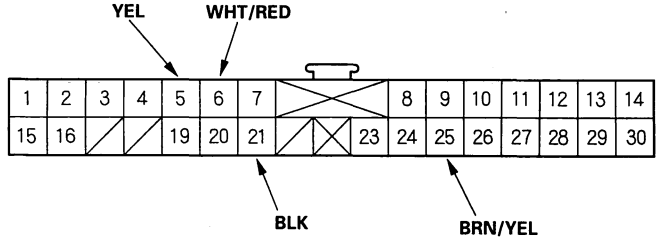

Wire side of female terminals

4. Reconnect the connector, and make these input tests at the connector.
   - If any test indicates a problem, find and correct the cause, then recheck the system.
   - If all the input tests prove OK, go to step 5.

Cavity	Wire	Test Condition	Test: Desired result	Possible cause if result is not obtained
5	YEL	Ignition switch ON (II)	Check for voltage to ground: There should be battery voltage.	• Blown No. 21 (7.5 A) fuse in the under-dash fuse/relay box • An open in the wire
6	WHT/RED	Under all conditions	Check for voltage to ground: There should be battery voltage.	• Blown No. 7 (10 A) fuse in the under-dash fuse/relay box • An open in the wire
21	BLK	Under all conditions	Check for voltage to ground: There should be less than 1 V.	• Poor ground (G503) • An open in the wire

5. Disconnect the connector from the gauge control module, and make these input tests at the connector.
   - If any test indicators a problem, find and correct the cause, then recheck the system.
   - If all the input tests prove OK, replace the gauge control module.

Cavity	Wire	Test Condition	Test: Desired result	Possible cause if result is not obtained
25	BRN/YEL	Under all conditions	Check for continuity between the No. 25 terminal and under-dash fuse/relay box N (45P) connector No. 28 terminal: There should be continuity.	An open in the wire
		Under-dash fuse/relay box connector N (45P) disconnected	Check continuity to ground: There should be no continuity.	Short to ground on the wire

Protected by AR

Gauge Control Module Input Test (cont'd)

'06 model

1. Remove the gauge control module (see page 22-276).
2. Disconnect the 36P connector from the gauge control module.
3. Inspect the connector and socket terminals to be sure they are all making good contact.
   - If the terminals are bent, loose or corroded, repair them as necessary, and recheck the system.
   - If the terminals look OK, go to step 4.

GAUGE CONTROL MODULE CONNECTOR (36P)

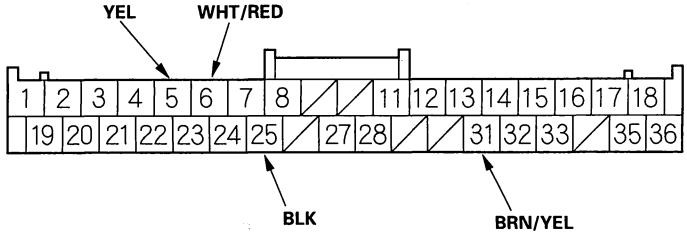

Wire side of female terminals

4. Reconnect the connector, and make these input tests at the connector.
   - If any test indicates a problem, find and correct the cause, then recheck the system.
   - If all the input tests prove OK, go to step 5.

Cavity	Wire	Test Condition	Test: Desired result	Possible cause if result is not obtained
5	YEL	Ignition switch ON (II)	Check for voltage to ground: There should be battery voltage.	• Blown No. 21 (7.5 A) fuse in the under-dash fuse/relay box • An open in the wire
6	WHT/RED	Under all conditions	Check for voltage to ground: There should be battery voltage.	• Blown No. 7 (10 A) fuse in the under-dash fuse/relay box • An open in the wire
25	BLK	Under all conditions	Check for voltage to ground: There should be less than 1 V.	• Poor ground (G503) • An open in the wire

5. Disconnect the connector from the gauge assembly, and make these input tests at the connector.
   - If any test indicates a problem, find and correct the cause, then recheck the system.
   - If all the input tests prove OK, replace the gauge control module.

Cavity	Wire	Test Condition	Test: Desired result	Possible cause if result is not obtained
31	BRN/YEL	Under all conditions	Check for continuity between the No. 25 terminal and under-dash fuse/relay box N (45P) connector No. 28 terminal: There should be continuity.	An open in the wire
		Under-dash fuse/relay box connector N (45P) disconnected	Check continuity to ground: There should be no continuity.	Short to ground on the wire

BACK

Protected by AR

Door Multiplex Control Unit Input Test

1. Remove the driver's door switch panel.

   - 2-door (see page 20-9)
   - 4-door (see page 20-10)

2. Disconnect the 23P connector from the power window master switch (see page 22-241).

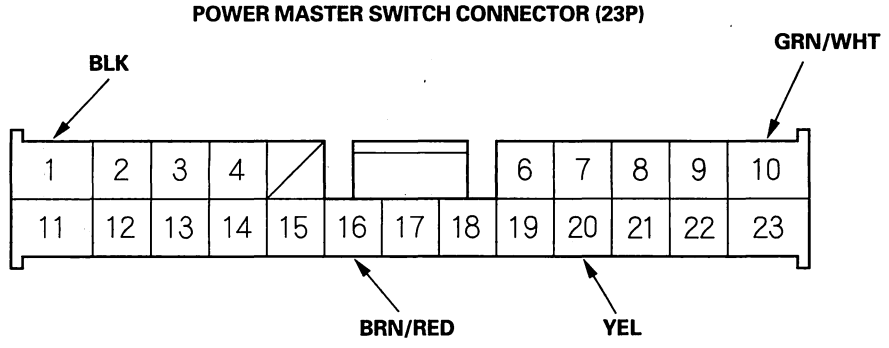

Wire side of female terminals

3. Inspect the connector and socket terminals to be sure they are all making good contact.

   - If the terminals are bent, loose or corroded, repair them as necessary, and recheck the system.
   - If the terminals look OK, go to step 4.

(cont'd)

Protected by AR

Door Multiplex Control Unit Input Test (cont'd)

4. Reconnect the connector, and make these input tests at the connector.

   - If any test indicates a problem, find and correct the cause, then recheck the system.
   - If all the input tests prove OK, go to step 5.

Cavity	Wire	Test condition	Test: Desired result	Possible cause if result is not obtained
1	BLK	Under all conditions	Check for voltage to ground: There should be less than 1 V.	• Poor ground (G501, G601) • An open in the wire
10	GRN/WHT	Under all conditions	Check for voltage to ground: There should be battery voltage.	• Blown No. 27 (20 A) fuse in the under-dash fuse/relay box • An open in the wire
20	YEL	Ignition switch ON (II)	Check for voltage to ground: There should be battery voltage.	• Blown No. 21 (7.5 A) fuse in the under-dash fuse/relay box • An open in the wire

5. Disconnect the connector from the door multiplex control unit, and make these input tests at the connector.

   - If any test indicates a problem, find and correct the cause, then recheck the system.
   - If all the input tests prove OK, the door multiplex control unit must be faulty, replace the power window master switch.

Cavity	Wire	Test condition	Test: Desired result	Possible cause if result is not obtained
16	BRN/RED	Under all conditions	Check for continuity between terminal No. 16 and the under-dash fuse/relay box connector J (21P) connector terminal No. 4: There should be continuity.	An open in the wire
		Under-dash fuse/relay box connector J (21P) disconnected	Check for continuity to ground: There should be no continuity.	Short to ground

BACK

Protected by AR

Combination Switch Control Unit Input Test

1. Remove the steering column covers (see page 17-25).

2. Disconnect the 8P connector from the wiper/washer switch (see page 22-251).

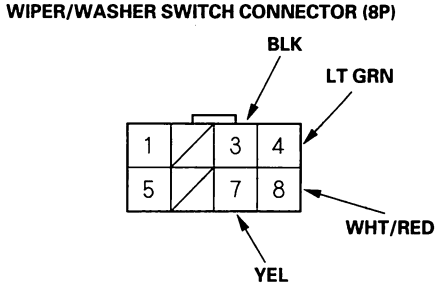

Wire side of female terminals

3. Inspect the connector and socket terminals to be sure they are all making good contact.
   - If the terminals are bent, loose or corroded, repair them as necessary, and recheck the system.
   - If the terminals look OK, go to step 4.

4. Reconnect the connector, and make these input tests at the connector.
   - If any test indicates a problem, find and correct the cause, then recheck the system.
   - If all the input tests prove OK, go to step 5.

Cavity	Wire	Test condition	Test: Desired result	Possible cause if result is not obtained
3	BLK	Under all conditions	Check for voltage to ground: There should be less than 1 V.	• Poor ground (G501, G601) • An open in the wire
8	WHT/RED	Under all conditions	Check for voltage to ground: There should be battery voltage.	• Blown No. 7 (10 A) fuse in the under-dash fuse/relay box • An open in the wire
7	YEL	Ignition switch ON (II)	Check for voltage to ground: There should be battery voltage.	• Blown No. 21 (7.5 A) fuse in the under-dash fuse/relay box • An open in the wire

5. Disconnect the connector from the wiper/washer switch, and make these input tests at the connector.
   - If any test indicates a problem, find and correct the cause, then recheck the system.
   - If all the input tests prove OK, the combination switch control unit must be faulty, replace the wiper/washer switch.

Cavity	Wire	Test condition	Test: Desired result	Possible cause if result is not obtained
4	LT GRN	Under all conditions	Check for continuity between terminal 4 and the under-dash fuse/relay box connector X (39P) connector terminal No. 27: There should be continuity.	An open in the wire
		Under-dash fuse/relay box connector X (39P) connector disconnected	Check for continuity to ground: There should be no continuity.	Short to ground

Protected by AR

Relay Control Module Input Test

1. Remove the under-hood fuse/relay box under cover.
2. Disconnect the 10P connector from the under-hood fuse/relay box.

UNDER-HOOD FUSE/RELAY BOX CONNECTOR I (10P)

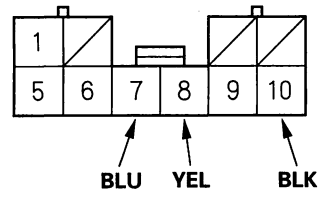

Wire side of female terminals

3. Inspect the connector and socket terminals to be sure they are all making good contact.
   - If the terminals are bent, loose or corroded, repair them as necessary, and recheck the system.
   - If the terminals look OK, go to step 4.
4. Reconnect the connector, and make these input tests at the connector.
   - If any test indicates a problem, find and correct the cause, then recheck the system.
   - If all the input tests prove OK, go to step 5.

Cavity	Wire	Test condition	Test: Desired result	Possible cause if result is not obtained
10	BLK	Under all conditions	Check for voltage to ground: There should be less than 1 V.	• Poor ground (G501, G601) • An open in the wire
8	YEL	Ignition switch ON (II)	Check for voltage to ground: There should be battery voltage.	• Blown No. 21 (7.5 A) fuse in the under-dash fuse/relay box • An open in the wire

5. Disconnect the 10P connector from the under-hood fuse/relay box, and make these input tests at the connector.
   - If any test indicates a problem, find and correct the cause, then recheck the system.
   - If all the input tests prove OK, the relay module must be faulty, replace the under-hood fuse/relay box.

Cavity	Wire	Test condition	Test: Desired result	Possible cause if result is not obtained
7	BLU	Under all conditions	Check for continuity between terminal 7 and the under-dash fuse/relay box connector D (17P) connector terminal No. 11: There should be continuity.	An open in the wire
		Under-dash fuse/relay box connector D (17P) disconnected	Check for continuity to ground: There should be no continuity.	Short to ground

BACK

Protected by AR

Component Location Index

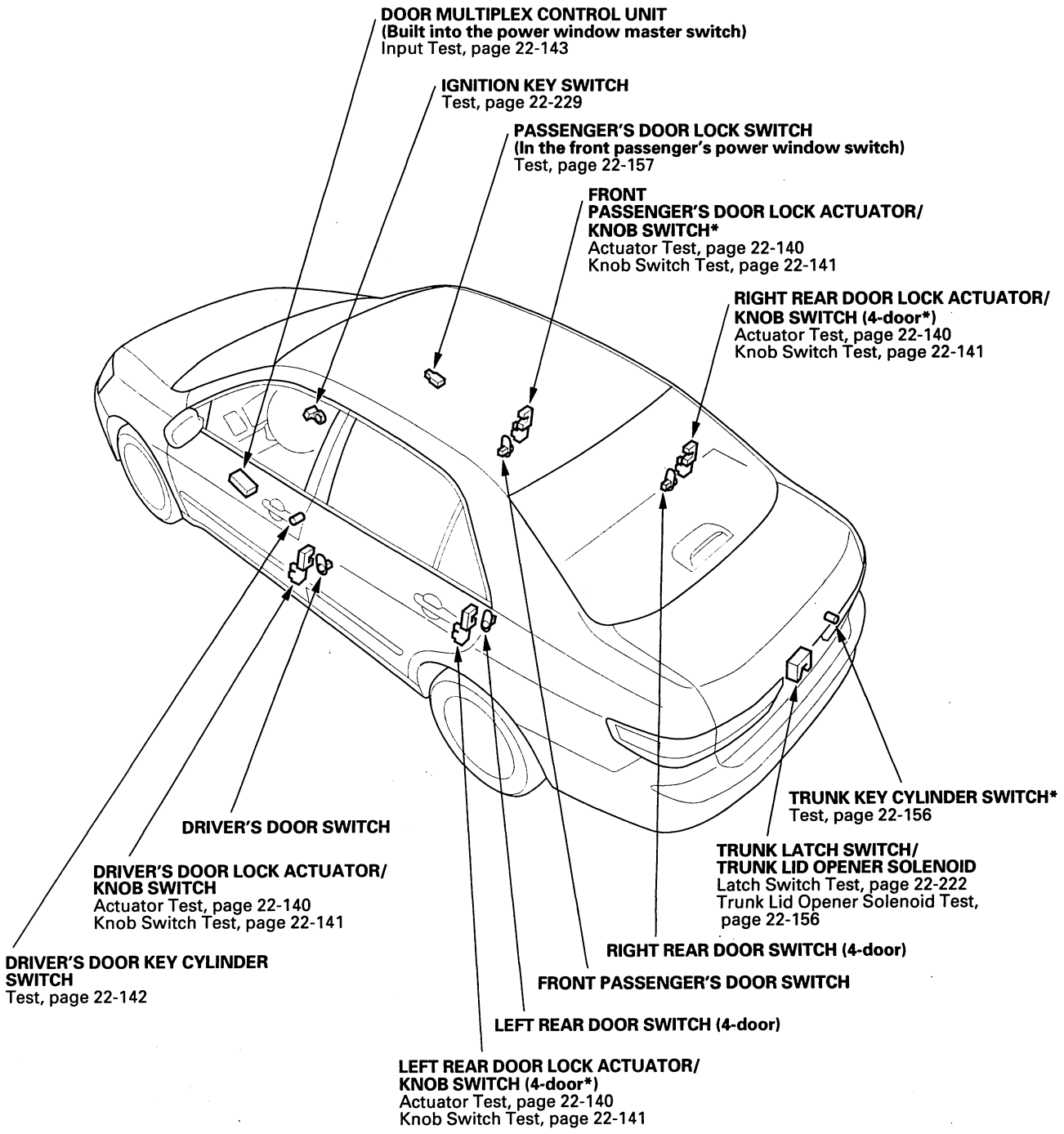

*: EX, EXL, LX-V6 '06 model Canada SE

(cont'd)

Protected by AR

Keyless/Power Door Locks/Security System

Component Location Index (cont'd)

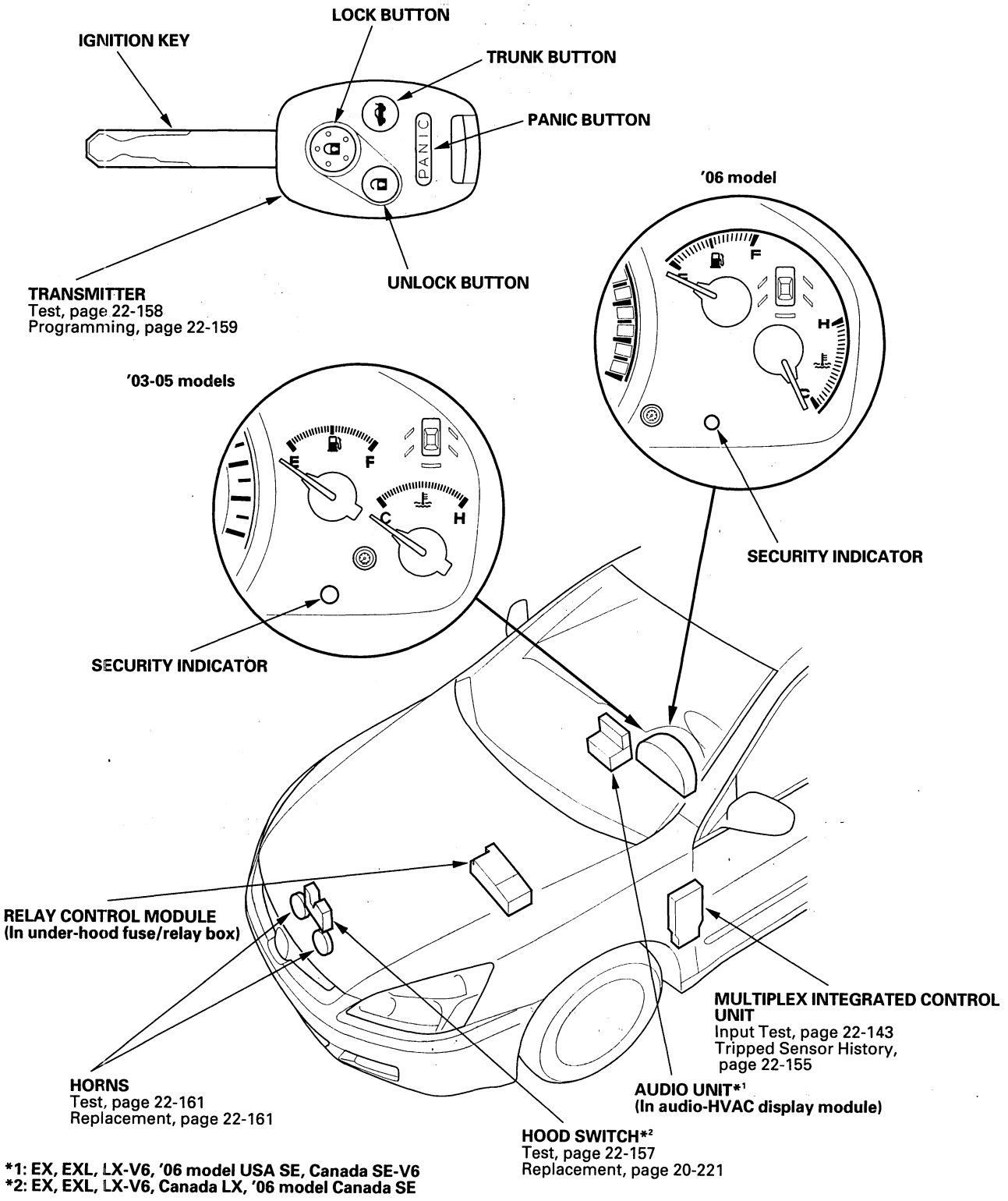

*1: EX, EXL, LX-V6, '06 model USA SE, Canada SE-V6
*2: EX, EXL, LX-V6, Canada LX, '06 model Canada SE

BACK

Protected by AR

System Description

Security Alarm System

The security alarm system is armed automatically after the doors, hood, and trunk are closed and locked. For the system to arm, the ignition switch must be off, the key must be removed, and the MICU must receive signals that the doors, hood, trunk are closed and locked. The alarm can be disarmed at any time by unlocking the driver's door with the key or pressing the UNLOCK button on the remote transmitter.

When everything is closed and locked, the only inputs that are grounded, and have 0 volts, are the driver's door lock knob switch (LOCK position), and the integrated audio-HVAC display module. In other words, all of the other switches are open, and have about 5 volts with system awake and 1 volts in sleep mode, including the key cylinder switches. The security indicator in the gauge control module begins to flash immediately after the vehicle is completely closed and locked, and 15 seconds later, the security system arms and the security indicator flashes on for a shorter amount of time than before. If the security indicator does not flash, the system is not arming. A beep sounds and parking lights flash to confirm the security alarm system is armed if the LOCK button is pressed a second time within 5 seconds.

If one of the switches is misadjusted or shorted internally, or there is a short in the circuit, the security system will not arm. As long as the control unit continues to receive a ground signal (0 volts), it senses that the vehicle is not closed and locked, and the system will not arm. A switch that is slightly misadjusted can cause the alarm to sound for no apparent reason. In this case, a significant change in outside air temperature, the vibration of a passing truck, or someone bumping into the vehicle could cause the alarm to sound. There is no glass breakage or motion detector feature.

If anything is opened or improperly unlocked after the system is armed, the control unit receives a ground signal from that switch, and the 1—5 volts reference drops to 0 volts. If the integrated audio-HVAC display module is disconnected, the input loses its ground, and the input voltage goes to 1—5 volts. The system sounds the alarm when any of these occur:

- A door or the trunk is forced open
- A door is unlocked without using the key or the remote transmitter
- The hood is opened (EX, EXL, LX-V6, Canada LX, '06 model Canada SE)
- The audio-HVAC display module is disconnected (EX, EXL, LX-V6, '06 model USA SE, Canada SE-V6)
- The remote panic is operated

When the system sounds the alarm, the horns sound and the exterior lights flash for 2 minutes. The alarm can be stopped at any time by unlocking the driver's door with the key or by pressing any button on the remote transmitter.

Panic Mode

The panic mode sounds the alarm in order to attract attention. When the PANIC button on the remote transmitter is pressed and held for 2 seconds, the alarm sounds and the exterior lights flash for about 20 seconds.

The panic mode can be cancelled at anytime by pressing any button on the remote transmitter or by turning the ignition switch ON (II). The panic mode will not function if the ignition switch is ON (II).

(cont'd)

Protected by AR

System Description (cont'd)

Keyless Entry System

The keyless entry system is integrated with the MICS. The multiplex integrated control unit (MICU) receives LOCK, UNLOCK and PANIC signals from the door multiplex control unit (keyless receiver).

The keyless entry system allows you to lock and unlock the vehicle with the remote transmitter. When you press the LOCK button, all doors lock. When you press the UNLOCK button once, only the driver's door unlocks. The other doors will unlock when you press the button a second time. The doors will not lock with the remote transmitter if a door is not fully closed, or if the key is in the ignition switch.

If the UNLOCK button is pressed, released, then pressed and held, the windows will begin to open. The windows stop if the button is released. See power windows for more information and troubleshooting.

When the switch for the ceiling light is in the center position, it will come on when the UNLOCK button is pressed. If a door is not opened, the light will go off in about 30 seconds, and the doors will relock. If the doors are locked with the remote transmitter within 30 seconds, the light will go off immediately.

BACK

Protected by AR

Circuit Diagram

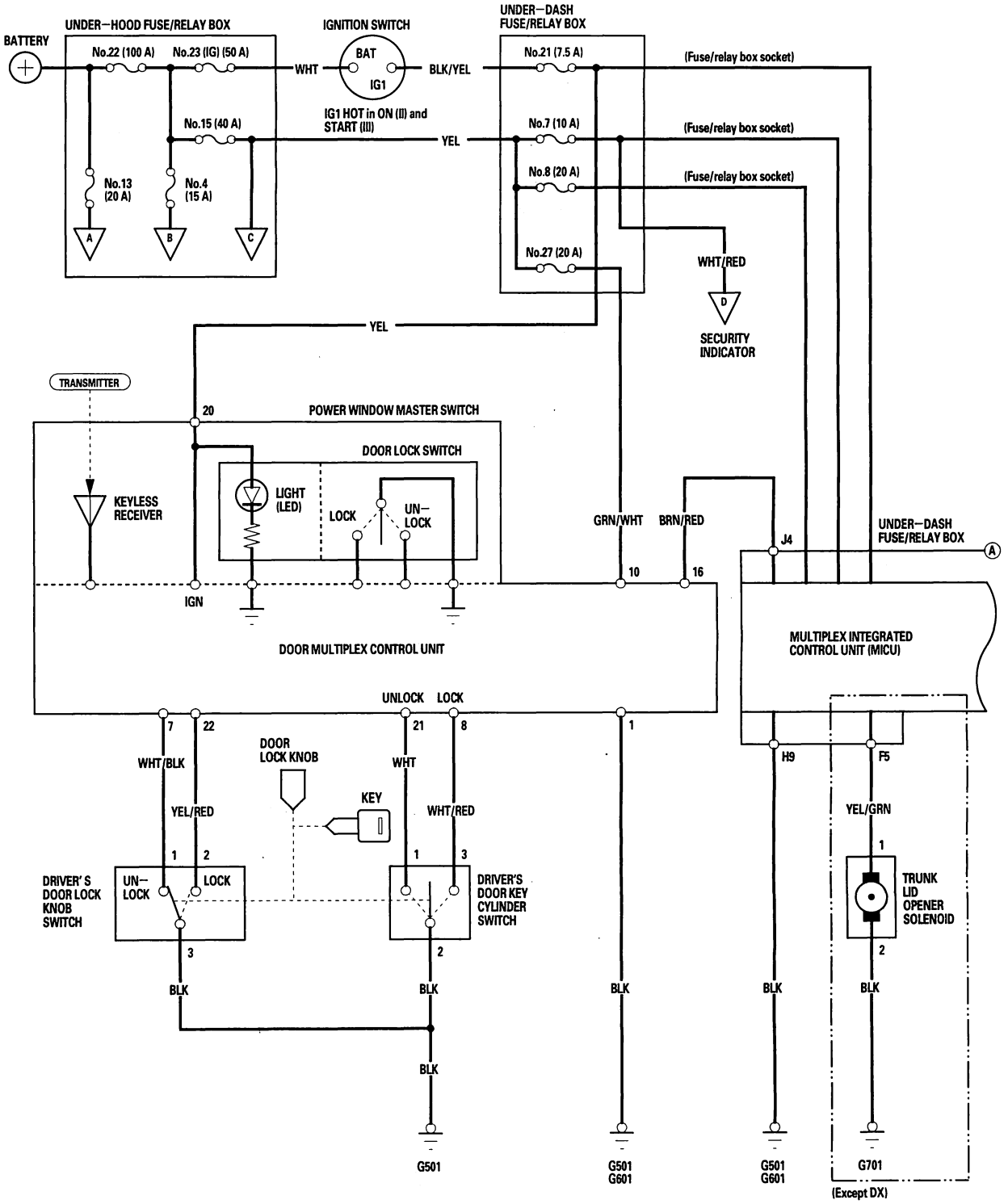

(cont'd)

BACK

Protected by AR

Keyless/Power Door Locks/Security System

Circuit Diagram (cont'd)

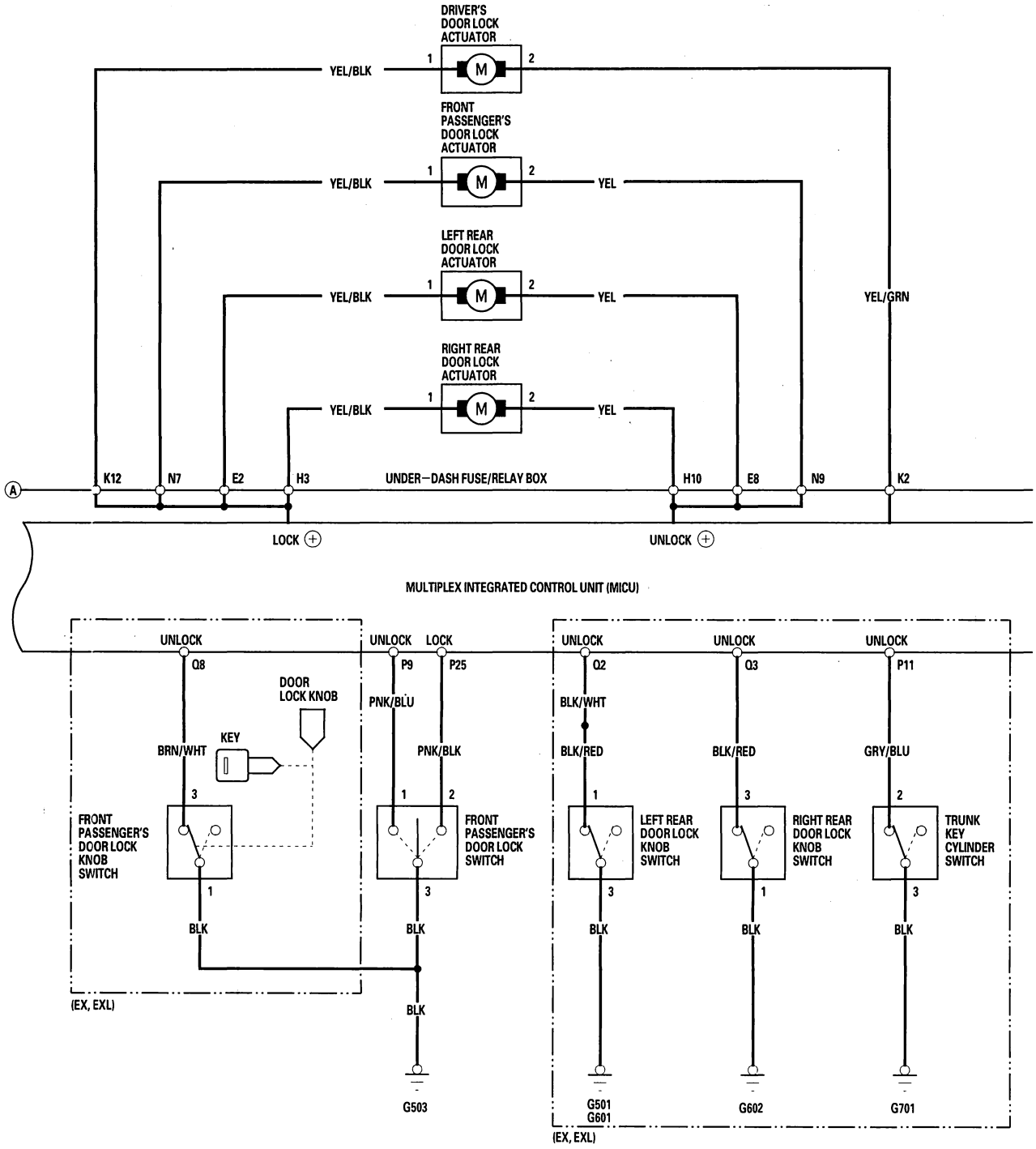

BACK

Protected by AR

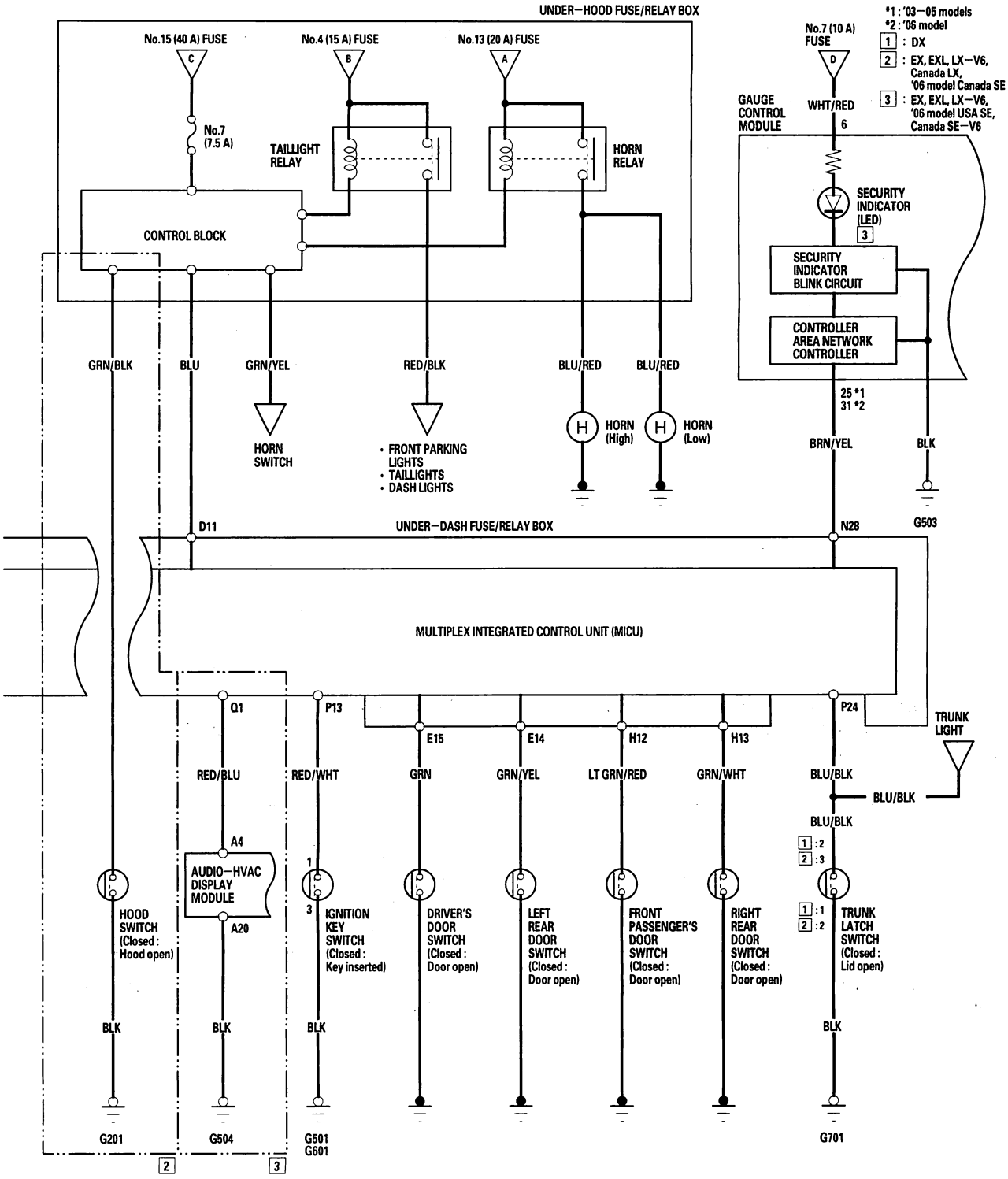

BACK

Protected by AR

Door Lock Actuator Test

Driver's door

1. Remove the driver's door panel.
   - 2-door (see page 20-9)
   - 4-door (see page 20-10)
2. Disconnect the 2P connector from the actuator.

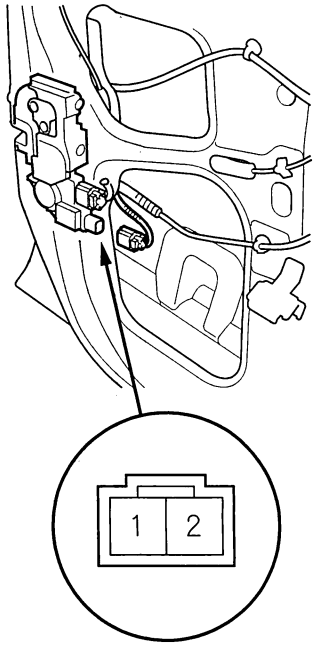

3. Check actuator operation by connecting power and ground according to the table. To prevent damage to the actuator, apply battery voltage only momentarily.

Terminal / Position	1	2
LOCK	⊕	⊖
UNLOCK	⊖	⊕

4. If the actuator does not operate as specified, replace it.

Passenger's door

1. Remove the passenger's door panel.
   - 2-door (see page 20-9)
   - 4-door (see page 20-10)
2. Disconnect the 2P connector from the actuator.

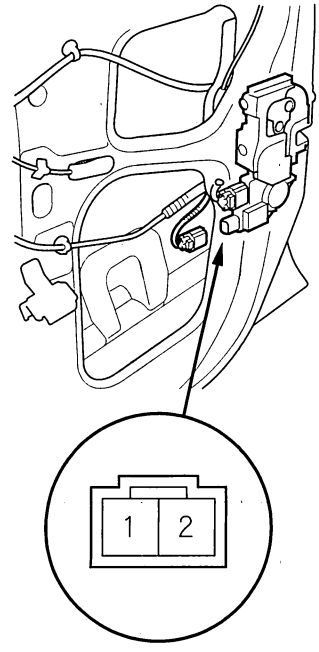

3. Check actuator operation by connecting power and ground according to the table. To prevent damage to the actuator, apply battery voltage only momentarily.

Terminal / Position	1	2
LOCK	⊕	⊖
UNLOCK	⊖	⊕

4. If the actuator does not operate as specified, replace it.

BACK

Protected by AR

Door Lock Knob Switch Test

Driver's Door

1. Remove the driver's door panel.
   - 2-door (see page 20-9)
   - 4-door (see page 20-10)
2. Disconnect the 3P connector from the actuator.

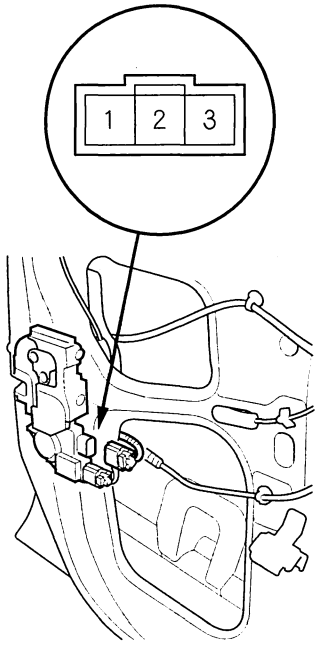

3. Check for continuity between the terminals.
   - There should be continuity between the No. 2 and No. 3 terminals when the door lock knob switch is in the LOCK position and no continuity when the switch is in the UNLOCK position.
   - There should be continuity between the No. 1 and No. 3 terminals when the door lock knob switch is in the UNLOCK position and no continuity when the switch is in the LOCK position.
4. If the continuity is not as specified, replace the door lock actuator.

Front Passenger's Door (EX, EXL, '06 model Canada SE)

1. Remove the front passenger's door panel.
   - 2-door (see page 20-9)
   - 4-door (see page 20-10)
2. Disconnect the 3P connector from the actuator.

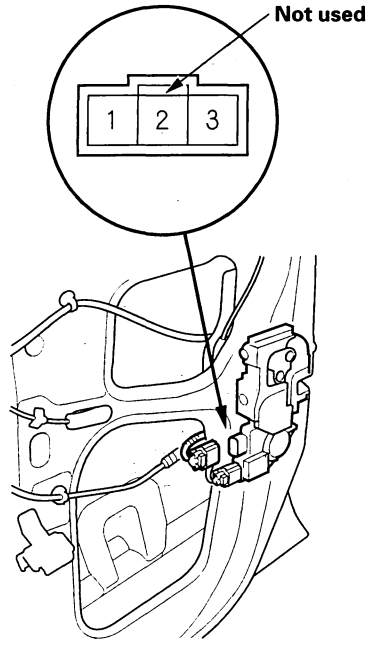

3. Check for continuity between the terminals. There should be continuity between the No. 1 and No. 3 terminals when the door lock knob switch in the UNLOCK position and no continuity when the switch is in the LOCK position.
4. If the continuity is not as specified, replace the door lock actuator.

(cont'd)

Protected by AR

Door Lock Knob Switch Test (cont'd)

Rear Door (EX, EXL, '06 model Canada SE)

1. Remove the left or right rear door panel (see page 20-25).
2. Disconnect the 3P connector from the actuator.

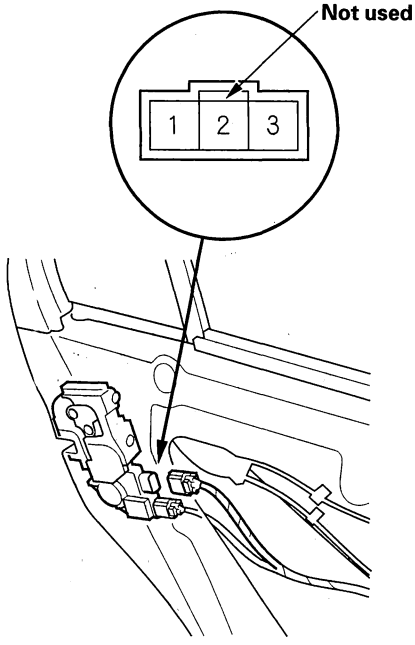

3. Check for continuity between the terminals. There should be continuity between the No. 1 and No. 3 terminals when the door lock knob switch is UNLOCK position and no continuity when the switch is in the LOCK position.
4. If the continuity is not as specified, replace the door lock actuator.

Door Key Cylinder Switch Test

1. Remove the driver's door panel.
   - 2-door (see page 20-9)
   - 4-door (see page 20-10)
2. Disconnect the 3P connector from the key cylinder switch.

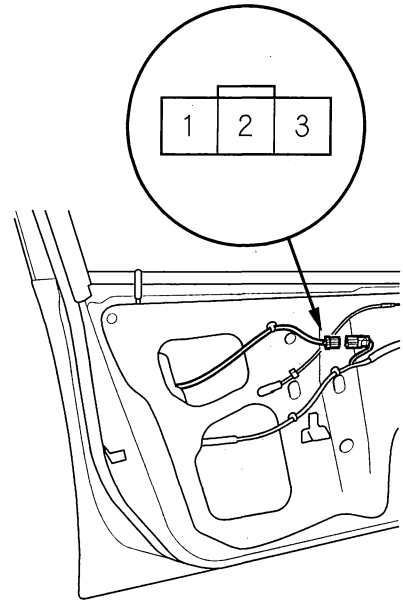

3. Check for continuity between the terminals.
   - There should be continuity between the No. 2 and No. 3 terminals when the door key cylinder switch is in LOCK position.
   - There should be no continuity between the No. 2 and No. 3 terminals when the door key cylinder switch is in the neutral or UNLOCK position.
   - There should be continuity between the No. 1 and No. 2 terminals when the door key cylinder switch is in UNLOCK position.
   - There should be no continuity between the No. 1 and No. 2 terminals when the door key cylinder switch is in the neutral or LOCK position.
4. If the continuity is not as specified, replace the door key cylinder assembly.
   - 2-door (see page 20-12)
   - 4-door (see page 20-14)

BACK

Protected by AR

Control Unit Input Test

1. Before testing the keyless entry/security control functions, troubleshoot the multiplex integrated control system. (see page 22-91).

Multiplex Integrated Control Unit

2. Remove the left kick panel.

   - 2-door (see page 20-90)
   - 4-door (see page 20-91)

3. Disconnect the under-dash fuse/relay box connectors.

   NOTE: All connectors are wire side of female terminals.

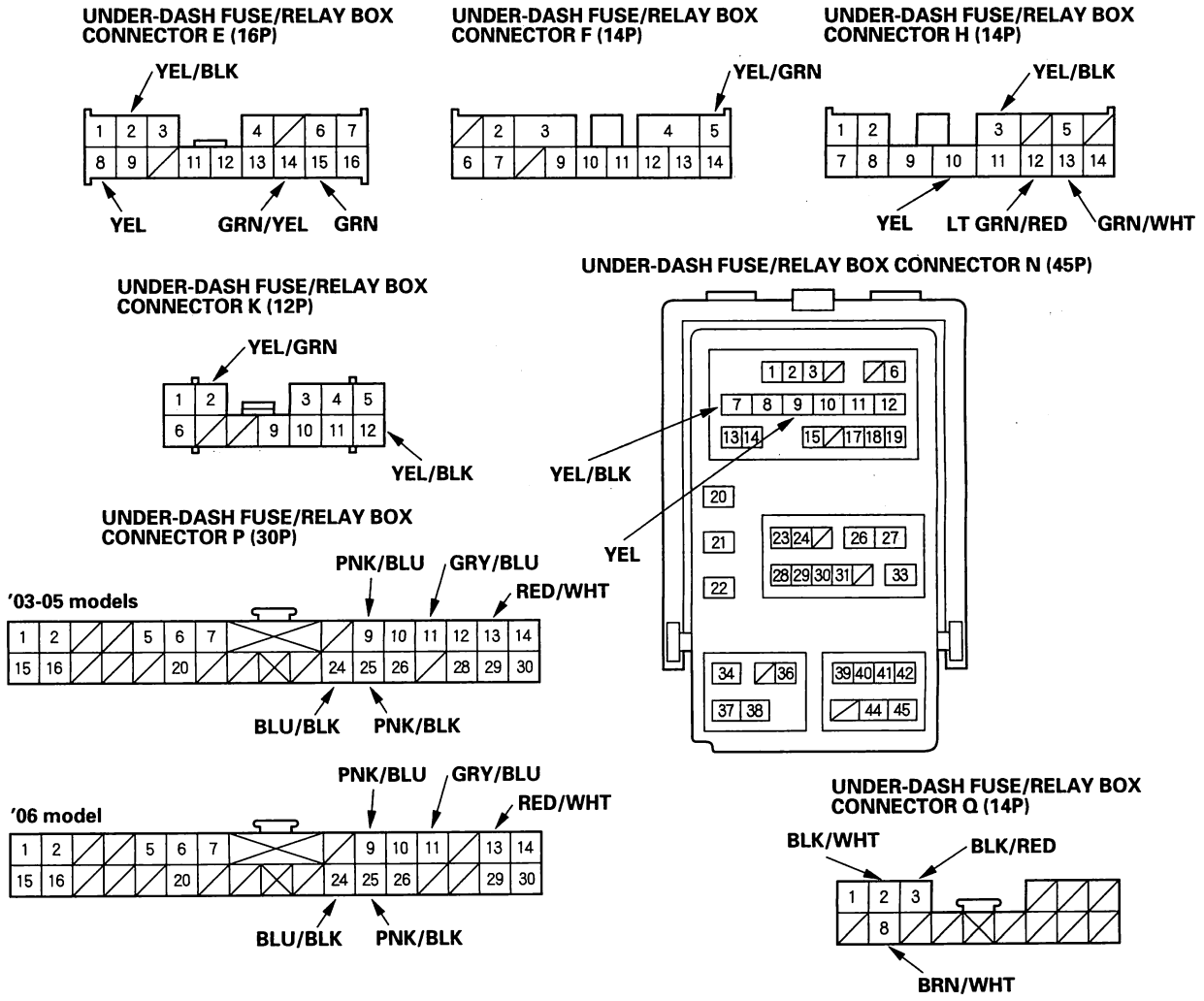

4. Inspect the connector and socket terminals to be sure they are all making good contact.

   - If the terminals are bent, loose or corroded, repair them as necessary, and recheck the system.
   - If the terminals look OK, go to step 5.

(cont'd)

Protected by AR

Control Unit Input Test (cont'd)

5. With the connectors still disconnected, make these input tests at the connectors.

   - If any test indicates a problem, find and correct the cause, then recheck the system.
   - If the input tests prove OK, go to step 6.

Cavity	Wire	Test condition	Test: Desired result	Possible cause if result is not obtained
H9	BLK	Under all conditions	Check for continuity to ground: There should be continuity.	• Poor ground (G501, G601) • An open in the wire
F5	YEL/GRN	Connect the F5 terminal to the battery positive terminal momentarily.	Check trunk opener operation: Trunk lid should open.	• Poor ground (G701) • Faulty trunk opener solenoid • An open in the wire
K2 K12	YEL/GRN YEL/BLK	Connect the battery positive terminal to K12 (K2) terminal, and K2 (K12) terminal to H9 terminal.	Check actuator operation: The driver's door lock actuator should lock (unlock).	• Faulty driver's door lock actuator • An open in the wire
N7 N9	YEL/BLK YEL	Connect the battery positive terminal to N7 (N9) terminal, and N9 (N7) terminal to H9 terminal.	Check actuator operation: The front passenger's door lock actuator should lock (unlock).	• Faulty front passenger's door lock actuator • An open in the wire
E2 E8	YEL/BLK YEL	Connect the battery positive terminal to E2 (E8) terminal, and E8 (E2) terminal to H9 terminal.	Check actuator operation: The left rear door lock actuator should lock (unlock).	• Faulty left rear door lock actuator • An open in the wire
H3 H10	YEL/BLK YEL	Connect the battery positive terminal to H3 (H10) terminal, and H10 (H3) terminal to H9 terminal.	Check actuator operation: The right rear door lock actuator should lock (unlock).	• Faulty right rear door lock actuator • An open in the wire

BACK

Protected by AR

6. Reconnect all connectors to the under-dash fuse/relay box.

7. Turn ignition switch to ON (II) to keep the system awake and make these input tests at the appropriate connectors on the under-dash fuse/relay box.

   - If any test indicates a problem, find and correct the cause, then recheck the system.
   - If all the input tests prove OK, go to step 8.

Cavity	Wire	Test condition	Test: Desired result	Possible cause if result is not obtained
Q8*2	BRN/WHT	Front passenger's door lock knob switch unlocked	Check for voltage to ground: There should be less than 1 V.	• Poor ground (G503) • Faulty front passenger's door lock knob switch • An open in the wire
		Front passenger's door lock knob switch locked	Check for voltage to ground: There should be 5 V or more.	• Faulty front passenger's door lock knob switch • Short to ground
P9	PNK/BLU	Front passenger's door lock switch unlocked	Check for voltage to ground: There should be less than 1 V.	• Poor ground (G503) • Faulty front passenger's door lock switch • An open in the wire
		Front passenger's door lock switch in neutral	Check for voltage to ground: There should be 5 V or more.	• Faulty front passenger's door lock switch • Short to ground
P25	PNK/BLK	Front passenger's door lock switch locked	Check for voltage to ground: There should be less than 1 V.	• Poor ground (G503) • Faulty front passenger's door lock switch • An open in the wire
		Front passenger's door lock switch in neutral	Check for voltage to ground: There should be 5 V or more.	• Faulty front passenger's door lock switch • Short to ground
Q2*2	BLK/WHT	Left rear door lock knob switch unlocked	Check for voltage to ground: There should be less than 1 V.	• Poor ground (G501, G601) • Faulty left rear door lock knob switch • An open in the wire
		Left rear door lock knob switch locked	Check for voltage to ground: There should be 5 V or more.	• Faulty left rear door lock knob switch • Short to ground
Q3*2	BLK/RED	Right rear door lock knob switch unlocked	Check for voltage to ground: There should be less than 1 V.	• Poor ground (G602) • Faulty right rear door lock knob switch • An open in the wire
		Right rear door lock knob switch locked	Check for voltage to ground: There should be 5 V or more.	• Faulty right rear door lock knob switch • Short to ground
P11*1	GRY/BLU	Trunk key cylinder switch unlocked	Check for voltage to ground: There should be less than 1 V.	• Poor ground (G701) • Faulty trunk key cylinder switch • An open in the wire
		Trunk key cylinder switch in neutral	Check for voltage to ground: There should be 5 V or more.	• Faulty trunk key cylinder switch • Short to ground

* 1: with security ('03-05 models)
* 2: EX, EXL,'06 model Canada SE

(cont'd)

Protected by AR

Control Unit Input Test (cont'd)

Cavity	Wire	Test condition	Test: Desired result	Possible cause if result is not obtained
Q1	RED/BLU	Under all conditions	Check for voltage to ground: There should be less than 1 V.	• Poor ground (G504) • Faulty connections at the audio unit • Faulty audio unit • An open in the wire
P13	RED/WHT	Ignition key inserted into the ignition switch.	Check for voltage to ground: There should be less than 1 V.	• Poor ground (G501, G601) • Faulty ignition key switch • An open in the wire
		Ignition key removed from the ignition switch.	Check for voltage to ground: There should be 5 V or more.	• Faulty ignition key switch • Short to ground
E15	GRN	Driver's door open	Check for voltage to ground: There should be less than 1 V.	• Faulty driver's door switch • An open in the wire
		Driver's door closed	Check for voltage to ground: There should be 5 V or more.	• Faulty driver's door switch • Short to ground
H12	LT GRN/ RED	Front passenger's door open	Check for voltage to ground: There should be less than 1 V.	• Faulty front passenger's door switch • An open in the wire
		Front passenger's door closed	Check for voltage to ground: There should be 5 V or more.	• Faulty front passenger's door switch • Short to ground
E14	GRN/YEL	Left rear door open	Check for voltage to ground: There should be less than 1 V.	• Faulty left rear door switch • An open in the wire
		Left rear door closed	Check for voltage to ground: There should be 5 V or more.	• Faulty left rear door switch • Short to ground
H13	GRN/WHT	Right rear door open	Check for voltage to ground: There should be less than 1 V.	• Faulty right rear door switch • An open in the wire
		Right rear door closed	Check for voltage to ground: There should be 5 V or more.	• Faulty right rear door switch • Short to ground
P24	BLU/BLK	Trunk lid open	Check for voltage to ground: There should be less than 1 V.	• Poor ground (G701) • Faulty trunk latch switch • An open in the wire
		Trunk lid closed	Check for voltage to ground: There should be 5 V or more.	• Faulty trunk latch switch • Short to ground

BACK

Protected by AR

Door Multiplex Control Unit

8. Remove the driver's power window switch panel (see page 20-9).

9. Disconnect the 23P connector from the power window master switch.

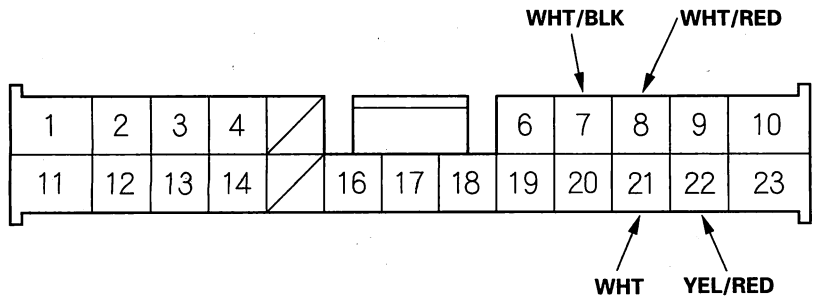

Wire side of female terminals

10. Inspect the connector and socket terminals to be sure they are all making good contact.

- If the terminals are bent, loose or corroded, repair them as necessary, and recheck the system.
- If the terminals look OK, go to step 11.

(cont'd)

Protected by AR

Control Unit Input Test (cont'd)

11. Reconnect the connector to the door multiplex control unit, and make these input tests at the connectors.

    - If any test indicates a problem, find and correct the cause, then recheck the system.
    - If all the input tests prove OK, go to step 12.

Cavity	Wire	Test condition	Test: Desired result	Possible cause if result is not obtained
7	WHT/BLK	Driver's door lock knob switch unlocked	Check for voltage to ground: There should be less than 1 V.	• Poor ground (G501) • Faulty driver's door lock knob switch • An open in the wire
		Driver's door lock knob switch locked	Check for voltage to ground: There should be 5 V or more.	• Faulty driver's door lock knob switch • Short to ground
22	YEL/RED	Driver's door lock knob switch locked	Check for voltage to ground: There should be less than 1 V.	• Poor ground (G501) • Faulty driver's door lock knob switch • An open in the wire
		Driver's door lock knob switch unlocked	Check for voltage to ground: There should be 5 V or more.	• Faulty driver's door lock knob switch • Short to ground
21	WHT	Driver's door key cylinder switch in UNLOCK	Check for voltage to ground: There should be less than 1 V.	• Faulty driver's door key cylinder switch • Poor ground (G501) • An open in the wire • Short to ground
		Driver's door key cylinder switch in neutral	Check for voltage to ground: There should be 5 V or more.	
		Driver's door key cylinder switch in LOCK	Check for voltage to ground: There should be 5 V or more.	
8	WHT/RED	Driver's door key cylinder switch in LOCK	Check for voltage to ground: There should be less than 1 V.	• Faulty driver's door key cylinder switch • Poor ground (G501) • An open in the wire • Short to ground
		Driver's door key cylinder switch in neutral	Check for voltage to ground: There should be 5 V or more.	
		Driver's door key cylinder switch in UNLOCK	Check for voltage to ground: There should be 5 V or more.	

12. If all the input tests prove OK, and no DTCs were found during MICU troubleshooting (B-CAN system diagnosis test mode A), go to the B-CAN system input and output index. If multiple failures are found on more than one control unit, replace the under-dash fuse/relay box (includes the MICU). If input failures are related to a particular control unit, replace that control unit.

BACK

Protected by AR

DTC Troubleshooting

DTC B1026: Passenger's Door Lock Switch Signal Error

1. Clear the DTCs using the HDS.
2. Cycle the ignition switch to OFF and then back ON.
3. Operate the passenger's door lock switch in the LOCK and UNLOCK positions for 2 seconds.
4. Check for DTCs using the HDS.

   Is DTC B1026 indicated?

   YES—Go to step 5.

   NO—Intermittent failure. The passenger's door lock system is OK at this time. Check pinfits and connections. ■
5. With the door lock in UNLOCK position, select SECURITY from the HDS and enter the DATA LIST.
6. Check the ON/OFF information of the Front Psnger's Door Lock Sw. (LOCK) and Front Psnger's Door Lock Sw. (UNLOCK) in the DATA LIST.

   Are both information indicators OFF?

   YES—Go to step 7.

   NO—Go to step 9.
7. Make sure the ON/OFF information of the Front Psnger's Door Lock Sw. (LOCK) and Front Psnger's Door Lock Sw. (UNLOCK) are changed when the passenger's door lock switch is in the LOCK and UNLOCK positions.

   Does the information show the correct ON and OFF indications when the door lock switch in the LOCK and UNLOCK positions?

   YES—Faulty MICU; replace it. ■

   NO—Go to step 8.
8. Check for a short between the door lock switch LOCK and UNLOCK wires.

   Are the wire harnesses OK?

   YES—Faulty passenger's door lock switch; replace it. ■

   NO—A short in the wire, repair and recheck. ■
9. Remove the passenger's inner handle (see page 20-9).
10. Disconnect the 3P connector from the passenger's door lock switch.
11. Check the ON/OFF information of the Front Psnger's Door Lock Sw. (LOCK) and Front Psnger's Door Lock Sw. (UNLOCK) in the DATA LIST.

    Are both information indicators OFF?

    YES—Faulty passenger's door lock switch; replace it. ■

    NO—Go to step 12.
12. Check for a short in the wire between the MICU and passenger's door lock switch at the security alarm/ keyless door lock system control unit input test (see page 22-143).

    Are the wire harnesses OK?

    YES—Faulty MICU; replace it. ■

    NO—A short in the wire, repair and recheck. ■

Protected by AR

DTC Troubleshooting (cont'd)

DTC B1027: Trunk Key Cylinder Switch Signal Error

1. Clear the DTCs using the HDS.
2. Cycle the ignition switch to OFF and then back ON.
3. Operate the trunk key cylinder switch for 2 seconds.
4. Check the DTCs using the HDS.

   Is DTC B1027 indicated?

   YES—Go to step 5.

   NO—Intermittent failure. The trunk key cylinder system is OK at this time.■
5. With the trunk key cylinder switch in the off (neutral) position, select the TEST MODE MENU from the HDS and enter the DATA LIST.
6. Check the ON/OFF information of the Trunk Key Cylinder Switch (UNLOCK) in the DATA LIST.

   Is the information indicator OFF?

   YES—Go to step 7.

   NO—Go to step 9.
7. Make sure the ON/OFF information of the Trunk Key Cylinder Switch (UNLOCK) are changed when the trunk key cylinder switch is turned to UNLOCK position with the key.

   Does the information show ON when the trunk key cylinder switch is turned to UNLOCK position, and show OFF when the trunk key cylinder switch is returned to the off (neutral) position?

   YES—Faulty MICU; replace it.■

   NO—Go to step 8.
8. Check for an open in the wire between the MICU and trunk key cylinder switch.

   Are the wire harnesses OK?

   YES—Faulty trunk key cylinder switch; replace it.■

   NO—An open in the wire, repair and recheck.■
9. Disconnect the 3P connector from the trunk key cylinder switch.
10. Check the ON/OFF information of the Trunk Key Cylinder Switch (UNLOCK) in the DATA LIST.

    Is the information indicator OFF?

    YES—Faulty trunk key cylinder switch; replace it.■

    NO—Go to step 11.
11. Check for a short in the wire between the MICU and trunk key cylinder switch.

    Are the wire harnesses OK?

    YES—Faulty MICU; replace it.■

    NO—A short in the wire, repair and recheck.■

BACK

Protected by AR

DTC B1127: Driver's Door Key Cylinder Switch Signal Error

1. Clear the DTCs using the HDS.
2. Cycle the ignition switch to OFF and then back ON.
3. Operate the driver's door key cylinder in the LOCK and UNLOCK positions for 2 seconds.
4. Check for DTCs using the HDS.

   Is DTC B1127 indicated?

   YES—Go to step 5.

   NO—Intermittent failure. The driver's door key cylinder system is OK at this time. Check pinfits and connections. ■
5. With no driver's door key cylinder operation, select SECURITY from the HDS, and enter the DATA LIST.
6. Check the ON/OFF information of the Driver's Door Key Cylinder Switch (LOCK) and Driver's Door Key Cylinder Switch (UNLOCK) in the DATA LIST.

   Are both information indicators OFF?

   YES—Go to step 7.

   NO—Go to step 10.
7. Turn the driver's door key cylinder to the LOCK and UNLOCK positions with the ignition key and check the ON/OFF information of the Driver's Door Key Cylinder Switch (LOCK) and Driver's Door Key Cylinder Switch (UNLOCK) in the DATA LIST.

   Is the Driver's Door Key Cylinder Switch (LOCK) (Driver's Door Key Cylinder Switch (UNLOCK)) information indicator ON when the key cylinder is in the LOCK (UNLOCK) position, and OFF when the key is returned to the neutral position?

   YES—Faulty door multiplex control unit; replace the power window master switch. ■

   NO—Go to step 8.
8. Disconnect the driver's door key cylinder switch 3P connector.
9. Check for continuity between the No. 3 (LOCK) and No. 1 (UNLOCK) terminals of the driver's door key cylinder switch 3P connector and the No. 8 (LOCK) and No. 21 (UNLOCK) terminals of the power window master switch 23P connector.

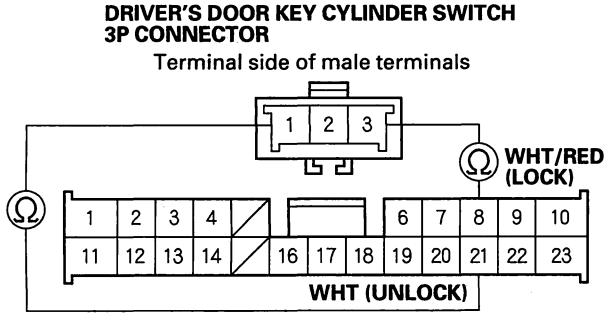

   Is there continuity?

   YES—Faulty driver's door key cylinder switch. ■

   NO—Repair an open in the WHT/RED (LOCK) or WHT (UNLOCK) wire. ■
10. Disconnect the driver's door key cylinder switch 3P connector.
11. Check the ON/OFF information of the Driver's Door Key Cylinder Switch (LOCK) and Driver's Door Key Cylinder Switch (UNLOCK) in the DATA LIST.

    Are both information indicators OFF?

    YES—Faulty driver's door key cylinder switch. ■

    NO—Go to step 12.

(cont'd)

Protected by AR

DTC Troubleshooting (cont'd)

12. Check for continuity between the No. 3 (LOCK) and No. 1 (UNLOCK) terminals of the driver's door key cylinder switch 3P connector and body ground.

DRIVER'S DOOR KEY CYLINDER SWITCH 3P CONNECTOR

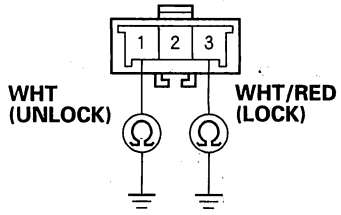

Terminal side of male terminals

Is there continuity?

YES—Repair a short in the WHT/RED (LOCK) or WHT (UNLOCK) wire. ■

NO—Faulty door multiplex control unit; replace the power window master switch. ■

BACK

Protected by AR

DTC B1128: Driver's Door Lock Switch Signal Error

1. Clear the DTCs using the HDS.
2. Cycle the ignition switch to OFF and then back ON.
3. Operate the driver's door lock switch in the LOCK and UNLOCK positions for 2 seconds.
4. Check for DTCs using the HDS.

   Is DTC B1128 indicated?

   YES—Go to step 5.

   NO—Intermittent failure. The driver's door lock switch system is OK at this time. Check pinfits and connections. ■
5. With no driver's door lock switch operation, select SECURITY from the HDS, and enter the DATA LIST.
6. Check the ON/OFF information of the Driver's Door Lock Switch (LOCK) and Driver's Door Lock Switch (UNLOCK) in the DATA LIST.

   Are both information indicators OFF?

   YES—Go to step 7.

   NO—Check the door lock switch. If the driver's door lock switch is OK, faulty door multiplex control unit; replace the power window master switch. ■
7. Push the driver's door lock switch in LOCK and UNLOCK positions, and check the ON/OFF information of the Driver's Door Lock Switch (LOCK) and Driver's Door Lock Switch (UNLOCK) in the DATA LIST.

   Is the Driver's Door Lock Switch (LOCK) (Driver's Door Lock Switch (UNLOCK)) information indicator ON when the door lock switch is pushed in each switch position, and OFF when the door lock switch is released?

   YES—Substitute a known-good power window master switch. If the code is still present, replace the MICU. ■

   NO—Faulty door multiplex control unit; replace the power window master switch. ■

Protected by AR

DTC Troubleshooting (cont'd)

DTC B1129: Driver's Door Lock Knob Switch Signal Error

1. Clear the DTCs using the HDS.
2. Cycle the ignition switch to OFF and then back ON.
3. Operate the driver's door lock knob switch in the LOCK and UNLOCK positions for 2 seconds.
4. Check for DTCs using the HDS.

   Is DTC B1129 indicated?

   YES—Go to step 5.

   NO—Intermittent failure. The driver's door lock knob switch system is OK at this time. Check pinfits and connections.■

5. Select SECURITY from the HDS, and enter the DATA LIST.

   Check the ON/OFF information of the Driver's Door Lock knob Switch (LOCK) and Driver's Door Lock knob Switch (UNLOCK) in the DATA LIST.

   Is the Driver's Door Lock knob Switch (LOCK) information indicator ON and Driver's Door Lock knob Switch (UNLOCK) information indicator OFF with the door lock knob switch in LOCK position, and is the Driver's Door Lock knob Switch (LOCK) information indicator OFF and Driver's Door Lock knob Switch (UNLOCK) information indicator ON with the door lock knob switch in UNLOCK position?

   YES—Substitute a known-good power window master switch. If the code is still present, replace the MICU.■

   NO—Go to step 6.

6. Disconnect the driver's door lock knob switch 3P connector.
7. Check the ON/OFF information of the Driver's Door Lock knob Switch (LOCK) and Driver's Door Lock knob Switch (UNLOCK) in the DATA LIST.

   Are both information indicators OFF?

   YES—Faulty driver's door lock knob switch.■

   NO—Go to step 8.

8. Check for continuity between the No. 2 (LOCK) and No. 1 (UNLOCK) terminals of the driver's door lock knob switch 3P connector and body ground.

DRIVER'S DOOR LOCK KNOB SWITCH 3P CONNECTOR

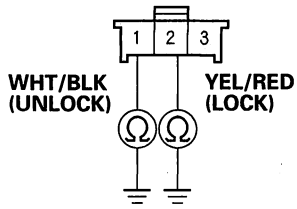

Wire side of female terminals

Is there continuity?

YES—Repair a short in the YEL/RED (LOCK) or WHT/BLK (UNLOCK) wire.■

NO—Go to driver's door lock knob switch test (see page 22-141). If the driver's door lock knob switch is OK, the door multiplex control unit is faulty; replace the power window master switch.■

BACK

Protected by AR

Tripped Sensor History

The security system stores information on the last tripped sensor if the security system has been violated. The information can be retrieved using the HDS.

To retrieve the last tripped sensor data:

1. Select HISTORY DATA from the security system test mode menu.
2. Select CURRENT DATA.
3. Confirm that the VIN matches the Vehicle then press the enter button.
4. Scroll through the data list.
   - Sensors that were violated will indicate DETECT.
   - Sensors that were not violated will indicate NONE.
5. Inspect the DETECT circuit for:
   - Misadjusted or damaged switch.
   - Loose or corroded connections.
   - Intermittent short to ground.

Protected by AR

Trunk Lid Opener Solenoid Test

1. Disconnect the 3P connector from the trunk latch switch/trunk lid opener solenoid.

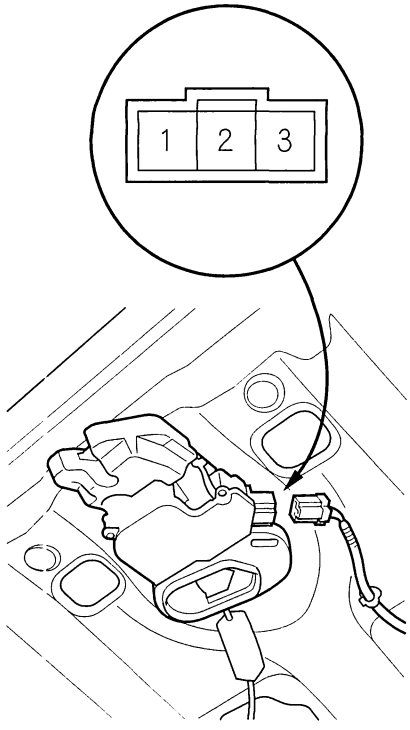

2. Check trunk lid opener solenoid operation by connecting power and ground according to the table. To prevent damage to the trunk lid opener solenoid, apply battery voltage only momentarily.

Terminal / Position	1	2
UNLOCK	⊕	⊖

3. If the trunk lid opener solenoid does not work as specified, replace it.

Trunk Key Cylinder Switch Test

4-door EX, EXL, LX-V6, '06 model Canada SE

1. Remove the trunk lid trim (see page 20-116).

2. Disconnect the 3P connector from the key cylinder switch.

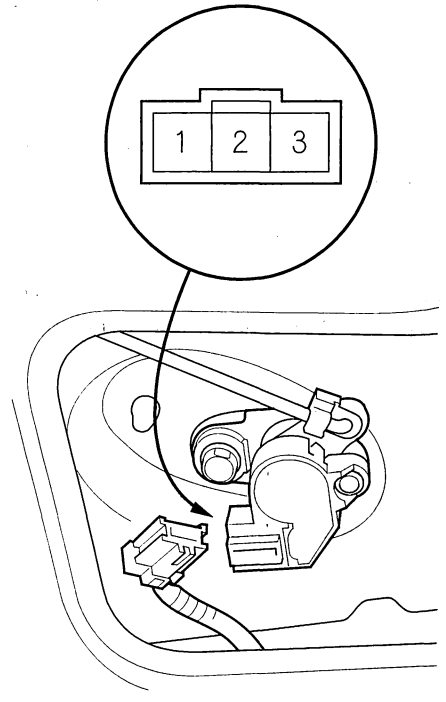

3. Check for continuity between the terminals. There should be continuity between the No. 2 and No. 3 terminals when the trunk key cylinder switch is in UNLOCK position. There should be no continuity between the No. 2 and No. 3 terminals when the trunk key cylinder switch is in the released (neutral) position.

4. If the continuity is not as specified, replace the trunk key cylinder switch.

BACK

Protected by AR

Door Lock Switch Test

Passenger's Door Lock Switch

1. Remove the front passenger's switch panel.
   - 2-door (see page 20-9)
   - 4-door (see page 20-10)
2. Disconnect the 10P connector from the front passenger's power window switch.

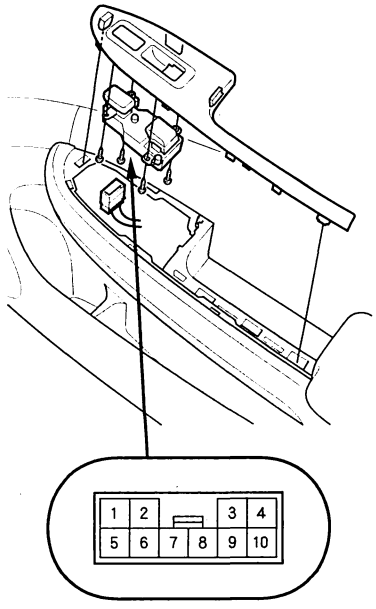

3. Check for continuity between the terminals.
   - There should be continuity between the No. 2 and No. 9 terminals when the door lock switch is in LOCK position. There should be no continuity between the No. 2 and No. 9 terminals when the door lock switch is in the neutral position.
   - There should be continuity between the No. 1 and No. 9 terminals when the door lock switch is in UNLOCK position. There should be no continuity between the No. 1 and No. 9 terminals when the door lock switch is in the neutral position.
4. If the continuity is not as specified, replace the door lock switch.

Hood Switch Test

EX, EXL, LX-V6, Canada LX, '06 model Canada SE

1. Open the hood.
2. Disconnect the 2P connector from the hood switch.

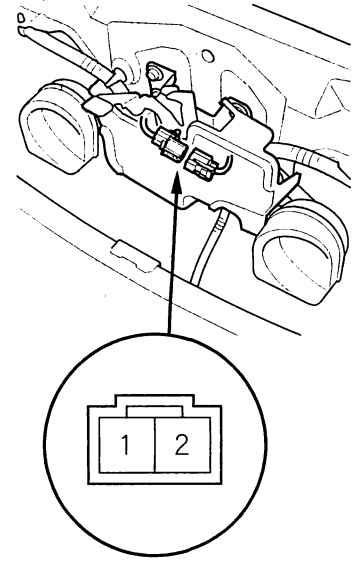

3. Check for continuity between the terminals. There should be continuity between the No. 1 and No. 2 terminals when the hood is opened (lever released). There should be no continuity between the No. 1 and No. 2 terminals when the hood is closed (lever pushed down).
4. If the continuity is not as specified, replace the hood switch.

Protected by AR

Transmitter Test

NOTE:
- If the doors unlock or lock with the transmitter, but the LED on the transmitter does not come on, the LED is faulty; replace the transmitter.
- If any door is open, you cannot lock the doors with the transmitter.
- If you unlocked the doors with the transmitter, but do not open any of the doors within 30 seconds, the doors relock automatically.
- The doors do not lock or unlock with the transmitter if the ignition key is inserted in the ignition switch.

1. Press the lock or unlock button five or six times to reset the transmitter.

   - If the locks work, the transmitter is OK.■
   - If the locks don't work, go to step 2.

2. Open the transmitter and check for water damage.

   - If you find any water damage, replace the transmitter.■
   - If there is no water damage, go to step 3.

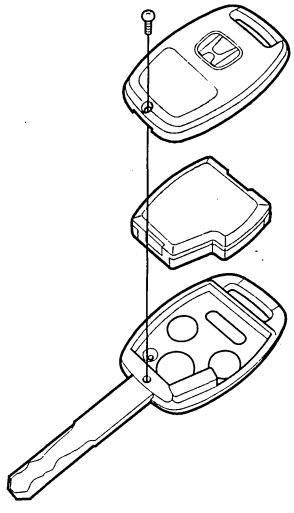

3. Replace the transmitter battery (A) with a new one, and try to lock and unlock the doors with the transmitter by pressing the lock or unlock button five or six times.

   - If the doors lock and unlock, the transmitter is OK.■
   - If the doors don't lock and unlock, go to step 4.

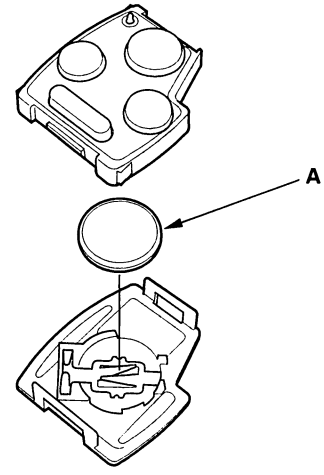

4. Reprogram and register the transmitter, then try to lock and unlock the doors.

   - If the doors lock and unlock, the transmitter is OK.■
   - If the doors don't lock and unlock, try and program to another vehicle. If still not operating, replace the transmitter.■

BACK

Protected by AR

Transmitter Programming

Storing transmitter codes:
The codes of up to three transmitters can be stored into the keyless receiver unit memory. (If a fourth code is stored, the code which was input first will be erased.)

NOTE: It is important to maintain the time limits between the steps. Make sure the doors, the hood and the tailgate are closed.

1. Turn the ignition switch ON (II).
2. Within 1 to 4 sec, press the transmitter lock or unlock button with the transmitter aimed at the keyless receiver in the power window master switch.
3. Within 1 to 4 sec, turn the ignition switch OFF.
4. Within 1 to 4 sec, turn the ignition switch ON (II).
5. Within 1 to 4 sec, press the transmitter lock or unlock button with the transmitter aimed at the keyless receiver in the power window master switch.
6. Within 1 to 4 sec, turn the ignition switch OFF.
7. Within 1 to 4 sec, turn the ignition switch ON (II).
8. Within 1 to 4 sec, press the transmitter lock or unlock button with the transmitter aimed at the keyless receiver in the power window master switch.
9. Within 1 to 4 sec, turn the ignition switch OFF.
10. Within 4 sec, turn the ignition switch ON (II).
11. Within 1 to 4 sec, press the transmitter lock or unlock button with the transmitter aimed at the keyless receiver in the power window master switch.
12. Confirm you can hear the sound of the door lock actuators within 1 to 4 sec, then push the transmitter lock or unlock button again, or the code will not be stored.
13. Within 10 sec, aim the transmitters (up to two additional ones) whose codes you want to store at the keyless receiver, and press the transmitter lock or unlock buttons.
    Confirm that you can hear the sound of the door lock actuators after each transmitter code is stored.
14. Turn the ignition switch OFF, and pull out the key.
15. Confirm proper operation with the transmitters.

Protected by AR

Horns

Component Location Index

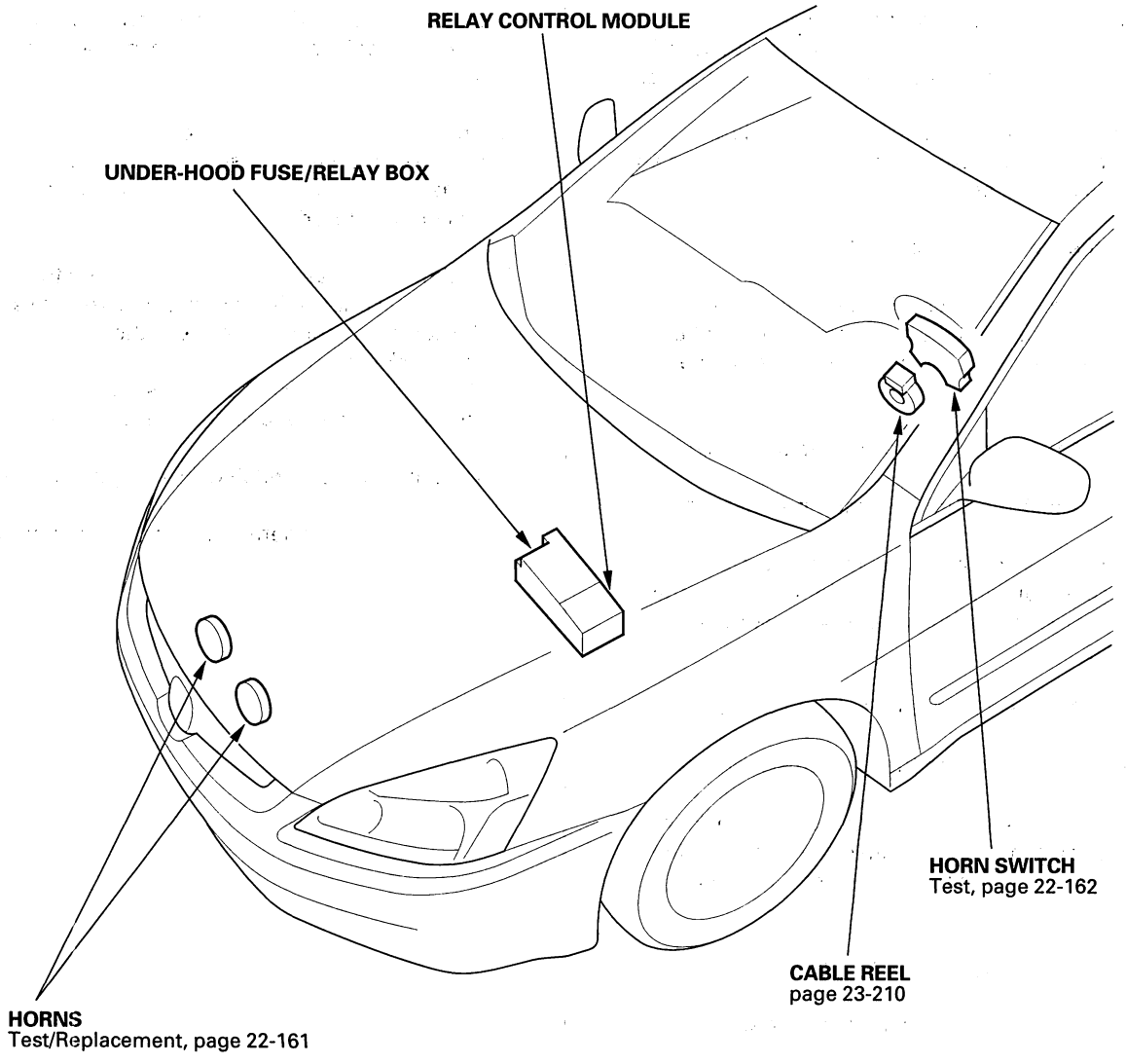

BACK

Protected by AR

Circuit Diagram

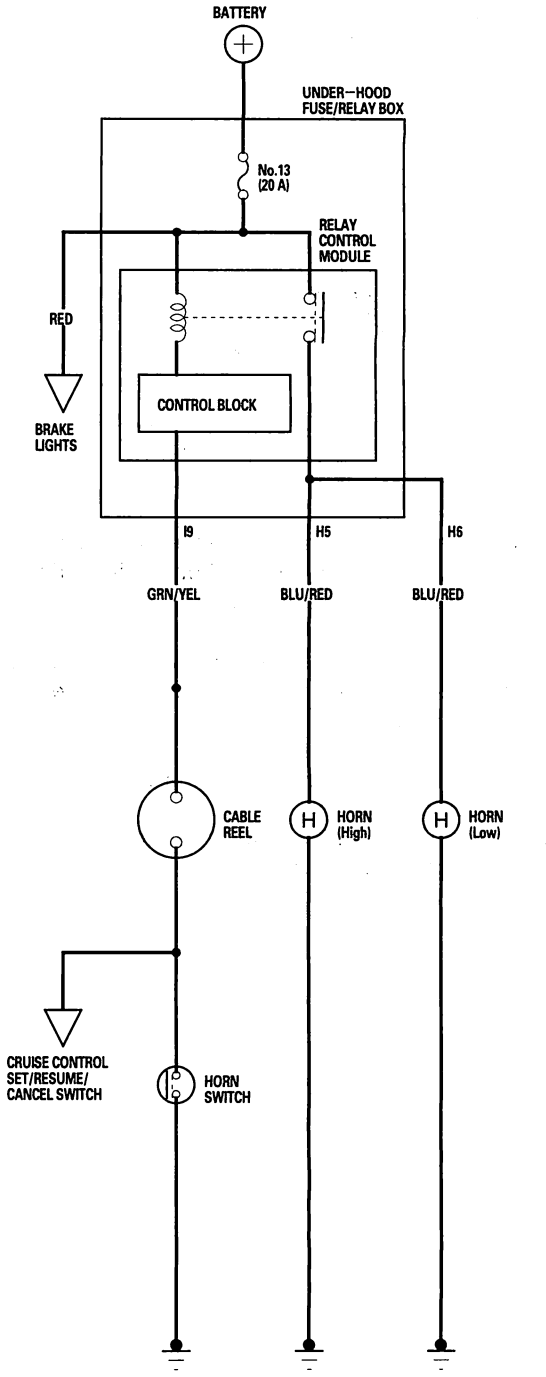

Horn Test/Replacement

1. Remove the front bulkhead cover (see page 20-197).
2. Disconnect the 1P connector (A) from each horn (B).

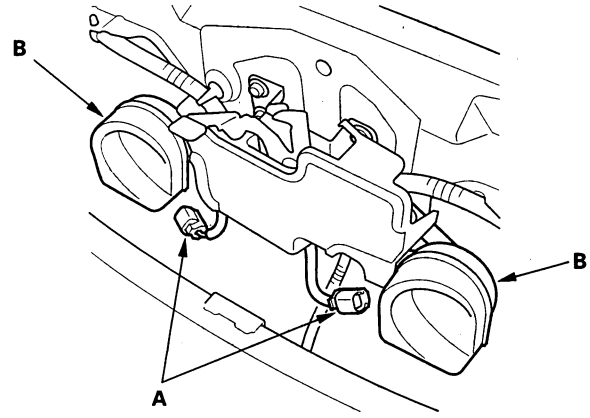

3. Test the horn by connecting battery power to the terminal (A) and grounding the bracket (B). The horn should sound.

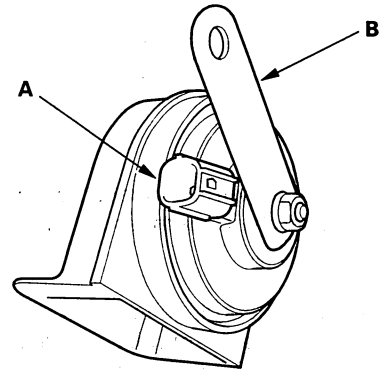

4. If it fails to sound, replace it.

Protected by AR

Horn Switch Test

1. Remove the steering column covers (see page 17-25).

2. Disconnect the cable reel 5P (13P) connector (A) from the dashboard wire harness.
( ): With cruise control

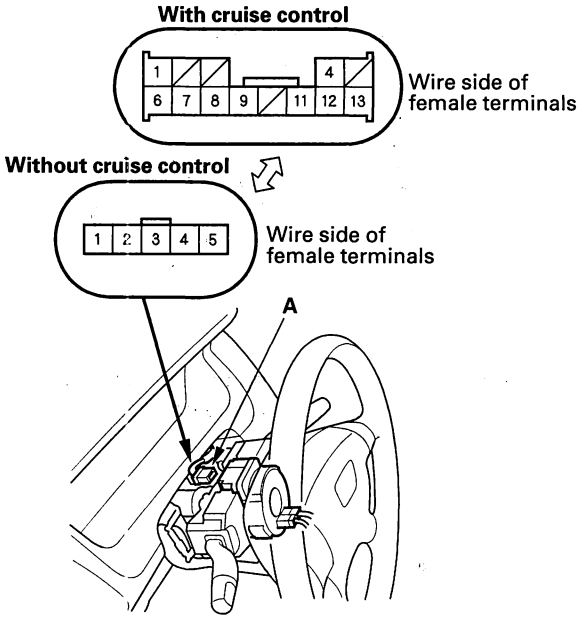

3. Using a jumper wire, connect the No. 1 terminal of the dashboard wire harness 5P (or 13P) connector to body ground.

   - If the horns sound, go to step 4.
   - If the horns don't sound, check these items:
     - No. 13 (20 A) fuse in the under-hood fuse/relay box.
     - Relay control module in the under-hood fuse/relay box.
     - Horns (see page 22-161).
     - An open in the wire.

4. Reconnect the cable reel 5P (13P) connector (A) to the dashboard wire harness.
( ): With cruise control

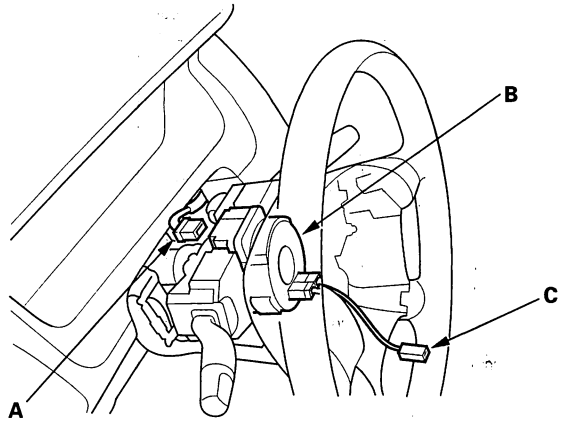

5. Remove the driver's airbag assembly (see page 23-197), and disconnect the horn switch 1P positive terminal from the cable reel (B).

6. Using a jumper wire, connect the cable reel side 1P connector (C) to body ground, and turn the wheel side to side.

   - If the horns sound, replace the driver's airbag assembly.
   - If the horns don't sound or sounds intermittently, replace the cable reel.

BACK

Protected by AR

Exterior Lights

Component Location Index

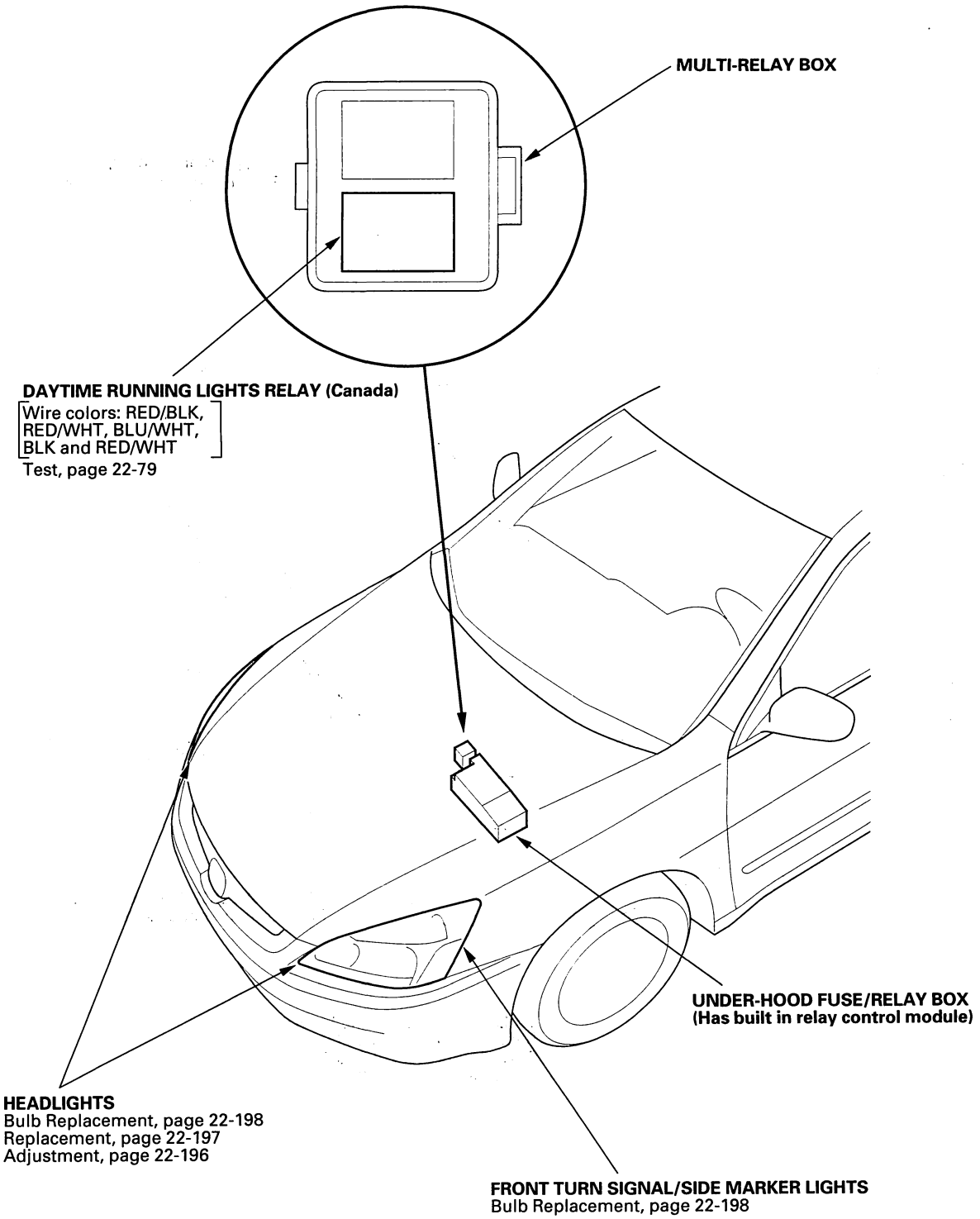

(cont'd)

Protected by AR

Component Location Index (cont'd)

4-door ('03-05 models):

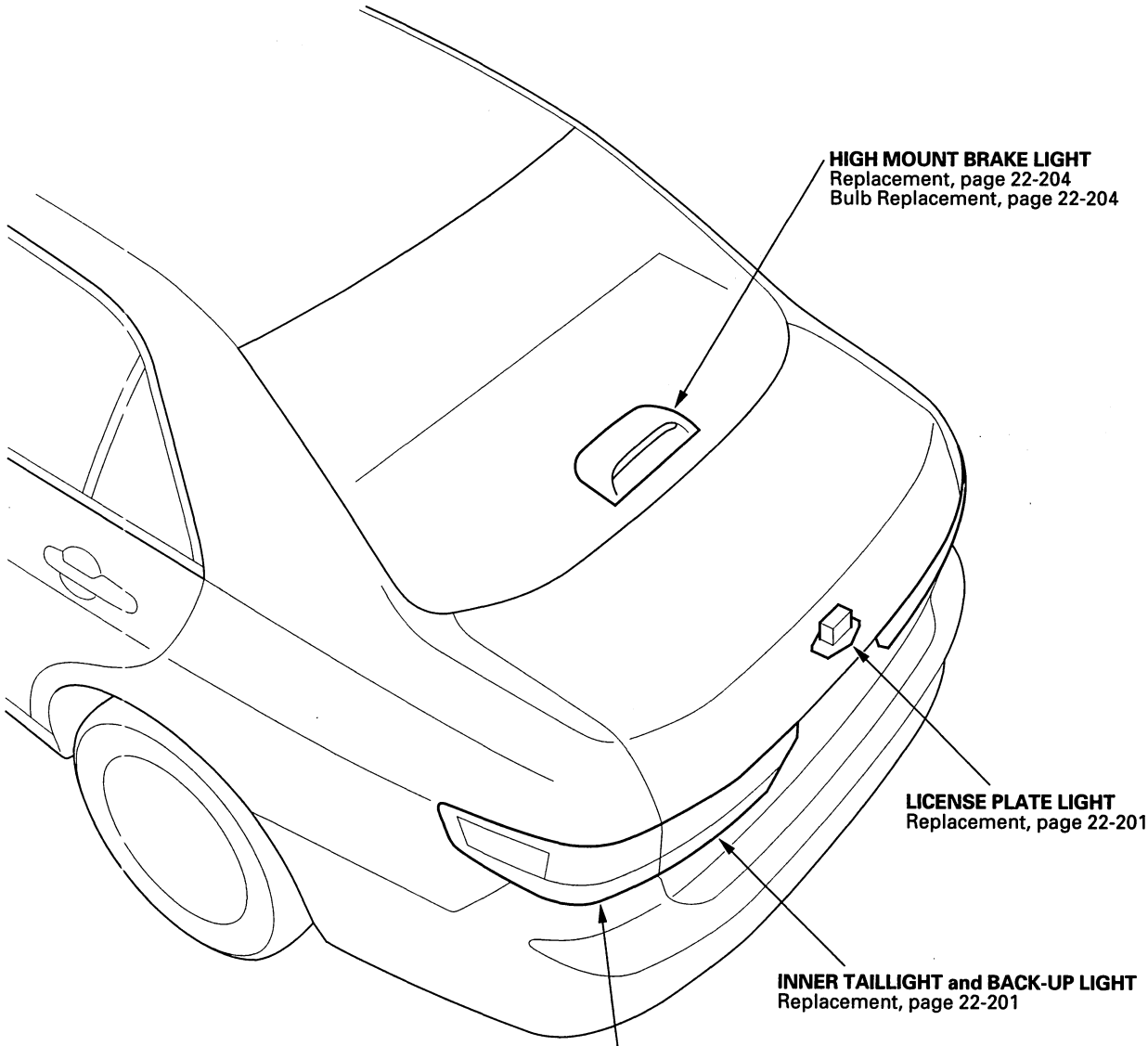

BACK

Protected by AR

4-door ('06 model):

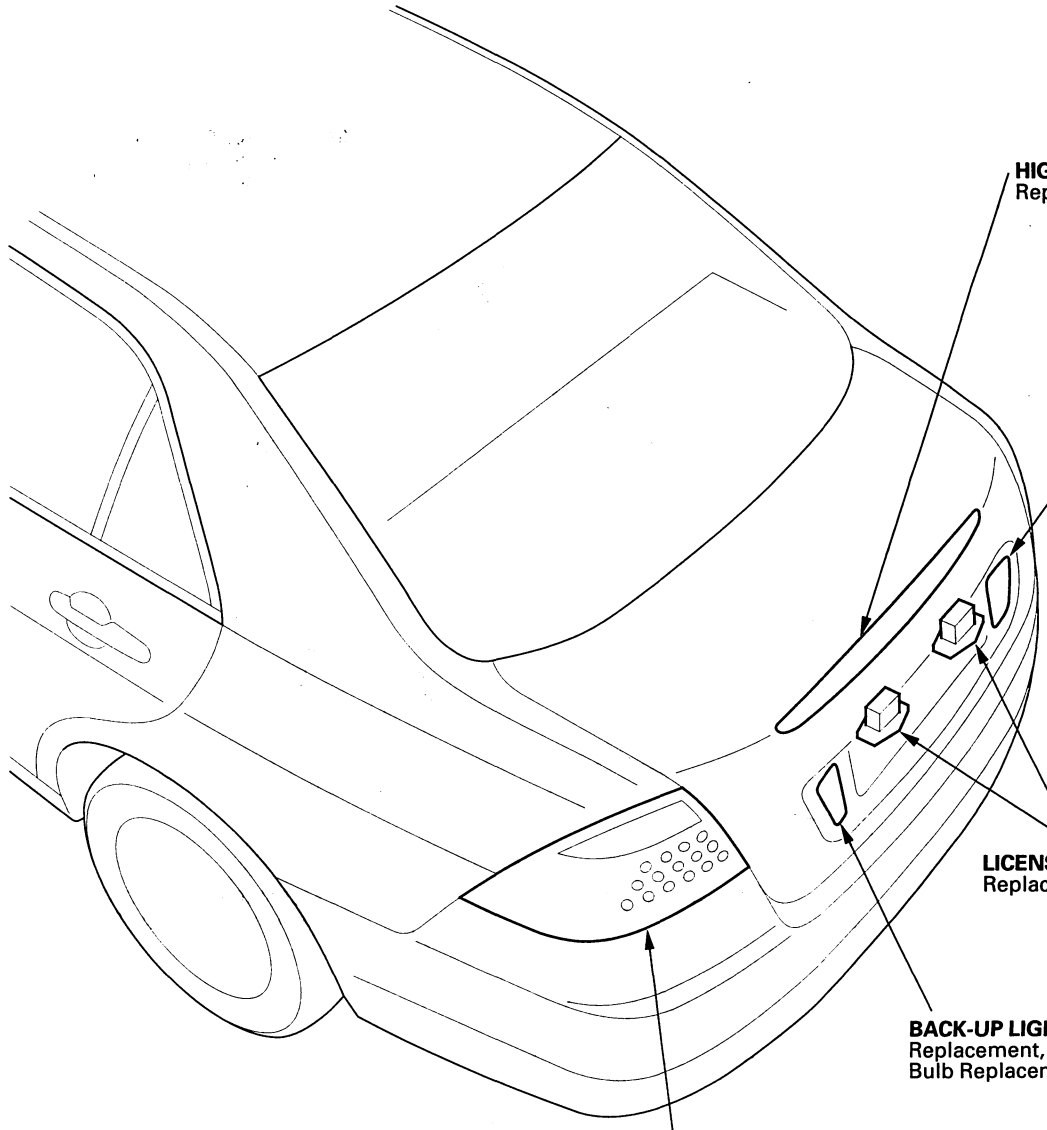

(cont'd)

Protected by AR

Component Location Index (cont'd)

2-door ('03-05 models):

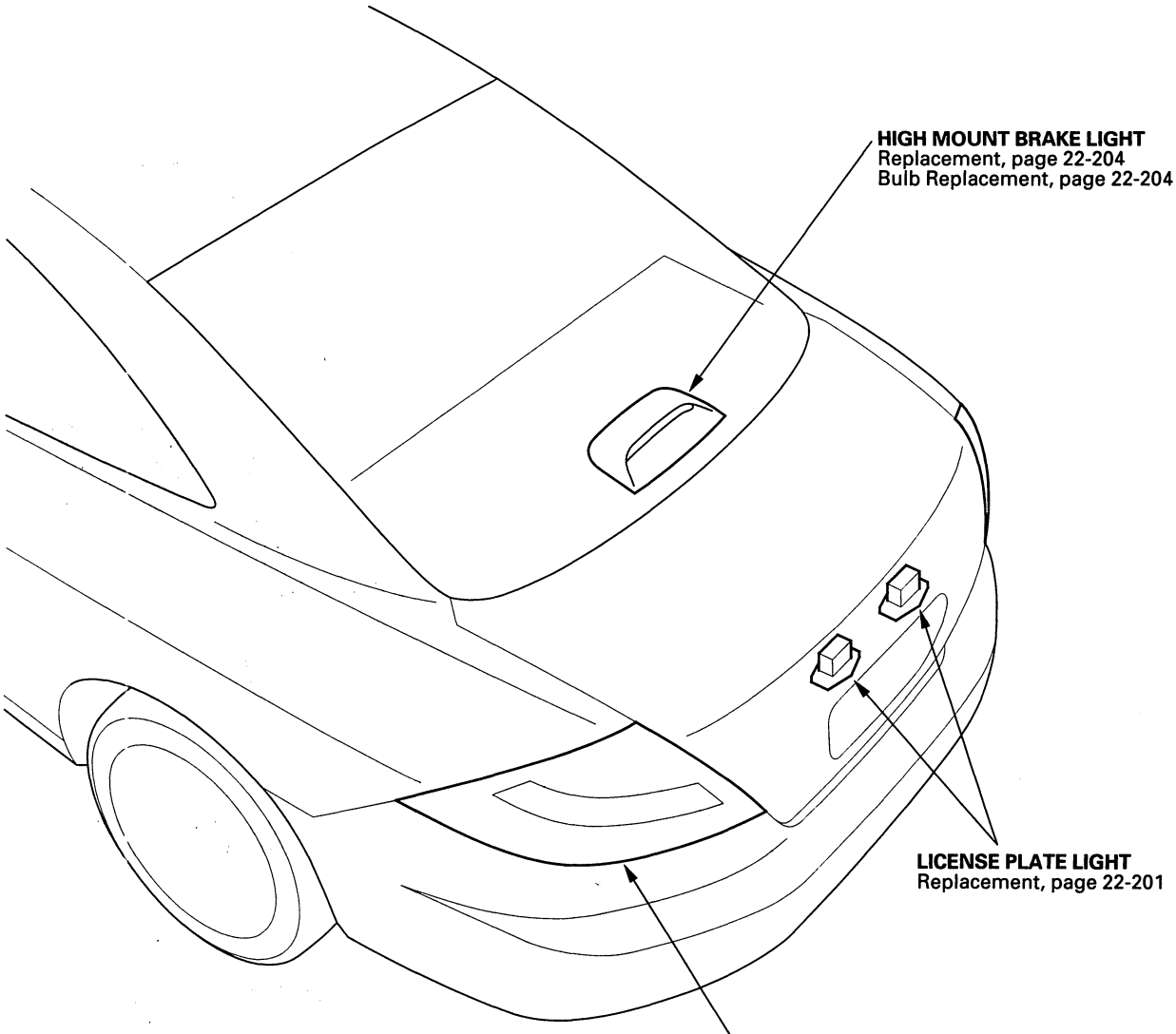

BACK

Protected by AR

2-door ('06 model):

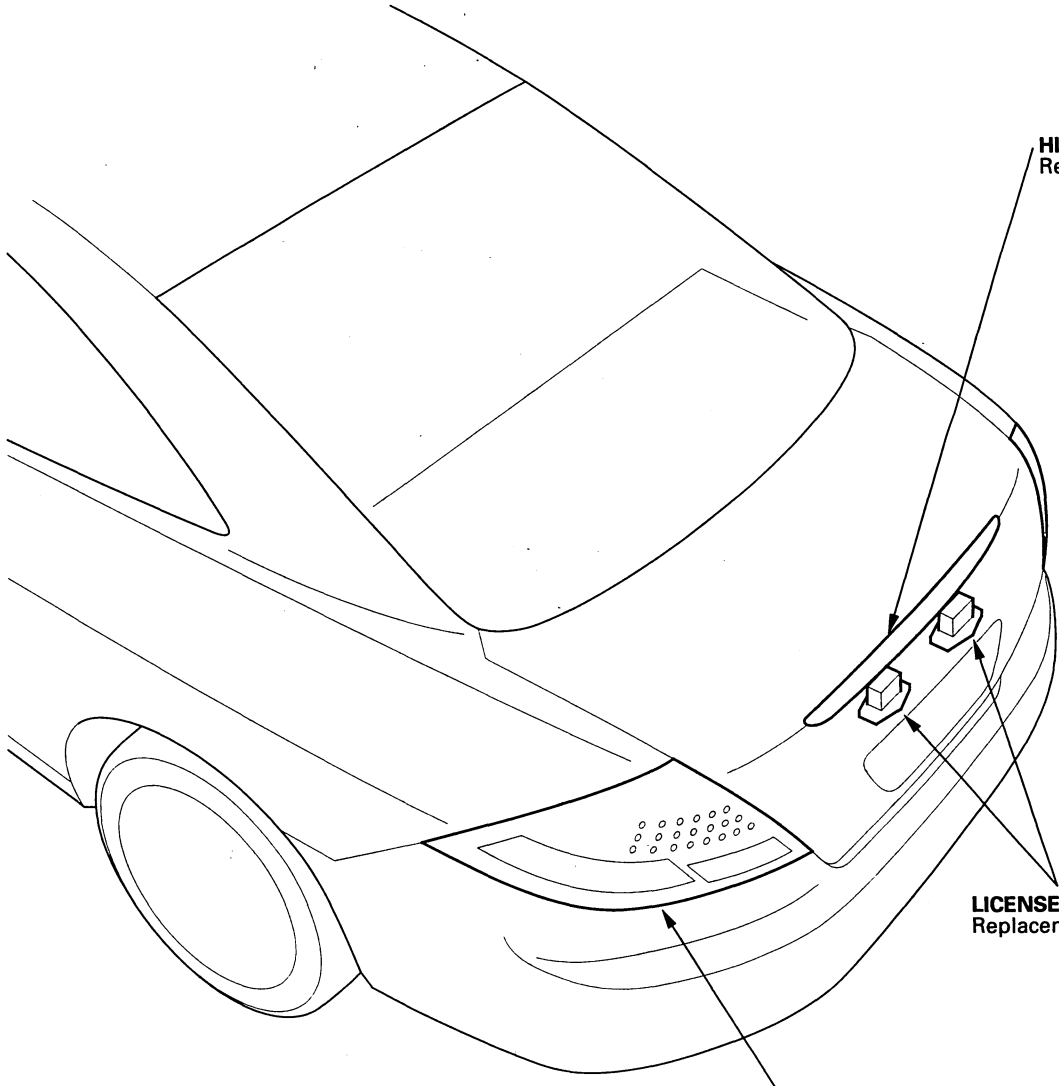

(cont'd)

Protected by AR

Component Location Index (cont'd)

'03-05 models

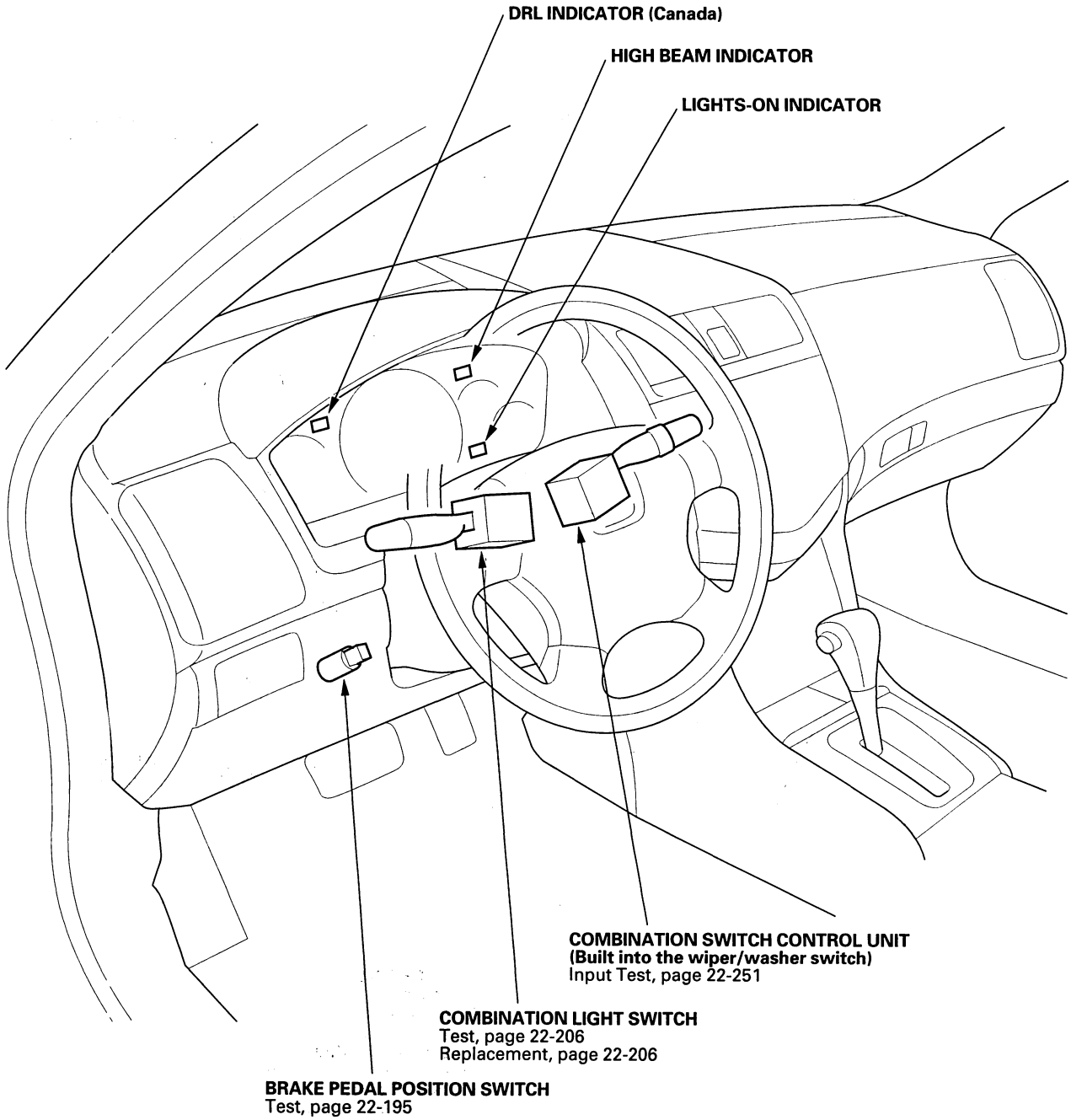

BACK

Protected by AR

'06 model

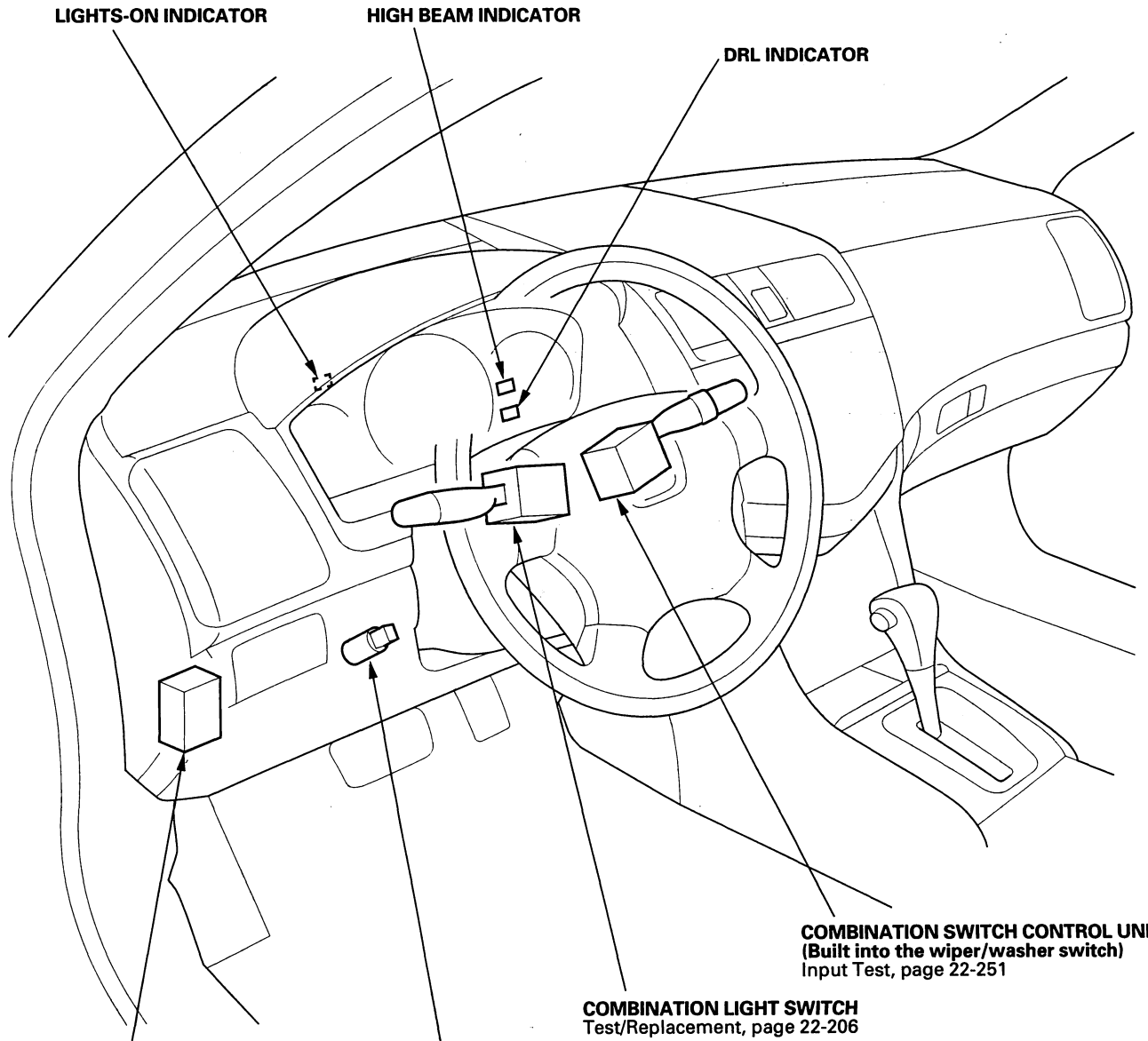

Protected by AR

Exterior Lights

Circuit Diagram

USA ('03-05 models):

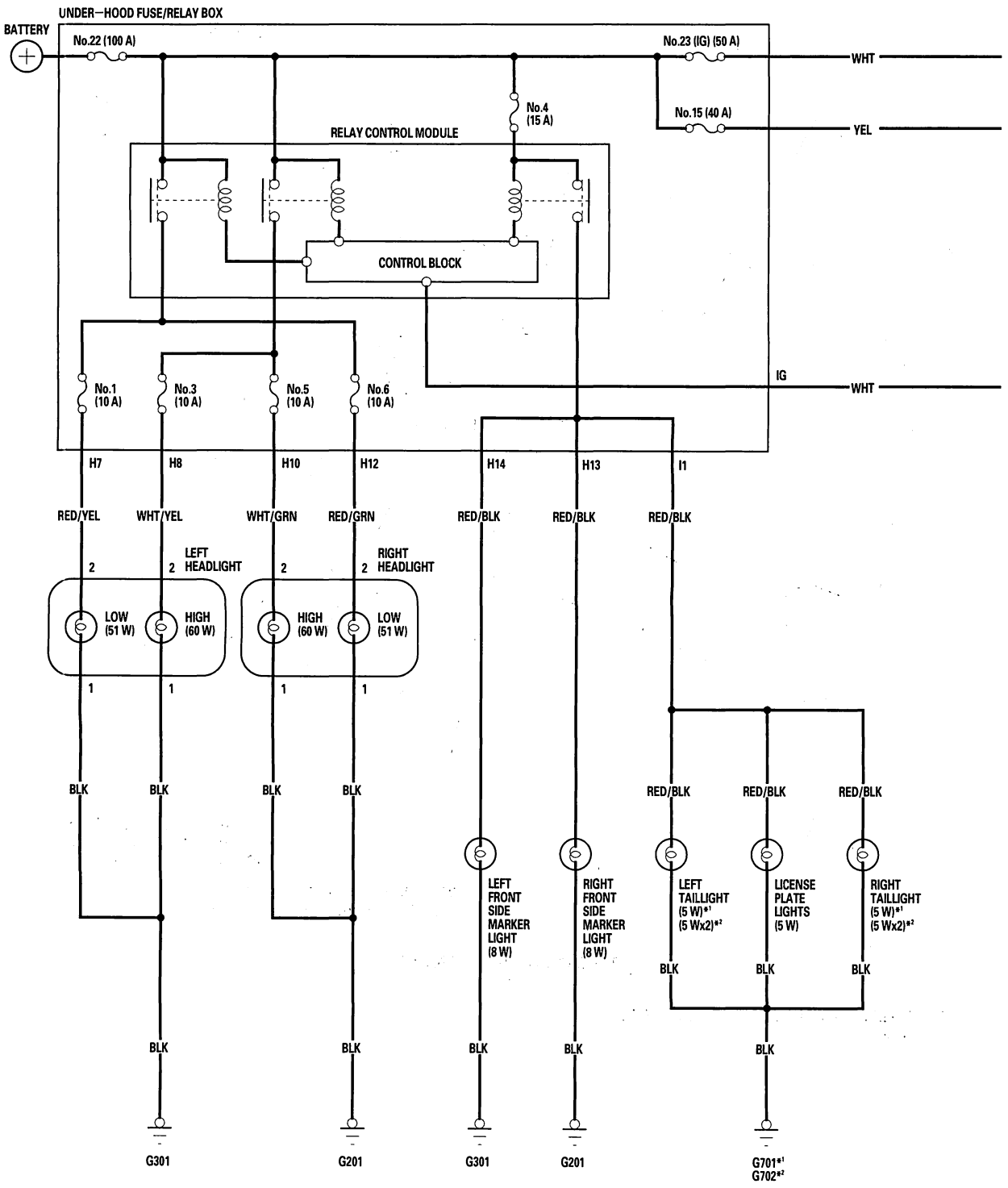

BACK

Protected by AR

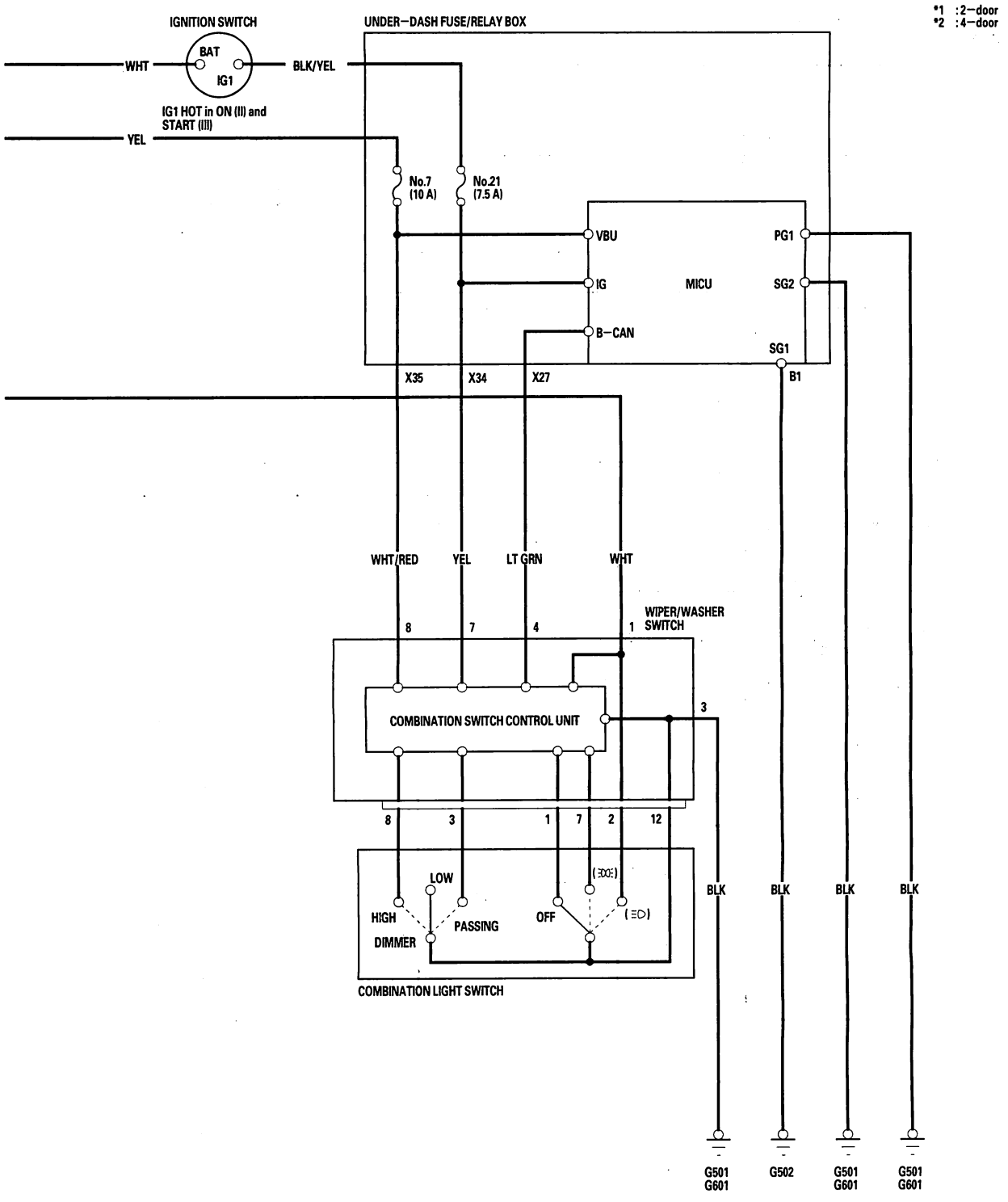

(cont'd)

Protected by AR

Exterior Lights

Circuit Diagram (cont'd)

Canada ('03-05 models):

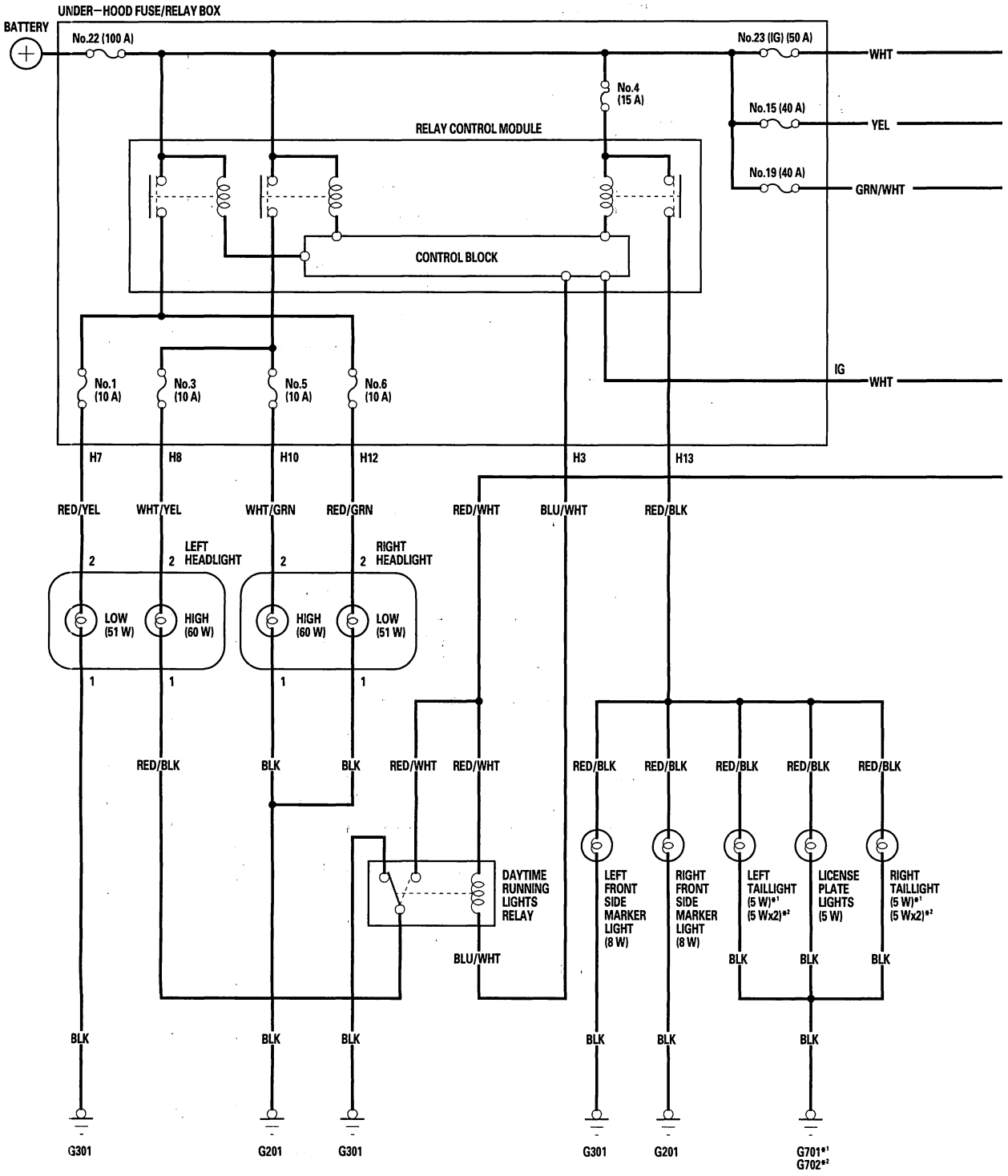

BACK

Protected by AR

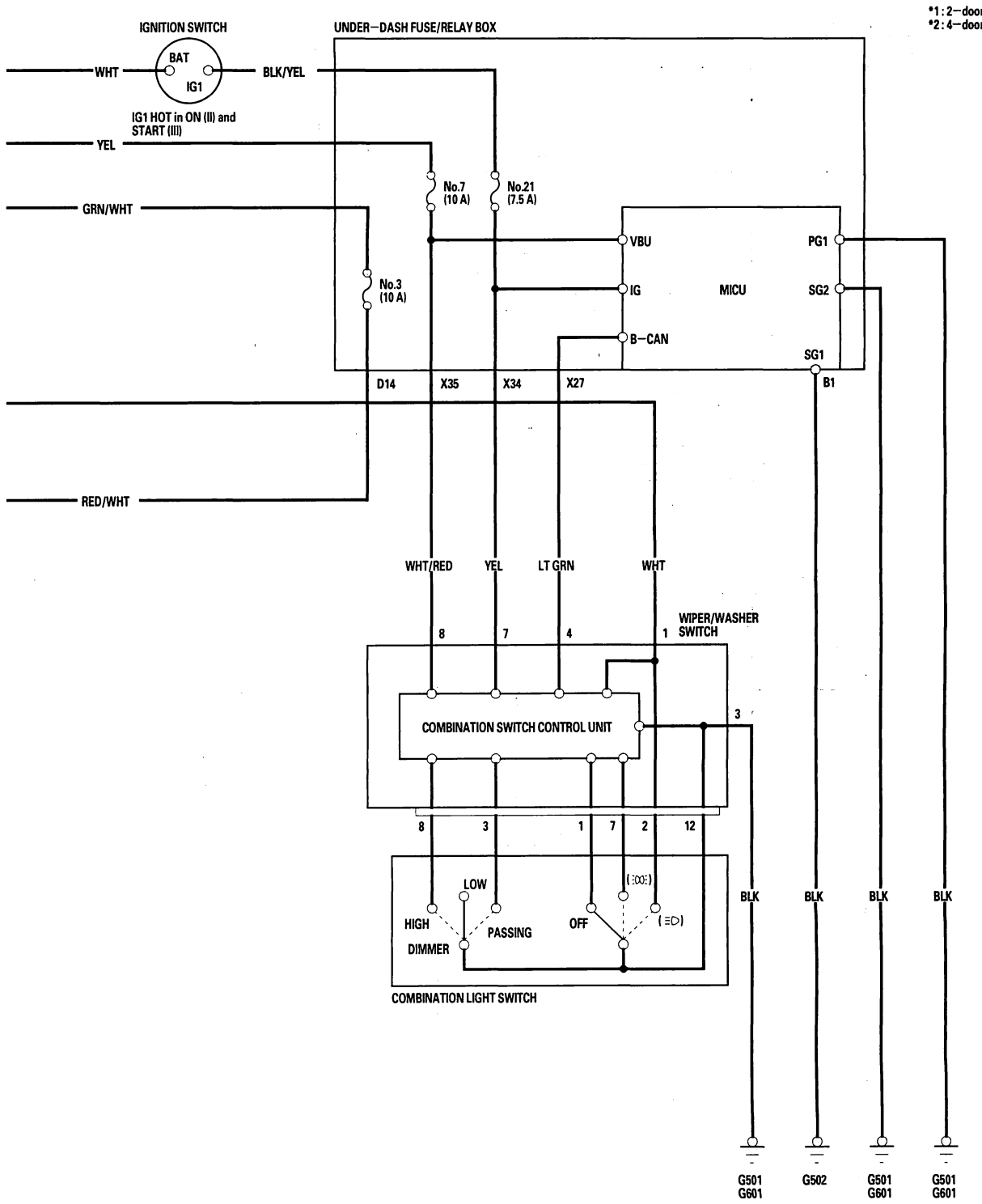

Protected by AR

Exterior Lights

Circuit Diagram - Lighting System

USA ('06 model):

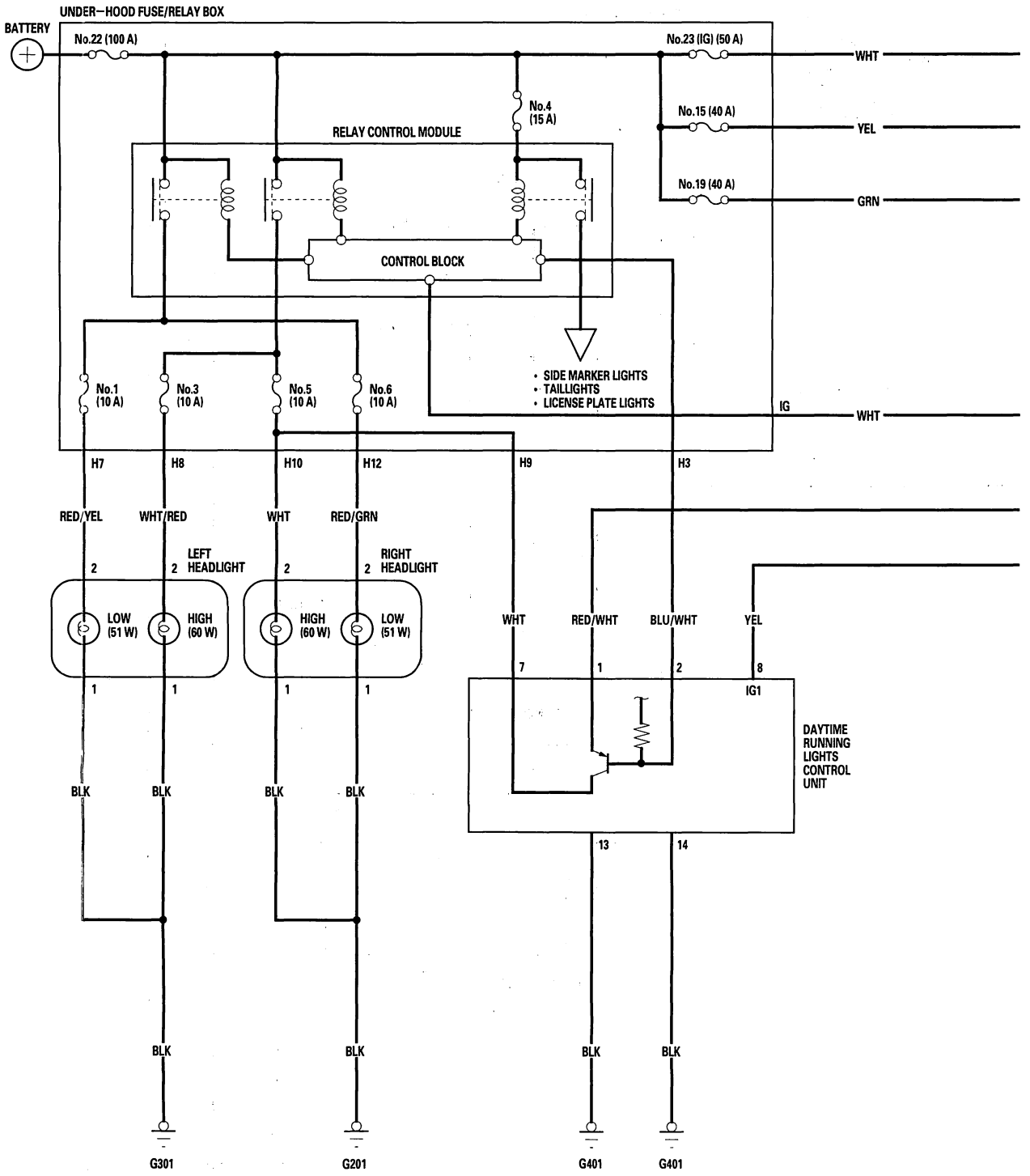

BACK

Protected by AR

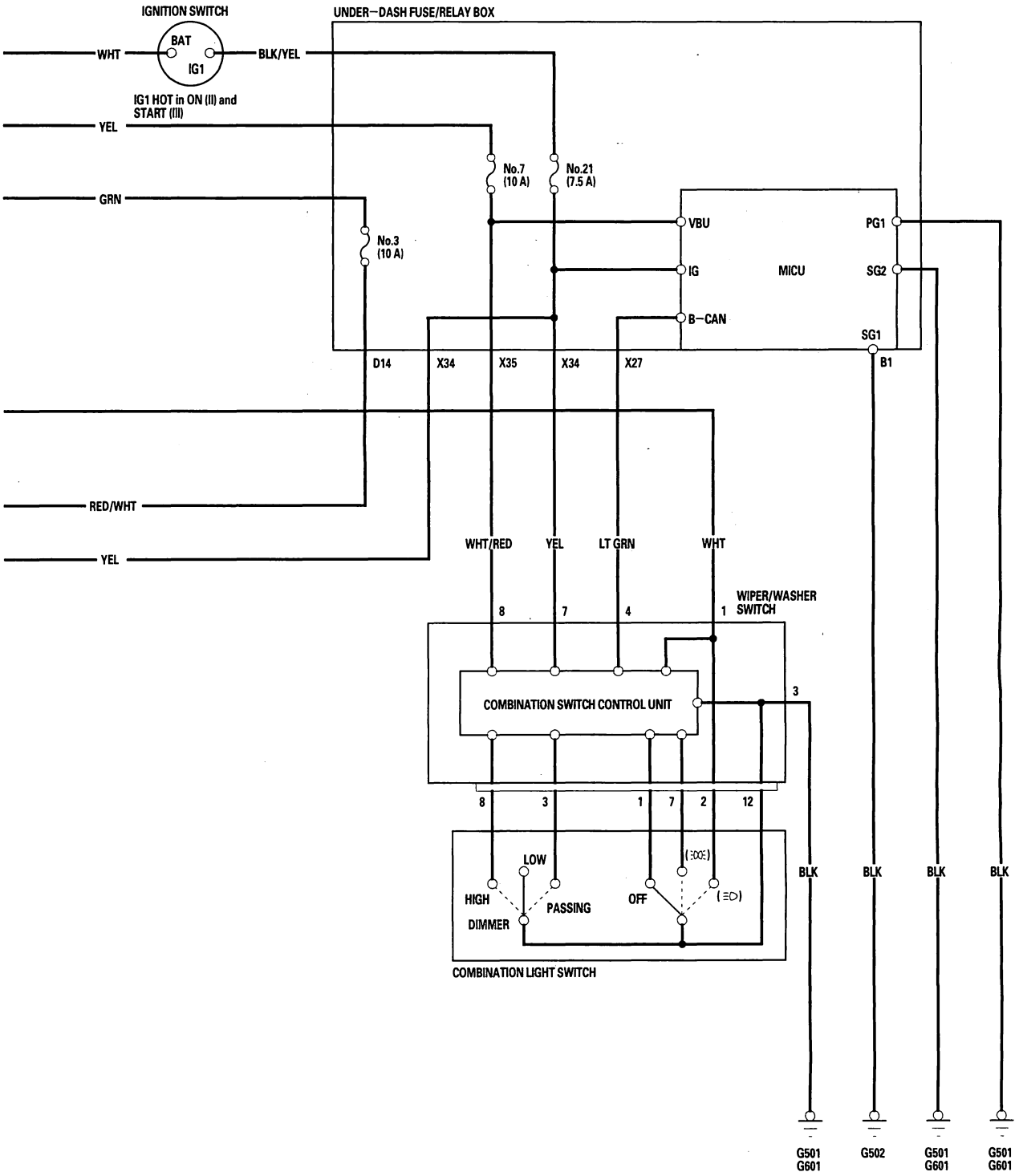

(cont'd)

BACK

Protected by AR

Exterior Lights

Circuit Diagram - Lighting System (cont'd)

Canada ('06 model):

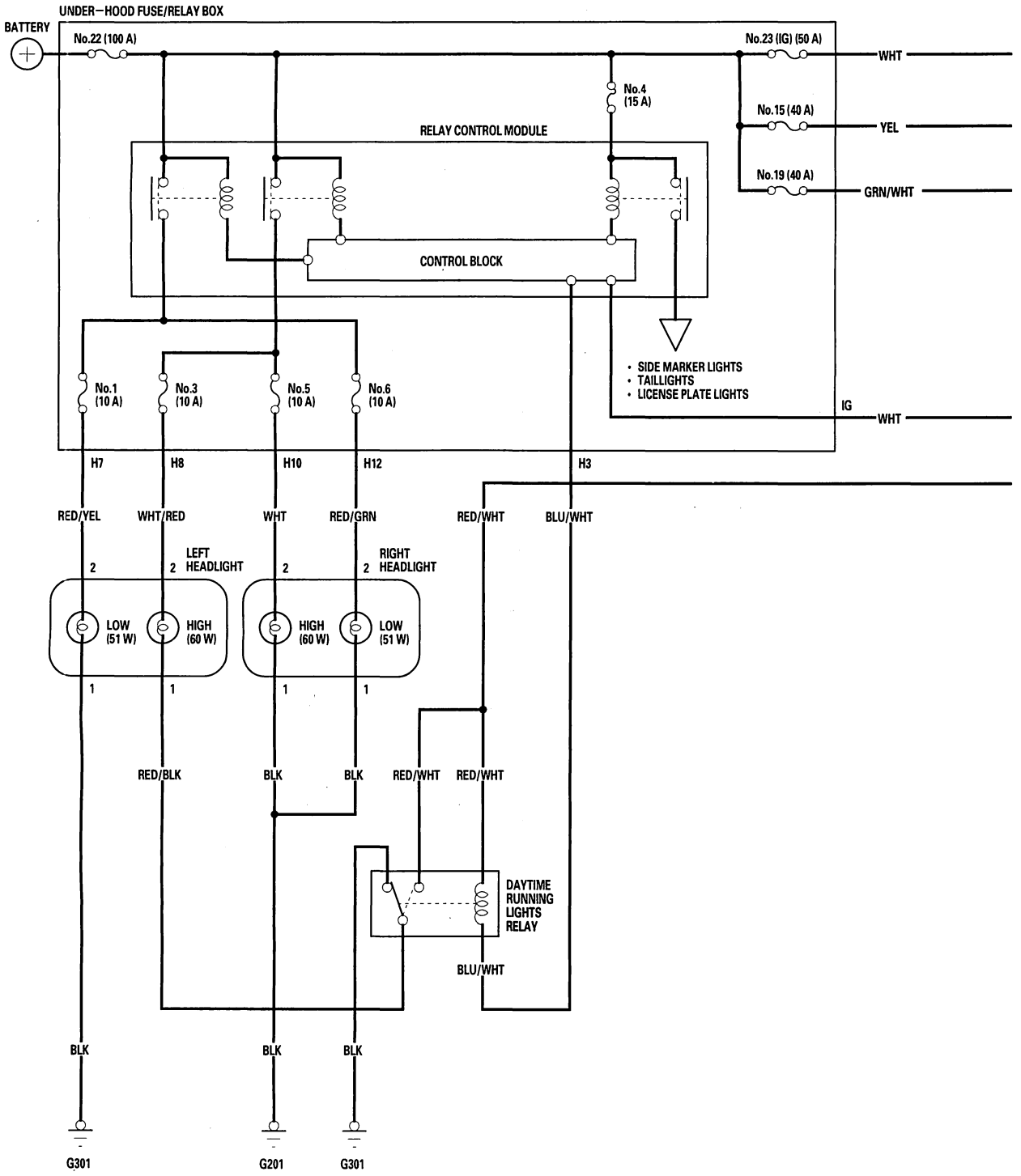

BACK

Protected by AR

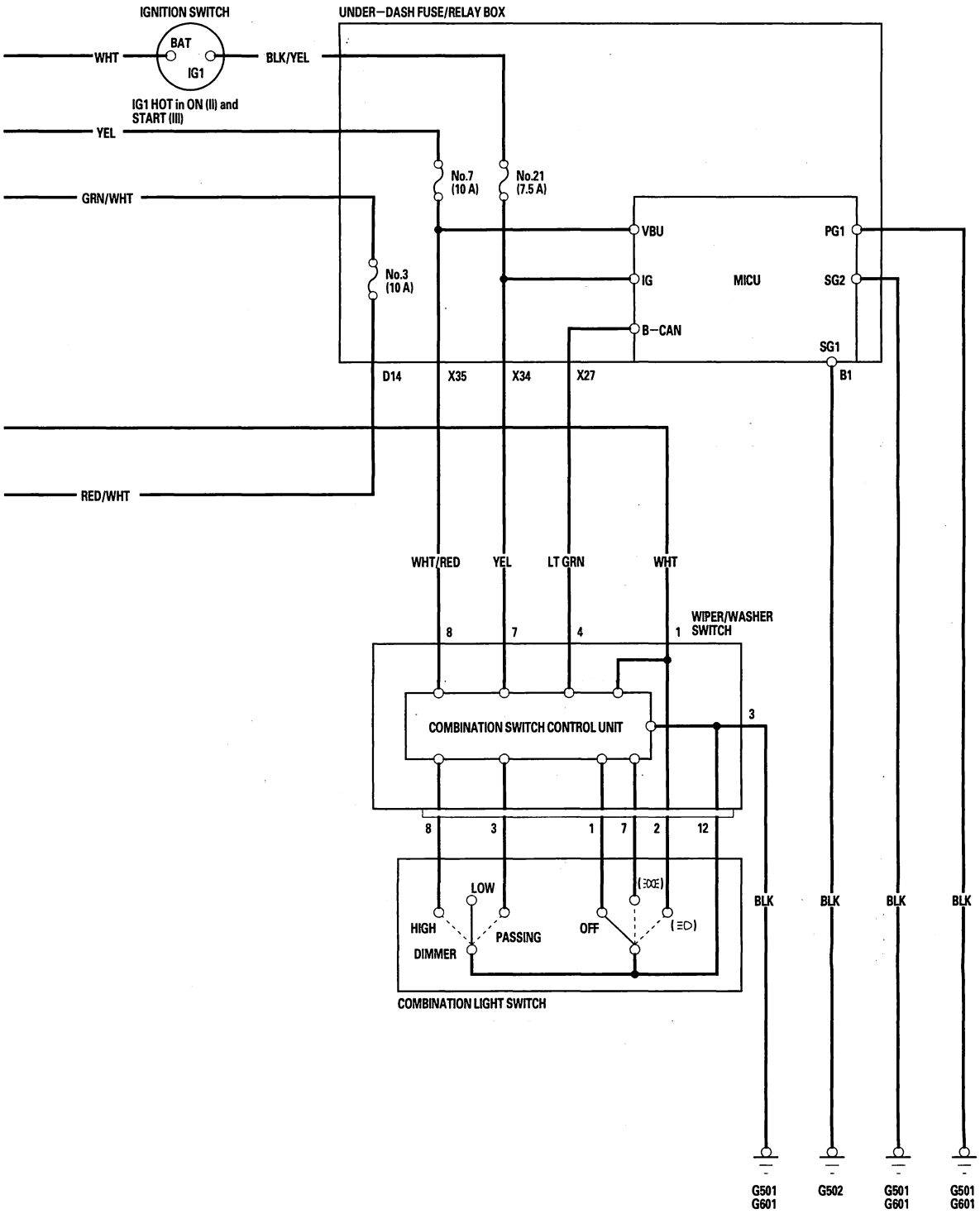

BACK

Protected by AR

Exterior Lights

Circuit Diagram - Side Marker/License Plate Lights

4-door ('06 model):

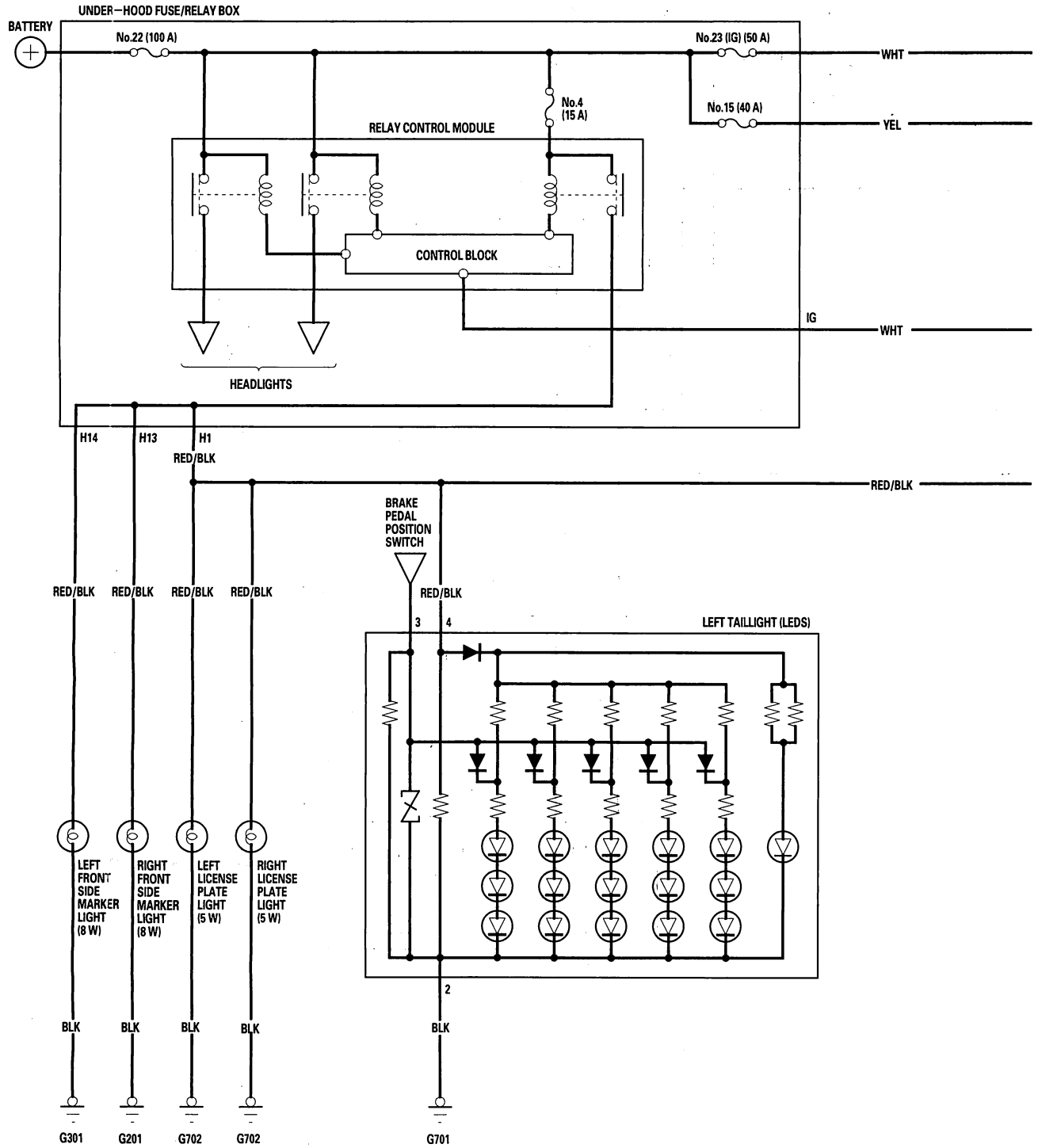

BACK

Protected by AR

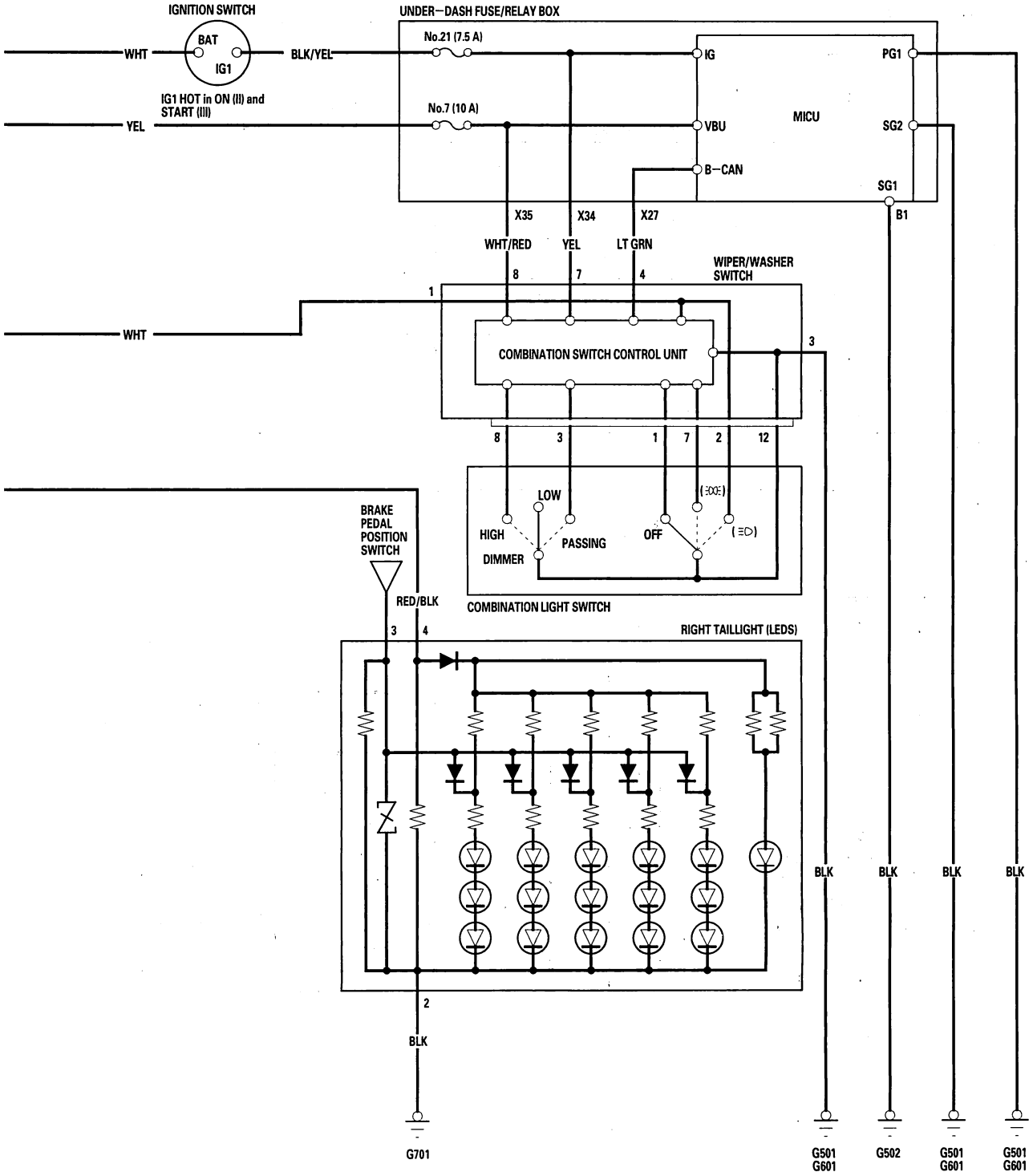

BACK

Protected by AR

Exterior Lights

Circuit Diagram - Side Marker/License Plate Lights (cont'd)

2-door ('06 model):

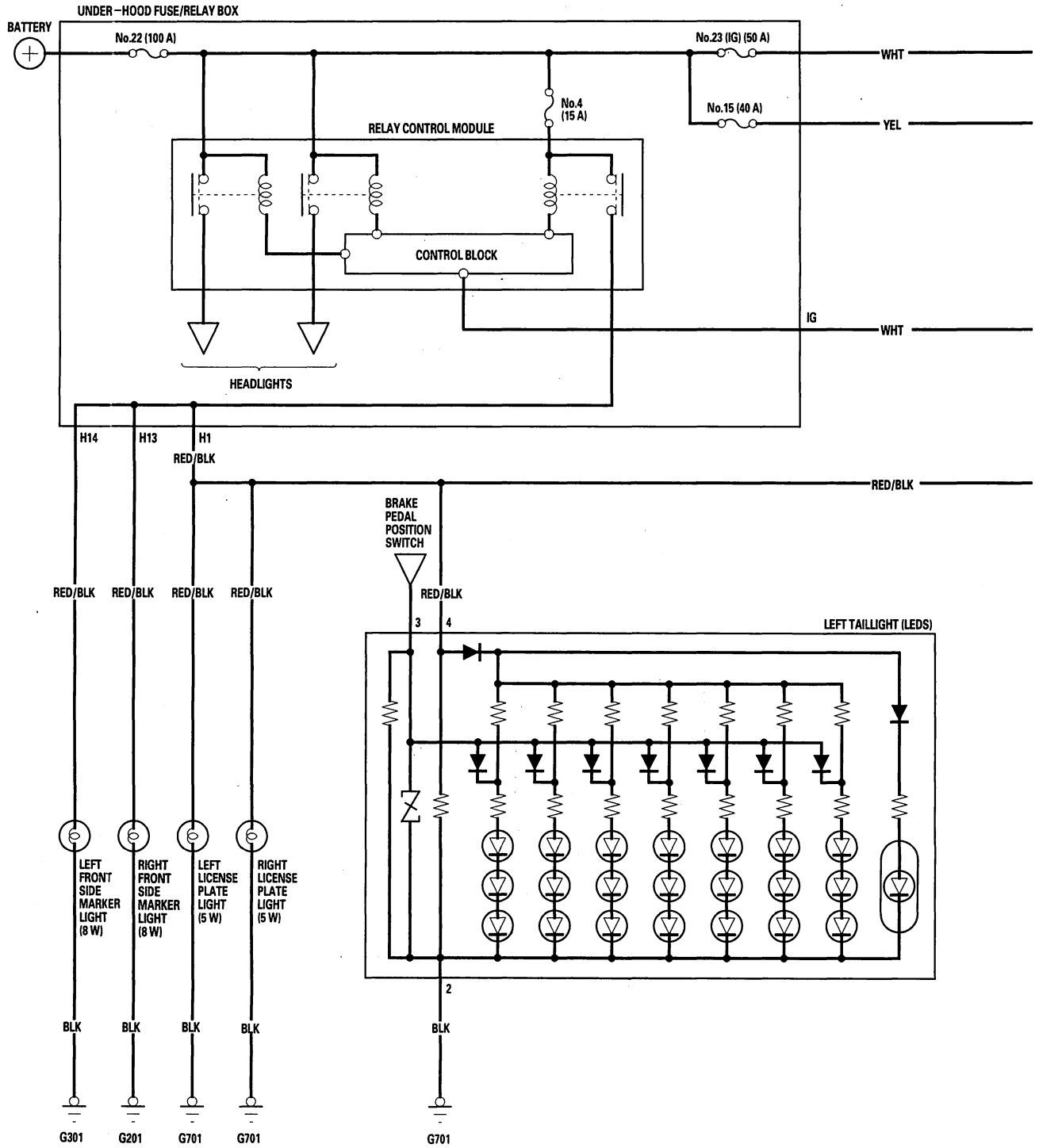

BACK

Protected by AR

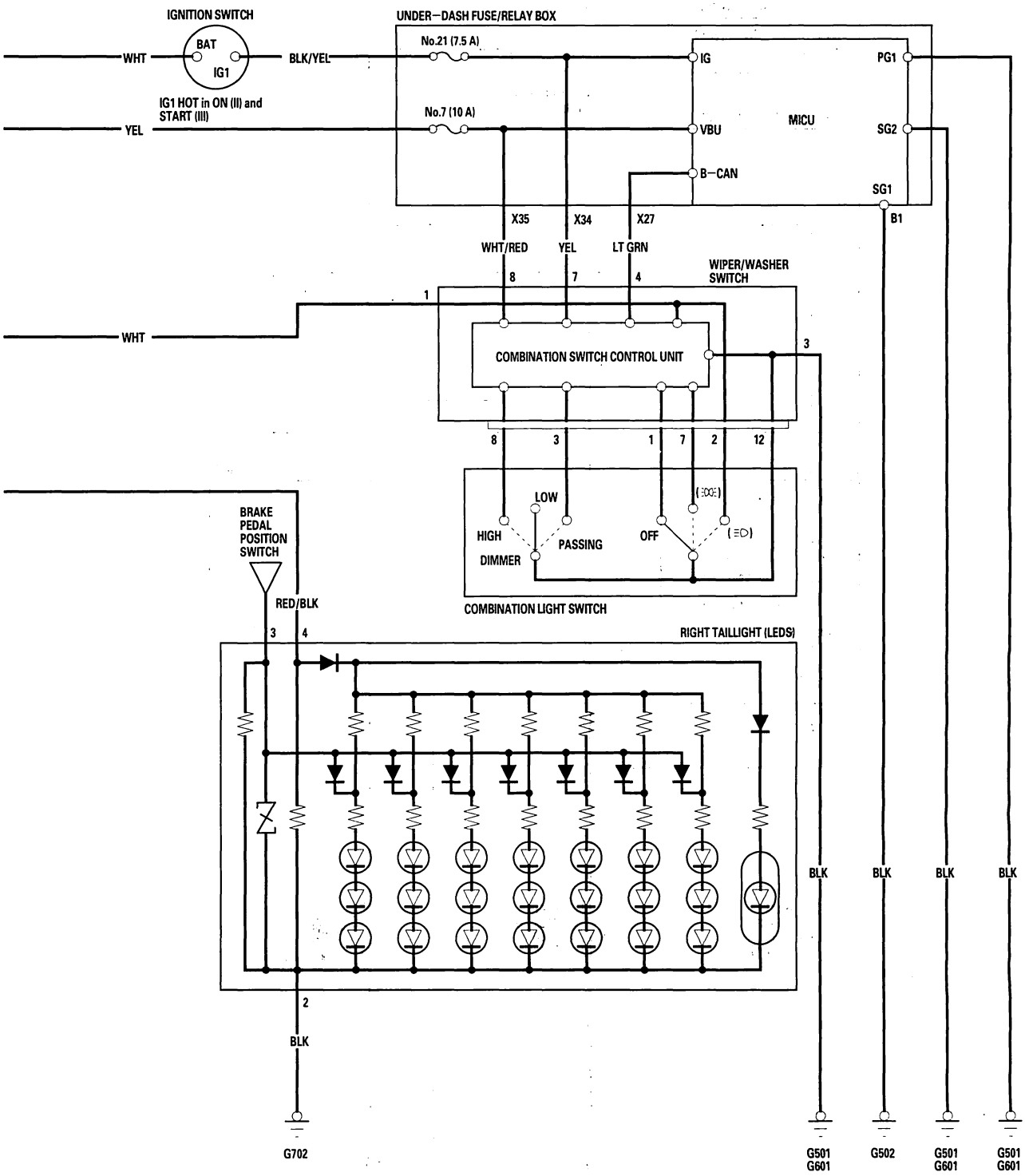

Protected by AR

Exterior Lights

Circuit Diagram - Back-up Lights

'03-05 models

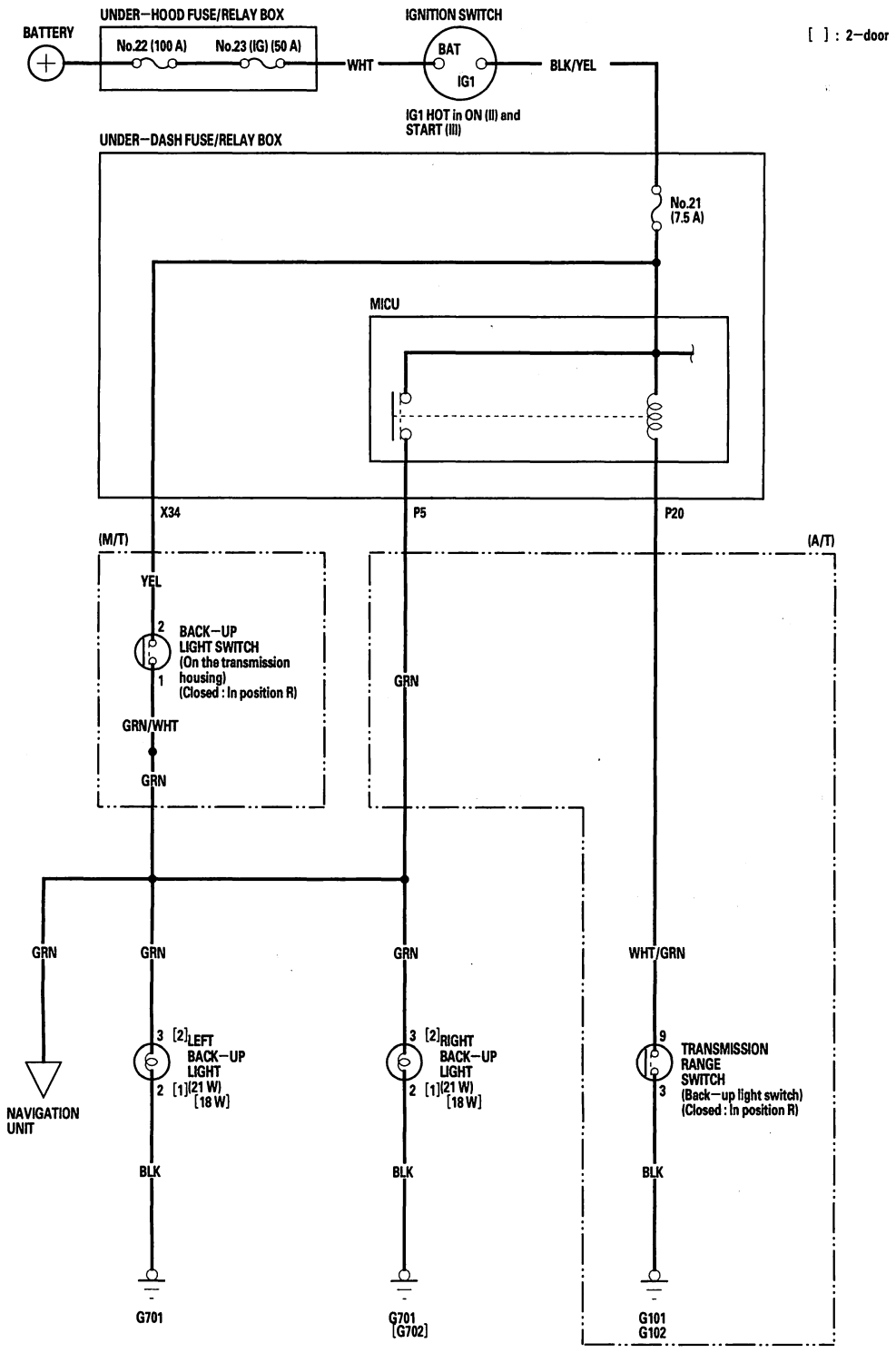

BACK

Protected by AR

'06 model

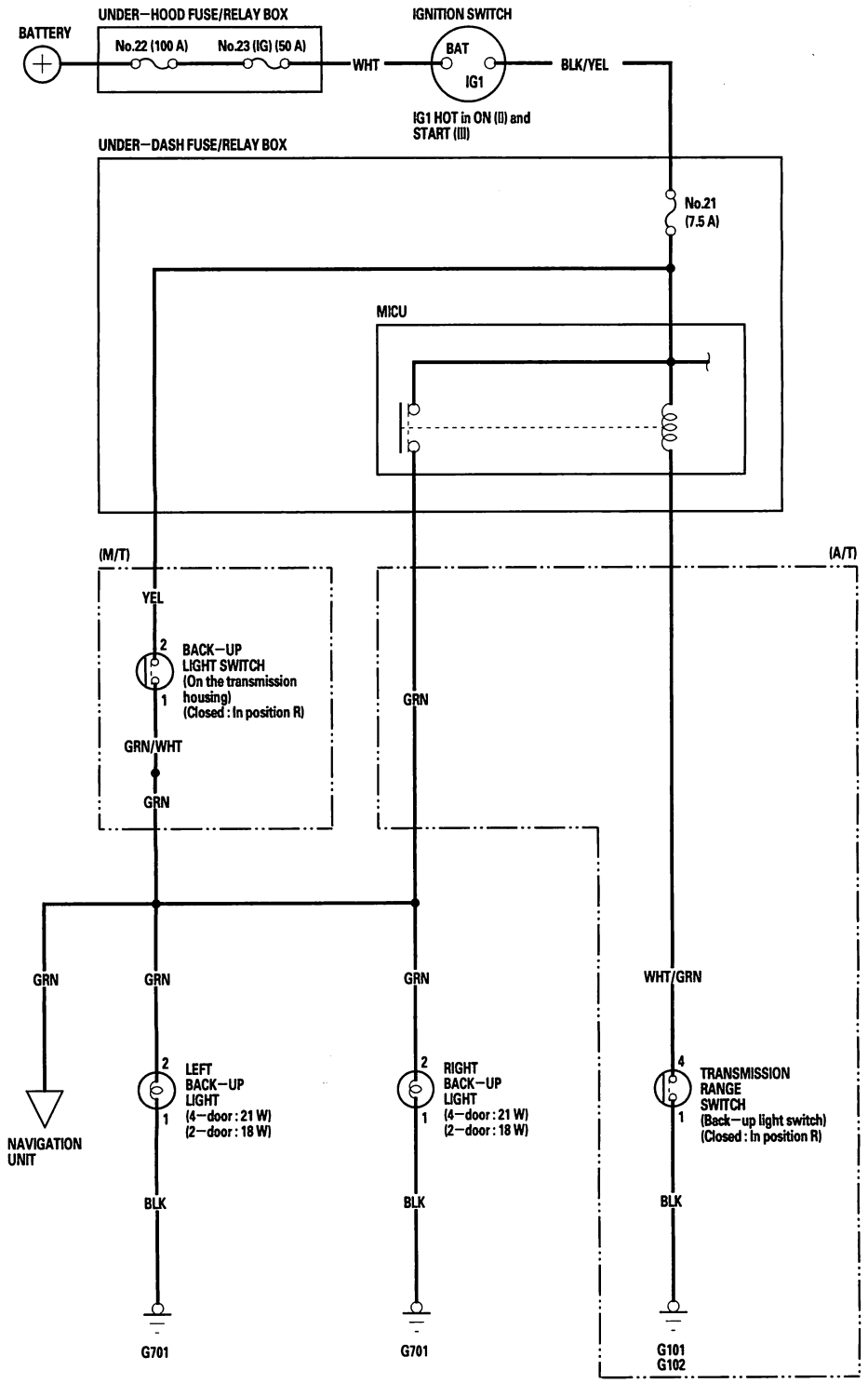

BACK

Protected by AR

Exterior Lights

Circuit Diagram - Brake Lights

'03-05 models

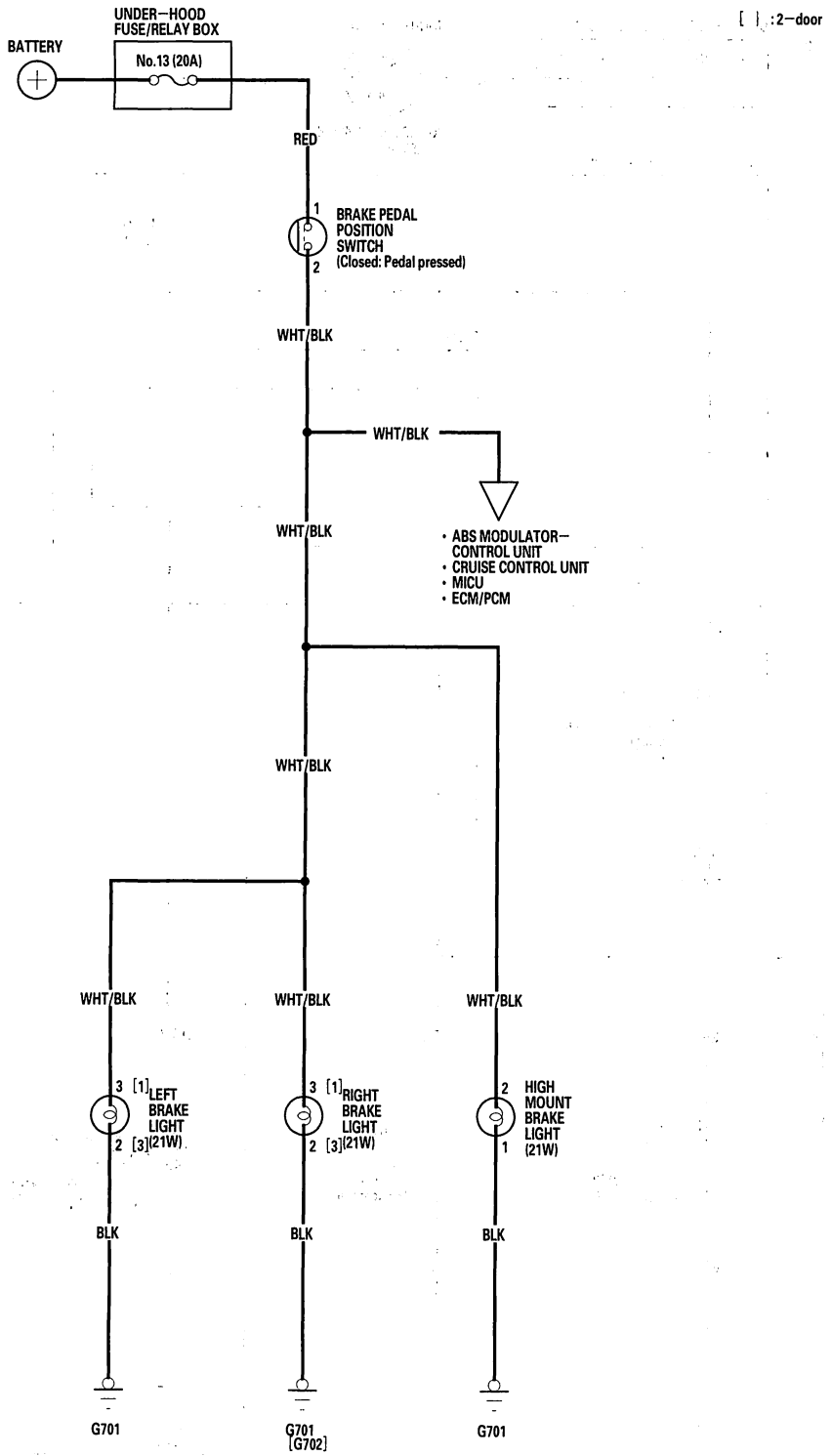

BACK

Protected by AR

4-door ('06 model)

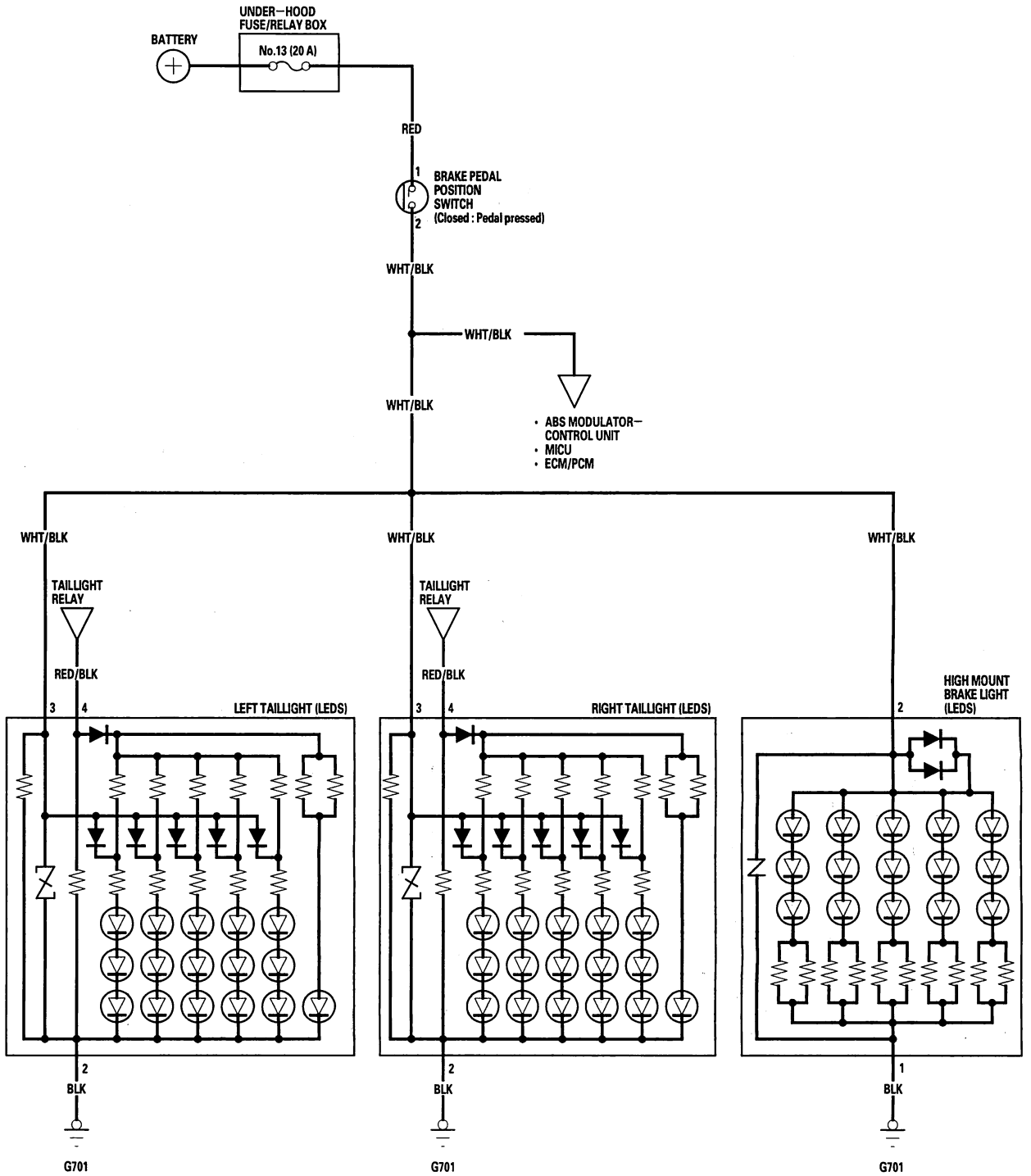

BACK

Protected by AR

Circuit Diagram - Brake Lights (cont'd)

2-door ('06 model)

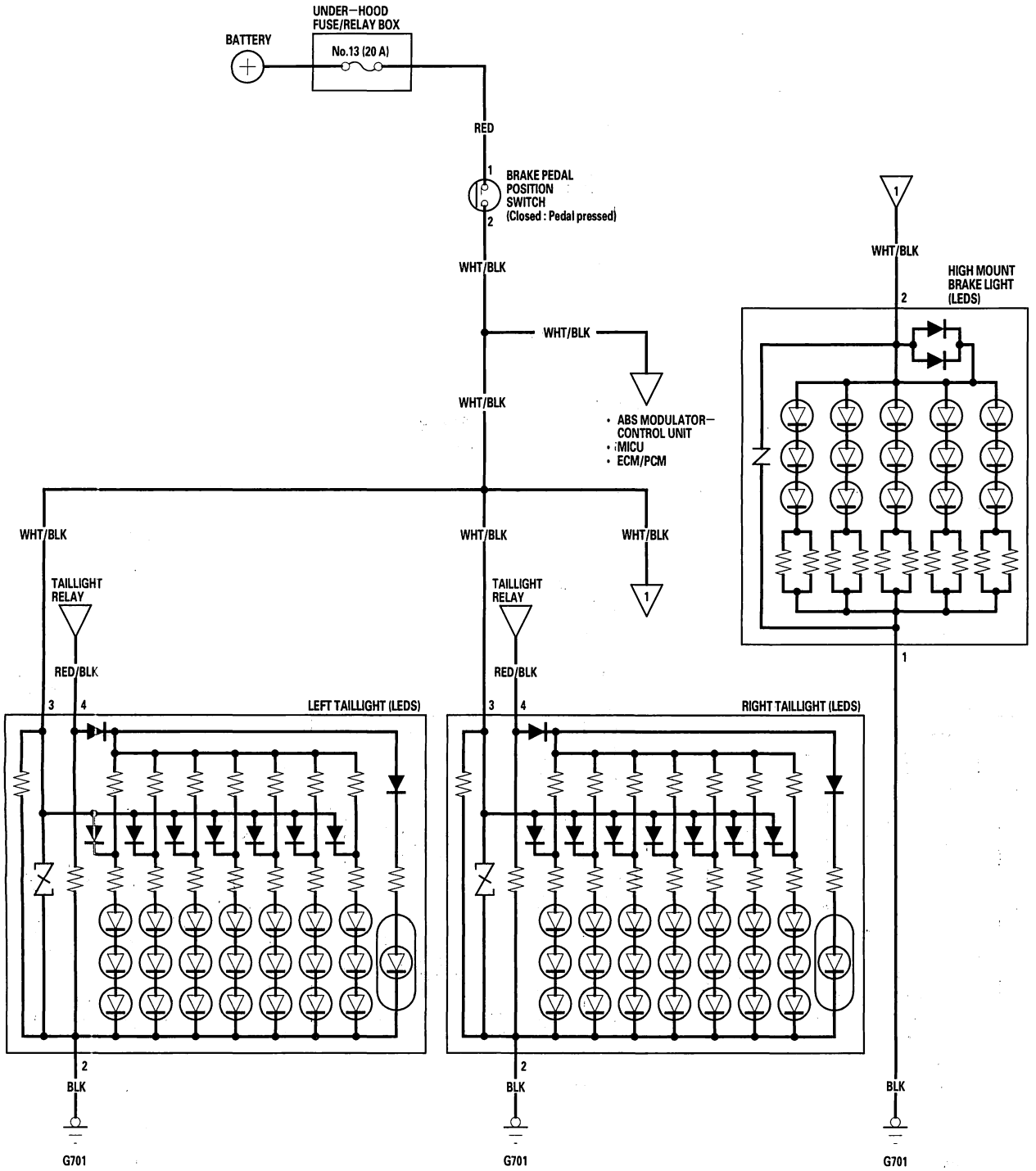

BACK

Protected by AR

DTC Troubleshooting

DTC B1075: Headlight Signal Error

1. Clear the DTCs using the HDS.
2. Turn the headlights switch from the OFF position to the ON position.
3. Check for DTCs using the HDS.

   Is DTC B1075 indicated?

   YES—Go to step 4.

   NO—Intermittent failure, the headlight circuit is OK at this time. Check pinfits and connections. ■
4. With the headlight switch OFF, select LIGHTING SYSTEM from the HDS, and enter the DATA LIST.
5. Check the ON/OFF information of the Headlight Switch (BACK-UP) in the DATA LIST.

   Is the information indicator OFF?

   YES—Go to step 6.

   NO—Go to step 10.
6. Turn the headlight switch ON.
7. Check the ON/OFF information of the Headlight Switch (BACK-UP) in the DATA LIST.

   Is the information indicator ON?

   YES—Troubleshoot DTC B1278. ■

   NO—Go to step 8.
8. Disconnect the relay control module 10P connector (under-hood fuse/relay box connector I) and the wiper/washer switch 8P connector.
9. Check for continuity between the No. 6 terminal of the relay control module 10P connector and the No. 1 terminal of the wiper/washer switch (combination switch control unit) 8P connector.

RELAY CONTROL MODULE 10P CONNECTOR (UNDER-HOOD FUSE/RELAY BOX CONNECTOR I)

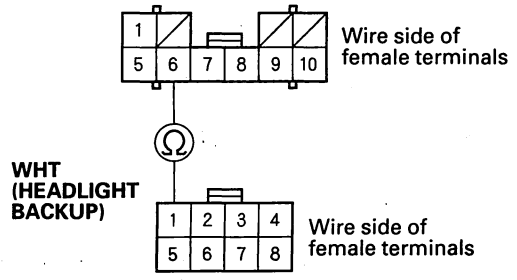

WIPER/WASHER SWITCH 8P CONNECTOR

Is there continuity?

YES—Faulty combination switch control unit; replace the wiper/washer switch. ■

NO—Repair an open in the WHT wire. ■
10. Disconnect the relay control module 10P connector.
11. Check for continuity between the No. 6 terminal of the relay control module 10P connector and body ground.

RELAY CONTROL MODULE 10P CONNECTOR (UNDER-HOOD FUSE/RELAY BOX CONNECTOR I)

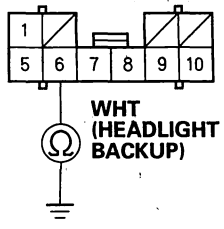

Wire side of female terminals

Is there continuity?

YES—Repair a short in the WHT wire. ■

NO—Faulty combination switch control unit; replace the wiper/washer switch. ■

Protected by AR

DTC Troubleshooting (cont'd)

DTC B1078: Daytime Running Lights Signal Error

1. Clear the DTCs using the HDS.
2. Cycle the ignition switch to OFF and then back ON.
3. Operate the parking brake lever.
4. Check for DTCs using the HDS.

   Is DTC B1078 indicated?

   YES—Go to step 5.

   NO—Intermittent failure, the daytime running lights system is OK at this time. Check pinfits and connections. ■
5. Turn the headlight switch ON, then push the combination light switch forward for high beams.

   Do both headlights come on?

   YES—Go to step 6.

   NO—Go to step 9.
6. Turn the headlight switch OFF.
7. Select LIGHTING SYSTEM from the HDS, and enter the DATA LIST.
8. Check the ON/OFF information of the DRL Relay Command (Canada) in the DATA LIST.

   Is the information indicator ON?

   YES—Replace the daytime running lights relay. ■

   NO—Go to the relay control module input test (see page 22-132). ■
9. Check the No. 3 (10 A) or No. 5 (10 A) fuses in the under-hood fuse/relay box.

   Are both fuses OK?

   YES—Go to step 10.

   NO—Replace the blown fuse and recheck the system. ■
10. Check headlight bulbs.

    Are both bulbs OK?

    YES—Go to step 11.

    NO—Replace the blown bulb and recheck the system. ■

BACK

Protected by AR

11. Check for continuity between the No. 2 terminal of the headlight (high beam) 2P connectors and the No. 8 (left headlight) or No. 10 (right headlight) terminals of the under-hood fuse/relay box 14P connector H.

UNDER-HOOD FUSE/RELAY BOX 14P CONNECTOR H

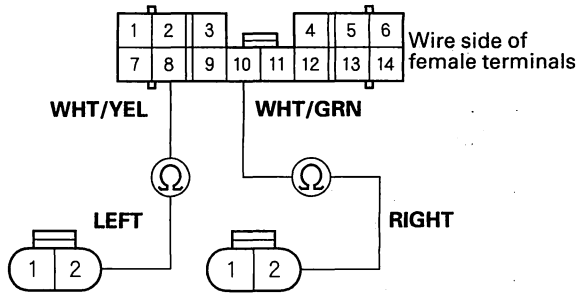

HEADLIGHT 2P CONNECTORS (HIGH BEAM)
Wire side of female terminals

Is there continuity?

YES—Go to step 12.

NO—Repair an open in the WHT/YEL (left headlight) or WHT/GRN (right headlight) wire.■

12. Check for continuity between the No. 1 terminal of the headlight (high beam) 2P connectors and body ground.

HEADLIGHT 2P CONNECTORS (HIGH BEAM)

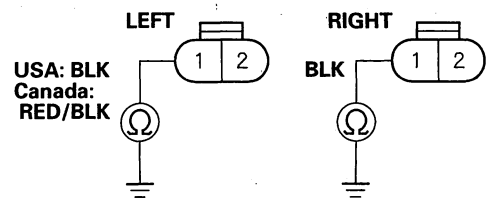

Wire side of female terminals

Is there continuity?

YES—Faulty relay control module; replace the under-hood fuse/relay box.■

NO—Check the daytime running lights relay (left headlight). If OK, repair an open in the BLK wire or poor ground (G201, G301).■

Protected by AR

DTC Troubleshooting (cont'd)

DTC B1079: Daytime Running Lights Malfunction (USA) ('06 model)

1. Clear the DTCs with the HDS.
2. Turn the ignition switch OFF.
3. Make sure the brake pedal position switch is OFF.
4. Make sure the headlight switch is OFF.
5. Turn the ignition switch ON (II).
6. Check for DTCs with the HDS.

   Is DTC B1079 indicated?

   YES—Go to step 7.

   NO—Intermittent failure. The daytime running light system is OK at this time. Check for loose or poor connections. ■

7. Turn the headlight switch ON, then push the combination light switch forward for high beams.

   Do both headlights come on?

   YES—Go to step 8.

   NO—If one of the headlights doesn't come on, check the fuse and bulb, and for a poor ground (G201, G301) or an open in the wire. If both headlights don't come on, go to step 11.

8. Turn the headlight switch OFF.
9. Select LIGHTING SYSTEM from the HDS, and enter the DATA LIST.
10. Check the ON/OFF information of the DRL Command in the DATA LIST.

    Is the information indicator ON?

    YES—Go to relay control module input test (see page 22-132). ■

    NO—Substitute a known-good daytime running light control unit and recheck the system. ■

11. Check the No. 3 (10 A) and No. 5 (10 A) fuses in the under-hood fuse/relay box.

    Are both fuses OK?

    YES—Go to step 12.

    NO—Replace the blown fuse, and recheck the system. ■

12. Check the headlight bulbs.

    Are both bulbs OK?

    YES—Go to step 13.

    NO—Replace the blown bulb, and recheck the system. ■

BACK

Protected by AR

13. Disconnect the 2P connector from each headlight high beam.

14. Disconnect under-hood fuse/relay box connector H (14P).

15. Check for continuity between left headlight high beam 2P connector terminal No. 2 and under-hood fuse/relay box connector H (14P) terminal No. 8, and between right headlight high beam 2P connector terminal No. 2 and under-hood fuse/relay box connector H (14P) terminal No. 10.

UNDER-HOOD FUSE/RELAY BOX CONNECTOR H (14P)

Wire side of female terminals

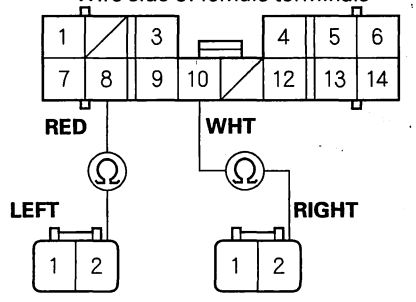

HEADLIGHT HIGH BEAM CONNECTORS (2P)

Wire side of female terminals

Is there continuity?

YES—Go to step 16.

NO—Repair an open in the wire.■

16. Check for continuity between each headlight high beam 2P connector terminal No. 1 and body ground.

HEADLIGHT HIGH BEAM CONNECTORS (2P)

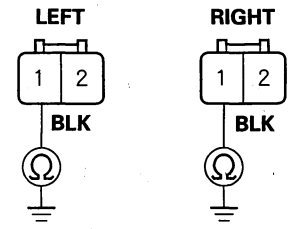

Wire side of female terminals

Is there continuity?

YES—Faulty relay control module; replace the under-hood fuse/relay box.■

NO—Repair an open in the wire or a poor ground (G201, G301).■

Protected by AR

DTC Troubleshooting (cont'd)

DTC B1275: Headlight Switch OFF Position Circuit Malfunction

DTC B1276: Headlight Switch Parking (SMALL) Position Circuit Malfunction

DTC B1277: Headlight Switch AUTO Position Circuit Malfunction

DTC B1278: Headlight Switch ON Position Circuit Malfunction

1. Clear the DTCs using the HDS.
2. Cycle the ignition switch to OFF and then back ON.
3. Check for DTCs using the HDS.

   Is DTC B1275, B1276, B1277 or B1278 indicated?

   YES—Go to step 4.

   NO—Intermittent failure, the headlight system is OK at this time. Check pinfits and connections. ■
4. Reset the DTCs using the HDS.
5. Turn the ignition switch ON (II) and wait for 2 seconds.
6. Turn the parking (small) light switch ON and wait for 2 seconds.
7. Turn the headlight light switch (LOW) ON and wait for 2 seconds.
8. Change the dimmer switch position from low beam to high beam and wait for 2 seconds.
9. Check the DTCs using the HDS.

   Is DTC B1275, B1276, B1277, B1278 indicated?

   YES—Go to step 10.

   NO—Intermittent failure, the combination switch and the control unit are OK at this time. Check pinfits and connections. ■
10. Disconnect the combination light switch 12P connector from the wiper/washer switch.
11. Perform the combination light switch test (see page 22-206).

    Is the combination light switch check OK?

    YES—Faulty combination switch control unit, replace the wiper/washer switch. ■

    NO—Replace the combination light switch. ■

BACK

Protected by AR

DTC B1279: Headlight Switch DIMMER Position Circuit Malfunction

1. Clear the DTCs using the HDS.
2. Cycle the ignition switch to OFF and then back ON.
3. Check for DTCs using the HDS.

   Is DTC B1279 indicated?

   YES—Go to step 4.

   NO—Intermittent failure. The turn signal switch circuit is OK at this time. Check pinfits and connections. ■
4. Reset the DTCs by CLEAR MENU (DTC CLEAR) of the HDS.
5. Turn the ignition switch ON (II), then turn the headlight switch ON.
6. Change the combination light switch from low beam to high beam and wait for 2 seconds.
7. Pull and hold the combination light switch lever and keep the passing switch position for more than 2 seconds.
8. Check for DTCs by selecting the DTCs MENU (DTCs) from the HDS.

   Is DTC B1279 indicated?

   YES—Go to step 9.

   NO—Intermittent failure, the combination switch and the combination switch control unit are OK at this time. Check pinfits and connections. ■
9. Disconnect the combination light switch 12P connector from the wiper/washer switch.
10. Perform the combination light switch test (see page 22-206).

    Is the combination light switch OK?

    YES—Faulty combination switch control unit, replace the wiper/washer switch. ■

    NO—Replace the combination light switch. ■

DTC B1280: Turn Signal Switch Circuit Malfunction

1. Clear the DTCs using the HDS.
2. Cycle the ignition switch to OFF and then back ON.
3. Check for DTCs using the HDS.

   Is DTC B1280 indicated?

   YES—Go to step 4.

   NO—Intermittent failure. The turn signal switch circuit is OK at this time. Check pinfits and connections. ■
4. Reset the DTCs by CLEAR MENU (DTC CLEAR) of the HDS.
5. Turn the ignition switch ON (II).
6. Turn the turn signal switch to the left position and wait for 2 seconds.
7. Turn the turn signal switch to the right position and wait for 2 seconds.
8. Check for DTCs using the HDS.

   Is DTC B1280 indicated?

   YES—Go to step 9.

   NO—Intermittent failure, the turn signal light switch and the combination switch control unit are OK at this time. Check pinfits and connections. ■
9. Disconnect the combination light switch 12P connector from the wiper/washer switch.
10. Check for short in the turn signal light switch terminals in each switch position (see page 22-206).

    Is there a short?

    YES—Faulty, turn signal light switch, replace the combination light switch. ■

    NO—Faulty combination switch control unit, replace the wiper/washer switch. ■

Protected by AR

Daytime Running Lights Control Unit Input Test

USA ('06 model)

NOTE:
- Before troubleshooting the daytime running lights control system, troubleshoot the multiplex integrated control system first using B-CAN System Diagnosis Test Mode A (see page 22-91).
- Make sure the headlights high beam come on normally with the combination light switch ON.

1. Remove the driver's dashboard lower cover (see page 20-130).

2. Disconnect the 14P connector (A) from the daytime running lights control unit (B).

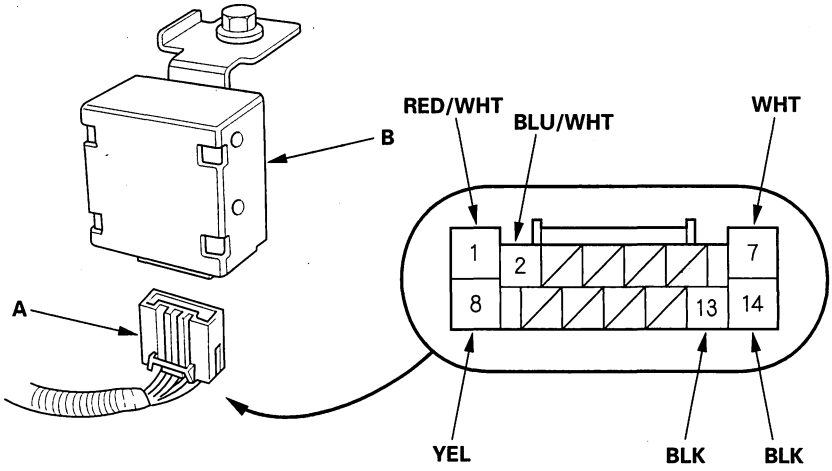

Wire side of female terminals

3. Inspect the connector and socket terminals to be sure they are all making good contact.

   - If the terminals are bent, loose or corroded, repair them as necessary and recheck the system.
   - If the terminals look OK, go to step 4.

4. Reconnect the connector to the daytime running lights control unit, and make these input tests at the connector.

   - If any test indicates a problem, find and correct the cause, then recheck the system.
   - If all the input tests prove OK, go to step 5.

Cavity	Wire	Test condition	Test: Desired result	Possible cause if result is not obtained
13 14	BLK	Under all conditions	Check for voltage to ground: There should be less than 1 V.	• Poor ground (G401) • An open in the wire
8	YEL	Ignition switch ON (II)	Check for voltage to ground: There should be battery voltage.	• Blown No. 21 (7.5 A) fuse in the driver's under-dash fuse/relay box • An open in the wire
1	RED/WHT	Under all conditions	Check for voltage to ground: There should be battery voltage.	• Blown No. 19 (40 A) fuse in the under-hood fuse/relay box • Blown No. 3 (10 A) fuse in the driver's under-dash fuse/relay box • An open in the wire

5. Disconnect the 14P connector from the daytime running lights control unit, and make these input tests at the connector.

   - If any test indicates a problem, find and correct the cause, then recheck the system.
   - If all input tests prove OK, the control unit must be faulty: replace it.

Cavity	Wire	Test condition	Test: Desired result	Possible cause if result is not obtained
2	BLU/WHT	Under all conditions	Check for continuity between the No. 2 terminal and under-hood fuse/relay box connector H (14P) No. 3 terminal: There should be continuity.	An open in the wire
7	WHT	Under all conditions	Check for continuity to ground: There should be continuity.	• Faulty under-hood fuse/relay box • A open in thr wire

BACK

Protected by AR

Brake Pedal Position Switch Test

1. Disconnect the 4P connector (A) from the brake pedal position switch (B).

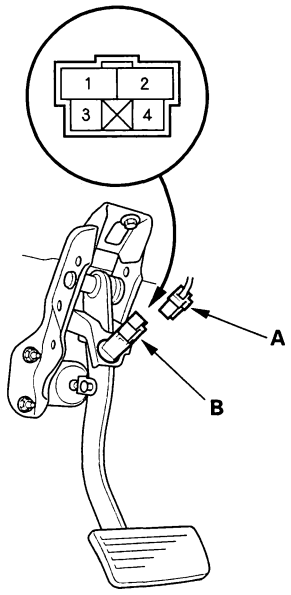

2. Check for continuity between the No. 1 and No. 2 terminals.

   - There should be continuity when the brake pedal is pressed.
   - There should be no continuity when the brake pedal is released.

3. Check for continuity between the No. 3 and No. 4 terminals (with cruise control).

   - There should be no continuity when the brake pedal is pressed.
   - There should be continuity when the brake pedal is released.

4. If necessary, adjust or replace the switch, or adjust the pedal height (see page 19-6).

Protected by AR

Headlight Adjustment

⚠CAUTION

Headlights become very hot during use; do not touch them or any attaching hardware immediately after they have been turned off.

Before adjusting the headlights:

- Park the vehicle on a level surface.
- Make sure the tire pressures are correct.
- The driver or someone who weighs the same should sit in the driver's seat.

1. Clean the outer lens so that you can see the center (A) of the headlights.

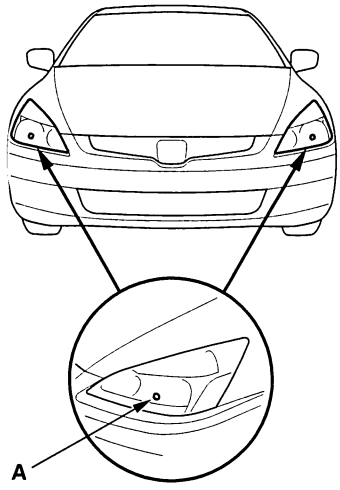

2. Park the vehicle in front of a wall or a screen (A).

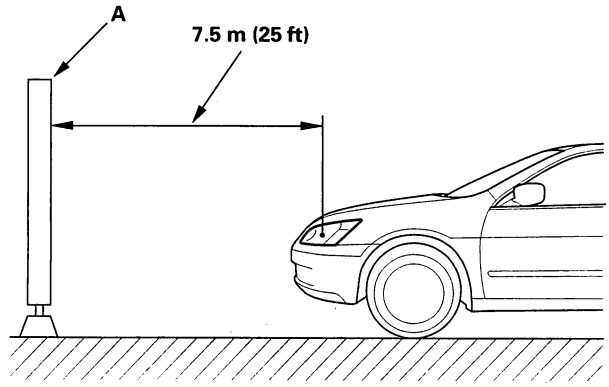

3. Turn the low beams on.

4. Determine if the headlights are aimed properly.

Vertical adjustment:
Measure the height of the headlights (A). The lights should reflect 52 mm (2.1 in.) below headlight height (B).

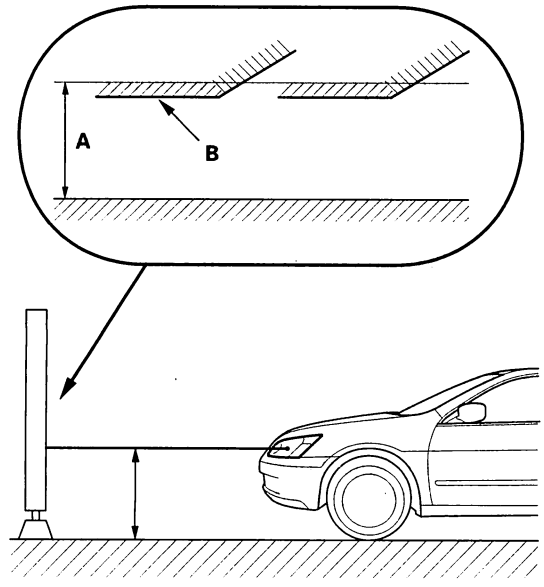

BACK

Protected by AR

5. If necessary, open the hood and adjust the headlights to local requirements by turning the vertical adjuster.

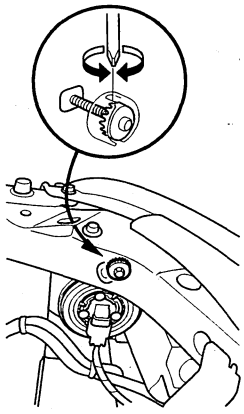

Headlight Replacement

1. Remove the front bumper.
   - 2-door (see page 20-184)
   - 4-door (see page 20-185)
2. Remove the connectors (A) from the headlight assembly (B).

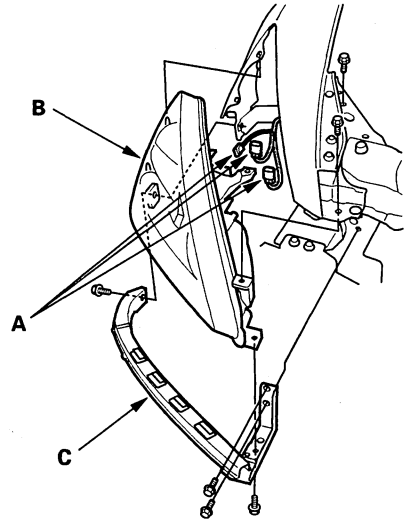

3. Remove the five mounting bolts and the harness clip, then remove the headlight.
4. Remove the bolt and the corner upper beam (C) from the headlight.
5. Install the headlight in the reverse order of removal.
6. After replacement, adjust the headlight to local requirement.

Protected by AR

Exterior Lights

Bulb Replacement

Headlight

1. For low beam headlight bulb, remove the inner fender (see page 20-211).
2. Disconnect the 2P connectors (A) from the headlight.

Headlight (high beam): 60 W
Headlight (low beam): 51 W

High beam:

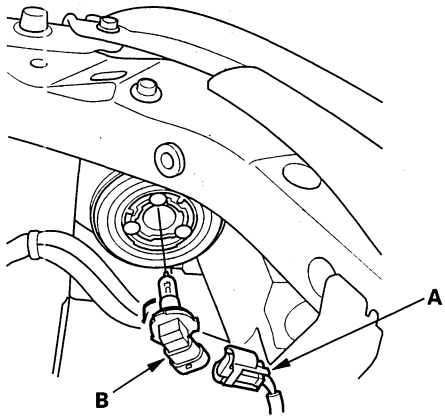

Low beam:

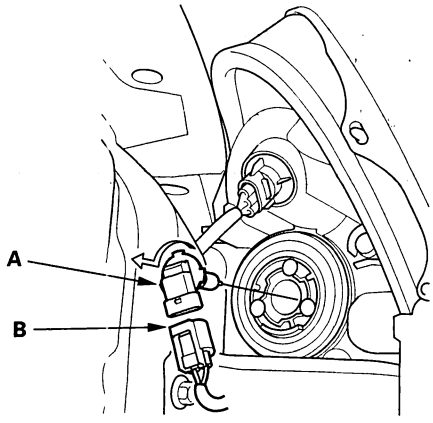

3. Turn the bulb socket (B) 45 ° counterclockwise to remove the bulb.
4. Install a new bulb in the reverse order of removal.

Front Turn Signal/Side Marker Lights

1. Remove the inner fender (see page 20-211).
2. Disconnect the 3P connector (A) from the front turn signal/side marker light.

Front Turn Signal/Side Marker Lights: 21/5 W

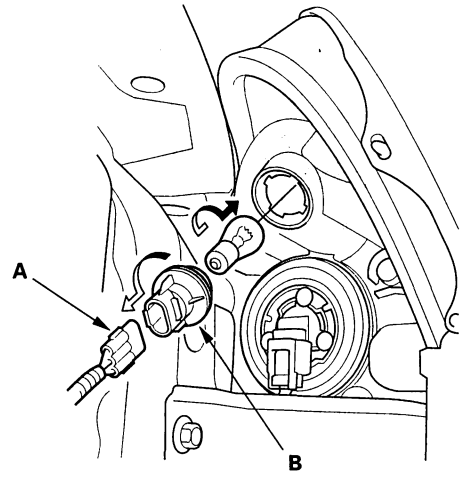

3. Turn the bulb socket (B) 45 ° counterclockwise to remove the bulb.
4. Install a new bulb in the reverse order of removal.

BACK

Protected by AR

Taillight Replacement

Taillight (2-door)

1. Remove the rear bumper (see page 20-188).
2. Open the trunk lid and remove the trunk side trim panel (see page 20-112).
3. Disconnect the connectors (A) from the taillights (B).

Brake/Taillight ('03-05 models): 21/5 W
Back-up Light ('03-05 models): 16 W
Brake/Taillight ('06 model): LED

'03-05 models

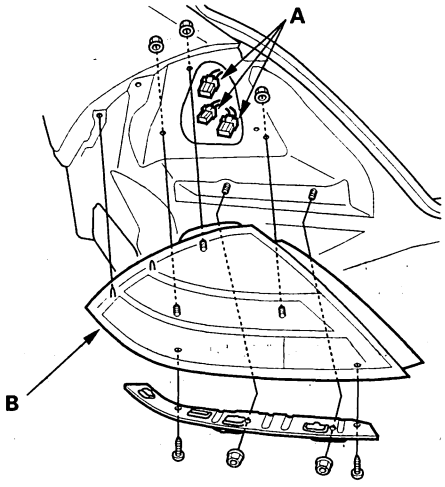

'06 model

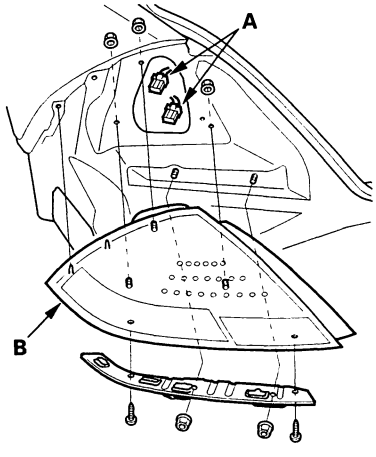

4. Remove the mounting nuts and screws, then remove the taillight.
5. Turn the turn signal light bulb socket 45 ° counterclockwise to remove the bulb.

Turn Signal Light: 21 W

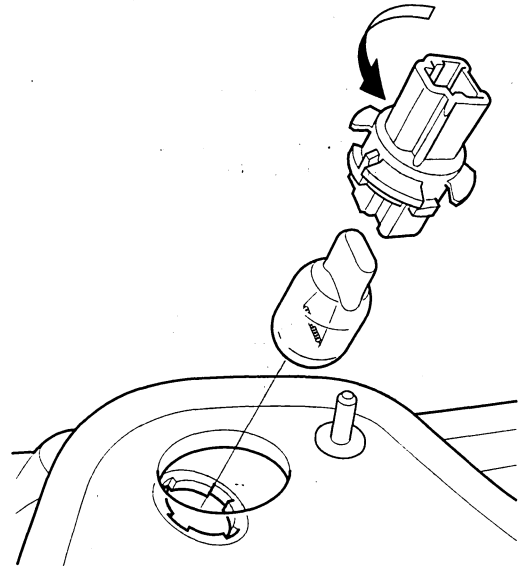

6. Inspect the gasket; replace it if it is distorted or stays compressed.
7. Install the taillight in the reverse order of removal and tighten the nuts to 5 N·m (0.5 kgf·m, 4 ldf·ft).
8. After installing the taillight, run water over it to make sure it does not leak.

Protected by AR

Taillight Replacement (cont'd)

Taillight (4-door)

1. Remove the rear bumper (see page 20-189).
2. Open the trunk lid and remove the trunk side trim panel (see page 20-113).
3. Disconnect the connectors (A) from the taillights (B).

Brake/Taillight ('03-05 models): 21/5 W
Brake/Taillight ('06 model): LED

'03-05 models

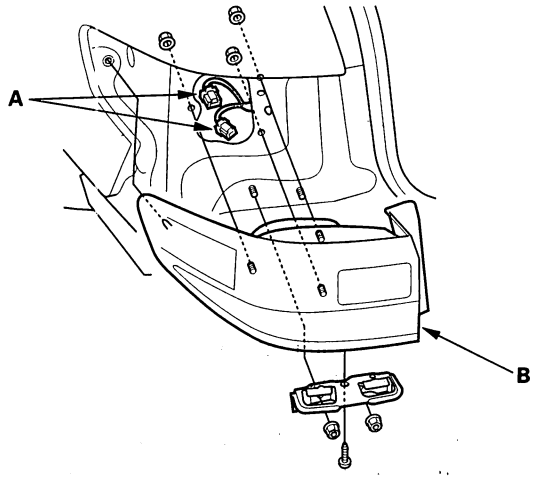

'06 model

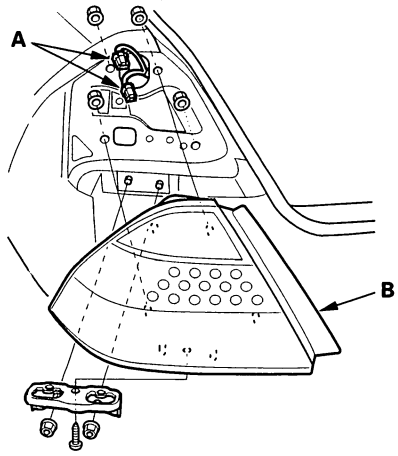

4. Remove the mounting nuts and screws, then remove the taillight.
5. Turn the turn signal light bulb socket 45 ° counterclockwise to remove the bulb.

Turn Signal Light: 21 W

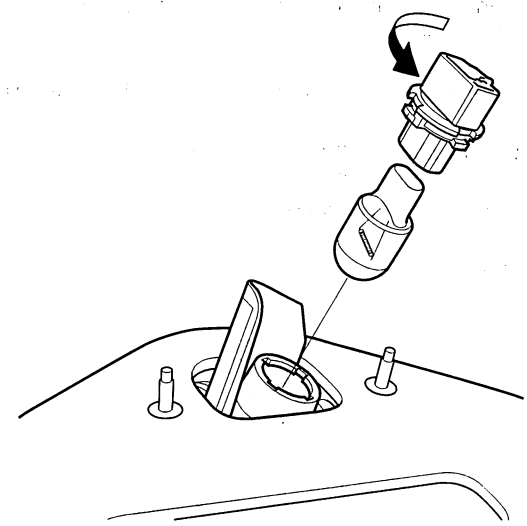

6. Inspect the gasket; replace it if it is distorted or stays compressed.
7. Install the taillight in the reverse order of removal and tighten the nuts to 5 N·m (0.5 kgf·m, 4 lbf·ft).
8. After installing the taillight, run water over it to make sure it does not leak.

BACK

Protected by AR

Inner Taillight (4-door) ('03-05 models)

1. Open the trunk lid and disconnect the connectors (A) from the trunk lid.

Taillight: 5 W
Back-up Light: 21 W

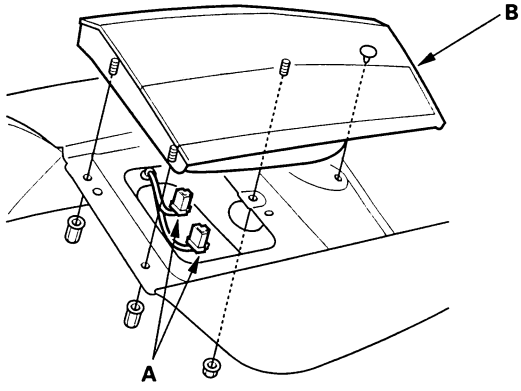

2. Remove the three nuts and the inner taillight (B).
3. Turn the bulb socket 45 ° counterclockwise to remove the bulb.
4. Inspect the gasket; replace it. If it is distorted or stays compressed.
5. Install the taillight and tighten the nuts to 5 N·m (0.5 kgf·m, 4 lbf·ft).
6. After installing the taillight, run water over it to make sure it does not leak.

License Plate Light Replacement

1. 2-door: Remove the license plate trim (see page 20-206).
2. Pull the license plate light assembly out, and disconnect the 2P connector (A) from the light.

License Plate Light: 5 W

4-door ('03-05 models)

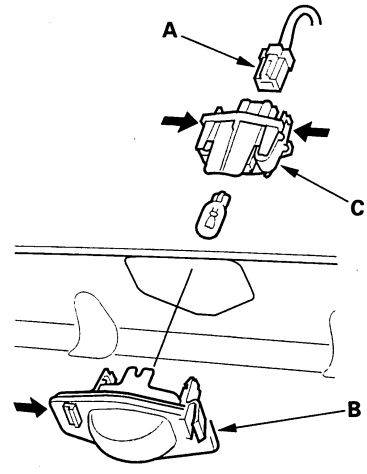

2-door, 4-door ('06 model)

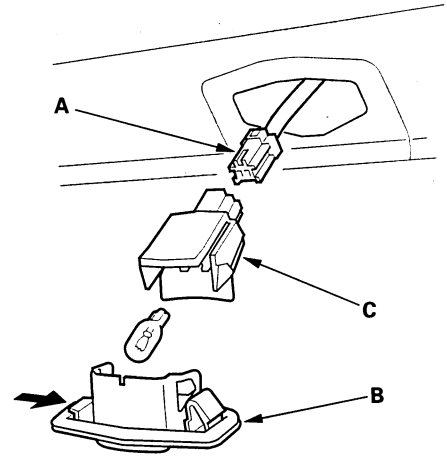

3. Separate the lens (B) and housing (C), then remove the bulb.
4. Install the light in the reverse order of removal.

Protected by AR

Taillight/Brake Light LED Replacement

2-door ('06 model)

1. Remove the taillight (see page 22-199).
2. Remove the gasket (A) from the taillight.

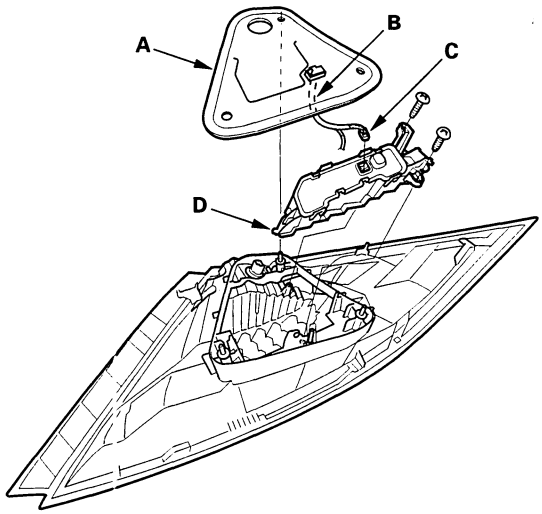

3. Release and uncoil the taillight harness (B) from the taillight housing. Note the installation of the harness.
4. Remove the four screws. Carefully disconnect the connector (C) from the taillight/brake light LED (D).
5. Inspect the gaskets. If the gaskets are distorted or compressed, replace them.
6. Install the new LED in the reverse order of removal.

4-door ('06 model)

1. Remove the taillight (see page 22-200).
2. Remove the gasket (A) from the taillight.

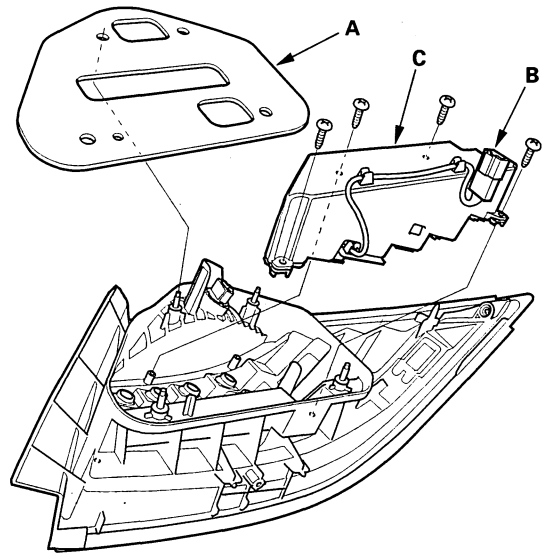

3. Remove the four screws. Carefully disconnect the connector (B) from the taillight/brake light LED (C).
4. Inspect the gaskets. If the gaskets are distorted or compressed, replace them.
5. Install the new LED in the reverse order of removal.

BACK

Protected by AR

Back-up Light Bulb Replacement

4-door ('06 model)

1. Open the trunk lid and remove the trunk lid trim (see page 20-116).
2. Disconnect the 2P connector from the back-up light.
3. Turn the bulb socket (A) 45 ° counterclockwise, then remove the bulb (B).

Back-up Light: 21 CP

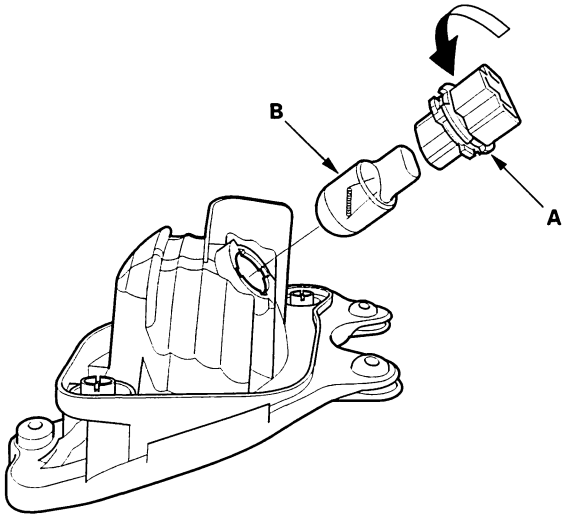

4. Install the bulb in the reverse order of removal.

Back-up Light Replacement

4-door ('06 model)

1. Remove the rear license trim (see page 20-206).
2. Remove the four screws, then remove the back-up lights (A).

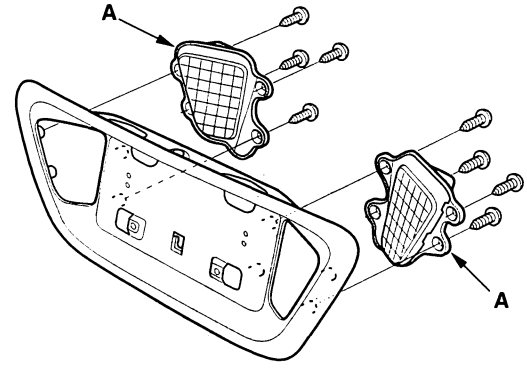

3. Install the back-up lights in the reverse order of removal.

Protected by AR

High Mount Brake Light Replacement

Bulb Replacement ('03-05 models)

1. Open the trunk lid and disconnect the 2P connector (A) from the bulb socket (B).

   High Mount Brake Light: 21 W

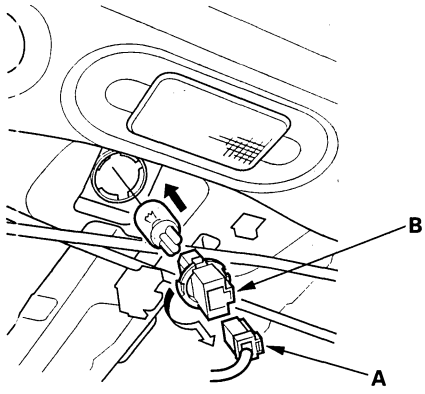

2. Turn the bulb socket (B) 45 ° counterclockwise to remove the bulb.

Housing Replacement ('03-05 models)

1. Remove the rear shelf.

   - 2 door (see page 20-108)
   - 4 door (see page 20-110)

2. Remove the high mount brake light housing (A) from the cover (B).

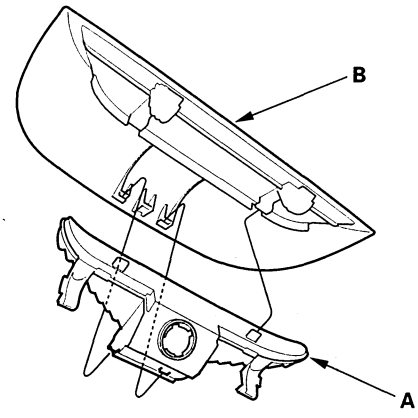

BACK

Protected by AR

'06 model

1. Open the trunk lid.
2. Remove the trunk lid trim.
   - 2 door (see page 20-115)
   - 4 door (see page 20-116)
3. Remove the four nuts and the high mount brake light (A).

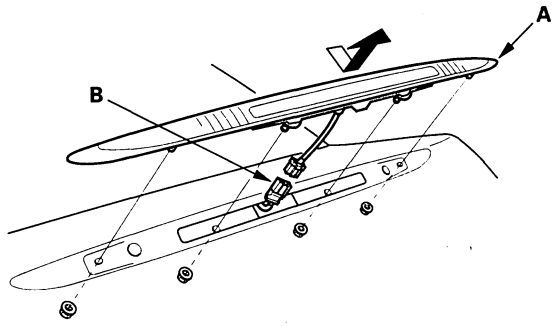

4. Disconnect the 2P connector (B) from the high mount brake light.
5. Install the light in the reverse order of removal.

Protected by AR

Combination Light Switch Test/Replacement

1. Remove the dashboard lower cover (see page 20-130).
2. Remove the steering column covers (see page 17-25).
3. Disconnect the 12P connector (A) from the wiper/washer switch (B).

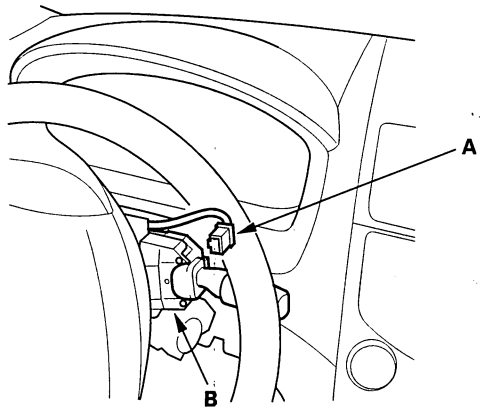

4. Remove the two screws, then slide out the combination light switch (A).

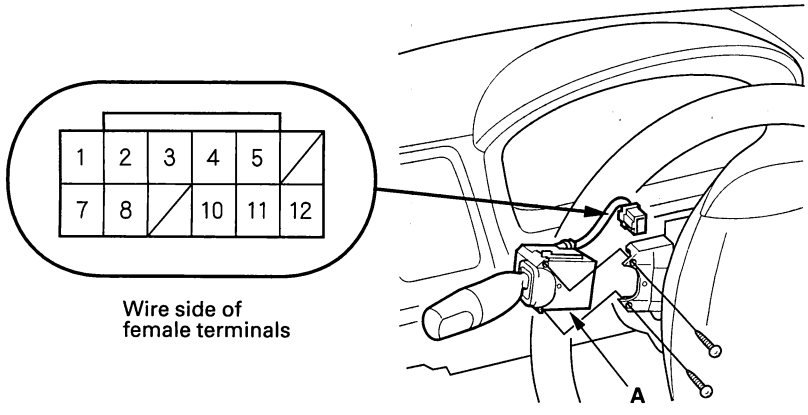

BACK

Protected by AR

5. Inspect the connector terminals to be sure they are all making good contact.

- If the terminals are bent, loose or corroded, repair them as necessary, and recheck the system.
- If the terminals look OK, check for continuity between the terminals in each switch position according to the tables.
  - If the continuity is not as specified, replace the switch.

Light switch:

Position \ Terminal			1	2	3	8	7	12
Headlight switch	OFF		○					○
							○	○
		LOW		○			○	○
		HIGH		○			○	○
						○		○
Passing switch	OFF							
	ON				○			○

Turn signal switch:

Position \ Terminal	4	10	12
LEFT	○		○
NEUTRAL			
RIGHT		○	○

BACK

Protected by AR

Dash Lights Brightness Controller

Circuit Diagram

2003-2005 models

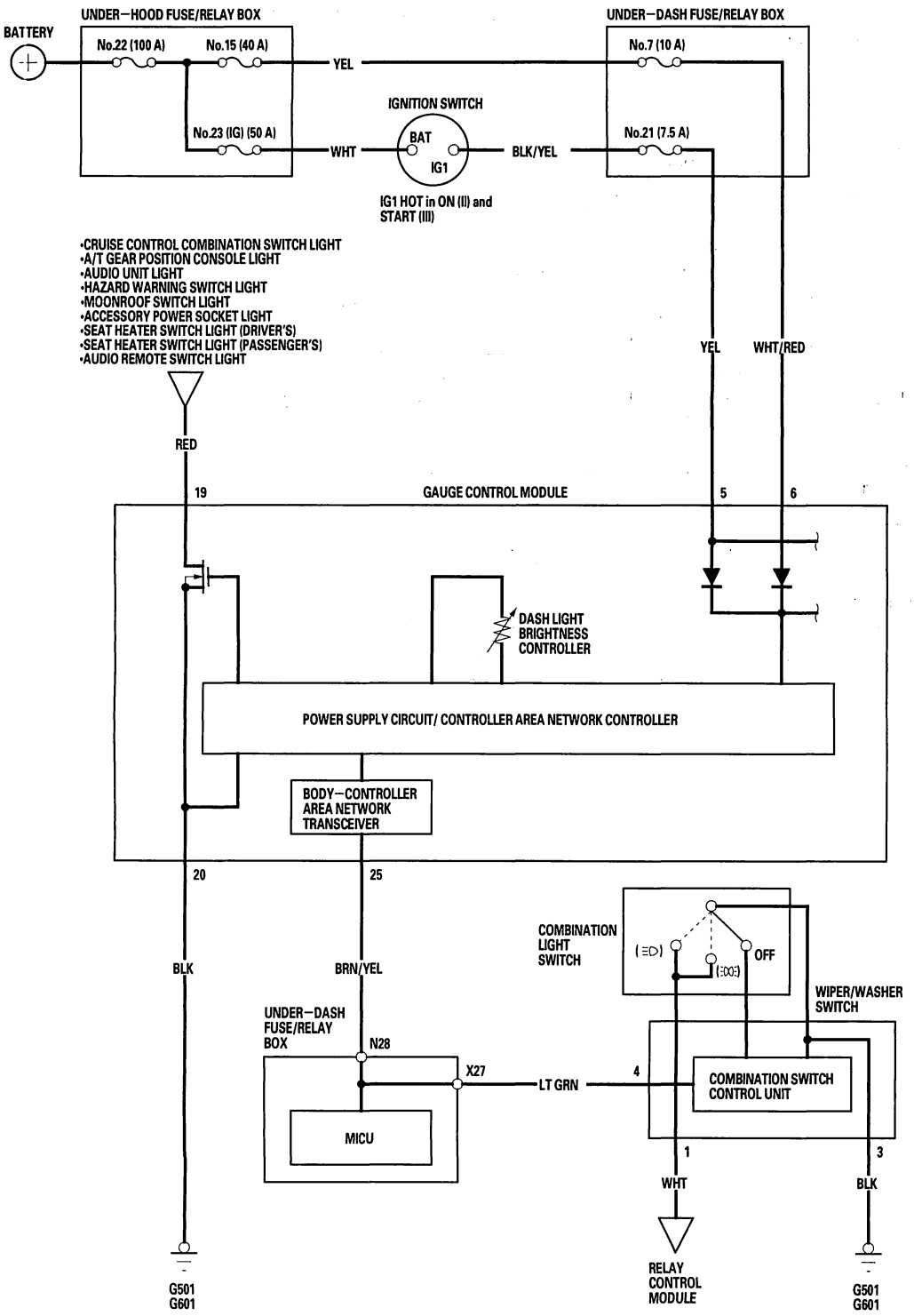

BACK

Protected by AR

2006 model

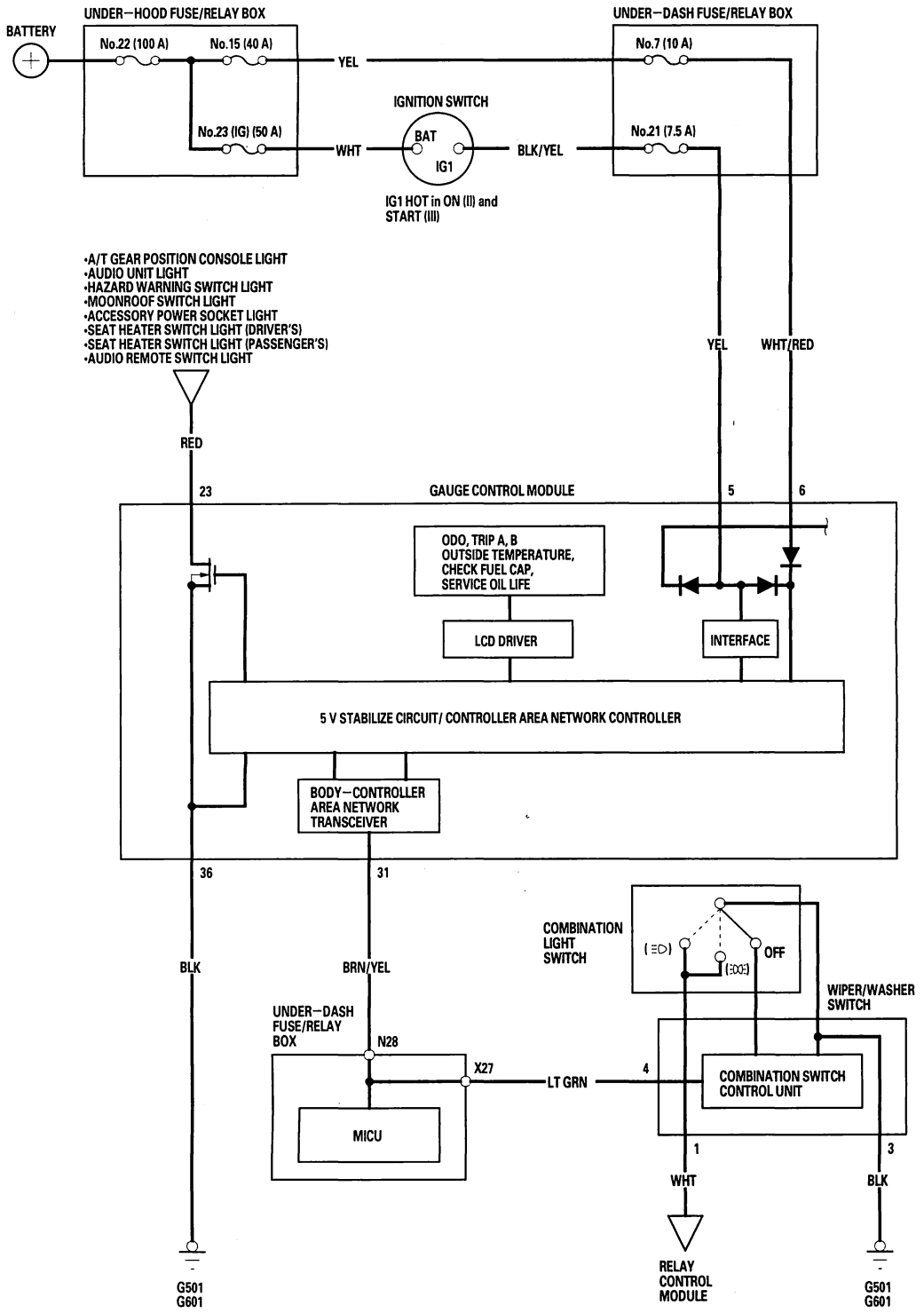

BACK

Protected by AR

Turn Signal/Hazard Flasher

Component Location Index

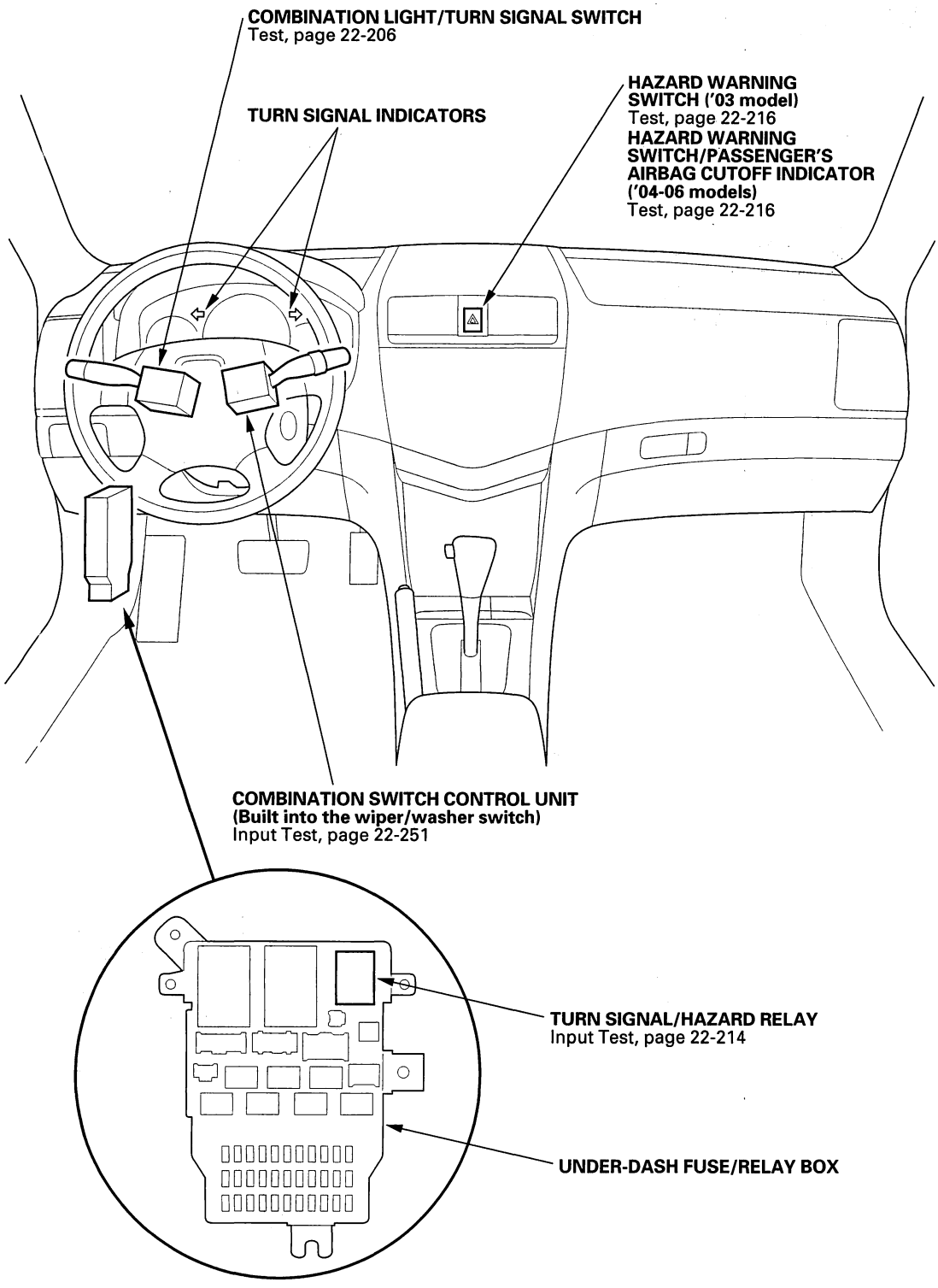

BACK

Protected by AR



Protected by AR

Turn Signal/Hazard Flasher

Circuit Diagram

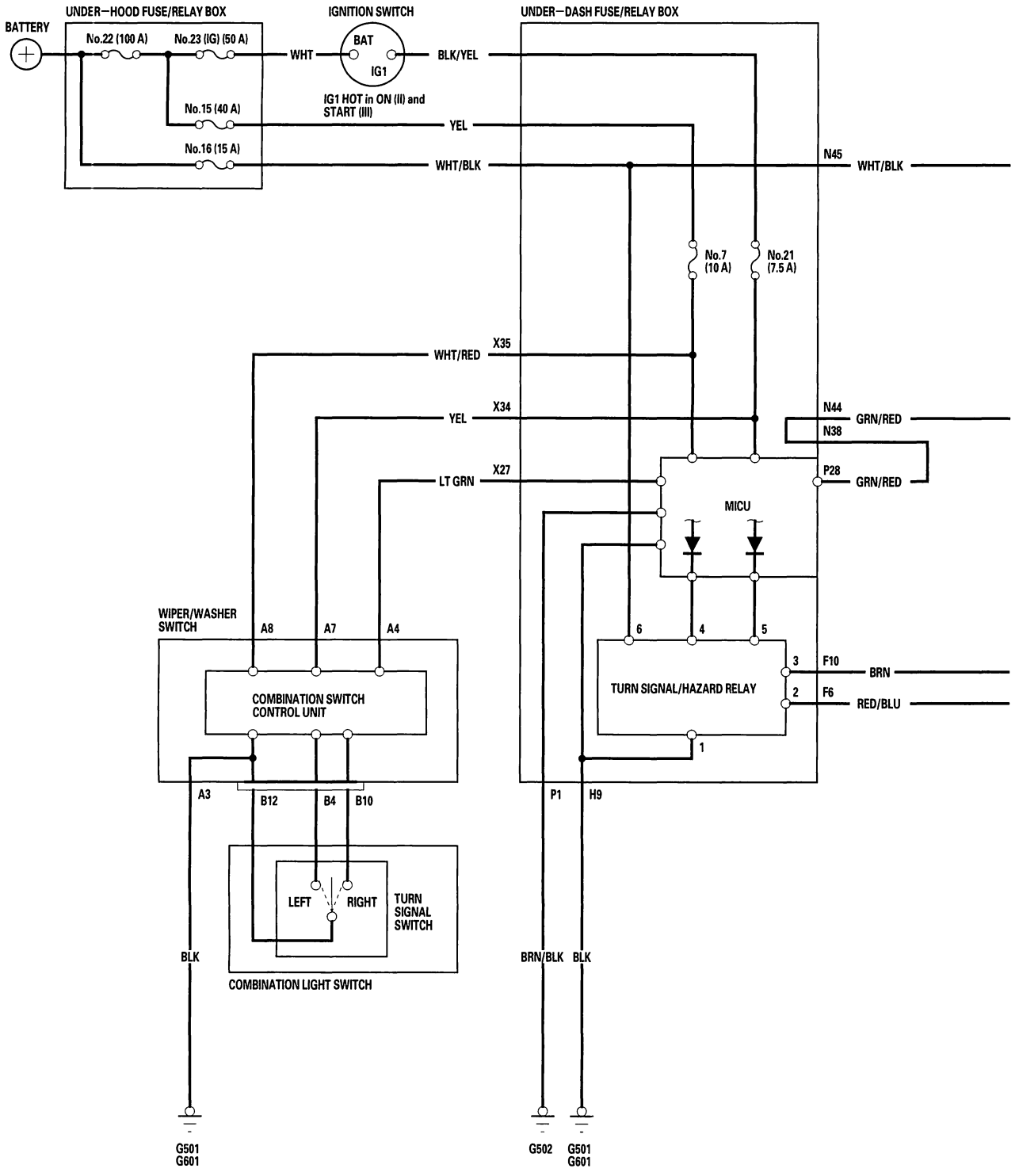

BACK

Protected by AR

[ ] : 2—door
[1] : '03 model
[2] : '04—06 models

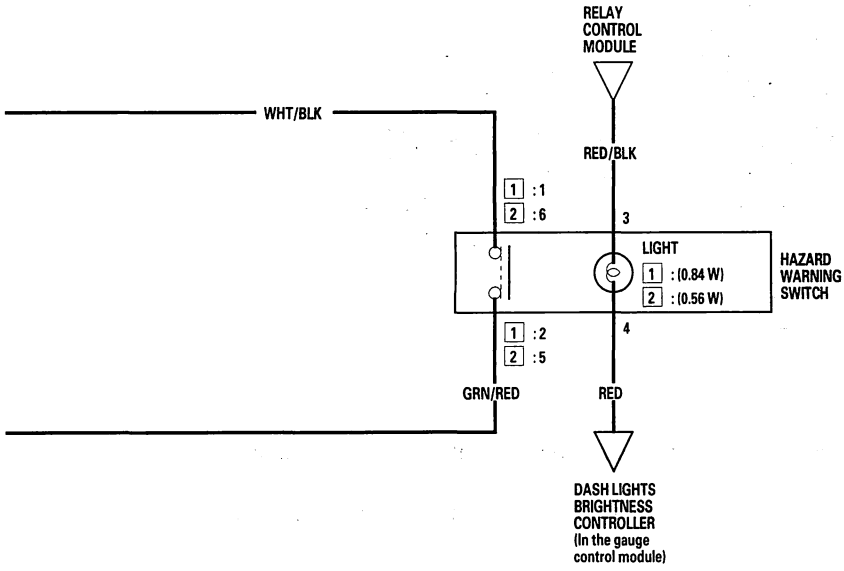

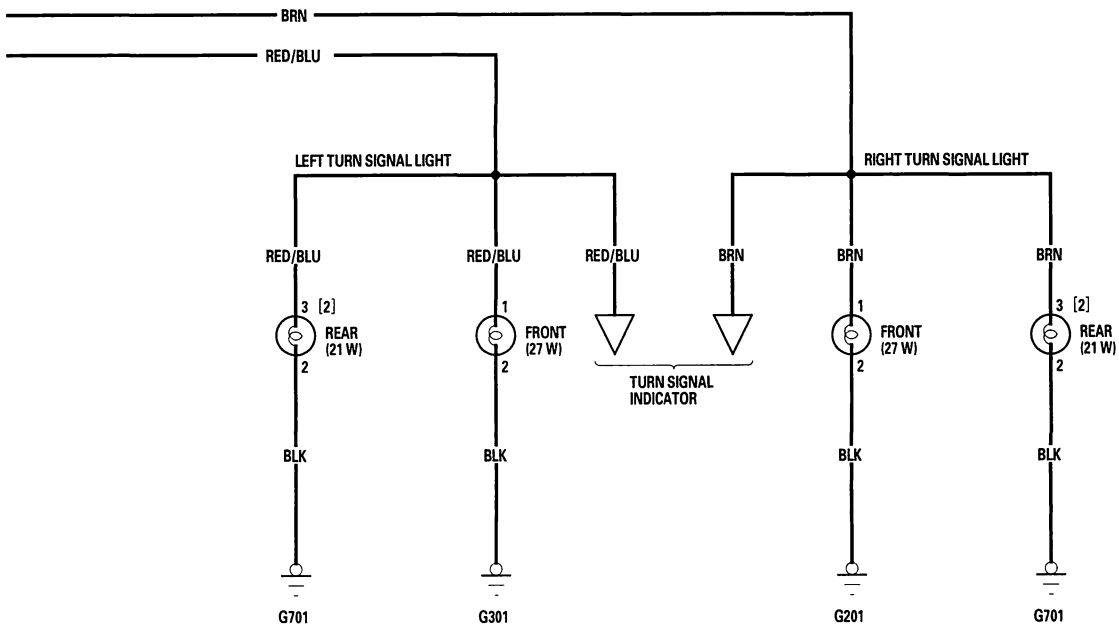

BACK

Protected by AR

Turn Signal/Hazard Flasher

Turn Signal/Hazard Relay Input Test

1. Remove the turn signal/hazard relay (A) from the under-dash fuse/relay box (B).

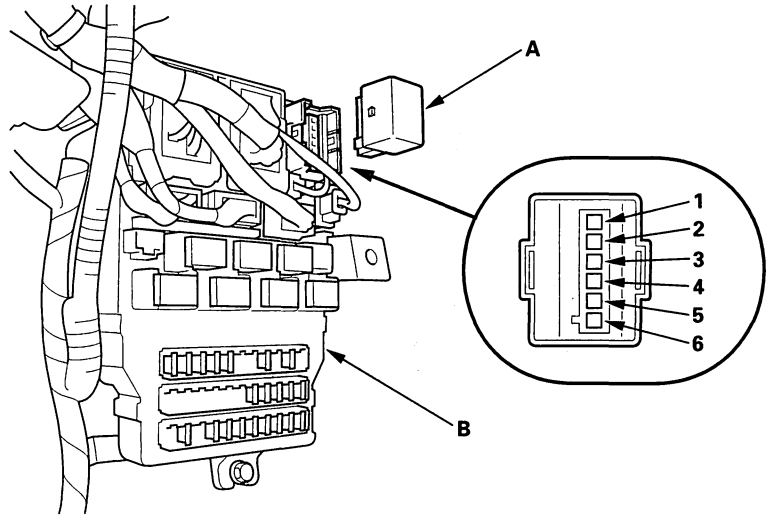

2. Inspect the relay and fuse/relay box socket terminals to be sure they are all making good contact.

   - If the terminals are bent, loose, or corroded, repair them as necessary, and recheck the system.
   - If the terminals look OK, go to step 3.

BACK

Protected by AR

3. Make these input tests at the fuse/relay box.

- If any test indicates a problem, find and correct the cause, then recheck the system.
- If all the input tests prove OK, the turn signal/hazard relay must be faulty; replace it.

Cavity	Teat condition	Test: Desired result	Possible cause if result is not obtained
6	Under all conditions	Check for voltage to ground: There should be battery voltage.	• Blown No. 16 (15 A) fuse in the under-hood fuse/relay box • Faulty under-dash fuse/relay box • An open in the wire
1	Under all conditions	Check for continuity to ground: There should be continuity.	• Poor ground (G501, G601) • Faulty under-dash fuse/relay box • An open in the wire
2	Connect the No. 6 terminal to the No. 2 terminal with a jumper wire.	Check the turn signal lights operation: The left turn signal lights should come on.	• Blown bulb • Poor ground (G301, G701) • An open in the wire
3	Connect the No. 6 terminal to the No. 3 terminal with a jumper wire.	Check the turn signal lights operation: The right turn signal lights should come on.	• Blown bulb • Poor ground (G201, G701 or G702) • An open in the wire
4	Ignition switch ON (II) and turn signal switch in Left position.	Check for voltage to ground: There should be about 10 V.	• Poor ground (G501, G601) • Faulty turn signal switch • Faulty under-dash fuse/relay box • An open in the wire • Faulty combination switch control unit* • Faulty MICU*
5	Ignition switch ON (II) and turn signal switch in Right position.	Check for voltage to ground: There should be about 10 V.	
4	Hazard warning switch ON	Check for voltage to ground: There should be about 10 V.	• Poor ground (G501, G601) • Blown No. 16 (15 A) fuse in the under-hood fuse/relay box • Faulty under-dash fuse/relay box • Faulty hazard warning switch • An open in the wire • Faulty MICU*
5		Check for voltage to ground: There should be about 10 V.	

* : Go to the multiplex integrated control system test mode A troubleshooting (see page 22-91).

Protected by AR

Turn Signal/Hazard Flasher

Hazard Warning Switch Test

Hazard Warning Switch ('03 model)

1. Remove the upper panel (see page 20-131).
2. Disconnect the 5P connector (A) from the hazard warning switch (B).

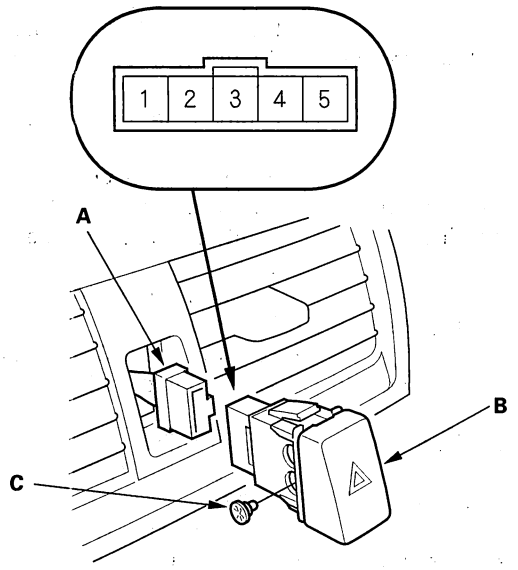

3. Push out the hazard warning switch from behind the upper panel.
4. Check for continuity between the terminals in each switch position according to the table.

Terminal / Position	1	2	3		4
OFF			○	⌀	○
ON	○	○	○	⌀	○

5. If the continuity is not as specified, replace the bulb (C) or the hazard warning switch.

Hazard Warning Switch/Passenger's Airbag Cutoff Indicator ('04-06 models)

1. Remove the upper panel (see page 20-131).
2. Disconnect the 6P connector (A) from the hazard warning switch/passenger's airbag cutoff indicator (B).

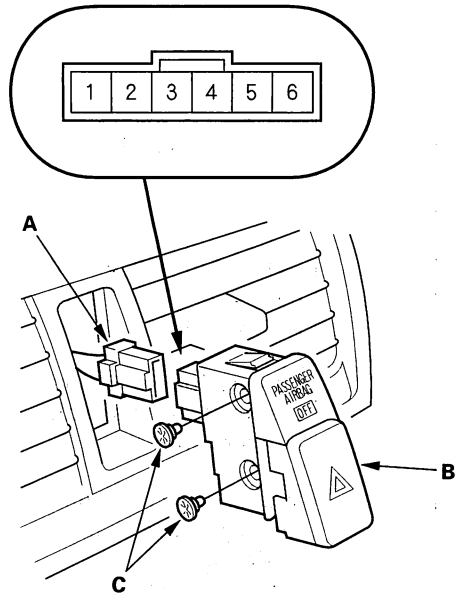

3. Push out the hazard warning switch/passenger's airbag cutoff indicator from the upper panel.
4. Check for continuity between the terminals in each switch position according to the table.

Terminal / Position	3		4	5	6
OFF	○	⌀	○		
ON	○	⌀	○	○	○

5. If the continuity is not as specified, replace the illumination bulb(s) (C) or the hazard warning switch.

BACK

Protected by AR

Interior Lights

Component Location Index

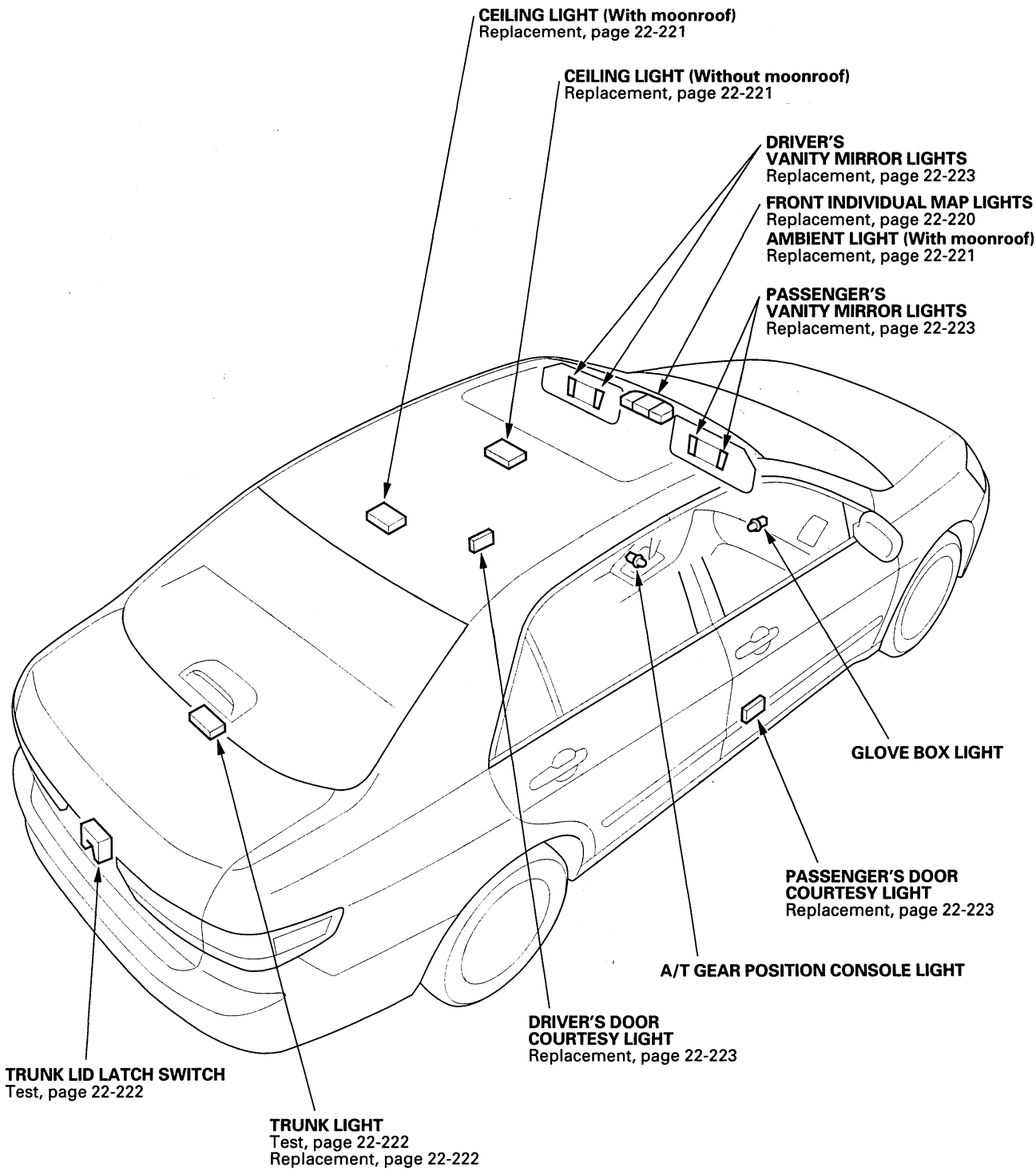

Protected by AR

Interior Lights

Circuit Diagram

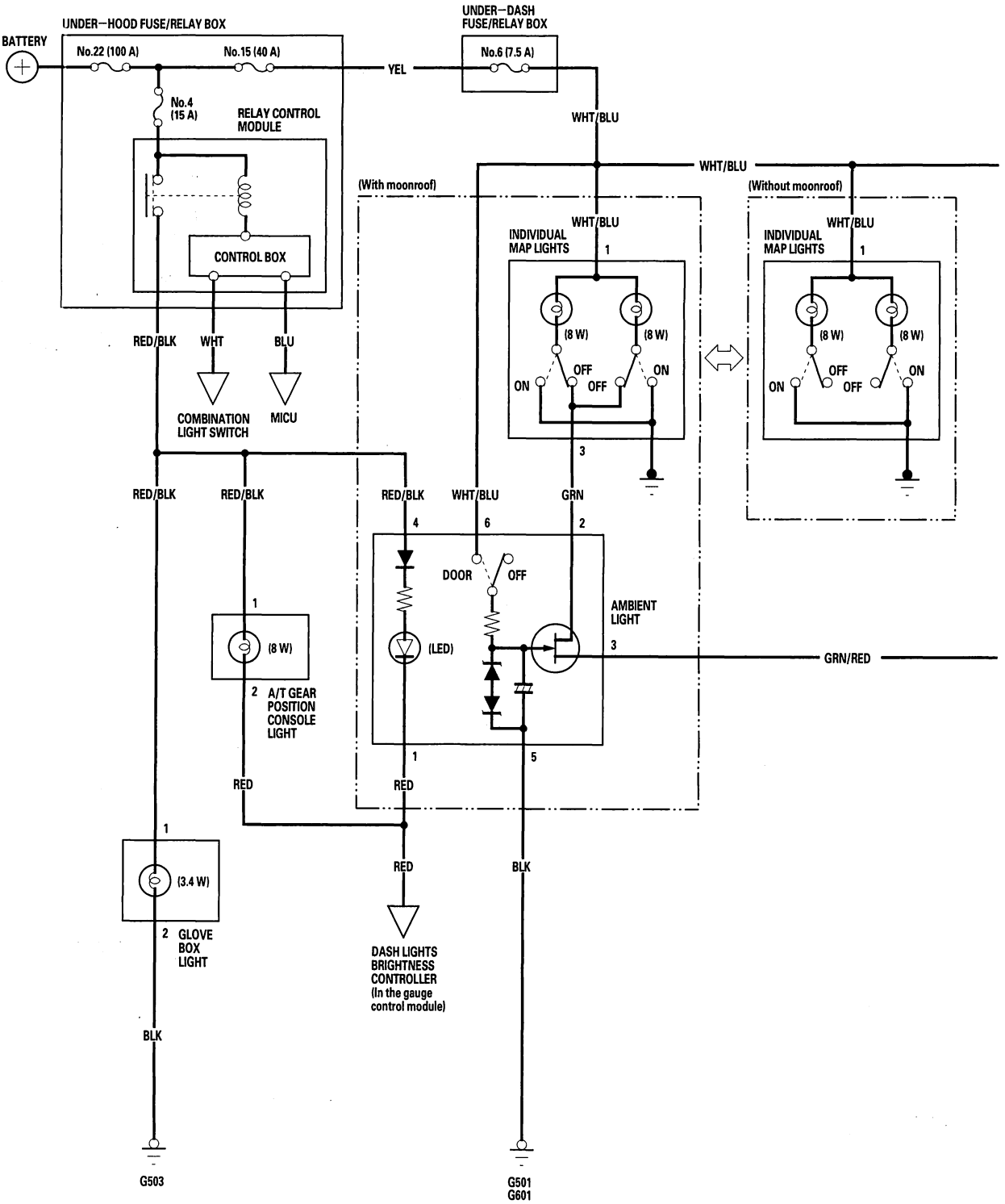

BACK

Protected by AR

[1] : DX
[2] : EX, EXL, LX–V6, Canada LX, '06 model Canada SE

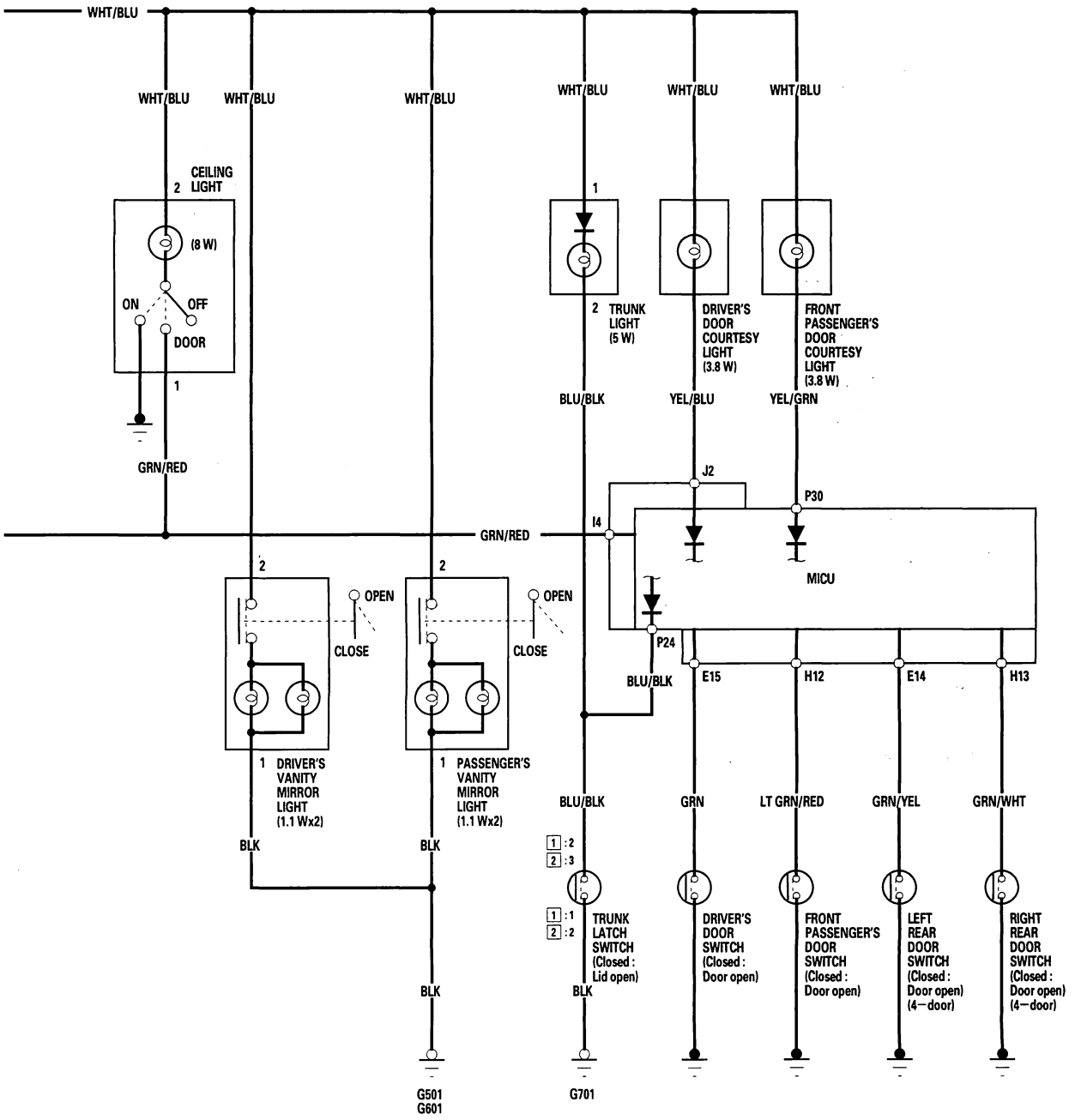

BACK

Protected by AR

Interior Lights

Front Individual Map Light Replacement

With Moonroof

1. Carefully pry off the lens (A) with a small screwdriver.

Front Map Light: 8 W x 2

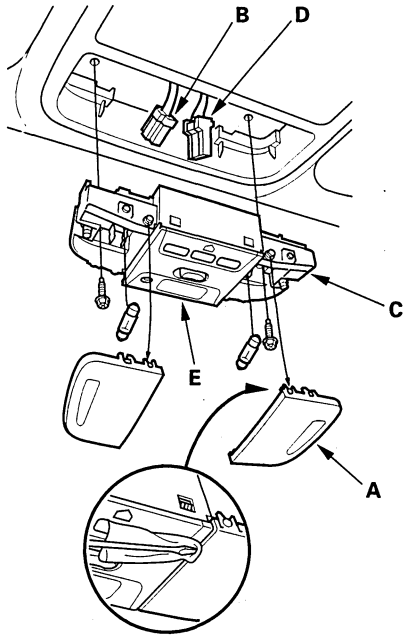

2. Remove the two mounting screws.
3. Disconnect the 3P connector (B) from the housing (C).
4. Disconnect the 8P connector (D) from the ambient light (E).
5. Install the light in the reverse order of removal.

Without Moonroof

1. Carefully pry off the lens (A) with a small screwdriver.

Front Map Light: 8 W x 2

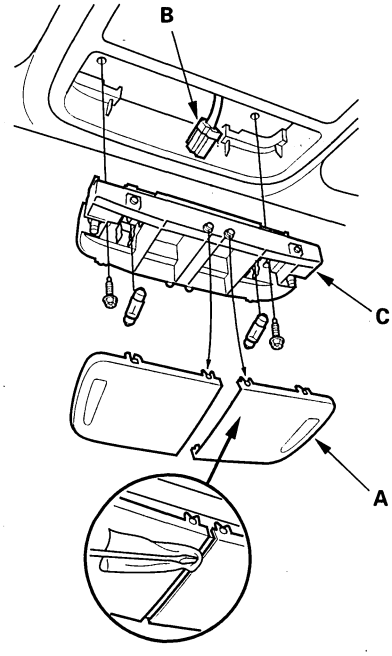

2. Remove the two mounting screws.
3. Disconnect the 3P connector (B) from the housing (C).
4. Install the light in the reverse order of removal.

BACK

Protected by AR

Ambient Light Replacement

With Moonroof

1. Remove the front individual map light (see page 22-220).
2. Disconnect the 8P connector (A) from the ambient light.

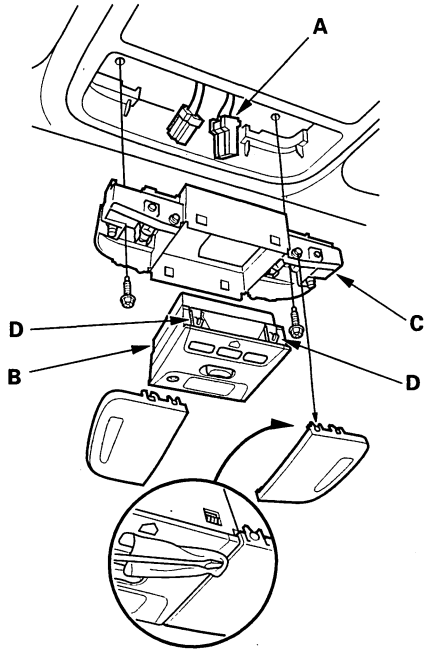

3. Carefully pry off the ambient light assembly (B) from the map light housing (C) while pressing in on the retaining tabs (D).
4. Install in the reverse order removal.

Ceiling Light Replacement

1. Turn the light switch OFF.
2. Carefully pry off the lens (A) with a small screwdriver.

Ceiling Light: 8 W

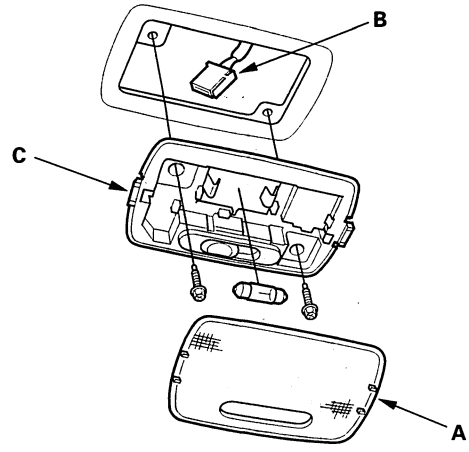

3. Remove the two mounting screws.
4. Disconnect the 3P connector (B) from the housing (C).
5. Install in the reverse order of removal.

Protected by AR

Trunk Light Test/Replacement

1. Open the trunk lid.
2. Carefully pry out the trunk light (A).

   Trunk Light: 5 W

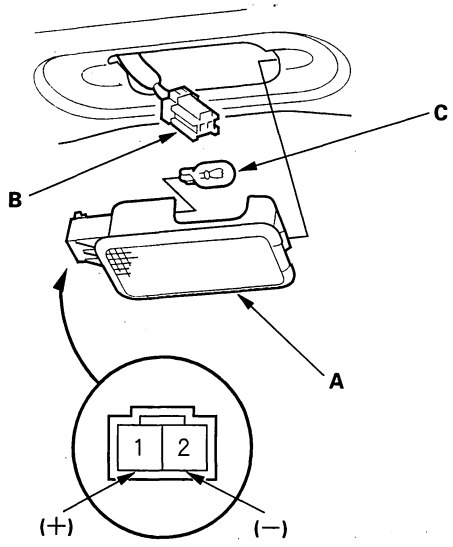

3. Disconnect the 2P connector (B) from the light.
4. Check for continuity between the No. 1 (+) and No. 2 (−) terminals. There should be continuity. If there is no continuity, check the bulb (C). If the bulb(s) is OK, replace the trunk light.

Trunk Lid Latch Switch Test

1. Open the trunk lid.
2. Disconnect the 3P (2P) connector (A) from the trunk lid latch (B).
   ( ): DX ('03-05 models)

   With keyless entry

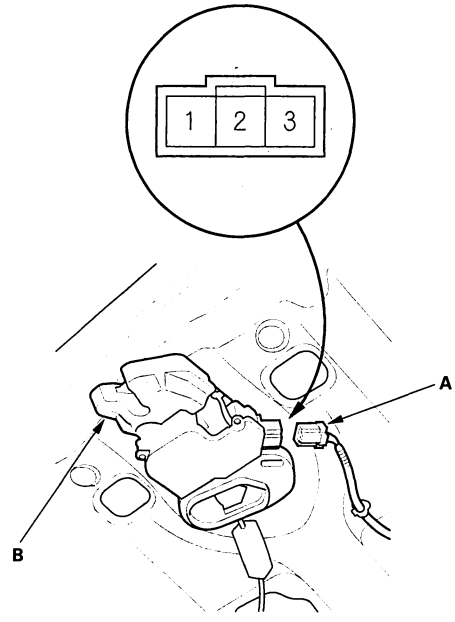

   Without keyless entry

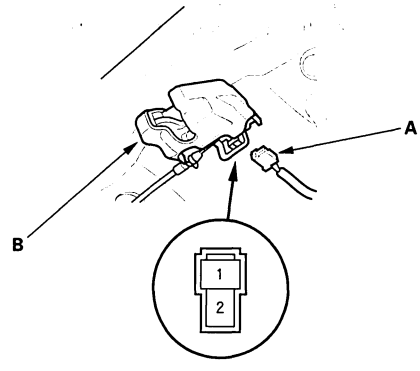

3. Check for continuity between the No. 2 (No. 1) and No. 3 (No. 2) terminals.
   ( ): DX ('03-05 models)

   - There should be continuity with the trunk lid latch unlatched (trunk open).
   - There should be no continuity with the trunk lid latch latched (trunk closed).

4. If the continuity is not as specified, replace the trunk lid latch switch.

BACK

Protected by AR

Vanity Mirror Light Test

1. Open the sunvisor.
2. Remove the sunvisor (see page 20-117).
3. Disconnect the 2P connector (A) from the vanity mirror light.

   Vanity mirror light: 1.1 W

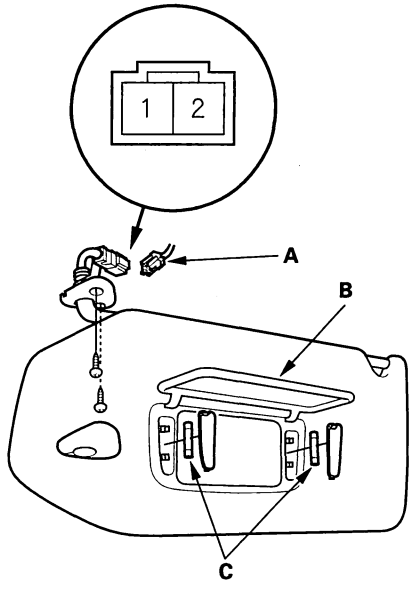

4. Check for continuity between the No. 1 and No. 2 terminals.
   - With the vanity mirror cover (B) opened, there should be continuity.
   - With the vanity mirror cover closed, there should be no continuity.
5. If the continuity is not as specified, replace the bulb (C) or the sunvisor.

Courtesy Light Replacement

1. Carefully pry off the lens (A) with a small screwdriver.

   Courtesy light: 3.8 W

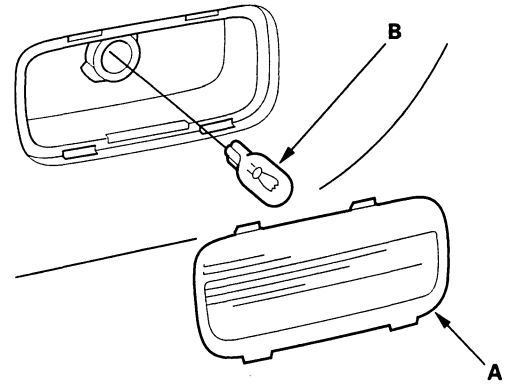

2. Remove the bulb (B) from the socket.

Protected by AR

Entry Lights Control System

Component Location Index

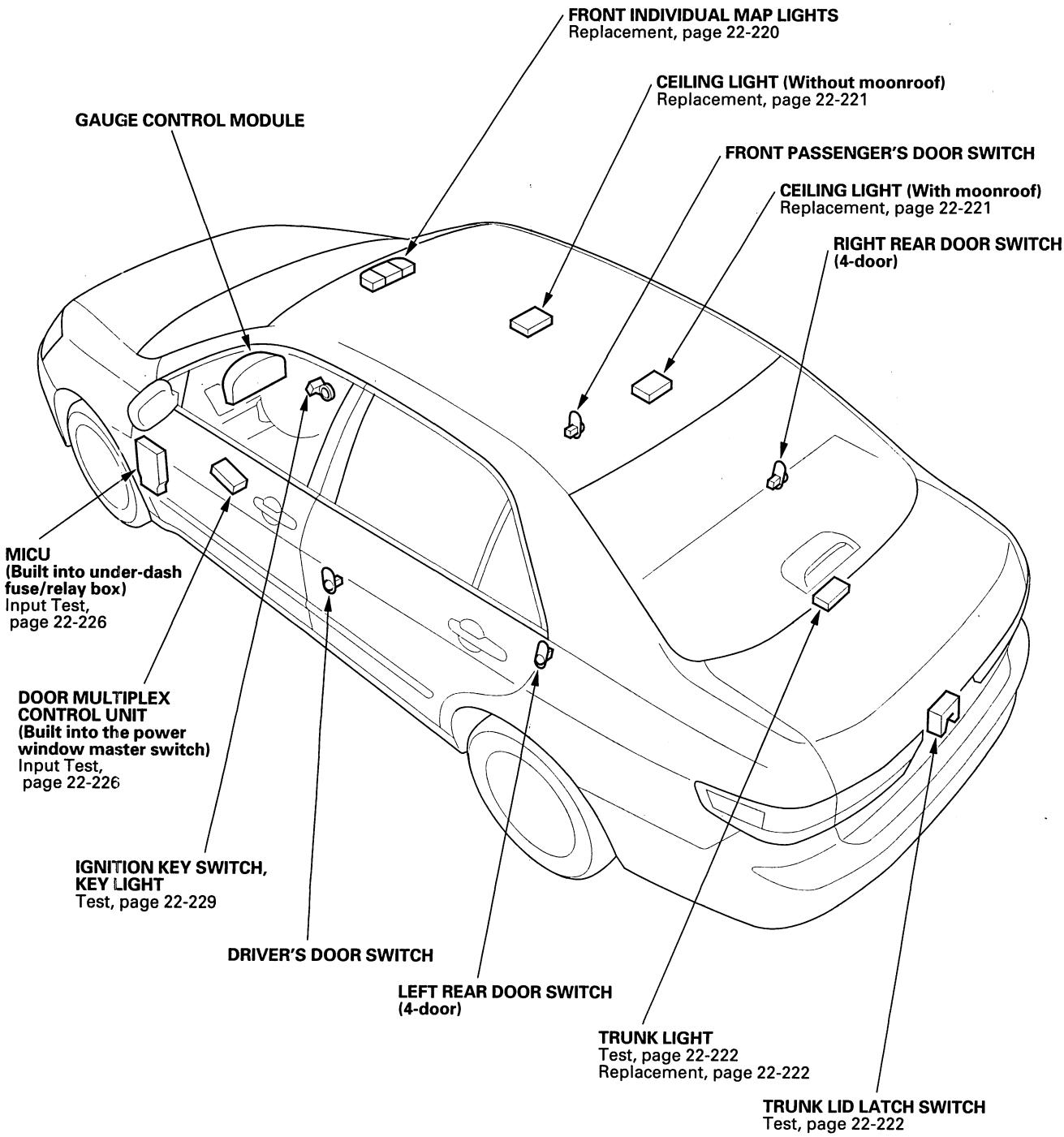

BACK

Protected by AR

Circuit Diagram

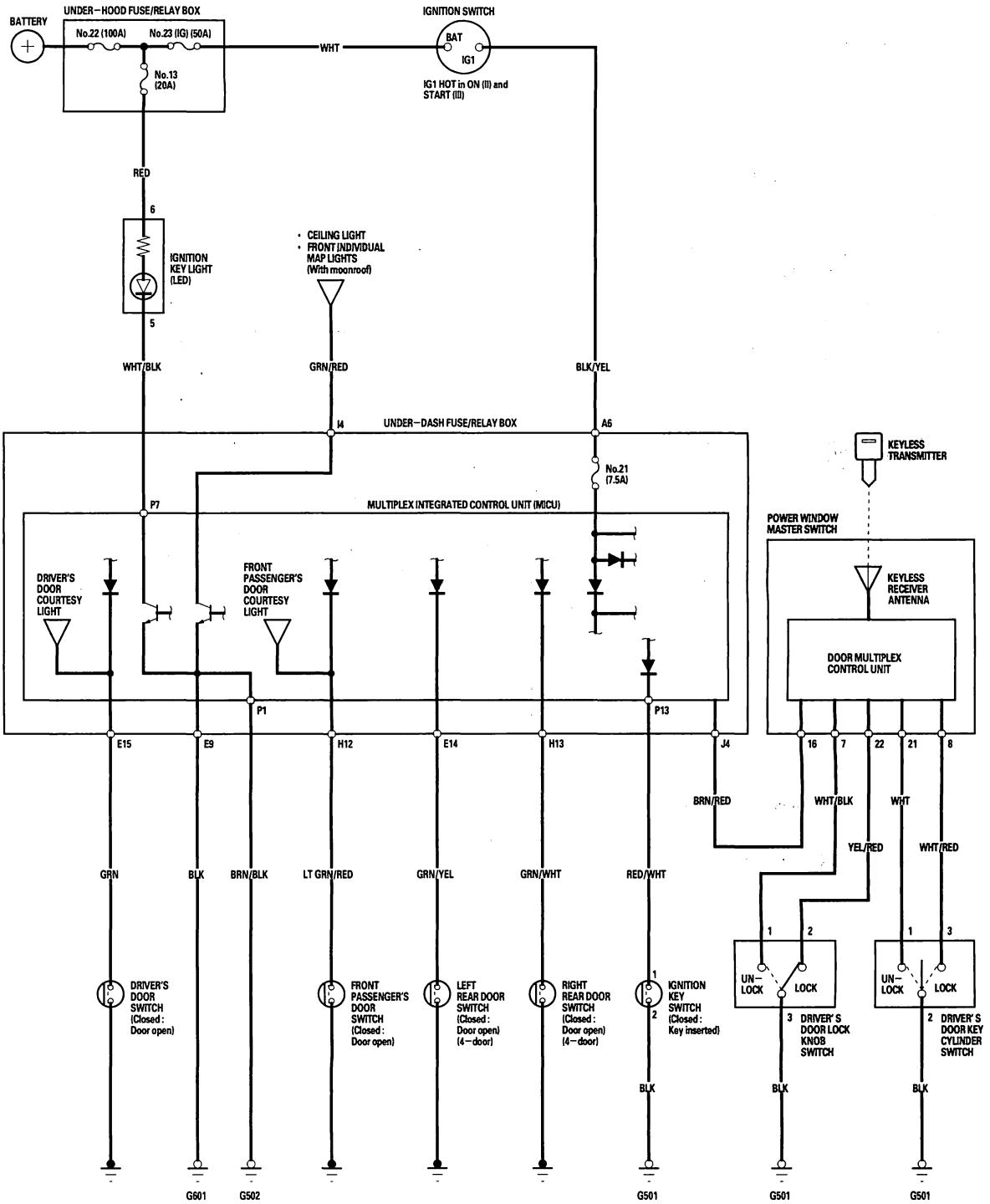

Protected by AR

Entry Lights Control System

Control Unit Input Test

1. Before testing the entry light control functions, troubleshoot the multiplex integrated control system using B-CAN System Diagnosis Test Mode A (see page 22-91).

Multiplex Integrated Control Unit

2. Remove the left kick panel.
   - 2-door (see page 20-90)
   - 4-door (see page 20-91)
3. Disconnect the under-dash fuse/relay box connectors.

   NOTE: All connectors are wire side of female terminals.

UNDER-DASH FUSE/RELAY BOX CONNECTOR E (16P)

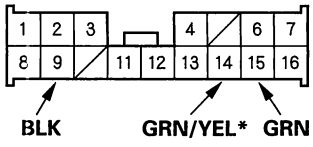

UNDER-DASH FUSE/RELAY BOX CONNECTOR H (14P)

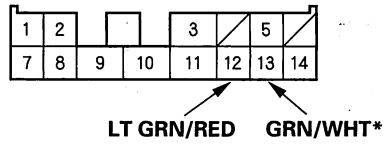

UNDER-DASH FUSE/RELAY BOX CONNECTOR I (5P)

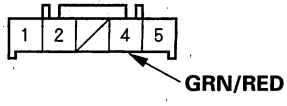

UNDER-DASH FUSE/RELAY BOX CONNECTOR P (30P)

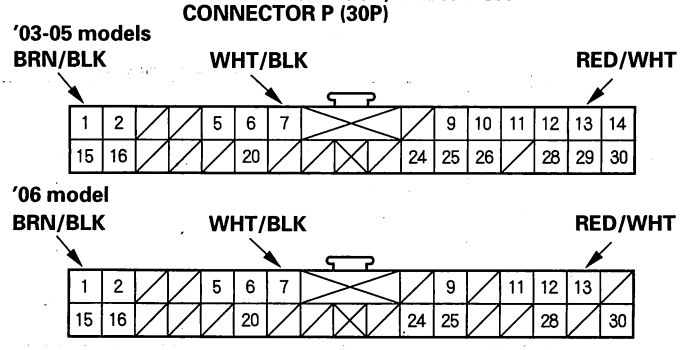

*: 4-door

4. Inspect the connector terminals to be sure they are all making good contact.
   - If the terminals are bent, loose or corroded, repair them as necessary, and recheck the system.
   - If the terminals look OK, go to step 5.

BACK

Protected by AR

5. With the connectors still disconnected, make these input tests at the connector.

   • If any test indicates a problem, find and correct the cause, the recheck the system.
   • If all the input tests prove OK, go to step 6.

Cavity	Wire	Test condition	Test: Desired result	Possible cause if result is not obtained
P1	BRN/BLK	Under all conditions	Check for continuity to ground: There should be continuity.	• Poor ground (G502) • An open in the wire
E9	BLK	Under all conditions	Check for continuity to ground: There should be continuity.	• Poor ground (G601) • An open in the wire
P7	WHT/BLK	Under all conditions	Attach to ground: Ignition key light should come on.	• Blown No. 13 (20 A) fuse in the under-hood fuse/relay box • Faulty ignition keylight (LED) • An open in the wire
I4	GRN/RED	Ceiling light switch in middle position	Attach to ground: Ceiling light(s) should come on.	• Blown No. 6 (7.5 A) fuse in the under-dash fuse/relay box • Blown bulb • Faulty ceiling light • An open in the wire

6. Reconnect the connectors to the under-dash fuse/relay box.

7. Turn the ignition switch to ON (II) to keep the system awake and make these input tests at the appropriate connectors on the under-dash fuse/relay box.

   • If any test indicates a problem, find and correct the cause, then recheck the system.
   • If all the input tests prove OK, go to step 8.

Cavity	Wire	Test condition	Test: Desired result	Possible cause if result is not obtained
E15	GRN	Driver's door open	Check for voltage to ground: There should be less than 1 V.	• Faulty driver's door switch • An open in the wire
		Driver's door closed	Check for voltage to ground: There should be 5 V or more.	• Faulty driver's door switch • Short to ground
H12	LT GRN/RED	Front passenger's door open	Check for voltage to ground: There should be less than 1 V.	• Faulty front passenger's door switch • An open in the wire
		Front passenger's door closed	Check for voltage to ground: There should be 5 V or more.	• Faulty front passenger's door switch • Short to ground
E14*	GRN/YEL	Left rear door open	Check for voltage to ground: There should be less than 1 V.	• Faulty left rear door switch • An open in the wire
		Left rear door closed	Check for voltage to ground: There should be 5 V or more.	• Faulty left rear door switch • Short to ground
H13*	GRN/WHT	Right rear door open	Check for voltage to ground: There should be less than 1 V.	• Faulty right rear door switch • An open in the wire
		Right rear door closed	Check for voltage to ground: There should be 5 V or more.	• Faulty right rear door switch • Short to ground
P13	RED/WHT	Ignition key inserted into the ignition switch	Check for voltage to ground: There should be less than 1 V.	• Poor ground (G501) • Faulty ignition key switch • An open in the wire
		Ignition key removed from the ignition switch	Check for voltage to ground: There should be 5 V or more.	• Faulty ignition key switch • Short to ground

*: 4-door

(cont'd)

Protected by AR

Entry Lights Control System

Control Unit Input Test (cont'd)

Door Multiplex Control Unit

8. Remove the driver's door panel (see page 20-9).
9. Disconnect the 23P connector from the door multiplex control unit.
10. Inspect the connector and socket terminals to be sure they are all making good contact.
    - If the terminals are bent, loose or corroded, repair them as necessary, and recheck the system.
    - If the terminals look OK, go to step 11.

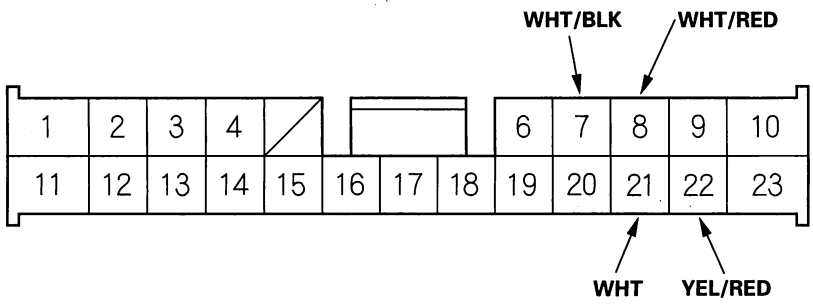

Wire side of female terminals

11. Reconnect the connector to the door multiplex control unit, and make these input tests at the appropriate connector.
    - If any test indicates a problem, find and correct the cause, then recheck the system.
    - If all the input tests prove OK, the control unit must be faulty; replace the power window master switch.

Cavity	Wire	Test condition	Test: Desired result	Possible cause if result is not obtained
22	YEL/RED	Driver's door lock knob locked	Check for voltage to ground: There should be less than 1 V.	• Faulty driver's door lock actuator • Poor ground (G501)
		Drive's door lock knob unlocked	Check for voltage to ground: There should be 5 V or more.	• Faulty driver's door lock actuator • Short to ground
7	WHT/BLK	Driver's door lock knob unlocked	Check for voltage to ground: There should be less than 1 V.	• Faulty driver's door lock actuator • Poor ground (G501) • An open in the wire
		Driver's door lock knob locked	Check for voltage to ground: There should be 5 V or more.	• Faulty driver's door lock actuator • Short to ground
8	WHT/RED	Driver's door key cylinder switch in LOCK	Check for voltage to ground: There should be less than 1 V.	• Faulty driver's door key cylinder switch • Poor ground (G501) • An open in the wire • Short to ground
		Driver's door key cylinder switch in the neutral position	Check for voltage to ground: There should be 5 V or more.	
		Driver's door key cylinder switch in UNLOCK	Check for voltage to ground: There should be 5 V or more.	
21	WHT	Driver's door key cylinder switch in UNLOCK	Check for voltage to ground: There should be less than 1 V.	• Faulty driver's door key cylinder switch • Poor ground (G501) • An open in the wire • Short to ground
		Driver's door key cylinder switch in the neutral position	Check for voltage to ground: There should be 5 V or more.	
		Driver's door key cylinder switch in LOCK	Check for voltage to ground: There should be 5 V or more.	

BACK

Protected by AR

Ignition Key Switch Test

1. Remove the steering column upper and lower covers (see page 17-25).
2. Disconnect the 6P connector.

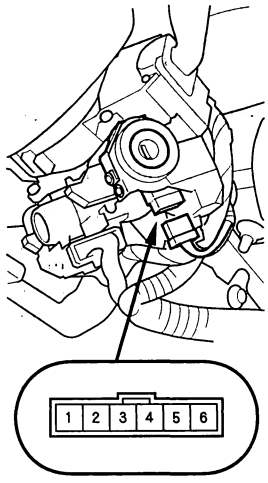

3. Check for continuity between the No. 1 and No. 2 terminals.
   - There should be continuity with the key in the ignition switch.
   - There should be no continuity with the key removed.
4. If the continuity is not as specified, replace the ignition switch.

Ignition Key Light Test

1. Remove the steering column upper and lower covers (see page 17-25).
2. Disconnect the 6P connector.

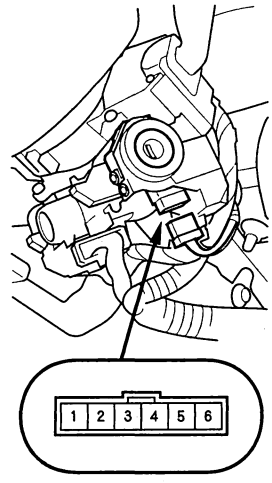

3. The LED should come on when power is connected to the No. 6 terminal and ground is connected to No. 5 terminal.
4. If the LED does not come on, replace the ignition switch.

Protected by AR

Power Windows

Component Location Index

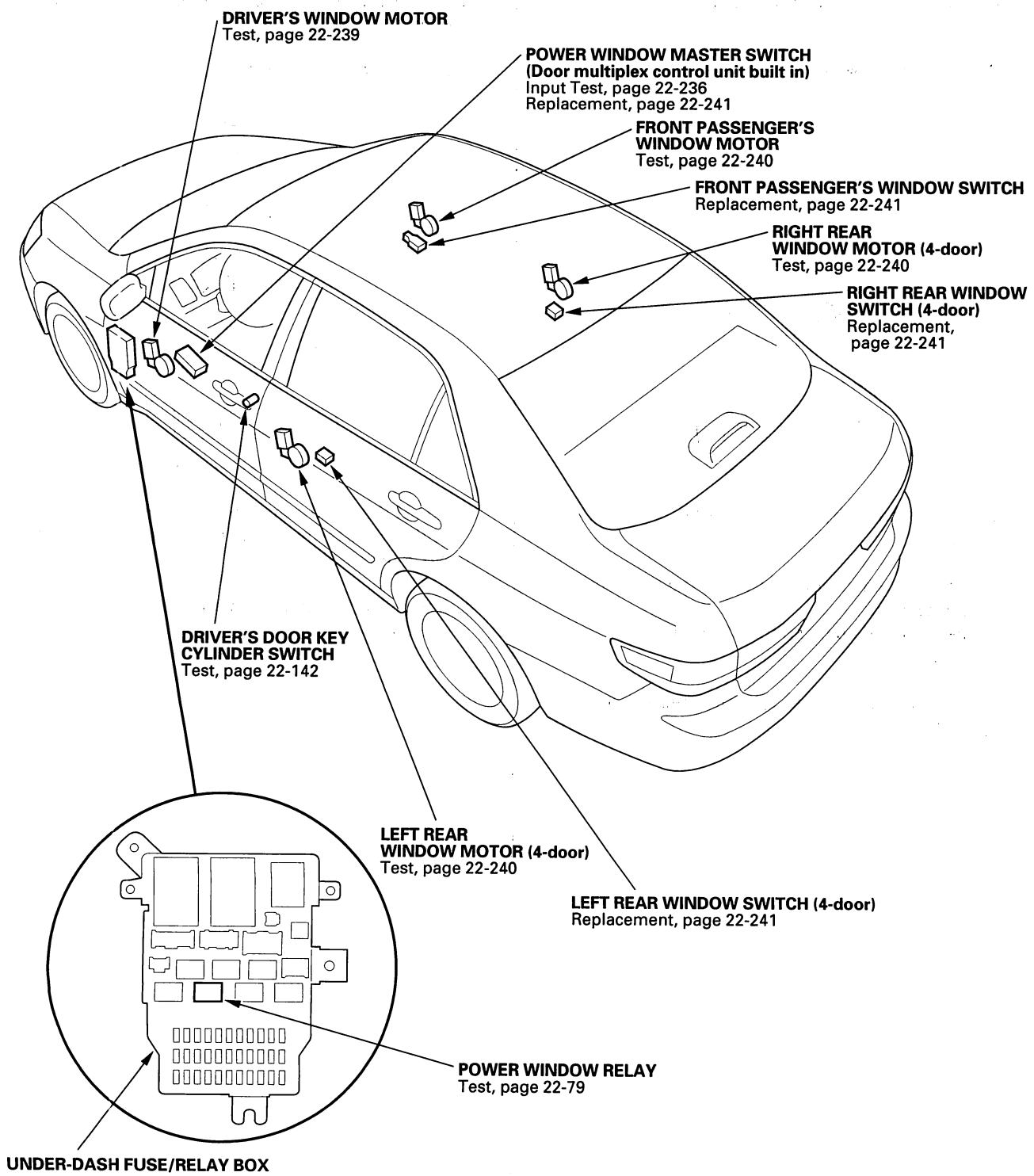

BACK

Protected by AR

System Description

Key Cylinder Operation

With the key inserted in the driver's door key cylinder, turn the key a second time and hold within 10 seconds to operate the windows (clockwise to open, counterclockwise to close). The windows stop moving when the key is released.

NOTE: Anti-trap will not work when door key cylinder switch is used to close the windows.

Keyless Operation

By pressing the UNLOCK button of the keyless transmitter a second time and holding , the windows open. The windows stop moving when the UNLOCK button is released. The windows do not close with the LOCK button.

Anti-trap Power Window Operation

The system is composed of the power window master switch, the power window master switch and the driver's window motor. The power window motor incorporates a pulser which generates pulses during the motor's operation and sends the pulses to the power window control unit. As soon as the power window master switch detects no pulses from the pulser, the control unit makes the power window motor stop and reverse. This is to prevent pinching your hand or fingers during auto-up operation.

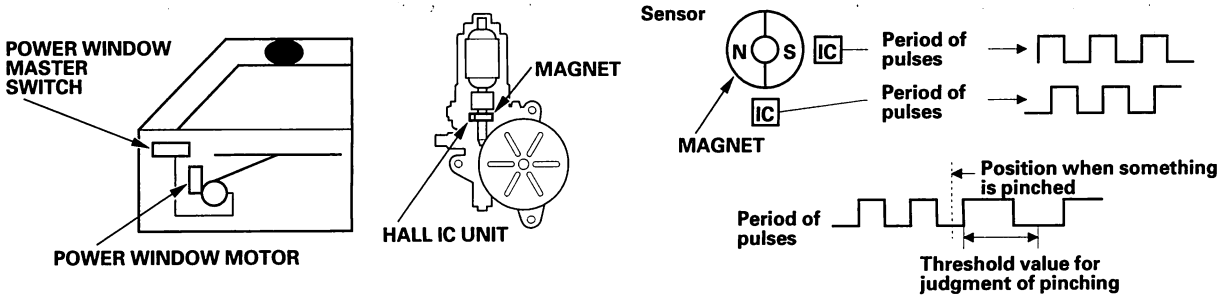

Protected by AR

Resetting the Power Window Control Unit

Resetting the power window is required when any of the following have been removed or repaired

- Power window regulator
- Power window motor
- Window run channel
- Door glass

Using the HDS

1. Connect the Honda Diagnostic System (HDS) to the vehicle's DLC.
2. Turn the ignition switch ON (II), then enter the vehicle's VIN and mileage at the prompts.
3. Select Body Electrical from the System Selection menu.
4. From the Body Electrical System Select menu, select Power Windows.
5. From the Mode menu, select Adjustments.
6. From the Adjustment menu, select Window P Reset.
7. Follow the prompts on the screen.
8. Confirm that the power window master switch is reset by using the driver's window AUTO UP and DOWN function.

BACK

Protected by AR

Resetting the power window

Without the HDS

1. Turn the ignition switch ON (II).
2. Move the driver's window all the way down by using the driver's window DOWN switch.
3. Open the driver's door.

   NOTE: steps 4-7 must be done within 5 seconds of each other.

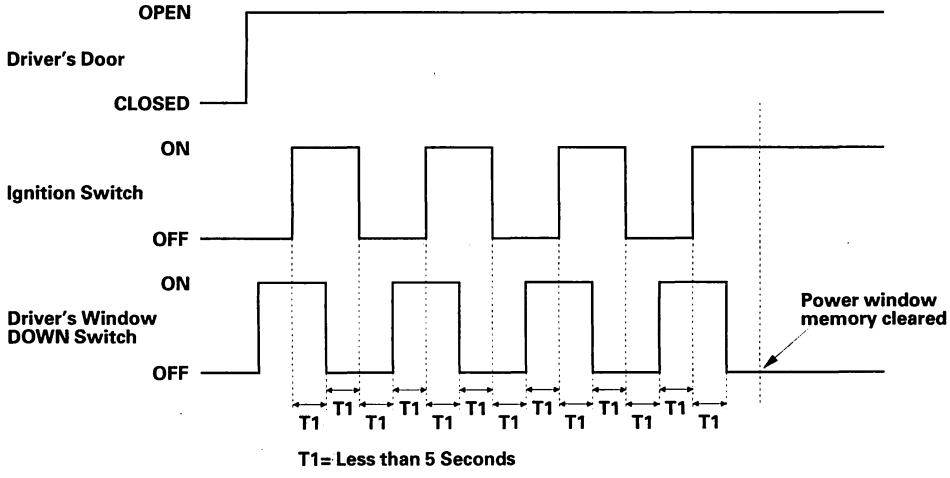

4. Turn the ignition switch OFF.
5. Push and hold the driver's window DOWN switch.
6. Turn the ignition switch ON (II).
7. Release the driver's window DOWN switch.
8. Repeat steps 4-7 three more times.
9. Wait 1 second.
10. Confirm that AUTO UP and AUTO DOWN do not work. If AUTO UP and DOWN work, go back to step 1.
11. Move the driver's window all the way down by holding the driver's window DOWN switch to the AUTO DOWN position.
12. Pull up and hold the driver's window UP switch to the AUTO UP position until the window reaches the fully closed position, then continue to hold the switch for 1 second.
13. Confirm that the power window master switch is reset by using the driver's window AUTO UP and DOWN function.

    If the window still does not work in AUTO, repeat the procedure several times, paying close attention to the 5 second time limit between steps. If it still does not work, go to B-CAN System Diagnosis Test Mode A (see page 22-91).

Protected by AR

Power Windows

Circuit Diagram

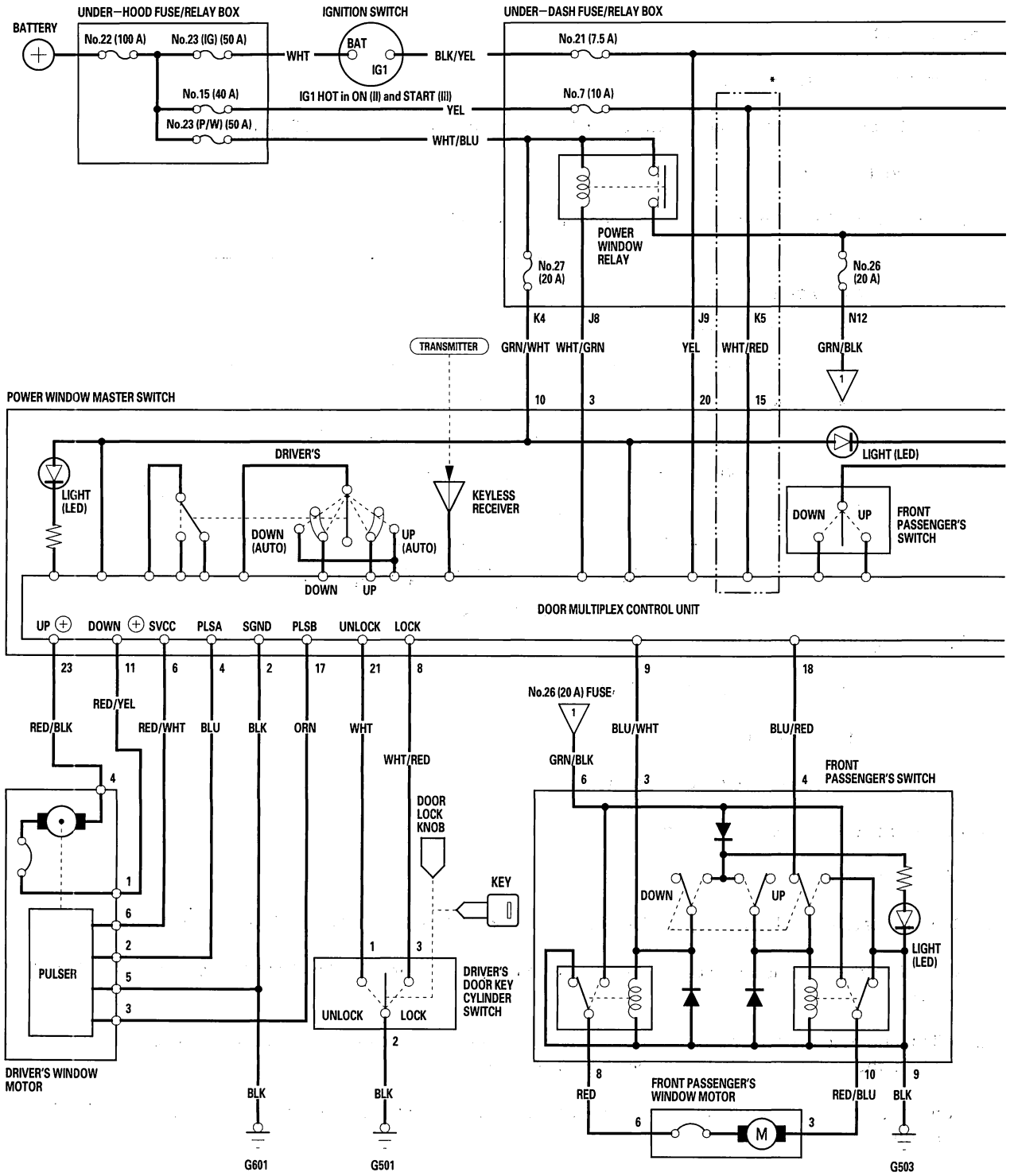

BACK

Protected by AR

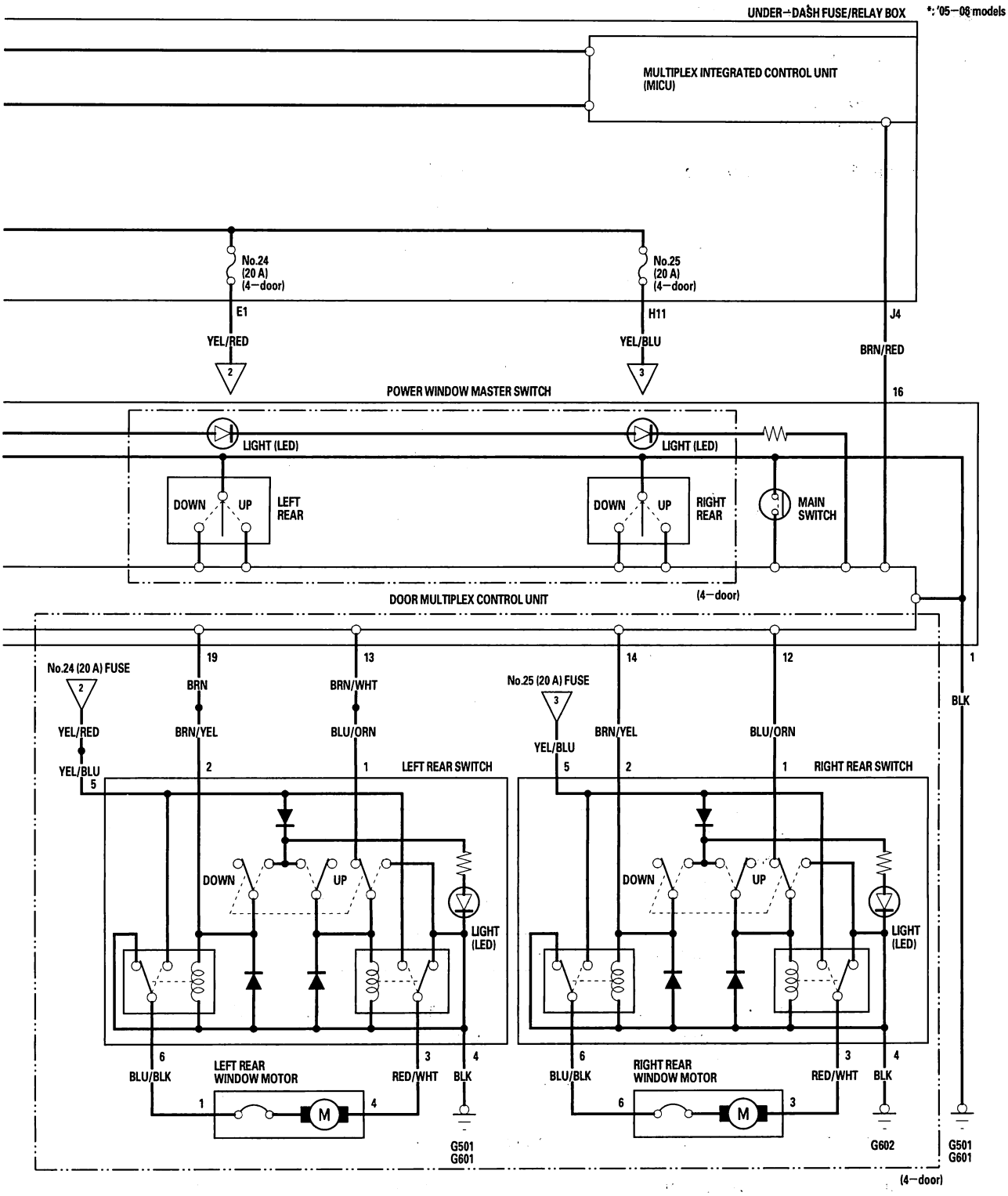

BACK

Protected by AR

Power Windows

Master Switch Input Test

1. Before testing the power windows, troubleshoot the multiplex integrated control system using B-CAN System Diagnosis Test Mode A (see page 22-91).

2. Remove the driver's door switch trim.

   - 2-door (see page 20-9)
   - 4-door (see page 20-10)

3. Disconnect the 23P connector (A) from the power window switch (B).

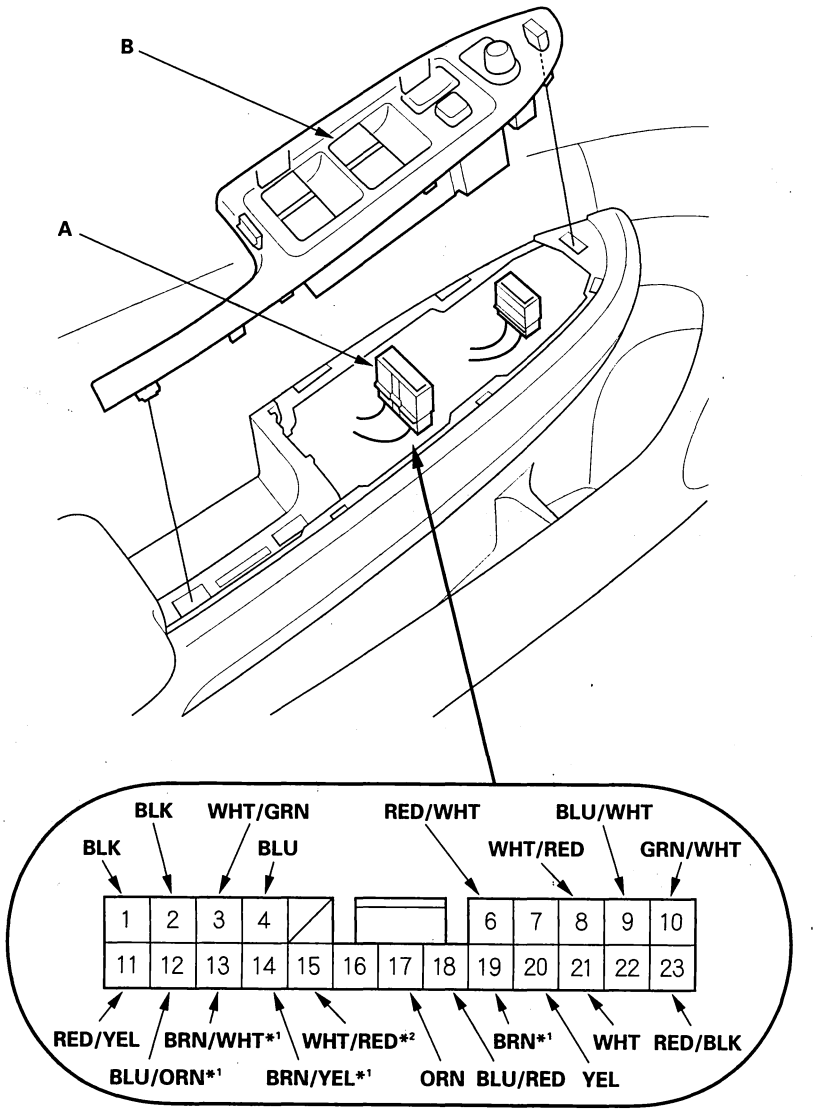

Wire side of female terminals

*1: 4-door
*2: '05-06 models

4. Inspect the connector and socket terminals to be sure they are all making good contact.

   - If the terminals are bent, loose or corroded, repair them as necessary, and recheck the system.
   - If the terminals look OK, go to step 5.

BACK

Protected by AR

5. Reconnect the 23P connector to the switch.

6. Turn the ignition switch to ON (II) to keep the system awake and perform the following input tests.

- If any test indicates a problem, find and correct the cause, then recheck the system.
- If all the input tests prove OK, go to step 7.

Cavity	Wire	Test condition	Test: Desired result	Possible cause if result is not obtained
6	RED/WHT	Ignition switch ON (II)	Check for voltage to ground: There should be battery voltage.	• Faulty power window master switch • Short to ground in the wire
2	BLK	Under all conditions	Check for voltage to ground: There should be 1 V or less.	• Faulty power window master switch • Poor ground (G601)
10	GRN/WHT	Under all conditions	Check for voltage to ground: There should be battery voltage.	• Blown No. 23 (P/W) (50 A) fuse in the under-hood fuse/relay box • Blown No. 27 (20 A) fuse in the under-dash fuse/relay box • Faulty under-dash fuse/relay box • An open in the wire
20	YEL	Ignition switch ON (II)	Check for voltage to ground: There should be battery voltage.	• Blown No. 21 (7.5 A) fuse in the under-dash fuse/relay box • Faulty under-dash fuse/relay box • An open in the wire
15*1	WHT/RED	Under all conditions	Check for voltage to ground: There should be battery voltage.	• Blown No. 7 (10 A) fuse in the under-dash fuse/relay box • Faulty under-dash fuse/relay box • An open in the wire
1	BLK	Under all conditions	Check for voltage to ground: There should be less than 1 V.	• Poor ground (G601) • An open in the wire
4	BLU	Ignition switch ON (II), and the driver's window switch AUTO DOWN	Check for voltage between the No. 4 and No. 2 terminals: There should be 0 V—about 5 V—0 V—about 5 V repeatedly (a digital voltmeter reads about 2.5 V while the window moves).	• Blown No. 21 (7.5 A) fuse in the under-dash fuse/relay box • Blown No. 27 (20 A) fuse in the under-dash fuse/relay box • Faulty power window master switch • Short to ground in the wire • Faulty driver's window motor
17	ORN	Ignition switch ON (II), and the driver's window switch AUTO DOWN	Check for voltage between the No. 17 and No. 2 terminals: There should be 0 V—about 5 V—0 V—about 5 V repeatedly (a digital voltmeter reads about 2.5 V while the window moves).	
21	WHT	Driver's door key cylinder switch in UNLOCK	Check for voltage to ground: There should be 1 V or less.	• Faulty driver's door key cylinder switch • Poor ground (G501) • An open in the wire
		Driver's door key cylinder switch in neutral	Check for voltage to ground: There should be about 5 V.	• Short to ground • Faulty driver's door key cylinder switch
		Driver's door key cylinder switch in LOCK	Check for voltage to ground: There should be about 5 V.	
8	WHT/RED	Driver's door key cylinder switch in LOCK	Check for voltage to ground: There should be 1 V or less.	• Faulty driver's door key cylinder switch • Poor ground (G501) • An open in the wire
		Driver's door key cylinder switch in neutral	Check for voltage to ground: There should be about 5 V.	• Short to ground • Faulty driver's door key cylinder switch
		Driver's door key cylinder switch in UNLOCK	Check for voltage to ground: There should be about 5 V.	

* 1: '05-06 models

NOTE: Reference voltage is approximately 5 V when system is awake. The voltage drops to 0.8 V when the system goes into sleep mode.

(cont'd)

Protected by AR

Master Switch Input Test (cont'd)

7. Disconnect the 22P connector from the power window master switch, and make these input tests at the connector.

- If any test indicates a problem, find and correct the cause, then recheck the system.
- If all the input tests prove OK, the control unit must be faulty; replace the power window master switch.

Cavity	Wire	Test condition	Test: Desired result	Possible cause if result is not obtained
3	WHT/GRN	Under all conditions	Connect terminal No. 3 to ground. Check for voltage at under-dash fuse/relay box No. 26 (20 A) fuse: There should be battery voltage.	• Blown No. 23 (P/W) (50 A) fuse in the under-hood fuse/relay box. • Faulty power window relay • Faulty under-dash fuse/relay box • An open in the wire
11	RED/YEL	Connect the No. 10 and No. 11 terminals with a jumper wire, and No. 23 terminal to body ground.	Check the driver's window motor operation: The window should go down.	• Blown No. 27 (20 A) fuse in the under-dash fuse/relay box • Faulty driver's power window motor • An open in the wire
23	RED/BLK	Connect the No. 10 and No. 23 terminals with a jumper wire, and No. 11 terminal to body ground.	Check for driver's window motor operation: The window should go up.	
9	BLU/WHT	Connect the No. 10 and No. 9 terminals with a jumper wire, and the No. 3 terminal to body ground.	Check the front passenger's window motor operation: The window should go down.	• Poor ground (G503) • Blown No. 26 (20 A) fuse in the under-dash fuse/relay box • Faulty front passenger's power window switch • Faulty front passenger's power window motor • An open in the wire
18	BLU/RED	Connect the No. 10 and No. 18 terminals with a jumper wire, and the No. 3 terminal to body ground.	Check the front passenger's window motor operation: The window should go up.	
13*1	BRN/WHT	Connect the No. 10 and No. 13 terminals with a jumper wire, and the No. 3 terminal to body ground.	Check the left rear window motor operation: The window should go up.	• Poor ground (G601) • Blown No. 24 (20 A) fuse in the under-dash fuse/relay box • Faulty left rear power window switch • Faulty left rear power window motor • An open in the wire
19*1	BRN	Connect the No. 10 and No. 19 terminals with a jumper wire, and the No. 3 terminal to body ground.	Check the left rear window motor operation: The window should go down.	
12*1	BLU/ORN	Connect the No. 10 and No. 12 terminals with a jumper wire, and the No. 3 terminal to body ground.	Check the right rear window motor operation: The window should go up.	• Poor ground (G602) • Blown No. 25 (20 A) fuse in the under-dash fuse/relay box • Faulty right rear power window switch • Faulty right rear power window motor • An open in the wire
14*1	BRN/YEL	Connect the No. 10 and No. 14 terminals with a jumper wire, and the No. 3 terminal to body ground.	Check the right rear window motor operation: The window should go down.	

* 1: 4-door

BACK

Protected by AR

Driver's Window Motor Test

Motor Test

1. Remove the driver's door panel.
   - 2-door (see page 20-9)
   - 4-door (see page 20-10)
2. Disconnect the 6P connector (A) from the window motor.

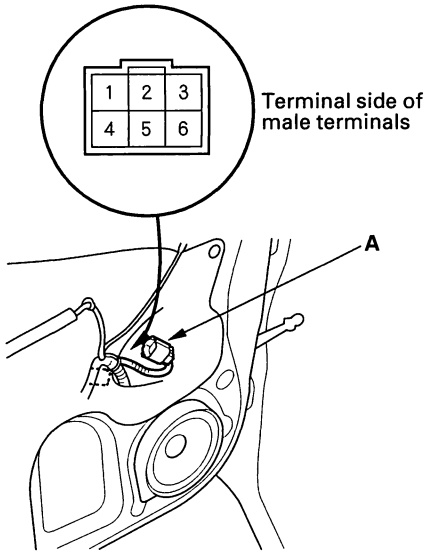

3. Test the motor in each direction by connecting battery power and ground according to the table. When the motor stops running, disconnect one lead immediately.

Terminal / Direction	1	4
UP	⊖	⊕
DOWN	⊕	⊖

4. If the motor does not run or fails to run smoothly, replace it.

Pulser Test

5. Reconnect the 6P connector to the window motor.
6. Check for voltage between the terminals.
   - There should be battery voltage between the No. 6 (+) and No. 5 (−) terminals when the ignition switch is ON (II).
   - Connect an analog voltmeter between the No. 2 (+) and No. 5 (−) terminals, and run the window motor down or up. The voltmeter needle should move back and forth alternately (a digital voltmeter should show the average voltage between 0—5 V).
   - Connect an analog voltmeter between the No. 3 (+) and No. 5 (−) terminals, and run the window motor at down or up. The voltmeter needle should move back and forth alternately.

   If the voltage is not as specified, replace the driver's window motor.

Protected by AR

Passenger's Window Motor Test

1. Remove the passenger's door panel.
   - 2-door (see page 20-9)
   - 4-door (see page 20-10)
2. Disconnect the 6P connector (A) from the window motor.

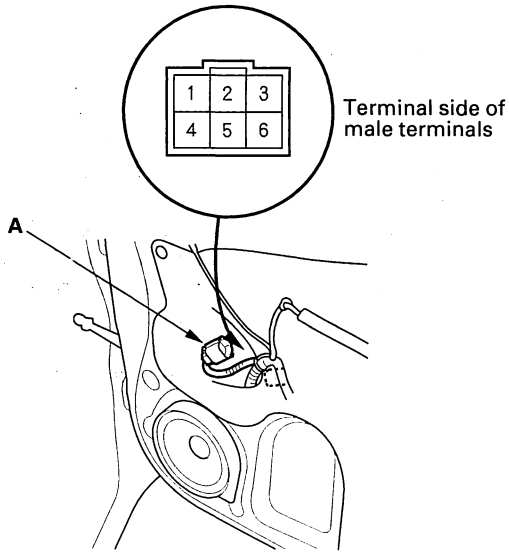

3. Test the motor by connecting battery power and ground according to the table. When the motor stops running, disconnect one lead immediately.

Terminal / Direction	3(4)	6(1)
UP	⊕	⊖
DOWN	⊖	⊕

( ): Left rear window motor

4. If the motor does not run or fails to run smoothly, replace it.

BACK

Protected by AR

Master Switch Replacement

1. Carefully pry off the driver's door switch trim.
   - 2-door (see page 20-9)
   - 4-door (see page 20-10)
2. Disconnect the power mirror and power window switch connectors (A).

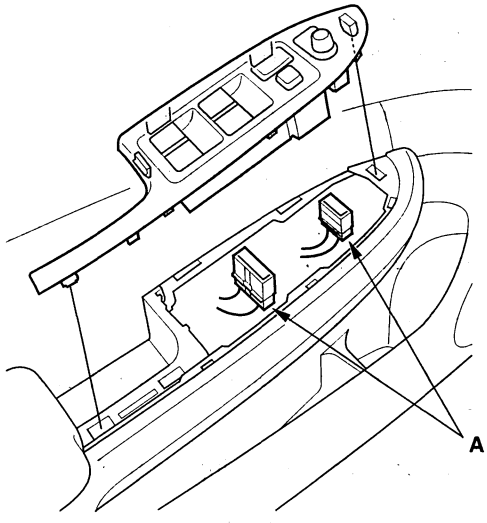

3. Remove the four mounting screws, then remove the master switch (A) from the panel (B).

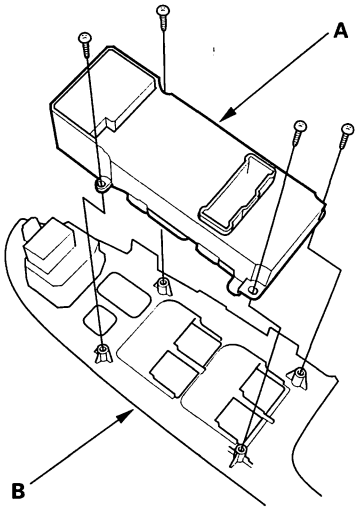

4. Reinstall the switch in reverse order of removal.
5. Reset the power window control unit (see page 22-232).
6. For some models; reprogram the keyless remotes (see page 22-159).

Passenger's Window Switch Test/ Replacement

1. Carefully pry off the door switch trim.
   - 2-door (see page 20-9)
   - 4-door (see page 20-10)
2. Disconnect the power window switch connector (A), then remove the three mounting screws and the power window switch (B) from the switch trim (C).

Front Passenger's:

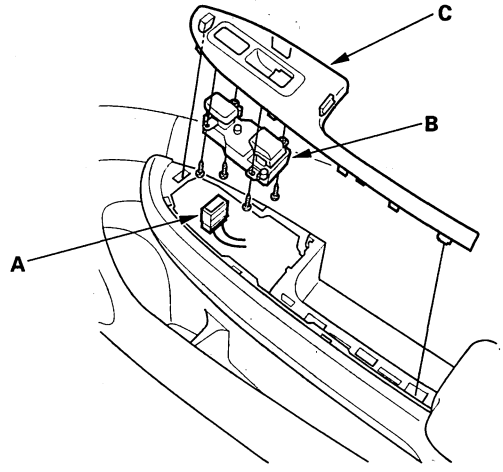

Rear:

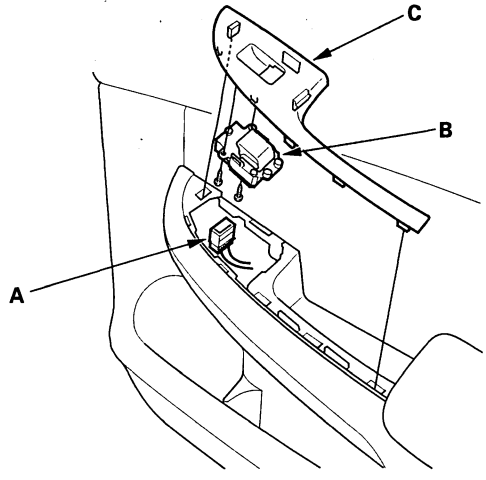

3. Swap the window switch with another known-good switch and test.
   If the original window switch is faulty, replace it.

Protected by AR

DTC Troubleshooting

DTC B1125: Driver's Power Window Motor A Pulse Error

DTC B1126: Driver's Power Window Motor B Pulse Error

1. Open and close the driver's power window by using the driver's switch manually.
2. While the power window moving, select POWER WINDOWS from the HDS and enter the DATA LIST.
3. Check the EXIST/NONE information of the P/W PLSA (B1125) or P/W PLSB (B1126) in the DATA LIST.

   Do the information indicators display EXIST?

   YES—Replace the power window master switch. ■

   NO—Go to step 4.
4. Refer to the power window master switch input test, check for continuity between the driver's power window motor 6P connector and the power window master switch 23P connector (see page 22-236).

   Are all the wire harnesses OK?

   YES—Substitute a known-good power window master switch, and recheck. If DTC is gone, the original master switch is faulty; replace it. If the DTC is still indicated, replace the driver's power window motor. ■

   NO—Repair a short or an open in the wire. ■

DTC B1140: Driver's Power Window Position Detect Circuit Error

1. Clear the DTCs using the HDS.
2. Cycle the ignition switch to OFF and then back ON (II).
3. Open and close the driver's power window by using the driver's switch manually.
4. Check for DTCs using the HDS.

   Is DTC B1125 or B1126 indicated?

   YES—Troubleshoot the DTC B1125 or B1126 (see page 22-242). ■

   NO—Go to step 5.
5. Reset the power window control unit (see page 22-232).
6. Check for DTCs again using the HDS.

   Is DTC B1140 indicated?

   YES—Faulty door multiplex control unit; replace the power window master switch. ■

   NO—The system is recovered at this time. ■

BACK

Protected by AR

Component Location Index

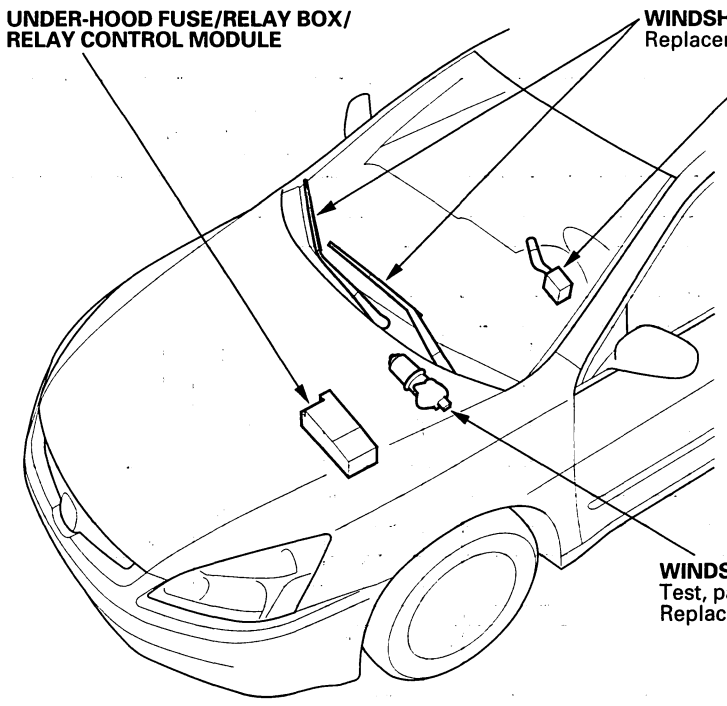

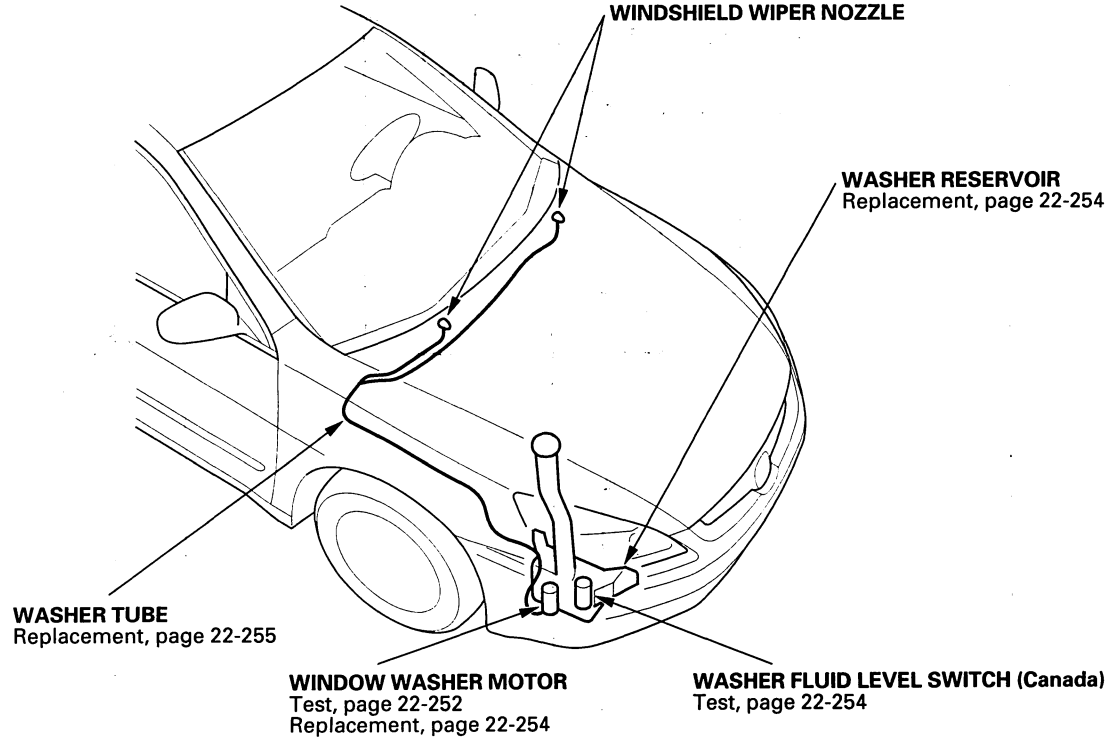

Protected by AR

Wipers/Washers

Circuit Diagram

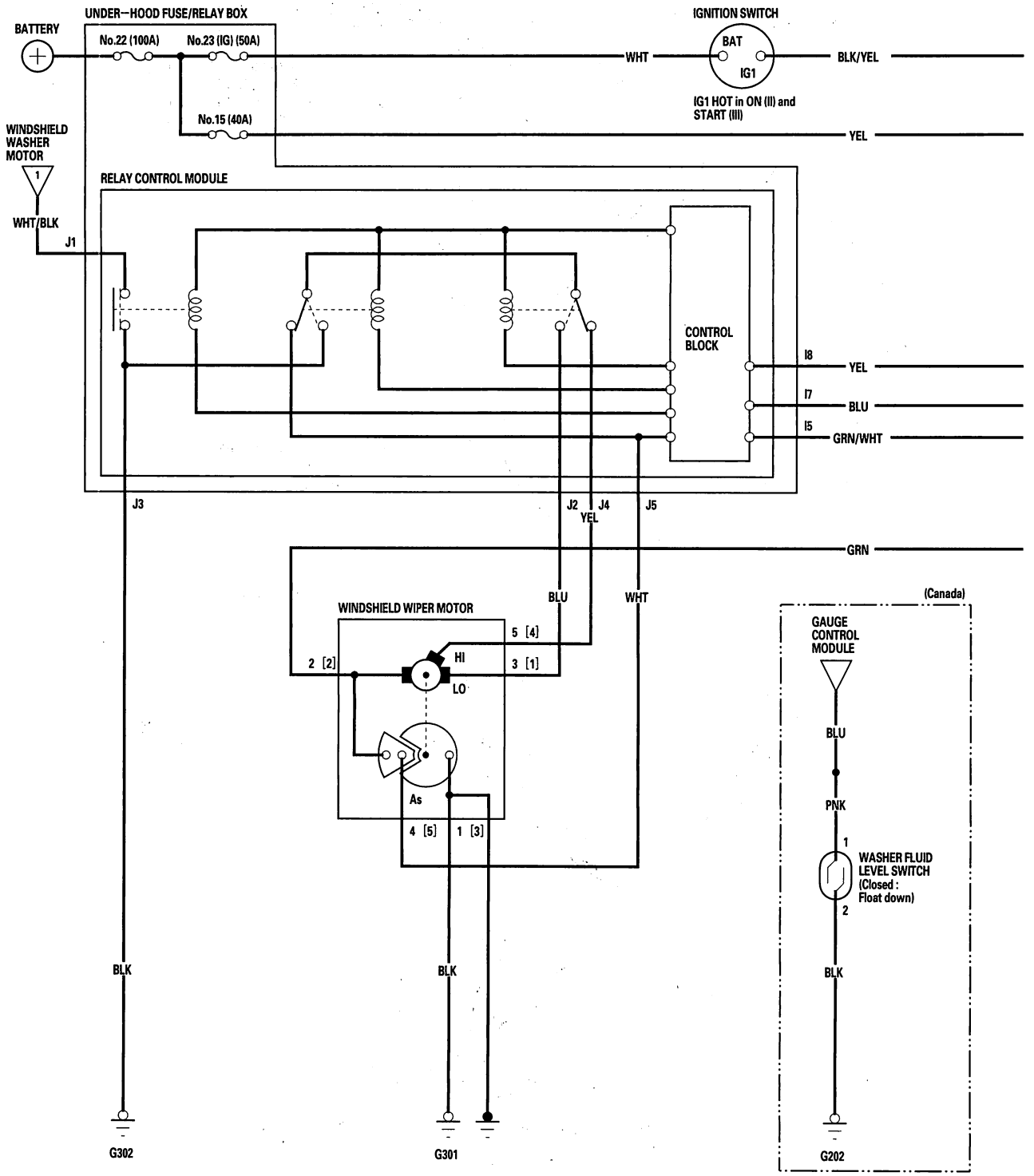

BACK

Protected by AR

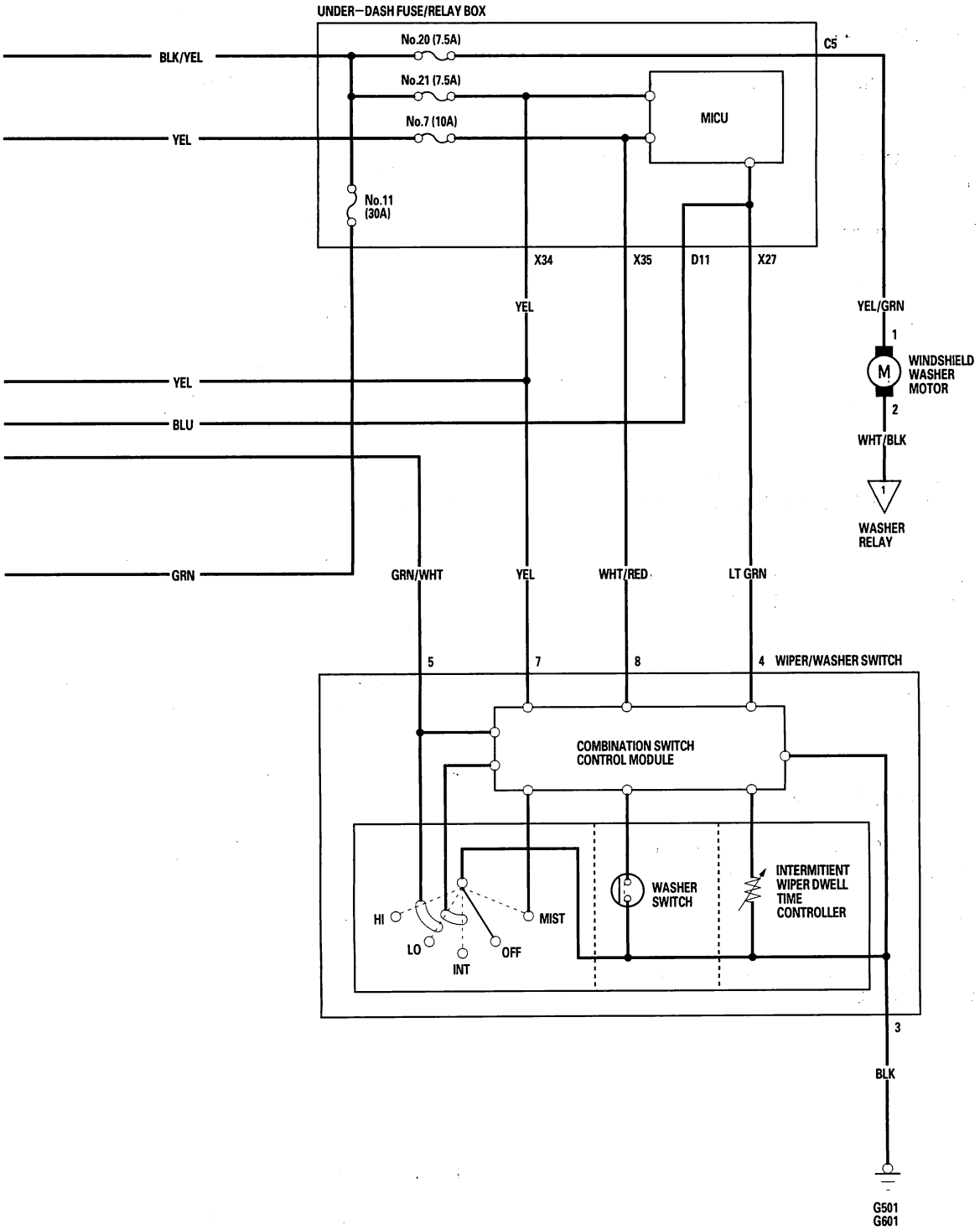

BACK

Protected by AR

DTC Troubleshooting

DTC B1076: Windshield Wiper Signal Error

1. Clear the DTCs using the HDS.
2. Cycle the ignition switch to OFF and then back ON (II).
3. Turn the wiper switch to INT, LOW, then HIGH for at least 2 seconds each.
4. Check for DTCs using the HDS.

   Is DTC B1076 indicated?

   YES—Go to step 5.

   NO—Intermittent failure. The windshield wiper system is OK at this time. Check pinfits and connections. ■
5. With the wiper/washer switch OFF, select WINDSHIELD WIPERS from the HDS, and enter the DATA LIST.
6. Check the ON/OFF information of the Windshield Wiper Switch (BACK-UP) in the DATA LIST.

   Is the information indicator OFF?

   YES—Go to step 7.

   NO—Go to step 11.
7. Turn the wiper switch ON (low or high).
8. Check the ON/OFF information of the Windshield Wiper Switch (BACK-UP) in the DATA LIST.

   Is the information indicator ON?

   YES—Faulty relay control module; replace the under-hood fuse/relay box. ■

   NO—Go to step 9.
9. Disconnect the relay control module 10P connector and the wiper/washer switch 8P connector.
10. Check for continuity between the No. 5 terminal of the relay control module 10P connector and the No. 5 terminal of the wiper/washer switch (combination switch control unit) 8P connector.

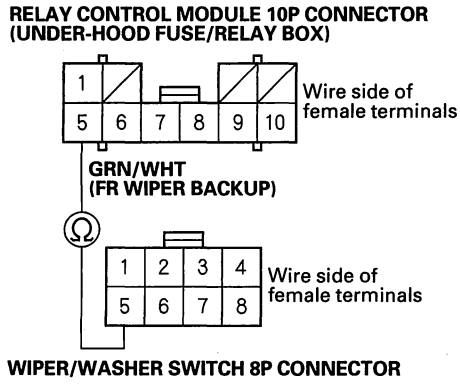

   Is there continuity?

   YES—Faulty combination switch control unit; replace the wiper/washer switch. ■

   NO—Repair an open in the GRN/WHT wire. ■
11. Disconnect the relay control module 10P connector and the wiper/washer switch 8P connector.
12. Check for continuity between the No. 5 terminal of the relay control module 10P connector and body ground.

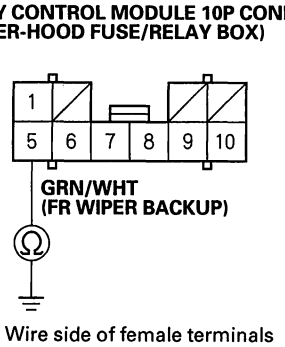

   Is there continuity?

   YES—Repair a short in the GRN/WHT wire. ■

   NO—Faulty relay control module; replace the under-hood fuse/relay box. ■

BACK

Protected by AR

DTC B1077: Windshield Wiper (As) Signal Error

1. Clear the DTCs using the HDS.
2. Cycle the ignition switch to OFF and then back ON (II).
3. Turn the wiper switch to INT, LOW, then HIGH for at least 2 seconds each.
4. Check for DTCs using the HDS.

   Is DTC B1077 indicated?

   YES—Go to step 5.

   NO—Intermittent failure. The windshield wiper system is OK at this time. Check pinfits and connections. ■
5. Turn the ignition switch ON (II).
6. Select WINDSHIELD WIPERS from the HDS and enter the DATA LIST.
7. Turn the windshield wiper switch ON.
8. Check the ON/OFF information of the Windshield Wiper Switch (INTERMITTENT), Windshield Wiper Switch (LOW), and Windshield Wiper Switch (HIGH) in the DATA LIST at each wiper switch position.

   Is the information indicator ON at each switch position?

   YES—Go to step 9.

   NO—Go to step 17.
9. Select FUNCTIONAL. TEST from the TEST MODE MENU, and operate the windshield wiper motor with FR WIPER (LOW) and FR WIPER (HIGH).

   Does the windshield wiper motor run?

   YES—Go to step 10.

   NO—Go to step 18.
10. Turn the windshield wiper switch OFF, and stop the wiper arms at the park position. (If the wiper arms do not stop at the park position, turn the ignition switch OFF and stop them at the park position correctly.)
11. Turn the ignition switch ON (II).

    Do the wipers begin to run as soon as the ignition switch is cycled ON?

    YES—Go to step 16.

    NO—Go to step 12.
12. Check the ON/OFF information of the Windshield Wiper Motor PARK Switch in the DATA LIST.

    Is the information indicator OFF?

    YES—Go to step 13.

    NO—Faulty relay control module; replace the under-hood fuse/relay box. ■
13. Turn the ignition switch ON (II), and turn the windshield wiper switch ON at low speed.
14. Check the ON/OFF information of the Windshield Wiper Motor PARK Switch in the DATA LIST.

    Does the DATA LIST information indicate ON and OFF alternately as the wipers pass the PARK position?

    YES—Intermittent failure, the windshield wiper system is OK at this time. Check pinfits and connections. ■

    NO—Go to step 15.

(cont'd)

Protected by AR

DTC Troubleshooting (cont'd)

15. Check for continuity between the No. 4 [No. 5] terminal of the windshield wiper motor 5P connector and No. 5 terminal of the under-hood fuse/relay box 5P connector J.
[ ] : 2-door

UNDER-HOOD FUSE/RELAY BOX 5P CONNECTOR J

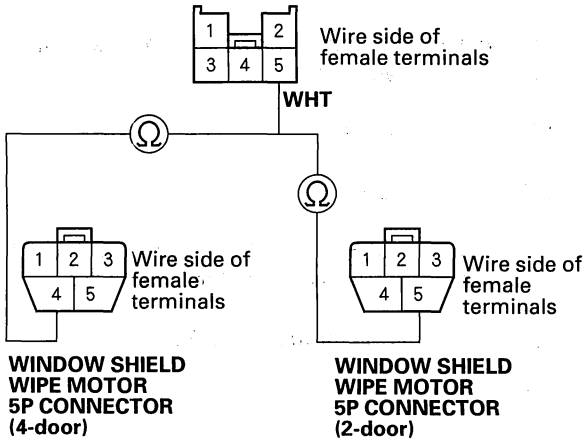

Is there continuity?

YES—Faulty windshield wiper motor; replace it.■

NO—Repair an open in the WHT wire.■

16. Check for continuity between the No. 5 terminal of the under-hood fuse/relay box 5P connector J and body ground.

UNDER-HOOD FUSE/RELAY BOX 5P CONNECTOR J

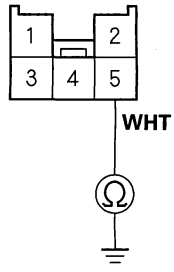

Wire side of female terminals

Is there continuity?

YES—Repair a short in the WHT wire.■

NO—Faulty windshield wiper motor; replace it.■

17. Check the No. 7 (10 A), No. 11 (30 A) and No. 21 (7.5 A) fuses in the under-dash fuse/relay box.

Are the fuses OK?

YES—Faulty relay module; Replace the under-hood fuse/relay box.■

NO—Replace the blown fuse and recheck the system.■

18. Turn the ignition switch OFF, and check the No. 11 (30 A) fuse in the under-dash fuse/relay box.

Is the fuse OK?

YES—Go to step 19.

NO—Replace the blown fuse and recheck the system.■

19. Turn the ignition switch ON (II).

20. Check for voltage between the No. 2 terminal of the windshield wiper motor 5P connector and body ground.

WINDSHIELD WIPER MOTOR 5P CONNECTOR

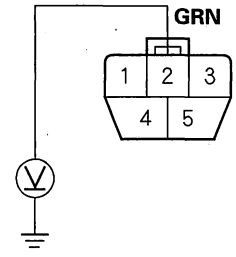

Wire side of female terminals

Is there battery voltage?

YES—Go to step 21.

NO—Repair an open in the GRN wire.■

BACK

Protected by AR

21. Check for continuity between the No. 3 [No. 1] and No. 5 [No. 4] terminals of the windshield wiper motor 5P connector and the No. 2 and No. 4 terminal of the under-hood fuse/relay box 5P connector J.
[ ] : 2-door

4-door:

UNDER-HOOD FUSE/RELAY BOX 5P CONNECTOR J

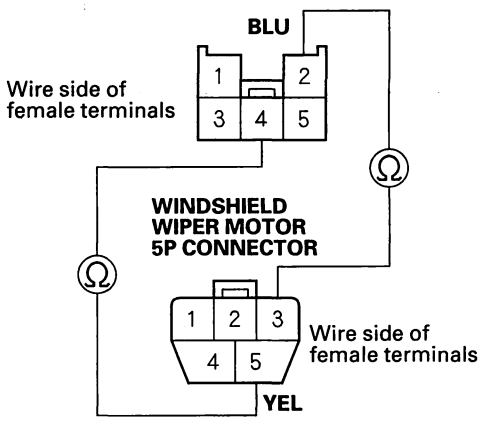

2-door:

UNDER-HOOD FUSE/RELAY BOX 5P CONNECTOR J

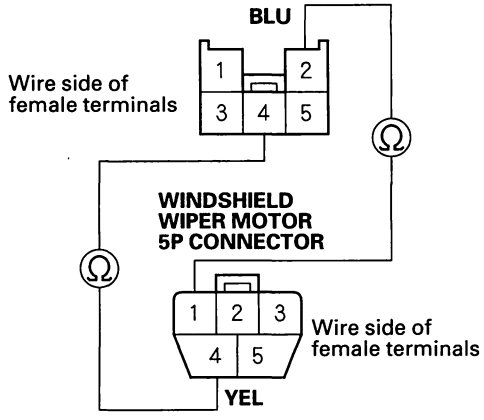

Is there continuity?

YES—Repair an open in the BLU or YEL wire. ■

NO—Go to step 22.

22. Perform the wiper motor test (see page 22-252).

Does the wiper motor operate correctly?

YES—Faulty relay module; Replace the under-hood fuse/relay box. ■

NO—Replace the windshield wiper motor. ■

Protected by AR

DTC Troubleshooting (cont'd)

DTC B1281: Windshield Wiper Switch MIST Position Circuit Malfunction

DTC B1282: Windshield Wiper Switch INT (AUTO) Position Circuit Malfunction

DTC B1283: Windshield Wiper Switch LOW Position Circuit Malfunction

DTC B1284: Windshield Wiper Switch HIGH Position Circuit Malfunction

1. Clear the DTCs using the HDS.
2. Cycle the ignition switch to OFF and then back ON (II).
3. Turn the windshield wiper switch in MIST and wait for 2 seconds.
4. Turn the windshield wiper switch OFF and wait for 2 seconds.
5. Turn the windshield wiper switch in INT (AUTO) and wait for 2 seconds.
6. Turn the windshield wiper switch in LOW and wait for 2 seconds.
7. Turn the windshield wiper switch in HIGH and wait for 2 seconds.
8. Check for DTCs using the HDS.

Is DTC B1281, B1282, B1283, or B1284 indicated?

YES—Replace the windshield wiper/washer switch. ■

NO—Intermittent failure, the windshield wiper/washer switch and the combination switch control unit are OK at this time. Check pinfits and connections. ■

Wiper/Washer Switch Test/ Replacement

NOTE: The wiper/washer switch is built into the combination switch control unit. For the wiper/washer test, refer to the wiper/washer switch input test (see page 22-251).

1. Remove the dashboard lower cover (see page 20-130).
2. Remove the steering column covers (see page 17-25).
3. Disconnect the combination light switch 12P connector (A) and dashboard wire harness 8P connector (B) from the wiper/washer switch (C).

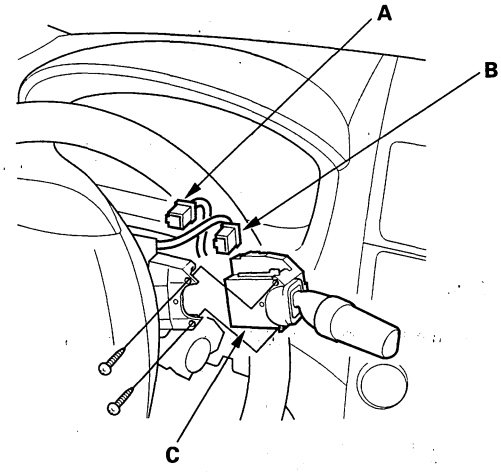

4. Remove the two screws, then slide out the wiper/washer switch.

BACK

Protected by AR

Wiper/Washer Switch Input Test

1. Before troubleshooting the wiper/washer system, troubleshoot the B-CAN System Diagnosis Test Mode A (see page 22-91).
2. Remove the dashboard lower cover (see page 20-130).
3. Remove the steering column covers (see page 17-25).
4. Disconnect the 8P connector (A) from the wiper/washer switch (B).

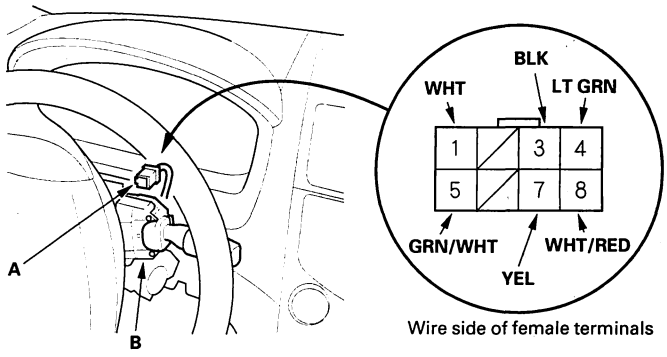

Wire side of female terminals

5. Inspect the connector and socket terminals to be sure they are all making good contact.
   - If the terminals are bent, loose or corroded, repair them as necessary, and recheck the system.
   - If the terminals look OK, go to step 6.
6. Reconnect the connect, and make these input tests at the connector.
   - If any test indicates a problem, find and correct the cause, then recheck the system.
   - If all the input tests prove OK, go to step 7.

Cavity	Wire	Test condition	Test: Desired result	Possible cause if result is not obtained
3	BLK	Under all conditions	Check for voltage to ground: There should be less than 1 V.	• Poor ground (G501, G601) • An open in the wire
8	WHT/RED	Under all conditions	Check for voltage to ground: There should be battery voltage.	• Blown No. 15 (40 A) fuse in the under-dash fuse/relay box • Blown No. 7 (10 A) fuse in the under-dash fuse/relay box • An open in the wire
7	YEL	Ignition switch ON (II)	Check for voltage to ground: There should be battery voltage.	• Blown No. 21 (7.5 A) fuse in the under-dash fuse/relay box • An open in the wire

7. Disconnect the connector from the wiper/washer switch, and make these input tests at the connector.
   - If any test indicates a problem, find and correct the cause, then recheck the system.
   - If all the input tests prove OK, the combination switch control unit must be faulty, replace the wiper/washer switch.

Cavity	Wire	Test condition	Test: Desired result	Possible cause if result is not obtained
5	GRN/WHT	Under all conditions	Check for continuity between the No. 5 terminal and under-hood fuse/relay box 10P connector No. 5 terminal: There should be continuity.	An open in the wire
4	LT GRN	Under all conditions	Check for continuity between the No. 4 terminal and under-dash fuse/relay box X connector No. 27 terminal: There should be continuity.	An open in the wire
1	WHT	Under all conditions	Check for continuity between the No. 1 terminal and under-hood fuse/relay box 10P connector No. 6 terminal: There should be continuity.	An open in the wire

Protected by AR

Wiper Motor Test

1. Open the hood, and remove the wiper arms.

   NOTE: Carefully remove the wiper arms, so that they do not touch the hood.

2. Remove the hood seal and cowl cover.

3. Disconnect the connector from the wiper motor.

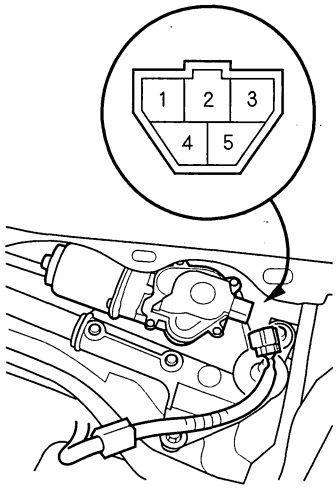

4. Test the motor by connecting battery power to the No. 2 terminal and ground the No. 3 [1] terminal of the wiper motor 5P connector. The motor should run at low speed. If the motor does not run or fails to run smoothly, replace the motor.

5. Test the motor by connecting battery power to the No. 2 terminal and ground the No. 5 [4] terminal of the wiper motor 5P connector. The motor should run at high speed. If the motor does not run or fails to run smoothly, replace the motor.

6. Connect an analog voltmeter between the No. 4 [5] (+) and No. 1 [3] (−) terminals, and run the motor at low or high speed. The voltmeter should indicate 12 V and 4 V or less alternately. If it does not, replace the wiper motor.
   [ ] : 2-door

Washer Motor Test

1. Remove the right inner fender (see page 20-211).

2. Disconnect the 2P connector from the washer motor.

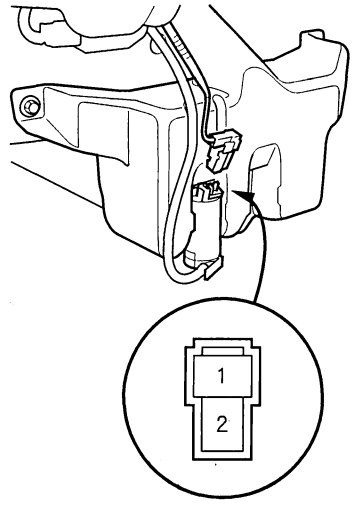

3. Test the motor by connecting battery power to the No. 1 terminal and ground the No. 2 terminal of the washer motor. The motor should run.

   - If the motor does not run or fails to run smoothly, replace it.
   - If the motor runs smoothly, but little or no washer fluid is pumped, check for a disconnected or blocked washer hose, or a clogged washer motor outlet.

BACK

Protected by AR

Wiper Motor Replacement

1. Open the hood. Remove the caps, nuts (A), and the windshield wiper arms (B).

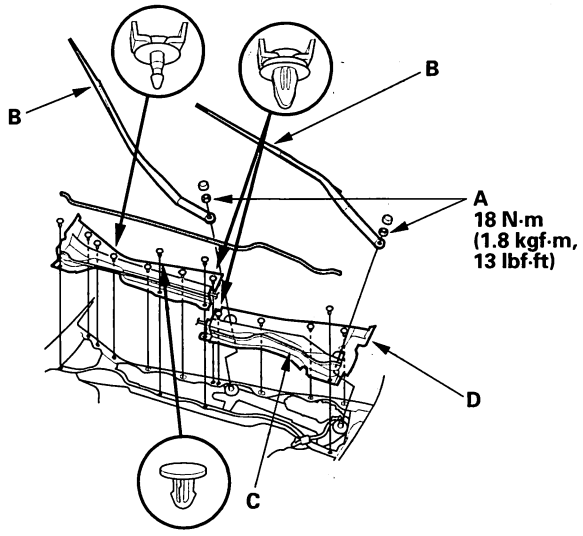

2. Remove the hood seals (C) and cowl covers (D).

3. Disconnect the 5P connector (A) from the wiper motor.

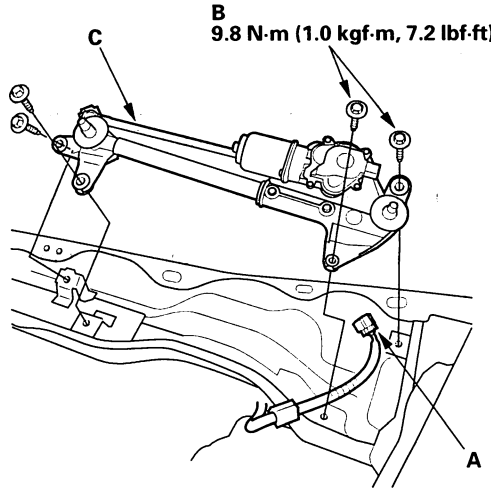

4. Remove the four bolts (B) and wiper linkage assembly (C).

5. Scribe a line (A) across the link and windshield wiper linkage to show the original adjustment. Separate the windshield wiper linkage (B) from the wiper motor (C).

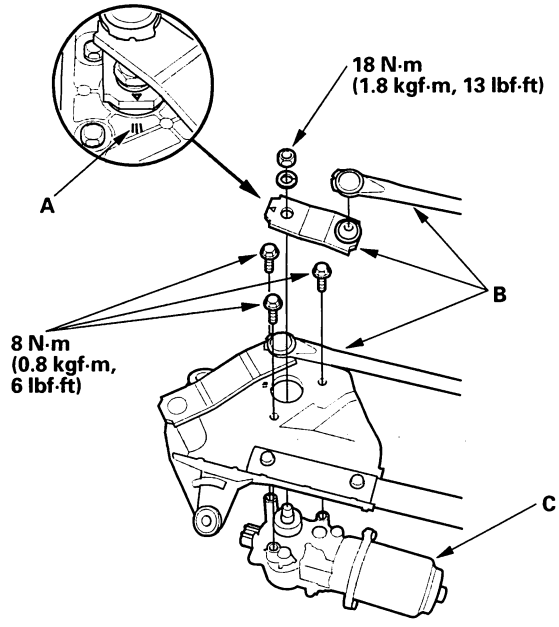

6. Install in the reverse order to removal, and note these items:

- Apply multipurpose grease to the moving parts.
- Before reinstalling the wiper arms, turn the wiper switch ON, then OFF to return the wiper shafts to the park position.
- If necessary, replace any damaged clips.
- Check the wiper motor operation.

Protected by AR

Washer Reservoir Replacement

1. Remove the right inner fender (see page 20-211).
2. Disconnect the washer tube (A) and washer motor 2P connector (B).

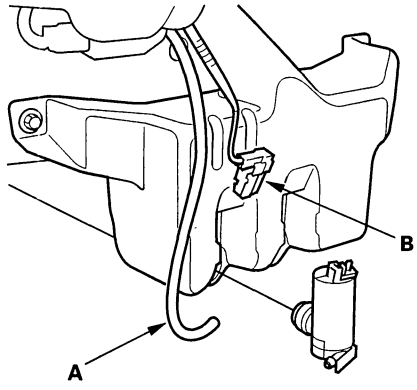

3. Remove the clip (A) and three bolts (B), then remove the washer reservoir (C).

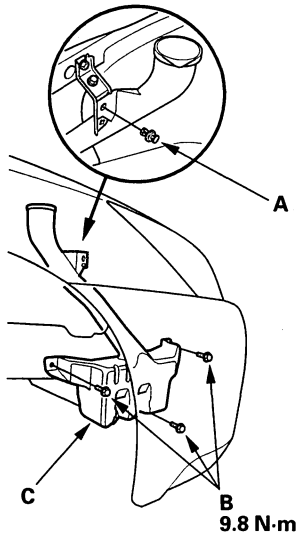

4. Install the reservoir in the reverse order of removal.

Washer Fluid Level Switch Test

Canada

1. Remove the right inner fender (see page 20-211).
2. Disconnect the 2P connector (A) from the washer fluid level switch (B).

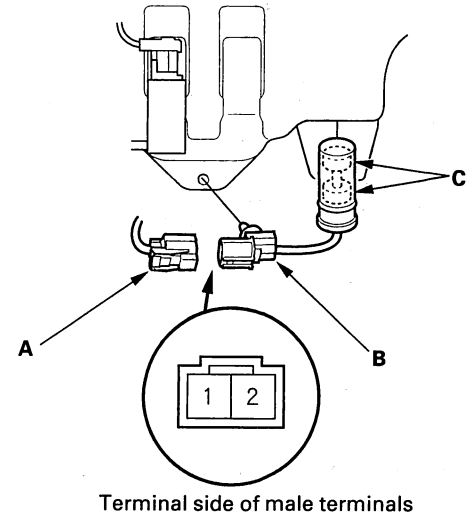

Terminal side of male terminals

3. Remove the washer fluid level switch from the reservoir.

   NOTE: Fluid may flow out of the opening.

4. Check for continuity between the No. 1 and No. 2 terminals in each float position (C).

   - There should be continuity when the float is down.
   - There should be no continuity when the float is up.

BACK

Protected by AR

Washer Tube Replacement

1. Remove the right inner fender (see page 20-211).
2. Remove the windshield washer nozzles and clips, then remove the tube.

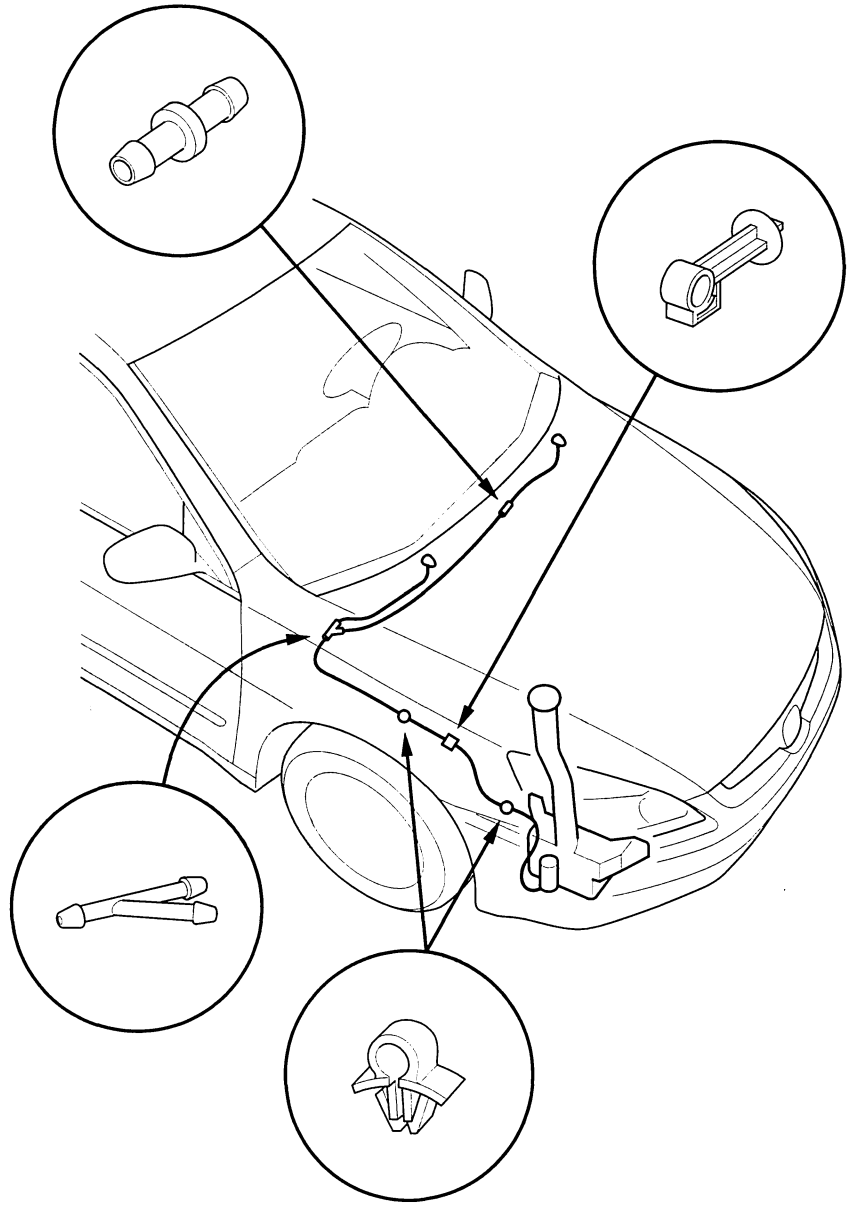

3. Install in the reverse order of removal. Take care not to pinch the washer tube. Check the windshield washer operation.

Protected by AR

Gauges

Component Location Index

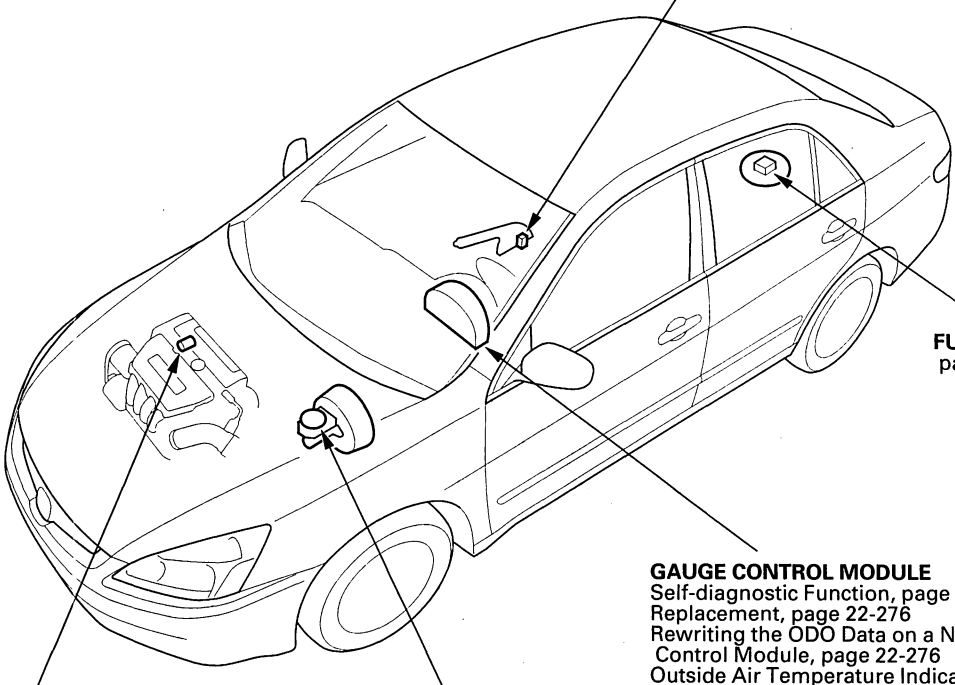

BACK

Protected by AR

'03-05 models

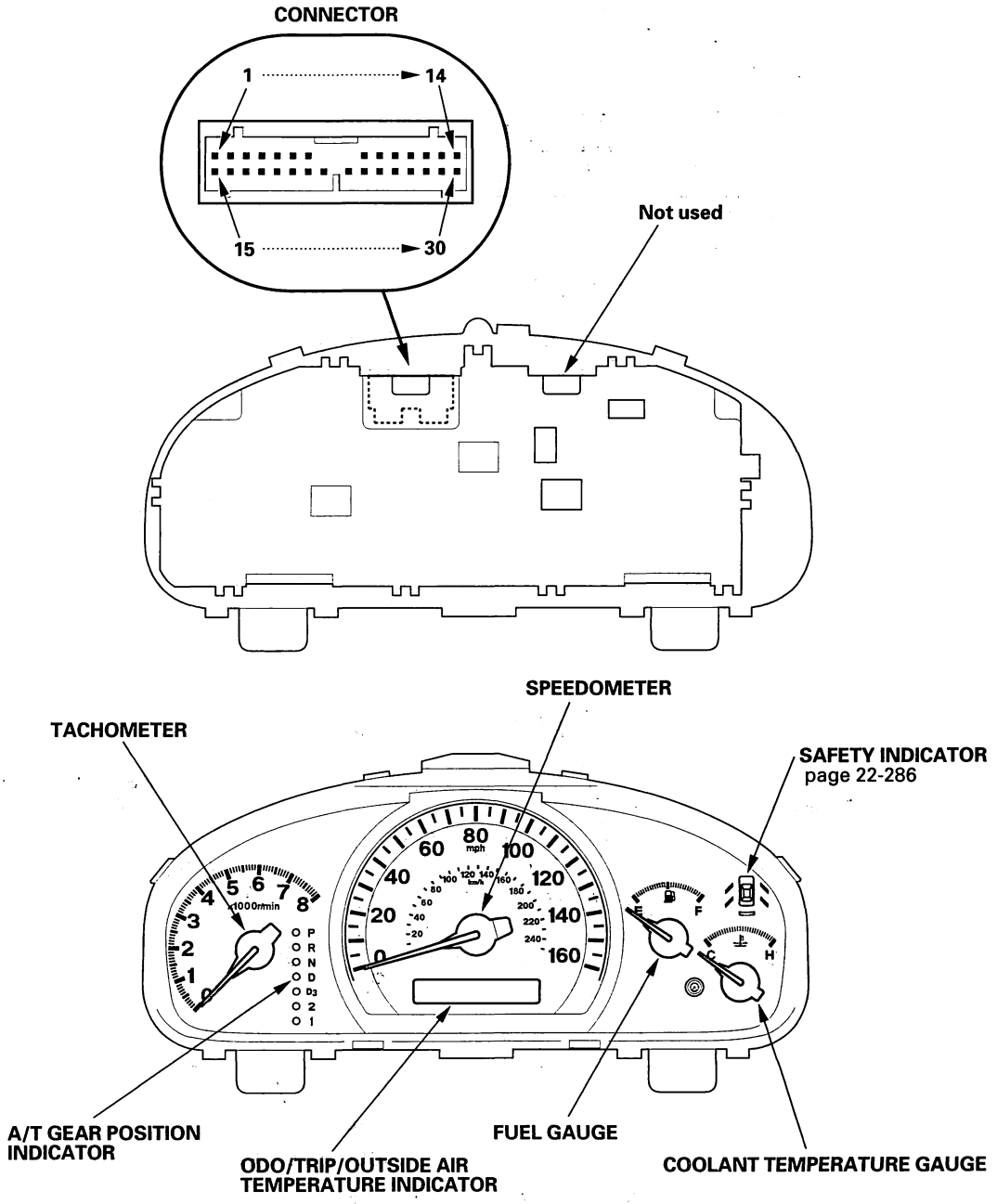

(cont'd)

Protected by AR

Component Location Index (cont'd)

'06 model

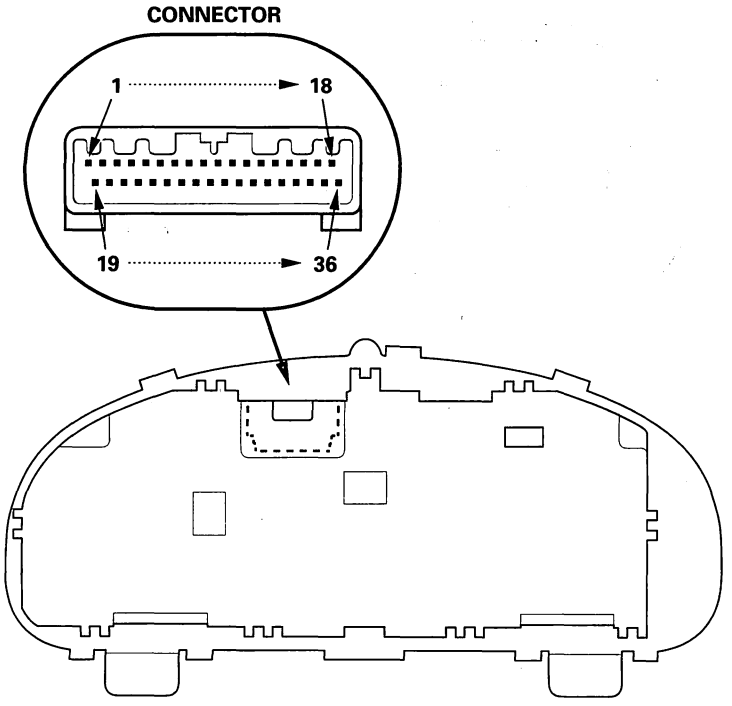

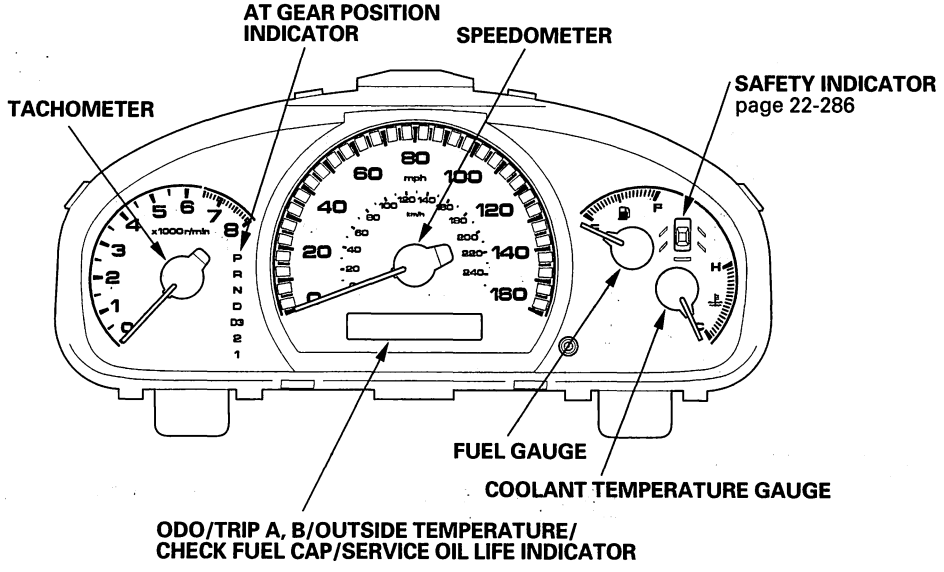

BACK

Protected by AR

Self-diagnostic Function

Before troubleshooting the gauge system, refer to multiplex integrated control system B-CAN System Diagnosis Test Mode A (see page 22-91).

The gauge control module has a self-diagnostic function.
- The beeper drive circuit check
- The indicator drive circuit check
- The switch input test
- The LCD segments check
- The gauges drive circuit check (Speedometer, Tachometer, Fuel gauge, Coolant temperature gauge)
- The communication line check (of the body-controller area network (B-CAN) communication line and the frame-controller area network (F-CAN) communication line between the gauges).

NOTE: Indicators are also controlled via the communication line.

Entering the self-diagnostic function

Before running the self-diagnostic function, check the No. 7 (10 A) fuse and the No. 21 (7.5 A) fuse in the under-dash fuse/relay box.

1. Push and hold the trip/reset button.
2. Turn the headlights ON.
3. Turn the ignition switch ON (II).
4. Within 5 sec., turn the headlights OFF, then ON and OFF again.
5. Within 5 sec., release the trip/reset button, and then push and release the button three times repeatedly.

NOTE:
- While in the self-diagnostic mode, the dash lights brightness controller operates normally.
- While in the self-diagnostic mode, the trip/reset button is used to start the Beeper Drive Circuit Test and the Gauge Drive Circuit Check.
- If the vehicle speed exceeds 1.2 mph (2 km/h) or the ignition switch is turned OFF, the self-diagnostic mode ends.

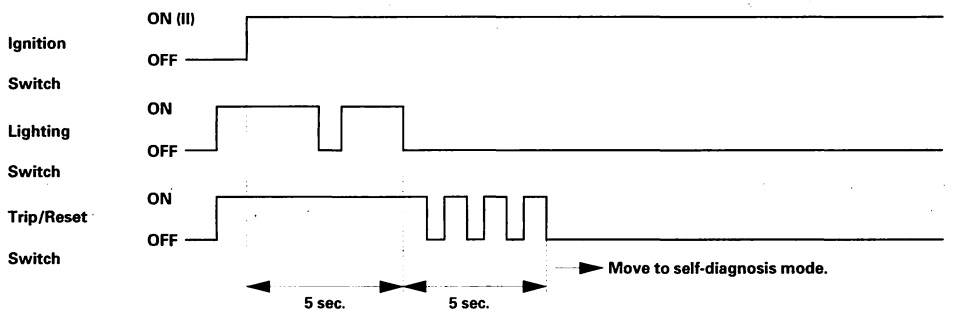

The Beeper Drive Circuit Check

When entering the self-diagnostic mode, the beeper sounds five times.

The Indicator Drive Circuit Check

When entering the self-diagnostic mode, the following indicator lights blink:
Seat belt indicator, charging system indicator, low fuel indicator, maintenance required indicator, security indicator, high beam indicator, lights on indicator, malfunction indicator lamp (MIL), A/T gear position indicator, ABS indicator, cruise main indicator and safety indicators (doors and trunk).

Switch Input Check

After the intermittent beeper sounds at the initial stage of the self-diagnostic function, a beeper sounds continuously while any of the following switch inputs are switched from OFF to ON:
Cruise control main cruise set, cruise cancel, cruise resume, and parking brake switches.

(cont'd)

Protected by AR

Self-diagnostic Function (cont'd)

The LCD Segment Check
When entering the self-diagnostic mode, the odo/trip segments and outside air temperature segment blink five times.

The Gauge Drive Circuit Check
When entering the self-diagnostic mode, the speedometer, the tachometer, the fuel gauge, and the coolant temperature gauge needles sweep from the minimum position to maximum position, then return to the minimum position.
NOTE:
After the beeper stops sounding and the gauge needles return to the minimum position, pushing the trip/reset button starts the Beeper Drive Circuit Check (one beep) and the Gauge Drive Circuit Check again.
The check cannot be started again until the gauge needles return to the minimum position.

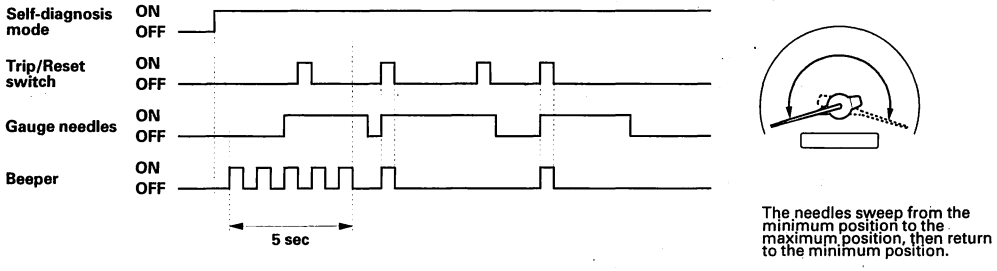

If a needle fails to sweep or the beeper does not sound, replace the gauge control module.

The Communication Line Check
While in the self-diagnostic mode, the Communication Line Check starts after the odo/trip LCD Segments Check.
If all segments comes on, the communication line is OK.

- If the word "Error 1" is indicated, there is a malfunction in the communication line between the gauge control module and the frame-controller area network (F-CAN). Check for DTCs in the ECM/PCM. If no DTCs are found, go to B-CAN System Diagnosis Test Mode A (see page 22-91).
- If the word "Error 2" is indicated, there is a malfunction in the communication line between the gauge control module and the body-controller area network (B-CAN). Go to B-CAN System Diagnosis Test Mode A (see page 22-91).
- If the word "Error 3" is indicated, there is a malfunction in the communication line between the gauge control module and the body-controller area network (B-CAN) and the frame-controller area network (F-CAN). Check for DTCs in the ECM/PCM. If no DTCs are found, go to B-CAN System Diagnosis Test Mode A (see page 22-91).

Normal:



Faulty (example Error 1):



If any communicaition line errors are found, go to B-CAN System Diagnosis Test Mode A (see page 22-91).

Ending the self-diagnostic function
Turn the ignition switch OFF.
Note: If the vehicle speed exceeds 1.2 mph (2 km/h), the self-diagnostic function ends.

BACK

Protected by AR

Circuit Diagram

'03-05 models

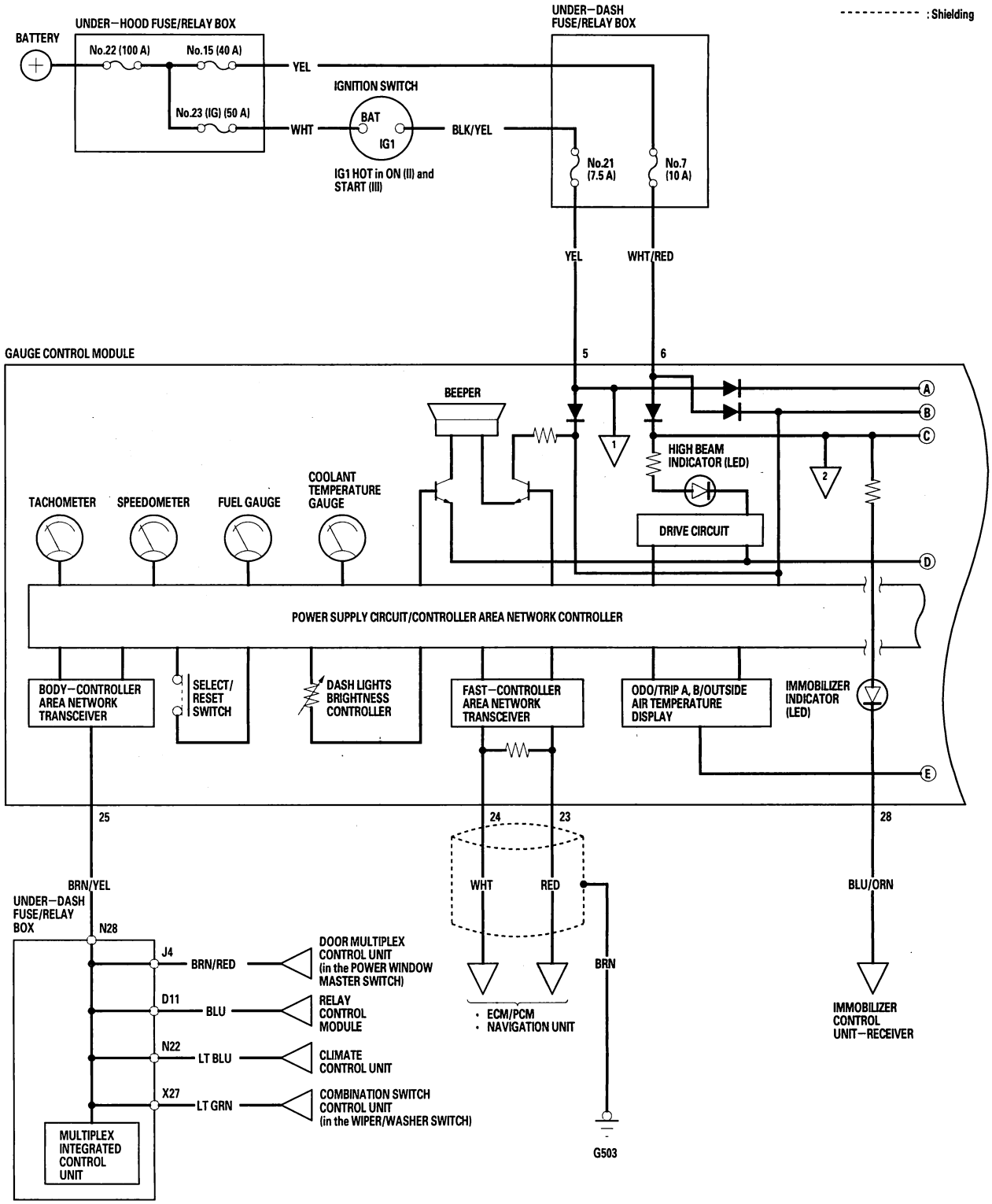

(cont'd)

BACK

Protected by AR

Circuit Diagram (cont'd)

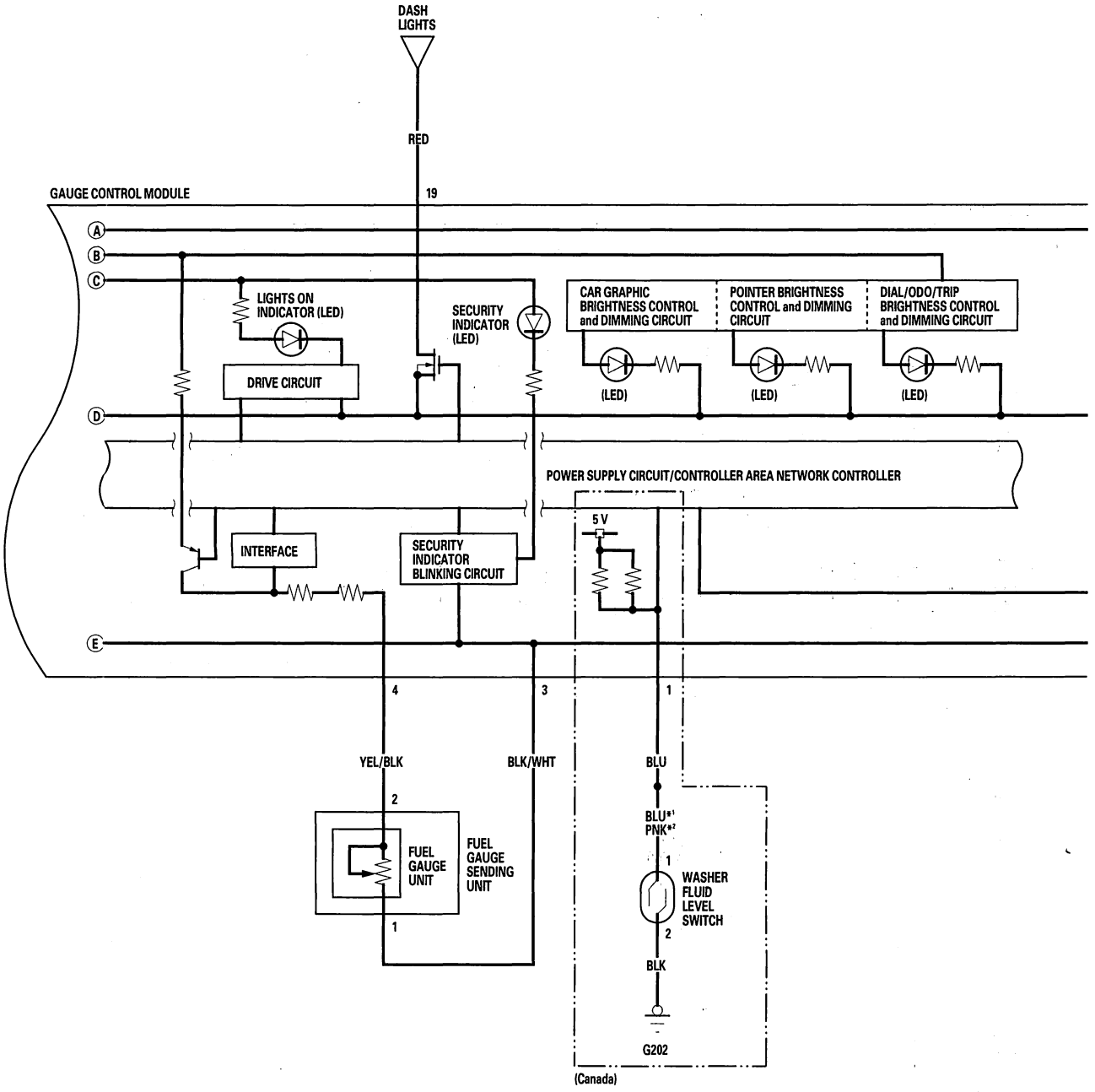

BACK

Protected by AR

*1 : M/T
*2 : A/T

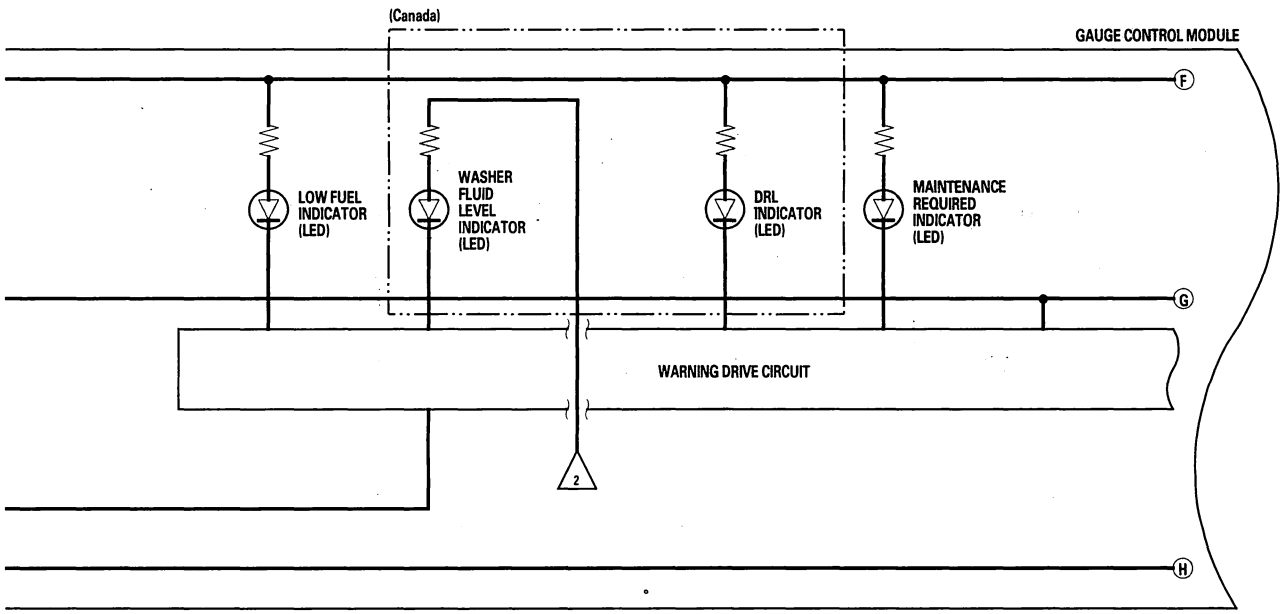

(cont'd)

Protected by AR

Circuit Diagram (cont'd)

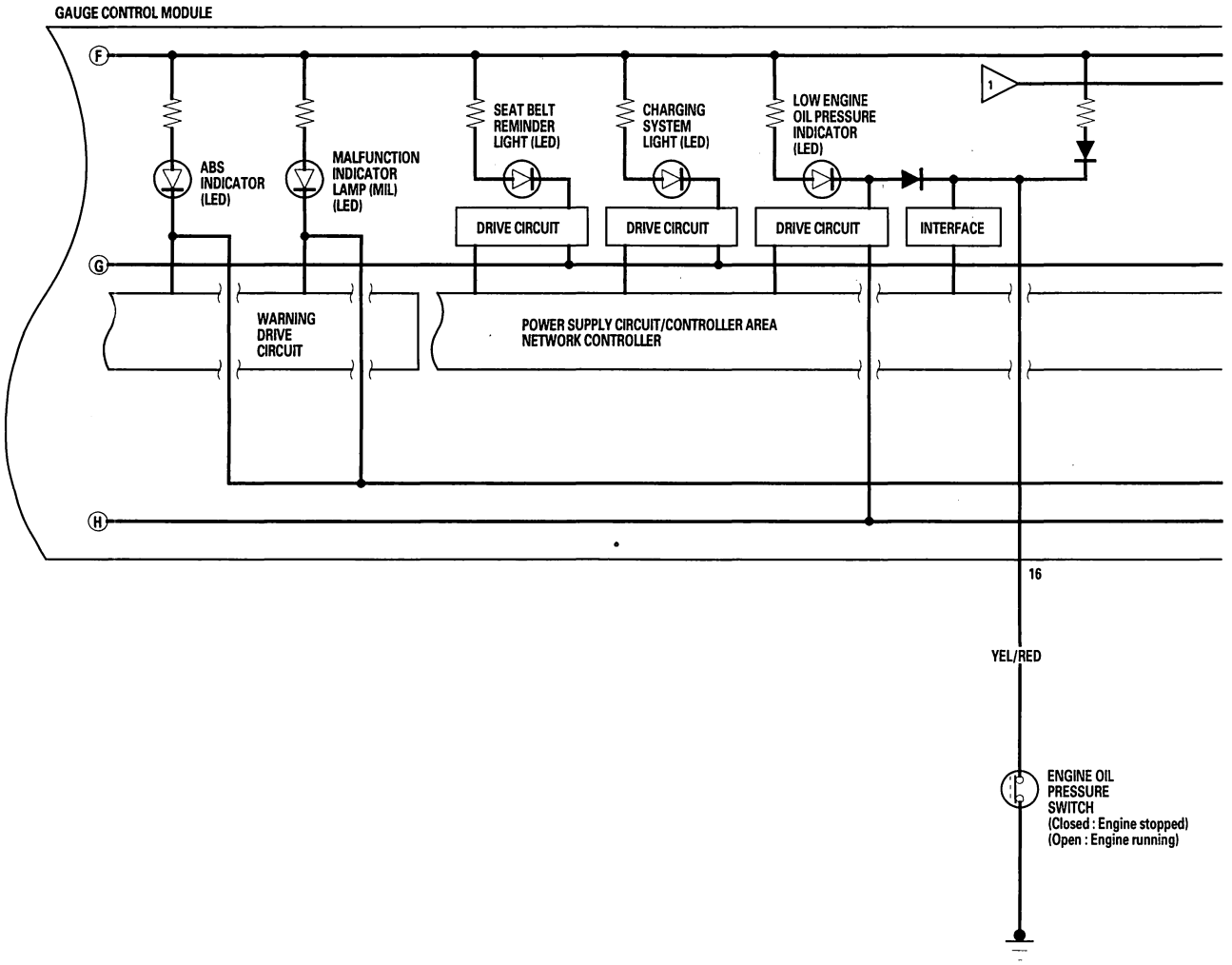

BACK

Protected by AR

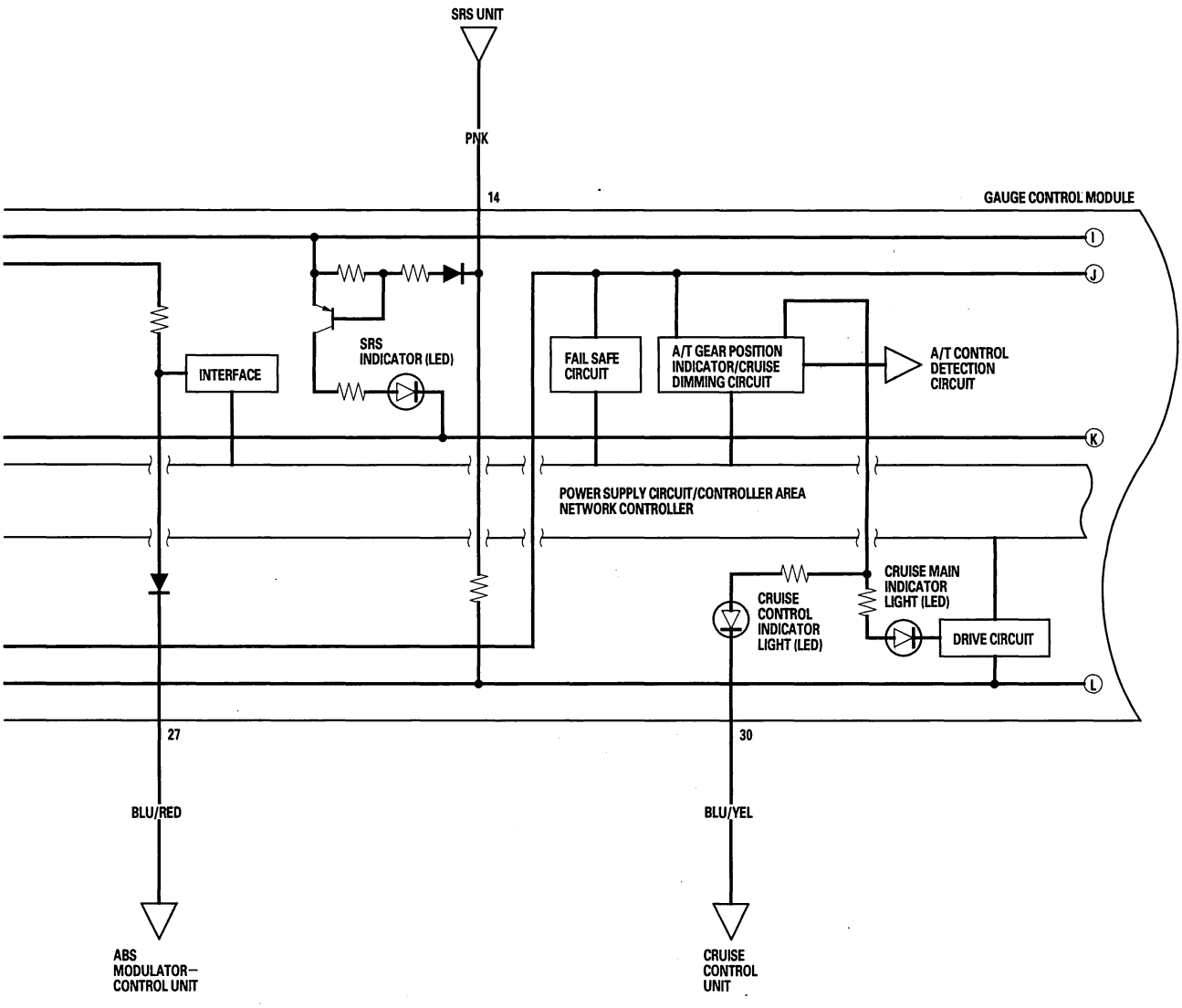

(cont'd)

BACK

Protected by AR

Circuit Diagram (cont'd)

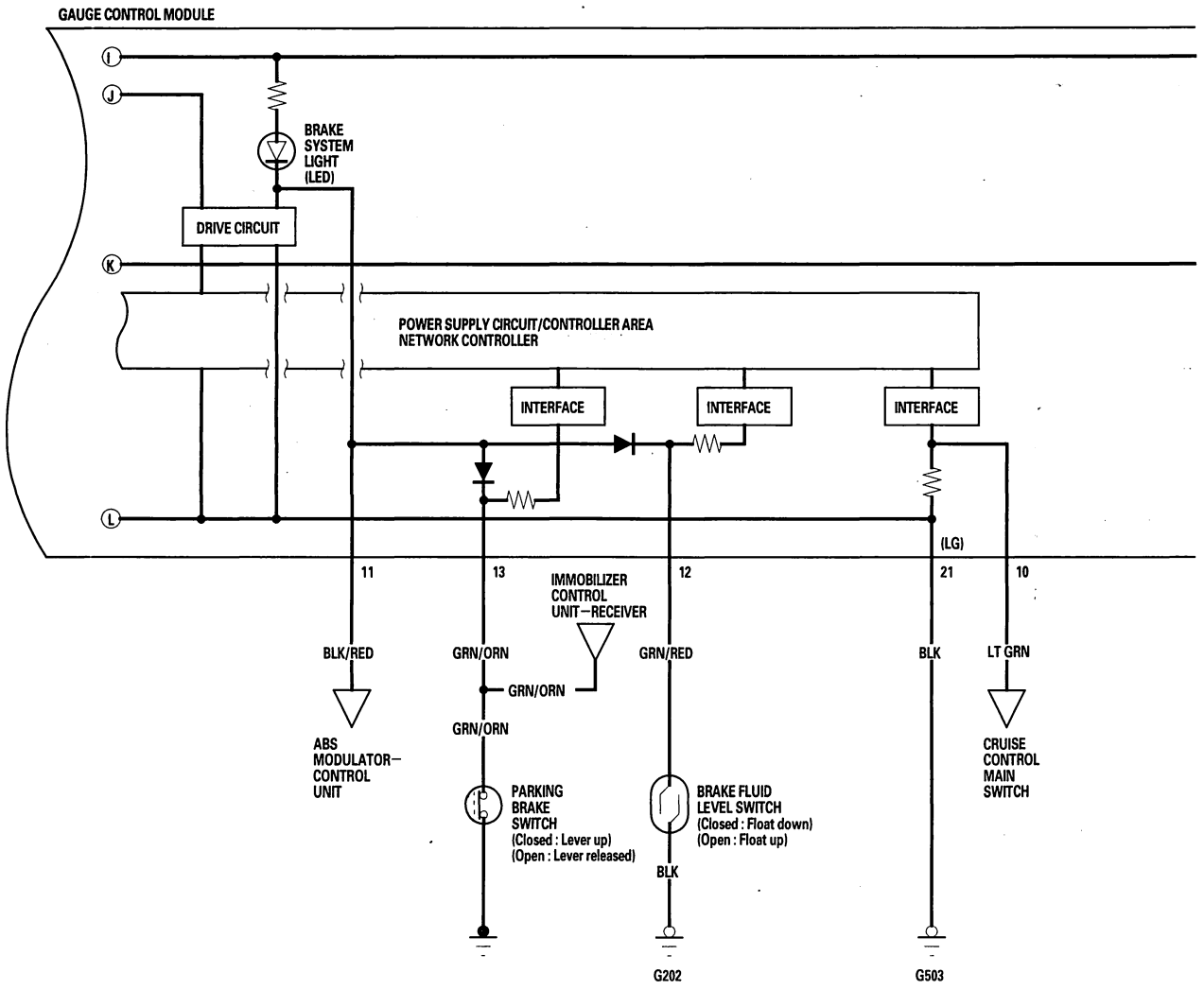

BACK

Protected by AR

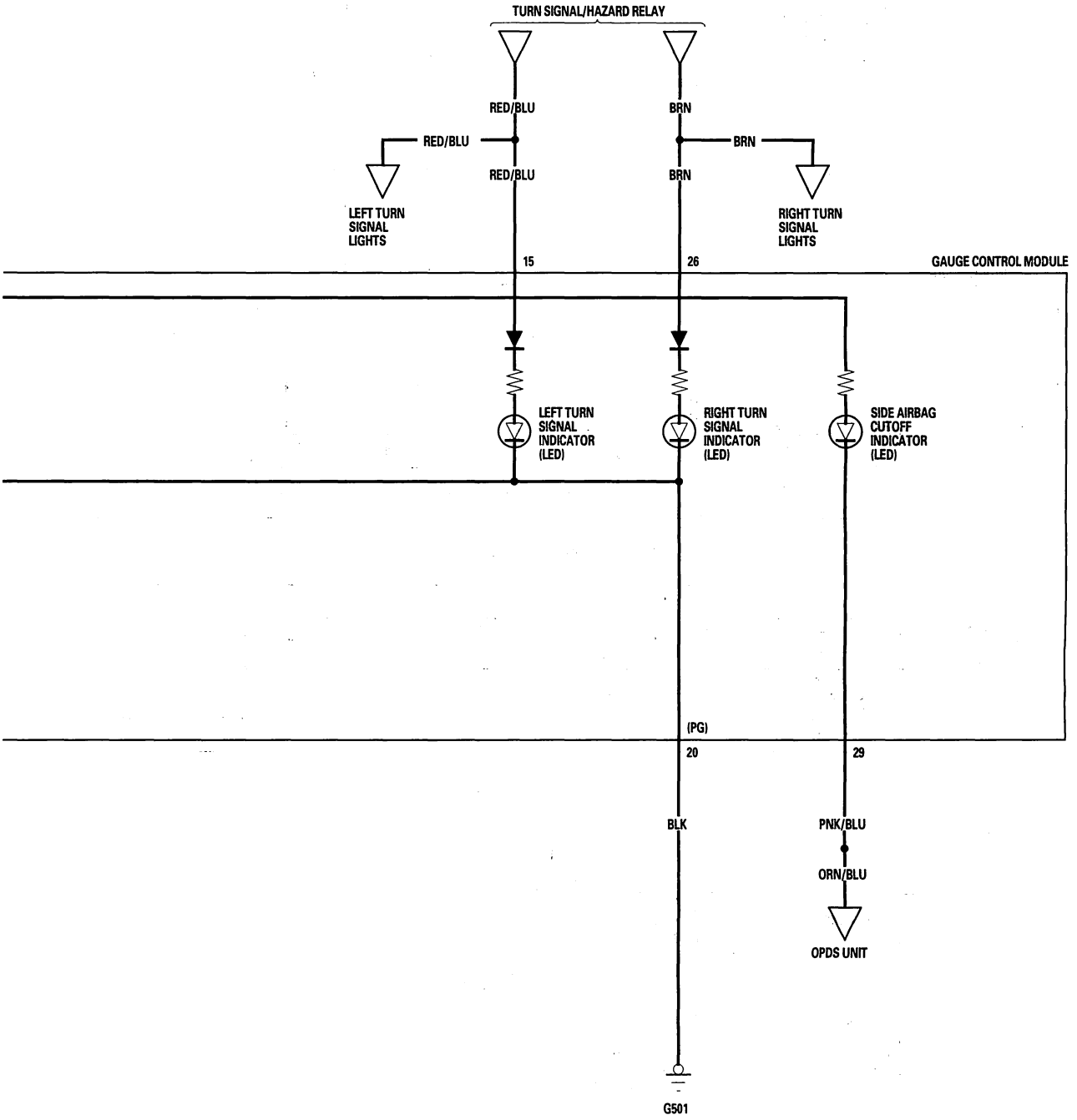

BACK

Protected by AR

Circuit Diagram (cont'd)

'06 model

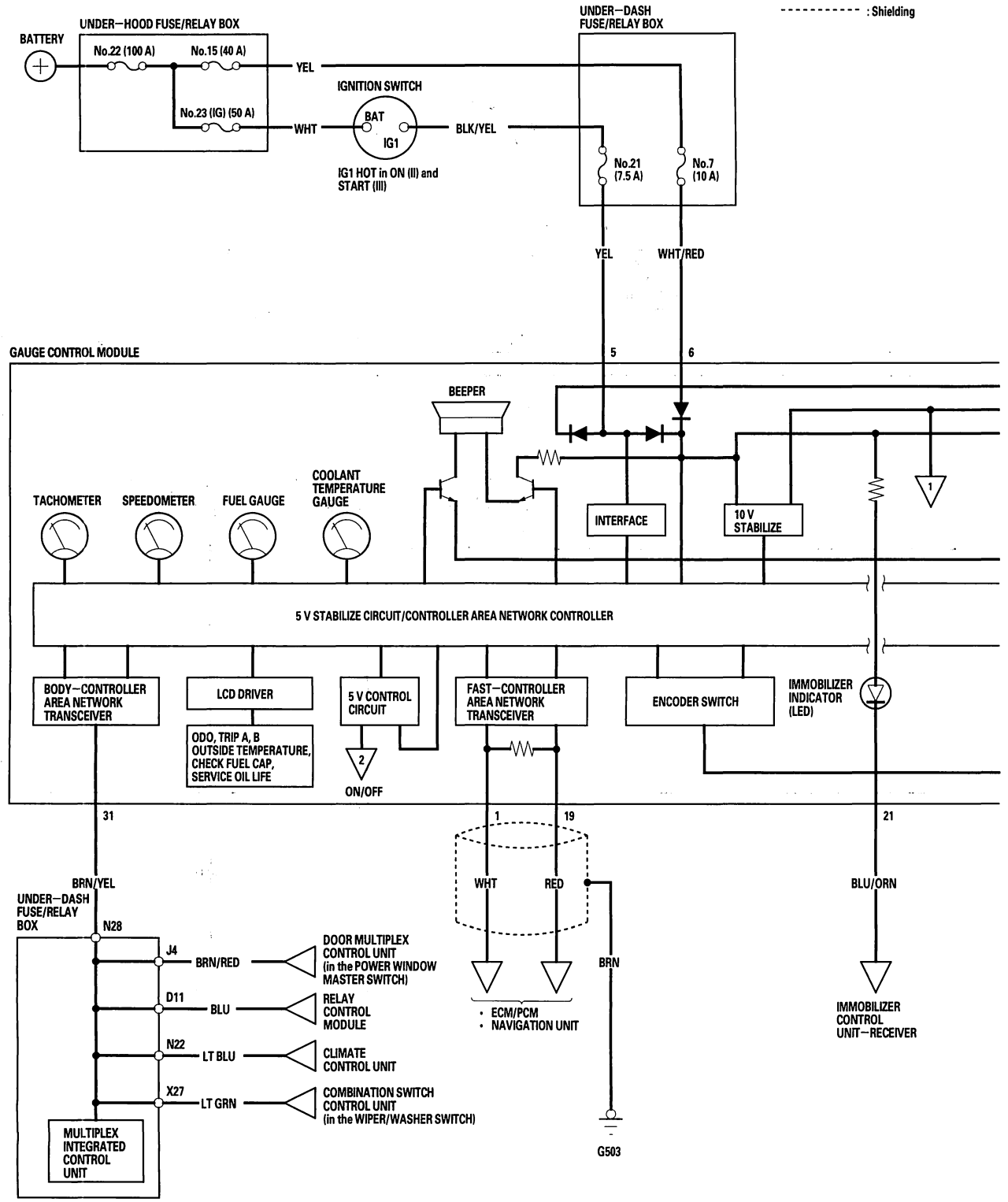

BACK

Protected by AR

*1 : M/T
*2 : A/T

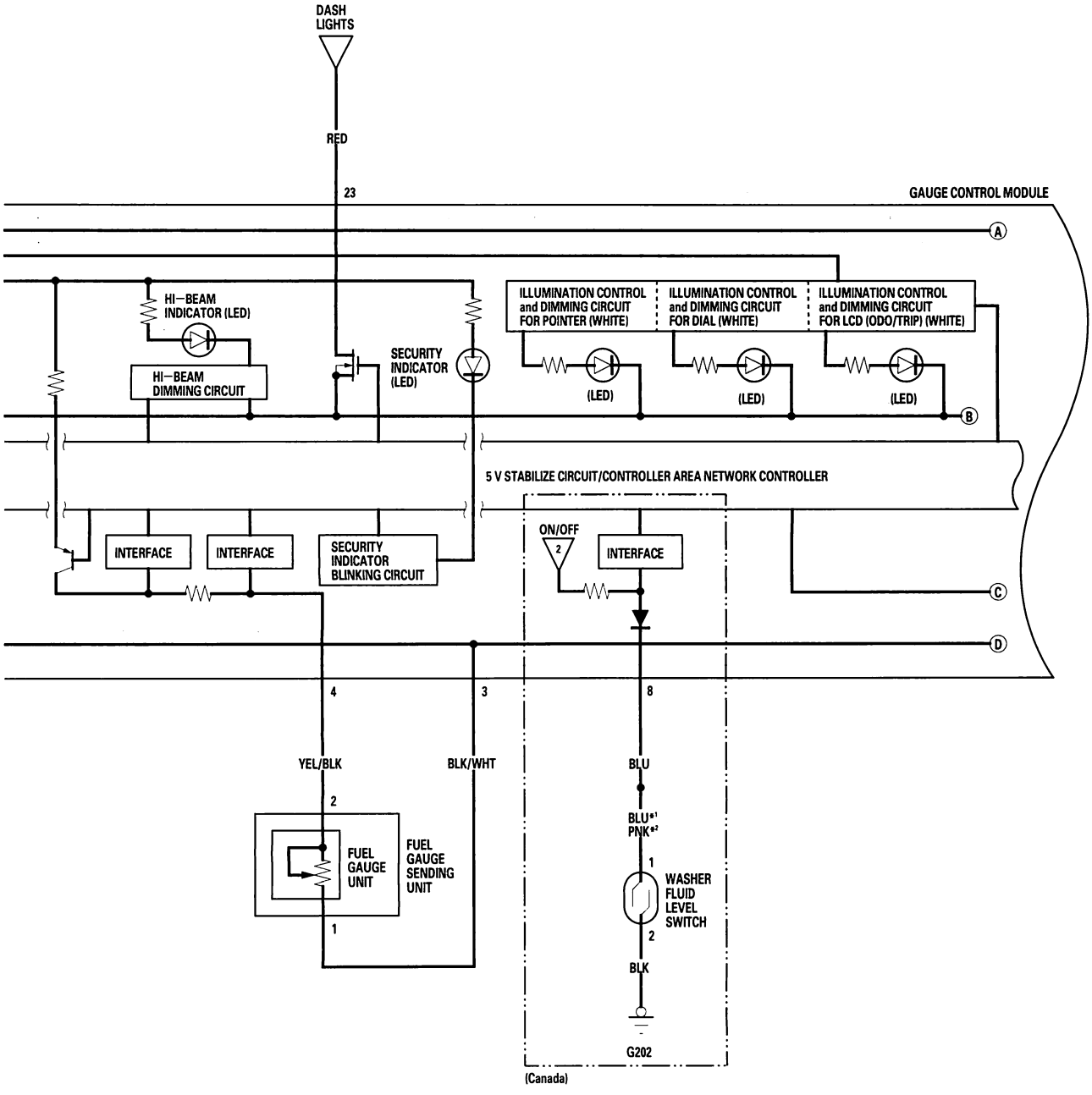

(cont'd)

Protected by AR

Gauges

Circuit Diagram (cont'd)

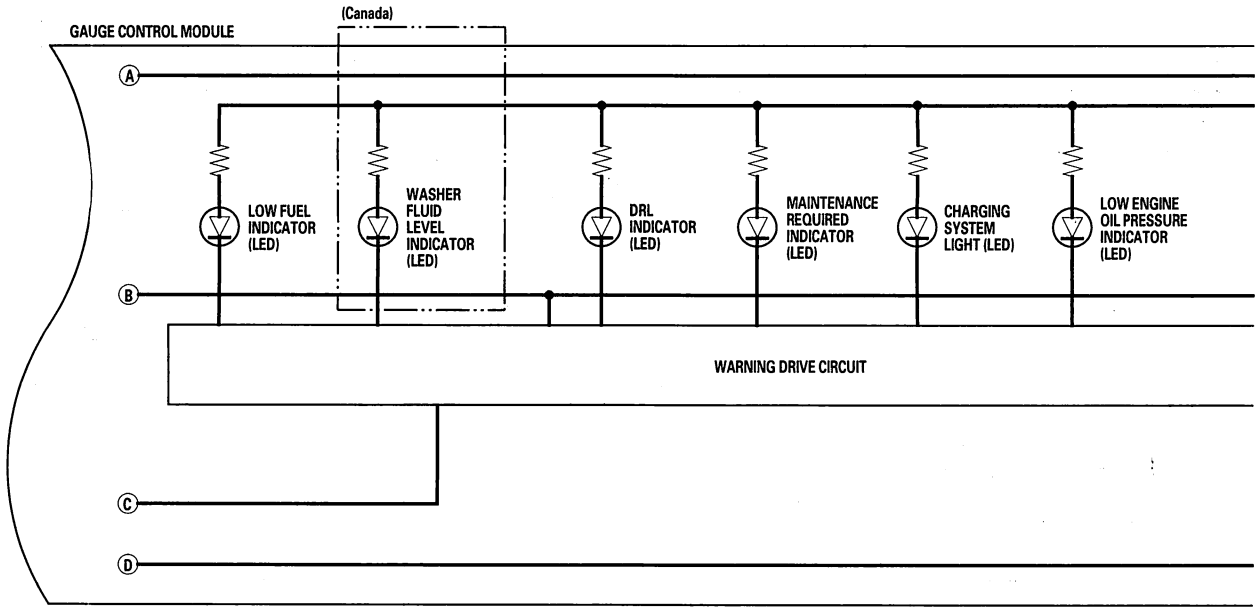

BACK

Protected by AR

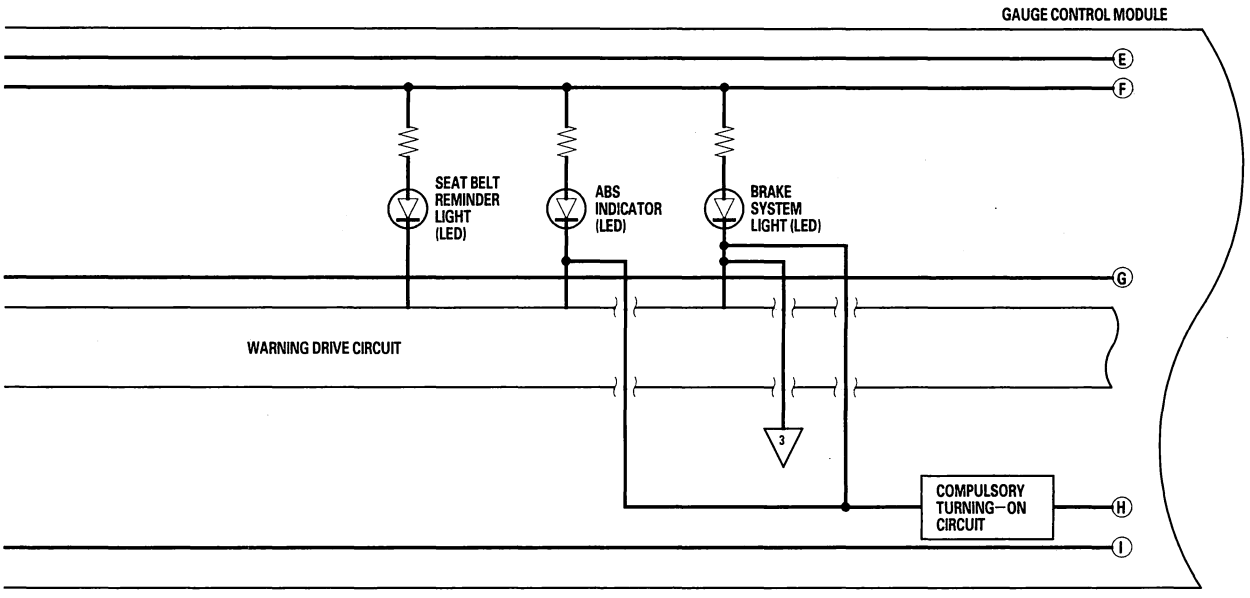

(cont'd)

Protected by AR

Circuit Diagram (cont'd)

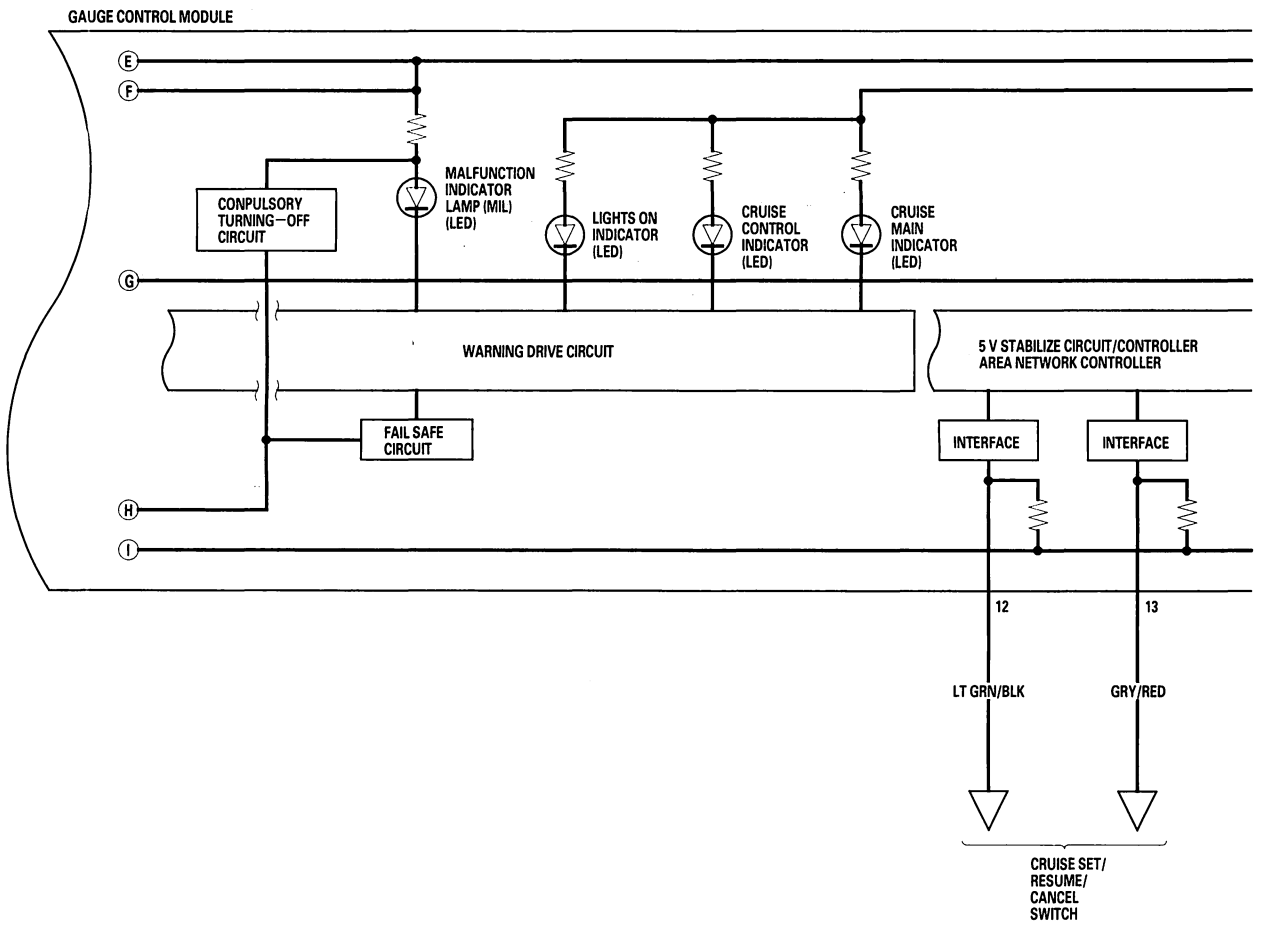

BACK

Protected by AR

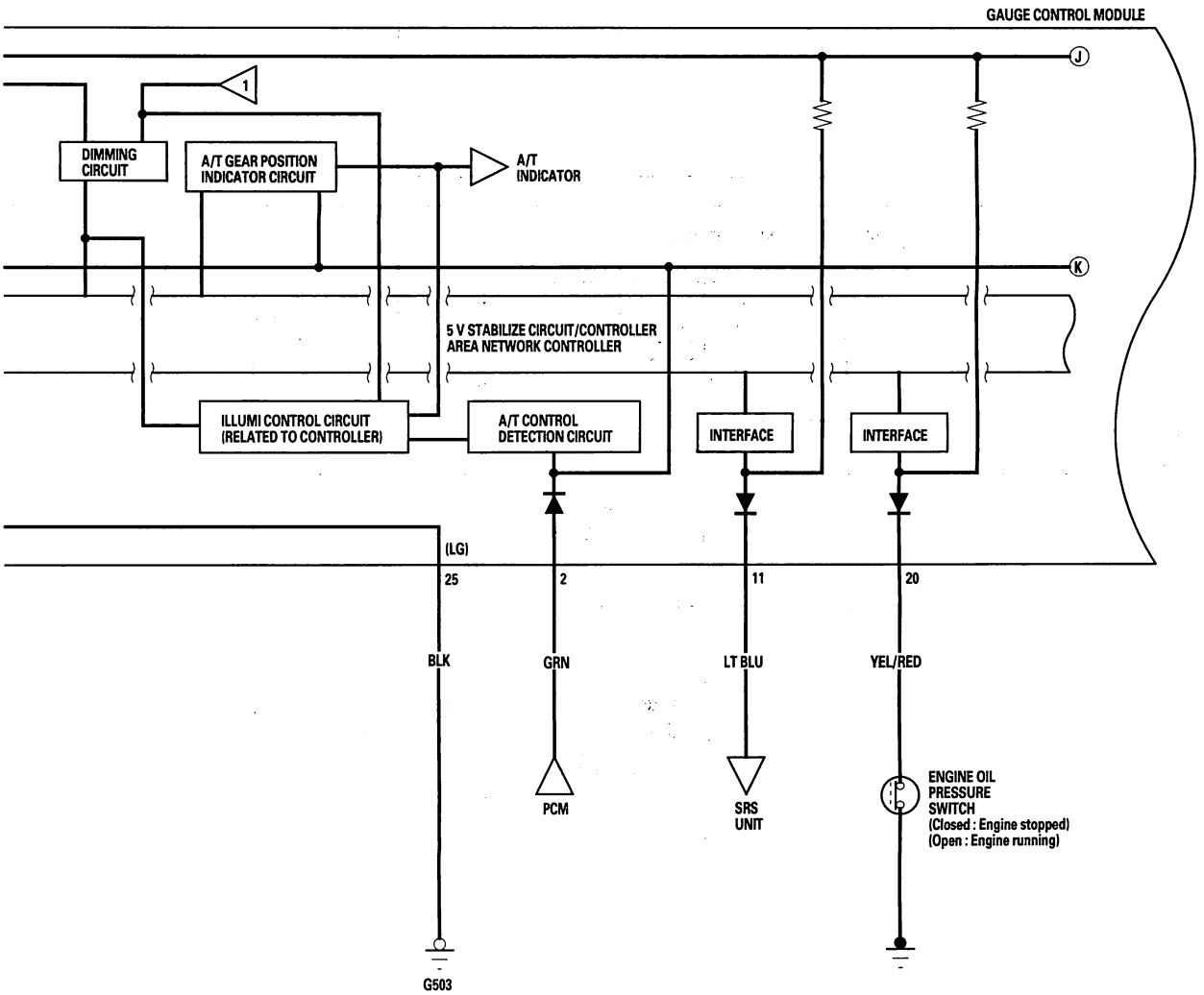

(cont'd)

BACK

Protected by AR

Gauges

Circuit Diagram (cont'd)

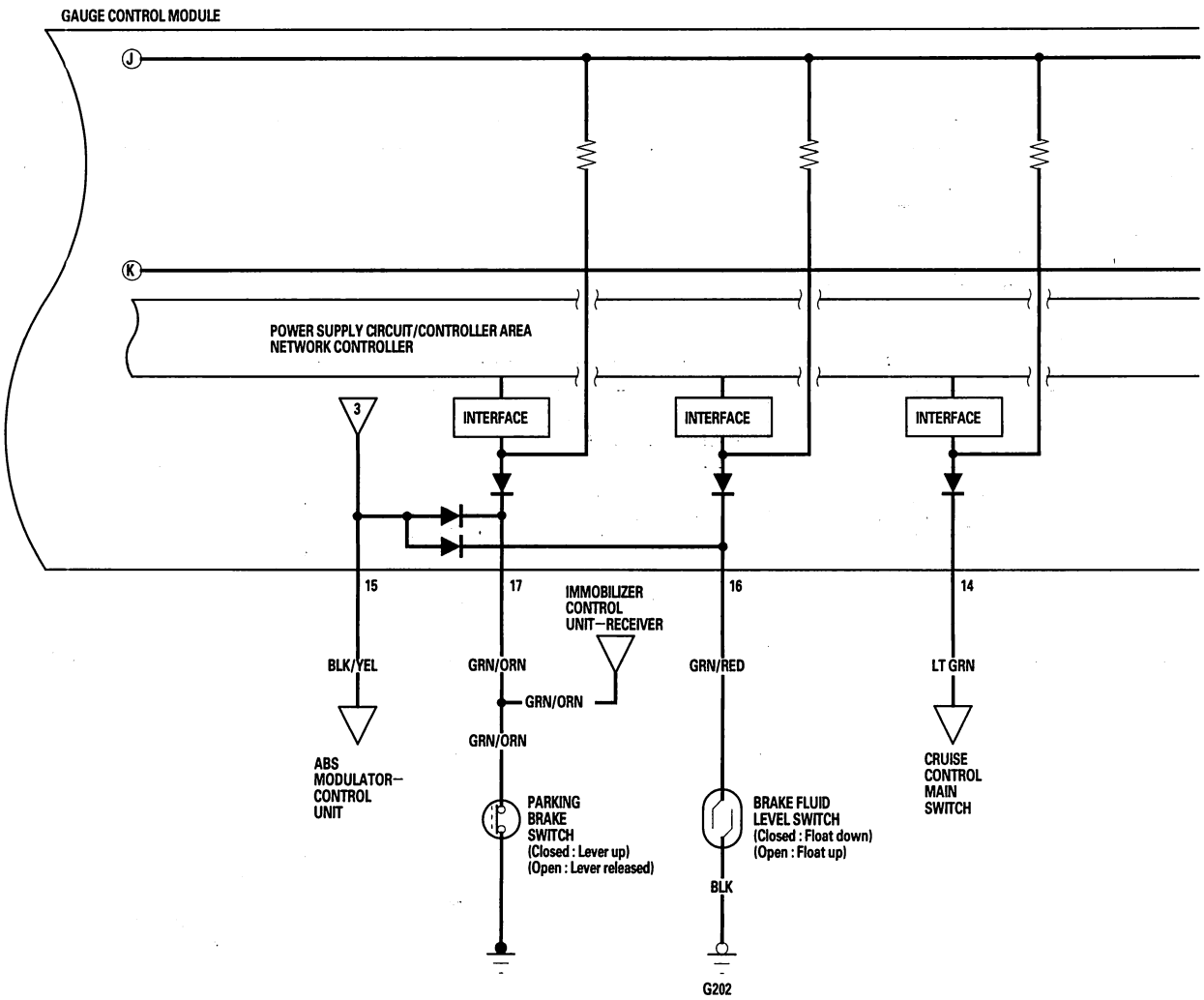

BACK

Protected by AR

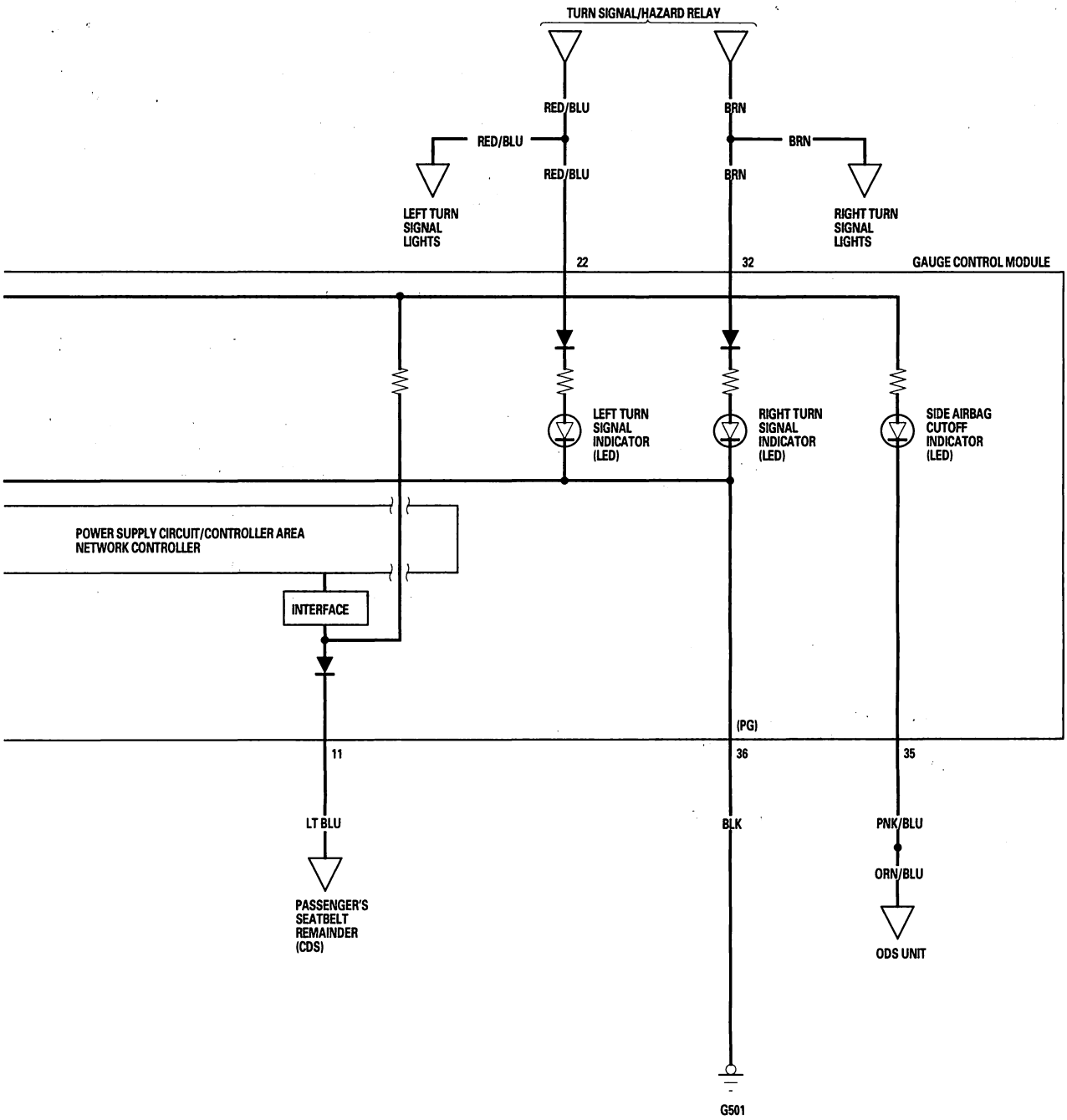

BACK

Protected by AR

Gauge Control Module Replacement

1. Remove the instrument panel (see page 20-129), then remove the upper column cover (see page 17-25).

2. Place a clean shop towel (A) under the gauge control module to prevent scratching the steering column or dash panel.

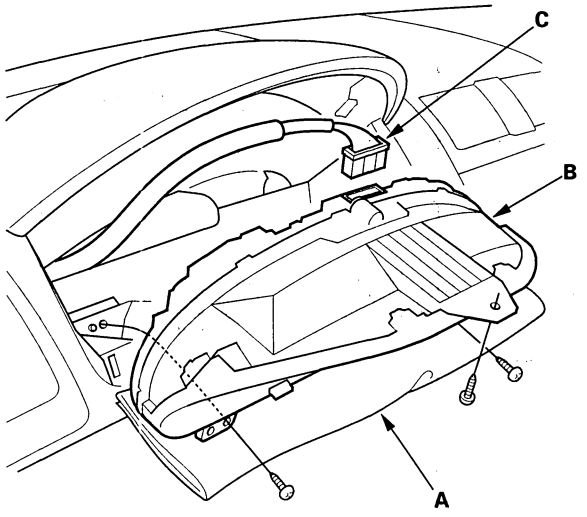

3. Remove the screws from the gauge control module (B).

4. Disconnect the 30P ('03-05 models) or 36P ('06 model) connector (C), and remove the gauge control module.

5. Install the gauge control module in the reverse order of removal.

Rewriting the ODO Data on a New Gauge Control Module

NOTE:
- If the HDS retrieves the ODO data from the gauge control module, the ODO value on the ODO/TRIP display will appear as "— — —", making the ODO function unusable, and the HDS will be unable to retrieve additional ODO values.
- Rewriting is not possible on a gauge control module that does not communicate.
- Obtain a new gauge control module before starting the rewriting process.

1. Before replacing the gauge control module, connect the HDS to the data link connector.

2. Select GAUGES AND INDICATORS from the HDS menu display.

3. Select "ODO REWRITE" from the ADJUSTMENTS menu display, and follow the instructions on the menu display to retrieve the ODO value.

4. Replace the gauge control module.

5. Follow the instructions on the menu display to write the new ODO value to the new gauge control module.

BACK

Protected by AR

Outside Air Temperature Indicator Test

NOTE: To test the outside air temperature sensor (see page 21-123).

The outside air temperature sensor for the indicator is mounted behind the front bumper. Because of this, the temperature reading can be affected by heat reflection from the road, engine heat, and even exhaust from the surrounding traffic. To prevent bogus readings, the display uses a specific logic as shown.

The outside air is warmer than when the ignition switch was turned OFF (ACC or LOCK) position:

- If the ignition switch was turned OFF for less than 2 hours, the displayed temperature when you turn the ignition switch to ON (II) stays at the ignition switch-off temperature until the vehicle has gone faster than 18 mph (11 km/h) for 30 seconds, then rises 1 degree every minute until the outside air temperature is reached.
- If the ignition switch was turned OFF for 2 hours or more, the displayed temperature when you turn the ignition switch to ON (II) the display immediately updates to the measured outside air temperature.

The outside air is cooler than when the ignition switch was turned OFF (ACC or LOCK) position:

- If the ignition switch was turned OFF for less than 2 hours, the displayed temperature when you turn the ignition switch to ON (II) is the ignition switch-off temperature.
  The displayed temperature then drops 1 degree every 2 seconds until the reading matches the outside air temperature.
- If the ignition switch was turned OFF for 2 hours or more, the displayed temperature is the measured outside air temperature.

Forced Display

You can also force the indicator to display the measured temperature.

1. Turn the ignition switch OFF.
2. Remove the No. 7 (10 A) fuse from the under-dash fuse/relay box for 60 seconds, then reinstall it.
3. Turn the ignition switch ON (II).

Troubleshooting

If the indicator displays "— — —" for more than 2 seconds after selecting the outside air temperature display mode, check the climate control system for DTCs, or an open in the LT BLU wire between the under-dash fuse/relay box and the climate control unit.

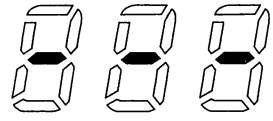

(cont'd)

Protected by AR

Outside Air Temperature Indicator Test (cont'd)

Calibration

NOTE: This procedure must be done after the temperature sensor stabilizes.

The outside air temperature indicator's displayed temperature can be recalibrated ±3 ° to meet the customer's expectations.

1. Turn the ignition switch ON (II).
2. Press and hold the reset select button for 10 seconds. While you continue to hold the button, the display will scroll through temperature settings from +3 ° to −3 ° as shown.

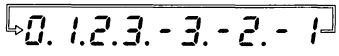

3. When the desired correction value appears on the display, release the button, and the recalibrated outside air temperature will be displayed. Each time a desired correction valve is entered, it replaces the previous valve.

Example:
Incorrect value = 68 °F (20 °C)

Desired correction valve = +2 °F (+1 °C)
Correct valve = 70 °F (21 °C)

Desired correction valve = −2 °F (−1 °C)
Correct valve = 66 °F (19 °C)

NOTE: To recalibrate the display to the true temperature, remove the outside air temperature sensor (A), but leave it connected. Submerge the sensor and a thermometer (B) in a container of ice water (C). Select the calibration mode as described above, then recalibrate the display to the true temperature.

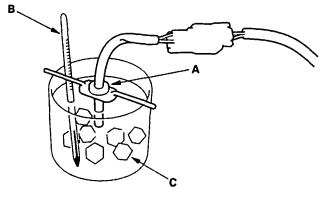

Resetting the Maintenance Required Indicator

Blinking Pattern:

Miles (km)	Maintenance Reminder Light
At 7,900 (12,640) to 8,100 (12,960)	Blinks for 10 seconds when the ignition switch is turned ON (II).
At 9,900 (15,840) to 11,000 (16,160)	Comes on and stays on while the ignition switch is ON (II).

How to Reset

Push and hold the trip/reset button, turn the ignition switch ON (II), and continue to hold the button for more than 10 seconds.

BACK

Protected by AR

DTC Troubleshooting

DTC B1152: Gauge Control Module EEPROM Error

1. Clear the DTCs using the HDS.
2. Start the engine.
3. Check for DTCs by selecting the DTCs MENU (DTCs) from the HDS.

   Is DTC B1152 indicated?

   YES—Faulty gauge control module; replace the gauge control module (see page 22-276).■

   NO—Intermittent failure, the gauge control module is OK at this time. Check pinfits and connections. If the connections are good, check the battery condition (see page 22-78), and the charging system (see page 4-34).■

DTC B1155: Gauge Control Module Lost Communication (Headlight Switch Message) with the Combination Switch Control Unit

1. Clear the DTCs using the HDS.
2. Cycle the ignition switch to OFF and then back ON.
3. Check for DTCs by selecting the DTCs MENU (DTCs) from the HDS.

   Is DTC B1155 indicated?

   YES—Go to step 4.

   NO—Intermittent failure. The gauge control system is OK at this time. Check pinfits and connections.■
4. Check for DTCs by selecting the DTCs MENU (DTCs) from the HDS.

   Is DTC B1007 or B1062 also indicated?

   YES—Go to Combination Switch Control Unit Input Test (see page 22-131).■

   NO—Go to Gauge Control Module Input Test.■
   - '03-05 models: see page 22-127
   - '06 model: see page 22-128

Protected by AR

DTC Troubleshooting (cont'd)

DTC B1156: Gauge Control Module Lost Communication (Wiper Switch Message) with the Combination Switch Control Unit

1. Clear the DTCs using the HDS.
2. Cycle the ignition switch to OFF and then back ON.
3. Check for DTCs by selecting the DTCs MENU (DTCs) from the HDS.

   Is DTC B1156 indicated?

   YES—Go to step 4.

   NO—Intermittent failure. The gauge control system is OK at this time. Check pinfits and connections. ■
4. Check for DTCs by selecting the DTCs MENU (DTCs) of the HDS.

   Is DTC B1009 or B1063 also indicated?

   YES—Go to Combination Switch Control Unit Input Test (see page 22-131). ■

   NO—Go to Gauge Control Module Input Test. ■
   - '03-05 models: see page 22-127
   - '06 model: see page 22-128

BACK

Protected by AR

DTC B1157: Gauge Control Module Lost Communication with Multiplex Integrated Control Unit (MICU)

1. Clear the DTCs using the HDS.
2. Cycle the ignition switch to OFF and then back ON.
3. Check for DTCs by selecting the DTCs MENU (DTCs) from the HDS.

   Is DTC B1157 indicated?

   YES—Go to step 4.

   NO—Intermittent failure. The gauge control system is OK at this time. Check pinfits and connections.■
4. Check for DTCs by selecting the DTCs MENU (DTCs) from the HDS.

   Are DTCs B1055 and B1255 also indicated?

   YES—Go to Multiplex Integrated Control Unit Input Test (see page 22-124).■

   NO—Go to Gauge Control Module Input Test.■
   - '03-05 models: see page 22-127
   - '06 model: see page 22-128

DTC B1158: Gauge Control Module Lost Communication with Relay Module

1. Clear the DTCs using the HDS.
2. Cycle the ignition switch to OFF and then back ON.
3. Check for DTCs by selecting the DTCs MENU (DTCs) from the HDS.

   Is DTC B1158 indicated?

   YES—Go to step 4.

   NO—Intermittent failure. The gauge control system is OK at this time. Check pinfits and connections.■
4. Check for DTCs by the DTCs MENU (DTCs) of the HDS.

   Is DTC B1005 also indicated?

   YES—Go to Relay Control Module Input Test (see page 22-132).■

   NO—Go to Gauge Control Module Input Test.■
   - '03-05 models: see page 22-127
   - '06 model: see page 22-128

Protected by AR

DTC Troubleshooting (cont'd)

DTC B1159: Gauge Control Module Lost Communication (Door Switch Message) with the Multiplex Integrated Control Unit (MICU)

1. Clear the DTCs using the HDS.
2. Cycle the ignition switch to OFF and then back ON.
3. Check for DTCs by selecting the DTCs MENU (DTCs) from the HDS.

   Is DTC B1159 indicated?

   YES—Go to step 4.

   NO—Intermittent failure. The gauge control system is OK at this time. Check pinfits and connections. ■
4. Check for DTCs by selecting the DTCs MENU (DTCs) from the HDS.

   Is DTC B1057 also indicated?

   YES—Go to Multiplex Integrated Control Unit Input Test (see page 22-124). ■

   NO—Go to Gauge Control Module Input Test. ■
   - '03-05 models: see page 22-127
   - '06 model: see page 22-128

DTC B1160: Gauge Control Module Lost Communication (Door Lock Switch Message) with the Door Multiplex Control Unit

1. Clear the DTCs using the HDS.
2. Cycle the ignition switch to OFF and then back ON.
3. Check for DTCs by selecting the DTCs MENU (DTCs) from the HDS.

   Is DTC B1160 indicated?

   YES—Go to step 4.

   NO—Intermittent failure. The gauge control system is OK at this time. Check pinfits and connections. ■
4. Check for DTCs by the DTCs MENU (DTCs) of the HDS.

   Is DTC B1006 or B1058 also indicated?

   YES—Go to Door Multiplex Control Unit Input Test (see page 22-129). ■

   NO—Go to Gauge Control Module Input Test. ■
   - '03-05 models: see page 22-127
   - '06 model: see page 22-128

BACK

Protected by AR

DTC B1175: Fuel Gauge Sending Unit Signals Input Error

1. Do the fuel gauge sending unit test (see page 11-351).

   Is the fuel gauge sending unit OK?

   YES—Go to step 2.

   NO—Replace the fuel gauge sending unit. ■

2. Disconnect the 30P ('03-05 models) or 36P ('06 model) from the gauge control module and the 5P connector from the fuel pump/fuel gauge sending unit.

3. Check for continuity between the No. 3 and No. 4 terminals of the gauge control module 30P ('03-05 models) or 36P ('06 model) connector and No. 1 and No. 2 terminals of the fuel pump/fuel gauge sending unit 5P connector.

   '03-05 models

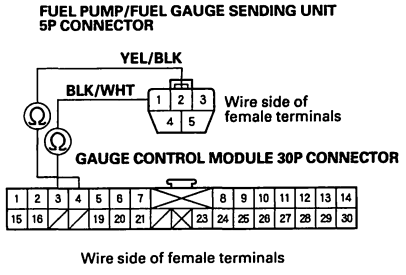

Wire side of female terminals

   '06 model

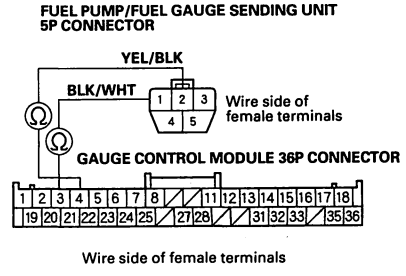

Wire side of female terminals

   Is there continuity?

   YES—Go to step 4.

   NO—Repair an open in the BLK/WHT or YEL/BLK wire between the gauge control module and fuel gauge sending unit. ■

4. Check for continuity between the No. 3 and No. 4 terminals of the gauge control module 30P ('03-05 models) or 36P ('06 model) connector and body ground.

   '03-05 models

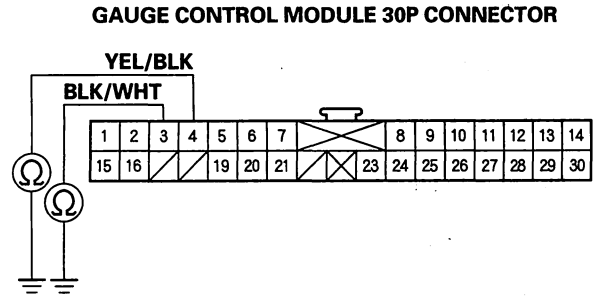

Wire side of female terminals

   '06 model

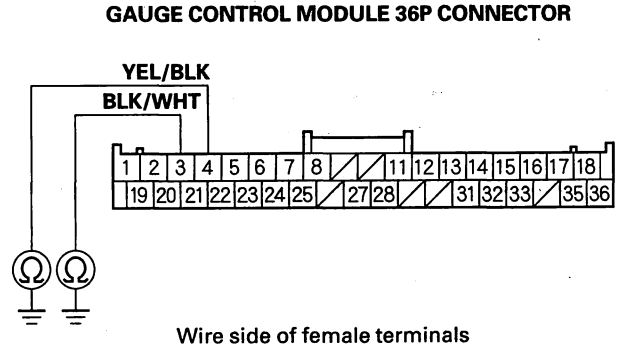

Wire side of female terminals

   Is there continuity?

   YES—Repair a short in the BLK/WHT or YEL/BLK wire. ■

   NO—Inspect all pinfits between the gauge control module and the sending unit. If circuit integrity is good, and the problem still exist, swap gauge control module with a known-good one. If the problem is gone, replace the gauge control module (see page 22-276). ■

Protected by AR

DTC Troubleshooting (cont'd)

DTC B1177: Abnormal Battery Voltage (7.5 V)

1. Clear the DTCs using the HDS.
2. Cycle the ignition switch to OFF and then back ON.
3. Check the DTCs by selecting the DTCs MENU (DTCs) from the HDS.

   Is DTC B1177 indicated?

   YES—Go to step 5.

   NO—Go to step 4.
4. Crank the engine.

   Is DTC B1177 indicated?

   YES—Go to step 5.

   NO—Intermittent failure. The gauge control module and power supply voltage (IG1) that is supplied to the gauge control module are OK at this time.■
5. Check the battery (see page 22-78), and the charging system (see page 4-34).

   Is the battery condition and the charging system normal?

   YES—Go to step 6.

   NO—Abnormal battery condition which needs a recharge or replacement, or a charging system repair.■
6. With the gauge control module 30P ('03-05 models), 36P ('06 model) connector still connected, turn the ignition switch to ON, and check for voltage between the No. 5 terminal and body ground.

   '03-05 models

   GAUGE CONTROL MODULE 30P CONNECTOR

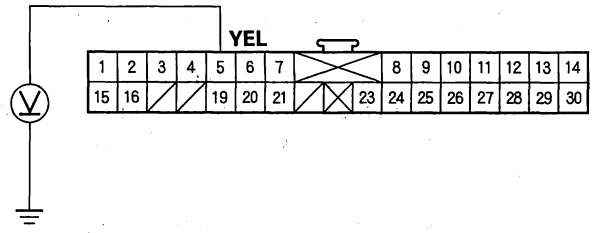

   Wire side of female terminals

   '06 model

   GAUGE CONTROL MODULE 36P CONNECTOR

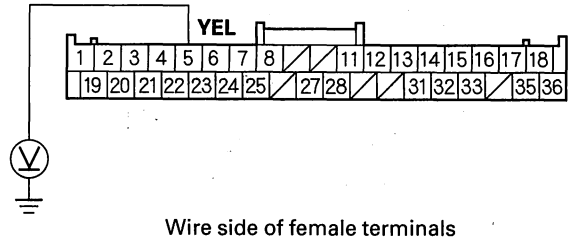

   Wire side of female terminals

   Is there 7.5 V or more?

   YES—Go to step 7.

   NO—Repair an open or high resistance in the YEL wire between the gauge control module and under-dash fuse/relay box.■

BACK

Protected by AR

7. Check for voltage between the No. 5 and No. 21 terminals.

'03-05 models

GAUGE CONTROL MODULE 30P CONNECTOR

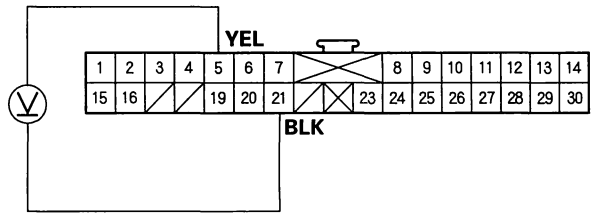

Wire side of female terminals

'06 model

GAUGE CONTROL MODULE 36P CONNECTOR

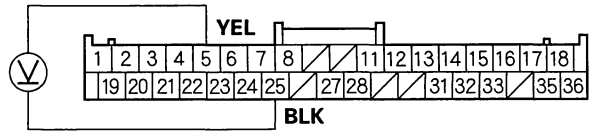

Wire side of female terminals

Is there 7.5 V or more?

YES—Faulty gauge control module; Replace the gauge control module (see page 22-276).■

NO—Repair an open or high resistance in the BLK wire between the gauge control module and ground.■

BACK

Protected by AR

Safety Indicator System

Component Location Index

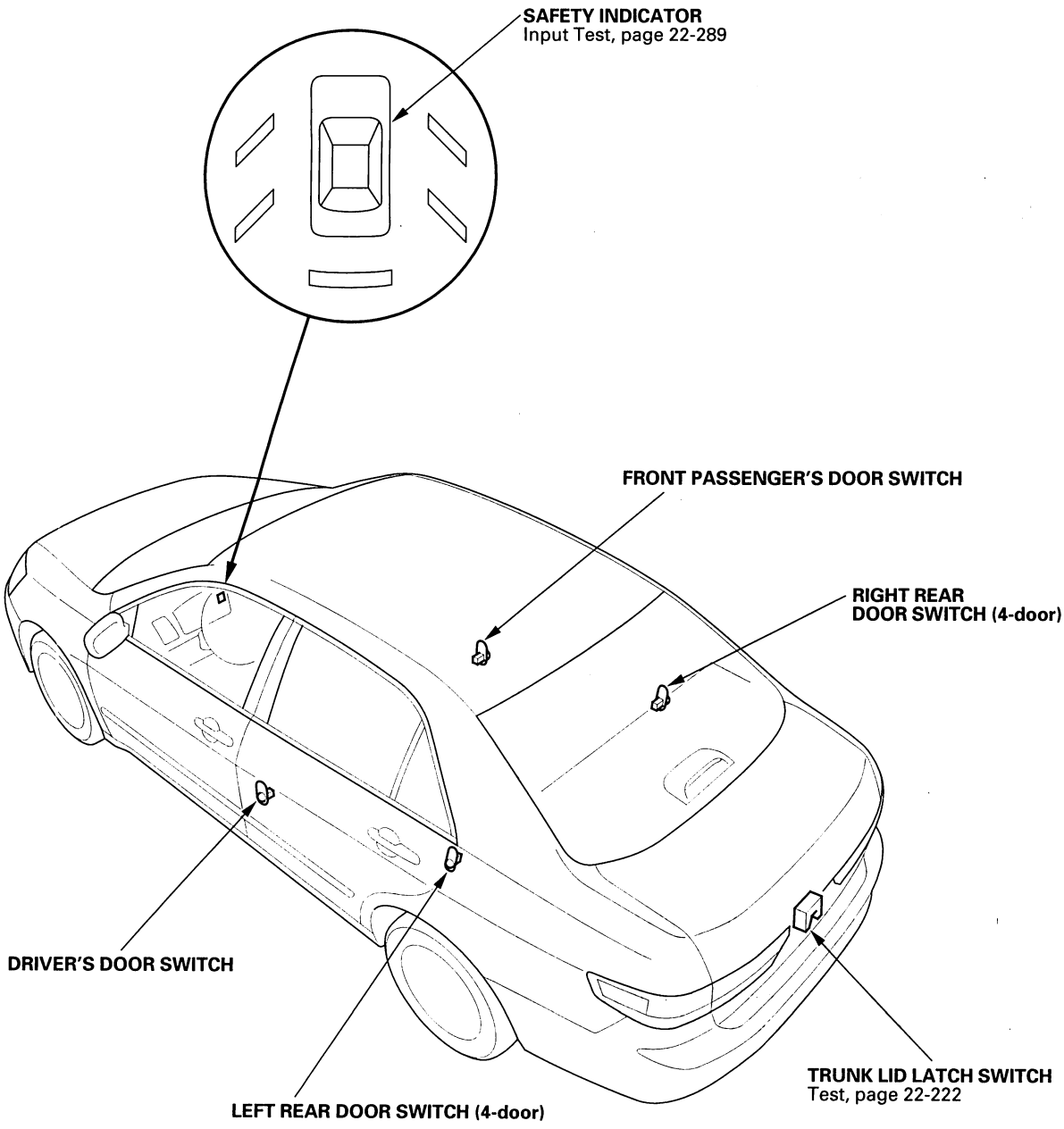

BACK

Protected by AR

Circuit Diagram

'03-05 models

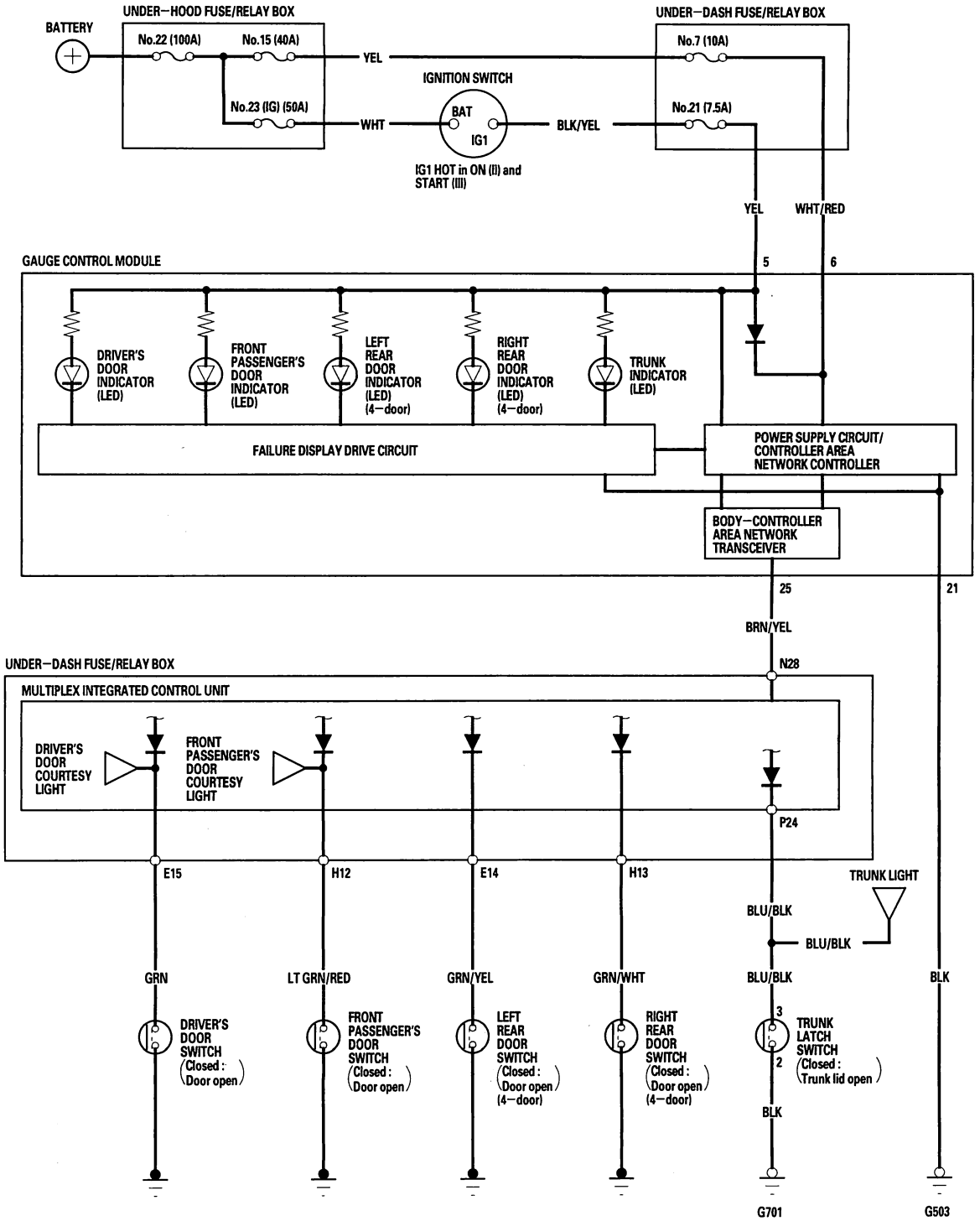

BACK

Protected by AR

Safety Indicator System

Circuit Diagram (cont'd)

'06 model

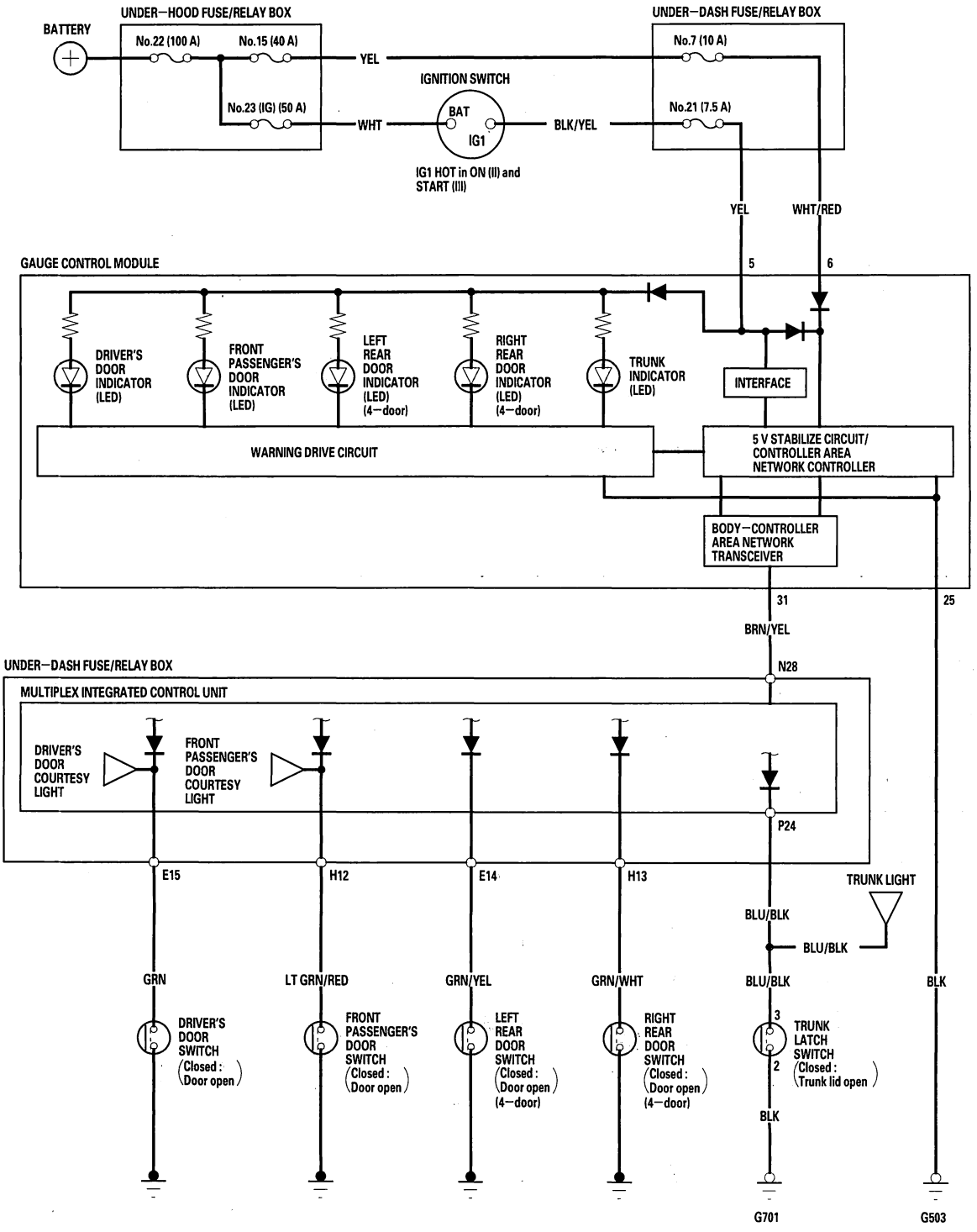

BACK

Protected by AR

Safety Indicator Input Test

1. Before testing the safety indicator functions, troubleshoot the multiplex integrated control system using the B-CAN System Diagnosis Test Mode A (see page 22-91).

Multiplex Integrated Control Unit

2. Remove the left kick panel.

   - 2-door (see page 20-90)
   - 4-door (see page 20-91)

3. Disconnect the under-dash fuse/relay box connectors E, H and P.

   NOTE: All connectors are wire side of female terminals.

UNDER-DASH FUSE/RELAY BOX CONNECTOR E (16P)

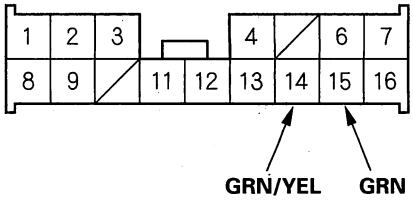

UNDER-DASH FUSE/RELAY BOX CONNECTOR H (14P)

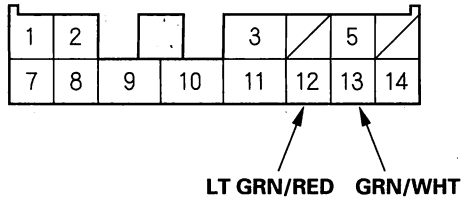

'03-05 models

UNDER-DASH FUSE/RELAY BOX CONNECTOR P (30P)

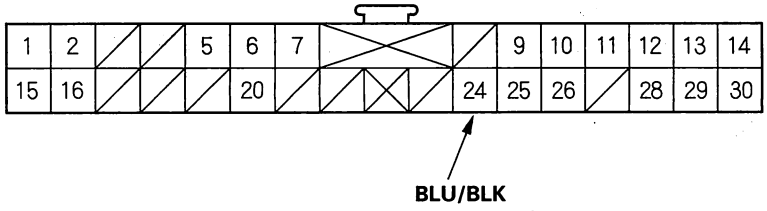

'06 model

UNDER-DASH FUSE/RELAY BOX CONNECTOR P (30P)

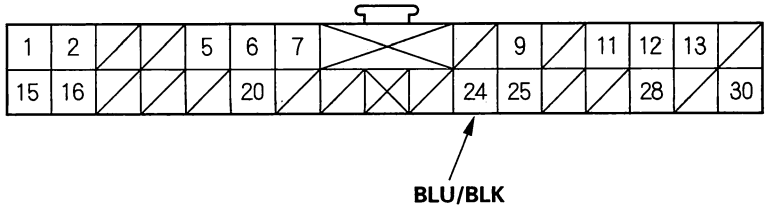

4. Inspect the connector and socket terminals to be sure they are all making good contact.

   - If the terminals are bent, loose or corroded, repair them as necessary, are recheck the system.
   - If the terminals look OK, go to step 5.

(cont'd)

Protected by AR

Safety Indicator Input Test (cont'd)

5. Reconnect the connectors to the under-dash fuse/relay box.

6. Turn the ignition switch to ON (II) to keep the system awake and make sure these input tests at the appropriate connectors on the under-dash fuse/relay box.

   - If any test indicates a problem, find and correct the cause, then recheck the system.
   - If all the input tests prove OK, go to step 7.

Cavity	Wire	Test condition	Test: Desired result	Possible cause if result is not obtained
E15	GRN	Driver's door open	Check for voltage to ground: There should be less than 1 V.	• Faulty driver's door switch • An open in the wire
		Driver's door closed	Check for voltage to ground: There should be about 5 V.	• Faulty driver's door switch • Short to ground
H12	LT GRN/ RED	Front passenger's door open	Check for voltage to ground: There should be less than 1 V.	• Faulty front passenger's door switch • An open in the wire
		Front passenger's door closed	Check for voltage to ground: There should be about 5 V.	• Faulty front passenger's door switch • Short to ground
E14*	GRN/YEL	Left rear door open	Check for voltage to ground: There should be less than 1 V.	• Faulty left rear door switch • An open in the wire
		Left rear door closed	Check for voltage to ground: There should be about 5 V.	• Faulty left rear door switch • Short to ground
H13*	GRN/WHT	Right rear door open	Check for voltage to ground: There should be less than 1 V.	• Faulty right rear door switch • An open in the wire
		Right rear door closed	Check for voltage to ground: There should be about 5 V.	• Faulty right rear door switch • Short to ground
P24*	BLU/BLK	Trunk lid open	Check for voltage to ground: There should be less than 1 V.	• Poor ground (G701) • Faulty trunk latch switch • An open in the wire
		Trunk lid closed	Check for voltage to ground: There should be about 5 V.	• Faulty trunk latch switch • Short to ground

*: 4-door

7. Run the gauge control module Self-diagnostic Function (see page 22-259).

   - If the indicators flash, go to step 8.
   - If the indicators do not flash, replace the gauge control module.

8. Substitute a known-good under-dash fuse/relay box and recheck the system.

   - If the symptom is gone, the multiplex integrated control unit (MICU) is faulty; replace the under-dash fuse/relay box.
   - If the symptom is still present, the gauge control module must be faulty; replace the gauge control module.

BACK

Protected by AR

Reminder Systems, Key Light Timer, and Engine Oil Pressure Indicator Systems

Circuit Diagram

'03-05 models

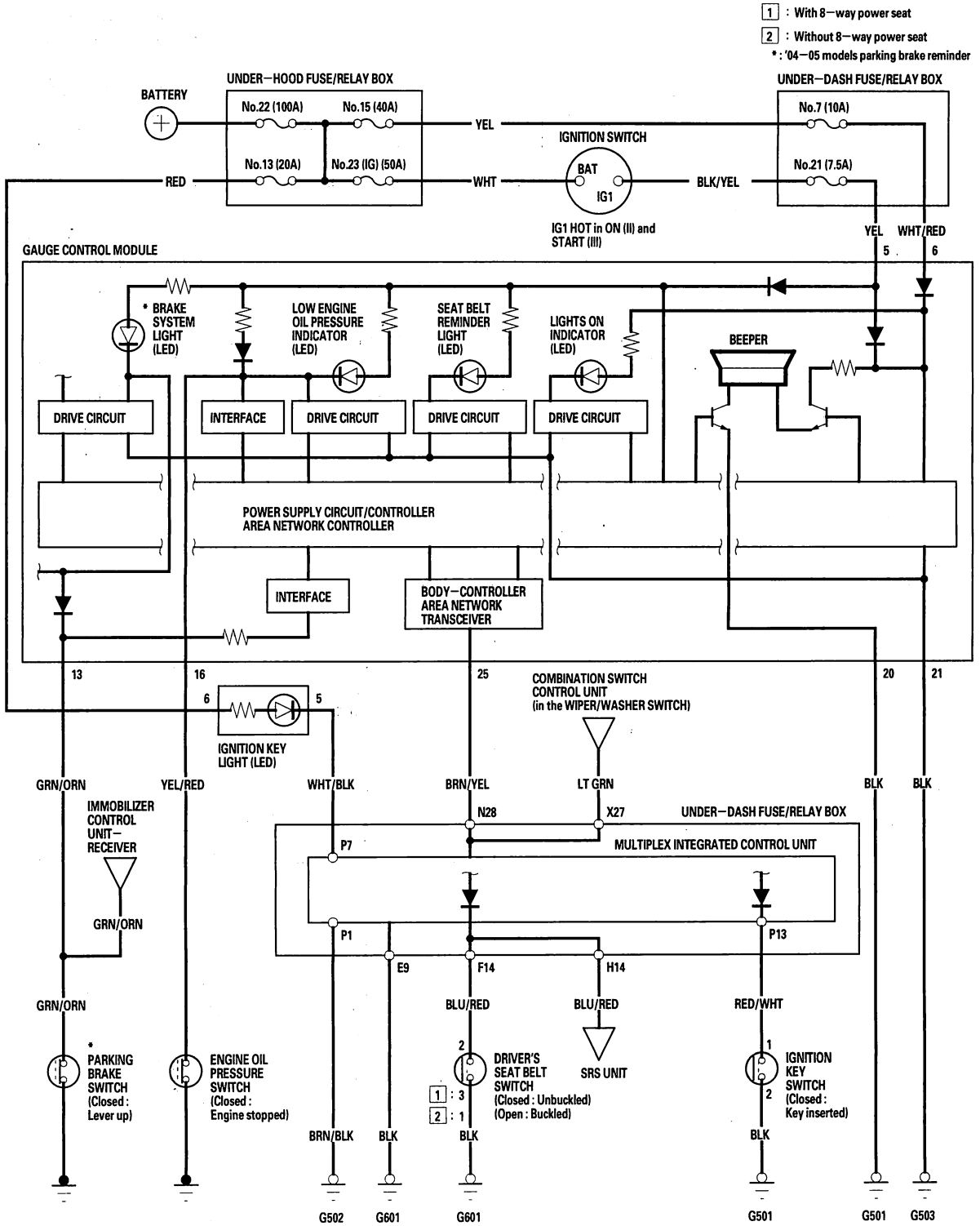

BACK

Protected by AR

Reminder Systems, Key Light Timer, and Engine Oil Pressure Indicator Systems

Circuit Diagram (cont'd)

'06 model

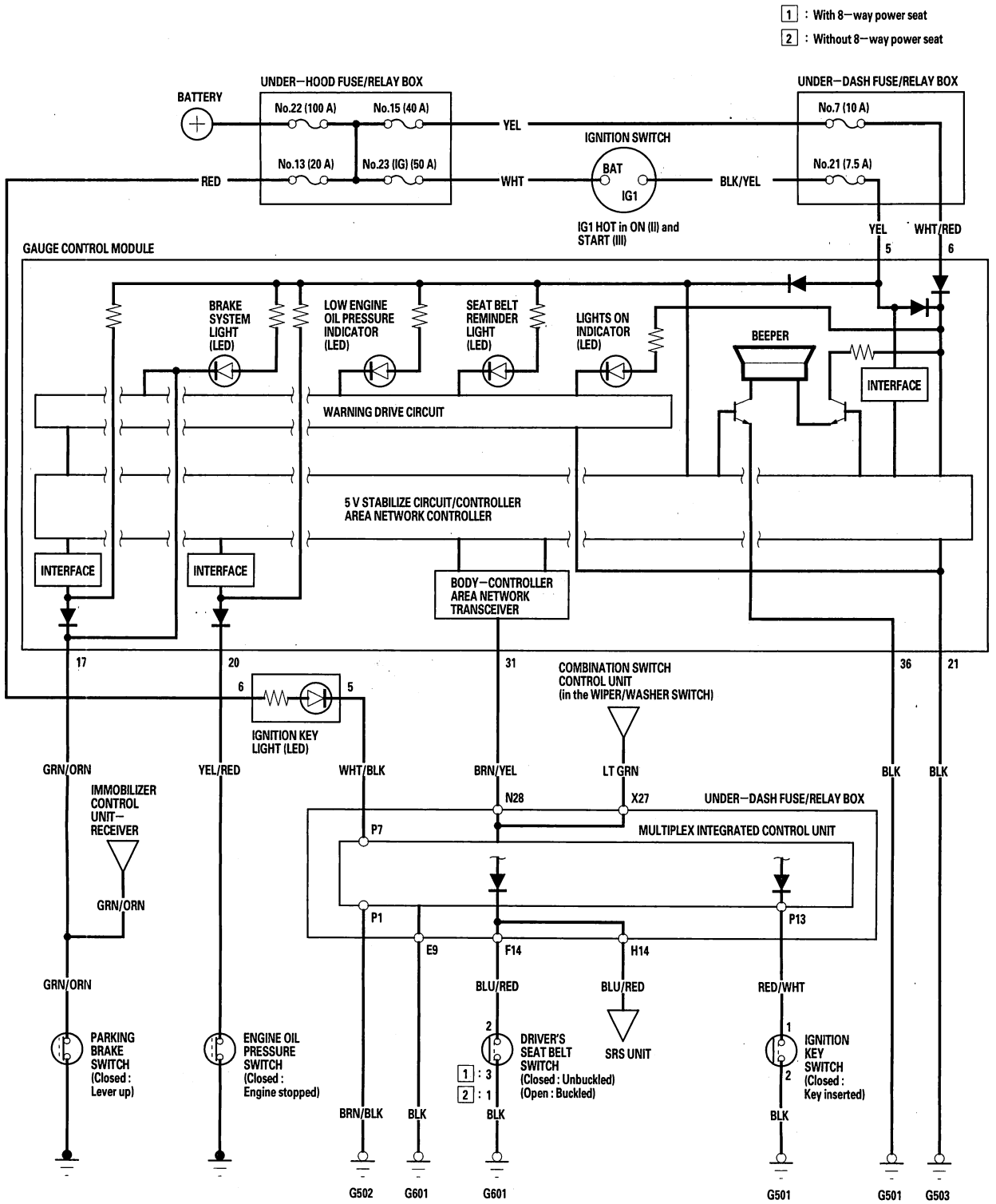

BACK

Protected by AR

Control Unit Input Test

1. Before testing, troubleshoot the multiplex integrated control system using B-CAN System Diagnosis Test Mode A (see page 22-91).

Multiplex Integrated Control Unit

2. Remove the left kick panel.

   - 2-door (see page 20-90)
   - 4-door (see page 20-91)

3. Disconnect the under-dash fuse/relay box connectors F and P.

   NOTE: All connectors are wire side of female terminals.

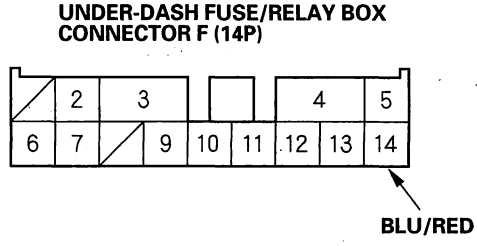

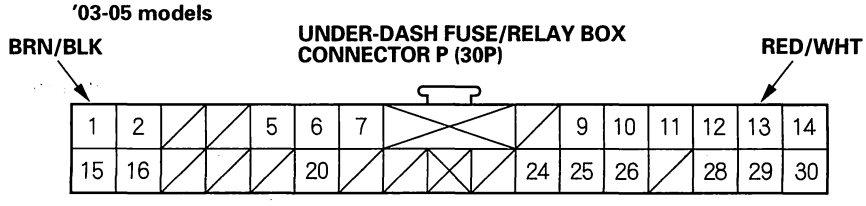

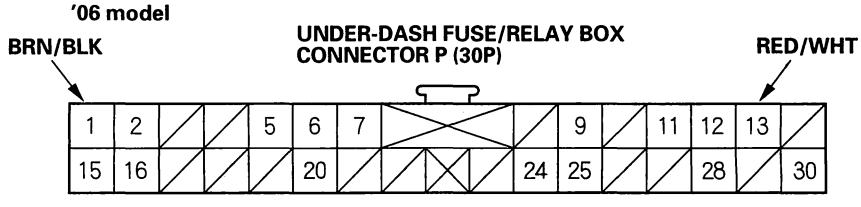

4. Inspect the connector and socket terminals to be sure they are all making good contact.

   - If the terminals are bent, loose or corroded, repair them as necessary, and recheck the system.
   - If the terminals are OK, go to step 5.

(cont'd)

Protected by AR

Control Unit Input Test (cont'd)

5. Reconnect the connectors, and make these input tests at the connector.

   - If any test indicates a problem, find and correct the cause, then recheck the system.
   - If all the input tests prove OK, go to step 6.

Cavity	Wire	Test condition	Test: Desired result	Possible cause if result is not obtained
F14 . H14	BLU/RED	Ignition switch ON (II), driver's seat belt is buckled.	Check for voltage to ground: There should be 1 V or less.	• Faulty driver's seat belt switch • Poor ground (G601) • An open in the wire
		Ignition switch ON (II), driver's seat belt is unbuckled.	Check for voltage to ground: There should be about 5 V.	• Faulty driver's seat belt switch • Short to ground
P13	RED/WHT	Ignition key in the ignition switch.	Check for voltage to ground: There should be 1 V or less.	• Faulty ignition switch • Poor ground (G501) • An open in the wire
		Ignition key out of the ignition switch.	Check for voltage to ground: There should be about 5 V*.	• Faulty ignition switch • Short to ground

* Within 5 seconds of pulling the key out of the ignition switch, the system will go into sleep mode and the reference voltage drops from about 5 V to about 1 V.

6. Remove the gauge control module (see page 22-276).

7. Disconnect the gauge control module 30P ('03-05 models) or 36P ('06 model) connector.

GAUGE CONTROL MODULE 30P CONNECTOR

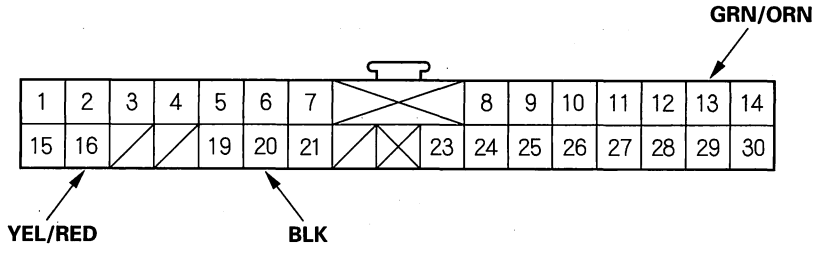

Wire side of female terminals

GAUGE CONTROL MODULE 36P CONNECTOR

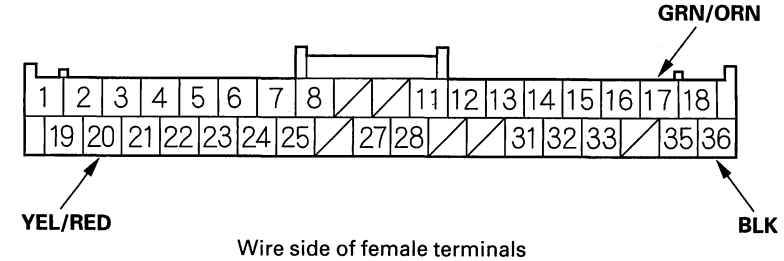

Wire side of female terminals

8. Inspect the connector and socket terminals to be sure they are all making good contact.

   - If the terminals are bent, loose or corroded, repair them as necessary, and recheck the system.
   - If the terminals are OK, go to step 9.

BACK

Protected by AR

9. With the connectors still disconnected, make these input tests at the connector.

   - If any test indicates a problem, find and correct the cause, then recheck the system.
   - If the input tests prove OK, go to step 10.

Cavity	Wire	Test condition	Test: Desired result	Possible cause if result is not obtained
16 20*3	YEL/RED	Engine OFF	Check for continuity to ground: There should be continuity.	• Faulty engine oil pressure switch • An open in the wire
		Engine running	Check for continuity to ground: There should be no continuity.	• Mechanical problem in the engine • Faulty engine oil pressure switch • An short to ground in the wire

* 3: '06 model

10. Reconnect the connector, and make these input tests at the connector.

    - If any test indicates a problem, find and correct the cause, then recheck the system.
    - If the input tests prove OK, go to step 11.

Cavity	Wire	Test condition	Test: Desired result	Possible cause if result is not obtained
13*1 17*2	GRN/ORN	Parking brake lever pulled	Check for voltage to ground: There should be less than 1 V.	• Faulty parking brake switch • An open in the wire
		Parking brake lever released	Check for voltage to ground: There should be about 5 V or more.	• Faulty parking brake switch • Short to ground
20 36*3	BLK	Under all conditions	Check for voltage to ground: There should be less than 1 V.	• Poor ground (G501) • An open in the wire

* 1: '04-05 models parking brake reminder
* 2: '06 model parking brake reminder
* 3: '06 model

11. Run the gauge control module Self-diagnostic Function (see page 22-259).

    - If the beeper sounds and the seatbelt light flashes, go to step 12.
    - If the beeper does not sounds, or the seatbelt light does not flash, replace the gauge control module (see page 22-276).

12. Substitute a known-good under-dash fuse/relay box and recheck the system.

    - It the symptom is gone, the MICU is faulty; replace the under-dash fuse/relay box.
    - It the symptom is still present, the gauge control module is faulty; replace the gauge control module (see page 22-276).

Protected by AR

Rear Window Defogger

Component Location Index

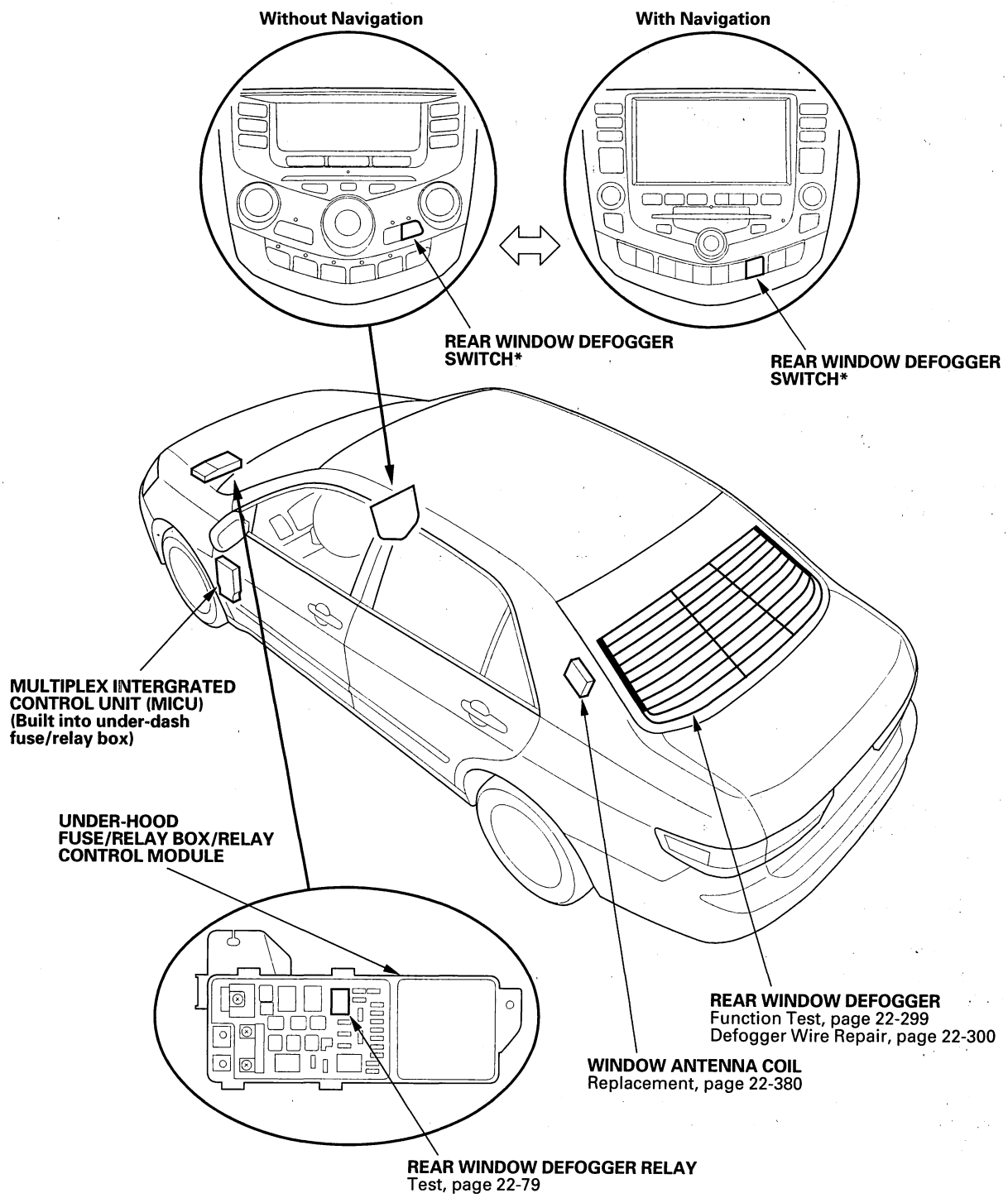

*: Rear window defogger switch is built into the climate control unit (audio-HVAC display module).

BACK

Protected by AR

Circuit Diagram

With Climate Control:

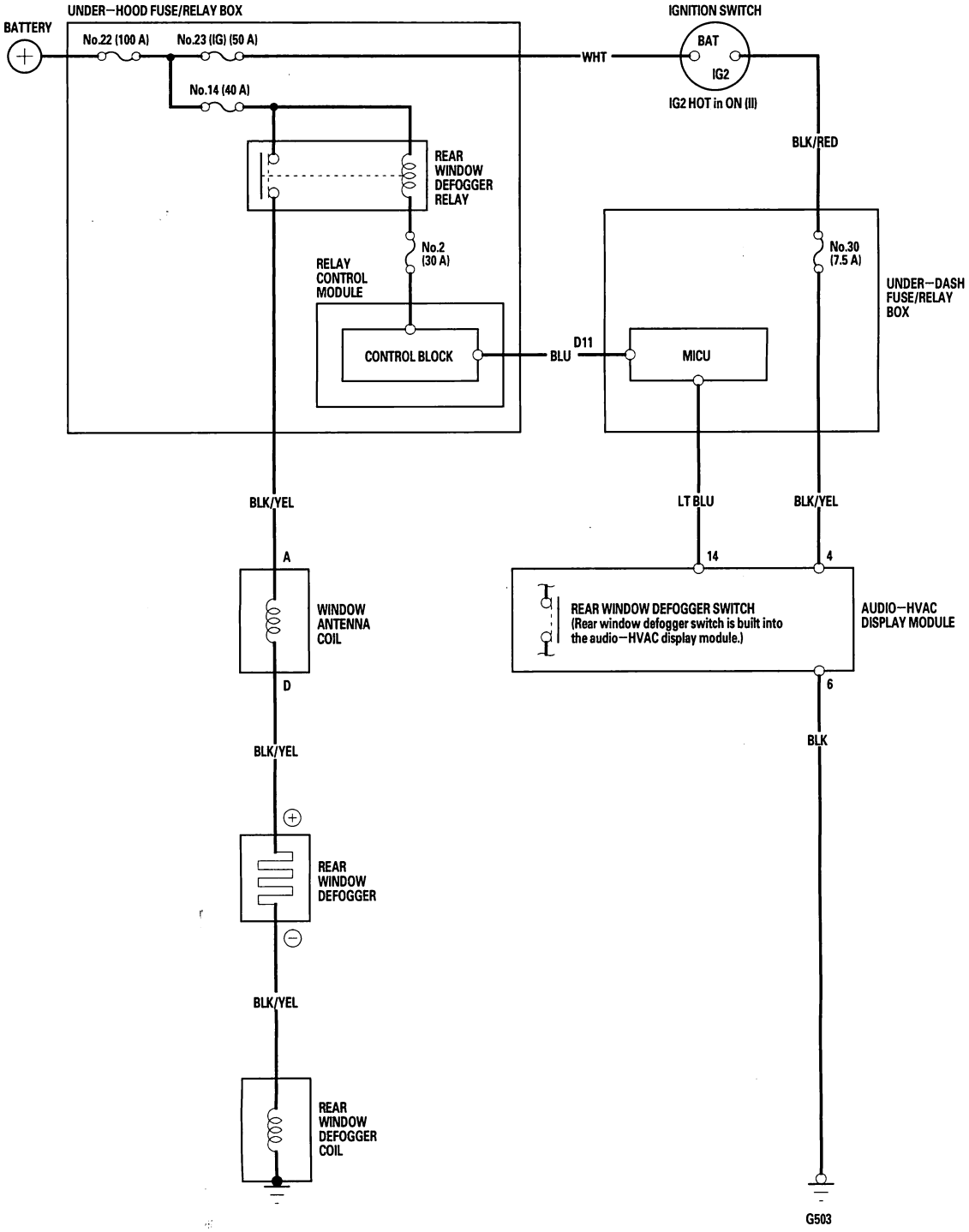

BACK

Protected by AR

Rear Window Defogger

Circuit Diagram (cont'd)

Without Climate Control:

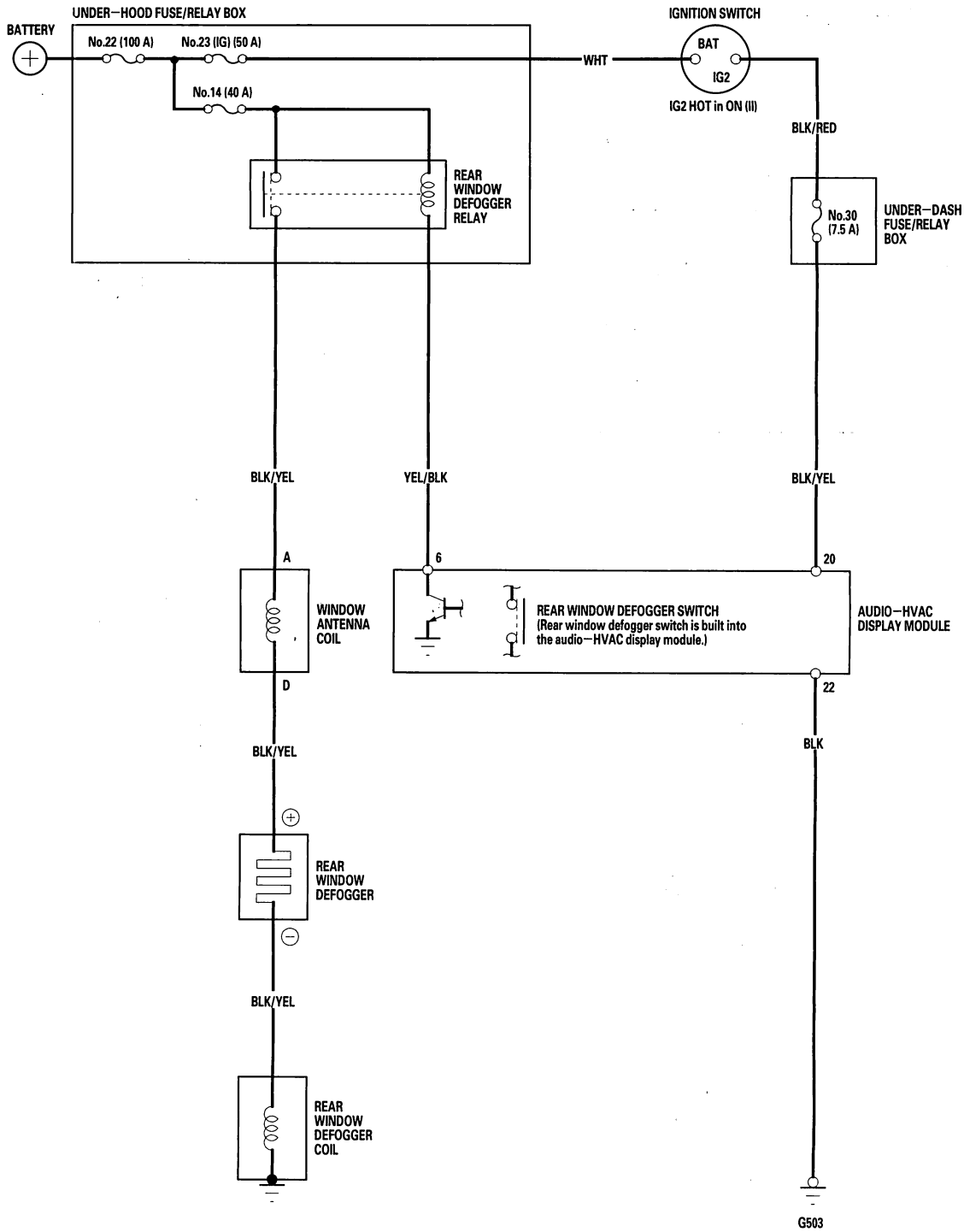

BACK

Protected by AR

Function Test

Before troubleshooting the rear window circuit, perform multiplex integrated control system troubleshooting using B-CAN System Diagnosis Test Mode A (see page 22-91).

NOTE:
- Be careful not to scratch or damage the defogger wires with the tester probe.
- Before testing, check the No. 14 (40 A) fuse in the under-hood fuse/relay box and No. 30 (7.5 A) fuse in the under-dash fuse/relay box.

1. Check for voltage between the positive terminal (A) and body ground with the ignition switch and defogger switch ON.
   There should be battery voltage.

   - If there is no voltage, check for:
     - Faulty defogger relay.
     - Faulty window antenna coil.
     - Faulty climate control unit (audio-HVAC display module)
     - An open in the BLK/YEL wire to the positive terminal.
   - If there is voltage, go to step 2.

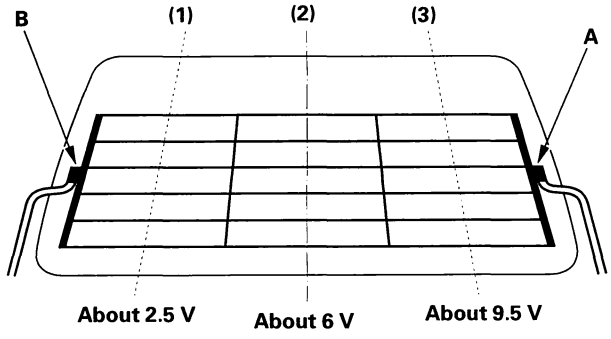

2. Disconnect the negative terminal (B) from the rear window defogger.

3. Check for continuity between the negative terminal and body ground.

   - If there is no continuity, check for an open in the BLK/YEL wire and ground.
   - If there is continuity, go to step 4.

4. Reconnect the negative terminal to the rear window defogger.

5. Turn the ignition switch ON (II) and the rear window defogger switch ON.

6. Touch the voltmeter positive probe to the points (1), (2), (3) on each defogger wire, and the negative probe to the negative terminal.

   - If the voltage is as specified, the defogger wire up to that point is OK.
   - If the voltage is not as specified, repair the defogger wire.
     - If it is more than specified at one of the points, there is a break in the negative half of the wire.
     - If it is less than specified at one of the points, there is a break in the negative half of the wire.

Protected by AR

Rear Window Defogger

Defogger Wire Repair

NOTE: To make an effective repair, the broken section must be no longer than one inch.

1. Lightly rub the area around the broken section (A) with fine steel wool, then clean it with alcohol.

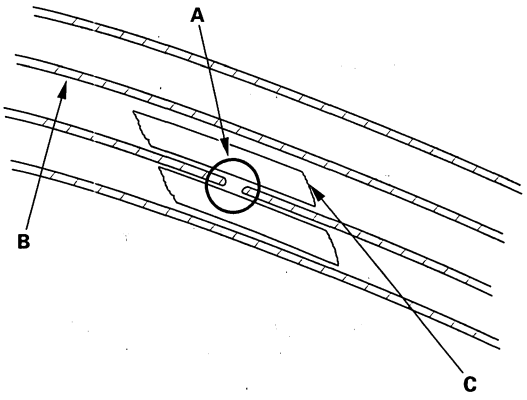

2. Carefully mask above and below the broken portion of the defogger wire (B) with cellophane tape (C).

3. Using a small brush, apply a heavy coat of silver conductive paint (commercially available) extending about 1/8 " on both sides of the break. Allow 25 minutes to dry.

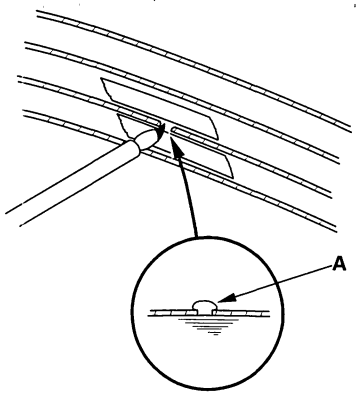

4. Perform the function test to confirm that the wire is repaired.

5. Apply a second coat of paint in the same way. Let it dry 3 hours before removing the tape.

BACK

Protected by AR

Component Location Index

4-door:

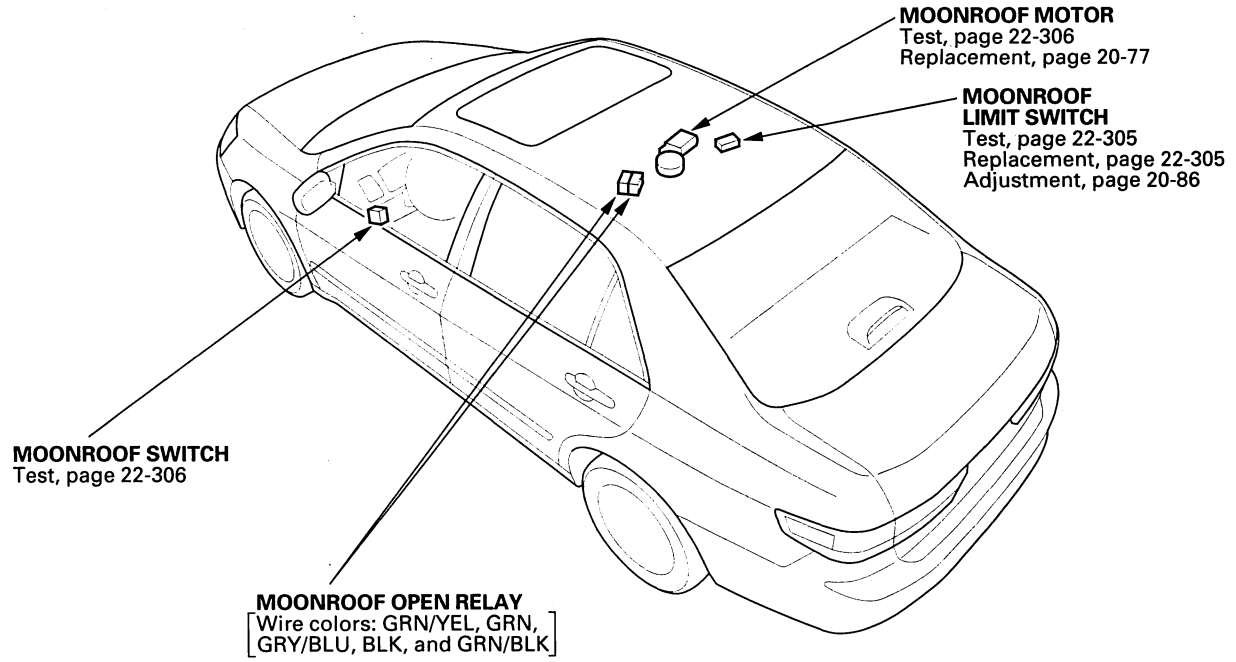

Protected by AR

Component Location Index (cont'd)

2-door:

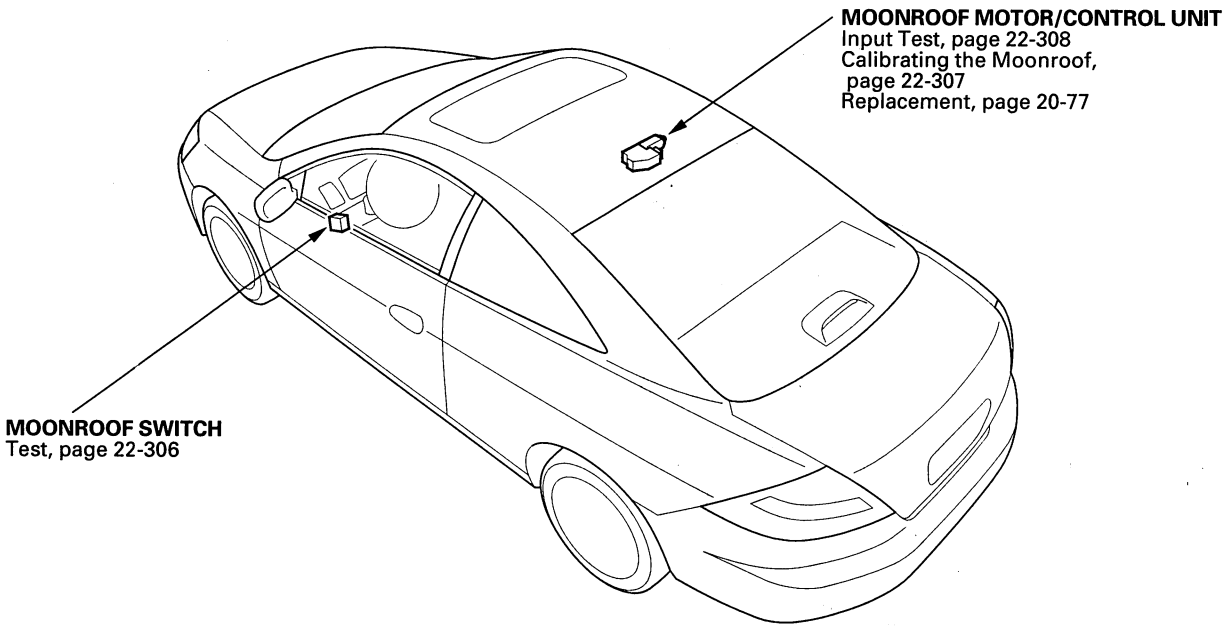

BACK

Protected by AR

Circuit Diagram

4-door:

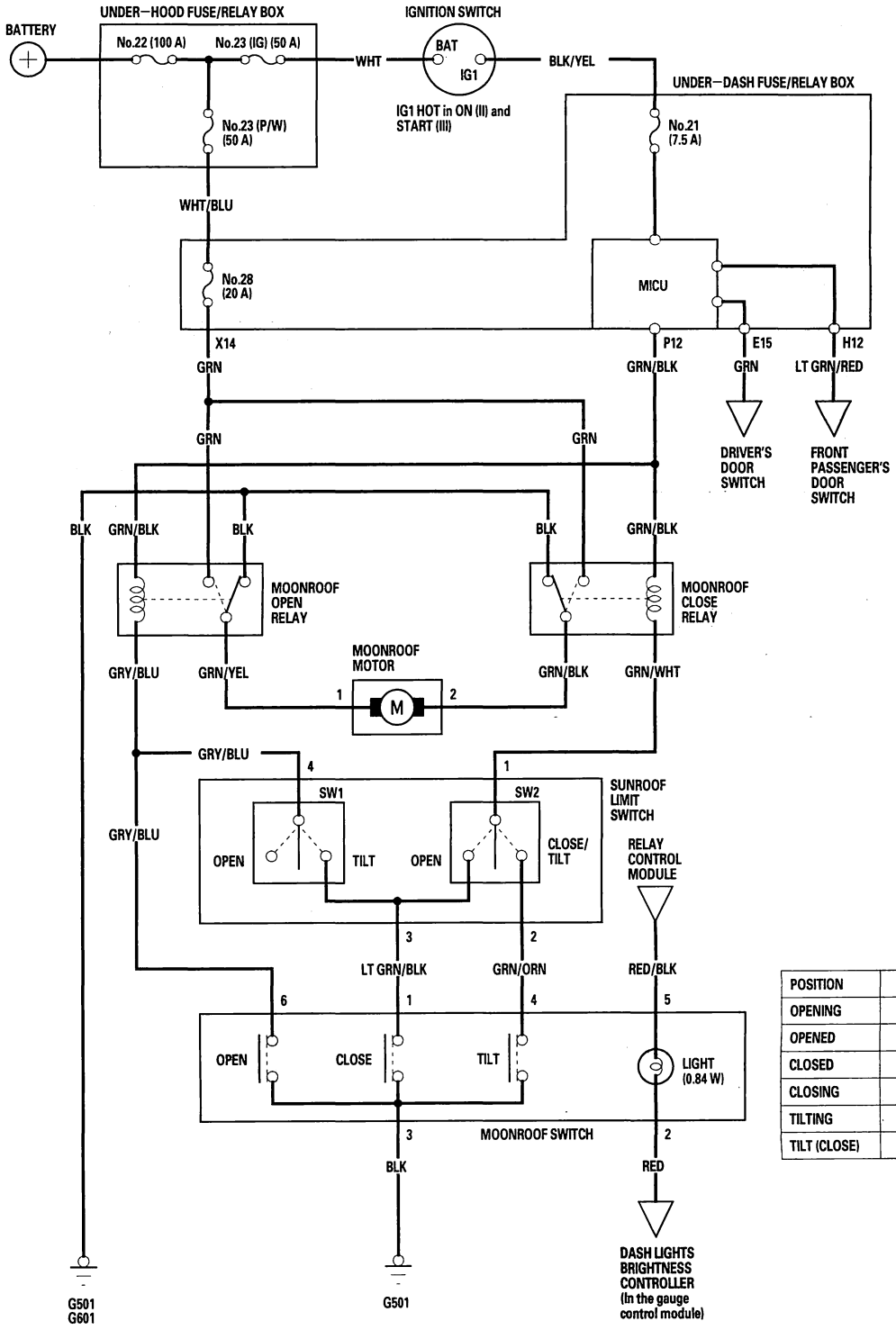

POSITION	SW1	SW2
OPENING	OPEN	OPEN
OPENED	OPEN	OPEN
CLOSED	OPEN	CLOSE/TILT
CLOSING	OPEN	OPEN
TILTING	OPEN	CLOSE/TILT
TILT (CLOSE)	TILT	CLOSE/TILT

BACK

Protected by AR

Moonroof

Circuit Diagram (cont'd)

2-door:

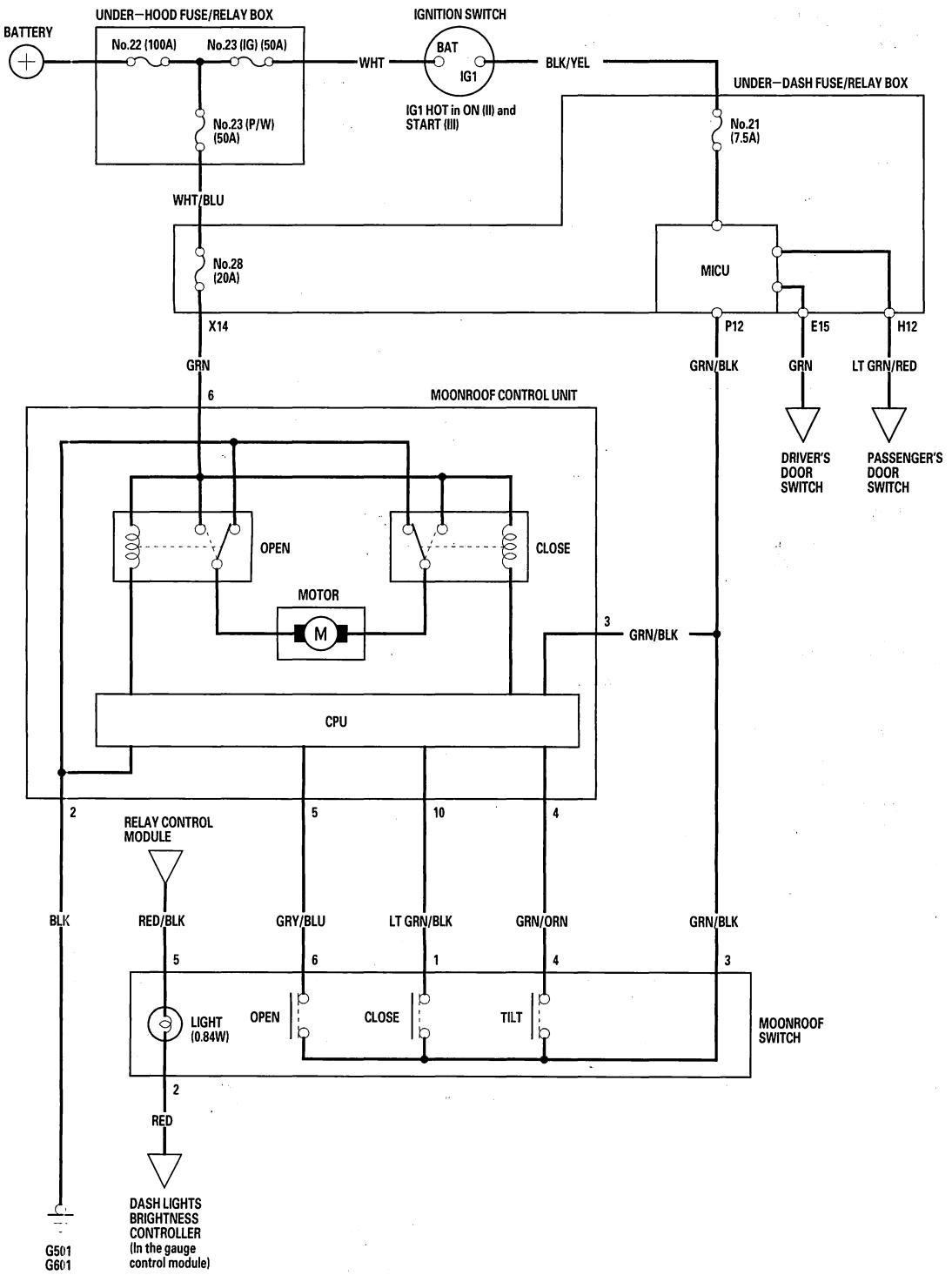

BACK

Protected by AR

Limit Switch Test

4-door

1. Remove the headliner (see page 20-117).
2. Disconnect the 4P connector (A) from the moonroof limit switch (B).

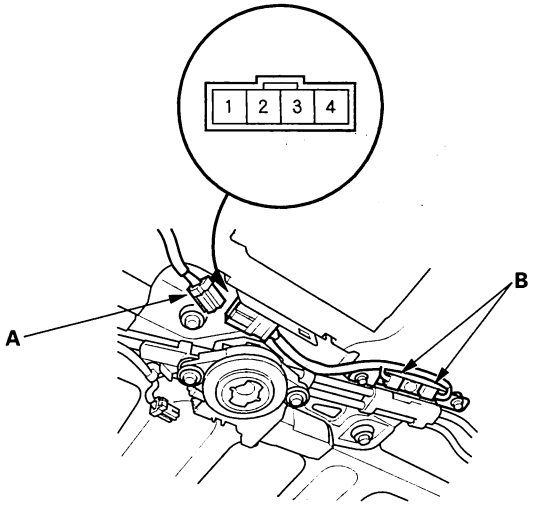

3. Check for continuity between the terminals in each switch position according to the table.

Position \ Terminal	1	2	3	4
TILT	○—○		○—○	
OPEN	○—		—○	
CLOSE	○—○			

4. If the continuity is not as specified, adjust the moonroof limit switch (see page 20-86).
   If the continuity is still not as specified, replace the moonroof limit switch.

Limit Switch Replacement

4-door

1. Remove the headliner (see page 20-117).
2. Mark the position of the moonroof limit switch (A) on the moonroof fame (B).

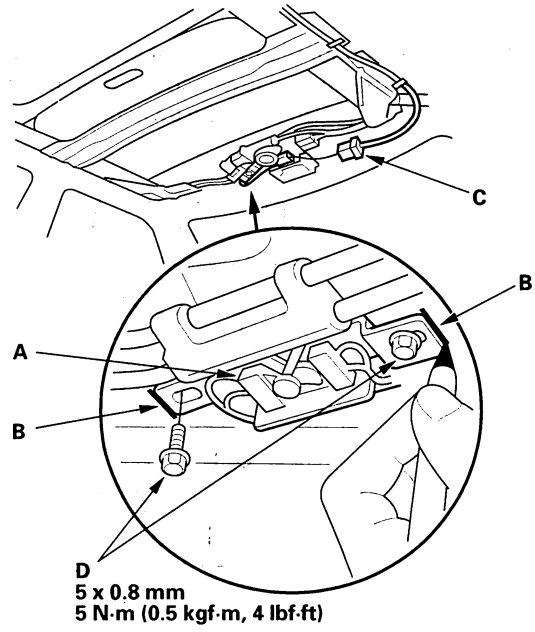

3. Disconnect the 4P connector (C) from the moonroof limit switch.
4. Remove the two mounting bolts (D).
5. Install the switch in the reverse order of removal.
6. Adjust the moonroof limit switch as needed (see page 20-86).

Protected by AR

Moonroof

Switch Test

NOTE: The moonroof can still be operated for about 10 minutes after the ignition switch is turned from the "II" to the "I" or "O" positions, as long as none of the doors are opened. This provides a convenience to parked occupants while offering a degree of security against unwanted or accidental moonroof operation.

1. Carefully push out the moonroof switch (A) from behind the dashboard lower cover, then disconnect the 6P connector (B) from the switch.

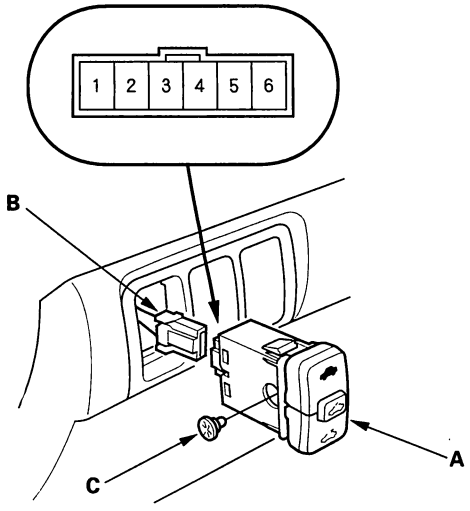

2. Check for continuity between the terminals in each switch position according to the table.

Terminal / Position	2		5	1	3	4	6
CLOSE		○		○	○		
TILT	○		○		○	○	
OPEN		○			○		○

3. If the continuity is not as specified, replace the bulb (C) or the switch.

Motor Test

4-door

1. Remove the headliner (see page 20-117).

2. Disconnect the 2P connector from the moonroof motor.

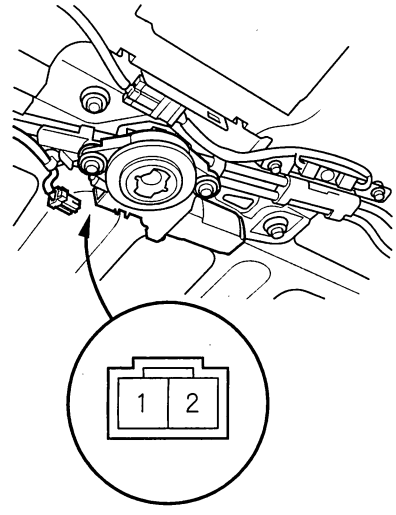

3. Check the motor by connecting power and ground according to the table.

Terminal / Position	1	2
OPEN	⊕	⊖
CLOSE	⊖	⊕

4. If the motor does not run, replace it.

   NOTE: See closing force check (see page 20-87) for motor clutch test.

BACK

Protected by AR

Moonroof Calibration

2-door

NOTE: Moonroof calibration is required if any of the conditions listed below occur:

- The ignition switch is turned OFF while operating the moonroof (pressing the open/close switch). As a countermeasure, if the ignition switch is returned to the ON (II) position within 10 minutes, and moonroof operation is continued, calibration will not necessary.
  NOTE: If a door is opened during the 10 minutes period, the calibration will be required.
- The moonroof is manually operated using the moonroof wrench with the battery dead or disconnected.
- The moonroof motor is replaced with a new one.
- The moonroof motor is removed from the moonroof assembly and operated before it is reinstalled.

Moonroof glass is positioned in the OPEN position (or partially open)

1. Press the moonroof OPEN switch until the moonroof stops in its fully open position.
2. Release the moonroof OPEN switch.
3. Press the moonroof OPEN switch again for about 13 seconds.
   NOTE: Keep pressing the switch even through the moonroof motor continues to function.
4. Calibration is complete. The moonroof will automatically move to the regular preset fully open position and come to stop.

Moonroof glass is positioned in the TILT position

1. Press the moonroof OPEN switch until the moonroof glass stops in its fully open position.
2. Release the moonroof OPEN switch.
3. Press the moonroof OPEN switch for about 13 seconds.
   NOTE: Keep pressing the switch even through the moonroof glass will repeat an inching behavior (moving 40 mm, then stopping for 0.4 seconds)
4. Calibration is complete. The moonroof will automatically move to the regular preset fully open position and come to stop.

Moonroof motor is replaced

1. Open the moonroof to its fully open position manually with the moonroof wrench.
2. Remove the moonroof motor (see page 20-77).
   NOTE: If you have accidentally moved the moonroof glass after the removal of the moonroof motor, return the moonroof to its fully open position.
3. Install the new moonroof motor (see page 20-77).
4. Perform the moonroof OPEN position calibration procedure.
5. Within 5 seconds after completion of the moonroof calibration, press the moonroof OPEN switch again. After 3 seconds the moonroof glass will move toward the fully closed position.
6. Release the moonroof OPEN switch.
   NOTE: The moonroof glass will move toward the fully closed position even though the open switch is being pressed. Allow it to move until it reaches the fully closed position.
   NOTE: Step 5 is only applicable if a new motor is installed, and must not be applied to the original motor. The original motor memorized the initial position data and does not require recalibration.

Protected by AR

Moonroof Control Unit Input Test

2-door

1. Remove the headliner (see page 20-117).
2. Disconnect the 10P connector (A) from the moonroof control unit (B).

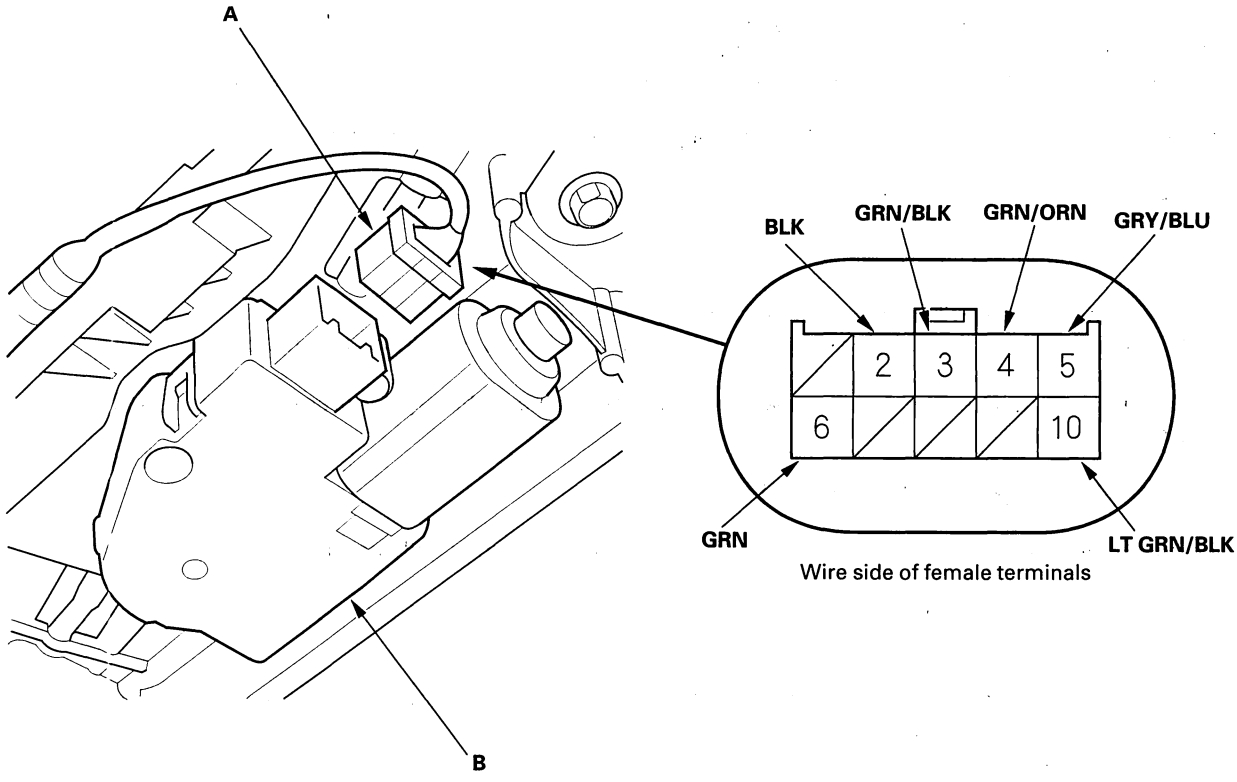

3. Inspect the connector and socket terminals to be sure they are all making good contact.
   - If the terminals are bent, loose or corroded, repair them as necessary, and recheck the system.
   - If the terminals look OK, go to step 4.

BACK

Protected by AR

4. Reconnect the connector, and make these input tests at the connector.

- If any test indicates a problem, find and correct the cause, then recheck the system.
- If all the input tests prove OK, go to step 5.

Cavity	Wire	Test condition	Test: Desired result	Possible cause if result is not obtained
6	GRN	Under all conditions	Check for voltage to ground: There should be battery voltage.	• Blown No. 28 (20 A) fuse in the under-dash fuse/relay box • Faulty under-dash fuse/relay box • An open in the wire
2	BLK	Under all conditions	Check for voltage to ground: There should be less than 1 V.	• Poor ground (G501, G601) • An open in the wire

5. Disconnect the connector from the moonroof control unit, and make these input tests at the connector

- If any test indicates a problem, find and correct the cause, then recheck the system.
- If all the inputs prove OK, the control unit must be faulty; replace it.

3	GRN/BLK	Under all conditions	Check for continuity between the No. 3 terminal and the multiplex integrated control unit P12 terminal: There should be continuity.	An open in the wire
4	GRN/ORN	Moonroof switch in TILT position	Check for continuity between the No. 3 and No. 4 terminals: There should be continuity.	• Faulty moonroof switch • An open in the wire
5	GRY/BLU	Moonroof switch in OPEN position	Check for continuity between the No. 3 and No. 5 terminals: There should be continuity.	• Faulty moonroof switch • An open in the wire
10	LT GRN/BLK	Moonroof switch in CLOSE position	Check for continuity between the No. 3 and No. 10 terminals: There should be continuity.	• Faulty moonroof switch • An open in the wire

Protected by AR

Audio System

Component Location Index

4-door

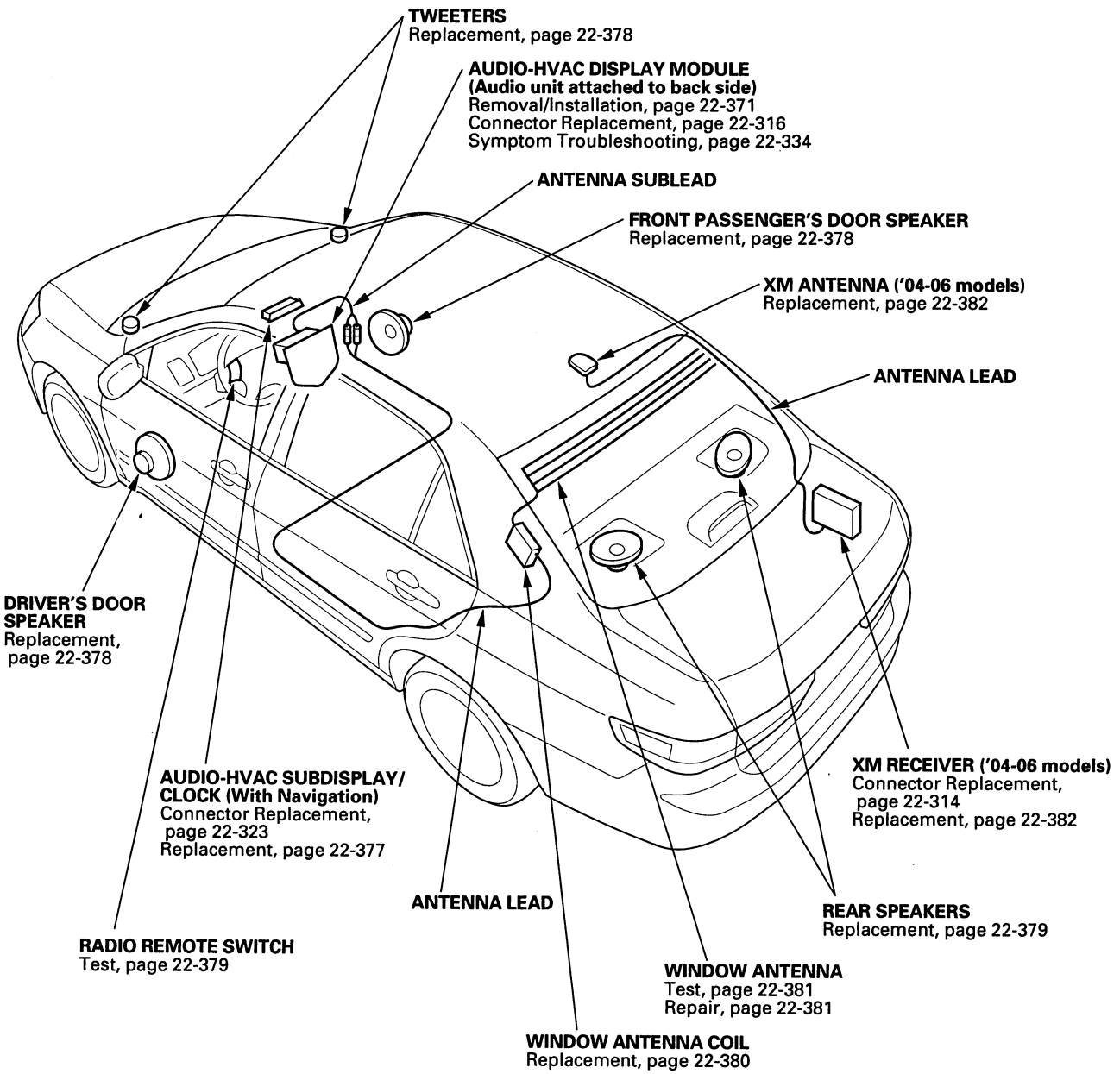

BACK

Protected by AR

2-door

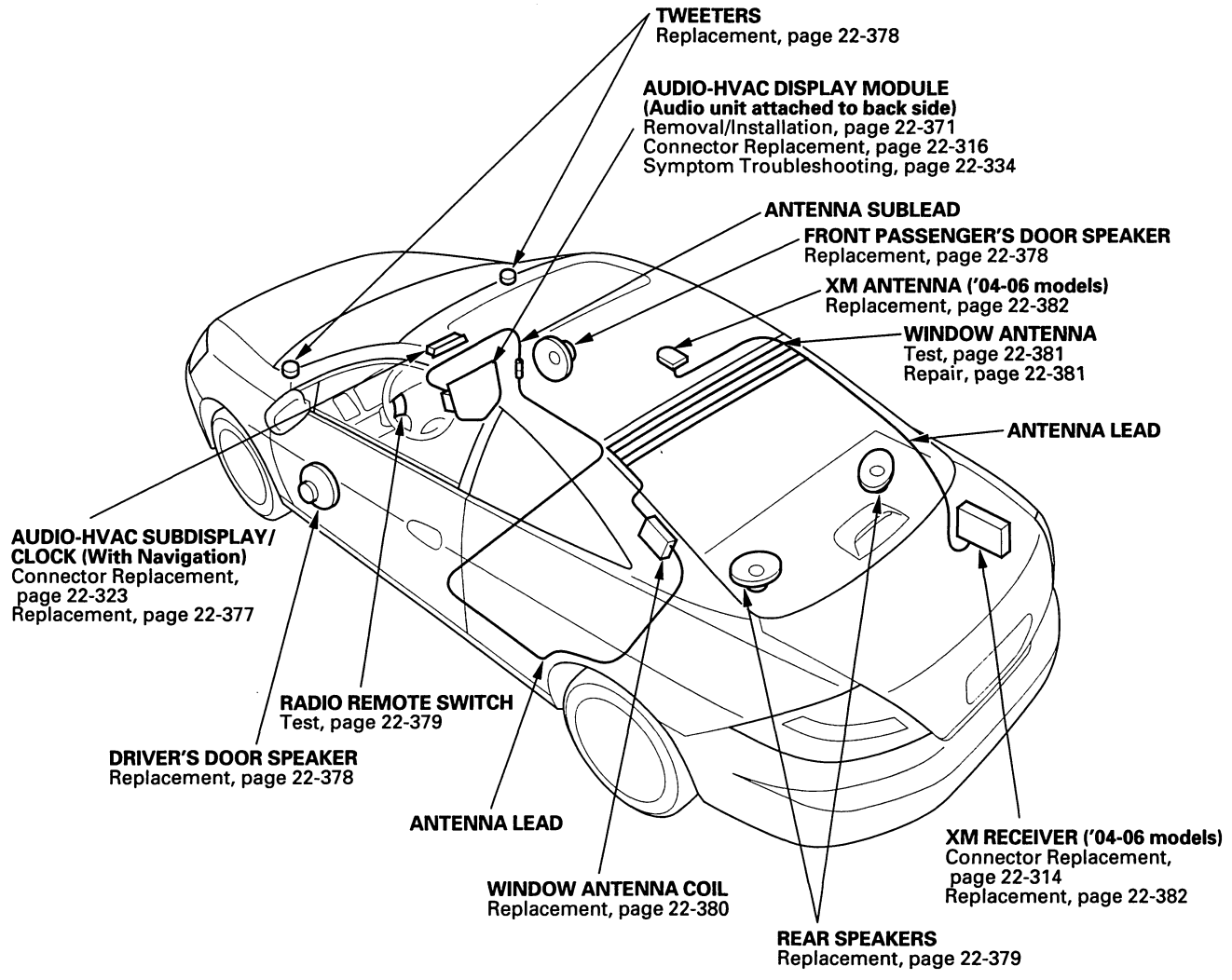

Protected by AR

Audio System

System Description

Overview

The audio unit acts as the "processor" for all audio functions. Selection of the audio functions can be done from the front panel, the audio remote (on steering wheel), or by using the navigation voice control system. The audio display provides the current front and rear audio status. For vehicles with the navigation option, additional audio information is available by touching the audio button. (See the owner's manual for more details.)

Each audio component passes its audio signal to the audio unit. In addition it communicates with the audio unit via the GA-Net bus. Any open connection in this circuit will cause audio and navigation functions to appear inoperative.

The 6CD changer output can be directed to the audio unit.

The XM can be output to the audio unit.

BACK

Protected by AR

System Diagram

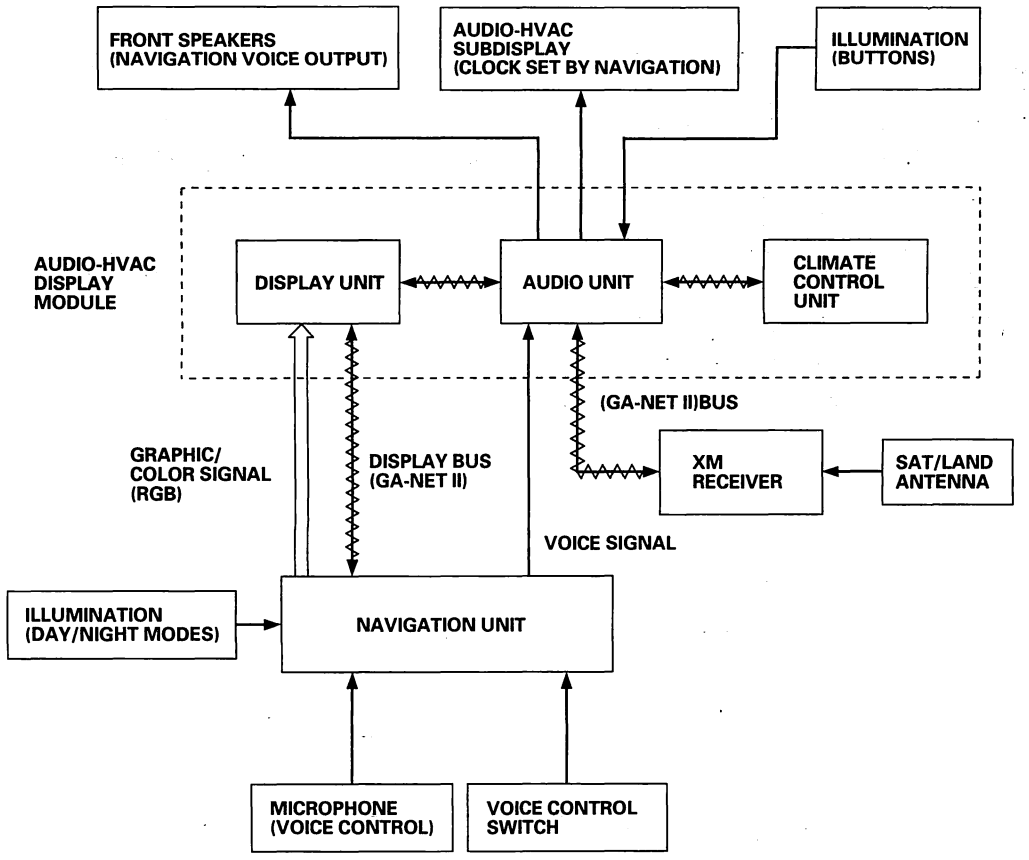

(cont'd)

Protected by AR

System Description (cont'd)

XM Receiver Connector Inputs and Outputs

'04-05 models

Cavity	Wire	Connect to	Cavity	Wire	Connect to
A1	WHT/GRN	Constant power	A8	———	Not used
A2	LT BLU	XM receiver (ACC power)	A9	BLU	Audio unit bus (+)
A3	BLK	Bus ground	A10	RED	Audio unit bus (—)
A4	BRN	Audio shield ground	A11	BLK	XM receiver ground
A5	GRN	Audio unit (Right +)	A12	———	Not used
A6	BLU	Audio unit (Left +)	A13	RED	Audio unit (Right —)
A7	———	Not used	A14	WHT	Audio unit (Left —)

Cavity	Wire	Connect to
B1	———	Terrestrial signal antenna
B2	———	Satellite signal antenna

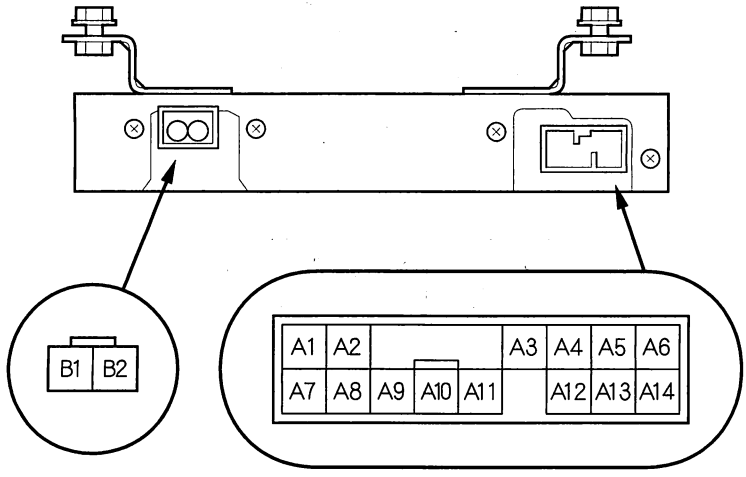

BACK

Protected by AR

'06 model

Cavity	Wire	Connect to	Cavity	Wire	Connect to
A1	WHT/GRN	Constant power	A8	———	Not used
A2	LT BLU	XM receiver (ACC power)	A9	BLU	Audio unit bus (+)
A3	BLK	Bus ground	A10	RED	Audio unit bus (—)
A4	BRN	Audio shield ground	A11	BLK	XM receiver ground
A5	GRN	Audio unit (Right +)	A12	———	Not used
A6	BLU	Audio unit (Left +)	A13	RED	Audio unit (Right —)
A7	———	Not used	A14	WHT	Audio unit (Left —)

Cavity	Wire	Connect to
1	———	XM signal input satellite and ground wave
2	———	XM signal ground

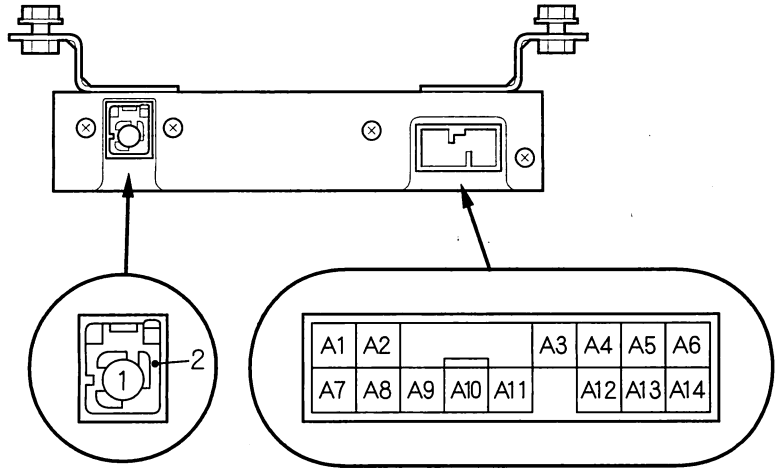

(cont'd)

BACK

Protected by AR

System Description (cont'd)

Audio Unit Connector Inputs and Outputs

When replacing an audio unit connector, match the wires to the cavities listed in the following table.

Without Navigation

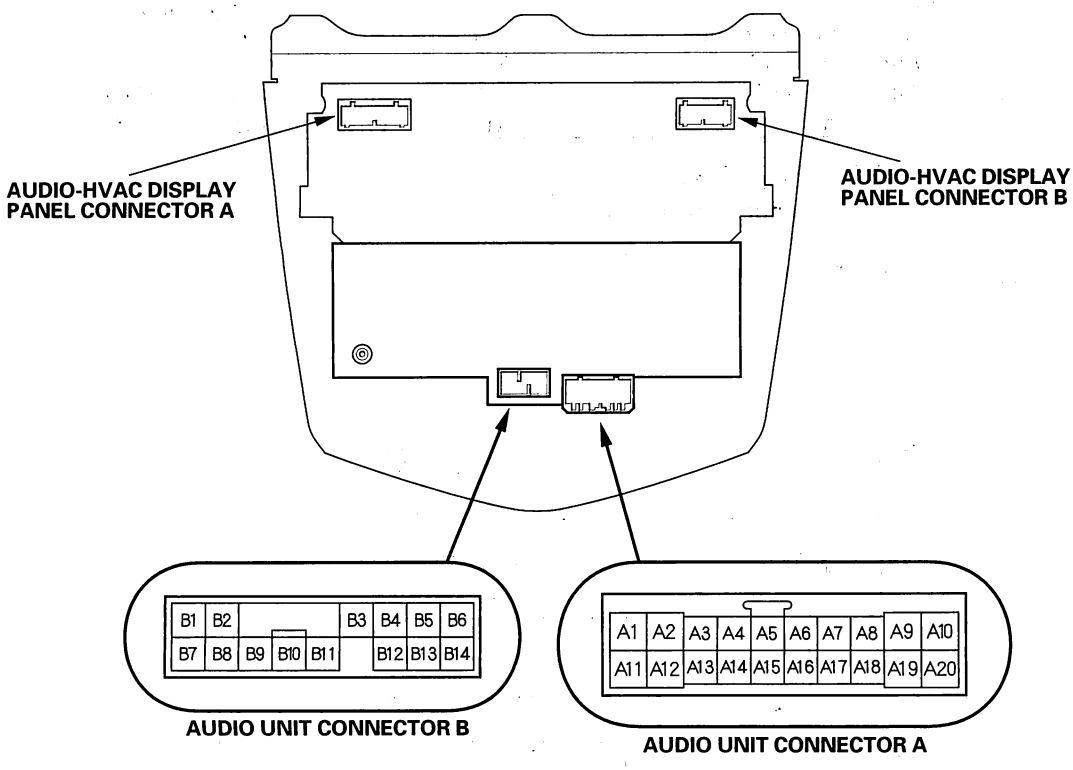

Cavity	Wire	Connect to	Cavity	Wire	Connect to
A1	YEL/GRN	Radio switch (AMP.)	A11	BRN	Radio remote switch ground
A2	YEL/RED	ACC (main stereo power supply)	A12	———	Not used
A3	GRN/RED	Radio remote switch	A13	———	Not used
A4	RED/BLU	(Security input)	A14	———	Not used
A5	PNK	Right rear speaker (+)	A15	BLU/YEL	Right rear speaker (−)
A6	BLU/WHT	Left rear speaker (+)	A16	BLU/BLK	Left rear speaker (−)
A7	GRN/YEL	Front passenger's door speaker (+), Right tweeter (+)	A17	GRY	Front passenger's door speaker (−), Right tweeter (−)
A8	GRN/BLK	Driver's door speaker (+), Left tweeter (+)	A18	LT GRN	Driver's door speaker (−), Left tweeter (−)
A9	RED/BLK	Lights-on signal	A19	RED	Dash lights brightness controller
A10	WHT/GRN	Constant power	A20	BLK	Ground (G504)

BACK

Protected by AR

'04-06 models with XM radio

Cavity	Wire	Connect to	Cavity	Wire	Connect to
B1	WHT	XM receiver constant power	B8	RED/BLK	Lights-on signal
B2	LT BLU	XM receiver (ACC power)	B9	BLU	XM receiver bus (+)
B3	BLK	XM receiver bus ground	B10	GRN	XM receiver bus (−)
B4	BRN	XM receiver audio shield ground	B11	BLK	XM receiver ground
B5	LT GRN	XM receiver (Right +)	B12	RED	Dash lights brightness controller
B6	GRY	XM receiver (Left +)	B13	BRN/YEL	XM receiver (Right −)
B7	YEL	Constant power	B14	BRN/WHT	XM receiver (Left −)

(cont'd)

Protected by AR

System Description (cont'd)

Audio Unit Connector Inputs and Outputs

When replacing an audio unit connector, match the wires to the cavities listed in the following table.

With Navigation

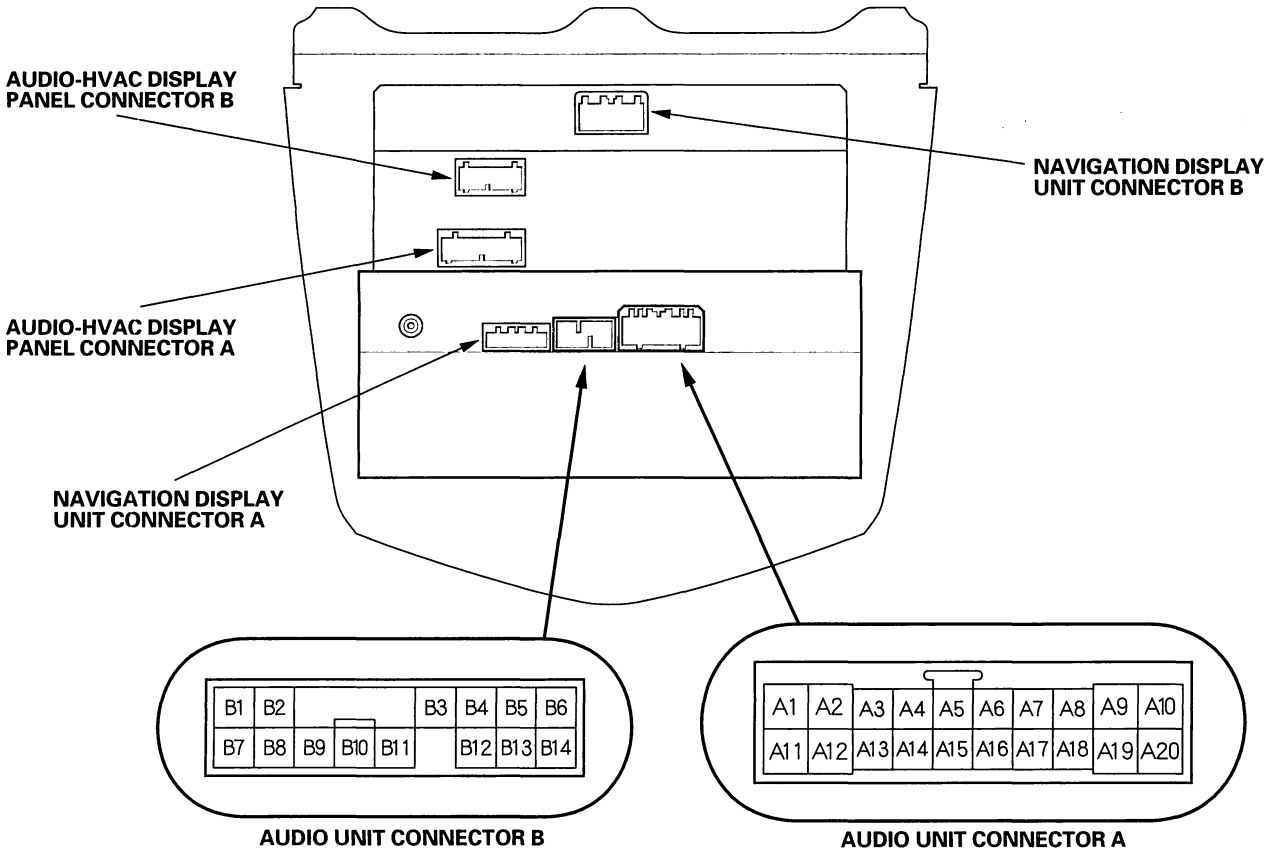

Cavity	Wire	Connect to	Cavity	Wire	Connect to
A1	YEL/GRN	Radio switch (Amp.)	A11	BRN	Radio remote switch ground
A2	YEL/RED	ACC (main stereo power supply)	A12	BLU/RED	Navigation unit (RG GND)
A3	GRN/RED	Radio remote switch	A13	WHT	Navigation unit (RG L+)
A4	RED/BLU	(Security input)	A14	———	Not used
A5	PNK	Right rear speaker (+)	A15	BLU/YEL	Right rear speaker (−)
A6	BLU/WHT	Left rear speaker (+)	A16	BLU/BLK	Left rear speaker (−)
A7	GRN/YEL	Front passenger's door speaker (+), Right tweeter (+)	A17	GRY	Front passenger's door speaker (−), Right tweeter (−)
A8	GRN/BLK	Driver's door speaker (+), Left tweeter (+)	A18	LT GRN	Driver's door speaker (−), Left tweeter (−)
A9	RED/BLK	Lights-on signal	A19	RED	Dash lights brightness controller
A10	WHT/GRN	Constant power	A20	BLK	Ground (G504)

BACK

Protected by AR

Cavity	Wire	Connect to	Cavity	Wire	Connect to
B1	WHT	Constant power	B8	RED/BLK	Lights-on signal (ILL +)
B2	LT BLU	ACC (system)	B9	BLU	BUS (+)
B3	BLK	Ground (BUS)	B10	GRN	BUS (−)
B4	BRN*1	Audio SH ground	B11	BLK	Ground (main)
B5	LT GRN	Audio (R ch +)	B12	RED*2	Lights-on signal (ILL −)
B6	GRY	Audio (L ch +)	B13	BRN/YEL	Audio (R ch −)
B7	YEL	Constant power	B14	BRN/WHT	Audio (L ch −)

* 1: '04-06 models
* 2: EX-L model

(cont'd)

Protected by AR

System Description (cont'd)

Audio Unit Connector Inputs and Outputs

Navigation type printed circuit board connector

Terminal	Signal	Terminal	Signal
1	SWD-VDD	14	D-GND
2	CD-LED-G	15	CD-LED-R
3	ANTI-IND	16	EJECT
4	TUNE VOL-UP	17	TUNE VOL-DN
5	KEY-CLK	18	KEY-DATA
6	KEY-IN	19	KEY PS
7	ENC VOL-UP	20	ENC VOL-DN
8	IS-BUS-DATA	21	PW SW
9	LAMP +B	22	IS-BUS-FLAME
10	LAMP-RET	23	LAMP +B
11	IGN-DET	24	LAMP-RET
12	BUS+	25	P-GND
13	P-GND	26	BUS−

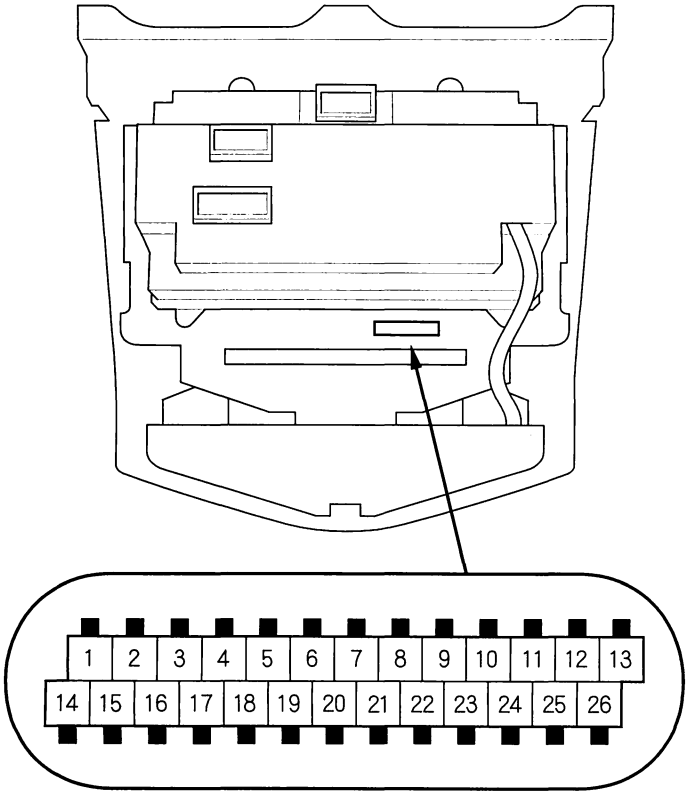

BACK

Protected by AR

6 CD type printed circuit board connector

10P Connector

Terminal	Signal	Terminal	Signal
1	AUDIO-GND	6	VDD 5V
2	Power switch	7	SEC-LED
3	ILLUMI-GND 4	8	RED-LED
4	ILLUMI 8V-4	9	GREEN-LED
5	VOL-B	10	VOL-A

20P Connector

Terminal	Signal	Terminal	Signal
1	ILLUMI-GND-1	11	ILLUMI 8V-1
2	ILLUMI-GND-3	12	LCD-CK
3	ILLUMI 8V-3	13	LCD-CE
4	ILLUMI-GND-2	14	LCD-DO
5	ILLUMI 8V-2	15	ACC 5V
6	SET4	16	LCD-GND
7	SET3	17	LCD 8V
8	SET2	18	AC-DATA
9	SET1	19	EJECT switch
10	Not used	20	LCD-DI

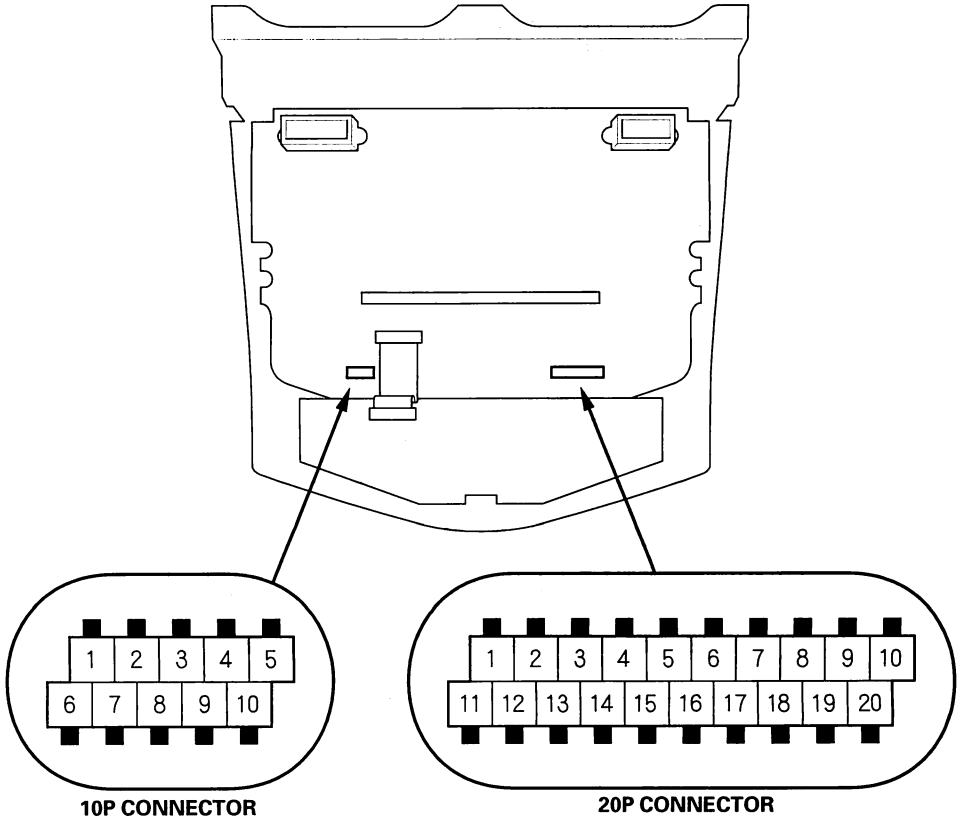

(cont'd)

BACK

Protected by AR

System Description (cont'd)

Audio Unit Connector Inputs and Outputs

Single CD type printed circuit board connector

Terminal	Signal	Terminal	Signal
1	EJECT	13	PW SW
2	ENC VOL-DN	14	ENC VOL-UP
3	LCD-RST	15	LCD-CE
4	LCD-DO	16	LCD-CLK
5	D-GND	17	LCD-DI
6	IGN DET	18	SED-VDD
7	I/S-BUS-DATA	19	CD-LED
8	P-GND	20	I/S-BUS-FRAME
9	P-GND	21	P-GND
10	LCD LAMP +B	22	LCD LAMP-RET
11	LAMP-RET	23	LAMP-RET
12	LAMP +B	24	LAMP +B

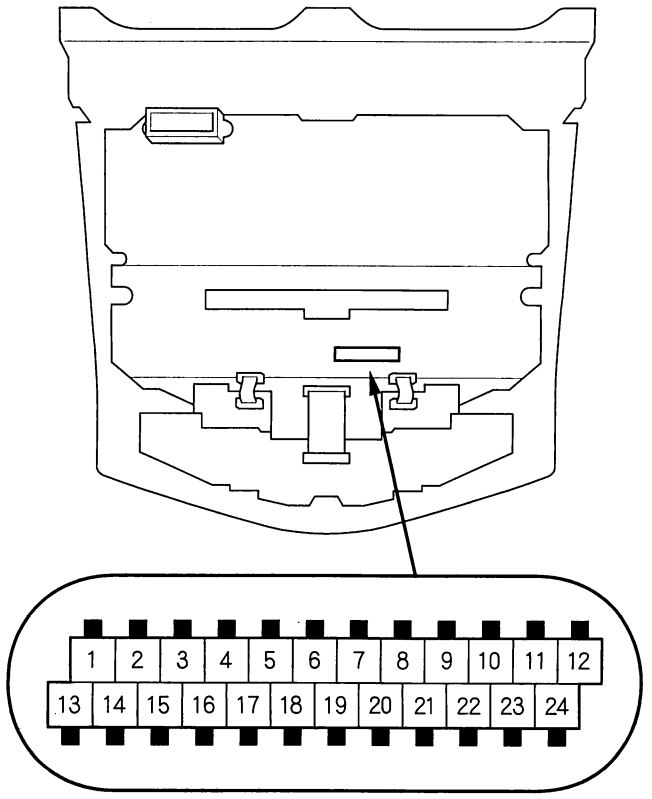

BACK

Protected by AR

Audio-HVAC Subdisplay/Clock Connector Inputs and Outputs

When replacing an audio unit connector, match the wires to the cavities listed in the following table.

With Navigation

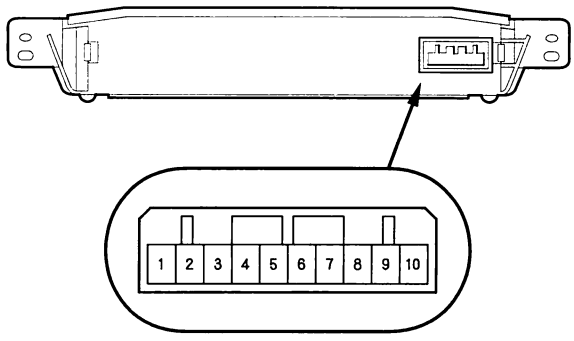

Cavity	Wire	Connect to	Cavity	Wire	Connect to
1	BLK	GND (5 V)	6	BLU/RED	DATA
2	BLU/ORN	5 V	7	BLU	CE (LOAD)
3	BLK	GND	8	GRY	SHIELDING GND
4	YEL/RED	RESET	9	RED	LCD BACKLIGHT (+)
5	YEL	CLOCK	10	GRN	LCD BACKLIGHT (−)

Protected by AR

BACK

Protected by AR

Circuit Diagram

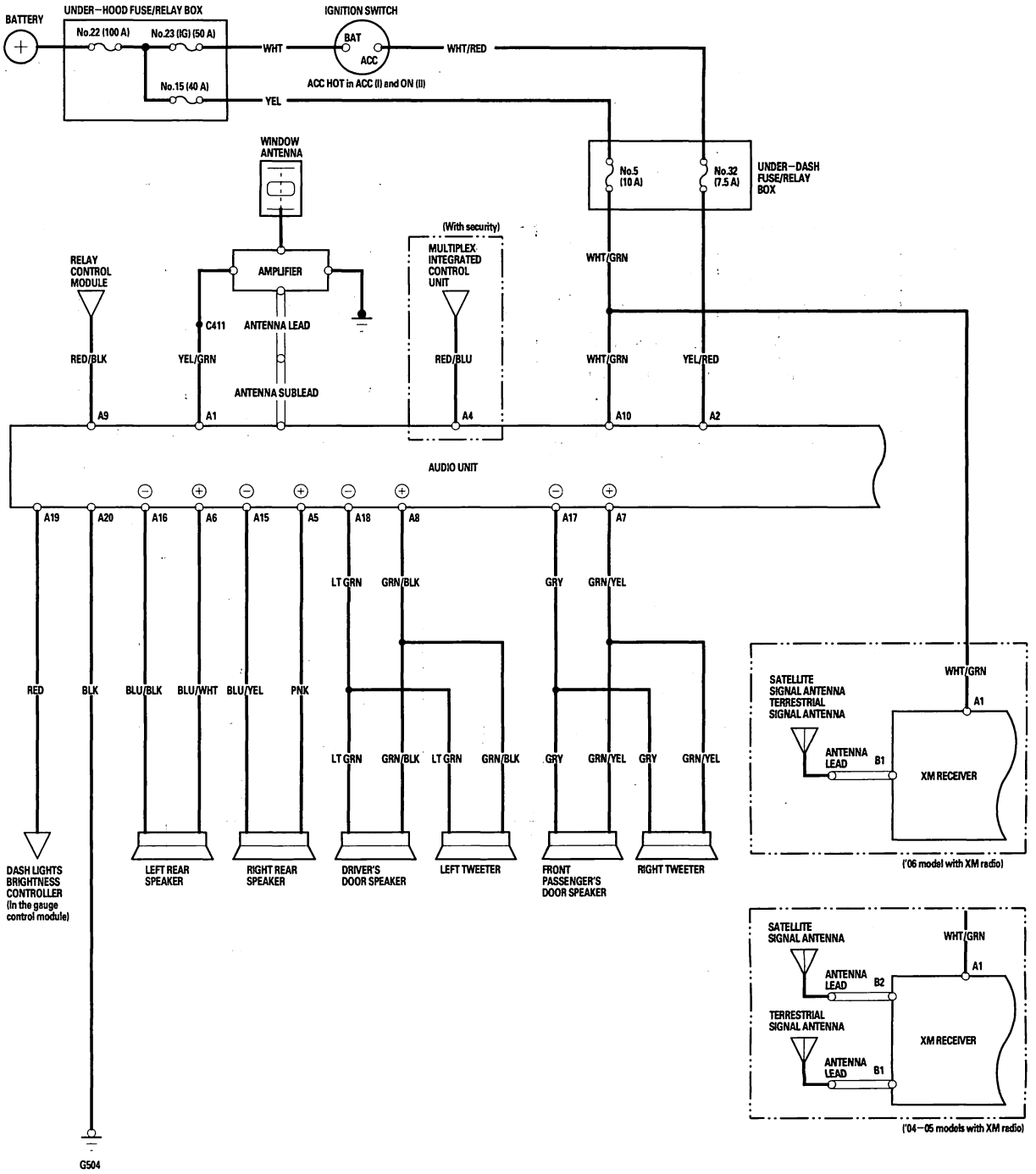

(cont'd)

BACK

Protected by AR

Audio System

Circuit Diagram (cont'd)

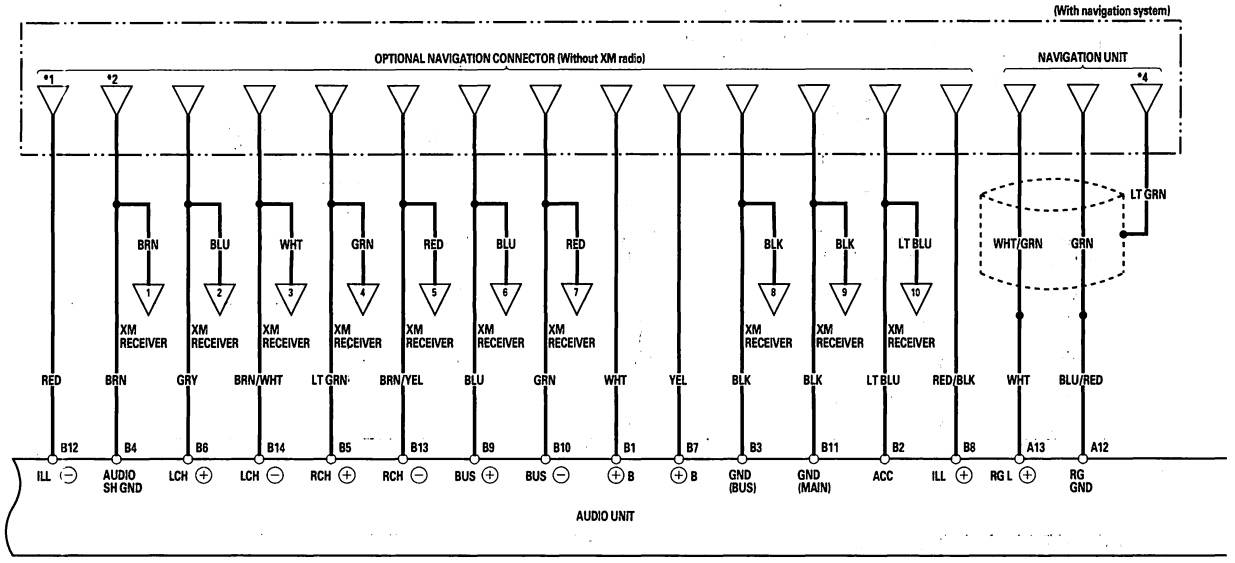

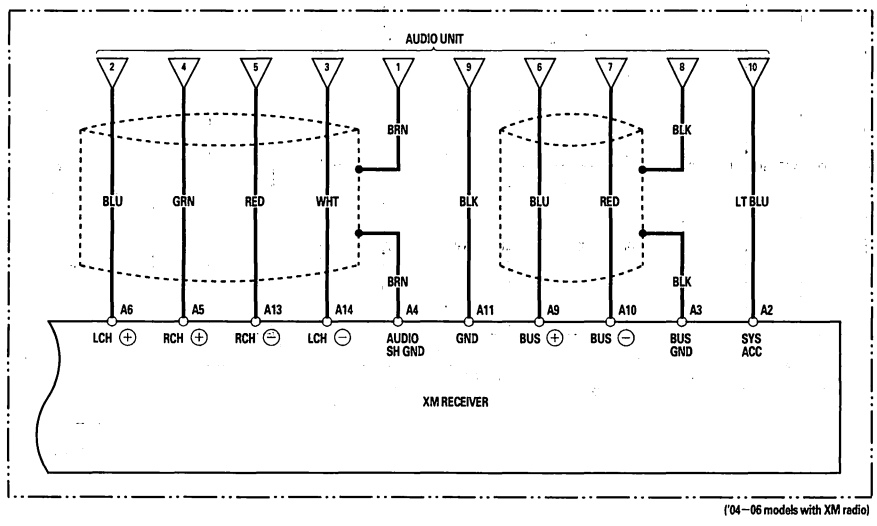

('04 – 06 models with XM radio)

BACK

Protected by AR

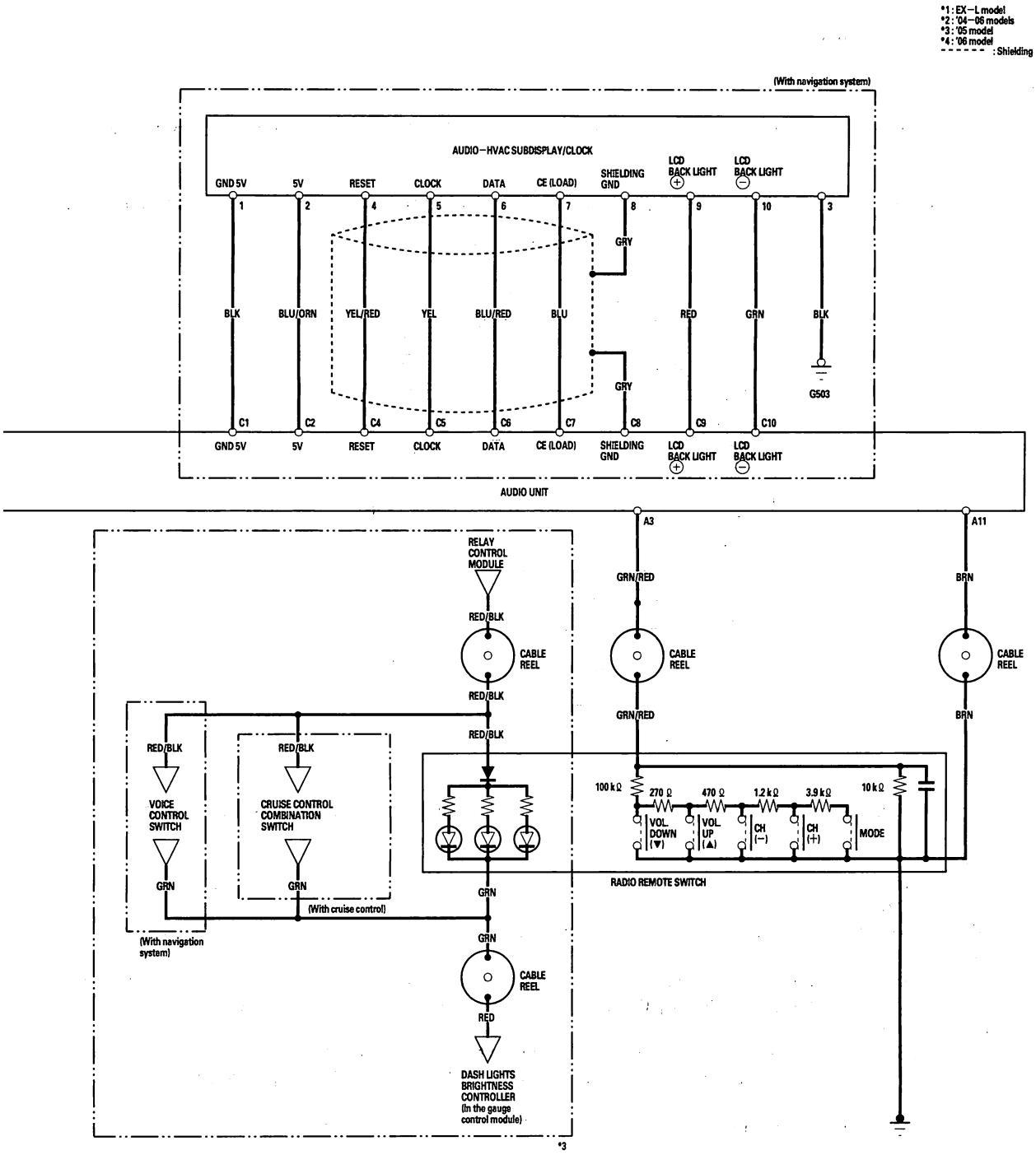

BACK

Protected by AR

Self-diagnostic Function

Starting the self-diagnostic function (with Navigation)

1. Turn the ignition switch to ACC (I) or ON (II).
2. Turn the audio unit off.
3. While holding down the upper part of both the "CH/DISK" and "SEEK/SKIP" bars at the same time, press the VOL/PWR knob.
4. "DIAG" will appear on the audio-HVAC subdisplay/clock to indicate you have entered the self-diagnostic mode.



5. By pressing a button while "DIAG" is displayed, the input will trigger a mode that is assigned to that switch.

   AM/FM button
   Entire LCD lighting mode: Turns on the entire LCD to show the presence or absence of an LCD failure.
   CD/AUX or CD/SAT button
   Entire LCD light-out mode: Turns off the entire LCD to show the presence or absence of an LCD failure.
   SEEK SKIP bar (▶▶I)
   Display IS-BUS communication verification status: Displays the verification of the communication between the climate control unit and Navigation-display (toggles between "nVd" and "AC" every 5 seconds).
   SEEK SKIP bar (I◀◀)
   Display 12C-BUS communication verification status: Displays the verification of the communication among the display, the EEPROM, and the tuner (toggles between "DSP", "EEP" and "TnR" every 5 seconds).

6. The self-diagnostic function will end when the audio unit is turned off, or the ignition switch is turned off.

BACK

Protected by AR

Display Specifications

Entire LCD lighting
AM/FM Display



IS-BUS communication verification status
SEEK/SKIP Display (A/C Bus OK)
(▶▶|)



SEEK/SKIP Display (Navigation Bus OK)
(▶▶|)

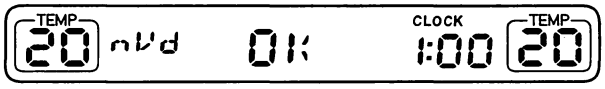

SEEK/SKIP Display (Display Bus OK)
(|◀◀)



SEEK/SKIP Display (EEPROM Bus OK)
(|◀◀)



SEEK/SKIP Display (Tuner Bus OK)
(|◀◀)



If Bus faulty indicated, check for loose or poor connections.

Entire LCD lights-outs
CD/AUX ('03 model) or CD/SAT ('04 model)

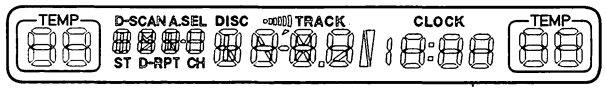

SEEK/SKIP Display (A/C Bus Faulty)
(▶▶|)

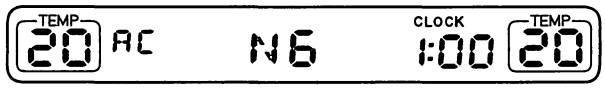

SEEK/SKIP Display (Navigation Bus Faulty)
(▶▶|)

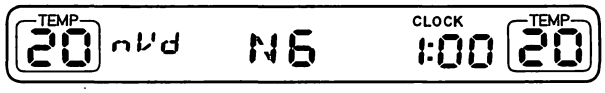

SEEK/SKIP Display (Display Bus Faulty)
(|◀◀)

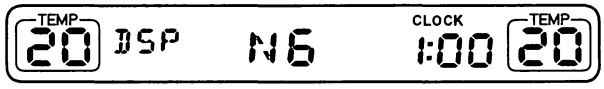

SEEK/SKIP Display (EEPROM Bus Faulty)
(|◀◀)

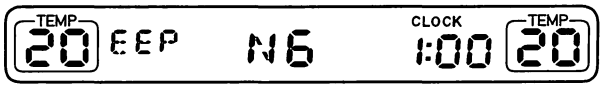

SEEK/SKIP Display (Tuner Bus Faulty)
(|◀◀)

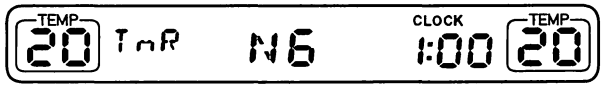

Protected by AR

Self-diagnostic Function (cont'd)

Starting the self-diagnostic function (without Navigation)

1. Turn the ignition switch to ACC (I) or ON (II).
2. Turn the audio unit ON.
3. While holding down both the "Preset 1" and "Preset 6" buttons simultaneously, press the AUDIO PWR knob.
4. "DIAG" will appear on the audio unit display to indicate you have entered the self-diagnostic mode.



5. By pressing a button while "DIAG" is displayed, the input will trigger a mode that is assigned to that button.

   Preset 3 button
   Entire LCD lighting mode: Turns on the entire LCD to show the presence or absence of an LCD failure.
   Preset 4 button
   Entire LCD lights-out mode: Turns off the entire LCD to show the presence or absence of an LCD failure.

6. The self-diagnostic function will end when the audio unit is turned off, or the ignition switch is turned off.

BACK

Protected by AR

Display Specifications

Entire LCD lighting
Preset 3 Display

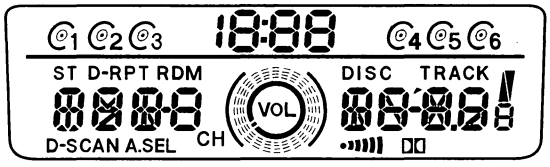

Entire LCD lights-outs
Preset 4 Display

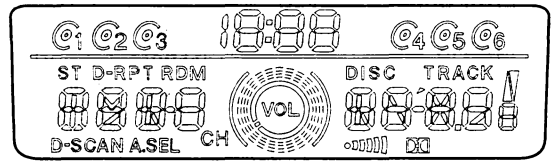

12C-BUS communication verification status
Display (Display Bus OK)

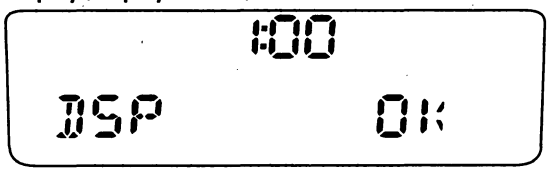

Display (Display Bus Faulty)

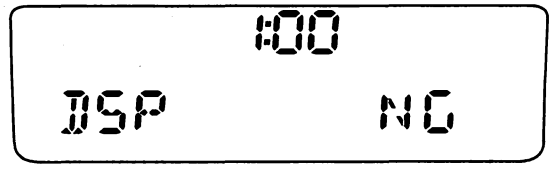

Display (EEPROM Bus OK)

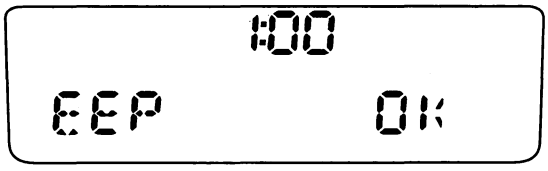

Display (EEPROM Bus Faulty)

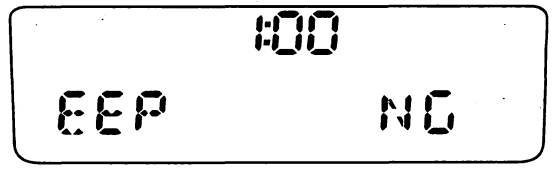

Display (Tuner Bus OK)

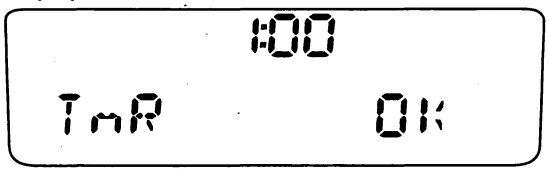

Display (Tuner Bus Faulty)

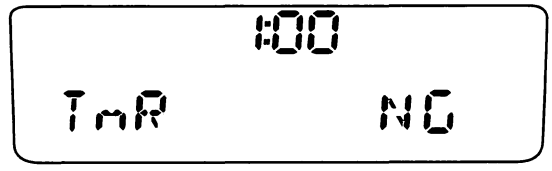

If Bus faulty indicated, check for loose or poor connections.

Protected by AR

Error Codes

The audio system displays error codes when a problem is detected with the disc changer, the disc, the XM radio, or the anti-theft code.

Error Code Displayed	Possible Cause	Solution
DISC	Cannot read disc.	Eject the disc and try another one.
DISC ERROR	There is a porblem with the disc player. A common problem is disc labels coming off the disc in the player.	Try to eject the disc and try another one. If there is still a problem, replace the audio unit.
DISC FORMAT	A disc was inserted that has a format that is not recognized.	Eject the disc and try another one.
DISC-H	Disc player is hot. This can happen if the vehicle is parked out in the hot sun all day.	Park the vehicle in a cooler place for awhile and try the disc player again. If the error code is still present, try another disc. If the error code is still present, replace the audio unit.
LOADING	XM radio is acquiring audio or program information.	Wait until the radio has received the information.
XM OFF AIR	XM channel not in service.	Try another XM channel.
XM NO SIGNAL	Loss of signal.	Both terrestrial and satellite antennas have lost signal. Park the vehicle outside with a clear view of the southern horizon.
XM UPDATING	XM radio is receiving information update from the network.	This message will disappear once the update is done.
XM ANTENNA	XM antenna error.	Repair the open or short in the terrestrial or satellite antenna. Substitute the XM antenna and recheck. If the error is gone, replace the original XM antenna. If the error is still present, replace the antenna lead.
————	No signal from XM.	Check known-good vehicle with XM radio. If the known-good vehicle has the same symptoms, contact XM at (800) 852-9090.
ERR 1	Anti-theft code mismatch (1st try).	Enter the correct anti-theft code.
ERRE	Anti-theft code mismatch (10th try).	Remove fuse No. 5 (20 A) in the under-dash fuse/relay box, then reinsert it. You will have 10 more tries to enter the correct anti-theft code.

BACK

Protected by AR

Symptom Troubleshooting Index

Symptom	Diagnostic procedure	Also check for
Poor radio reception or interference	Symptom Troubleshooting (see page 22-334)	• Antenna lead short or open in the wire • Window antenna open
Disc changer does not move between discs (with navigation)	Symptom Troubleshooting (see page 22-336)	
Radio preset memory is lost	Symptom Troubleshooting (see page 22-337)	• Battery condition • Battery cable condition
XM radio preset memory is lost ('04-06 models)	Symptom Troubleshooting (see page 22-338)	
Power will not turn OFF	Symptom Troubleshooting (see page 22-339)	
No sound is heard from speakers (display is normal)	Symptom Troubleshooting (see page 22-339)	
Poor or no sound with XM radio ('04-06 models)	Symptom Troubleshooting (see page 22-341)	
XM radio display is blank and no station information is displayed ('04-06 models)	Symptom Troubleshooting (see page 22-342)	
Audio disc does not play	Symptom Troubleshooting (see page 22-344)	
Audio disc skips	Symptom Troubleshooting (see page 22-344)	Tire pressure (over inflated)
Radio remote switch does not work properly	Symptom Troubleshooting (see page 22-345)	
Volume does not change (with navigation or single CD type)	Symptom Troubleshooting (see page 22-347)	
Volume does not change (6 CD type)	Symptom Troubleshooting (see page 22-348)	
Audio disc does not load	Symptom Troubleshooting (see page 22-349)	
Audio disc does not eject (with navigation or single CD type)	Symptom Troubleshooting (see page 22-350)	
Audio disc does not eject (6 CD type)	Symptom Troubleshooting (see page 22-351)	
Disc changer does not load all six discs	Symptom Troubleshooting (see page 22-352)	
Audio-HVAC display module switches do not work	Symptom Troubleshooting (see page 22-352)	
Disc LED does not turn ON or OFF	Symptom Troubleshooting (see page 22-353)	
Power switch will not turn ON (with navigation or single CD type)	Symptom Troubleshooting (see page 22-354)	
Power switch will not turn ON (6 CD type)	Symptom Troubleshooting (see page 22-356)	
Display is missing information (6 CD type)	Symptom Troubleshooting (see page 22-358)	
Audio-HVAC subdisplay/clock does not display (with navigation)	Symptom Troubleshooting (see page 22-359)	
Audio display and controls are dim, no back lighting (LCD segments can be read)	Symptom Troubleshooting (see page 22-360)	
No display appears on the screen (LCD segments cannot be read)	Symptom Troubleshooting (see page 22-360)	
Security indicator does not work properly	Symptom Troubleshooting (see page 22-361)	

Protected by AR

Symptom Troubleshooting

Poor radio reception or interference

NOTE: Check the radio reception in an open area. Poor reception/interference can be caused by the following:
- The radio station is far away.
- A tall building, a mountain, or high-voltage power line is nearby.

1. Check if each radio station can be received normally. Compare the radio reception/interference to another vehicle of the same model and trim level in the exact same conditions.

   Are they the same?

   YES—Operation is normal. ■

   NO—Go to step 2.

2. Check if the radio reception/interference is the same in several locations.

   Is the reception/interference the same?

   YES—Go to step 3.

   NO—Multipath interference or weak station. Operation is normal. ■

3. Check the reception/interference when the rear window defogger is on.

   Is the reception poor with the rear window defogger on?

   YES—Check for a break in the rear window defogger grid (see page 22-381), a poor connection, or a faulty antenna coil (see page 22-380). ■

   NO—Go to step 4.

4. Check to see if the problem is interference while the engine is running.

   Is there noise (static or while) with the engine running?

   YES—Check the antenna and radio grounds. If OK, check the charging system and the ignition system. ■

   NO—Go to step 5.

5. Wrap aluminum foil (A) around the tip of a tester probe (B) as shown.

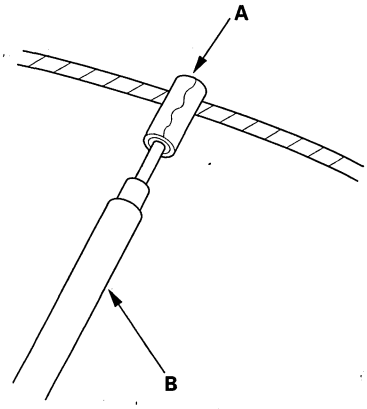

6. Check for continuity by touching one tester probe to the window antenna terminal (A), and move the other tester probe along the antenna wires.

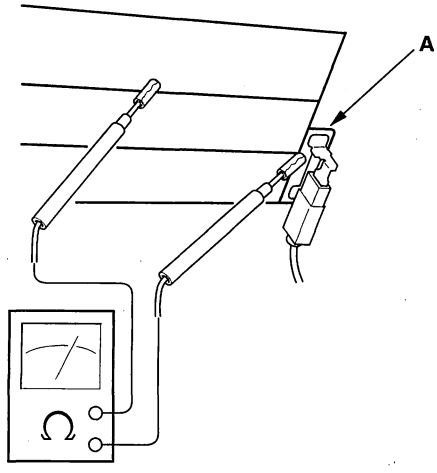

Is there continuity in all sections of the antenna?

YES—Go to step 7.

NO—Repair the antenna wires (see page 22-381). ■

BACK

Protected by AR

7. Turn the radio ON, and measure the voltage between antenna amplifier connector A terminal 1 and body ground.

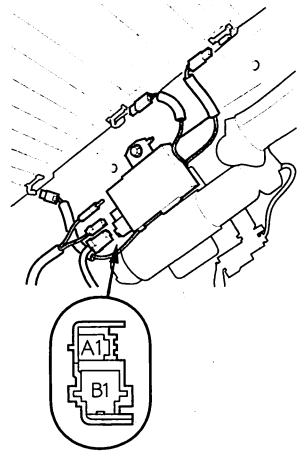

Is there 12 V?

YES—Go to step 8.

NO—Go to step 13.

8. Remove the audio-HVAC display module, and disconnect the antenna lead.

9. Disconnect the antenna lead from the antenna amplifier.

10. Check for continuity between the antenna cable center pin at the audio unit lead and the antenna cable center pin at the antenna amplifier lead.

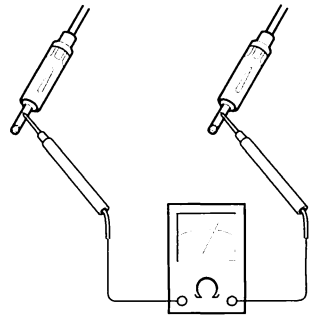

Is there continuity?

YES—Go to step 11.

NO—Replace the antenna cable. ■

11. Check for continuity between the shield surface of the audio unit lead and the antenna cable shield surface of the antenna amplifier lead.

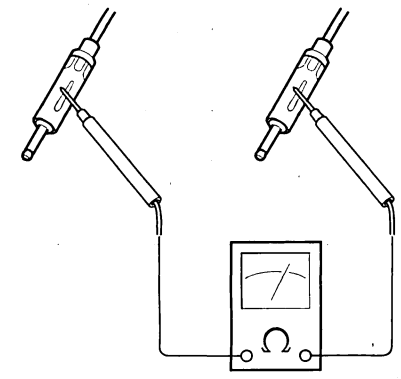

Is there continuity?

YES—Go to step 12.

NO—Replace the antenna cable. ■

12. Check for continuity between the antenna cable center pin and the surface of the antenna lead.

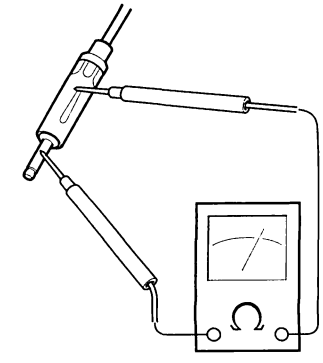

Is there continuity?

YES—Replace the antenna cable. ■

NO—Replace the antenna amplifier and recheck. If the reception is still poor, replace the audio unit. ■

(cont'd)

Protected by AR

Symptom Troubleshooting (cont'd)

13. Remove the audio-HVAC display module and disconnect the radio unit connector A (20P).

14. Check for continuity between audio unit connector A (20P) terminal No. 1 and antenna coil connector A terminal No. 1.

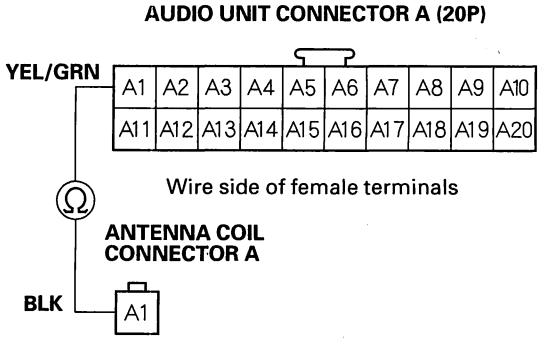

Is there continuity?

YES—Substitute a known-good audio-HVAC display module and retest. ■

NO—Repair the open in the wire between the audio unit and the antenna coil. ■

Disc changer does not move between discs (with navigation)

1. Insert the six CDs into the audio unit and see if the changer moves between CDs.

   Does the changer operate normally?

   YES—Intermittent failure, the CD changer is OK at this time. ■

   NO—Go to step 2.

2. Insert six different CDs into the audio unit.

   Does the changer operate normally?

   YES—At least one of the original CDs is faulty. ■

   NO—Replace the audio unit. ■

BACK

Protected by AR

Radio preset memory is lost

1. Set each of the radio station preset buttons.

   Do each of the preset buttons set properly?

   YES—Go to step 2.

   NO—Replace the audio-HVAC display module. ■

2. Turn the ignition switch OFF for 1 minute, then turn it back to ON (II).

3. Test all the preset buttons for proper recall operation.

   Do the preset buttons recall the set radio stations?

   YES—System is normal at this time. Check connections at the audio unit. ■

   NO—Go to step 4.

4. Inspect the under-dash fuse/relay box No. 5 (10 A) fuse.

   Is it OK?

   YES—Go to step 5.

   NO—Replace the fuse and reset. If it fails again, repair the short to ground in the harness. ■

5. Remove the audio-HVAC display module (see page 22-371).

6. Turn the ignition switch ON (II).

7. Measure voltage between the audio unit connector A10 terminal and body ground.

AUDIO UNIT CONNECTOR A (20P)

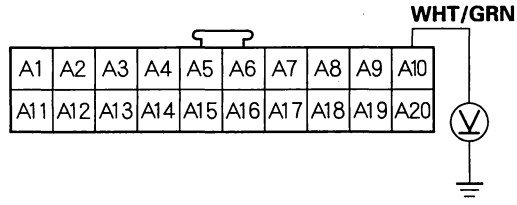

Wire side of female terminals

Is there battery voltage?

YES—Go to step 8.

NO—An open wire between the under-dash fuse/relay box and audio unit A10 terminal. ■

8. Check for continuity between the audio unit A20 terminal and body ground.

AUDIO UNIT CONNECTOR A (20P)

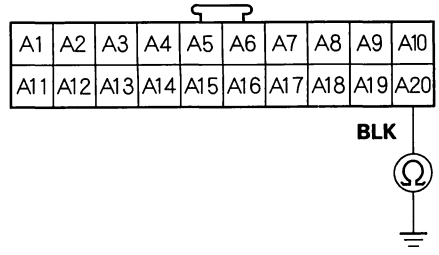

Wire side of female terminals

Is there continuity?

YES—Replace the audio-HVAC display module. ■

NO—An open wire between the audio unit A20 terminal and body ground (G504). ■

Protected by AR

Symptom Troubleshooting (cont'd)

XM radio preset memory is lost ('04-06 models)

1. Set each of the XM radio channel preset buttons.

   Do each of the XM radio channel preset buttons set properly?

   YES—Go to step 2.

   NO—Replace the audio-HVAC display module (see page 22-371).■

2. Turn OFF the ignition switch for 1 minute, then turn it back to ON (II).

3. Test all of the XM radio channel preset buttons for proper recall operation.

   Do the preset buttons recall the set radio stations?

   YES—System is normal at this time. Check connections at the audio unit.■

   NO—Go to step 4.

4. Turn the ignition switch to LOCK (0).

5. Measure voltage between audio unit connector A (20P) No. 10 terminal and body ground.

AUDIO UNIT CONNECTOR A (20P)

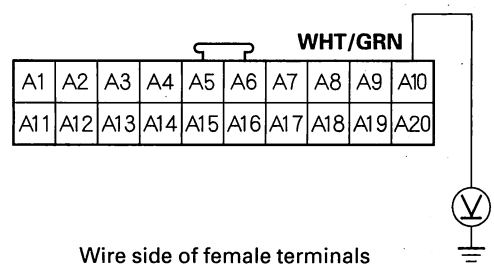

Wire side of female terminals

Is there battery voltage?

YES—Go to step 6.

NO—Repair an open in the wire between the driver's under-dash fuse/relay box and audio unit connector A (20P) No. 10 terminal.■

6. Check for voltage between audio unit connector A (20P) No. 20 terminal and body ground.

AUDIO UNIT CONNECTOR A (20P)

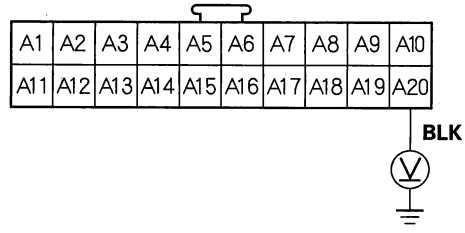

Wire side of female terminals

Is there less than 0.1 V?

YES—Replace the audio unit.■

NO—Repair an open in the wire between audio unit connector A (20P) No. 20 terminal and body ground (G504).■

BACK

Protected by AR

Power will not turn OFF

1. With the ignition switch ON (II), push the power switch OFF, or turn the ignition switch OFF to see if the audio unit turns OFF.

   Is the audio unit OFF?

   YES—Operation is normal. ■

   NO—Go to step 2.

2. Turn the ignition switch OFF.

3. Remove the audio unit (see page 22-372). Disconnect the audio unit connector A (20P).

4. Measure the voltage between the No. 2 terminal of the audio unit connector A (20P) and body ground.

AUDIO UNIT CONNECTOR A (20P)

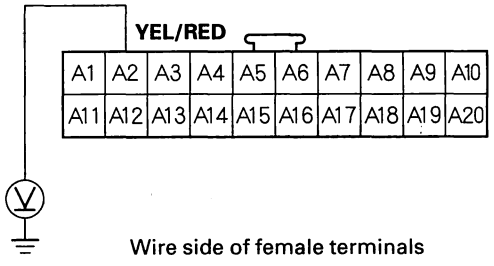

Wire side of female terminals

Is there voltage?

YES—Check for short to power on YEL wire. ■

NO—Replace the audio unit. ■

No sound is heard from speakers (display is normal)

NOTE:
- Set the fader and balance positions to the center.
- Before performing symptom troubleshooting, check for power switch will not turn ON troubleshooting (see page 22-354).

1. Check that the volume button is not set to min level.

   Is it at MIN level?

   YES—Raise the volume level, and recheck the function. ■

   NO—
   - With navigation: Go to step 2.
   - Without navigation: Go to step 3.

2. Check the NAVIGATION MUTE MODE.

   Is the NAVIGATION MUTE MODE set?

   YES—Cancel the NAVIGATION MUTE MODE by pressing the voice command button, and recheck the function. ■

   NO—Go to step 3.

3. Check to see if there is a specific speaker that has no sound.

   Is there a specific one?

   YES—Go to step 4.

   NO—Go to step 9.

4. Turn the ignition switch OFF.

(cont'd)

Protected by AR

Symptom Troubleshooting (cont'd)

5. Remove the speaker(s) with no sound (see page 22-378), and disconnect its connector.

6. Check the speaker with no sound for damage.

   Is there any damage?

   YES—Substitute the speaker and recheck. ■

   NO—Go to step 7.

7. Check the speaker 2P connector for a loose or poor connection.

   Reconnect the speaker 2P connector and recheck the symptom; does it still fail?

   YES—Go to step 8.

   NO—Operation is normal. ■

8. Measure the resistance between the No. 1 and No. 2 terminals of the speaker connector.

   Is there about 4 Ω ?

   YES—Go to step 9.

   NO—Faulty speaker(s). ■

9. Remove the audio unit (see page 22-372).

10. Disconnect the audio unit connector A (20P).

11. Check the resistance between the following terminals of audio unit connector A (20P).

Speaker	Terminal	Wire color
Driver's door speaker, Left tweeter	A8 (+)	GRN/BLK
	A18 (−)	LT GRN
Front passenger's door speaker, Right tweeter	A7 (+)	GRN/YEL
	A17 (−)	GRY
Left rear speaker	A6 (+)	BLU/WHT
	A16 (−)	BLU/BLK
Right rear speaker	A5 (+)	PNK
	A15 (−)	BLU/YEL

   Is there more than 4 Ω ?

   YES—Go to step 12.

   NO—Repair an open in the wire between the audio unit and speaker. ■

12. Disconnect the speaker 2P connector.

13. Check for continuity between body ground and audio unit connector A (20P) terminals No. 5, 6, 7, 8, 15, 16, 17, and 18 individually.

AUDIO UNIT CONNECTOR A (20P)

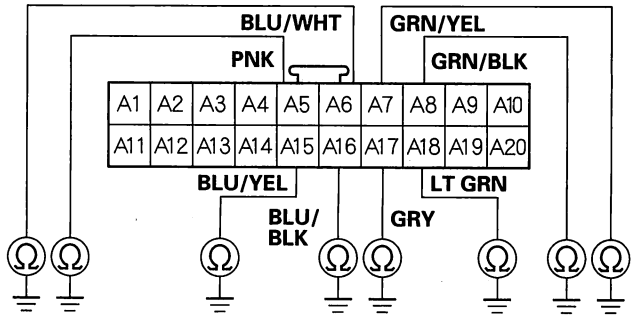

Wire side of female terminals

   Is there continuity?

   YES—Repair short to ground in the wire between the audio unit and speaker. ■

   NO—Substitute a known-good audio unit and recheck. If the symptom/indication goes away, replace the original audio unit. ■

BACK

Protected by AR

Poor or no sound with XM radio ('04-06 models)

NOTE: Check the radio reception in an open area. Poor reception/interference can be caused by tall buildings, mountains, or high-voltage power lines are nearby.

1. Turn the ignition switch to ACC (I).
2. Turn on the audio unit and select XM radio.
3. Check for an error message on the display.

   Is there any message displayed?

   YES—Go to error code list (see page 22-332). ■

   NO—Go to step 4.

4. Disconnect audio unit connector B (14P).
5. Check for continuity between XM receiver connector A (14P) and body ground according to the table.

XM receiver connector	Wire color
A6	BLU
A14	WHT
A5	GRN
A13	RED
A9	BLU
A10	RED
A2	LT BLU

   Is there continuity?

   YES—Repair a short to ground in the wire between the audio unit and the XM receiver. ■

   NO—Go to step 6.

6. Check for continuity between XM receiver connector A (14P) and audio unit connector B (14P) according to the table.

XM receiver connector	Audio unit connector	Wire color
A6	B6	BLK, GRY
A14	B14	WHT, BRN/WHT
A5	B5	GRN, LT GRN
A13	B13	RED, BRN/YEL
A9	B9	BLU
A10	B10	RED, GRN
A11	B11	BLK
A2	B2	LT BLU

   Is there continuity?

   YES—Substitute a known-good XM receiver, then reconnect all connectors and recheck. If the symptom/indication goes away, replace the original XM receiver. If symptom/indication is still present, replace the audio unit. ■

   NO—Repair open in the wire between audio unit and XM receiver. ■

Protected by AR

Symptom Troubleshooting (cont'd)

XM radio display is blank and no station information is displayed ('04-06 models)

1. Turn the ignition switch to LOCK (0).
2. Disconnect XM receiver connector A (14P).
3. Turn the ignition switch to ACC (I).
4. Check the voltage between XM receiver connector A (14P) No. 1 terminal and body ground.

XM RECEIVER CONNECTOR A (14P)

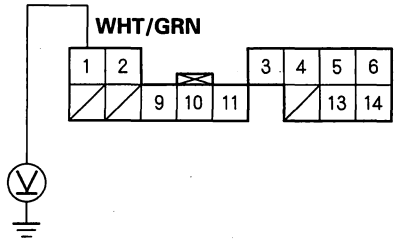

Wire side of female terminals

Is there battery voltage?

YES—Go to step 5.

NO—Repair an open in the wire between fuse No. 5 (10 A) under-dash fuse/relay box and XM receiver connector A (14P) No. 1 terminal.■

5. Check for voltage between XM receiver connector A (14P) No. 11 terminal and body ground.

XM RECEIVER CONNECTOR A (14P)

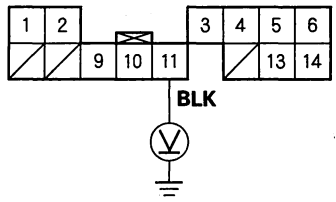

Wire side of female terminals

Is there less than 0.1 V?

YES—Go to step 6.

NO—Repair an open in the wire between XM receiver connector A (14P) No. 11 terminal and audio unit connector B (14P) No. 11 terminal.■

6. Turn the ignition switch to LOCK (0).

BACK

Protected by AR

7. Check the voltage between XM receiver connector A (14P) No. 2 terminal and body ground.

XM RECEIVER CONNECTOR A (14P)

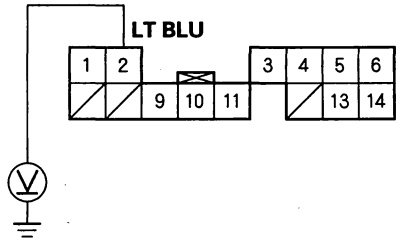

Wire side of female terminals

Is there 10 V or more present?

YES—Go to step 8.

NO—Substitute a known-good XM receiver and recheck. If 10 V or more are present, replace the original XM receiver. ■

8. Turn the ignition switch ON (II).

9. Check the voltage between XM receiver connector A (14P) No. 2 terminal and body ground.

XM RECEIVER CONNECTOR A (14P)

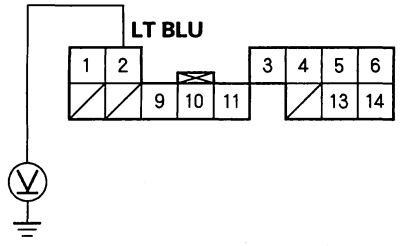

Wire side of female terminals

Is there less than 0.1 V?

YES—Substitute a known-good XM receiver, then reconnect all connectors and recheck. If the symptom/indication goes away, replace the original XM receiver. If symptom/indication is still present, replace the audio unit. ■

NO—Substitute a known-good audio unit and recheck. If 0.5 V or less are present, replace the original audio unit. ■

Protected by AR

Symptom Troubleshooting (cont'd)

Special Tools Required
Diagnostics CD 07AAZ-SDBA100

Audio disc does not play

1. Try loading a disc.

   Does the disc load?

   YES—Go to step 2.

   NO—Go to disc does not load (see page 22-349). ■

2. Insert another disc to see if the symptom can be duplicated.

   Does the disc play?

   YES—Operation is normal. ■

   NO—Go to step 3.

3. Insert audio diagnostic CD (T/N 07AAZ-SDBA100) in the audio unit.

   Does the disc play?

   YES—The original disc is faulty or has an unreadable format. ■

   NO—Replace the audio unit (see page 22-372). ■

Special Tools Required
Diagnostics CD 07AAZ-SDBA100

Audio disc skips

1. Confirm the vehicles tires are properly inflated.

2. Check customer's CD for scratches, fingerprints, and marks.

   NOTE: The following test should be performed with the audio unit bass and treble set to customer's listening preference. When comparing to known-good vehicles, comparison should be performed on same model and trim level.

3. Test-drive to identify when customer's CD skipping occurs. The audio diagnostic CD (T/N: 07AAZ-SDBA100) can be used if customer's CD is not available. Use tracks 10—12.

   Does the skipping occur?

   YES—Go to step 4.

   NO—Operation is normal. ■

4. Compare the customer's CD that is skipping to a known-good vehicle under the same conditions.

   Does the CD skip in the known-good vehicle under the same conditions?

   YES—Operation is normal. ■

   NO—Go to step 5.

BACK

Protected by AR

5. With the vehicle parked and the engine running, insert the diagnostic skip test CD (07AAZ-SDBA300). Play tracks 2—11 and note the track number(s) the CD starts skipping. Do the same test on a known-good vehicle.

   Does the CD skip on same track(s) number as the known-good vehicle?

   YES—Operation is normal. ■

   NO—Go to step 6.

6. Insert the diagnostic skip test CD (07AAZ-SDBA200) play tracks 7—11 and tracks 13—15 and note the track number(s) the CD starts skipping. Perform the same test on a known-good vehicle.

   Does the CD skip on same track(s) number as known-good vehicle?

   YES—Operation is normal. ■

   NO—Replace the audio unit (see page 22-372). ■

Radio remote switch does not work properly

1. Test the radio remote switch (see page 22-379).

   Is the radio remote switch OK?

   YES—Intermittent failure, the radio remote switch and audio unit is OK at this time. ■

   NO—Go to step 2.

2. Check the audio unit operation (volume up, volume down, CH (—), CH (+), MODE).

   Is the audio unit operation OK?

   YES—Go to step 3.

   NO—Replace the audio unit (see page 22-372), and recheck. ■

3. Remove the audio-HVAC display module (see page 22-371).

(cont'd)

Protected by AR

Symptom Troubleshooting (cont'd)

4. Measure resistance between the No. 3 and No. 11 terminals of the audio unit connector (20P). The resistance shoald be as shown in the table.

AUDIO UNIT CONNECTOR A (20P)

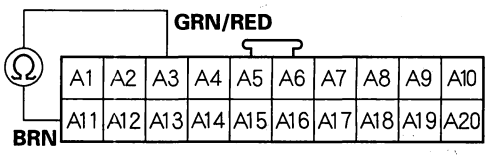

Wire side of female terminals

RADIO REMOTE SWITCH TABLE

Button held down	VOL DOWN	VOL UP	CH (−)	CH (+)	MODE	(NONE)
Resistance	about 100 Ω	about 370 Ω	about 840 Ω	about 2 kΩ	about 4 kΩ	10 kΩ

Is resistance OK?

YES—Go to step 5.

NO—Repair open or high resistance in the circuit between the audio unit and the radio remote switch. If the wires are OK, replace the cable reel (see page 23-210).■

5. Check for continuity between the No. 3 terminal of the audio unit connector A (20P) and body ground, and between the No. 11 terminal and body ground. There should be no continuity.

AUDIO UNIT CONNECTOR A (20P)

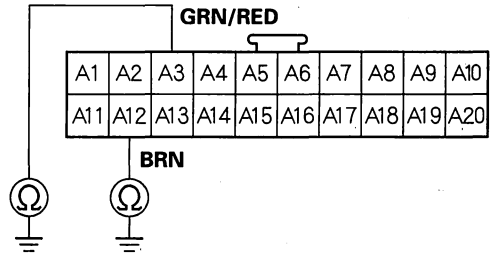

Wire side of female terminals

Is there continuity?

YES—Repair the short to body ground in the circuit between the audio unit and the radio remote switch. If the wires are OK, replace the cable reel (see page 23-210).■

NO—Replace the audio unit (see page 22-372).■

BACK

Protected by AR

Special Tools Required
- Radio test harness breakout box 07AAZ-SDAA100
- Test harness A&B (Alpine) 070AZ-SDAA100

Volume does not change (with navigation or single CD type)

1. Set the fader and balance position to the center.
2. Operate the volume knob to see if the volume changes accordingly.

   Does it change?

   YES—Operation is normal.■

   NO—Go to step 3.
3. Operate the volume knob to see if the LCD display changes accordingly.

   Does it change?

   YES—Replace the audio unit.■

   NO—Go to step 4.
4. Remove the audio unit (see page 22-372).
5. Connect test harness (070AZ-SDAA100) test harness A (with navigation), or test harness B (with single CD player) to radio test harness breakout box (07AAZ-SDAA100).
6. Connect the special tool (070AZ-SDAA100) PTN-1 (A) (with navigation) or PTN-4 (B) (with single CD type) connector to the printed circuit board connector.

   With navigation:

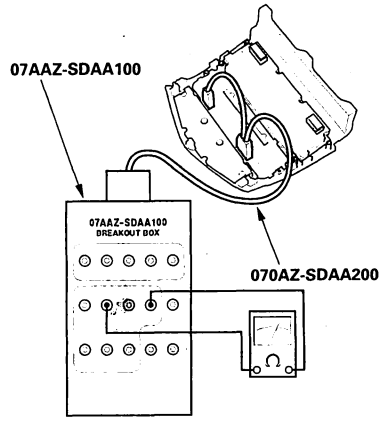

   With single CD type:

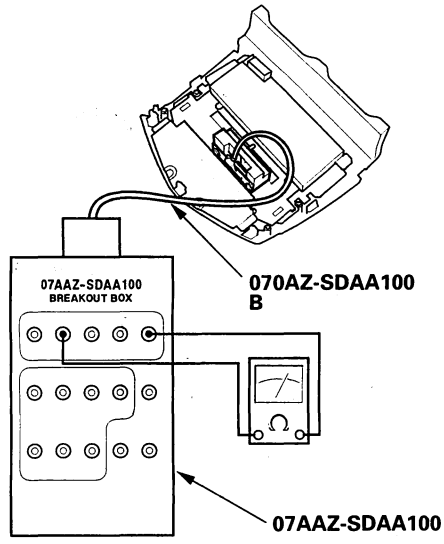

7. Connect the ohm meter to the special tool (070AZ-SDAA100) GND terminal and VOL+ terminal.
8. Turn the volume knob clockwise one click at a time. The resistance should change as follows with each turn of the knob:
   1.0 Ω → infinity → 1.0 Ω → infinity → 1.0 Ω

   Does the resistance change as indicated?

   YES—Go to step 9.

   NO—Replace the audio-HVAC display panel.■
9. Connect the ohm meter to the special tool (070AZ-SDAA100 adapter) GND terminal and VOL— terminal.

(cont'd)

Protected by AR

Symptom Troubleshooting (cont'd)

With navigation:

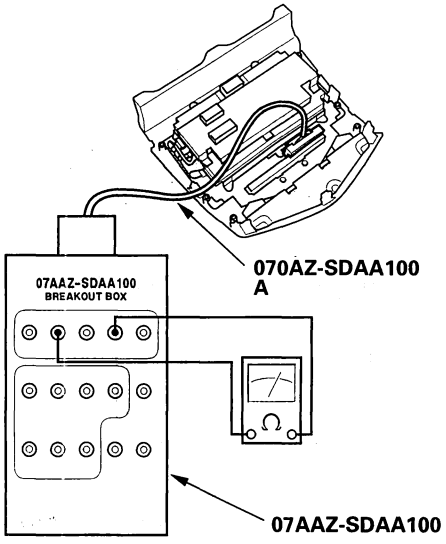

With single CD type:

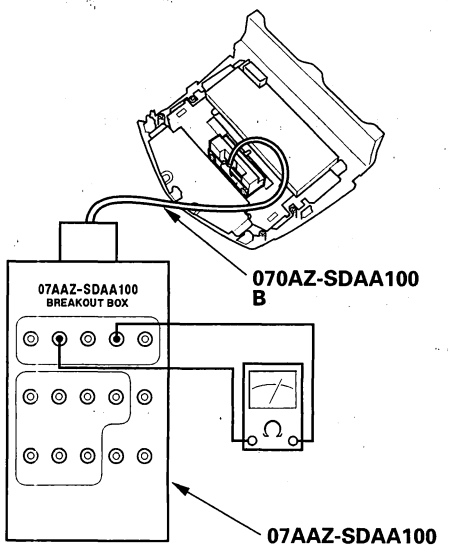

10. Turn the volume knob clockwise one click at a time. The resistance should change as follows with each turn of the knob:
1.0 kΩ → infinity → 1.0 kΩ → infinity → 1.0 kΩ

Does the resistance change as indicated?

YES—Replace the audio unit.■

NO—Replace the audio-HVAC display panel.■

Special Tools Required
- Radio test harness breakout box 07AAZ-SDAA100
- Test harness (Stanley) 070AZ-SDAA200

Volume does not change (6 CD type)

1. Set the fader and balance position to the center.
2. Operate the volume knob to see if the volume changes accordingly.

   Does it change?

   YES—Operation is normal.■

   NO—Go to step 3.
3. Operate the volume knob to see if the LCD display changes accordingly.

   Does it change?

   YES—Replace the audio unit.■

   NO—Go to step 4.
4. Remove the audio unit (see page 22-372).
5. Connect test harness (070AZ-SDAA200) to the radio test harness breakout box (07AAZ-SDAA100).
6. Connect the special tool (070AZ-SDAA200) connectors to the printed circuit board connector.

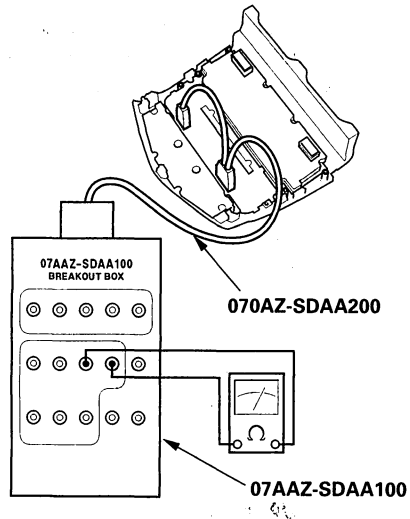

7. Connect the ohm meter to the special tool (070AZ-SDAA200 adapter) GND terminal and VOL-A terminal.

BACK

Protected by AR

8. Turn the volume knob clockwise one click at a time. The resistance should change as follows with each turn of the knob:
0 kΩ → infinity → 0 kΩ → infinity → 0 kΩ

Does the resistance change as indicated?

YES—Go to step 9.

NO—Replace the audio-HVAC display panel. ■

9. Connect the ohm meter to the special tool (070AZ-SDAA200 adapter) GND terminal and VOL-B terminal.

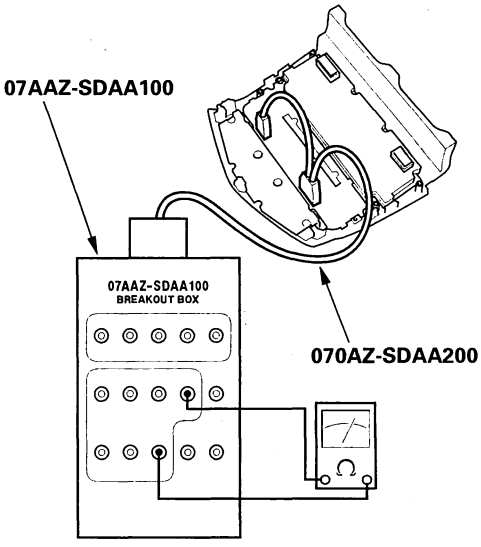

10. Turn the volume knob clockwise one click at a time. The resistance should change as follows with each turn of the knob:
0 kΩ → infinity → 0 kΩ → infinity → 0 kΩ

Does the resistance change as indicated?

YES—Replace the audio unit. ■

NO—Replace the audio-HVAC display panel. ■

Audio disc does not load

1. Insert a CD to see if the symptom can be duplicated.

Does the CD load?

YES—Operation is normal. If the audio disc loads normally, but will not play, go to audio disc does not play (see page 22-344). ■

NO—Go to step 2.

2. Insert another CD.

Does the CD load?

YES—The original CD is faulty. ■

NO—Replace audio unit. ■

Protected by AR

Symptom Troubleshooting (cont'd)

Special Tools Required
- Radio test harness breakout box 07AAZ-SDAA100
- Test harness A&B (Alpine) 070AZ-SDAA100

Audio disc does not eject (with navigation or single CD type)

NOTE: Inspect the quality of the CDs, and make sure there are no adhesive labels applied to them.

1. Check to see if the CD disc is ejected correctly by pushing the EJECT button.

   Is it normal?

   YES—Operation is normal. ■

   NO—Go to step 2.

2. Check to see if it is ejected with some binding or not ejected at all.

   Is it ejected with some binding?

   YES—Go to step 3.

   NO—Go to step 4.

3. Replace the disc and recheck.

   Does the problem continue?

   YES—Faulty audio unit. ■

   NO—Faulty disc. ■

4. Remove the audio unit (see page 22-372).

5. Connect test harness (070AZ-SDAA100) test harness A (with navigation), or test harness B (single CD type) to the radio test harness breakout box (07AAZ-SDAA100).

6. Connect the special tool connector to the printed circuit board connector.

With navigation:

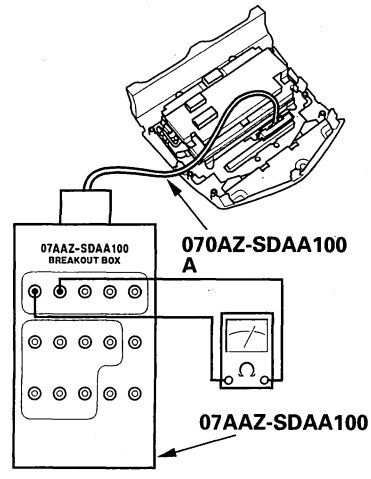

With single CD type:

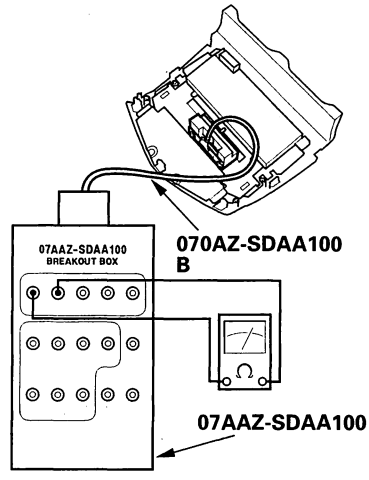

7. Connect the ohm meter to the special tool (070AZ-SDAA100 adapter) EJECT and GND terminals.

8. Press the EJECT button and check for continuity between the EJECT and GND terminals.

   Is there continuity?

   YES—Replace the audio unit. ■

   NO—Replace the audio-HVAC display panel. ■

BACK

Protected by AR

Special Tools Required
- Radio test harness breakout box 07AAZ-SDAA100
- Test harness (Stanley) 070AZ-SDAA200

Audio disc does not eject (6 CD type)

NOTE: Inspect the quality of the CDs, and make sure there are no adhesive labels applied to them.

1. Check to see if the CD disc is ejected correctly by pushing the EJECT button.

   Is it normal?

   YES—Operation is normal. ■

   NO—Go to step 2.

2. Check to see if it is ejected with some binding or not ejected at all.

   Is it ejected with some binding?

   YES—Go to step 3.

   NO—Go to step 4.

3. Replace the disc and recheck.

   Does the problem continue?

   YES—Replace audio unit. ■

   NO—Faulty CD disc. ■

4. Remove the audio unit (see page 22-372).

5. Connect test harness (070AZ-SDAA200) to the radio test harness breakout box (07AAZ-SDAA100).

6. Connect the special tool connectors to the printed circuit board connector.

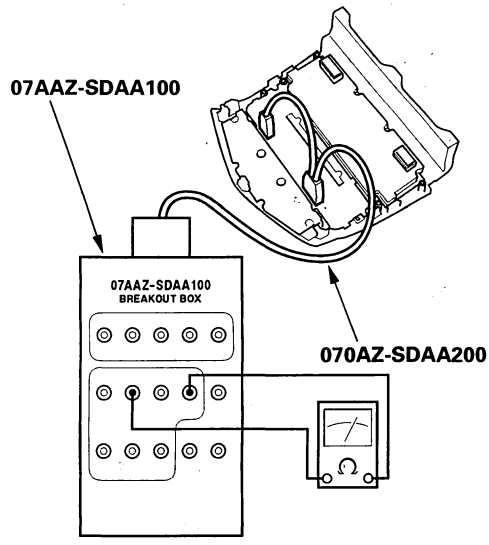

7. Connect the ohm meter to the special tool (070AZ-SDAA200 adapter) EJECT and GND terminals.

8. Push the EJECT button and check for continuity between the EJECT and GND terminals.

   Is there continuity?

   YES—Go to step 9.

   NO—Replace the audio-HVAC display panel. ■

9. Check the audio-HVAC display panel and audio unit for assembling integrity.

   Are they assembled correctly?

   YES—Replace the audio unit. ■

   NO—Reinstall the audio-HVAC display panel onto the audio unit, and check the problem. ■

Protected by AR

Symptom Troubleshooting (cont'd)

Disc changer does not load all six discs

NOTE: Inspect the quality of the discs, and make sure there are no adhesive labels applied to them.

1. Load six discs into the audio unit.

   Does the audio unit accept all six discs?

   YES—Intermittent failure, the audio unit is OK at this time. ■

   NO—Go to step 2.

2. Try to load the discs again.

   Does the audio unit accept all six discs?

   YES—At least one of the original CDs is faulty. ■

   NO—Replace the audio unit. ■

Audio-HVAC display module switches do not work

NOTE: In order to troubleshoot the main power switch, go to "Power switch will not turn on" (see page 22-354).

1. Refer to the following switch list, and find the appropriate switch for each button. Then perform the following exercise to identify the switch that does not work by operating various buttons which only belong to that switch.

   Switch List:
   Switch A: AM/FM, CD/AUX, SCAN, SEEK/SKIP, UP/DOWN, CH/DISC UP DOWN, LOAD, EJECT
   Switch B: INFO, MAP, MENU, JOY, CANCEL, SET UP, ZOOM UP/DOWN
   Switch C: TUNE Push MODE
   Switch D: TEMPERATURE CONTROL, AUTO, OFF, DEF, RECIRCULATION, REAR DEF, DUAL
   Switch E: AUDIO
   Switch F: A/C

2. Check to see if the buttons that do not function all belong to switch A.

   Are they all switch A's?

   YES—Faulty audio-HVAC display panel and audio unit. Replace the audio-HVAC display module. ■

   NO—Go to step 3.

3. Check to see if the buttons that do not function all belong to switch B.

   Are they all switch B's?

   YES—Faulty audio-HVAC display panel and audio unit. Replace the audio-HVAC display module. ■

   NO—Go to step 4.

BACK

Protected by AR

4. Check to see if the buttons that do not function all belong to switch C.

   Are they all switch C's?

   YES—Faulty audio-HVAC display panel and audio unit. Replace the audio-HVAC display module. ■

   NO—Go to step 5.

5. Check to see if the buttons that do not function all belong to switch D.

   Are they all switch D's?

   YES—Replace the audio-HVAC display panel. ■

   NO—Go to step 6.

6. Check to see if the buttons that do not function all belong to switch E.

   Are they all switch E's?

   YES—Faulty audio-HVAC display panel, audio unit and navigation display. Replace the audio-HVAC display module. ■

   NO—Go to step 7.

7. Check to see if the button that do not function all belong to switch F.

   Are they all switch F's?

   YES—Faulty audio-HVAC display panel, climate control unit and navigation display. Replace the audio-HVAC display module. ■

   NO—Replace the audio-HVAC display panel. ■

Disc LED does not turn ON or OFF

1. Identify whether the LED that does not turn on or off is the green or red one; they indicated the status.

   - Green indicator: Loading on ready.
   - Red indicator: Loading on wait.

   Is LED indicated?

   YES—Operation is normal. ■

   NO—Replace the audio unit. ■

Protected by AR

Symptom Troubleshooting (cont'd)

Special Tools Required
- Radio test harness breakout box 07AAZ-SDAA100
- Test harness A&B (Alpine) 070AZ-SDAA100

Power switch will not turn ON (with navigation or single CD type)

1. With the ignition switch ON (II), push the power switch ON to see if the audio unit turns ON.

   Does the power turn on?

   YES—Operation is normal. ■

   NO—Go to step 2.

2. Turn the ignition switch OFF, then check the No. 5 (10 A) and No. 32 (7.5 A) fuses in the under-dash fuse/relay box.

   Are the fuses OK?

   YES—Go to step 3.

   NO—Replace the fuse(s) and recheck. ■

3. Remove the audio-HVAC display module (see page 22-371). Check that audio unit connector A (20P) is properly connected.

   Is it connected properly?

   YES—Go to step 4.

   NO—Reconnect the connector, and recheck the function. ■

4. Measure voltage between audio unit connector A10 terminal and body ground.

AUDIO UNIT CONNECTOR A (20P)

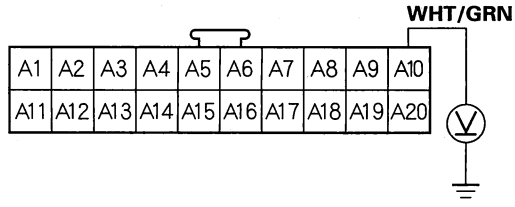

Wire side of female terminals

Is there battery voltage?

YES—Go to step 5.

NO—Repair the open circuit or poor connection in wire between the under-dash fuse/relay box No. 5 (10 A) fuse and audio unit connector A terminal No. 10. ■

5. Turn the ignition switch ON (II).

6. Measure the voltage between the audio unit connector A terminal No. 2 and body ground.

AUDIO UNIT CONNECTOR A (20P)

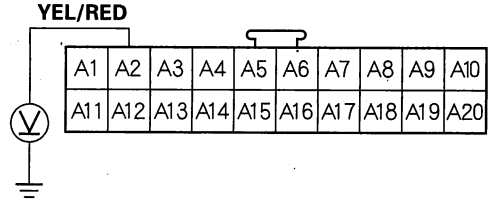

Wire side of female terminals

Is there battery voltage?

YES—Go to step 7.

NO—Repair the open circuit or poor connection in the wire between the under-dash fuse/relay box No. 32 (7.5 A) fuse and audio unit connector A terminal No. 2. ■

BACK

Protected by AR

7. Turn the ignition switch OFF, then check for continuity between audio unit connector A terminal No. 20 and body ground.

AUDIO UNIT CONNECTOR A (20P)

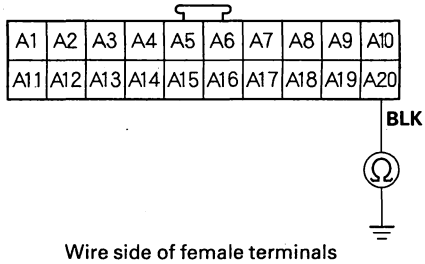

Wire side of female terminals

Is there continuity?

YES—Go to step 8.

NO—Repair the open wire between audio unit connector A20 and body ground (G504). ■

8. Remove the audio unit (see page 22-372).

9. Connect test harness (070AZ-SDAA100) test harness A (with navigation), or test harness B (single CD type) to the radio test harness breakout box (07AAZ-SDAA100).

10. Connect the special tool connector to the printed circuit board connector.

With navigation:

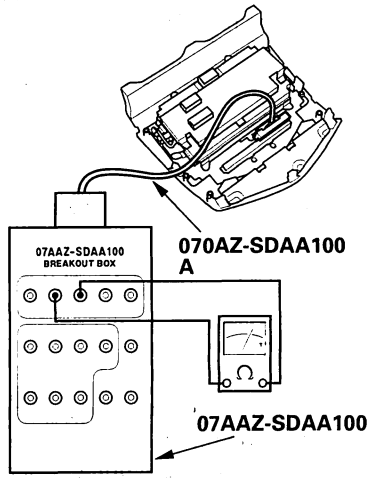

With single CD player:

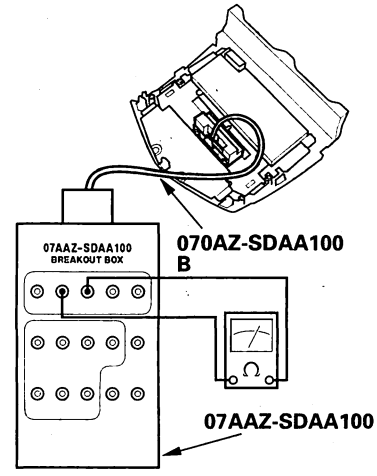

11. Connect the ohm meter to the special tool (070AZ-SDAA100 adapter) POWER and GND terminals.

12. Push the POWER button and check for continuity between the POWER and GND terminals.

Is there continuity?

YES—Replace the audio unit. ■

NO—Replace the audio-HVAC display panel. ■

Protected by AR

Symptom Troubleshooting (cont'd)

Special Tools Required
- Radio test harness breakout box 07AAZ-SDAA100
- Test harness A&B (Alpine) 070AZ-SDAA200

Power switch will not turn ON (6 CD type)

1. With the ignition switch ON (II), push the power switch ON to see if the audio unit turns ON.

   Does the power turn on?

   YES—Operation is normal.■

   NO—Go to step 2.

2. Turn the ignition switch OFF, then check the No. 5 (10 A) and No. 32 (7.5 A) fuses in the under-dash fuse/relay box.

   Are the fuses OK?

   YES—Go to step 3.

   NO—Replace the fuse(s) and recheck.■

3. Remove the audio-HVAC display module (see page 22-371). Check that audio unit connector A (20P) is properly connected.

   Is it connected properly?

   YES—Go to step 4.

   NO—Reconnect the connector, and recheck the function.■

4. Measure voltage between audio unit connector A10 terminal and body ground.

AUDIO UNIT CONNECTOR A (20P)

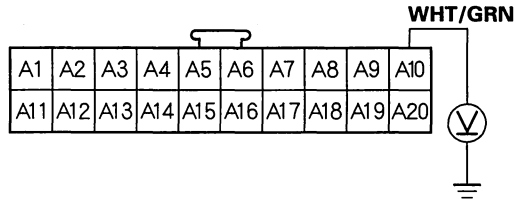

Wire side of female terminals

Is there battery voltage?

YES—Go to step 5.

NO—Repair the open circuit or poor connection in wire between the under-dash fuse/relay box No. 5 (10 A) fuse and audio unit connector A terminal No. 10.■

5. Turn the ignition switch ON (II).

6. Measure the voltage between the audio unit connector A terminal No. 2 and body ground.

AUDIO UNIT CONNECTOR A (20P)

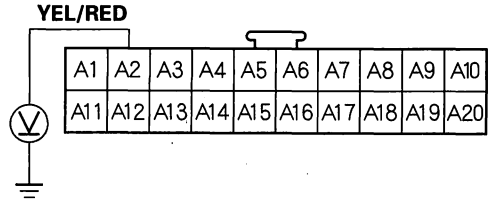

Wire side of female terminals

Is there battery voltage?

YES—Go to step 7.

NO—Repair the open circuit or poor connection in the wire between the under-dash fuse/relay box No. 32 (7.5 A) fuse and audio unit connector A terminal No. 2.■

BACK

Protected by AR

7. Turn the ignition switch OFF, then check for continuity between audio unit connector A terminal No. 20 and body ground.

AUDIO UNIT CONNECTOR A (20P)

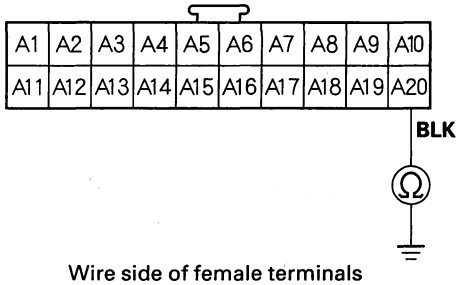

Wire side of female terminals

Is there continuity?

YES—Go to step 8.

NO—Repair the open wire between audio unit connector A20 and body ground (G504).■

8. Remove the audio unit (see page 22-372).

9. Connect test harness (070AZ-SDAA200) to the radio test harness breakout box (07AAZ-SDAA100).

10. Connect the special tool connectors to the printed circuit board connector.

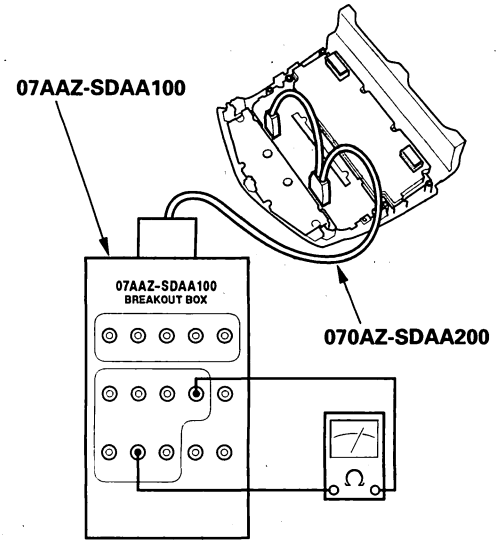

11. Connect the ohm meter to the special tool (070AZ-SDAA200 adapter) POW SW and GND terminals.

12. Push the POWER button and check for continuity between the POW SW and GND terminals.

Is there continuity?

YES—Replace the audio unit.■

NO—Replace the audio-HVAC display panel.■

Protected by AR

Symptom Troubleshooting (cont'd)

Special Tools Required
- Radio test harness breakout box 07AAZ-SDAA100
- Test harness (Stanley) 070AZ-SDAA200

Display is missing information (6 CD type)

NOTE:
- A part of the A/C does not display.
- There is display of A/C information.
- Wrong indication in LCD.

1. Repeat turning the ignition switch ON (II) and OFF to see if the problem appears.

   Does the problem appear?

   YES—Go to step 2.

   NO—Operation is normal. ■

2. Remove the audio-HVAC display module (see page 22-371), and check for the proper connection of the connectors.

   Is it connected properly?

   YES—Go to step 3.

   NO—Reconnect the connectors, and recheck the problem. ■

3. Check all A/C information of LCD display.

   Do all the indicators work?

   YES—Go to step 4.

   NO—Replace the audio-HVAC display module. ■

4. Remove the audio unit (see page 22-372).

5. Connect test harness (070AZ-SDAA200) to the radio test harness breakout box (07AAZ-SDAA100).

6. Connect the special tool connectors to the printed circuit board connector.

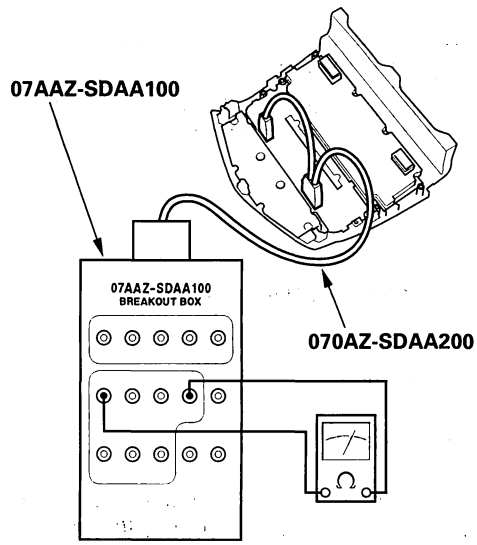

7. Connect the ohm meter to the special tool (070AZ-SDAA200 adapter) AUTO/MANU and GND terminals.

   Is there continuity?

   YES—Faulty audio-HVAC display panel. ■

   NO—Operation is normal. ■

BACK

Protected by AR

Audio-HVAC subdisplay/clock does not display (with navigation)

1. Check the connections at the audio-HVAC subdisplay/clock 10P connector and the audio unit connector C (10P).

   Are the connectors and terminals connected properly?

   YES—Go to step 2.

   NO—Repair the connection and recheck. ■

2. Check for continuity between the audio-HVAC subdisplay/clock 10P connector and the audio unit connector C (10P) terminals for each wire listed in the chart.

Wire	Audio-HVAC subdisplay/ clock 10P connector terminal	Audio unit connector C (10P) terminal
BLU/ORN	2	2
YEL/RED	4	4
YEL	5	5
BLU/RED	6	6
BLU	7	7
GRY	8	8
BLK	1	1
RED	9	9
GRN	10	10
BLK	3	(body ground)

   Is there continuity?

   YES—Go to step 3.

   NO—Repair the open in the wire between the audio unit and the audio-HVAC subdisplay/clock. ■

3. Check for continuity between each audio-HVAC subdisplay/clock 10P connector terminal and body ground.

Wire	Clock 10P connector terminal
BLU/ORN	2
YEL/RED	4
YEL	5
BLU/RED	6
BLU	7
GRY	8
BLK	1
RED	9
GRN	10

   Is there continuity?

   YES—Repair the short to ground in the wire between the audio unit and the audio-HVAC subdisplay/clock. ■

   NO—Go to step 4.

4. Substitute a known-good audio-HVAC subdisplay/ clock and recheck.

   Does the subdisplay work properly?

   YES—Replace the original audio-HVAC subdisplay/ clock. ■

   NO—Substitute a known-good audio-HVAC display panel and retest. If the problem is gone, replace the original audio unit. ■

Protected by AR

Symptom Troubleshooting (cont'd)

Audio display and controls are dim, no back lighting (LCD segments can be read)

1. Repeat turning the ignition switch ON (II) and OFF to see if the back lighting returns.

   Does the back lighting return?

   YES—Operation is normal at this time. ■

   NO—Go to step 2.

2. Shine a flashlight against the audio unit display.

   Can the audio unit display information be seen?

   YES—Replace the audio unit (see page 22-372).

   NO—Go to no display appears on the screen (LCD segments can not be read) (see page 22-360).

No display appears on the screen (LCD segments cannot be read)

1. Repeat turning the ignition switch ON (II) and OFF to see if the problem appears.

   Does the problem appear?

   YES—Go to step 2.

   NO—Operation is normal. ■

2. Remove the audio-HVAC display module (see page 22-371), and check for the proper connection of the audio unit connector A (20P).

   Is it connected properly?

   YES—Go to step 3.

   NO—Reconnect the connector, and recheck the problem. ■

3. Check that the audio unit switches correctly respond to your operation.

   Do they function correctly?

   YES—Faulty audio unit. ■

   NO—Faulty front printed circuit board and audio printed circuit board. ■

BACK

Protected by AR

Security indicator does not work properly

1. Check if the operation of the security indicator when turning the ignition switch OFF.

   Does the security indicator flash?

   YES—Operation is normal. ■

   NO—Go to step 2.

2. Check the operation of the radio station preset buttons.

   Do the preset buttons set and keep their memory?

   YES—Replace the audio unit. ■

   NO—Go to radio preset memory is lost (see page 22-337). ■

Protected by AR

Sound Quality Diagnosis

Special Tools Required
Diagnostics CD 07AAZ-SDBA100

Use the following tests to check sound quality.

NOTE: Before beginning the following tests, write down the client's bass, treble, fader and balance settings, then set them to their center positions for the testing.

Left/Right Channel ID

Do this test to confirm proper channel routing.

1. Insert the audio diagnostic CD (T/N 07AAZ-SDBA 100) into the audio unit.
2. Play track No. 1 (left, both, right channel ID) at a normal, or slightly higher than normal, volume level.
3. The voice should be audible only from the channel or channels when indicated.
   - If the channel ID is correct for each side, go to phase test (see page 22-362).
   - If the channel ID is not correct, check for
     - Shorted speaker wire
     - Faulty audio unit

Special Tools Required
Diagnostics CD 07AAZ-SDBA100

Phase Test

Do this test to confirm proper speaker phasing.

1. Insert the audio diagnostic CD (T/N 07AAZ-SDBA 100) into the audio unit.
2. Play track No. 2 (phase) at a normal, or slightly higher than normal, volume level.
3. The voice should sound centered and focused when it is in-phase.
4. The voice should sound diffused, and have "less bass" when it is out of phase.
   - If the voice changes from in-phase to out of phase as indicated by the prompt, the phasing is correct. Go to electrical noise test (see page 22-363).
   - If the voice always sounds out of phase, phasing is not correct. Check for
     - Crossed speaker wires
     - Faulty audio unit

BACK

Protected by AR

Special Tools Required
Diagnostics CD 07AAZ-SDBA100

Electrical Noise Test

Do this test to check for electrical noise being induced into the audio system.

NOTE: Electrical noise may be caused by outside sources that cannot be filtered by the audio system. Make sure you remove cell phones and/or turn off any aftermarket devices before beginning this test.

1. Insert the audio diagnostic CD (T/N 07AAZ-SDBA 100) into the audio unit.
2. Play track No. 4 (digital zero) at a normal, or slightly higher than normal, volume level.
3. Operate any electrical device that may causes noise from the audio system, including starting the engine.
4. Play track No. 5 (near digital zero) at a normal, or slightly higher than normal, volume level.
5. Operate any electrical device that may causes noise from the audio system, including starting the engine.
6. Play track No. 6 (SNR) at a normal, or slightly higher than normal, volume level.
7. Operate any electrical device that causes noise from the audio system, including starting the engine.

   - If no abnormal noise is heard, go to the individual speaker test (see page 22-364).
   - If the noise is present only during the SNR track, replace the audio unit.
   - If the noise is heard during the digital zero or near digital zero track, check for
     - Poor ground at the audio unit, engine, or battery cable
     - Pinched or shorted speaker wire
     - Faulty audio unit
     - Other faulty components causing excessive electrical noise (ignition coils, alternator, door lock actuators, etc.). Disconnect any suspect components, and then replay the tracks that were originally noisy. If the noise is gone, check the component's circuit and the component.

Protected by AR

Sound Quality Diagnosis (cont'd)

Special Tools Required
Diagnostics CD 07AAZ-SDBA100

Individual Speaker Test

Do this test to identify a faulty speaker.

1. Insert the audio diagnostic CD (T/N 07AAZ-SDBA 100) into the audio unit.
2. Play track No. 30 (steady 300 Hz tone) at a normal, or slightly higher than normal, volume level.
3. Listen to each speaker for poor sound, and compare it to the other speakers. Use the audio unit's fader and balance settings to help isolate the channel with the problem.
   - If the sound quality produced by a specific speaker is poor, substitute it with a known-good speaker. If the poor sound quality continues, go to the sound balance test (see page 22-364).
   - If the sound quality is OK, go to the sound balance test (see page 22-364).

Special Tools Required
Diagnostics CD 07AAZ-SDBA100

Sound Balance Test

Perform this test to identify a faulty channel or speaker.

1. Insert the audio diagnostic CD (T/N 07AAZ-SDBA 100) into the audio unit.
2. Confirm the bass and treble are set to the center positions.
3. Play track No. 3 (pink noise) at a normal, or slightly higher than normal, volume level.
4. A "static" type sound should be heard through all speakers.
5. Insert the audio diagnostic CD (T/N 07AAZ-SDBA 100) into the audio unit of a known-good vehicle.
6. Set the bass and treble to the center positions.
7. Play track No. 3 (pink noise) all the same level as was played in step 3.
8. Compare the sounds made by the two vehicles.
   - If the sounds made by the two vehicles are very similar, go to the Frequency Sweep Test (see page 22-365).
   - If the sound does not have as much bass, go to the phase test (see page 22-362).
   - If the sound does not have enough "hiss," check the tweeters and their circuits.

BACK

Protected by AR

Special Tools Required
Diagnostics CD 07AAZ-SDBA100

Frequency sweep

Do this test to find rattles or reverberation that may cause a perception of poor sound quality.

1. Insert the audio diagnostic CD (T/N 07AAZ-SDBA 100) into the audio unit.
2. Play track No. 13 (sweep from 500 Hz to 35 Hz) at a normal, or slightly higher than normal, volume level.
3. Listen to each speaker for poor sound quality or reverberations caused by specific frequencies. Use the voice-over to estimate the frequency that causes the vibration. Use the audio unit's fader and balance settings to help isolate the channel with the problem.
   - If vibrations or poor sound quality is heard, go to step 4.
   - If no vibrations or poor sound quality is heard, go to sound judging (see page 22-365).
4. Choose the appropriate track from No. 14 to 25 (small range frequency sweep) or 26 to 53 (single frequencies) to recreate the frequency that caused the poor sound quality or vibration located in step 3; this aids in diagnosis of the cause.

   NOTE: When you get to the track that recreates the problem, select the repeat function on the audio unit, this will help you isolate the cause.
5. Replace or insulate the source of the vibration or, if the speaker is the source of the poor sound quality, replace it.

Special Tools Required
Diagnostics CD 07AAZ-SDBA100

Sound judging

Do this test to compare overall sound quality, imaging, and dynamics between the customer's vehicle and a known-good vehicle. Only use a vehicle of the same model and trim level for this test.

1. In the customer's vehicle, set the bass, treble, fader, and balance settings to the customer's normal settings that were written down before beginning the test.
2. Insert the audio diagnostic CD (T/N 07AAZ-SDBA 100) into the audio unit.
3. Play tracks No. 7 to 12 (sound quality, midland, dynamics, and imaging demonstration tracks) at a normal, or slightly higher than normal, volume level. Write down the volume setting being used.
4. Listen to areas of the track that stand out as being either real clear or poorer than other areas of the track.
5. In a known-good vehicle, insert the audio diagnostic CD (T/N 07AAZ-SDBA100) into the audio unit.
6. Play the tracks at the same volume level and the same bass, treble, balance, and fader settings as used in step 3 in the customer's vehicle.
7. Listen to the same area of the track that stood out as being either real clear or poorer than other areas of the track.

(cont'd)

Protected by AR

Sound Quality Diagnosis (cont'd)

8. Compare the customer's vehicle's sound quality results the known-good vehicle's results.

   - If the sound quality in the customer's vehicle is comparable to the sound quality in the known-good vehicle, then the customer's vehicle is operating as designed.
   - If the sound quality is not comparable, check these items in order.
     - Loose or improperly installed speakers or other hardware that may become excited by the vibrations generated by the speakers
     - Damaged speaker(s)
     - Faulty audio unit

Seek Stop Test

Do this test to check the performance of the audio unit's AM and FM reception. Refer to symptom troubleshooting: no sound is heard from speakers (display is normal) (see page 22-339) before continuing with this test.

NOTE:
- Aftermarket theft-recovery devices and other aftermarket accessories may reduce radio reception.
- Changes in cloud cover and other atmospheric conditions will affect the ability of the audio unit to receive radio signals.

1. Park the client's vehicle in an open area away from buildings or other obstacles.
2. Park a known-good vehicle (same year, model, and trim level) next to the customer's vehicle, facing the same direction.
3. Start the engine in the customer's vehicle, and turn on the radio.
4. Set the FM receiver to 87.7 MHz.
5. Press the "Seek +" button, and record the first station that the audio unit locks onto.
6. Press the "Seek +" button repeatedly, and write down each station that the audio unit locks onto until the station recorded in step 5 is reached again.
7. Set the AM receiver to 530 kHz.
8. Press the "Seek +" button, and record the first station that the audio unit locks onto.
9. Press the "Seek +" button repeatedly, and write down each station that the audio unit locks onto until the station recorded in step 8 is reached again.

BACK

Protected by AR

10. Turn the ignition switch to LOCK (0).

11. Start the engine in the known-good vehicle, and then perform steps 4 thru 10 on the known-good vehicle.

12. Compare the number of stations received in steps 6 and 9 in the customer's vehicle with the number of stations received in the known-good vehicle.

    - If the number of stations received is the same, or within 10 %, the audio unit's tuner performance is OK. The problem may be atmospheric conditions, multi-path interference, or other obstructions to the radio signal.
    - If the customer's vehicle receives fewer stations by at least 10 %, go to step 2 of poor radio reception of interference (see page 22-334).

Protected by AR

Audio-HVAC Display Module Illumination Troubleshooting

NOTE: If the display is blank when the headlights are off, the problem is not in the illumination circuit (see page 22-360).

1. Turn the ignition switch to the ON (II) position.
2. Turn the combination light switch ON.
3. Turn the illumination control dial on the gauge control module back and forth between full dim and full bright.

   Does the problem with the illumination affect only the audio-HVAC display panel?

   YES—Go to step 4.

   NO—Go to B-CAN Diagnosis Test Mode A (see page 22-91).
4. Turn the illumination control dial on the gauge control module back and forth between full dim and full bright while watching the audio-HVAC display panel buttons, button LEDs, LCD displays.
5. Proceed with the diagnostic procedure for the appropriate symptom(s).

Symptom	Diagnostic Procedure
• Buttons stay bright and do not adjust with dimmer • LEDs do not dim with dimmer off of full bright position • LCD display or subdisplay is full bright and does not adjust with dimmer • Lower panel ambient light may or may not dim with dimmer	Go to step 6.
• Buttons do not light up • LEDs do not dim • LCD display or subdisplay is full bright and does not adjust with dimmer, or does not fully dim • Lower panel ambient light may or may not dim with dimmer	Go to step 9.
• Lower panel ambient light does not light up • Buttons dim with dimmer • LEDs dim with dimmer off of full bright position • LCD display dims with dimmer	Go to step 12.
Symptom other than those listed above	Replace the audio-HVAC display module.■

6. Remove the audio-HVAC display module (see page 22-371) and check for loose wires terminals or poor connections at audio unit connector A (20P).

   Are all the wire terminals tight, and is audio unit connector A (20P) connected properly?

   YES—Go to step 7.

   NO—Repair the loose wire terminal, or properly connect audio unit connector A (20P) and recheck the symptom.■
7. Turn the illumination control dial on the gauge control module to the full bright position.

BACK

Protected by AR

8. Measure the voltage between the No. 19 and No. 20 terminals of audio unit connector A (20P).

   Is there 1 V or less?

   YES—Check connections at audio unit connector A (20P). If connections are OK substitute a known-good audio-HVAC display module and recheck the symptom. If the symptom is gone, replace the original audio-HVAC display module. ■

   NO—Repair open in the RED wire between the MICU and the audio-HVAC display module. ■

9. Remove the audio-HVAC display module (see page 22-371) and check for loose wire terminals or poor connections at audio unit connector A (20P).

   Are all the wire terminals tight, and is audio unit connector A (20P) connected properly?

   YES—Go to step 10.

   NO—Repair the loose wire terminal, or properly connect audio unit connector A (20P) and recheck the symptom. ■

10. With the combination light switch still ON, turn the illumination control dial on the gauge control module to the full bright position.

11. Measure the voltage between the No. 9 and No. 20 terminals of the audio unit connector A (20P).

    Is there battery voltage?

    YES—Check connections at the audio unit connector A (20P). If connections are OK substitute a known-good audio-HVAC display module and recheck the symptom. If the symptom is gone, replace the original audio-HVAC display module. ■

    NO—Repair open in the RED/BLK wire between the under-hood fuse/relay box and the audio-HVAC display panel. ■

12. Remove the audio-HVAC display module (see page 22-371) and check for loose wire terminals or poor connections at climate control unit connector B (16P).

    Are all the wire terminals tight, and is climate control unit connector B (16P) connector connected properly?

    YES—Go to step 13.

    NO—Repair the loose wire terminal, or properly connect climate control unit connector B (16P) and recheck the symptom. ■

13. Turn the illumination control dial on the gauge control module to the full bright position.

14. Measure the voltage between the No. 12 and No. 6 terminals of climate control unit connector B (16P).

    Is there 1 V or less?

    YES—Go to step 15.

    NO—Repair open in the RED wire between the MICU and the climate control unit. ■

15. Measure the voltage between the No. 8 and No. 6 terminals of the climate control unit connector B (16P).

    Is there battery voltage?

    YES—Check connections at climate control unit connector B (16P). If connections are OK substitute a known-good audio-HVAC display module and recheck the symptom. If the symptom is gone, replace the original audio-HVAC display module. ■

    NO—Repair open in the RED/BLK wire between the under-hood fuse/relay box and the climate control unit. ■

Protected by AR

XM Antenna Troubleshooting

Radio displays error code: XM NO SIGNAL or XM ANTENNA ('04-06 models)

NOTE: Check XM radio reception in an open area. Poor reception/interference can be caused by tall buildings, mountains, or high-voltage power lines.

1. Park vehicle outside with a clear view of the southern horizon.

   Does XM radio receive a signal?

   YES—Reception interference operation is normal. ■

   NO—Go to step 2.

2. Check XM antenna connector B (2P) at XM receiver.

   Is XM antenna connector B connected?

   YES—Go to step 3.

   NO—Reconnect XM connector B, recheck XM radio operation. If the signal restored, operation is normal. If signal not restored go to step 3.

3. Substitute known-good XM antenna.

   Does the XM radio receive a signal?

   YES—Replace XM antenna. ■

   NO—Substitute known-good XM antenna subharness. If XM radio receives signal, replace original XM antenna subharness. ■

BACK

Protected by AR

Audio-HVAC Display Module Removal/Installation

SRS components are located in this area. Review the SRS component locations (see page 23-17) and the precautions and procedures (see page 23-19) before performing repairs or service.

NOTE:
- Put on gloves to protect your hands.
- Take care not to scratch the dashboard and related parts.
- Lay a workshop towel under the parts when working on them to protect the face panel from scratches or other damage.
- Do not work in a dusty or dirty place.
- Discharge static electricity from your body before and during the work.
- Do not touch the circuit board with your bare hands.
- Do not work with dirty hands.
- Be careful not to fold the flat plate cable.
- Do not touch the terminal connector of the flat plate cable with your bare hands. (If you have touched it, wipe it off thoroughly.)

1. Make sure you have the anti-theft codes for the radio and navigation system, then write down the frequencies for the radio's preset buttons.

2. Remove the upper panel (see page 20-131).

3. Remove the center pocket (see page 20-132).

4. Remove the screws and bolts, disconnect the audio-HVAC display module connectors (A) and the antenna lead (B), then remove the audio-HVAC display module (C).

Without Climate Control:

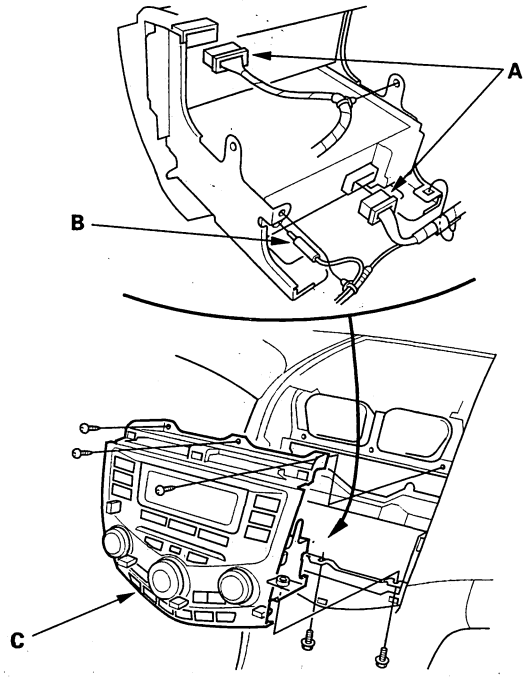

With Climate Control:

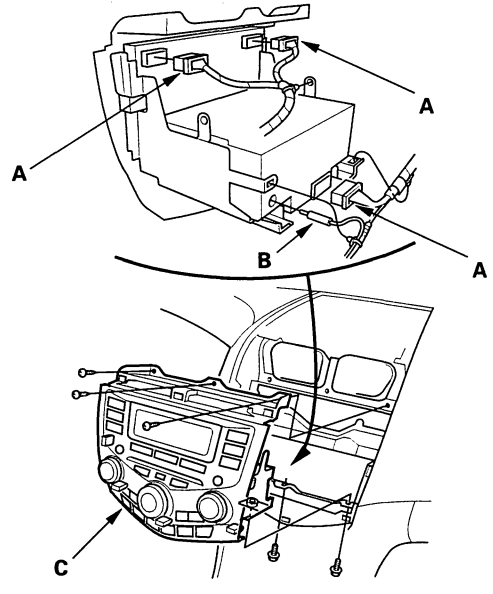

(cont'd)

Protected by AR

Audio-HVAC Display Module Removal/Installation (cont'd)

With Navigation:

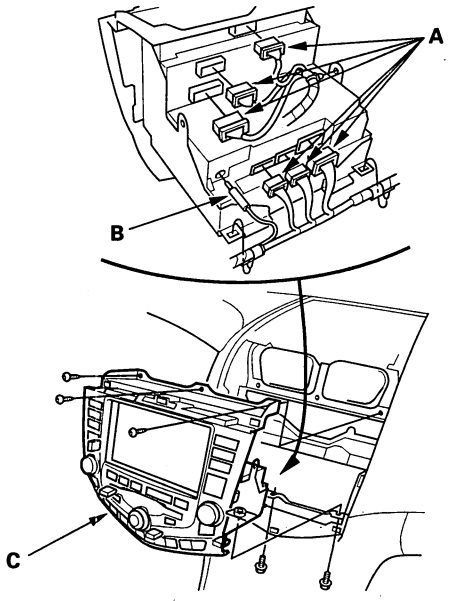

5. Install the audio-HVAC display module and note these items:

   - Make sure the disconnected connectors plugged in properly, and the antenna lead is connected properly.
   - Enter the anti-theft code for the radio, then enter the customer's radio station presets.

Audio-HVAC Display Panel and Audio Unit Removal/Installation

1. Remove the audio-HVAC display module (see page 22-371).

2. Remove the mounting screws and the audio unit (A) from the radio brackets (B).

Without Climate Control:

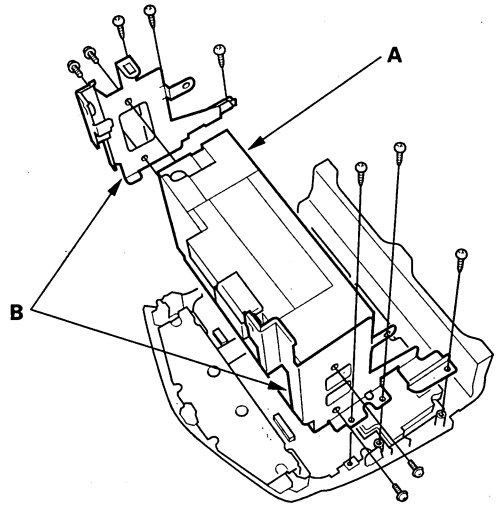

With Climate Control:

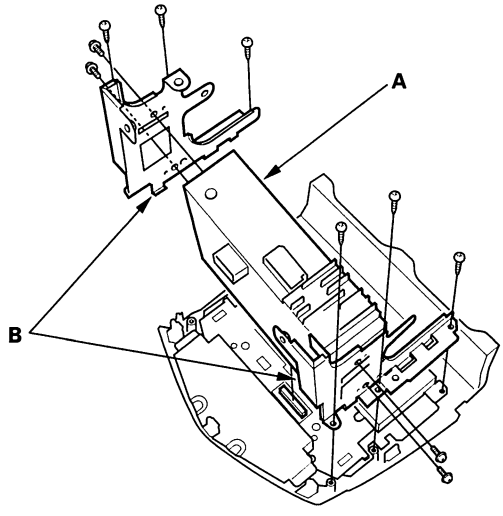

BACK

Protected by AR

With Navigation:

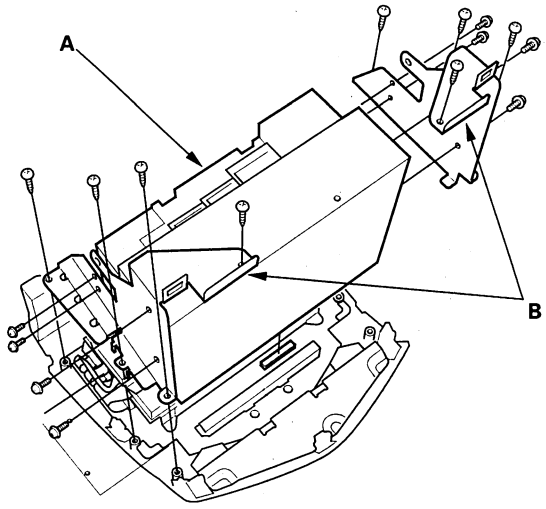

3. Install in the reverse order of removal.

Protected by AR

Audio-HVAC Display Panel Disassembly/Reassembly

1. Remove the audio-HVAC display panel (see page 22-372).

2. Remove the mounting screws and the covers (A), then disconnect the connectors (B) (Navigation system) from the printed circuit board (C).

Without Climate Control:

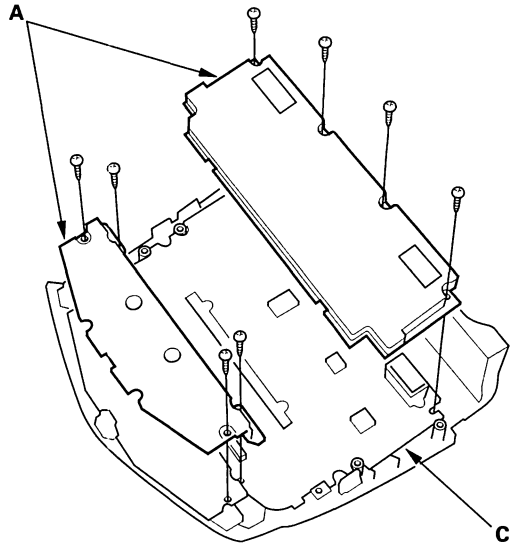

With Climate Control:

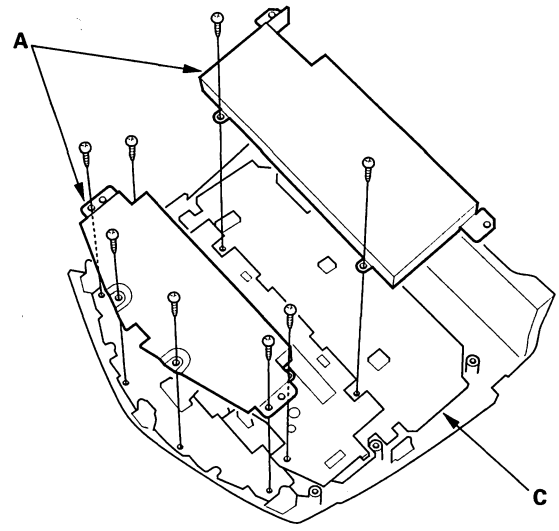

With Navigation:

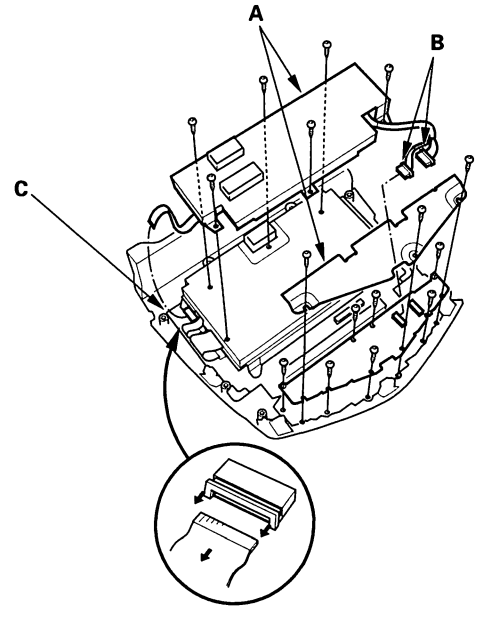

BACK

Protected by AR

3. With navigation system: Remove the mounting screws and display unit (A) from the printed circuit board (B).

With Navigation:

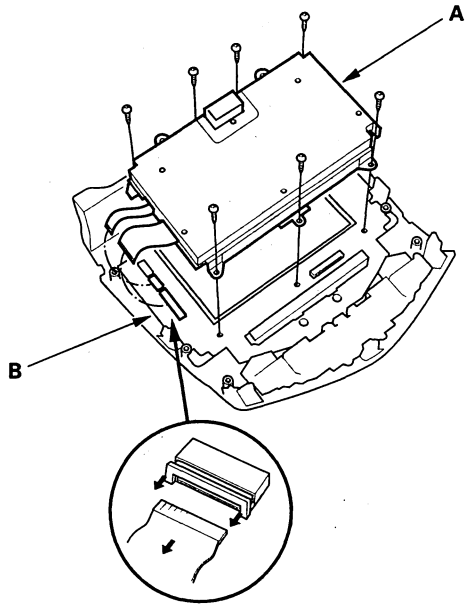

4. Remove the mounting screws and control knobs (A), then remove the printed circuit board (B).

Without Climate Control:

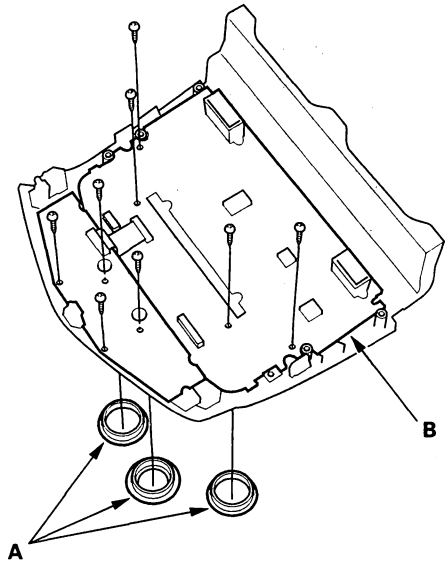

(cont'd)

Protected by AR

Audio-HVAC Display Panel Disassembly/Reassembly (cont'd)

With Climate Control:

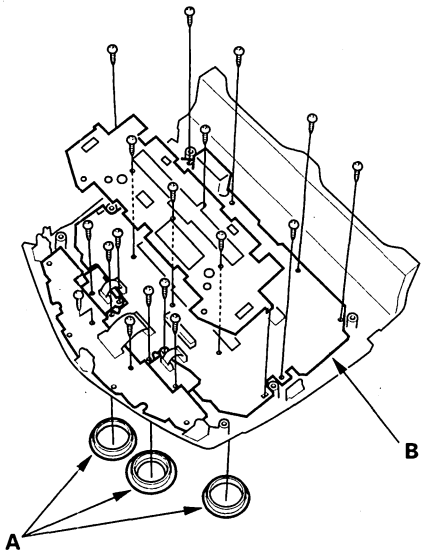

With Navigation:

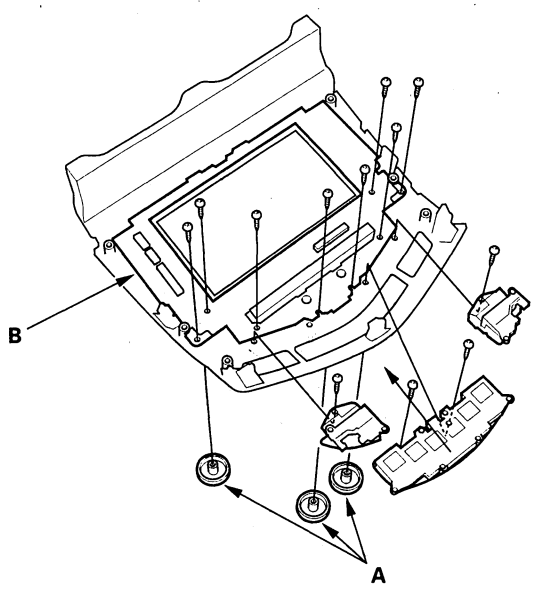

5. Install the audio unit and printed circuit board in the reverse order of removal.

BACK

Protected by AR

Audio-HVAC Subdisplay/Clock Replacement

With Navigation

1. Remove the upper panel (see page 20-131).
2. Remove the two mounting screws.
3. Disconnect the 10P connector (A) from the audio-HVAC subdisplay/clock (B).

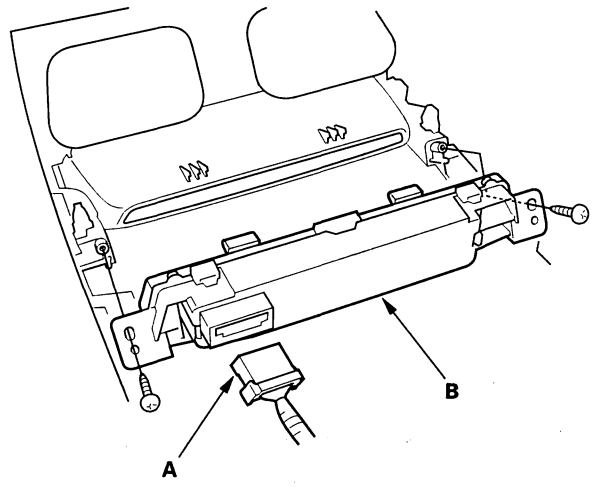

4. Install in the reverse order of removal.

BACK

Protected by AR

Speaker Replacement

Front Speaker

1. Remove the door panel.
   - 2-door (see page 20-9)
   - 4-door (see page 20-10)

NOTICE
If you pull the speaker out too far from the door, you will damage the lower clips (C).

2. Pull the speaker (A) straight out, just enough to release the upper clips. Then lift the speaker straight up to release the lower clips (C).

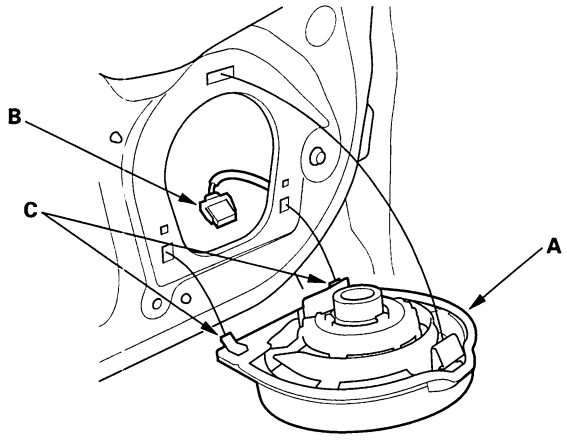

3. Disconnect the 2P connector (B), and remove the speaker.
4. Install in the reverse order of removal.

Tweeter

1. Remove the tweeter speaker grille (A).

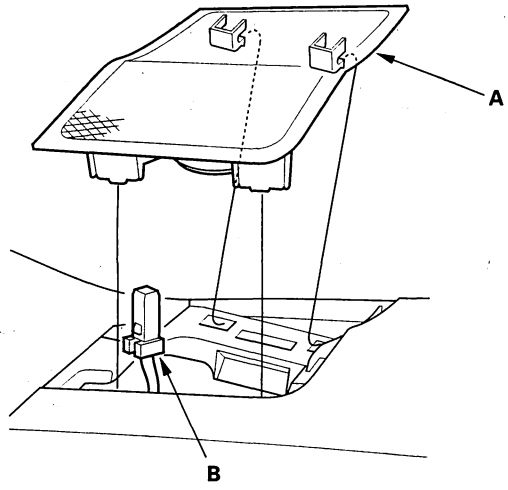

2. Disconnect the 2P connector (B) from the tweeter.
3. Remove the tweeter speaker grille from the tweeter.

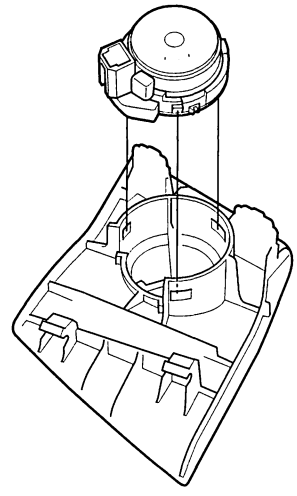

4. Install in the reverse order of removal.

BACK

Protected by AR

Rear Speaker

1. Remove the rear speaker cover by prying straight up to release the clips.
2. Remove the four mounting bolts from the rear speaker (A).

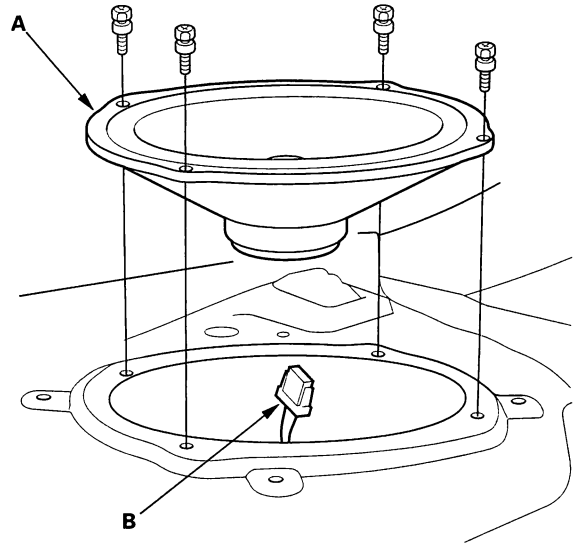

3. Disconnect the 2P connector (B), and remove the speaker.
4. Install in the reverse order of removal.

Radio Remote Switch Test

1. Remove the driver's airbag assembly (see page 23-197).
2. Remove the 4P connector (A) from the radio remote switch (B).

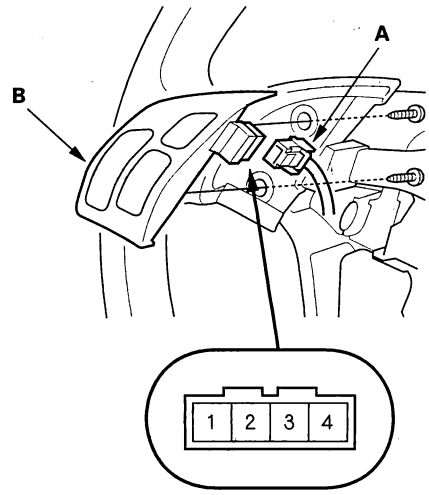

3. Remove the two mounting screws and the switch.
4. Measure resistance between the No. 3 and No. 4 terminals in each switch position according to the table.

Position	Resistance
OFF	About 10 kΩ
MODE	About 4 kΩ
CH (+)	About 2 kΩ
CH (−)	About 840 Ω
▲ (VOL. UP)	About 370 Ω
▼ (VOL. DOWN)	About 100 Ω

5. If the resistance is not as specified, replace the remote switch.

Protected by AR

Window Antenna Coil Replacement

1. Remove the left rear pillar trim.

   - 2 door without side Curtain Airbags (see page 20-97)
   - 4 door without side Curtain Airbags (see page 20-98)
   - 2 door with side Curtain Airbags (see page 20-104)
   - 4 door with side Curtain Airbags (see page 20-105)

2. Disconnect the 1P connectors (A) from the window antenna coil (B).

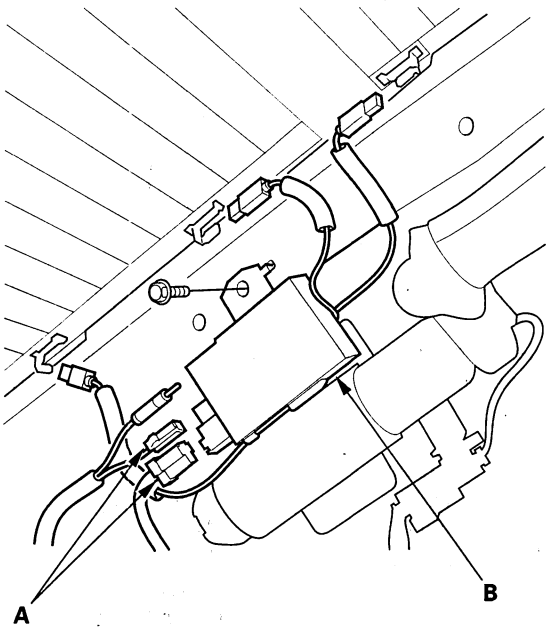

3. Disconnect all connectors, then remove the bolt and window antenna coil.

4. Install in the reverse order of removal.

BACK

Protected by AR

Window Antenna Test

1. Wrap aluminum foil (A) around the tip of the tester probe (B) as shown.

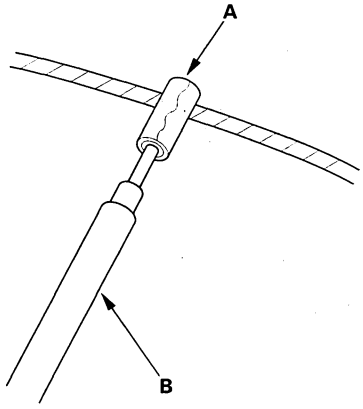

2. Touch one tester probe to the near of the window antenna terminal (A) here, and move the other tester probe along the antenna wires to check that continuity exists. Repair if continuity does not exist.

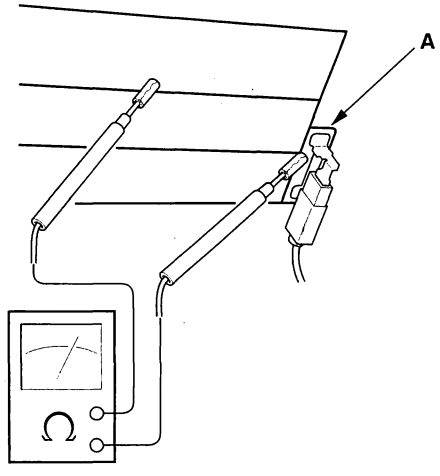

Window Antenna Repair

NOTE: To make an effective repair, the broken section must be no longer than one inch.

1. Lightly rub the area around the broken section (A) with fine steel wool, then clean it with alcohol.

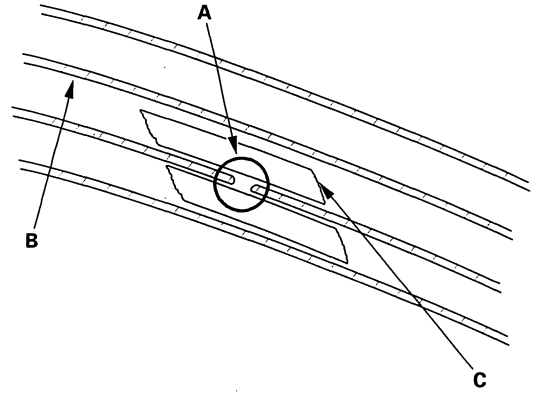

2. Carefully mask above and below the broken portion of the window antenna wire (B) with cellophane tape (C).

3. Mix the silver conductive paint thoroughly. Using a small brush, apply a heavy coat of paint (A) extending about 1/8 " on both sides of the break. Allow 30 minutes to dry.

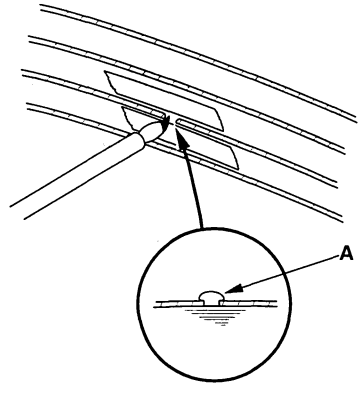

4. Check for continuity in the repaired wire.

5. Apply a second coat of paint in the same way. Let it dry three hours before removing the tape.

Protected by AR

XM Antenna Replacement

'04-06 models

1. Remove the headliner (see page 20-117).
2. Disconnect the 2P ('04-05 models) or 1P ('06 model) connector (A) from the XM antenna (B).

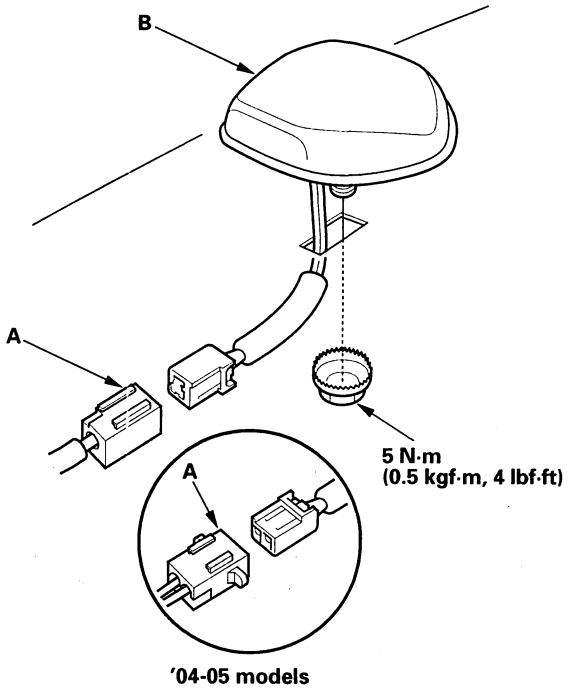

'04-05 models

3. Remove the nut from the XM antenna.
4. Install in the reverse order of removal.

XM Receiver Replacement

'04-06 models

1. Open the trunk lid.
2. Remove the right trunk side trim panel.
   - 2-door (see page 20-112)
   - 4-door (see page 20-113)
3. Loosen the two nuts from the XM receiver.
4. Disconnect the 14P connector (A) and 2P ('04-05 models) or 1P ('06 model) connector (B) from the XM receiver (C).

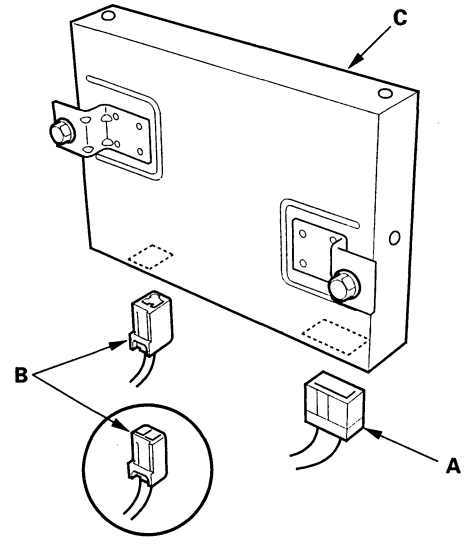

'04-05 models

5. Install in the reverse order of removal.

BACK

Protected by AR

Accessory Power Sockets

BODY

Component Location Index

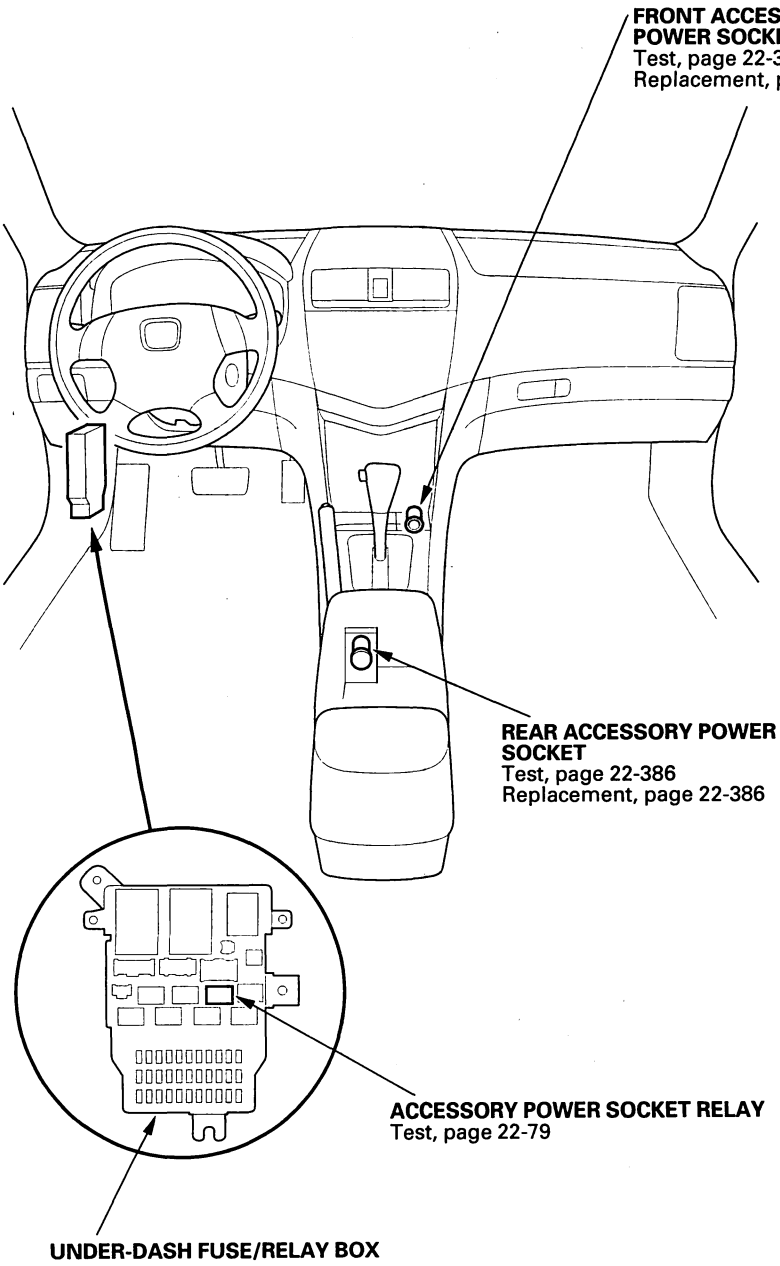

BACK

Protected by AR

Accessory Power Sockets

Circuit Diagram

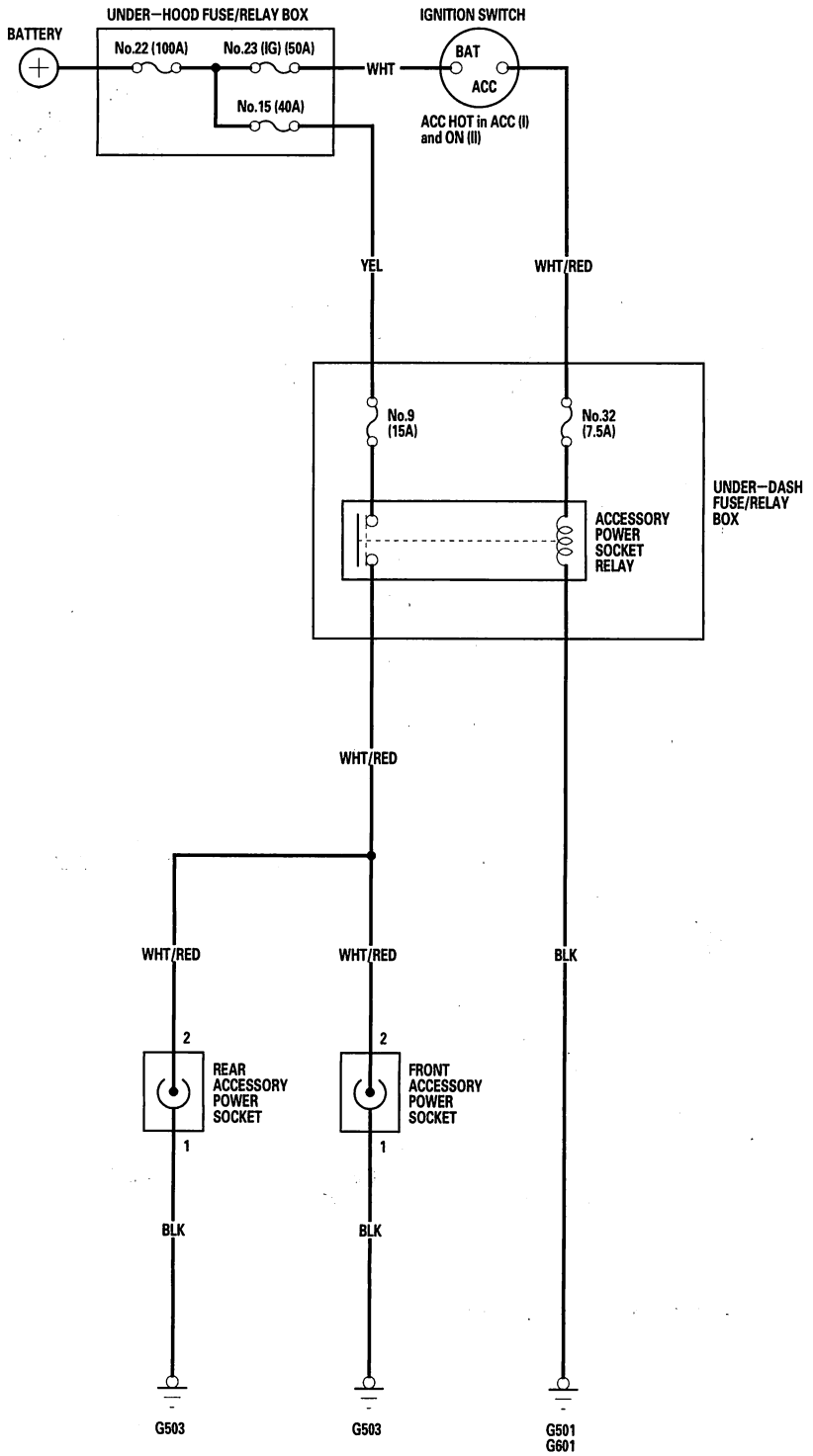

BACK

Protected by AR

Front Accessory Power Socket Test/Replacement

1. Remove the center console holder (see page 20-125).

2. Disconnect the 2P connector from the front accessory power socket.

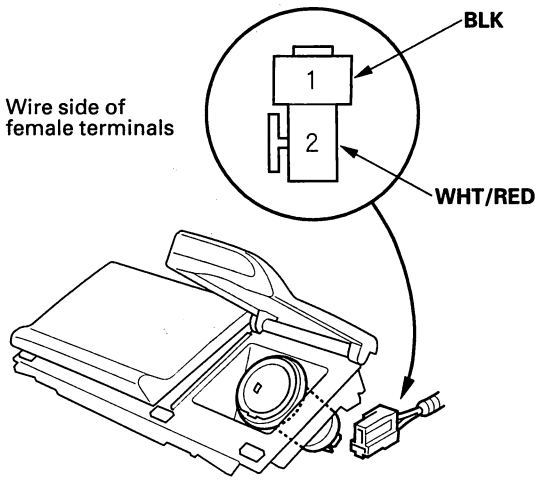

3. Inspect the connector terminals to be sure they are all making good contact.

   - If the terminals are bent, loose, or corroded, repair them as necessary, and recheck the system.
   - If the terminals look OK, go to step 4.

4. Turn the ignition switch to ACC (I), and check for voltage between the No. 2 terminal and body ground. There should be battery voltage.

   - If there is battery voltage, go to step 5.
   - If there is no battery voltage, check for:
     - Blown No. 9 (15 A) or No. 32 (7.5 A) fuse in the under-dash fuse/relay box.
     - Faulty accessory power socket relay.
     - Poor ground (G501, G601).
     - An open in the wire.

5. Check for continuity between the No. 1 terminal and body ground. There should be continuity.

   - If there is continuity, go to step 6.
   - If there is no continuity, check for:
     - Poor ground (G503).
     - An open in the wire.

6. Remove the housing (A) and socket (B).

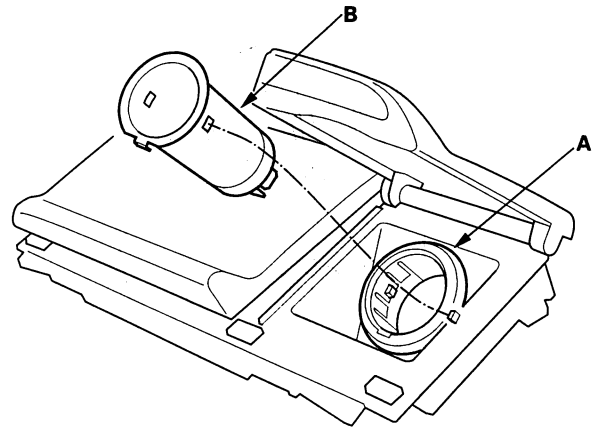

7. Remove the ring (A).

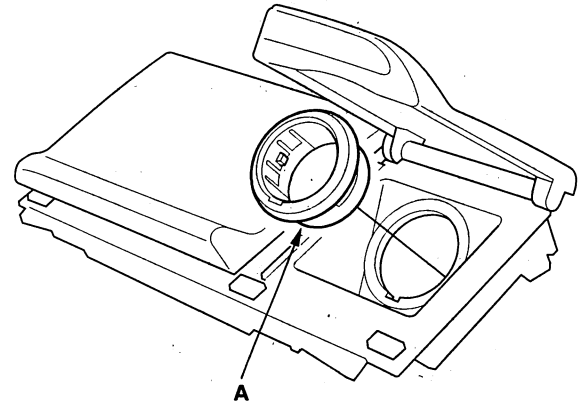

8. Install the power socket in the reverse order of removal.

Protected by AR

Accessory Power Sockets

Rear Accessory Power Socket Test/Replacement

1. Open the center console.
2. Remove the screw and accessory power socket panel (A).

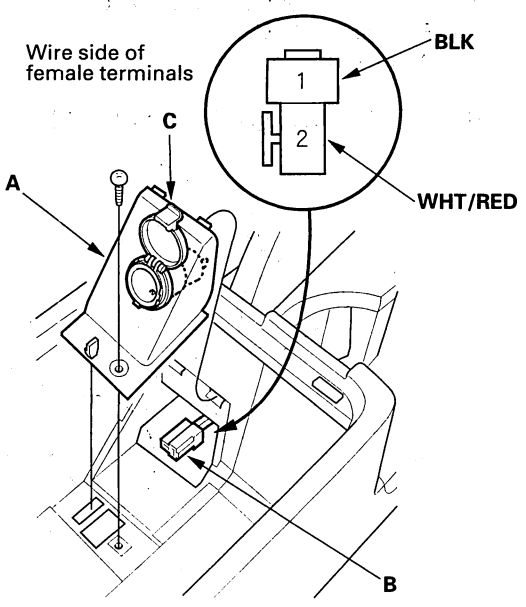

3. Disconnect the 2P connector (B) from the rear accessory power socket (C).
4. Inspect the connector terminals to be sure they are all making good contact.
   - If the terminals are bent, loose, or corroded, repair them as necessary, and recheck the system.
   - If the terminals look OK, go to step 5.
5. Turn the ignition switch to ACC (I), and check for voltage between the No. 2 terminal and body ground. There should be battery voltage.
   - If there is battery voltage, go to step 6.
   - If there is no battery voltage, check for:
     - Blown No. 9 (15 A) or No. 32 (7.5 A) fuse in the under-dash fuse/relay box.
     - Faulty accessory power socket relay.
     - Poor ground (G501, G601).
     - An open in the wire.
6. Check for continuity between the No. 1 terminal and body ground. There should be continuity.
   - If there is continuity, go to step 7.
   - If there is no continuity, check for:
     - Poor ground (G503).
     - An open in the wire.
7. Remove the housing (A) and socket (B).

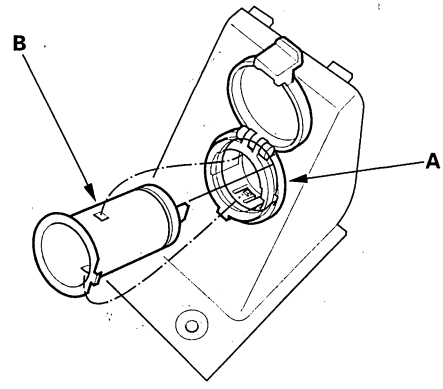

8. Remove the housing (A) from the panel (B).

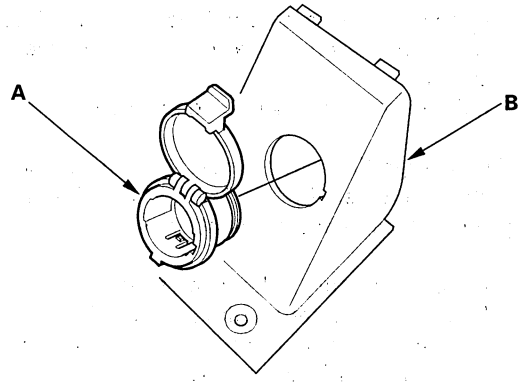

9. Install the power socket in the reverse order of removal.

BACK

Protected by AR

Power Seats

Component Location Index

8-way Adjustable:

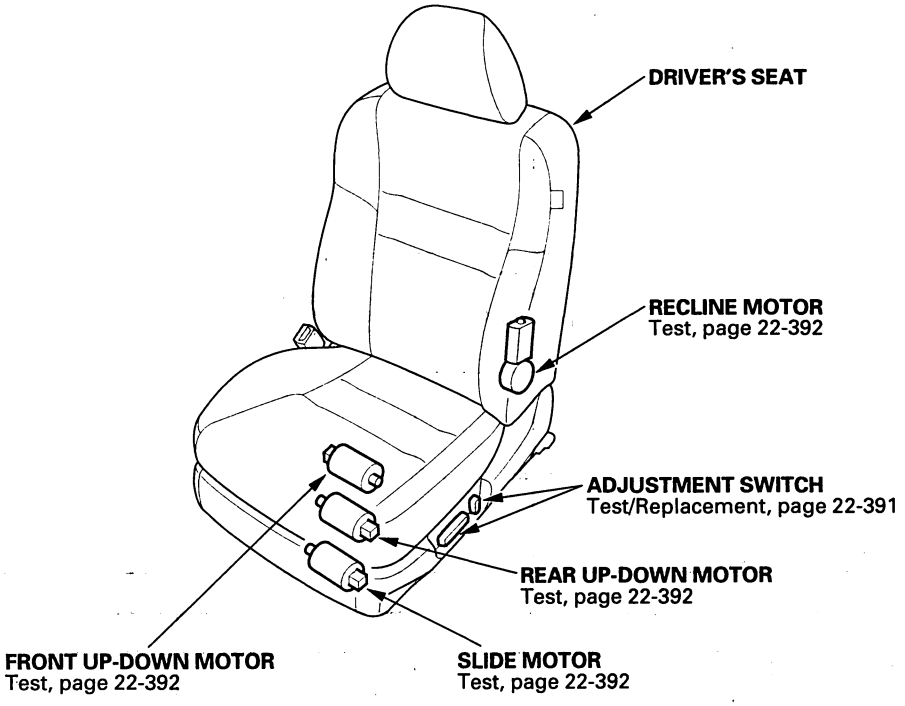

2-way Adjustable:

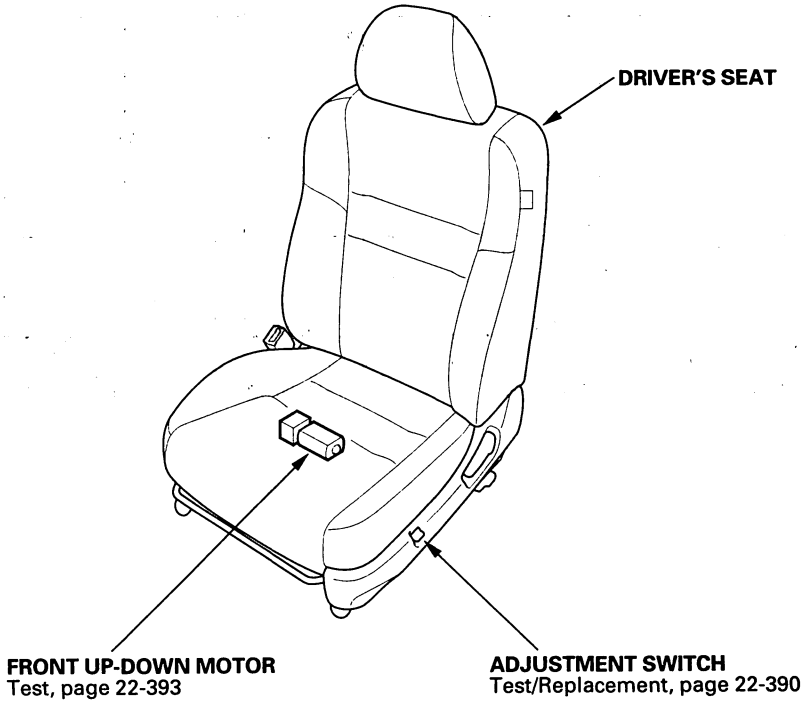

Protected by AR

Power Seats

Circuit Diagram

8-way Adjustable

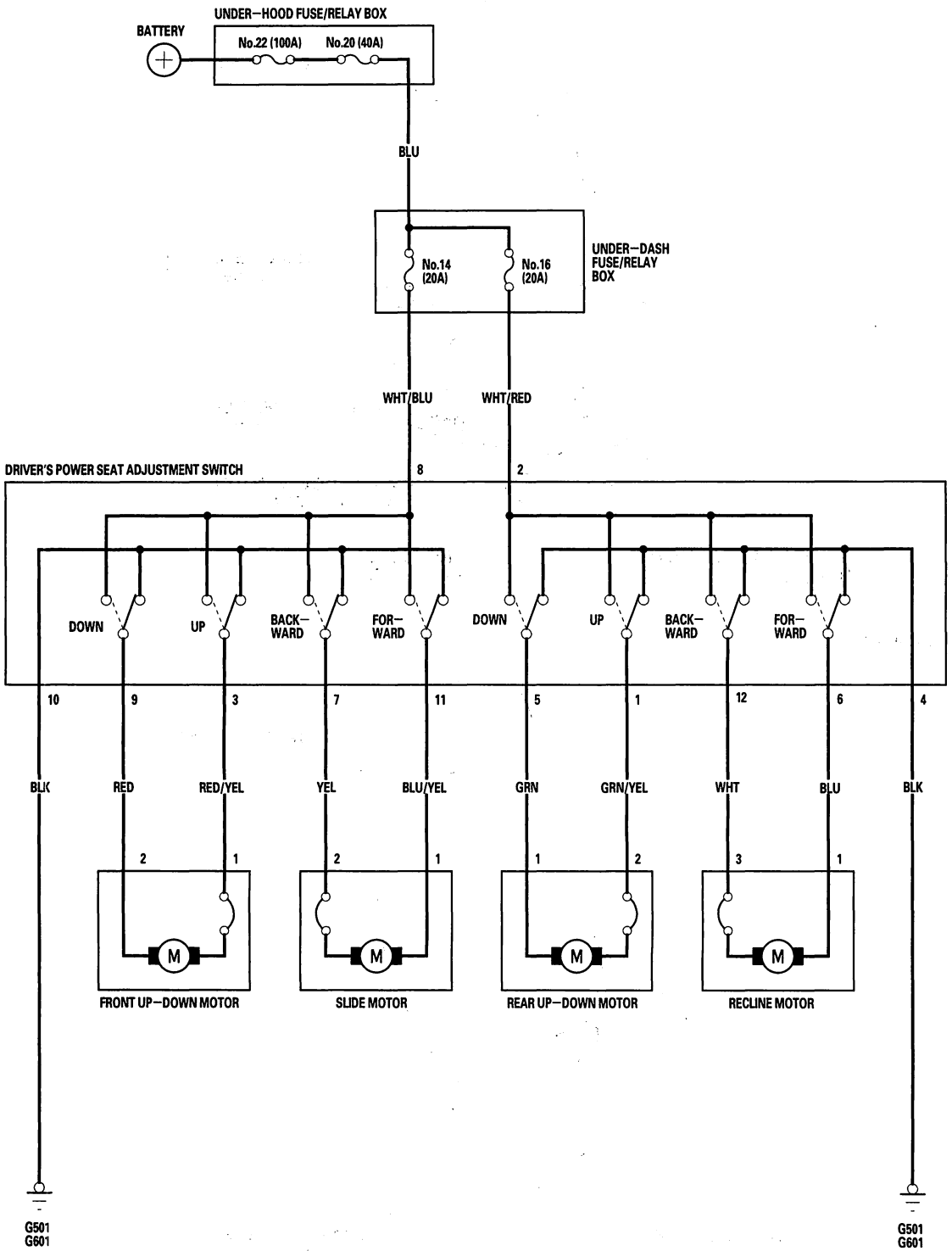

BACK

Protected by AR

2-way Adjustable

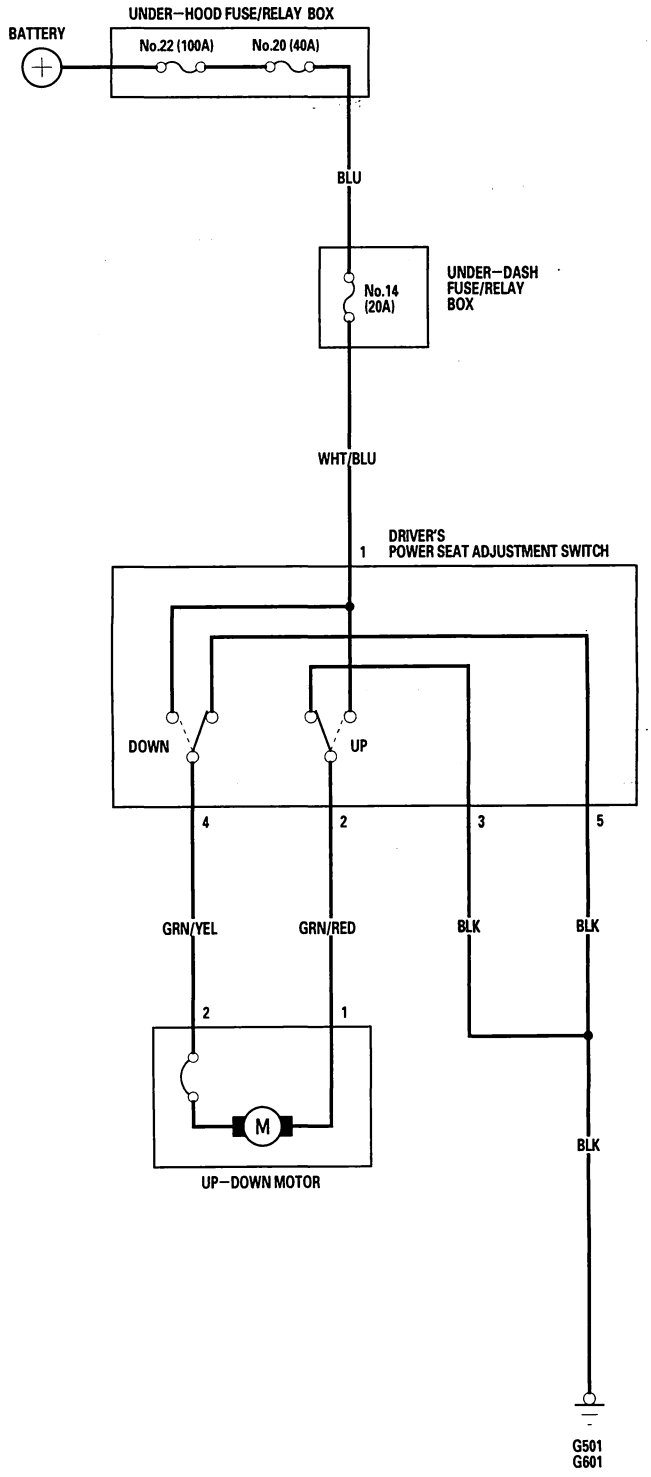

Protected by AR

Power Seats

Switch Test/Replacement

Driver's Power Seat (2-way Adjustable)

1. Remove the recline cover (see page 20-154) from the driver's power seat, then remove the two screws and the power seat adjustment switch.
2. Disconnect the 5P connector from the power seat adjustment switch (A).

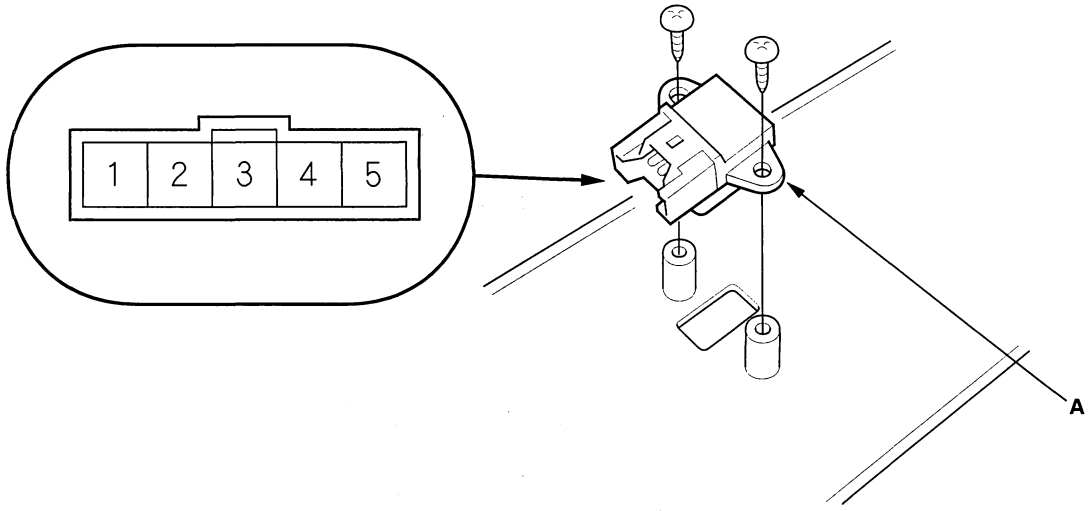

3. Check for continuity between the terminals in each switch position according to the table.

Position	Terminal	1	2	3	4	5
UP-DOWN SWITCH	UP	○——	——○		○——	——○
	DOWN	○——	——○	——○		

4. If the continuity is not as specified, replace the switch.

BACK

Protected by AR

Driver's Power Seat (8-way Adjustable)

1. Remove the power seat adjustment switch knobs (A) and recline cover (see page 20-155) from the driver's power seat, then remove the two screws and the power seat switch.

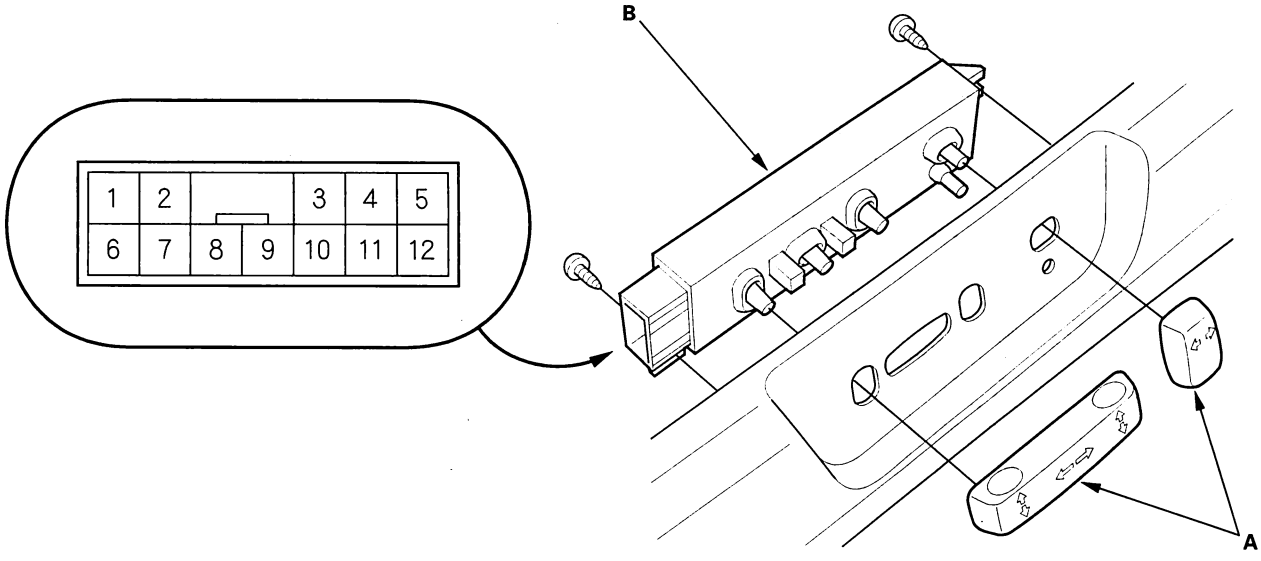

2. Disconnect the 12P connector from the power seat adjustment switch (B).
3. Reinstall the adjustment switch knobs to the switch.
4. Check for continuity between the terminals in each switch position according to the table.

Position \ Terminal		1	2	3	4	5	6	7	8	9	10	11	12
SLIDE SWITCH	Forward							○	○		○	○	
	Backward							○	○		○	○	
RECLINE SWITCH	Forward		○		○		○						○
	Backward		○		○		○						○
FRONT UP-DOWN SWITCH	UP			○					○	○	○		
	DOWN			○					○	○	○		
REAR UP-DOWN SWITCH	UP	○	○		○	○							
	DOWN	○	○		○	○							

5. If the continuity is not as specified, replace the switch.

Protected by AR

Motor Test

Driver's 8-way Adjustable Power Seat

1. Remove the driver's seat (see page 20-144).
2. Disconnect the 12P connector (A) from the power seat adjustment switch (B).

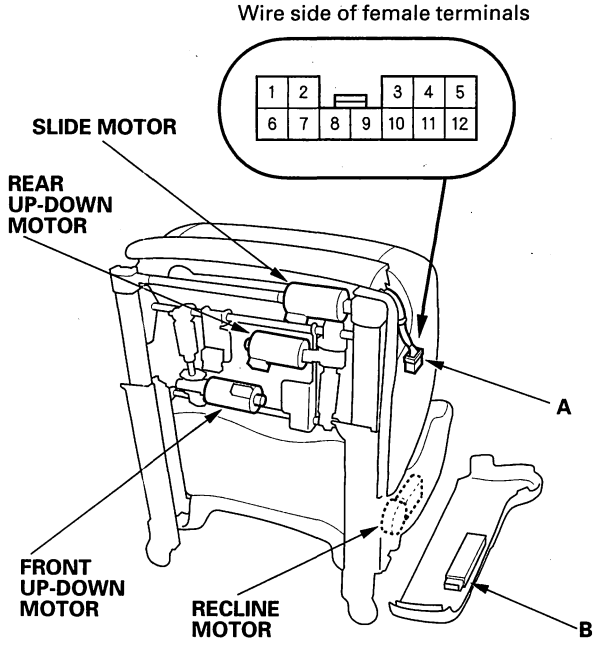

3. Test each motor by applying battery voltage and body ground to the terminals.

Slide motor

Terminal / Position	7	11
Forward	⊖	⊕
Backward	⊕	⊖

Recline motor

Terminal / Position	6	12
Forward	⊖	⊕
Backward	⊕	⊖

Front up-down motor

Terminal / Position	3	9
UP	⊕	⊖
DOWN	⊖	⊕

Rear up-down motor

Terminal / Position	1	5
UP	⊕	⊖
DOWN	⊖	⊕

4. If the motor does not run or fails to run smoothly, check for an open in the driver's seat wire harness between the 12P connector and each motor connector. If the harness is OK, replace the motor (see page 20-162).

BACK

Protected by AR

Driver's 2-way Adjustable Power Seat

1. Remove the driver's seat (see page 20-144).
2. Disconnect the 5P connector (A) from the power seat adjustment switch (B).

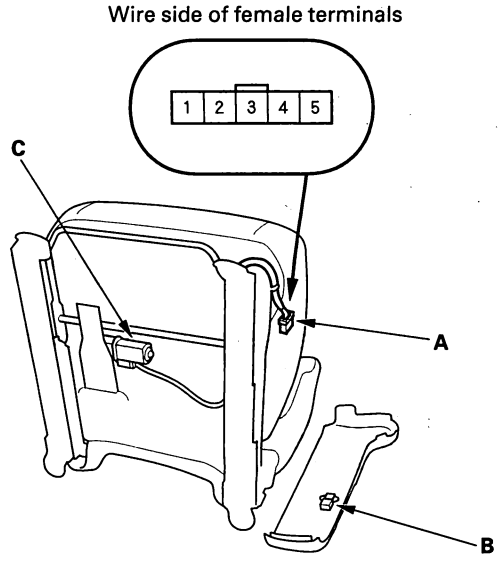

3. Test the motor (C) by applying battery voltage to the 5P connector No. 2 (or No. 4) and ground to the No. 4 (or No. 2) terminals. The motor should run.
4. If the motor does not run or fails to run smoothly, check for an open in the wire between the 5P connector and the motor 2P connector. If the harness is OK, replace the motor (see page 20-162).

Protected by AR

Seat Heaters

Component Location Index

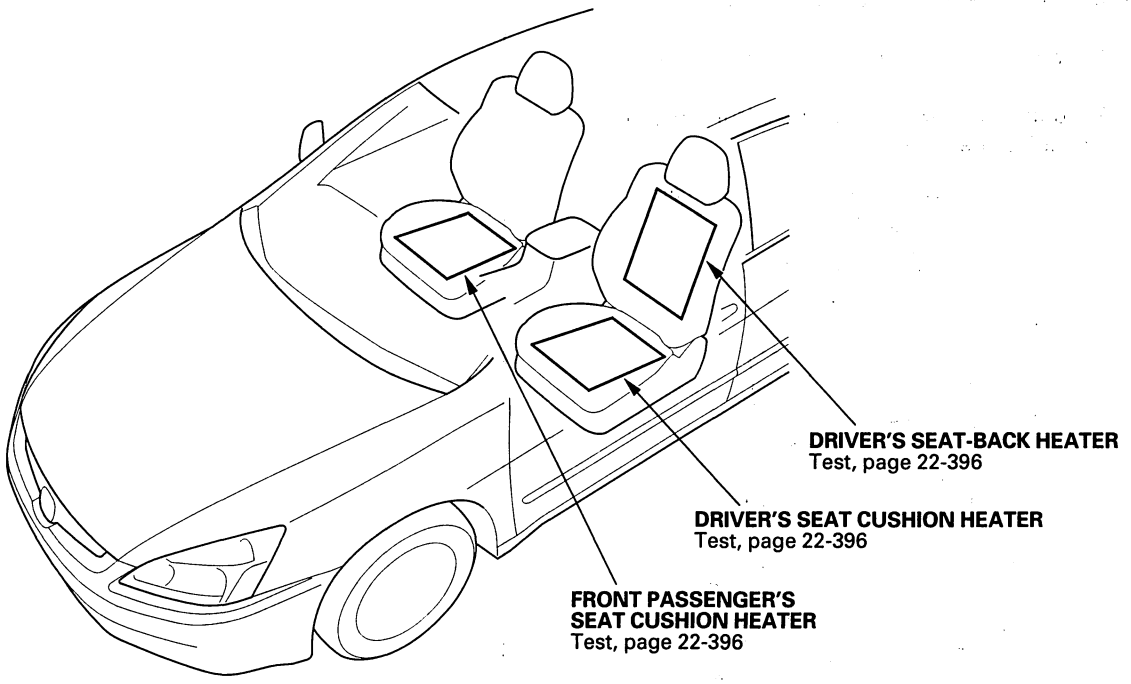

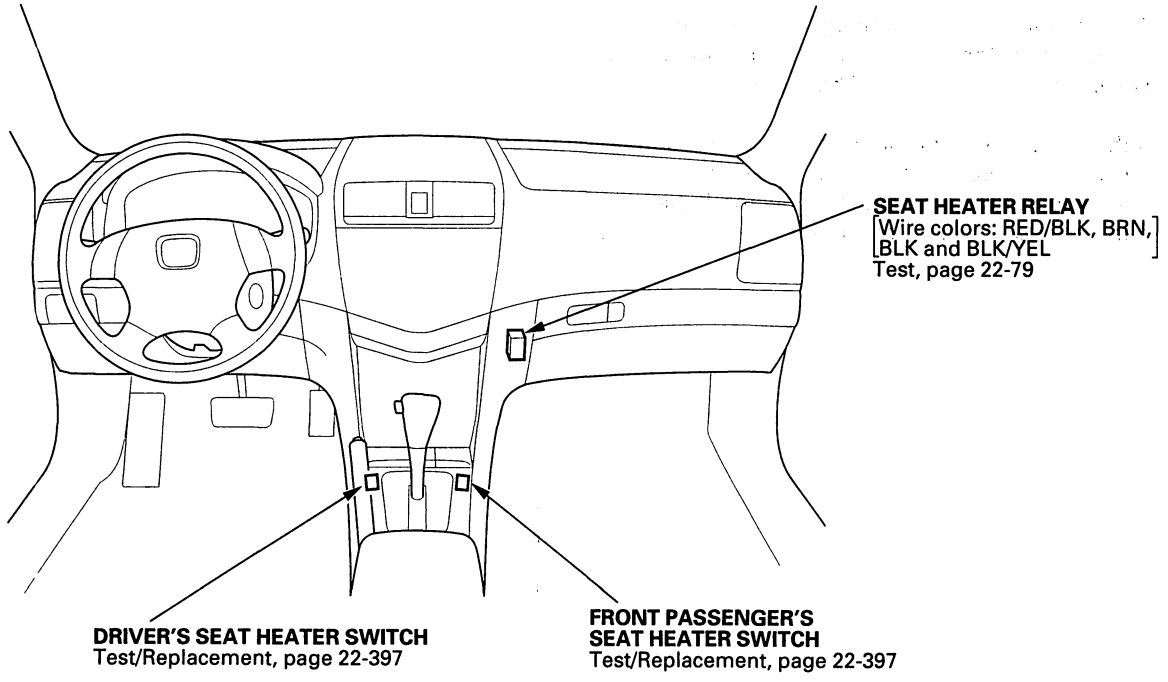

BACK

Protected by AR

Circuit Diagram

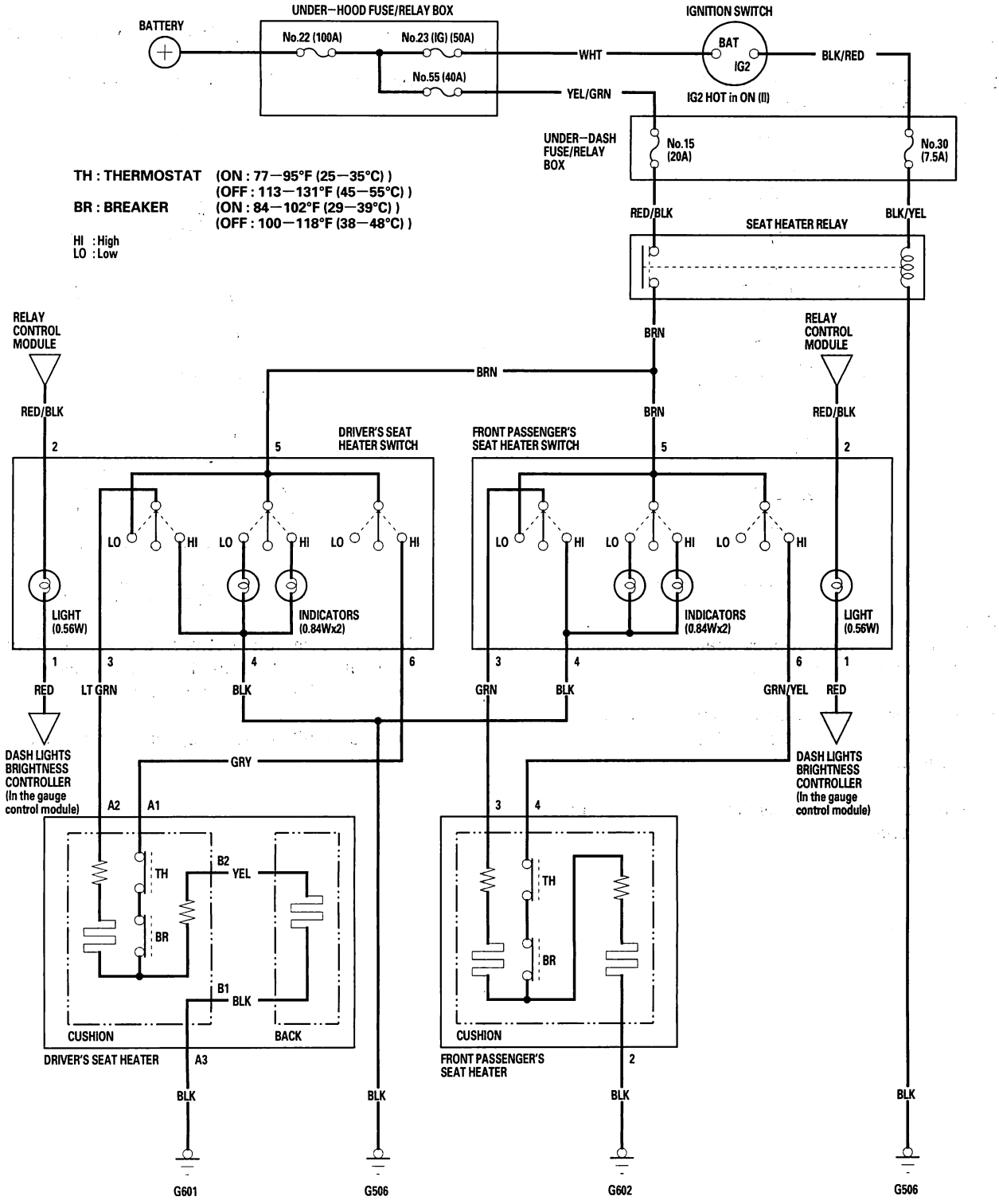

Protected by AR

Seat Heaters

Seat Heater Test

Driver's Seat

1. Remove the driver's seat (see page 20-144).
2. Disconnect the 4P connector (A) and 2P connector (B) from the seat heater.

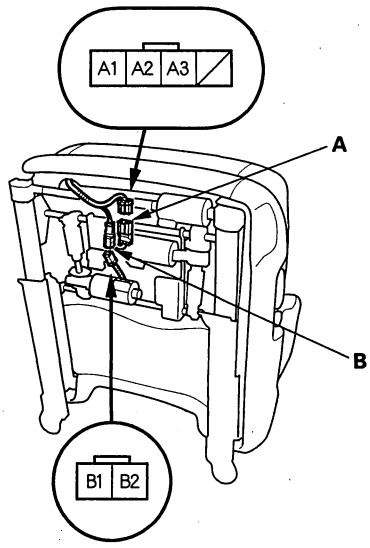

Wire side of female terminals

3. Check for continuity between the B1 and B2 terminals of the seat-back heater 2P connector. There should be continuity.
4. Check for continuity between the A1 and A2 terminals, and the A1 and B2 terminals. There should be continuity.
5. If the continuity check is not as specified, replace the seat heater.

Front Passenger's Seat

1. Remove the passenger's seat (see page 20-144).
2. Disconnect the 4P connector (A) from the seat heater.

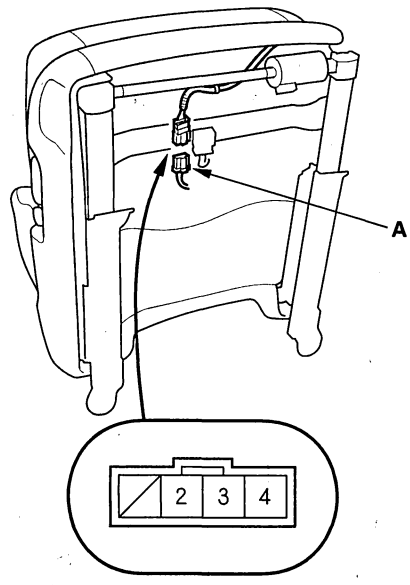

Terminal side of male terminals

3. Check for continuity between the No. 2 and No. 3 terminals, and No. 3 and No. 4 terminals of the 4P connector. There should be continuity.
4. If the continuity is not as specified, replace the seat heater.

BACK

Protected by AR

Switch Test

1. Remove the center console front panel (see page 20-125).

2. Disconnect the 6P connector from the seat heater switch (A), then remove the switch.

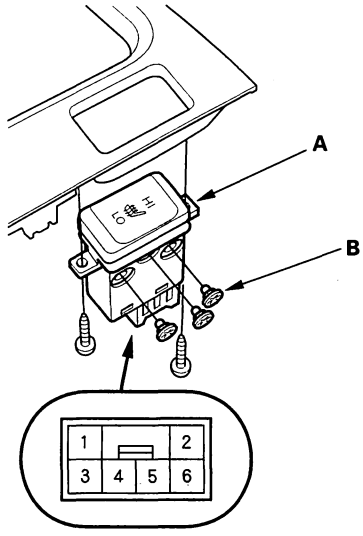

3. Check for continuity between the terminals in each switch position according to the table.

Position \ Terminal		1		2	3	4		5	6
ON	HIGH	○	○	○	○	○	○	○	○
	LOW	○	○	○		○	○	○	
					○			○	
OFF		○	○	○					

4. If the continuity check is not as specified, replace the illumination bulbs (B) or the switch.

Protected by AR

Power Mirrors

Component Location Index

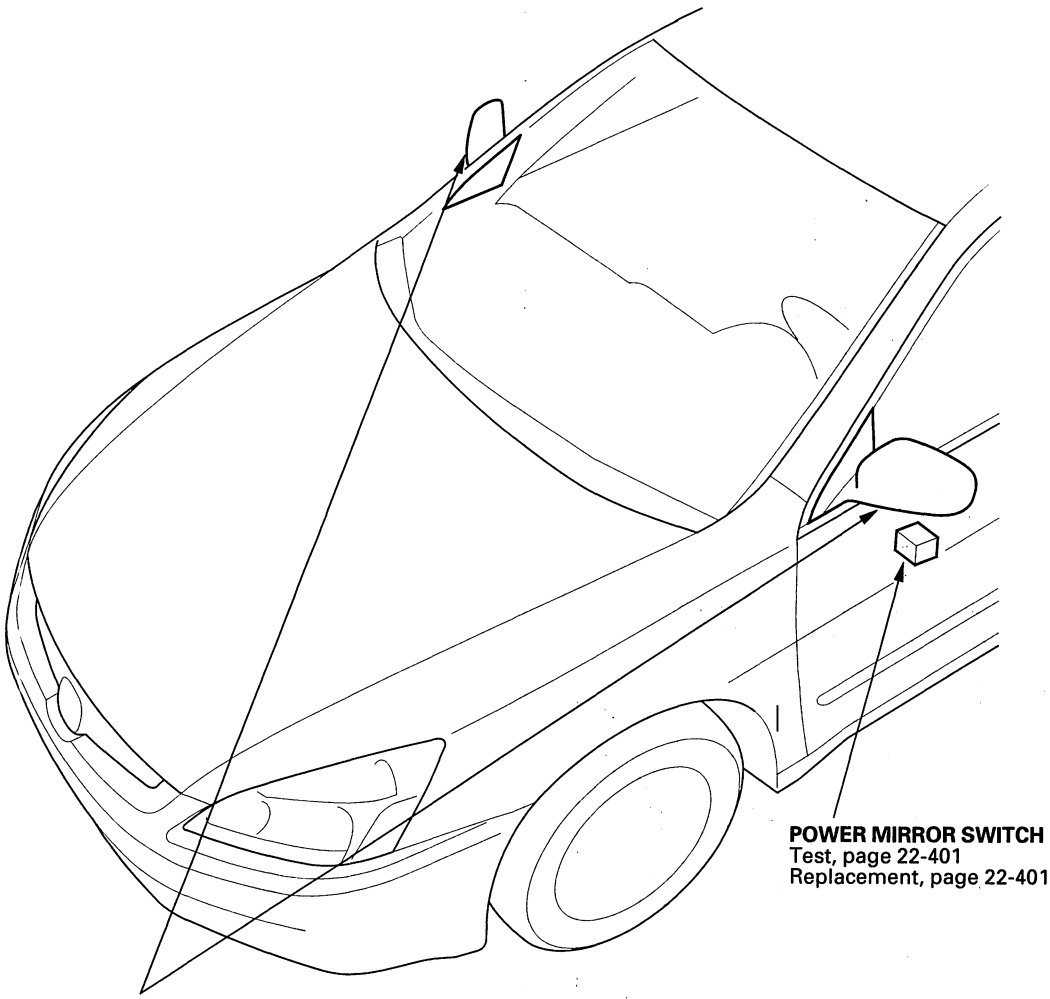

POWER MIRROR SWITCH
Test, page 22-401
Replacement, page 22-401

POWER MIRRORS
Function Test, page 22-400
Replacement, page 20-41
Power Mirror Actuator Test, page 22-401
Mirror Actuator Replacement, page 22-402

BACK

Protected by AR

Circuit Diagram

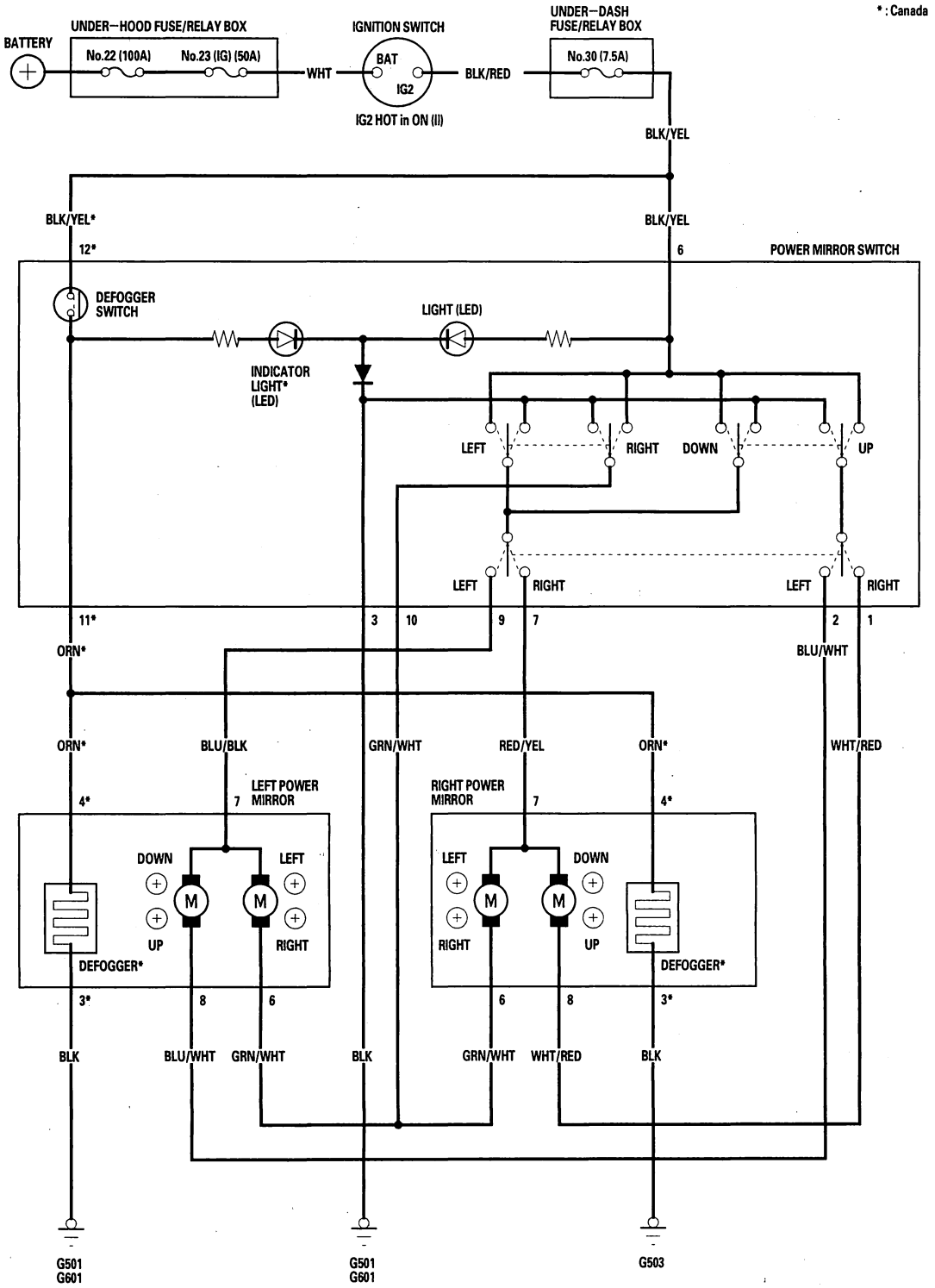

Protected by AR

Power Mirrors

Function Test

1. Remove the driver's door switch trim.

   - 2-door (see page 20-9)
   - 4-door (see page 20-10)

   NOTE: The illustration shows 4-door.

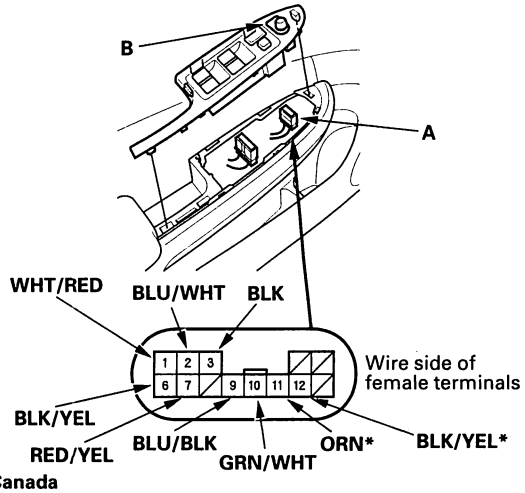

*: Canada

2. Disconnect the 13P connector (A) from the power mirror switch (B), and inspect the terminals. If OK, go to step 3.

3. Choose the appropriate test based on the symptom:
   - Both mirrors don't work, go to step 4.
   - Left mirror doesn't work, go to step 6.
   - Right mirror doesn't work, go to step 7.
   - Defogger doesn't work (Canada), go to step 8.

Both mirrors

4. Check for voltage between the No. 6 terminal and body ground with the ignition switch ON (II). There should be battery voltage.
   - If there is no battery voltage, check for:
     - Blown No. 30 (7.5 A) fuse in the under-dash fuse/relay box.
     - An open in the BLK/YEL wire.
   - If there is battery voltage, go to step 5.

5. Check for continuity between the No. 3 terminal and body ground.
   There should be continuity.
   - If there is no continuity, check for:
     - An open in the BLK wire.
     - Poor ground (G501, G601).
   - If there is continuity, check both mirrors individually as described in the next column.

Left mirror

6. Connect the No. 6 terminal to the No. 9 terminal, and the No. 2 (or No. 10) terminal to the No. 3 terminal with jumper wires. The left mirror should tilt down (or swing left) with the ignition switch ON (II).
   - If the mirror does not tilt down (or does not swing left), check for an open in the BLU/WHT (or GRN/WHT) wire between the left mirror and the 13P connector. If the wire is OK, check the left mirror actuator.
   - If the mirror neither tilts down nor swings left, repair the BLU/BLK wire.
   - If the mirror works properly, check the mirror switch.

Right mirror

7. Connect the No. 6 terminal to the No. 7 terminal, and the No. 1 (or No. 10) terminal to the No. 3 terminal with jumper wires. The right mirror should tilt down (or swing left) with the ignition switch ON (II).
   - If the mirror does not tilt down (or does not swing left), check for an open in the WHT/RED (or GRN/WHT) wire between the right mirror and the 13P connector.
     If the wire is OK, check the right mirror actuator.
   - If the mirror neither tilts down nor swings left, repair the RED/YEL wire.
   - If the mirror works properly, check the mirror switch.

Defogger (Canada)

8. Connect the No. 12 and No. 11 terminals with a jumper wire, and check for voltage between the No. 4 terminal of the mirror connectors and body ground. There should be battery voltage and both mirrors should warm up with the ignition switch ON (II).
   - If there is no voltage or neither warms up, check for:
     - An open in the BLK/YEL or ORN wire.
     - Blown No. 30 (7.5 A) fuse in the under-dash fuse/relay box.
   - If only one fails to warm up, check:
     - Its defogger.
     - Poor ground (G501, G601).
   - If both warm up, check the defogger switch.

BACK

Protected by AR

Power Mirror Switch Test/ Replacement

1. Remove the driver's door switch trim.
   - 2-door (see page 20-9)
   - 4-door (see page 20-10)
2. Disconnect the 13P connector (A) from the power mirror switch (B).

   NOTE: The illustration shows 4-door.

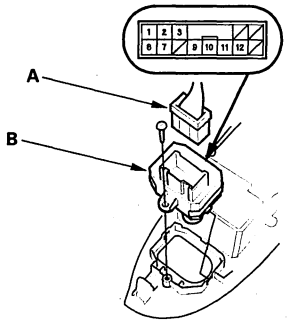

3. Check for continuity between the terminals in each switch position according to the table.

Mirror Switch:

	Terminal / Position	1	2	3	6	7	9	10
L	UP		○	○			○	
L	DOWN		○	○	○		○	
L	LEFT				○		○	○
L	RIGHT				○		○	○
R	UP	○		○				
R	DOWN	○		○	○			
R	LEFT				○	○		○
R	RIGHT				○	○		○

Defogger Switch (Canada):

Terminal / Position	11	12
ON	○	○
OFF		

4. If the continuity is not as specified, replace the power mirror switch.

Power Mirror Actuator Test

1. Remove the door panel.
   - 2-door (see page 20-9)
   - 4-door (see page 20-10)
2. Disconnect the 8P connector (A) from the power mirror actuator (B).

   NOTE: The illustration shows 4-door.

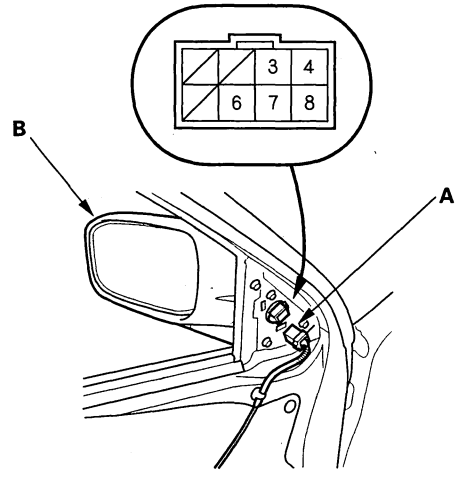

3. Check actuator operation by connecting power and ground according to the table.

Terminal / Position	6	7	8
TILT UP		⊖	⊕
TILT DOWN		⊕	⊖
SWING LEFT	⊖	⊕	
SWING RIGHT	⊕	⊖	

4. If the mirror fails to work properly, replace the mirror actuator.

Defogger Test (Canada)

5. Check for continuity between the No. 3 and No. 4 terminals of the 8P connector. There should be continuity with the defogger switch ON. If there is no continuity, check for an open circuit.

Protected by AR

Power Mirror Actuator Replacement

1. Remove the power mirror (see page 20-41).
2. Disconnect the 8P connector.
3. Carefully remove the mirror holder from the mirror housing. Gently pull it out by hand (see page 20-43).
4. Remove the cover (A), then remove the two screws from the mirror connector (B).

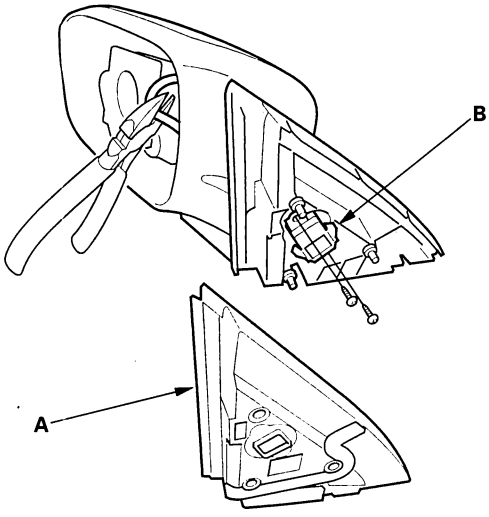

5. Record the terminal locations and wire colors.
6. Cut the wire harness with the wire cutter.
7. Remove the three screws, and separate the mirror housing (A) from the bracket (B).

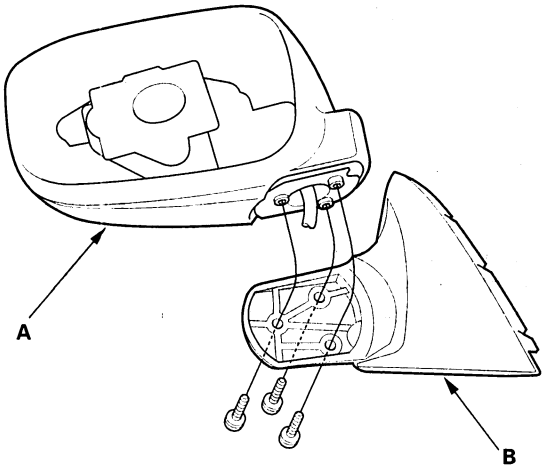

8. Remove the three screws and separate the actuator (A) from the housing (B).

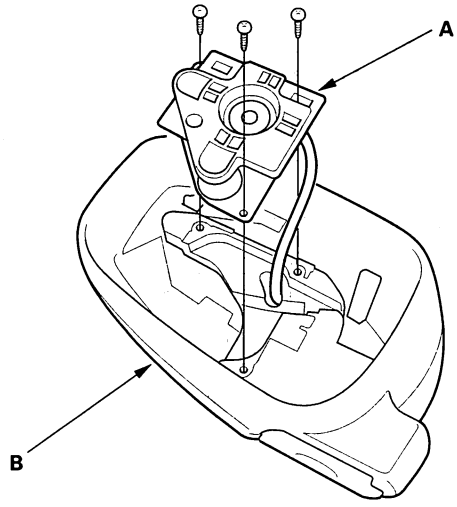

9. Route the wire harness (A) of the new actuator (B) through the hole in the bracket (C).

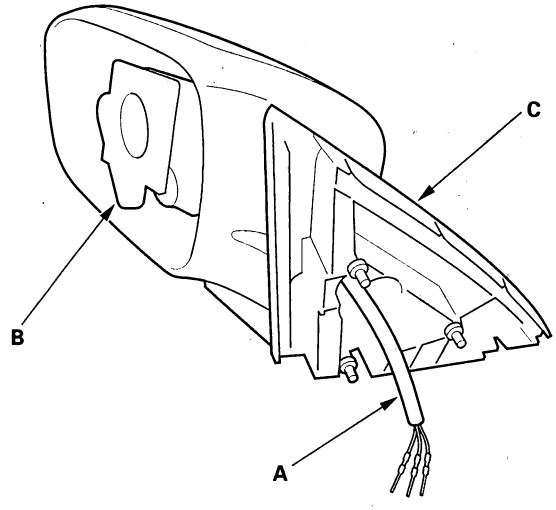

10. Install the new actuator in the reverse order of removal.

BACK

Protected by AR

11. Insert the terminals into the connector in the original arrangement as shown below.

Terminal View:

USA

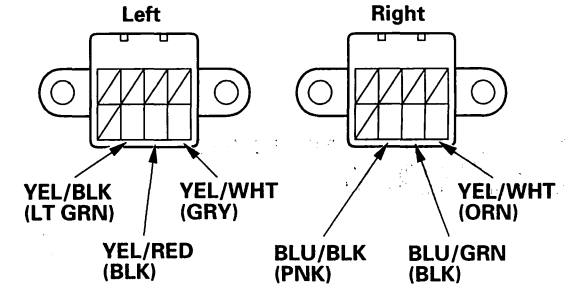

Canada

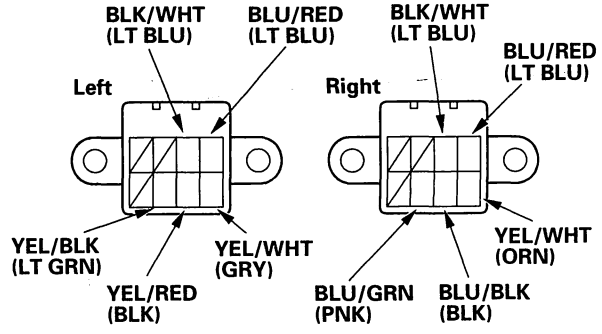

( ): Donelly made

12. Reassemble in the reverse order of disassembly. Be careful not to break the mirror holder when reinstalling it to the actuator.

13. Reinstall the mirror assembly to the door.

14. Operate the power mirror to ensure smooth operation.

Protected by AR

Immobilizer System

Component Location Index

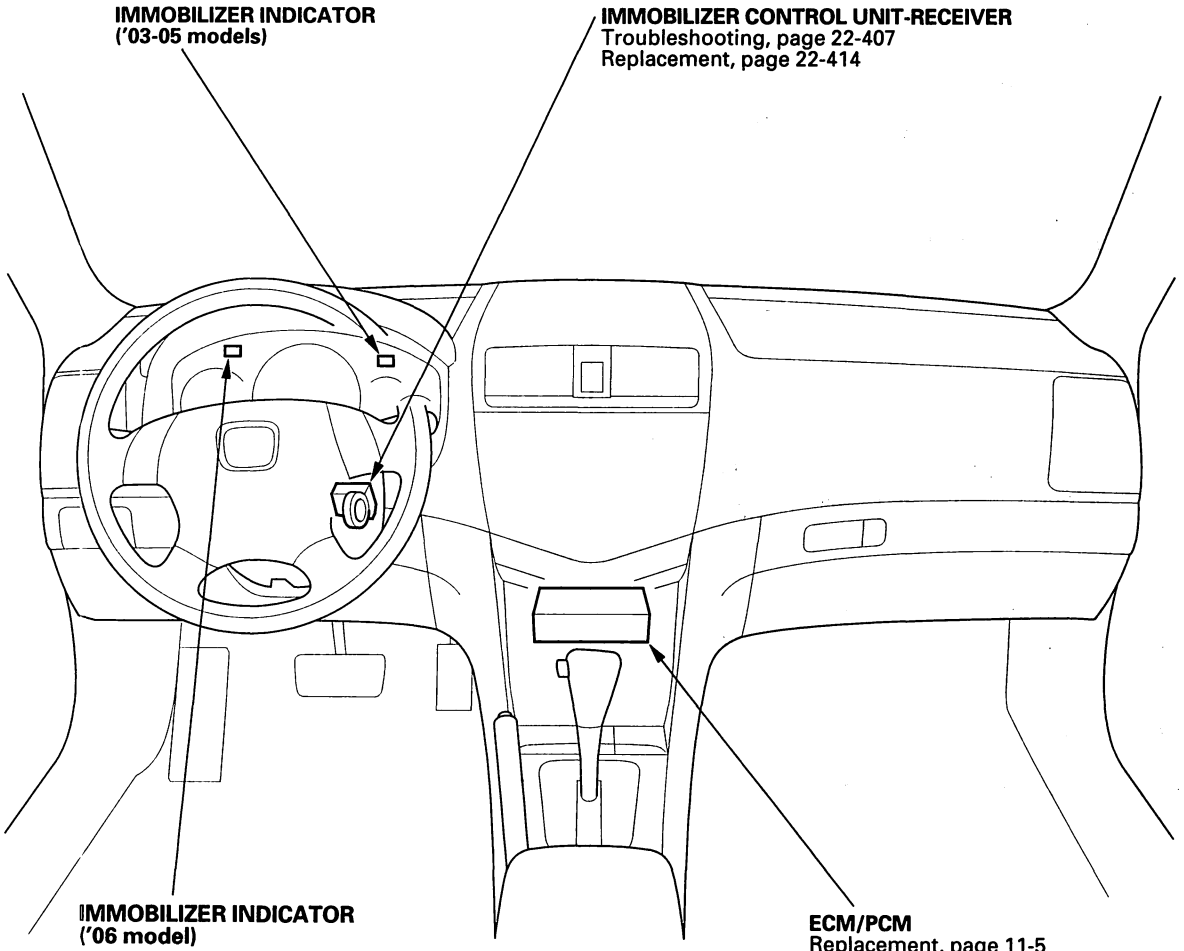

BACK

Protected by AR

System Description

The vehicle is equipped with a type IV immobilizer system that will disable the vehicle unless the proper ignition key is used. This system consists of a transponder located in the ignition key, an immobilizer control unit-receiver, an indicator light, and the ECM/PCM.

When the key is inserted in the ignition switch and turned to the ON (II) position, the immobilizer control unit-receiver sends power to the transponder in the ignition key. The transponder then sends a coded signal back to the immobilizer control unit-receiver which then sends a coded signal to the ECM/PCM. The code is a rolling type embedded in the immobilizer control unit-receiver instead the PCM.

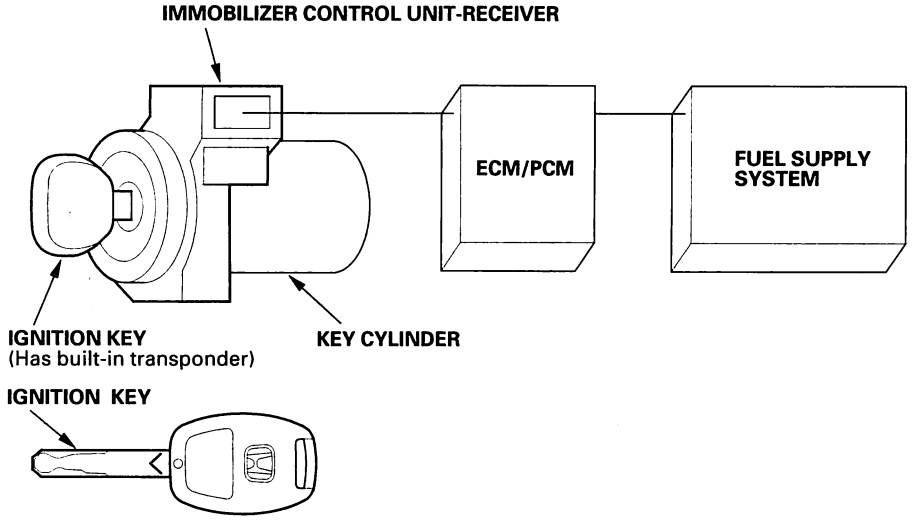

NOTE: This key is slimilar in appearance to other models, but it is a rolling code type. Only key with a V on the shank can be used.

- If the proper key has been used, the immobilizer indicator light will come on for about 2 seconds, then go off.
- If the wrong key has been used or the code was not received or recognized by the unit, the indicator light will come on for about 2 seconds, then it will blink until the ignition switch is turned OFF.
- If the ignition switch is turned OFF, the indicator will blink for about 5 seconds to signal that the unit has reset correctly, then the indicator will go off.
- If the customer has lost their key, and cannot start the engine, contact Honda Customer Relations.

IMMOBILIZER INDICATOR LIGHT BLINKING PATTERN:

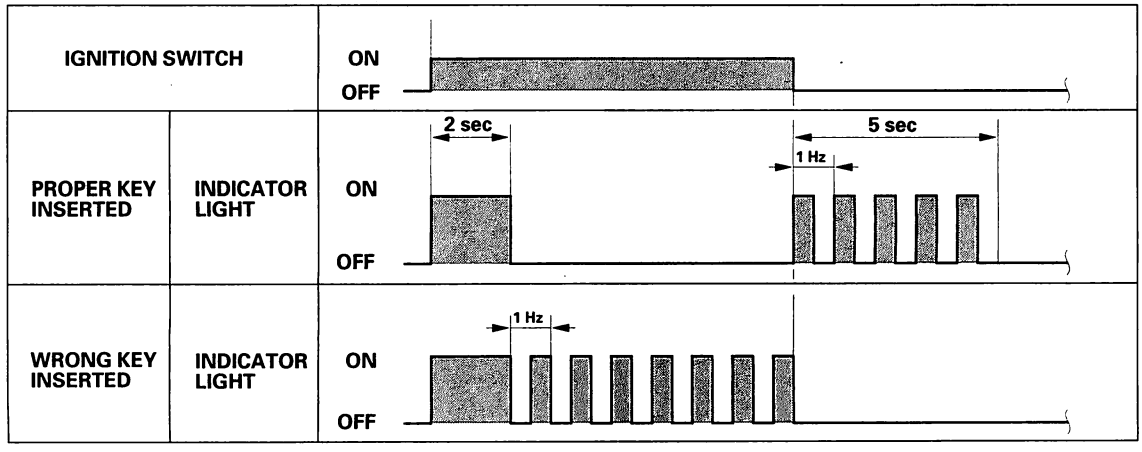

Protected by AR

Immobilizer System

Circuit Diagram

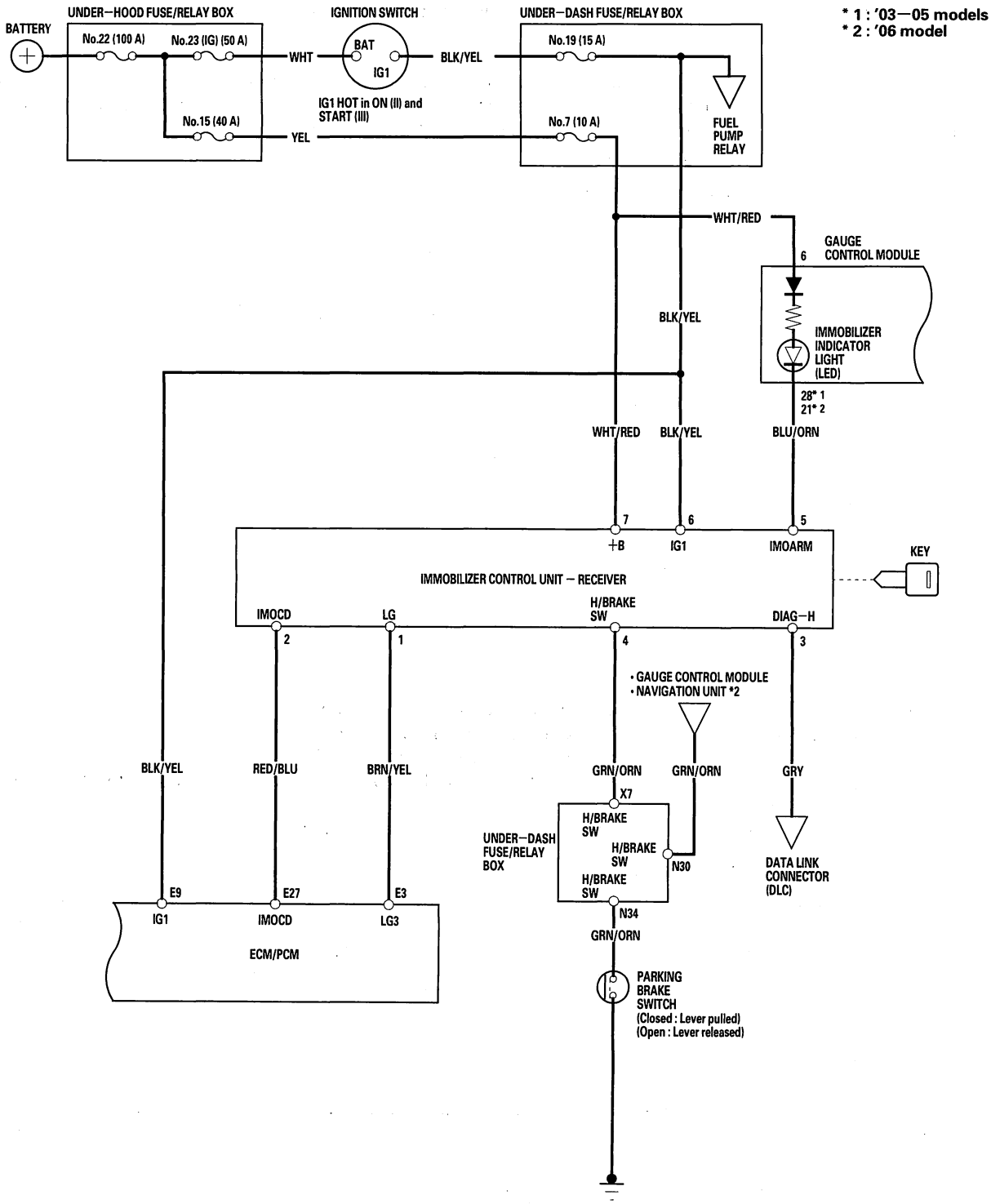

BACK

Protected by AR

Troubleshooting

1. Turn the ignition switch ON (II) with a programmed key.
2. Check to see if the immobilizer indicator comes on.

   Does the indicator come on?

   YES—Go to step 3.

   No—Go to step 12.
3. Check the immobilizer indicator operation.

   Does the indicator come on for 2 seconds, then go off?

   YES—Go to step 4.

   No—Go to step 6.
4. Try to crank the engine.

   Does the starter motor operate?

   YES—Go to step 5.

   No—Check the starter motor. ■
5. Try to start the engine.

   Does the engine start?

   YES—If available, check the Status Log in the Immobilizer Info with the HDS (see page 22-413). If the Status Log is not available, the immobilizer system is OK at this time. ■

   No—Go to step 25. ■
6. Check to see if the immobilizer indicator comes on and blinks.

   Does the indicator blink?

   YES—Go to step 25.

   No—Go to step 7.
7. Disconnect the 7P connector from the immobilizer control unit-receiver.
8. Check to see if the immobilizer indicator goes off.

   Does the indicator go off?

   YES—Check the immobilizer control unit-receiver. ■

   No—Go to step 9.
9. Turn the ignition switch OFF.
10. Remove the gauge control module and disconnect its 30P ('03-05 models) or 36P ('06 model) connector (see page 22-276).
11. Check for continuity between the immobilizer control unit-receiver 7P connector No. 5 (IMOARM) terminal and body ground.

IMMOBILIZER CONTROL-UNIT RECEIVER 7P CONNECTOR

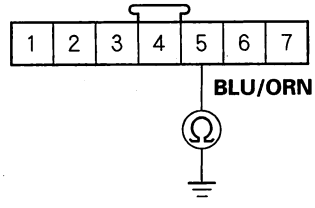

Wire side of female terminals

Is there continuity?

YES—Repair a short in the wire. ■

No—Faulty immobilizer indicator, replace the gauge control module. ■

(cont'd)

Protected by AR

Troubleshooting (cont'd)

12. Try to start the engine.

    Does the engine start?

    YES—Go to step 13.

    No—Go to step 18.

13. Turn the ignition switch OFF.

14. Disconnect the 7P connector from the immobilizer control unit-receiver.

15. Check for voltage between the immobilizer control unit-receiver 7P connector No. 7 (+B) terminal and body ground.

IMMOBILIZER CONTROL-UNIT RECEIVER 7P CONNECTOR

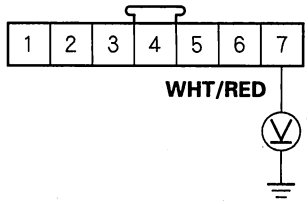

Wire side of female terminals

Is there battery voltage?

YES—Go to step 16.

No—Faulty No. 7 (10 A) fuse in the under-dash fuse/relay box. If the fuse is OK, check for an open in the wire between the immobilizer control unit-receiver and under-dash fuse/relay box.■

16. Remove the gauge control module and disconnect its 30P ('03-05 models) or 36P ('06 model) connector (see page 22-276).

17. Check for continuity between the immobilizer control unit-receiver 7P connector No. 5 (IMOARM) terminal and gauge control module 30P ('03-05 models) or 36P ('06 model) connector No. 28 ('03-05 models) or No. 21 ('06 model) terminal.

'03-05 models

IMMOBILIZER CONTROL-UNIT RECEIVER 7P CONNECTOR

Wire side of female terminals

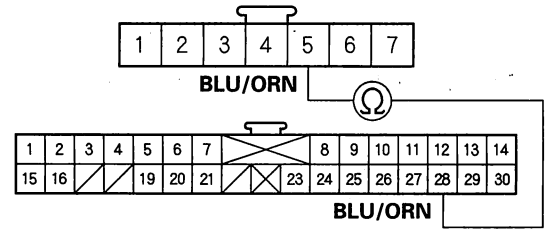

GAUGE CONTROL MODULE 30P CONNECTOR

Wire side of female terminals

'06 model

IMMOBILIZER CONTROL-UNIT RECEIVER 7P CONNECTOR

Wire side of female terminals

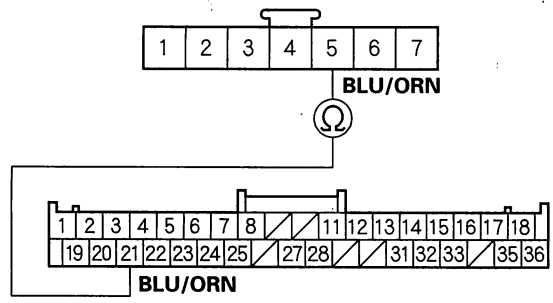

GAUGE CONTROL MODULE 36P CONNECTOR

Wire side of female terminals

Is there continuity?

YES—Faulty immobilizer indicator, replace the gauge control module.■

No—Repair an open in the wire.■

18. Turn the ignition switch OFF.

19. Disconnect the 7P connector from the immobilizer control unit-receiver.

20. Turn the ignition switch ON (II).

BACK

Protected by AR

21. Check for voltage between the immobilizer control unit-receiver 7P connector No. 6 (IG1) terminal and body ground.

IMMOBILIZER CONTROL-UNIT RECEIVER 7P CONNECTOR

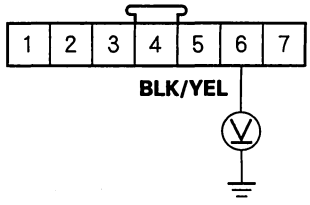

Wire side of female terminals

Is there battery voltage?

YES—Go to step 22.

No—Faulty No. 19 (15 A) fuse in the under-dash fuse/relay box. If the fuse is OK, check for an open in the wire between the immobilizer control unit-receiver and under-dash fuse/relay box.■

22. Turn the ignition switch OFF.

23. Disconnect the 31P E connector from the ECM/PCM.

24. Check for continuity between the immobilizer control unit-receiver 7P connector No. 1 (LG3) terminal and ECM/PCM connector E (31P) No. 3 terminal.

IMMOBILIZER CONTROL-UNIT RECEIVER 7P CONNECTOR

Wire side of female terminals

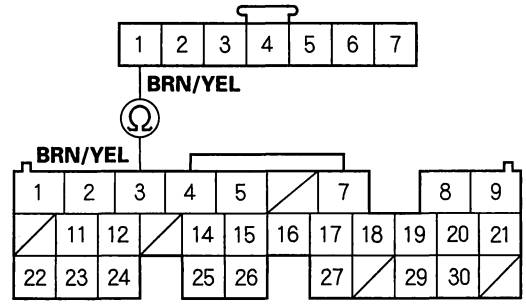

ECM/PCM CONNECTOR E (31P)

Wire side of female terminals

Is there continuity?

YES—Check the immobilizer control unit-receiver.■

No—Repair an open in the wire.■

(cont'd)

Protected by AR

Troubleshooting (cont'd)

25. Turn the ignition switch OFF.
26. Connect the HDS to the data link connector.
27. Turn the ignition switch ON (II).
28. Look at the System Check in the Immobilizer Info with the HDS (see page 22-412).

    Is the immobilizer system normal?

    YES—Go back to step 1.

    NO—Go to step 29.
29. Verify the System Check display on the HDS for the following information:

    - Harness short from the ECM/PCM to the immobilizer unit. (S-net line short)
    - The communication was not good between the ECM/PCM and the immobilizer unit by the battery voltage low.
    - The communication was not good between the immobilizer unit and the ECM/PCM by influence of some noise.
    - Immobilizer unit failure
    - ECM/PCM failure

    Does the HDS display any of the above information?

    YES—Go to step 30.

    NO—Go to step 34.
30. Turn the ignition switch OFF.
31. Disconnect the 7P connector from the immobilizer control unit-receiver.
32. Disconnect the ECM/PCM connector E (31P).
33. Check for continuity between the immobilizer control unit-receiver 7P connector No. 2 (IMOCD) terminal and body ground.

    IMMOBILIZER CONTROL UNIT-RECEIVER 7P CONNECTOR

    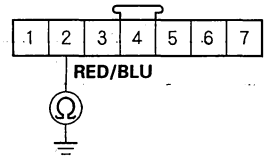

    Wire side of female terminals

    Is there continuity?

    YES—Repair a short in the wire. ■

    NO—Substitute a known-good immobilizer control unit-receiver and/or ECM/PCM. ■
34. Verify the System Check display on the HDS for the following information:

    - Blown fuse
    - Harness open from the ECM/PCM and the immobilizer unit.
    - The communication was not good between the ECM/PCM and the immobilizer unit by battery voltage low.
    - The communication was not good between the immobilizer unit and the ECM/PCM by influence of some noise.
    - Immobilizer unit failure
    - ECM/PCM failure

    Does the HDS display any of the above information?

    YES—Go to step 35.

    NO—Check the Possible Failures shown on the System Check display (see page 22-412). ■
35. Turn the ignition switch OFF.
36. Disconnect the 7P connector from the immobilizer control unit-receiver.
37. Disconnect the ECM/PCM connector from the E (31P).

BACK

Protected by AR

38. Check for continuity between the immobilizer control unit-receiver 7P connector No. 2 (IMOCD) terminal and ECM/PCM connector E (31P) No. 27 terminal.

IMMOBILIZER CONTROL-UNIT RECEIVER 7P CONNECTOR
Wire side of female terminals

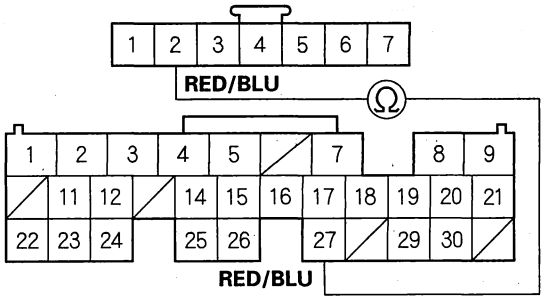

ECM/PCM CONNECTOR E (31P)
Wire side of female terminals

Is there continuity?

YES—Substitute a known-good immobilizer control unit-receiver and/or ECM/PCM. ■

No—Repair an open in the wire. ■

Protected by AR

Immobilizer System

System Check

1. Connect the HDS to the data link connector.
2. Turn the ignition switch ON (II).
3. Monitor the System Check in the Immobilizer Info with the HDS.
4. If the HDS displays the "Immobilizer system is normal", the immobilizer system is OK. If the HDS displays any other messages, check as follows:

Status Log No.	System Check	Possible Failures
A-1	Immobilizer system is not normal	• This key is not registered in the immobilizer unit. Try to register keys by using "KEYS". • The communication was not good between the antenna and the immobilizer key by influence of metal such as key chains. • The communication was not good between the antenna and the immobilizer key by battery voltage low.
A-2	Immobilizer system is not normal	• Intermittent interruption between transponder and immobilizer unit. • The immobilizer key type is different. It is not for this vehicle but for another one or for other company's one. • Key failure (transponder failure) • The communication was not good between the antenna and the immobilizer key by influence of metal such as key chains. • The communication was not good between the antenna and the immobilizer key by battery voltage low.
A-3	Immobilizer system is not normal	• The ignition switch was turned on with a non-immobilizer key. • The immobilizer key type is different. It is not for this vehicle but for another one or for other company's one. • Key failure (transponder failure) • The communication was not good between the antenna and the immobilizer key by influence of metal such as key chains. • The communication was not good between the antenna and the immobilizer key by battery voltage low. • Immobilizer unit failure
B-1	Immobilizer system is not normal	• The ECM/PCM was not registered. Try to register the ECM/PCM by using "REPLACE ECM/PCM". • The communication was not good between the ECM/PCM and the immobilizer unit by battery voltage low. • The communication was not good between the immobilizer unit and the ECM/PCM by influence of some noise.
B-2	Immobilizer system is not normal	• The ECM/PCM was not registered. Try to register the ECM/PCM by using "REPLACE ECM/PCM". • The communication was not good between the ECM/PCM and the immobilizer unit by battery voltage low. • The communication was not good between the immobilizer unit and the ECM/PCM by influence of some noise.
D-1	Immobilizer system is not normal	• Harness short from the ECM/PCM to the immobilizer unit. (S-net line short) • The communication was not good between the ECM/PCM and the immobilizer unit by battery voltage low. • The communication was not good between the immobilizer unit and the ECM/PCM by influence of some noise. • Immobilizer unit failure • ECM/PCM failure
D-3	Immobilizer system is not normal	• Blown fuse • Harness open from the ECM/PCM to the immobilizer unit. • The communication was not good between the ECM/PCM and the immobilizer unit by battery voltage low. • The communication was not good between the immobilizer unit and the ECM/PCM by influence of some noise. • Immobilizer unit failure • ECM/PCM failure

BACK

Protected by AR

Status Log

If you suspect there is a immobilizer system problem, check the status log.

NOTE: Status log may not be available for all models. If you have an updated immobilizer control unit-receiver ('03-05 models) or a '06 model, status log should be available.

1. Connect the HDS to the data link connector.
2. Turn the ignition switch ON (II).
3. On the HDS screen, select Honda systems, select immobilizer set-up, select immobilizer information, then select status log.
4. Check the Status log count. Troubleshoot the status with the highest count first. If no counts are listed, the immobilizer system is OK. Continue with normal symptom troubleshooting.

Status Log No.	Detected Item	Probable Cause
A-1	KEY CODE MISMATCH (Code format normal, but code data is mismatch)	1. The key was not registered 2. Interference from metal such as key chains 3. Low battery voltage
A-2	KEY CODE MISMATCH (Code format failure)	1. Ignition switch was turned on with another type of immobilizer key or aftermarket key 2. Interference from metal such as key chains 3. Low battery voltage
A-3	KEY CODE MISMATCH (No key code or non-immobilizer key)	1. Ignition switch was turned on with another type of immobilizer key or aftermarket key 2. Interference from metal such as key chains 3. Low battery voltage 4. Key failure 5. Immobilizer control unit-receiver failure
B-1	ECM/PCM CODE MISMATCH (Code format normal, but code data is mismatch)	1. ECM/PCM was not registered correctly 2. Low battery voltage 3. Poor or loose terminal connections at the immobilizer control unit-receiver 4. Communication line electrical noise
B-2	ECM/PCM MISMATCH (Code format failure)	1. ECM/PCM was not registered correctly 2. Low battery voltage 3. Poor or loose terminal connections at the immobilizer control unit-receiver 4. Communication line electrical noise
D-1	SECURITY-NET LINE PROBLEM (Short to ground)	1. Low battery voltage 2. Poor or loose terminal connections at the immobilizer control unit-receiver and the ECM/PCM 3. Communication line electrical noise
D-3	SECURITY-NET LINE PROBLEM (Open line or ECM/PCM failure)	1. Open or short in the harness from the ECM/PCM to the immobilizer control unit-receiver 2 Low battery voltage 3 Poor or loose terminal connections at the immobilizer control unit-receiver and the ECM/PCM 4 Communication line electrical noise

Protected by AR

Immobilizer Control Unit-Receiver Replacement

1. Remove the dashboard lower cover (see page 20-130).
2. Remove the steering column covers (see page 17-25).
3. Disconnect the 7P connector (A) from the immobilizer control unit-receiver (B).

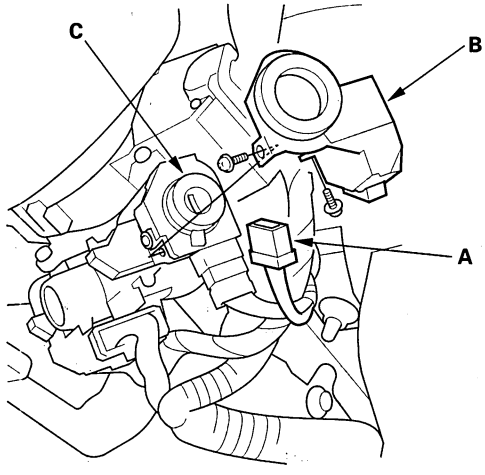

4. Remove the two screws and the immobilizer control unit-receiver from the ignition key cylinder (C).
5. Install the immobilizer control unit-receiver in the reverse order of removal.
6. After replacement, check the immobilizer system.

BACK

Protected by AR

Navigation System ('03-05 models)

Special Tools 22-416
Component Location Index 22-417
General Troubleshooting Information 22-418
Symptom Troubleshooting Index 22-422
System Description 22-424
Circuit Diagram 22-444
Symptom Troubleshooting 22-447
System Diagnosis Mode 22-464
Forced Starting of Display 22-480
DVD-ROM Replacement 22-480
Navigation Unit Removal/Installation 22-481
GPS Antenna Removal/Installation 22-481
Voice Control Switch Removal/Installation 22-482
Display Unit Removal/Installation 22-371
Navigation System ('06 model)..... 22-483

Protected by AR

Navigation System ('03-05 models)

Special Tools

Ref. No.	Tool Number	Description	Qty
①	07PAZ-0010100	SCS Service Connector	1

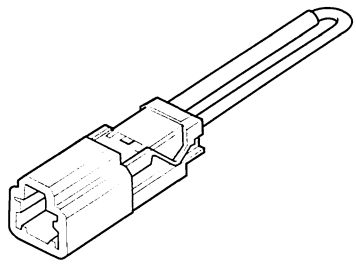

①

BACK

Protected by AR

Component Location Index

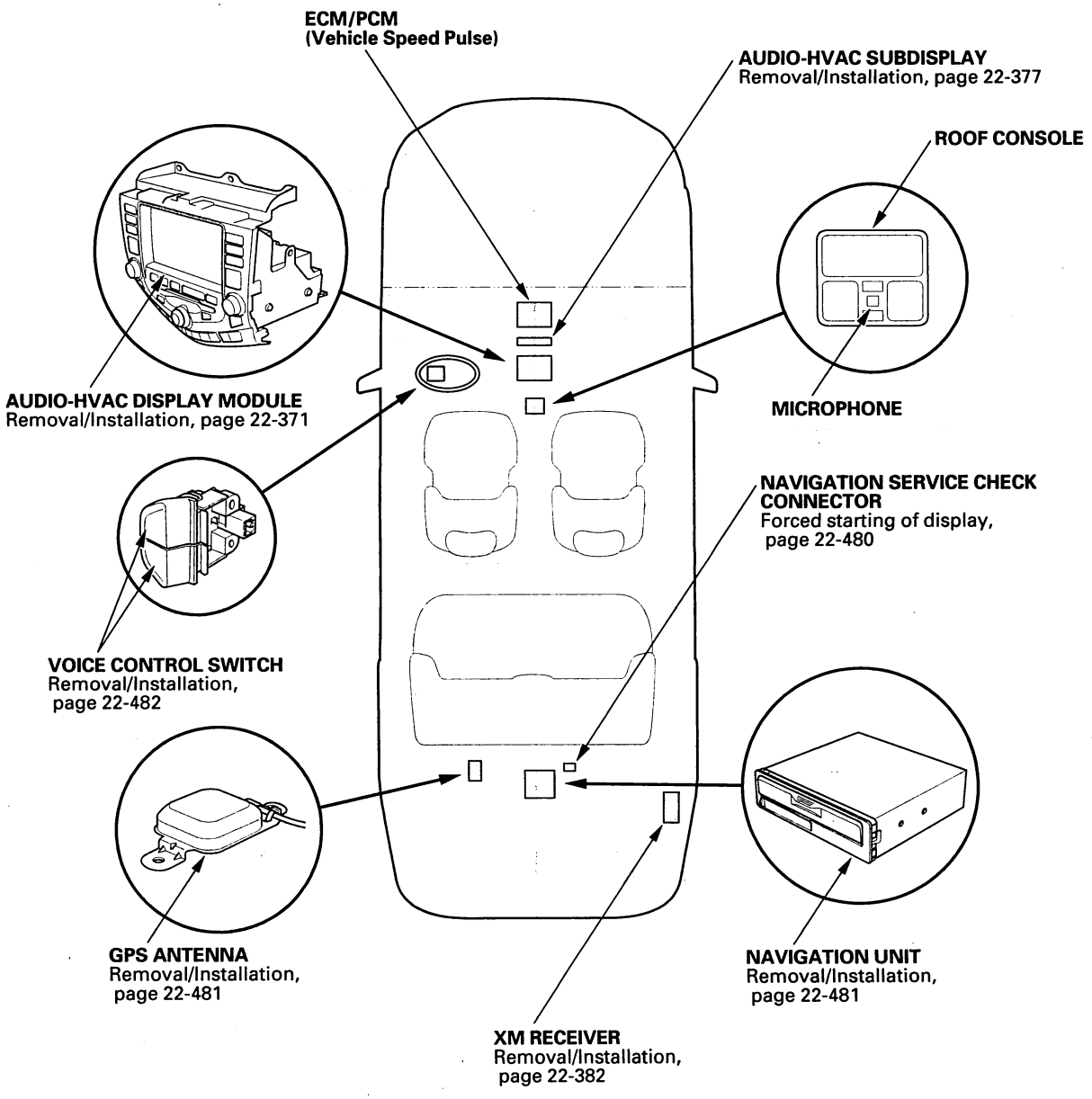

BACK

Protected by AR

Navigation System ('03-05 models)

General Troubleshooting Information

General Operation

Refer to the Navigation System Manual for the navigation system operating procedures.

Anti-theft Feature

The navigation system and audio unit have a coded theft protection circuit. Be sure to get the customer's anti-theft security codes number before;

- disconnecting the battery.
- disconnecting the navigation unit 8P connector.
- removing the No. 7 (10 A) fuse from the under-dash fuse/relay box.

After service, reconnect power to the navigation unit, and turn the ignition switch ON (II). Enter the 4-digit anti-theft security code, then select "Done".

If the code cannot be found, use the interactive Network (*i*N) to look it up. You will need the serial number from the navigation unit in the trunk. It is on a label on the underside of the unit. Alternatively, you can view the serial number in the "Navi ECU" diagnostic screen (see page 22-469).

When replacing the navigation unit, be sure to give the customer the new anti-theft security code.

Symptom Diagnosis

Certain circumstances and system limitations will result in occasional vehicle positioning errors. Some customers may think this indicates a problem with the navigation system when, in fact, the system is normal. Keep the following items in mind when interviewing customers about symptoms of the navigation system.

Self-Inertial Navigation Limitations

The limitations of the self-inertial portion of the navigation system (the yaw rate sensor and the vehicle speed signal) can cause some discrepancies between the vehicle's actual position and the indicated vehicle position (GPS vehicle position).

The following circumstances may cause vehicle positioning errors:

- Moving the vehicle with the engine stopped and the vehicle stopped, such as by ferry or tow truck, or if the vehicle is spun on a turn table.
- Tire slippage, changes in tire rolling diameters, and some driving situations may cause discrepancies in travel distances. Examples of this include:
  - Continuous tire slippage on a slippery surface
  - Driving with snow chains mounted
  - Abnormal tire pressure
  - Incorrect tire size
  - Frequent lane changes across a wide highway
  - Continuous driving on a straight or gently curving highway
  - Very bumpy roads
- Tolerances in the system and map inaccuracies sometimes limit how precisely the vehicle position is indicated. Examples of this include:
  - Driving on roads not shown on the map (map matching is not possible)
  - Driving on a road that winds in one direction, such as a loop bridge, an interchange, or a spiral parking garage
  - Driving on a road with a series of sharp hair-pin turns
  - Driving near a gradual highway exit or transition
  - Driving on one of two close parallel roads
  - Making many 90 degree turns

Global Positioning System (GPS) Limitations

The GPS cannot detect the vehicle's position during the following instances:

- For the first 5 to 10 minutes after reconnecting the battery (This can take as long as 45 minutes).
- When the satellite signals are blocked by tall buildings, mountains, tunnels, large trees, inside parking structures or large trucks.
- When the GPS antenna is blocked by metallic window tinting or by an object placed above it in the vehicle. The GPS antenna requires a clear unobstructed view of the sky.
- When there is no satellite signal output (Signal output is sometimes stopped for satellite servicing).
- When the satellite signals are blocked by the operation of some electronic aftermarket accessories including, but not limited to non-OEM in-dash entertainment units (radio, CD players/changers, radar detectors and theft recovery systems), and cellphones placed near the navigation system.

BACK

Protected by AR

The accuracy of GPS is reduced during these instances:

- Metallic window tinting above the GPS antenna.
- When only two satellite signals can be received (Three satellite signals are required for accurate positioning).
- When the satellite control centers are experiencing problems.
- When driving near high tension power lines.
- When the satellite signals are blocked by the operation of some electronic aftermarket accessories including, but not limited to non-OEM in-dash entertainment units (radio, CD players/changers, radar detectors and theft recovery systems), and cellphones placed near the navigation system.

Muting Logic

Whenever the navigation system is giving guidance all the front speakers are muted. When the voice control system is being used, all of the speakers are muted.

LCD Display Unit Limitations

- In cold temperatures, the display may stay dark for the first 2 or 3 minutes until it warms up.
- When the display is too hot because of direct summer sunlight, it will remain dark until the temperature drops (You may see an error message displayed stating this fact).
- When the humidity is high and the interior temperature is low, the display may appear cloudy. The display will clear up after some use.
- Fingerprints on the touch panel may sometimes be noticeable because of the panel's low-reflection coating. Clean the screen with a soft, damp cloth. You may use a mild cleaner intended for eye glasses or computer screens. To avoid scratching the panel, do not rub too hard, or use abrasive cleaners or shop towels.
- The touch panel is an infrared system, so there is no need to press hard. If a touch switch does not function immediately, shift your finger slightly, and touch again.

NOTE: Input may be affected by direct sunlight.

Symptom Duplication

- When the symptom can be duplicated, verify that it is not a characteristic of the system. Review the navigation manual and compare it to a known-good vehicle (with the same software and database), under the same conditions. If not the same, follow the self-diagnostic procedures and the appropriate troubleshooting procedures.
- When the symptom does not reappear or only reappears intermittently, ask the customer about the conditions when the symptom occurred.
  - Ask the customer to demonstrate the problem.
  - Try to establish possible user error or misunderstanding of the system.
  - Try to establish if outside interference may have been the cause.
  - Try to duplication the symptom under the same conditions the customer was experiencing.
  - Vibration, temperature extremes, and moisture (dew, humidity) are factors that are difficult to duplicate.
  - Inspect the vehicle for after-market electronic devices (vehicle locators, amps, radar detectors, etc) that may be hidden.

Service Precautions

- If the navigation unit needs to be replaced, inform the customer that personal information in the navigation system will be lost. If possible, have the customer record their personal information before the unit is replaced.
- Before disconnecting the battery, make sure you have the anti-theft codes for the radio and the navigation system, and write down the XM radio channel presets. Also obtain any PGM-FI or transmission DTCs and freeze frame date (which will be lost when the PCM loses power).
- When the battery is disconnected, the internal GPS clock is reset to "0:00". The clock will reset to the correct time after the system finishes GPS initialization.
- After reconnecting the battery, you have to wait to get the initial signal from the satellite. It will take from 10 to 45 minutes.
- Before returning the vehicle to the customer, enter the radio and navigation anti-theft security code, then enter the customer's XM radio channel presets, and set the clock.

(cont'd)

Protected by AR

General Troubleshooting Information (cont'd)

System Initialization

If for any reason, you lose power to the navigation system (like the battery was disconnected). The navigation system will require initialization. Once completed, your system will be ready to use.

This initialization requires the following:

- Entry of the 4-digit anti-theft security code to "unlock" the system
- GPS initialization (may not be needed depending of the length of time the system was without power)
- Map matching to align the GPS to a location on the map

Entering Security Code

The navigation system and audio unit have a coded theft protection circuit. Be sure to get the customer's anti-theft security codes number before;

- disconnecting the battery
- disconnecting the navigation unit 8P connector
- removing the No. 7 (10 A) fuse from the under-dash fuse/relay box

After service, reconnect power to the navigation unit, and turn the ignition switch ON (II). Enter the 4-digit anti-theft security code, then select "Done".

When replacing the navigation unit or audio unit, be sure to give the customer the new anti-theft security code.

GPS initialization

Depending on the length of time the battery was disconnected, your system may require GPS initialization. If it does, the following screen appears:

*****Wait*****
The system is acquiring its GPS signal. This could take up to 10 minutes.
• Engine must be running
• Vehicle must be parked outside, away from buildings
• Do not move the vehicle at this time

If this procedure is not necessary the system proceeds directly to the Disclaimer screen. During initialization, the system searches for all available GPS satellites, and obtains their orbital information. During this procedure the vehicle should be out in the open with a clear view of the sky.

If the navigation system finds the satellites properly, this box clears, and changes to the Disclaimer screen. If within 10 minutes the system fails to locate a sufficient number of satellites to locate your position, the following screen appears.

Navigation system is unable acquire a proper GPS signal.
• Move vehicle to another location
• Turn the ignition switch off
• Disconnect the battery for 30 minutes to clear the GPS receiver's memory
• Reconnect the battery and follow the screen prompts

If this is displayed, turn off the engine, then restart the vehicle. If you now see the Disclaimer screen, the GPS initialization is complete.

NOTE:
- The average acquiring time is less than 10 minutes, but it can take as long as 45 minutes.
- If the system is still unable to acquire a signal, follow the instructions on the screen. If this screen appears again, go to troubleshooting for the GPS icon is white (see page 22-453).

BACK

Protected by AR

Map Matching

This part of the initialization matches the GPS coordinates with a road on the map screen. To perform this part of the procedure, ensure that the navigation system is displaying a map, and drive the vehicle on a mapped road shown on the map screen. Do not enter a destination at this time. When the name of the current road you are driving on, appears at the bottom of the screen, the entire procedure is complete. Your system is now ready to use.

Obtaining A Navigation DVD

If the Navigation DVD is lost or damaged, or you need a yearly updated DVD, you have 2 ways to purchase one. You can either call (888) 291-4675, or order on-line at www.honda.com.

Both methods require a credit card. The DVD for this model has an orange label, and cannot be ordered through the parts system. The following DVDs will not work in this navigation system:

- Earlier or later model navigation DVDs (colored labels; white, black, or turquoise)
- Map software programs manufactured by other companies
- DVD movies, or DVDs containing audio recordings

Update DVDs are available for purchase usually in the fall of each year. They may contain the following:

- Enhanced maps and points of interest (POI) coverage
- Fixes for minor software bugs
- Additional features

NOTE: Updating is optional, and there is no program to provide free DVDs containing yearly mapping updates.

Protected by AR

Navigation System ('03-05 models)

Symptom Troubleshooting Index

Symptom	Diagnostic procedure	Also check for
Navigation system stays on the GPS initialization screen	System Initialization (see page 22-420)	• Navigation unit • GPS antenna/cable • Harness/fuses/switches
No picture is displayed	Troubleshooting (see page 22-447)	• Navigation unit • Display unit • Harness/fuses/switches
Address cannot be found or system gives poor routing	Verify proper operation using the owner's manual	
Vehicle position icon constantly leaves road or is very far from actual position	Troubleshooting (see page 22-456)	• Navigation unit • GPS antenna/cable • ECM/PCM (speed and fuel pulses) • Harness/fuses/switches
Picture is missing a color or tone	Troubleshooting (see page 22-448)	• Navigation unit • Harness/fuses/switches
Picture has lines/rolls/other issues	Troubleshooting (see page 22-450)	• Navigation unit • Display unit • Harness/fuses/switches
Display unit buttons or touch screen buttons do not work or respond properly	Troubleshooting (see page 22-451)	• Display unit • Harness/fuses/switches
GPS icon is white, or not shown	Troubleshooting (see page 22-453)	• Navigation unit • GPS antenna/cable • Harness/fuses/switches
Voice guidance cannot be heard	Troubleshooting (see page 22-453)	• Navigation unit • Audio unit/amplifier • Harness/fuses/switches
Voice control does not work/respond	Troubleshooting (see page 22-455)	• Navigation unit • Microphone/steering buttons • Harness/fuses/switches
DVD screen error messages	Troubleshooting (see page 22-457)	• Navigation unit • Display unit • DVD
Trip computer-no distance	Troubleshooting (see page 22-457)	• ECM/PCM (speed and fuel pulses) • Harness/fuses/switches
Trip computer-no fuel information	Troubleshooting (see page 22-458)	• Gauge assembly (CAN) • Harness/fuses/switches
Navigation cannot control A/C	Troubleshooting (see page 22-458)	• Display unit • Harness/fuses/switches
Display day/night mode does not work	Troubleshooting (see page 22-459)	• Display unit • Gauge assembly (CAN) • Harness/fuses/switches
System locks up constantly	Troubleshooting (see page 22-459)	• Navigation unit • Harness/fuses/switches • DVD
Vehicle icon wanders across the map when driving (does not follow a displayed road) or spins when driving	Troubleshooting (see page 22-460)	• Navigation unit
Navigation drives by itself when parked	Troubleshooting (see page 22-460)	
Navigation stays on with ignition switch off	Troubleshooting (see page 22-461)	• Harness/fuses/switches

BACK

Protected by AR

Symptom	Diagnostic procedure	Also check for
Navigation cannot control audio/CD	Troubleshooting (see page 22-462)	• Display unit • Audio unit/amplifier
Navigation cannot control XM radio	Troubleshooting (see page 22-462)	• Display unit • Harness
Audio-HVAC subdisplay does not work properly	Troubleshooting (see page 22-463)	• Navigation unit • Subdisplay unit • Harness/fuses/switches
Audio-HVAC subdisplay does not match time in set-up	Make sure H/U Time Send is ON. Go to H/U Time Send under functional set up (see page 22-474)	
Time is not correct	Reset Time Adjustment in set-up	
Navigation frequently asks for code and needs GPS initialization	Troubleshooting (see page 22-463)	• Navigation unit • Harness/fuses/switches
Some set-up and information functions of the navigation system are "grayed-out" do not work	Customer did not select "OK" from Disclaimer screen. Refer to System Function Diagram (see page 22-434)	
Previous Destinations button is dim and not selectable in the Enter destination by screen	The vehicle may be new, or the customer deleted the destination. Enter a destination, and allow the system to route to it. After the trip, the Previous Destinations button will be selectable.	
Today's Destinations button is dim and not selectable in the Enter destination by screen	The customer has not entered a group of locations for Today's Destinations. This is normal. The button is only selectable if the customer is using this function.	
Navigation system displays Extension when XM is selected in the audio screen	Wrong colored disc installed in the navigation unit. The DVD should have a white label. Install the correct color labeled disc.	

Protected by AR

Navigation System ('03-05 models)

System Description

Overview

The navigation system is a highly-sophisticated, hybrid locating system that uses satellites and a map database to show you where you are and to help guide you to a desired destination.

The navigation system receives signals from the global positioning system (GPS), a network of 24 satellites in orbit around the earth. By receiving signals from several of these satellites, the navigation system can determine the latitude, longitude elevation of the vehicle. In addition, signals from the system's yaw rate sensor and the ECM/PCM (vehicle speed pulse) enable the system to keep track of the vehicle's direction and speed of travel.

This hybrid system has advantages over a system that is either entirely self-contained or one that relies totally on the GPS. For example, the self-contained portion of the system can keep track of vehicle position even when satellite signals cannot be received. When the navigation system is on, the GPS can keep track of the vehicle position even when the vehicle is transported by ferry.

The navigation system applies all location, direction, and speed information to maps and calculates a route to the destination entered. As you drive to that destination, the system provides both visual and audio guidance.

This navigation system also has voice recognition that allows voice control of most of the navigation functions. The Talk and BACK buttons on the steering wheel activate the voice control. The voice control also allows control of the audio and climate control.

The navigation system provides a trip computer function. The fuel economy display is calculated by data provided by the ECM/PCM. The ECM/PCM provides fuel pulses via the F-CAN bus, and a dedicated speed signal. Trip computer screen data is approximate and will not agree with odometer or the customer's actual fuel consumed.

The illumination signal is used by the navigation unit to automatically switch the display between Night and Day brightness modes when Display is set to Auto. When the instrument panel brightness control is set to full brightness, the navigation system stays in the Day mode, even with the headlights on. Display unit button illumination is supplied through the audio unit. The illumination cancel signal (dash brightness full) is passed by the CAN bus to the navigation control unit.

The GA-NET bus provides communication between the navigation unit and the display unit. This bus also links the components in the audio-HVAC display module. The bus is used to pass button and touch-screen commands to the navigation unit. In addition, muting and voice control commands are sent to the display unit and the audio and climate control systems for processing. The audio unit uses the bus to control the XM-receiver or other accessories.

BACK

Protected by AR

System Diagram

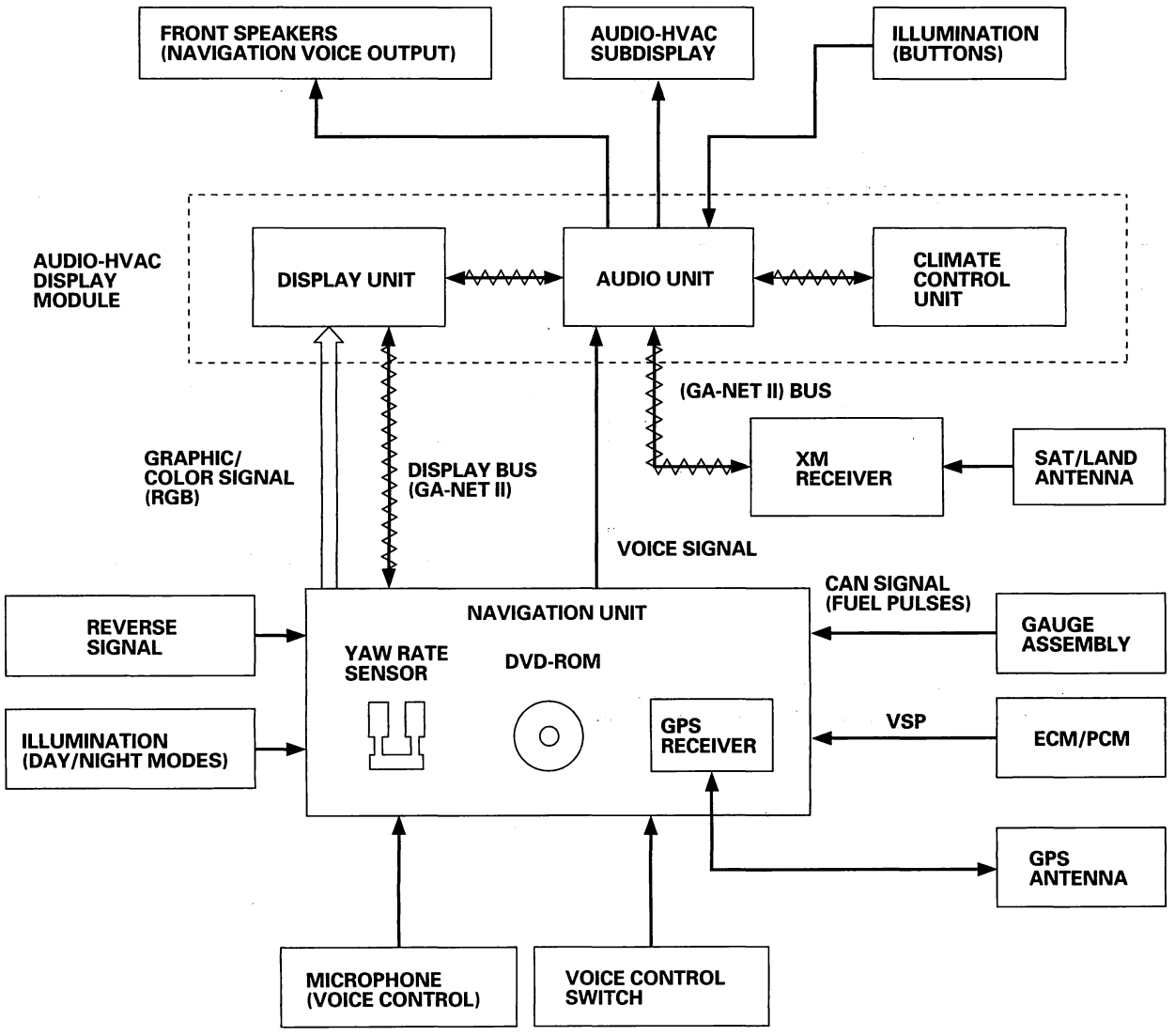

(cont'd)

Protected by AR

Navigation System ('03-05 models)

System Description (cont'd)

Navigation Function

The navigation system is composed of the navigation unit, the ECM/PCM (vehicle speed signal), the GPS antenna, microphone, voice control switch, audio unit, climate control unit, and the display unit.

Function Diagram

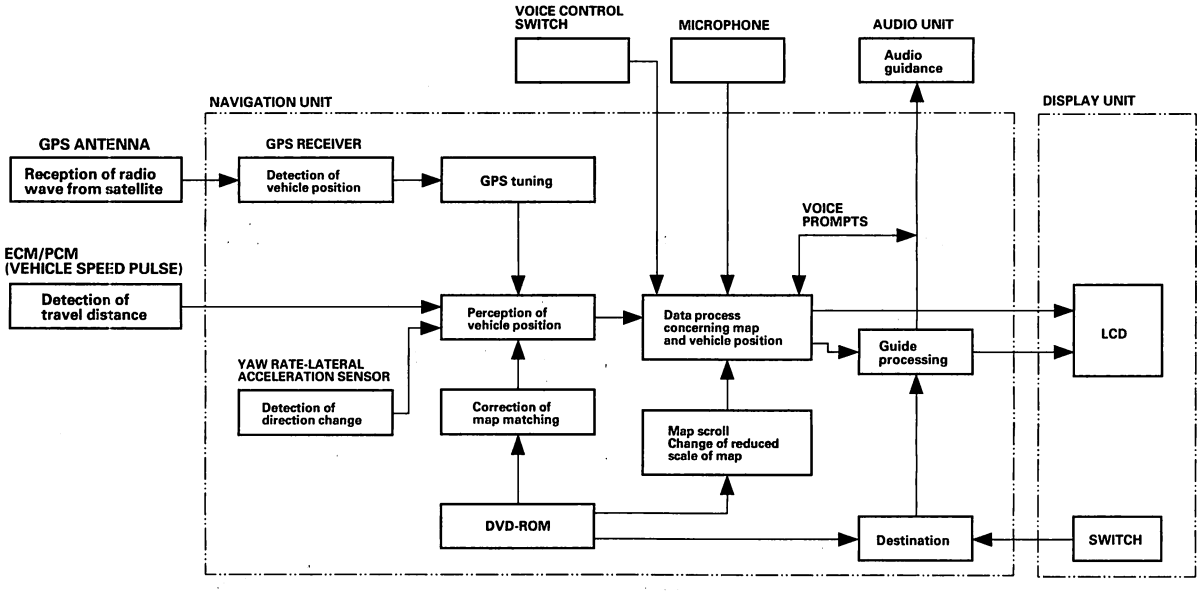

Vehicle Speed Pulse

The vehicle speed pulse is sent by the ECM/PCM. The ECM/PCM receives a signal from the countershaft speed sensor, then it processes the signal and transmits it to the speedometer and other systems.

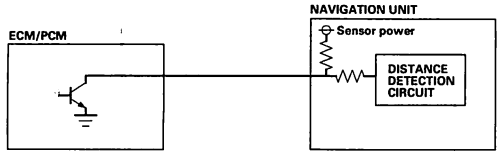

Charge Signal

The PCM sends a charge signal to the navigation unit via F-CAN. A thermister inside the navigation unit monitors the units internal temperature. This information combined with charge signal determines the control units internal cooling fan operation.

Fuel Use and Level Data

The navigation unit monitors the ECM/PCM fuel usage and tank level data via the F-CAN bus. The navigation system combines this information, the vehicle speed signal, GPS, and the map data for trip computer calculations.

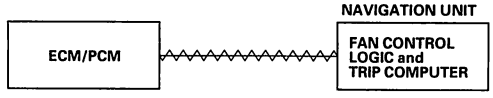

BACK

Protected by AR

Yaw Rate Sensor

The yaw rate sensor (located in the navigation unit) detects the direction change (angular speed) of the vehicle. The sensor is an oscillation gyro built into the navigation unit.

Sensor Element Structure

The sensor element is shaped like a tuning fork, and it consists of the piezoelectric parts, the metal block, and the support pin. There are four piezoelectric parts: one to drive the oscillators, one to monitor and maintain the oscillation at a regular frequency, and two to detect angular velocity. The two oscillators, which have a 90-degree twist in the center, are connected at the bottom by the metal block and supported by the support pin. A detection piezoelectric part is attached to the top of each oscillator. The driving piezoelectric part is attached to the bottom of one oscillator, and the monitoring piezoelectric part is attached to the bottom of the other oscillator.

Oscillation Gyro Principles

The piezoelectric parts have "electric/mechanical transfer characteristics." They bend vertically when voltage is applied to both sides of the parts, and voltage is generated between both sides of the piezoelectoric parts when they are bent by an external force. The oscillation gyro functions by utilizing this characteristic of the piezoelectric parts and "Coriolis force." (Coriolis force deflects moving objects as a result of the earth's rotation.) In the oscillation gyro, this force moves the sensor element when angular velocity is applied.

Operation

1. The driving piezoelectric part oscillates the oscillator by repeatedly bending and returning when an AC voltage of 6 kHz is applied to the part, The monitoring-side oscillator resonates because it is connected to the driving-side oscillator by the metal block.
2. The monitoring piezoelectric part bends in proportion to the oscillation and outputs voltage (the monitor signal). The navigation unit control circuit controls the drive signal to stabilize the monitor signal.
3. When the vehicle is stopped, the detecting piezoelectric parts oscillate right and left with the oscillators, but no signal is output because the parts are not bent (no angular force).
4. When the vehicle turns to the right, the sensor element moves in a circular motion with the right oscillator bending forward and the left oscillator bending rearward. The amount of forward/rearward bend varies according to the angular velocity of the vehicle.
5. The detecting piezoelectric parts output voltage (the yaw rate signal) according to the amount of bend. The amount of vehicle direction change is determined by measuring this voltage.

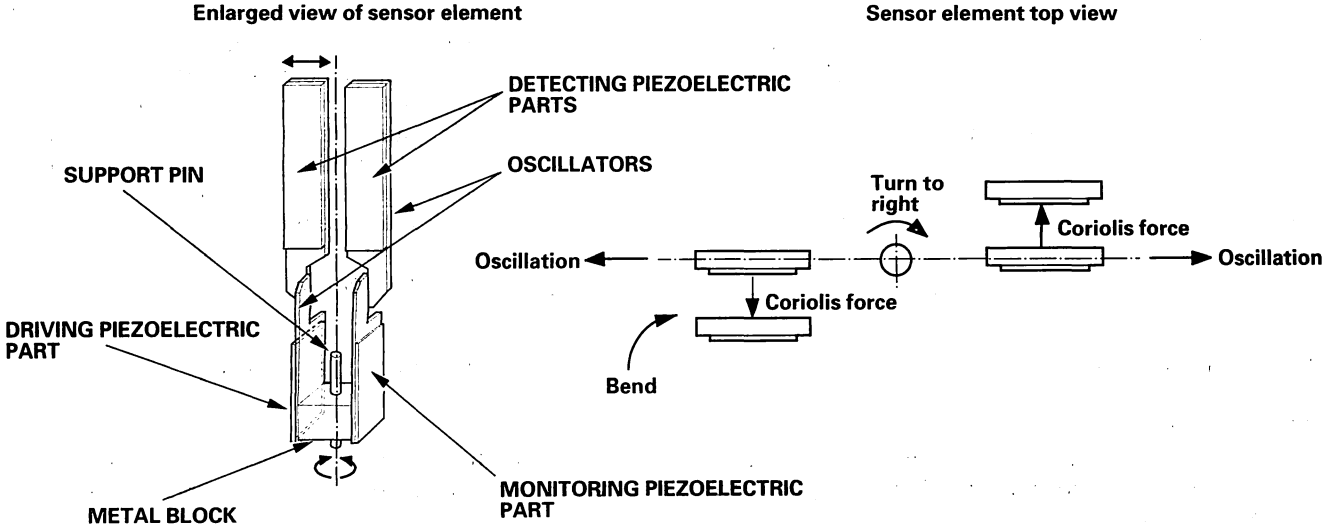

(cont'd)

Protected by AR

Navigation System ('03-05 models)

System Description (cont'd)

Global Positioning System (GPS)
The global positioning system (GPS) enables the navigation system to determine the current position of the vehicle by utilizing the signals transmitted from the satellites in orbit around the earth. The satellites transmit the satellite identification signal, orbit information, transmission time signal, and other information. When the GPS receiver receives a signal from three or more satellites simultaneously, it calculates the current position of the vehicle based on the distance to each satellite and the satellite is position in its respective orbit.

Position detection Image with GPS satellite

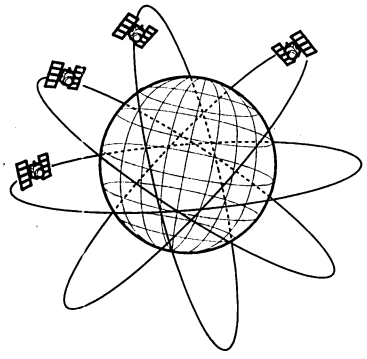

NOTE: Four satellites on each of 6 orbits.

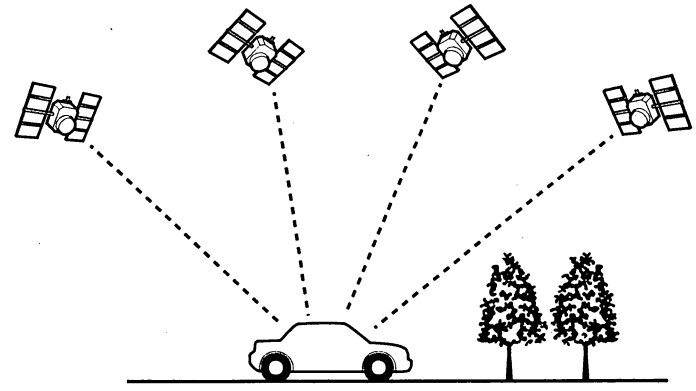

Precision of GPS
The precision of the GPS varies according to the number of satellites from which signals are received and the view of the sky. The precision is indicated by the color of the GPS icon shown on the display.

GPS ICON	NUMBER OF SATELLITES	CONDITION	DESCRIPTION
White GPS icon	2 or less	Impossible to detect vehicle position	GPS function is normal. The satellite signals received by the GPS are too few to detect the vehicle position.
Green GPS icon	3	Vehicle position detectable in 2 dimensions	The longitude and latitude of the vehicle position can be detected. (Less precise than detection in three dimensions)
	4 or more	Vehicle position detectable in 3 dimensions	The longitude, latitude and the altitude of the vehicle position can be detected. (More precise than detection in two dimensions)
Not indicated	———	Faulty	The GPS can't be utilized due to a faulty GPS receiver, open in the wire, or other fault or interference.

GPS Antenna
The GPS antenna amplifies and transmits the signals received from the satellites to the GPS receiver.

GPS Receiver
The GPS receiver is built in the navigation unit. It calculates the vehicle position by receiving the signal from the GPS antenna. The vehicle position and signal reception condition is transmitted from the GPS receiver to the navigation control unit to adjust vehicle position.

BACK

Protected by AR

Navigation Unit
The navigation unit calculates the vehicle position and guides you to the destination. The unit performs map matching correction, GPS correction, and distance tuning. It also controls the menu functions and the DVD-ROM drive, and interprets voice commands. With control of all these items, the navigation unit makes the navigation picture signal, then it transmits the signal to the display unit and audio driving instructions to the audio unit.

Calculation of Vehicle Position
The navigation unit calculates the vehicle position (the driving direction and the current position) by receiving the directional change signals from the yaw rate sensor and the travel distance signals from the PCMs vehicle speed pulse (VSP) signal.

Map Matching Tuning
The map matching tuning is accomplished by indicating the vehicle position on the roads on the map. The map data transmitted from the DVD-ROM is checked against the vehicle position data, and the vehicle position is indicated on the nearest road. Map matching tuning does not occur when the vehicle travels on a road not shown on the map, or when the vehicle position is far away from a road on the map.

GPS Tuning
The GPS tuning is accomplished by indicating the vehicle position as the GPS's vehicle position. The navigation unit compares its calculated vehicle position data with the GPS vehicle position data. If there is large difference between the two, the indicated vehicle position is adjusted to the GPS vehicle position.

Distance Tuning
The distance tuning reduces the difference between the travel distance signal from the VSP and the distance data on the map. The navigation unit compares its calculated vehicle position data with the GPS vehicle position data. The navigation unit then decreases the tuning value when the vehicle position is always ahead of the GPS vehicle position, and it increases the tuning value when the vehicle position is always behind the GPS vehicle position.

Route Guidance
The navigation unit can calculate different routes to a selected destination. You have five options:

- Direct Route — Calculate a route that is the most direct.
- Easy Route — Calcute a route that minimizes the number of turns needed.
- Minimize Freeways — Calculate a route that avoids freeway travel. If that is not possible, keep the amount of freeway travel to a minimum.
- Minimize Toll Roads — Calculate a route that avoids, or minimizes travel on toll roads.
- Maximize Freeways — Calculate a route that uses freeways as much as possible.

Audio Guidance
The navigation unit transmits audio driving instructions before entering an intersection or passing a junction. The audio instructions come through the audio unit to the front speakers.

NOTE: The front speakers are muted whenever the navigation system is giving guidance commands, and all of the speakers when the voice control system is being used.

DVD-ROM
The DVD-ROM contains the following:

- MAP data
- POI database: Restaurants, and other points of interest
- NAVI Program: The DVD contains the software for each model that uses this DVD

(cont'd)

Protected by AR

Navigation System ('03-05 models)

System Description (cont'd)

Audio Unit
The audio unit receives the audio driving instructions from the navigation unit and transmits the instructions through the front speakers even when the audio system is in use. The audio unit is also a termination point in the GA-Net bus.

Display Unit
The display unit uses liquid crystal display (LCD). The LCD is a 7-inch-diagonal, thin film transistor (TFT), stripe type with 280,800 picture elements, The color film and fluorescent light are laid out on the back of the liquid crystal film. The touch sensor on the front of the LCD is an infrared type with 20 vertical and 9 horizontal infrared rays to produce 180 sensing points. The display unit transmits the signal from each button and the touch screen command to the navigation unit using the GA-NET bus.

Infrared rays
('04-05 models shown)

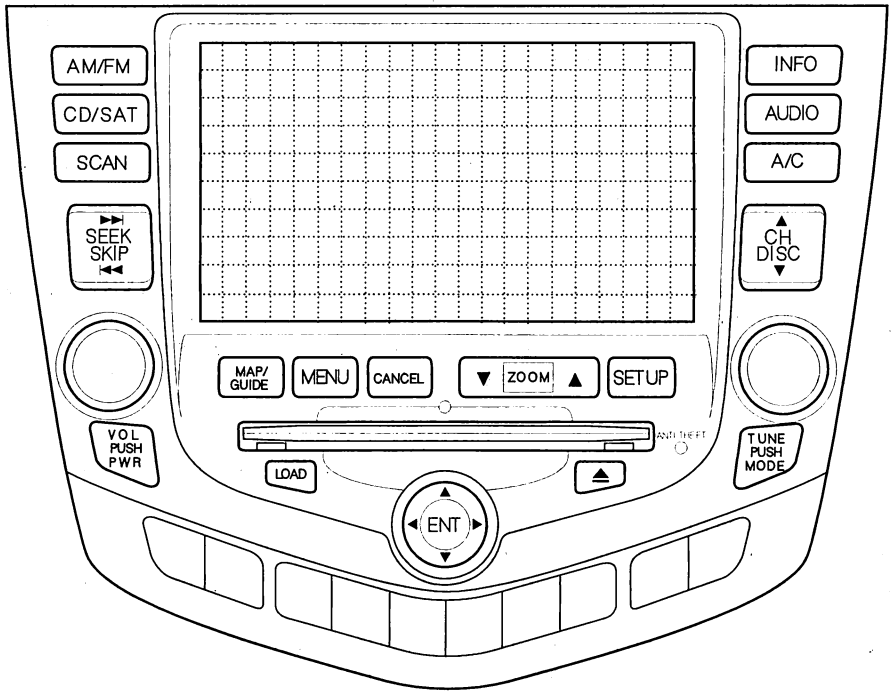

- - - - - - - - - : **Infrared for touch screen commands**

Microphone
The microphone (on the ceiling, near the front map light) receives voice commands and transmits them to the navigation unit for interpretation.

Talk Button
Activates the voice control system in the navigation unit to accept voice commands.

Back Button
Returns the display to the previous screen (similar function as the CANCEL button).

BACK

Protected by AR

Glossary

The following is a glossary of terms pertaining to the Voice Recognition Navigation System.

Item	Definition
Audio-HVAC subdisplay	The upper display that shows the time and current status of the audio and climate control systems.
Breadcrumbs	Off road tracking dots that can be followed on the map to retrace your route back to a mapped (digitized) road. This function can be turned on/off in Setup screen 1.
CAN	Controller Area Network. This communication network allows processors in the vehicle to send/receive information. The fuel pulses used by the trip computer are received from the PCM using the F-CAN (Fast Controller Area Network) bus.
B-CAN	Body CAN Bus (see CAN)
CPU	Central Processing Unit. The main device within the navigation unit that coordinates the rest of the electronic functions.
Database	This consists of the Map data, and the POI (Points Of Interest) data stored on the DVD
DBW	Drive By Wire. Allows electrical control of the throttle without the need of a mechanical linkage.
DCA	Detailed Coverage Area. Main metropolitan areas in the Lower 48 states, and Canada are mapped to this level. See the Navigation Owner's manual for a list of these areas.
DTC	Diagnostic Trouble Codes. Use the Honda PGM Tester, or HDS tablet to obtain, and troubleshoot the cause of these codes.
Dead Reckoning	The use of the speed signal, and yaw rate sensor to position the vehicle on the map even when the GPS signal is obscured by tall buildings, or while driving in a tunnel.
Digitized Road	A road that appears on the navigation screen. The road name will appear at the bottom of the navigation screen. If the user drives "off road", the navigation system will display "Not on a digitized road", and if 1/2 mile, then "breadcrumbs" will appear.
Disclaimer Screen	Screen containing cautionary information. It is meant to be read carefully and acknowledged by the customer when using the navigation system.
DVD or DVD-ROM	Digital Versatile Disk. The navigation program and database resides on this disk. See the Navigation Owner's Manual for information on how to order a replacement or update DVD.
ECM	Engine Control Module. Typically referred to as the PCM.
E/T	Elapsed Time for the current trip as displayed by the trip computer screen.
Extension	A term displayed by the navigation system when an "unknown" input has been selected (for example "XM" was selected). This is only displayed when the wrong version software is installed in the navigation unit.
FAQ	Frequently Asked Question. See the Navigation Owner's Manual for a list of the customer FAQs, and troubleshooting information.
F-CAN	Fast CAN Bus (see CAN)
FE	Fuel Economy value as displayed on the trip computer screen.
Fuel Pulses	This signal is transmitted on the CAN bus, and is used by the Trip Computer to calculate the fuel economy.
GPS	Global Positioning System. A network of 24 satellites in orbit around the earth. The navigation system can simultaneously receive signals from up to 12 satellites to accurately position the vehicle on the map.
HDS	Honda Diagnostic System. A hand held tablet PC for use in diagnosing vehicle problems. This device can be used to obtain DTC codes for diagnosis of navigation system CAN related problems.
H/U	Head Unit. The navigation system display unit assembly in the dash.
Initialization	This refers to the period needed to re-acquire the GPS satellite orbital information whenever the navigation system power has been disconnected. This can take from 10 to 45 minutes.
LCD	Liquid Crystal Display (the navigation screen)

(cont'd)

Protected by AR

Navigation System ('03-05 models)

System Description (cont'd)

Item	Definition
Map Matching	The received GPS information allows the navigation system to position the vehicle on the map. Map matching has occurred if the map screen is displaying the current street name in the bottom-shaded area.
Mic	Abbreviation for the microphone used for receiving voice commands. It is located near the map light in the ceiling.
Model (in the diagnosis Version screen)	A "model code" stored on an internal "chip" in the navigation unit. The model code tells the navigation unit what software to load. Every navigation unit "model" has a unique part number for the navigation unit.
MW	Maneuver Window. While on-route to a destination, this window displays information about the next maneuver.
Navi	Abbreviation for the Navigation System
Off Route	This occurs when the user leaves mapped roads. Off road tracking dots ("breadcrumbs") are displayed if the option is enabled in Setup. The user can use them to return to a mapped road. The bottom of the navigation screen will say "Not on a digitized road".
Outlying Areas	These are rural areas that typically have only their main roads mapped. All other roads are shown in light brown for reference only, since they have not been verified.
PC Card Slot	The PC Card (PCMCIA, type II) slot is for factory use only. Make sure that the sliding door is closed at all items. If opened, an error message is displayed on the screen.
PCM	Powertrain Control Module. This unit supplies the navigation system speed signal, and sends fuel pulses for the trip computer function via the F-CAN network.
PCMCIA	A computer industry defined term referring to the PC Card slot standard.
PGM Tester	A Honda diagnostic tool for use in diagnosing vehicle problems.
PIN	Personal Identification Number. A random 4 digit number created by the customer to protect personal information.
POI	Point Of Interest. These are the businesses, schools etc. found under the "places" option on the main menu.
Polygon	Colored areas on the map screen denoting parks, schools etc. See the Navigation Owner's Manual "Traveling to Your Destination" for a list of the assigned colors.
QWERTY	Keyboard layout resembling the typewriter keys. The keyboard layout can be changed to an alphabetical layout in the Setup mode.
SCS connector	The 2-pin connector used to put the navigation system into the diagnostic mode.
Security Code	Code needed to activate the navigation system. The security code can be obtained from the "iN" by entering the navigation system control serial number. The serial number can be found from the diagnostic screens (Unit Check, Navi ECU), or from the under side of the control unit.
Touch Switches or Touch Sensor	The sides of the navigation screen have 9 vertical and 20 horizontal infrared beams that are interrupted by the user's finger to select the desired function.
Tuning	A continual update of internal navigation system scaling factors. See the individual sensor tuning discussions under either "System Description", or "System Diagnosis Mode" (see page 22-464) in this manual.
Unverified Streets	These streets have not been verified for turn restrictions, one-way, etc. They are shown in light brown on the map. You can enter address destinations in these areas, but voice guidance ends at the last verified street closest to your destination.

BACK

Protected by AR

Item	Definition
Verified Streets	These streets consist of the detailed metropolitan coverage areas, and all other inter-town connection roads. These roads are shown in black on the map.
VP	Vehicle Position. When in map mode, this circular icon shows the vehicle position on the map. Touch this icon to show the latitude, longitude, and elevation of your current position.
VR	Voice Recognition. This allows voice control of many of the navigation functions. The hardware consists of the microphone, steering wheel (Talk/Back) buttons, and the front speakers. See the overview for more information.
VSP	Vehicle Speed Pulse. This pulse signal coming from the PCM is used to update the Vehicle position on the map, and to calculate the trip computer fuel economy. These pulses do not indicate direction (forward or backward). When in reverse, the navigation receives a signal from the MICU and directs the VP to move backwards on the map.
VSS	Vehicle Speed Sensor. This sensor reads the output shaft speed at the transmission and, provides a speed pulse to the PCM. The PCM sends this pulse to the navigation system and speedometer.
XM Satellite Radio	A satellite band radio system where signals are received from either a satellite or land based transmitters.
Yaw Sensor	This device is located in the navigation system control unit and senses the side-to-side twisting force generated when the vehicle turns.

(cont'd)

Protected by AR

Navigation System ('03-05 models)

System Description (cont'd)

System Function Diagram
This diagram shows the features of the navigation system starting at the center and working outward in layers. The navigation program starts at "Key ON", and then displays the globe screen. Once the disclaimer screen is acknowledged, the next shaded portions of the diagram become active. However, some functions of the INFO and SET UP buttons, and all functions of the AUDIO and A/C buttons can be accessed immediately after the globe screen (white).

These items above the map screen show various methods to begin a destination, such as "Go Home". Once you begin driving to your destination, you are provided with map/voice guidance, routing cautions (in unverified areas), and a directions list. While driving to your destination, use the voice control system as much as possible to interact with the navigation, audio, and climate control systems.

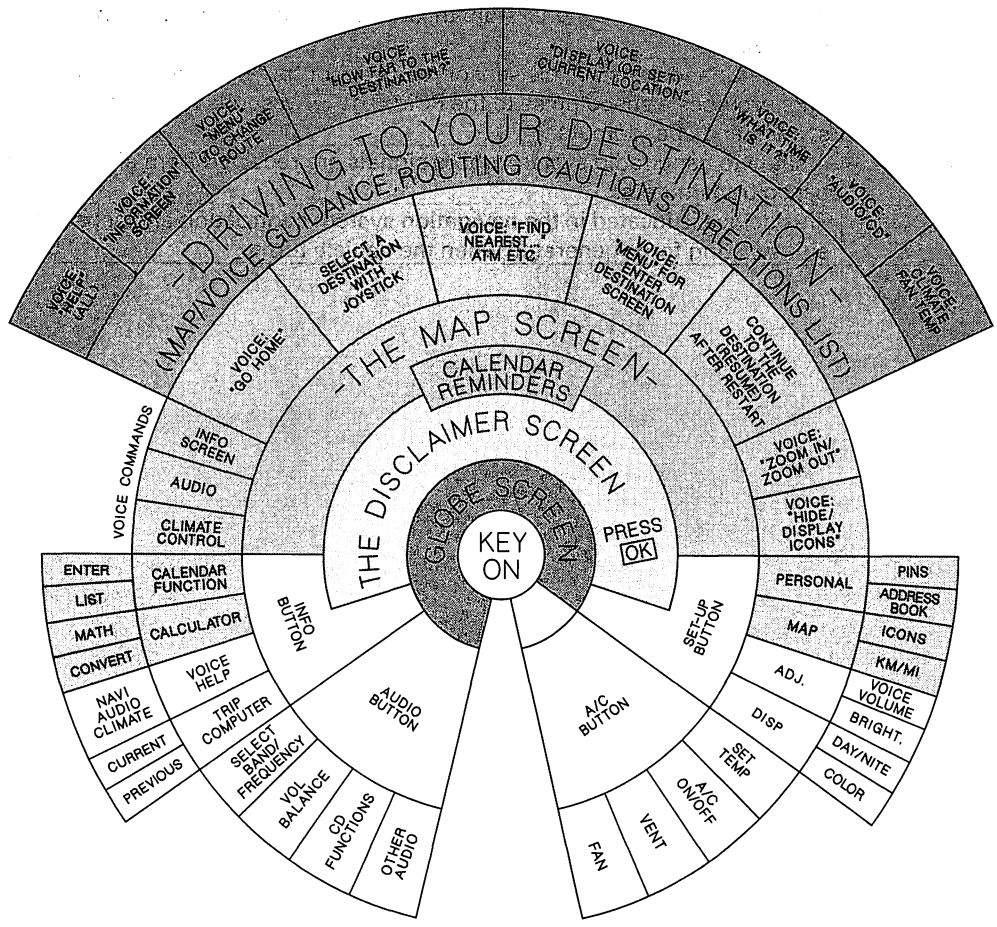

- Functions accessible at any time
- Disclaimer screen
- Map screen/voice commands to enter a destination
- Driving to your destination
- Voice commands while driving to your destination
- Globe screen

BACK

Protected by AR

Diagnostic Function Diagram

This diagram shows the diagnostic slice of the System Function Diagram. It has the diagnostic features of the navigation system starting at the center and working outward in layers. The diagnostic starts at "Key ON," and then displays the Diagnostic Main Menu (Select Diagnosis items) after:

- Starting the vehicle with the SCS connector plugged in to the navigation service check connector (see page 22-480) to get to the System Links screen, then selecting Return.
- Simultaneously pressing and holding the MENU, MAP/GUIDE, and CANCEL buttons.

The diagram shows the available menu choices starting at the buttom left and moving clockwise.
You will find a detailed explanation of each feature on the given page numbers.
In most cases, do not clear or change settings in any diagnostic screen unless instructed to do so in the explanation or by the factory. If the factory supplies you with a PCMCIA card to place in the PC slot, then the features specified in the diagram with "Card" are available.

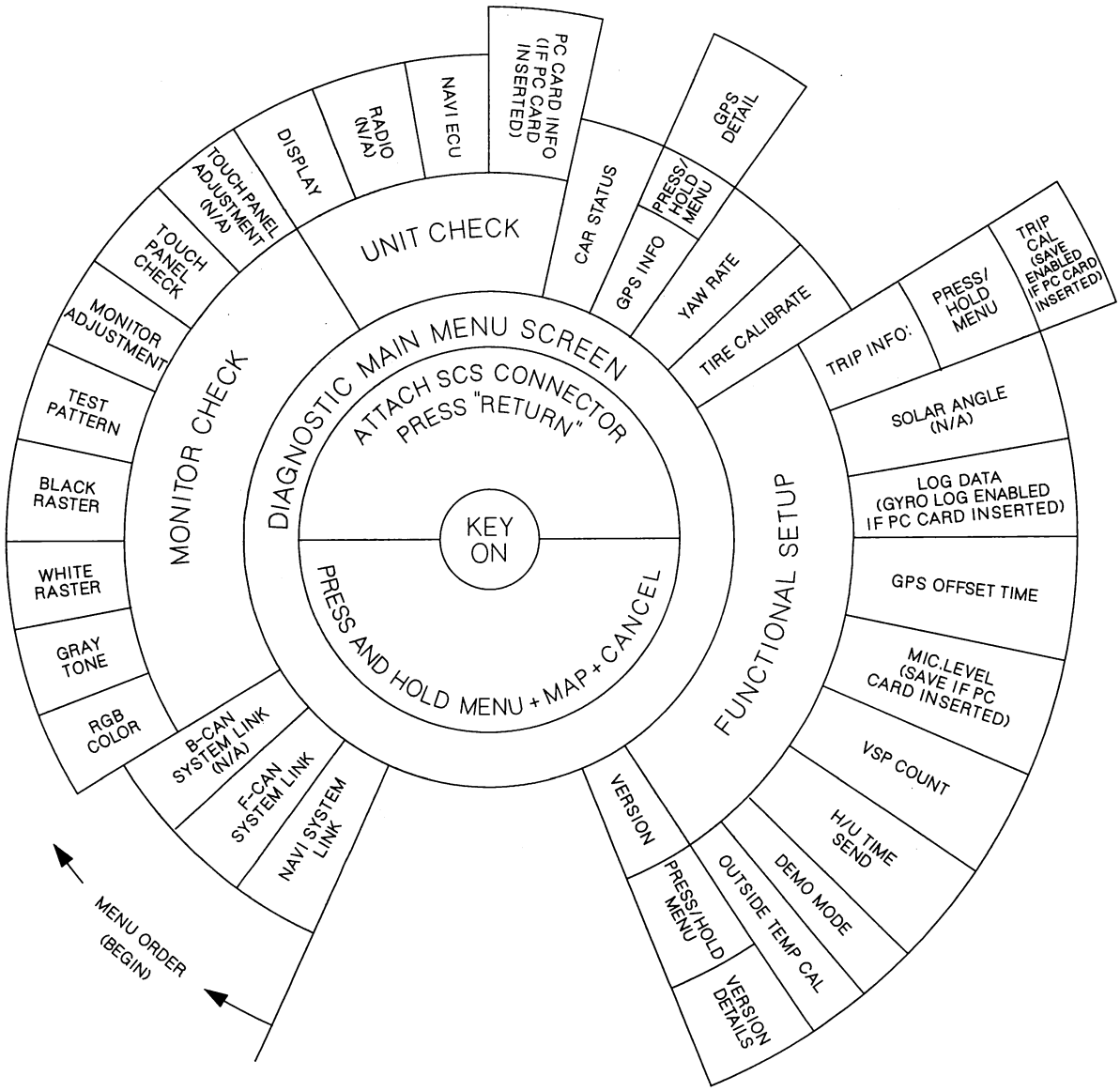

(cont'd)

Protected by AR

Navigation System ('03-05 models)

System Description (cont'd)

Navigation Unit Inputs and Outputs for Connector A (20P)

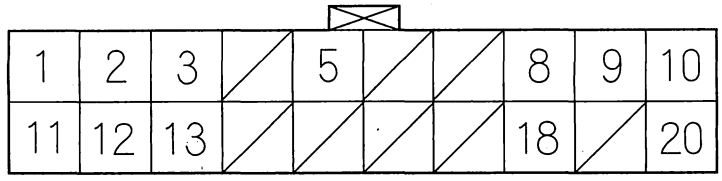

Wire side of female terminals

Terminal Number	Wire Color	Terminal Name	Description	Voltage (about)	Symptom
1	WHT	R SIG (Red signal)	Red color signal	0—1 V AC	If open: Red color missing (see "RGB Color" diagnostic). If short to ground: Red color missing (see "RGB Color" diagnostic).
2	RED	G SIG (Green signal)	Green color signal	0—1 V AC	If open: Green color missing (see "RGB Color" diagnostic). If short to ground: Green color missing (see "RGB Color" diagnostic).
3	GRY	SH SIG (Shield signal)	Shield for terminal No. 1, 2, 11, 12, 13	0 V	If open: No change to display. If short to ground: No change to display.
5	RED/BLK	ILL (+) (Illumination positive)	Parking light on signal from dash and console lights, under-hood "Relay fuse box"	Lights on= battery voltage, Lights off=0 V	If open: When brightness="Auto", night mode for the display is inoperative when lights on. If short to ground: Blows fuse 4 in under-hood fuse/relay box.
8	WHT	CAN-H (CAN high)	F-CAN bus communication with the "gauge control module"	Pulses 2.5—6 V average 3 V	If open: 1) System Links FI-ECU, and Meter both show "NG". 2) F-CAN diagnostic="NG". 3) B-CAN diagnostic="NG". 4) Car status CHG (CAN)=0. 5) Functional Setup, Trip into, FUP & Sampled FL=0. If short to ground: Same diagnostic conditions as when open, and also sets the following DTCs. • B1168 Gauge Control Module loss of Comm. (Engine) • B1169 Gauge Control Module loss of Comm. (A/T) • B1178 F-CAN communication Circuit error. • U0073 (F-CAN Bus off) • U0155 (F-CAN Gauge control) • U0121 (F-CAN TCS control)
9	GRN/BLK	SH DISP BUS (Shield display bus)	Shield for display bus terminal No. 10, 20	0 V	If open: No change to display. If short to ground: No change to display.
10	RED/WHT	DISP BUS (+) (Display bus positive)	Date bus (+) GA-Net	0 V—5 V pulses average 2.5 V depends on bus traffic	If open: Navigation buttons and touch screen do not work. If short to ground: Navigation buttons and touch screen do not work.

BACK

Protected by AR

Terminal Number	Wire Color	Terminal Name	Description	Voltage (about)	Symptom
11	YEL	B SIG (Blue signal)	Blue color signal	0—1 V AC	If open: Blue color missing (see "RGB Color" diagnostic). If short to ground: Blue color missing (see "RGB Color" diagnostic).
12	BRN	C SIG (Composite signal)	Composite video (vertical/horizontal) Synchronizing signal	0.3 V AC	If open: Picture rolls horizontally, colors still visible. If short to ground: Picture rolls horizontally, colors still visible.
13	BLU	GND SIG (Ground signal)	Ground for color signal	0 V	If open: No change to display. If short to ground: No change to display.
18	RED	CAN-L (CAN low)	F-CAN bus communication with the "gauge control module"	Pulses 2.5—6 V average 3 V	If open: 1) System Links FI-ECU, and Meter both show "NG". 2) F-CAN diagnostic="NG". 3) B-CAN diagnostic="NG". 4) Car status CHG (CAN)=0. 5) Functional Setup, Trip into, FUP & Sampled FL=0. If short to ground: Same diagnostic conditions as when open, and also sets the following DTCs. • B1168 Gauge Control Module loss of Comm. (Engine) • B1169 Gauge Control Module loss of Comm. (A/T) • B1178 F-CAN communication Circuit error. • U0073 (F-CAN Bus off) • U0155 (F-CAN Gauge control) • U0121 (F-CAN TCS control)
20	RED/BLU	DISP BUS (—) (Display bus negative)	Date bus (—) GA-Net	0 V—5 V pulses nominally 2.5 V	If open: Navigation buttons and touch screen do not work. If short to ground: Hard and touch buttons work OK.

(cont'd)

Protected by AR

Navigation System ('03-05 models)

System Description (cont'd)

Navigation Unit Inputs and Outputs for Connector B (14P)

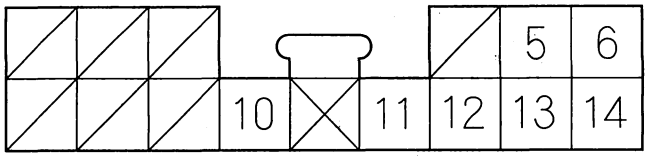

Wire side of female terminals

Terminal Number	Wire Color	Terminal Name	Description	Voltage (about)	Symptom
5	WHT/GRN	RG L (+) (Route guidance voice left positive)	Left audio signal of voice guidance, and Voice Recognition (VR) prompts	Audio signal 0.004—0.04 V	If open: If voice activated, radio speakers buzz; if voice off, no effect. If short to ground: If voice activated, radio speakers buzz; if voice off, no effect.
6	BLU	MIC SIG (+) (Mic signal positive)	Microphone output signal positive	4—5 V (with Talk button pressed)	If open: No microphone signal shown in diagnostic screens: "Navi System Link" and Functional Setup "Mic Level". If short to ground: No microphone signal shown in diagnostic screens: "Navi System Link" and Functional Setup "Mic Level".
10	GRY	STRG SW (Steering switches)	Steering switch output	4—5 V (Talk button depressed) 2.5—3 V (Back button depressed)	If open: Steering wheel "Talk", and "Back" switch/ buttons do not work. If short to ground: Steering wheel "Talk", and "Back" switch/buttons do not work.
11	LT GRN	SH RG (Shield route guidance)	Shield for terminal No. 5, 12	0 V	If open: No effect on voice output. If short to ground: No effect on voice output.
12	GRN	GND RG (Ground routs guidance)	Ground for voice guidance, and Voice Recognition (VR) prompts	0 V	If open: No effect on voice output. If short to ground: No effect on voice output.
13	LT BLU	SH MIC (Shield mic)	Shield for terminal No. 6, 14	0 V	If open: No effect on voice recognition. If short to ground: No effect on voice recognition.
14	PNK	GND MIC (Ground mic)	Ground for microphone signal	0 V	If open: No microphone signal shown in diagnostics: "Navi System Link" and Functional Setup "Mic Level". If short to ground: No effect on voice recognition.

BACK

Protected by AR

Navigation Unit Inputs and Outputs for Connector C (8P)

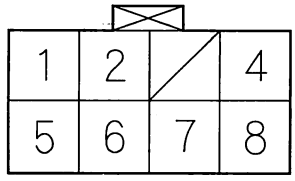

Wire side of female terminals

Terminal Number	Wire Color	Terminal Name	Description	Voltage (about)	Symptom
1	WHT/RED	+B (+B Power source)	Continuous power source	Battery voltage	If open: Display picture goes out (display back light still on). NOTE: System will reboot to "enter code" screen. If short to ground: Blows fuse No. 7 (10 A) in the under-dash fuse/relay box.
2	YEL/RED	ACC (Accessory)	Power source for accessories	Battery voltage at ACC (I)	If open: Display picture goes out (display back light still on). NOTE: When re-connected the system will reboot to "enter code" screen. If short to ground: Blows fuse No. 32 (7.5 A) in the under-dash fuse/relay box.
4	BLK	GND (Ground)	Ground for navigation unit	0 V	If open: No effect on system. If short to ground: No effect on system.
5	GRN	BACK LT (Back light)	Reverse signal of select laver from "Multiplex Integrated Control Unit" (A/T) or backup light switch (M/T)	In reverse, battery voltage: Otherwise 0 V	If open: Navigation never sees reverse. Diagnostic screen "Car Status", "Back"=0. If short to ground: Blows fuse No. 21 (7.5 A) in the under-dash fuse/relay box.
6	BLU/WHT	VSP (Vehicle speed pulse)	Vehicle speed pulse signal from PCM	Pulses 0—5 V: Average 2.5 V, when moving	If open: No vehicle speed pulses. Diagnostic screen "Car Status", VSP Navi=0. If short to ground: No vehicle speed pulses. Diagnostic screen "Car Status", VSP Navi=0.
7	GRN/RED	DIAG P (Diagnostic positive)	Service check signal for navigation system	5—6 V	If open: No effect on system. If short to ground: System goes into diagnostic mode.
8	GRN/YEL	DIAG N (Diagnostic negative)	Ground for service check signal	0 V	If open: No effect on system. If short to ground: No effect on system.

(cont'd)

Protected by AR

Navigation System ('03-05 models)

System Description (cont'd)

Navigation Unit Inputs and Outputs for Connector E (2P)

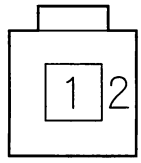

Wire side of female terminals

Terminal Number	Wire Color	Terminal Name	Description	Voltage (about)	Symptom
1	———	GPS	GPS signal (5 V in, GPS signal out)	5 V	If open: GPS icon on screen is white, system links screen ANT shows "NG." If short to ground: Same as open.
2	———	GND GPS	Ground for GPS signal	0 V	If open: GPS icon on screen is white, system links screen ANT shows "NG." If short to ground: No effect on system.

BACK

Protected by AR

Display Unit Inputs and Outputs for Connector A (10P)

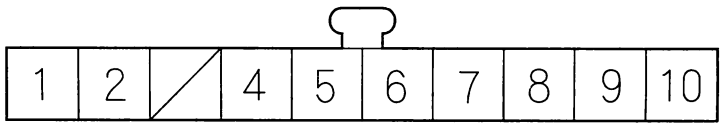

Wire side of female terminals

Terminal Number	Wire Color	Terminal Name	Description	Voltage (about)	Symptom
1	BLK	GND SIG		0 V	If open: Display visible, but very dim. If short to ground: Display unaffected.
2	BLU/ORN	5 V		5 V	If open: All display segments show briefly at key on. If short to ground: All LCD segments do not work, display backlight on.
4	YEL/RED	RESET	Time set sync signal	5 V	If open: Clock display will not set to navigation time (when time offset is applied or when "Reset" touched in Setup "Clock Adjustment" screen). If short to ground: All LCD segments do not work, display backlight on.
5	YEL	CLOCK		0—0.04 V	If open: Randomly displays some characters, display backlight on. If short to ground: Randomly displayed characters, display backlight on.
6	BLU/RED	DATA		0—0.04 V	If open: All LCD segments on, backlight on. If short to ground: All LCD segments on, backlight on.
7	BLU	CE		0 V	If open: All LCD segments on, backlight on. If short to ground: All LCD segments on, backlight on.
8	GRY	SH SIG	Shield for terminal No. 4, 5, 6, 7	0 V	If open: No effect on display. If short to ground: No effect on display.
9	RED	LCD BL— (LCD backlight—)	Power for LCD backlight—	0—0.2 V	If open: Display functions normal, but display is very dim. If short to ground: Display functions normally.
10	GRN	LCD BL+ (LCD backlight+)	Power for LCD backlight+	9.2 V	If open: Display completely blank. If short to ground: Display completely blank.

(cont'd)

Protected by AR

Navigation System ('03-05 models)

System Description (cont'd)

Display Unit Inputs and Outputs for Connector B (20P)

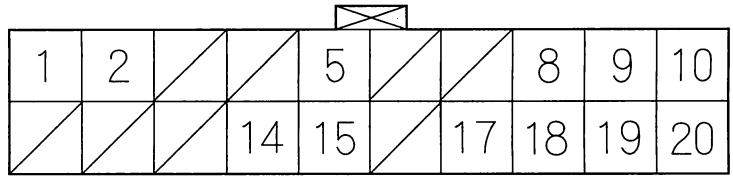

Wire side of female terminals

Terminal Number	Wire Color	Terminal Name	Description	Voltage (about)	Symptom
1	WHT/RED	+B (+B power source)	Continuous power source	Battery voltage	If open: Screen completely off (no backlight visible). If short to ground: Blows fuse No. 7 (10 A) in the under-dash fuse/relay box.
2	YEL/RED	ACC (Accessory)	Power source for accessory	Battery voltage at ACC (I)	If open: Display and buttons do not work. If short to ground: Blows fuse No. 32 (7.5 A) in the under-dash fuse/relay box.
5	RED/WHT	DISP BUS (+) (Display bus positive)	Data bus (+) GA-Net	0 V—5 V pulses average 2.5 V depends on bus traffic	If open: Navigation buttons and touch screen do not work. If short to ground: Navigation buttons and touch screen do not work.
8	WHT	R SIG (Red signal)	Red color signal	0—1 V AC	If open: Red color missing (see "RGB Color" diagnostic). If short to ground: Red color missing (see "RGB Color" diagnostic).
9	RED	G SIG (Green signal)	Green color signal	0—1 V AC	If open: Green color missing (see "RGB Color" diagnostic). If short to ground: Green color missing (see "RGB Color" diagnostic).
10	BLK	GND (Ground)	Ground for display unit	0 V	If open: No change to display. If short to ground: No change to display.
14	GRN/BLK	SH DISP BUS (Shield display bus)	Shield for display bus terminal No. 5, 15	0 V	If open: No change to display. If short to ground: No change to display.
15	RED/BLU	DISP BUS (—) (Display bus negative)	Date bus (—) GA-Net	0 V—5 V pulses average 2.5 V depends on bus traffic	If open: Navigation buttons and touch screen do not work. If short to ground: Hard and touch buttons work OK.
17	BLU	GND SIG (Ground signal)	Ground for color signal	0 V	If open: No change to display. If short to ground: No change to display.
18	YEL	B SIG (Blue signal)	Blue color signal	0—1 V AC	If open: Blue color missing (see "RGB Color" diagnostic). If short to ground: Blue color missing (see "RGB Color" diagnostic).
19	BRN	C SIG (Composite signal)	Composite video (vertical/horizontal) synchronizing signal	0.3 V AC	If open: Picture rolls horizontally, colors still visible. If short to ground: Picture rolls horizontally, colors still visible.
20	GRY	SH SIG (Shield signal)	Shield for terminal No. 8, 9, 17, 18, 19	0 V	If open: No change to display. If short to ground: No change to display.

BACK

Protected by AR

Audio-HVAC Subdisplay Unit Inputs and Outputs for 10P Connector

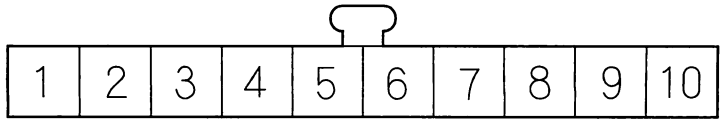

Wire side of female terminals

Terminal Number	Wire Color	Terminal Name	Description	Voltage (about)	Symptom
1	BLK	GND SIG	———	0 V	If open: Display visible, but very dim. If short to ground: Display unaffected.
2	BLU/ORN	5 V	———	5 V	If open: All display segments show briefly at key on. If short to ground: All LCD segments do not work, display backlight on.
3	BLK	GND	———	0 V	———
4	YEL/RED	RESET	Time set sync signal	5 V	If open: Clock display will not set to navigation time (when time offset is applied or when "Reset" touched in Setup "Clock Adjustment" screen). If short to ground: All LCD segments do not work display backlight on.
5	YEL	CLOCK	———	0—0.04 V	If open: Randomly displays some characters, display backlight on. If short to ground: Randomly displayed characters, display backlight on.
6	BLU/RED	DATA	———	0—0.04 V	If open: All LCD segments on, backlight on. If short to ground: All LCD segments on, backlight on.
7	BLU	CE	———	0 V	If open: All LCD segments on, backlight on. If short to ground: All LCD segments on, backlight on.
8	GRY	SH SIG	Shield for terminal No. 4, 5, 6, 7	0 V	If open: No effect on display. If short to ground: No effect on display.
9	RED	LCD BL— (LCD backlight—)	Power for LCD backlight—	0—0.2 V	If open: Display function normal, but display is very dim. If short to ground: Display functions normally.
10	GRN	LCD BL+ (LCD backlight+)	Power for LCD backlight+	9.2 V	If open: Display completely blank. If short to ground: Display completely blank.

BACK

Protected by AR

Navigation System ('03-05 models)

Circuit Diagram

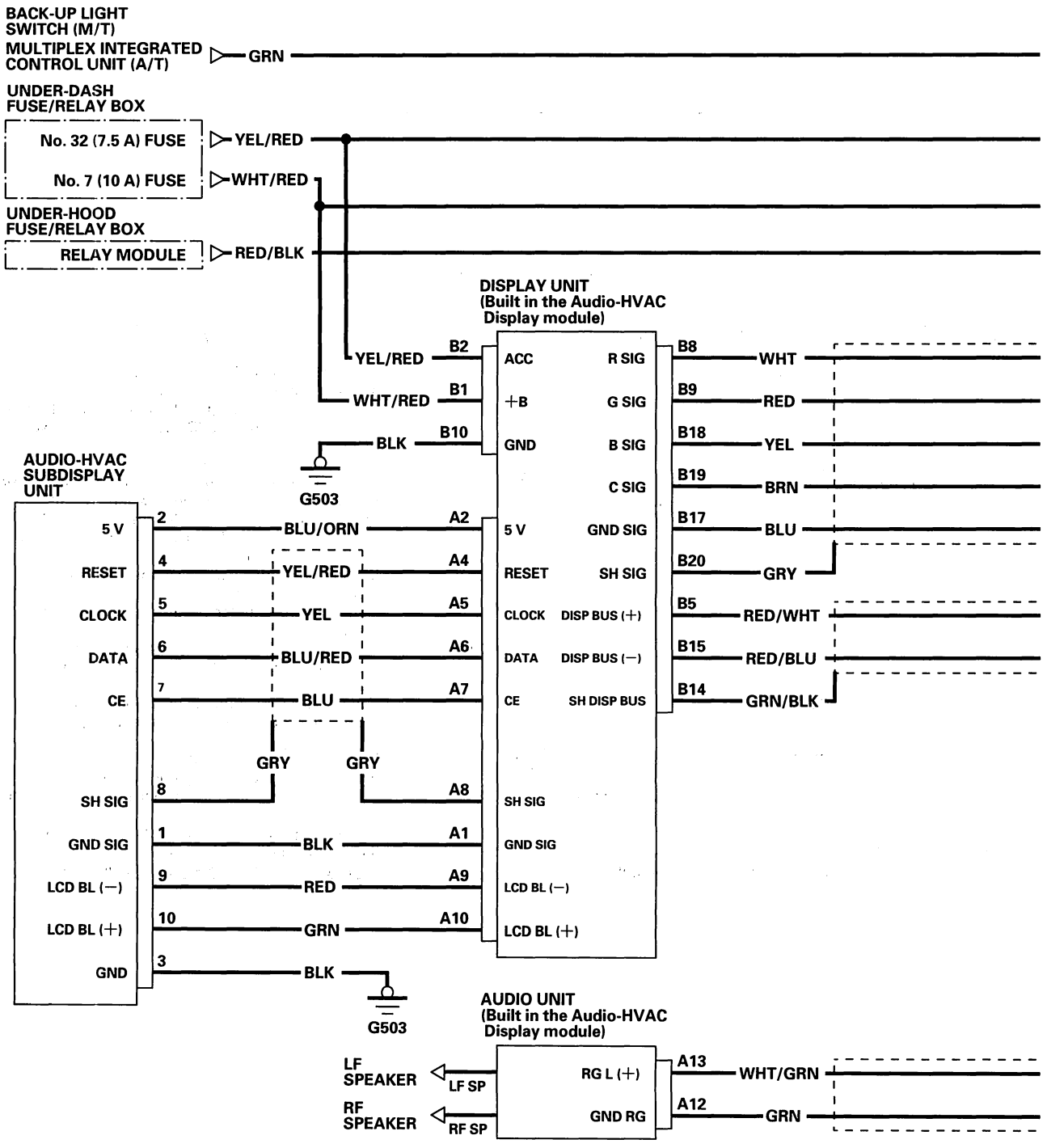

BACK

Protected by AR

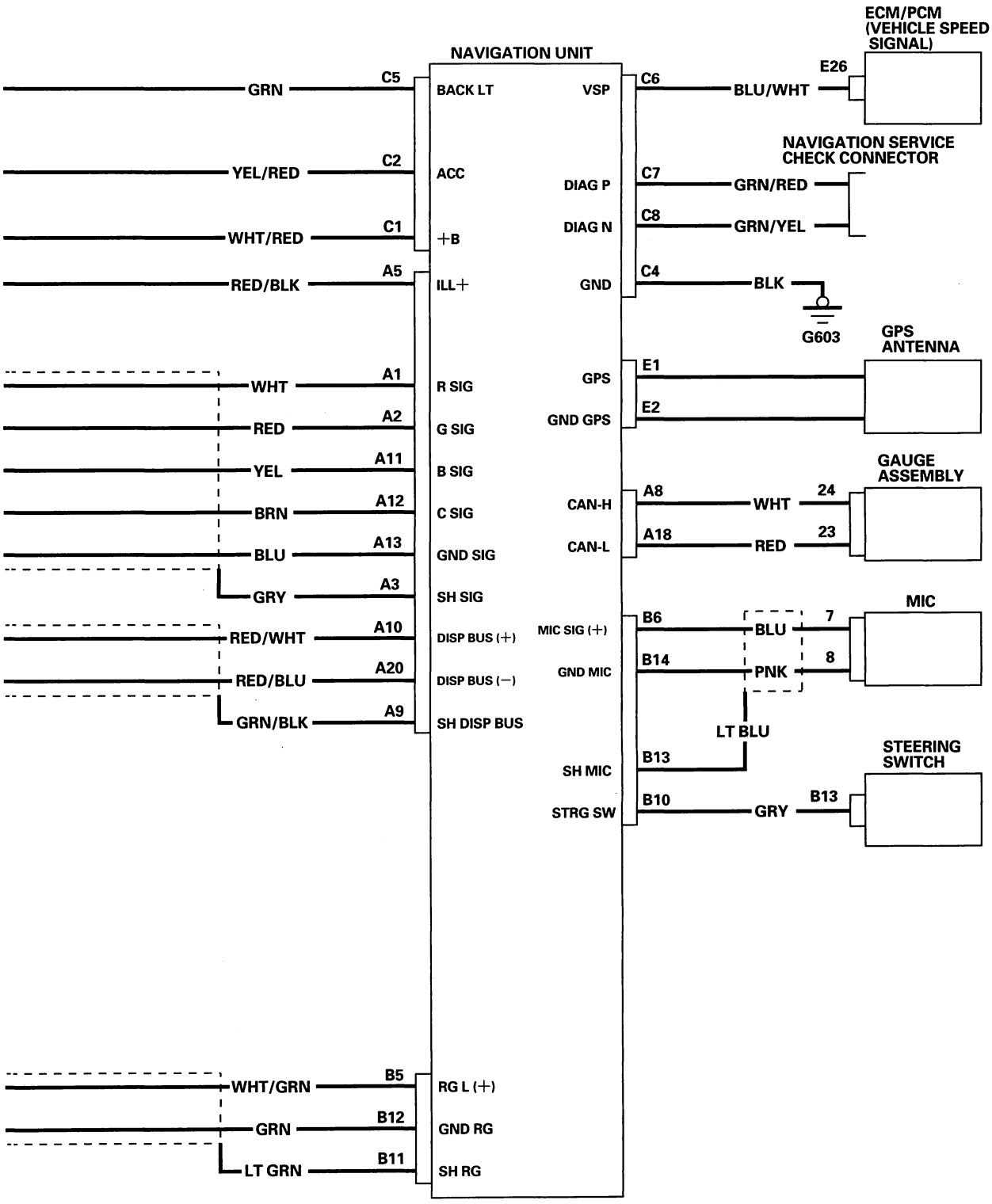

(cont'd)

BACK

Protected by AR

Navigation System ('03-05 models)

Circuit Diagram (cont'd)

Audio-HVAC subdisplay unit 10P connector

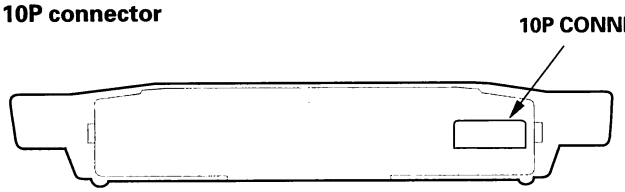

10P CONNECTOR

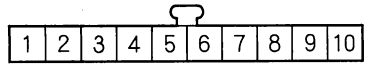

Wire side of female terminals

Display unit connectors

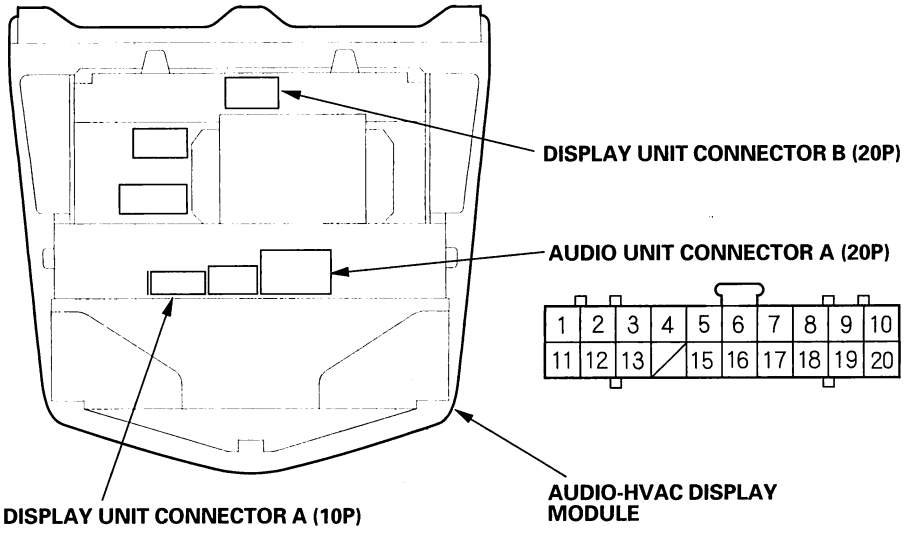

CONNECTOR A (10P)

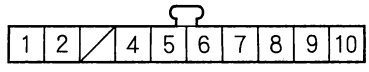

CONNECTOR B (20P)

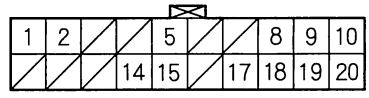

Wire side of female terminals

Navigation unit connectors

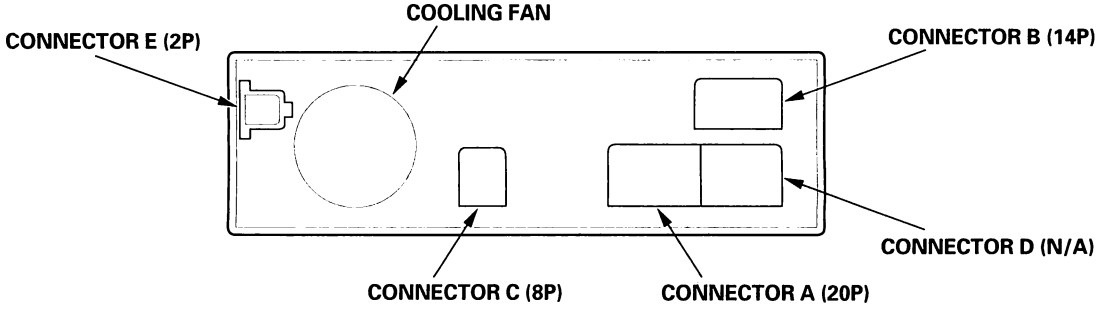

CONNECTOR A (20P)

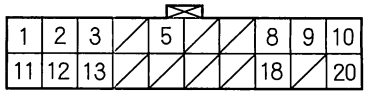

CONNECTOR B (14P)

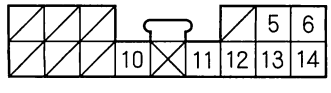

CONNECTOR C (8P)

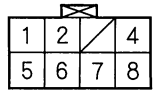

CONNECTOR E (2P)



W als

BACK

Protected by AR

Symptom Troubleshooting

No picture is displayed

NOTE
- Always check the connectors for poor connections or loose terminals.
- Diagnostic Test: Navi System Link

1. Check the No. 7 (10 A) fuse and No. 32 (7.5 A) fuse in the under-dash fuse/relay box, and reinstall the fuse if it is OK.

   Is the fuse OK?

   YES—Go to step 2.

   NO—Replace the fuse and recheck. ■

2. Turn the ignition switch to ACC (I).

3. Operate the radio and listen to the audio.

   Can audio be heard?

   YES—Go to step 4.

   NO—Check the ACC circuit. ■

4. Turn the ignition switch ON (II).

5. Measure the voltage between body ground and navigation unit connector C (8P) terminals No. 1 and No. 2 individually.

NAVIGATION UNIT CONNECTOR C (8P)

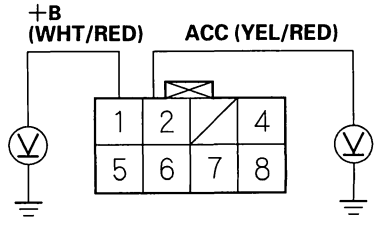

Wire side of female terminals

Is there battery voltage?

YES—Go to step 6.

NO—If the +B wire does not have voltage, repair open in the wire between the under-dash fuse/relay box and the navigation unit.
If the ACC wire does not have voltage, repair open in the wire between the under-dash fuse/relay box and the navigation unit. ■

6. Turn the ignition switch OFF.

7. Disconnect the navigation unit connector C (8P).

8. Check for continuity between navigation unit connector C (8P) terminal No. 4 and body ground.

NAVIGATION UNIT CONNECTOR C (8P)

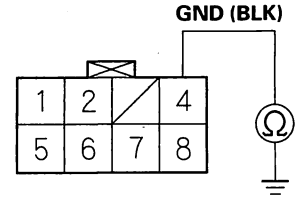

Wire side of female terminals

Is there continuity?

YES—Go to step 9.

NO—Repair open in the wire between the navigation unit and body ground (G603). ■

9. Reconnect the navigation unit connector C (8P).

10. Perform the forced starting of the display (see page 22-480).

    Is the diagnosis menu of the picture diagnosis displayed?

    YES—Go into the Diagnostic mode and use the "Navi System Link" diagnostic (see page 22-465) to check the links. ■

    NO—Go to step 11.

(cont'd)

Protected by AR

Symptom Troubleshooting (cont'd)

11. Shield the display unit from the sun with your hand, and check that the display is back lit (only back light is ON.)

    Can you see the back light?

    YES—Replace the navigation unit (see page 22-481).■

    NO—Go to step 12.

12. Turn the ignition switch ON (II).

13. Measure the voltage between body ground and display unit connector B (20P) terminal No. 1 and No. 2 individually.

DISPLAY UNIT CONNECTOR B (20P)

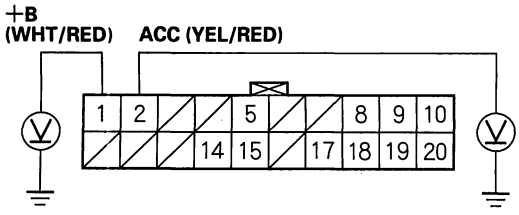

Wire side of female terminals

Is there battery voltage?

YES—Replace the display unit.■

NO—If the +B wire does not have voltage, repair open in the wire between the under-dash fuse/relay box and the navigation unit.
If the ACC wire does not have voltage, repair open in the wire between the under-dash fuse/relay box and the navigation unit.■

Picture is missing a color or tone

NOTE:
- Always check the connectors for poor connections or loose terminals.
- Before troubleshooting, get the navigation system anti-theft codes.
- After troubleshooting, enter the navigation system anti-theft codes.

1. Go into the Diagnostic Menu and use "RGB Color" test under Monitor Check (see page 22-467).

   Are the red, green, and blue colored circles shown?

   YES—The system is OK at this time.■

   NO—Go to step 2.

2. Turn the ignition switch to OFF.

3. Disconnect the navigation unit connector A (20P) and display unit 20P connector.

4. Check for loose terminals at navigation unit connector A (20P) and display unit 20P connector.

   Are there loose terminals?

   YES—Repair the terminal.■

   NO—Go to step 5.

BACK

Protected by AR

5. Check for continuity between the appropriate terminals of navigation unit connector A (20P) to display unit connector B (20P) based on the missing color(s).

Missing color	Navigation unit connector A (20P)	Display unit connector B (20P)	Wire color
Blue	A11	B18	YEL
Green	A2	B9	RED
Red	A1	B8	WHT

NAVIGATION UNIT CONNECTOR A (20P)

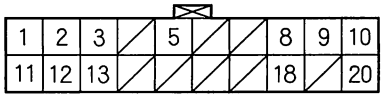

Wire side of female terminals

DISPLAY UNIT CONNECTOR B (20P)

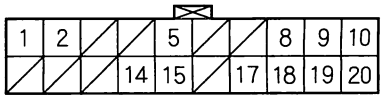

Wire side of female terminals

Is there continuity?

YES—Go to step 6.

NO—There is an open in the circuit between the display unit and the navigation unit. Check for poor connections or loose terminals at the display and navigation units. If a poor connection or loose terminal is found, replace the affected shielded harness.■

6. Check for continuity between the appropriate terminals of navigation unit connector A (20P) and display unit connector B (20P) based on the missing color(s).

Missing color	Navigation unit connector A (12P)	Display unit connector B (20P)
Blue	A11	B10, B20
Green	A2	B10, B20
Red	A1	B10, B20

NAVIGATION UNIT CONNECTOR A (20P)

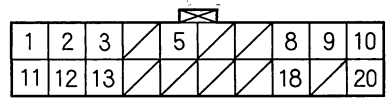

Wire side of female terminals

DISPLAY UNIT CONNECTOR B (20P)

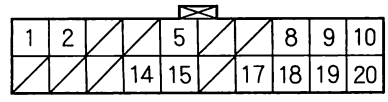

Wire side of female terminals

Is there continuity?

YES—There is a short to body ground in the circuit between the display unit and the navigation unit. Replace the affected shielded harness.■

NO—Replace the navigation unit. If the problem is still unresolved, replace the display unit.■

BACK

Protected by AR

Symptom Troubleshooting (cont'd)

Picture has lines/rolls/other issues

NOTE:
- Always check the connectors for poor connections or loose terminals.
- Before troubleshooting, get the navigation system anti-theft codes.
- After troubleshooting, enter the navigation system anti-theft codes.

1. Check for electronic aftermarket accessories (possibly hidden) mounted near the display unit or the navigation unit.

   Are there any electronic accessories?

   YES—Disable the accessories, and recheck. ■

   NO—Go to step 2.

2. Start up the navigation picture.

   Is the picture scrolling horizontally (left to right or right to left)?

   YES—Check for an open or short to ground in the C SIG wire from navigation unit connector A (20P) terminal No. 12 to display unit connector B (20P) terminal No. 19. Also check for a short to ground between display unit connector B terminal No. 19 and terminal No. 20. ■

   NO—Go to step 3.

3. Go into the Diagnostic mode and use "RGB Color" test under Monitor Check (see page 22-467).

   Is the picture missing a red, green or blue color?

   YES—Do the troubleshooting for the picture is missing a color or tone (see page 22-448). ■

   NO—Go to step 4.

4. Turn the ignition switch OFF.

5. Substitute a known-good display unit, and recheck.

   Is the picture OK?

   YES—Replace the original display unit. ■

   NO—Replace the navigation unit (see page 22-481). ■

BACK

Protected by AR

Display unit buttons or touch screen buttons do not work or respond properly

NOTE:
- Always check the connectors for poor connections or loose terminals.
- Before troubleshooting, get the navigation system anti-theft codes.
- After troubleshooting, enter the navigation system anti-theft codes.

1. Turn the ignition switch to ACC (I).

2. Go into the Diagnostic mode and use the "Touch Panel" test under Monitor Check (see page 22-467) and, if necessary, the "Display" test under Unit Check (see page 22-469).

   Do the buttons work properly?

   YES—System is OK.■

   NO—Go to step 3.

3. Try all the buttons on the navigation system.

   Is there a specific row or columns of buttons, set of button, or a certain button that does not respond properly (i.e. pressing a button in the lower left corner causes a button in the right lower corner to respond.)?

   YES—Replace the display unit.■

   NO—Go to step 4.

4. Measure the voltage between body ground and display unit connector B (20P) terminal No. 1 and No. 2 individually.

DISPLAY UNIT CONNECTOR B (20P)

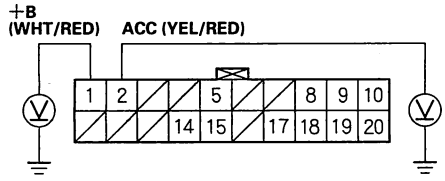

Wire side of female terminals

Is there battery voltage?

YES—Go to step 5.

NO—If the +B wire does not have voltage, repair the open in the wire between the under-dash fuse/relay box and the display unit. If the ACC wire does not have voltage, repair the open in the wire between the under-dash fuse/relay box and the display unit.■

5. Turn the ignition switch OFF.

6. Disconnect the display unit connector B (20P).

7. Check for continuity between display unit connector B (20P) terminal No. 10 and body ground.

DISPLAY UNIT CONNECTOR B (20P)

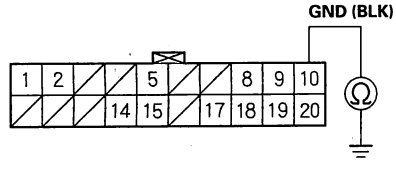

Wire side of female terminals

Is there continuity?

YES—Go to step 8.

NO—Repair the open in the wire between the display unit and body ground (G503).■

8. Disconnect the navigation unit connector A (20P).

(cont'd)

Protected by AR

Symptom Troubleshooting (cont'd)

9. Check for continuity between body ground and display unit connector B (20P) terminal No. 5 and No. 15 individually.

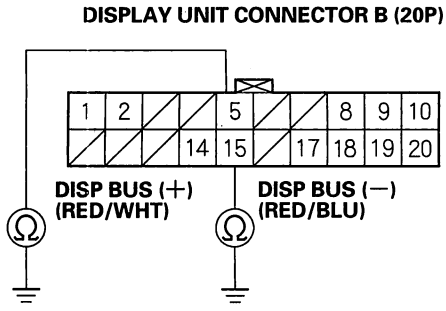

Wire side of female terminals

Is there continuity?

YES—There is a short to body ground in the circuit between the display unit and the navigation unit. Replace the affected shielded harness.■

NO—Go to step 10.

10. Check for continuity between display unit connector B (20P) terminal No. 5 and navigation unit connector A (20P) terminal No. 10.

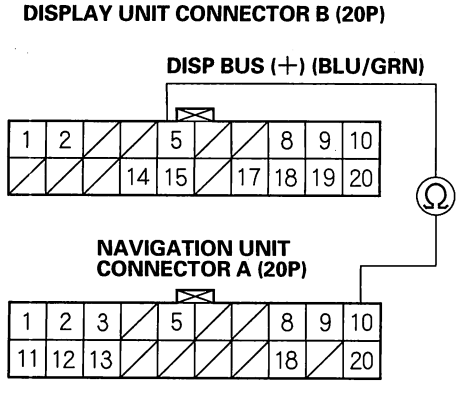

Wire side of female terminals

Is there continuity?

YES—Go to step 11.

NO—There is an open in the circuit between the display unit and the navigation unit. Check for poor connections or loose terminals at the display and navigation units. If a poor connection or loose terminal is found, replace the affected shielded harness.■

11. Check for continuity between display unit connector B (20P) terminal No. 15 and navigation unit connector A (20P) terminal No. 20.

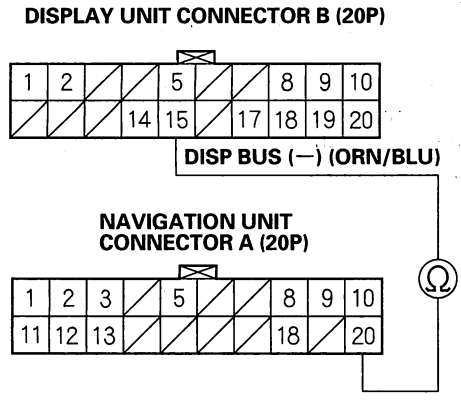

Wire side of female terminals

Is there continuity?

YES—Replace the display unit.■

NO—There is an open in the circuit between the display unit and the navigation unit. Check for poor connections or loose terminals at the display and navigation units. If a poor connection or loose terminal is found, replace the affected shielded harness.■

BACK

Protected by AR

GPS icon is white, or not shown

NOTE:
- Make sure the vehicle is parked outside and away from buildings.
- Refer to GPS Information (see page 22-472) for realtime satellite reception display.

1. Check for metallic window tint on the windshield and electronic aftermarket accessories (possibly hidden) mounted near the GPS antenna or the navigation unit.

   Is there metallic window tint or electronic accessories?

   YES—Remove tint or the accessories and recheck. ■

   NO—Go to step 2.

2. Go into the Diagnostic Menu and use the "Navi System Link" test (see page 22-465) to check the GPS antenna.

   Is "GPS Ant" icon red?

   YES—Use the "Navi ECU" test under Unit Check (see page 22-469) to check for a kinked, crushed, or disconnected GPS antenna wire. If necessary, try a known-good GPS antenna. If icon is still red, replace the navigation unit. ■

   NO—Check that nothing is blocking the GPS antenna located under the rear shelf and recheck. Sudstitute a known-good navigation unit, and recheck. ■

Voice guidance cannot be heard

NOTE:
- Always check the connectors for poor connections or loose terminals.
- Before troubleshooting, write down the customer's radio station presets, and get the radio and navigation system anti-theft codes.
- After troubleshooting, enter the radio and navigation system anti-theft codes, and the radio station presets.

1. Press the display unit SET-UP button.

2. Check the volume setting for the navigation system.

   Is it set to OFF?

   YES—Set the volume to an audible level. ■

   NO—Go to step 3.

3. Check the radio operation.

   Can you hear the radio?

   YES—Go to step 4.

   NO—Troubleshoot the audio system. ■

4. Go into the Diagnostic Menu and use the "Navi System Link" test (see page 22-465) to check the radio.

   Is "Radio" icon red?

   YES—Troubleshoot the audio system. ■

   NO—Go to step 5.

5. Turn the ignition switch OFF.

6. Disconnect the navigation unit connector B (14P) and the audio unit connector A (20P).

(cont'd)

Protected by AR

Symptom Troubleshooting (cont'd)

7. Check for continuity between body ground and navigation unit connector B (14P) terminals No. 5, No. 12 individually.

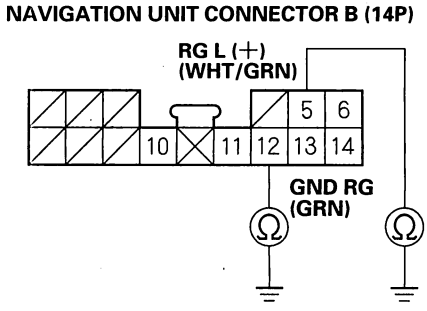

Wire side of female terminals

Is there continuity?

YES—Replace the affected shielded harness. ■

NO—Go to step 8.

8. Check for continuity between navigation unit connector B (14P) terminal No. 5 and the audio unit connector A (20P) terminal No. 13.

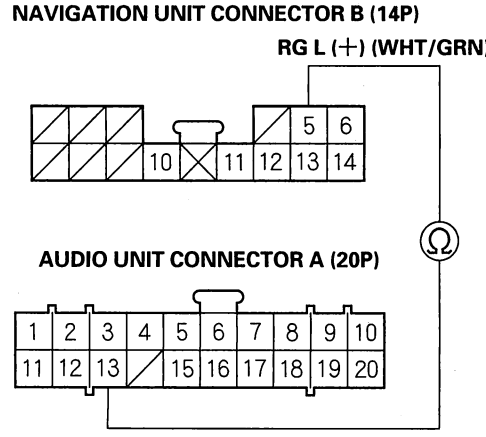

Wire side of female terminals

Is there continuity?

YES—Go to step 9.

NO—There is an open in the circuit between the navigation unit and audio unit. Check for poor connections or loose terminals at the audio and navigation units. If a poor connection or loose terminal is found, replace the affected shielded harness. ■

BACK

Protected by AR

9. Check for continuity between navigation unit connector B (14P) terminal No. 12 and the audio unit connector A (20P) terminal No. 12.

NAVIGATION UNIT CONNECTOR B (14P)

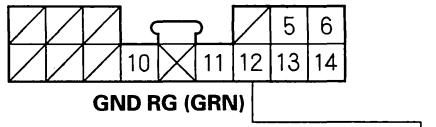

GND RG (GRN)

AUDIO UNIT CONNECTOR A (20P)

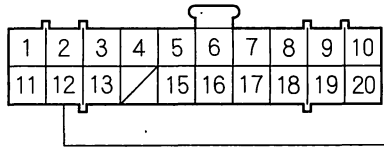

Wire side of female terminals

Is there continuity?

YES—Go to step 10.

NO—There is an open in the circuit between the navigation unit and audio unit. Check for poor connections or loose terminals at the audio and navigation units. If a poor connection or loose terminal is found, replace the affected shielded harness. ■

10. Substitute a known-good audio unit, and recheck.

Is the system OK?

YES—Replace the original audio unit. ■

NO—Replace the navigation unit (see page 22-481). ■

Voice control does not work/respond

NOTE:
- Always check the connectors for poor connections or loose terminals.
- Before troubleshooting, write down the customer's radio station presets, and get the radio and navigation system anti-theft codes.
- After troubleshooting, enter the radio and navigation system anti-theft codes, and the radio station presets.

Before assuming that a voice complaint is hardware related, ensure that the voice control system is being operated correctly.

- Make sure you are on the correct screen when trying to issue a voice command. For instance, the command "Find the nearest Italian Restaurant" only works on a Map screen.
  (See the Navigation System Manual for a complete list of allowed voice commands for the information being displayed.)
- Close the windows and moonroof.
- Set the fan speed to low (1 or 2).
- Adjust the air flow from the air conditioning vents so that they do not blow against the microphone on the ceiling.
- Pause after pressing the TALK button, then give a voice command clearly in a natural speaking voice. If the system cannot recognize your command, speak louder.
- If the microphone picks up voices other than yours, the system may not interpret your voice commands correctly.
- If you speak a command with something in your mouth, or your voice is too husky, the system may misunderstand your command.

(cont'd)

Protected by AR

Symptom Troubleshooting (cont'd)

1. Go into the Diagnostic Menu and use the "Mic Level" test the under Functional Setup (see page 22-474) to check the operation of the TALK and BACK buttons.

   Are the TALK and BACK buttons operational?

   YES—Go to step 2.

   NO—Check for an open or short to ground on navigation unit connector B (14P) terminal No. 10. ■

2. Use the "Mic Level" diagnostic under Functional Setup (see page 22-474) to check the operation of the microphone.

   Is the microphone operational?

   YES—Check the operation of the voice control system (see the Navigation System Manual). ■

   NO—Check for a loose front map light (microphone) assembly. If OK, check for an open or short to ground on navigation unit connector B (14P) terminals No. 6 and No. 14. ■

Vehicle position icon constantly leaves road or is very far from actual position

1. Check the GPS icon on the navigation picture.

   Is the GPS icon white?

   YES—Do the troubleshooting for GPS icon is white, or not shown (see page 22-453). ■

   NO—Go to step 2.

2. Go into the Diagnostic Menu and use the "Yaw Rate" test (see page 22-473) to check the yaw rate sensor.

3. Go into the Diagnostic Menu and use the "Car Status" test (see page 22-471) to check the vehicle speed pulse.

   Are the yaw rate sensor and vehicle speed pulse OK?

   YES—The problem may be normal. Check to see if the problem occurs in the same place. If it does, the problem could be in the database. Go to step 4.

   NO—If the problem is the yaw rate sensor, replace the navigation unit (see page 22-481). If the problem is the vehicle speed pulse, troubleshoot the vehicle speed signal circuit. ■

4. Substitute a known-good navigation unit and check to see if the problem occurs in the same place.

   Does the problem occur in the same place?

   YES—The problem is in the database. Report the problem according to the Navigation System Manual under "Reporting Errors". ■

   NO—Replace the original navigation unit (see page 22-481). ■

BACK

Protected by AR

DVD screen error messages

NOTE:
- Check the Navigation System Manual for a list of common DVD screen error messages and the probable cause.
- Go into the Diagnostic Menu and use the "Car Status" test (see page 22-471) to check the status of the DVD lid.

1. Check the DVD-ROM reading surface for scratches.

   Are there scratches?

   YES—Replace the DVD-ROM (see page 22-480). ■

   NO—If the problem occurs occasionally when the system is cold, this is normal. If the problem occurs frequently when driving, replace the navigation unit (see page 22-481). ■

Trip computer-no distance

NOTE:
- Always check the connectors for poor connections or loose terminals.
- Before troubleshooting, get the navigation system anti-theft codes.
- After troubleshooting, enter the navigation system anti-theft codes.
- If the Previous button on the Trip Computer screen is not active, make sure to answer OK to the Disclaimer screen.
- Verify that the correct navigation unit is installed for this model. Go into the Diagnostic Menu and use "Version" (see page 22-478).

1. Go into the Diagnostic Menu and use the "Car Status" test (see page 22-471) to check for a vehicle speed pulse (VSP).

   Is there a VSP when the vehicle is moving?

   YES—Check the CAN system for DTCs. If OK, replace the navigation unit. ■

   NO—Check the VSP wire for an open or short to power or ground. ■

Protected by AR

Symptom Troubleshooting (cont'd)

Trip computer-no fuel information

NOTE:
- Always check the connectors for poor connections or loose terminals.
- Before troubleshooting, get the navigation system anti-theft codes.
- After troubleshooting, enter the navigation system anti-theft codes.
- If the Previous button on the Trip Computer screen is not active, make sure to answer OK to the Disclaimer screen.
- Verify that the correct navigation unit is installed for this model. Go into the Diagnostic Menu and use "Version" (see page 22-478).

Do the "Navi System Link" test (see page 22-465) to check the communication line between the ECM/PCM (FI-ECU) and the navigation unit.

1. Go into the Diagnostic Menu and use "Trip Information" test under Functional Setup (see page 22-474) with the engine running.

   Are the values greater than zero?

   YES—The system is OK.■

   NO—Check the CAN system for DTCs. If OK, replace the navigation unit.■

Navigation cannot control A/C

NOTE:
- Always check the connectors for poor connections or loose terminals.
- Before troubleshooting get the navigation system anti-theft codes.
- After troubleshooting, enter the navigation system anti-theft codes.
- Verify that the correct navigation unit is installed for this model. Go into the Diagnostic Menu and use "Version" (see page 22-478).

1. Go into the Diagnostic Menu and use the "Navi System Link" test (see page 22-465).

   Is "Air-con" icon red?

   YES—Do the climate control system troubleshooting.■

   NO—Check for an open or short to ground between display unit connector A (5P) terminals No. 2, No. 3 No. 4 and climate control unit connector A (16P) terminals No. 16, No. 15, No. 8. If OK, check the climate control system for normal operation. If the climate control system works properly, substitute a known-good display unit and recheck.■

BACK

Protected by AR

Display day/night mode does not work

NOTE:
- Always check the connectors for poor connections or loose terminals.
- Before troubleshooting get the navigation system anti-theft codes.
- After troubleshooting, enter the navigation system anti-theft codes.
- Full brightness on the instrument panel brightness control causes the system to stay in the day mode, even when the lights are on.

1. Make sure the instrument panel brightness control is not on full brightness.

2. Change the day/night mode to AUTO under Set-up and recheck.

   Does the display change to day and night modes using the headlights?

   YES—The system is OK at this time. ■

   NO—Go to step 3.

3. Go into the Diagnostic Menu and use the "Car Status" test to check for an ILL signal (see page 22-471).

   Is "ILL" signal OK?

   YES—The system is OK. ■

   NO—Check the ILL+ circuit between the navigation unit and relay module. ■

System locks up constantly

1. Start the engine and turn the ignition switch OFF, then turn the ignition switch ON (II).

   Does the system reboot?

   YES—The system is OK at this time. ■

   NO—Check the DVD for scratches or damage and the navigation unit for water damage. If OK, go into the Diagnostic Menu and do all of the "Unit Check" tests (see page 22-469). ■

Protected by AR

Symptom Troubleshooting (cont'd)

Vehicle icon wanders across the map when driving (does not follow a displayed road) or spins when driving

NOTE: This symptom is caused by a defective yaw rate sensor. Perform this diagnostic when the vehicle is cold and warm.

1. Go into the Diagnostic Menu and use the "Yaw Rate" test (see page 22-473).

   Are the values correct?

   YES—The system is OK. ■

   NO—Replace the navigation unit (see page 22-481). ■

Navigation drives by itself when parked

NOTE:
- Always check the connectors for poor connections or loose terminals.
- Before troubleshooting, get the navigation system anti-theft code.
- After troubleshooting, re-enter the anti-theft code, and re-initialize the navigation system.

1. Start the engine.
2. From the main menu, select places, then select any destination, and begin the trip.
3. With the vehicle parked, watch the vehicle icon on the display.

   Does the vehicle position icon move by itself?

   YES—Go to step 4.

   NO—The system is OK at this time. ■
4. Go into the Diagnostic Menu and select "Demonstration" test (see page 22-474) under Functional Setup.

   Is "Demonstration Mode" set to "YES"?

   YES—Set the Demonstration mode to "NO". ■

   NO—Replace the navigation unit (see page 22-481). ■

BACK

Protected by AR

Navigation stays on with ignition switch off

NOTE:
- Always check the connectors for poor connections or loose terminals.
- Before troubleshooting, get the navigation system anti-theft code.
- After troubleshooting, re-enter the anti-theft code, and re-initialize the navigation system.

1. With the key out of the ignition.

   Does the navigation screen stay on?

   YES—Go to step 2.

   NO—The system is OK at this time. ■

2. The vehicle may have been used as a demonstration vehicle at an event like an auto show. In these events, power is often jumpered to the navigation system so that the ignition key is not needed in the vehicle. At the end of the show, the jumper wire may not have been removed. Check the navigation unit "C" connector (8P) for a "non-factory" jumper wire in series with the factory cable.

   Is there a jumper wire?

   YES—Remove the jumper wire, and re-test. ■

   NO—Go to step 3.

3. The display or audio unit may have been jumpered behind the dash to allow the navigation system to run without the ignition key.

   Does the radio function with the ignition switch off?

   YES—Go to step 4.

   NO—Go to step 5.

4. Remove the display unit and check to see if the audio 20P connector has a non-factory jumper wire in series with the factory connector.

   Is there a jumper wire?

   YES—Remove the jumper wire, and re-test. ■

   NO—Go to step 5.

5. Check the interior lights with the ignition switch off.

   Can you turn on the interior lights with the ignition switch off?

   YES—Troubleshooting the ACC circuit. ■

   NO—Replace the navigation unit (see page 22-481). ■

Protected by AR

Symptom Troubleshooting (cont'd)

Navigation cannot control audio/CD

1. Make sure the anti-theft code for the audio system is entered.
2. Go into the Diagnostic Menu and use the "Navi System Link" test (see page 22-465).

   Is for "Radio" icon red?

   YES—Do the troubleshooting for the voice guidance cannot be heard (see page 22-453). ■

   NO—Go to step 3.
3. Substitute a known-good navigation unit (see page 22-481), and recheck.

   Can the navigation control audio/CD?

   YES—Replace the original navigation unit (see page 22-481). ■

   NO—Do the audio system troubleshooting. ■

Navigation cannot control XM radio

1. Go into the Diagnostic Menu and use the "Navi System Link" test (see page 22-465).

   Is the "XM" icon red?

   YES—Check the connector at the XM receiver. ■

   NO—Go to step 2.
2. Substitute a known-good navigation unit (see page 22-481), and recheck.

   Can the navigation control the XM radio?

   YES—Replace the original navigation unit (see page 22-481). ■

   NO—Do the audio system troubleshooting. ■

BACK

Protected by AR

Audio-HVAC subdisplay does not work properly

1. Check the clock. Reset if necessary.

   Does the clock reset?

   YES—The system is OK at this time. ■

   NO—Go to step 2.

2. Check for an open or short to body ground between subdisplay unit 10P connector terminal No. 4, No. 5, No. 6, No. 7 and navigation unit connector A (10P) terminal No. 4, No. 5, No. 6, No. 7.

   Are the circuits OK?

   YES—Replace the navigation unit. ■

   NO—Repair the circuits. ■

Navigation frequently asks for code and needs GPS initialization

1. Check for an open on navigation unit connector C (8P) terminals No. 1 and No. 2.

   Are the circuits OK?

   YES—Replace the navigation unit. ■

   NO—Repair the circuits. ■

Protected by AR

System Diagnosis Mode

Start-up procedure and Diagnosis Menu

There are two ways to enter the diagnostic mode:

1. Connect the SCS connector (see page 22-480) to the navigation service connector located in the trunk. Turn the ignition switch to the ON (II) position. The display will go directly to the diagnostic menu screen shown below.

   NOTE: When finished troubleshooting, make sure to remove the SCS connector.

2. Turn the ignition switch ON (II). Use the navigation display hard buttons as described below:

   A. If the battery has not been disconnected, then press and hold the 3 buttons (Menu, Map/ Guide, and Cancel), and keep them pressed for about 5 seconds. The display screen will go directly to the "Select Diagnosis Items" menu shown below.

   B. If the battery was disconnected and reconnected prior to this test, hold down the Menu and Zoom Out buttons at the "Code" or "GPS Acquire" screen. The display will go to the "Navi System Link" screen. Push the joystick to go to the "Functional Setup menu," then touch the Return icon to get to the "Select Diagnosis Items" menu.

   NOTE: This only allows access to the diagnostic screens. All other navigation functions are disabled.

DIAGNOSTIC MENU SCREEN

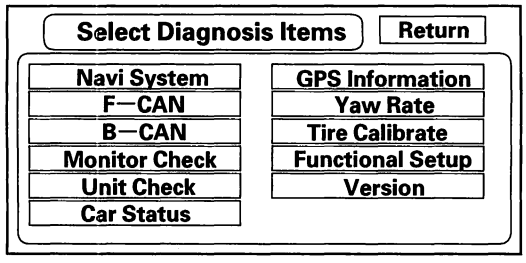

3. After the display changes to the Select Diagnosis Items menu, select the item you want to check and the diagnostic will start. To return to the previous screen, select "RETURN".

   - Navi System (Link)
   - F-CAN (System link)
   - B-CAN (System link)
   - Monitor Check
   - Unit Check
   - Car Status
   - GPS Information
   - Yaw Rate
   - Tire Calibrate
   - Functional Setup
   - Version

BACK

Protected by AR

Navi System Link

- This diagnostic tests the cables connecting the navigation components. Ensure that the ignition switch is in the ON (II) position. When the diagnostic begins, a "bong" sound is heard. The system is in a "Detecting" mode, and is waiting for all items in white to be tested. This includes the navigation voice control (TALK/BACK) buttons, and microphone. Press the navigation TALK button on the steering wheel, and in a normal voice, say "testing". The Talk indicator on the screen should become green, and the voice level indicator should move to at least the 6th bar to pass. Next, press the navigation BACK button. This should cause the "Cancel" indicator to go green.
- If all of the communication lines connecting the system components, and the navigation TALK/BACK buttons/microphone check out OK (all block diagram items green), then the "OK" indicator will become green.
- If there is a problem with the system, the faulty system component item will change to red, and the screen will show "NG" in red. Use the troubleshooting index, and other diagnostic screens to help locate the problem.
- The indication on the screen will not change until the ignition switch is cycled. After repairing the affected cable or system, repeat this diagnostic.

  NOTE: Green boxes and green "OK" indicate that the communications lines (cables) are intact. This diagnostic does not necessarily imply that the individual components are functioning properly. For instance, the GPS antenna wire may be crushed, but still show as "green" . A road test, or other diagnostic may be necessary to find the problem.

- This navigation system is designed for use in the US or Canada market.
  - US Market: English is the only language choice.
  - Canada Market: On the disclaimer screen, English or French can be selected.
  - Touch the "Chg Canada" or "Chg US" button to select the desired choice.
- Select "Return" to return to the Diagnosis Menu.

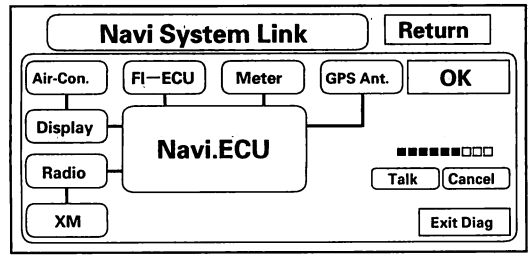

NOTE:
- The mic level indicator must reach the 6th bar or greater to pass the test.
- For '04-05 models; If the XM link is red or flashing red, go to audio system symptom troubleshooting (see page 22-462).

(cont'd)

Protected by AR

System Diagnosis Mode (cont'd)

F-CAN System Link

F-CAN (Fast Controller Area Network) passes information between processors on the network. For example, the F-CAN network is used to pass fuel pulses between the ECM/PCM and the navigation unit for the trip computer function. The F-CAN network uses a communication protocol that transmits data at 500 Kbps.

- If the diagnostic screen below reads NG with the ignition switch ON (II), then diagnostic trouble codes (DTCs) for the F-CAN can be retrieved with the HDS (Honda Diagnostic System). The data displayed in the ID boxes is irrelevant.
- For more details on troubleshooting the F-CAN, refer to the multiplex system.

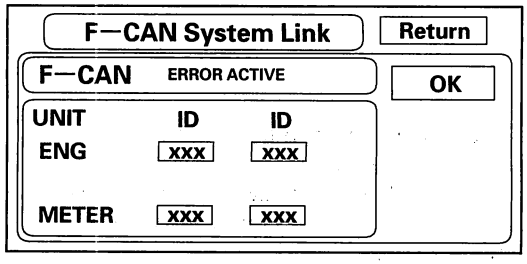

B-CAN System Link

B-CAN (Body Controller Area Network) communication moves at a slower speed for convenience related items, and for other functions.

- If the diagnostic screen below reads NG with the ignition switch ON (II), then diagnostic trouble codes (DTCs) for the B-CAN can be retrieved with the HDS (Honda Diagnostic System). The data displayed in the ID boxes is irrelevant.
- For more details on troubleshooting the B-CAN, refer to the multiplex system.

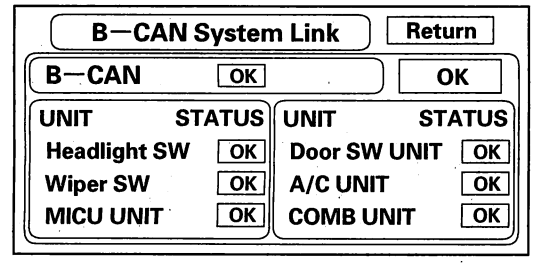

BACK

Protected by AR

Monitor Check

Overview of display unit

- The display unit communicates with the navigation unit over its own GA-Net bus. Information is sent to the navigation unit whenever the user activates the touch screen, or buttons. Information sent by the navigation unit to the display unit includes commands to control the LCD back light.
- The display unit is protected by the security system by daisy-chaining the security signal through it, and then passing the signal to the audio unit.
- The illumination input from the gauge brightness control provides back lighting for the buttons surrounding the screen.
- The display unit also communicates with the climate control unit to set the A/C, mode, and fan speed, and to receive the outside temperature that is displayed on the A/C-INFO screen.

These screens allow troubleshooting of the display unit. Select the item you want to troubleshoot, and follow the diagnostic instructions.

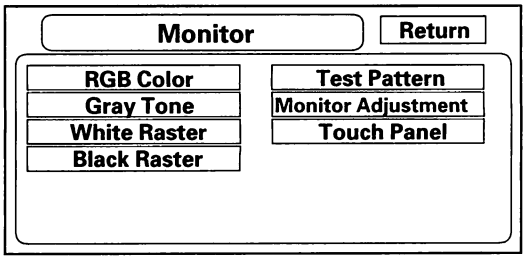

RGB Color
This screen verifies that the display unit is receiving the video (R, G, B and Composite sync) signals properly. The three primary colors should all be shown without distortion. The combination of all three should produce a central white section. If any of the colors are missing, troubleshoot for the color signal (see page 22-448). If the picture has lines in it, or scrolls horizontally or vertically, troubleshoot for a Composite sync problem (see page 22-450).

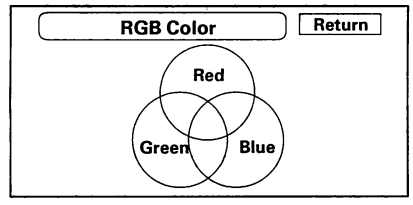

Gray Tone
This screen looks for problems with contrast. You should be able to see the changes from bar to bar across the scale. It is normal for the 2 bars on either side to appear the same.

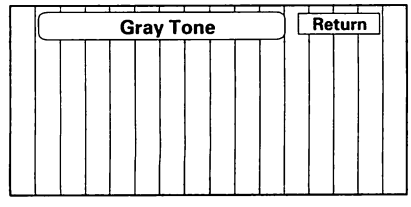

White Raster
The entire display must be shown in white.

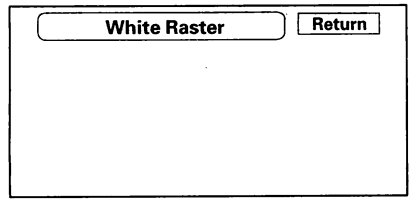

(cont'd)

Protected by AR

System Diagnosis Mode (cont'd)

Black Raster
The entire display must be shown in black.

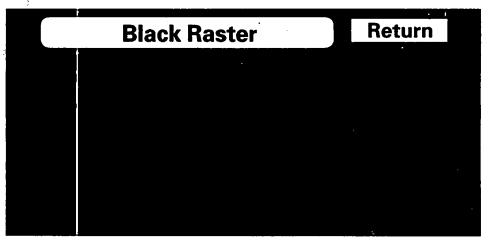

Test Pattern
The chart below shows the colors being used for the Map and Menu screens. This is for factory use only. To check the color signal use the "RGB Color" test.

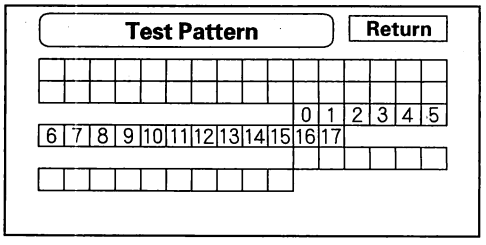

Monitor Adjustment
This allows the navigation display to be centered. Use the joystick to move the picture up/down or left/right. It is unlikely that you will ever need to adjust the monitor position. The "Default" button will reset the display position to factory specifications.

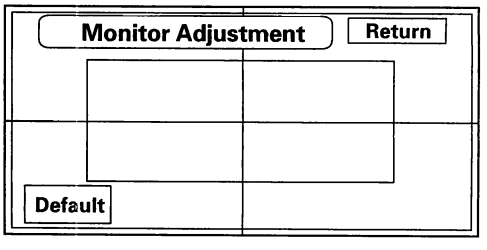

Touch Panel
The panel touch sensing system consists of 9 horizontal and 20 vertical infrared beams. Touching the screen blocks both a horizontal and a vertical beam. Every possible touch position is shown on this diagnostic screen. Touching one of these areas should cause its color to reverse, and sound a "beep". If any areas of the screen either don't respond, or respond at some other location when touched, then replace the display unit. The "Display" test under Unit Check provides an additional method to determine if one of the infrared sources or detectors is bad.

NOTE: Direct sunlight can affect this test by falsely triggering the infrared detectors, so perform this diagnostic inside or in a shaded area.

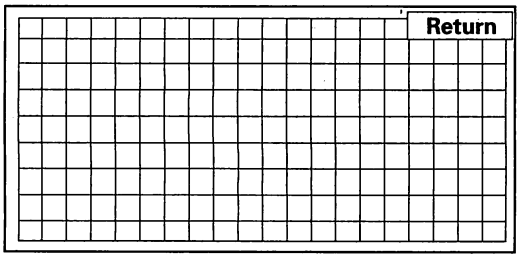

BACK

Protected by AR

Unit Check

Select the item you want to check, and the test starts.

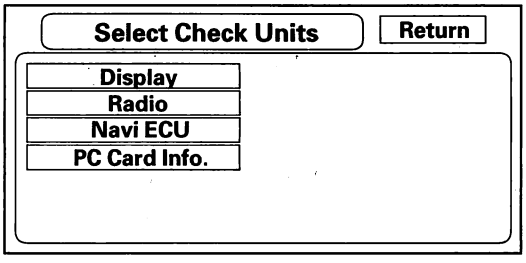

Display

This diagnostic performs additional checks on the communication bus between the control unit and the display. In addition, the internal electronics and touch screen functionality are confirmed.

- When the connection is NG, first check for loose terminals at the navigation unit and the display unit connections. Next check for an open or short in the communication line between the navigation unit and the display unit. If the line is found to have an open or short, replace the affected shielded harness.
- If the ROM or RAM is NG, replace the display unit.
- If the touch sensor is NG, then check for zeros in the "X", or "Y" values below.
- The version represents the software version in the display.
- The "1" following the X, indicate the 20 working vertical infrared beams/receptors (from left to right). The "1s" following the Y, indicate the 9 working horizontal beams (from top to bottom). If any one of the "1s" is a zero, this indicates that there is a problem with one of the beams or receptors. Check all around the inside rim of the navigation screen for dirt or anything that may be blocking a beam. If nothing is found, replace the display unit. See the display unit diagram in the "System Description" (see page 22-430) showing the infrared beam layout. Individual touch positions can be verified by running the "Touch Panel" test under the Monitor Check.

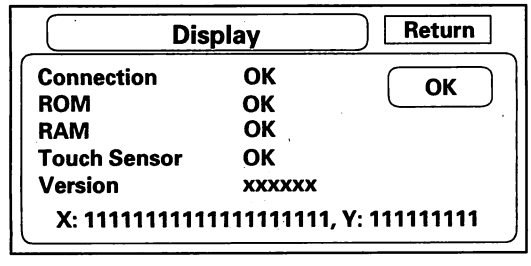

(cont'd)

Protected by AR

System Diagnosis Mode (cont'd)

Radio
If the NG is indicated, check for loose audio unit connector.

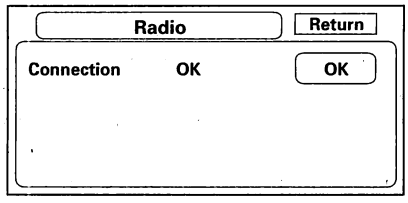

Navi ECU
This screen looks for problem with the navigation unit. When this diagnostic is initiated, there is a delay of up to a minute while it runs.

- "ROM (Application)", and "ROM (Loader)" are for factory use.
- If "V-RAM" or "D-RAM" is NG, then replace the navigation unit.
- If "GPS" indicates "NG (ANT)", then check the entire GPS antenna wire from the navigation unit to the antenna. If the wire is crushed or damaged, try a known good antenna. If this diagnostic reads OK, then order a new GPS antenna. If the diagnostic still reads NG (ANT), then replace the navigation unit.
- "DVD ROM" represents the database version on the DVD. This information can also be found in Setup Screen 4 by selecting System Information.
- "Serial No." should be the same as the serial number found on the underside of the navigation unit. This number is needed to obtain the security code from the Interactive Network (IN) system.
- Mem Clr is for factory use and should not be used unless instructed by the factory.
  Selecting this will erase the customer's settings, personal information, GPS orbital data, and anything else stored in memory.

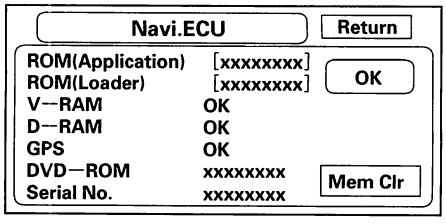

PC Card info
There is no PC Card in the PC slot, and the screen should say, "PC Card is not inserted". Do not insert any card or object into the slot.

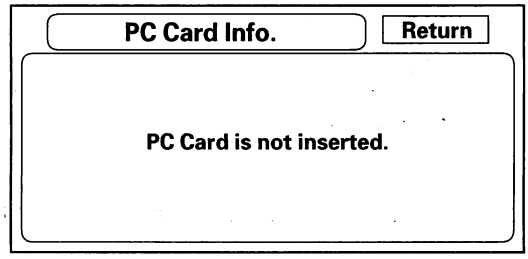

If the factory provides a PC card and instructs you to insert a card, then the screen displays the Manufacturer, and Product Name as shown in the following screen.

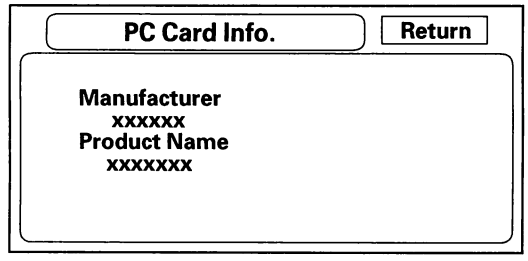

BACK

Protected by AR

Car Status

This screen is used to confirm that navigation unit is properly receiving input signals. Signals equal to (0) are OFF, and signals equal to (1) are ON. If the value on the display does not match the actual vehicle status, then check the wire carrying the signal.

- CHG-(OBSELETE-NOT USED) Charge indicator (Pin 3 of C-Connector)
  a) OFF (0) when engine is off, or alternator is not charging
  b) ON (1) when engine is running

This signal was used by the previous DVD navigation system. If CHG was off, then the screen was shut off after 10 minutes of inactivity to minimize battery consumption.

- VSP-Vehicle Speed Pulse from ECM/PCM (Pin 6 of C-connector)
  a) OFF (0) when vehicle is not moving
  b) ON (1) when vehicle is moving

The VSP comes from the ECM/PCM as a dedicated signal. Internally, the navigation unit compares the actual VP on the map against street data to adjust the pulse to speed scaling factor. As this scaling factor becomes more accurate, the "Level" gradually increases from 0 to 10.

- BACK-Reverse indication from taillight relay (Pin 5 of C-connector)
  a) OFF (0) when shift lever is in any position other than reverse
  b) ON (1) when shift lever is in reverse

The Back signal is used by the navigation unit to allow the map screen to show the VP moving backwards when in reverse. This signal is needed because the Speed Pulse has no direction indication.

- CHG (CAN)-Charge indicator from ECM/PCM using F-CAN bus (Pin 8, 18 of navigation unit A-connector)
  a) OFF (0) when engine is off
  b) ON (1) when engine is running

This signal is obtained off of the F-CAN bus. See the Multiplex control system for troubleshooting F-CAN. Diagnostic trouble codes (DTCs) for the F-CAN can be retrieved with the HDS (Honda Diagnostic System).

- ILL-Illumination Indication (Pin 5 of navigation unit A-connector)
  a) OFF (0) when parking lights, or headlights are off
  b) ON (1) when parking lights, or headlights are off

This signal is used by the navigation unit to determine whether to put the navigation screen into the Day or Night brightness mode. (Setup screen 1)

- DVD Lid-senses if DVD door is open
  a) (Close) when door is closed
  b) (Open) when door is open

The navigation unit has a micro switch to detect this. If open is indicated when the door is closed, replace the navigation unit.

- PC Card Lid-Senses if PC Card door is open
  a) (Close) when door is closed
  b) (Open) when door is open

The navigation unit has a micro switch to detect this. If open is indicated when the door is slid shut, then replace the navigation unit. This slot is for insertion of PC Flash memory cards for gathering diagnostic information. This is for factory use only.

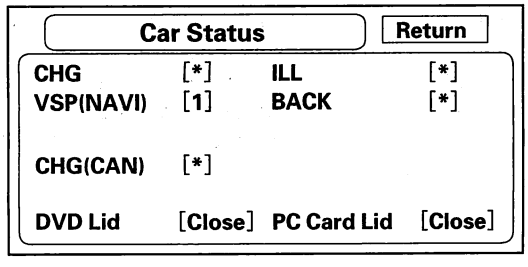

(cont'd)

Protected by AR

System Diagnosis Mode (cont'd)

GPS Information

This screen shows the current status of GPS reception. The circular diagram shows the current location of the GPS satellites (yellow numbers) as they would appear in the sky. The outer circle represents the horizon (0 degrees elevation). The middle and inner circles represents 30 and 60 degrees respectively. The very center of the diagram (90 degrees elevation) is directly overhead. Naturally, nearby obstructions, like tall buildings will block satellites in that direction. That is why it is necessary to be in an open area to effectively troubleshoot GPS reception issues. The satellite numbers shown on the diagram correspond to the "PRN" number in the "GPS Details" screen. There are always 24 "active" GPS satellites in orbit. Because satellites fail, and have to be removed from service, spares always parked in orbit, ready to be activated. This is why the PRN (satellite ID number) can be greater than 24.

NOTE:

- To use this screen for troubleshooting, the vehicle should be out side away from buildings, tall trees, and high-tension wires for at least 10 minutes with the engine running.
- Metallic window tinting on the rear window or after-market electronic accessories mounted near the navigation or display units can interfere with GPS acquisition.
- The "Number of Satellites" box shows the number of acquired satellites (maximum of 12). It should contain 3 or more icons. If not troubleshoot for "GPS icon is white, or not shown" (see page 22-453).
- The "Current Position" shows latitude, longitude, and elevation(in meters). If there are less than 3 satellites, the elevation can be grossly inaccurate.
- The Date/Time field shows the current date, and also a time that includes daylight savings and other offsets entered by the customer in Setup screen 2 "Adjust Time Zone/Clock".

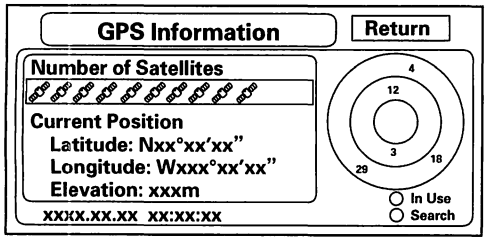

GPS Detail

By pressing and holding the MENU button for 10 seconds, a GPS Detail screen is displayed. This screen displays real time incoming satellite positional data. Most of the information shown on this screen is for factory use, however some of the data can indicate partial GPS signal interference.

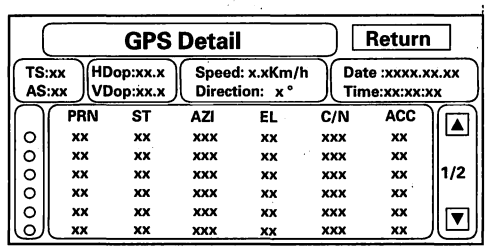

- The box TS/AS and HDop/VDop is for factory use.
- The Speed and Direction information is updated in real time when driving, and can be used to detect intermittent speed sensor problems.
- The Date/Time Information is the same as in Setup screen 2 "Adjust Time Zone/Clock".
- If the "3D" icon is shown above the yellow dots, this implies that at least 4 satellites are available for map positioning, and the "GPS" indicator on the map screen will be green. See the Global Positioning System detailed explanation in the "System Description" (see page 22-428).
- If the row of data in the table below begins with a "yellow dot", the AZI and EL fields can be used to locate each satellite on the circular GPS diagram (see prior screen).

BACK

Protected by AR

NOTE: The data shown in the GPS Detail screen is an example only.

The table of values shown on the screen below has the following columns:

Column	Description	Problem indication
Active	Active satellites (Yellow Dot)	If "3D" is missing, follow GPS icon is white, or not shown troubleshooting (see page 22-453).
PRN	The satellite ID number	
ST	The status: 0 = cannot view or searching, 2 = acquiring	If all 0, then, follow GPS icon is white, or not shown troubleshooting (see page 22-453).
AZI	Azimuth, the angle (0—360) clockwise from north	
EL	Elevation from the horizon (90 deg is overhead)	
C/N	N/A	Healthy signal is 49—52, no signal: 27—33
ACC	N/A	

Yaw Rate

This diagnostic checks the yaw rate sensor in the control unit. This device detects when the vehicle turns, and repositions the vehicle position icon on the map screen. For more detailed information, see the yaw rate sensor theory of operation under "System Description" (see page 22-427).

- "Sensor" indicates the voltage output from the yaw rate sensor. It should indicate about 2.500 bolts when stopped.
- "Offset" is the reference voltage or standard within the yaw rate sensor. It also should indicate about 2.500 volts when stopped.
- A "sensor" output voltage HIGHER than the "Offset" voltage indicates that the vehicle is turning to the right.
  A "sensor" output voltage LOWER than the "Offset" voltage indicates that the vehicle is turning to the left.
- The yaw rate offset, and sensor should both indicate about 2.500 volts when stopped. If either reads zero, or 5.000 volts replace the navigation unit.
- The yaw rate offset and sensor should be within +/— 0.01 V of each other when stopped. The sensor value should change relative to the offset as the car is turned while driving. If not, replace the navigation unit.

Example: Car stopped

Normal		**Abnormal**	
Offset	2.526 V	Offset	2.526 V
Sensor	2.516—2.536 V	Sensor	2.623 V

Example: Car turning

Normal		**Abnormal**	
Offset	2.526 V	Offset	2.526 V
Sensor	2.678 V (right turn) 2.478 V (left turn)	Sensor	2.623 V (no change on turns)

- Auto tuning should always be on. If it is off, turn it on.
- "Sensitivity study" represents the status of the internal tuning function. At initialization, this value starts at 6 and increases to # 10 as the internal correction values become more accurate.
- The settings "CCW Cal Factor", "CW Cal Factor", and "Set" are for factory use only. THIS SHOULD NEVER BE USED.

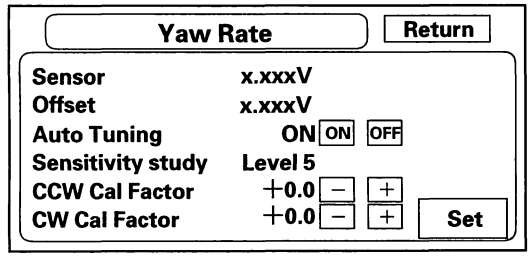

(cont'd)

Protected by AR

System Diagnosis Mode (cont'd)

Tire Calibrate

As the vehicle moves, the navigation system receives speed pulses from the ECM/PCM. These pulses are converted using a conversion factor to a mph speed that moves the vehicle position (VP) on the map. The navigation system has an internal tuning function that generates and refines this factor based on actual driving. The "Level" indicates the status of the tuning. At navigation initialization, it begins at 0, and increases to 10 as the navigation system is used.

- The "Auto Tuning" is factory set to "ON", and should remain on.
- The "LEVEL" indicates the tuning status. If it is less than 10, the unit is still calibrating.
- The "Tire-Cal. Tuning" and "Set" should not be used. It is for factory use only.

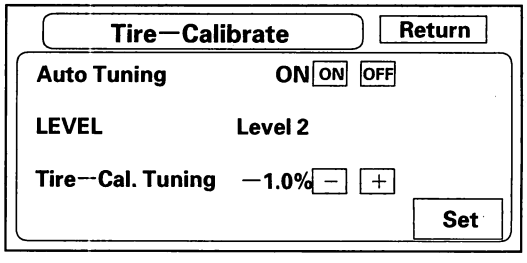

Functional Setup

Select the item you want to check.

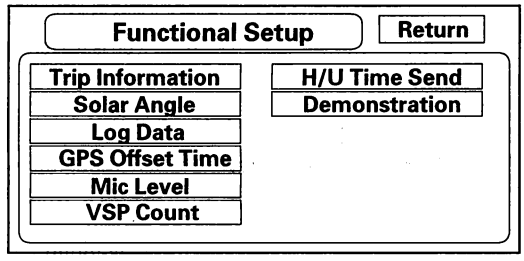

BACK

Protected by AR

Trip Information
This screen shows current internal values used for trip computer calculations. They are for factory use only.

- Simulation "Start" is for factory use.
- "Data Save" should always be on. It is for factory use only.

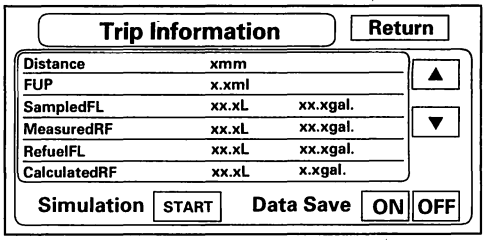

Trip Calibrate
By holding down the MENU button while on the "Trip Information" screen, you will see the screen below. This screen allows you to adjust the vehicle range (distance to empty).

- "Calc. RANGE" is the calculated value.
- "Disp. RANGE" is the distance displayed on the trip computer "Range" field. If it reads "0", the vehicle will have enough fuel to travel about 20 miles.
- Range Tuning can be adjusted "+" or "—" to adjust the range to empty. It is recommended that this value not be changed.

NOTE: Setting the range offset too low (+10) could result in the vehicle running out of gas before the display reads "0". Make changes slowly when changing this value.

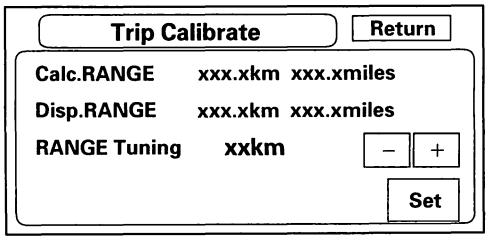

Solar Angle
This screen is used to graphically display the sun's position as determined by GPS. The navigation system uses the sun's angle, along with the sunlight sensor to control the driver/passenger A/C air flow. The heat that must be removed by the A/C unit varies, depending on the angle of the sun entering the vehicle. This screen is for factory use only, and should not be adjusted.

- The screen shows a circular diagram of the sky oriented in the direction that the vehicle is pointing. During daylight hours a red dot is shown, representing the direction and elevation of the sun. The outer circle represents the horizon (0 degrees elevation). The middle circle is 30 degrees, the center circle is 60 degrees, and the very center is directly overhead (90 degrees).
- "Auto" should always be on (yellow).
- The "Angle", "Dir", and "Reliability" settings are used by the factory to simulate the sun's position for debugging this function.

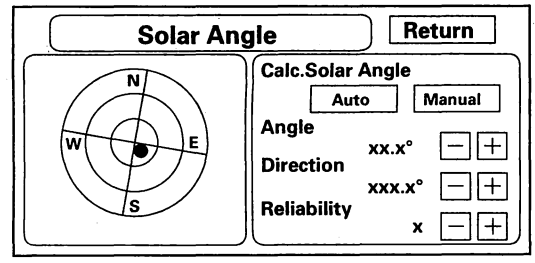

(cont'd)

Protected by AR

System Diagnosis Mode (cont'd)

Log Data
This screen allows the factory to collect log data to troubleshoot navigation system issues.

- Normally there is no card in the "PC Card Slot", and the PC slot door should always be closed. The screen should look like below.

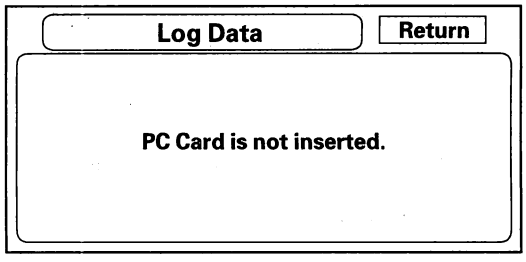

- However, if the factory provides a PC card and instructs you to insert it into the card slot (label side up), and then slide the PC Card door shut. If instructed by the factory, select "Gyro. Sensor Logs ON". Follow the factory procedure for gathering test data, and properly ending the test.

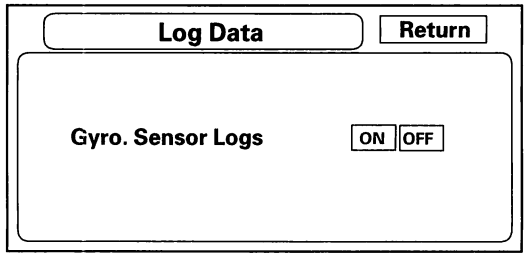

GPS Offset Time
This screen is for factory use only. It allows adjustment of the GPS time. This display updates in real time.

- "GPS Time" is the time as received from the GPS satellites. It is in Greenwich Mean Time (GMT).
- "System Time" is the internal time used by the navigation unit to calculate your position on the map. It is also in Greenwich Mean Time (GMT).
- "Display Time" is the time shown on Setup screen 2 "Adjust Time Zone/Clock", and reflects any changes due to daylight savings time or time adjustments entered by the customer.
- Date, Hour, Minute, and "Set" should not be used.

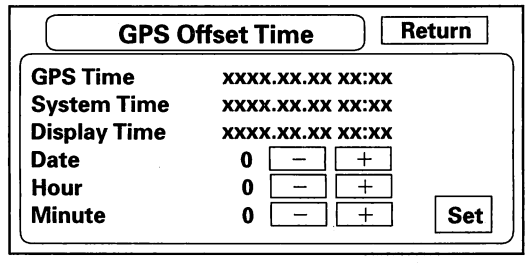

BACK

Protected by AR

Mic Level
This diagnostic allows you to independently test the microphone and the TALK and BACK buttons. They are used to activate the voice control system. The microphone is located near the map light in the ceiling. It is directional, and works best if the voice is coming from the drivers seat.

- Press the TALK button on the steering wheel, and in a normal voice say "testing". The TALK indicator on the screen should momentarily become green, and the text "Now Recording..." should appear in yellow. In addition, the Mic Level indicator should on the screen does not briefly become green, then check the wiring from the TALK button to the navigation unit. If there is no "Mic Level" movement when you speak, then you should check the wire running from the microphone to the control unit.
- Press the BACK button on the steering wheel. This should cause the Cancel indicator on the screen to momentarily become green. If it does not briefly change to green, then check the wiring from the steering wheel BACK button to the navigation unit.

NOTE: The Mic Level indicator must reach the 6th bar or greater to pass the test.

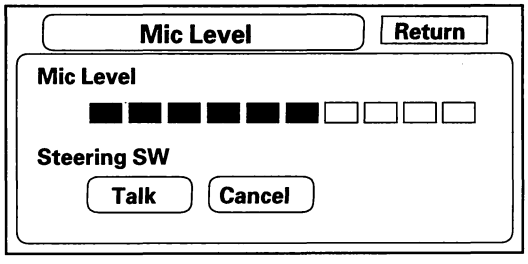

VSP Count
This screen displays the number of pulses per revolution of the tire. This is for factory use only, and should not be changed.

- "Pulse Count Setting" should always be set to "Auto".
- "VSP Count" should always be "4", and should never be adjusted or set to any other value.

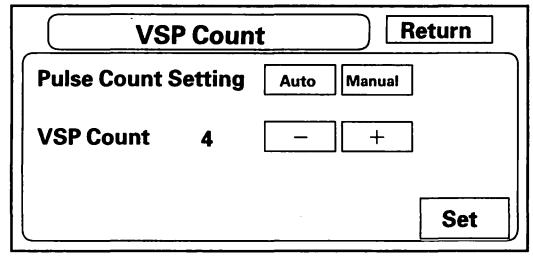

H/U Time Send
This screen determines whether to automatically send the navigation time to the upper display. The display unit connector A (10P) passes this information to the subdisplay unit. The navigation time can be found in the Setup screen 2 "Adjust Time Zone/Clock" setting.

- "H/U Time Send" should always be set to "ON".

NOTE: Selecting "Reset" on the Adjust Time Zone/ Clock screen automatically resets this diagnostic function to "ON".

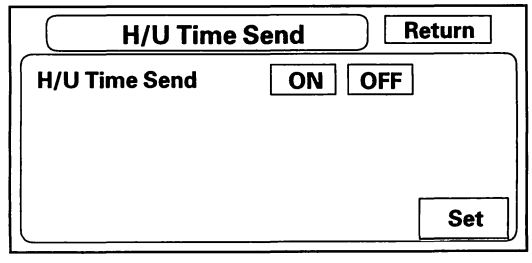

(cont'd)

Protected by AR

System Diagnosis Mode (cont'd)

Demonstration
This screen is for factory use only, and should always be set to "OFF". Occasionally this setting is turned "ON" when vehicles are being used at Auto Shows or similar events. Turning this feature on, allows the navigation system to automatically follow a route to a destination when the vehicle is stationary.

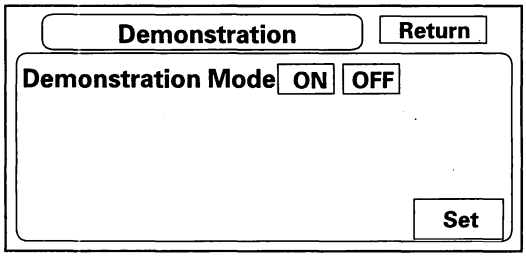

Version

This screen displays the current version of the program, and allows the loading of a new version of the program either from a CD/DVD or from a PC card.

The D-Ram Program version should always be greater than or equal to the Disc Program version. The mapped database version is the date of the database on the DVD.

The Model code is 20H, and is for factory use only. This code is stored on a chip in the navigation unit. Therefore, every model has a unique part number for the navigation unit.

NOTE: If any model number other than 20H is displayed, replace the navigation unit with the correct part. The model code tells the navigation unit what software to load off the DVD.

Do not use DISC LOAD or Card LOAD, unless instructed to do so by the factory.

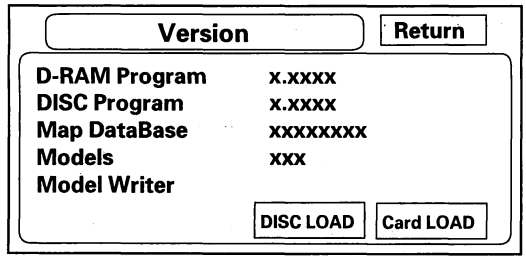

BACK

Protected by AR

Error Message Table

Screen Error Message	Solution
Navigation system is unable to acquire a proper GPS signal.	Make sure there is nothing on the rear package tray blocking the GOS antenna. If not, move the vehicle to an open space away from tall buildings, trees, etc. Rear window tinting and after-market devices can affect the GPS reception.
Navigation unit door is open or No DVD disc installed. Please check system.	Make sure the navigation DVD is installed with the label side up and the navigation unit door is fully snapped closed.
PC card slot door is open. Please check system.	Make sure that the sliding door for the PC card is fully closed.
No DVD disc, please check system.	Check that the navigation DVD is installed with the label side up.
Display temp is too high. System will shut down until display cools down.	This message will appear briefly when the display temperature is too high, and then the display will turn off until the temperature cools down. The system will turn back on when the display cools down.
Outside temperature is low, system will take a while to start up.	The temperature is below —30°C and the navigation ECU has difficulties reading the DVD. The system will start up when the temperate warms up.
DVD disc reading error (unformatted), please consult your dealer.	Check the DVD source for deep scratches or other damage. Make sure you are using an official Honda navigation DVD (orange in color). The system cannot read other mapping databases or video DVDs. If the problem persists, see your dealer.
Route has not been completed. Please try again from a different location.	Routing to or from a place (new area) that is not in the database. Try planning a different route to or from a different location.
No alternate route found. Original route will be guided.	No alternate route method was found. The original route will be used.
This destination cannot be found in database.	The destination was not found in the database. Try another destination nearby, or select the destination with the joystick.

Protected by AR

Navigation System ('03-05 models)

Forced Starting of Display

Special Tools Required
SCS service connector 07PAZ-0010100

1. Connect the SCS service connector (A) to the navigation service check connector (B) located behind the navigation unit.

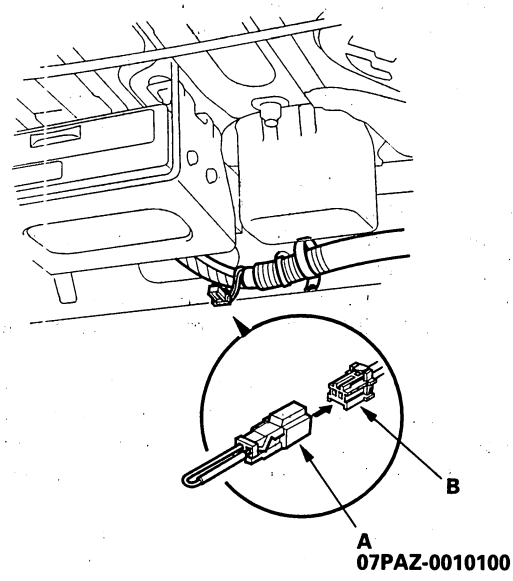

2. Turn the ignition switch ON (II).
3. Check that the system starts up and then changes to the "Navi System Link" screen.

   NOTE: If the system fails to display the "Navi System Link" screen, refer to no picture is displayed (see page 22-447).

DVD-ROM Replacement

NOTE: When the DVD-ROM is re-inserted or replaced, a map match must be done (see page 22-421).

1. Turn the ignition switch ON (II).
2. Open the front cover (A) of the navigation unit (B) located trunk room.

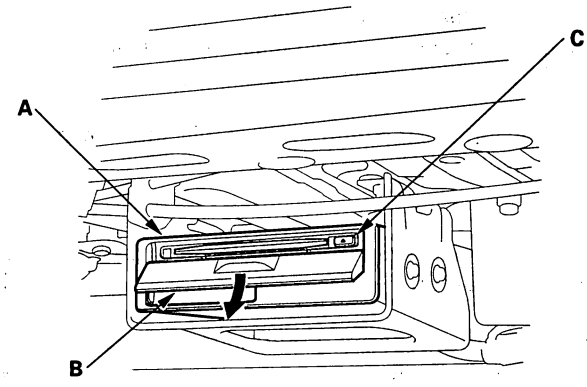

3. Press the EJECT button (C).
4. Remove the DVD-ROM.
5. Insert the new DVD-ROM.
6. Close the front cover. Do not turn the ignition switch OFF, until data is down loaded to navigation unit.

   NOTE: After servicing, the front cover must be closed. If you start up the navigation system with the front cover open, the display will indicate. "Navigation unit door is open or No DVD Disk installed. Please check system".

BACK

Protected by AR

Navigation Unit Removal/ Installation

NOTE: If the navigation unit is replaced or disconnected, a map match must be done (see page 22-421).

1. Remove the navigation unit from the trunk room.

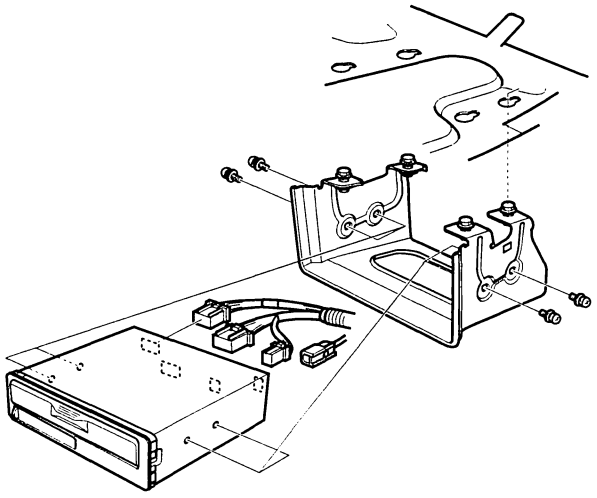

2. Remove the navigation unit bracket (B) from the passenger's seat.
3. Remove the bracket from the navigation unit (C).
4. Install in the reverse order of removal.

GPS Antenna Removal/Installation

1. Remove the rear shelf (see page 20-108).
2. Remove the GPS antenna (A).

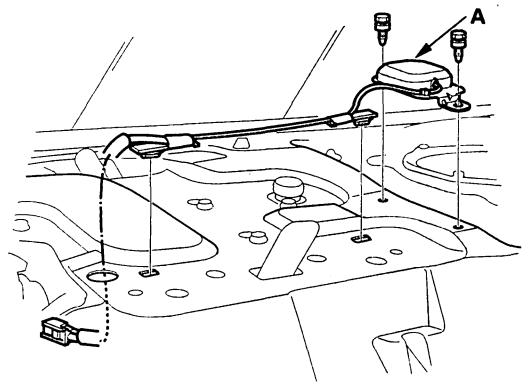

3. Install in the reverse order of removal.

Protected by AR

Voice Control Switch Removal/Installation

1. For 4 door, remove the driver's airbag (see page 23-197), then remove the voice control switch (see page 17-23).
   For 2 door, remove the voice control switch cover (A) from left side of the steering wheel.

   Illustration shows 2 door models

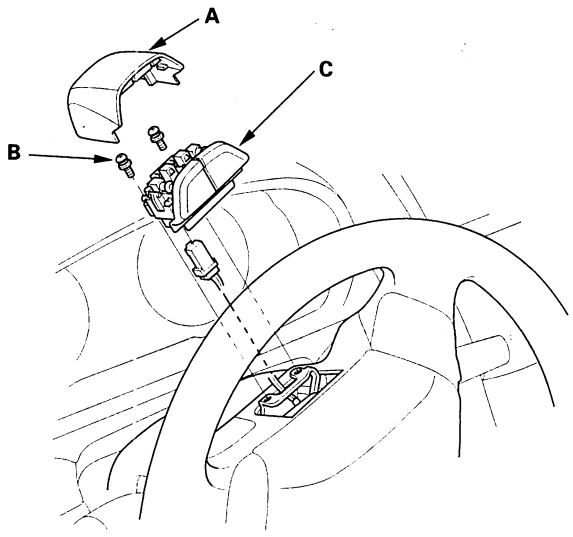

2. Remove the two screws (B) from the voice control switch (C), then remove the voice control switch.
3. Disconnect the voice control switch connector.
4. Install in the reverse order of removal.

BACK

Protected by AR

Navigation System ('06 model)

Special Tools 22-484
Component Location Index 22-485
General Troubleshooting Information 22-486
Symptom Troubleshooting Index 22-490
System Description 22-492
Circuit Diagram 22-512
Symptom Troubleshooting 22-515
System Diagnosis Mode 22-532
Forced Starting of Display 22-549
DVD-ROM Replacement 22-549
Navigation Unit Removal/Installation 22-550
GPS Antenna Removal/Installation 22-550
Voice Control Switch Removal/Installation 22-551
Display Unit Removal/Installation 22-371
Navigation System ('03-05 models)..... 22-415

Protected by AR

Navigation System ('06 model)

Special Tools

Ref. No.	Tool Number	Description	Qty
①	07PAZ-0010100	SCS Service Connector	1

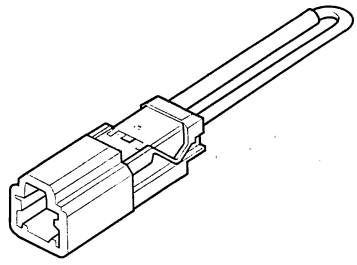

①

BACK

Protected by AR

Component Location Index

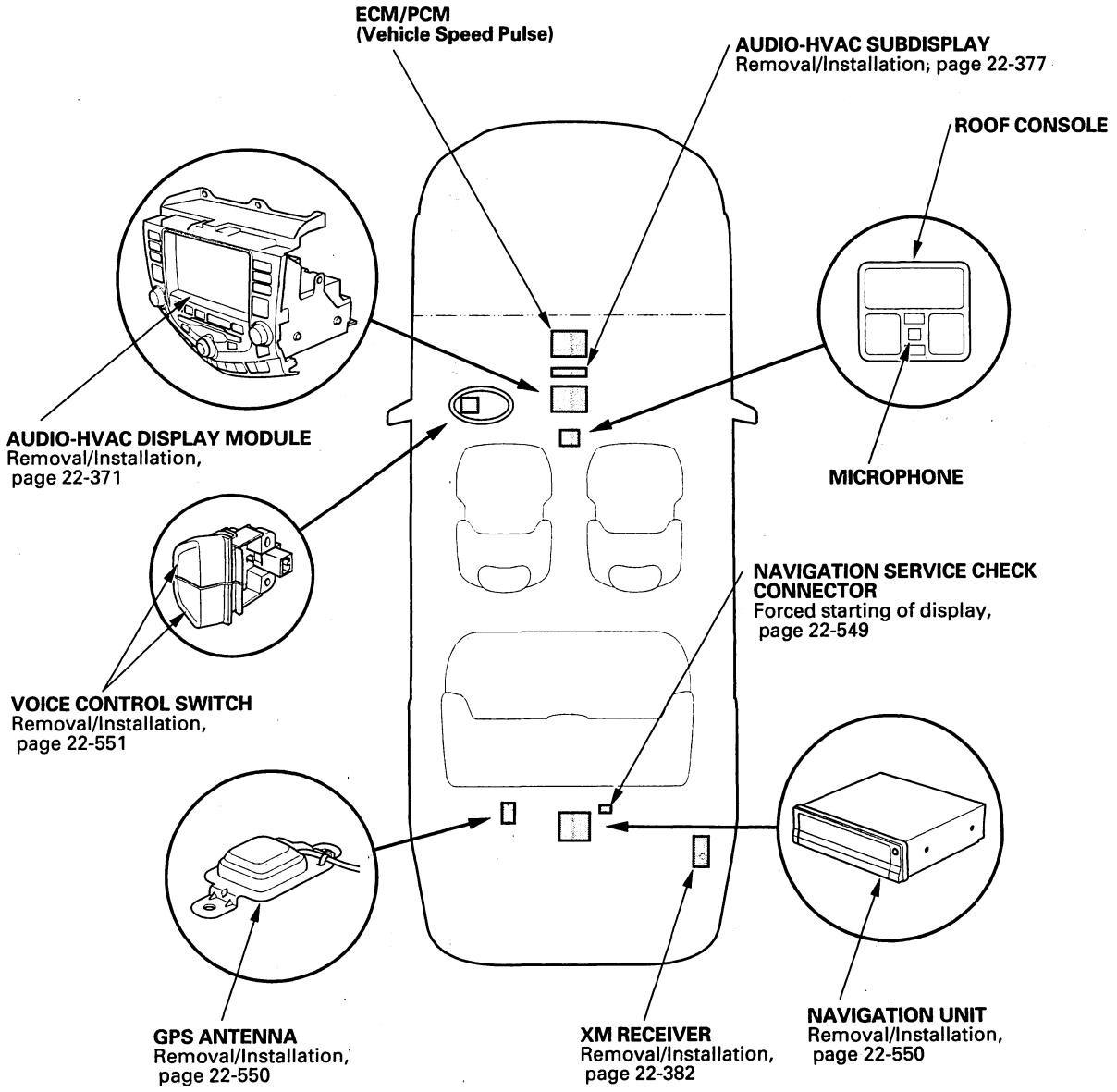

Protected by AR

Navigation System ('06 model)

General Troubleshooting Information

General Operation

Refer to the Navigation System Manual for the navigation system operating procedures.

Anti-theft Feature

The navigation system and audio unit have a coded theft protection circuit. Be sure to get the customer's anti-theft security codes number before;

- disconnecting the battery.
- disconnecting the navigation unit 8P connector.
- removing the No. 7 (10 A) fuse from the under-dash fuse/relay box.

After service, reconnect power to the navigation unit, and turn the ignition switch ON (II). Enter the 4-digit anti-theft security code, then select "Done".

If the code cannot be found, use the interactive Network (*i*N) to look it up. You will need the serial number from the navigation unit in the trunk. It is on a label on the underside of the unit. Alternatively, you can view the serial number in the Navi ECU diagnostic screen (see page 22-536).

When replacing the navigation unit, be sure to give the customer the new anti-theft security code.

Symptom Diagnosis

Certain circumstances and system limitations will result in occasional vehicle positioning errors. Some customers may think this indicates a problem with the navigation system when, in fact, the system is normal. Keep the following items in mind when interviewing customers about symptoms of the navigation system.

Self-Inertial Navigation Limitations

The limitations of the self-inertial portion of the navigation system (the yaw rate sensor and the vehicle speed signal) can cause some discrepancies between the vehicle's actual position and the indicated vehicle position (GPS vehicle position).

The following circumstances may cause vehicle positioning errors:

- Moving the vehicle with the engine stopped and the vehicle stopped, such as by ferry or tow truck, or if the vehicle is spun on a turn table.
- Tire slippage, changes in tire rolling diameters, and some driving situations may cause discrepancies in travel distances. Examples of this include:
  - Continuous tire slippage on a slippery surface
  - Driving with snow chains mounted
  - Abnormal tire pressure
  - Incorrect tire size
  - Frequent lane changes across a wide highway
  - Continuous driving on a straight or gently curving highway
  - Very bumpy roads
- Tolerances in the system and map inaccuracies sometimes limit how precisely the vehicle position is indicated. Examples of this include:
  - Driving on roads not shown on the map (map matching is not possible)
  - Driving on a road that winds in one direction, such as a loop bridge, an interchange, or a spiral parking garage
  - Driving on a road with a series of sharp hair-pin turns
  - Driving near a gradual highway exit or transition
  - Driving on one of two close parallel roads
  - Making many 90 degree turns

Global Positioning System (GPS) Limitations

The GPS cannot detect the vehicle's position during the following instances:

- For the first 5 to 10 minutes after reconnecting the battery (This can take as long as 45 minutes).
- When the satellite signals are blocked by tall buildings, mountains, tunnels, large trees, inside parking structures or large trucks.
- When the GPS antenna is blocked by metallic window tinting or by an object placed above it in the vehicle. The GPS antenna requires a clear unobstructed view of the sky.
- When there is no satellite signal output (Signal output is sometimes stopped for satellite servicing).
- When the satellite signals are blocked by the operation of some electronic aftermarket accessories including, but not limited to non-OEM in-dash entertainment units (radio, CD players/changers, radar detectors and theft recovery systems), and cellphones placed near the navigation system.

BACK

Protected by AR

The accuracy of GPS is reduced during these instances:

- Metallic window tinting above the GPS antenna.
- When only two satellite signals can be received (Three satellite signals are required for accurate positioning).
- When the satellite control centers are experiencing problems.
- When driving near high tension power lines.
- When the satellite signals are blocked by the operation of some electronic aftermarket accessories including, but not limited to non-OEM in-dash entertainment units (radio, CD players/changers, radar detectors and theft recovery systems), and cellphones placed near the navigation system.

Muting Logic

Whenever the navigation system is giving guidance all the front speakers are muted. When the voice control system is being used, all of the speakers are muted.

LCD Display Unit Limitations

- In cold temperatures, the display may stay dark for the first 2 or 3 minutes until it warms up.
- When the display is too hot because of direct summer sunlight, it will remain dark until the temperature drops (You may see an error message displayed stating this fact).
- When the humidity is high and the interior temperature is low, the display may appear cloudy. The display will clear up after some use.
- Fingerprints on the touch panel may sometimes be noticeable because of the panel's low-reflection coating. Clean the screen with a soft, damp cloth. You may use a mild cleaner intended for eye glasses or computer screens. To avoid scratching the panel, do not rub too hard, or use abrasive cleaners or shop towels.
- The touch panel consists of a touch sensitive resistive memberance covering the display. Unlike previous systems, you must actually "touch" the display to activate it. Never use hard or sharp implements to operate the screen because you risk damaging the sensing membrane. If a touch "switch" does not function immediately, shift your finger slightly, and touch it again.

Note: The display is unaffected by sunlight, as in previous displays.

Symptom Duplication

- When the symptom can be duplicated, verify that it is not a characteristic of the system. Review the navigation manual and compare it to a known-good vehicle (with the same software and database), under the same conditions. If not the same, follow the self-diagnostic procedures and the appropriate troubleshooting procedures.
- When the symptom does not reappear or only reappears intermittently, ask the customer about the conditions when the symptom occurred.
  - Ask the customer to demonstrate the problem.
  - Try to establish possible user error or misunderstanding of the system.
  - Try to establish if outside interference may have been the cause.
  - Try to duplication the symptom under the same conditions the customer was experiencing.
  - Vibration, temperature extremes, and moisture (dew, humidity) are factors that are difficult to duplicate.
  - Inspect the vehicle for after-market electronic devices (vehicle locators, amps, radar detectors, etc) that may be hidden.

Service Precautions

- If the navigation unit needs to be replaced, inform the customer that personal information in the navigation system will be lost. If possible, have the customer record their personal information before the unit is replaced.
- Before disconnecting the battery, make sure you have the anti-theft codes for the radio and the navigation system, and write down the XM radio channel presets. Also obtain any PGM-FI or transmission DTCs and freeze frame date (which will be lost when the PCM loses power).
- When the battery is disconnected, the internal GPS clock is reset to "0:00". The clock will reset to the correct time after the system finishes GPS initialization.
- After reconnecting the battery, you have to wait to get the initial signal from the satellite. It will take from 10 to 45 minutes.
- Verify map matching
- Before returning the vehicle to the customer, enter the radio and navigation anti-theft security code, then enter the customer's XM radio channel presets, adjust the setup clock settings in the navigation system.

(cont'd)

Protected by AR

General Troubleshooting Information (cont'd)

System Initialization

If for any reason, you lose power to the navigation system (like the battery was disconnected). The navigation system will require initialization. Once completed, the system will be ready to use.

This initialization requires the following:

- Entry of the 4-digit anti-theft security code to "unlock" the system
- GPS initialization (may not be needed depending of the length of time the system was without power)
- Map matching to align the GPS to a location on the map

Entering Security Code

The navigation system and audio unit have a coded theft protection circuit. Be sure to get the customer's anti-theft security codes number before;

- disconnecting the battery
- disconnecting the navigation unit 8P connector
- removing the No. 7 (10 A) fuse from the under-dash fuse/relay box

After service, reconnect power to the navigation unit, and turn the ignition switch ON (II). Enter the 4-digit anti-theft security code, then select "Done".

When replacing the navigation unit or audio unit, be sure to give the customer the new anti-theft security code.

GPS initialization

Depending on the length of time the battery was disconnected, your system may require GPS initialization. If it does, the following screen appears:

*****Wait*****
The system is acquiring its GPS signal.
This could take up to 10 minutes.
• Engine must be running
• Vehicle must be parked outside, away from buildings
• Do not move the vehicle at this time

If this procedure is not necessary the system proceeds directly to the Disclaimer screen. During initialization, the system searches for all available GPS satellites, and obtains their orbital information. During this procedure the vehicle should be out in the open with a clear view of the sky.

If the navigation system finds the satellites properly, this box clears, and changes to the Disclaimer screen. If within 10 minutes the system fails to locate a sufficient number of satellites to locate your position, the following screen appears.

Navigation system is unable acquire a proper GPS signal.
• Move vehicle to another location
• Turn the ignition switch off
• Disconnect the battery for 30 minutes to clear the GPS receiver's memory
• Reconnect the battery and follow the screen prompts

If this is displayed, turn off the engine, then restart the vehicle. If you now see the Disclaimer screen, the GPS initialization is complete.

NOTE:
- The average acquiring time is less than 10 minutes, but it can take as long as 45 minutes.
- If the system is still unable to acquire a signal, follow the instructions on the screen. If this screen appears again, go to troubleshooting for the No GPS icon is shown (see page 22-521).

BACK

Protected by AR

Map Matching

This part of the initialization matches the GPS coordinates with a road on the map screen. To perform this part of the procedure, ensure that the navigation system is displaying a map. Check the "GPS" icon in the upper left corner of the screen, it should be "Green" when the vehicle is parked outside, with the correct color labeled DVD installed in the navigation unit. Drive the vehicle on a mapped road shown on the map screen. Do not enter a destination at this time. When the name of the current road you are driving on, appears at the bottom of the screen, the entire procedure is complete. Your system is now ready to use.

Obtaining A Navigation DVD

If the Navigation DVD is lost or damaged, or you need a yearly updated DVD, you have 2 ways to purchase one. You can either call (888) 291-4675, or order on-line at www.honda.com.

Both methods require a credit card. The DVD for this model has a white label, and cannot be ordered through the parts system. The following DVDs will not work in this navigation system:

- Navigation DVDs with labels other than white
- Map software programs manufactured by other companies
- DVD movies, or DVDs containing audio recordings

Update DVDs are available for purchase usually in the fall of each year. They may contain the following:

- Enhanced maps and points of interest (POI) coverage
- Fixes for minor software bugs
- Additional features

NOTE: Updating is optional, and there is no program to provide free DVDs containing yearly mapping updates.

Protected by AR

Navigation System ('06 model)

Symptom Troubleshooting Index

Symptom	Diagnostic procedure	Also check for
Navigation system stays on the GPS initialization screen	System Initialization (see page 22-488)	• Navigation unit • Wrong colored disc installed • GPS antenna/cable • Harness/fuses/switches
No picture is displayed	Troubleshooting (see page 22-515)	• Navigation unit • Aftermarket accessories connected to the system • Display unit • Harness/fuses/switches
Address cannot be found or system gives poor routing	Verify proper operation using the owner's manual	Wrong colored disc installed
Vehicle position icon constantly leaves road or is very far from actual position	Troubleshooting (see page 22-524)	• Navigation unit • GPS antenna/cable • PCM (speed pulse missing) • Harness/fuses/switches
Picture is missing a color or tone	Troubleshooting (see page 22-516)	• Navigation unit • Wrong colored disc installed • Harness/fuses/switches • Aftermarket accessories connected to the system
Picture has lines/rolls/other issues	Troubleshooting (see page 22-518)	• Navigation unit • Display unit • Harness/fuses/switches
Display unit buttons or touch screen buttons do not work or respond properly	Troubleshooting (see page 22-519)	• Display unit • Wrong colored disc installed • Harness/fuses/switches
GPS icon is white, or not shown	Troubleshooting (see page 22-521)	• Navigation unit • Aftermarket accessories connected to the system • GPS antenna/cable • Harness/fuses/switches
Voice guidance cannot be heard	Troubleshooting (see page 22-521)	• Navigation unit • Audio unit/amplifier • Volume or Voice feedback settings (see Owner's manual for details) • Harness/fuses/switches
Voice control does not work/respond	Troubleshooting (see page 22-523)	• Navigation unit • Volume or Voice feedback settings (see Owner's manual for details) • Microphone/steering buttons • Harness/fuses/switches
DVD screen error messages	Troubleshooting (see page 22-525)	• Navigation unit • Wrong colored disc installed • Display unit • Damaged DVD disc
Trip computer-no distance	Troubleshooting (see page 22-525)	• PCM (speed and fuel pulses) • Wrong colored disc installed • Wrong unit (model code) • Harness/fuses/switches
Trip computer-no fuel information	Troubleshooting (see page 22-526)	• Gauge assembly (CAN) • Wrong colored disc installed • Wrong unit (model code) • Harness/fuses/switches
Navigation cannot control A/C	Troubleshooting (see page 22-526)	• Display unit • Wrong colored disc installed • Wrong unit (model code) • Harness/fuses/switches
Display day/night mode does not work	Troubleshooting (see page 22-527)	• Display unit • Display brightness set to "High" • Gauge assembly (CAN) • Harness/fuses/switches
System locks up constantly	Troubleshooting (see page 22-527)	• Navigation unit • Harness/fuses/switches • Wrong colored disc installed • Damaged DVD disc
Vehicle icon wanders across the map when driving (does not follow a displayed road) or spins when driving	Troubleshooting (see page 22-528)	• Navigation unit • Wrong colored disc installed • Damaged DVD disc
Navigation drives by itself when parked	Troubleshooting (see page 22-528)	

BACK

Protected by AR

Symptom	Diagnostic procedure	Also check for
Navigation stays on with ignition switch off	Troubleshooting (see page 22-529)	• Harness/fuses/switches • Aftermarket accessories connected to the system
Navigation cannot control audio/CD	Troubleshooting (see page 22-530)	• Display unit • Wrong colored disc installed • Audio unit/amplifier
Navigation cannot control XM radio	Troubleshooting (see page 22-530)	• Display unit • Wrong colored disc installed • Harness
Audio-HVAC subdisplay does not work properly	Troubleshooting (see page 22-531)	• Navigation unit • Subdisplay unit • Harness/fuses/switches
Time is not correct	Reset Time Adjustment in set-up	
Navigation frequently asks for code and needs GPS initialization	Troubleshooting (see page 22-531)	• Navigation unit • Low battery • Harness/fuses/switches
Some set-up and information functions of the navigation system are "grayed out" and do not work	Customer did not select "OK" from Disclaimer screen. Refer to System Function Diagram (see page 22-502)	
Previous Destinations button is dim and not selectable in the Enter destination by screen	The vehicle may be new, or the customer deleted the destination. Enter a destination, and allow the system to route to it. After the trip, the Previous Destinations button will be selectable.	Owner's manual for details
Today's Destinations button is dim and not selectable in the Enter destination by screen	The customer has not entered a group of locations for Today's Destinations. This is normal. The button is only selectable if the customer is using this function.	Owner's manual for details
The navigation system will not Map Match	Refer to troubleshooting for Vehicle icon wanders across the map when driving (see page 22-528)	

Protected by AR

Navigation System ('06 model)

System Description

Overview

The navigation system is a highly-sophisticated, hybrid locating system that uses satellites and a map database to show you where you are and to help guide you to a desired destination.

The navigation system receives signals from the global positioning system (GPS), a network of 24 satellites in orbit around the earth. By receiving signals from several of these satellites, the navigation system can determine the latitude, longitude elevation of the vehicle. In addition, signals from the system's yaw rate sensor and the ECM/PCM (vehicle speed pulse) enable the system to keep track of the vehicle's direction and speed of travel.

This hybrid system has advantages over a system that is either entirely self-contained or one that relies totally on the GPS. For example, the self-contained portion of the system can keep track of vehicle position even when satellite signals cannot be received. When the navigation system is on, the GPS can keep track of the vehicle position even when the vehicle is transported by ferry.

The navigation system applies all location, direction, and speed information to maps and calculates a route to the destination entered. As you drive to that destination, the system provides both visual and audio guidance.

This navigation system also has voice recognition that allows voice control of most of the navigation functions. The Talk and BACK buttons on the steering wheel activate the voice control. The voice control also allows control of the audio and climate control.

The navigation system provides a trip computer function. The fuel economy display is calculated by data provided by the ECM/PCM. The ECM/PCM provides fuel use and level data via the F-CAN bus, and a dedicated speed signal.

The illumination signal is used by the navigation unit to automatically switch the display between Night and Day brightness modes when Display is set to Auto. When the instrument panel brightness control is set to full brightness, the navigation system stays in the Day mode, even with the headlights on. Display unit button illumination is supplied through the audio unit.

The GA-NET bus provides communication between the navigation unit and the display unit. This bus also links the components in the audio-HVAC display module. The bus is used to pass button and touch-screen commands to the navigation unit. In addition, muting and voice control commands are sent to the display unit and the audio and climate control systems for processing. The audio unit uses the bus to control the XM-receiver or other accessories.

BACK

Protected by AR

System Diagram

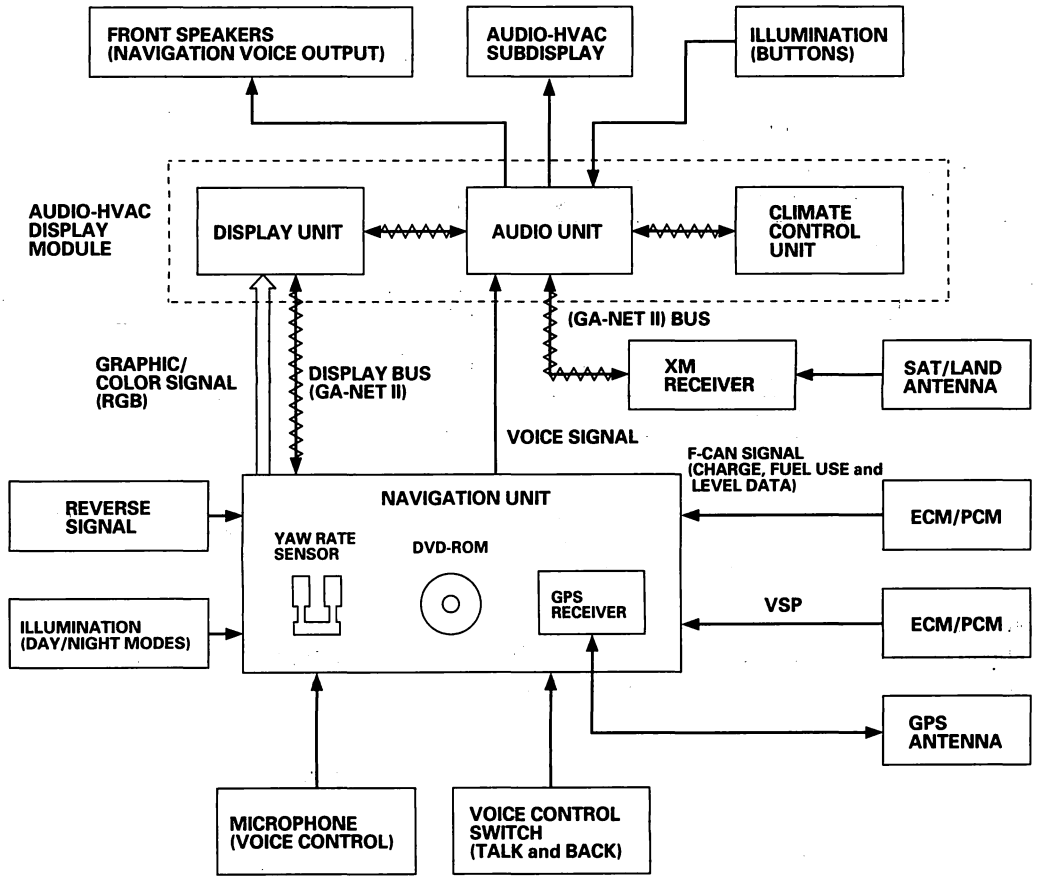

(cont'd)

Protected by AR

Navigation System ('06 model)

System Description (cont'd)

Navigation Function

The navigation system is composed of the navigation unit, the ECM/PCM (vehicle speed signal), the GPS antenna, microphone, voice control switch, audio unit, climate control unit, and the display unit.

Function Diagram

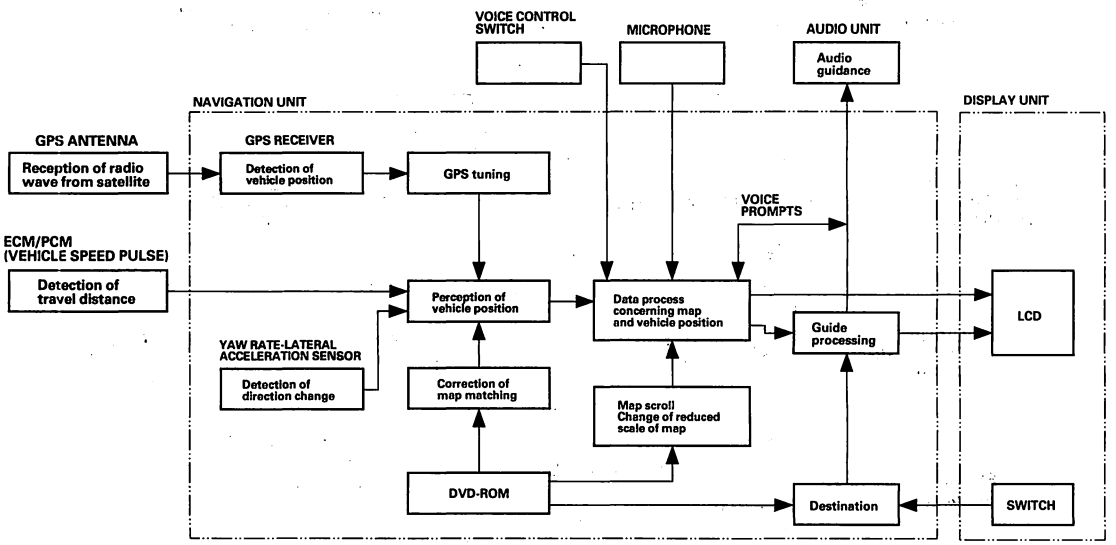

Vehicle Speed Pulse

The vehicle speed pulse is sent by the ECM/PCM. The ECM/PCM receives a signal from the countershaft speed sensor, then it processes the signal and transmits it to the speedometer and other systems.

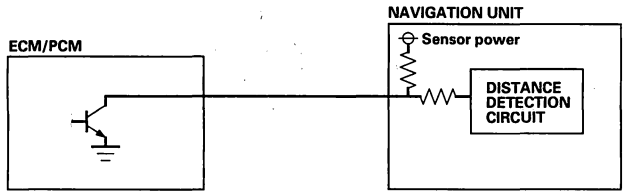

Charge Signal

The PCM sends a charge signal to the navigation unit via F-CAN. A thermister inside the navigation unit monitors the units internal temperature. This information combined with charge signal determines the control units internal cooling fan operation.

Fuel Use Level Data

The navigation unit monitors the ECM/PCM fuel usage and tank level data via the F-CAN bus. The navigation system combines this information, the vehicle speed signal, GPS, and the map data for trip computer calculations.

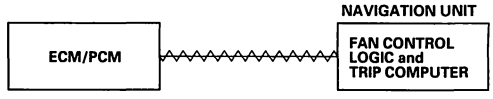

BACK

Protected by AR

Yaw Rate Sensor
The yaw rate sensor (located in the navigation unit) detects the direction change (angular speed) of the vehicle. The sensor is an oscillation gyro built into the navigation unit.

Sensor Element Structure
The sensor element is shaped like a tuning fork, and it consists of the piezoelectric parts, the metal block, and the support pin. There are four piezoelectric parts: one to drive the oscillators, one to monitor and maintain the oscillation at a regular frequency, and two to detect angular velocity. The two oscillators, which have a 90-degree twist in the center, are connected at the bottom by the metal block and supported by the support pin. A detection piezoelectric part is attached to the top of each oscillator. The driving piezoelectric part is attached to the bottom of one oscillator, and the monitoring piezoelectric part is attached to the bottom of the other oscillator.

Oscillation Gyro Principles
The piezoelectric parts have "electric/mechanical transfer characteristics." They bend vertically when voltage is applied to both sides of the parts, and voltage is generated between both sides of the piezoelectoric parts when they are bent by an external force. The oscillation gyro functions by utilizing this characteristic of the piezoelectric parts and "Coriolis force." (Coriolis force deflects moving objects as a result of the earth's rotation.) In the oscillation gyro, this force moves the sensor element when angular velocity is applied.

Operation
1. The driving piezoelectric part oscillates the oscillator by repeatedly bending and returning when an AC voltage of 6 kHz is applied to the part, The monitoring-side oscillator resonates because it is connected to the driving-side oscillator by the metal block.
2. The monitoring piezoelectric part bends in proportion to the oscillation and outputs voltage (the monitor signal). The navigation unit control circuit controls the drive signal to stabilize the monitor signal.
3. When the vehicle is stopped, the detecting piezoelectric parts oscillate right and left with the oscillators, but no signal is output because the parts are not bent (no angular force).
4. When the vehicle turns to the right, the sensor element moves in a circular motion with the right oscillator bending forward and the left oscillator bending rearward. The amount of forward/rearward bend varies according to the angular velocity of the vehicle.
5. The detecting piezoelectric parts output voltage (the yaw rate signal) according to the amount of bend. The amount of vehicle direction change is determined by measuring this voltage.

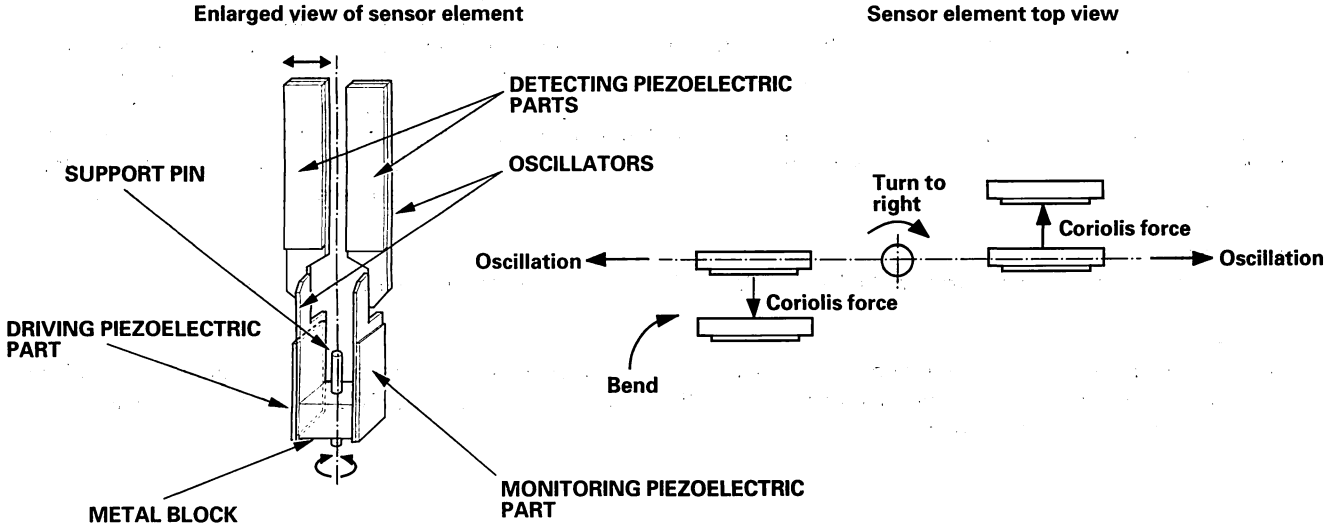

(cont'd)

Protected by AR

Navigation System ('06 model)

System Description (cont'd)

Global Positioning System (GPS)
The global positioning system (GPS) enables the navigation system to determine the current position of the vehicle by utilizing the signals transmitted from the satellites in orbit around the earth. The satellites transmit the satellite identification signal, orbit information, transmission time signal, and other information. When the GPS receiver receives a signal from three or more satellites simultaneously, it calculates the current position of the vehicle based on the distance to each satellite and the satellite is position in its respective orbit.

Position detection Image with GPS satellite

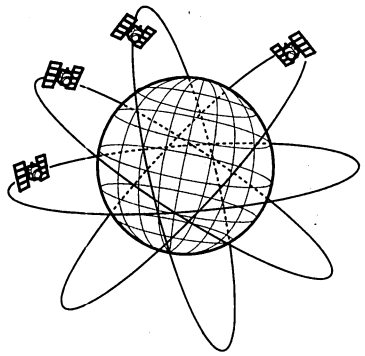

NOTE: Four satellites on each of 6 orbits.

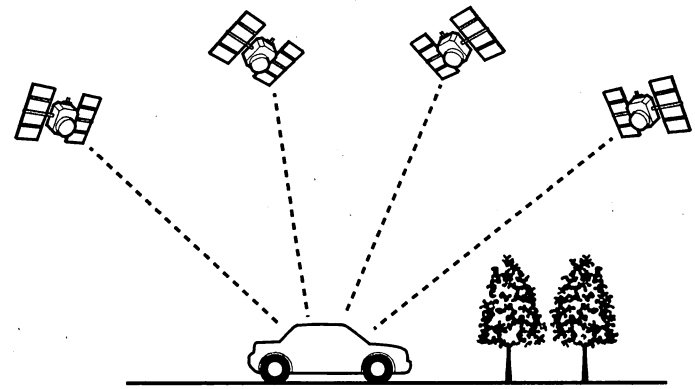

Precision of GPS
The precision of the GPS varies according to the number of satellites from which signals are received and the view of the sky. The precision is indicated by the color of the GPS icon shown on the display.

GPS ICON	NUMBER OF SATELLITES	CONDITION	DESCRIPTION
No GPS icon shown	2 or less	Impossible to detect vehicle position	GPS function is normal. The satellite signals received by the GPS are too few to detect the vehicle position.
Sqare GPS icon shown with white "GPS"	3	Vehicle position detectable in 2 dimensions	The longitude and latitude of the vehicle position can be detected. (Less precise than detection in three dimensions)
Cube GPS icon shown with green "GPS"	4 or more	Vehicle position detectable in 3 dimensions	The longitude, latitude and the altitude of the vehicle position can be detected. (More precise than detection in two dimensions)

GPS Antenna
The GPS antenna amplifies and transmits the signals received from the satellites to the GPS receiver.

GPS Receiver
The GPS receiver is built in the navigation unit. It calculates the vehicle position by receiving the signal from the GPS antenna. The vehicle position and signal reception condition is transmitted from the GPS receiver to the navigation control unit to adjust vehicle position.

BACK

Protected by AR

Navigation Unit
The navigation unit calculates the vehicle position and guides you to the destination. The unit performs map matching correction, GPS correction, and distance tuning. It also controls the menu functions and the DVD-ROM drive, and interprets voice commands. With control of all these items, the navigation unit makes the navigation picture signal, then it transmits the signal to the display unit and audio driving instructions to the audio unit.

Calculation of Vehicle Position
The navigation unit calculates the vehicle position (the driving direction and the current position) by receiving the directional change signals from the yaw rate sensor and the travel distance signals from the PCMs vehicle speed pulse (VSP) signal.

Map Matching Tuning
The map matching tuning is accomplished by indicating the vehicle position on the roads on the map. The map data transmitted from the DVD-ROM is checked against the vehicle position data, and the vehicle position is indicated on the nearest road. Map matching tuning does not occur when the vehicle travels on a road not shown on the map, or when the vehicle position is far away from a road on the map.

GPS Tuning
The GPS tuning is accomplished by indicating the vehicle position as the GPS's vehicle position. The navigation unit compares its calculated vehicle position data with the GPS vehicle position data. If there is large difference between the two, the indicated vehicle position is adjusted to the GPS vehicle position.

Distance Tuning
The distance tuning reduces the difference between the travel distance signal from the VSP and the distance data on the map. The navigation unit compares its calculated vehicle position data with the GPS vehicle position data. The navigation unit then decreases the tuning value when the vehicle position is always ahead of the GPS vehicle position, and it increases the tuning value when the vehicle position is always behind the GPS vehicle position.

Route Guidance
The navigation unit can calculate different routes to a selected destination. You have five options:

- Direct Route — Calculate a route that is the most direct.
- Easy Route — Calculate a route that minimizes the number of turns needed.
- Minimize Freeways — Calculate a route that avoids freeway travel. If that is not possible, keep the amount of freeway travel to a minimum.
- Minimize Toll Roads — Calculate a route that avoids, or minimizes travel on toll roads.
- Maximize Freeways — Calculate a route that uses freeways as much as possible.

Audio Guidance
The navigation unit transmits audio driving instructions before entering an intersection or passing a junction. The audio instructions come through the audio unit to the front speakers.

NOTE: The front speakers are muted whenever the navigation system is giving guidance commands, and all of the speakers when the voice control system is being used.

DVD-ROM
The map data (including all scale rates) is stored in the DVD-ROM. The map data includes:

- Road distances, road widths, speed limits, traffic regulations, passing time at junction, distances to junctions, and the driving instructions for audio guidance.
- Latitude and longitude GPS.

(cont'd)

Protected by AR

Navigation System ('06 model)

System Description (cont'd)

Audio Unit
The audio unit receives the audio driving instructions from the navigation unit and transmits the instructions through the front speakers even when the audio system is in use. The audio unit is also a termination point in the GA-Net bus.

Display Unit
The display unit uses liquid crystal display (LCD). The LCD is a 7-inch-diagonal, thin film transistor (TFT), stripe type with 330,960 picture elements, The color film and fluorescent light are laid out on the back of the liquid crystal film. The touch sensor on the front of the LCD consists of a touch sensitive resistive membrane with an infinite number of possible touch locations. To maintain compatibility with earlier display units the sensing locations are confined to a grid of 20 vertical and 10 horizontal touch locations. This produces 200 total sensing zones. The display unit transmits the signal from each operation key and the touch switches to the navigation unit over the GA-Net bus.

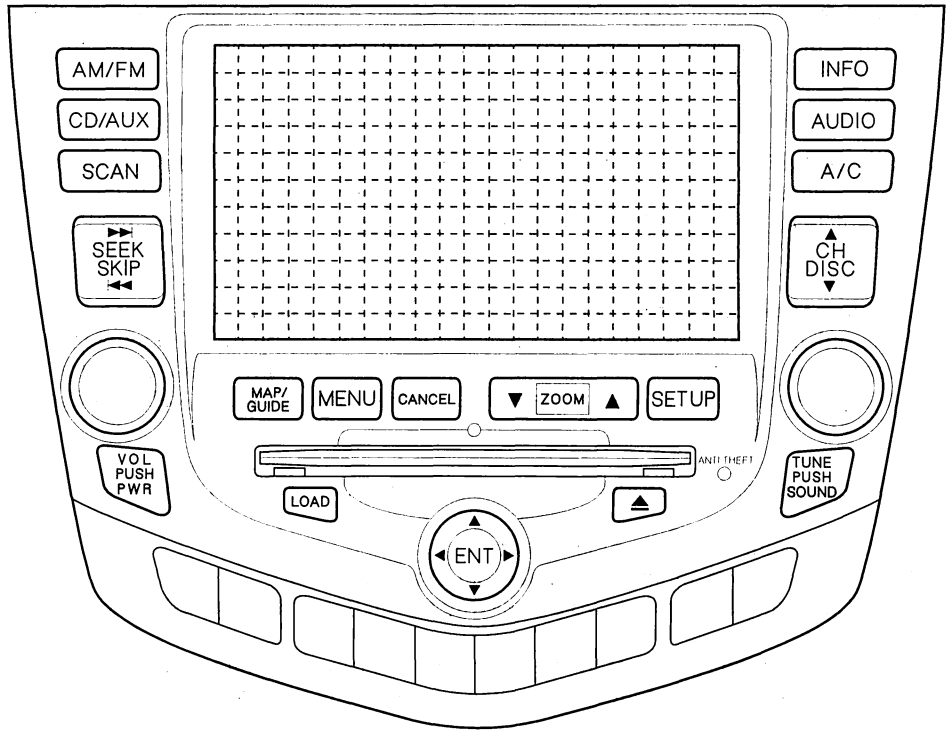

Microphone
The microphone (on the ceiling, near the front map light) receives voice commands and transmits them to the navigation unit for interpretation.

Talk Button
Activates the voice control system in the navigation unit to accept voice commands.

Back Button
Returns the display to the previous screen (similar function as the CANCEL button).

BACK

Protected by AR

Glossary

The following is a glossary of terms pertaining to the Voice Recognition Navigation System.

Item	Definition
Audio-HVAC subdisplay	The upper display that shows the time and current status of the audio and climate control systems.
Breadcrumbs	Off road tracking dots that can be followed on the map to retrace your route back to a mapped (digitized) road. This function can be turned on/off in Setup screen 1.
CAN	Controller Area Network. This communication network allows processors in the vehicle to send/receive information. The fuel pulses used by the trip computer are received from the PCM using the F-CAN (Fast Controller Area Network) bus.
B-CAN	Body CAN Bus (see CAN)
CPU	Central Processing Unit. The main device within the navigation unit that coordinates the rest of the electronic functions.
Database	This consists of the Map data, and the POI (Points Of Interest) data stored on the DVD
DBW	Drive By Wire. Allows electrical control of the throttle without the need of a mechanical linkage.
DCA	Detailed Coverage Area. Main metropolitan areas in the Lower 48 states, and Southern Canada are mapped to this level. See the Navigation Owner's manual for a list of these areas.
DTC	Diagnostic Trouble Codes. Use the Honda PGM Tester, or HDS tablet to obtain, and troubleshoot the cause of these codes.
Dead Reckoning	The use of the speed signal, and yaw rate sensor to position the vehicle on the map even when the GPS signal is obscured by tall buildings, or while driving in a tunnel.
Digitized Road	A road that appears on the navigation screen. The road name will appear at the bottom of the navigation screen. If the user drives "off road", the navigation system will display "Not on a digitized road", and if 1/2 mile, then "breadcrumbs" will appear.
Disclaimer Screen	Screen containing cautionary information. It is meant to be read carefully and acknowledged by the customer when using the navigation system.
DVD or DVD-ROM	Digital Versatile Disk. The navigation program and database resides on this disk. See the Navigation Owner's Manual for information on how to order a replacement or update DVD.
ECM	Engine Control Module. Typically referred to as the PCM.
E/T	Elapsed Time for the current trip as displayed by the trip computer screen.
FAQ	Frequently Asked Question. See the Navigation Owner's Manual for a list of the customer FAQs, and troubleshooting information.
F-CAN	Fast CAN Bus (see CAN)
FE	Fuel Economy value as displayed on the trip computer screen.
Fuel Pulses	This signal is transmitted on the CAN bus, and is used by the Trip Computer to calculate the fuel economy.
GA-Net bus	Units communication line.
GPS	Global Positioning System. A network of 24 satellites in orbit around the earth. The navigation system can simultaneously receive signals from up to 12 satellites to accurately position the vehicle on the map.
HDS	Honda Diagnostic System. A hand held tablet PC for use in diagnosing vehicle problems. This device can be used to obtain DTC codes for diagnosis of navigation system CAN related problems.
H/U	Head Unit. The navigation system display unit assembly in the dash.
Initialization	This refers to the period needed to re-acquire the GPS satellite orbital information whenever the navigation system power has been disconnected. This can take from 10 to 45 minutes.
LCD	Liquid Crystal Display (the navigation screen)

(cont'd)

Protected by AR

Navigation System ('06 model)

System Description (cont'd)

Item	Definition
Map Matching	The received GPS information allows the navigation system to position the vehicle on the map. Map matching has occurred if the map screen is displaying the current street name in the bottom-shaded area.
Mic	Abbreviation for the microphone used for receiving voice commands. It is located near the map light in the ceiling.
Model (in the diagnosis Version screen)	A "model code" stored on an internal "chip" in the navigation unit. The model code tells the navigation unit what software to load. Every navigation unit "model" has a unique part number for the navigation unit.
MW	Maneuver Window. While on-route to a destination, this window displays information about the next maneuver.
Navi	Abbreviation for the Navigation System
Off Route	This occurs when the user leaves mapped roads. Off road tracking dots ("breadcrumbs") are displayed if the option is enabled in Setup. The user can use them to return to a mapped road. The bottom of the navigation screen will say "Not on a digitized road".
Outlying Areas	These are rural areas that typically have only their main roads mapped. All other roads are shown in light brown for reference only, since they have not been verified.
PC Card Slot	The PC Card (PCMCIA, type II) slot is for factory use only.
PCM	Powertrain Control Module. This unit supplies the navigation system speed signal, and sends fuel pulses for the trip computer function via the F-CAN network.
PCMCIA	A computer industry defined term referring to the PC Card slot standard.
PIN	Personal Identification Number. A random 4 digit number created by the customer to protect personal information.
POI	Point Of Interest. These are the businesses, schools etc. found under the "places" option on the main menu.
Polygon	Colored areas on the map screen denoting parks, schools etc. See the Navigation Owner's Manual "Traveling to Your Destination" for a list of the assigned colors.
QWERTY	Keyboard layout resembling the typewriter keys. The keyboard layout can be changed to an alphabetical layout in the Setup mode.
SCS connector	The 2-pin connector used to put the navigation system into the diagnostic mode.
Security Code	Code needed to activate the navigation system. The security code can be obtained from the "iN" by entering the navigation system control serial number. The serial number can be found from the diagnostic screens (Unit Check, Navi ECU), or from the under side of the control unit.
Touch Switches or Touch Sensor	The navigation screen has 2 clear films on the screen panel. When you touch the screen panel, the films engaged and the display unit detects the touch point.
Tuning	A continual update of internal navigation system scaling factors. See the individual sensor tuning discussions under either "System Description", or "System Diagnosis Mode" (see page 22-532) in this manual.
Unverified Streets	These streets have not been verified for turn restrictions, one-way, etc. They are shown in light brown on the map. You can enter address destinations in these areas, but voice guidance ends at the last verified street closest to your destination.

BACK

Protected by AR

Item	Definition
Verified Streets	These streets consist of the detailed metropolitan coverage areas, and all other inter-town connection roads. These roads are shown in black on the map.
VP	Vehicle Position. When in map mode, this circular icon shows the vehicle position on the map. Touch this icon to show the latitude, longitude, and elevation of your current position.
VR	Voice Recognition. This allows voice control of many of the navigation functions. The hardware consists of the microphone, steering wheel (Talk/Back) buttons, and the front speakers. See the overview for more information.
VSP	Vehicle Speed Pulse. This pulse signal coming from the PCM is used to update the Vehicle position on the map, and to calculate the trip computer fuel economy. These pulses do not indicate direction (forward or backward). When in reverse, the navigation receives a signal from the MICU and directs the VP to move backwards on the map.
VSS	Vehicle Speed Sensor. This sensor reads the output shaft speed at the transmission and, provides a speed pulse to the PCM. The PCM sends this pulse to the navigation system and speedometer.
XM Satellite Radio	A satellite band radio system where signals are received from either a satellite or land based transmitters.
Yaw Sensor	This device is located in the navigation system control unit and senses the side-to-side twisting force generated when the vehicle turns.

(cont'd)

Protected by AR

Navigation System ('06 model)

System Description (cont'd)

System Function Diagram

This diagram shows the features of the navigation system starting at the center and working outward in layers. The navigation program starts at "Key ON", and then displays the globe screen. Once the disclaimer screen is acknowledged, the next shaded portions of the diagram become active. However, some functions of the INFO and SET UP buttons, and all functions of the AUDIO and A/C buttons can be accessed immediately after the globe screen (white).

These items above the map screen show various methods to begin a destination, such as "Go Home". Once you begin driving to your destination, you are provided with map/voice guidance, routing cautions (in unverified areas), and a directions list. While driving to your destination, use the voice control system as much as possible to interact with the navigation, audio, and climate control systems.

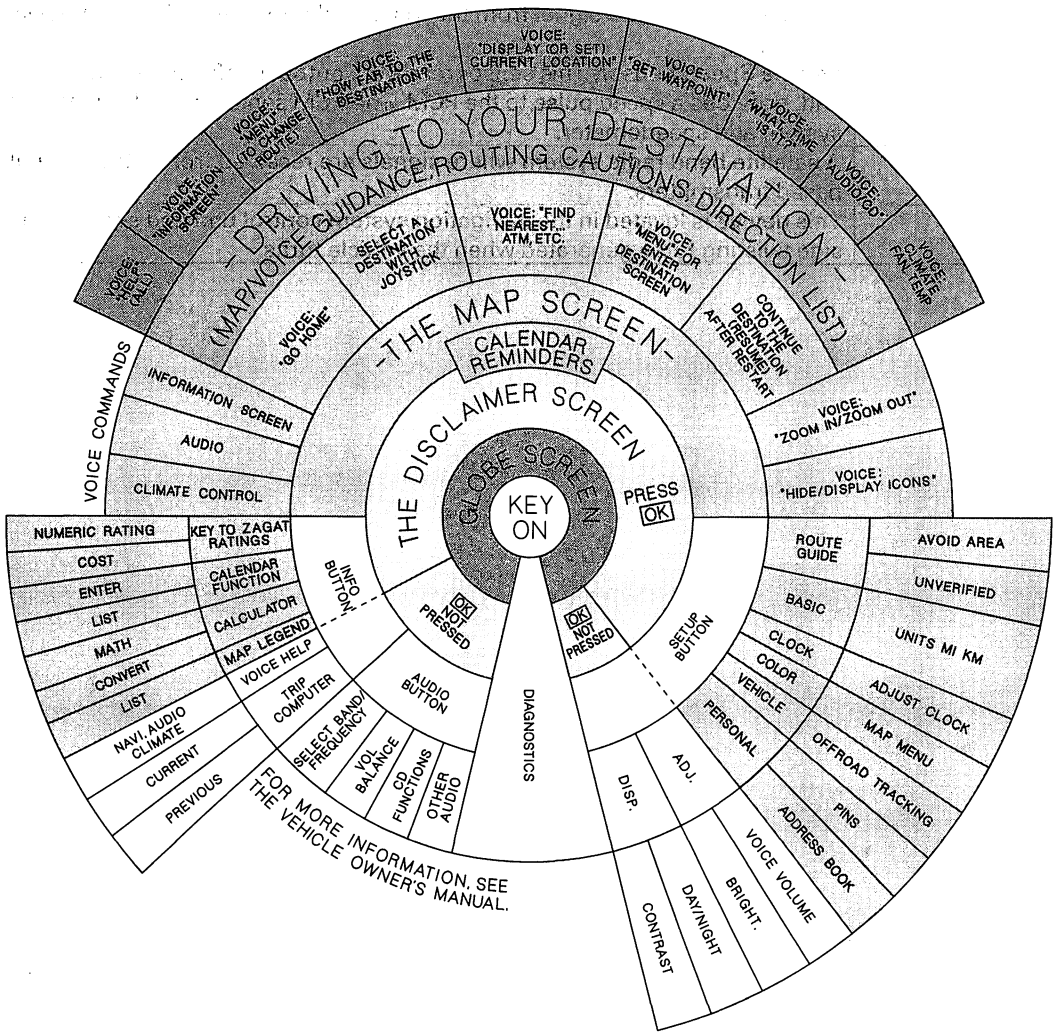

- Functions accessible at any time
- Disclaimer screen
- Map screen/voice commands to enter a destination
- Driving to your destination
- Voice commands while driving to your destination
- Globe screen

BACK

Protected by AR

Diagnostic Function Diagram

This diagram shows the diagnostic slice of the System Function Diagram. It has the diagnostic features of the navigation system starting at the center and working outward in layers. The diagnostic starts at "Key ON," and then displays the Diagnostic Main Menu (Select Diagnosis items) after:

The diagram shows the available menu choices starting at the buttom left and moving clockwise.

You will find a detailed explanation of each feature on the given page numbers.

In most cases, do not clear or change settings in any diagnostic screen unless instructed to do so in the explanation or by the factory. If the factory supplies you with a PCMCIA card to place in the PC slot, then the features specified in the diagram with "Card" are available.

- Starting the vehicle with the SCS connector plugged in to the navigation service check connector (see page 22-549) to get to the System Links screen, then selecting Return.
- Simultaneously pressing and holding the MENU, MAP/GUIDE, and CANCEL buttons.

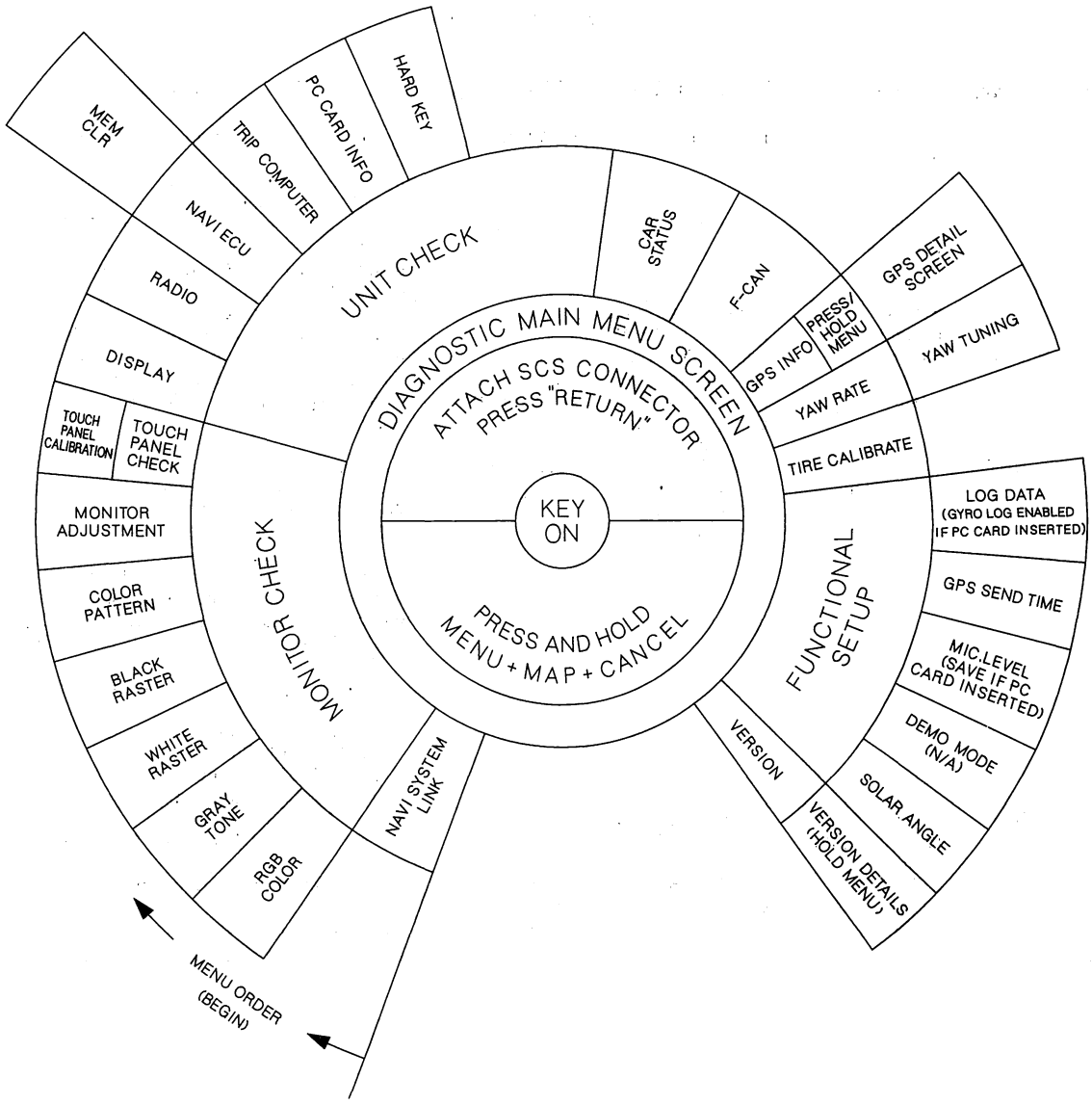

(cont'd)

Protected by AR

Navigation System ('06 model)

System Description (cont'd)

Navigation Unit Inputs and Outputs for Connector A (20P)

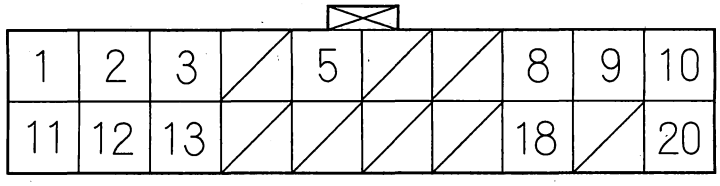

Wire side of female terminals

Terminal Number	Wire Color	Terminal Name	Description	Voltage (about)	Symptom
1	WHT	R SIG (Red signal)	Red color signal	0—1 V AC	If open: Red color missing (see "RGB Color" diagnostic). If short to ground: Red color missing (see "RGB Color" diagnostic).
2	RED	G SIG (Green signal)	Green color signal	0—1 V AC	If open: Green color missing (see "RGB Color" diagnostic). If short to ground: Green color missing (see "RGB Color" diagnostic).
3	GRY	SH SIG (Shield signal)	Shield for terminal No. 1, 2, 11, 12, 13	0 V	If open: No change to display. If short to ground: No change to display.
5	RED/BLK	ILL (+) (Illumination positive)	Parking light on signal from dash and console lights, under-hood "Relay fuse box"	Lights on= battery voltage, Lights off=0 V	If open: When brightness="Auto", night mode for the display is inoperative when lights on. If short to ground: Blows fuse 4 in under-hood fuse/relay box.
8	WHT	CAN-H (CAN high)	F-CAN bus communication with the "gauge control module"	Pulses 2.5—6 V average 3 V	If open: 1) System Links FI-ECU, and Meter both show "NG". 2) F-CAN diagnostic="NG". 3) B-CAN diagnostic="NG". 4) Car status CHG (CAN)=0. 5) Functional Setup, Trip into, FUP & Sampled FL=0. If short to ground: Same diagnostic conditions as when open, and also sets the following DTCs. • B1168 Gauge Control Module loss of Comm. (Engine) • B1169 Gauge Control Module loss of Comm. (A/T) • B1178 F-CAN communication Circuit error. • U0073 (F-CAN Bus off) • U0155 (F-CAN Gauge control) • U0121 (F-CAN TCS control)
9	GRY	SH DISP BUS (Shield display bus)	Shield for display bus terminal No. 10, 20	0 V	If open: No change to display. If short to ground: No change to display.
10	RED/WHT	DISP BUS (+) (Display bus positive)	Date bus (+) GA-Net	0 V—5 V pulses average 2.5 V depends on bus traffic	If open: Navigation buttons and touch screen do not work. If short to ground: Navigation buttons and touch screen do not work.

BACK

Protected by AR

Terminal Number	Wire Color	Terminal Name	Description	Voltage (about)	Symptom
11	YEL	B SIG (Blue signal)	Blue color signal	0—1 V AC	If open: Blue color missing (see "RGB Color" diagnostic). If short to ground: Blue color missing (see "RGB Color" diagnostic).
12	BRN	C SIG (Composite signal)	Composite video (vertical/horizontal) Synchronizing signal	0.3 V AC	If open: Picture rolls horizontally, colors still visible. If short to ground: Picture rolls horizontally, colors still visible.
13	BLU	GND SIG (Ground signal)	Ground for color signal	0 V	If open: No change to display. If short to ground: No change to display.
18	RED	CAN-L (CAN low)	F-CAN bus communication with the "gauge control module"	Pulses 2.5—6 V average 3 V	If open: 1) System Links FI-ECU, and Meter both show "NG". 2) F-CAN diagnostic="NG". 3) B-CAN diagnostic="NG". 4) Car status CHG (CAN)=0. 5) Functional Setup, Trip into, FUP & Sampled FL=0. If short to ground: Same diagnostic conditions as when open, and also sets the following DTCs. • B1168 Gauge Control Module loss of Comm. (Engine) • B1169 Gauge Control Module loss of Comm. (A/T) • B1178 F-CAN communication Circuit error. • U0073 (F-CAN Bus off) • U0155 (F-CAN Gauge control) • U0121 (F-CAN TCS control)
20	RED/BLU	DISP BUS (—) (Display bus negative)	Date bus (—) GA-Net	0 V—5 V pulses nominally 2.5 V	If open: Navigation buttons and touch screen do not work. If short to ground: Hard and touch buttons work OK.

(cont'd)

Protected by AR

Navigation System ('06 model)

System Description (cont'd)

Navigation Unit Inputs and Outputs for Connector B (14P)

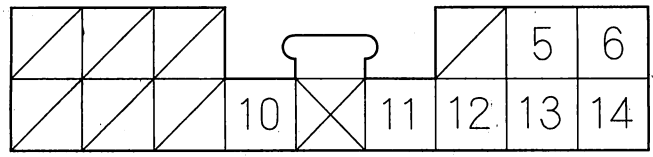

Wire side of female terminals

Terminal Number	Wire Color	Terminal Name	Description	Voltage (about)	Symptom
5	WHT/GRN	RG L (+) (Route guidance voice left positive)	Left audio signal of voice guidance, and Voice Recognition (VR) prompts	Audio signal 0.004—0.04 V	If open: If voice activated, radio speakers buzz; if voice off, no effect. If short to ground: If voice activated, radio speakers buzz; if voice off, no effect.
6	BLU	MIC SIG (+) (Mic signal positive)	Microphone output signal positive	4—5 V (with Talk button pressed)	If open: No microphone signal shown in diagnostic screens: "Navi System Link" and Functional Setup "Mic Level". If short to ground: No microphone signal shown in diagnostic screens: "Navi System Link" and Functional Setup "Mic Level".
10	GRY	STRG SW (Steering switches)	Steering switch output	4—5 V (Talk button depressed) 2.5—3 V (Back button depressed)	If open: Steering wheel "Talk", and "Back" switch/buttons do not work. If short to ground: Steering wheel "Talk", and "Back" switch/buttons do not work.
11	LT GRN	SH RG (Shield route guidance)	Shield for terminal No. 5, 12	0 V	If open: No effect on voice output. If short to ground: No effect on voice output.
12	GRN	GND RG (Ground routs guidance)	Ground for voice guidance, and Voice Recognition (VR) prompts	0 V	If open: No effect on voice output. If short to ground: No effect on voice output.
13	LT BLU	SH MIC (Shield mic)	Shield for terminal No. 6, 14	0 V	If open: No effect on voice recognition. If short to ground: No effect on voice recognition.
14	PNK	GND MIC (Ground mic)	Ground for microphone signal	0 V	If open: No microphone signal shown in diagnostics: "Navi System Link" and Functional Setup "Mic Level". If short to ground: No effect on voice recognition.

BACK

Protected by AR

Navigation Unit Inputs and Outputs for Connector C (8P)

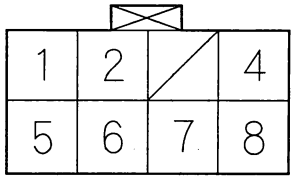

Wire side of female terminals

Terminal Number	Wire Color	Terminal Name	Description	Voltage (about)	Symptom
1	WHT/RED	+B (+B Power source)	Continuous power source	Battery voltage	If open: Display picture goes out (display back light still on). NOTE: System will reboot to "enter code" screen. If short to ground: Blows fuse No. 7 (10 A) in the under-dash fuse/relay box.
2	YEL/RED	ACC (Accessory)	Power source for accessories	Battery voltage at ACC (I)	If open: Display picture goes out (display back light still on). NOTE: When re-connected the system will reboot to "enter code" screen. If short to ground: Blows fuse No. 32 (7.5 A) in the under-dash fuse/relay box.
4	BLK	GND (Ground)	Ground for navigation unit	0 V	If open: No effect on system. If short to ground: No effect on system.
5	GRN	BACK LT (Back light)	Reverse signal of select laver from "Multiplex Integrated Control Unit" (A/T) or backup light switch (M/T)	In reverse, battery voltage: Otherwise 0 V	If open: Navigation never sees reverse. Diagnostic screen "Car Status", "Back"=0. If short to ground: Blows fuse No. 21 (7.5 A) in the under-dash fuse/relay box.
6	BLU/WHT	VSP (Vehicle speed pulse)	Vehicle speed pulse signal from PCM	Pulses 0—5 V: Average 2.5 V, when moving	If open: No vehicle speed pulses. Diagnostic screen "Car Status", VSP Navi=0. If short to ground: No vehicle speed pulses. Diagnostic screen "Car Status", VSP Navi=0.
7	GRN/RED	DIAG P (Diagnostic positive)	Service check signal for navigation system	5—6 V	If open: No effect on system. If short to ground: System goes into diagnostic mode.
8	GRN/YEL	DIAG N (Diagnostic negative)	Ground for service check signal	0 V	If open: No effect on system. If short to ground: No effect on system.

(cont'd)

Protected by AR

Navigation System ('06 model)

System Description (cont'd)

Navigation Unit Inputs and Outputs for Connector E (2P)

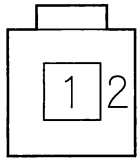

Wire side of female terminals

Terminal Number	Wire Color	Terminal Name	Description	Voltage (about)	Symptom
1	———	GPS	GPS signal (5 V in, GPS signal out)	5 V	If open: GPS icon on screen is white, system links screen ANT shows "NG." If short to ground: Same as open.
2	———	GND GPS	Ground for GPS signal	0 V	If open: GPS icon on screen is white, system links screen ANT shows "NG." If short to ground: No effect on system.

BACK

Protected by AR

Display Unit Inputs and Outputs for Connector A (10P)

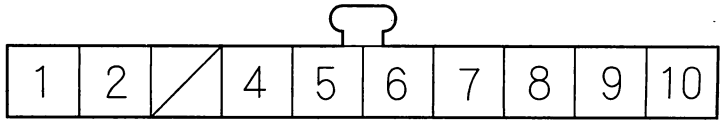

Wire side of female terminals

Terminal Number	Wire Color	Terminal Name	Description	Voltage (about)	Symptom
1	BLK	GND SIG		0 V	If open: Display visible, but very dim. If short to ground: Display unaffected.
2	BLU/ORN	5 V		5 V	If open: All display segments show briefly at key on. If short to ground: All LCD segments do not work, display backlight on.
4	YEL/RED	RESET	Time set sync signal	5 V	If open: Clock display will not set to navigation time (when time offset is applied or when "Reset" touched in Setup "Clock Adjustment" screen). If short to ground: All LCD segments do not work, display backlight on.
5	YEL	CLOCK		0—0.04 V	If open: Randomly displays some characters, display backlight on. If short to ground: Randomly displayed characters, display backlight on.
6	BLU/RED	DATA		0—0.04 V	If open: All LCD segments on, backlight on. If short to ground: All LCD segments on, backlight on.
7	BLU	CE		0 V	If open: All LCD segments on, backlight on. If short to ground: All LCD segments on, backlight on.
8	GRY	SH SIG	Shield for terminal No. 4, 5, 6, 7	0 V	If open: No effect on display. If short to ground: No effect on display.
9	RED	LCD BL— (LCD backlight—)	Power for LCD backlight—	0—0.2 V	If open: Display functions normal, but display is very dim. If short to ground: Display functions normally.
10	GRN	LCD BL+ (LCD backlight+)	Power for LCD backlight+	9.2 V	If open: Display completely blank. If short to ground: Display completely blank.

(cont'd)

Protected by AR

Navigation System ('06 model)

System Description (cont'd)

Display Unit Inputs and Outputs for Connector B (20P)

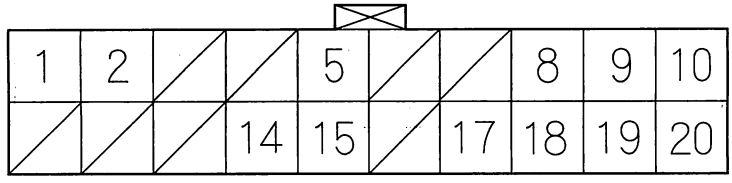

Wire side of female terminals

Terminal Number	Wire Color	Terminal Name	Description	Voltage (about)	Symptom
1	WHT/RED	+B (+B power source)	Continuous power source	Battery voltage	If open: Screen completely off (no backlight visible). If short to ground: Blows fuse No. 7 (10 A) in the under-dash fuse/relay box.
2	YEL/RED	ACC (Accessory)	Power source for accessory	Battery voltage at ACC (I)	If open: Display and buttons do not work. If short to ground: Blows fuse No. 32 (7.5 A) in the under-dash fuse/relay box.
5	RED/WHT	DISP BUS (+) (Display bus positive)	Data bus (+) GA-Net	0 V—5 V pulses average 2.5 V depends on bus traffic	If open: Navigation buttons and touch screen do not work. If short to ground: Navigation buttons and touch screen do not work.
8	WHT	R SIG (Red signal)	Red color signal	0—1 V AC	If open: Red color missing (see "RGB Color" diagnostic). If short to ground: Red color missing (see "RGB Color" diagnostic).
9	RED	G SIG (Green signal)	Green color signal	0—1 V AC	If open: Green color missing (see "RGB Color" diagnostic). If short to ground: Green color missing (see "RGB Color" diagnostic).
10	BLK	GND (Ground)	Ground for display unit	0 V	If open: No change to display. If short to ground: No change to display.
14	GRY	SH DISP BUS (Shield display bus)	Shield for display bus terminal No. 5, 15	0 V	If open: No change to display. If short to ground: No change to display.
15	RED/BLU	DISP BUS (—) (Display bus negative)	Date bus (—) GA-Net	0 V—5 V pulses average 2.5 V depends on bus traffic	If open: Navigation buttons and touch screen do not work. If short to ground: Hard and touch buttons work OK.
17	BLU	GND SIG (Ground signal)	Ground for color signal	0 V	If open: No change to display. If short to ground: No change to display.
18	YEL	B SIG (Blue signal)	Blue color signal	0—1 V AC	If open: Blue color missing (see "RGB Color" diagnostic). If short to ground: Blue color missing (see "RGB Color" diagnostic).
19	BRN	C SIG (Composite signal)	Composite video (vertical/horizontal) synchronizing signal	0.3 V AC	If open: Picture rolls horizontally, colors still visible. If short to ground: Picture rolls horizontally, colors still visible.
20	GRY	SH SIG (Shield signal)	Shield for terminal No. 8, 9, 17, 18, 19	0 V	If open: No change to display. If short to ground: No change to display.

BACK

Protected by AR

Audio-HVAC Subdisplay Unit Inputs and Outputs for 10P Connector

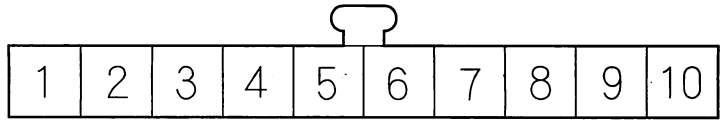

Wire side of female terminals

Terminal Number	Wire Color	Terminal Name	Description	Voltage (about)	Symptom
1	BLK	GND SIG	———	0 V	If open: Display visible, but very dim. If short to ground: Display unaffected.
2	BLU/ORN	5 V	———	5 V	If open: All display segments show briefly at key on. If short to ground: All LCD segments do not work, display backlight on.
3	BLK	GND	———	0 V	———
4	YEL/RED	RESET	Time set sync signal	5 V	If open: Clock display will not set to navigation time (when time offset is applied or when "Reset" touched in Setup "Clock Adjustment" screen). If short to ground: All LCD segments do not work display backlight on.
5	YEL	CLOCK	———	0—0.04 V	If open: Randomly displays some characters, display backlight on. If short to ground: Randomly displayed characters, display backlight on.
6	BLU/RED	DATA	———	0—0.04 V	If open: All LCD segments on, backlight on. If short to ground: All LCD segments on, backlight on.
7	BLU	CE	———	0 V	If open: All LCD segments on, backlight on. If short to ground: All LCD segments on, backlight on.
8	GRY	SH SIG	Shield for terminal No. 4, 5, 6, 7	0 V	If open: No effect on display. If short to ground: No effect on display.
9	RED	LCD BL— (LCD backlight—)	Power for LCD backlight—	0—0.2 V	If open: Display function normal, but display is very dim. If short to ground: Display functions normally.
10	GRN	LCD BL+ (LCD backlight+)	Power for LCD backlight+	9.2 V	If open: Display completely blank. If short to ground: Display completely blank.

Protected by AR

Navigation System ('06 model)

Circuit Diagram

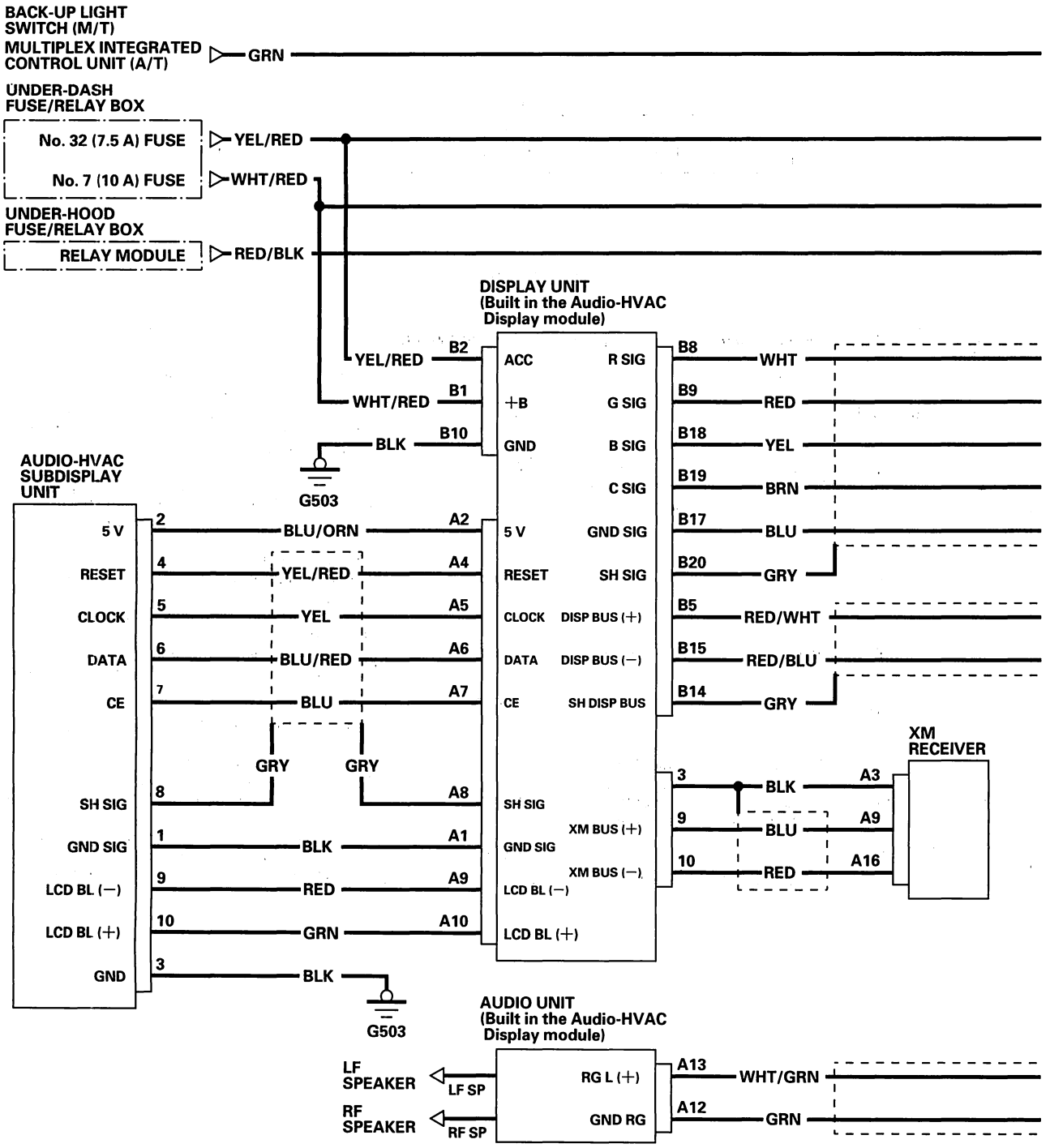

BACK

Protected by AR

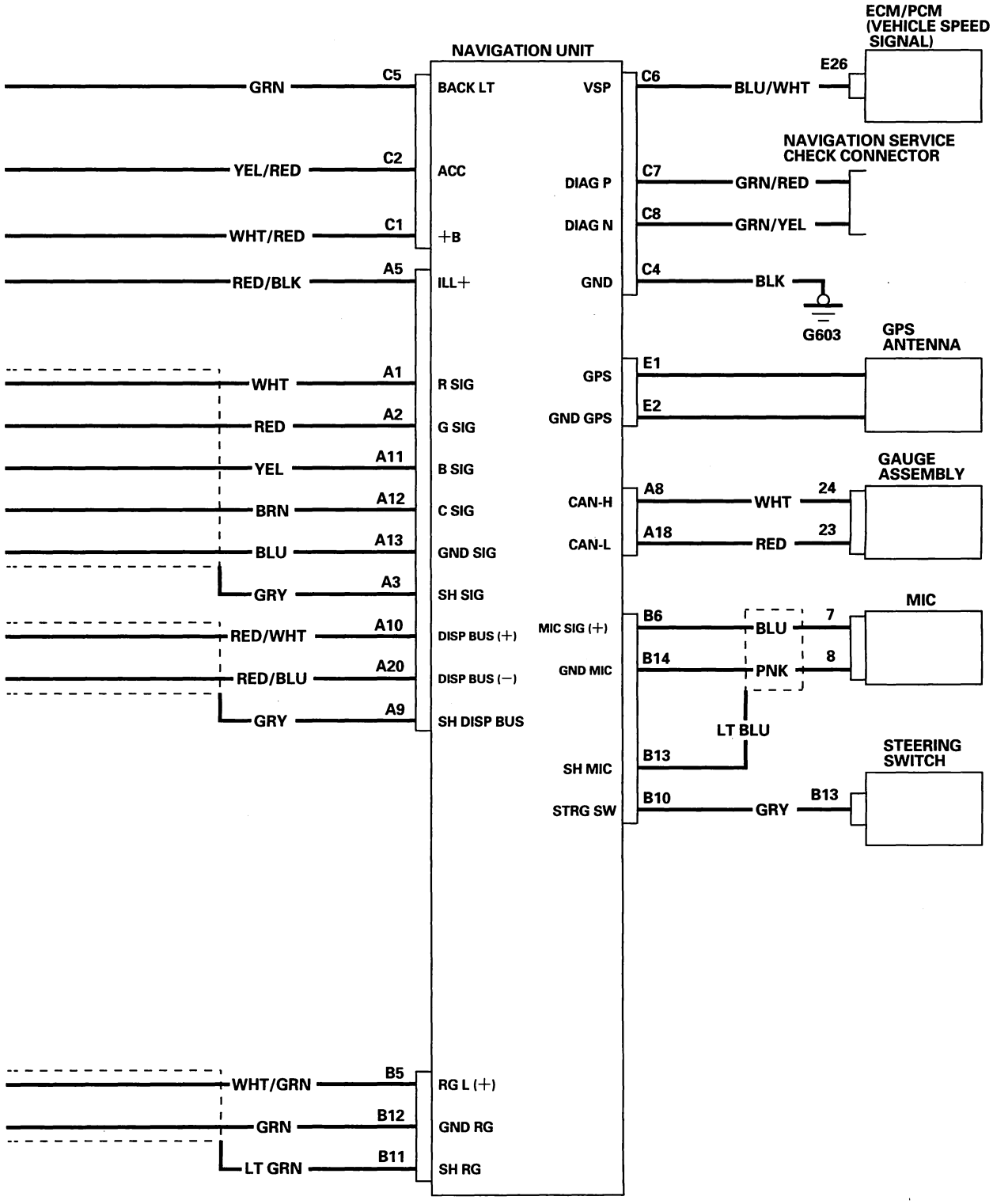

(cont'd)

BACK

Protected by AR

Navigation System ('03-05 models)

Circuit Diagram (cont'd)

Audio-HVAC subdisplay unit 10P connector

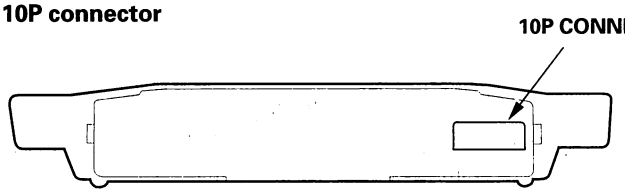

10P CONNECTOR

1	2	3	4	5	6	7	8	9	10

Wire side of female terminals

Display unit connectors

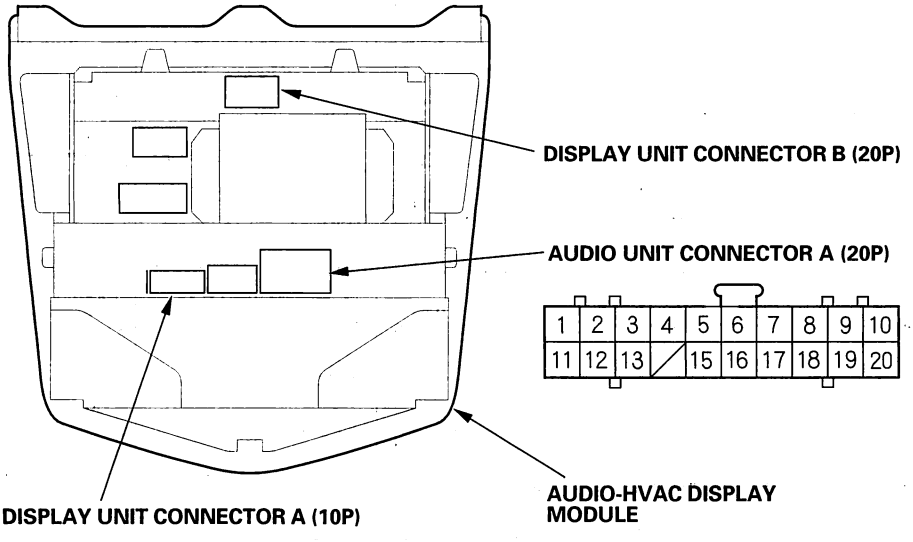

CONNECTOR A (10P)

1	2		4	5	6	7	8	9	10

CONNECTOR B (20P)

1	2			5			8	9	10
			14	15		17	18	19	20

Wire side of female terminals

Navigation unit connectors

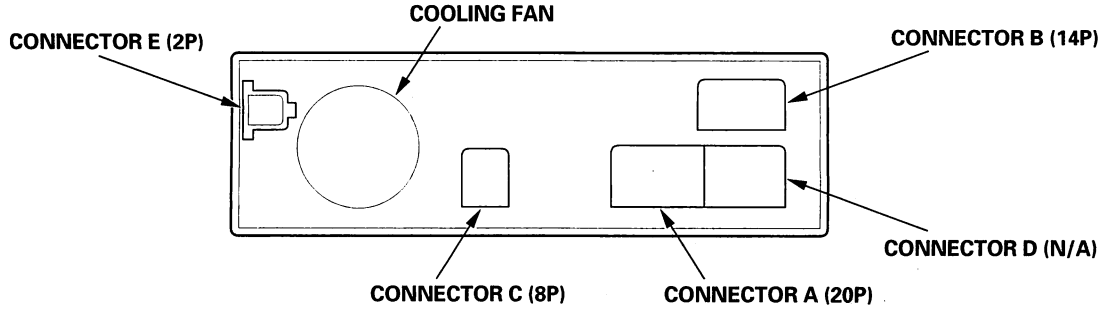

CONNECTOR A (20P)

1	2	3		5			8	9	10
11	12	13					18		20

CONNECTOR B (14P)

								5	6
			10		11	12	13	14	

CONNECTOR C (8P)

1	2		4
5	6	7	8

CONNECTOR E (2P)

1	2

...nals

BACK

Protected by AR

Symptom Troubleshooting

No picture is displayed

NOTE
- Always check the connectors for poor connections or loose terminals.
- Diagnostic Test: Navi System Link
- Confirm the correct DVD disc is installed in the navigation unit (see page 22-489)

1. Check the No. 7 (10 A) fuse and No. 32 (7.5 A) fuse in the under-dash fuse/relay box, and reinstall the fuse if it is OK.

   Is the fuse OK?

   YES—Go to step 2.

   NO—Replace the fuse and recheck.■

2. Turn the ignition switch to ACC (I).

3. Operate the radio and listen to the audio.

   Can audio be heard?

   YES—Go to step 4.

   NO—Check the ACC circuit.■

4. Turn the ignition switch ON (II).

5. Measure the voltage between body ground and navigation unit connector C (8P) terminals No. 1 and No. 2 individually.

NAVIGATION UNIT CONNECTOR C (8P)

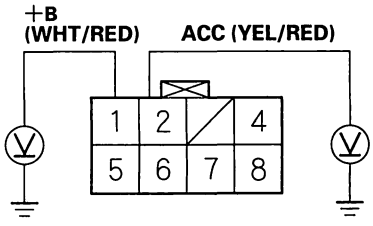

Wire side of female terminals

Is there battery voltage?

YES—Go to step 6.

NO—If the +B wire does not have voltage, repair open in the wire between the under-dash fuse/relay box and the navigation unit.
If the ACC wire does not have voltage, repair open in the wire between the under-dash fuse/relay box and the navigation unit.■

6. Turn the ignition switch OFF.

7. Disconnect the navigation unit connector C (8P).

8. Check for continuity between navigation unit connector C (8P) terminal No. 4 and body ground.

NAVIGATION UNIT CONNECTOR C (8P)

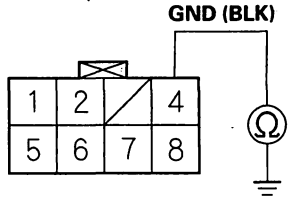

Wire side of female terminals

Is there continuity?

YES—Go to step 9.

NO—Repair open in the wire between the navigation unit and body ground (G603).■

9. Reconnect the navigation unit connector C (8P).

10. Perform the forced starting of the display (see page 22-549).

    Is the diagnosis menu of the picture diagnosis displayed?

    YES—Go into the Diagnostic mode and use the "Navi System Link" diagnostic (see page 22-533) to check the links.■

    NO—Go to step 11.

(cont'd)

Protected by AR

Symptom Troubleshooting (cont'd)

11. Shield the display unit from the sun with your hand, and check that the display is back lit (only back light is ON.)

    Can you see the back light?

    YES—Replace the navigation unit (see page 22-550). ■

    NO—Go to step 12.

12. Turn the ignition switch ON (II).

13. Measure the voltage between body ground and display unit connector B (20P) terminal No. 1 and No. 2 individually.

DISPLAY UNIT CONNECTOR B (20P)

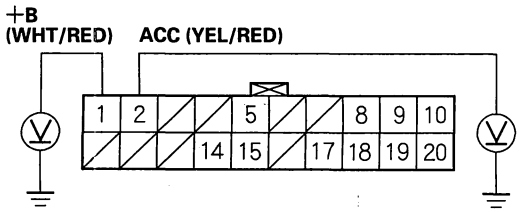

Wire side of female terminals

Is there battery voltage?

YES—Replace the display unit. ■

NO—If the +B wire does not have voltage, repair open in the wire between the under-dash fuse/relay box and the navigation unit.
If the ACC wire does not have voltage, repair open in the wire between the under-dash fuse/relay box and the navigation unit. ■

Picture is missing a color or tone

NOTE:
- Always check the connectors for poor connections or loose terminals.
- Before troubleshooting, get the navigation system anti-theft codes.
- After troubleshooting, enter the navigation system anti-theft codes.
- Confirm the correct DVD disc is installed in the navigation unit (see page 22-489)

1. Go into the Diagnostic Menu and use "RGB Color" test under Monitor Check (see page 22-534).

   Are the red, green, and blue colored circles shown?

   YES—The system is OK at this time. ■

   NO—Go to step 2.

2. Turn the ignition switch to OFF.

3. Disconnect the navigation unit connector A (20P) and display unit 20P connector.

4. Check for loose terminals at navigation unit connector A (20P) and display unit 20P connector.

   Are there loose terminals?

   YES—Repair the terminal. ■

   NO—Go to step 5.

BACK

Protected by AR

5. Check for continuity between the appropriate terminals of navigation unit connector A (20P) to display unit connector B (20P) based on the missing color(s).

Missing color	Navigation unit connector A (20P)	Display unit connector B (20P)	Wire color
Blue	A11	B18	YEL
Green	A2	B9	RED
Red	A1	B8	WHT

NAVIGATION UNIT CONNECTOR A (20P)

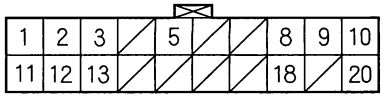

Wire side of female terminals

DISPLAY UNIT CONNECTOR B (20P)

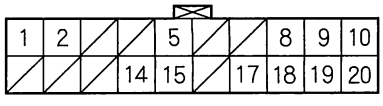

Wire side of female terminals

Is there continuity?

YES—Go to step 6.

NO—There is an open in the circuit between the display unit and the navigation unit. Check for poor connections or loose terminals at the display and navigation units. If a poor connection or loose terminal is found, replace the affected shielded harness.■

6. Check for continuity between the appropriate terminals of navigation unit connector A (20P) and display unit connector B (20P) based on the missing color(s).

Missing color	Navigation unit connector A (12P)	Display unit connector B (20P)
Blue	A11	B10, B20
Green	A2	B10, B20
Red	A1	B10, B20

NAVIGATION UNIT CONNECTOR A (20P)

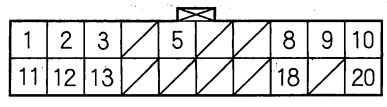

Wire side of female terminals

DISPLAY UNIT CONNECTOR B (20P)

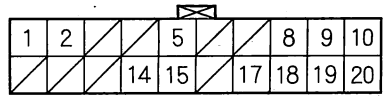

Wire side of female terminals

Is there continuity?

YES—There is a short to body ground in the circuit between the display unit and the navigation unit. Replace the affected shielded harness.■

NO—Replace the navigation unit. If the problem is still unresolved, replace the display unit.■

Protected by AR

Symptom Troubleshooting (cont'd)

Picture has lines/rolls/other issues

NOTE:
- Always check the connectors for poor connections or loose terminals.
- Before troubleshooting, get the navigation system anti-theft codes.
- After troubleshooting, enter the navigation system anti-theft codes.
- Confirm the correct DVD disc is installed in the navigation unit (see page 22-489)

1. Check for electronic aftermarket accessories (possibly hidden) mounted near the display unit or the navigation unit.

   Are there any electronic accessories?

   YES—Disable the accessories, and recheck. ■

   NO—Go to step 2.

2. Start up the navigation picture.

   Is the picture scrolling horizontally (left to right or right to left)?

   YES—Check for an open or short to ground in the C SIG wire from navigation unit connector A (20P) terminal No. 12 to display unit connector B (20P) terminal No. 19. Also check for a short to ground between display unit connector B terminal No. 19 and terminal No. 20. ■

   NO—Go to step 3.

3. Go into the Diagnostic mode and use "RGB Color" test under Monitor Check (see page 22-534).

   Is the picture missing a red, green or blue color?

   YES—Do the troubleshooting for the picture is missing a color or tone (see page 22-516). ■

   NO—Go to step 4.

4. Turn the ignition switch OFF.

5. Substitute a known-good display unit, and recheck.

   Is the picture OK?

   YES—Replace the original display unit. ■

   NO—Replace the navigation unit (see page 22-550). ■

BACK

Protected by AR

Display unit buttons or touch screen buttons do not work or respond properly

NOTE:
- If the audio system is malfunctioning, repair the audio system first. Refer to the appropriate audio system troubleshooting.
- Always check the connectors for poor connections or loose terminals.
- Before troubleshooting, get the navigation system anti-theft codes.
- After troubleshooting, enter the navigation system anti-theft codes.

1. Turn the ignition switch to ACC (I).

2. Go into the Diagnostic mode and use the "Touch Panel" test under Monitor Check (see page 22-534) and, if necessary, the "Display" test under Unit Check (see page 22-536).

   Do the buttons work properly?

   YES—System is OK.■

   NO—Go to step 3.

3. Try all the buttons on the navigation system.

   Is there a specific row or columns of buttons, set of button, or a certain button that does not respond properly (i.e. pressing a button in the lower left corner causes a button in the right lower corner to respond.)?

   YES—Replace the display unit.■

   NO—Go to step 4.

4. Measure the voltage between body ground and display unit connector B (20P) terminal No. 1 and No. 2 individually.

DISPLAY UNIT CONNECTOR B (20P)

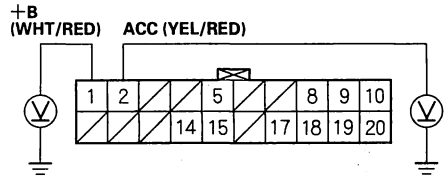

Wire side of female terminals

Is there battery voltage?

YES—Go to step 5.

NO—If the +B wire does not have voltage, repair the open in the wire between the under-dash fuse/relay box and the display unit. If the ACC wire does not have voltage, repair the open in the wire between the under-dash fuse/relay box and the display unit.■

5. Turn the ignition switch OFF.

6. Disconnect the display unit connector B (20P).

7. Check for continuity between display unit connector B (20P) terminal No. 10 and body ground.

DISPLAY UNIT CONNECTOR B (20P)

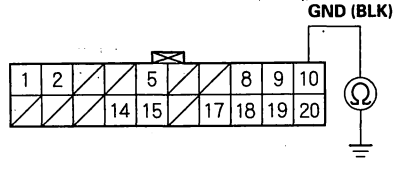

Wire side of female terminals

Is there continuity?

YES—Go to step 8.

NO—Repair the open in the wire between the display unit and body ground (G503).■

8. Disconnect the navigation unit connector A (20P).

(cont'd)

Protected by AR

Symptom Troubleshooting (cont'd)

9. Check for continuity between body ground and display unit connector B (20P) terminal No. 5 and No. 15 individually.

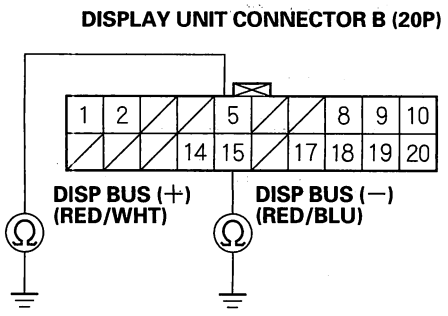

Wire side of female terminals

Is there continuity?

YES—There is a short to body ground in the circuit between the display unit and the navigation unit. Replace the affected shielded harness.■

NO—Go to step 10.

10. Check for continuity between display unit connector B (20P) terminal No. 5 and navigation unit connector A (20P) terminal No. 10.

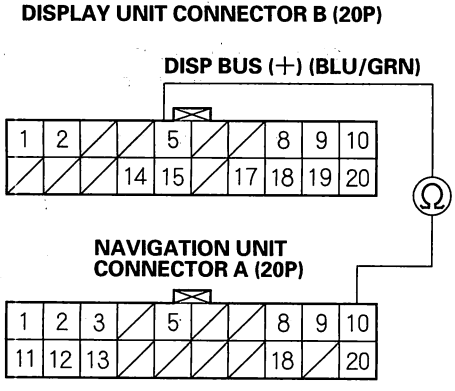

Wire side of female terminals

Is there continuity?

YES—Go to step 11.

NO—There is an open in the circuit between the display unit and the navigation unit. Check for poor connections or loose terminals at the display and navigation units. If a poor connection or loose terminal is found, replace the affected shielded harness.■

11. Check for continuity between display unit connector B (20P) terminal No. 15 and navigation unit connector A (20P) terminal No. 20.

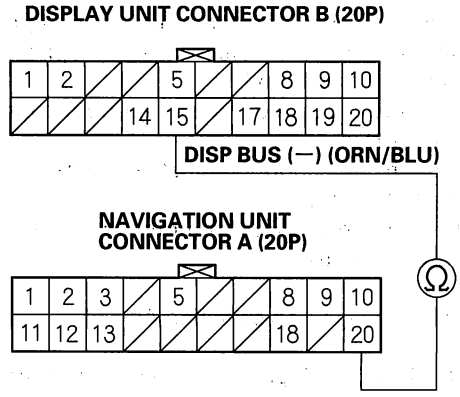

Wire side of female terminals

Is there continuity?

YES—Replace the display unit.■

NO—There is an open in the circuit between the display unit and the navigation unit. Check for poor connections or loose terminals at the display and navigation units. If a poor connection or loose terminal is found, replace the affected shielded harness.■

BACK

Protected by AR

GPS icon is white, or not shown

NOTE:
- Make sure the vehicle is parked outside and away from buildings.
- Refer to GPS Information (see page 22-541) for realtime satellite reception display.

1. Check for metallic window tint on the windshield and electronic aftermarket accessories (possibly hidden) mounted near the GPS antenna or the navigation unit.

   Is there metallic window tint or electronic accessories?

   YES—Remove tint or the accessories and recheck. ■

   NO—Go to step 2.

2. Go into the Diagnostic Menu and use the "Navi System Link" test (see page 22-533) to check the GPS antenna.

   Is "GPS Ant" icon red?

   YES—Use the "Navi ECU" test under Unit Check (see page 22-536) to check for a kinked, crushed, or disconnected GPS antenna wire. If necessary, try a known-good GPS antenna. If icon is still red, replace the navigation unit. ■

   NO—Check that nothing is blocking the GPS antenna located under the rear shelf and recheck. Sudstitute a known-good navigation unit, and recheck. ■

Voice guidance cannot be heard

NOTE:
- Always check the connectors for poor connections or loose terminals.
- Before troubleshooting, write down the customer's radio station presets, and get the radio and navigation system anti-theft codes.
- After troubleshooting, enter the radio and navigation system anti-theft codes, and the radio station presets.

1. Press the display unit SET-UP button.

2. Check the volume setting for the navigation system.

   Is it set to OFF?

   YES—Set the volume to an audible level. ■

   NO—Go to step 3.

3. Check the radio operation.

   Can you hear the radio?

   YES—Go to step 4.

   NO—Troubleshoot the audio system. ■

4. Go into the Diagnostic Menu and use the "Navi System Link" test (see page 22-533) to check the radio.

   Is "Radio" icon red?

   YES—Troubleshoot the audio system. ■

   NO—Go to step 5.

5. Turn the ignition switch OFF.

6. Disconnect the navigation unit connector B (14P) and the audio unit connector A (20P).

(cont'd)

Protected by AR

Symptom Troubleshooting (cont'd)

7. Check for continuity between body ground and navigation unit connector B (14P) terminals No. 5, No. 12 individually.

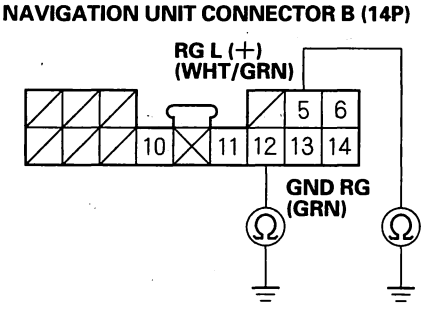

Wire side of female terminals

Is there continuity?

YES—Replace the affected shielded harness. ■

NO—Go to step 8.

8. Check for continuity between navigation unit connector B (14P) terminal No. 5 and the audio unit connector A (20P) terminal No. 13.

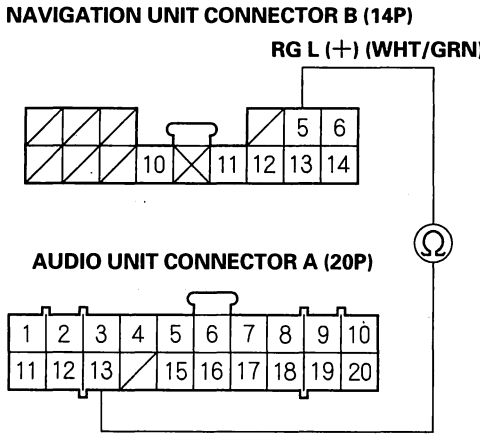

Wire side of female terminals

Is there continuity?

YES—Go to step 9.

NO—There is an open in the circuit between the navigation unit and audio unit. Check for poor connections or loose terminals at the audio and navigation units. If a poor connection or loose terminal is found, replace the affected shielded harness. ■

BACK

Protected by AR

9. Check for continuity between navigation unit connector B (14P) terminal No. 12 and the audio unit connector A (20P) terminal No. 12.

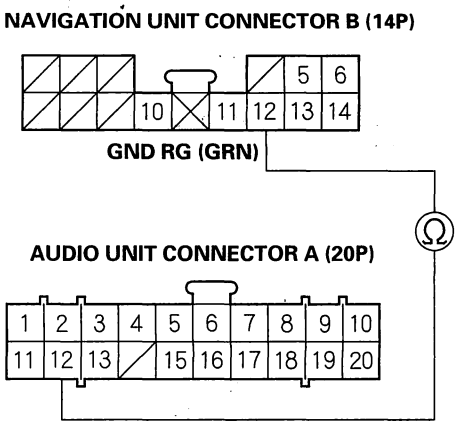

Is there continuity?

YES—Go to step 10.

NO—There is an open in the circuit between the navigation unit and audio unit. Check for poor connections or loose terminals at the audio and navigation units. If a poor connection or loose terminal is found, replace the affected shielded harness. ■

10. Substitute a known-good audio unit, and recheck.

Is the system OK?

YES—Replace the original audio unit. ■

NO—Replace the navigation unit (see page 22-550). ■

Voice control does not work/respond

NOTE:
- Always check the connectors for poor connections or loose terminals.
- Before troubleshooting, write down the customer's radio station presets, and get the radio and navigation system anti-theft codes.
- After troubleshooting, enter the radio and navigation system anti-theft codes, and the radio station presets.

Before assuming that a voice complaint is hardware related, ensure that the voice control system is being operated correctly.

- Make sure you are on the correct screen when trying to issue a voice command. For instance, the command "Find the nearest Italian Restaurant" only works on a Map screen.
  (See the Navigation System Manual for a complete list of allowed voice commands for the information being displayed.)
- Close the windows and moonroof.
- Set the fan speed to low (1 or 2).
- Adjust the air flow from the air conditioning vents so that they do not blow against the microphone on the ceiling.
- Pause after pressing the TALK button, then give a voice command clearly in a natural speaking voice. If the system cannot recognize your command, speak louder.
- If the microphone picks up voices other than yours, the system may not interpret your voice commands correctly.
- If you speak a command with something in your mouth, or your voice is too husky, the system may misunderstand your command.

(cont'd)

Protected by AR

Symptom Troubleshooting (cont'd)

1. Go into the Diagnostic Menu and use the "Mic Level" test the under Functional Setup (see page 22-544) to check the operation of the TALK and BACK buttons.

   Are the TALK and BACK buttons operational?

   YES—Go to step 2.

   NO—Check for an open or short to ground on navigation unit connector B (14P) terminal No. 10. ■

2. Use the "Mic Level" diagnostic under Functional Setup (see page 22-544) to check the operation of the microphone.

   Is the microphone operational?

   YES—Check the operation of the voice control system (see the Navigation System Manual). ■

   NO—Check for a loose front map light (microphone) assembly. If OK, check for an open or short to ground on navigation unit connector B (14P) terminals No. 6 and No. 14. ■

Vehicle position icon constantly leaves road or is very far from actual position

1. Check the GPS icon on the navigation picture.

   Is No GPS icon shown?

   YES—Do the troubleshooting for GPS icon is white, or not shown (see page 22-521). ■

   NO—Go to step 2.

2. Go into the Diagnostic Menu and use the "Yaw Rate" test (see page 22-542) to check the yaw rate sensor.

3. Go into the Diagnostic Menu and use the "Car Status" test (see page 22-539) to check the vehicle speed pulse.

   Are the yaw rate sensor and vehicle speed pulse OK?

   YES—The problem may be normal. Check to see if the problem occurs in the same place. If it does, the problem could be in the database. Go to step 4.

   NO—If the problem is the yaw rate sensor, replace the navigation unit (see page 22-550). If the problem is the vehicle speed pulse, troubleshoot the vehicle speed signal circuit. ■

4. Substitute a known-good navigation unit and check to see if the problem occurs in the same place.

   Does the problem occur in the same place?

   YES—The problem is in the database. Report the problem according to the Navigation System Manual under "Reporting Errors". ■

   NO—Replace the original navigation unit (see page 22-550). ■

BACK

Protected by AR

DVD screen error messages

NOTE:
- Check the Navigation System Manual for a list of common DVD screen error messages and the probable cause.
- Go into the Diagnostic Menu and use the "Car Status" test (see page 22-539) to check the status of the DVD lid.

1. Check the DVD-ROM reading surface for scratches.

   Are there scratches?

   YES—Replace the DVD-ROM (see page 22-549). ■

   NO—If the problem occurs occasionally when the system is cold, this is normal. If the problem occurs frequently when driving, replace the navigation unit (see page 22-550). ■

Trip computer-no distance

NOTE:
- Always check the connectors for poor connections or loose terminals.
- Before troubleshooting, get the navigation system anti-theft codes.
- After troubleshooting, enter the navigation system anti-theft codes.
- If the Previous button on the Trip Computer screen is not active, make sure to answer OK to the Disclaimer screen.
- Verify that the correct navigation unit is installed for this model. Go into the Diagnostic Menu and use "Version" (see page 22-547).

1. Go into the Diagnostic Menu and use the "Car Status" test (see page 22-539) to check for a vehicle speed pulse (VSP).

   Is there a VSP when the vehicle is moving?

   YES—Check the CAN system for DTCs. If OK, replace the navigation unit. ■

   NO—Check the VSP wire for an open or short to power or ground. ■

Protected by AR

Symptom Troubleshooting (cont'd)

Trip computer-no fuel information

NOTE:
- Always check the connectors for poor connections or loose terminals.
- Before troubleshooting, get the navigation system anti-theft codes.
- After troubleshooting, enter the navigation system anti-theft codes.
- If the Previous button on the Trip Computer screen is not active, make sure to answer OK to the Disclaimer screen.
- Verify that the correct navigation unit is installed for this model. Go into the Diagnostic Menu and use "Version" (see page 22-547).

Do the "Navi System Link" test (see page 22-533) to check the communication line between the ECM/PCM (FI-ECU) and the navigation unit.

1. Go into the Diagnostic Menu and use "Trip Computer" test under Unit Check (see page 22-536) with the engine running.

   Are the values greater than zero?

   YES—The system is OK.■

   NO—Check the CAN system for DTCs. If OK, replace the navigation unit.■

Navigation cannot control A/C

NOTE:
- Always check the connectors for poor connections or loose terminals.
- Before troubleshooting get the navigation system anti-theft codes.
- After troubleshooting, enter the navigation system anti-theft codes.
- Verify that the correct navigation unit is installed for this model. Go into the Diagnostic Menu and use "Version" (see page 22-547).

1. Go into the Diagnostic Menu and use the "Navi System Link" test (see page 22-533).

   Is "Air-con" icon red?

   YES—Do the climate control system troubleshooting.■

   NO—Check for an open or short to ground between display unit connector A (5P) terminals No. 2, No. 3 No. 4 and climate control unit connector A (16P) terminals No. 16, No. 15, No. 8. If OK, check the climate control system for normal operation. If the climate control system works properly, substitute a known-good display unit and recheck.■

BACK

Protected by AR

Display day/night mode does not work

NOTE:
- Always check the connectors for poor connections or loose terminals.
- Before troubleshooting get the navigation system anti-theft codes.
- After troubleshooting, enter the navigation system anti-theft codes.
- Full brightness on the instrument panel brightness control causes the system to stay in the day mode, even when the lights are on.

1. Make sure the instrument panel brightness control is not on full brightness.

2. Change the day/night mode to AUTO under Set-up and recheck.

   Does the display change to day and night modes using the headlights?

   YES—The system is OK at this time. ■

   NO—Go to step 3.

3. Go into the Diagnostic Menu and use the "Car Status" test to check for an ILL signal (see page 22-539).

   Is "ILL" signal OK?

   YES—The system is OK. ■

   NO—Check the ILL+ circuit between the navigation unit and relay module. ■

System locks up constantly

1. Start the engine and turn the ignition switch OFF, then turn the ignition switch ON (II).

   Does the system reboot?

   YES—The system is OK at this time. ■

   NO—Check the DVD for scratches or damage and the navigation unit for water damage. If OK, go into the Diagnostic Menu and do all of the "Unit Check" tests (see page 22-536). ■

Protected by AR

Symptom Troubleshooting (cont'd)

Vehicle icon wanders across the map when driving (does not follow a displayed road) or spins when driving

NOTE: This symptom is caused by a defective yaw rate sensor. Perform this diagnostic when the vehicle is cold and warm.

1. Go into the Diagnostic Menu and use the "Yaw Rate" test (see page 22-542).

   Are the values correct?

   YES—The system is OK. ■

   NO—Replace the navigation unit (see page 22-550). ■

Navigation drives by itself when parked

NOTE:
- Always check the connectors for poor connections or loose terminals.
- Before troubleshooting, get the navigation system anti-theft code.
- After troubleshooting, re-enter the anti-theft code, and re-initialize the navigation system.

1. Start the engine.
2. From the main menu, select places, then select any destination, and begin the trip.
3. With the vehicle parked, watch the vehicle icon on the display.

   Does the vehicle position icon move by itself?

   YES—Go to step 4.

   NO—The system is OK at this time. ■
4. Go into the Diagnostic Menu and select "DEMO MODE" test (see page 22-544) under Functional Setup.

   Is "DEMO MODE" set to "YES"?

   YES—Set the Demonstration mode to "NO". ■

   NO—Replace the navigation unit (see page 22-550). ■

BACK

Protected by AR

Navigation stays on with ignition switch off

NOTE:
- Always check the connectors for poor connections or loose terminals.
- Before troubleshooting, get the navigation system anti-theft code.
- After troubleshooting, re-enter the anti-theft code, and re-initialize the navigation system.

1. With the key out of the ignition.

   Does the navigation screen stay on?

   YES—Go to step 2.

   NO—The system is OK at this time. ■

2. The vehicle may have been used as a demonstration vehicle at an event like an auto show. In these events, power is often jumpered to the navigation system so that the ignition key is not needed in the vehicle. At the end of the show, the jumper wire may not have been removed. Check the navigation unit "C" connector (8P) for a "non-factory" jumper wire in series with the factory cable.

   Is there a jumper wire?

   YES—Remove the jumper wire, and re-test. ■

   NO—Go to step 3.

3. The display or audio unit may have been jumpered behind the dash to allow the navigation system to run without the ignition key.

   Does the radio function with the ignition switch off?

   YES—Go to step 4.

   NO—Go to step 5.

4. Remove the display unit and check to see if the audio 20P connector has a non-factory jumper wire in series with the factory connector.

   Is there a jumper wire?

   YES—Remove the jumper wire, and re-test. ■

   NO—Go to step 5.

5. Check the interior lights with the ignition switch off.

   Can you turn on the interior lights with the ignition switch off?

   YES—Troubleshooting the ACC circuit. ■

   NO—Replace the navigation unit (see page 22-550). ■

Protected by AR

Symptom Troubleshooting (cont'd)

Navigation cannot control audio/CD

1. Make sure the anti-theft code for the audio system is entered.
2. Go into the Diagnostic Menu and use the "Navi System Link" test (see page 22-533).

   Is for "Radio" icon red?

   YES—Do the troubleshooting for the voice guidance cannot be heard (see page 22-521). ■

   NO—Go to step 3.
3. Substitute a known-good navigation unit (see page 22-550), and recheck.

   Can the navigation control audio/CD?

   YES—Replace the original navigation unit (see page 22-550). ■

   NO—Do the audio system troubleshooting. ■

Navigation cannot control XM radio

1. Go into the Diagnostic Menu and use the "Navi System Link" test (see page 22-533).

   Is the "XM" icon red?

   YES—Check the connector at the XM receiver. ■

   NO—Go to step 2.
2. Substitute a known-good navigation unit (see page 22-550), and recheck.

   Can the navigation control the XM radio?

   YES—Replace the original navigation unit (see page 22-550). ■

   NO—Do the audio system troubleshooting. ■

BACK

Protected by AR

Audio-HVAC subdisplay does not work properly

1. Check the clock. Reset if necessary.

   Does the clock reset?

   YES—The system is OK at this time. ■

   NO—Go to step 2.

2. Check for an open or short to body ground between subdisplay unit 10P connector terminal No. 4, No. 5, No. 6, No. 7 and navigation unit connector A (10P) terminal No. 4, No. 5, No. 6, No. 7.

   Are the circuits OK?

   YES—Replace the navigation unit. ■

   NO—Repair the circuits. ■

Navigation frequently asks for code and needs GPS initialization

1. Check for an open on navigation unit connector C (8P) terminals No. 1 and No. 2.

   Are the circuits OK?

   YES—Replace the navigation unit. ■

   NO—Repair the circuits. ■

Protected by AR

System Diagnosis Mode

Start-up procedure and Diagnosis Menu

There are two ways to enter the diagnostic mode:

1. Connect the SCS connector (see page 22-549) to the navigation service connector located in the trunk. Turn the ignition switch to the ON (II) position. The display will go directly to the diagnostic menu screen shown below.

   NOTE: When finished troubleshooting, make sure to remove the SCS connector.

2. Turn the ignition switch ON (II). Use the navigation display hard buttons as described below:

   Press and hold the 3 buttons (Menu, Map/Guide, and Cancel), and keep them pressed for about 5 seconds. The display screen will go directly to the "Select Diagnosis Items" menu shown below.

   NOTE: This only allows access to the diagnostic screens. All other navigation functions are disabled.

DIAGNOSTIC MENU SCREEN

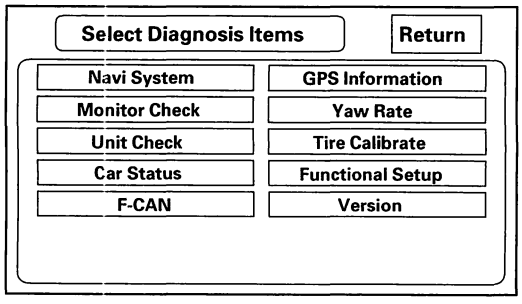

3. After the display changes to the Select Diagnosis Items menu, select the item you want to check and the diagnostic will start. To return to the previous screen, select "RETURN".

   - Navi System (Link)
   - Monitor Check
   - Unit Check
   - Car Status
   - F-CAN
   - GPS Information
   - Yaw Rate
   - Tire Calibrate
   - Functional Setup
   - Version

BACK

Protected by AR

Navi System Link

- This diagnostic tests the cables connecting the navigation components. Ensure that the ignition switch is in the ON (II) position. When the diagnostic begins, a "bong" sound is heard. The system is in a "Detecting" mode, and is waiting for all items in white to be tested. This includes the voice control (Talk/Back) buttons, and microphone. Press the TALK button on the steering wheel, and in a normal voice, say "testing". The Talk indicator on the screen should become green, and the voice level indicator should move to at least the 6th bar to pass. Next, press the Back button. This should cause the "Cancel" indicator to go green.
- If all of the communication lines connecting the system components, and the Talk/Back switch buttons/microphone check out OK (all block diagram items green), then the "OK" indicator will become green.
- If there is a problem with the system, the faulty system component item will change to red, and the screen will show "NG" in red. Use the troubleshooting index, and other diagnostic screens to help locate the problem.
- The indication on the screen may not change until the ignition switch is cycled. After repairing the affected cable or system, repeat this diagnostic.
  NOTE: Green boxes and green "OK" indicate that the communications lines (cables) are intact. This diagnostic does not necessarily imply that the individual components are functioning properly. For instance, the GPS antenna wire may be crushed, but still show as "green" . A road test, or other diagnostic may be necessary to fully test each component.

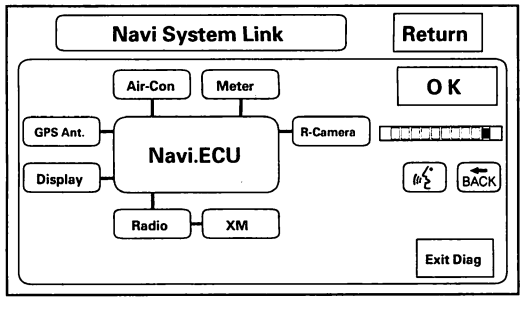

NOTE: The mic level indicator must reach the 6th bar or greater to pass the test.

Factory diagnostic screen "In Line Diag"

When a navigation control unit is powered up for the first time at the factory, the "factory diagnosis" screen (In Line Diag) shows up. Normally the factory performs the steps necessary to verify proper operation and terminate the "factory diagnostic". Until the proper confirmation sequence is performed, the screen will show up every time the vehicle is started.

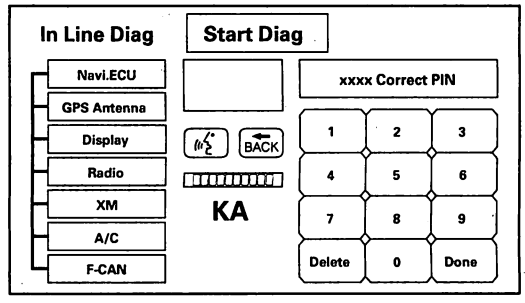

Follow the steps below to prevent the screen from showing up in the future:

- Hold down the buttons (Menu + Map/Guide + Cancel) for about 5 seconds (the "Select Diagnosis Items" screen will appear)
- Hold down the Map/ Guide button for 5—10 seconds (A screen with a "Complete" button, will appear)
- Touch "Complete", and then the "Return" button (the system may re-boot)
- Restart the vehicle, and confirm normal operation by completing the "PDI of the navigation system" Service Bulletin.

(cont'd)

Protected by AR

System Diagnosis Mode (cont'd)

Monitor Check

Overview of display unit

- The display unit communicates with the navigation unit over its own GA-Net bus. Information is sent to the navigation unit whenever the user activates the touch screen, or buttons. Information sent by the navigation unit to the display unit includes commands to control the LCD back light.
- The navigation unit also sends navigation and rear camera video information to the screen using the Red, Green, Blue, and Composite Video signals.
- The display unit is protected by the security system by daisy-chaining the security signal through it, and then passing the signal to the audio unit.
- The illumination input from the gauge brightness control provides back lighting for the buttons surrounding the screen.

These screens allow troubleshooting of the display unit. Select the item you want to troubleshoot, and follow the diagnostic instructions.

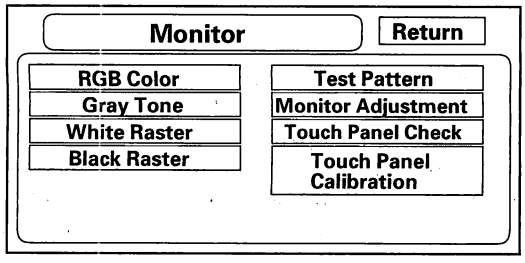

RGB Color
This screen verifies that the display unit is receiving the video (R, G, B and Composite sync) signals properly. The three primary colors should all be shown without distortion. The combination of all three should produce a central white section. If any of the colors are missing, troubleshoot for the color signal (see page 22-516). If the picture has lines in it or scrolls horizontally, or vertically, troubleshoot for a Composite sync problem (see page 22-518).

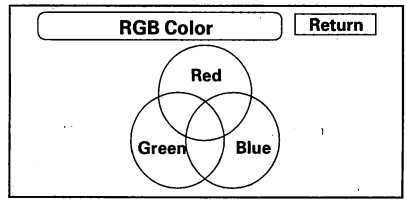

Gray Tone
This screen looks for problems with contrast. You should be able to see the changes from bar to bar across the scale. It is normal for the 2 bars on either side to appear the same.

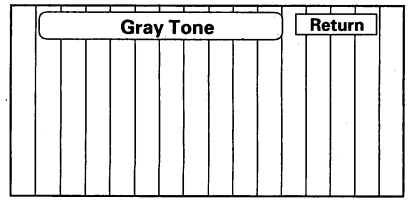

White Raster
The entire display must be shown in white.

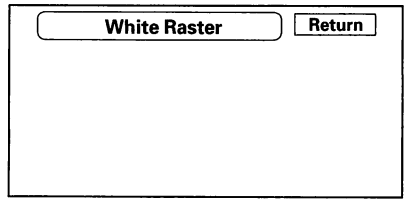

BACK

Protected by AR

Black Raster
The entire display must be shown in black.

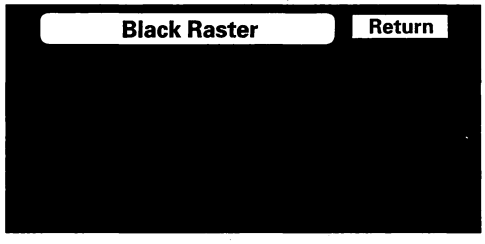

Color Pattern
The chart below shows the colors being used for the map and menu screens. This is for factory use only. To check the color signal use the "RGB Color" diagnostic found under the Monitor Check.

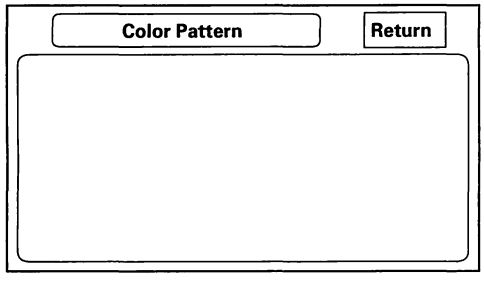

Monitor Adjustment
This allows the navigation display to be centered. Use the joystick to move the picture up/down or left/right. It is unlikely that you will ever need to adjust the monitor position. The "Default" button will reset the display position to factory specifications.

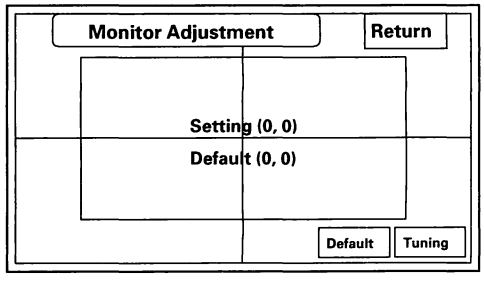

Touch Panel
The panel touch sensing system consists of a touch sensitive resistive membrane covering the display. Contrarily to other systems using infrared beams, the screen has to be physically "touched" to make it work. The display has capability of an almost infinite number of touch locations. However, to be compatible with earlier systems, the software only senses the locations shown on the diagram screen below. Every possible touch button position is shown on this diagram screen. Touching one of these should cause its color to reverse, and sound a "beep." If the touch locations are off slightly (by less than one touch location), use the "Touch Panel Calibration" diagnostic to re-align the touch "zones" with the screen image. If any areas of the screen either don't respond, or respond at some other location when touched, the replace the display unit.

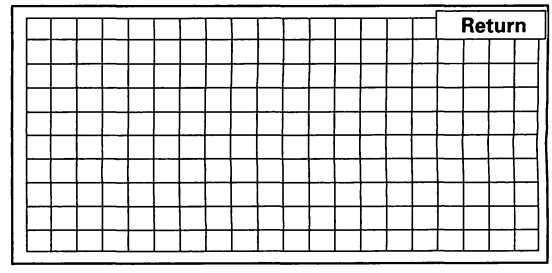

Touch Panel Calibration
Touch the "+" item on the screen. If the screen respond at some other location when touched, adjust responded point to touched point using the joy stick.

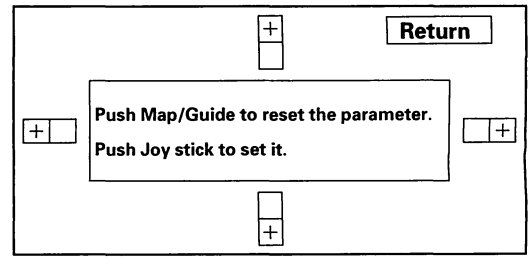

(cont'd)

Protected by AR

System Diagnosis Mode (cont'd)

Unit Check

Select the item you want to check and the diagnostic starts.

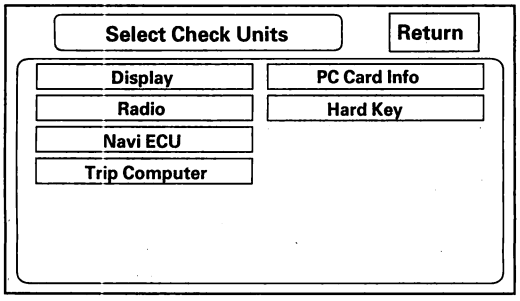

Display

This diagnostic performs additional checks on the communication bus between the control unit and the display. In addition, the internal electronics and touch screen functionality are confirmed.

- When the connection is NG, first check for loose terminals at the navigation unit and the display unit connections. Next check for an open or short in the communication line between the navigation unit and the display unit. If the line is found to have an open or short, replace the affected shielded harness.
- If the ROM or RAM is NG, replace the display unit.
- The version represents the software version in the display.

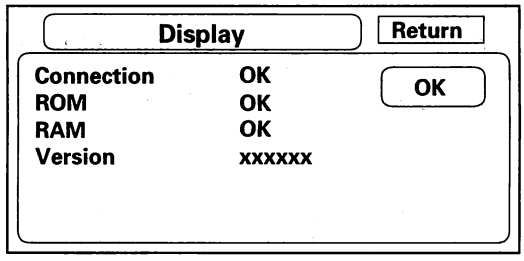

BACK

Protected by AR

Radio
This diagnostic checks the audio connections. If not OK, do the troubleshooting for audio system.

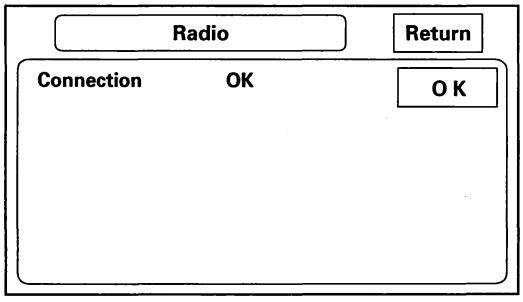

Navi ECU
This screen looks for problems the navigation unit. When this diagnostic is initiated, there is a delay of up to a minute while it runs.

NOTE: This diagnostic cannot be canceled when running.

- If "V-RAM" or "D-RAM" is NG, then replace the navigation unit.
- If "GPS" indicates "NG (ANT)", then check the entire GPS antenna wire from the navigation unit to the antenna. If the wire is crushed or damaged, try a known good antenna. If this diagnostic reads OK, then order a new GPS antenna. If the diagnostic still reads NG (ANT), then replace the navigation unit.
- "DVD ROM" represents the database version on the DVD. This information can also be found in Setup Screen 4 by selecting System Information.
- "Serial No." should be the same as the serial number found on the underside of the navigation unit. This number is needed to obtain the security code from the Interactive Network (IN) system.
- The Mem Clr is for factory use and should not be used unless instructed by the factory.
  Selecting this will erase the customer's settings, personal information, and anything else stored in memory.

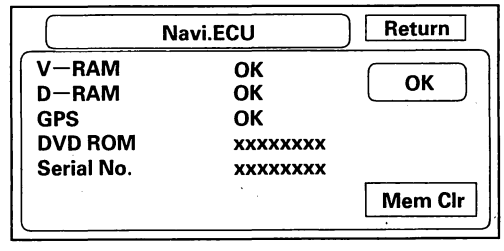

(cont'd)

Protected by AR

System Diagnosis Mode (cont'd)

Trip Computer
This screen shows current internal values used for trip computer calculations. They are for factory use only.

- Simulation "Start" is for factory use.
- "Data Save" should always be OFF. It is for factory use only.

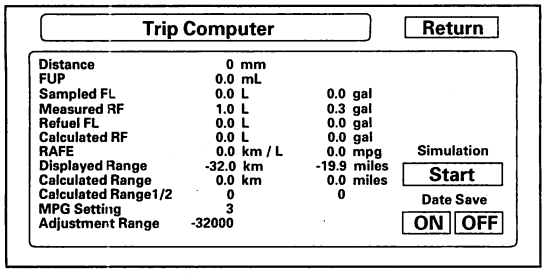

Trip Calibrate
By holding down the MENU button while on the "Trip Information" screen, you will see the screen below. This screen allows you to adjust the vehicle range (distance to empty).

- "Calc. RANGE" is the calculated value.
- "Disp. RANGE" is the distance displayed on the trip computer "Range" field. If it reads "0", the vehicle will have enough fuel to travel apporoximately 20 miles.
- Range Tuning can be adjusted "+" or "—" to adjust the range to empty. It is recommended that this value not be changed.

NOTE: Setting the range offset too low (+10) could result in the vehicle running out of gas before the display reads "0". Make changes slowly when changing this value.

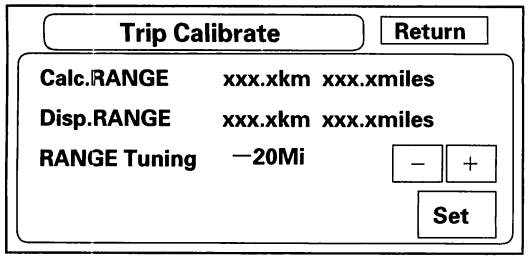

PC Card info.
There is no PC Card in the PC slot, and the screen should say, "PC Card is not inserted."

NOTE: Do not insert any card or object into the slot.

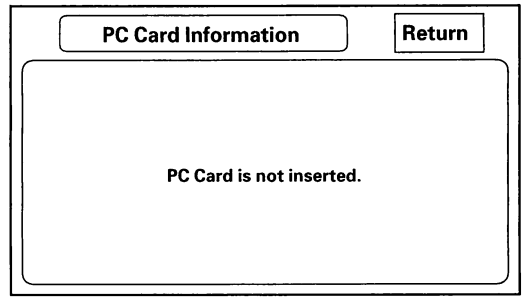

If the factory provides a PC card and instructs you to insert a card, then the screen displays the Manufacturer, and Product Name as shown in the following screen.

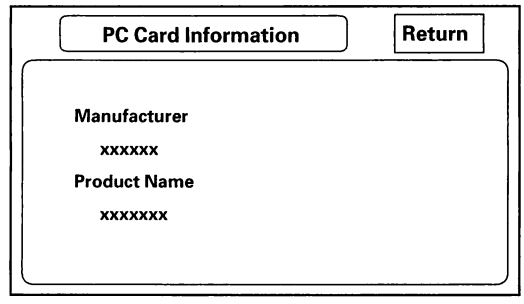

BACK

Protected by AR

Hard Key
This diagnostic tests the joystick, and the buttons that surround it. For this model, the joystick and buttons utilize the GA-Net bus for communication to the navigation control unit.

To complete the test, touch each button, and move the joystick to each indicated position. As each function is tested, the corresponding button on the display should highlight. To exit, push in and hold the joystick.

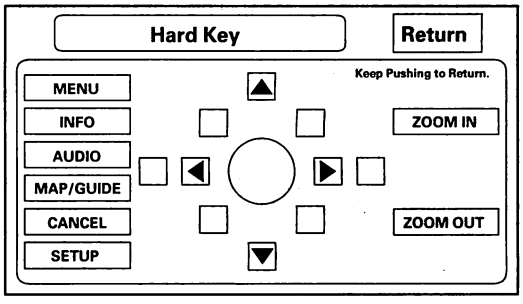

Car Status

This screen is used to confirm that navigation unit is properly receiving input signals. Signals equal to (0) are OFF, and signals equal to (1) are ON. If the value on the display does not match the actual vehicle status, then check the wire carrying the signal.

- VSP-Vehicle Speed Pulse from PCM
  (Pin 6 of C-connector)
  a) OFF (0) when vehicle is not moving
  b) ON (1) when vehicle is moving

The VSP comes from the PCM as a dedicated signal. Internally, the navigation unit compares the actual VP on the map against street data to adjust the pulse to speed scaling factor. As this scaling factor becomes more accurate, the "Level" gradually increases from 0 to 10 (see the Tire Calibrate diagnostic screen).

- BACK-Reverse indication from taillight relay
  (Pin 5 of C-connector)
  a) OFF (0) when shift lever is in any position other than reverse
  b) ON (1) when shift lever is in reverse

The Back signal is used by the navigation unit to allow the map screen to show the VP moving backwards when in reverse and to activate the rearview camera. This signal is needed because the Speed Pulse has no direction indication.

(cont'd)

Protected by AR

System Diagnosis Mode (cont'd)

This signal is obtained off of the F-CAN bus. For problems, perform F-CAN troubleshooting. Diagnostic trouble codes (DTCs) for the F-CAN can be retrieved with the HDS (Honda Diagnostic System).

- ILL-Illumination Indication
  (Pin 5 of navigation unit A-connector)
  a) OFF (0) when parking lights, or headlights are off
  b) ON (1) when parking lights, or headlights are off

This signal is used by the navigation unit to determine whether to put the navigation screen into the Day or Night brightness mode. (Setup screen 1)

- DVD Lid-senses if DVD door is open
  a) (Close) when door is closed
  b) (Open) when door is open

The navigation unit has a micro switch to detect this. If open is indicated when the door is closed, replace the navigation unit.

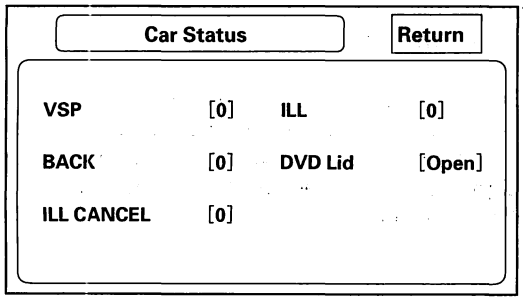

F-CAN System Link

F-CAN (Fast Controller Area Network) passes information between processors on the network. For example, the F-CAN network is used to pass fuel pulses between the PCM and the navigation unit for the trip computer function. The F-CAN network uses a communication protocol that transmits data at 500 Kbps.

- If the diagnostic screen below reads NG with the ignition switch ON (II), then diagnostic trouble codes (DTCs) for the F-CAN can be retrieved with the HDS (Honda Diagnostic System). The data displayed in the ID boxes is irrelevant.
- For more details on troubleshooting the F-CAN, refer to the multiplex system.

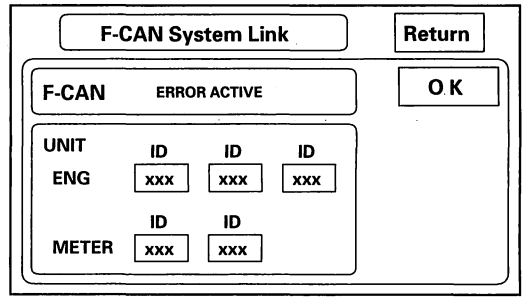

BACK

Protected by AR

GPS Information

This screen shows the current status of GPS reception. The circular diagram shows the current location of the GPS satellites (yellow dots) as they would appear in the sky. The outer circle represents the horizon (0 degrees elevation). The middle and inner circles represents 30 and 60 degrees respectively. The very center of the diagram (90 degrees elevation) is directly overhead. Naturally, nearby obstructions, like tall buildings will block satellites in that direction. That is why it is necessary to be in an open area to effectively troubleshoot GPS reception issues. There are always 24 "active" GPS satellites in orbit. Because satellites fail, and have to be removed from service, spares always parked in orbit, ready to be activated. This is why the PRN (satellite ID number) can be greater than 24.

NOTE: To use this screen for troubleshooting, the vehicle should be out side away from buildings, tall trees, and high-tension wires for at least 10 minutes with the engine running.

- The "Number of Satellites" box shows the number of acquired satellites (maximum of 12). It should contain 3 or more icons. If not troubleshoot for "GPS icon is white, or not shown" (see page 22-521).
- The "Current Position" shows latitude, longitude, and elevation (in meters). If there are less than 3 satellites, the elevation can be grossly inaccurate.
- The Date/Time field shows the current date, and also a time that includes daylight savings and other offsets entered by the customer in Setup screen 2 "Adjust Time Zone/Clock".

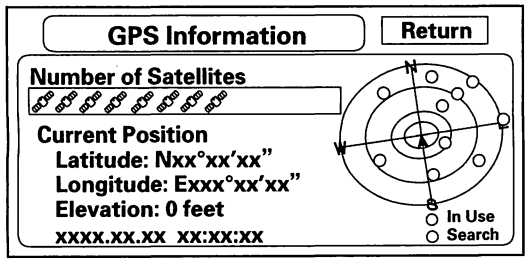

GPS Detail

By pressing and holding the MENU button for 10 seconds, a GPS Detail screen is displayed. This screen displays real time incoming satellite positional data. Most of the information shown on this screen is for factory use, however some of the data can indicate partial GPS signal interference.

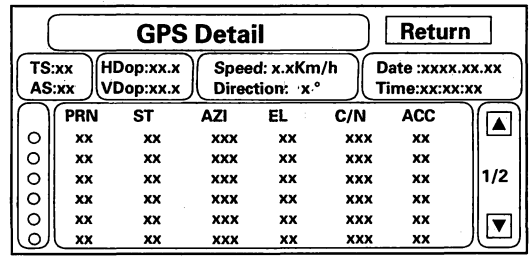

(cont'd)

Protected by AR

System Diagnosis Mode (cont'd)

- The box TS/AS and HDop/VDop is for factory use.
- The Speed and Direction information is updated in real time when driving, and can be used to detect intermittent speed sensor problems.
- The Date/Time Information is the same as in Setup screen "Adjust Time Zone/Clock".
- If the "3D" icon is shown above the yellow dots, this implies that at least 4 satellites are available for map positioning, and the "GPS" indicator on the map screen will be green. See the "Global Positioning System" detailed explanation in the "System Description".
- If the row of data in the table below begins with a "yellow dot", the AZI and EL fields can be used to locate each satellite on the circular GPS diagram (see prior screen).

NOTE: The data shown in the GPS Detail screen is an example only.

The table of values shown on the screen below has the following columns:

Column	Description	Problem indication
Active	Active satellites (Yellow Dot)	If "3D" is missing, follow GPS icon is white, or not shown troubleshooting (see page 22-521).
PRN	The satellite ID number	
ST	The status: 0= cannot view or searching, 2= acquiring	If all 0, then, follow GPS icon is white, or not shown troubleshooting (see page 22-521).
AZI	Azimuth, the angle (0—360) clockwise from north	
EL	Elevation from the horizon (90 deg is overhead)	
C/N	N/A	Healthy signal is 49-52, no signal: 27-33
ACC	N/A	

Yaw Rate

This diagnostic checks the yaw rate sensor in the control unit. This device detects when the vehicle turns, and repositions the vehicle position icon on the map screen. For more detailed information, see the yaw rate sensor theory of operation under "System Description"

- "Sensor" indicates the voltage output from the yaw rate sensor. It should indicate about 2.500 volts when stopped.
- "Offset" is the reference voltage or standard within the yaw rate sensor. It also should indicate about 2.500 volts when stopped.
- A "sensor" output voltage HIGHER than the "Offset" voltage indicates that the vehicle is turning to the right.
  A "sensor" output voltage LOWER than the "Offset" voltage indicates that the vehicle is turning to the left.
- The yaw rate offset, and sensor should both indicate about 2.500 volts when stopped. If either reads zero, or 5.000 volts, replace the navigation unit.

BACK

Protected by AR

- The yaw rate offset and sensor should be within +/—0.01 V of each other when stopped. The sensor value should change relative to the offset as the car is turned while driving. If not, replace the navigation unit.

Example: Car stopped

Normal		**Abnormal**	
Offset	2.526 V	Offset	2.526 V
Sensor	2.516—2.536 V	Sensor	2.623 V

Example: Car turning

Normal		**Abnormal**	
Offset	2.526 V	Offset	2.526 V
Sensor	2.678 V (right turn) 2.478 V (left turn)	Sensor	2.623 V (no change on turns)

- The settings "CCW Cal Factor", "CW Cal Factor", and "Set" are for factory use only. THIS SHOULD NEVER BE USED.
- Touch "Tuning" to view small but gradual yaw rate problems.

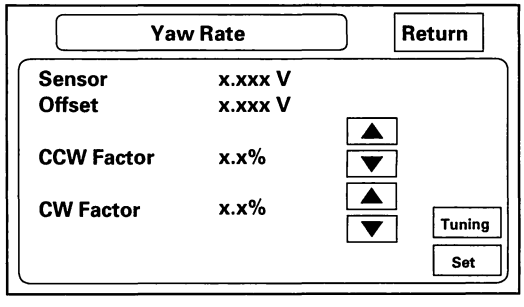

Yaw Rate Tuning
This diagnostic allows you to graphically display problems with the yaw rate sensor.

- The "ANG-Disp" value accumulates any differences between the "offset", and "sensor" voltages (see Yaw Rate diagnostic). When the sensor is healthy, the random changes in these two voltages generally cancels out, so the value is 0. However if one voltage is consistently higher than the other, then the "ANG-Disp" value accumulates the constant change.
- The "Reset" button temporarily clears the angular accumulation (ANG-Disp), and clears the display dots.
- Do not touch the "CCW" or "CW", or "Set" buttons. These are used for factory setup only.

Two tests are explained below. For gross problems with the sensor, the stationary test usually confirms whether the sensor is defective. For yaw rate issues related to driving, perform the road test described below.

1. Stationary test: If the "VP" icon spins in place and the "ANG-Disp" value slowly increases or decreases in value, the yaw rate sensor is defective. Replace the Navigation control unit.
2. Road test: Drive the vehicle on a very straight road. Enter the diagnostic mode, select "Yaw rate", and touch the "Tuning" button. While driving down a straight road, the white "dots" should trace a straight line across the screen. However, if you are driving on a straight road, and you notice the dots constantly dropping down or heading up as you drive, the navigation control unit's yaw sensor is defective. You can touch "Reset" to clear "ANG-Disp", and dotted line.

3. If either test above fails, please enter "Yaw rate sensor defective" for the problem description, on the "Navigation core return form".

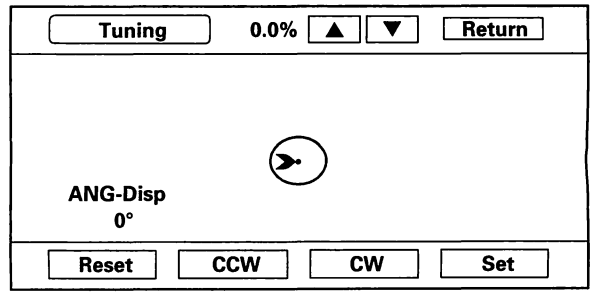

(cont'd)

Protected by AR

System Diagnosis Mode (cont'd)

Tire Calibrate

As the vehicle moves, the navigation system receives speed pulses from the PCM. These pulses are converted using a conversion factor to a mph speed that moves the vehicle position (VP) on the map. The navigation system has an internal tuning function that generates and refines this factor based on actual driving. The "Level" indicates the status of the tuning. At initialization, it begins at 0, and increases to 10 as the navigation system is used.

- The "Auto Tuning" is factory set to "ON", and should remain on.
- The "LEVEL" indicates the tuning status. If it is less than 10, the unit is still calibrating.
- The "Tire-Cal. Tuning" and Set should not be used. It is for factory use only.

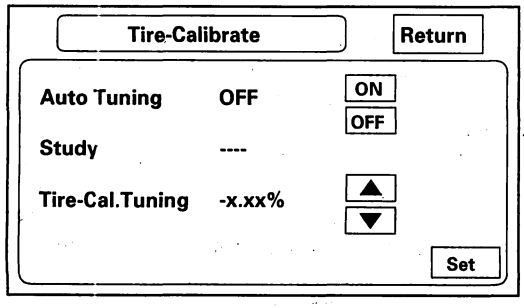

Functional Setup

Select the item you want to check.

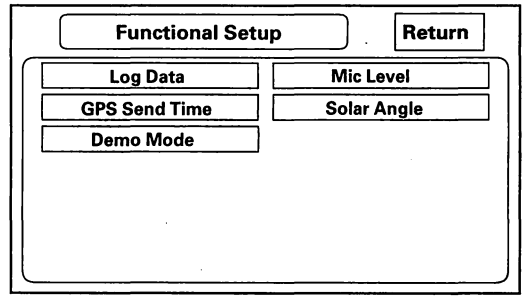

BACK

Protected by AR

Log Data
This screen allows the factory to collect log data to troubleshoot navigation system issues.

- Normally there is no card in the "PC Card slot", and the PC slot door should always be closed.

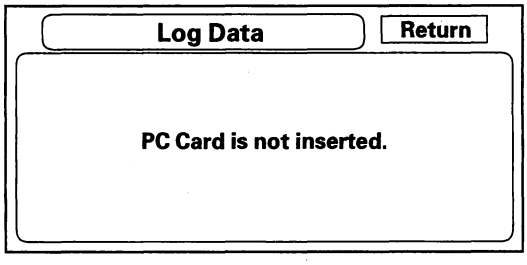

- However, if the factory provides a PC card and instructs you to insert it into the card slot (label side up), and then slide the PC Card door shut. If instructed by the factory, select "Gyro. Sensor Logs ON". Follow the factory procedure for gathering test data, and properly ending the test.

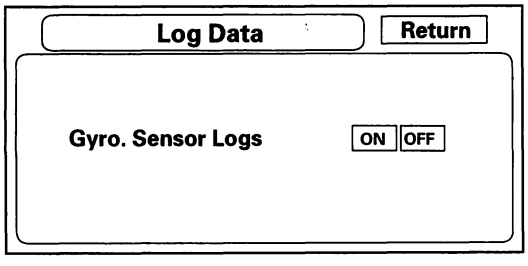

GPS Send Time
This screen is for factory use only, do not adjust. It allows adjustment of the GPS time. This display updates in real time.

- "GPS Time" is the time as received from the GPS satellites. It is in Greenwich Mean Time (GMT).
- "System Time" is the internal time used by the navigation unit to calculate your position on the map. It is also in Greenwich Mean Time (GMT).
- "Display Time" is the time shown on Setup screen 2 "Adjust Time Zone/Clock", and reflects any changes due to daylight savings time or time adjustments entered by the customer.
- Date, Hour, Minute, and "Set" should not be used.

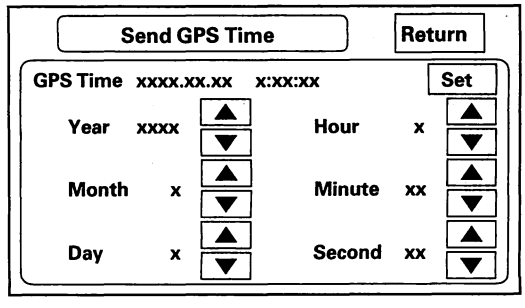

Demo Mode
This screen is for factory use only, and should always be set to "OFF". Occasionally this setting is turned "ON" when vehicles are being used at Auto Shows or similar events. Turning this feature on, allows the navigation system to automatically follow a route to a destination when the vehicle is stationary.

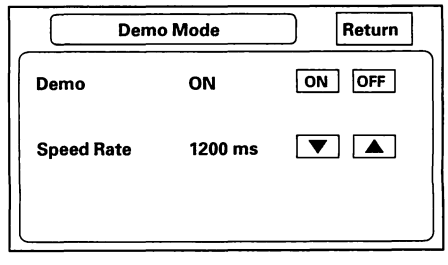

(cont'd)

Protected by AR

System Diagnosis Mode (cont'd)

Mic Level
This diagnostic allows you to independently test the microphone and the Talk/Back buttons. They are used to activate the voice control system. The microphone is located near the map light in the ceiling. It is directional, and works best if the voice is coming from the drivers seat.

- Press the Talk button on the steering wheel, and in a normal voice say "testing". The TALK indicator on the screen should momentarily become green, and the text "Now Recording..." should appear in yellow. In addition, the Mic Level indicator should move at least to the 6th bar. If the Talk indicator on the screen does not briefly become green, then check the wiring from the Talk button to the navigation unit. If there is no "Mic Level" movement when you speak, then you should check the wire running from the microphone to the control unit.
- Press the Back button on the steering wheel. This should cause the Cancel indicator on the screen to momentarily become green. If it does not briefly change to green, then check the wiring from the steering wheel Back button to the navigation unit.

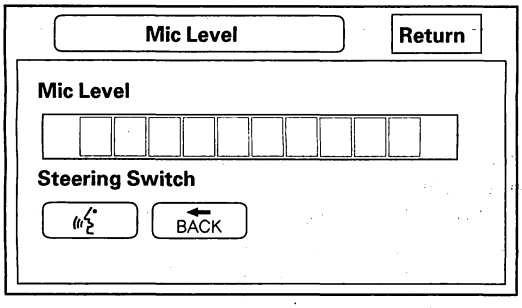

Solar Angle
This screen is used to graphically display the sun's position as determined by GPS. The navigation system uses the sun's angle, along with the sunlight sensor to control the driver/passenger A/C air flow. The heat that must be removed by the A/C unit varies, depending on the angle of the sun entering the vehicle. This screen is for factory use only, and should not be adjusted.

- The screen shows a circular diagram of the sky oriented in the direction that the vehicle is pointing. During daylight hours a red dot is shown, representing the direction and elevation of the sun. The outer circle represents the horizon (0 degrees elevation). The middle circle is 30 degrees, the center circle is 60 degrees, and the very center is directly overhead (90 degrees).
- "Auto" should always be on (yellow).
- The "Angle", "Dir", and "Reliability" settings are used by the factory to simulate the sun's position for debugging this function.

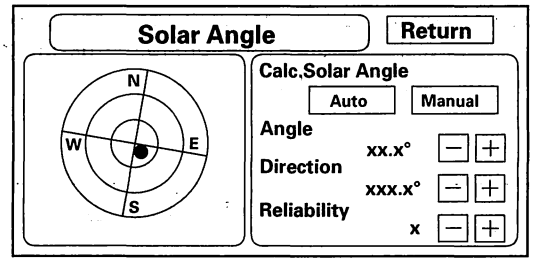

BACK

Protected by AR

Version

This screen displays the current version of the program, and allows the loading of a new version of the program either from a CD/DVD or from a PC card.

- Program Flash is the version of the navigation program in memory.
- Program Disc is the version of the program on the DVD.
- The Values "IPL", "APL", "DBOOT", and "System uCom" are for factory use.
- The value for "Models" should begin with the letters "SDA"; and indicates that the navigation unit is for an ACCORD. If any other letters appear after "Models", then verify the part number on the underside of the navigation unit, and replace the navigation unit if necessary.
- "Download" should never be touched unless instructed by the factory. Touching download overwrites the navigation software version in memory, with the software version on the DVD.

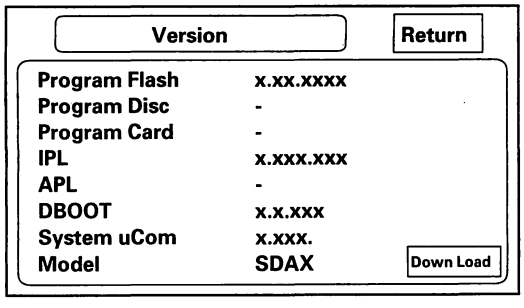

NOTE: If any model number other than SDAX is displayed, replace the navigation unit with the correct part. The model code tells the navigation unit what software to load off the DVD.

(cont'd)

Protected by AR

System Diagnosis Mode (cont'd)

Error Message Table

Screen Error Message	Solution
Navigation system is unable to acquire a proper GPS signal.	Make sure there is nothing on the rear package tray blocking the GOS antenna. If not, move the vehicle to an open space away from tall buildings, trees, etc. Rear window tinting and after-market devices can affect the GPS reception.
Navigation unit door is open or No DVD disc installed. Please check system.	Make sure the navigation DVD is installed with the label side up and the navigation unit door is fully snapped closed.
PC card slot door is open. Please check system.	Make sure that the sliding door for the PC card is fully closed.
No DVD disc, please check system.	Check that the navigation DVD is installed with the label side up.
Display temp is too high. System will shut down until display cools down.	This message will appear briefly when the display temperature is too high, and then the display will turn off until the temperature cools down. The system will turn back on when the display cools down.
Outside temperature is low, system will take a while to start up.	The temperature is below −30°C and the navigation ECU has difficulties reading the DVD. The system will start up when the temperate warms up.
DVD disc reading error (unformatted), please consult your dealer.	Check the DVD source for deep scratches or other damage. Make sure you are using an official Honda navigation DVD (white in color). The system cannot read other mapping databases or video DVDs. If the problem persists, see your dealer.
Route has not been completed. Please try again from a different location.	Routing to or from a place (new area) that is not in the database. Try planning a different route to or from a different location.
No alternate route found. Original route will be guided.	No alternate route method was found. The original route will be used.
This destination cannot be found in database.	The destination was not found in the database. Try another destination nearby, or select the destination with the joystick.

BACK

Protected by AR

Forced Starting of Display

Special Tools Required
SCS service connector 07PAZ-0010100

1. Connect the SCS service connector (A) to the navigation service check connector (B) located behind the navigation unit.

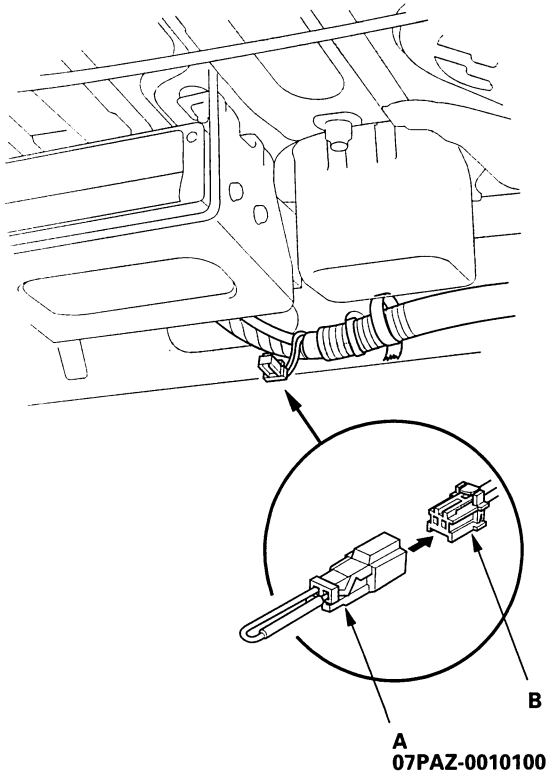

2. Turn the ignition switch ON (II).
3. Check that the system starts up and then changes to the "Navi System Link" screen.
4. Remove the SCS connector.

   NOTE: If the system fails to display the "Navi System Link" screen, refer to no picture is displayed (see page 22-515).

DVD-ROM Replacement

NOTE: When the DVD-ROM is re-inserted or replaced, a map match must be done (see page 22-489).

1. Turn the ignition switch ON (II).
2. Push the open button (A) of the navigation unit (B) located in the trunk area.

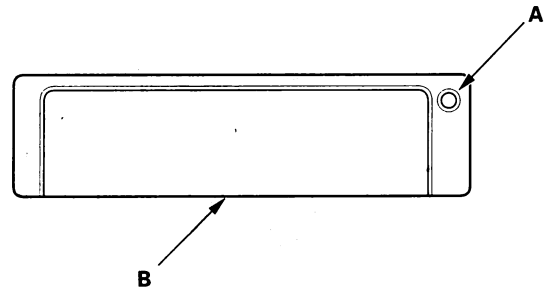

3. Press the EJECT button.
4. Remove the DVD-ROM.
5. Insert the new DVD-ROM.
6. Push the open button. Do not turn the ignition switch OFF, until data is down loaded to navigation unit.

   NOTE: After servicing, the front cover must be closed. If you start up the navigation system with the front cover open, the display will indicate. "Navigation unit door is open or No DVD Disk installed. Please check system".

Protected by AR

Navigation System ('06 model)

Navigation Unit Removal/ Installation

NOTE: If the navigation unit is replaced or disconnected, a map match must be done (see page 22-489).

1. Remove the navigation unit from the trunk area.

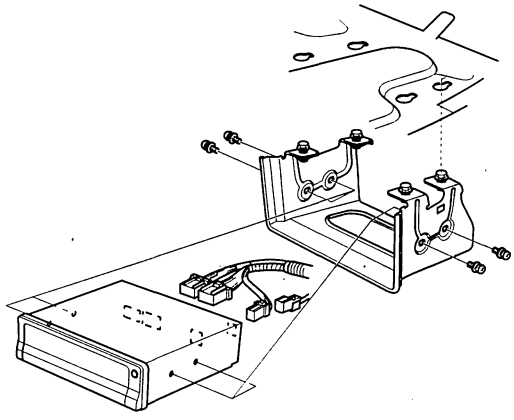

2. Remove the navigation unit bracket (B) from the passenger's seat.
3. Remove the bracket from the navigation unit (C).
4. Install in the reverse order of removal.

GPS Antenna Removal/Installation

1. Remove the rear shelf (see page 20-108).
2. Remove the GPS antenna (A).

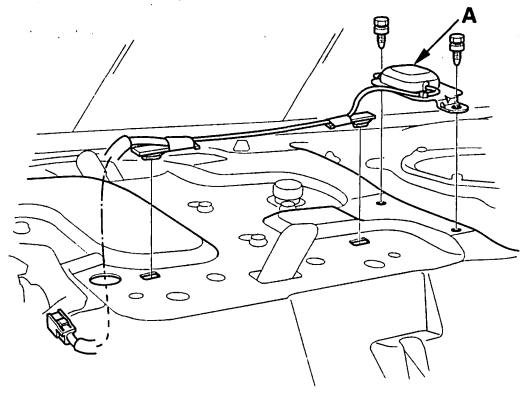

3. Install in the reverse order of removal.

BACK

Protected by AR

Voice Control Switch Removal/Installation

1. For 4 door, remove the driver's airbag (see page 23-197), then remove the voice control switch (see page 17-23).
   For 2 door, remove the voice control switch cover (A) from left side of the steering wheel.

   Illustration shows 2 door models

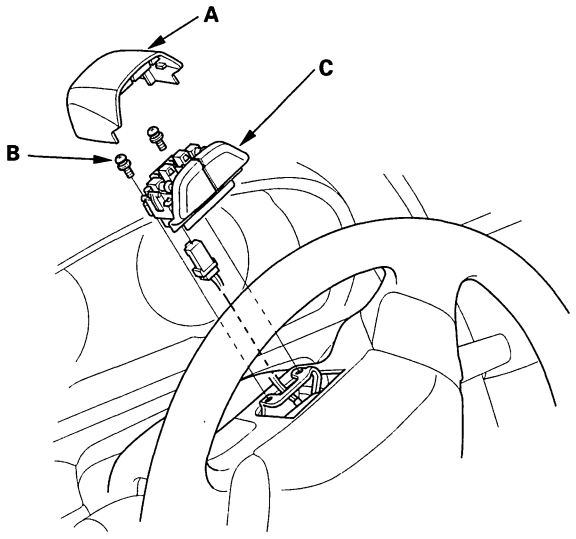

2. Remove the two screws (B) from the voice control switch (C), then remove the voice control switch.
3. Disconnect the voice control switch connector.
4. Install in the reverse order of removal.

Protected by AR

BACK

Protected by AR

Restraints

Restraints
Special Tools 23-2

Seat Belts
Component Location Index 23-3
Front Seat Belt Replacement 23-5
Rear Seat Belt Replacement 23-12
Inspection 23-15

SRS (Supplemental Restraint System)
Component Location Index 23-17
Precautions and Procedures 23-19
General Troubleshooting Information 23-30
DTC Troubleshooting Index 23-38
Symptom Troubleshooting Index 23-47
System Description 23-48
Circuit Diagram 23-52
DTC Troubleshooting 23-58
Symptom Troubleshooting 23-186
Component Replacement/Inspection After Deployment 23-194
Driver's Airbag Replacement 23-197
Front Passenger's Airbag Replacement 23-198
Side Airbag Replacement 23-199
Side Curtain Airbag Replacement 23-200
Airbag Disposal 23-206
Cable Reel Replacement 23-210
SRS Unit Replacement 23-213
Side Impact Sensor (First) Replacement 23-214
Side Impact Sensor (Second) Replacement 23-215
OPDS/ODS Unit Replacement 23-216
Front Impact Sensor Replacement 23-217
Front Passenger's Weight Sensor Replacement 23-218
Front Passenger's Weight Sensor Unit Replacement 23-219
Driver's Seat Position Sensor Replacement 23-220
Passenger's Airbag Cutoff Indicator Illumination Bulb Test 23-221



Protected by AR

Restraints

Special Tools

Ref. No.	Tool Number	Description	Qty
①*1	07HAZ-SG00500	Deployment Tool	1
②	07PAZ-0010100	SCS Service Connector	1
③	07SAZ-TB4011A	SRS Inflator Simulator	1
④*2	07TAZ-001020A	Backprobe Adapter, 17 mm	2
⑤	07XAZ-S1A0200	SRS Simulator Lead E	1
⑥	07XAZ-SZ30100	SRS Simulator Lead F	1
⑦	07YAZ-S3AA100	SRS Simulator Lead H	1
⑧	070AZ-SAA0100	SRS Short Canceller	1

* 1: Included in SRS Tool Set 07MAZ-SM5000B
* 2: Use with the stacking patch cords from T/N 07SAZ-001000A, Backprobe Set.

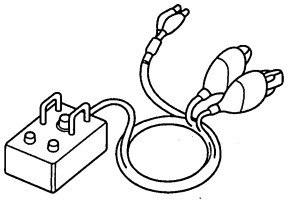

①

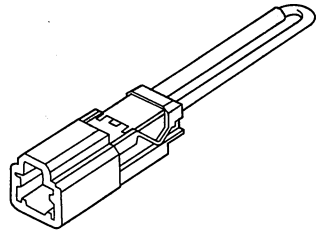

②

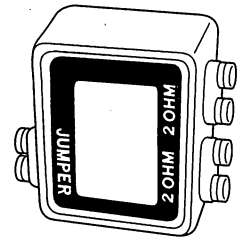

③

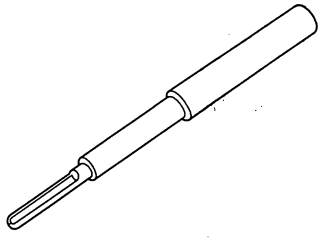

④

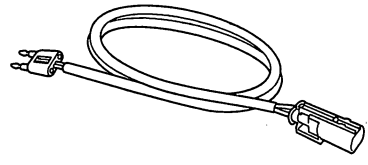

⑤

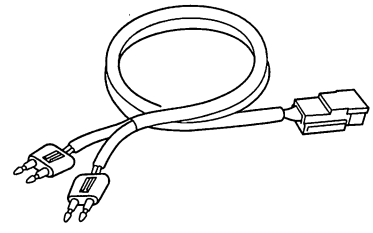

⑥

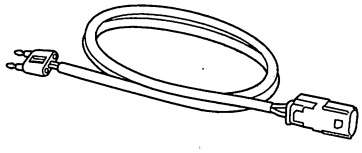

⑦



⑧

BACK

Protected by AR

Component Location Index

2-door

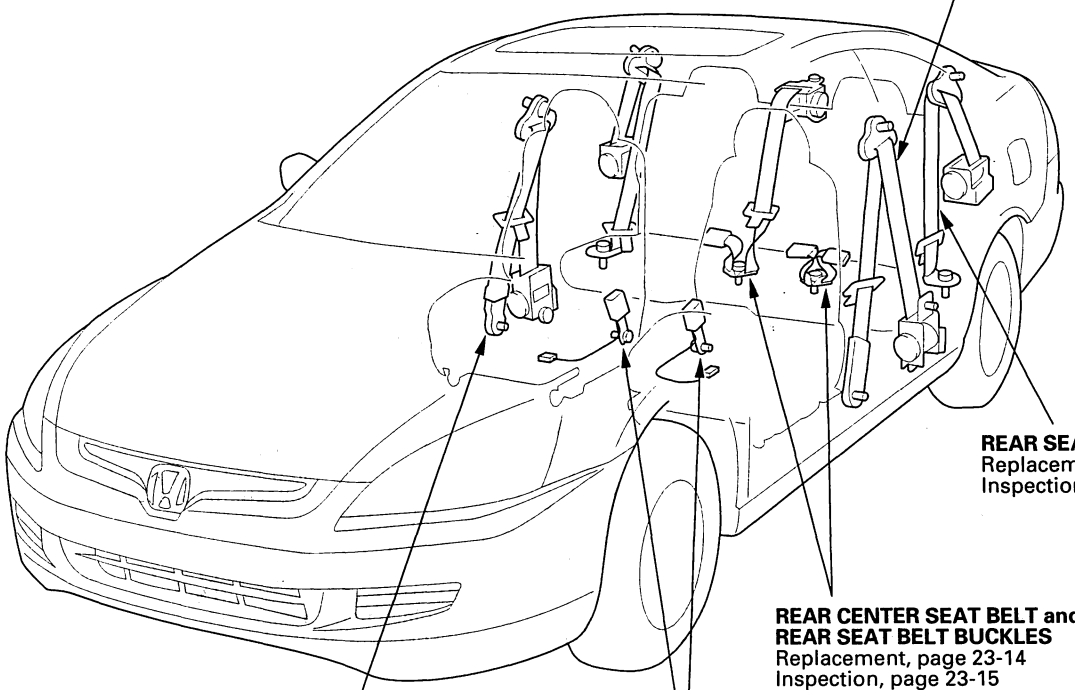

Protected by AR

Component Location Index (cont'd)

4-door

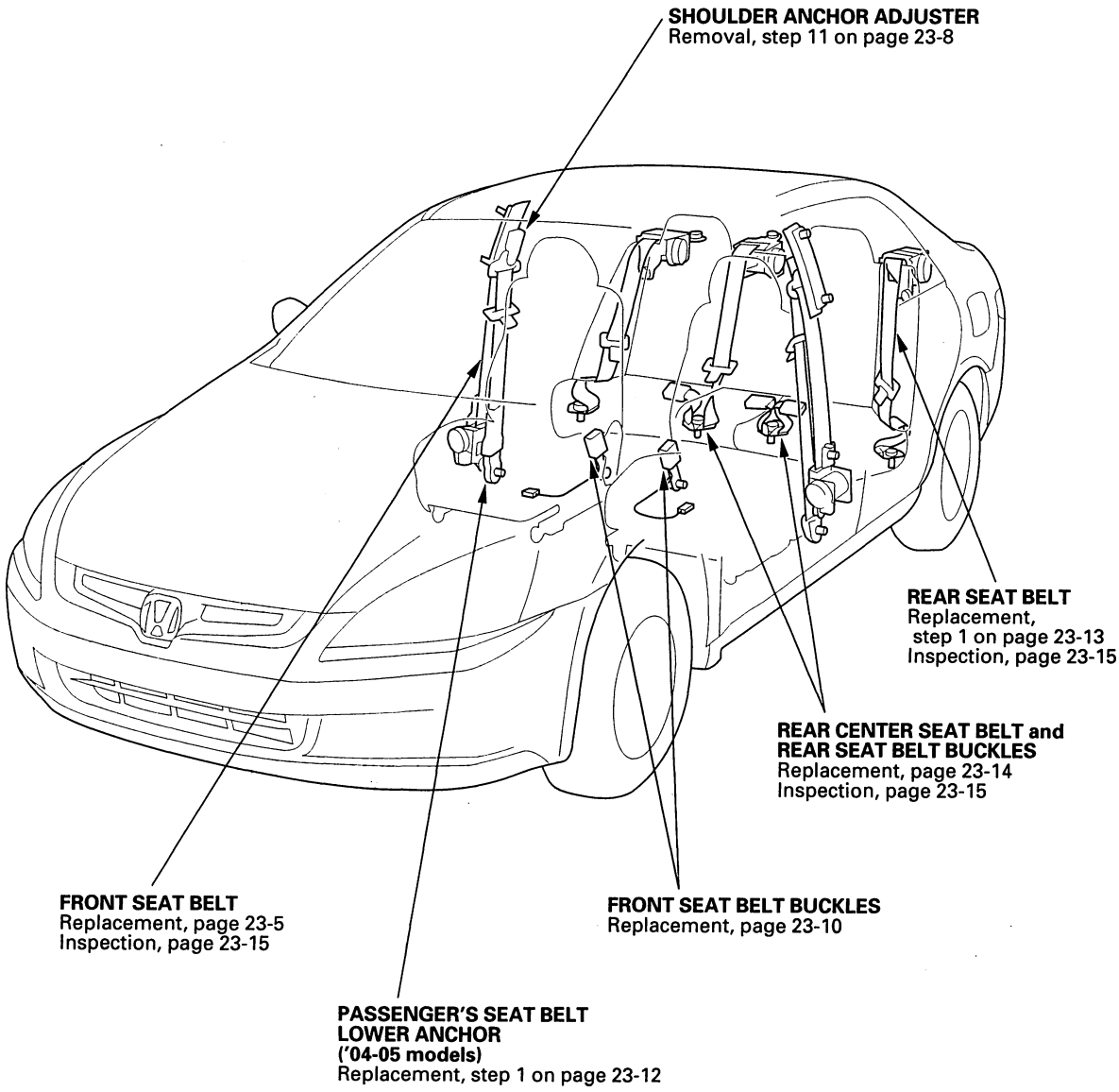

BACK

Protected by AR

Front Seat Belt Replacement

SRS components are located in this area. Review the SRS component locations (see page 23-17) and the precautions and procedures (see page 23-19) before performing repairs or service.

NOTE: Check the front seat belts for damage, and replace them if necessary. Be careful not to damage them during removal and installation.

Front Seat Belt - 2-door

1. Make sure you have the anti-theft codes for the audio and the navigation system, then write down the frequencies for the audio preset buttons.
2. Slide the front seat forward fully.
3. Disconnect the negative cable from the battery, and wait at least 3 minutes before beginning work.
4. Remove the seat belts.
   - '03 model driver's and passenger's seat belts and '04-06 models driver's seat belt: Remove the lower anchor cap (A), and remove the lower anchor bolt (B).
   - '04-06 models passenger's seat belt: Carefully insert the tip of a small screwdriver (C) through the hole in the back of the front seat belt lower anchor cover (D) and into the hole in the front seat belt lower anchor (E).
     Unlock the lower anchor by pushing in on the screwdriver. Remove the screwdriver, and then detach the front seat belt anchor plate (F) and anchor cover from the lower anchor.

'03 model

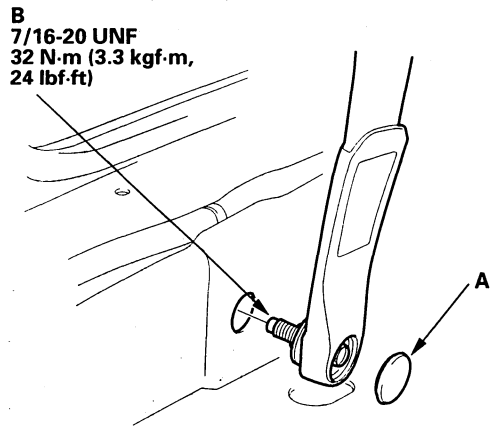

'04-06 models

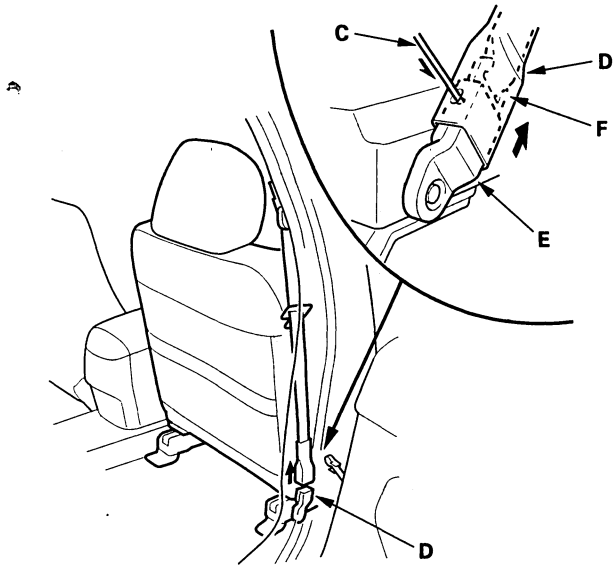

5. Remove these items:
   - Side trim panel (see page 20-106).
   - Middle cross-member gusset (see page 20-226).

(cont'd)

Protected by AR

Front Seat Belt Replacement (cont'd)

6. Remove the upper anchor cap (A), and remove the upper anchor bolt (B). Release the clip (C), then release the front seat belt (D) from the seat belt guide (E).

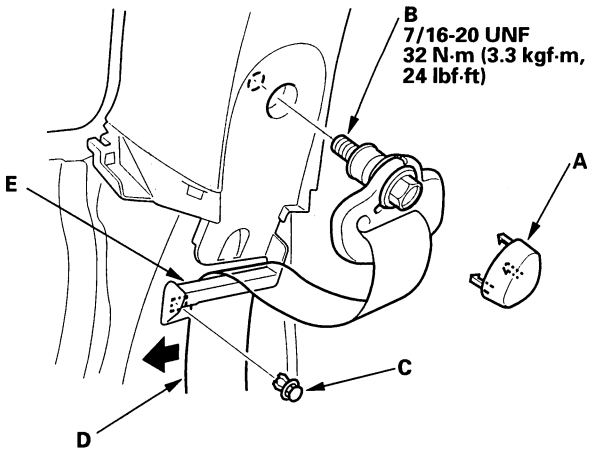

7. Disconnect the seat belt tensioner connector (A). Remove the retractor mounting bolt (B) and the retractor bolt (C), then remove the front seat belt (D) and retractor (E).

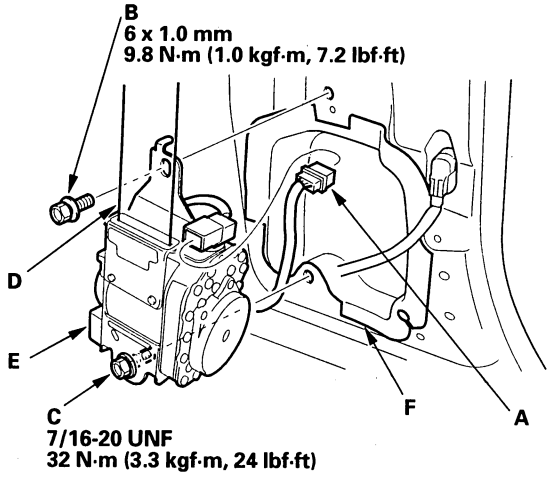

8. If necessary, remove the front seat belt protector (F).

9. Install the belt in the reverse order of removal, and note these items:

- Check that the retractor locking mechanism functions (see page 23-15).
- Assemble the washers, collars, and bushings on the upper and lower anchor bolts as shown.
- If the seat belt tensioner has been deployed, replace the front seat belt protector with a new one.
- Apply medium strength liquid thread lock to the anchor bolts before reinstallation.
- Before installing the anchor bolts, make sure there are no twists or kinks in the front seat belt.
- Make sure the seat belt tensioner connector is plugged in properly.
- '04-06 models passenger's seat belt: Before attaching the front seat belt lower anchor, make sure there are no twists or kinks in the belts. Triangle marks (A) on the anchor plate (B) and on the lower anchor (C) must face the same side. Insert the hook on the anchor plate into the lower anchor, and be sure that the lower anchor is locked securely.
- Reconnect the negative cable to the battery.
- Enter the anti-theft codes for the audio and the navigation system, then enter the customer's audio station presets.
- Reset the clock.

Upper anchor bolt installation

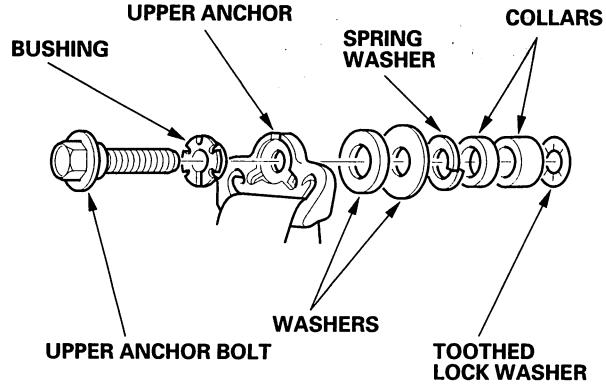

BACK

Protected by AR

Lower anchor bolt installation

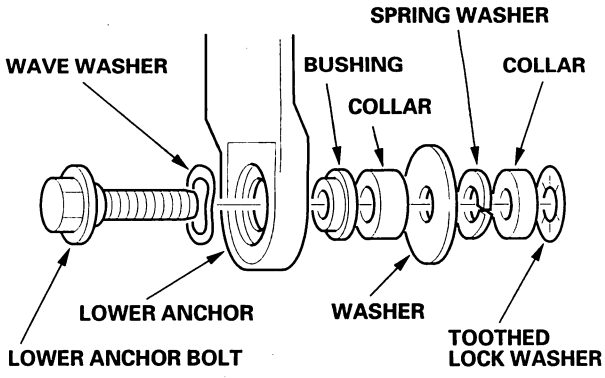

Front seat belt lower anchor installation ('04-06 models passenger's)

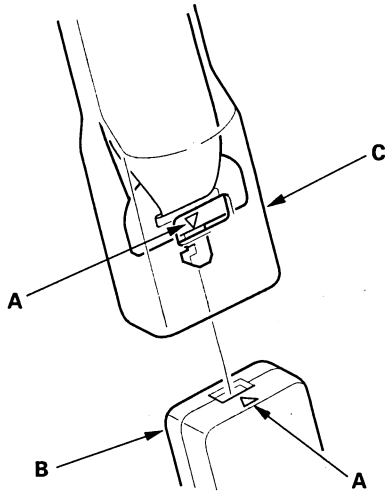

Front Seat Belt - 4-door

1. Make sure you have the anti-theft codes for the audio and the navigation system, then write down the frequencies for the audio preset buttons.
2. Slide the front seat forward fully.
3. Disconnect the negative cable from the battery, and wait at least 3 minutes before beginning work.
4. '03 model driver's and passenger's seat belts and '04-06 models driver's seat belt: Remove the lower anchor cap (A) , and remove the lower anchor bolt (B).

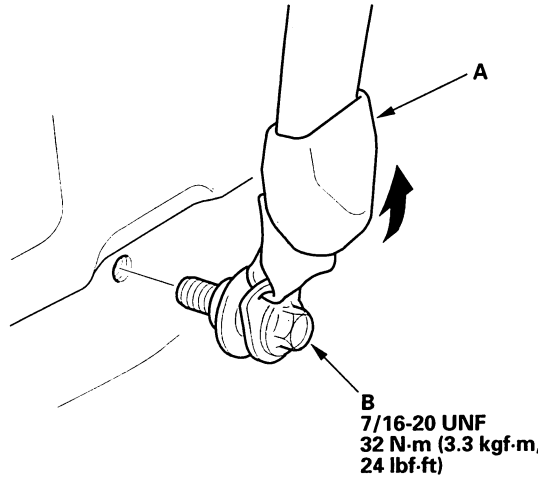

(cont'd)

Protected by AR

Front Seat Belt Replacement (cont'd)

5. '04-06 models passenger's seat belt: Carefully insert the tip of a small screwdriver (A) through the hole in the back of the front seat belt lower anchor cover (B) and into the hole in the front seat belt lower anchor (C).
   Unlock the lower anchor by pushing in on the screwdriver. Remove the screwdriver, and then detach the front seat belt anchor plate (D) and anchor cover from the lower anchor.

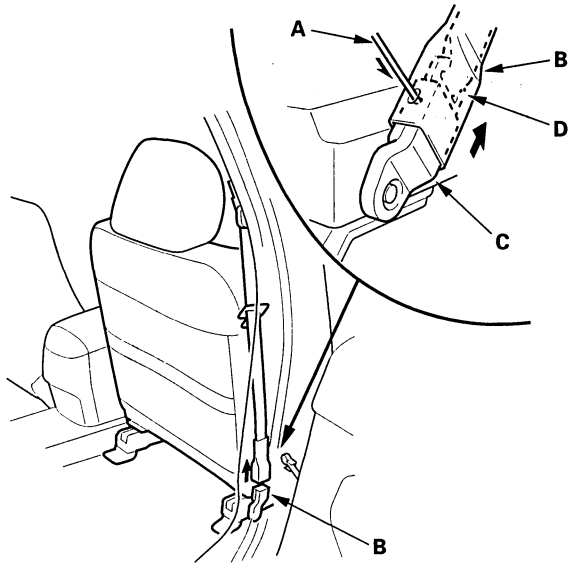

6. Remove the B-pillar lower trim, without side curtain airbags (see page 20-96), with side curtain airbags (see page 20-102).

7. Remove the upper anchor cover (A), and remove the upper anchor bolt (B).

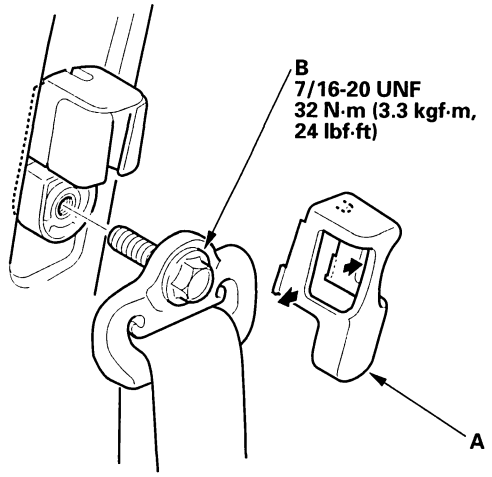

8. Disconnect the seat belt tensioner connector (A). Remove the upper retractor mounting bolt (B) and the lower retractor bolt (C), then remove the front seat belt (D) and retractor (E).

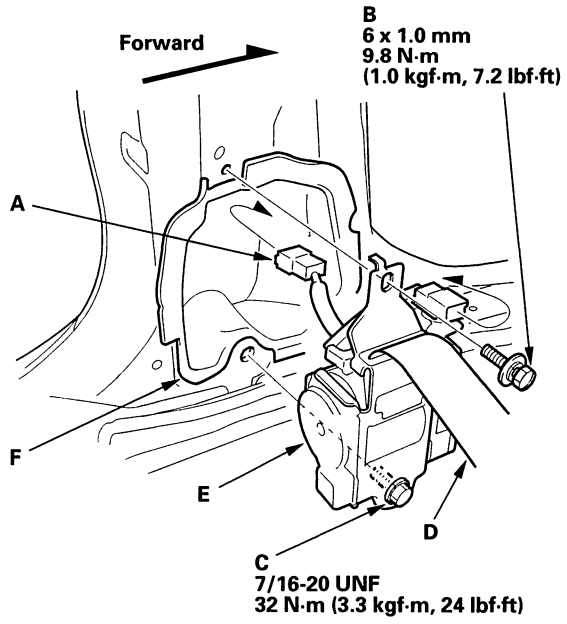

9. If necessary, remove the front seat belt protector (F).

10. Remove the B-pillar upper trim, without side curtain airbags (see page 20-96), with side curtain airbags (see page 20-102).

11. Remove the shoulder anchor adjuster (A).

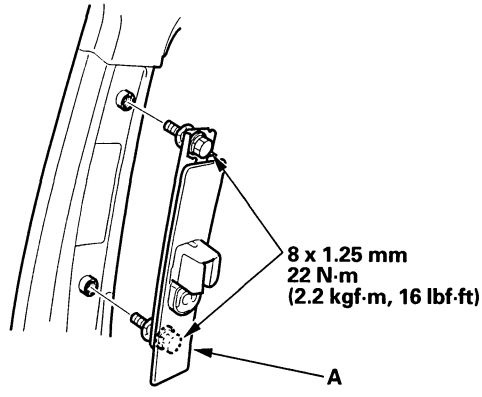

BACK

Protected by AR

12. Install the seat belt in the reverse order of removal, and note these items:

- Apply medium strength liquid thread lock to the anchor bolts before reinstallation.
- Check that the retractor locking mechanism functions (see page 23-15).
- Assemble the washers, collars, and bushings on the upper and lower anchor bolts as shown.
- If the seat belt tensioner has been deployed, replace the front seat belt protector with a new one.
- Before installing the anchor bolts, make sure there are no twists or kinks in the front seat belt.
- Make sure the seat belt tensioner connector is plugged in properly.
- '04-06 models passenger's seat belt: Before attaching the front seat belt lower anchor, make sure there are no twists or kinks in the belts. Triangle marks (A) on the anchor plate (B) and on the lower anchor (C) must face the same side. Insert the hook on the anchor plate into the lower anchor, and be sure that the lower anchor is locked securely.
- Reconnect the negative cable to the battery.
- Enter the anti-theft code for the audio and the navigation system, then enter the customer's audio station presets.
- Reset the clock.

Upper anchor bolt installation

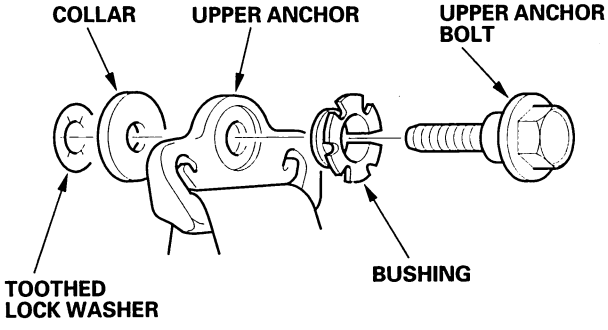

Lower anchor bolt installation

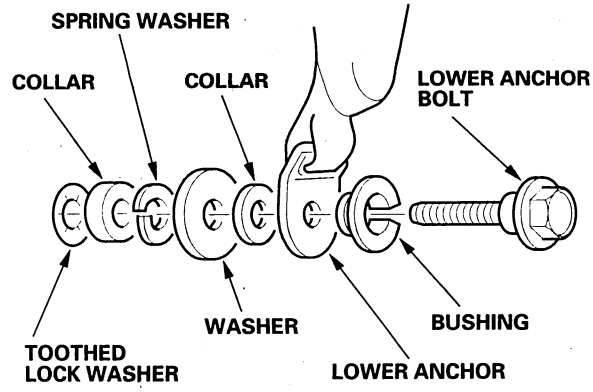

Front seat belt lower anchor installation ('04-06 models passenger's)

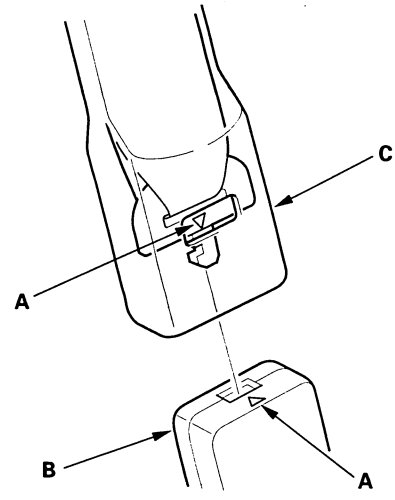

(cont'd)

Protected by AR

Front Seat Belt Replacement (cont'd)

Seat Belt Buckle

1. Make sure you have the anti-theft codes for the audio and the navigation system, then write down the frequencies for the audio preset buttons.
2. Disconnect the negative cable from the battery, and wait at least 3 minutes before beginning work.
3. Remove the front seat (see page 20-144).
4. Manual seat: Remove the center cover.
   - '03 model 2-door (see page 20-149)
   - '04-06 models 2-door (see page 20-150)
   - '03 model 4-door (see page 20-151)
   - '04-06 models 4-door passenger's (see page 20-152)
5. Detach the seat belt switch connector (A) and harness clip (B).

Manual seat/Manual height adjustable seat

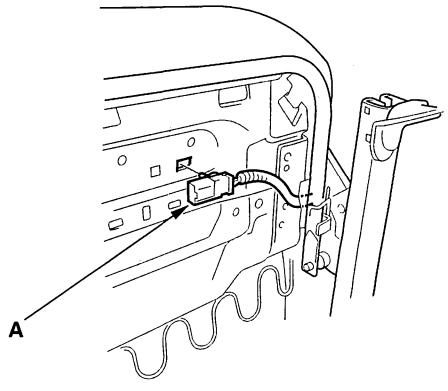

2-way power seat

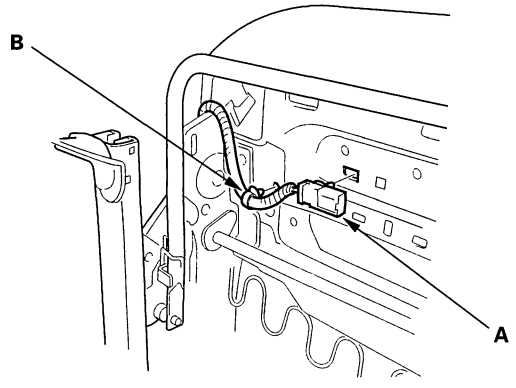

8-way power seat

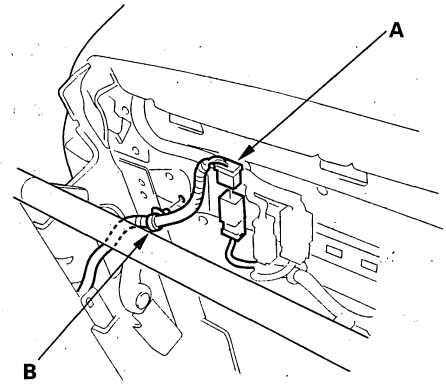

6. Remove the center anchor bolt (A) and detach the harness clip (B), then remove the seat belt buckle (C).

Manual seat/Maual height adjustable seat

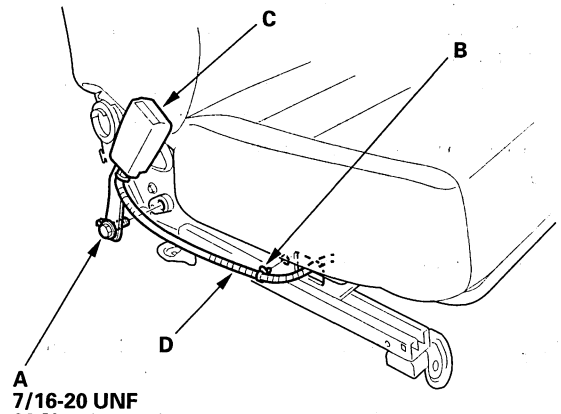

A
7/16-20 UNF
32 N·m (3.3 kgf·m, 24 lbf·ft)

BACK

Protected by AR

2-way power seat

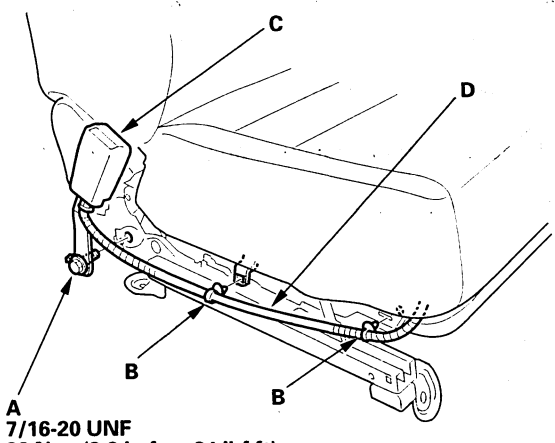

8-way power seat

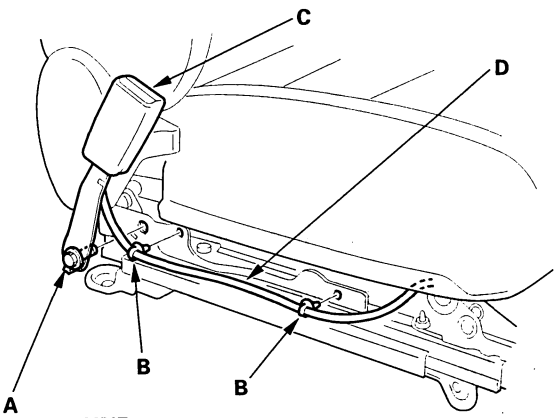

7. Pull the seat belt switch harness (D) out through the space between the seat cushion and the seat linkage (except manual seat), or through the hole in the seat track (manual seat).

8. Install the buckle in the reverse order of removal, and note these items:

- Apply medium strength liquid thread lock to the center anchor bolt before reinstallation.
- Assemble the washers on the center anchor bolt as shown.
- Move the seat all the way forward and backward and confirm that the seat buckle harness is routed properly.
- Reconnect the negative cable to the battery.
- Enter the anti-theft codes for the audio and the navigation system, then enter the customer's audio station presets.
- Reset the clock.

Center anchor bolt installation

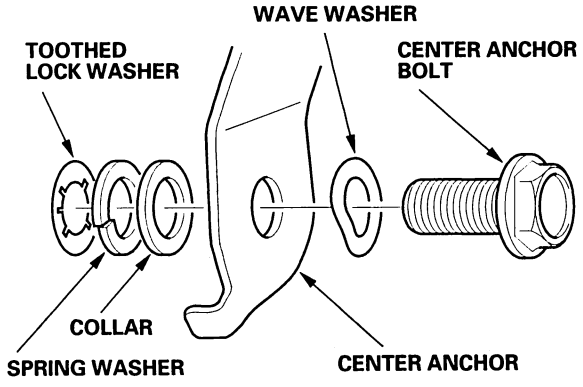

(cont'd)

Protected by AR

Front Seat Belt Replacement (cont'd)

Passenger's Seat Belt Lower Anchor '04-06 Models

1. Make sure you have the anti-theft codes for the audio and the navigation system, then write down the frequencies for the audio preset buttons.
2. Disconnect the negative cable from the battery, and wait at least 3 minutes before beginning work.
3. Remove the front seat (see page 20-144).
4. Remove the lower anchor bolt (A), then remove the lower anchor (B).

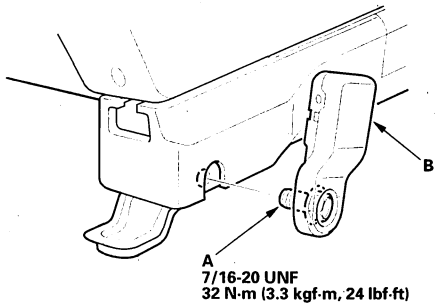

5. Install the buckle in the reverse order of removal, and note these items:
   - Apply medium strength liquid thread lock to the lower anchor bolt before reinstallation.
   - Assemble the washers, collars, and bushing on the lower anchor bolt as shown.
   - Reconnect the negative cable to the battery.
   - Enter the anti-theft codes for the audio and the navigation system, then enter the customer's audio station presets.
   - Reset the clock.

Lower anchor bolt installation

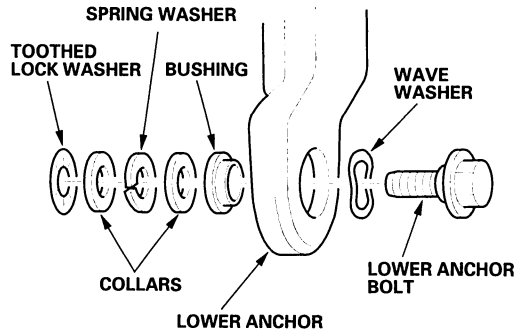

Rear Seat Belt Replacement

NOTE: Check the rear seat belts for damage, and replace them if necessary. Be careful not to damage them during removal and installation.

Rear Seat Belt - 2-door

1. Remove the rear seat cushion (see page 20-173).
2. Remove the lower anchor bolt (A).

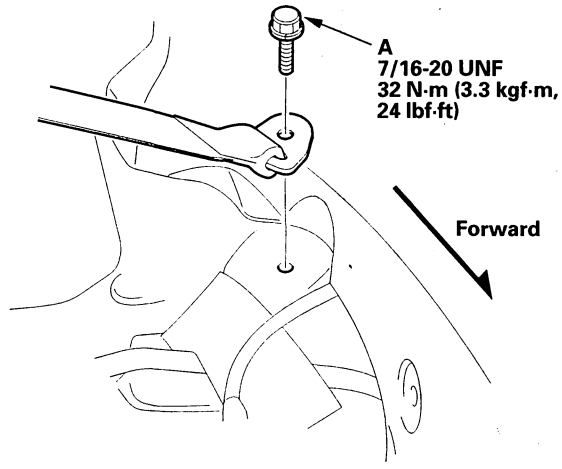

3. Remove the side trim panel (see page 20-106).
4. Remove the upper anchor bolt (A).

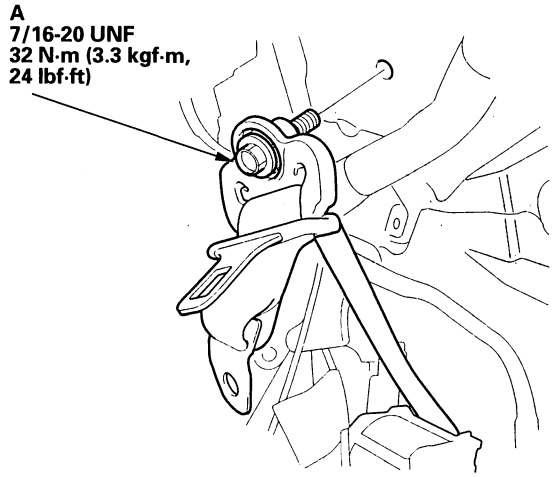

BACK

Protected by AR

5. Remove the retractor bolt (A), then remove the rear seat belt (B) and retractor (C).

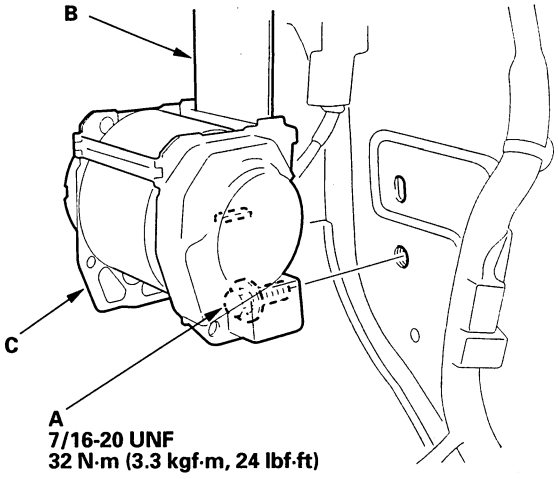

6. Install the seat belt in the reverse order of removal, and note these items:

- Apply medium strength liquid thread lock to the anchor bolts before reinstallation.
- Check that the retractor locking mechanism functions (see page 23-15).
- Assemble the washers, collar, and bushing on the upper anchor bolt as shown.
- Before installing the anchor bolts, make sure there are no twists or kinks in the rear seat belt.

Upper anchor bolt installation

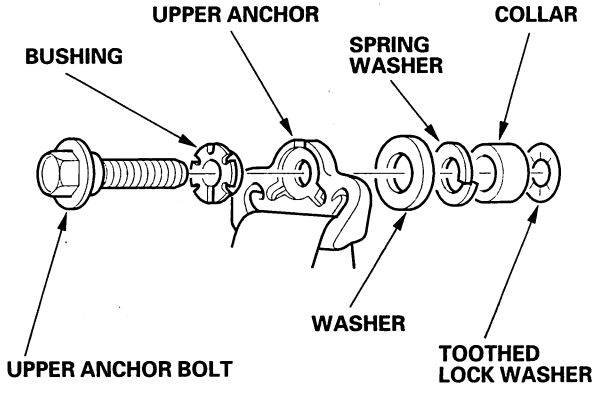

Rear Seat Belt - 4-door

1. Remove the rear seat side bolster (see page 20-174).

2. Remove the center anchor bolt (A).

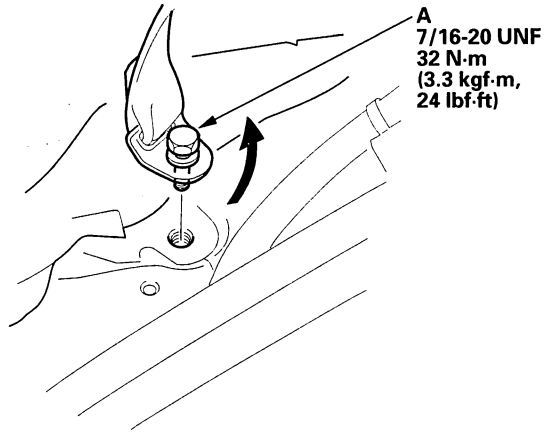

3. Remove the rear shelf (see page 20-110).

4. Remove the retractor mounting bolt (A) and the retractor bolt (B), then remove the rear seat belt (C) and retractor (D).

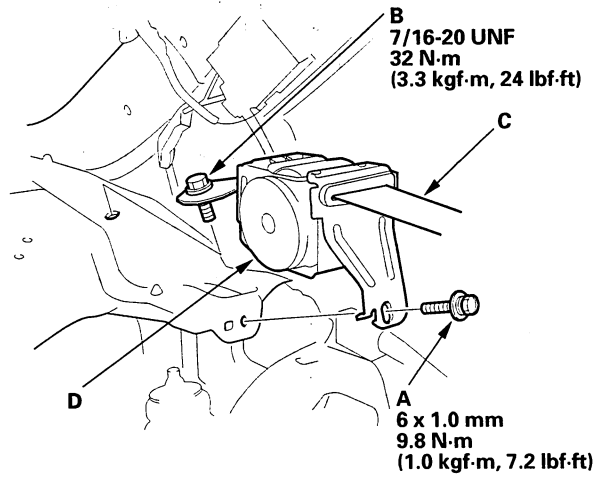

5. Install the seat belt in the reverse order of removal, and note these items:

- Apply medium strength liquid thread lock to the anchor bolt before reinstallation.
- Check that the retractor locking mechanism functions as described (see page 23-15).
- Before installing the anchor bolt, make sure there are no twists or kinks in the rear seat belt.

(cont'd)

Protected by AR

Rear Seat Belt Replacement (cont'd)

Center Belt and Seat Belt Buckles

1. Remove the rear seat cushion, 2-door (see page 20-173), 4-door (see page 20-174).

2. Remove the center anchor bolts (A), and remove the seat belt buckles (B).

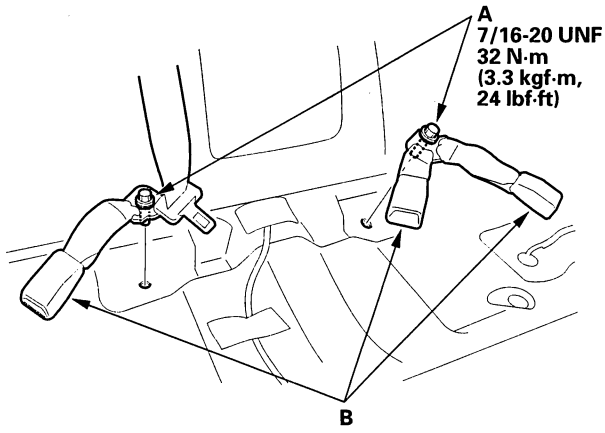

3. Remove the rear shelf, 2-door (see page 20-108), 4-door (see page 20-110).

4. Remove the retractor mounting self-tapping ET screw (A) and the retractor bolt (B), then remove the center belt (C) and retractor (D).

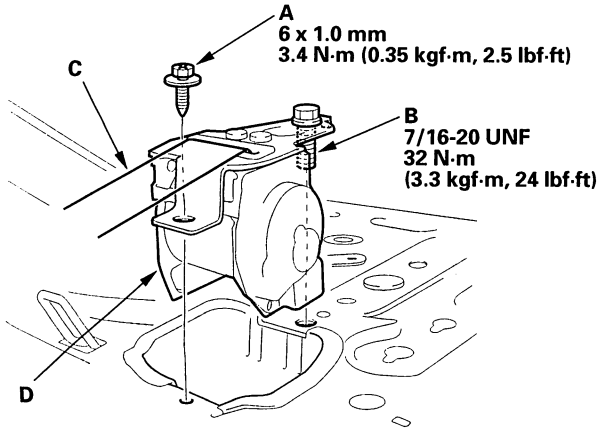

5. Remove the protector (A).

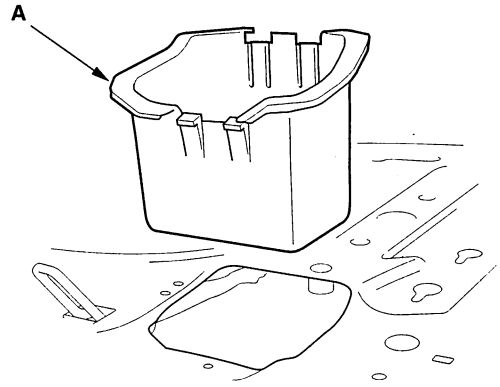

6. Install the seat belt and buckles in the reverse order of removal, and note these items:

- Apply medium strength liquid thread lock to the anchor bolts before reinstallation.
- Check that the retractor locking mechanism functions (see page 23-15).
- Assemble the washers on the center anchor bolt as shown.
- Before installing the center anchor bolt, make sure there are no twists or kinks in the center belt.

Center anchor bolt installation

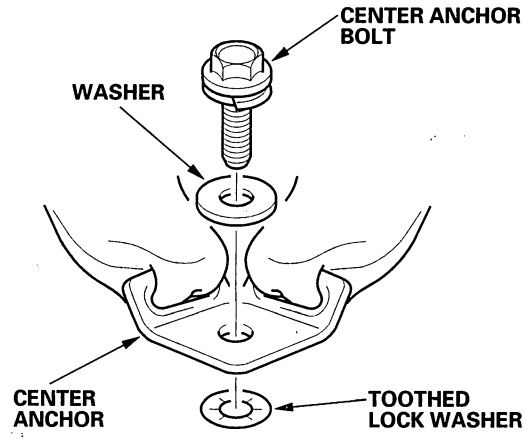

BACK

Protected by AR

Inspection

SRS components are located in this area. Review the SRS component locations (see page 23-17) and the precautions and procedures (see page 23-19) before performing repairs or service.

Retractor

1. Before installing the retractor, check that the seat belt can be pulled out freely.

2. Make sure that the seat belt does not lock when the retractor (A) is leaned slowly up to 15 ° from the mounted position. The seat belt should lock when the retractor is leaned over 40 °. Do not attempt to disassemble the retractor. The front seat belt retractor with seat belt tensioner is shown, the front seat belt retractor without seat belt tensioner is similar.

Front - 2-door

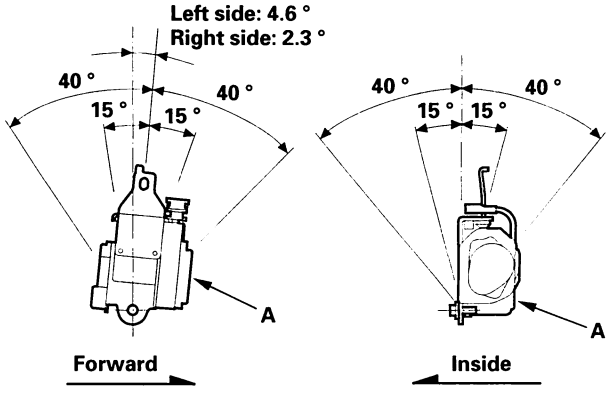

Front - 4-door

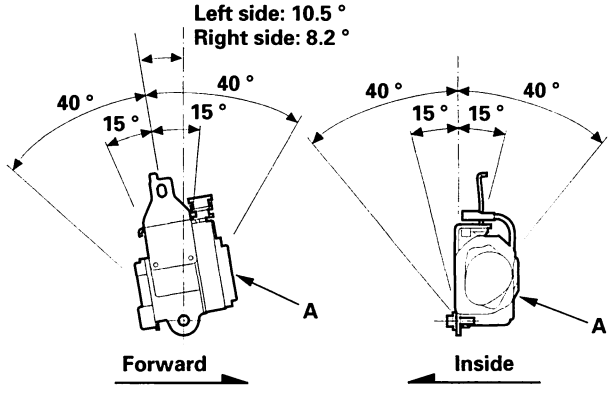

Rear - 2-door

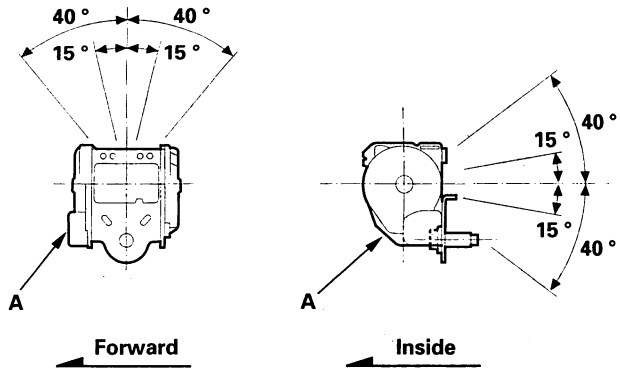

Rear - 4-door

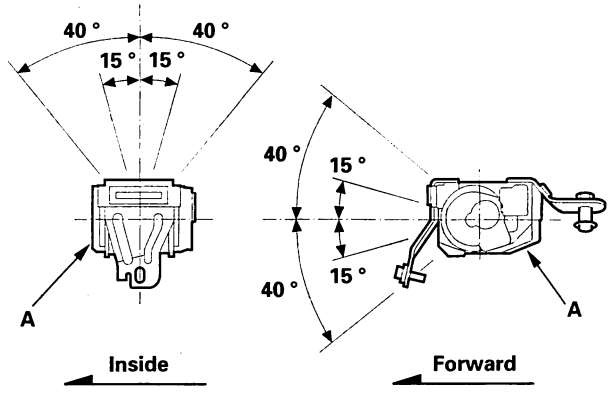

Rear center

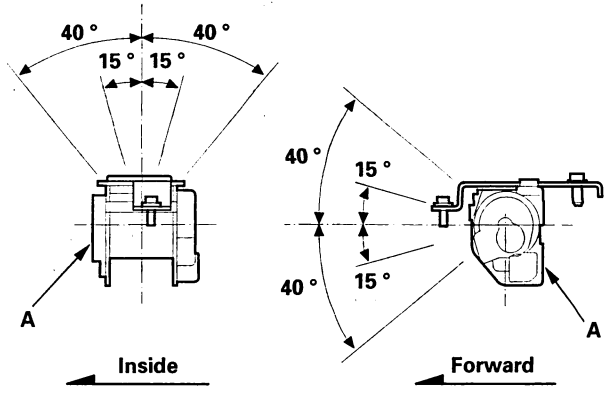

3. Replace the seat belt with a new assembly if there is any abnormality. Do not disassemble any part of the seat belt for any reason.

(cont'd)

Protected by AR

Inspection (cont'd)

In-vehicle

1. Check that the seat belt is not twisted or caught on anything.

2. After installing the anchors, check for free movement on the anchor bolts. If necessary, remove the anchor bolts and check that the washers and other parts are not damaged or improperly installed.

3. Check the seat belts for damage or discoloration. Clean with a shop towel if necessary. Use only soap and water to clean.

   NOTE: Dirt build-up in the loops of the upper anchors can cause the seat belts to retract slowly. Wipe the inside of the loops with a clean cloth dampened in isopropyl alcohol.

4. Check that the seat belt does not lock when pulled out slowly. The seat belt is designed to lock only during a sudden stop or impact.

5. Make sure that the seat belt will retract automatically when released.

6. For each passenger's seat belt, check the seat belt retractor locking mechanism ALR (automatic locking retractor). This function is for securing child seats.

   –1 Pull the seat belt all the way out to engage the ALR. The seat belt should retract with a ratcheting sound, but not extend. This is normal.
   –2 To disengage the ALR, release the seat belt and allow it to fully retract, then pull the seat belt out part-way. The seat belt should retract and extend normally.

7. Replace the seat belt with a new assembly if there is any abnormality. Do not disassemble any part of the seat belt for any reason.

BACK

Protected by AR

Component Location Index

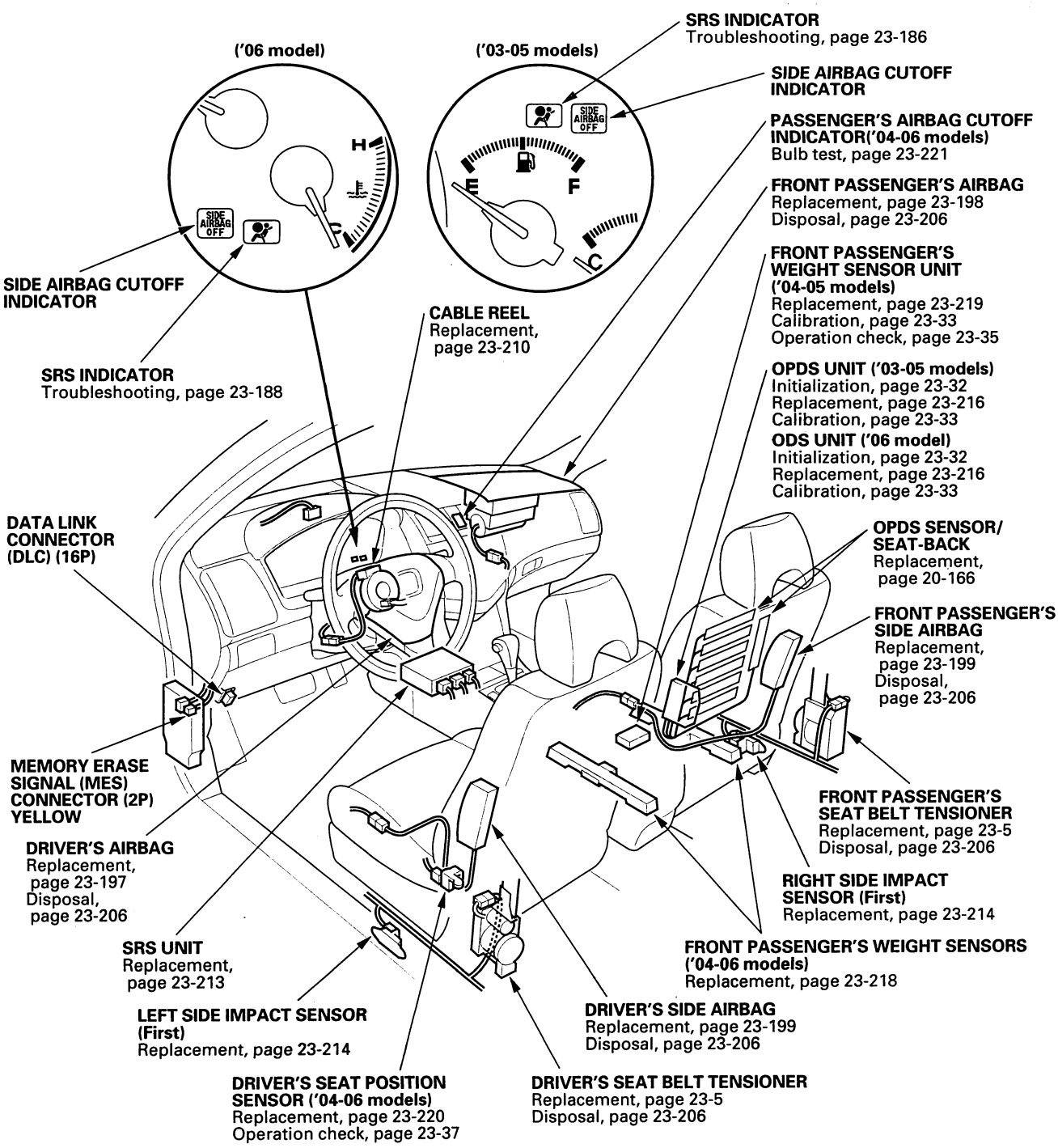

SRS INDICATOR
Troubleshooting, page 23-186

SIDE AIRBAG CUTOFF INDICATOR

PASSENGER'S AIRBAG CUTOFF INDICATOR('04-06 models)
Bulb test, page 23-221

FRONT PASSENGER'S AIRBAG
Replacement, page 23-198
Disposal, page 23-206

FRONT PASSENGER'S WEIGHT SENSOR UNIT ('04-05 models)
Replacement, page 23-219
Calibration, page 23-33
Operation check, page 23-35

OPDS UNIT ('03-05 models)
Initialization, page 23-32
Replacement, page 23-216
Calibration, page 23-33

ODS UNIT ('06 model)
Initialization, page 23-32
Replacement, page 23-216
Calibration, page 23-33

SIDE AIRBAG CUTOFF INDICATOR

SRS INDICATOR
Troubleshooting, page 23-188

CABLE REEL
Replacement, page 23-210

DATA LINK CONNECTOR (DLC) (16P)

OPDS SENSOR/ SEAT-BACK
Replacement, page 20-166

FRONT PASSENGER'S SIDE AIRBAG
Replacement, page 23-199
Disposal, page 23-206

MEMORY ERASE SIGNAL (MES) CONNECTOR (2P) YELLOW

DRIVER'S AIRBAG
Replacement, page 23-197
Disposal, page 23-206

FRONT PASSENGER'S SEAT BELT TENSIONER
Replacement, page 23-5
Disposal, page 23-206

RIGHT SIDE IMPACT SENSOR (First)
Replacement, page 23-214

SRS UNIT
Replacement, page 23-213

FRONT PASSENGER'S WEIGHT SENSORS ('04-06 models)
Replacement, page 23-218

LEFT SIDE IMPACT SENSOR (First)
Replacement, page 23-214

DRIVER'S SIDE AIRBAG
Replacement, page 23-199
Disposal, page 23-206

DRIVER'S SEAT POSITION SENSOR ('04-06 models)
Replacement, page 23-220
Operation check, page 23-37

DRIVER'S SEAT BELT TENSIONER
Replacement, page 23-5
Disposal, page 23-206

(cont'd)

BACK

Protected by AR

Component Location Index (cont'd)

4-door shown; 2-door is similar

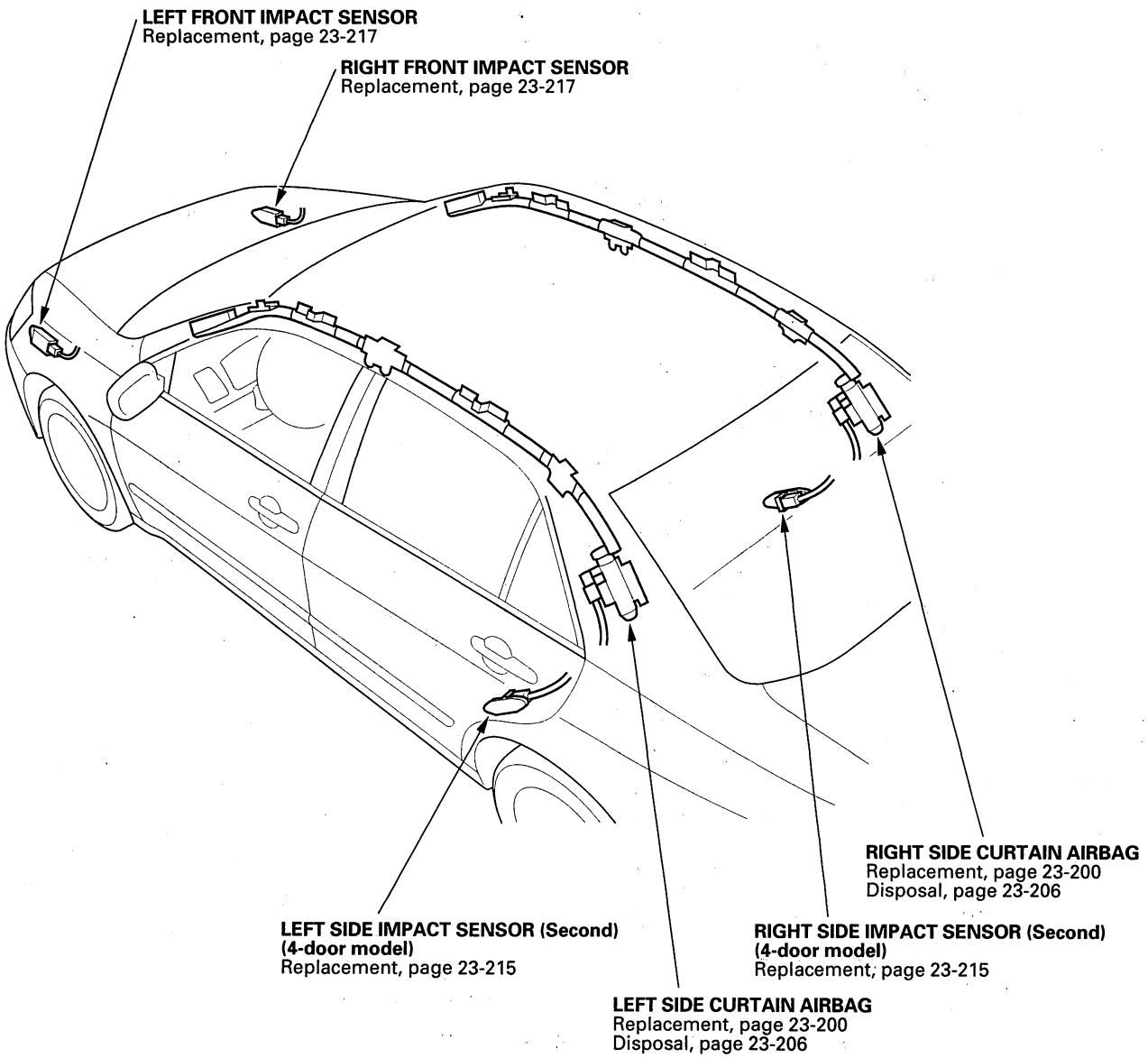

BACK

Protected by AR

Precautions and Procedures

General Precautions

Please read the following precautions carefully before performing the airbag system service. Observe the instructions described in this manual, or the airbags could accidentally deploy and cause damage or injuries.

- Except when performing electrical inspections, always turn the ignition switch OFF, disconnect the negative cable from the battery, and wait at least 3 minutes before beginning work.
  NOTE: The SRS memory is not erased even if the ignition switch is turned OFF or the battery cables are disconnected from the battery.
- Use replacement parts which are manufactured to the same standards and quality as the original parts. Do not install used SRS parts. Use only new parts when making SRS repairs.
- Carefully inspect any SRS part before you install it. Do not install any part that shows signs of being dropped or improperly handled, such as dents, cracks or deformation.

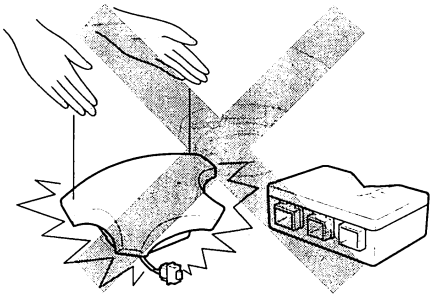

- Before removing any of the SRS parts (including the disconnection of the connectors), always disconnect the SRS connector.
- Use only a digital multimeter to check the system. If it is not a Honda multimeter, make sure its output is 10 mA (0.01A) or less when switched to the lowest value in the ohmmeter range. A tester with a higher output could cause accidental deployment and possible injury.
- Do not put objects on the front passenger's airbag.
- The original radio and navigation system have a coded theft protection circuit. Be sure to get the customer's anti-theft codes and write down the frequencies for the radio's preset stations before disconnecting the battery negative cable.
- Before returning the vehicle to the customer, enter the radio code, the navigation code, then enter the customer's audio presets, and set the clock.

Steering-related Precautions

Cable Reel Alignment

- Misalignment of the cable reel could cause an open in the wiring, make the SRS system remote steering wheel controls and the horn inoperative. Center the cable reel whenever the following is performed (see step 6 on page 23-212).
  - Installation of the steering wheel
  - Installation of the cable reel
  - Installation of the steering column
  - Other steering-related adjustment or installation
- Do not disassemble the cable reel.
- Do not apply grease to the cable reel.
- If the cable reel shows any signs of damage, replace it with a new one. For example, if it does not rotate smoothly, replace the cable reel.

(cont'd)

Protected by AR

Precautions and Procedures (cont'd)

Airbag Handling and Storage

Do not disassemble an airbag. It has no serviceable parts. Once an airbag has been deployed, it cannot be repaired or reused.

For temporary storage of an airbag during service, observe the following precautions.

- Store the removed airbag with the pad surface up. Never put anything on the airbag.

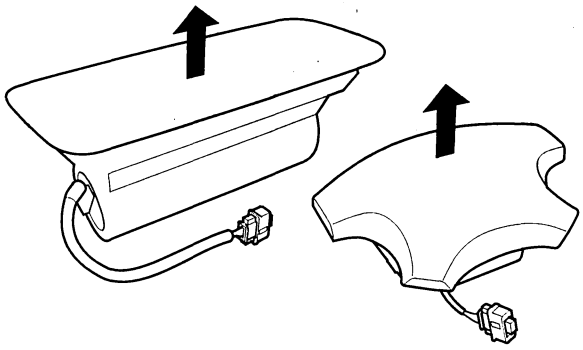

- To prevent damage to the airbag, keep it away from any oil, grease, detergent, or water.

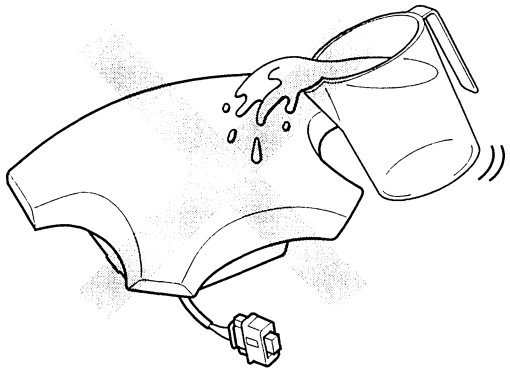

- Store the removed airbag on a secure, flat surface away from any high heat source (exceeding 200 °F/ 93 °C).

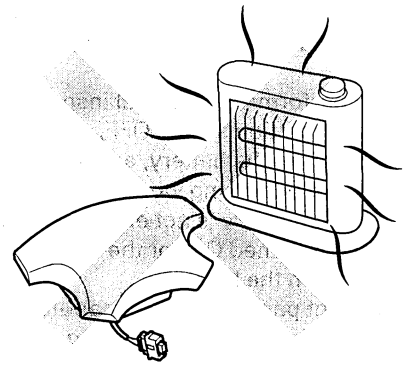

- Never perform electrical inspections to the airbags, such as measuring resistance.
- Do not position yourself in front of the airbag during removal, inspection, or replacement.

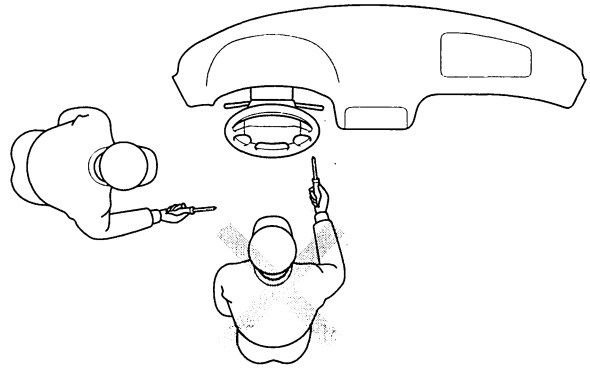

- Refer to the scrapping procedures for disposal of a damaged airbag.

BACK

Protected by AR

- The side curtain airbag inflator assembly is a long, jointed part containing an inflator (A), a flexible bag (B), an adapter pipe (C), and a center bracket (D).

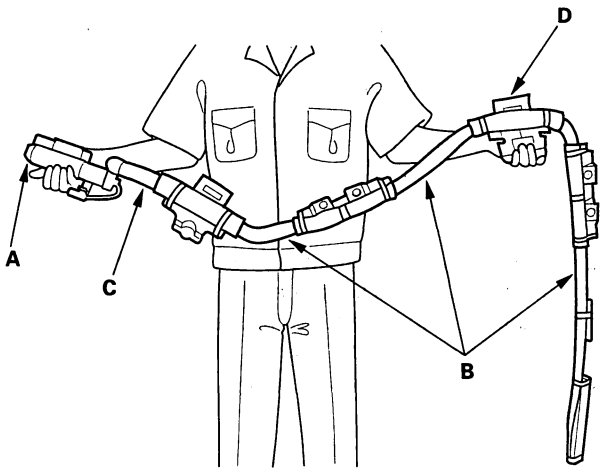

- When removing or installing the side curtain airbag inflator assembly, never handle the flexible bag (B) or the adapter pipe (C).

(cont'd)

BACK

Protected by AR

Precautions and Procedures (cont'd)

SRS Unit, Front Impact Sensors, Side Impact Sensors, Front Passenger's Weight Sensor Unit ('04-05 Models), and Front Passenger's Weight Sensors ('04-06 Models)

- Be careful not to bump or impact the SRS unit, front impact sensors, or side impact sensors when the ignition switch is ON (II), or for at least 3 minutes after the ignition switch is turned OFF.
- During installation or replacement, be careful not to bump (by impact wrench, hammer, etc.) the area around the SRS unit, front impact sensors, or side impact sensors. The airbags could accidentally deploy and cause damage or injury.

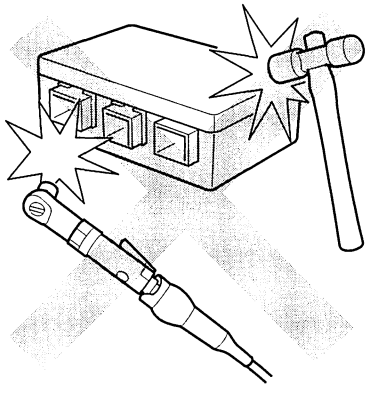

- After a collision in which the front airbags or seat belt tensioners were deployed, replace the SRS unit, front sensors, and other related components (see page 23-194). After a collision in which a side airbag was deployed, replace the side impact sensor on the deployed side, and the SRS unit. After a collision in which the airbags or the side airbags did not deploy, inspect for any damage or any deformation on the SRS unit, front impact sensors, and side impact sensors. Replace all damaged parts.

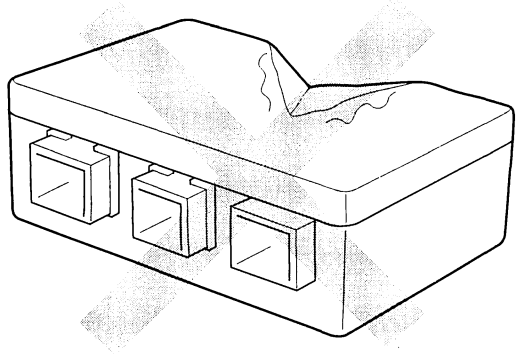

- Do not disassemble the SRS unit, front impact sensors, side impact sensors, driver's seat position sensor, front passenger's weight sensor unit ('03-05 models), and front passenger's weight sensors.
- Turn the ignition switch OFF, disconnect the battery negative cable, and wait at least 3 minutes before beginning installation or replacement of the SRS unit or disconnecting the connectors from the SRS unit.
- Be sure the SRS unit, front impact sensors, and side impact sensors are installed securely with the mounting bolts torqued to 9.8 N·m (1.0 kgf·m, 7.2 lbf·ft)
- Do not spill water or oil on the SRS unit or the side impact sensors, and keep them away from dust.
- Store the SRS unit, front impact sensors, and side impact sensors in a cool (less than 104 °F/40 °C) and dry (less than 80 % relative humidity, no moisture) area.

BACK

Protected by AR

Wiring Precautions

Some of the SRS wiring can be identified by special yellow outer covering, and the SRS connectors can be identified by their yellow color.
Observe the instructions.

- Never attempt to modify, splice, or repair SRS wiring. If there is an open or damage in SRS wiring or terminals, replace the harness.

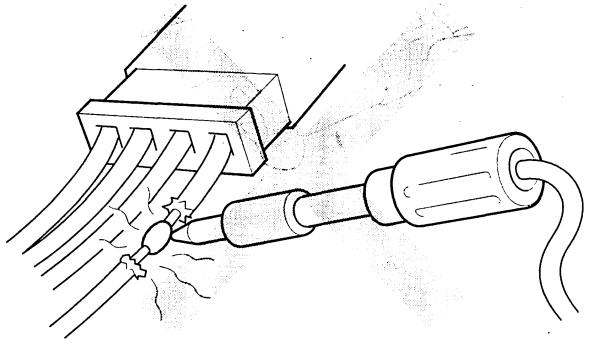

- Be sure to install the harness wires so they do not get pinched or interfere with other parts.

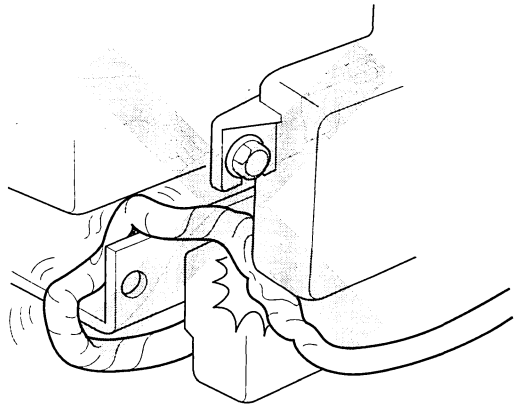

- Make sure all SRS ground locations are clean and securely fastened for optimum metal-to-metal contact. Poor grounding can cause intermittent problems that are difficult to diagnose.

Precautions for Electrical Inspections

- When using electrical test equipment, insert the probe of the tester into the wire side of the connector. Do not insert the probe of the tester into the terminal side of the connector, and do not tamper with the connector.

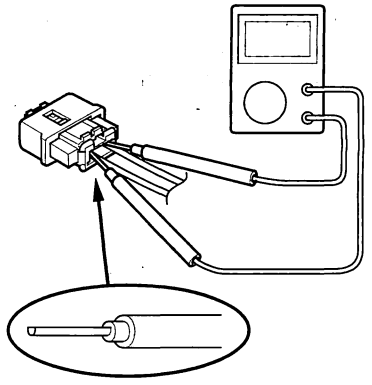

- Use a U-shaped probe. Do not insert the probe forcibly.

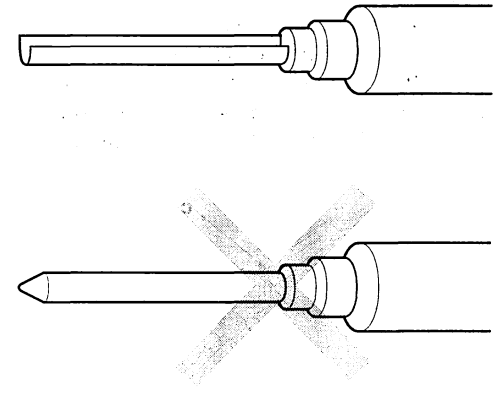

- Use specified service connectors in troubleshooting. Using improper tools could cause an error in inspection due to poor metal-to-metal contact.

(cont'd)

BACK

Protected by AR

Precautions and Procedures (cont'd)

Spring-loaded Lock Connector

Some SRS system connectors have a spring-loaded lock.

Front Airbag Connectors

Disconnecting
To release the lock, pull the spring-loaded sleeve (A) toward the stop (B) while holding the opposite half of the connector. Then pull the connector halves apart. Be sure to pull on the sleeve and not on the connector.

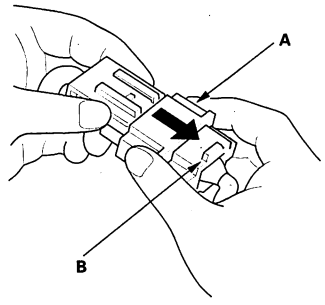

Connecting

1. To reconnect, hold the pawl-side connector, and press on the back of the sleeve-side connector in the direction shown. As the two connector halves are pressed together, the sleeve (A) is pushed back by the pawl (C). Do not touch the sleeve.

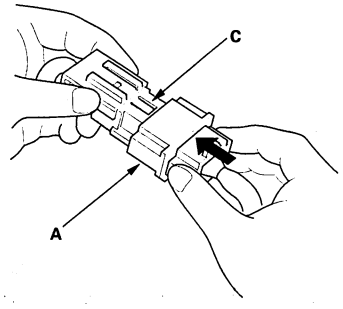

2. When the connector halves are completely connected, the pawl is released, and the spring-loaded sleeve locks the connector.

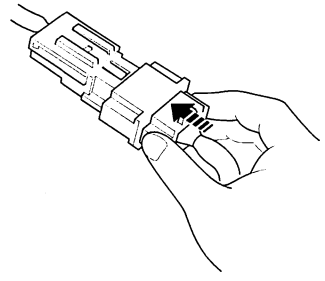

Side Airbag Connector

Disconnecting
To release the lock, pull the spring-loaded sleeve (A) and the slider (B) while holding the opposite half of the connector. Then pull the connector halves apart. Be sure to pull on the sleeve and not on the connector half.

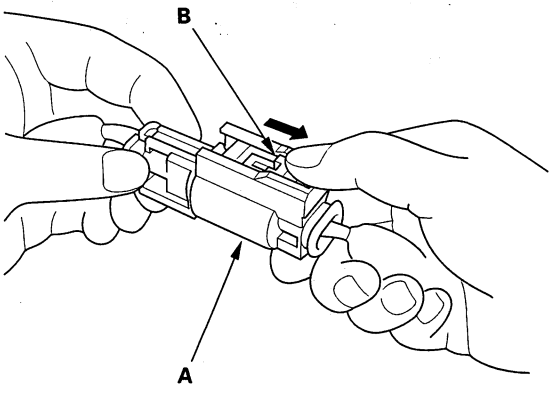

Connecting
Hold both connector halves, and press them firmly together until the projection (C) of the sleeve-side connector clicks.

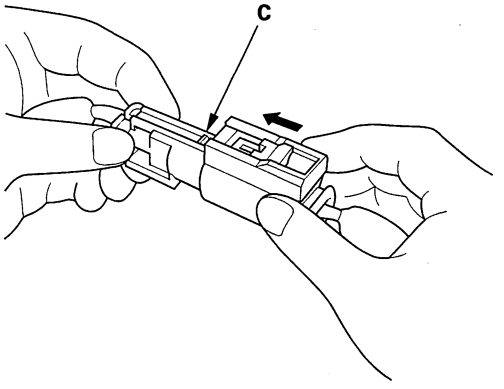

BACK

Protected by AR

Reopening the SRS Unit Circuit For Diagnosis

NOTE:
- To prevent damage of the connector cavity, insert the SRS short canceller straight into the cavity from the terminal side.
- Do not use the special tool if it is damaged.
- Make sure to remove the special tool before re-connecting.

When SRS unit connectors A, B, or C are disconnected, a short circuit is created in the connector by its own function to prevent airbag deployment. The circuit may need to be opened when diagnosis is performed on the circuit.
Insert the SRS short canceller (No. 070AZ-SAA0100, short canceller) in the specified cavities when it is necessary to keep the circuit open for diagnosis.

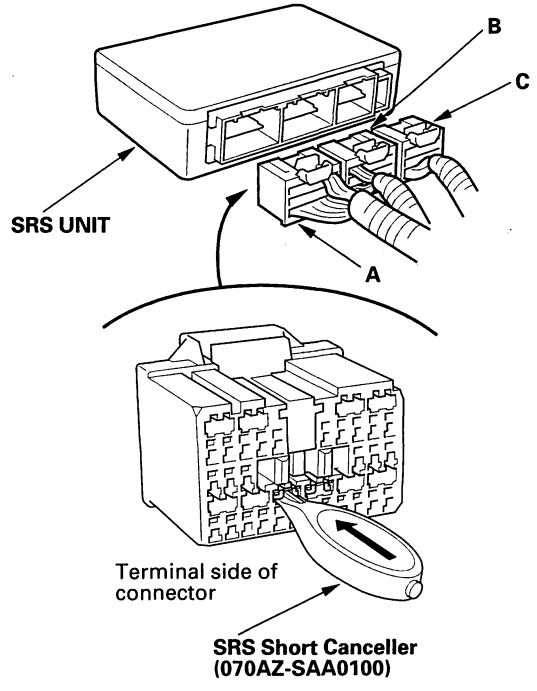

SRS UNIT CONNECTOR A (28P)

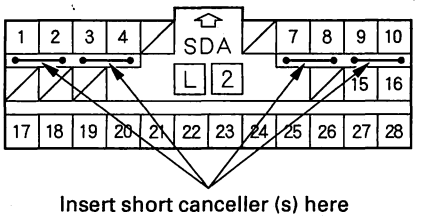

Insert short canceller (s) here

Wire side of female terminals

SRS UNIT CONNECTOR B (28P)

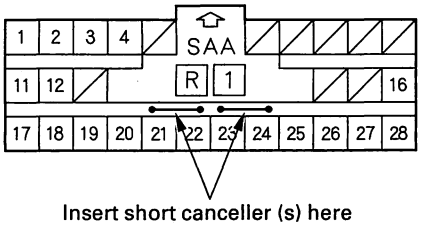

Insert short canceller (s) here

Wire side of female terminals

SRS UNIT CONNECTOR C (16P)

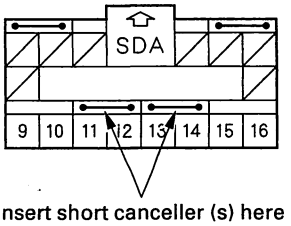

Insert short canceller (s) here

Wire side of female terminals

(cont'd)

BACK

Protected by AR

Precautions and Procedures (cont'd)

Backprobing Spring-loaded Lock Connectors

When checking voltage or resistance on this type of connector the first time, you must remove the retainer to insert the tester probe from the wire side.

NOTE: It is not necessary to reinstall the removed retainer; the terminals will stay locked in the connector housing.

To remove the retainer (A), insert a flat-tip screwdriver (B) between the connector body and the retainer, then carefully pry out the retainer. Take care not to break the connector.

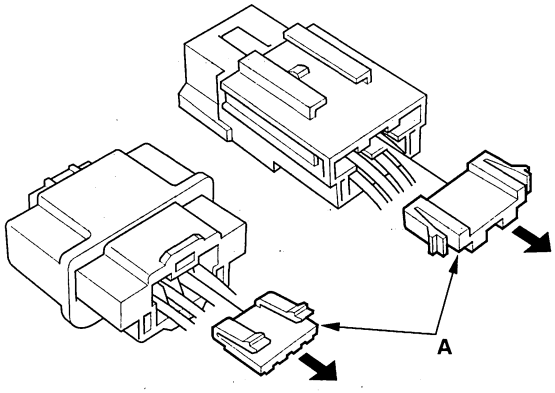

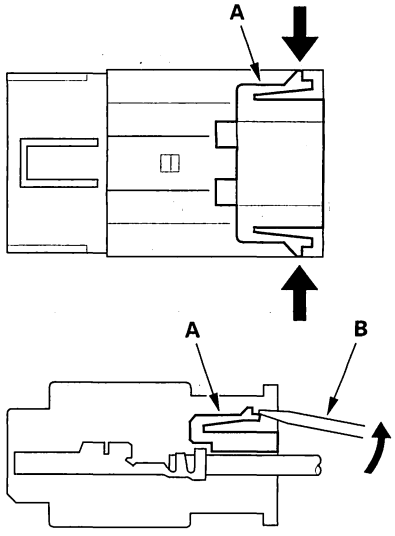

Seats with Side Airbags

Seats with side airbags have a "SIDE AIRBAG" label on the seat-back. Because the component parts (seat-back cover, cushion, etc.) of seats with and without airbags are different, make sure you install only the correct replacement parts.

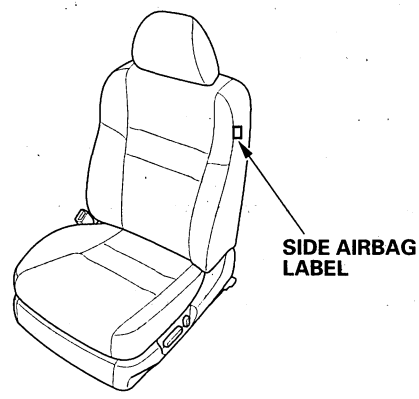

- When cleaning, do not saturate the seat with liquid, and do not spray steam on the seat.
- Do not repair a torn or frayed seat-back cover. Replace the seat-back cover.
- After a collision in which the side airbag was deployed, replace the side airbag with new parts. If the seat-back cushion is split, it must be replaced. If the seat-back frame is deformed, it must be replaced.
- Never put aftermarket accessories on the seat (covers, pads, seat heaters, lights, etc.).

BACK

Protected by AR

Disconnecting System Connectors

Turn the ignition switch OFF and disconnect the negative cable from the battery, and wait at least 3 minutes before beginning the following procedures.

- Before disconnecting SRS unit connector B (3) from SRS unit, disconnect both seat belt tensioner 4P connectors (4, 5).
- Before disconnecting the cable reel 4P connector (1), disconnect the driver's airbag 4P connector (2).

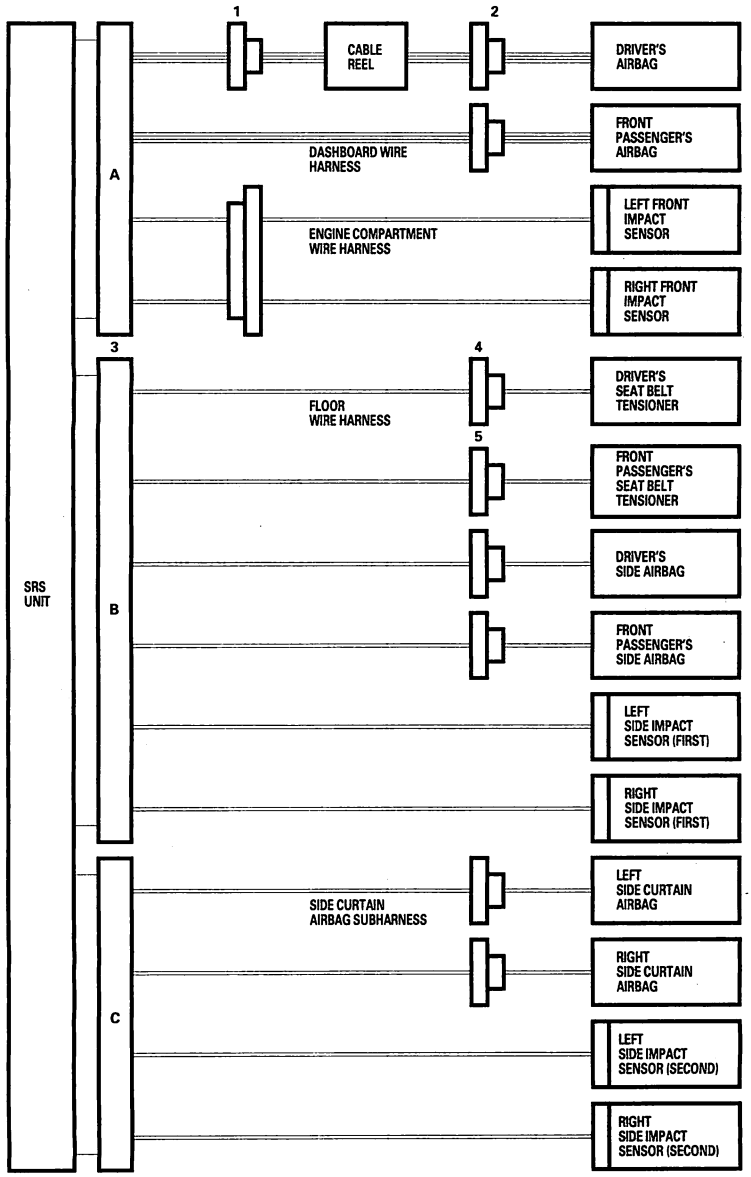

(cont'd)

BACK

Protected by AR

Precautions and Procedures (cont'd)

1. Disconnect the battery negative cable, and wait at least 3 minutes.

Driver's Airbag

2. Remove the access panel (A) from the steering wheel, then disconnect the driver's airbag 4P connector (B) from the cable reel.

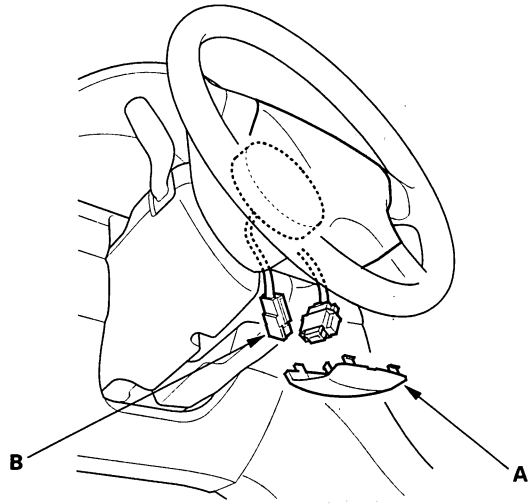

Front Passenger's Airbag

3. Remove the glove box, then disconnect the front passenger's airbag 4P connector (A) from the dashboard wire harness.

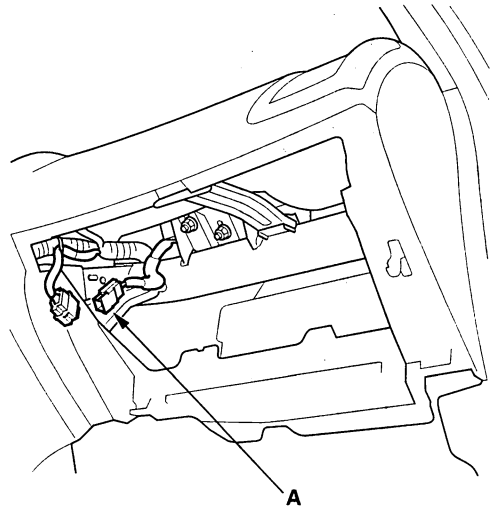

Side Airbag

4. Disconnect both side airbag 2P connectors (A) from the floor wire harness.

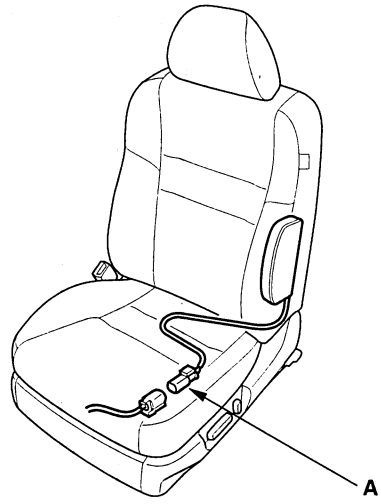

Side Curtain Airbag

5. Disconnect both side curtain airbag subharness 2P connectors from the side curtain airbags.

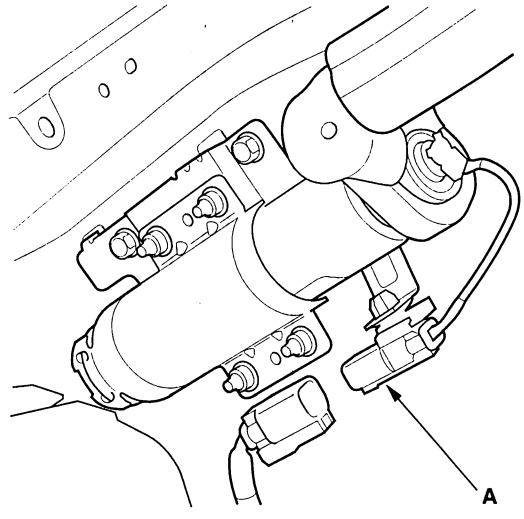

BACK

Protected by AR

Seat Belt Tensioner

6. Disconnect both floor wire harness 4P connectors (A) from the seat belt tensioners.

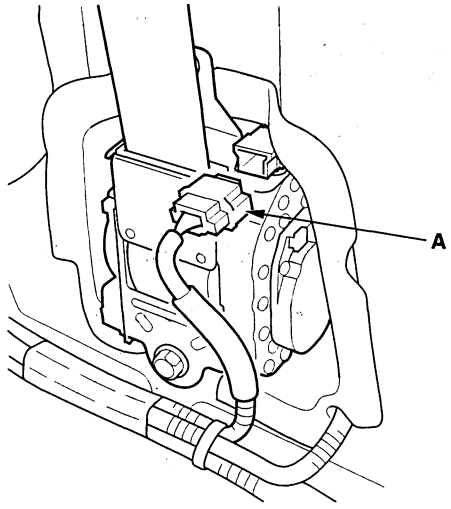

SRS Unit

7. Disconnect SRS unit connector A, and/or SRS unit connector B, and/or SRS unit connector C from the SRS unit.

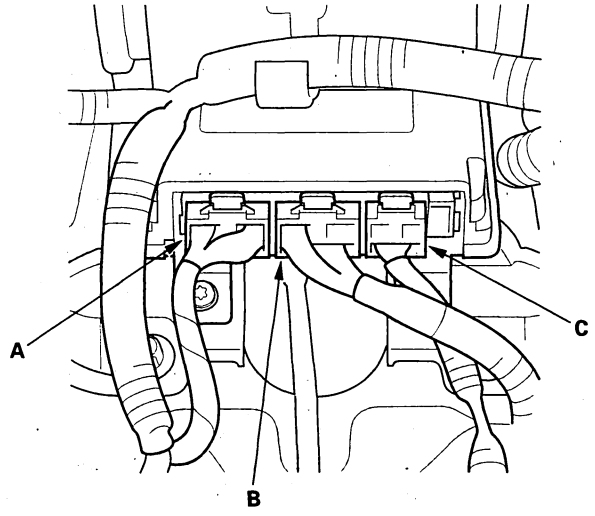

BACK

Protected by AR

General Troubleshooting Information

DTC (Diagnostic Trouble Codes)

The self-diagnostic function of the SRS system allows it to locate the causes of system problems and then store this information in memory. For easier troubleshooting, this data can be retrieved via a data link circuit.

- When you turn the ignition switch ON (II), the SRS indicator comes on. If it goes off after 6 seconds, the system is normal, and is not currently detecting any abnormality.
- If there is an abnormality, the system locates and defines the problem, stores this information in memory, and turns the SRS indicator on. The data will remain in the memory even when the ignition switch is turned off or if the battery is disconnected.
- The data is stored in memory as a diagnostic trouble code (DTC).
- DTCs are either latching or resetting depending on the malfunction. With resetting DTCs, the SRS indicator will go off the next time the ignition switch is turned ON and the system is normal, but the DTC is still stored. With latching DTCs the SRS indicator will not turn OFF until the malfunction is repaired and the DTC is cleared.
- When you connect the HDS to the 16P data link connector (DLC), you can retrieve a more detailed DTC in the Honda Systems "SRS" menu.
- After reading and recording the DTC, proceed with the troubleshooting procedure for that code.

Precautions

- Use only a digital multimeter to check the system. If it's not a Honda multimeter, make sure its output is 10 mA (0.01 A) or less when switched to the smallest value in the ohmmeter range. A tester with a higher output could damage the airbag circuit or cause accidental airbag deployment and possible injury.
- Whenever the ignition switch is ON (II), or has been turned OFF for less than 3 minutes, be careful not to bump the SRS unit; the airbags could accidentally deploy and cause damage or injuries.
- Before you remove the SRS harness, disconnect the driver's airbag connector, the front passenger's airbag connector, both side airbag connectors, both side curtain airbag connectors, and both seat belt tensioner connectors.
- Make sure the battery is sufficiently charged. If the battery is dead or low, measuring values won't be correct.
- Do not touch a tester probe to the terminals in the SRS unit or harness connectors, and do not connect the terminals with a jumper wire. Use only the backprobe set and the HDS. Backprobe spring-loaded lock type connectors correctly.

Reading the DTC

HDS

1. Make sure the ignition switch is OFF.
2. Connect the HDS to the DLC (A).

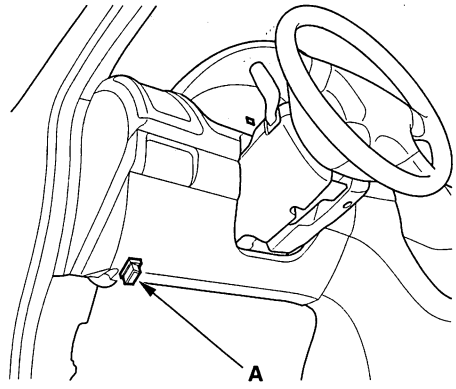

3. Turn the ignition switch ON (II).
4. Use the HDS to check for DTCs.
5. Read and record the DTC.
6. Turn the ignition switch OFF, and wait for 10 seconds.
7. Disconnect the HDS from the DLC.
8. Do the troubleshooting procedure for the DTC.

BACK

Protected by AR

Erasing the DTC Memory with HDS

1. Make sure the ignition switch is OFF.
2. Connect the HDS to the DLC (A).

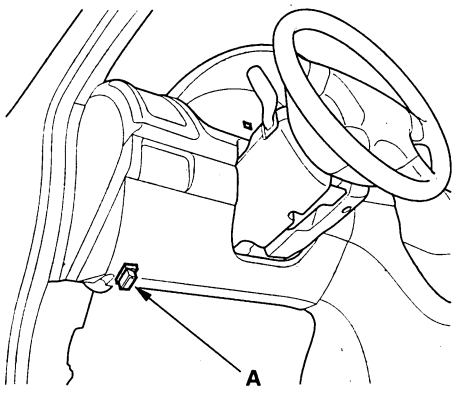

3. Turn the ignition switch ON (II).
4. In the TEST MODE MENU of the HDS, select DTC CLEAR. This erases the DTC(s).
5. Turn the ignition switch OFF, and wait for 10 seconds.
6. Disconnect the HDS from the DLC.

Erasing the DTC Memory with Manual Mode

Special Tools Required
SCS Service Connector 07PAZ-0010100

To erase the DTC(s) from the SRS unit, use the HDS, or the following procedure.

1. Make sure the ignition switch is OFF.
2. Connect the SCS service connector (A) to the yellow MES 2P connector (B). Do not use a jumper wire.

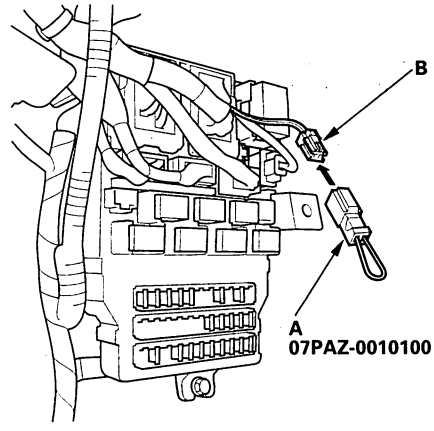

3. Turn the ignition switch ON (II).
4. The SRS indicator comes on for about 6 seconds, and then goes off. Remove the SCS service connector from the MES connector (2P) within 4 seconds after the indicator goes off.
5. The SRS indicator comes on again. Reconnect the SCS service connector to the MES connector (2P) within 4 seconds after the indicator comes on.
6. When the SRS indicator goes off, remove the SCS service connector from the MES connector (2P) within 4 seconds.
7. The SRS indicator blinks two times indicating that the memory has been erased.
8. Turn the ignition switch OFF, and wait for 10 seconds.
9. Turn the ignition switch ON (II) again. If the SRS indicator comes on for 6 seconds, and then goes off, the system is OK.

(cont'd)

Protected by AR

General Troubleshooting Information (cont'd)

Initializing the OPDS/ODS Unit

When a seat-back cover, seat-back cushion, and/or OPDS/ODS unit is replaced, initialize the OPDS/ODS by following the procedure.

NOTE: A new (uninitialized) OPDS/ODS unit installed with a faulty OPDS sensor can cause DTC 85-71.

1. Erase the DTC memory (see "Erasing the DTC Memory").
2. Make sure the front passenger's seat is dry. Set the seat-back in a normal position, and make sure there is nothing on the seat.
3. Make sure the ignition switch is OFF and the MES connector is not shorted.
4. Connect the HDS to the DLC (A).

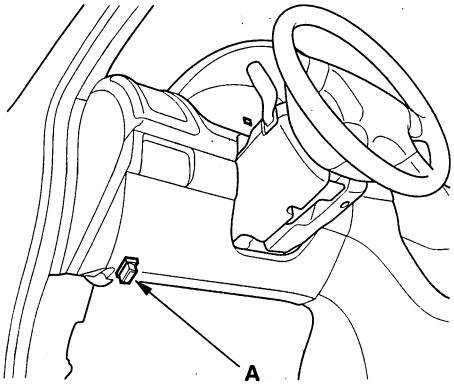

5. Turn the ignition switch ON (II).
6. From the HDS Main Menu, select SRS, then Misc Test, then Adjustments. In the Adjustment Menu, select OPDS/ODS INIT. Follow the screen prompts to initialize the OPDS/ODS.
7. Turn the ignition switch OFF.
8. Disconnect the HDS from the DLC.

   NOTE: If the OPDS/ODS system fails to initialize after several attempts, replace the OPDS sensor and retry. If the OPDS/ODS system continues to fail to initialize, replace the OPDS/ODS unit.

Troubleshooting Intermittent Failures

If there was a malfunction, but it doesn't recur, it will be stored in the memory as an intermittent failure, and the SRS indicator may come on depending on the malfunction detected.

After checking the DTC, troubleshoot as follows:

1. Read the DTC (see "Reading the DTC").
2. Erase the DTC memory (see "Erasing the DTC Memory").
3. Set the parking brake, then start the engine, and let it idle.
4. The SRS indicator comes on for about 6 seconds and then go off.
5. Shake the wire harness and the connectors, take a test drive (quick acceleration, quick braking, cornering), turn the steering wheel fully left and right, and hold it there for 5 to 10 seconds. If the problem recurs, the SRS indicator will come on.
6. If you can't duplicate the intermittent failure, the system is OK at this time.

BACK

Protected by AR

Calibrating the Front Passenger's Weight Sensor Unit ('04-05 models) or calibrate the ODS unit ('06 model)

When the front passenger's weight sensors and/or weight sensor unit ('04-05 models) or calibrate the ODS unit ('06 model) is replaced, calibrate the weight sensor unit ('04-05 models) or calibrate the ODS unit ('06 model) by following the procedure.

While calibrating the front passenger's weight sensor unit ('04-05 models) or calibrate the ODS unit ('06 model), observe these precautions:

- Make sure all components of the front passenger's seat are correctly installed.
- Make sure all optional parts such as seat covers are removed.
- Make sure nothing is on or under the front passenger's seat.
- Make sure there is nothing in the front passenger's seat-back pocket.
- Keep the windows closed.
- Perform all calibration procedures except test driving in the service bay.
- Make sure the vehicle is on level ground.
- Keep the A/C and the heater off.
- Do not touch the front passenger's seat until you drive the vehicle.
- Do not expose the front passenger's seat to sudden temperature changes.

1. Position the front passenger's seat to the rear most position, and adjust the recliner to the most forward position. Do not move from these positions.

2. Connect the HDS to the data link connector (DLC) (A).

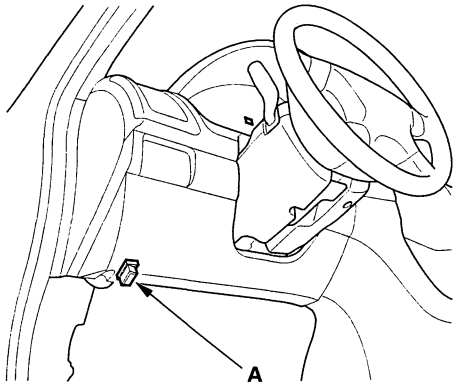

3. Drive the vehicle, and accelerate to 20 mph (36 km/h), then stop on level ground.

4. From the Main Menu, select SRS, then Seat Weight Sensor, then Misc Test, then Adjustments. Select "SWS INIT" in the Adjustment Menu and follow the prompts until the initialization operation has been completed.

5. Prepare a weight between 55 to 77 lbs (25 to 35 kg) then measure and note its actual weight (M) with a scale.

   NOTE: The accuracy of the scale must be within ±2.2 lbs (1 kg).

6. Place the weight on the front passenger's seat.

   NOTE: Leave the HDS connected in the Misc Menu.

7. Drive the vehicle, and accelerate to 20 mph (36 km/h), then stop on level ground.

8. From the HDS's Main Menu, select SRS, then Seat Weight Sensor, then Misc Test, then Inspection. Select "SEAT OUTPUT CHK." in the HDS's Inspection Menu. The weight (T) of the front passenger's seat is recorded by the HDS.

9. Calculate the variance between the weight measured on the scale (M) and the HDS (T) with the formula shown.

   Variance = (T)−(M)＜±8.6 lbs (3.9 kg)

   M: Weight measured on the scale
   T: Weight measured by the HDS with the weight on the seat

   - If the variance is ±8.6 lbs (±3.9 kg) or less, calibration is complete. Go to step 18.
   - If the variance is more than ±8.6 lbs (±3.9 kg), remove the seat weight sensors (see page 23-218), and reinstall them, then go to step 10.

(cont'd)

Protected by AR

General Troubleshooting Information (cont'd)

10. Remove weight from the front passenger's seat.

11. Drive the vehicle, accelerate to 20 mph (36 km/h), then stop on level ground.

12. From the HDS inspection menu, select Seat Weight Sensor, then "SEAT OUTPUT CHK." The weight (T0) of the front passenger's seat is recorded by the HDS.

    - If the reading on the HDS (T0) is ±6.6 lbs (±3.0 kg) or less, go to step 13.
    - If the reading on the tester (T0) is more than ±6.6 lbs (±3.0 kg), repeat this procedure from the beginning.

13. Measure and note the prepared weight (M1) again with a scale.

14. Place the weight on the front passenger's seat.

15. Drive the vehicle, accelerate to 20 mph (36 km/h), then stop on level ground.

16. From the HDS Main Menu, select SRS, then Seat Weight Sensor, then Misc Test, then Inspection. Select "SEAT OUTPUT CHK." in the HDS Inspection Menu. The weight (T1) of the front passenger's seat is recorded by the HDS.

17. Calculate the variance between the weight measured on the scale and the HDS with the formula shown.

    Variance = (T1)−(M1)＜±8.6 lbs (3.9 kg)

    T1: Weight measured by the HDS with the weight on the seat
    M1: Weight measured on the scale

    - If the variance is ±8.6 lbs (±3.9 kg) or less, calibration is complete. Go to step 18.
    - If the variance is more than ±8.6 lbs (±3.9 kg), replace the front passenger's weight sensors (if they were not replaced before this procedure), and repeat this procedure from the beginning.

18. Turn the ignition switch OFF, and disconnect the HDS from the DLC.

BACK

Protected by AR

Operation Check of the Front Passenger's Weight Sensor Unit ('04-05 models) or operate the ODS unit ('06 model)

The operation of the front passenger's weight sensor unit ('04-05 models) or operate the ODS unit ('06 model) must be checked after any of these actions.

- Replacement of front passenger's seat component(s) (except weight sensor unit and/or weight sensors)
- After a vehicle collision

Pre-Operation Check Set-up

- Make sure all the components of the front passenger's seat are correctly installed.
- Position the front passenger's seat to the rear most position.
- Adjust the seat recline to the forward most position.
- Do not move the seat from this position.
- Make sure nothing is on or under the front passenger's seat.
- Make sure there is nothing in the front passenger's seat-back pocket.
- Keep the windows closed.
- Perform all calibration procedures except test-driving in the service bay.
- Make sure the vehicle is on level ground.
- Turn the heater and the A/C off.
- Do not touch the passenger's seat during the calibration.
- Do not expose the front passenger's seat to sudden temperature changes.

After Replacing Front Passenger's Seat Component(s)

1. Connect the HDS to the data link connector (DLC) (A).

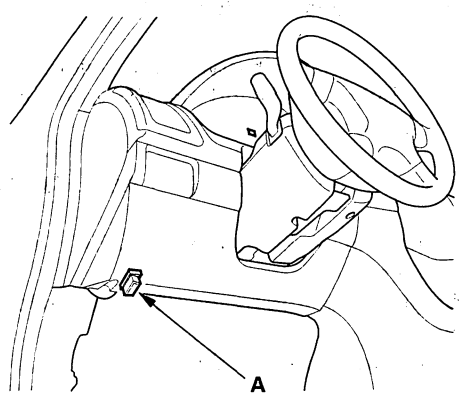

2. Drive the vehicle, accelerate to 20 mph (36 km/h), then stop on level ground.

3. From the HDS Main Menu, select SRS, then Seat Weight Sensor, then Misc Test, then Inspection. Select "SEAT OUTPUT CHK." in the HDS Inspection Menu. The weight (T0) of the front passenger's seat is recorded by the HDS.

   - If the reading on the HDS (T0) is ±6.6 lbs (±3.0 kg), or less, go to step 4.
   - If the reading on the HDS (T0) is more than ±6.6 lbs (±3.0 kg), turn the ignition switch OFF, and go to step 1 of "Calibrating the Front Passenger's Weight Sensor Unit ('04-05 models) or operate the ODS unit ('06 model)."

4. Prepare a weight between 55 to 77 lbs (25 to 35 kg), then measure and note its actual weight (M) with a scale.

   NOTE: The accuracy of the scale must be within ±2.2 lbs (1 kg).

5. Place the prepared weight on the front passenger's seat.

6. Drive the vehicle, and accelerate to 20 mph (36 km/h), then stop on level ground.

(cont'd)

Protected by AR

General Troubleshooting Information (cont'd)

7. From the HDS Main Menu, select SRS, then Seat Weight Sensor, then Misc Test, then Inspection. Select "SEAT OUTPUT CHK." in the HDS Inspection Menu. The weight (T1) of the front passenger's seat is recorded by the HDS.

8. Calculate the variance between the weight measured by the scale and the HDS with the formula shown.

   Variance = ((T1)−(T0)−(M1))＜±8.6 lbs (3.9 kg)

   T1: Weight measured by the HDS with the weight on the seat
   T0: Weight measured by the HDS with no load on the seat
   M1: Weight measured on the scale

   - If the variance is ±8.6 lbs (±3.9 kg) or less, the check is complete. Go to step 9.
   - If the variance is more than ±8.6 lbs (±3.9 kg), remove the seat weight sensors, reinstall them, then repeat this procedure from the beginning.
   - If after reinstalling the front passenger's seat weight sensors, the variance is still more than ±8.6 lbs (±3.9 kg), replace the front passenger's weight sensors (if they were not replaced).

9. Turn the ignition switch OFF, and disconnect the HDS from the DLC.

After a vehicle collision

10. Position the front passenger's seat to the rear most position, adjust the recliner to the most forward position. Do not move it from these positions.

11. Connect the HDS to the data link connector (DLC) (A).

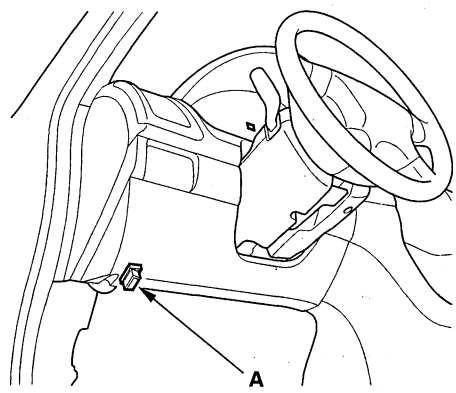

12. Drive the vehicle, accelerate to 20 mph (36 km/h), then stop on level ground.

13. From the HDS inspection menu, select Seat Weight Sensor, then "SEAT OUTPUT CHK." The weight (T0) of the front passenger's seat is recorded by the HDS.

    - If the reading on the HDS (T0) is ±6.6 lbs (±3.0 kg) or less, go to step 14.
    - If the reading on the HDS (T0) is more than ±6.6 lbs (±3.0 kg), remove the seat weight sensors, reinstall them, then repeat steps 1−3.
    - If after reinstalling the front passenger's seat weight sensors, the reading on the HDS (T0) is still more than ±6.6 lbs (±3.0 kg), go to step 1 of "Calibrating the Front Passenger's Weight Sensor Unit ('04-05 models) or calibrate the ODS unit ('06 model)."

14. Prepare a weight between 55 to 77 lbs (25 to 35 kg), then measure and note its actual weight (M) with a scale.

    NOTE: The accuracy of scale must be within ±2.2 lbs (1 kg).

15. Place the prepared weight on the front passenger's seat.

BACK

Protected by AR

16. Drive the vehicle, and accelerate to 20 mph (36 km/h), then stop on level ground.

17. From the HDS Inspection Menu, select Seat Weight Sensor, then "SEAT OUTPUT CHK." The weight (T1) of the front passenger's seat is recorded by the HDS.

18. Calculate the variance between the weight measured on the scale and the HDS with the formula shown.

    Variance = ((T1)−(T0)−(M1))＜±8.6 lbs (3.9 kg)

    T1: Weight measured by the HDS with the weight on the seat
    T0: Weight measured by the HDS with no load on the seat
    M1: Weight measured on the scale

    - If the variance is ±8.6 lbs (±3.9 kg) or less, the check is complete. Go to step 19.
    - If the variance is more than ±8.6 lbs (±3.9 kg), remove the seat weight sensors, and reinstall them, then repeat this procedure from the beginning.
    - If after reinstalling the front passenger's seat weight sensors, the variance still more than ±8.6 lbs (±3.9 kg), replace the front passenger's weight sensors and the seat riser, then go to step 1 of "Calibrating the Front Passenger's Weight Sensor Unit ('04-05 models) or calibrate the ODS unit ('06 model)."

19. Turn the ignition switch OFF, and disconnect the HDS from the DLC.

Operation Check of the Driver's Seat Position Sensor

The driver's seat position sensor must be checked after any of these actions.
- Driver's seat position sensor replacement
- Cover plate (front side of driver's seat slide rail) replacement

1. Make sure the driver's seat is at its full forward position.

2. Make sure the ignition switch is OFF (0).

3. Connect the HDS to the DLC (A).

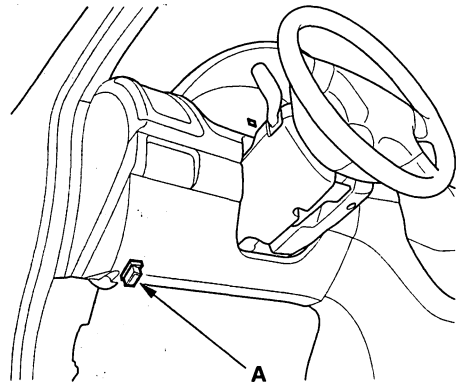

4. Turn the ignition switch ON (II).

5. From the HDS Main Menu, select SRS, then Data List, then All Data List, then SPS.

6. Move the seat all the way forward. Using a piece of tape, mark a line on the seat's outer cover where the front riser cover meets the seat riser. The SPS should read "NEAR."

   NOTE: It takes a few seconds for the HDS to display changes, so wait about 5 seconds between each move.

   Move the seat back in small increments (about 5 mm) until the SPS reads "NOT NEAR." The seat should be approximately 25 mm from the front.

   If the SPS data does not work as described above, check the driver's seat position sensor or the cover plate for damage, and replace parts as needed.

7. Turn the ignition switch OFF, and disconnect the HDS from the DLC.

Protected by AR

DTC Troubleshooting Index

NOTE: Before looking up DTCs in the DTC troubleshooting index, verify the manufacturer of the SRS unit. The DTCs are different from manufacturer to manufacturer.

TRW SRS Unit ('03-05 models)

DTC	Latch *1	Reset *2	Detection Item	Notes
11-1x		X	Open or increased resistance in driver's airbag first inflator	(see page 23-58)
11-3x		X	Short to another wire or decreased resistance in driver's airbag first inflator	(see page 23-59)
11-4x		X	Open or increased resistance in driver's airbag second inflator	(see page 23-58)
11-6x		X	Short to another wire or decreased resistance in driver's airbag second inflator	(see page 23-59)
11-8x	X		Short to power in driver's airbag first inflator	(see page 23-61)
11-9x	X		Short to ground in driver's airbag first inflator	(see page 23-62)
11-Ax	X		Short to power in driver's airbag second inflator	(see page 23-61)
11-Bx	X		Short to ground in driver's airbag second inflator	(see page 23-62)
12-1x		X	Open or increased resistance in front passenger's airbag first inflator	(see page 23-64)
12-3x		X	Short to another wire or decreased resistance in front passenger's airbag first inflator	(see page 23-65)
12-4x		X	Open or increased resistance in front passenger's airbag second inflator	(see page 23-64)
12-6x		X	Short to another wire or decreased resistance in front passenger's airbag second inflator	(see page 23-65)
12-8x	X		Short to power in front passenger's airbag first inflator	(see page 23-66)
12-9x	X		Short to ground in front passenger's airbag first inflator	(see page 23-67)
12-Ax	X		Short to power in front passenger's airbag second inflator	(see page 23-66)
12-Bx	X		Short to ground in front passenger's airbag second inflator	(see page 23-67)
21-1x		X	Open or increased resistance in driver's seat belt tensioner	(see page 23-68)
21-3x		X	Short to another wire or decreased resistance in driver's seat belt tensioner	(see page 23-69)
21-8x	X		Short to power in driver's seat belt tensioner	(see page 23-70)
21-9x	X		Short to ground in driver's seat belt tensioner	(see page 23-71)
22-1x		X	Open or increased resistance in front passenger's seat belt tensioner	(see page 23-72)
22-3x		X	Short to another wire or decreased resistance in front passenger's seat belt tensioner	(see page 23-73)
22-8x	X		Short to power in front passenger's seat belt tensioner	(see page 23-74)
22-9x	X		Short to ground in front passenger's seat belt tensioner	(see page 23-75)
31-1x		X	Open or increased resistance in driver's side airbag inflator	(see page 23-76)
31-3x		X	Short to another wire or decreased resistance in driver's side airbag inflator	(see page 23-77)
31-8x	X		Short to power in driver's side airbag inflator	(see page 23-78)
31-9x	X		Short to ground in driver's side airbag inflator	(see page 23-79)
32-1x		X	Open or increased resistance in front passenger's side airbag inflator	(see page 23-80)
32-3x		X	Short to another wire or decreased resistance in front passenger's side airbag inflator	(see page 23-81)
32-8x	X		Short to power in front passenger's side airbag inflator	(see page 23-82)
32-9x	X		Short to ground in front passenger's side airbag inflator	(see page 23-83)
33-1x		X	Open or increased resistance in left side curtain airbag inflator	(see page 23-84)
33-3x		X	Short to another wire or decreased resistance in left side curtain airbag inflator	(see page 23-85)
33-8x	X		Short to power in left side curtain airbag inflator	(see page 23-86)
33-9x	X		Short to ground in left side curtain airbag inflator	(see page 23-87)
34-1x		X	Open or increased resistance in right side curtain airbag inflator	(see page 23-88)
34-3x		X	Short to another wire or decreased resistance in right side curtain airbag inflator	(see page 23-89)
34-8x	X		Short to power in right side curtain airbag inflator	(see page 23-90)
34-9x	X		Short to ground in right side curtain airbag inflator	(see page 23-91)

NOTE: The "x" at the end of each DTC denotes a numeric character (0 thru 9) or an alpha character (A thru F) that you will see on the HDS display. The character is unrelated to your troubleshooting; it designates the SRS unit manufacturer and other detail used for product analysis.

* 1: The SRS indicator turns on and stays on whenever the ignition switch is in the ON (II) position, or until the code is cleared.

* 2: The SRS indicator turns on when the DTC is set. The SRS indicator will not turn on after the ignition switch is cycled from ON (II) to OFF (0), but the DTC will be stored in the SRS unit.

BACK

Protected by AR

NOTE: Before looking up DTCs in the DTC troubleshooting index, verify the manufacturer of the SRS unit. The DTCs are different from manufacturer to manufacturer.

TRW SRS Unit ('03-05 models)

DTC	Latch *1	Reset *2	Detection Item	Notes
41-1x		X	No signal from the left front impact sensor	(see page 23-92)
41-2x		X	Internal failure of the left front impact sensor	(see page 23-100)
41-3x				
41-Bx	X			
42-1x		X	No signal from the right front impact sensor	(see page 23-96)
42-2x		X	Internal failure of the right front impact sensor	(see page 23-101)
42-3x				
42-Bx	X			
43-1x		X	No signal from the left side impact sensor (first)	(see page 23-102)
43-2x		X	Internal failure of the left side impact sensor (first)	(see page 23-110)
43-3x				
43-Bx	X			
44-1x		X	No signal from the right side impact sensor (first)	(see page 23-106)
44-2x		X	Internal failure of the right side impact sensor (first)	(see page 23-110)
44-3x				
44-Bx	X			
45-1x		X	No signal from left side impact sensor (second)	(see page 23-111)
45-2x		X	Internal failure of left side impact sensor (second)	(see page 23-117)
45-3x				
45-Bx	X			
46-1x		X	No signal from right side impact sensor (second)	(see page 23-114)
46-2x		X	Internal failure of right side impact sensor (second)	(see page 23-117)
46-3x				
46-Bx	X			
51-2x		X	Internal failure of SRS unit	(see page 23-118)
51-4x				
52-8x	X			
52-9x				
52-Ax				
52-Bx	X		Internal failure of SRS unit	(see page 23-119)
52-Cx				
52-Dx				
52-Ex				
52-Fx				
53-1x		X		
53-2x		X	Internal failure of SRS unit	(see page 23-120)
53-3x				
53-4x				
54-1x				
54-2x				
54-3x				
54-4x		X	Internal failure of SRS unit	(see page 23-121)
54-5x				
54-6x				
54-7x				
55-1x				
55-2x				
55-3x		X	Internal failure of SRS unit	(see page 23-122)
55-4x				

NOTE: The "x" at the end of each DTC denotes a numeric character (0 thru 9) or an alpha character (A thru F) that you will see on the HDS display. The character is unrelated to your troubleshooting; it designates the SRS unit manufacturer and other detail used for product analysis.

* 1: The SRS indicator turns on and stays on whenever the ignition switch is in the ON (II) position, or until the code is cleared.

* 2: The SRS indicator turns on when the DTC is set. The SRS indicator will not turn on after the ignition switch is cycled from ON (II) to OFF (0), but the DTC will be stored in the SRS unit.

(cont'd)

Protected by AR

DTC Troubleshooting Index (cont'd)

NOTE: Before looking up DTCs in the DTC troubleshooting index, verify the manufacturer of the SRS unit. The DTCs are different from manufacturer to manufacturer.

TRW SRS Unit ('03-05 models)

DTC	Latch *1	Reset *2	Detection Item	Notes
61-1x		X	Open in driver's seat belt buckle switch (with power seat)	(see page 23-123)
			Open in driver's seat belt buckle switch (without power seat)	(see page 23-126)
61-2x			Short in driver's seat belt buckle switch (with power seat)	(see page 23-129)
			Short in driver's seat belt buckle switch (without power seat)	(see page 23-132)
62-1x			Open in front passenger's seat belt buckle switch (with power seat)	(see page 23-135)
			Open in front passenger's seat belt buckle switch (without power seat)	(see page 23-138)
62-2x			Short in front passenger's seat belt buckle switch (with power seat)	(see page 23-141)
			Short in front passenger's seat belt buckle switch (without power seat)	(see page 23-144)
71-1x	X		Open in driver's seat position sensor	(see page 23-147)
71-2x			Short in driver's seat position sensor	(see page 23-148)
81-4x			Faulty front passenger's weight sensor unit	(see page 23-158)
81-5x				
81-61			No signal from the front passenger's weight sensor unit (with side airbag)	(see page 23-151)
			No signal from the front passenger's weight sensor unit (without side airbag)	(see page 23-155)
81-62			Non-stipulated response data (with side airbag)	(see page 23-151)
			Non-stipulated response data (without side airbag)	(see page 23-155)
81-63			Model ID code or variation code inconsistent	(see page 23-158)
81-64			ECU serial ID code inconsistent	
81-71			Front passenger's weight sensor unit does not calibrate	(see page 23-159)
81-78				
81-79			Front passenger's weight sensors drift check failure	(see page 23-158)
82-1x			No signal from the inner side front passenger's weight sensor	(see page 23-160)
83-2x			No signal from the outer side front passenger's weight sensor	(see page 23-160)
85-4x			Faulty OPDS unit	(see page 23-161)
85-5x				
85-61			No signal from the OPDS unit	(see page 23-162)
85-62			Non-stipulated response data	
85-63			Model ID code or variation code inconsistent	(see page 23-161)
85-64			ECU serial ID code inconsistent	
85-71			OPDS unit not initialized	(see page 23-170)
85-78				
85-79			OPDS drift check failure	(see page 23-161)
86-1x			Faulty seat-back OPDS sensor	(see page 23-170)
86-2x			Faulty seat support OPDS sensor	
87-31			Internal failure of the OPDS unit	(see page 23-171)
87-32			The side airbag cutoff indicator stays on	(see page 23-171)
91-1x			Internal failure of the SRS unit	(see page 23-175)
91-2x			Short in SRS indicator circuit	(see page 23-175)
92-1x		X	Open in passenger's airbag cutoff indicator	(see page 23-177)
92-2x			Short to ground in passenger's airbag cutoff indicator	(see page 23-177)
A1-1x	X		Faulty power supply (VA line)	(see page 23-182)
A2-1x			Faulty power supply (VB line)	(see page 23-184)
D1-11			Driver's airbag and/or driver's seat belt tensioner deployed	(see page 23-122)
D2-11			Front passenger's airbag and/or front passenger's seat belt tensioner deployed	
D3-11			Driver's side airbag deployed	
D4-11			Front passenger's side airbag deployed	
D7-11			Rear-end collisioned	
E2-11			Front passenger's airbag deployed	
E4-11			Front passenger's side airbag deployed	
F1-11			Driver's airbag and/or driver's seat belt tensioner deployed	
F2-11			Front passenger's airbag and/or front passenger's seat belt tensioner deployed	
F3-11			Driver's side airbag deployed	
F4-11			Front passenger's side airbag deployed	

NOTE: The "x" at the end of each DTC denotes a numeric character (0 thru 9) or an alpha character (A thru F) that you will see on the HDS display. The character is unrelated to your troubleshooting; it designates the SRS unit manufacturer and other detail used for product analysis.

* 1: The SRS indicator turns on and stays on whenever the ignition switch is in the ON (II) position, or until the code is cleared.
* 2: The SRS indicator turns on when the DTC is set. The SRS indicator will not turn on after the ignition switch is cycled from ON (II) to OFF (0), but the DTC will be stored in the SRS unit.

BACK

Protected by AR

NOTE: Before looking up DTCs in the DTC troubleshooting index, verify the manufacturer of the SRS unit. The DTCs are different from manufacturer to manufacturer.

DENSO SRS Unit ('03-05 models)

DTC	Latch *1	Reset *2	Detection Item	Notes
11-1x		X	Open in driver's airbag first inflator	(see page 23-58)
11-2x		X	Increased resistance in driver's airbag first inflator	(see page 23-58)
11-3x		X	Short to another wire or decreased resistance in driver's airbag first inflator	(see page 23-59)
11-4x		X	Open in driver's airbag second inflator	(see page 23-58)
11-5x		X	Increased resistance in driver's airbag second inflator	(see page 23-58)
11-6x		X	Short to another wire or decreased resistance in driver's airbag second inflator	(see page 23-59)
11-8x	X		Short to power in driver's airbag first inflator	(see page 23-61)
11-9x	X		Short to ground in driver's airbag first inflator	(see page 23-62)
11-Ax	X		Short to power in driver's airbag second inflator	(see page 23-61)
11-Bx	X		Short to ground in driver's airbag second inflator	(see page 23-62)
12-1x		X	Open in front passenger's airbag first inflator	(see page 23-64)
12-2x		X	Increased resistance in front passenger's airbag first inflator	(see page 23-64)
12-3x		X	Short to another wire or decreased resistance in front passenger's airbag first inflator	(see page 23-65)
12-4x		X	Open in front passenger's airbag second inflator	(see page 23-64)
12-5x		X	Increased resistance in front passenger's airbag second inflator	(see page 23-64)
12-6x		X	Short to another wire or decreased resistance in front passenger's airbag second inflator	(see page 23-65)
12-8x	X		Short to power in front passenger's airbag first inflator	(see page 23-66)
12-9x	X		Short to ground in front passenger's airbag first inflator	(see page 23-67)
12-Ax	X		Short to power in front passenger's airbag second inflator	(see page 23-66)
12-Bx	X		Short to ground in front passenger's airbag second inflator	(see page 23-67)
21-1x		X	Open in driver's seat belt tensioner	(see page 23-68)
21-2x		X	Increased resistance in driver's seat belt tensioner	(see page 23-68)
21-3x		X	Short to another wire or decreased resistance in driver's seat belt tensioner	(see page 23-69)
21-8x	X		Short to power in driver's seat belt tensioner	(see page 23-70)
21-9x	X		Short to ground in driver's seat belt tensioner	(see page 23-71)
22-1x		X	Open in front passenger's seat belt tensioner	(see page 23-72)
22-2x		X	Increased resistance in front passenger's seat belt tensioner	(see page 23-72)
22-3x		X	Short to another wire or decreased resistance in front passenger's seat belt tensioner	(see page 23-73)
22-8x	X		Short to power in front passenger's seat belt tensioner	(see page 23-74)
22-9x	X		Short to ground in front passenger's seat belt tensioner	(see page 23-75)
31-1x		X	Open in driver's side airbag inflator	(see page 23-76)
31-2x		X	Increased resistance in driver's side airbag inflator	(see page 23-76)
31-3x		X	Short to another wire or decreased resistance in driver's side airbag inflator	(see page 23-77)
31-8x	X		Short to power in driver's side airbag inflator	(see page 23-78)
31-9x	X		Short to ground in driver's side airbag inflator	(see page 23-79)
32-1x		X	Open in front passenger's side airbag inflator	(see page 23-80)
32-2x		X	Increased resistance in front passenger's side airbag inflator	(see page 23-80)
32-3x		X	Short to another wire or decreased resistance in front passenger's side airbag inflator	(see page 23-81)
32-8x	X		Short to power in front passenger's side airbag inflator	(see page 23-82)
32-9x	X		Short to ground in front passenger's side airbag inflator	(see page 23-83)

NOTE: The "x" at the end of each DTC denotes a numeric character (0 thru 9) or an alpha character (A thru F) that you will see on the HDS display. The character is unrelated to your troubleshooting; it designates the SRS unit manufacturer and other detail used for product analysis.

* 1: The SRS indicator turns on and stays on whenever the ignition switch is in the ON (II) position, or until the code is cleared.
* 2: The SRS indicator turns on when the DTC is set. The SRS indicator will not turn on after the ignition switch is cycled from ON (II) to OFF (0), but the DTC will be stored in the SRS unit.

(cont'd)

Protected by AR

DTC Troubleshooting Index (cont'd)

NOTE: Before looking up DTCs in the DTC troubleshooting index, verify the manufacturer of the SRS unit. The DTCs are different from manufacturer to manufacturer.

DENSO SRS Unit ('03-05 models)

DTC	Latch *1	Reset *2	Detection Item	Notes
41-1x		X	No signal from the left front impact sensor	(see page 23-92)
41-2x			Internal failure of the left front impact sensor	(see page 23-100)
41-9x	X			
41-Bx				
41-Cx	X		Faulty power supply to the left front impact sensor	(see page 23-95)
42-1x		X	No signal from the right front impact sensor	(see page 23-96)
42-2x			Internal failure of the right front impact sensor	(see page 23-101)
42-9x	X			
42-Bx				
42-Cx			Faulty power supply to the right front impact sensor	(see page 23-99)
43-1x		X	No signal from the left side impact sensor (First)	(see page 23-102)
43-2x			Internal failure of the left side impact sensor (First)	(see page 23-110)
43-Bx	X			
43-Cx			Faulty power supply to the left side impact sensor (First)	(see page 23-104)
44-1x		X	No signal from the right side impact sensor (First)	(see page 23-106)
44-2x			Internal failure of the right side impact sensor (First)	(see page 23-110)
44-Bx	X			
44-Cx			Faulty power supply to the right side impact sensor (First)	(see page 23-108)
51-2x		X	Internal failure of SRS unit	(see page 23-118)
51-4x				
51-7x				
52-8x	X			
52-9x				
52-Ax				
52-Bx			Internal failure of SRS unit	(see page 23-119)
52-Cx				
52-Dx				
52-Ex				
52-Fx				
53-3x		X	Internal failure of SRS unit	(see page 23-120)
53-4x				
54-1x				
54-2x				
54-3x				
54-4x			Internal failure of SRS unit	(see page 23-121)
54-7x				
55-1x				
55-2x				
55-7x			Internal failure of SRS unit	(see page 23-122)

NOTE: The "x" at the end of each DTC denotes a numeric character (0 thru 9) or an alpha character (A thru F) that you will see on the HDS display. The character is unrelated to your troubleshooting; it designates the SRS unit manufacturer and other detail used for product analysis.

* 1: The SRS indicator turns on and stays on whenever the ignition switch is in the ON (II) position, or until the code is cleared.

* 2: The SRS indicator turns on when the DTC is set. The SRS indicator will not turn on after the ignition switch is cycled from ON (II) to OFF (0), but the DTC will be stored in the SRS unit.

BACK

Protected by AR

NOTE: Before looking up DTCs in the DTC troubleshooting index, verify the manufacturer of the SRS unit. The DTCs are different from manufacturer to manufacturer.

DENSO SRS Unit ('03-05 models)

DTC	Latch *1	Reset *2	Detection Item	Notes
61-1x		X	Open in driver's seat belt buckle switch (with power seat)	(see page 23-123)
			Open in driver's seat belt buckle switch (without power seat)	(see page 23-126)
61-2x			Short in driver's seat belt buckle switch (with power seat)	(see page 23-129)
			Short in driver's seat belt buckle switch (without power seat)	(see page 23-132)
62-1x			Open in front passenger's seat belt buckle switch (with power seat)	(see page 23-135)
			Open in front passenger's seat belt buckle switch (without power seat)	(see page 23-138)
62-2x			Short in front passenger's seat belt buckle switch (with power seat)	(see page 23-141)
			Short in front passenger's seat belt buckle switch (without power seat)	(see page 23-144)
71-1x	X		Open in driver's seat position sensor	(see page 23-147)
71-2x			Short in driver's seat position sensor	(see page 23-148)
71-22			Short to power in driver's seat position sensor	(see page 23-150)
81-4x			Faulty front passenger's weight sensor unit	(see page 23-158)
81-5x				
81-61			No signal from the front passenger's weight sensor unit (with side airbag)	(see page 23-151)
81-62			No signal from the front passenger's weight sensor unit (without side airbag)	(see page 23-155)
81-63			Model ID code or variation code inconsistent	(see page 23-158)
81-64			ECU serial ID code inconsistent	
81-71			Front passenger's weight sensor unit does not calibrate	(see page 23-159)
81-78				
81-79			Front passenger's weight sensors drift check failure	(see page 23-158)
82-1x			No signal from the inner side front passenger's weight sensor	(see page 23-160)
83-2x			No signal from the outer side front passenger's weight sensor	(see page 23-160)
85-4x			Faulty OPDS unit	(see page 23-161)
85-5x				
85-61			No signal from the OPDS unit	(see page 23-162)
85-62			Non-stipulated response data	
85-63			Model ID code or variation code inconsistent	(see page 23-161)
85-64			ECU serial ID code inconsistent	
85-71			OPDS unit not initialized	(see page 23-170)
85-78				
85-79			OPDS drift check failure	(see page 23-161)
86-1x		X	Faulty seat-back OPDS sensor	(see page 23-170)
86-2x			Faulty seat support OPDS sensor	
87-31			Internal failure of the OPDS unit	(see page 23-171)
87-32			The side airbag cutoff indicator stays on	(see page 23-171)
91-1x			Internal failure of the SRS unit	(see page 23-175)
91-2x			Short in SRS indicator circuit	(see page 23-175)
92-1x	X		Short to power in passenger's airbag cutoff indicator	(see page 23-177)
92-2x			Open in passenger's airbag cutoff indicator	(see page 23-177)
			Short to ground in passenger's airbag cutoff indicator	(see page 23-177)
A1-1x			Faulty power supply (VA line)	(see page 23-182)
A2-1x			Faulty power supply (VB line)	(see page 23-184)
D1-11			Driver's airbag and/or driver's seat belt tensioner deployed	(see page 23-122)
D2-11			Front passenger's airbag and/or front passenger's seat belt tensioner deployed	
D3-11			Driver's side airbag deployed	
D4-11			Front passenger's side airbag deployed	
D7-11			Rear-end collisioned	
E2-11			Front passenger's airbag deployed	
E4-11			Front passenger's side airbag deployed	
F1-11			Driver's airbag and/or driver's seat belt tensioner deployed	
F2-11			Front passenger's airbag and/or front passenger's seat belt tensioner deployed	
F3-11			Driver's side airbag deployed	
F4-11			Front passenger's side airbag deployed	

NOTE: The "x" at the end of each DTC denotes a numeric character (0 thru 9) or an alpha character (A thru F) that you will see on the HDS display. The character is unrelated to your troubleshooting; it designates the SRS unit manufacturer and other detail used for product analysis.

* 1: The SRS indicator turns on and stays on whenever the ignition switch is in the ON (II) position, or until the code is cleared.

* 2: The SRS indicator turns on when the DTC is set. The SRS indicator will not turn on after the ignition switch is cycled from ON (II) to OFF (0), but the DTC will be stored in the SRS unit.

(cont'd)

Protected by AR

DTC Troubleshooting Index (cont'd)

NOTE: Before looking up DTCs in the DTC troubleshooting index, verify the manufacturer of the SRS unit. The DTCs are different from manufacturer to manufacturer.

TRW SRS Unit ('06 model)

DTC	Latch *1	Reset *2	Detection Item	Notes
11-1x		X	Open or increased resistance in driver's airbag first inflator	(see page 23-58)
11-3x		X	Short to another wire or decreased resistance in driver's airbag first inflator	(see page 23-59)
11-4x		X	Open or increased resistance in driver's airbag second inflator	(see page 23-58)
11-6x		X	Short to another wire or decreased resistance in driver's airbag second inflator	(see page 23-59)
11-8x	X		Short to power in driver's airbag first inflator	(see page 23-61)
11-9x	X		Short to ground in driver's airbag first inflator	(see page 23-62)
11-Ax	X		Short to power in driver's airbag second inflator	(see page 23-61)
11-Bx	X		Short to ground in driver's airbag second inflator	(see page 23-62)
12-1x		X	Open or increased resistance in front passenger's airbag first inflator	(see page 23-64)
12-3x		X	Short to another wire or decreased resistance in front passenger's airbag first inflator	(see page 23-65)
12-4x		X	Open or increased resistance in front passenger's airbag second inflator	(see page 23-64)
12-6x		X	Short to another wire or decreased resistance in front passenger's airbag second inflator	(see page 23-65)
12-8x	X		Short to power in front passenger's airbag first inflator	(see page 23-66)
12-9x	X		Short to ground in front passenger's airbag first inflator	(see page 23-67)
12-Ax	X		Short to power in front passenger's airbag second inflator	(see page 23-66)
12-Bx	X		Short to ground in front passenger's airbag second inflator	(see page 23-67)
21-1x		X	Open or increased resistance in driver's seat belt tensioner	(see page 23-68)
21-3x		X	Short to another wire or decreased resistance in driver's seat belt tensioner	(see page 23-69)
21-8x	X		Short to power in driver's seat belt tensioner	(see page 23-70)
21-9x	X		Short to ground in driver's seat belt tensioner	(see page 23-71)
22-1x		X	Open or increased resistance in front passenger's seat belt tensioner	(see page 23-72)
22-3x		X	Short to another wire or decreased resistance in front passenger's seat belt tensioner	(see page 23-73)
22-8x	X		Short to power in front passenger's seat belt tensioner	(see page 23-74)
22-9x	X		Short to ground in front passenger's seat belt tensioner	(see page 23-75)
31-1x		X	Open or increased resistance in driver's side airbag inflator	(see page 23-76)
31-3x		X	Short to another wire or decreased resistance in driver's side airbag inflator	(see page 23-77)
31-8x	X		Short to power in driver's side airbag inflator	(see page 23-78)
31-9x	X		Short to ground in driver's side airbag inflator	(see page 23-79)
32-1x		X	Open or increased resistance in front passenger's side airbag inflator	(see page 23-80)
32-3x		X	Short to another wire or decreased resistance in front passenger's side airbag inflator	(see page 23-81)
32-8x	X		Short to power in front passenger's side airbag inflator	(see page 23-82)
32-9x	X		Short to ground in front passenger's side airbag inflator	(see page 23-83)
33-1x		X	Open or increased resistance in left side curtain airbag inflator	(see page 23-84)
33-3x		X	Short to another wire or decreased resistance in left side curtain airbag inflator	(see page 23-85)
33-8x	X		Short to power in left side curtain airbag inflator	(see page 23-86)
33-9x	X		Short to ground in left side curtain airbag inflator	(see page 23-87)
34-1x		X	Open or increased resistance in right side curtain airbag inflator	(see page 23-88)
34-3x		X	Short to another wire or decreased resistance in right side curtain airbag inflator	(see page 23-89)
34-8x	X		Short to power in right side curtain airbag inflator	(see page 23-90)
34-9x	X		Short to ground in right side curtain airbag inflator	(see page 23-91)

NOTE: The "x" at the end of each DTC denotes a numeric character (0 thru 9) or an alpha character (A thru F) that you will see on the HDS display. The character is unrelated to your troubleshooting; it designates the SRS unit manufacturer and other detail used for product analysis.

* 1: The SRS indicator turns on and stays on whenever the ignition switch is in the ON (II) position, or until the code is cleared.

* 2: The SRS indicator turns on when the DTC is set. The SRS indicator will not turn on after the ignition switch is cycled from ON (II) to OFF (0), but the DTC will be stored in the SRS unit.

BACK

Protected by AR

NOTE: Before looking up DTCs in the DTC troubleshooting index, verify the manufacturer of the SRS unit. The DTCs are different from manufacturer to manufacturer.

TRW SRS Unit ('06 model)

DTC	Latch *1	Reset *2	Detection Item	Notes
41-1x		X	No signal from the left front impact sensor	(see page 23-92)
41-2x		X	Internal failure of the left front impact sensor	(see page 23-100)
41-3x				
41-Bx	X			
42-1x		X	No signal from the right front impact sensor	(see page 23-96)
42-2x		X	Internal failure of the right front impact sensor	(see page 23-101)
42-3x				
42-Bx	X			
43-1x		X	No signal from the left side impact sensor (first)	(see page 23-102)
43-2x		X	Internal failure of the left side impact sensor (first)	(see page 23-110)
43-3x				
43-Bx	X			
44-1x		X	No signal from the right side impact sensor (first)	(see page 23-106)
44-2x		X	Internal failure of the right side impact sensor (first)	(see page 23-110)
44-3x				
44-Bx	X			
45-1x		X	No signal from left side impact sensor (second)	(see page 23-111)
45-2x		X	Internal failure of left side impact sensor (second)	(see page 23-117)
45-3x				
45-Bx	X			
46-1x		X	No signal from right side impact sensor (second)	(see page 23-114)
46-2x		X	Internal failure of right side impact sensor (second)	(see page 23-117)
46-3x				
46-Bx	X			
51-2x		X	Internal failure of SRS unit	(see page 23-118)
51-4x				
52-8x	X			
52-9x				
52-Ax				
52-Bx	X		Internal failure of SRS unit	(see page 23-119)
52-Cx				
52-Dx				
52-Ex				
52-Fx				
53-1x		X		
53-2x		X	Internal failure of SRS unit	(see page 23-120)
53-3x				
53-4x				
54-1x				
54-2x				
54-3x				
54-4x		X	Internal failure of SRS unit	(see page 23-121)
54-5x				
54-6x				
54-7x				
55-1x				
55-2x				
55-3x		X	Internal failure of SRS unit	(see page 23-122)
55-4x				

NOTE: The "x" at the end of each DTC denotes a numeric character (0 thru 9) or an alpha character (A thru F) that you will see on the HDS display. The character is unrelated to your troubleshooting; it designates the SRS unit manufacturer and other detail used for product analysis.

* 1: The SRS indicator turns on and stays on whenever the ignition switch is in the ON (II) position, or until the code is cleared.

* 2: The SRS indicator turns on when the DTC is set. The SRS indicator will not turn on after the ignition switch is cycled from ON (II) to OFF (0), but the DTC will be stored in the SRS unit.

(cont'd)

BACK

Protected by AR

DTC Troubleshooting Index (cont'd)

NOTE: Before looking up DTCs in the DTC troubleshooting index, verify the manufacturer of the SRS unit. The DTCs are different from manufacturer to manufacturer.

TRW SRS Unit ('06 model)

DTC	Latch *1	Reset *2	Detection Item	Notes
61-1x		X	Open in driver's seat belt buckle switch (with power seat)	(see page 23-123)
			Open in driver's seat belt buckle switch (without power seat)	(see page 23-126)
61-2x			Short in driver's seat belt buckle switch (with power seat)	(see page 23-129)
			Short in driver's seat belt buckle switch (without power seat)	(see page 23-132)
62-1x			Open in front passenger's seat belt buckle switch (with power seat)	(see page 23-135)
			Open in front passenger's seat belt buckle switch (without power seat)	(see page 23-138)
62-2x			Short in front passenger's seat belt buckle switch (with power seat)	(see page 23-141)
			Short in front passenger's seat belt buckle switch (without power seat)	(see page 23-144)
71-1x	X		Open in driver's seat position sensor	(see page 23-147)
71-2x			Short in driver's seat position sensor	(see page 23-148)
81-4x			Faulty ODS unit	(see page 23-158)
81-5x				
81-61			No signal from the ODS unit	(see page 23-166)
81-62			Non-stipulated response data	(see page 23-166)
81-63			Model ID code or variation code inconsistent	(see page 23-158)
81-64			ECU serial ID code inconsistent	
81-71			ODS unit does not calibrate	(see page 23-159)
81-78				
81-79			Front passenger's weight sensors drift check failure	(see page 23-158)
82-1x			No signal from the inner side front passenger's weight sensor	(see page 23-160)
83-2x			No signal from the outer side front passenger's weight sensor	(see page 23-160)
85-4x			Faulty ODS unit	(see page 23-161)
85-5x				
85-61			No signal from the ODS unit	(see page 23-166)
85-62			Non-stipulated response data	
85-63			Model ID code or variation code inconsistent	(see page 23-161)
85-64			ECU serial ID code inconsistent	
85-71			ODS unit not initialized	(see page 23-170)
85-78				
85-79			ODS drift check failure	(see page 23-161)
86-1x			Faulty seat-back OPDS sensor	(see page 23-170)
86-2x			Faulty seat support OPDS sensor	
87-31			Internal failure of the ODS unit	(see page 23-171)
87-32			The side airbag cutoff indicator stays on	(see page 23-173)
91-1x			Internal failure of the SRS unit	(see page 23-175)
91-2x			Short in SRS indicator circuit	(see page 23-175)
92-1x		X	Open in passenger's airbag cutoff indicator	(see page 23-177)
92-2x			Short to ground in passenger's airbag cutoff indicator	(see page 23-177)
A1-1x	X		Faulty power supply (VA line)	(see page 23-182)
A2-1x			Faulty power supply (VB line)	(see page 23-184)
D1-11			Driver's airbag and driver's seat belt tensioner deployed	(see page 23-122)
D2-11			Front passenger's airbag and front passenger's seat belt tensioner deployed	
D3-11			Driver's side airbag deployed	
D4-11			Front passenger's side airbag deployed	
D7-11			Rear-end collisioned	
E2-11			Front passenger's airbag deployed	
E4-11			Front passenger's side airbag deployed	
F1-11			Driver's airbag and driver's seat belt tensioner deployed	
F2-11			Front passenger's airbag and front passenger's seat belt tensioner deployed	
F3-11			Driver's side airbag deployed	
F4-11			Front passenger's side airbag deployed	

NOTE: The "x" at the end of each DTC denotes a numeric character (0 thru 9) or an alpha character (A thru F) that you will see on the HDS display. The character is unrelated to your troubleshooting; it designates the SRS unit manufacturer and other detail used for product analysis.

* 1: The SRS indicator turns on and stays on whenever the ignition switch is in the ON (II) position, or until the code is cleared.
* 2: The SRS indicator turns on when the DTC is set. The SRS indicator will not turn on after the ignition switch is cycled from ON (II) to OFF (0), but the DTC will be stored in the SRS unit.

BACK

Protected by AR

Symptom Troubleshooting Index

Symptom	Diagnostic procedure	Also check for
SRS indicator does not come on	Symptom Troubleshooting (see page 23-186)	
SRS indicator stays on, but no DTCs are stored	Symptom Troubleshooting (see step 1 on page 23-190)	
Side airbag cutoff indicator stays on after bulb check, and no DTCs are stored, or side airbag cutoff indicator is flashing	• Make sure nothing is on the front passenger's seat. • If the side airbag cutoff indicator stays on after the ignition switch is turned ON (II), initialize the OPDS/ODS unit (see page 23-32). – If the side airbag cutoff indicator operates normally, the system is OK. – If the side airbag cutoff indicator stays on, or flashes replace the OPDS sensor/ seat-back (see page 20-166). The sensor is part of the seat-back pad.	DTC 87-32 troubleshooting

Protected by AR

System Description

SRS Components

Airbags
The SRS is a safety device which, when used with the seat belt, is designed to help protect the driver and front passenger in a frontal impact exceeding a certain set limit. The system consists of the SRS unit, including safing sensor and impact sensor (A), the cable reel (B), the driver's airbag (C), the front passenger's airbag (D), side airbags (E), side curtain airbags (L), seat belt tensioners (I), front impact sensors (J), side impact sensors (first) (F) and side impact sensors (second) (K).
Since the driver's and front passenger's airbags use the same sensors, both normally inflate at the same time. However, it is possible for only one airbag to inflate. This can occur when the severity of a collision is at the margin, or threshold, that the SRS unit determines whether or not the airbags will deploy. In such cases, the seat belt will provide sufficient protection, and the supplemental protection offered by the airbag would be minimal.

Front Passenger's Weight Sensors ('04-06 models)
The front passenger's weight sensor unit ('04-05 models) (M) is under the front passenger's seat along with the weight sensors (N). The weight sensors detect the weight on the seat, and send the information to the front passenger's weight sensor unit ('04-05 models) or the ODS unit ('06 model). If the total weight is about 65 lbs (30 kg) or less, the front passenger's weight sensor unit or OPDS/ODS unit sends a signal to the SRS unit to prevent the passenger's airbag from deploying. When the passenger's airbag is disabled, the passenger airbag cutoff indicator on the center panel comes on to alert the driver that the front passenger's airbag will not deploy in a front-end collision.

Driver's Seat Position Sensor ('04-06 models)
The driver's seat position sensor (O) is under the driver's seat on the left side. When the driver's seat is moved to its full forward position, the deployment of the driver's airbag is moderated to decrease its force of impact during a front-end collision.

OPDS/ODS
The side airbag system also includes an occupant position detection system (OPDS). This system consists of sensors (G) and a OPDS/ODS unit (H) in the front passenger's seat-back. The OPDS/ODS unit sends occupant height and position data to the SRS unit. If the OPDS/ODS unit determines that the front passenger is of small stature (for example, a child) or the front passenger is leaning into the side airbag deployment path, the SRS unit will automatically disable the passenger's side airbag. The SRS unit will also disable the airbag when the OPDS detects certain objects on the seat. When the side airbag is disabled, the side airbag cutoff indicator on the instrument panel alerts the driver that the passenger's side airbag will not deploy in a side impact. When the object is removed, or the passenger sits upright, the side airbag cutoff indicator will go off after a few seconds, alerting the driver that the passenger's side airbag will deploy in a side impact.

BACK

Protected by AR

('03-05 models)

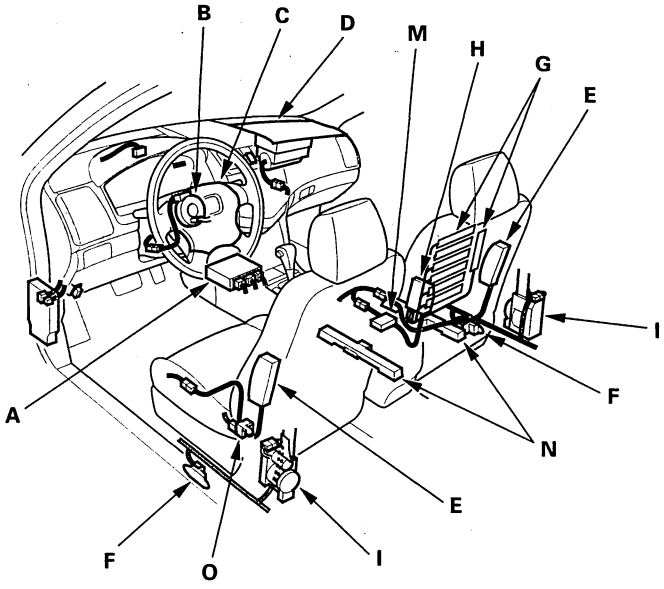

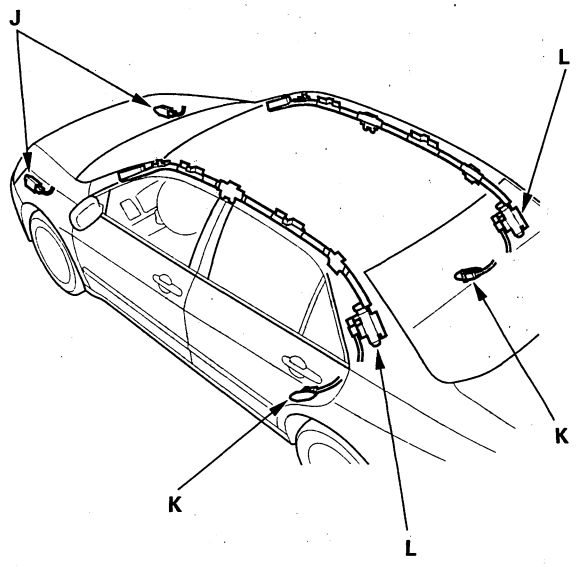

('06 model)

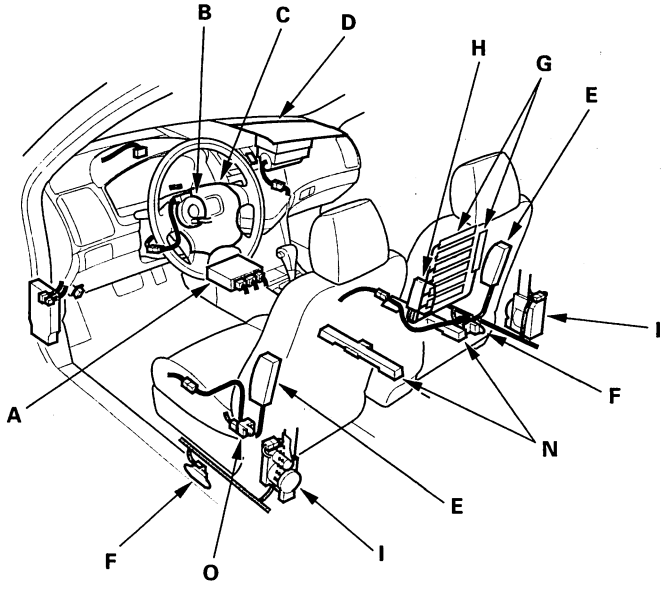

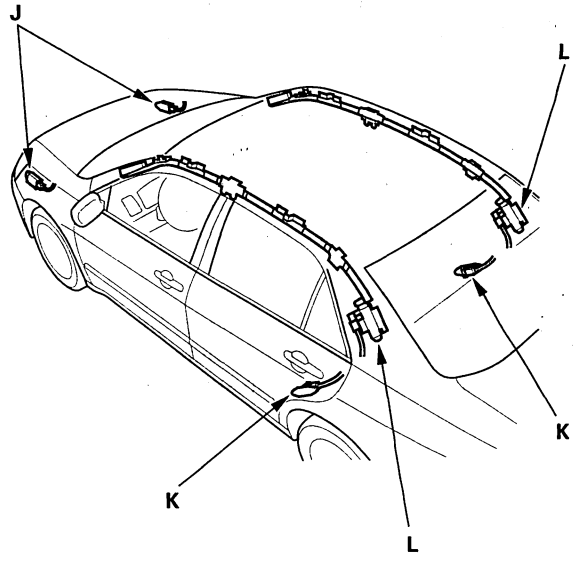

(cont'd)

BACK

Protected by AR

System Description (cont'd)

Side Airbag Cutoff Indicator/OPDS/ODS Operation

The indicator comes on if the front passenger's seat is occupied by a small adult or child who is leaning into the deployment path, or an object (grocery bag, briefcase, purse, etc.) is in the seat. This indicates the passenger's side airbag is off and will not deploy; there is no problem with the side airbag. If the passenger sits upright or moves to another seat, or you remove the object from the seat, the light should go off. There will be some delay between the occupant's repositioning, and when the indicator will turn on or off.

Passenger Airbag Cutoff Indicator

The indicator comes on if the weight of the front passenger is 65 lbs (30 kg) or less. This indicates the passenger's front airbag is off and will not deploy. The front airbag is shut off to reduce the chance of airbag-caused injuries.

SRS Operation

The main circuit in the SRS unit senses and judges the force of impact and, if necessary, ignites the inflator charges. If battery voltage is too low or power is disconnected due to the impact, the voltage regulator and the back-up power circuit, respectively, will keep voltage at a constant level.

For the SRS to operate

Seat Belt Tensioners

(1) A front impact sensor must activate and send electric signals to the microprocessor.
(2) The microprocessor must compute the signals and send them to the tensioners.
(3) The charges must ignite and deploy the tensioners.

Driver's and Front Passenger's Airbag(s)

(1) A front impact sensor must activate, and send electric signals to the microprocessor.
(2) The microprocessor must compute the signals, and send them to the airbag inflator(s).
(3) The inflators that received signals must ignite and deploy the airbags.

Side Airbag(s)

(1) A side impact sensor must activate, and send electric signals to the microprocessor.
(2) The microprocessor must compute the signals and send them to the side airbag inflator(s). However, the microprocessor cuts off the signals to the front passenger's side airbag if the SRS unit determines that the front passenger's head is in the deployment path of the side airbag.
(3) The inflator that received the signal must ignite and deploy the side airbag.

Side Curtain Airbag(s)

(1) Side impact sensors must activate, and send electrical signals to the microprocessor.
(2) The microprocessor must compute the signals and send them to the side curtain airbag and side airbag inflator(s).
(3) The inflator that received the signals must ignite and deploy the side curtain airbag and side airbag at the same time.

BACK

Protected by AR

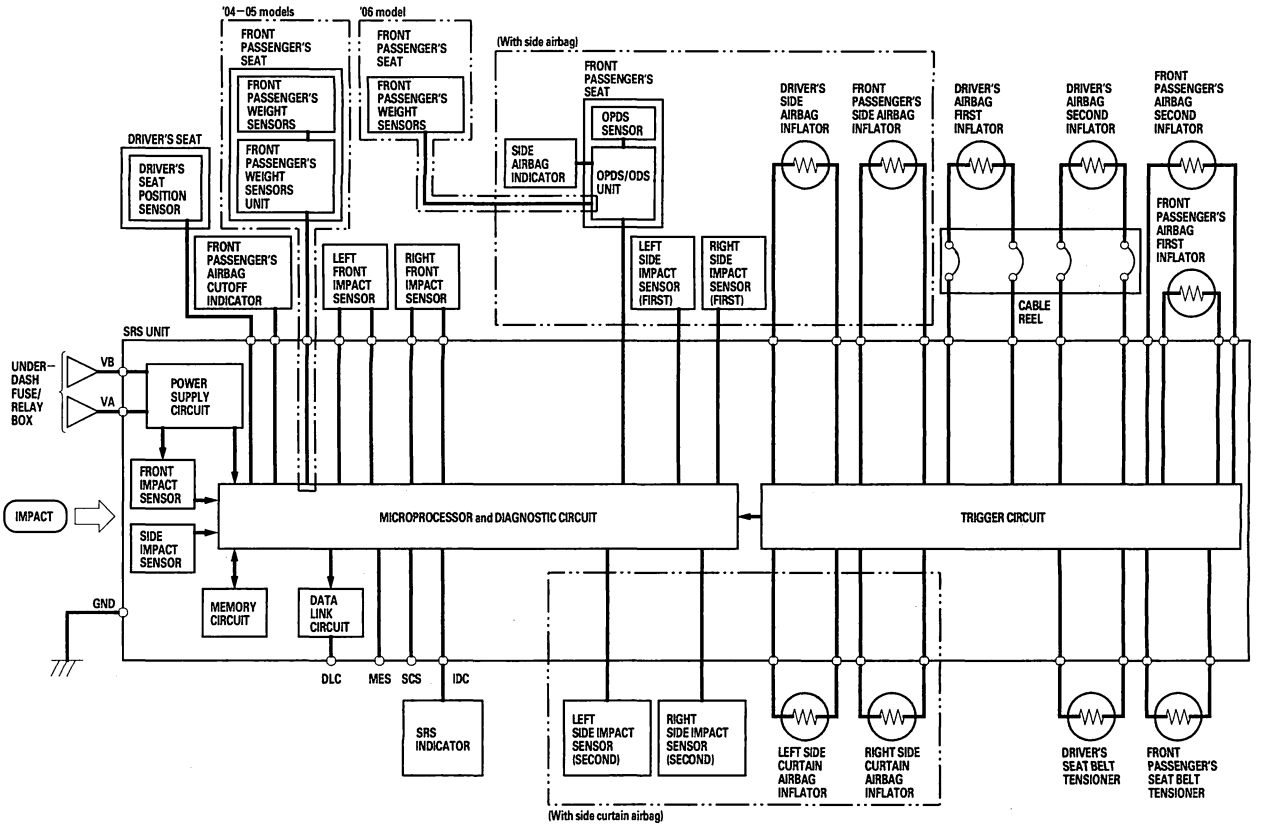

Self-diagnosis System

A self-diagnosis circuit is built into the SRS unit; when the ignition switch is turned ON (II), the SRS indicator comes on and goes off after about 6 seconds if the system is operating normally.

If the indicator does not come on, or does not go off after 6 seconds, or if it comes on while driving, it indicates an abnormality in the system. The system must be inspected and repaired as soon as possible.

For better serviceability, the SRS unit memory stores a DTC that relates to the cause of the malfunction, and the unit is connected to the data link connector (DLC). This information can be read with the HDS when it is connected to the DLC (16P) (see page 23-30).

NOTE: Before you disconnect the battery negative cable for troubleshooting, make sure you have the anti-theft code for the audio and the navigation system. Write down the audio presets.

Protected by AR

Circuit Diagram

Without side curtain airbags ('03-05 models)

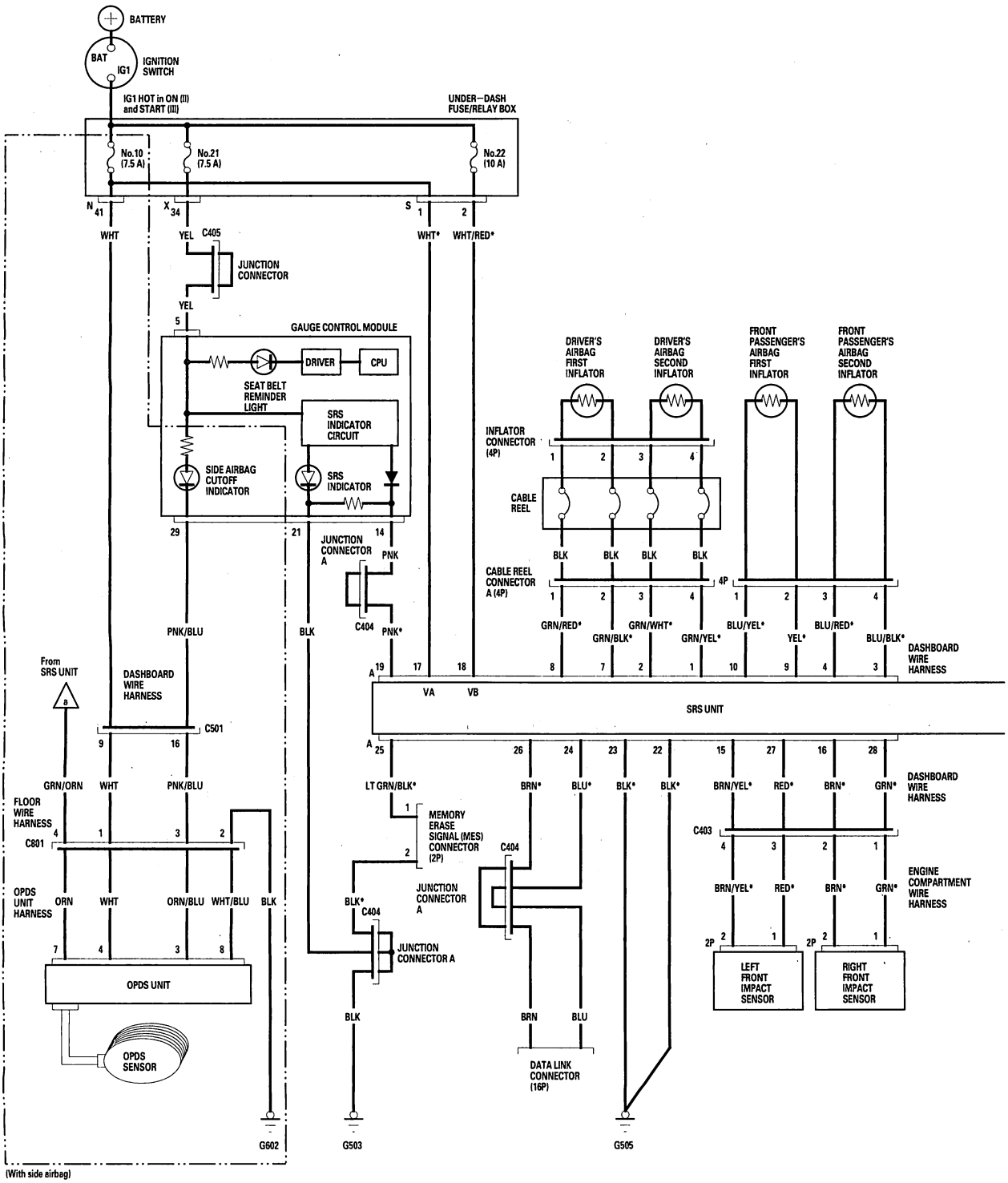

BACK

Protected by AR

BLUE or BROWN wire color can be used for the SRS circuit's which has * mark

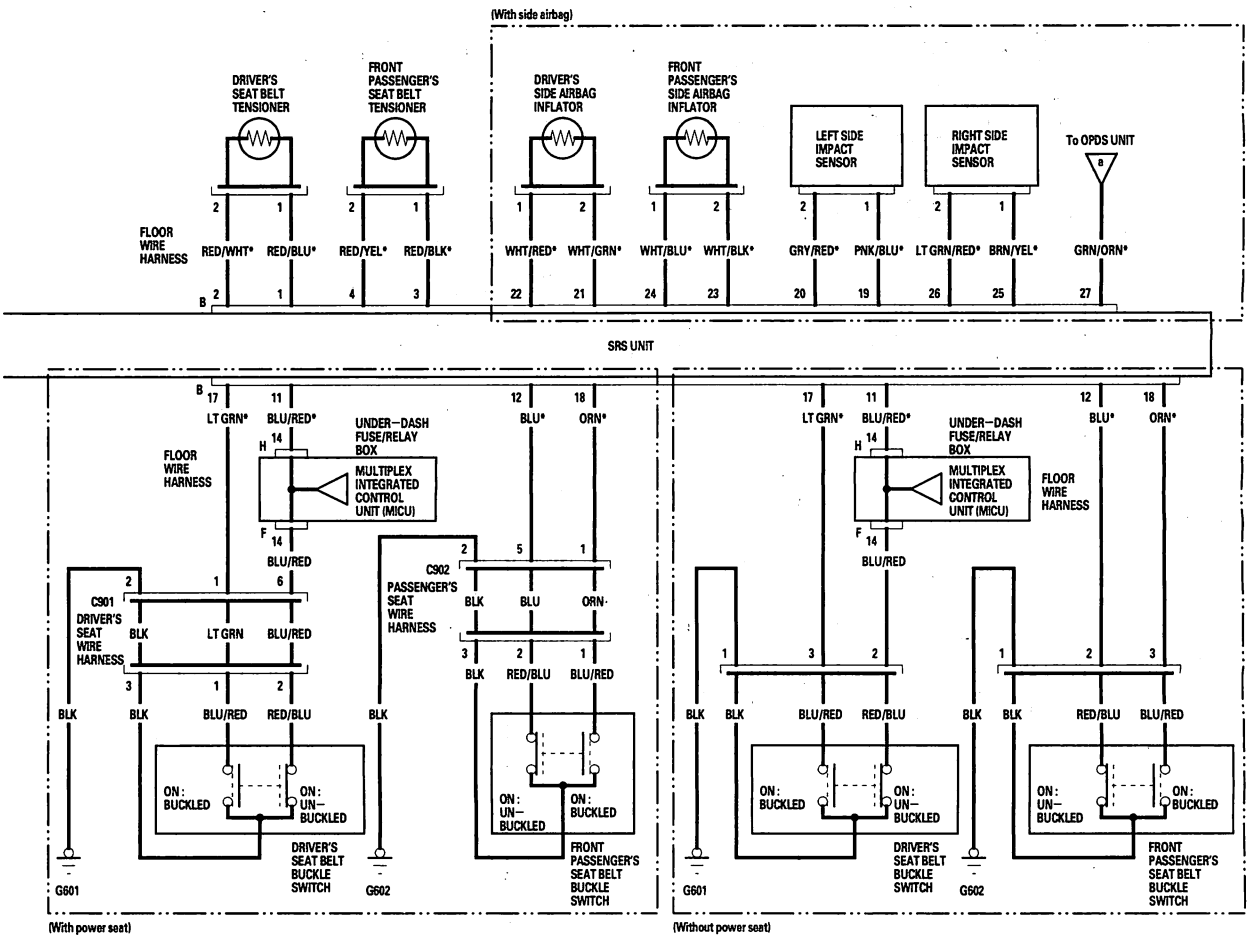

BACK

Protected by AR

Circuit Diagram (cont'd)

With side curtain airbags ('03-05 models)

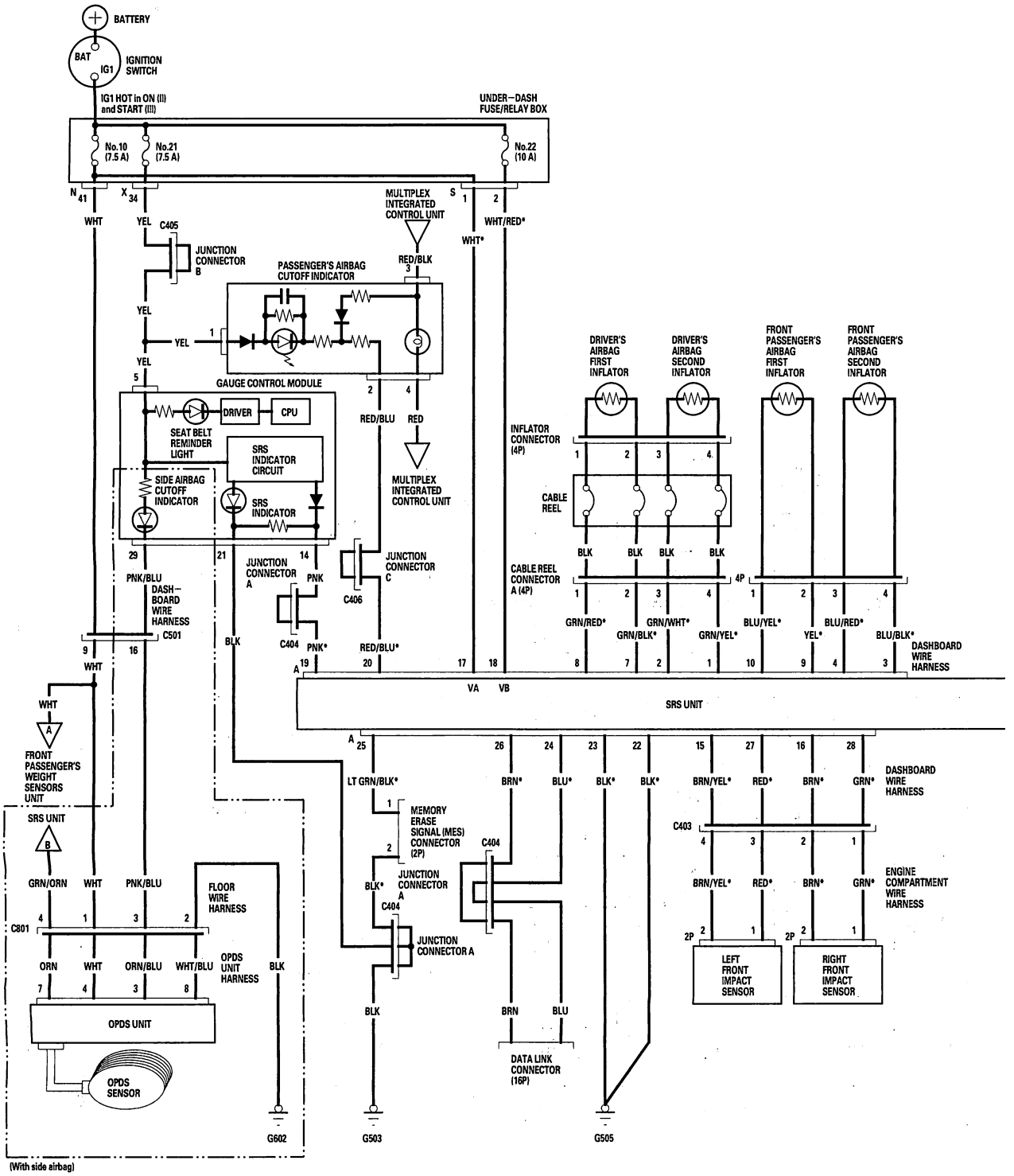

BACK

Protected by AR

*1 : With power seat
*2 : Without power seat

BLUE or BROWN wire color can be used the SRS circuit's which has * mark

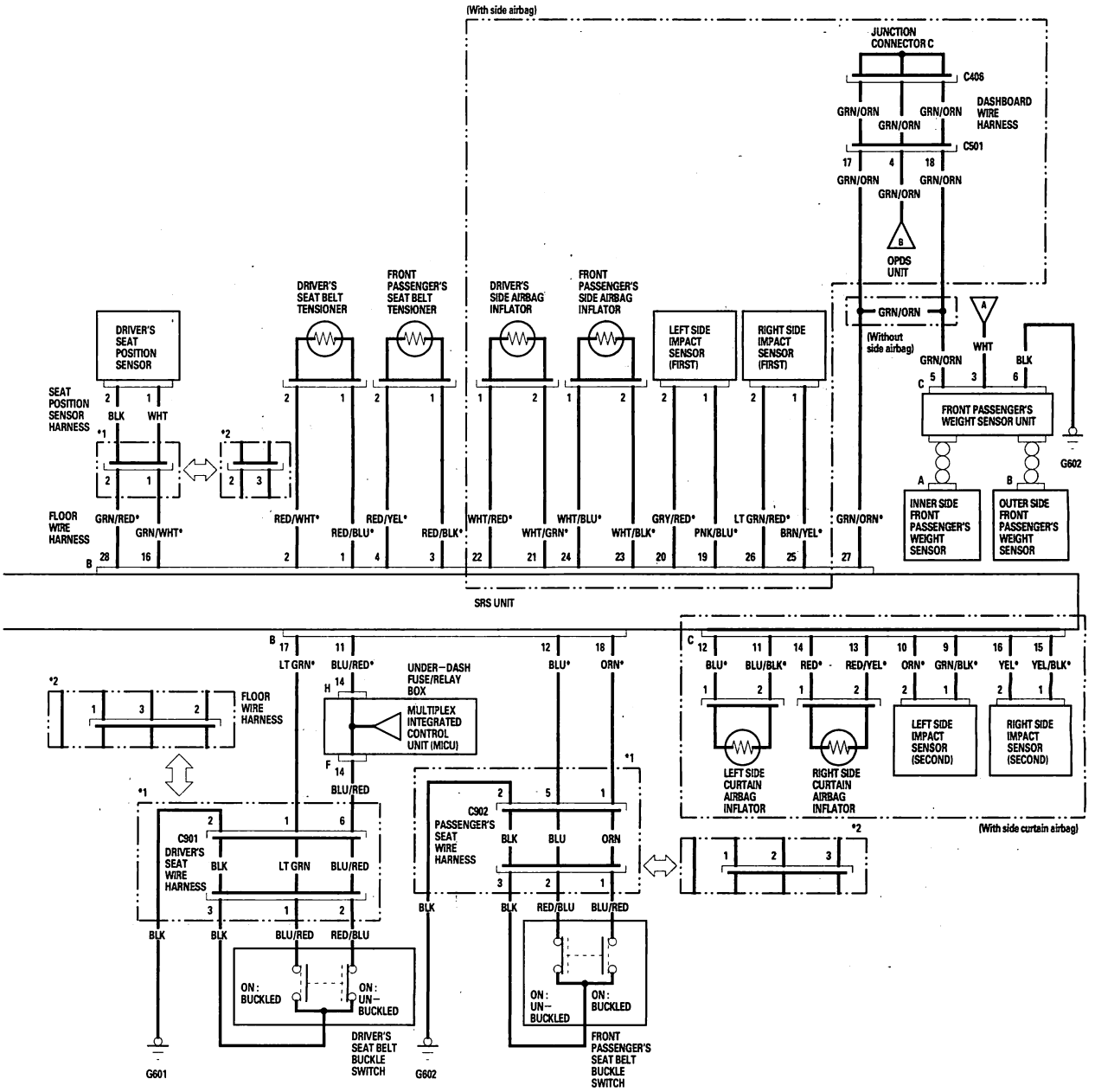

BACK

Protected by AR

Circuit Diagram (cont'd)

('06 model)

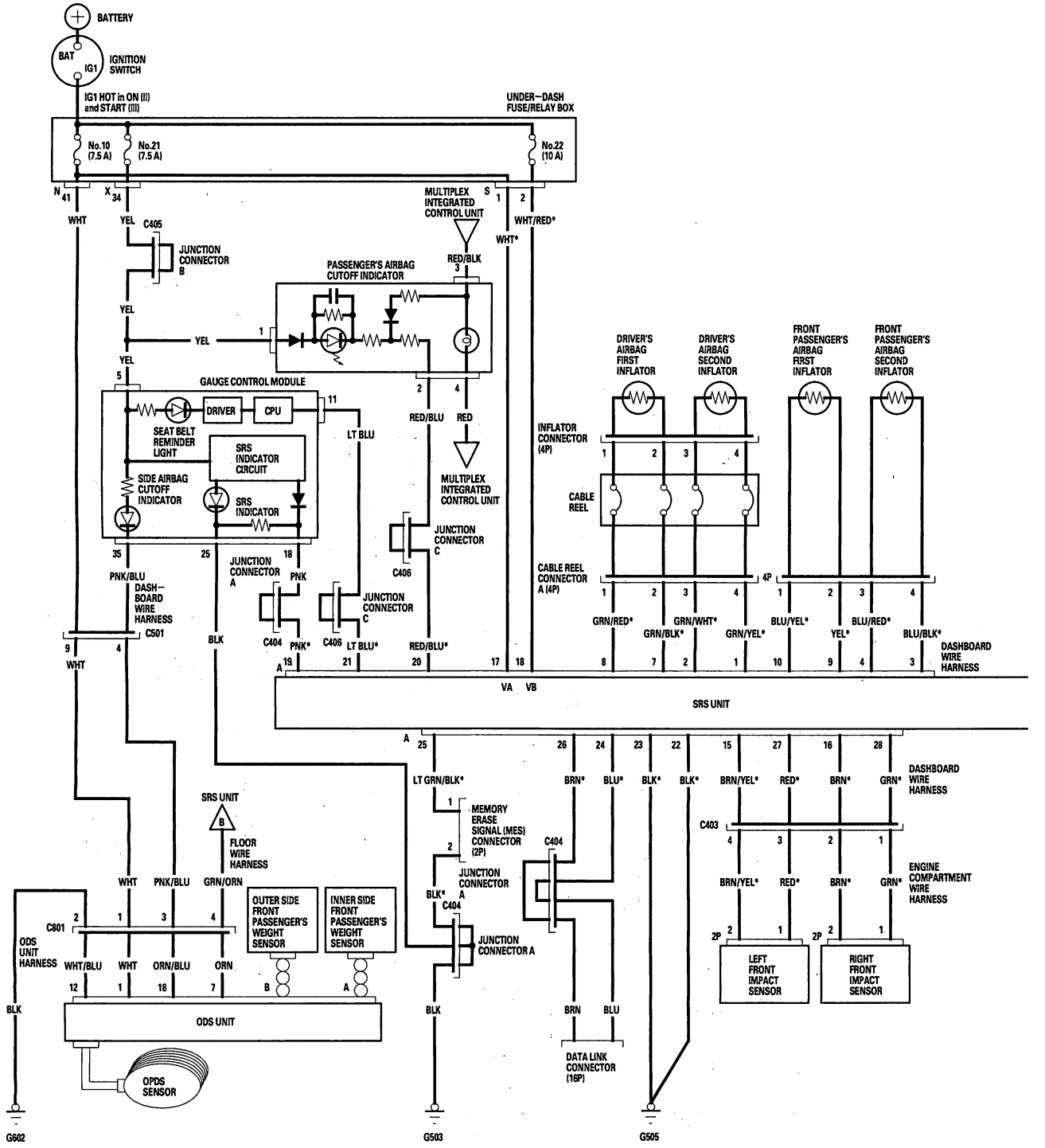

BACK

Protected by AR

*1 : With power seat
*2 : Without power seat

BLUE or BROWN wire color can be used for the SRS circuit's which has * mark

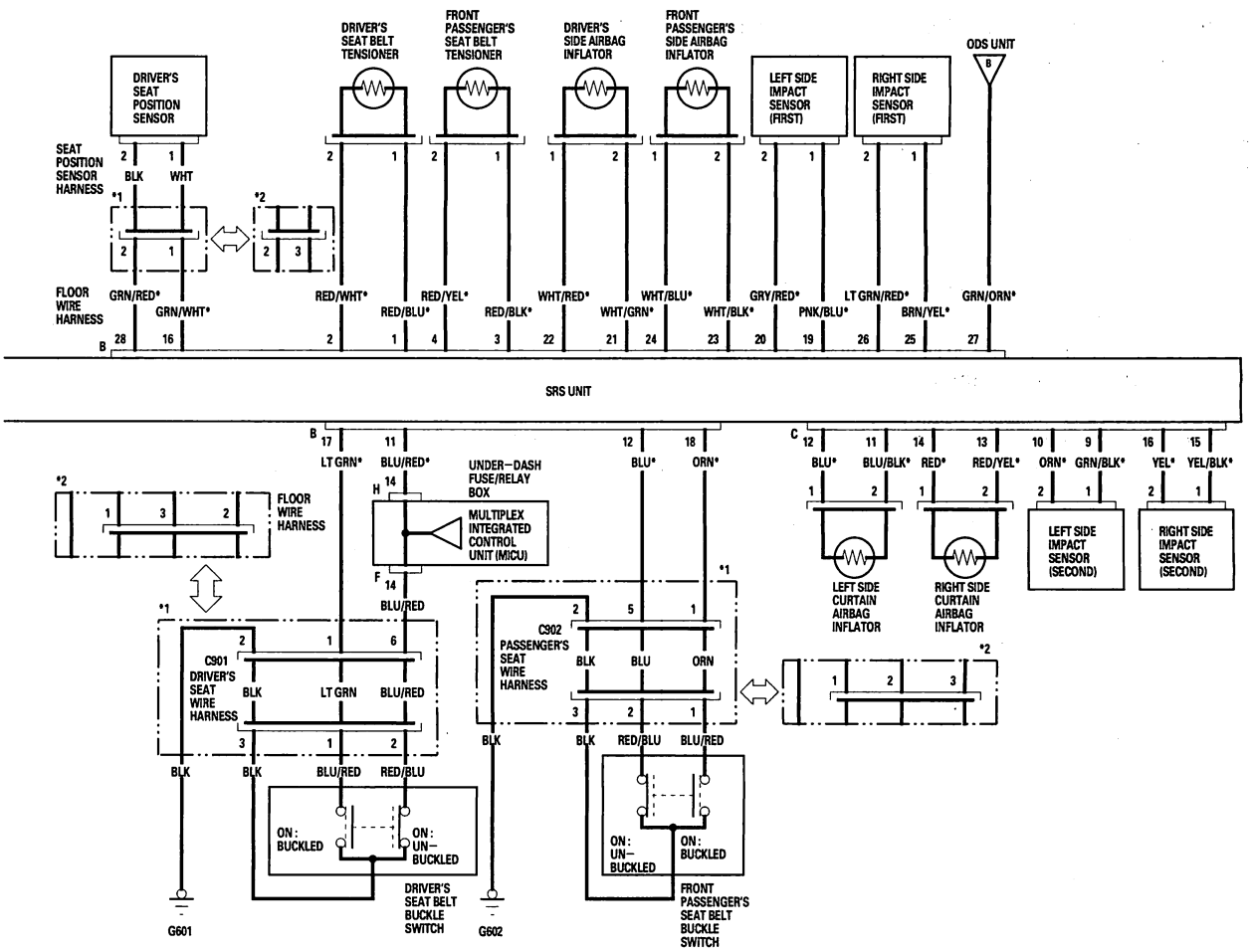

BACK

Protected by AR

DTC Troubleshooting

DTC 11-1x (11-10 to 11-19, 11-1A to 11-1F):
Open in Driver's Airbag First Inflator

DTC 11-2x (11-20 to 11-29, 11-2A to 11-2F):
Increased Resistance in Driver's First Airbag Inflator

DTC 11-4x (11-40 to 11-49, 11-4A to 11-4F):
Open in Driver's Airbag Second Inflator

DTC 11-5x (11-50 to 11-59, 11-5A to 11-5F):
Increased Resistance in Driver's Airbag Second Inflator

Special Tools Required
- SRS inflator simulator 07SAZ-TB4011A
- SRS simulator lead F 07XAZ-SZ30100

1. Erase the DTC memory (see page 23-31).
2. Turn the ignition switch ON (II), and check that the SRS indicator comes on for about 6 seconds and then goes off.

   Does the SRS indicator stay on, and is DTC 11-1x, 11-2x, 11-4x, or 11-5x indicated?

   YES—Go to step 3.

   NO—Intermittent failure, system is OK at this time. Go to Troubleshooting Intermittent Failures (see page 23-32). If another DTC is indicated, go to the DTC troubleshooting index.
3. Turn the ignition switch OFF. Disconnect the battery negative cable, and wait for 3 minutes.
4. Disconnect the driver's airbag 4P connector (A) from the cable reel.

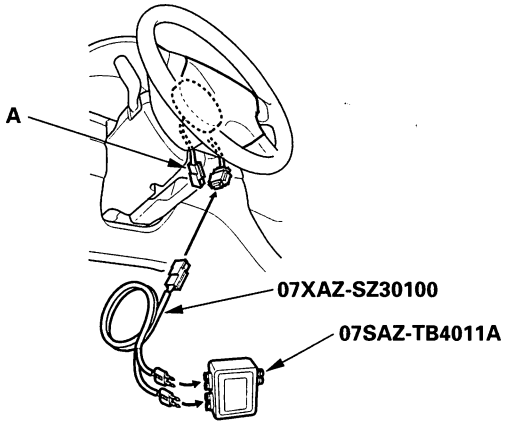

5. Connect the SRS inflator simulator (2 Ω connectors) and simulator lead F to the cable reel.
6. Reconnect the battery negative cable.
7. Erase the DTC memory.
8. Read the DTC (see page 23-30).

   Is DTC 11-1x, 11-2x, 11-4x, or 11-5x indicated?

   YES—Go to step 9.

   NO—Open or increased resistance in the driver's airbag first or second inflator; replace the driver's airbag (see page 23-197).■
9. Turn the ignition switch OFF. Disconnect the battery negative cable, and wait for 3 minutes.
10. Disconnect the dashboard wire harness 4P connector (A) from the cable reel.

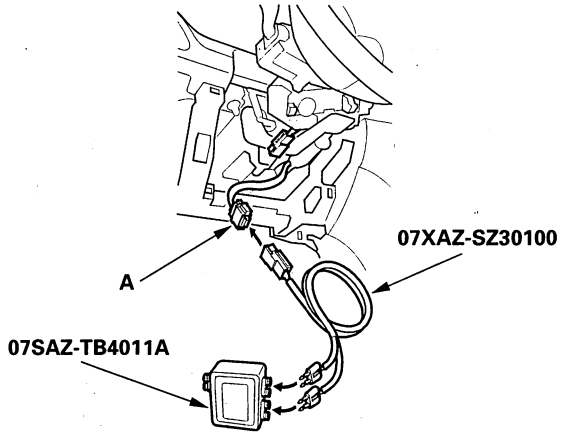

11. Connect the SRS inflator simulator (2 Ω connectors) and the simulator lead to the dashboard wire harness.
12. Reconnect the battery negative cable.
13. Erase the DTC memory.

BACK

Protected by AR

14. Read the DTC.

    Is DTC 11-1x, 11-2x, 11-4x, or 11-5x indicated?

    YES—Go to step 15.

    NO—Open or increased resistance in the cable reel; replace the cable reel (see page 23-210). ■

15. Turn the ignition switch OFF. Disconnect the battery negative cable, and wait for 3 minutes.

16. Disconnect SRS unit connector A (28P) from the SRS unit (see step 7 on page 23-29). Do not disconnect the simulator lead from dashboard wire harness 4P connector.

17. Disconnect the SRS inflator simulator from SRS simulator lead F.

18. Check the resistance between the terminals of both SRS simulator leads. There should be 1 Ω or less.

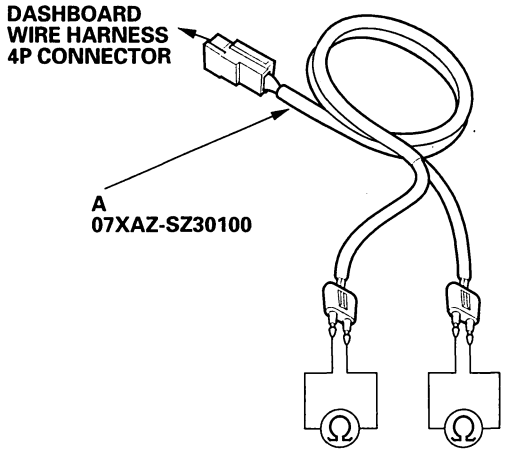

Is the resistance as specified?

YES—Faulty SRS unit or poor contact at SRS unit connector A (28P) and the SRS unit. Check the connection between the connector and the SRS unit. If the connection is OK, replace the SRS unit (see page 23-213). ■

NO—Open or increased resistance in the dashboard wire harness; replace the dashboard wire harness. ■

DTC 11-3x (11-30 to 11-39, 11-3A to 11-3F): Short to Another Wire or Decreased Resistance in Driver's Airbag First Inflator

DTC 11-6x (11-60 to 11-69, 11-6A to 11-6F): Short to Another Wire or Decreased Resistance in Driver's Airbag Second Inflator

Special Tools Required
- SRS inflator simulator 07SAZ-TB4011A
- SRS simulator lead F 07XAZ-SZ30100
- SRS short canceller 070AZ-SAA0100

1. Erase the DTC memory (see page 23-31).

2. Turn the ignition switch ON (II), and check that the SRS indicator comes on for about 6 seconds and then goes off.

   Does the SRS indicator stay on, and is DTC 11-3x or 11-6x indicated?

   YES—Go to step 3.

   NO—Intermittent failure, system is OK at this time. Go to Troubleshooting Intermittent Failures (see page 23-32). If another DTC is indicated, go to the DTC troubleshooting index.

3. Turn the ignition switch OFF. Disconnect the battery negative cable, and wait for 3 minutes.

4. Disconnect the driver's airbag 4P connector (A) from the cable reel.

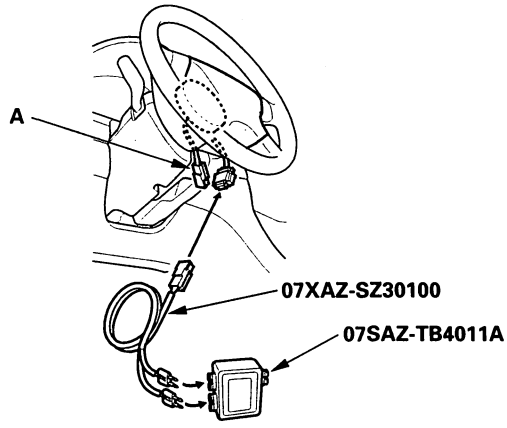

5. Connect the SRS inflator simulator (2 Ω connectors) and simulator lead F to the cable reel.

(cont'd)

Protected by AR

DTC Troubleshooting (cont'd)

6. Reconnect the battery negative cable.
7. Erase the DTC memory.
8. Read the DTC (see page 23-30).

   Is DTC 11-3x or 11-6x indicated?

   YES—Go to step 9.

   NO—Short in the driver's airbag first or second inflator; replace the driver's airbag (see page 23-197).■
9. Turn the ignition switch OFF. Disconnect the battery negative cable, and wait for 3 minutes.
10. Disconnect the dashboard wire harness 4P connector (A) from the cable reel.

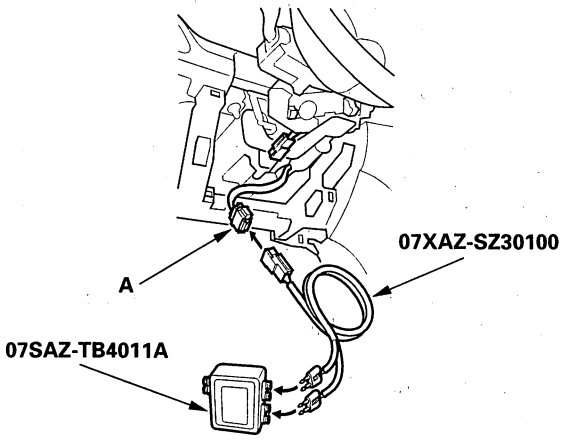

11. Connect the SRS inflator simulator (2 Ω connectors) and the simulator lead to the dashboard wire harness.
12. Reconnect the battery negative cable.
13. Erase the DTC memory.
14. Read the DTC.

    Is DTC 11-3x or 11-6x indicated?

    YES—Go to step 15.

    NO—Short in the cable reel; replace the cable reel (see page 23-210).■
15. Turn the ignition switch OFF. Disconnect the battery negative cable, and wait for 3 minutes.
16. Disconnect SRS unit connector A (28P) from the SRS unit (see step 7 on page 23-29).
17. Disconnect the SRS inflator simulator from the SRS simulator lead.
18. Connect SRS short cancellers (070AZ-SAA0100) to the No. 7 and No. 8 terminals and No. 1 and No.2 terminals of the SRS unit connector A (28P) (see page 23-25).
19. Check resistance between the terminals of both SRS simulator leads. There should be an open circuit or at least 1 MΩ.

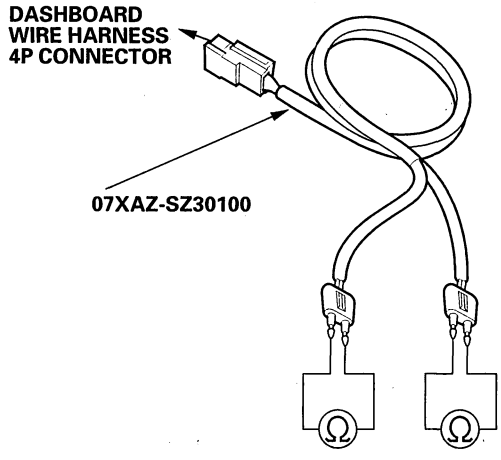

Is the resistance as specified?

YES—Faulty SRS unit or poor contact at SRS unit connector A (28P) and the SRS unit. Check the connection between the connector and the SRS unit. If the connection is OK, replace the SRS unit (see page 23-213).■

NO—Short in the dashboard wire harness; replace the dashboard wire harness.■

BACK

Protected by AR

DTC 11-8x (11-80 to 11-89, 11-8A to 11-8F): Short to Power in Driver's Airbag First Inflator

DTC 11-Ax (11-A0 to 11-A9, 11-AA to 11-AF): Short to Power in Driver's Airbag Second Inflator

Special Tools Required
- SRS inflator simulator 07SAZ-TB4011A
- SRS simulator lead F 07XAZ-SZ30100

1. Erase the DTC memory (see page 23-31).
2. Turn the ignition switch ON (II), and check that the SRS indicator comes on for about 6 seconds and then goes off.

   Does the SRS indicator stay on, and is DTC 11-8x or 11-Ax indicated?

   YES—Go to step 3.

   NO—Intermittent failure, system is OK at this time. Go to Troubleshooting Intermittent Failures (see page 23-32). If another DTC is indicated, go to the DTC troubleshooting index.
3. Turn the ignition switch OFF. Disconnect the battery negative cable, and wait for 3 minutes.
4. Disconnect the driver's airbag 4P connector (A) from the cable reel.

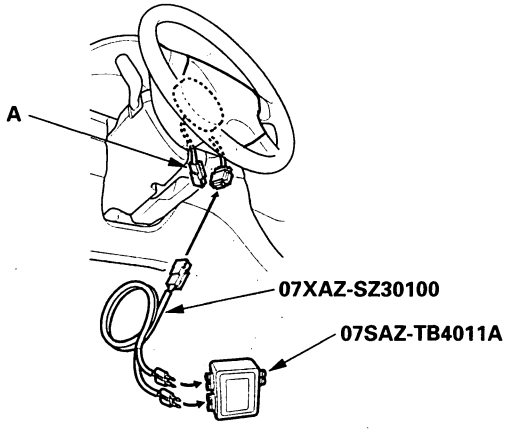

5. Connect the SRS inflator simulator (2 Ω connectors) and simulator lead F to the cable reel.
6. Reconnect the battery negative cable.
7. Erase the DTC memory.
8. Read the DTC (see page 23-30).

   Is DTC 11-8x or 11-Ax indicated?

   YES—Go to step 9.

   NO—Short to power in the driver's airbag first or second inflator; replace the driver's airbag (see page 23-197).■
9. Turn the ignition switch OFF. Disconnect the battery negative cable, and wait for 3 minutes.
10. Disconnect the dashboard wire harness 4P connector (A) from the cable reel.

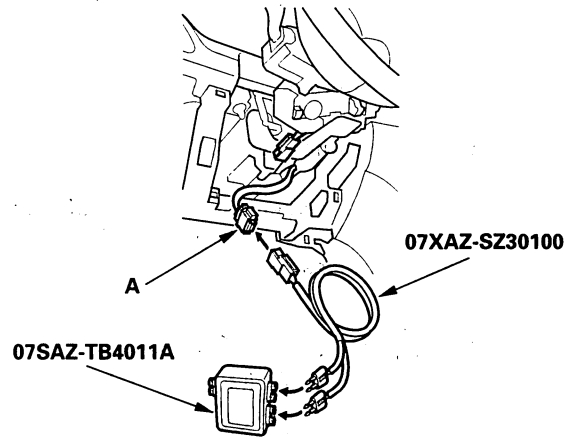

11. Connect the SRS inflator simulator (2 Ω connectors) and the simulator lead to the dashboard wire harness.
12. Reconnect the battery negative cable.
13. Erase the DTC memory.

(cont'd)

Protected by AR

DTC Troubleshooting (cont'd)

14. Read the DTC.

    Is DTC 11-8x or 11-Ax indicated?

    YES—Go to step 15.

    NO—Short to power in the cable reel; replace the cable reel (see page 23-210). ■

15. Turn the ignition switch OFF. Disconnect the battery negative cable, and wait for 3 minutes.

16. Disconnect SRS unit connector A (28P) from the SRS unit (see step 7 on page 23-29).

17. Disconnect the SRS inflator simulator from the SRS simulator lead.

18. Reconnect the battery negative cable.

19. Turn the ignition switch ON (II).

20. Check for voltage between each terminal of both SRS simulator leads and body ground. There should be 0.5 V or less.

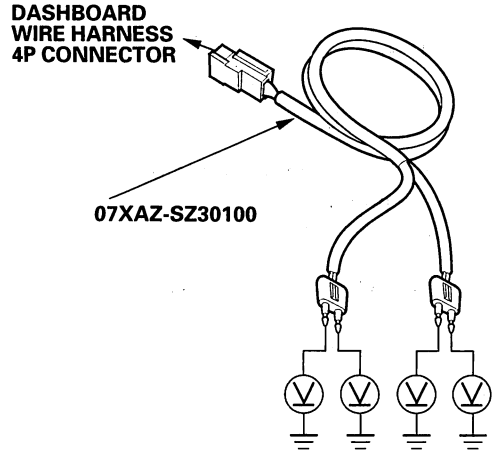

Is the voltage as specified?

YES—Faulty SRS unit or poor contact at SRS unit connector A (28P) and the SRS unit. Check the connection between the connector and the SRS unit. If the connection is OK, replace the SRS unit (see page 23-213). ■

NO—Short to power in the dashboard wire harness; replace the dashboard wire harness. ■

DTC 11-9x (11-90 to 11-99, 11-9A to 11-9F): Short to Ground in Driver's Airbag First Inflator

DTC 11-Bx (11-B0 to 11-B9, 11-BA to 11-BF): Short to Ground in Driver's Airbag Second Inflator

Special Tools Required
- SRS inflator simulator 07SAZ-TB4011A
- SRS simulator lead F 07XAZ-SZ30100

1. Erase the DTC memory (see page 23-31).

2. Turn the ignition switch ON (II), and check that the SRS indicator comes on for about 6 seconds and then goes off.

   Does the SRS indicator stay on, and is DTC 11-9x or 11-Bx indicated?

   YES—Go to step 3.

   NO—Intermittent failure, system is OK at this time. Go to Troubleshooting Intermittent Failures (see page 23-32). If another DTC is indicated, go to the DTC troubleshooting index.

3. Turn the ignition switch OFF. Disconnect the battery negative cable, and wait for 3 minutes.

4. Disconnect the driver's airbag 4P connector (A) from the cable reel.

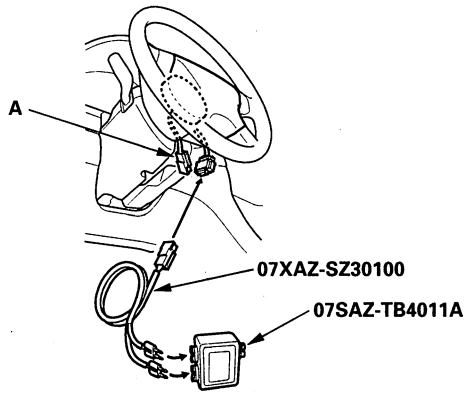

5. Connect the SRS inflator simulator (2 Ω connectors) and simulator lead F to the cable reel.

6. Reconnect the battery negative cable.

7. Erase the DTC memory.

BACK

Protected by AR

8. Read the DTC (see page 23-30).

   Is DTC 11-9x or 11-Bx indicated?

   YES—Go to step 9.

   NO—Short to ground in the driver's airbag first or second inflator; replace the driver's airbag (see page 23-197).■

9. Turn the ignition switch OFF. Disconnect the battery negative cable, and wait for 3 minutes.

10. Disconnect the dashboard wire harness 4P connector (A) from the cable reel.

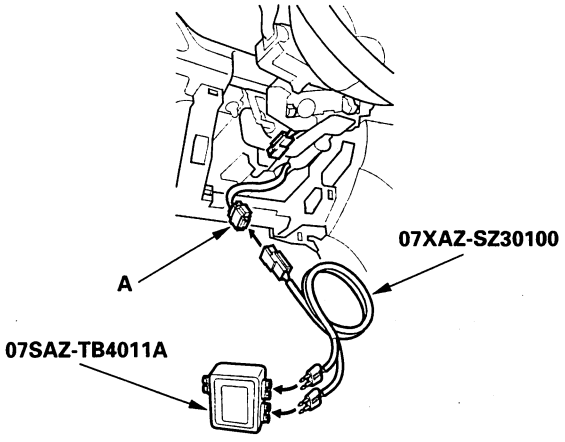

11. Connect the SRS inflator simulator (2 Ω connectors) and the simulator lead to the dashboard wire harness.

12. Reconnect the battery negative cable.

13. Erase the DTC memory.

14. Read the DTC.

    Is DTC 11-9x or 11-Bx indicated?

    YES—Go to step 15.

    NO—Short to ground in the cable reel; replace the cable reel (see page 23-210).■

15. Turn the ignition switch OFF. Disconnect the battery negative cable, and wait for 3 minutes.

16. Disconnect SRS unit connector A (28P) from the SRS unit (see step 7 on page 23-29).

17. Disconnect the SRS inflator simulator from the SRS simulator lead.

18. Check resistance between each terminal of both SRS simulator leads and body ground. There should be an open circuit or at least 1 MΩ.

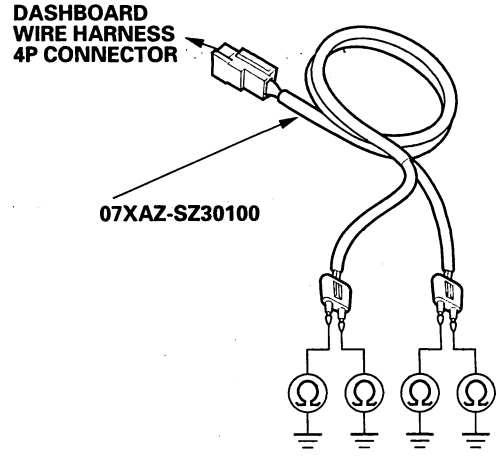

Is the resistance as specified?

YES—Faulty SRS unit or poor contact at SRS unit connector A (28P) and the SRS unit. Check the connection between the connector and the SRS unit. If the connection is OK, replace the SRS unit (see page 23-213).■

NO—Short to ground in the dashboard wire harness; replace the dashboard wire harness.■

BACK

Protected by AR

DTC Troubleshooting (cont'd)

DTC 12-1x (12-10 to 12-19, 12-1A to 12-1F): Open in Front Passenger's Airbag First Inflator
DTC 12-2x (12-20 to 12-29, 12-2A to 12-2F): Increased Resistance in Front Passenger's Airbag First Inflator
DTC 12-4x (12-40 to 12-49, 12-4A to 12-4F): Open in Front Passenger's Airbag Second Inflator
DTC 12-5x (12-50 to 12-59, 12-5A to 12-5F): Increased Resistance in Front Passenger's Airbag Second Inflator

Special Tools Required
- SRS inflator simulator 07SAZ-TB4011A
- SRS simulator lead F 07XAZ-SZ30100

1. Erase the DTC memory (see page 23-31).
2. Turn the ignition switch ON (II), and check that the SRS indicator comes on for about 6 seconds and then goes off.

   Does the SRS indicator stay on, and is DTC 12-1x, 12-2x, 12-4x, or 12-5x indicated?

   YES—Go to step 3.

   NO—Intermittent failure, system is OK at this time. Go to Troubleshooting Intermittent Failures (see page 23-32). If another DTC is indicated, go to the DTC troubleshooting index.
3. Turn the ignition switch OFF. Disconnect the battery negative cable, and wait for 3 minutes.
4. Disconnect the front passenger's airbag 4P connector (A) from the dashboard wire harness.

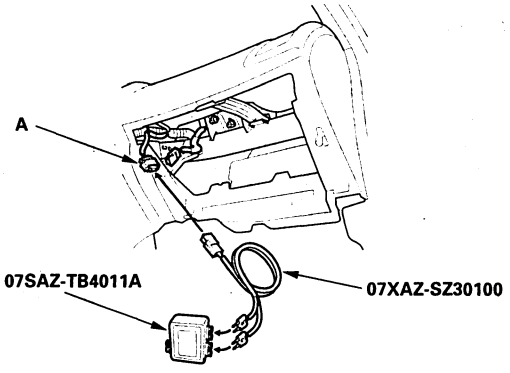

5. Connect the SRS inflator simulator (2 Ω connectors) and simulator lead F to the dashboard wire harness.
6. Reconnect the battery negative cable.
7. Erase the DTC memory.
8. Read the DTC (see page 23-30).

   Is DTC 12-1x, 12-2x, 12-4x, or 12-5x indicated?

   YES—Go to step 9.

   NO—Open or increased resistance in the front passenger's airbag first or second inflator; replace the front passenger's airbag (see page 23-198).■
9. Turn the ignition switch OFF. Disconnect the battery negative cable, and wait for 3 minutes.
10. Disconnect SRS unit connector A (28P) from the SRS unit (see step 7 on page 23-29). Do not disconnect the simulator lead from the dashboard wire harness 4P connector.
11. Disconnect the SRS inflator simulator from the SRS simulator lead.
12. Check resistance between the terminals of both SRS simulator leads. There should be 1 Ω or less.

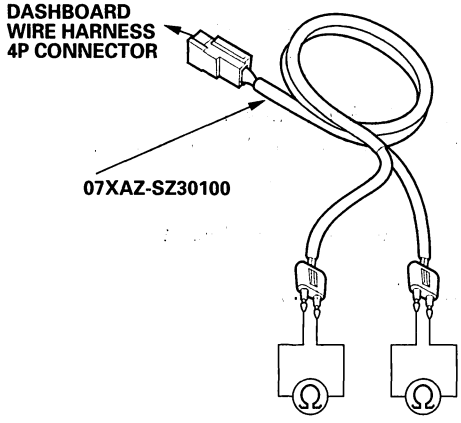

   Is the resistance as specified?

   YES—Faulty SRS unit or poor contact at SRS unit connector A (28P). Check the connection; if the connection is OK, replace the SRS unit (see page 23-213).■

   NO—Open or increased resistance in the dashboard wire harness; replace the dashboard wire harness.■

BACK

Protected by AR

DTC 12-3x (12-30 to 12-39, 12-3A to 12-3F): Short to Another Wire or Decreased Resistance in Front Passenger's Airbag First Inflator
DTC 12-6x (12-60 to 12-69, 12-6A to 12-6F): Short to Another Wire or Decreased Resistance in Front Passenger's Airbag Second Inflator

Special Tools Required
- SRS inflator simulator 07SAZ-TB4011A
- SRS simulator lead F 07XAZ-SZ30100
- SRS short canceller 070AZ-SAA0100

1. Erase the DTC memory (see page 23-31).
2. Turn the ignition switch ON (II), and check that the SRS indicator comes on for about 6 seconds and then goes off.

   Does the SRS indicator stay on, and is DTC 12-3x or 12-6x indicated?

   YES—Go to step 3.

   NO—Intermittent failure, system is OK at this time. Go to Troubleshooting Intermittent Failures (see page 23-32). If another DTC is indicated, go to the DTC troubleshooting index.
3. Turn the ignition switch OFF. Disconnect the battery negative cable, and wait for 3 minutes.
4. Disconnect the front passenger's airbag 4P connector (A) from the dashboard wire harness.

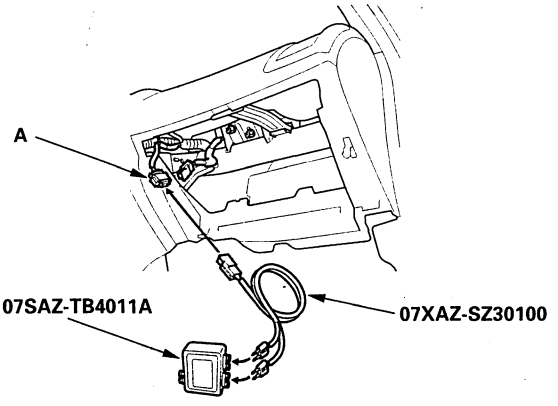

5. Connect the SRS inflator simulator (2 Ω connectors) and simulator lead F to the dashboard wire harness.
6. Reconnect the battery negative cable.
7. Erase the DTC memory.
8. Read the DTC (see page 23-30).

   Is DTC 12-3x or 12-6x indicated?

   YES—Go to step 9.

   NO—Short in the front passenger's airbag first or second inflator; replace the front passenger's airbag (see page 23-198).■
9. Turn the ignition switch OFF. Disconnect the battery negative cable, and wait for 3 minutes.
10. Disconnect SRS unit connector A (28P) from the SRS unit (see step 7 on page 23-29).
11. Disconnect the SRS inflator simulator from the SRS simulator lead.
12. Connect SRS short cancellers (070AZ-SAA0100) to the No. 9 and No. 10 terminals and the No. 3 and No.4 terminal of the SRS unit connector A (28P) (see page 23-25).
13. Check resistance between the terminals of both SRS simulator leads. There should be an open circuit or at least 1 MΩ.

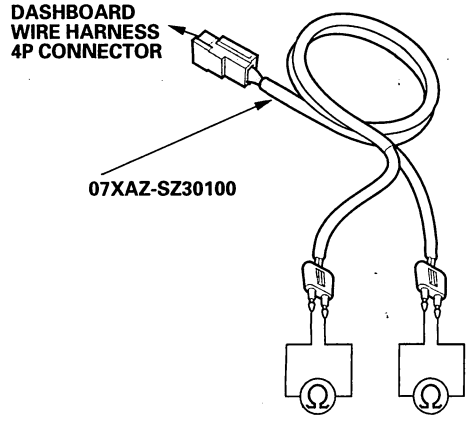

Is the resistance as specified?

YES—Faulty SRS unit or poor contact at SRS unit connector A (28P) and the SRS unit. Check the connection between the connector and the SRS unit. If the connection is OK, replace the SRS unit (see page 23-213).■

NO—Short in the dashboard wire harness; replace the dashboard wire harness.■

BACK

Protected by AR

DTC Troubleshooting (cont'd)

DTC 12-8x (12-80 to 12-89, 12-8A to 12-8F): Short to Power in Front Passenger's Airbag First Inflator

DTC 12-Ax (12-A0 to 12-A9, 12-AA to 12-AF): Short to Power in Front Passenger's Airbag Second Inflator

Special Tools Required
- SRS inflator simulator 07SAZ-TB4011A
- SRS simulator lead F 07XAZ-SZ30100

1. Erase the DTC memory (see page 23-31).
2. Turn the ignition switch ON (II), and check that the SRS indicator comes on for about 6 seconds and then goes off.

   Does the SRS indicator stay on, and is DTC 12-8x or 12-Ax indicated?

   YES—Go to step 3.

   NO—Intermittent failure, system is OK at this time. Go to Troubleshooting Intermittent Failures (see page 23-32). If another DTC is indicated, go to the DTC troubleshooting index.
3. Turn the ignition switch OFF. Disconnect the battery negative cable, and wait for 3 minutes.
4. Disconnect the front passenger's airbag 4P connector (A) from the dashboard wire harness.

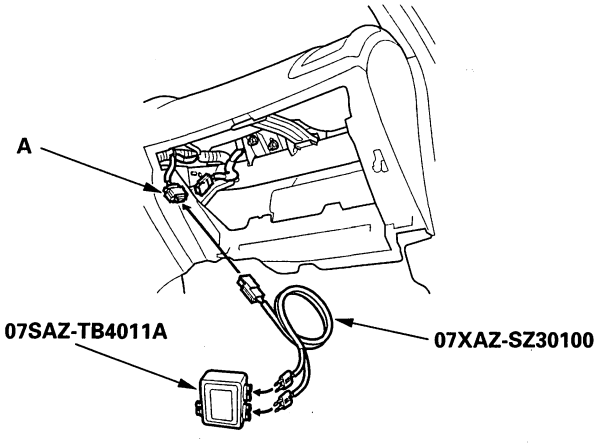

5. Connect the SRS inflator simulator (2 Ω connectors) and simulator lead F to the dashboard wire harness.
6. Reconnect the battery negative cable.
7. Erase the DTC memory.
8. Read the DTC (see page 23-30).

   Is DTC 12-8x or 12-Ax indicated?

   YES—Go to step 9.

   NO—Short to power in the front passenger's airbag first or second inflator; replace the front passenger's airbag (see page 23-198).■
9. Turn the ignition switch OFF. Disconnect the battery negative cable, and wait for 3 minutes.
10. Disconnect SRS unit connector A (28P) from the SRS unit (see step 7 on page 23-29).
11. Disconnect the SRS inflator simulator from the SRS simulator lead.
12. Reconnect the battery negative cable.
13. Turn the ignition switch ON (II).
14. Check for voltage between each terminal of both SRS simulator leads and body ground. There should be 0.5 V or less.

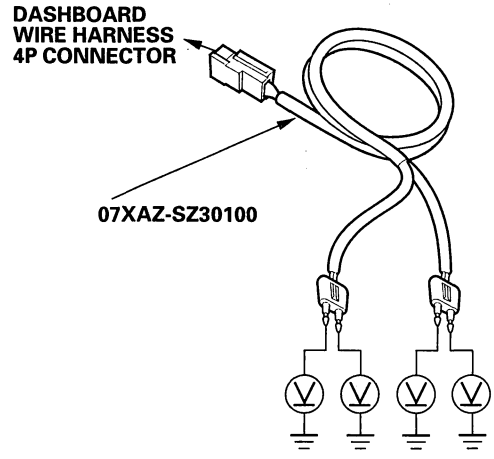

Is the voltage as specified?

YES—Faulty SRS unit or poor contact at SRS unit connector A (28P) and the SRS unit. Check the connection between the connector and the SRS unit. If the connection is OK, replace the SRS unit (see page 23-213).■

NO—Short to power in the dashboard wire harness; replace the dashboard wire harness.■

BACK

Protected by AR

DTC 12-9x (12-90 to 12-99, 12-9A to 12-9F): Short to Ground in Front Passenger's Airbag First Inflator

DTC 12-Bx (12-B0 to 12-B9, 12-BA to 12-BF): Short to Ground in Front Passenger's Airbag Second Inflator

Special Tools Required
- SRS inflator simulator 07SAZ-TB4011A
- SRS simulator lead F 07XAZ-SZ30100

1. Erase the DTC memory (see page 23-31).
2. Turn the ignition switch ON (II), and check that the SRS indicator comes on for about 6 seconds and then goes off.

   Does the SRS indicator stay on, and is DTC 12-9x or 12-Bx indicated?

   YES—Go to step 3.

   NO—Intermittent failure, system is OK at this time. Go to Troubleshooting Intermittent Failures (see page 23-32). If another DTC is indicated, go to the DTC troubleshooting index.
3. Turn the ignition switch OFF. Disconnect the battery negative cable, and wait for 3 minutes.
4. Disconnect the front passenger's airbag 4P connector (A) from the dashboard wire harness.

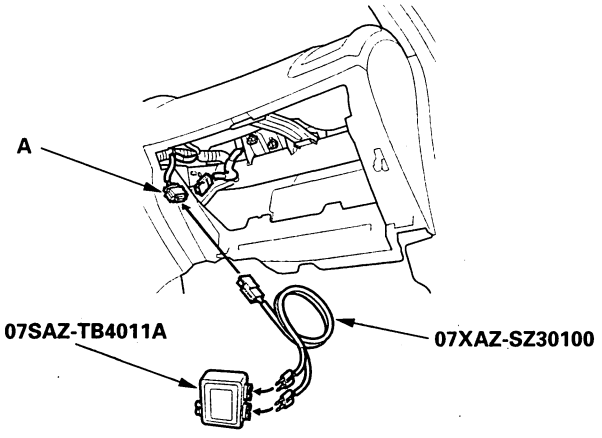

5. Connect the SRS inflator simulator (2 Ω connectors) and simulator lead F to the dashboard wire harness.
6. Reconnect the battery negative cable.
7. Erase the DTC memory.
8. Read the DTC (see page 23-30).

   Is DTC 12-9x or 12-Bx indicated?

   YES—Go to step 9.

   NO—Short to ground in the front passenger's airbag first or second inflator; replace the front passenger's airbag (see page 23-198).■
9. Turn the ignition switch OFF. Disconnect the battery negative cable, and wait for 3 minutes.
10. Disconnect SRS unit connector A (28P) from the SRS unit (see step 7 on page 23-29).
11. Disconnect the SRS inflator simulator from the SRS simulator lead.
12. Check resistance between each terminal of both SRS simulator leads and body ground. There should be an open circuit or at least 1 MΩ.

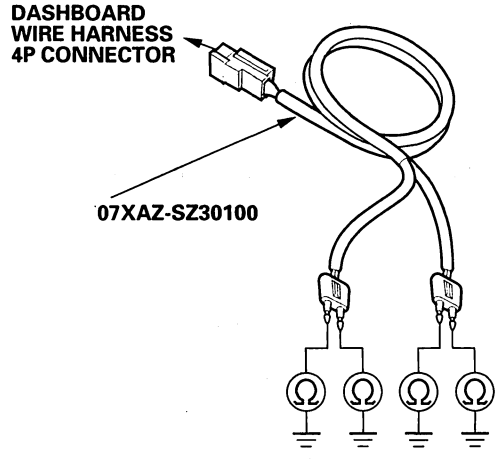

Is the resistance as specified?

YES—Faulty SRS unit or poor contact at SRS unit connector A (28P) and the SRS unit. Check the connection between the connector and the SRS unit. If the connection is OK, replace the SRS unit (see page 23-213).■

NO—Short to ground in the dashboard wire harness; replace the dashboard wire harness.■

BACK

Protected by AR

DTC Troubleshooting (cont'd)

DTC 21-1x (21-10 to 21-19, 21-1A to 21-1F): Open in Driver's Seat Belt Tensioner

DTC 21-2x (21-20 to 21-29, 21-2A to 21-2F): Increased Resistance in Driver's Seat Belt Tensioner

Special Tools Required
- SRS inflator simulator 07SAZ-TB4011A
- SRS simulator lead F 07XAZ-SZ30100

1. Erase the DTC memory (see page 23-31).
2. Turn the ignition switch ON (II), and check that the SRS indicator comes on for about 6 seconds and then goes off.

   Does the SRS indicator stay on, and is DTC 21-1x or 21-2x indicated?

   YES—Go to step 3.

   NO—Intermittent failure, system is OK at this time. Go to Troubleshooting Intermittent Failures (see page 23-32). If another DTC is indicated, go to the DTC troubleshooting index.
3. Turn the ignition switch OFF. Disconnect the battery negative cable, and wait for 3 minutes.
4. Disconnect the driver's seat belt tensioner 4P connector (A) from the floor wire harness.

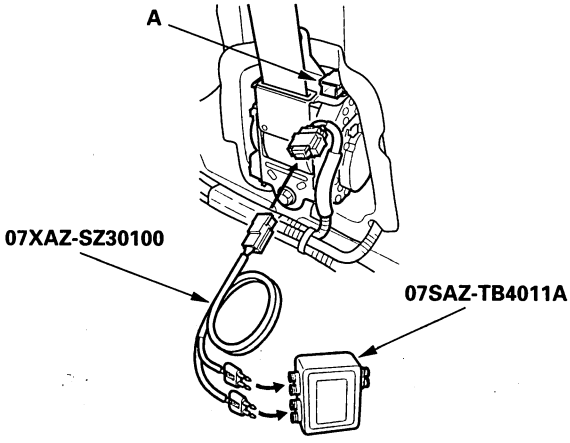

5. Connect the SRS inflator simulator (2 Ω connectors) and simulator lead F to the floor wire harness.
6. Reconnect the battery negative cable.
7. Erase the DTC memory.
8. Read the DTC (see page 23-30).

   Is DTC 21-1x or 21-2x indicated?

   YES—Go to step 9.

   NO—Open or increased resistance in the driver's seat belt tensioner; replace the driver's seat belt (see page 23-5). ■
9. Turn the ignition switch OFF. Disconnect the battery negative cable, and wait for 3 minutes.
10. Disconnect the front passenger's seat belt tensioner connector (see step 6 on page 23-29).
11. Disconnect SRS unit connector B (28P) from the SRS unit (see step 7 on page 23-29).
12. Check resistance between the No. 1 and the No. 2 terminals of SRS unit connector B (28P). There should be 2.0—3.0 Ω.

SRS UNIT CONNECTOR B (28P)

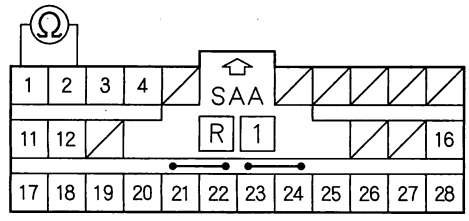

Wire side of female terminals

Is resistance as specified?

YES—Faulty SRS unit or poor contact at SRS unit connector B (28P) and the SRS unit. Check the connection; if the connection is OK, replace the SRS unit (see page 23-213). ■

NO—Open or increased resistance in the floor wire harness; replace the floor wire harness. ■

BACK

Protected by AR

DTC 21-3x (21-30 to 21-39, 21-3A to 21-3F): Short to Another Wire or Decreased Resistance in Driver's Seat Belt Tensioner

Special Tools Required
- SRS inflator simulator 07SAZ-TB4011A
- SRS simulator lead F 07XAZ-SZ30100

1. Erase the DTC memory (see page 23-31).
2. Turn the ignition switch ON (II), and check that the SRS indicator comes on for about 6 seconds and then goes off.

   Does the SRS indicator stay on, and is DTC 21-3x indicated?

   YES—Go to step 3.

   NO—Intermittent failure, system is OK at this time. Go to Troubleshooting Intermittent Failures (see page 23-32). If another DTC is indicated, go to the DTC troubleshooting index.
3. Turn the ignition switch OFF. Disconnect the battery negative cable, and wait for 3 minutes.
4. Disconnect the driver's seat belt tensioner 4P connector (A) from the floor wire harness.

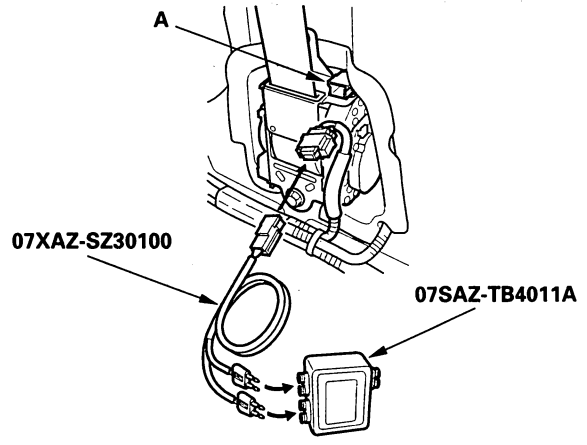

5. Connect the SRS inflator simulator (2 Ω connectors) and simulator lead F to the floor wire harness.
6. Reconnect the battery negative cable.
7. Erase the DTC memory.
8. Read the DTC (see page 23-30).

   Is DTC 21-3x indicated?

   YES—Go to step 9.

   NO—Short in the driver's seat belt tensioner; replace the driver's seat belt (see page 23-5).■
9. Turn the ignition switch OFF. Disconnect the battery negative cable, and wait for 3 minutes.
10. Disconnect the front passenger's seat belt tensioner connector (see step 6 on page 23-29).
11. Disconnect SRS unit connector B (28P) from the SRS unit (see step 7 on page 23-29).
12. Disconnect the simulator lead from the floor wire harness.
13. Check resistance between the No. 1 and the No. 2 terminals of SRS unit connector B (28P). There should be an open circuit or at least 1 MΩ.

SRS UNIT CONNECTOR B (28P)

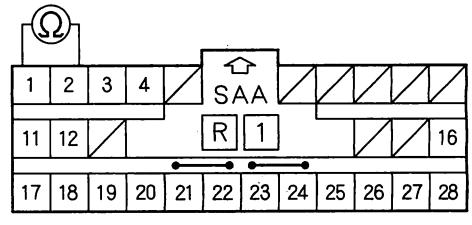

Wire side of female terminals

Is the resistance as specified?

YES—Faulty SRS unit or poor contact at SRS unit connector B (28P) and the SRS unit. Check the connection; if the connection is OK, replace the SRS unit (see page 23-213).■

NO—Short in the floor wire harness; replace the floor wire harness.■

BACK

Protected by AR

DTC Troubleshooting (cont'd)

DTC 21-8x (21-80 to 21-89, 21-8A to 21-8F): Short to Power in Driver's Seat Belt Tensioner

Special Tools Required
- SRS inflator simulator 07SAZ-TB4011A
- SRS simulator lead F 07XAZ-SZ30100

1. Erase the DTC memory (see page 23-31).
2. Turn the ignition switch ON (II), and check that the SRS indicator comes on for about 6 seconds and then goes off.

   Does the SRS indicator stay on, and is DTC 21-8x indicated?

   YES—Go to step 3.

   NO—Intermittent failure, system is OK at this time. Go to Troubleshooting Intermittent Failures (see page 23-32). If another DTC is indicated, go to the DTC troubleshooting index.
3. Turn the ignition switch OFF. Disconnect the battery negative cable, and wait for 3 minutes.
4. Disconnect the driver's seat belt tensioner 4P connector (A) from the floor wire harness.

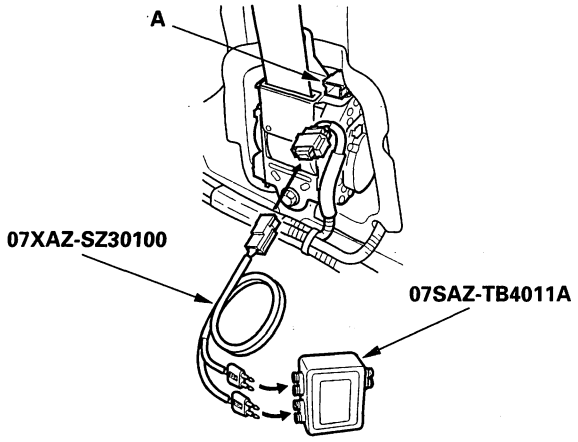

5. Connect the SRS inflator simulator (2 Ω connectors) and simulator lead F to the floor wire harness.
6. Reconnect the battery negative cable.
7. Erase the DTC memory.
8. Read the DTC (see page 23-30).

   Is DTC 21-8x indicated?

   YES—Go to step 9.

   NO—Short to power in the driver's seat belt tensioner; replace the driver's seat belt (see page 23-5). ■
9. Turn the ignition switch OFF. Disconnect the battery negative cable, and wait for 3 minutes.
10. Disconnect the front passenger's seat belt tensioner connector (see step 6 on page 23-29).
11. Disconnect SRS unit connector B (28P) from the SRS unit (see step 7 on page 23-29).
12. Disconnect the simulator lead from the floor wire harness.
13. Reconnect the battery negative cable.
14. Turn the ignition switch ON (II).
15. Check for voltage between the No. 1 terminal of SRS unit connector B (28P) and body ground, and between the No. 2 terminal and body ground. There should be 0.5 V or less.

SRS UNIT CONNECTOR B (28P)

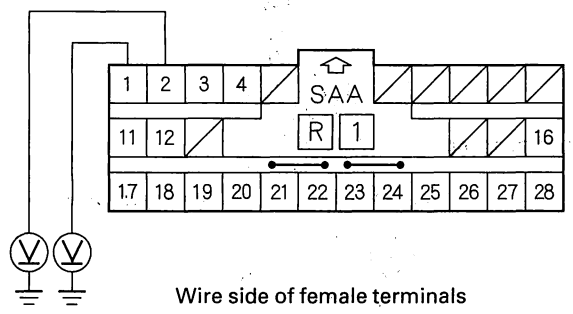

Wire side of female terminals

Is the voltage as specified?

YES—Faulty SRS unit or poor contact at SRS unit connector B (28P) and the SRS unit. Check the connection; if the connection is OK, replace the SRS unit (see page 23-213). ■

NO—Short to power in the floor wire harness; replace the floor wire harness. ■

BACK

Protected by AR

DTC 21-9x (21-90 to 21-99, 21-9A to 21-9F): Short to Ground in Driver's Seat Belt Tensioner

Special Tools Required
- SRS inflator simulator 07SAZ-TB4011A
- SRS simulator lead F 07XAZ-SZ30100

1. Erase the DTC memory (see page 23-31).
2. Turn the ignition switch ON (II), and check that the SRS indicator comes on for about 6 seconds and then goes off.

   Does the SRS indicator stay on, and is DTC 21-9x indicated?

   YES—Go to step 3.

   NO—Intermittent failure, system is OK at this time. Go to Troubleshooting Intermittent Failures (see page 23-32). If another DTC is indicated, go to the DTC troubleshooting index.
3. Turn the ignition switch OFF. Disconnect the battery negative cable, and wait for 3 minutes.
4. Disconnect the driver's seat belt tensioner 4P connector (A) from the floor wire harness.

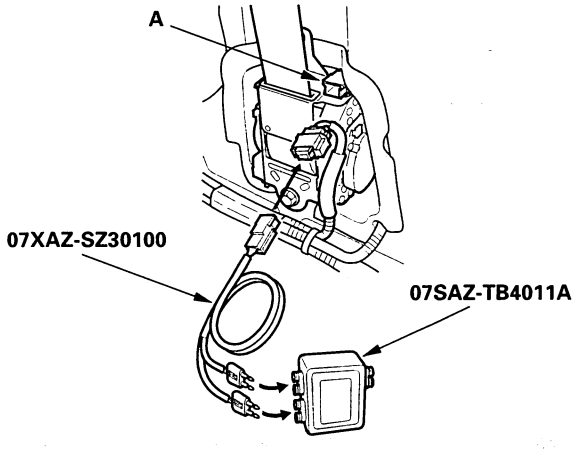

5. Connect the SRS inflator simulator (2 Ω connectors) and simulator lead F to the floor wire harness.
6. Reconnect the battery negative cable.
7. Erase the DTC memory.
8. Read the DTC (see page 23-30).

   Is DTC 21-9x indicated?

   YES—Go to step 9.

   NO—Short to ground in the driver's seat belt tensioner; replace the driver's seat belt (see page 23-5). ■
9. Turn the ignition switch OFF. Disconnect the battery negative cable, and wait for 3 minutes.
10. Disconnect the front passenger's seat belt tensioner connector (see step 6 on page 23-29).
11. Disconnect SRS unit connector B (28P) from the SRS unit (see step 7 on page 23-29).
12. Disconnect the simulator lead from the floor wire harness.
13. Check resistance between the No. 1 terminals of SRS unit connector B (28P) and body ground, and between the No. 2 terminal and body ground. There should be an open circuit or at least 1 MΩ.

SRS UNIT CONNECTOR B (28P)

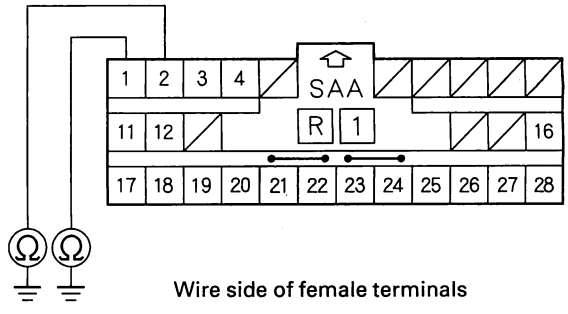

Wire side of female terminals

Is the resistance as specified?

YES—Faulty SRS unit or poor contact at SRS unit connector B (28P) and the SRS unit. Check the connection; if the connection is OK, replace the SRS unit (see page 23-213). ■

NO—Short to ground in the floor wire harness; replace the floor wire harness. ■

Protected by AR

DTC Troubleshooting (cont'd)

DTC 22-1x (22-10 to 22-19, 22-1A to 22-1F): Open in Front Passenger's Seat Belt Tensioner

DTC 22-2x (22-20 to 22-29, 22-2A to 22-2F): Increased Resistance in Front Passenger's Seat Belt Tensioner

Special Tools Required
- SRS inflator simulator 07SAZ-TB4011A
- SRS simulator lead F 07XAZ-SZ30100

1. Erase the DTC memory (see page 23-31).
2. Turn the ignition switch ON (II), and check that the SRS indicator comes on for about 6 seconds and then goes off.

   Does the SRS indicator stay on, and is DTC 22-1x or 22-2x indicated?

   YES—Go to step 3.

   NO—Intermittent failure, system is OK at this time. Go to Troubleshooting Intermittent Failures (see page 23-32). If another DTC is indicated, go to the DTC troubleshooting index.
3. Turn the ignition switch OFF. Disconnect the battery negative cable, and wait for 3 minutes.
4. Disconnect the front passenger's seat belt tensioner 4P connector (A) from the floor wire harness.

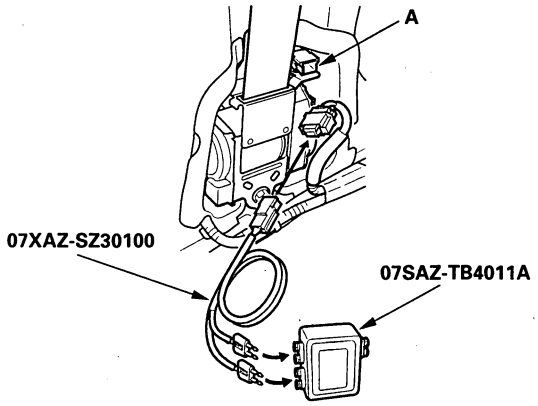

5. Connect the SRS inflator simulator (2 Ω connectors) and simulator lead F to the floor wire harness.
6. Reconnect the battery negative cable.
7. Erase the DTC memory.
8. Read the DTC (see page 23-30).

   Is DTC 22-1x or 22-2x indicated?

   YES—Go to step 9.

   NO—Open or increased resistance in the front passenger's seat belt tensioner; replace the front passenger's seat belt (see page 23-5). ■
9. Turn the ignition switch OFF. Disconnect the battery negative cable, and wait for 3 minutes.
10. Disconnect the driver's seat belt tensioner connector (see step 6 on page 23-29).
11. Disconnect SRS unit connector B (28P) from the SRS unit (see step 7 on page 23-29).
12. Check resistance between the No. 3 and the No. 4 terminal of SRS unit connector B (28P). There should be 2.0—3.0 Ω.

SRS UNIT CONNECTOR B (28P)

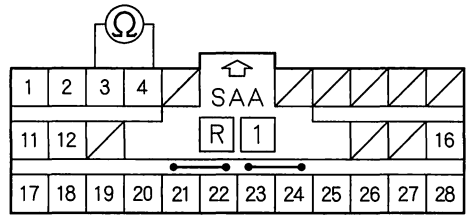

Wire side of female terminals

Is resistance as specified?

YES—Faulty SRS unit or poor contact at SRS unit connector B (28P) and the SRS unit. Check the connection; if the connection is OK, replace the SRS unit (see page 23-213). ■

NO—Open or increased resistance in the floor wire harness; replace the floor wire harness. ■

BACK

Protected by AR

DTC 22-3x (22-30 to 22-39, 22-3A to 22-3F): Short to Another Wire or Decreased Resistance in Front Passenger's Seat Belt Tensioner

Special Tools Required
- SRS inflator simulator 07SAZ-TB4011A
- SRS simulator lead F 07XAZ-SZ30100

1. Erase the DTC memory (see page 23-31).

2. Turn the ignition switch ON (II), and check that the SRS indicator comes on for about 6 seconds and then goes off.

   Does the SRS indicator stay on, and is DTC 22-3x indicated?

   YES—Go to step 3.

   NO—Intermittent failure, system is OK at this time. Go to Troubleshooting Intermittent Failures (see page 23-32). If another DTC is indicated, go to the DTC troubleshooting index.

3. Turn the ignition switch OFF. Disconnect the battery negative cable, and wait for 3 minutes.

4. Disconnect the front passenger's seat belt tensioner 4P connector (A) from the floor wire harness.

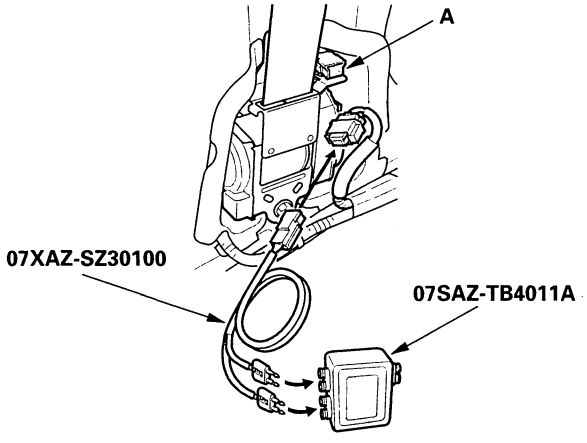

5. Connect the SRS inflator simulator (2 Ω connectors) and simulator lead F to the floor wire harness.

6. Reconnect the battery negative cable.

7. Erase the DTC memory.

8. Read the DTC (see page 23-30).

   Is DTC 22-3x indicated?

   YES—Go to step 9.

   NO—Short in the front passenger's seat belt tensioner; replace the front passenger's seat belt (see page 23-5). ■

9. Turn the ignition switch OFF. Disconnect the battery negative cable, and wait for 3 minutes.

10. Disconnect the driver's seat belt tensioner connector (see step 6 on page 23-29).

11. Disconnect SRS unit connector B (28P) from the SRS unit (see step 7 on page 23-29).

12. Disconnect the simulator lead from the floor wire harness.

13. Check resistance between the No. 3 and the No. 4 terminals of SRS unit connector B (28P). There should be an open circuit or at least 1 MΩ.

SRS UNIT CONNECTOR B (28P)

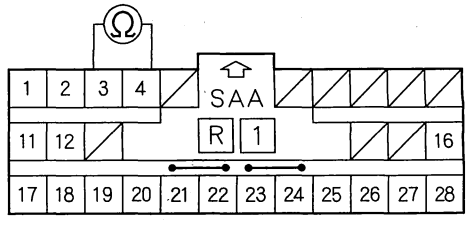

Wire side of female terminals

Is the resistance as specified?

YES—Faulty SRS unit or poor contact at SRS unit connector B (28P) and the SRS unit. Check the connection; if the connection is OK, replace the SRS unit (see page 23-213). ■

NO—Short in the floor wire harness; replace the floor wire harness. ■

BACK

Protected by AR

DTC Troubleshooting (cont'd)

DTC 22-8x (22-80 to 22-89, 22-8A to 22-8F): Short to Power in Front Passenger's Seat Belt Tensioner

Special Tools Required
- SRS inflator simulator 07SAZ-TB4011A
- SRS simulator lead F 07XAZ-SZ30100

1. Erase the DTC memory (see page 23-31).
2. Turn the ignition switch ON (II), and check that the SRS indicator comes on for about 6 seconds and then goes off.

   Does the SRS indicator stay on, and is DTC 22-8x indicated?

   YES—Go to step 3.

   NO—Intermittent failure, system is OK at this time. Go to Troubleshooting Intermittent Failures (see page 23-32). If another DTC is indicated, go to the DTC troubleshooting index.
3. Turn the ignition switch OFF. Disconnect the battery negative cable, and wait for 3 minutes.
4. Disconnect the front passenger's seat belt tensioner 4P connector (A) from the floor wire harness.

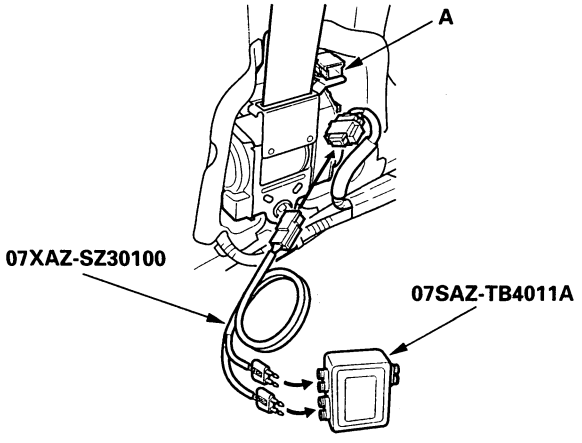

5. Connect the SRS inflator simulator (2 Ω connectors) and simulator lead F to the floor wire harness.
6. Reconnect the battery negative cable.
7. Erase the DTC memory.
8. Read the DTC (see page 23-30).

   Is DTC 22-8x indicated?

   YES—Go to step 9.

   NO—Short to power in the front passenger's seat belt tensioner; replace the front passenger's seat belt (see page 23-5). ■
9. Turn the ignition switch OFF. Disconnect the battery negative cable, and wait for 3 minutes.
10. Disconnect the driver's seat belt tensioner connector (see step 6 on page 23-29).
11. Disconnect SRS unit connector B (28P) from the SRS unit (see step 7 on page 23-29).
12. Disconnect the simulator lead from the floor wire harness.
13. Reconnect the battery negative cable.
14. Turn the ignition switch ON (II).
15. Check for voltage between the No. 3 terminal of SRS unit connector B (28P) and body ground, and between the No. 4 terminal and body ground. There should be 0.5 V or less.

SRS UNIT CONNECTOR B (28P)

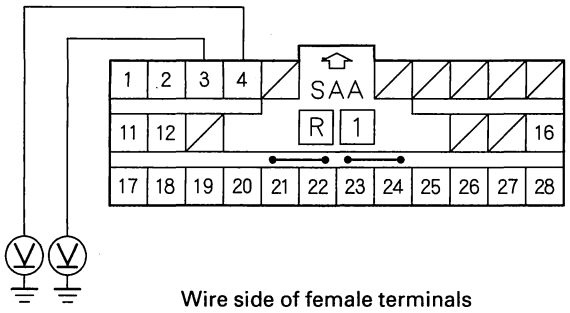

Wire side of female terminals

Is the voltage as specified?

YES—Faulty SRS unit or poor contact at SRS unit connector B (28P) and the SRS unit. Check the connection; if the connection is OK, replace the SRS unit (see page 23-213). ■

NO—Short to power in the floor wire harness; replace the floor wire harness. ■

BACK

Protected by AR

DTC 22-9x (22-90 to 22-99, 22-9A to 22-9F): Short to Ground in Front Passenger's Seat Belt Tensioner

Special Tools Required
- SRS inflator simulator 07SAZ-TB4011A
- SRS simulator lead F 07XAZ-SZ30100

1. Erase the DTC memory (see page 23-31).
2. Turn the ignition switch ON (II), and check that the SRS indicator comes on for about 6 seconds and then goes off.

   Does the SRS indicator stay on, and is DTC 22-9x indicated?

   YES—Go to step 3.

   NO—Intermittent failure, system is OK at this time. Go to Troubleshooting Intermittent Failures (see page 23-32). If another DTC is indicated, go to the DTC troubleshooting index.
3. Turn the ignition switch OFF. Disconnect the battery negative cable, and wait for 3 minutes.
4. Disconnect the front passenger's seat belt tensioner 4P connector (A) from the floor wire harness.

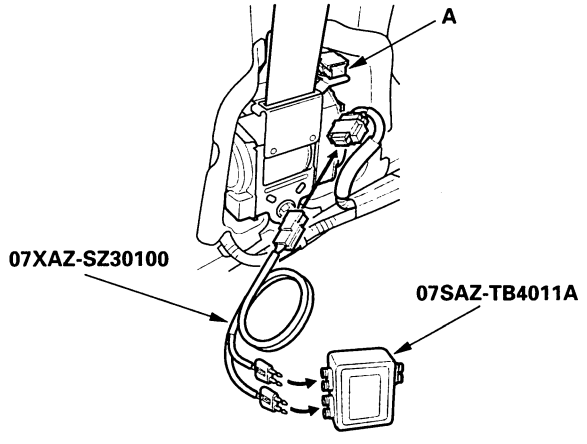

5. Connect the SRS inflator simulator (2 Ω connectors) and simulator lead F to the floor wire harness.
6. Reconnect the battery negative cable.
7. Erase the DTC memory.
8. Read the DTC (see page 23-30).

   Is DTC 22-9x indicated?

   YES—Go to step 9.

   NO—Short to ground in the front passenger's seat belt tensioner; replace the front passenger's seat belt (see page 23-5). ■
9. Turn the ignition switch OFF. Disconnect the battery negative cable, and wait for 3 minutes.
10. Disconnect the driver's seat belt tensioner connector (see step 6 on page 23-29).
11. Disconnect SRS unit connector B (28P) from the SRS unit (see step 7 on page 23-29).
12. Disconnect the simulator lead from the floor wire harness.
13. Check resistance between the No. 3 terminal of SRS unit connector B (28P) and body ground, and between the No. 4 terminal and body ground. There should be an open circuit or at least 1 MΩ.

SRS UNIT CONNECTOR B (28P)

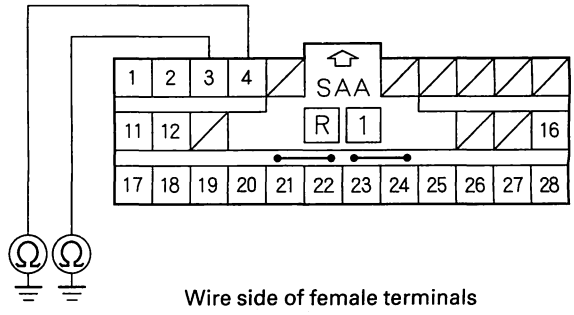

Wire side of female terminals

Is the resistance as specified?

YES—Faulty SRS unit or poor contact at SRS unit connector B (28P) and the SRS unit. Check the connection; if the connection is OK, replace the SRS unit (see page 23-213). ■

NO—Short to ground in the floor wire harness; replace the floor wire harness. ■

Protected by AR

DTC Troubleshooting (cont'd)

DTC 31-1x (31-10 to 31-19, 31-1A to 31-1F): Open in Driver's Side Airbag Inflator

DTC 31-2x (31-20 to 31-29, 31-2A to 31-2F): Increased Resistance in Driver's Side Airbag Inflator

Special Tools Required
- SRS inflator simulator 07SAZ-TB4011A
- SRS simulator lead E 07XAZ-S1A0200

1. Erase the DTC memory (see page 23-31).
2. Turn the ignition switch ON (II), and check that the SRS indicator comes on for about 6 seconds and then goes off.

   Does the SRS indicator stay on, and is DTC 31-1x or 31-2x indicated?

   YES—Go to step 3.

   NO—Intermittent failure, system is OK at this time. Go to Troubleshooting Intermittent Failures (see page 23-32). If another DTC is indicated, go to the DTC troubleshooting index.
3. Turn the ignition switch OFF. Disconnect the battery negative cable, and wait for 3 minutes.
4. Disconnect the floor wire harness 2P connector (A) from the driver's side airbag.

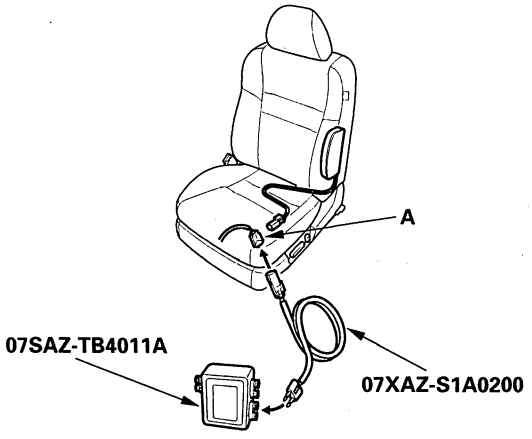

5. Connect the SRS inflator simulator (2 Ω connector) and simulator lead E to the floor wire harness.
6. Reconnect the battery negative cable.
7. Erase the DTC memory.
8. Read the DTC (see page 23-30).

   Is DTC 31-1x or 31-2x indicated?

   YES—Go to step 9.

   NO—Open or increased resistance in the driver's side airbag inflator; replace the driver's side airbag (see page 23-199). ■
9. Turn the ignition switch OFF. Disconnect the battery negative cable, and wait for 3 minutes.
10. Disconnect both seat belt tensioner 4P connectors (see step 6 on page 23-29).
11. Disconnect SRS unit connector B (28P) from the SRS unit (see step 7 on page 23-29).
12. Disconnect the SRS inflator simulator from the SRS simulator lead.
13. Check resistance between the terminals of the SRS simulator lead. There should be 1.0 Ω or less.

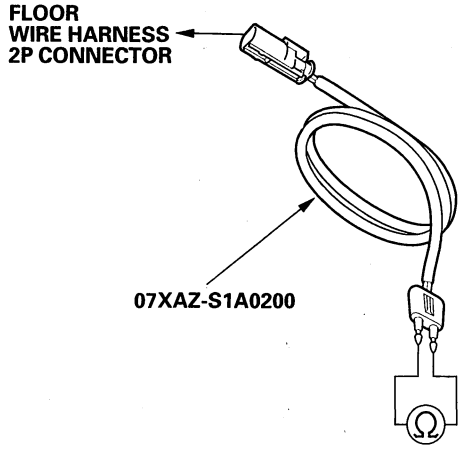

Is the resistance as specified?

YES—Faulty SRS unit or poor contact at SRS unit connector B (28P) and the SRS unit. Check the connection; if the connection is OK, replace the SRS unit (see page 23-213). ■

NO—Open or increased resistance in the floor wire harness; replace the floor wire harness. ■

BACK

Protected by AR

DTC 31-3x (31-30 to 31-39, 31-3A to 31-3F): Short to Another Wire or Decreased Resistance in Driver's Side Airbag Inflator

Special Tools Required
- SRS inflator simulator 07SAZ-TB4011A
- SRS simulator lead E 07XAZ-S1A0200
- SRS short canceller 070AZ-SAA0100

1. Erase the DTC memory (see page 23-31).
2. Turn the ignition switch ON (II), and check that the SRS indicator comes on for about 6 seconds and then goes off.

   Does the SRS indicator stay on, and is DTC 31-3x indicated?

   YES—Go to step 3.

   NO—Intermittent failure, system is OK at this time. Go to Troubleshooting Intermittent Failures (see page 23-32). If another DTC is indicated, go to the DTC troubleshooting index.
3. Turn the ignition switch OFF. Disconnect the battery negative cable, and wait for 3 minutes.
4. Disconnect the floor wire harness 2P connector (A) from the driver's side airbag.

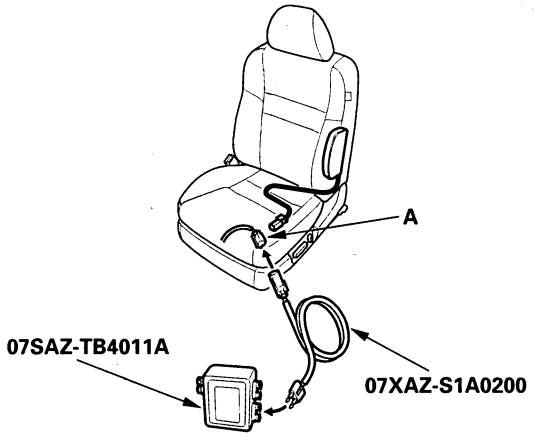

5. Connect the SRS inflator simulator (2 Ω connector) and simulator lead E to the floor wire harness.
6. Reconnect the battery negative cable.
7. Erase the DTC memory.
8. Read the DTC (see page 23-30).

   Is DTC 31-3x indicated?

   YES—Go to step 9.

   NO—Short to another wire in the driver's side airbag inflator; replace the driver's side airbag (see page 23-199). ■
9. Turn the ignition switch OFF. Disconnect the battery negative cable, and wait for 3 minutes.
10. Disconnect both seat belt tensioner 4P connectors (see step 6 on page 23-29).
11. Disconnect SRS unit connector B (28P) from the SRS unit (see step 7 on page 23-29).
12. Disconnect the SRS inflator simulator from the SRS simulator lead.
13. Connect the SRS short canceller (070AZ-SAA0100) to the No. 21 and No. 22 terminals of SRS unit connector B (28P) (see page 23-25).
14. Check resistance between the terminals of SRS simulator lead E. There should be an open circuit or at least 1 MΩ.

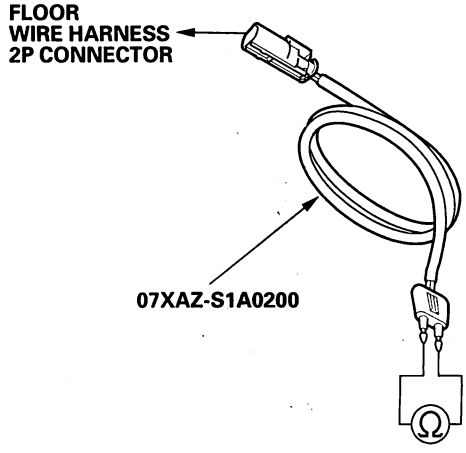

   Is the resistance as specified?

   YES—Faulty SRS unit or poor contact at SRS unit connector B (28P) and the SRS unit. Check the connection; if the connection is OK, replace the SRS unit (see page 23-213). ■

   NO—Short in the floor wire harness; replace the floor wire harness. ■

BACK

Protected by AR

DTC Troubleshooting (cont'd)

DTC 31-8x (31-80 to 31-89, 31-8A to 31-8F): Short to Power in Driver's Side Airbag Inflator

Special Tools Required
- SRS inflator simulator 07SAZ-TB4011A
- SRS simulator lead E 07XAZ-S1A0200

1. Erase the DTC memory (see page 23-31).
2. Turn the ignition switch ON (II), and check that the SRS indicator comes on for about 6 seconds and then goes off.

   Does the SRS indicator stay on, and is DTC 31-8x indicated?

   YES—Go to step 3.

   NO—Intermittent failure, system is OK at this time. Go to Troubleshooting Intermittent Failures (see page 23-32). If another DTC is indicated, go to the DTC troubleshooting index.
3. Turn the ignition switch OFF. Disconnect the battery negative cable, and wait for 3 minutes.
4. Disconnect the floor wire harness 2P connector (A) from the driver's side airbag.

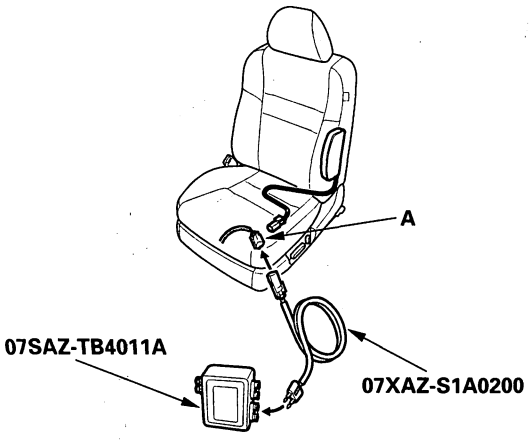

5. Connect the SRS inflator simulator (2 Ω connector) and simulator lead E to the floor wire harness.
6. Reconnect the battery negative cable.
7. Erase the DTC memory.
8. Read the DTC (see page 23-30).

   Is DTC 31-8x indicated?

   YES—Go to step 9.

   NO—Short to power in the driver's side airbag inflator; replace the driver's side airbag (see page 23-199).■
9. Turn the ignition switch OFF. Disconnect the battery negative cable, and wait for 3 minutes.
10. Disconnect both seat belt tensioner 4P connectors (see step 6 on page 23-29).
11. Disconnect SRS unit connector B (28P) from the SRS unit (see step 7 on page 23-29).
12. Disconnect the SRS inflator simulator from the SRS simulator lead.
13. Reconnect the battery negative cable.
14. Turn the ignition switch ON (II).
15. Check for voltage between each terminal of SRS simulator lead E and body ground. There should be 0.5 V or less.

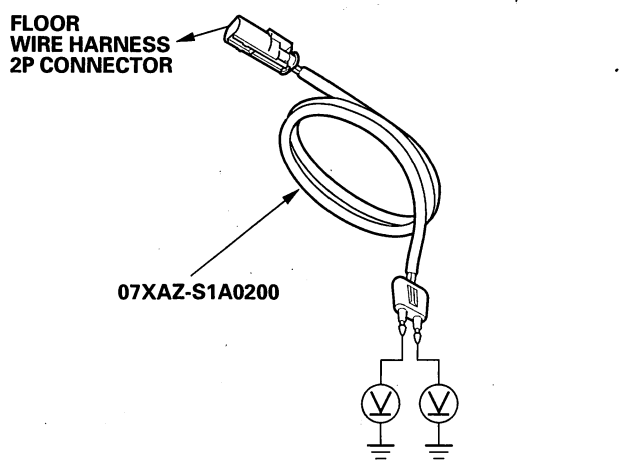

Is the voltage as specified?

YES—Faulty SRS unit or poor contact at SRS unit connector B (28P) and the SRS unit. Check the connection; if the connection is OK, replace the SRS unit (see page 23-213).■

NO—Short to power in the floor wire harness; replace the floor wire harness.■

BACK

Protected by AR

DTC 31-9x (31-90 to 31-99, 31-9A to 31-9F): Short to Ground in Driver's Side Airbag Inflator

Special Tools Required
- SRS inflator simulator 07SAZ-TB4011A
- SRS simulator lead E 07XAZ-S1A0200

1. Erase the DTC memory (see page 23-31).
2. Turn the ignition switch ON (II), and check that the SRS indicator comes on for about 6 seconds and then goes off.

   Does the SRS indicator stay on, and is DTC 31-9x indicated?

   YES—Go to step 3.

   NO—Intermittent failure, system is OK at this time. Go to Troubleshooting Intermittent Failures (see page 23-32). If another DTC is indicated, go to the DTC troubleshooting index.
3. Turn the ignition switch OFF. Disconnect the battery negative cable, and wait for 3 minutes.
4. Disconnect the floor wire harness 2P connector (A) from the driver's side airbag.

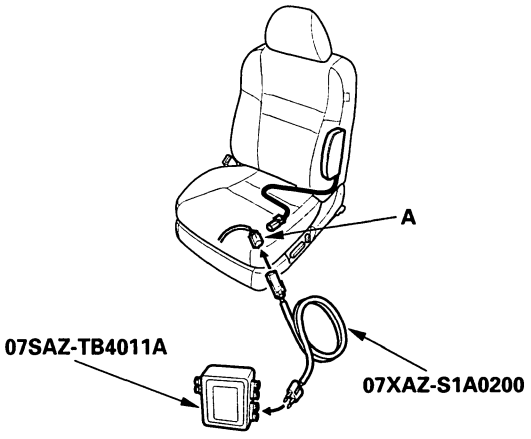

5. Connect the SRS inflator simulator (2 Ω connector) and simulator lead E to the floor wire harness.
6. Reconnect the battery negative cable.
7. Erase the DTC memory.
8. Read the DTC (see page 23-30).

   Is DTC 31-9x indicated?

   YES—Go to step 9.

   NO—Short to ground in the driver's side airbag inflator; replace the driver's side airbag (see page 23-199).■
9. Turn the ignition switch OFF. Disconnect the battery negative cable, and wait for 3 minutes.
10. Disconnect both seat belt tensioner 4P connectors (see step 6 on page 23-29).
11. Disconnect SRS unit connector B (28P) from the SRS unit (see step 7 on page 23-29).
12. Disconnect the SRS inflator simulator from the SRS simulator lead.
13. Check resistance between each terminal of SRS simulator lead E and body ground. There should be an open circuit or at least 1 MΩ.

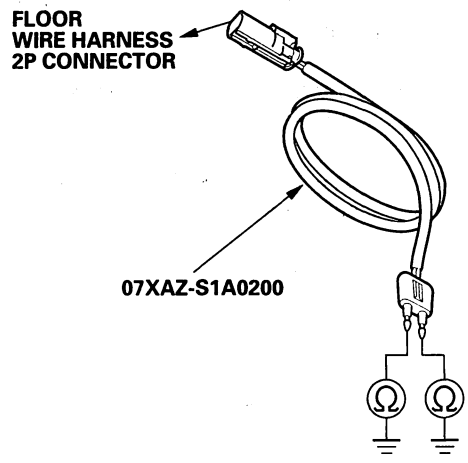

Is the resistance as specified?

YES—Faulty SRS unit or poor contact at SRS unit connector B (28P) and the SRS unit. Check the connection; if the connection is OK, replace the SRS unit (see page 23-213).■

NO—Short to ground in the floor wire harness; replace the floor wire harness.■

BACK

Protected by AR

DTC Troubleshooting (cont'd)

DTC 32-1x (32-10 to 32-19, 32-1A to 32-1F): Open in Front Passenger's Side Airbag Inflator

DTC 32-2x (32-20 to 32-29, 32-2A to 32-2F): Increased Resistance in Front Passenger's Side Airbag Inflator

Special Tools Required
- SRS inflator simulator 07SAZ-TB4011A
- SRS simulator lead E 07XAZ-S1A0200

1. Erase the DTC memory (see page 23-31).
2. Turn the ignition switch ON (II), and check that the SRS indicator comes on for about 6 seconds and then goes off.

   Does the SRS indicator stay on, and is DTC 32-1x or 32-x indicated?

   YES—Go to step 3.

   NO—Intermittent failure, system is OK at this time. Go to Troubleshooting Intermittent Failures (see page 23-32). If another DTC is indicated, go to the DTC troubleshooting index.
3. Turn the ignition switch OFF. Disconnect the battery negative cable, and wait for 3 minutes.
4. Disconnect the floor wire harness 2P connector (A) from the front passenger's side airbag.

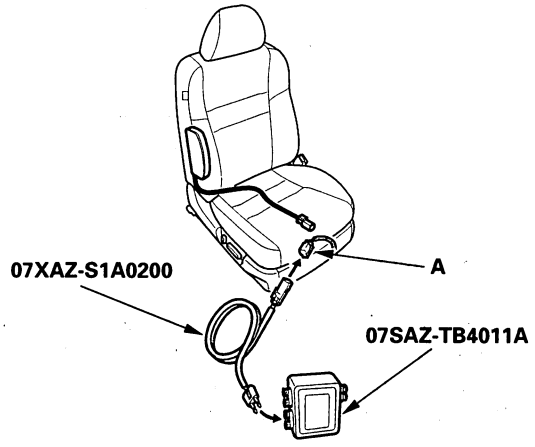

5. Connect the SRS inflator simulator (2 Ω connector) and simulator lead E to the floor wire harness.
6. Reconnect the battery negative cable.
7. Erase the DTC memory.
8. Read the DTC (see page 23-30).

   Is DTC 32-1x or 32-2x indicated?

   YES—Go to step 9.

   NO—Open or increased resistance in the front passenger's side airbag inflator; replace the front passenger's side airbag (see page 23-199).■
9. Turn the ignition switch OFF. Disconnect the battery negative cable, and wait for 3 minutes.
10. Disconnect both seat belt tensioner 4P connectors (see step 6 on page 23-29).
11. Disconnect SRS unit connector B (28P) from the SRS unit (see step 7 on page 23-29).
12. Disconnect the SRS inflator simulator from the SRS simulator lead.
13. Check resistance between the terminals of the SRS simulator lead. There should be 1.0 Ω or less.

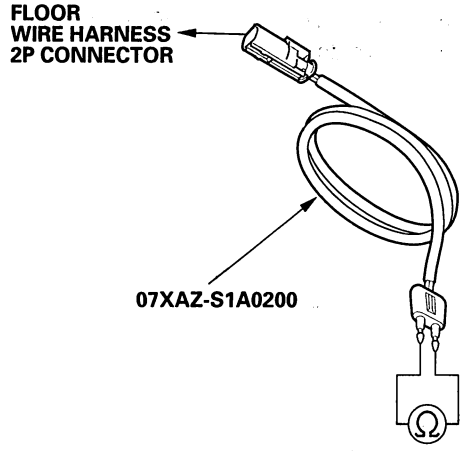

Is the resistance as specified?

YES—Faulty SRS unit or poor contact at SRS unit connector B (28P) and the SRS unit. Check the connection; if the connection is OK, replace the SRS unit (see page 23-213).■

NO—Open or increased resistance in the floor wire harness; replace the floor wire harness.■

BACK

Protected by AR

DTC 32-3x (32-30 to 32-39, 32-3A to 32-3F): Short to Another Wire or Decreased Resistance in Front Passenger's Side Airbag Inflator

Special Tools Required
- SRS inflator simulator 07SAZ-TB4011A
- SRS simulator lead E 07XAZ-S1A0200
- SRS short canceller 070AZ-SAA0100

1. Erase the DTC memory (see page 23-31).
2. Turn the ignition switch ON (II), and check that the SRS indicator comes on for about 6 seconds and then goes off.

   Does the SRS indicator stay on, and is DTC 32-3x indicated?

   YES—Go to step 3.

   NO—Intermittent failure, system is OK at this time. Go to Troubleshooting Intermittent Failures (see page 23-32). If another DTC is indicated, go to the DTC troubleshooting index.
3. Turn the ignition switch OFF. Disconnect the battery negative cable, and wait for 3 minutes.
4. Disconnect the floor wire harness 2P connector (A) from the front passenger's side airbag.

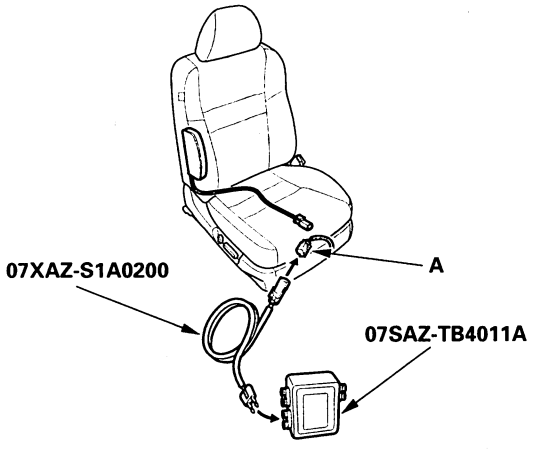

5. Connect the SRS inflator simulator (2 Ω connector) and simulator lead E to the floor wire harness.
6. Reconnect the battery negative cable.
7. Erase the DTC memory.
8. Read the DTC (see page 23-30).

   Is DTC 32-3x indicated?

   YES—Go to step 9.

   NO—Short to another wire in the front passenger's side airbag inflator; replace the front passenger's side airbag (see page 23-199).■
9. Turn the ignition switch OFF. Disconnect the battery negative cable, and wait for 3 minutes.
10. Disconnect both seat belt tensioner 4P connectors (see step 6 on page 23-29).
11. Disconnect SRS unit connector B (28P) from the SRS unit (see step 7 on page 23-29).
12. Disconnect the SRS inflator simulator from the SRS simulator lead.
13. Connect the SRS short canceller (070AZ-SAA0100) to the No. 23 and No. 24 terminals of SRS unit connector B (28P) (see page 23-25).
14. Check resistance between the terminals of the SRS simulator lead. There should be an open circuit or at least 1 MΩ.

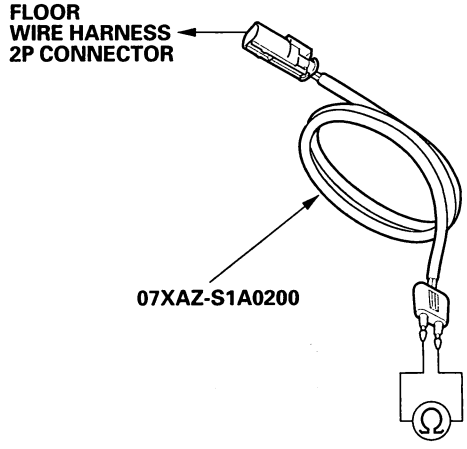

   Is the resistance as specified?

   YES—Faulty SRS unit or poor contact at SRS unit connector B (28P) and the SRS unit. Check the connection; if the connection is OK, replace the SRS unit (see page 23-213).■

   NO—Short in the floor wire harness; replace the floor wire harness.■

BACK

Protected by AR

DTC Troubleshooting (cont'd)

DTC 32-8x (32-80 to 32-89, 32-8A to 32-8F): Short to Power in Front Passenger's Side Airbag Inflator

Special Tools Required
- SRS inflator simulator 07SAZ-TB4011A
- SRS simulator lead E 07XAZ-S1A0200

1. Erase the DTC memory (see page 23-31).
2. Turn the ignition switch ON (II), and check that the SRS indicator comes on for about 6 seconds and then goes off.

   Does the SRS indicator stay on, and is DTC 32-8x indicated?

   YES—Go to step 3.

   NO—Intermittent failure, system is OK at this time. Go to Troubleshooting Intermittent Failures (see page 23-32). If another DTC is indicated, go to the DTC troubleshooting index.
3. Turn the ignition switch OFF. Disconnect the battery negative cable, and wait for 3 minutes.
4. Disconnect the floor wire harness 2P connector (A) from the front passenger's side airbag.

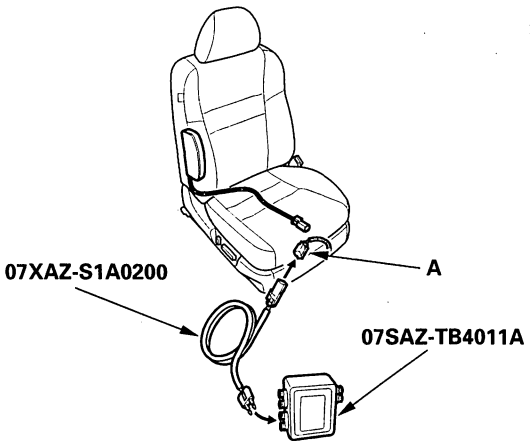

5. Connect the SRS inflator simulator (2 Ω connector) and simulator lead E to the floor wire harness.
6. Reconnect the battery negative cable.
7. Erase the DTC memory.
8. Read the DTC (see page 23-30).

   Is DTC 32-8x indicated?

   YES—Go to step 9.

   NO—Short to power in the front passenger's side airbag inflator; replace the front passenger's side airbag (see page 23-199).■
9. Turn the ignition switch OFF. Disconnect the battery negative cable, and wait for 3 minutes.
10. Disconnect both seat belt tensioner 4P connectors (see step 6 on page 23-29).
11. Disconnect SRS unit connector B (28P) from the SRS unit (see step 7 on page 23-29).
12. Disconnect the SRS inflator simulator from the SRS simulator lead.
13. Reconnect the battery negative cable.
14. Turn the ignition switch ON (II).
15. Check for voltage between each terminal of the SRS simulator lead and body ground. There should be 0.5 V or less.

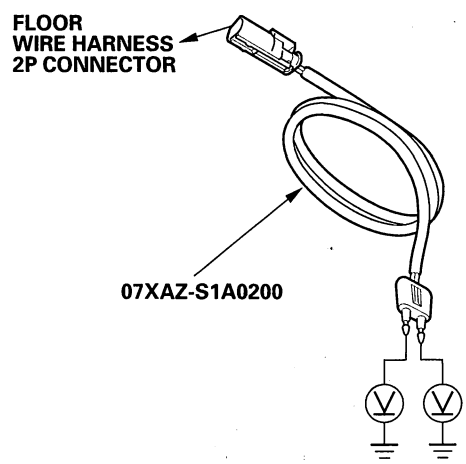

Is the voltage as specified?

YES—Faulty SRS unit or poor contact at SRS unit connector B (28P) and the SRS unit. Check the connection; if the connection is OK, replace the SRS unit (see page 23-213).■

NO—Short to power in the floor wire harness; replace the floor wire harness.■

BACK

Protected by AR

DTC 32-9x (32-90 to 32-99, 32-9A to 32-9F): Short to Ground in Front Passenger's Side Airbag Inflator

Special Tools Required
- SRS inflator simulator 07SAZ-TB4011A
- SRS simulator lead E 07XAZ-S1A0200

1. Erase the DTC memory (see page 23-31).
2. Turn the ignition switch ON (II), and check that the SRS indicator comes on for about 6 seconds and then goes off.

   Does the SRS indicator stay on, and is DTC 32-9x indicated?

   YES—Go to step 3.

   NO—Intermittent failure, system is OK at this time. Go to Troubleshooting Intermittent Failures (see page 23-32). If another DTC is indicated, go to the DTC troubleshooting index.
3. Turn the ignition switch OFF. Disconnect the battery negative cable, and wait for 3 minutes.
4. Disconnect the floor wire harness 2P connector (A) from the front passenger's side airbag.

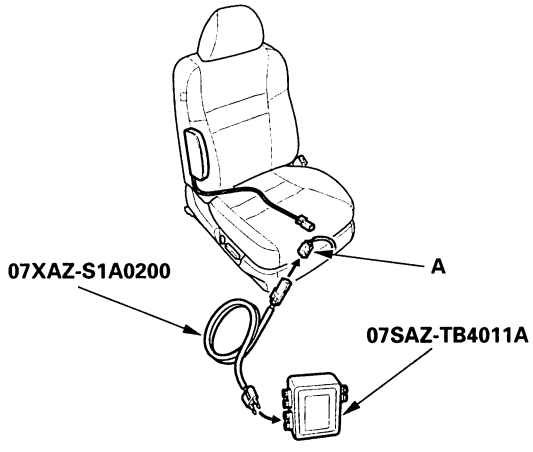

5. Connect the SRS inflator simulator (2 Ω connector) and simulator lead E to the floor wire harness.
6. Reconnect the battery negative cable.
7. Erase the DTC memory.
8. Read the DTC (see page 23-30).

   Is DTC 32-9x indicated?

   YES—Go to step 9.

   NO—Short to ground in the front passenger's side airbag inflator; replace the front passenger's side airbag (see page 23-199).■
9. Turn the ignition switch OFF. Disconnect the battery negative cable, and wait for 3 minutes.
10. Disconnect both seat belt tensioner 4P connectors (see step 6 on page 23-29).
11. Disconnect SRS unit connector B (28P) from the SRS unit (see step 7 on page 23-29).
12. Disconnect the SRS inflator simulator from the SRS simulator lead.
13. Check resistance between each terminal of the SRS simulator lead and body ground. There should be an open circuit or at least 1 MΩ.

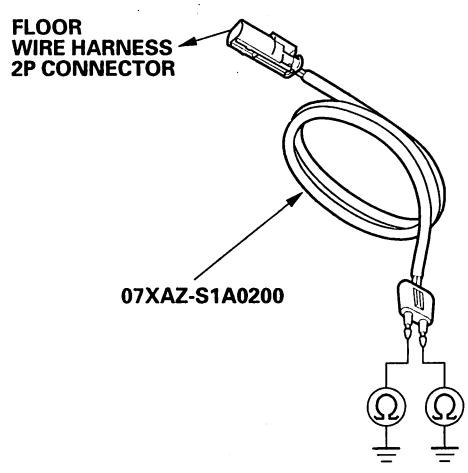

Is the resistance as specified?

YES—Faulty SRS unit or poor contact at SRS unit connector B (28P) and the SRS unit. Check the connection; if the connection is OK, replace the SRS unit (see page 23-213).■

NO—Short to ground in the floor wire harness; replace the floor wire harness.■

Protected by AR

DTC Troubleshooting (cont'd)

DTC 33-1x (33-10 to 33-19, 33-1A to 33-1F): Open or Increased Resistance in Left Side Curtain Airbag Inflator

Special Tools Required
- SRS inflator simulator 07SAZ-TB4011A
- SRS simulator lead E 07XAZ-S1A0200

1. Erase the DTC memory (see page 23-31).
2. Turn the ignition switch ON (II), and check that the SRS indicator comes on for about 6 seconds and then goes off.

   Does the SRS indicator stay on, and is DTC 33-1x indicated?

   YES—Go to step 3.

   NO—Intermittent failure, system is OK at this time. Go to Troubleshooting Intermittent Failures (see page 23-32). If another DTC is indicated, go to the DTC troubleshooting index.
3. Turn the ignition switch OFF. Disconnect the battery negative cable, and wait for 3 minutes.
4. Disconnect the left side curtain airbag 2P connector from the side curtain airbag subharness (A).

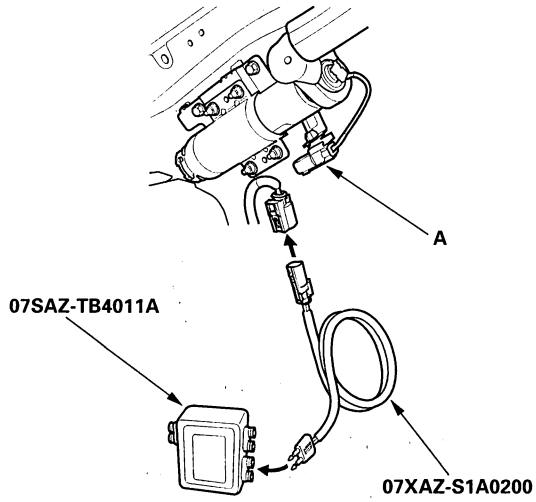

5. Connect the SRS inflator simulator (2 Ω connector) and simulator lead E to the side curtain airbag subharness.
6. Reconnect the battery negative cable.
7. Erase the DTC memory.
8. Read the DTC (see page 23-30).

   Is DTC 33-1x indicated?

   YES—Go to step 9.

   NO—Open or increased resistance in the left side curtain airbag; replace the left side curtain airbag (see page 23-200).■
9. Turn the ignition switch OFF. Disconnect the battery negative cable, and wait for 3 minutes.
10. Disconnect SRS unit connector C (16P) from the SRS unit (see step 7 on page 23-29). Do not disconnect the simulator lead from the side curtain airbag subharness.
11. Disconnect the SRS inflator simulator from the SRS simulator lead.
12. Check resistance between the terminals of the SRS simulator lead. There should be 1.0 Ω or less.

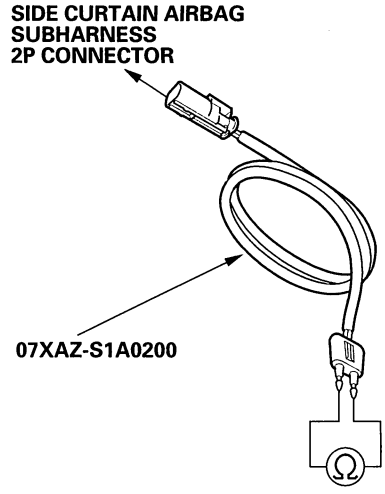

Is the resistance as specified?

YES—Faulty SRS unit or poor contact at the SRS unit connector C (16P) and the SRS unit. Check the connection; if the connection is OK, replace the SRS unit (see page 23-213).■

NO—Open or increased resistance in the side curtain airbag subharness; replace the side curtain airbag subharness.■

BACK

Protected by AR

DTC 33-3x (33-30 to 33-39, 33-3A to 33-3F): Short to Another Wire or Decreased Resistance in Left Side Curtain Airbag Inflator

Special Tools Required
- SRS inflator simulator 07SAZ-TB4011A
- SRS simulator lead E 07XAZ-S1A0200
- SRS short canceller 070AZ-SAA0100

1. Erase the DTC memory (see page 23-31).
2. Turn the ignition switch ON (II), and check that the SRS indicator comes on for about 6 seconds and then goes off.

   Does the SRS indicator stay on, and is DTC 33-3x indicated?

   YES—Go to step 3.

   NO—Intermittent failure, system is OK at this time. Go to Troubleshooting Intermittent Failures (see page 23-32). If another DTC is indicated, go to the DTC troubleshooting index.
3. Turn the ignition switch OFF. Disconnect the battery negative cable, and wait for 3 minutes.
4. Disconnect the left side curtain airbag 2P connector from the side curtain airbag subharness (A).

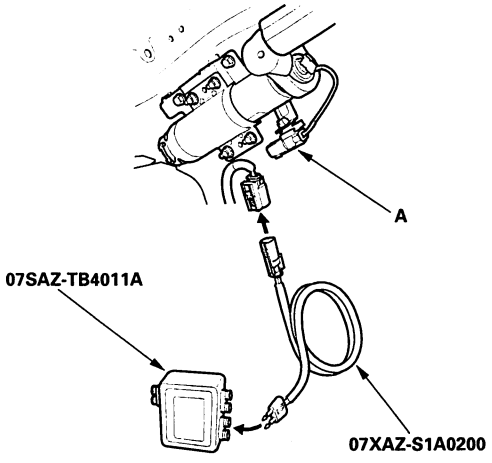

5. Connect the SRS inflator simulator (2 Ω connector) and simulator lead E to the side curtain airbag subharness.
6. Reconnect the battery negative cable.
7. Erase the DTC memory.
8. Read the DTC (see page 23-30).

   Is DTC 33-3x indicated?

   YES—Go to step 9.

   NO—Short to another wire in the left side curtain airbag inflator; replace the left side curtain airbag (see page 23-200).■
9. Turn the ignition switch OFF. Disconnect the battery negative cable, and wait for 3 minutes.
10. Disconnect SRS unit connector C (16P) from the SRS unit (see step 7 on page 23-29).
11. Disconnect the SRS inflator simulator from the SRS simulator lead.
12. Connect the SRS short canceller (070AZ-SAA0100) to the No. 11 and No. 12 terminals of SRS unit connector C (16P) (see page 23-25).
13. Check resistance between the terminals of the SRS simulator lead. There should be an open circuit or at least 1 MΩ.

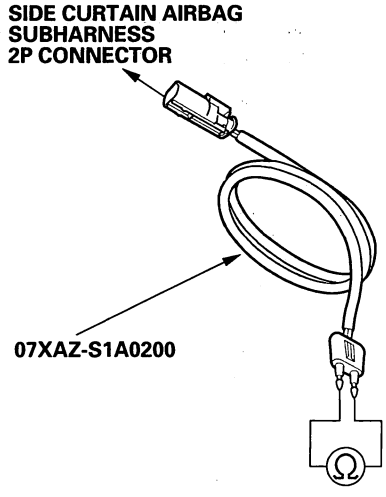

Is the resistance as specified?

YES—Faulty SRS unit or poor contact at SRS unit connector C (16P) and the SRS unit. Check the connection; if the connection is OK, replace the SRS unit (see page 23-213).■

NO—Short to another wire in the side curtain airbag subharness; replace the side curtain airbag subharness.■

BACK

Protected by AR

DTC Troubleshooting (cont'd)

DTC 33-8x (33-80 to 33-89, 33-8A to 33-8F): Short to Power in Left Side Curtain Airbag Inflator

Special Tools Required
- SRS inflator simulator 07SAZ-TB4011A
- SRS simulator lead E 07XAZ-S1A0200

1. Erase the DTC memory (see page 23-31).
2. Turn the ignition switch ON (II), and check that the SRS indicator comes on for about 6 seconds and then goes off.

   Does the SRS indicator stay on, and is DTC 33-8x indicated?

   YES—Go to step 3.

   NO—Intermittent failure, system is OK at this time. Go to Troubleshooting Intermittent Failures (see page 23-32). If another DTC is indicated, go to the DTC troubleshooting index.
3. Turn the ignition switch OFF. Disconnect the battery negative cable, and wait for 3 minutes.
4. Disconnect the left side curtain airbag 2P connector from the side curtain airbag subharness (A).

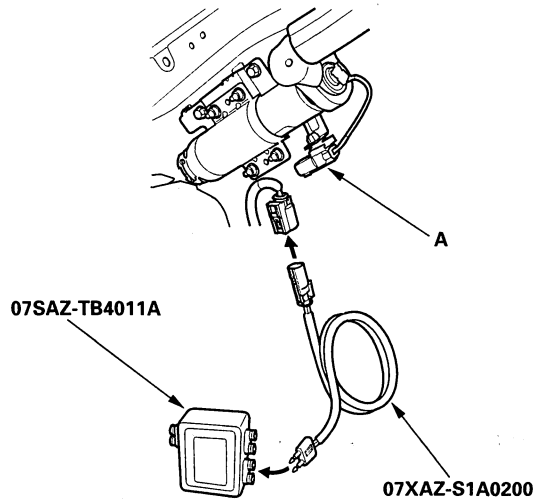

5. Connect the SRS inflator simulator (2 Ω connector) and simulator lead E to side curtain airbag subharness.
6. Reconnect the battery negative cable.
7. Erase the DTC memory.
8. Read the DTC (see page 23-30).

   Is DTC 33-8x indicated?

   YES—Go to step 9.

   NO—Short to power in the left side curtain airbag inflator; replace the left side curtain airbag (see page 23-200).■
9. Turn the ignition switch OFF. Disconnect the battery negative cable, and wait for 3 minutes.
10. Disconnect the SRS unit connector C (16P) from the SRS unit (see step 7 on page 23-29).
11. Reconnect the battery negative cable.
12. Turn the ignition switch ON (II).
13. Disconnect the SRS inflator simulator from the SRS simulator lead.
14. Check for voltage between each terminal of the SRS simulator lead and body ground. There should be 0.5 V or less.

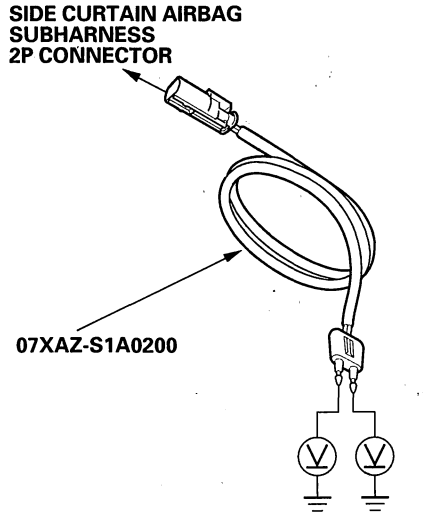

Is the voltage as specified?

YES—Faulty SRS unit or poor contact at SRS unit connector C (16P) and the SRS unit. Check the connection; if the connection is OK, replace the SRS unit (see page 23-213).■

NO—Short to power in the side curtain airbag subharness; replace the side curtain airbag subharness.■

BACK

Protected by AR

DTC 33-9x (33-90 to 33-99, 33-9A to 33-9F): Short to Ground in Left Side Curtain Airbag Inflator

Special Tools Required
- SRS inflator simulator 07SAZ-TB4011A
- SRS simulator lead E 07XAZ-S1A0200

1. Erase the DTC memory (see page 23-31).
2. Turn the ignition switch ON (II), and check that the SRS indicator comes on for about 6 seconds and then goes off.

   Does the SRS indicator stay on, and is DTC 33-9x indicated?

   YES—Go to step 3.

   NO—Intermittent failure, system is OK at this time. Go to Troubleshooting Intermittent Failures (see page 23-32). If another DTC is indicated, go to the DTC troubleshooting index.
3. Turn the ignition switch OFF. Disconnect the battery negative cable, and wait for 3 minutes.
4. Disconnect the left side curtain airbag 2P connector from the side curtain airbag subharness (A).

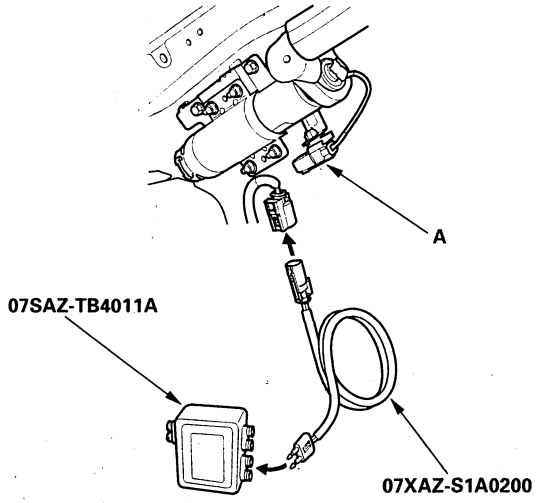

5. Connect the SRS inflator simulator (2 Ω connector) and simulator lead E to the side curtain airbag subharness.
6. Reconnect the battery negative cable.
7. Erase the DTC memory.
8. Read the DTC (see page 23-30).

   Is DTC 33-9x indicated?

   YES—Go to step 9.

   NO—Short to ground in the left side curtain airbag inflator; replace the left side curtain airbag (see page 23-200).■
9. Turn the ignition switch OFF. Disconnect the battery negative cable, and wait for 3 minutes.
10. Disconnect SRS unit connector C (16P) from the SRS unit (see step 7 on page 23-29).
11. Disconnect the SRS inflator simulator from the SRS simulator lead.
12. Check resistance between each terminal of the SRS simulator lead and body ground. There should be an open circuit or at least 1 MΩ.

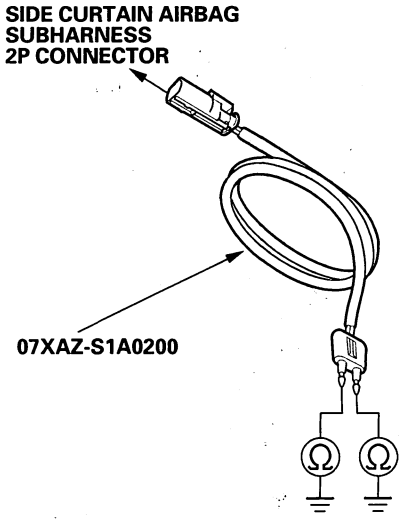

Is the resistance as specified?

YES—Faulty SRS unit or poor contact at SRS unit connector C (16P) and the SRS unit. Check the connection; if the connection is OK, replace the SRS unit (see page 23-213).■

NO—Short to ground in the side curtain airbag subharness; replace the side curtain airbag subharness.■

BACK

Protected by AR

DTC Troubleshooting (cont'd)

DTC 34-1x (34-10 to 34-19, 34-1A to 34-1F): Open or Increased Resistance in Right Side Curtain Airbag Inflator

Special Tools Required
- SRS inflator simulator 07SAZ-TB4011A
- SRS simulator lead E 07XAZ-S1A0200

1. Erase the DTC memory (see page 23-31).
2. Turn the ignition switch ON (II), and check that the SRS indicator comes on for about 6 seconds and then goes off.

   Does the SRS indicator stay on, and is DTC 34-1x indicated?

   YES—Go to step 3.

   NO—Intermittent failure, system is OK at this time. Go to Troubleshooting Intermittent Failures (see page 23-32). If another DTC is indicated, go to the DTC troubleshooting index.
3. Turn the ignition switch OFF. Disconnect the battery negative cable, and wait for 3 minutes.
4. Disconnect the right side curtain airbag 2P connector from the side curtain airbag subharness (A).

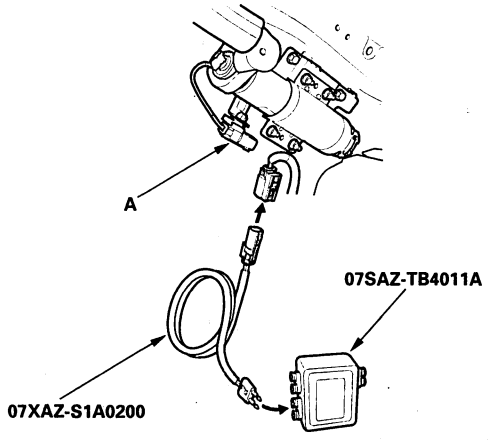

5. Connect the SRS inflator simulator (2 Ω connector) and simulator lead E to the side curtain airbag subharness.
6. Reconnect the battery negative cable.
7. Erase the DTC memory.
8. Read the DTC (see page 23-30).

   Is DTC 34-1x indicated?

   YES—Go to step 9.

   NO—Open or increased resistance in the right side curtain airbag inflator, replace the right side curtain airbag (see page 23-200).■
9. Turn the ignition switch OFF. Disconnect the battery negative cable, and wait for 3 minutes.
10. Disconnect SRS unit connector C (16P) from the SRS unit (see step 7 on page 23-29). Do not disconnect the simulator lead from the side curtain airbag subharness.
11. Disconnect the SRS inflator simulator from the SRS simulator lead.
12. Check resistance between the terminals of the SRS simulator lead. There should be 1.0 Ω or less.

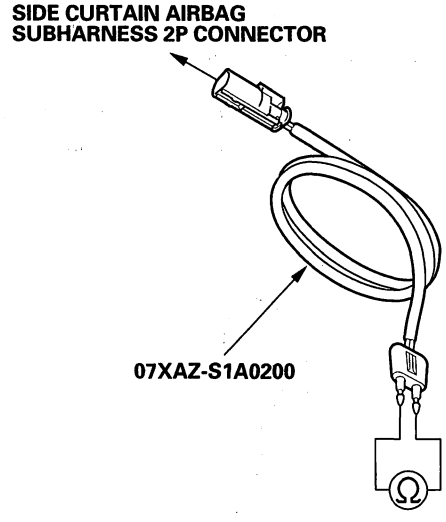

   Is the resistance as specified?

   YES—Faulty SRS unit or poor contact at SRS unit connector C (16P) and the SRS unit. Check the connection; if the connection is OK, replace the SRS unit (see page 23-213).■

   NO—Open or increased resistance in the side curtain airbag subharness; replace the side curtain airbag subharness.■

BACK

Protected by AR

DTC 34-3x (34-30 to 34-39, 34-3A to 34-3F): Short to Another Wire or Decreased Resistance in Right Side Curtain Airbag Inflator

Special Tools Required
- SRS inflator simulator 07SAZ-TB4011A
- SRS simulator lead E 07XAZ-S1A0200
- SRS short canceller 070AZ-SAA0100

1. Erase the DTC memory (see page 23-31).
2. Turn the ignition switch ON (II), and check that the SRS indicator comes on for about 6 seconds and then goes off.

   Does the SRS indicator stay on, and is DTC 34-3x indicated?

   YES—Go to step 3.

   NO—Intermittent failure, system is OK at this time. Go to Troubleshooting Intermittent Failures (see page 23-32). If another DTC is indicated, go to the DTC troubleshooting index.
3. Turn the ignition switch OFF. Disconnect the battery negative cable, and wait for 3 minutes.
4. Disconnect the right side curtain airbag 2P connector from the side curtain airbag subharness (A).

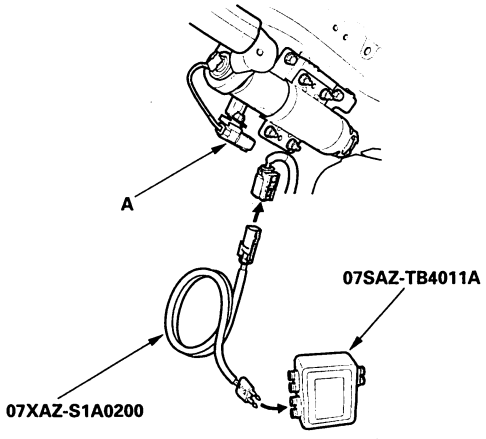

5. Connect the SRS inflator simulator (2 Ω connector) and simulator lead E to the side curtain airbag subharness.
6. Reconnect the battery negative cable.
7. Erase the DTC memory.
8. Read the DTC (see page 23-30).

   Is DTC 34-3x indicated?

   YES—Go to step 9.

   NO—Short to another wire in the right side curtain airbag inflator; replace the right side curtain airbag (see page 23-200). ■
9. Turn the ignition switch OFF. Disconnect the battery negative cable, and wait for 3 minutes.
10. Disconnect SRS unit connector C (16P) from the SRS unit (see step 7 on page 23-29).
11. Disconnect the SRS inflator simulator from the SRS simulator lead.
12. Connect the SRS short canceller (070AZ-SAA0100) to the No. 13 and No. 14 terminals of SRS unit connector C (16P) (see page 23-25).
13. Check resistance between the terminals of the SRS simulator lead. There should be an open circuit or at least 1 MΩ.

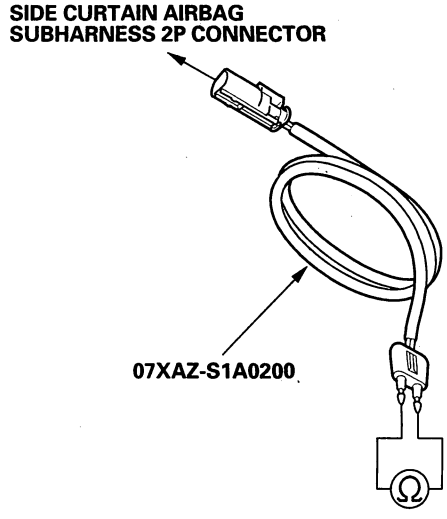

Is the resistance as specified?

YES—Faulty SRS unit or poor contact at SRS unit connector C (16P) and the SRS unit. Check the connection; if the connection is OK, replace the SRS unit (see page 23-213). ■

NO—Short in the side curtain airbag subharness; replace the side curtain airbag subharness. ■

BACK

Protected by AR

DTC Troubleshooting (cont'd)

DTC 34-8x (34-80 to 34-89, 34-8A to 34-8F): Short to Power in Right Side Curtain Airbag Inflator

Special Tools Required
- SRS inflator simulator 07SAZ-TB4011A
- SRS simulator lead E 07XAZ-S1A0200

1. Erase the DTC memory (see page 23-31).
2. Turn the ignition switch ON (II), and check that the SRS indicator comes on for about 6 seconds and then goes off.

   Does the SRS indicator stay on, and is DTC 34-8x indicated?

   YES—Go to step 3.

   NO—Intermittent failure, system is OK at this time. Go to Troubleshooting Intermittent Failures (see page 23-32). If another DTC is indicated, go to the DTC troubleshooting index.
3. Turn the ignition switch OFF. Disconnect the battery negative cable, and wait for 3 minutes.
4. Disconnect the right side curtain airbag 2P connector from the side curtain airbag subharness (A).

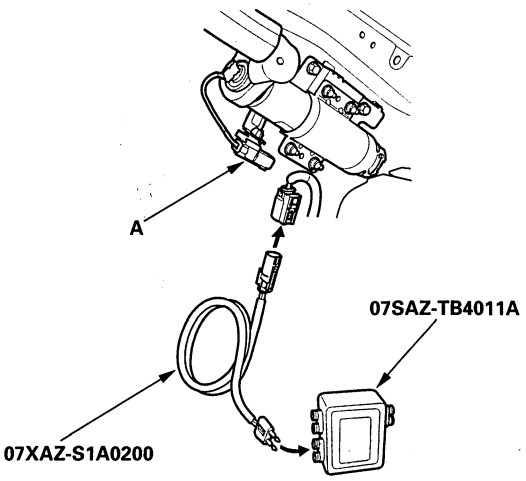

5. Connect the SRS inflator simulator (2 Ω connector) and simulator lead E to the side curtain airbag subharness.
6. Reconnect the battery negative cable.
7. Erase the DTC memory.
8. Read the DTC (see page 23-30).

   Is DTC 34-8x indicated?

   YES—Go to step 9.

   NO—Short to power in the right side curtain airbag inflator; replace the right side curtain airbag (see page 23-200).■
9. Turn the ignition switch OFF. Disconnect the battery negative cable, and wait for 3 minutes.
10. Disconnect SRS unit connector C (16P) from the SRS unit (see step 7 on page 23-29).
11. Reconnect the battery negative cable.
12. Turn the ignition switch ON (II).
13. Disconnect the SRS inflator simulator from the SRS simulator lead.
14. Check for voltage between each terminal of the SRS simulator lead and body ground. There should be 0.5 V or less.

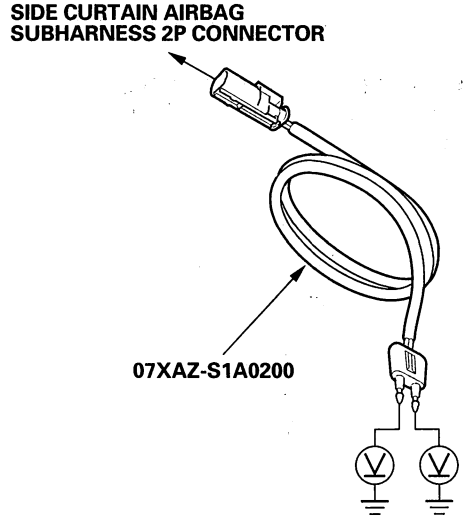

Is the voltage as specified?

YES—Faulty SRS unit or poor contact at SRS unit connector C (16P) and the SRS unit. Check the connection; if the connection is OK, replace the SRS unit (see page 23-213).■

NO—Short to power in the side curtain airbag subharness; replace the side curtain airbag subharness.■

BACK

Protected by AR

DTC 34-9x (34-90 to 34-99, 34-9A to 34-9F): Short to Ground in Right Side Curtain Airbag Inflator

Special Tools Required
- SRS inflator simulator 07SAZ-TB4011A
- SRS simulator lead E 07XAZ-S1A0200

1. Erase the DTC memory (see page 23-31).
2. Turn the ignition switch ON (II), and check that the SRS indicator comes on for about 6 seconds and then goes off.

   Does the SRS indicator stay on, and is DTC 34-9x indicated?

   YES—Go to step 3.

   NO—Intermittent failure, system is OK at this time. Go to Troubleshooting Intermittent Failures (see page 23-32). If another DTC is indicated, go to the DTC troubleshooting index.
3. Turn the ignition switch OFF. Disconnect the battery negative cable, and wait for 3 minutes.
4. Disconnect the right side curtain airbag 2P connector from the side curtain airbag subharness (A).

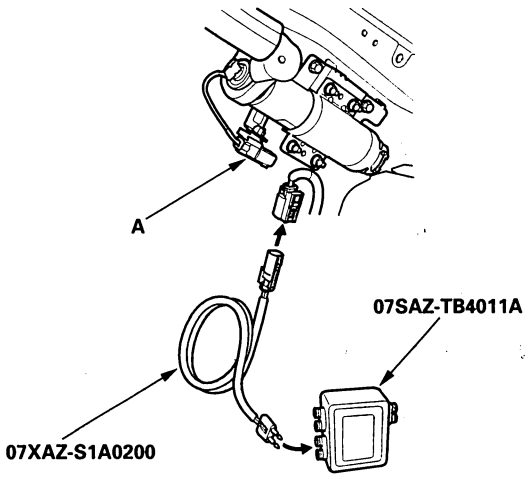

5. Connect the SRS inflator simulator (2 Ω connector) and simulator lead E to the side curtain airbag subharness.
6. Reconnect the battery negative cable.
7. Erase the DTC memory.
8. Read the DTC (see page 23-30).

   Is DTC 34-9x indicated?

   YES—Go to step 9.

   NO—Short to ground in the right side curtain airbag inflator; replace the right side curtain airbag (see page 23-200). ■
9. Turn the ignition switch OFF. Disconnect the battery negative cable, and wait for 3 minutes.
10. Disconnect SRS unit connector C (16P) from the SRS unit (see step 7 on page 23-29).
11. Disconnect the SRS inflator simulator from the SRS simulator lead.
12. Check resistance between each terminal of the SRS simulator lead and body ground. There should be an open circuit or at least 1 MΩ.

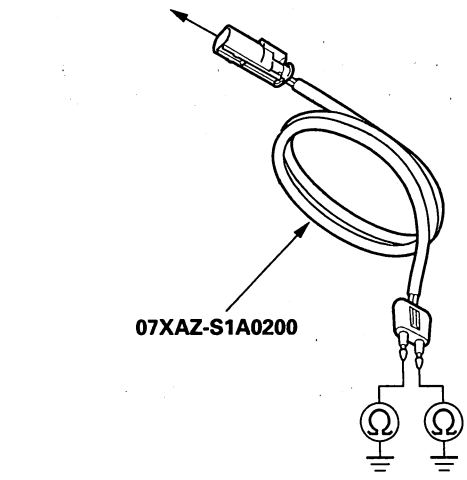

Is the resistance as specified?

YES—Faulty SRS unit or poor contact at SRS unit connector C (16P) and the SRS unit. Check the connection; if the connection is OK, replace the SRS unit (see page 23-213). ■

NO—Short to ground in the side curtain airbag subharness; replace the side curtain airbag subharness. ■

BACK

Protected by AR

DTC Troubleshooting (cont'd)

DTC 41-1x (41-10 to 41-19, 41-1A to 41-1F): No signal from the Left Front Impact Sensor

Special Tools Required
- SRS inflator simulator 07SAZ-TB4011A
- SRS simulator lead H 07YAZ-S3AA100

1. Erase the DTC memory (see page 23-31).

2. Turn the ignition switch ON (II), and check that the SRS indicator comes on for about 6 seconds and then goes off.

   Does the SRS indicator stay on, and is DTC 41-1x indicated?

   YES—Go to step 3.

   NO—Intermittent failure, system is OK at this time. Go to Troubleshooting Intermittent Failures (see page 23-32). If another DTC is indicated, go to the DTC troubleshooting index.

3. Turn the ignition switch OFF. Check the connections between SRS unit connector A (28P) and the SRS unit, between the engine compartment wire harness 2P connector and the left front impact sensor (see page 23-217), and at connector C403 (see page 22-26).

   Are the connections OK?

   YES—Go to step 4.

   NO—Repair the poor connections and retest. If DTC 41-1x is still present, go to step 4.

4. Disconnect the battery negative cable, and wait for 3 minutes.

5. Disconnect the engine compartment wire harness 2P connector (A) from the left front impact sensor.

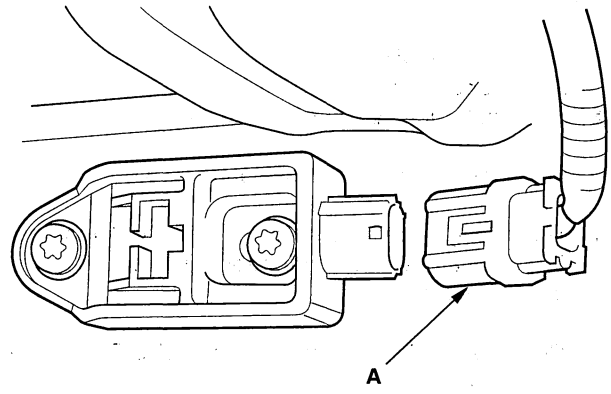

6. Disconnect SRS unit connector A (28P) from the SRS unit (see step 7 on page 23-29).

7. Check resistance between the No. 15 and No. 27 terminals of SRS unit connector A (28P). There should be an open circuit or at least 1 MΩ.

SRS UNIT CONNECTOR A (28P)

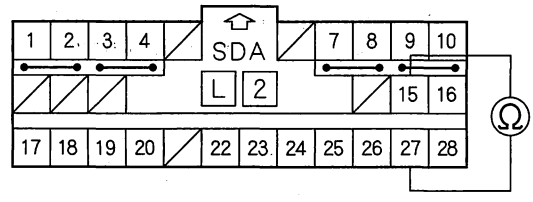

Wire side of female terminals

Is the resistance as specified?

YES—Go to step 8.

NO—Short in the engine compartment wire harness or dashboard wire harness; replace the faulty harness.■

BACK

Protected by AR

8. Check resistance between the No. 15 terminal of SRS unit connector A (28P) and body ground, and between the No. 27 terminal and body ground. There should be an open circuit or at lest 1 MΩ.

SRS UNIT CONNECTOR A (28P)

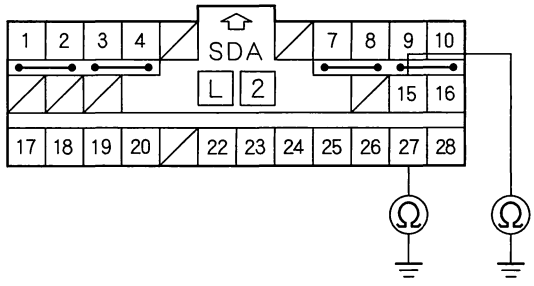

Wire side of female terminals

Is the resistance as specified?

YES—Go to step 9.

NO—Short to ground in the dashboard wire harness or engine compartment wire harness; replace the faulty harness. ■

9. Reconnect the battery negative cable.

10. Turn the ignition switch ON (II).

11. Check for voltage between the No. 15 terminal of SRS unit connector A (28P) and body ground, and between the No. 27 terminal and body ground. There should be 1 V or less.

SRS UNIT CONNECTOR A (28P)

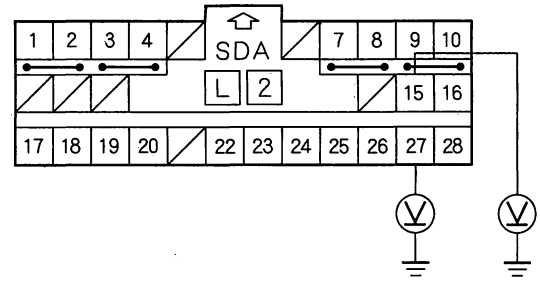

Wire side of female terminals

Is the voltage as specified?

YES—Go to step 12.

NO—Short to power in the engine compartment wire harness or the dashboard wire harness; replace the faulty harness. ■

12. Turn the ignition switch OFF.

13. Connect the SRS inflator simulator (jumper connector) and simulator lead H to the engine compartment wire harness 2P connector (A).

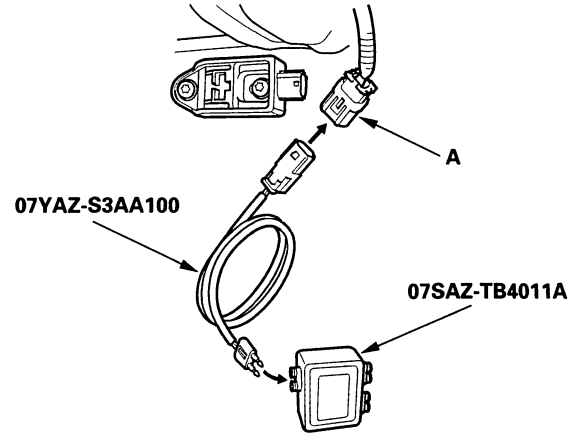

(cont'd)

Protected by AR

DTC Troubleshooting (cont'd)

14. Check resistance between the No. 15 and No. 27 terminals of SRS unit connector A (28P). There should be 0—1.0 Ω.

SRS UNIT CONNECTOR A (28P)

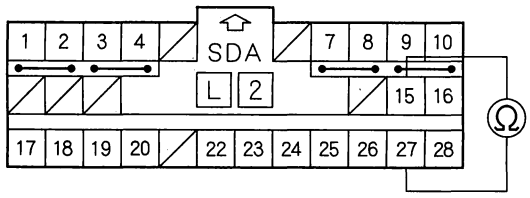

Wire side of female terminals

Is the resistance as specified?

YES—Faulty left front impact sensor or SRS unit; replace the left front impact sensor (see page 23-217). If the problem is still present, replace the SRS unit (see page 23-213). ■

NO—Poor connection at C403, faulty engine compartment wire harness, or faulty dashboard wire harness. Inspect C403. If it is OK, replace the faulty harness. ■

BACK

Protected by AR

DTC 41-Cx (41-C0 to 41-C9, 41-CA to 41-CF): Faulty Power Supply to the Left Front Impact Sensor

1. Erase the DTC memory (see page 23-31).

2. Turn the ignition switch ON (II), and check that the SRS indicator comes on for about 6 seconds and then goes off.

   Does the SRS indicator stay on, and is DTC 41-Cx indicated?

   YES—Go to step 3.

   NO—Intermittent failure, system is OK at this time. Go to Troubleshooting Intermittent Failures (see page 23-32). If another DTC is indicated, go to the DTC troubleshooting index.

3. Turn the ignition switch OFF. Disconnect the battery negative cable, and wait for 3 minutes.

4. Disconnect the engine compartment wire harness 2P connector (A) from the left front impact sensor.

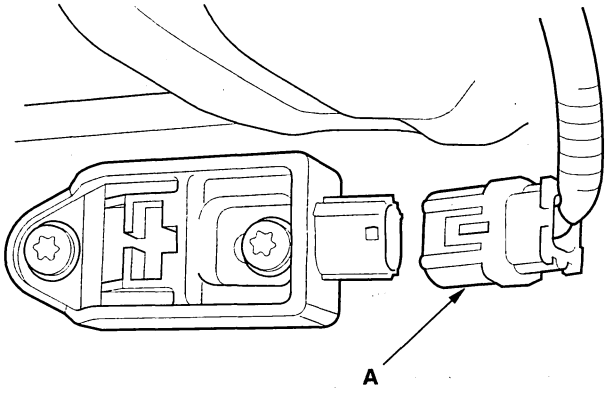

5. Disconnect SRS unit connector A (28P) from the SRS unit (see step 7 on page 23-29).

6. Check resistance between the No. 27 terminal of SRS unit connector A (28P) and body ground. There should be an open circuit or at least 1 MΩ.

SRS UNIT CONNECTOR A (28P)

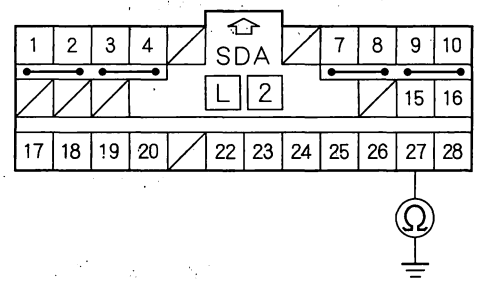

Wire side of female terminals

Is the resistance as specified?

YES—Go to step 7.

NO—Short to ground in the dashboard wire harness or engine compartment wire harness; replace the faulty harness. ■

7. Check resistance between the No. 15 and No. 27 terminals of SRS unit connector A (28P). There should be an open circuit or at least 1 MΩ.

SRS UNIT CONNECTOR A (28P)

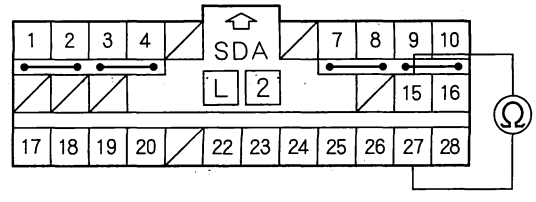

Wire side of female terminals

Is the resistance as specified?

YES—Faulty left front impact sensor or SRS unit; replace the left front impact sensor (see page 23-217). If the problem is still present, replace the SRS unit (see page 23-213). ■

NO—Short in the dashboard wire harness or engine compartment wire harness; replace the faulty harness. ■

BACK

Protected by AR

DTC Troubleshooting (cont'd)

DTC 42-1x (42-10 to 42-19, 42-1A to 42-1F): No Signal from the Right Front Impact Sensor

Special Tools Required
- SRS inflator simulator 07SAZ-TB4011A
- SRS simulator lead H 07YAZ-S3AA100

1. Erase the DTC memory (see page 23-31).

2. Turn the ignition switch ON (II), and check that the SRS indicator comes on for about 6 seconds and then goes off.

   Does the SRS indicator stay on, and is DTC 42-1x indicated?

   YES—Go to step 3.

   NO—Intermittent failure, system is OK at this time. Go to Troubleshooting Intermittent Failures (see page 23-32). If another DTC is indicated, go to the DTC troubleshooting index.

3. Turn the ignition switch OFF. Check the connections between SRS unit connector A (28P) and the SRS unit, between the engine compartment wire harness 2P connector and the right front impact sensor (see page 23-217), and at connector C403 (see page 22-26).

   Are the connections OK?

   YES—Go to step 4.

   NO—Repair the poor connections and retest. If DTC 42-1x is still present, go to step 4.

4. Disconnect the battery negative cable, and wait for 3 minutes.

5. Disconnect the engine compartment wire harness 2P connector (A) from the right front impact sensor.

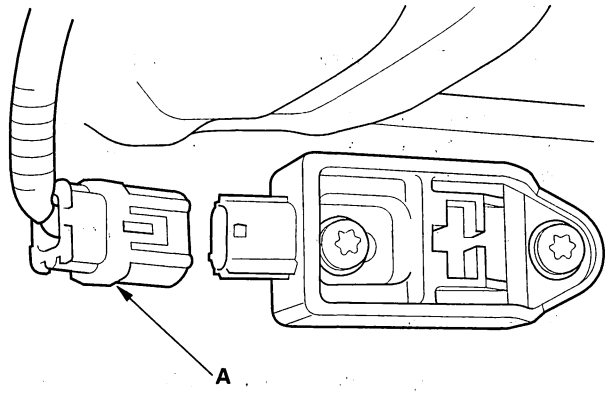

6. Disconnect SRS unit connector A (28P) from the SRS unit (see step 7 on page 23-29).

7. Check resistance between the No. 16 and No. 28 terminals of SRS unit connector A (28P). There should be an open circuit or at least 1 MΩ.

SRS UNIT CONNECTOR A (28P)

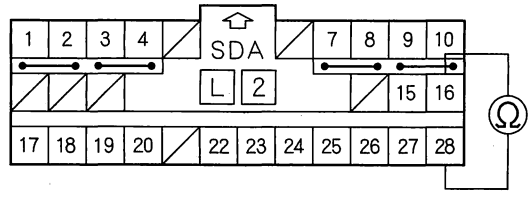

Wire side of female terminals

Is the resistance as specified?

YES—Go to step 8.

NO—Short in the engine compartment wire harness or dashboard wire harness; replace the faulty harness. ■

BACK

Protected by AR

8. Check resistance between the No. 16 terminal of SRS unit connector A (28P) and body ground, and between the No. 28 terminal and body ground. There should be an open circuit or at least 1 MΩ.

SRS UNIT CONNECTOR A (28P)

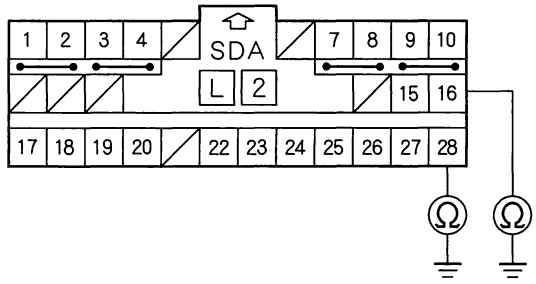

Wire side of female terminals

Is the resistance as specified?

YES—Go to step 9.

NO—Short to ground in the dashboard wire harness or engine compartment wire harness; replace the faulty harness. ■

9. Reconnect the battery negative cable.

10. Turn the ignition switch ON (II).

11. Check for voltage between the No. 16 terminal of SRS unit connector A (28P) and body ground, and between the No. 28 terminal and body ground. There should be 1 V or less.

SRS UNIT CONNECTOR A (28P)

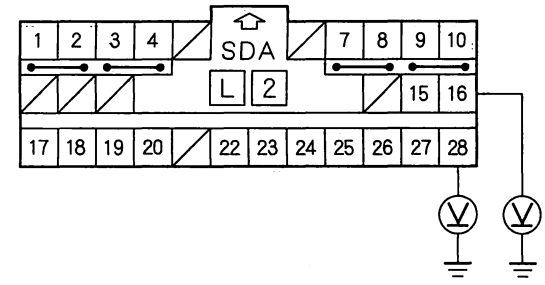

Wire side of female terminals

Is the voltage as specified?

YES—Go to step 12.

NO—Short to power in the engine compartment wire harness or dashboard wire harness; replace the faulty harness. ■

12. Turn the ignition switch OFF.

13. Connect the SRS inflator simulator (jumper connector) and the simulator lead to the engine compartment wire harness 2P connector (A).

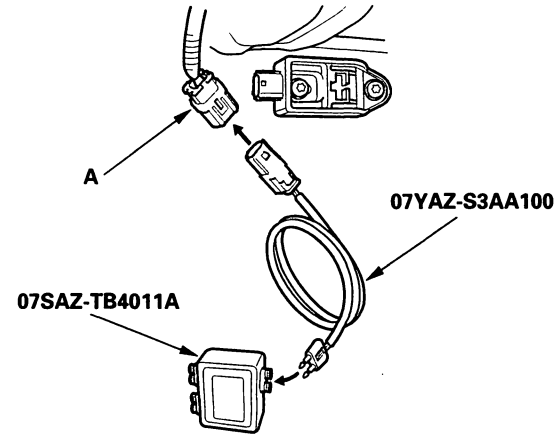

(cont'd)

Protected by AR

DTC Troubleshooting (cont'd)

14. Check resistance between the No. 16 and No. 28 terminals of SRS unit connector A (28P). There should be 0—1.0 Ω.

SRS UNIT CONNECTOR A (28P)

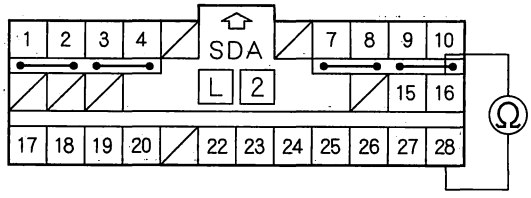

Wire side of female terminals

Is the resistance as specified?

YES—Faulty right front impact sensor or SRS unit; replace the right front impact sensor (see page 23-217). If the problem is still present, replace the SRS unit (see page 23-213). ■

NO—Poor connection at C403, faulty engine compartment wire harness, or faulty dashboard wire harness. Inspect C403. If it is OK, replace the faulty harness. ■

BACK

Protected by AR

DTC 42-Cx (42-C0 to 42-C9, 42-CA to 42-CF): Faulty Power Supply to the Right Front Impact Sensor

1. Erase the DTC memory (see page 23-31).

2. Turn the ignition switch ON (II), and check that the SRS indicator comes on for about 6 seconds and then goes off.

   Does the SRS indicator stay on, and is DTC 42-Cx indicated?

   YES—Go to step 3.

   NO—Intermittent failure, system is OK at this time. Go to Troubleshooting Intermittent Failures (see page 23-32). If another DTC is indicated, go to the DTC troubleshooting index.

3. Turn the ignition switch OFF. Disconnect the battery negative cable, and wait for 3 minutes.

4. Disconnect the engine compartment wire harness 2P connector (A) from the right front impact sensor.

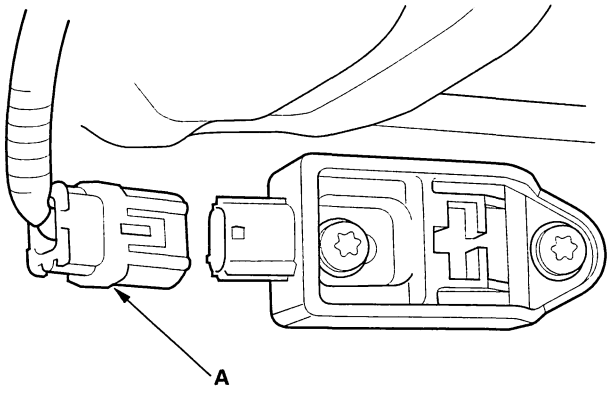

5. Disconnect SRS unit connector A (28P) from the SRS unit (see step 7 on page 23-29).

6. Check resistance between the No. 28 terminal of SRS unit connector A (28P) and body ground. There should be an open circuit or at least 1 MΩ.

SRS UNIT CONNECTOR A (28P)

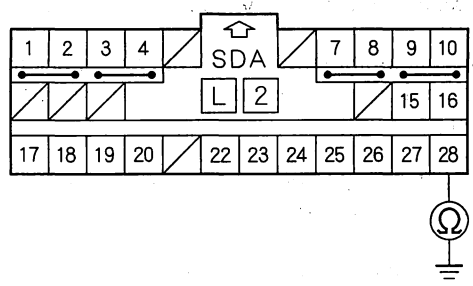

Wire side of female terminals

Is the resistance as specified?

YES—Go to step 7.

NO—Short to ground in the dashboard wire harness or engine compartment wire harness; replace the faulty harness.■

7. Check resistance between the No. 16 and No. 28 terminals of SRS unit connector A (28P). There should be an open circuit or at least 1 MΩ.

SRS UNIT CONNECTOR A (28P)

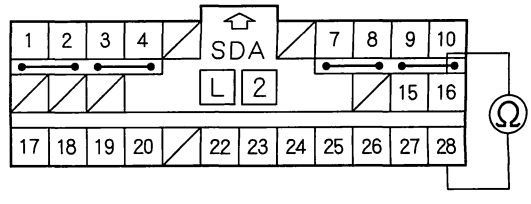

Wire side of female terminals

Is the resistance as specified?

YES—Faulty right front impact sensor or SRS unit; replace the right front impact sensor (see page 23-217). If the problem is still present, replace the SRS unit (see page 23-213).■

NO—Short in the dashboard wire harness or engine compartment wire harness; replace the faulty harness.■

BACK

Protected by AR

DTC Troubleshooting (cont'd)

DTC 41-2x (41-20 to 41-29, 41-2A to 41-2F), 41-3x (41-30 to 41-39, 41-3A to 41-3F): Internal Failure of the Left Front Impact Sensor

1. Erase the DTC memory (see page 23-31).
2. Turn the ignition switch ON (II), and check that the SRS indicator comes on for about 6 seconds and then goes off.

   Does the SRS indicator stay on, and is DTC 41-2x or 41-3x indicated?

   YES—Replace the left front impact sensor (see page 23-217). If DTC returns, replace the SRS unit (see page 23-213).■

   NO—Intermittent failure, system is OK at this time. Go to Troubleshooting Intermittent Failures (see page 23-32). If another DTC is indicated, go to the DTC troubleshooting index.

DTC 41-9x (41-90 to 41-99, 41-9A to 41-9F), 41-Bx (41-B0 to 41-B9, 41-BA to 41-BF): Internal Failure of the Left Front Impact Sensor

1. Erase the DTC memory (see page 23-31).
2. Turn the ignition switch ON (II), and check that the SRS indicator comes on for about 6 seconds and then goes off.

   Does the SRS indicator stay on, and is DTC 41-9x or 41-Bx indicated?

   YES—Replace the left front impact sensor (see page 23-217). If the DTC returns, replace the SRS unit (see page 23-213).■

   NO—Intermittent failure, system is OK at this time. Go to Troubleshooting Intermittent Failures (see page 23-32). If another DTC is indicated, go to the DTC troubleshooting index.

BACK

Protected by AR

DTC 42-2x (42-20 to 42-29, 42-2A to 42-2F), 42-3x (42-30 to 42-39, 42-3A to 42-3F): Internal Failure of the Right Front Impact Sensor

1. Erase the DTC memory (see page 23-31).
2. Turn the ignition switch ON (II), and check that the SRS indicator comes on for about 6 seconds and then goes off.

   Does the SRS indicator stay on, and is DTC 42-2x or 42-3x indicated?

   YES—Replace the right front impact sensor (see page 23-217). If DTC returns, replace the SRS unit (see page 23-213).■

   NO—Intermittent failure, system is OK at this time. Go to Troubleshooting Intermittent Failures (see page 23-32). If another DTC is indicated, go to the DTC troubleshooting index.

DTC 42-9x (42-90 to 42-99, 42-9A to 42-9F), 42-Bx (42-B0 to 42-B9, 42-BA to 42-BF): Internal Failure of the Right Front Impact Sensor

1. Erase the DTC memory (see page 23-31).
2. Turn the ignition switch ON (II), and check that the SRS indicator comes on for about 6 seconds and then goes off.

   Does the SRS indicator stay on, and is DTC 42-9x or 42-Bx indicated?

   YES—Replace the right front impact sensor (see page 23-217). If the DTC returns, replace the SRS unit (see page 23-213).■

   NO—Intermittent failure, system is OK at this time. Go to Troubleshooting Intermittent Failures (see page 23-32). If another DTC is indicated, go to the DTC troubleshooting index.

BACK

Protected by AR

DTC Troubleshooting (cont'd)

DTC 43-1x (43-10 to 43-19, 43-1A to 43-1F): No Signal from the Left Side Impact Sensor (first)

Special Tools Required
- SRS inflator simulator 07SAZ-TB4011A
- SRS simulator lead H 07YAZ-S3AA100

1. Erase the DTC memory (see page 23-31).

2. Turn the ignition switch ON (II), and check that the SRS indicator comes on for about 6 seconds and then goes off.

   Does the SRS indicator stay on, and is DTC 43-1x indicated?

   YES—Go to step 3.

   NO—Intermittent failure, system is OK at this time. Go to Troubleshooting Intermittent Failures (see page 23-32). If another DTC is indicated, go to the DTC troubleshooting index.

3. Turn the ignition switch OFF. Disconnect the battery negative cable, and wait for 3 minutes.

4. Check the connection between the floor wire harness 2P connector and the left side impact sensor (first).

   Is the connection OK?

   YES—Go to step 5.

   NO—Repair the poor connections and retest. If the DTC 43-1x is still present, go to step 5.

5. Disconnect both seat belt tensioner 4P connectors (see step 6 on page 23-29).

6. Disconnect the floor wire harness 2P connector (A) from the left side impact sensor (first).

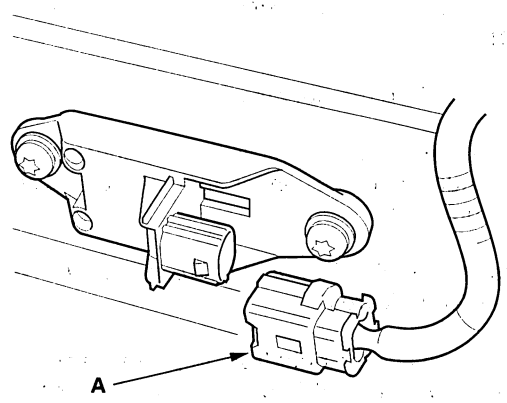

7. Disconnect SRS unit connector B (28P) from the SRS unit (see step 7 on page 23-29).

8. Check resistance between the No. 19 and No. 20 terminals of SRS unit connector B (28P). There should be an open circuit or at least 1 MΩ.

SRS UNIT CONNECTOR B (28P)

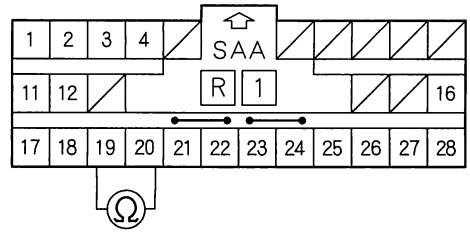

Wire side of female terminals

Is the resistance as specified?

YES—Go to step 9.

NO—Short in the floor wire harness; replace the floor wire harness. ■

BACK

Protected by AR

9. Check resistance between the No. 19 terminal of SRS unit connector B (28P) and body ground, and between the No. 20 terminal and body ground. There should be an open circuit or at least 1 MΩ.

SRS UNIT CONNECTOR B (28P)

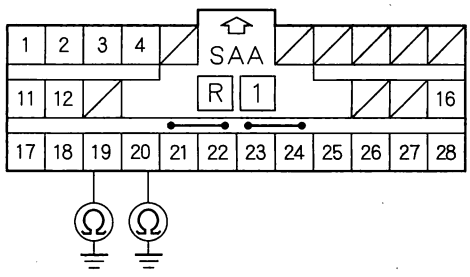

Wire side of female terminals

Is the resistance as specified?

YES—Go to step 10.

NO—Short to ground in the floor wire harness; replace the floor wire harness.■

10. Reconnect the battery negative cable.

11. Turn the ignition switch ON (II).

12. Check for voltage between the No. 19 terminal of SRS unit connector B (28P) and body ground, and between the No. 20 terminal and body ground. There should be 1 V or less.

SRS UNIT CONNECTOR B (28P)

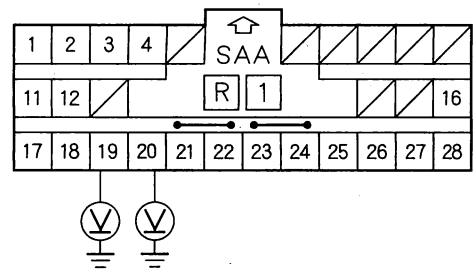

Wire side of female terminals

Is the voltage as specified?

YES—Go to step 13.

NO—Short to power in the floor wire harness; replace the floor wire harness.■

13. Turn the ignition switch OFF.

14. Connect the SRS inflator simulator (jumper connector) and simulator lead H to the floor wire harness 2P connector (A).

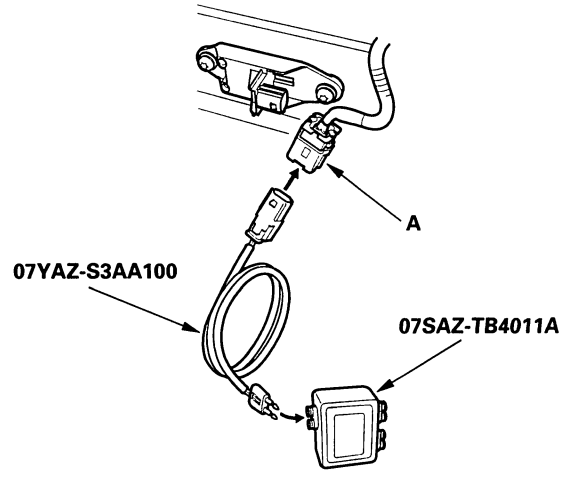

(cont'd)

Protected by AR

DTC Troubleshooting (cont'd)

15. Check resistance between the No. 19 and No. 20 terminals of SRS unit connector B (28P). There should be 1.0 Ω or less.

SRS UNIT CONNECTOR B (28P)

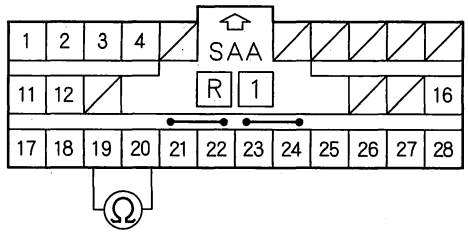

Wire side of female terminals

Is the resistance as specified?

YES—Faulty left side impact sensor (first) or SRS unit; replace the left side impact sensor (first) (see page 23-214). If the problem is still present, replace the SRS unit (see page 23-213). ■

NO—Open in the floor wire harness; replace the floor wire harness. ■

DTC 43-Cx (43-C0 to 43-C9, 43-CA to 43-CF): Faulty Power Supply to the Left Side Impact Sensor (first)

1. Erase the DTC memory (see page 23-31).
2. Turn the ignition switch ON (II), and check that the SRS indicator comes on for about 6 seconds and then goes off.

   Does the SRS indicator stay on, and is DTC 43-Cx indicated?

   YES—Go to step 3.

   NO—Intermittent failure, system is OK at this time. Go to Troubleshooting Intermittent Failures (see page 23-32). If another DTC is indicated, go to the DTC troubleshooting index.

3. Turn the ignition switch OFF. Disconnect the battery negative cable, and wait for 3 minutes.
4. Disconnect both seat belt tensioner 4P connectors (see step 6 on page 23-29).

BACK

Protected by AR

5. Disconnect the floor wire harness 2P connector (A) from the driver's side impact sensor (first).

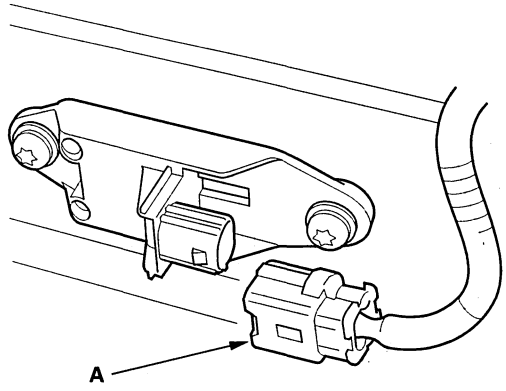

6. Disconnect SRS unit connector B (28P) from the SRS unit (see step 7 on page 23-29).

7. Check resistance between the No. 19 terminal of SRS unit connector B (28P) and body ground. There should be an open circuit or at least 1 MΩ.

SRS UNIT CONNECTOR B (28P)

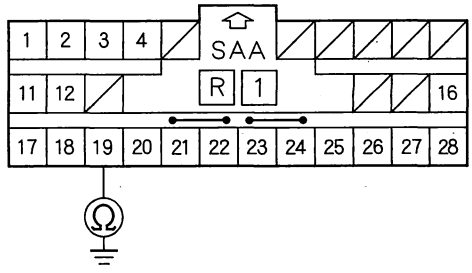

Wire side of female terminals

Is the resistance as specified?

YES—Go to step 8.

NO—Short to ground in the floor wire harness, replace the floor wire harness.■

8. Check resistance between the No. 19 and No. 20 terminals of SRS unit connector B (28P). There should be an open circuit or at least 1 MΩ.

SRS UNIT CONNECTOR B (28P)

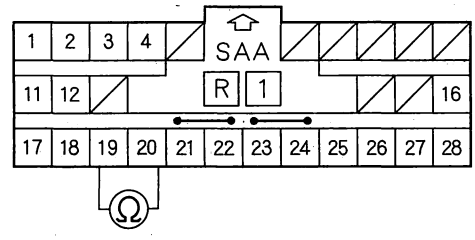

Wire side of female terminals

Is the resistance as specified?

YES—Faulty driver's side impact sensor (first) or SRS unit; replace the sensor (first) (see page 23-214). If the problem is still present, replace the SRS unit (see page 23-213).■

NO—Short in the floor wire harness; replace the floor wire harness.■

BACK

Protected by AR

DTC Troubleshooting (cont'd)

DTC 44-1x (44-10 to 44-19, 44-1A to 44-1F): No Signal from the Right Side Impact Sensor (first)

Special Tools Required
- SRS inflator simulator 07SAZ-TB4011A
- SRS simulator lead H 07YAZ-S3AA100

1. Erase the DTC memory (see page 23-31).
2. Turn the ignition switch ON (II), and check that the SRS indicator comes on for about 6 seconds and then goes off.

   Does the SRS indicator stay on, and is DTC 44-1x indicated?

   YES—Go to step 3.

   NO—Intermittent failure, system is OK at this time. Go to Troubleshooting Intermittent Failures (see page 23-32). If another DTC is indicated, go to the DTC troubleshooting index.
3. Turn the ignition switch OFF. Disconnect the battery negative cable, and wait for 3 minutes.
4. Check the connection between the floor wire harness 2P connector and the right side impact sensor (first).

   Is the connection OK?

   YES—Go to step 5.

   NO—Repair the poor connections and retest. If the DTC 44-1x is still present, go to step 5.
5. Disconnect both seat belt tensioner 4P connectors (see step 6 on page 23-29).
6. Disconnect the floor wire harness 2P connector (A) from the right side impact sensor (first).

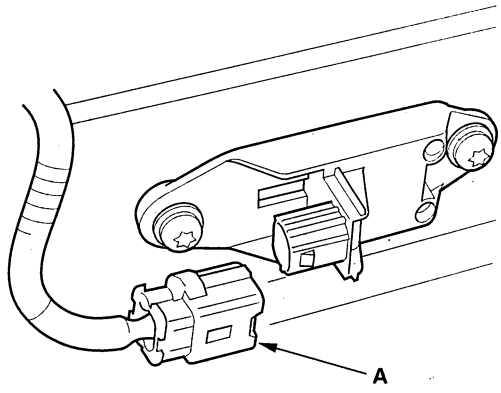

7. Disconnect SRS unit connector B (28P) from the SRS unit (see step 7 on page 23-29).
8. Check resistance between the No. 25 and No. 26 terminals of SRS unit connector B (28P). There should be an open circuit or at least 1 MΩ.

SRS UNIT CONNECTOR B (28P)

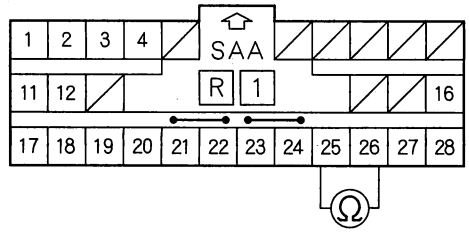

Wire side of female terminals

Is the resistance as specified?

YES—Go to step 9.

NO—Short in the floor wire harness; replace the floor wire harness. ■

BACK

Protected by AR

9. Check resistance between the No. 25 terminal of SRS unit connector B (28P) and body ground, and between the No. 26 terminal and body ground. There should be an open circuit or at least 1 MΩ.

SRS UNIT CONNECTOR B (28P)

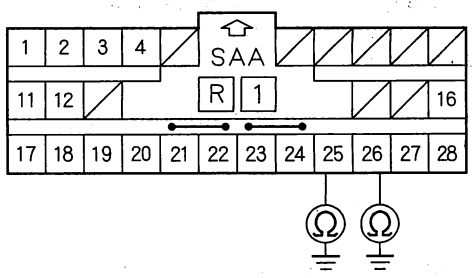

Wire side of female terminals

Is the resistance as specified?

YES—Go to step 10.

NO—Short to ground in the floor wire harness; replace the floor wire harness. ■

10. Reconnect the battery negative cable.

11. Turn the ignition switch ON (II).

12. Check for voltage between the No. 25 terminal of SRS unit connector B (28P) and body ground, and between the No. 26 terminal and body ground. There should be 1 V or less.

SRS UNIT CONNECTOR B (28P)

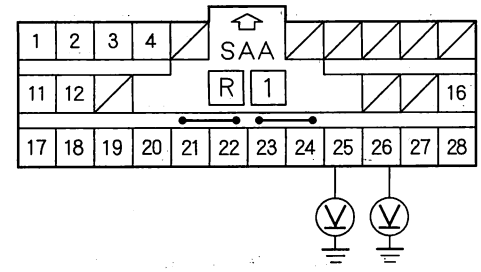

Wire side of female terminals

Is the voltage as specified?

YES—Go to step 13.

NO—Short to power in the floor wire harness; replace the floor wire harness. ■

13. Turn the ignition switch OFF.

14. Connect the SRS inflator simulator (jumper connector) and simulator lead H to the floor wire harness 2P connector (A).

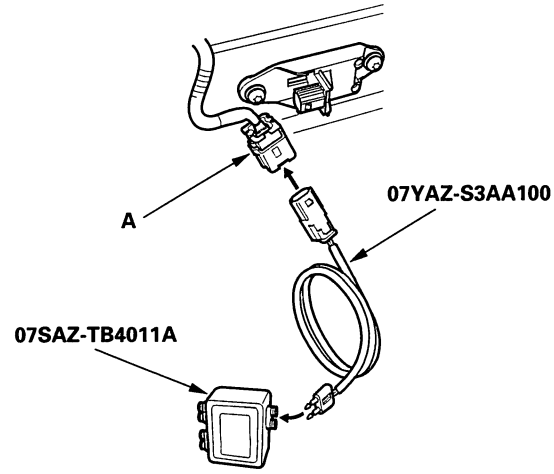

(cont'd)

BACK

Protected by AR

DTC Troubleshooting (cont'd)

15. Check resistance between the No. 25 and No. 26 terminals of SRS unit connector B (28P). There should be 1.0 Ω or less.

SRS UNIT CONNECTOR B (28P)

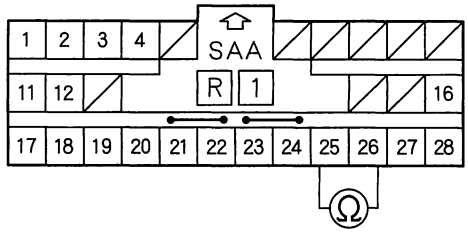

Wire side of female terminals

Is the resistance as specified?

YES—Faulty right side impact sensor (first) or SRS unit; replace the right side impact sensor (first) (see page 23-214). If the problem is still present, replace the SRS unit (see page 23-213). ■

NO—Open in the floor wire harness; replace the floor wire harness. ■

DTC 44-Cx (44-C0 to 44-C9, 44-CA to 44-CF): Faulty Power Supply to the Right Side Impact Sensor (first)

1. Erase the DTC memory (see page 23-31).
2. Turn the ignition switch ON (II), and check that the SRS indicator comes on for about 6 seconds and then goes off.

   Does the SRS indicator stay on, and is DTC 44-Cx indicated?

   YES—Go to step 3.

   NO—Intermittent failure, system is OK at this time. Go to Troubleshooting Intermittent Failures (see page 23-32). If another DTC is indicated, go to the DTC troubleshooting index.

3. Turn the ignition switch OFF. Disconnect the battery negative cable, and wait for 3 minutes.
4. Disconnect both seat belt tensioner 4P connectors (see step 6 on page 23-29).
5. Disconnect the floor wire harness 2P connector (A) from the right side impact sensor (first).

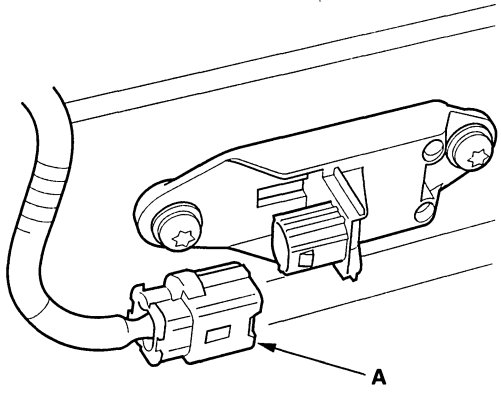

6. Disconnect SRS unit connector B (28P) from the SRS unit (see step 7 on page 23-29).

BACK

Protected by AR

7. Check resistance between the No. 25 terminal of SRS unit connector B (28P) and body ground. There should be an open circuit or at least 1 MΩ.

SRS UNIT CONNECTOR B (28P)

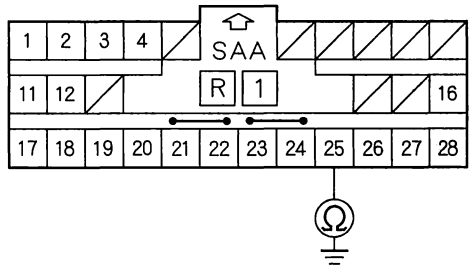

Wire side of female terminals

Is the resistance as specified?

YES—Go to step 8.

NO—Short to ground in the floor wire harness; replace the floor wire harness.■

8. Check resistance between the No. 25 and No. 26 terminals of SRS unit connector B (28P). There should be an open circuit, or at least 1 MΩ.

SRS UNIT CONNECTOR B (28P)

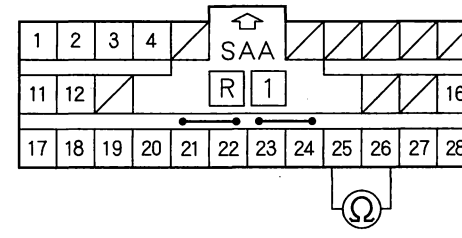

Wire side of female terminals

Is the resistance as specified?

YES—Faulty right side impact sensor (first) or SRS unit; replace the sensor (see page 23-214). If the problem is still present, replace the SRS unit (see page 23-213).■

NO—Short in the floor wire harness; replace the floor wire harness.■

BACK

Protected by AR

DTC Troubleshooting (cont'd)

DTC 43-2x (43-20 to 43-29, 43-2A to 43-2F), 43-3x (43-30 to 43-39, 43-3A to 43-3F), 43-Bx (43-B0 to 43-B9, 43-BA to 43-BF): Internal Failure of the Left Side Impact Sensor (first)

1. Erase the DTC memory (see page 23-31).
2. Turn the ignition switch ON (II), and check that the SRS indicator comes on for about 6 seconds and then goes off.

   Does the SRS indicator stay on, and is DTC 43-2x, 43-3x, or 43-Bx indicated?

   YES—Replace the left side impact sensor (first) (see page 23-214). If the DTC returns, replace the SRS unit (see page 23-213).■

   NO—Intermittent failure, system is OK at this time. Go to Troubleshooting Intermittent Failures (see page 23-32). If another DTC is indicated, go to the DTC troubleshooting index.

DTC 44-2x (44-20 to 44-29, 44-2A to 44-2F), 44-3x (44-30 to 44-39, 44-3A to 44-3F), 44-Bx (44-B0 to 44-B9, 44-BA to 44- BF): Internal Failure of the Right Side Impact Sensor (first)

1. Erase the DTC memory (see page 23-31).
2. Turn the ignition switch ON (II), and check that the SRS indicator comes on for about 6 seconds and then goes off.

   Does the SRS indicator stay on, and is DTC42-2x, 44-3x, or 44-Bx indicated?

   YES—Replace the right side impact sensor (first) (see page 23-214). If the DTC returns, replace the SRS unit (see page 23-213).■

   NO—Intermittent failure, system is OK at this time. Go to Troubleshooting Intermittent Failures (see page 23-32). If another DTC is indicated, go to the DTC troubleshooting index.

BACK

Protected by AR

DTC 45-1x (45-10 to 45-19, 45-1A to 45-1F): No Signal from the Left Side Impact Sensor (second)

Special Tools Required
- SRS inflator simulator 07SAZ-TB4011A
- SRS simulator lead H 07YAZ-S3AA100

1. Erase the DTC memory (see page 23-31).

2. Turn the ignition switch ON (II), and check that the SRS indicator comes on for about 6 seconds and then goes off.

   Does the SRS indicator stay on, and is DTC 45-1x indicated?

   YES—Go to step 3.

   NO—Intermittent failure, system is OK at this time. Go to Troubleshooting Intermittent Failures (see page 23-32). If another DTC is indicated, go to the DTC troubleshooting index.

3. Turn the ignition switch OFF. Disconnect the battery negative cable, and wait for 3 minutes.

4. Check the connection between the side curtain airbag subharness 2P connector and the left side impact sensor (second).

   Is the connection OK?

   YES—Go to step 5.

   NO—Repair the poor connections and retest. If the DTC 45-1x is still present, go to step 5.

5. Disconnect the left side curtain airbag 2P connector and side curtain airbag subharness (see step 5 on page 23-28).

6. Disconnect the side curtain airbag subharness 2P connector (A) from the left side impact sensor (second).

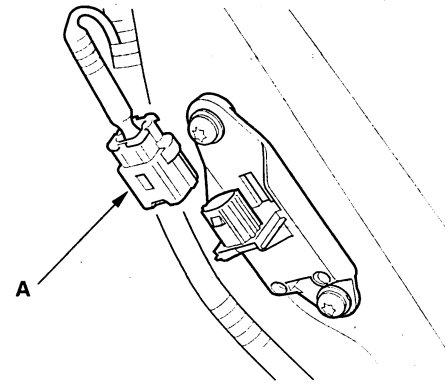

7. Disconnect SRS unit connector C (16P) from the SRS unit (see step 7 on page 23-29).

8. Check resistance between the No. 9 and No. 10 terminals of SRS unit connector C (16P). There should be an open circuit or at least 1 MΩ.

SRS UNIT CONNECTOR C (16P)

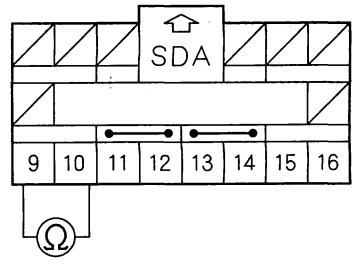

Wire side of female terminals

Is the resistance as specified?

YES—Go to step 9.

NO—Short in the side curtain airbag subharness; replace the side curtain airbag subharness. ■

(cont'd)

Protected by AR

DTC Troubleshooting (cont'd)

9. Check resistance between the No. 9 terminal of SRS unit connector C (16P) and body ground, and between the No. 10 terminal and body ground. There should be an open circuit or at least 1 MΩ.

SRS UNIT CONNECTOR C (16P)

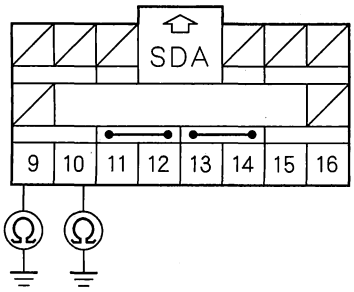

Wire side of female terminals

Is the resistance as specified?

YES—Go to step 10.

NO—Short to ground in the side curtain airbag subharness; replace the side curtain airbag subharness. ■

10. Reconnect the battery negative cable.

11. Turn the ignition switch ON (II).

12. Check for voltage between the No. 9 terminal of SRS unit connector C (16P) and body ground, and between the No. 10 terminal and body ground. There should be 1 V or less.

SRS UNIT CONNECTOR C (16P)

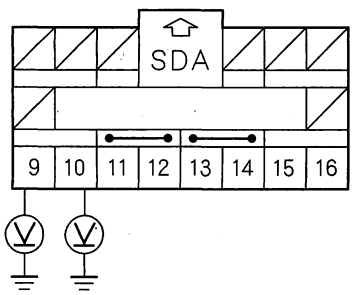

Wire side of female terminals

Is the voltage as specified?

YES—Go to step 13.

NO—Short to power in the side curtain airbag subharness; replace the side curtain airbag subharness. ■

13. Turn the ignition switch OFF.

14. Connect the SRS inflator simulator (jumper connector) and simulator lead H to the side curtain airbag subharness 2P connector (A).

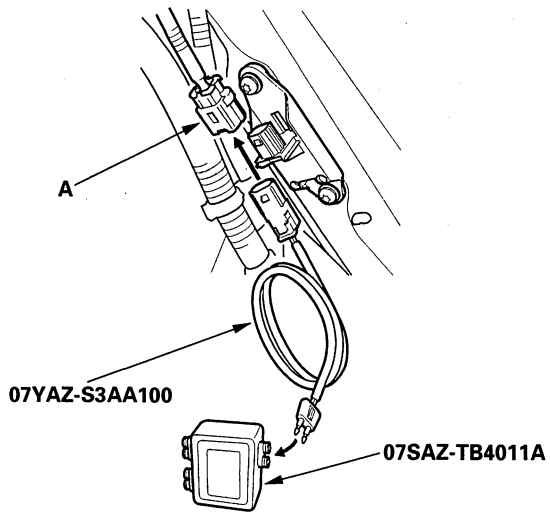

BACK

Protected by AR

15. Check resistance between the No. 9 and No. 10 terminals of SRS unit connector C (16P). There should be 1.0 Ω or less.

SRS UNIT CONNECTOR C (16P)

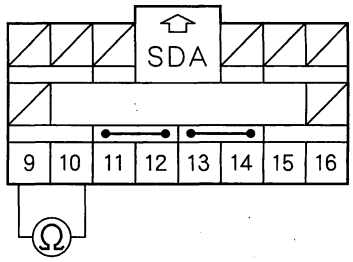

Wire side of female terminals

Is the resistance as specified?

YES—Faulty left side impact sensor (second) or SRS unit; replace the left side impact sensor (second) (see page 23-215). If the problem is still present, replace the SRS unit (see page 23-213).■

NO—Open in the side curtain airbag subharness; replace the side curtain airbag subharness.■

Protected by AR

DTC Troubleshooting (cont'd)

DTC 46-1x (46-10 to 46-19, 46-1A to 46-1F): No Signal from the Right Side Impact Sensor (second)

Special Tools Required
- SRS inflator simulator 07SAZ-TB4011A
- SRS simulator lead H 07YAZ-S3AA100

1. Erase the DTC memory (see page 23-31).

2. Turn the ignition switch ON (II), and check that the SRS indicator comes on for about 6 seconds and then goes off.

   Does the SRS indicator stay on, and is DTC 46-1x indicated?

   YES—Go to step 3.

   NO—Intermittent failure, system is OK at this time. Go to Troubleshooting Intermittent Failures (see page 23-32). If another DTC is indicated, go to the DTC troubleshooting index.

3. Turn the ignition switch OFF. Disconnect the battery negative cable, and wait for 3 minutes.

4. Check the connection between the side curtain airbag subharness 2P connector and the right side impact sensor (second).

   Is the connection OK?

   YES—Go to step 5.

   NO—Repair the poor connections and retest. If the DTC 46-1x is still present, go to step 5.

5. Disconnect the right side curtain airbag 2P connector and side curtain airbag subharness (see step 5 on page 23-28).

6. Disconnect the side curtain airbag subharness 2P connector (A) from the right side impact sensor (second).

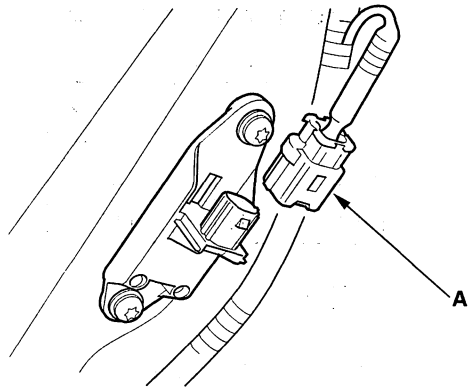

7. Disconnect SRS unit connector C (16P) from the SRS unit (see step 7 on page 23-29).

8. Check resistance between the No. 15 and No. 16 terminals of SRS unit connector C (16P). There should be an open circuit or at least 1 MΩ.

SRS UNIT CONNECTOR C (16P)

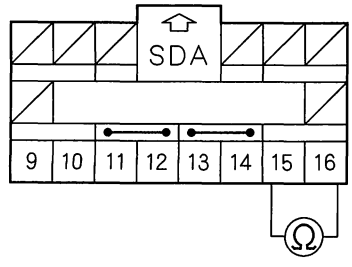

Wire side of female terminals

Is the resistance as specified?

YES—Go to step 9.

NO—Short in the side curtain airbag subharness; replace the side curtain airbag subharness. ■

BACK

Protected by AR

9. Check resistance between the No. 15 terminal of SRS unit connector C (16P) and body ground, and between the No. 16 terminal and body ground. There should be an open circuit or at least 1 MΩ.

SRS UNIT CONNECTOR C (16P)

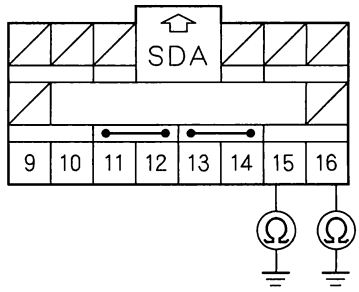

Wire side of female terminals

Is the resistance as specified?

YES—Go to step 10.

NO—Short to ground in the side curtain airbag subharness; replace the side curtain airbag subharness. ■

10. Reconnect the battery negative cable.

11. Turn the ignition switch ON (II).

12. Check for voltage between the No. 15 terminal of SRS unit connector C (16P) and body ground, and between the No. 16 terminal and body ground. There should be 1 V or less.

SRS UNIT CONNECTOR C (16P)

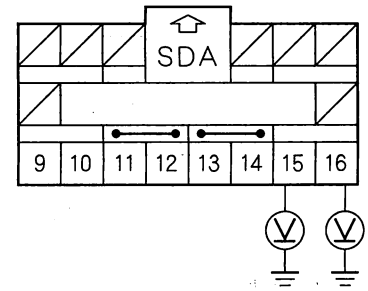

Wire side of female terminals

Is the voltage as specified?

YES—Go to step 13.

NO—Short to power in the side curtain airbag subharness; replace the side curtain airbag subharness. ■

13. Turn the ignition switch OFF.

14. Connect the SRS inflator simulator (jumper connector) and simulator lead H to the side curtain airbag subharness 2P connector (A).

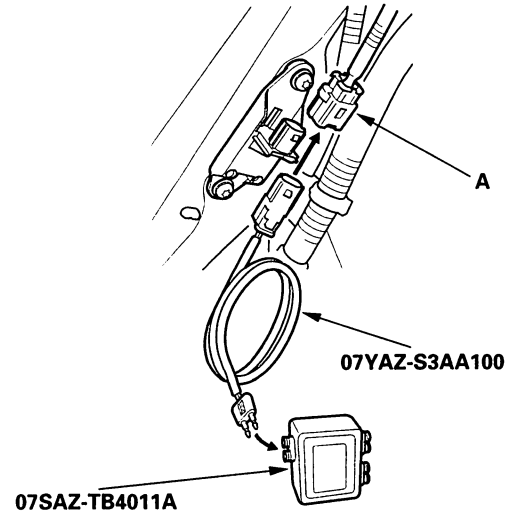

(cont'd)

Protected by AR

DTC Troubleshooting (cont'd)

15. Check resistance between the No. 15 and No. 16 terminals of SRS unit connector C (16P). There should be 1.0 Ω or less.

SRS UNIT CONNECTOR C (16P)

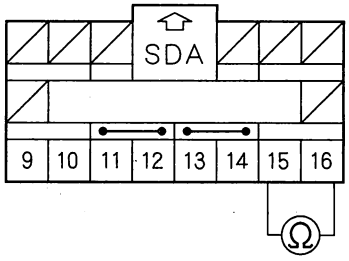

Wire side of female terminals

Is the resistance as specified?

YES—Faulty right side impact sensor (second) or SRS unit; replace the right side impact sensor (second) (see page 23-215). If the problem is still present, replace the SRS unit (see page 23-213). ■

NO—Open in the side curtain airbag subharness; replace the side curtain airbag subharness. ■

BACK

Protected by AR

DTC 45-2x (45-20 to 45-29, 45-2A to 45-2F), 45-3x (45-30 to 45-39, 45-3A to 45-3F), 45-Bx (45-B0 to 45-B9, 45-BA to 45-BF): Internal Failure of the Left Side Impact Sensor (second)

1. Erase the DTC memory (see page 23-31).
2. Turn the ignition switch ON (II), and check that the SRS indicator comes on for about 6 seconds and then goes off.

   Does the SRS indicator stay on, and is DTC 45-2x, 45-3x, or 45-Bx indicated?

   YES—Replace the left side impact sensor (second) (see page 23-215). If the DTC returns, replace the SRS unit (see page 23-213). ■

   NO—Intermittent failure, system is OK at this time. Go to Troubleshooting Intermittent Failures (see page 23-32). If another DTC is indicated, go to the DTC troubleshooting index.

DTC 46-2x (46-20 to 46-29, 46-2A to 46-2F), 46-3x (46-30 to 46-39, 46-3A to 46-3F), 46-Bx (46-B0 to 46-B9, 46-BA to 46-BF): Internal Failure of the Right Side Impact Sensor (second)

1. Erase the DTC memory (see page 23-31).
2. Turn the ignition switch ON (II), and check that the SRS indicator comes on for about 6 seconds and then goes off.

   Does the SRS indicator stay on, and is DTC 46-2x, 46-3x, or 46-Bx indicated?

   YES—Replace the right side impact sensor (second) (see page 23-215). If the DTC returns, replace the SRS unit (see page 23-213). ■

   NO—Intermittent failure, system is OK at this time. Go to Troubleshooting Intermittent Failures (see page 23-32). If another DTC is indicated, go to the DTC troubleshooting index.

BACK

Protected by AR

DTC Troubleshooting (cont'd)

DTC 51-2x (51-20 to 51-29, 51-2A to 51-2F), 51-4x (51-40 to 51-49, 51-4A to 51-4F), 51-7x (51-70 to 51-79, 51-7A to 51-7F): Internal Failure of the SRS Unit

NOTE: Before troubleshooting any of these DTCs, check the battery/system voltage. If the voltage is low, repair the charging system or replace the battery before troubleshooting the SRS. If the battery/system voltage is now OK, ask the customer if the battery ever went dead. A dead battery may trigger one of these DTCs.

1. Erase the DTC memory (see page 23-31).
2. Turn the ignition switch ON (II), and check that the SRS indicator comes on for about 6 seconds and then goes off.

   Does the SRS indicator stay on, and is DTC 51-2x, 51-4x, or 51-7x indicated?

   YES—Replace the SRS unit (see page 23-213). ■

   NO—Intermittent failure, system is OK at this time. Go to Troubleshooting Intermittent Failures (see page 23-32). If another DTC is indicated, go to the DTC troubleshooting index.

DTC 52-8x (52-80 to 52-89, 52-8A to 52-8F), 52-9x (52-90 to 52-99, 52-9A to 52-9F), 52-Ax (52-A0 to 52-A9, 52-AA to 52-AF): Internal Failure of the SRS Unit

NOTE: Before troubleshooting any of these DTCs, check the battery/system voltage. If the voltage is low, repair the charging system or replace the battery before troubleshooting the SRS. If the battery/system voltage is now OK, ask the customer if the battery ever went dead. A dead battery may trigger one of these DTCs.

1. Erase the DTC memory (see page 23-31).
2. Turn the ignition switch ON (II), and check that the SRS indicator comes on for about 6 seconds and then goes off.

   Does the SRS indicator stay on, and is DTC 52-8x, 52-9x, or 52-Ax indicated?

   YES—Replace the SRS unit (see page 23-213). ■

   NO—Intermittent failure, system is OK at this time. Go to Troubleshooting Intermittent Failures (see page 23-32). If another DTC is indicated, go to the DTC troubleshooting index.

BACK

Protected by AR

DTC 52-Bx (52-B0 to 52-B9, 52-BA to 52-BF), 52-Cx (52-C0 to 52-C9, 52-CA to 52-CF), 52-Dx (52-D0 to 52-D9, 52-DA to 52-DF):
Internal Failure of the SRS Unit

NOTE: Before troubleshooting any of these DTCs, check the battery/system voltage. If the voltage is low, repair the charging system or replace the battery before troubleshooting the SRS. If the battery/system voltage is now OK, ask the customer if the battery ever went dead. A dead battery may trigger one of these DTCs.

1. Erase the DTC memory (see page 23-31).
2. Turn the ignition switch ON (II), and check that the SRS indicator comes on for about 6 seconds and then goes off.

   Does the SRS indicator stay on, and is DTC 52-Bx, 52-Cx, or 52-Dx indicated?

   YES—Replace the SRS unit (see page 23-213). ■

   NO—Intermittent failure, system is OK at this time. Go to Troubleshooting Intermittent Failures (see page 23-32). If another DTC is indicated, go to the DTC troubleshooting index.

DTC 52-Ex (52-E0 to 52-E9, 52-EA to 52-EF), 52-Fx (52-F0 to 52-F9, 52-FA to 52-FF), 53-1x (53-10 to 53-19, 53-1A to 53-1F):
Internal Failure of the SRS Unit

NOTE: Before troubleshooting any of these DTCs, check the battery/system voltage. If the voltage is low, repair the charging system or replace the battery before troubleshooting the SRS. If the battery/system voltage is now OK, ask the customer if the battery ever went dead. A dead battery may trigger one of these DTCs.

1. Erase the DTC memory (see page 23-31).
2. Turn the ignition switch ON (II), and check that the SRS indicator comes on for about 6 seconds and then goes off.

   Does the SRS indicator stay on, and is DTC 52-Ex, 52-Fx, or 53-1x indicated?

   YES—Replace the SRS unit (see page 23-213). ■

   NO—Intermittent failure, system is OK at this time. Go to Troubleshooting Intermittent Failures (see page 23-32). If another DTC is indicated, go to the DTC troubleshooting index.

Protected by AR

DTC Troubleshooting (cont'd)

DTC 53-2x (53-20 to 53-29, 53-2A to 53-2F), 53-3x (53-30 to 53-39, 53-3A to 53-3F), 53-4x (53-40 to 53-49, 53-4A to 53-4F): Internal Failure of the SRS Unit

NOTE: Before troubleshooting any of these DTCs, check the battery/system voltage. If the voltage is low, repair the charging system or replace the battery before troubleshooting the SRS. If the battery/system voltage is now OK, ask the customer if the battery ever went dead. A dead battery may trigger one of these DTCs.

1. Erase the DTC memory (see page 23-31).
2. Turn the ignition switch ON (II), and check that the SRS indicator comes on for about 6 seconds and then goes off.

   Does the SRS indicator stay on, and is DTC 53-2x, 53-3x, or 53-4x indicated?

   YES—Replace the SRS unit (see page 23-213).■

   NO—Intermittent failure, system is OK at this time. Go to Troubleshooting Intermittent Failures (see page 23-32). If another DTC is indicated, go to the DTC troubleshooting index.

DTC 54-1x (54-10 to 54-19, 54-1A to 54-1F), 54-2x (54-20 to 54-29, 54-2A to 54-2F), 54-3x (54-30 to 54-39, 54-3A to 54-3F): Internal Failure of the SRS Unit

NOTE: Before troubleshooting any of these DTCs, check the battery/system voltage. If the voltage is low, repair the charging system or replace the battery before troubleshooting the SRS. If the battery/system voltage is now OK, ask the customer if the battery ever went dead. A dead battery may trigger one of these DTCs.

1. Erase the DTC memory (see page 23-31).
2. Turn the ignition switch ON (II), and check that the SRS indicator comes on for about 6 seconds and then goes off.

   Does the SRS indicator stay on, and is DTC 54-1x, 54-2x, or 54-3x indicated?

   YES—Replace the SRS unit (see page 23-213).■

   NO—Intermittent failure, system is OK at this time. Go to Troubleshooting Intermittent Failures (see page 23-32). If another DTC is indicated, go to the DTC troubleshooting index.

BACK

Protected by AR

DTC 54-4x (54-40 to 54-49, 54-4A to 54-4F), 54-5x (54-50 to 54-59, 54-5A to 54-5F), 54-6x (54-60 to 54-69, 54-6A to 54-6F):
Internal Failure of the SRS Unit

NOTE: Before troubleshooting any of these DTCs, check the battery/system voltage. If the voltage is low, repair the charging system or replace the battery before troubleshooting the SRS. If the battery/system voltage is now OK, ask the customer if the battery ever went dead. A dead battery may trigger one of these DTCs.

1. Erase the DTC memory (see page 23-31).
2. Turn the ignition switch ON (II), and check that the SRS indicator comes on for about 6 seconds and then goes off.

   Does the SRS indicator stay on, and is DTC 54-4x, 54-5x, or 54-6x indicated?

   YES—Replace the SRS unit (see page 23-213).■

   NO—Intermittent failure, system is OK at this time. Go to Troubleshooting Intermittent Failures (see page 23-32). If another DTC is indicated, go to the DTC troubleshooting index.

DTC 54-7x (54-70 to 54-79, 54-7A to 54-7F), 55-1x (55-10 to 55-19, 55-1A to 55-1F), 55-2x (55-20 to 55-29, 55-2A to 55-2F):
Internal Failure of the SRS Unit

NOTE: Before troubleshooting any of these DTCs, check the battery/system voltage. If the voltage is low, repair the charging system or replace the battery before troubleshooting the SRS. If the battery/system voltage is now OK, ask the customer if the battery ever went dead. A dead battery may trigger one of these DTCs.

1. Erase the DTC memory (see page 23-31).
2. Turn the ignition switch ON (II), and check that the SRS indicator comes on for about 6 seconds and then goes off.

   Does the SRS indicator stay on, and is DTC 54-7x, 55-1x, or 55-2x indicated?

   YES—Replace the SRS unit (see page 23-213).■

   NO—Intermittent failure, system is OK at this time. Go to Troubleshooting Intermittent Failures (see page 23-32). If another DTC is indicated, go to the DTC troubleshooting index.

Protected by AR

DTC Troubleshooting (cont'd)

DTC 55-3x (55-30 to 55-39, 55-3A to 55-3F), 55-4x (55-40 to 55-49, 55-4A to 55-4F), 55-7x (55-70 to 55-79, 55-7A to 55-7F):
Internal Failure of the SRS Unit

NOTE: Before troubleshooting any of these DTCs, check the battery/system voltage. If the voltage is low, repair the charging system or replace the battery before troubleshooting the SRS. If the battery/system voltage is now OK, ask the customer if the battery ever went dead. A dead battery may trigger one of these DTCs.

1. Erase the DTC memory (see page 23-31).
2. Turn the ignition switch ON (II), and check that the SRS indicator comes on for about 6 seconds and then goes off.

   Does the SRS indicator stay on, and is DTC 55-3x, 55-4x, or 55-7x indicated?

   YES—Replace the SRS unit (see page 23-213).■

   NO—Intermittent failure, system is OK at this time. Go to Troubleshooting Intermittent Failures (see page 23-32). If another DTC is indicated, go to the DTC troubleshooting index.

DTC D1-11, D2-11, D3-11, D4-11, D7-11, E2-11, E4-11, F1-11, F2-11, F3-11, F4-11:
Airbags, Side Airbags, and/or Seat Belt Tensioners Deployed

The SRS unit must be replaced after any airbags and/or tensioners have deployed (see page 23-194).■

BACK

Protected by AR

DTC 61-1x (61-10 to 61-19, 61-1A to 61-1F):
Open in Driver's Seat Belt Buckle Switch (with power seat)

1. Erase the DTC memory (see page 23-31).

2. Turn the ignition switch ON (II), then buckle and unbuckle the driver's seat belt several times.

3. Read the DTC (see page 23-30).

   Is DTC 61-1x indicated?

   YES—Go to step 4.

   NO—Intermittent failure, system is OK at this time. Go to Troubleshooting Intermittent Failures (see page 23-32).

4. Turn the ignition switch OFF.

5. Disconnect the driver's seat wire harness 3P connector from the driver's seat belt buckle switch 3P connector (A).

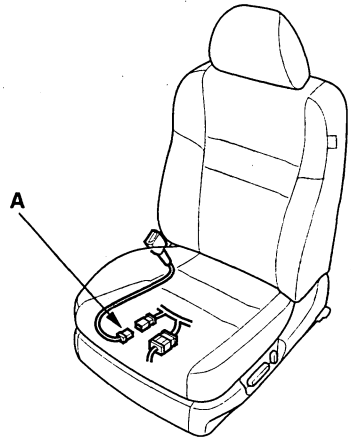

6. Buckle the driver's seat belt.

   Check resistance between the No. 1 and No. 3 terminals of the driver's seat belt buckle switch 3P connector. There should be 0—1 Ω.

   Check resistance between the No. 2 and No. 3 terminals of the same connector. There should be an open circuit or at least 1 MΩ.

DRIVER'S SEAT BELT BUCKLE SWITCH 3P CONNECTOR

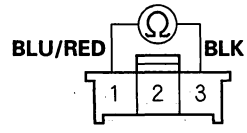

Wire side of female terminals

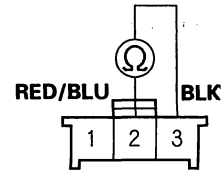

Wire side of female terminals

Are the resistance as specified?

YES—Go to step 7.

NO—Replace the driver's seat belt buckle assembly (see page 23-5), then clear the DTC. ■

(cont'd)

Protected by AR

DTC Troubleshooting (cont'd)

7. Unbuckle the driver's seat belt.

   Check resistance between the No. 2 and No. 3 terminals of the driver's seat belt buckle switch 3P connector. There should be 0—1 Ω.

   Check resistance between the No. 1 and No. 3 terminals of the same connector. There should be an open circuit or at least 1 MΩ.

DRIVER'S SEAT BELT BUCKLE SWITCH 3P CONNECTOR

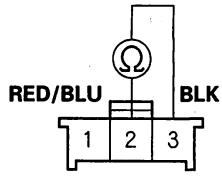

Wire side of female terminals

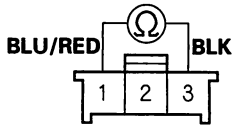

Wire side of female terminals

Are the resistance as specified?

YES—Go to step 8.

NO—Replace the driver's seat belt buckle assembly, then clear the DTC. ■

8. Check resistance between the No. 3 terminal of the driver's seat wire harness 3P connector and body ground. There should be 0—1 Ω.

DRIVER'S SEAT WIRE HARNESS 3P CONNECTOR

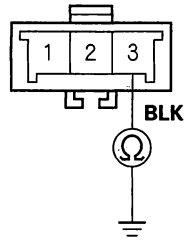

Terminal side of male terminals

Is the resistance as specified?

YES—Go to step 9.

NO—Open in the driver's seat wire harness or floor wire harness, or poor ground connection at G601 (see page 22-36). If G601 is OK, replace the faulty harness. ■

9. Disconnect the negative cable from the battery.

10. Disconnect both seat belt tensioner 4P connectors from the floor wire harness (see step 6 on page 23-29).

11. Disconnect SRS unit connector B (28P) from the SRS unit (see step 7 on page 23-29).

BACK

Protected by AR

12. Check resistance between the No. 17 terminal of SRS unit connector B (28P) and the No. 1 terminal of the driver's seat wire harness 3P connector. There should be 0—1 Ω.

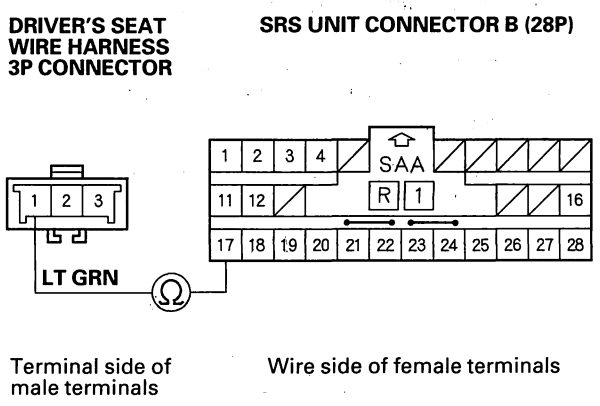

Is the resistance as specified?

YES—Go to step 13.

NO—Open in the driver's seat wire harness or floor wire harness; replace the faulty harness. ■

13. Check resistance between the No. 11 terminal of SRS unit connector B (28P) and the No. 2 terminal of the driver's seat wire harness 3P connector. There should be 0—1 Ω.

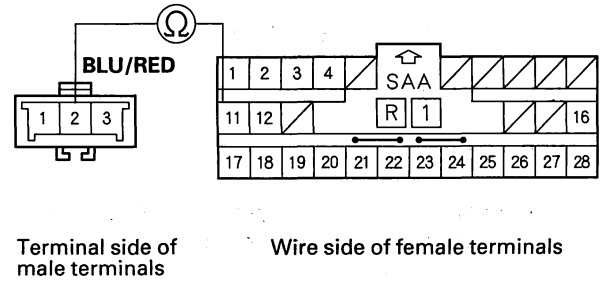

Is the resistance as specified?

YES—Replace the SRS unit (see page 23-213). ■

NO—Open in the driver's seat wire harness or floor wire harness, or poor connection at the floor wire harness. Check the connections at the floor wire harness, connector F (14P), and connector H (14P) at the under-dash fuse/relay box. If the connections are OK, replace the faulty harness or part. ■

BACK

Protected by AR

DTC Troubleshooting (cont'd)

DTC 61-1x (61-10 to 61-19, 61-1A to 61-1F): Open in Driver's Seat Belt Buckle Switch (without power seat)

1. Erase the DTC memory (see page 23-31).
2. Turn the ignition switch ON (II), then buckle and unbuckle the driver's seat belt several times.
3. Read the DTC (see page 23-30).

   Is DTC 61-1x indicated?

   YES—Go to step 4.

   NO—Intermittent failure, system is OK at this time. Go to Troubleshooting Intermittent Failures (see page 23-32).
4. Turn the ignition switch OFF.
5. Disconnect the floor wire harness 3P connector from the driver's seat belt buckle switch 3P connector (A).

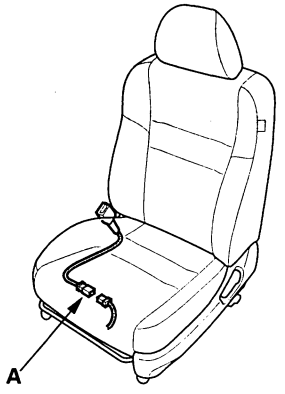

6. Buckle the driver's seat belt.

   Check resistance between the No. 1 and No. 3 terminals of the driver's seat belt buckle switch 3P connector. There should be 0—1 Ω.

   Check resistance between the No. 1 and No. 2 terminals of the same connector. There should be an open circuit or at least 1 MΩ.

DRIVER'S SEAT BELT BUCKLE SWITCH 3P CONNECTOR

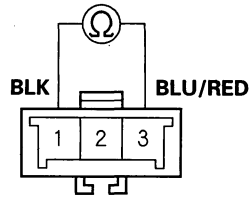

Terminal side of male terminals

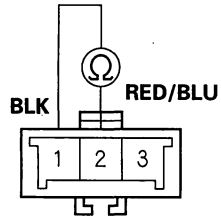

Terminal side of male terminals

Are the resistance as specified?

YES—Go to step 7.

NO—Replace the driver's seat belt buckle assembly (see page 23-10), then clear the DTC.■

BACK

Protected by AR

7. Unbuckle the driver's seat belt.

   Check resistance between the No. 1 and No. 2 terminals of the driver's seat belt buckle switch 3P connector. There should be 0—1 Ω.

   Check resistance between the No. 1 and No. 3 terminals of the same connector. There should be an open circuit or at least 1 MΩ.

DRIVER'S SEAT BELT BUCKLE SWITCH 3P CONNECTOR

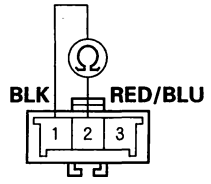

Terminal side of male terminals

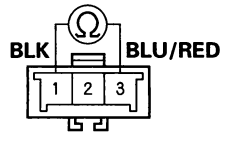

Terminal side of male terminals

Are the resistance as specified?

YES—Go to step 8.

NO—Replace the driver's seat belt buckle assembly (see page 23-10), then clear the DTC. ■

8. Check resistance between the No. 1 terminal of the floor wire harness 3P connector and body ground. There should be 0—1 Ω.

FLOOR WIRE HARNESS 3P CONNECTOR

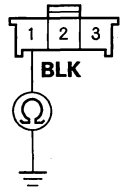

Wire side of female terminals

Is the resistance as specified?

YES—Go to step 9.

NO—Open in the floor wire harness or poor ground connection at G601 (see page 22-36). If G601 is OK, replace the floor wire harness. ■

9. Disconnect the negative cable from the battery.

10. Disconnect both floor wire harness 4P connector from the seat belt tensioner (see step 6 on page 23-6).

11. Disconnect SRS unit connector B (28P) from the SRS unit (see step 7 on page 23-29).

(cont'd)

Protected by AR

DTC Troubleshooting (cont'd)

12. Check resistance between the No. 17 terminal of SRS unit connector B (28P) and the No. 3 terminal of the floor wire harness 3P connector. There should be 0—1 Ω.

FLOOR WIRE HARNESS 3P CONNECTOR **SRS UNIT CONNECTOR B (28P)**

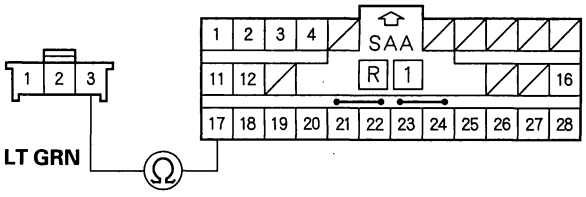

Wire side of female terminals

Is the resistance as specified?

YES—Go to step 13.

NO—Open in the floor wire harness; replace the floor wire harness.■

13. Check resistance between the No. 11 terminal of SRS unit connector B (28P) and the No. 2 terminal of the floor wire harness 3P connector. There should be 0—1 Ω.

FLOOR WIRE HARNESS 3P CONNECTOR **SRS UNIT CONNECTOR B (28P)**

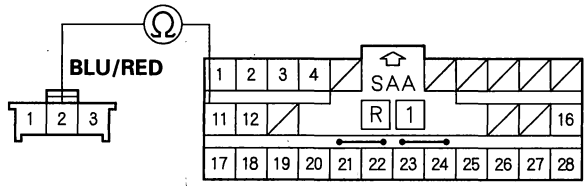

Wire side of female terminals

Is the resistance as specified?

YES—Replace the SRS unit (see page 23-213).■

NO—Open in the floor wire harness, or poor connection at the floor wire harness. Check the connections at the floor wire harness, connector F (14P), and connector H (14P) at the under-dash fuse/relay box. If the connections are OK, replace the faulty harness or part.■

BACK

Protected by AR

DTC 61-2x (61-20 to 61-29, 61-2A to 61-2F): Short in Driver's Seat Belt Buckle Switch (with power seat)

1. Erase the DTC memory (see page 23-31).
2. Turn the ignition switch ON (II), then buckle and unbuckle the driver's seat belt several times.
3. Read the DTC (see page 23-30).

   Is DTC 61-2x indicated?

   YES—Go to step 4.

   NO—Intermittent failure, system is OK at this time. Go to Troubleshooting Intermittent Failures (see page 23-32).
4. Turn the ignition switch OFF.
5. Disconnect the driver's seat harness 3P connector from the driver's seat belt buckle switch 3P connector (A).

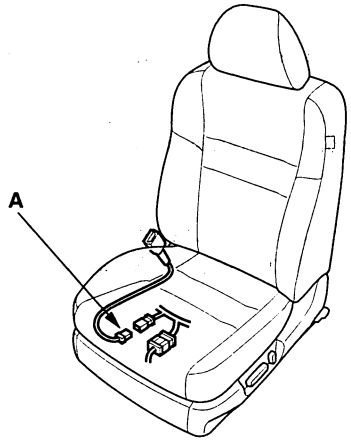

6. Buckle the driver's seat belt.

   Check resistance between the No. 1 and No. 3 terminals of the driver's seat belt buckle switch 3P connector. There should be 0—1 Ω.

   Check resistance between the No. 2 and No. 3 terminals of the same connector. There should be an open circuit or at least 1 MΩ.

DRIVER'S SEAT BELT BUCKLE SWITCH 3P CONNECTOR

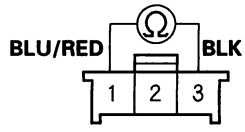

Wire side of female terminals

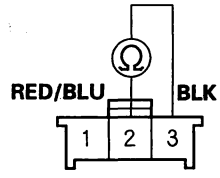

Wire side of female terminals

Are the resistance as specified?

YES—Go to step 7.

NO—Replace the driver's seat belt buckle assembly, then clear the DTC.■

(cont'd)

Protected by AR

DTC Troubleshooting (cont'd)

7. Unbuckle the driver's seat belt.

   Check resistance between the No. 2 and No. 3 terminals of the driver's seat belt buckle switch 3P connector. There should be 0—1 Ω.

   Check resistance between the No. 1 and No. 3 terminals of the same connector. There should be an open circuit or at least 1 MΩ.

DRIVER'S SEAT BELT BUCKLE SWITCH 3P CONNECTOR

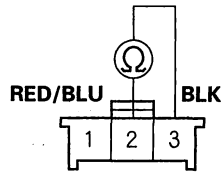

Wire side of female terminals

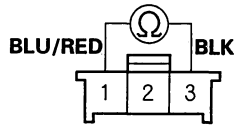

Wire side of female terminals

Are the resistance as specified?

YES—Go to step 8.

NO—Replace the driver's seat belt buckle assembly, then clear the DTC.■

8. Check resistance between body ground and driver's seat belt buckle switch 3P connector terminals No. 1 and No. 2. There should be an open circuit or at least 1 MΩ.

DRIVER'S SEAT BELT BUCKLE SWITCH 3P CONNECTOR

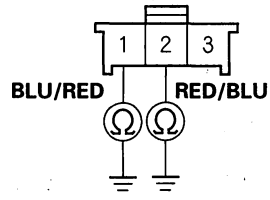

Wire side of female terminals

Is the resistance as specified?

YES—Go to step 9.

NO—Replace the driver's seat belt buckle assembly.■

9. Disconnect the negative cable from the battery.

10. Disconnect both seat belt tensioner 4P connectors from the floor wire harness (see step 6 on page 23-29).

11. Disconnect SRS unit connector B (28P) from the SRS unit (see step 7 on page 23-29).

BACK

Protected by AR

12. Check resistance between the No. 2 terminal of the driver's seat wire harness 3P connector and body ground. There should be an open circuit or at least 1 MΩ.

DRIVER'S SEAT WIRE HARNESS 3P CONNECTOR

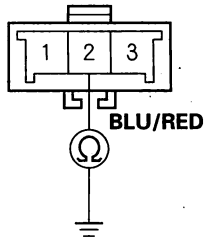

Terminal side of male terminals

Is the resistance as specified?

YES—Check the connections at the floor wire harness connector F (14P), and connector H (14P) at the under-dash fuse/relay box. If the connections are OK, go to step 13.

NO—Short to ground in the driver's seat wire harness, floor wire harness, or multiplex control unit. Replace the faulty harness or part. ■

13. Check resistance between the No. 1 terminal of the driver's seat wire harness 3P connector and body ground. There should be an open circuit or at least 1 MΩ.

DRIVER'S SEAT WIRE HARNESS 3P CONNECTOR

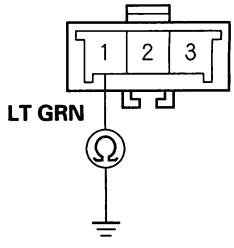

Terminal side of male terminals

Is the resistance as specified?

YES—Replace the SRS unit (see page 23-213). ■

NO—Short to ground in the driver's seat wire harness or floor wire harness; replace the faulty harness. ■

BACK

Protected by AR

DTC Troubleshooting (cont'd)

DTC 61-2x (61-20 to 61-29, 61-2A to 61-2F): Short in Driver's Seat Belt Buckle Switch (without power seat)

1. Erase the DTC memory (see page 23-31).
2. Turn the ignition switch ON (II), then buckle and unbuckle the driver's seat belt several times.
3. Read the DTC (see page 23-30).

   Is DTC 61-2x indicated?

   YES—Go to step 4.

   NO—Intermittent failure, system is OK at this time. Go to Troubleshooting Intermittent Failures (see page 23-32).
4. Turn the ignition switch OFF.
5. Disconnect the floor wire harness 3P connector from the driver's seat belt buckle switch 3P connector (A).

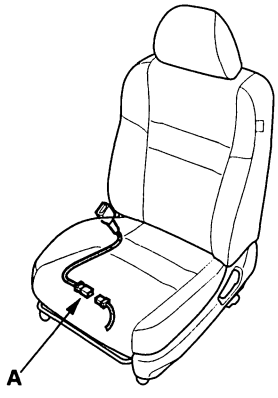

6. Buckle the driver's seat belt.

   Check resistance between the No. 1 and No. 3 terminals of the driver's seat belt buckle switch 3P connector. There should be 0—1 Ω.

   Check resistance between the No. 2 and No. 3 terminals of the same connector. There should be an open circuit or at least 1 MΩ.

DRIVER'S SEAT BELT BUCKLE SWITCH 3P CONNECTOR

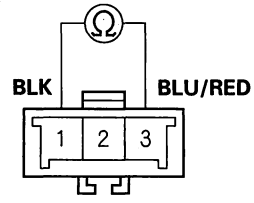

Terminal side of male terminals

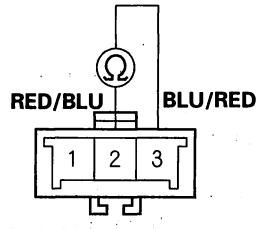

Terminal side of male terminals

Are the resistance as specified?

YES—Go to step 7.

NO—Replace the driver's seat belt buckle assembly, then clear the DTC. ■

BACK

Protected by AR

7. Unbuckle the driver's seat belt.

   Check resistance between the No. 1 and No. 2 terminals of the driver's seat belt buckle switch 3P connector. There should be 0—1 Ω.

   Check resistance between the No. 1 and No. 3 terminals of the same connector. There should be an open circuit or at least 1 MΩ.

DRIVER'S SEAT BELT BUCKLE SWITCH 3P CONNECTOR

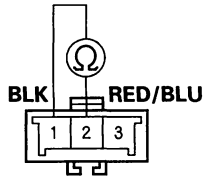

Terminal side of male terminals

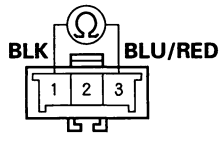

Terminal side of male terminals

Are the resistance as specified?

YES—Go to step 8.

NO—Replace the driver's seat belt buckle assembly, then clear the DTC.■

8. Check resistance between body ground and driver's seat belt buckle switch 3P connector terminals No. 2 and No. 3. There should an open circuit or at least 1 MΩ.

DRIVER'S SEAT BELT BUCKLE SWITCH 3P CONNECTOR

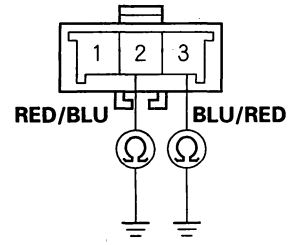

Terminal side of male terminals

Is the resistance as specified?

YES—Go to step 9.

NO—Replace the driver's seat belt buckle assembly.■

9. Disconnect the negative cable from the battery.

10. Disconnect both seat belt tensioner 4P connectors from the floor wire harness (see step 6 on page 23-29).

11. Disconnect SRS unit connector B (28P) from the SRS unit (see step 7 on page 23-29).

(cont'd)

Protected by AR

DTC Troubleshooting (cont'd)

12. Check resistance between the No. 2 terminal of the floor wire harness 3P connector and body ground. There should be an open circuit or at least 1 MΩ.

FLOOR WIRE HARNESS 3P CONNECTOR

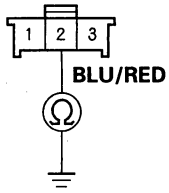

Wire side of female terminals

Is the resistance as specified?

YES—Check the connections at the floor wire harness, connector F (14P), and connector H (14P) at the under-dash fuse/relay box. If the connections are OK, go to step 13.

NO—Short to ground in the floor wire harness or the multiplex control unit. Replace the faulty harness or part. ■

13. Check resistance between the No. 3 terminal of the floor wire harness 3P connector and body ground. There should be an open circuit or at least 1 MΩ.

FLOOR WIRE HARNESS 3P CONNECTOR

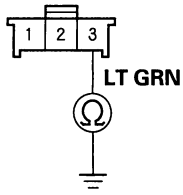

Wire side of female terminals

Is the resistance as specified?

YES—Replace the SRS unit (see page 23-213). ■

NO—Short to ground in the floor wire harness; replace the floor wire harness. ■

BACK

Protected by AR

DTC 62-1x (62-10 to 62-19, 62-1A to 62-1F): Open in Front Passenger's Seat Belt Buckle Switch (with power seat)

1. Erase the DTC memory (see page 23-31).
2. Turn the ignition switch ON (II), then buckle and unbuckle the front passenger's seat belt several times.
3. Read the DTC (see page 23-30).

   Is DTC 62-1x indicated?

   YES—Go to step 4.

   NO—Intermittent failure, system is OK at this time. Go to Troubleshooting Intermittent Failures (see page 23-32).
4. Turn the ignition switch OFF.
5. Disconnect the front passenger's seat belt buckle switch 3P connector (A) from the passenger's seat wire harness.

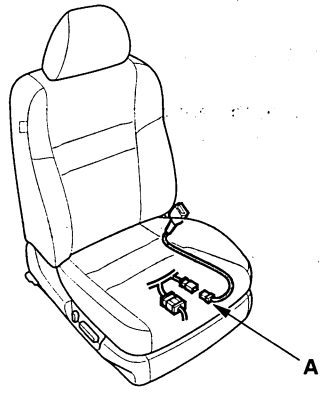

6. Buckle the front passenger's seat belt.

   Check resistance between the No. 1 and No. 3 terminals of the front passenger's seat belt buckle switch 3P connector. There should be 0—1 Ω.

   Check resistance between the No. 2 and No. 3 terminals of the same connector. There should be an open circuit or at least 1 MΩ.

FRONT PASSENGER'S SEAT BELT BUCKLE SWITCH 3P CONNECTOR

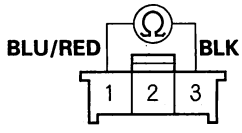

Wire side of female terminals

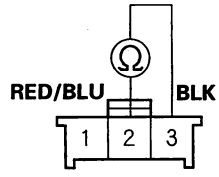

Wire side of female terminals

Are the resistance as specified?

YES—Go to step 7.

NO—Replace the front passenger's seat belt buckle assembly, then clear the DTC. ■

(cont'd)

Protected by AR

DTC Troubleshooting (cont'd)

7. Unbuckle the front passenger's seat belt.

   Check resistance between the No. 2 and No. 3 terminals of the front passenger's seat belt buckle switch 3P connector. There should be 0—1 Ω.

   Check resistance between the No. 1 and No. 3 terminals of the same connector. There should be an open circuit or at least 1 MΩ.

FRONT PASSENGER'S SEAT BELT BUCKLE SWITCH 3P CONNECTOR

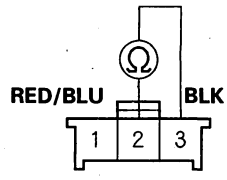

Wire side of female terminals

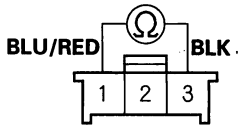

Wire side of female terminals

Are the resistance as specified?

YES—Go to step 8.

NO—Replace the front passenger's seat belt buckle assembly, then clear the DTC. ■

8. Check resistance between the No. 3 terminal of the passenger's seat wire harness 3P connector and body ground. There should be 0—1 Ω.

PASSENGER'S SEAT WIRE HARNESS 3P CONNECTOR

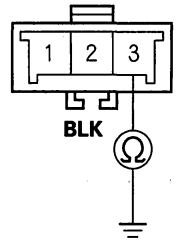

Terminal side of male terminals

Is the resistance as specified?

YES—Go to step 9.

NO—Open in the passenger's seat wire harness or floor wire harness, or poor ground connection at G602 (see page 22-38). If G602 is OK, replace the faulty harness. ■

9. Disconnect the negative cable from the battery.
10. Disconnect both seat belt tensioner 4P connectors from the floor wire harness (see step 6 on page 23-29).
11. Disconnect SRS unit connector B (28P) from the SRS unit (see step 7 on page 23-29).

BACK

Protected by AR

12. Check resistance between the No. 18 terminal of SRS unit connector B (28P) and the No. 1 terminal of the passenger's seat wire harness 3P connector. There should be 0—1 Ω.

PASSENGER'S SEAT WIRE HARNESS 3P CONNECTOR **SRS UNIT CONNECTOR B (28P)**

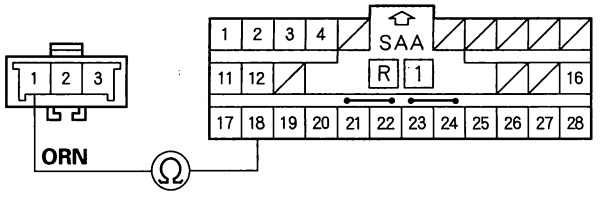

Terminal side of male terminals

Wire side of female terminals

Is the resistance as specified?

YES—Go to step 13.

NO—Open in the passenger's seat wire harness or floor wire harness; replace the faulty harness. ■

13. Check resistance between the No. 12 terminal of SRS unit connector B (28P) and the No. 2 terminal of the passenger's seat wire harness 3P connector. There should be 0—1 Ω.

PASSENGER'S SEAT WIRE HARNESS 3P CONNECTOR **SRS UNIT CONNECTOR B (28P)**

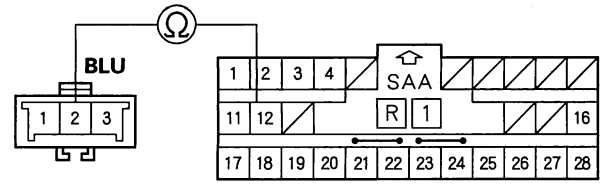

Terminal side of male terminals

Wire side of female terminals

Is the resistance as specified?

YES—Replace the SRS unit (see page 23-213). ■

NO—Open in the passenger's seat wire harness or floor wire harness; replace the faulty harness. ■

Protected by AR

DTC Troubleshooting (cont'd)

DTC 62-1x (62-10 to 62-19, 62-1A to 62-1F): Open in Front Passenger's Seat Belt Buckle Switch (without power seat)

1. Erase the DTC memory (see page 23-31).
2. Turn the ignition switch ON (II), then buckle and unbuckle the front passenger's seat belt several times.
3. Read the DTC (see page 23-30).

   Is DTC 62-1x indicated?

   YES—Go to step 4.

   NO—Intermittent failure, system is OK at this time. Go to Troubleshooting Intermittent Failures (see page 23-32).
4. Turn the ignition switch OFF.
5. Disconnect the front passenger's seat belt buckle switch 3P connector (A) from the floor wire harness.

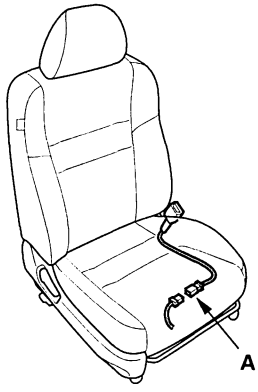

6. Buckle the front passenger's seat belt.

   Check resistance between the No. 1 and No. 3 terminals of the front passenger's seat belt buckle switch 3P connector. There should be 0—1 Ω.

   Check resistance between the No. 1 and No. 2 terminals of the same connector. There should be an open circuit or at least 1 MΩ.

FRONT PASSENGER'S SEAT BELT BUCKLE SWITCH 3P CONNECTOR

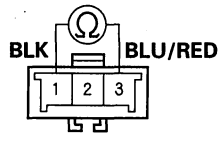

Terminal side of male terminals

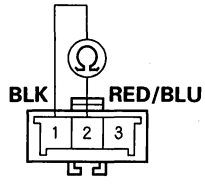

Terminal side of male terminals

Are the resistance as specified?

YES—Go to step 7.

NO—Replace the front passenger's seat belt buckle assembly, then clear the DTC.■

BACK

Protected by AR

7. Unbuckle the front passenger's seat belt.

   Check resistance between the No. 1 and No. 2 terminals of the front passenger's seat belt buckle switch 3P connector. There should be 0—1 Ω.

   Check resistance between the No. 1 and No. 3 terminals of the same connector. There should be an open circuit or at least 1 MΩ.

FRONT PASSENGER'S SEAT BELT BUCKLE SWITCH 3P CONNECTOR

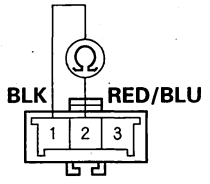

Terminal side of male terminals

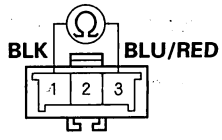

Terminal side of male terminals

Are the resistance as specified?

YES—Go to step 8.

NO—Replace the front passenger's seat belt buckle assembly, then clear the DTC. ■

8. Check resistance between the No. 1 terminal of the floor wire harness 3P connector and body ground. There should be 0—1 Ω.

FLOOR WIRE HARNESS 3P CONNECTOR

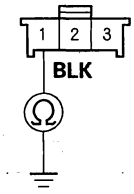

Wire side of female terminals

Is the resistance as specified?

YES—Go to step 9.

NO—Open in the floor wire harness or poor ground connection at G602 (see page 22-38). If G602 is OK, replace the floor wire harness. ■

9. Disconnect the negative cable from the battery.

10. Disconnect both seat belt tensioner 4P connectors from the floor wire harness (see step 6 on page 23-29).

11. Disconnect SRS unit connector B (28P) from the SRS unit (see step 7 on page 23-29).

(cont'd)

Protected by AR

DTC Troubleshooting (cont'd)

12. Check resistance between the No. 18 terminal of SRS unit connector B (28P) and the No. 3 terminal of the floor wire harness 3P connector. There should be 0—1 Ω.

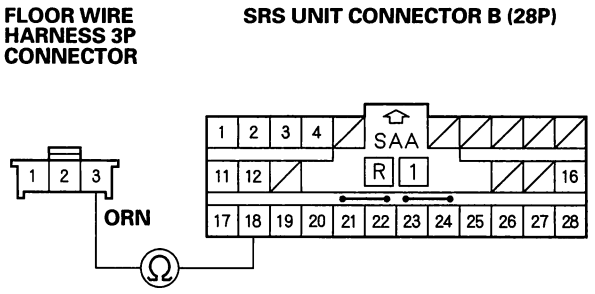

Wire side of female terminals

Is the resistance as specified?

YES—Go to step 13.

NO—Open in the floor wire harness; replace the floor wire harness. ■

13. Check resistance between the No. 12 terminal of SRS unit connector B (28P) and the No. 2 terminal of the floor wire harness 3P connector. There should be 0—1 Ω.

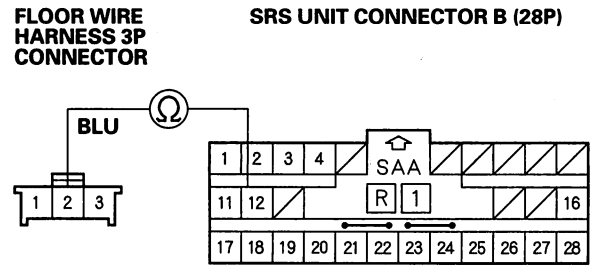

Wire side of female terminals

Is the resistance as specified?

YES—Replace the SRS unit (see page 23-213). ■

NO—Open in the floor wire harness; replace the floor wire harness. ■

BACK

Protected by AR

DTC 62-2x (62-20 to 62-29, 62-2A to 62-2F): Short in Front Passenger's Seat Belt Buckle Switch (with power seat)

1. Erase the DTC memory (see page 23-31).
2. Turn the ignition switch ON (II), then buckle and unbuckle the front passenger's seat belt several times.
3. Read the DTC (see page 23-30).

   Is DTC 62-2x indicated?

   YES—Go to step 4.

   NO—Intermittent failure, system is OK at this time. Go to Troubleshooting Intermittent Failures (see page 23-32).
4. Turn the ignition switch OFF.
5. Disconnect the front passenger's seat belt buckle switch 3P connector (A) from the passenger's seat wire harness.

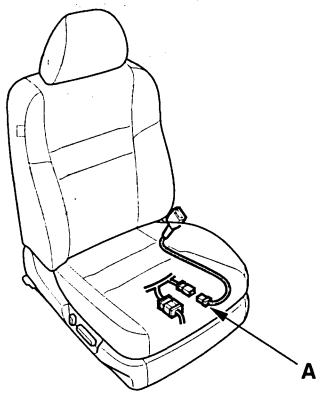

6. Buckle the front passenger's seat belt.

   Check resistance between the No. 1 and No. 3 terminals of the front passenger's seat belt buckle switch 3P connector. There should be 0—1 Ω.

   Check resistance between the No. 2 and No. 3 terminals of the same connector. There should be an open circuit or at least 1 MΩ.

FRONT PASSENGER'S SEAT BELT BUCKLE SWITCH 3P CONNECTOR

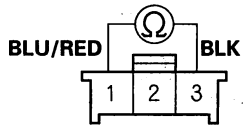

Wire side of female terminals

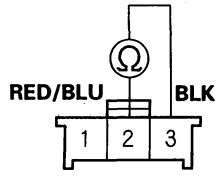

Wire side of female terminals

Are the resistance as specified?

YES—Go to step 7.

NO—Replace the front passenger's seat belt buckle assembly, then clear the DTC. ■

(cont'd)

Protected by AR

DTC Troubleshooting (cont'd)

7. Unbuckle the front passenger's seat belt.

   Check resistance between the No. 2 and No. 3 terminals of the front passenger's seat belt buckle switch 3P connector. There should be 0—1 Ω.

   Check resistance between the No. 1 and No. 3 terminals of the same connector. There should be an open circuit or at least 1 MΩ.

FRONT PASSENGER'S SEAT BELT BUCKLE SWITCH 3P CONNECTOR

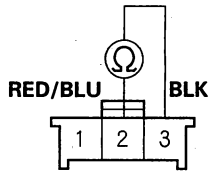

Wire side of female terminals

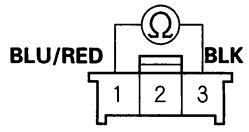

Wire side of female terminals

Are the resistance as specified?

YES—Go to step 8.

NO—Replace the front passenger's seat belt buckle assembly, then clear the DTC. ■

8. Check continuity between body ground and front passenger's seat belt buckle switch 3P connector terminals No. 1 and No. 2.

FRONT PASSSENGER'S SEAT BELT BUCKLE SWITCH 3P CONNECTOR

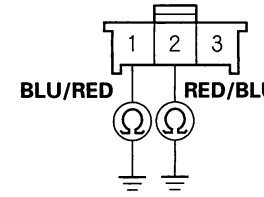

Wire side of female terminals

Is there continuity?

YES—Replace the front passenger's seat belt buckle assembly. ■

NO—Go to step 9.

9. Disconnect the negative cable from the battery.
10. Disconnect both seat belt tensioner 4P connectors from the floor wire harness (see step 6 on page 23-29).
11. Disconnect SRS unit connector B (28P) from the SRS unit (see step 7 on page 23-29).

BACK

Protected by AR

12. Check resistance between the No. 2 terminal of the passenger's seat wire harness 3P connector and body ground. There should be an open circuit or at least 1 MΩ.

PASSENGER'S SEAT WIRE HARNESS 3P CONNECTOR

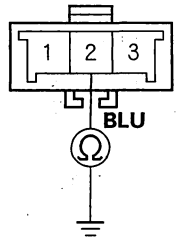

Terminal side of male terminals

Is the resistance as specified?

YES—Go to step 13.

NO—Short to ground in the passenger's seat wire harness or floor wire harness; replace the faulty harness. ■

13. Check resistance between the No. 1 terminal of the passenger's seat wire harness 3P connector and body ground. There should be an open circuit or at least 1 MΩ.

PASSENGER'S SEAT WIRE HARNESS 3P CONNECTOR

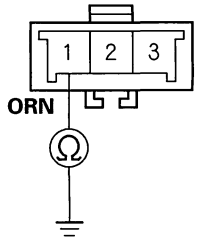

Terminal side of male terminals

Is the resistance as specified?

YES—Replace the SRS unit (see page 23-213). ■

NO—Short to ground in the passenger's seat wire harness or floor wire harness; replace the faulty harness. ■

Protected by AR

DTC Troubleshooting (cont'd)

DTC 62-2x (62-20 to 62-29, 62-2A to 62-2F): Short in Front Passenger's Seat Belt Buckle Switch (without power seat)

1. Erase the DTC memory (see page 23-31).
2. Turn the ignition switch ON (II), then buckle and unbuckle the front passenger's seat belt several times.
3. Read the DTC (see page 23-30).

   Is DTC 62-2x indicated?

   YES—Go to step 4.

   NO—Intermittent failure, system is OK at this time. Go to Troubleshooting Intermittent Failures (see page 23-32).
4. Turn the ignition switch OFF.
5. Disconnect the front passenger's seat belt buckle switch 3P connector (A) from the floor wire harness.

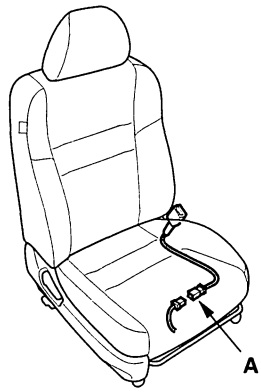

6. Buckle the front passenger's seat belt.

   Check resistance between the No. 1 and No. 3 terminals of the front passenger's seat belt buckle switch 3P connector. There should be 0—1 Ω.

   Check resistance between the No. 1 and No. 2 terminals of the same connector. There should be an open circuit or at least 1 MΩ.

FRONT PASSENGER'S SEAT BELT BUCKLE SWITCH 3P CONNECTOR

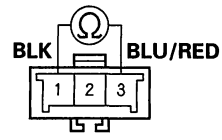

Terminal side of male terminals

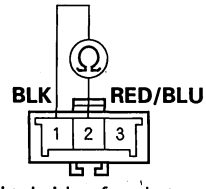

Terminal side of male terminals

Are the resistance as specified?

YES—Go to step 7.

NO—Replace the front passenger's seat belt buckle assembly, then clear the DTC.■

BACK

Protected by AR

7. Unbuckle the front passenger's seat belt.

   Check resistance between the No. 1 and No. 2 terminals of the front passenger's seat belt buckle switch 3P connector. There should be 0—1 Ω.

   Check resistance between the No. 1 and No. 3 terminals of the same connector. There should be an open circuit or at least 1 MΩ.

FRONT PASSENGER'S SEAT BELT BUCKLE SWITCH 3P CONNECTOR

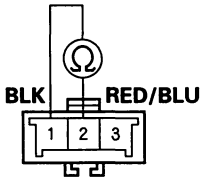

Terminal side of male terminals

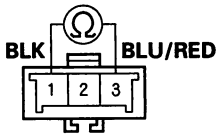

Terminal side of male terminals

Are the resistance as specified?

YES—Go to step 8.

NO—Replace the front passenger's seat belt buckle assembly, then clear the DTC. ■

8. Check continuity between body ground and front passenger's seat belt buckle switch 3P connector terminals No. 2 and No. 3.

FRONT PASSENGER'S SEAT BELT BUCKLE SWITCH 3P CONNECTOR

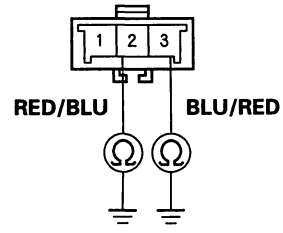

Terminal side of male terminals

Is there continuity?

YES—Replace the front passenger's seat belt buckle assembly. ■

NO—Go to step 9.

9. Disconnect the negative cable from the battery.
10. Disconnect both seat belt tensioner 4P connectors from the floor wire harness (see step 6 on page 23-29).
11. Disconnect SRS unit connector B (28P) from the SRS unit (see step 7 on page 23-29).

(cont'd)

Protected by AR

DTC Troubleshooting (cont'd)

12. Check resistance between the No. 2 terminal of the floor wire harness 3P connector and body ground. There should be an open circuit or at least 1 MΩ.

FLOOR WIRE HARNESS 3P CONNECTOR

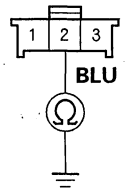

Wire side of female terminals

Is the resistance as specified?

YES—Go to step 13.

NO—Short to ground in the floor wire harness; replace the floor wire harness. ■

13. Check resistance between the No. 3 terminal of the floor wire harness 3P connector and body ground. There should be an open circuit or at least 1 MΩ.

FLOOR WIRE HARNESS 3P CONNECTOR

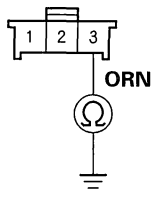

Wire side of female terminals

Is the resistance as specified?

YES—Replace the SRS unit (see page 23-213). ■

NO—Short to ground in the floor wire harness; replace the floor wire harness. ■

BACK

Protected by AR

DTC 71-1x (71-10 to 71-19, 71-1A to 71-1F): Open in Driver's Seat Position Sensor

Special Tools Required
SRS inflator simulator 07SAZ-TB4011A

1. Erase the DTC memory (see page 23-31).
2. Turn the ignition switch ON (II), and check that the SRS indicator comes on for about 6 seconds and then goes off.

   Does the SRS indicator stay on, and is DTC 71-1x indicated?

   YES—Go to step 3.

   NO—Intermittent failure, system is OK at this time. Go to Troubleshooting Intermittent Failures (see page 23-32). If another DTC is indicated, go to the DTC troubleshooting index.
3. Check the connection between the seat position sensor harness 2P connector and the driver's seat position sensor.
4. Erase the DTC memory.
5. Read the DTC (see page 23-30).

   Is DTC 71-1x indicated?

   YES—Go to step 6.

   NO—Intermittent failure, system is OK at this time. Go to Troubleshooting Intermittent Failures (see page 23-32). If another DTC is indicated, go to the DTC troubleshooting index.
6. Turn the ignition switch OFF. Disconnect the battery negative cable, and wait for 3 minutes.
7. Disconnect the driver's seat wire harness 2P connector from the driver's seat position sensor (A).

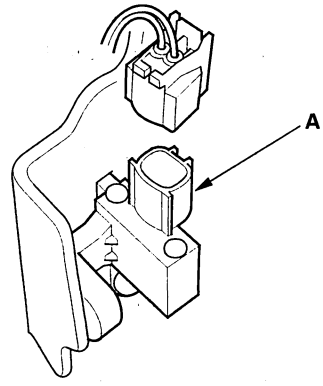

8. Connect the No. 1 and No. 2 terminals of the driver's seat wire harness 2P connector with a jumper wire.
9. Disconnect both seat belt tensioner 4P connectors (see step 6 on page 23-29).

(cont'd)

Protected by AR

DTC Troubleshooting (cont'd)

10. Disconnect SRS unit connector B (28P) from the SRS unit (see step 7 on page 23-29).

11. Check resistance between the No. 16 and No. 28 terminals of SRS unit connector B (28P). There should be 0—1.0 Ω.

SRS UNIT CONNECTOR B (28P)

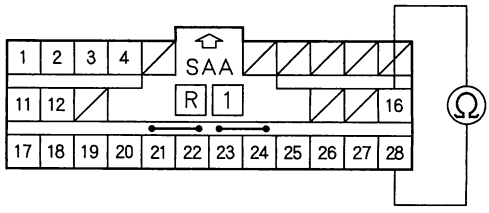

Wire side of female terminals

Is the resistance as specified?

YES—Faulty driver's seat position sensor or SRS unit; replace the driver's seat position sensor (see page 23-220). If the problem is still present, replace the SRS unit (see page 23-213). ■

NO—Open in the floor wire harness or seat position sensor harness; replace the faulty harness. ■

DTC 71-2x (71-20 to 71-29, 71-2A to 71-2F): Short in Driver's Seat Position Sensor

1. Erase the DTC memory (see page 23-31).

2. Turn the ignition switch ON (II), and check the SRS indicator comes on for about 6 seconds and then goes off.

   Does the SRS indicator stay on, and is DTC 71-2x indicated?

   YES—Go to step 3.

   NO—Intermittent failure, system is OK at this time. Go to Troubleshooting Intermittent Failures (see page 23-32). If another DTC is indicated, go to the DTC troubleshooting index.

3. Turn the ignition switch OFF. Disconnect the battery negative cable, and wait for 3 minutes.

BACK

Protected by AR

4. Disconnect the driver's seat wire harness 2P connector from the driver's seat position sensor (A).

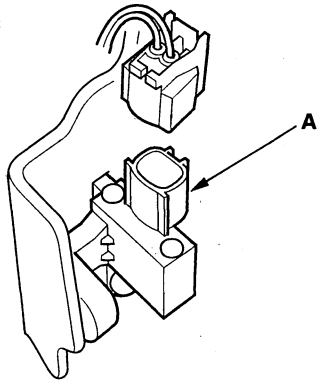

5. Reconnect the battery negative cable.
6. Erase the DTC memory.
7. Read the DTC (see page 23-30).

   Is DTC 71-2x indicated?

   YES—Go to step 8.

   NO—Faulty driver's seat position sensor; replace the driver's seat position sensor.■

8. Turn the ignition switch OFF. Disconnect the battery negative cable, and wait for 3 minutes.
9. Disconnect both seat belt tensioner 4P connectors (see step 6 on page 23-29).
10. Disconnect SRS unit connector B (28P) from the SRS unit (see step 7 on page 23-29).
11. Check resistance between the No. 16 and No. 28 terminals of SRS unit connector B (28P). There should be an open circuit or at least 1 MΩ.

SRS UNIT CONNECTOR B (28P)

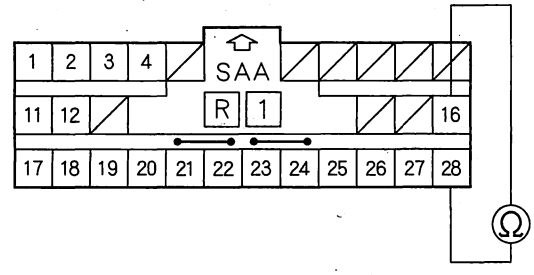

Wire side of female terminals

Is the resistance as specified?

YES—Go to step 12.

NO—Short in the floor wire harness or seat position sensor harness; replace the faulty harness.■

12. Check resistance between the No. 16 terminal of SRS unit connector B (28P) and body ground, and between the No. 28 terminal and body ground. There should be an open circuit or at least 1 MΩ.

SRS UNIT CONNECTOR B (28P)

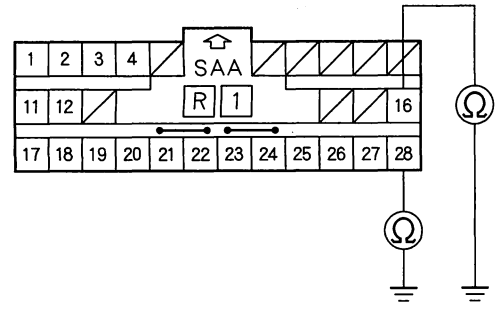

Wire side of female terminals

Is the resistance as specified?

YES—Faulty driver's seat position sensor or SRS unit; replace the driver's seat position sensor (see page 23-220). If the problem is still present, replace the SRS unit (see page 23-213).■

NO—Short in the floor wire harness or seat position sensor harness; replace the faulty harness.■

BACK

Protected by AR

DTC Troubleshooting (cont'd)

DTC 71-22: Short to Power in Driver's Seat Position Sensor

1. Erase the DTC memory (see page 23-31).
2. Turn the ignition switch ON (II), and check the SRS indicator comes on for about 6 seconds and then goes off.

   Does the SRS indicator stay on, and is DTC 71-22 indicated?

   YES—Go to step 3.

   NO—Intermittent failure, system is OK at this time. Go to Troubleshooting Intermittent Failures (see page 23-32). If another DTC is indicated, go to the DTC troubleshooting index.
3. Turn the ignition switch OFF. Disconnect the battery negative cable, and wait for 3 minutes.
4. Disconnect the floor wire harness 2P connector from the driver's seat position sensor (A).

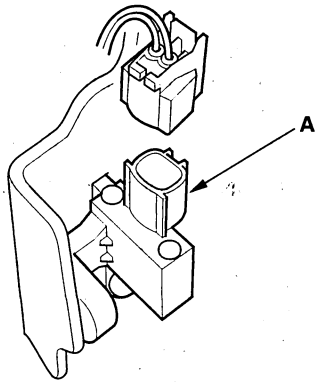

5. Disconnect both seat belt tensioner 4P connectors (see step 6 on page 23-29).
6. Disconnect SRS unit connector B from the SRS unit (see step 7 on page 23-29).
7. Check the voltage between the No. 16 terminal of SRS unit connector B (28P) and body ground, and between the No. 28 terminal and body ground. There should be 1 V or less.

SRS UNIT CONNECTOR B (28P)

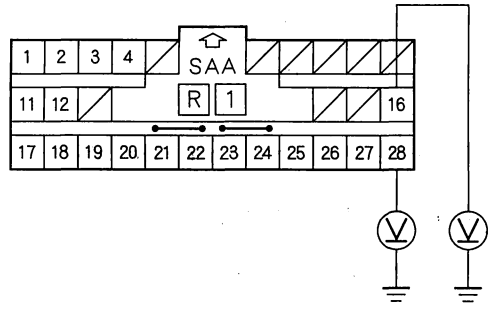

Wire side of female terminals

Is the voltage as specified?

YES—Faulty driver's seat position sensor or SRS unit; replace the driver's seat position sensor (see page 23-220). If the problem is still present, replace the SRS unit (see page 23-213).■

NO—Short to power in the floor wire harness or seat position sensor harness; replace the faulty harness.■

BACK

Protected by AR

DTC 81-61: No Signal from Front Passenger's Weight Sensor Unit (with side airbag) ('04-05 models)

DTC 81-62: Non-stipulated Response Data (with side airbag) ('04-05 models)

1. Erase the DTC memory (see page 23-31).
2. Read the DTC (see page 23-30).

   Is DTC 81-61 or 81-62 indicated?

   YES—Go to step 5.

   NO—Intermittent failure, system is OK at this time. Go to Troubleshooting Intermittent Failures (see page 23-32). If another DTC is indicated, go to the DTC troubleshooting index.
3. Check the connection between the floor wire harness 6P connector and the front passenger's weight sensor unit.

   Is the connection OK?

   YES—Go to step 4.

   NO—Repair the poor connection and retest. If DTC 81-61 or 81-62 or still present, go to step 6.
4. Turn the ignition switch OFF.
5. Check the No. 10 (7.5A) fuse in the under-dash fuse/relay box.

   Is the fuse OK?

   YES—Go to step 6.

   NO—Replace the fuse, then turn the ignition switch ON (II). If the fuse blows again, check for a short in the No. 10 (7.5 A) fuse circuit (dashboard wire harness or floor wire harness). ■
6. Disconnect the floor wire harness 6P connector C from the front passenger's weight sensor unit.

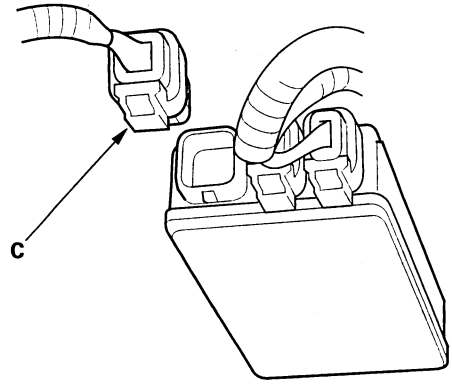

7. Turn the ignition switch ON (II).

(cont'd)

Protected by AR

DTC Troubleshooting (cont'd)

8. Check for voltage between the No. 3 terminal of the front passenger's weight sensor unit 6P connector C and body ground. There should be battery voltage.

FRONT PASSENGER'S WEIGHT SENSOR UNIT 6P CONNECTOR C

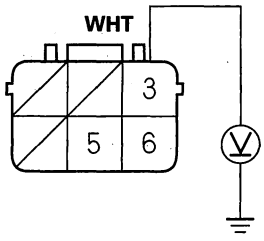

Wire side of female terminals

Is there battery voltage?

YES—Go to step 13.

NO—Go to step 9.

9. Turn the ignition switch OFF.

10. Disconnect dashboard wire harness 24P connector C501A from the floor wire harness (C501B).

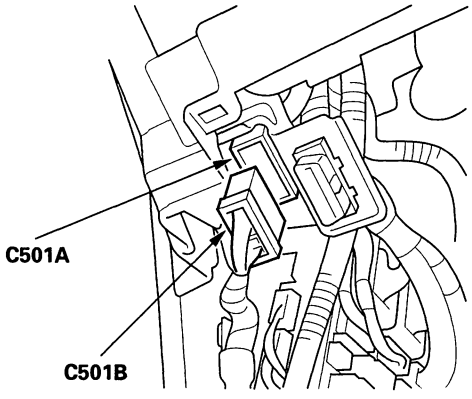

11. Turn the ignition switch ON (II).

12. Check for voltage between the No. 9 terminal of dashboard wire harness 24P connector and body ground. There should be battery voltage.

DASHBOARD WIRE HARNESS 24P CONNECTOR

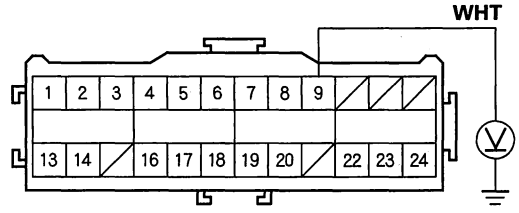

Terminal side of male terminals

Is there battery voltage?

YES—Open in the WHT wire of the floor wire harness; replace the floor wire harness.■

NO—Open in the WHT wire of the dashboard wire harness; replace dashboard wire harness.■

13. Turn the ignition switch OFF.

14. Check resistance between the No. 6 terminal of the front passenger's weight sensor unit 6P connector C and body ground. There should be 0—1.0 Ω.

FRONT PASSENGER'S WEIGHT SENSOR UNIT 6P CONNECTOR C

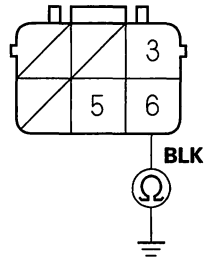

Wire side of female terminals

Is the resistance as specified?

YES—Go to step 15.

NO—Open in the BLK wire of the floor wire harness; check for poor ground connection at G602 (see page 22-38). If the connection is OK, replace the floor wire harness.■

BACK

Protected by AR

15. Turn the ignition switch OFF. Disconnect the battery negative cable, and wait for 3 minutes.

16. Disconnect both seat belt tensioner 4P connectors (see step 6 on page 23-29).

17. Disconnect SRS unit connector B (28P) from the SRS unit (see step 7 on page 23-29). Disconnect OPDS unit 8P connector D from the OPDS unit.

18. Check resistance between the No. 27 terminal of SRS unit connector B (28P) and body ground. There should be an open circuit or at least 1 MΩ.

SRS UNIT CONNECTOR B (28P)

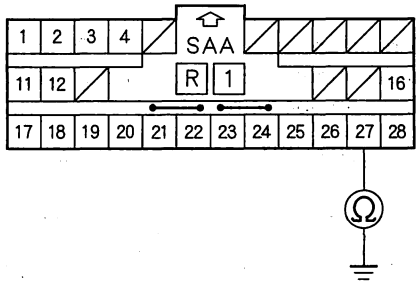

Wire side of female terminals

Is the resistance as specified?

YES—Go to step 19.

NO—Go to step 22.

19. Check resistance between the No. 27 terminal of SRS unit connector B (28P) and the No. 5 terminal of the front passenger's weight sensor unit 6P connector C. There should be 0—1.0 Ω.

SRS UNIT CONNECTOR B (28P)

FRONT PASSENGER'S WEIGHT SENSOR UNIT 6P CONNECTOR C

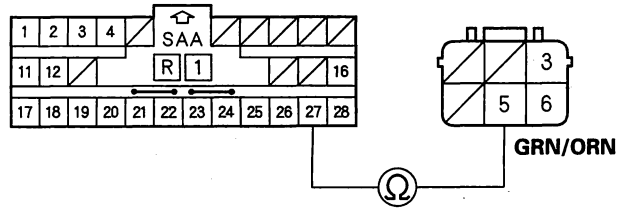

Wire side of female terminals

Is the resistance as specified?

YES—Faulty front passenger's weight sensor unit or SRS unit; replace the front passenger's weight sensor unit (see page 23-219). If the problem is still present, replace the SRS unit (see page 23-213).■

NO—Go to step 20.

(cont'd)

Protected by AR

DTC Troubleshooting (cont'd)

20. Disconnect dashboard wire harness 24P connector C501A from the floor wire harness (C501B).

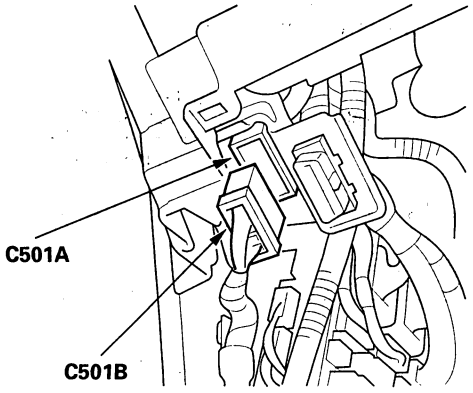

21. Check resistance between the No. 27 terminal of SRS unit connector B (28P) and the No. 17 terminal of floor wire harness 24P connector. There should be 0—1.0 Ω.

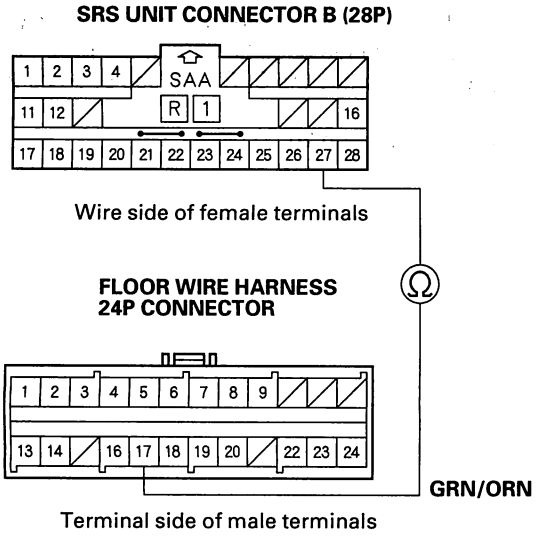

Is the resistance as specified?

YES—Open in the GRN/ORN wire of the dashboard wire harness; replace the dashboard wire harness.■

NO—Open in the floor wire harness; replace the floor wire harness.■

22. Disconnect dashboard wire harness 24P connector C501A from floor wire harness (C501B).

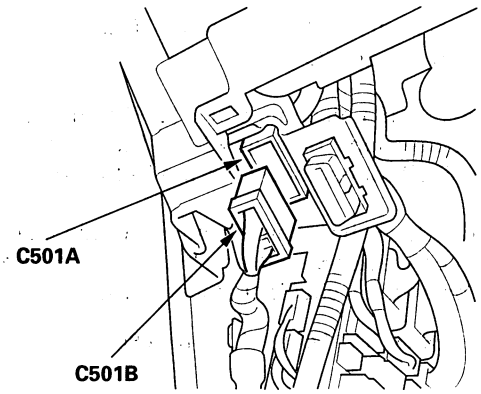

23. Check resistance between the No. 27 terminal of SRS unit connector B (28P) and body ground. There should be an open circuit or at least 1 MΩ.

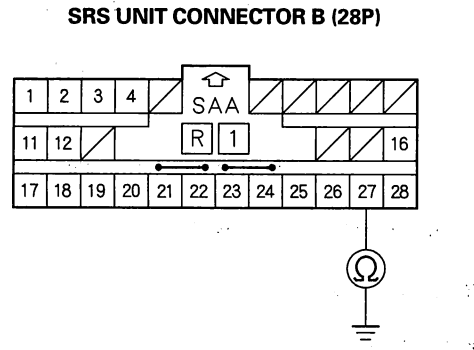

Is the resistance as specified?

YES—Short to ground in the dashboard wire harness; replace the dashboard wire harness.■

NO—Short to ground in the floor wire harness; replace the floor wire harness.■

BACK

Protected by AR

DTC 81-61: No Signal from Front Passenger's Weight Sensor Unit (without side airbag) ('04-05 models)

DTC 81-62: Non-stipulated Response Data (without side airbag) ('04-05 models)

1. Erase the DTC memory (see page 23-31).
2. Read the DTC (see page 23-30).

   Is DTC 81-61 or 81-62 indicated?

   YES—Go to step 3.

   NO—Intermittent failure, system is OK at this time. Go to Troubleshooting Intermittent Failures (see page 23-32). If another DTC is indicated, go to the DTC troubleshooting index.
3. Check the connection between the floor wire 6P connector and the front passenger's weight sensor unit.

   Is the connection OK?

   YES—Go to step 4.

   NO—Repair the poor connection and retest. If DTC 81-61 or 81-62 is still present, go to step 6.
4. Turn the ignition switch OFF.
5. Check the No. 10 (7.5 A) fuse in the driver's under-dash fuse/relay box.

   Is the fuse OK?

   YES—Go to step 6.

   NO—Replace the fuse, then turn the ignition switch ON (II). If the fuse blows again, check for a short in the No. 10 (7.5 A) fuse circuit (dashboard wire harness or floor wire harness). ■
6. Disconnect the floor wire harness 6P connector C from the front passenger's weight sensor unit.

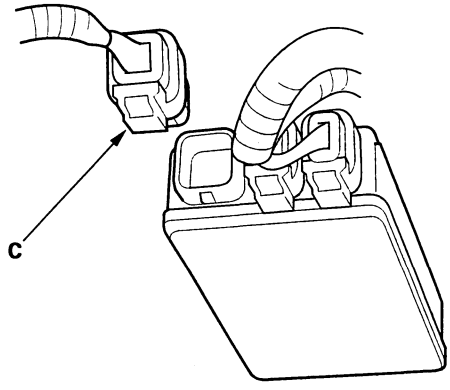

7. Turn the ignition switch ON (II).

(cont'd)

Protected by AR

DTC Troubleshooting (cont'd)

8. Check for voltage between the No. 3 terminal of the front passenger's weight sensor unit 6P connector C and body ground. There should be battery voltage.

FRONT PASSENGER'S WEIGHT SENSOR UNIT 6P CONNECTOR C

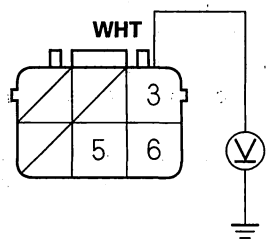

Wire side of female terminals

Is there battery voltage?

YES—Go to step 13.

NO—Go to step 9.

9. Turn the ignition switch OFF.

10. Disconnect dashboard wire harness 24P connector C501A from the floor wire harness (C501B).

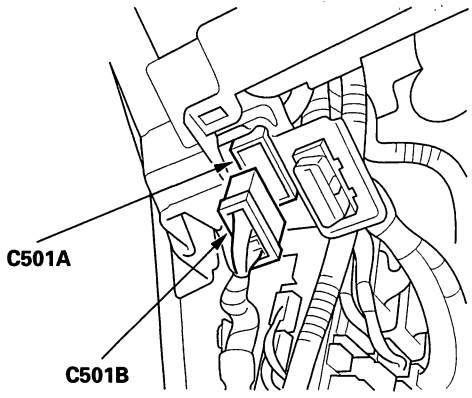

11. Turn the ignition switch ON (II).

12. Check for voltage between the No. 9 terminal of dashboard wire harness 24P connector and body ground. There should be battery voltage.

DASHBOARD WIRE HARNESS 24P CONNECTOR

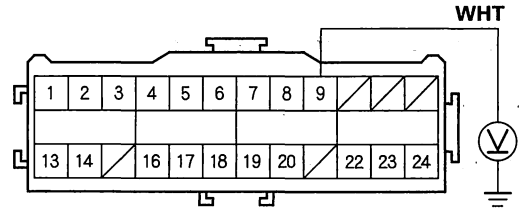

Terminal side of male terminals

Is there battery voltage?

YES—Open in the WHT wire of the floor wire harness; replace the floor wire harness. ■

NO—Open in the WHT wire of the dashboard wire harness; replace dashboard wire harness. ■

13. Turn the ignition switch OFF.

14. Check resistance between the No. 6 terminal of the front passenger's weight sensor unit 6P connector C and body ground. There should be 0—1.0 Ω.

FRONT PASSENGER'S WEIGHT SENSOR UNIT 6P CONNECTOR C

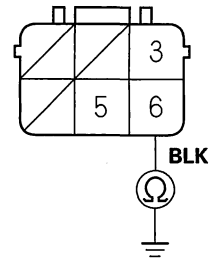

Wire side of female terminals

Is the resistance as specified?

YES—Go to step 15.

NO—Open in the BLK wire of the floor wire harness or left floor wire harness; check for poor ground connection at G601 (see page 22-36). If the connection is OK, replace the floor wire harness. ■

BACK

Protected by AR

15. Turn the ignition switch OFF. Disconnect the battery negative cable, and wait for 3 minutes.

16. Disconnect both seat belt tensioner 4P connectors (see step 6 on page 23-29).

17. Disconnect SRS unit connector B (28P) from the SRS unit (see step 7 on page 23-29).

18. Check resistance between the No. 27 terminal of SRS unit connector B (28P) and body ground. There should be an open circuit or at least 1 MΩ.

SRS UNIT CONNECTOR B (28P)

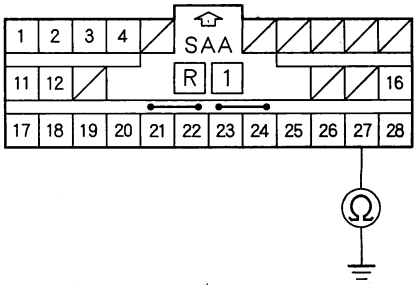

Wire side of female terminals

Is the resistance as specified?

YES—Go to step 19.

NO—Short to ground in the floor wire harness; replace the floor wire harness.■

19. Check resistance between the No. 27 terminal of SRS unit connector B (28P) and the No. 5 terminal of the front passenger's weight sensor unit 6P connector C. There should be 0—1.0 Ω.

SRS UNIT CONNECTOR B (28P)

FRONT PASSENGER'S WEIGHT SENSOR UNIT 6P CONNECTOR C

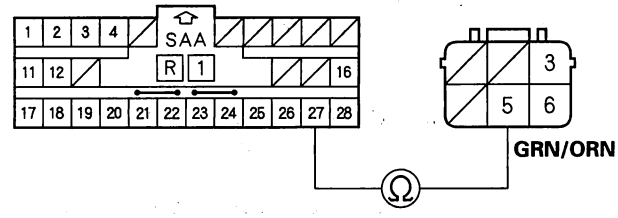

Wire side of female terminals

Is the resistance as specified?

YES—Faulty front passenger's weight sensor unit or SRS unit; replace the front passenger's weight sensor unit (see page 23-219). If the problem is still present, replace the SRS unit (see page 23-213).■

NO—Open in the GRN/ORN wire of the floor wire harness; replace the floor wire harness.■

Protected by AR

DTC Troubleshooting (cont'd)

DTC 81-4x (81-40 to 81-49, 81-4A to 81-4F), 81-5x (81-50 to 81-59, 81-5A to 81-5F), 81-63, 81-64: Internal Failure of the Front Passenger's Weight Sensor Unit ('04-05 models)

1. Erase the DTC memory (see page 23-31).
2. Turn the ignition switch ON (II), and check that the SRS indicator comes on for about 6 seconds and then goes off.

   Does the SRS indicator stay on, and is DTC 81-4x, 81-5x, 81-63, or 81-64 indicated?

   YES—Replace the front passenger's weight sensor unit (see page 23-219). If the DTC returns, replace the SRS unit (see page 23-213). ■

   NO—Intermittent failure, system is OK at this time. Go to Troubleshooting Intermittent Failures (see page 23-32). If another DTC is indicated, go to the DTC troubleshooting index.

DTC 81-79: Front Passenger's Weight Sensors Drift Check Failure ('04-05 models)

1. Erase the DTC memory (see page 23-31).
2. Turn the ignition switch ON (II), and check that the SRS indicator comes on for about 6 seconds and then goes off.

   Does the SRS indicator stay on, and is DTC 81-79 indicated?

   YES—Go to step 3.

   NO—Intermittent failure, system is OK at this time. Go to Troubleshooting Intermittent Failures (see page 23-32). If another DTC is indicated, go to the DTC troubleshooting index.
3. Turn the ignition switch OFF.
4. Make sure nothing is on the front passenger's seat.
5. Turn the ignition switch ON (II), and check that the SRS indicator comes on for about 6 seconds and then goes off.

   Does the SRS indicator go off?

   YES—The system is OK. ■

   NO—Remove the seat assembly (see page 20-144) and front passenger's weight sensors, then reinstall them. Calibrate the front passenger's weight sensor unit (see page 23-33). Retry the troubleshooting. If DTC 81-79 is indicated repeatedly, replace the front passenger's weight sensors. ■

BACK

Protected by AR

DTC 81-71, 81-78: Front passenger's weight sensor unit does not calibrate ('04-05 models)

1. Erase the DTC memory (see page 23-31).
2. Turn the ignition switch ON (II), and check that the SRS indicator comes on for about 6 seconds and then goes off.

   Does the SRS indicator stay on, and is DTC 81-71, or 81-78 indicated?

   YES—Calibrate the front passenger's weight sensor unit. If the DTC returns, replace the front passenger's weight sensor unit (see page 23-219). ■

   NO—Intermittent failure, system is OK at this time. Go to Troubleshooting Intermittent Failures (see page 23-32). If another DTC is indicated, go to the DTC troubleshooting index.

DTC 81-71, 81-78: ODS unit does not calibrate ('06 model)

1. Erase the DTC memory (see page 23-31).
2. Turn the ignition switch ON (II), and check that the SRS indicator comes on for about 6 seconds and then goes off.

   Does the SRS indicator stay on, and is DTC 81-71, or 81-78 indicated?

   YES—Calibrate the ODS unit. If the DTC returns, replace the ODS unit (see page 23-216). ■

   NO—Intermittent failure, system is OK at this time. Go to Troubleshooting Intermittent Failures (see page 23-32). If another DTC is indicated, go to the DTC troubleshooting index.

Protected by AR

DTC Troubleshooting (cont'd)

DTC 82-1x (82-10 to 82-19, 82-1A to 82-1F): No Signal from the Inner Side Front Passenger's Weight Sensor ('04-06 models)

1. Erase the DTC memory (see page 23-31).
2. Turn the ignition switch ON (II), and check that the SRS indicator comes on for about 6 seconds and then goes off.

   Does the SRS indicator stay on, and is DTC 82-1x indicated?

   YES—Replace the inner side front passenger's weight sensor (see page 23-218). ■

   NO—Intermittent failure, system is OK at this time. Go to Troubleshooting Intermittent Failures (see page 23-32). If another DTC is indicated, go to the DTC troubleshooting index.

DTC 83-2x (83-20 to 83-29, 83-2A to 83-2F): No Signal from the Outer Side Front Passenger's Weight Sensor ('04-06 models)

1. Erase the DTC memory (see page 23-31).
2. Turn the ignition switch ON (II), and check that the SRS indicator comes on for about 6 seconds and then goes off.

   Does the SRS indicator stay on, and is DTC 83-2x indicated?

   YES—Replace the outer side front passenger's weight sensor (see page 23-218). ■

   NO—Intermittent failure, system is OK at this time. Go to Troubleshooting Intermittent Failures (see page 23-32). If another DTC is indicated, go to the DTC troubleshooting index.

BACK

Protected by AR

DTC 85-4x (85-40 to 85-49, 85-4A to 85-4F), 85-5x (85-50 to 85-59, 85-5A to 85-5F), 85-63, 85-64: Internal Failure of the OPDS/ODS Unit

1. Erase the DTC memory (see page 23-31).
2. Turn the ignition switch ON (II), and check that the SRS indicator comes on for about 6 seconds and then goes off.

   Does the SRS indicator stay on, and is DTC85-4x, 85-5x, 85-63, or 85-64 indicated?

   YES—Go to step 3.

   NO—Intermittent failure, system is OK at this time. Go to Troubleshooting Intermittent Failures (see page 23-32). If another DTC is indicated, go to the DTC troubleshooting index.
3. Initialize the OPDS/ODS unit (see page 23-32).
4. Turn the ignition switch ON (II), and check that the SRS indicator comes on for about 6 seconds and then goes off.

   Does the SRS indicator go off?

   YES—The system is OK.■

   NO—Replace the OPDS/ODS unit (see page 23-216), and retest. If the problem is still present, replace the OPDS sensor/seat-back (see page 20-166).■

DTC 85-79: OPDS Sensor Drift Check Failure

1. Erase the DTC memory (see page 23-31).
2. Turn the ignition switch ON (II), and check that the SRS indicator comes on for about 6 seconds and then goes off.

   Does the SRS indicator stay on, and is DTC 85-79 indicated?

   YES—Turn the ignition switch OFF, and go to step 3.

   NO—Intermittent failure, system is OK at this time. Go to Troubleshooting Intermittent Failures (see page 23-32). If another DTC is indicated, go to the DTC troubleshooting index.
3. Make sure nothing is on the front passenger's seat.
4. Turn the ignition switch ON (II), and check that the SRS indicator comes on for about 6 seconds and then goes off.

   Does the SRS indicator go off?

   YES—The system is OK.■

   NO—Go to step 5.
5. Initialize the OPDS/ODS unit (see page 23-32).
6. Turn the ignition switch ON (II), and check that the SRS indicator comes on for about 6 seconds and then goes off.

   Does the SRS indicator go off?

   YES—The system is OK.■

   NO—Replace the OPDS/ODS unit (see page 23-216), and retest. If the problem is still present, replace the OPDS sensor/seat-back (see page 20-166).■

Protected by AR

DTC Troubleshooting (cont'd)

DTC 85-61: No Signal from the OPDS Unit ('04-05 models)

DTC 85-62: Non-stipulated Response Data ('04-05 models)

NOTE:
- An incorrect OPDS unit can cause DTC 85-63.
- A new (uninitialized) OPDS unit installed with a faulty sensor can also cause DTC 85-71.

1. Make sure nothing is on the front passenger's seat.
2. Erase the DTC memory (see page 23-31).
3. Read the DTC (see page 23-30).

   Is DTC 85-61 or 85-62 indicated?

   YES—Go to step 4.

   NO—Intermittent failure, system is OK at this time. Go to Troubleshooting Intermittent Failures (see page 23-32). If another DTC is indicated, go to the DTC Troubleshooting Index.

4. Check the connection between the OPDS unit harness 8P connector D and the OPDS unit.

   Is the connection OK?

   YES—Go to step 5.

   NO—Repair the poor connection and retest. If DTC 85-61 or 85-62 is still present, go to step 5.

5. Turn the ignition switch OFF.
6. Check the No. 10 (7.5 A) fuse in the under-dash fuse/relay box.

   Is the fuse OK?

   YES—Go to step 7.

   NO—Replace the fuse, then turn the ignition switch ON (II). If the fuse blows again, check for a short in the No. 10 (7.5 A) fuse circuit (dashboard wire harness, floor wire harness, or OPDS unit harness). ■
7. Disconnect the OPDS unit 8P connector D from the OPDS unit.

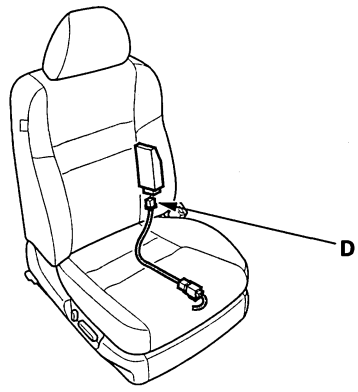

8. Turn the ignition switch ON (II).
9. Check for voltage between the No. 4 terminal of the OPDS unit 8P connector D and body ground. There should battery voltage.

OPDS UNIT 8P CONNECTOR D

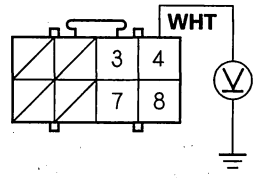

Wire side of female terminals

Is there battery voltage?

YES—Go to step 14.

NO—Go to step 10.

10. Turn the ignition switch OFF.

BACK

Protected by AR

11. Disconnect dashboard wire harness 24P connector C501A from the floor wire harness (C501B).

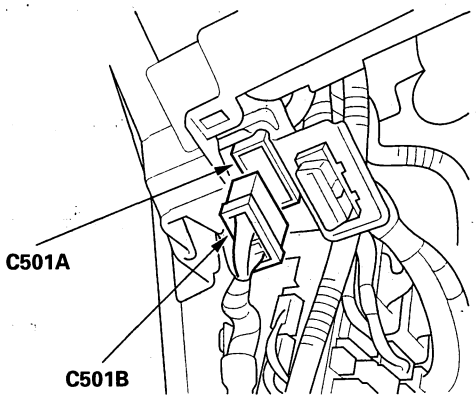

12. Turn the ignition switch ON (II).

13. Check for voltage between the No. 9 terminal of dashboard wire harness 24P connector and body ground. There should be battery voltage.

DASHBOARD WIRE HARNESS 24P CONNECTOR

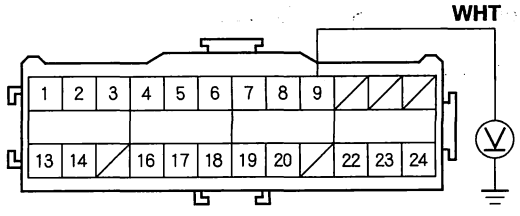

Terminal side of male terminals

Is there battery voltage?

YES—Open in the WHT wire of the floor wire harness or OPDS unit harness; replace the faulty harness. ■

NO—Open in the WHT wire of the dashboard wire harness; replace the dashboard wire harness. ■

14. Turn the ignition switch OFF.

15. Check resistance between the No. 8 terminal of the OPDS unit 8P connector D and body ground. There should be 0—1.0 Ω.

OPDS UNIT 8P CONNECTOR D

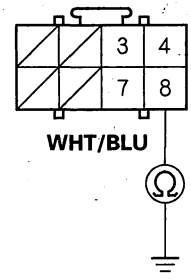

Wire side of female terminals

Is the resistance as specified?

YES—Go to step 16.

NO—Open in the OPDS unit harness or floor wire harness; check the connection at G602 (see page 22-38). If the connection is OK, replace the faulty harness. ■

16. Turn the ignition switch OFF. Disconnect the battery negative cable, and wait for 3 minutes.

17. Disconnect both seat belt tensioner 4P connectors (see step 6 on page 23-29).

(cont'd)

Protected by AR

DTC Troubleshooting (cont'd)

18. Disconnect SRS unit connector B (28P) from the SRS unit (see step 7 on page 23-29).

19. Check resistance between the No. 27 terminal of SRS unit connector B (28P) and body ground. There should be an open circuit or at least 1 MΩ.

SRS UNIT CONNECTOR B (28P)

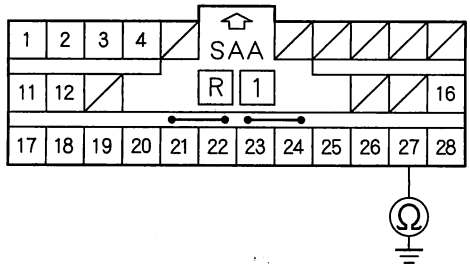

Wire side of female terminals

Is the resistance as specified?

YES—Go to step 20.

NO—Go to step 23.

20. Check resistance between the No. 27 terminal of SRS unit connector B (28P) and the No. 7 terminal of the OPDS unit 8P connector D. There should be 0—1.0 Ω.

SRS UNIT CONNECTOR B (28P) **OPDS UNIT 8P CONNECTOR D**

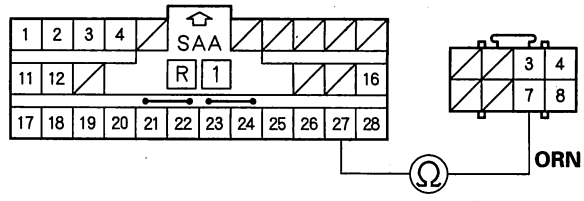

Wire side of female terminals

Is the resistance as specified?

YES—Faulty OPDS unit or SRS unit; replace the OPDS unit (see page 23-216). If the problem is still present, replace the OPDS sensor/seat-back (see page 20-166). If problem is still present, replace the SRS unit (see page 23-213).■

NO—Go to step 21.

BACK

Protected by AR

21. Disconnect the floor wire harness 4P connector C801 from the OPDS unit harness.

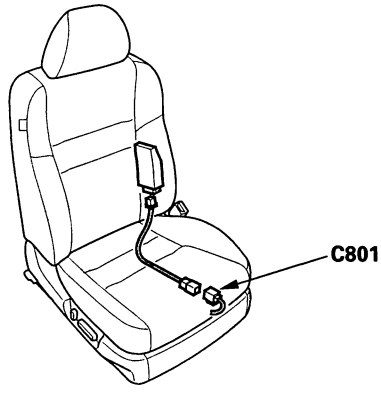

22. Check resistance between the No. 27 terminal of SRS unit connector B (28P) and the No. 4 terminal of floor wire harness 4P connector C801. There should be 0—1.0 Ω.

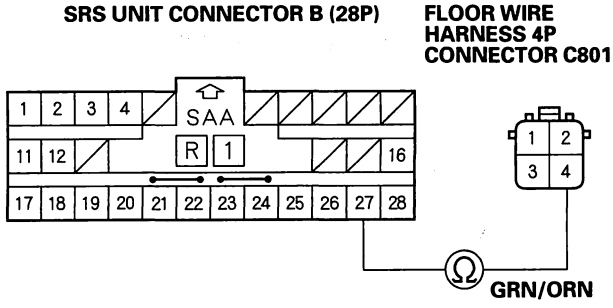

Wire side of female terminals

Is the resistance as specified?

YES—Open in the OPDS unit harness; replace the OPDS unit harness. ■

NO—Open in the GRN/ORN wire of the dashboard wire harness or floor wire harness; replace the faulty harness. ■

23. Disconnect floor wire harness 4P connector C801 from the OPDS unit harness.

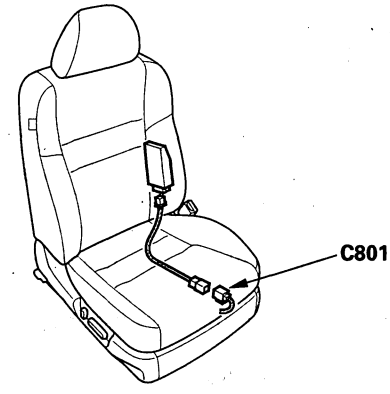

24. Check resistance between the No. 27 terminal of SRS unit connector B (28P) and body ground. There should be an open circuit or at least 1 MΩ.

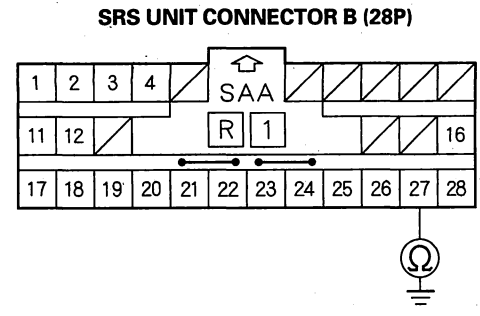

Wire side of female terminals

Is the resistance as specified?

YES—Short to ground in the OPDS unit harness; replace the OPDS unit harness. ■

NO—Short to ground in the dashboard wire harness or floor wire harness; replace the faulty harness. ■

Protected by AR

DTC Troubleshooting (cont'd)

DTC 81-61, 85-61: No Signal from the ODS Unit ('06 model)

DTC 81-62, 85-62: Non-stipulated Response Data ('06 model)

NOTE:
- An incorrect ODS unit can cause DTC 85-63.
- A new (uninitialized) ODS unit installed with a faulty sensor can also cause DTC 85-71.

1. Make sure nothing is on the front passenger's seat.
2. Erase the DTC memory (see page 23-31).
3. Read the DTC (see page 23-30).

   Is DTC 81-61, 85-61, 81-62, or 85-62 indicated?

   YES—Go to step 4.

   NO—Intermittent failure, system is OK at this time. Go to Troubleshooting Intermittent Failures (see page 23-32). If another DTC is indicated, go to the DTC Troubleshooting Index.

4. Check the connection between the ODS unit harness 18P connector D and the ODS unit.

   Is the connection OK?

   YES—Go to step 5.

   NO—Repair the poor connection and retest. If DTC 81-61, 85-61, 81-62, or 85-62 is still present, go to step 5.

5. Turn the ignition switch OFF.
6. Check the No. 10 (7.5 A) fuse in the under-dash fuse/relay box.

   Is the fuse OK?

   YES—Go to step 7.

   NO—Replace the fuse, then turn the ignition switch ON (II). If the fuse blows again, check for a short in the No. 10 (7.5 A) fuse circuit (dashboard wire harness, floor wire harness, or ODS unit harness).■

7. Disconnect the ODS unit 18P connector D from the ODS unit.

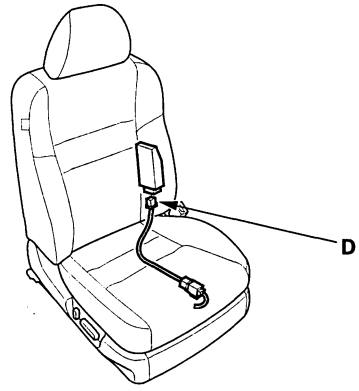

8. Turn the ignition switch ON (II).
9. Check for voltage between the No. 1 terminal of the ODS unit 18P connector D and body ground. There should battery voltage.

ODS UNIT 18P CONNECTOR D

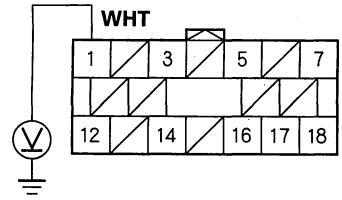

Wire side of female terminals

Is there battery voltage?

YES—Go to step 14.

NO—Go to step 10.

10. Turn the ignition switch OFF.

BACK

Protected by AR

11. Disconnect dashboard wire harness 24P connector C501 from the floor wire harness (A).

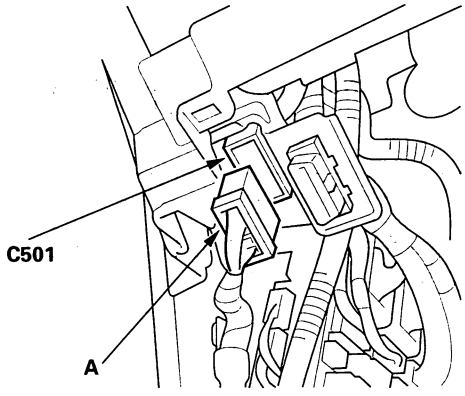

12. Turn the ignition switch ON (II).

13. Check for voltage between the No. 9 terminal of dashboard wire harness 24P connector and body ground. There should be battery voltage.

DASHBOARD WIRE HARNESS 24P CONNECTOR

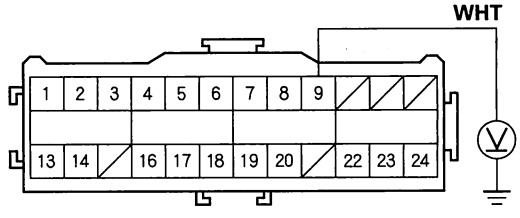

Terminal side of male terminals

Is there battery voltage?

YES—Open in the WHT wire of the floor wire harness or ODS unit harness; replace the faulty harness.■

NO—Open in the WHT wire of the dashboard wire harness; replace the dashboard wire harness.■

14. Turn the ignition switch OFF.

15. Check resistance between the No. 12 terminal of the ODS unit 18P connector D and body ground. There should be 0—1.0 Ω.

ODS UNIT 18P CONNECTOR D

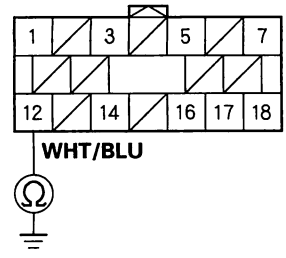

Wire side of female terminals

Is the resistance as specified?

YES—Go to step 16.

NO—Open in the ODS unit harness or floor wire harness; check the connection at G602 (see page 22-38). If the connection is OK, replace the faulty harness.■

16. Turn the ignition switch OFF. Disconnect the battery negative cable, and wait for 3 minutes.

17. Disconnect both seat belt tensioner 4P connectors (see step 6 on page 23-29).

(cont'd)

Protected by AR

DTC Troubleshooting (cont'd)

18. Disconnect SRS unit connector B (28P) from the SRS unit (see step 7 on page 23-29).

19. Check resistance between the No. 27 terminal of SRS unit connector B (28P) and body ground. There should be an open circuit or at least 1 MΩ.

SRS UNIT CONNECTOR B (28P)

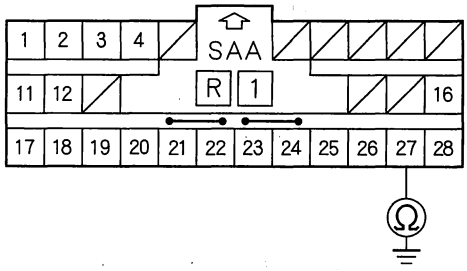

Wire side of female terminals

Is the resistance as specified?

YES—Go to step 20.

NO—Go to step 23.

20. Check resistance between the No. 27 terminal of SRS unit connector B (28P) and the No. 7 terminal of the ODS unit 18P connector D. There should be 0—1.0 Ω.

SRS UNIT CONNECTOR B (28P) **ODS UNIT 18P CONNECTOR D**

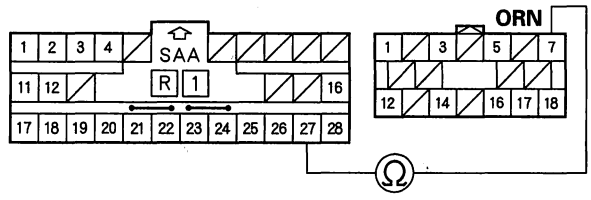

Wire side of female terminals

Is the resistance as specified?

YES—Faulty ODS unit or SRS unit; replace the ODS unit (see page 23-216). If the problem is still present, replace the OPDS sensor/seat-back (see page 20-166). If problem is still present, replace the SRS unit (see page 23-213).■

NO—Go to step 21.

BACK

Protected by AR

21. Disconnect the floor wire harness 4P connector C801 from the ODS unit harness.

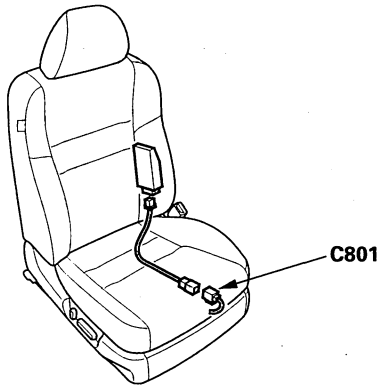

22. Check resistance between the No. 27 terminal of SRS unit connector B (28P) and the No. 4 terminal of floor wire harness 4P connector C801. There should be 0—1.0 Ω.

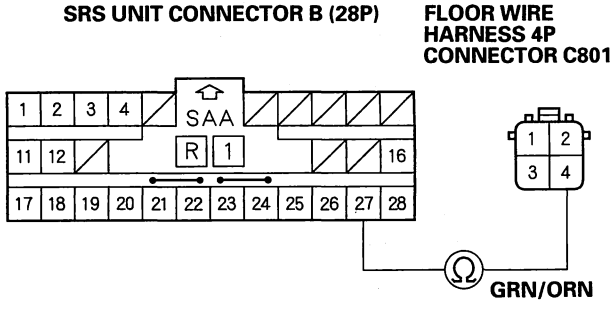

Wire side of female terminals

Is the resistance as specified?

YES—Open in the ODS unit harness; replace the ODS unit harness. ■

NO—Open in the GRN/ORN wire of the floor wire harness; replace the faulty harness. ■

23. Disconnect floor wire harness 4P connector C801 from the ODS unit harness.

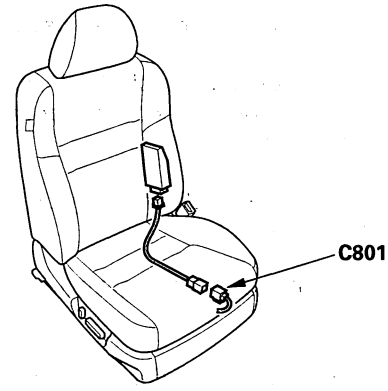

24. Check resistance between the No. 27 terminal of SRS unit connector B (28P) and body ground. There should be an open circuit or at least 1 MΩ.

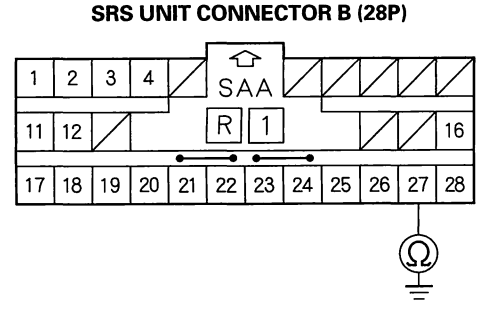

Wire side of female terminals

Is the resistance as specified?

YES—Short to ground in the ODS unit harness; replace the ODS unit harness. ■

NO—Short to ground in the floor wire harness; replace the faulty harness. ■

BACK

Protected by AR

DTC Troubleshooting (cont'd)

DTC 85-71, 85-78: OPDS/ODS unit not initialized

1. Erase the DTC memory (see page 23-31).
2. Turn the ignition switch ON (II), and check that the SRS indicator comes on for about 6 seconds and then goes off.

   Does the SRS indicator stay on, and is DTC 85-71, or 85-78 indicated?

   YES—Initialized OPDS/ODS unit (see page 23-32). ■

   NO—Intermittent failure, system is OK at this time. Go to Troubleshooting Intermittent Failures (see page 23-32). If another DTC is indicated, go to the DTC troubleshooting index.

DTC 86-1x (86-10 to 86-19, 86-1A to 86-1F): Faulty OPDS Seat-back Sensor

DTC 86-2x (86-20 to 86-29, 86-2A to 86-2F): Faulty OPDS Seat Support Sensor

1. Erase the DTC memory (see page 23-31).
2. Turn the ignition switch ON (II), and check that the SRS indicator comes on for about 6 seconds and then goes off.

   Does the SRS indicator stay on?

   YES—Go to step 3.

   NO—Intermittent failure, system is OK at this time. Go to Troubleshooting Intermittent Failures (see page 23-32).

   NOTE: Aftermarket devices (fluorescent lights, laptop computers, etc.) used near the front passenger's seat-back can interfere with the seat-back sensors and cause a false DTC 86-1x or 86-2x. If one of these devices was used, erase the DTC, operate the device near the seat-back, and recheck for DTCs. If DTC 86-1x or 86-2x is reset, erase it, and do not use the device near the seat-back.

3. Check the connection at the OPDS sensor harness connector and the OPDS/ODS unit connector.

   Are the connections OK?

   YES—Go to step 4.

   NO—Reconnect the OPDS sensor harness connector, and clear the DTC. ■

4. Replace the OPDS sensor/seat-back foam (see page 20-162), and initialize the OPDS/ODS unit (see page 23-32).
5. Erase the DTC memory, then check for DTC 86-1x or 86-2x.

   Is DTC 86-1x or 86-2x indicated?

   YES—Replace the OPDS/ODS unit (see page 23-216). ■

   NO—The system is OK. ■

BACK

Protected by AR

DTC 87-31: Internal Failure of the OPDS/ODS Unit

NOTE: Make sure the battery is sufficiently charged and in good condition.

1. Erase the DTC memory (see page 23-31).
2. Turn the ignition switch ON (II), and check that the SRS indicator comes on for about 6 seconds and then goes off.

   Does the SRS indicator stay on, and is DTC 87-31 indicated?

   YES—Replace the SRS unit (see page 23-213).

   NO—Intermittent failure, system is OK at this time. Go to Troubleshooting Intermittent Failures (see page 23-32). If another DTC is indicated, go to the DTC troubleshooting index for troubleshooting details.

DTC 87-32: Side Airbag Cutoff Indicator Stays ON ('03-05 models)

1. Erase the DTC memory (see page 23-31).
2. Turn the ignition switch ON (II), and check that the SRS indicator comes on for about 6 seconds and then goes off.

   Does the SRS indicator stay on?

   YES—Go to step 3.

   NO—Intermittent failure, system is OK at this time. Go to Troubleshooting Intermittent Failure (see page 23-32).

3. Turn the ignition switch OFF. Make sure nothing is on the front passenger's seat.
4. Disconnect the OPDS unit 8P connector D from the OPDS unit.

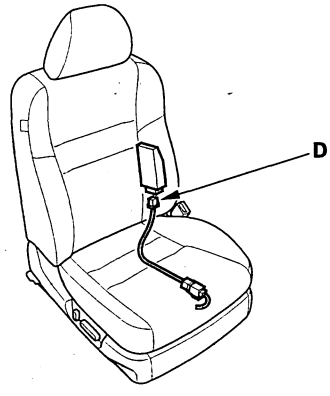

5. Turn the ignition switch ON (II).

(cont'd)

Protected by AR

DTC Troubleshooting (cont'd)

6. Check for voltage between the No. 3 terminal of the OPDS unit harness 8P connector D and body ground. There should be battery voltage.

OPDS UNIT HARNESS 8P CONNECTOR D

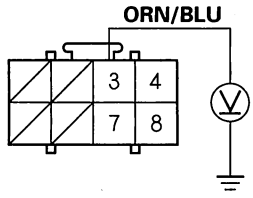

Wire side of female terminals

Is there battery voltage?

YES—Faulty OPDS unit; replace the OPDS unit (see page 23-216).

NO—Go to step 7.

7. Turn the ignition switch OFF.

8. Remove the gauge control module (see page 22-276). Disconnect gauge control module connector (30P) (A) from the gauge control module.

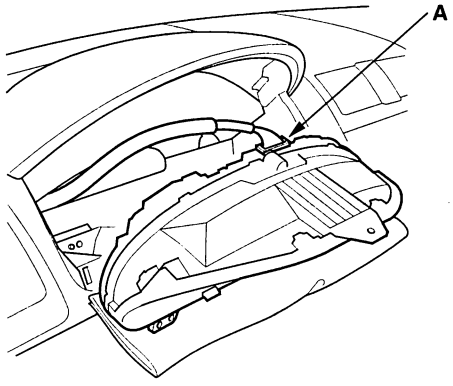

9. Check resistance between the No. 3 terminal of the OPDS unit 8P connector D and body ground. There should be an open circuit or at least 1 MΩ.

OPDS UNIT 8P CONNECTOR D

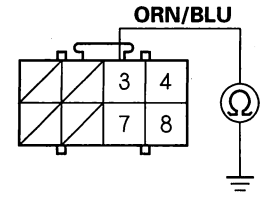

Wire side of female terminals

Is the resistance as specified?

YES—Replace the gauge control module. ■

NO—Short to ground in the OPDS unit harness floor wire harness or dashboard wire harness; replace the faulty harness. ■

BACK

Protected by AR

DTC 87-32: Side Airbag Cutoff Indicator Stays ON ('06 model)

1. Erase the DTC memory (see page 23-31).
2. Turn the ignition switch ON (II), and check that the SRS indicator comes on for about 6 seconds and then goes off.

   Does the SRS indicator stay on?

   YES—Go to step 3.

   NO—Intermittent failure, system is OK at this time. Go to Troubleshooting Intermittent Failure (see page 23-32).

3. Turn the ignition switch OFF. Make sure nothing is on the front passenger's seat.
4. Disconnect the ODS unit 18P connector D from the ODS unit.

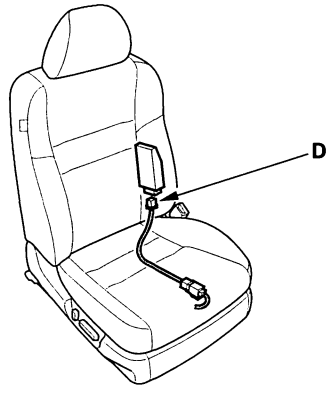

5. Turn the ignition switch ON (II).
6. Check for voltage between the No. 18 terminal of the ODS unit harness 18P connector D and body ground. There should be battery voltage.

ODS UNIT HARNESS 18P CONNECTOR D

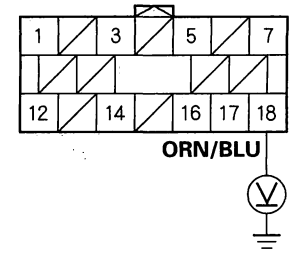

Wire side of female terminals

Is there battery voltage?

YES—Faulty ODS unit; replace the ODS unit (see page 23-216).

NO—Go to step 7.

7. Turn the ignition switch OFF.
8. Remove the gauge control module (see page 22-276). Disconnect gauge control module connector (36P) (A) from the gauge control module.

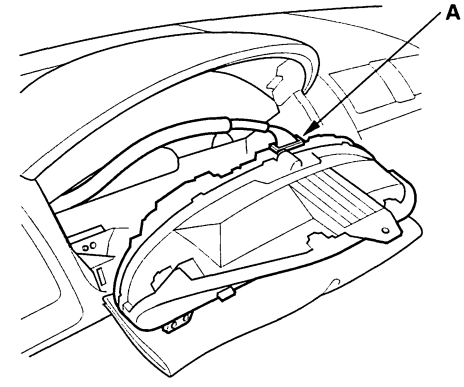

(cont'd)

Protected by AR

DTC Troubleshooting (cont'd)

9. Check resistance between the No. 18 terminal of the ODS unit 18P connector D and body ground. There should be an open circuit or at least 1 MΩ.

ODS UNIT 18P CONNECTOR D

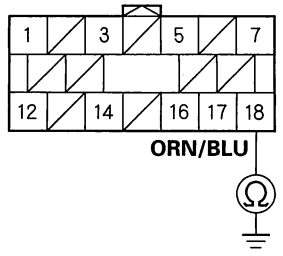

Wire side of female terminals

Is the resistance as specified?

YES—Replace the gauge control module. ■

NO—Short to ground in the ODS unit harness floor wire harness or dashboard wire harness; replace the faulty harness. ■

BACK

Protected by AR

DTC 91-1x (91-10 to 91-19, 91-1A to 91-1F): Internal Failure of the SRS Unit

NOTE: Before troubleshooting any of these DTCs, check the battery/system voltage. If the voltage is low, repair the charging system or replace the battery before troubleshooting the SRS. If the battery/system voltage is now OK, ask the customer if the battery ever went dead. A dead battery may trigger a DTC.

1. Erase the DTC memory (see page 23-31).
2. Turn the ignition switch ON (II), and check that the SRS indicator comes on for about 6 seconds and then goes off.

   Does the SRS indicator stay on, and is DTC 91-1x indicated?

   YES—Replace the SRS Unit (see page 23-213). ■

   NO—Intermittent failure, system is OK at this time. Go to Troubleshooting Intermittent Failures (see page 23-32). If another DTC is indicated, go to the DTC troubleshooting index.

DTC 91-2x (91-20 to 91-29, 91-2A to 91-2F): Short in SRS Indicator

1. Erase the DTC memory (see page 23-31).
2. Turn the ignition switch ON (II), and check that the SRS indicator comes on for about 6 seconds and then goes off.

   Does the SRS indicator stay on, and is DTC 91-2x indicated?

   YES—Go to step 3.

   NO—Intermittent failure, system is OK at this time. Go to Troubleshooting Intermittent Failures (see page 23-32). If another DTC is indicated, go to the DTC troubleshooting index.

3. Turn the ignition switch OFF. Disconnect the battery negative cable, and wait for 3 minutes.
4. Disconnect SRS unit connector A (28P) from the SRS unit (see step 7 on page 23-29).
5. Remove the gauge control module (see page 22-276). Disconnect the gauge control module connector 30P ('03-05 models) or 36P ('06 model) (A) from the gauge control module.

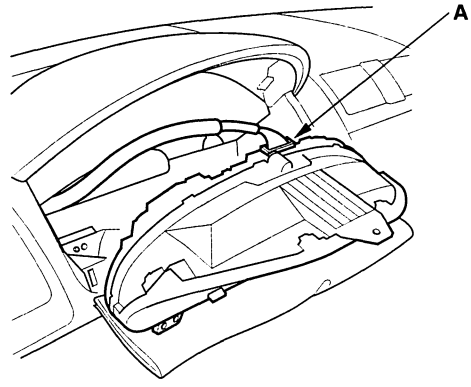

(cont'd)

Protected by AR

DTC Troubleshooting (cont'd)

6. Check resistance between the No. 19 terminal of SRS unit connector A (28P) and body ground. There should be an open circuit or at least 1 MΩ.

SRS UNIT CONNECTOR A (28P)

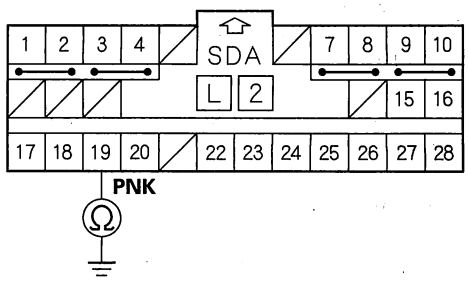

Wire side of female terminals

Is the resistance as specified?

YES—Go to step 7.

NO—Short to ground in the dashboard wire harness; replace the dashboard wire harness.■

7. Reconnect the gauge control module connector (A).

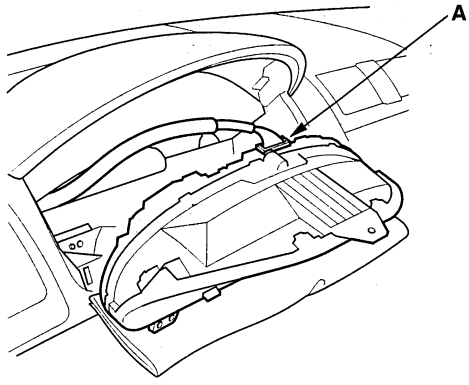

8. Turn the ignition switch ON (II).

9. Install a jumper wire between the No. 5 terminal and the No. 14 ('03-05 models), or the No. 18 ('06 model) terminal of the gauge control module connector 30P ('03-05 models), 36P ('06 model). The SRS indicator should go off.

'03-05 models

GAUGE CONTROL MODULE CONNECTOR (30P)

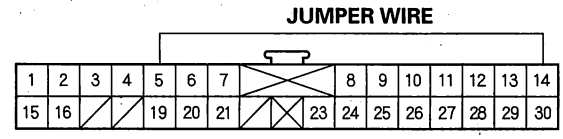

Wire side of female terminals

'06 model

GAUGE CONTROL MODULE CONNECTOR (36P)

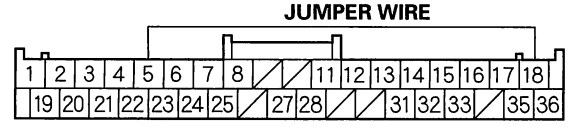

Wire side of female terminals

Does the SRS indicator go off?

YES—Faulty SRS unit or poor contact at SRS unit connector A (28P) and the SRS unit; check the connection. If the connection is OK, replace the SRS unit (see page 23-213).■

NO—Faulty SRS indicator circuit in the gauge control module or poor contact at gauge control module connector 30P ('03-05 models), 36P ('06 model); check the connection. If the connection is OK, replace the gauge control module.■

BACK

Protected by AR

DTC 92-1x (92-10 to 92-19, 92-1A to 92-1F): Passenger's Airbag Cutoff Indicator Malfunction ('04-06 models)

1. Erase the DTC memory (see page 23-31).
2. Turn the ignition switch ON (II), and check that the SRS indicator comes on for about 6 seconds and then goes off.

   Does the SRS indicator stay on, and is DTC 92-1x indicated?

   YES—Internal failure of SRS unit. Replace the SRS unit (see page 23-213).■

   NO—Intermittent failure, system is OK at this time. Go to Troubleshooting Intermittent Failures (see page 23-32). If another DTC is indicated, go to the DTC troubleshooting index.

DTC 92-2x (92-20 to 92-29, 92-2A to 92-2F): Open or Short to Ground in Passenger's Airbag Cutoff Indicator ('04-06 models)

NOTE: This DTC can be set if the key is turned on when the passenger's airbag cutoff indicator is unplugged.

1. Erase the DTC memory (see page 23-31).
2. Turn the ignition switch ON (II), and check that the SRS indicator comes on for about 6 seconds and then goes off.

   Does the SRS indicator stay on, and is DTC 92-2x indicated?

   YES—Go to step 3.

   NO—Intermittent failure, system is OK at this time. Go to Troubleshooting Intermittent Failures (see page 23-32). If another DTC is indicated, go to the DTC troubleshooting index.

3. Check the connection between the dashboard wire harness 6P connector and the passenger's airbag cutoff indicator.
4. Erase the DTC memory.
5. Check for a DTC.

   Is DTC 92-2x indicated?

   YES—Go to step 6.

   NO—Repair the poor connections and retest. If DTC 92-2x is still present, go to step 6.

6. Check the No. 21 (7.5 A) fuse in the driver's under-dash fuse/relay box.

   Is the fuse OK?

   YES—Go to step 7.

   NO—Replace the fuse, then turn the ignition switch ON (II). If the fuse blows again, check for a short in the No. 21 (7.5 A) fuse circuit (dashboard wire harness A).■

(cont'd)

Protected by AR

DTC Troubleshooting (cont'd)

7. Disconnect the passenger's airbag cutoff indicator 6P connector.

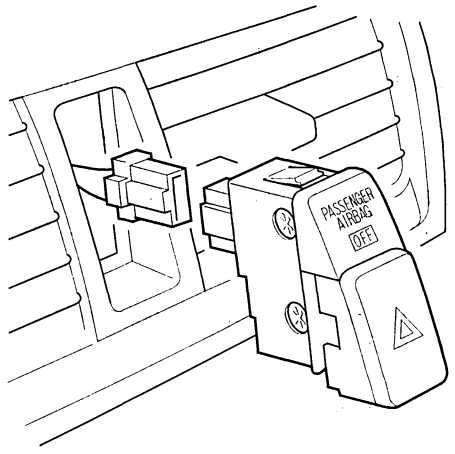

8. Turn the ignition switch ON (II).

9. Check for voltage between the No. 1 terminal of the passenger's airbag cutoff indicator 6P connector and body ground. There should be battery voltage.

PASSENGER'S AIRBAG CUTOFF INDICATOR 6P CONNECTOR

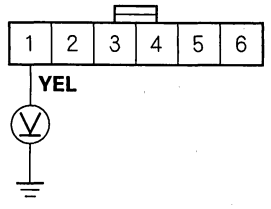

Wire side of female terminals

Is there battery voltage?

YES—Go to step 10.

NO—Open in the dashboard wire harness; replace the dashboard wire harness. ■

10. Turn the ignition switch OFF. Disconnect the battery negative cable, and wait for 3 minutes.

11. Disconnect SRS unit connector A (28P) from the SRS unit (see step 7 on page 23-29).

12. Reconnect the dashboard wire harness 6P connector to the passenger's airbag cutoff indicator.

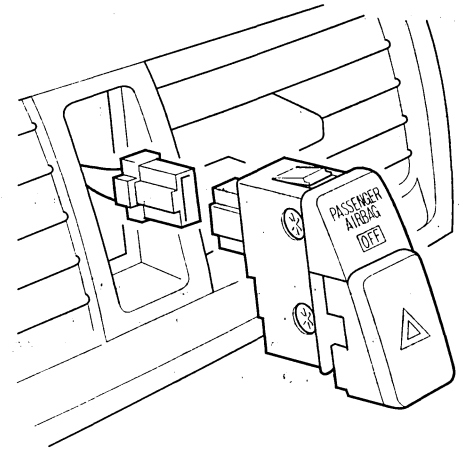

13. Reconnect the battery negative cable.

BACK

Protected by AR

14. Connect the No. 20 terminal of SRS unit connector A (28P) to body ground with a jumper wire.

SRS UNIT CONNECTOR A (28P)

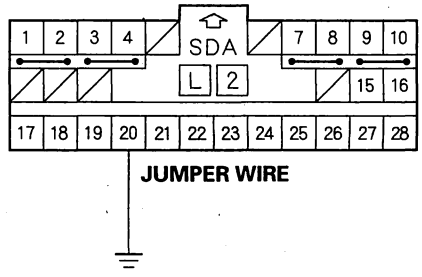

- Wire side of female terminals

15. Turn the ignition switch ON (II).

16. Check the passenger's airbag cutoff indicator.

Does the passenger's airbag cutoff indicator come on?

YES—Faulty SRS unit; replace the SRS unit (see page 23-213). ■

NO—Go to step 17.

17. Turn the ignition switch OFF.

18. Disconnect the jumper wire.

19. Disconnect the passenger's airbag cutoff indicator 6P connector (A) again.

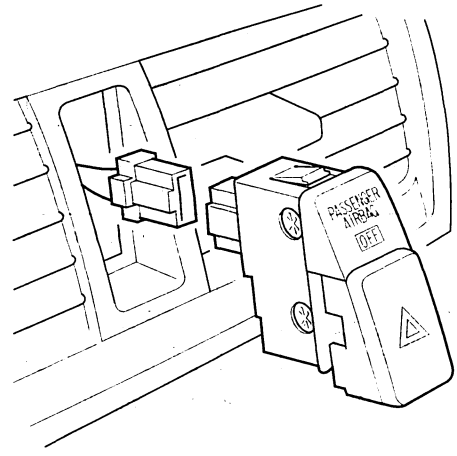

(cont'd)

Protected by AR

DTC Troubleshooting (cont'd)

20. Check resistance between the No. 2 terminal of the passenger's airbag cutoff indicator 6P connector and the No. 20 terminal of SRS unit connector A (28P). There should be 0—1.0 Ω.

SRS UNIT CONNECTOR A (28P)

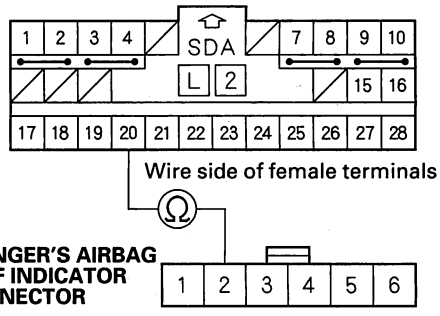

Is the resistance as specified?

YES—Go to step 23.

NO—Go to step 21.

21. Disconnect SRS unit connector A (28P) from the SRS unit.

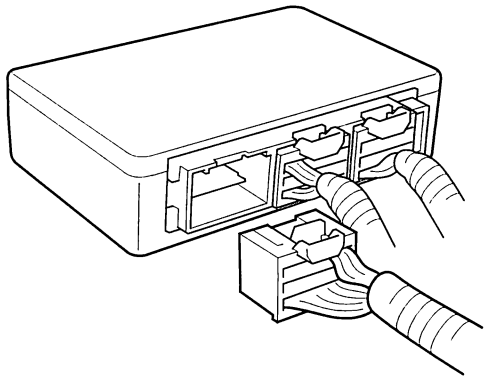

22. Check resistance between the No. 2 terminal of the passenger's airbag cutoff indicator 6P connector and the No. 20 terminal of dashboard wire harness 28P connector C801. There should be 0—1.0 Ω.

DASHBOARD WIRE HARNESS 28P CONNECTOR C801

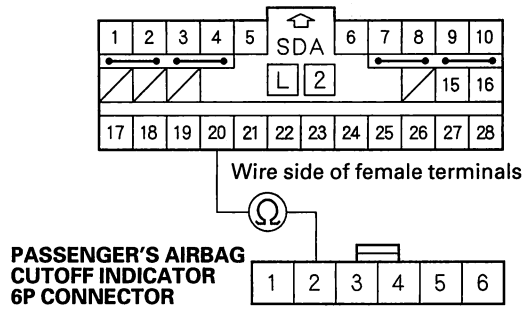

Is the resistance as specified?

YES—Open in the dashboard wire harness; replace the dashboard wire harness.■

NO—Go to step 23.

BACK

Protected by AR

23. Check resistance between the No. 20 terminal of SRS unit connector A (28P) and body ground. There should be an open circuit or at least 1 MΩ.

SRS UNIT CONNECTOR A (28P)

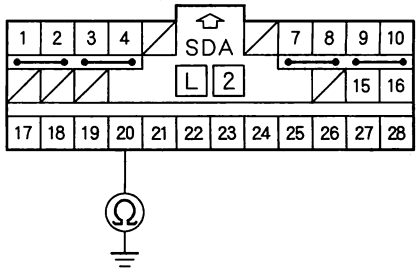

Wire side of female terminals

Is the resistance as specified?

YES—Check for faulty SRS unit or passenger's airbag cutoff indicator; replace the passenger's airbag cutoff indicator. If the problem is still present, replace the SRS unit (see page 23-213).■

NO—Go to step 24.

24. Check resistance between the No. 20 terminal of SRS unit connector A (28P) and body ground. There should be an open circuit or at least 1 MΩ.

SRS UNIT CONNECTOR A (28P)

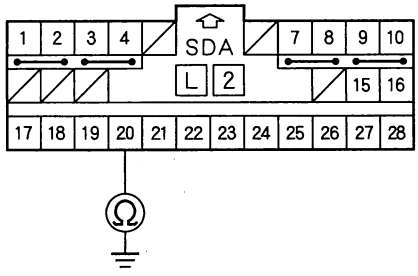

Wire side of female terminals

Is the resistance as specified?

YES—Short to ground in dashboard wire harness; replace dashboard wire harness.■

NO—Go to step 25.

25. Disconnect SRS unit connector A (28P) from the SRS unit.

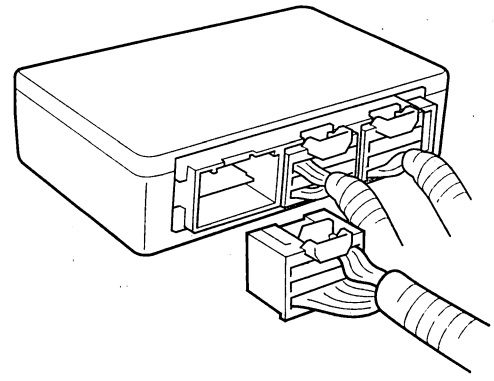

26. Check resistance between the No. 20 terminal of SRS unit connector A (28P) and body ground. There should be an open circuit or at least 1 MΩ.

SRS UNIT CONNECTOR A (28P)

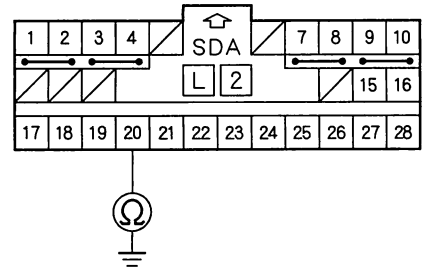

Wire side of female terminals

Is the resistance as specified?

YES—Short to ground in the SRS main harness; replace the SRS main harness.■

NO—Short to ground in the dashboard wire harness; replace the dashboard wire harness.■

Protected by AR

DTC Troubleshooting (cont'd)

DTC A1-1x (A1-10 to A1-19, A1-1A to A1-1F): Faulty Power Supply (VA Line)

1. Check the No. 10 (7.5 A) fuse in the under-dash fuse/relay box.

   Is the fuse OK?

   YES—Go to step 2.

   NO—Replace the fuse, then turn the ignition switch ON (II). If the fuse blows again, check for a short in the No. 10 (7.5 A) fuse circuit (dashboard wire harness, floor wire harness, or OPDS/ODS unit harness).■

2. Disconnect the battery negative cable, and wait for 3 minutes.

3. Disconnect SRS unit connector A (28P) from the SRS unit (see step 7 on page 23-29).

4. Reconnect the battery negative cable.

5. Connect a voltmeter between the No. 17 terminal of SRS unit connector A (28P) and body ground. Turn the ignition switch ON (II), and measure voltage. There should be battery voltage.

SRS UNIT CONNECTOR A (28P)

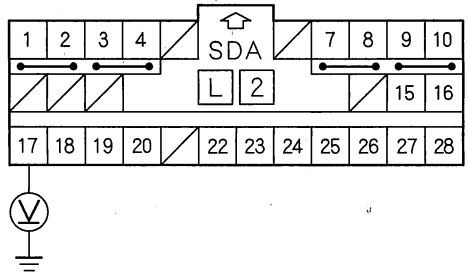

Wire side of female terminals

Is there battery voltage?

YES—Faulty SRS unit or poor contact at SRS unit connector A (28P) and the SRS unit; check the connection. If the connection is OK, replace the SRS unit (see page 23-213).■

NO—Go to step 6.

6. Turn the ignition switch OFF.

7. Disconnect under-dash fuse/relay box connector S (2P).

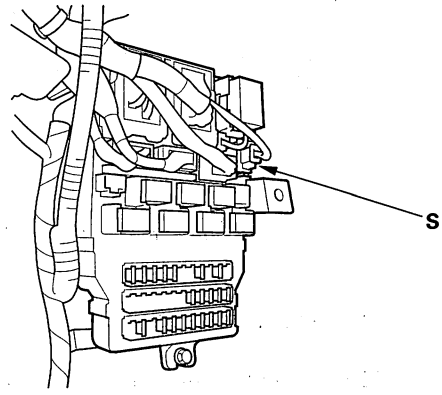

BACK

Protected by AR

8. Check resistance between the No. 1 terminal of under-dash fuse/relay box connector S (2P) and the No. 17 terminal of SRS unit connector A (28P). There should be 0—1.0 Ω.

UNDER-DASH FUSE/RELAY BOX CONNECTOR S (2P) **SRS UNIT CONNECTOR A (28P)**

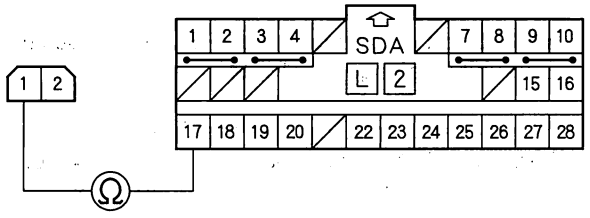

Wire side of female terminals

Is the resistance as specified?

YES—Open in the under-dash fuse/relay box or poor contact between connector S (2P) and the under-dash fuse/relay box; check the connection. If the connection is OK, replace the under-dash fuse/relay box (see page 22-77). ■

NO—Open in the dashboard wire harness; replace the dashboard wire harness. ■

Protected by AR

DTC Troubleshooting (cont'd)

DTC A2-1x (A2-10 to A2-19, A2-1A to A2-1F): Faulty Power Supply (VB Line)

1. Check the No. 22 (10 A) fuse in the under-dash fuse/relay box.

   Is the fuse OK?

   YES—Go to step 11.

   NO—Go to step 2.

2. Replace the No. 22 (10 A) fuse.

3. Turn the ignition switch ON (II) and wait for 30 seconds. Then turn the ignition switch OFF.

4. Check the No. 22 (10 A) fuse,

   Is the fuse OK?

   YES—The system is OK at this time.■

   NO—Go to step 5.

5. Replace the No. 22 (10 A) fuse.

6. Turn the ignition switch OFF. Disconnect the battery negative cable, and wait for 3 minutes.

7. Disconnect SRS unit connector A (28P) from the SRS unit (see step 7 on page 23-29).

8. Reconnect the battery negative cable.

9. Turn the ignition switch ON (II), and wait for 30 seconds. Then turn the ignition switch OFF.

10. Check the No. 22 (10 A) fuse.

    Is the fuse OK?

    YES—Short to ground in the SRS unit; replace the SRS unit (see page 23-213).■

    NO—Short to ground in the dashboard wire harness or in the under-dash fuse/relay box No. 22 (10 A) fuse line; replace the dashboard wire harness. If the problem is still there, replace the under-dash fuse/relay box.■

11. Turn the ignition switch OFF. Disconnect the battery negative cable, and wait for 3 minutes.

12. Disconnect SRS unit connector A (28P) from the SRS unit (see step 7 on page 23-29).

BACK

Protected by AR

13. Reconnect the battery negative cable.

14. Connect a voltmeter between the No. 18 terminal of SRS unit connector A (28P) and body ground. Turn the ignition switch ON (II), and measure voltage. There should be battery voltage.

SRS UNIT CONNECTOR A (28P)

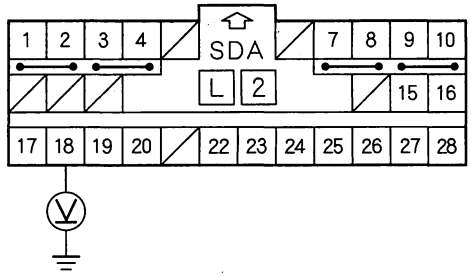

Wire side of female terminals

Is there battery voltage?

YES—Faulty SRS unit or poor contact at SRS unit connector A (28P) and the SRS unit; check the connection. If the connection is OK, replace the SRS unit (see page 23-213).■

NO—Go to step 15.

15. Turn the ignition switch OFF.

16. Disconnect under-dash fuse/relay box connector S (2P).

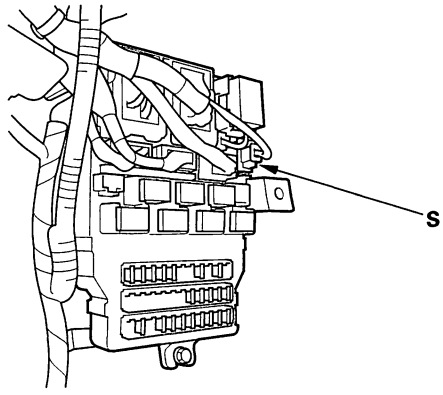

17. Check resistance between the No. 2 terminal of the under-dash fuse/relay box connector S (2P) and the No. 18 terminal of SRS unit connector A (28P). There should be 0—1.0 Ω.

UNDER-DASH FUSE/RELAY BOX CONNECTOR S (2P) **SRS UNIT CONNECTOR A (28P)**

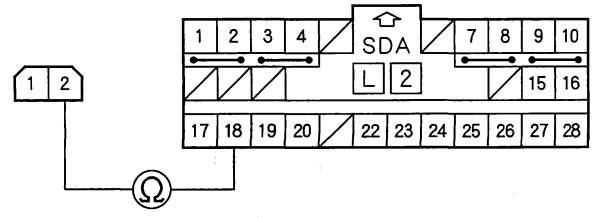

Wire side of female terminals

Is the resistance as specified?

YES—Open in the under-dash fuse/relay box or poor contact between connector S (2P) and the under-dash fuse/relay box; check the connection. If the connection is OK, replace the under-dash fuse/relay box (see page 22-77).■

NO—Open in the dashboard wire harness; replace the dashboard wire harness.■

Protected by AR

Symptom Troubleshooting

SRS indicator does not come on ('03-05 models)

1. Turn the ignition switch ON (II), and see if the other indicators come on (brake system, etc).

   Do the other indicators come on?

   YES—Go to step 2.

   NO—Go to step 9.

2. Turn the ignition switch OFF, then remove the gauge control module (see page 22-276). Disconnect the gauge control module connector (30P) (A) from the gauge control module.

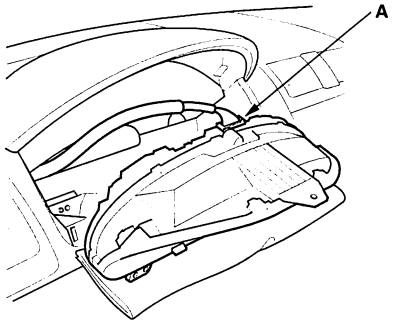

3. Check resistance between the No. 21 terminal of gauge control module connector (30P) and body ground. There should be 0—1.0 Ω.

GAUGE CONTROL MODULE CONNECTOR (30P)

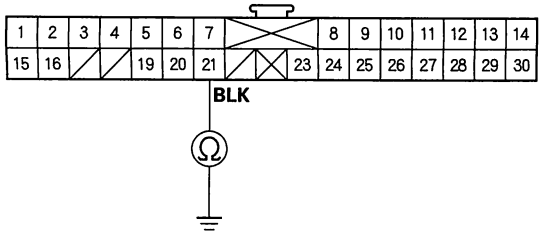

Wire side of female terminals

Is the resistance as specified?

YES—Go to step 4.

NO—Open in the BLK wire of the dashboard wire harness, junction connector or faulty body ground terminal (G503) (see page 22-34). If the body ground terminal is OK, replace the dashboard wire harness.■

4. Check for voltage between the No. 14 terminal of the gauge control module connector (30P) and body ground within the first 6 seconds after turning the ignition switch ON (II). There should be about 1.0 V for 6 seconds and then about 11 V.

GAUGE CONTROL MODULE CONNECTOR (30P)

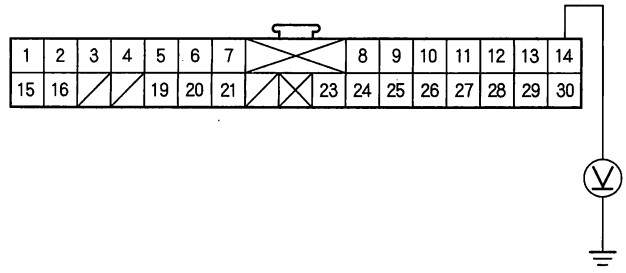

Wire side of female terminals

Is the voltage as specified?

YES—Faulty SRS indicator circuit in the gauge control module; replace the gauge control module.■

NO—Go to step 5.

5. Turn the ignition switch OFF. Disconnect the battery negative cable, and wait for 3 minutes.

BACK

Protected by AR

6. Disconnect SRS unit connector A (28P) from the SRS unit (see step 7 on page 23-29).

7. Reconnect the battery negative cable.

8. Connect a voltmeter between the No. 14 terminal of gauge control module connector (30P) and body ground. Turn the ignition switch ON (II), and measure voltage. There should be 0.5 V or less.

GAUGE CONTROL MODULE CONNECTOR (30P)

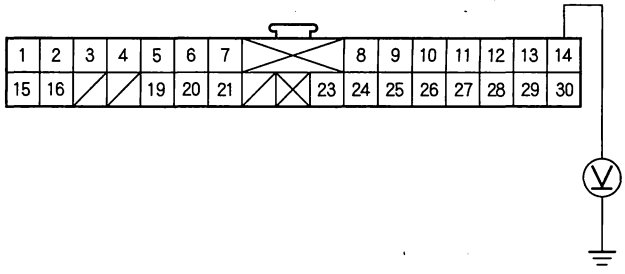

Wire side of female terminals

Is the voltage as specified?

YES—Faulty SRS unit; replace the SRS unit (see page 23-213). ■

NO—Short to power in the PNK wire of the dashboard wire harness or junction connector; replace the dashboard wire harness. ■

9. Turn the ignition switch OFF. Check the No. 21 (7.5 A) fuse in the under-dash fuse/relay box.

Is the fuse blown?

YES—Go to step 11.

NO—Go to step 10.

10. Connect a voltmeter between the No. 5 terminal of the gauge control module connector (30P) and body ground. Turn the ignition switch ON (II), and measure the voltage. There should be battery voltage.

GAUGE CONTROL MODULE CONNECTOR (30P)

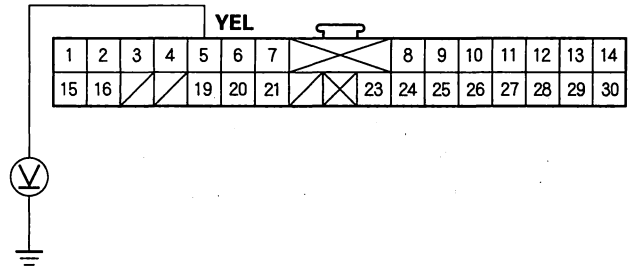

Wire side of female terminals

Is there battery voltage?

YES—Faulty SRS indicator circuit in the gauge control module or poor contact at the gauge control module connector (30P) and the gauge control module; if the connection is OK, replace the gauge control module. ■

NO—Open in the under-dash fuse/relay box No. 21 (7.5 A) fuse circuit, or open in the YEL wire of the dashboard wire harness A or junction connector. If the under-dash fuse/relay box is OK, replace the dashboard wire harness. ■

11. Replace the No. 21 (7.5 A) fuse, then check to see if the indicators comes on.

Do the indicators come on?

YES—The system is OK at this time. ■

NO—Repair the short to ground in the under-dash fuse/relay box No. 21 (7.5 A) fuse circuit. ■

Protected by AR

Symptom Troubleshooting (cont'd)

SRS indicator does not come on ('06 model)

1. Turn the ignition switch ON (II), and see if the other indicators come on (brake system, etc).

   Do the other indicators come on?

   YES—Go to step 2.

   NO—Go to step 9.

2. Turn the ignition switch OFF, then remove the gauge control module (see page 22-276). Disconnect the gauge control module connector (36P) (A) from the gauge control module.

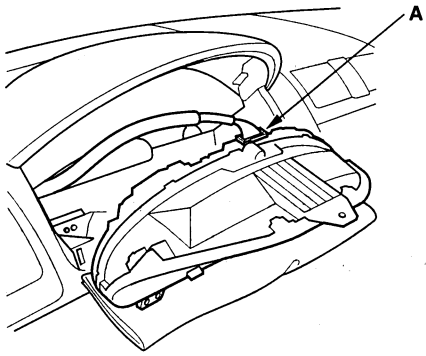

3. Check resistance between the No. 25 terminal of gauge control module connector (36P) and body ground. There should be 0—1.0 Ω.

GAUGE CONTROL MODULE CONNECTOR (36P)

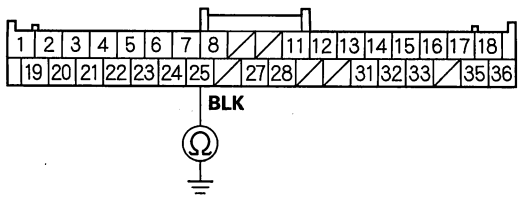

Wire side of female terminals

Is the resistance as specified?

YES—Go to step 4.

NO—Open in the BLK wire of the dashboard wire harness, junction connector or faulty body ground terminal (G503) (see page 22-34). If the body ground terminal is OK, replace the dashboard wire harness.■

4. Check for voltage between the No. 18 terminal of the gauge control module connector (36P) and body ground within the first 6 seconds after turning the ignition switch ON (II). There should be about 1.0 V for 6 seconds and then about 11 V.

GAUGE CONTROL MODULE CONNECTOR (36P)

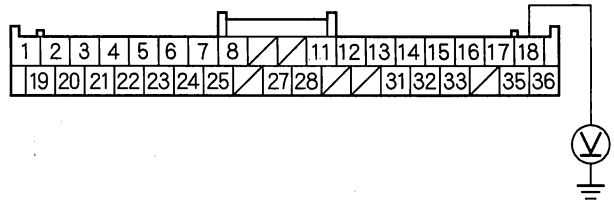

Wire side of female terminals

Is the voltage as specified?

YES—Faulty SRS indicator circuit in the gauge control module; replace the gauge control module.■

NO—Go to step 5.

5. Turn the ignition switch OFF. Disconnect the battery negative cable, and wait for 3 minutes.

BACK

Protected by AR

6. Disconnect SRS unit connector A (28P) from the SRS unit (see step 7 on page 23-29).

7. Reconnect the battery negative cable.

8. Connect a voltmeter between the No. 18 terminal of gauge control module connector (36P) and body ground. Turn the ignition switch ON (II), and measure voltage. There should be 0.5 V or less.

GAUGE CONTROL MODULE CONNECTOR (36P)

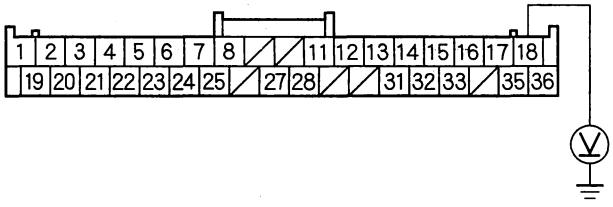

Wire side of female terminals

Is the voltage as specified?

YES—Faulty SRS unit; replace the SRS unit (see page 23-213). ■

NO—Short to power in the PNK wire of the dashboard wire harness or junction connector; replace the dashboard wire harness. ■

9. Turn the ignition switch OFF. Check the No. 21 (7.5 A) fuse in the under-dash fuse/relay box.

Is the fuse blown?

YES—Go to step 11.

NO—Go to step 10.

10. Connect a voltmeter between the No. 5 terminal of the gauge control module connector (36P) and body ground. Turn the ignition switch ON (II), and measure the voltage. There should be battery voltage.

GAUGE CONTROL MODULE CONNECTOR (36P)

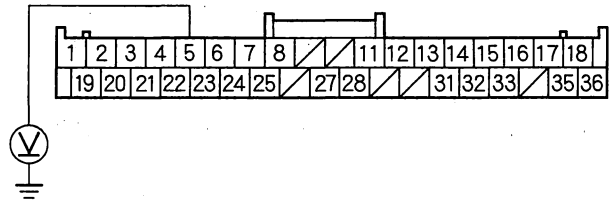

Wire side of female terminals

Is there battery voltage?

YES—Faulty SRS indicator circuit in the gauge control module or poor contact at the gauge control module connector (36P) and the gauge control module; if the connection is OK, replace the gauge control module. ■

NO—Open in the under-dash fuse/relay box No. 21 (7.5 A) fuse circuit, or open in the YEL wire of the dashboard wire harness A or junction connector. If the under-dash fuse/relay box is OK, replace the dashboard wire harness. ■

11. Replace the No. 21 (7.5 A) fuse, then check to see if the indicators comes on.

Do the indicators come on?

YES—The system is OK at this time. ■

NO—Repair the short to ground in the under-dash fuse/relay box No. 21 (7.5 A) fuse circuit. ■

Protected by AR

Symptom Troubleshooting (cont'd)

SRS indicator stays on, but no DTCs are stored ('03-05 models)

NOTE:
- If you cannot retrieve DTCs with the HDS using the SRS menu method, retrieve flash codes with the HDS in SCS mode.
- A new SRS unit must sense the entire system is OK before completing its initial self-test. The most common cause of an incomplete self-test is the failure to replace all deployed parts after a collision, in particular seat belt tensioners (see page 23-194).
- A battery/system voltage above 15.2 V can cause the SRS indicator to come on without storing any DTCs.

1. Disconnect the battery negative cable, and wait for 3 minutes.

2. Disconnect SRS unit connector A (28P) from the SRS unit (see step 7 on page 23-29).

3. Remove the gauge control module (see page 22-276). Disconnect gauge control module connector (30P) (A) from the gauge control module.

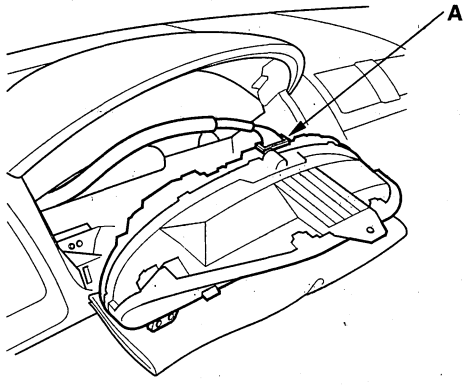

4. Check resistance between the No. 14 terminal of gauge control module connector (30P) and the No. 19 terminal of SRS unit connector A (28P). There should be 1 Ω or less.

GAUGE CONTROL MODULE CONNECTOR (30P)

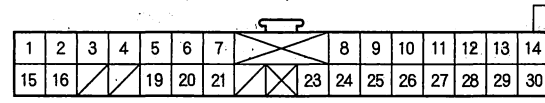

Wire side of female terminals

SRS UNIT CONNECTOR A (28P)

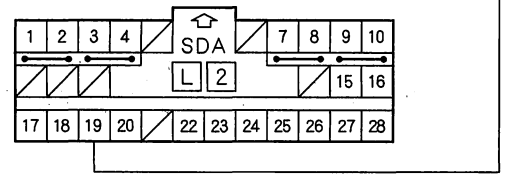

Wire side of female terminals

Is the resistance as specified?

YES—Go to step 5.

NO—Open in the dashboard wire harness; replace the dashboard wire harness.■

5. Reconnect the battery negative cable.

BACK

Protected by AR

6. Reconnect gauge control module connector (30P) to the gauge control module.
7. Turn the ignition switch ON (II).
8. Install a jumper wire between the No. 5 terminal and the No. 14 terminal of the gauge control module connector (30P). The SRS indicator should go off.

GAUGE CONTROL MODULE CONNECTOR (30P)

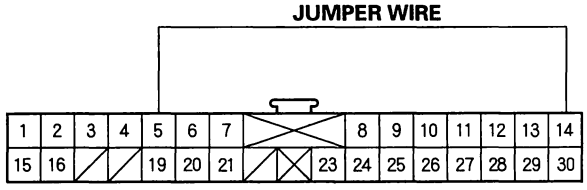

Wire side of female terminals

Does the SRS indicator go off?

YES—Faulty SRS unit or poor contact at SRS unit connector A (28P) and the SRS unit; check the connection. If the connection is OK, replace the SRS unit (see page 23-213). ■

NO—Faulty SRS indicator circuit in the gauge control module or poor contact at gauge control module connector (30P); check the connection. If the connection is OK, replace the gauge control module. ■

Protected by AR

Symptom Troubleshooting (cont'd)

SRS indicator stays on, but no DTCs are stored ('06 model)

NOTE:
- If you cannot retrieve DTCs with the HDS using the SRS menu method, retrieve flash codes with the HDS in SCS mode.
- A new SRS unit must sense the entire system is OK before completing its initial self-test. The most common cause of an incomplete self-test is the failure to replace all deployed parts after a collision, in particular seat belt tensioners (see page 23-194).
- A battery/system voltage above 15.2 V can cause the SRS indicator to come on without storing any DTCs.

1. Disconnect the battery negative cable, and wait for 3 minutes.

2. Disconnect SRS unit connector A (28P) from the SRS unit (see step 7 on page 23-29).

3. Remove the gauge control module (see page 22-276). Disconnect gauge control module connector (36P) (A) from the gauge control module.

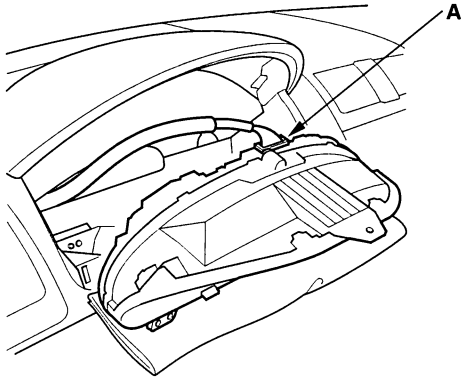

4. Check resistance between the No. 18 terminal of gauge control module connector (36P) and the No. 19 terminal of SRS unit connector A (28P). There should be 1 Ω or less.

GAUGE CONTROL MODULE CONNECTOR (36P)

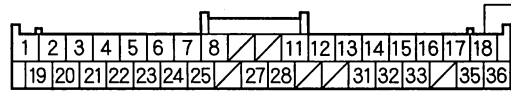

Wire side of female terminals

SRS UNIT CONNECTOR A (28P)

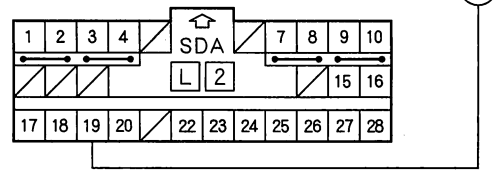

Wire side of female terminals

Is the resistance as specified?

YES—Go to step 5.

NO—Open in the dashboard wire harness; replace the dashboard wire harness. ■

5. Reconnect the battery negative cable.

BACK

Protected by AR

6. Reconnect gauge control module connector (36P) to the gauge control module.

7. Turn the ignition switch ON (II).

8. Install a jumper wire between the No. 5 terminal and the No. 18 terminal of the gauge control module connector (36P). The SRS indicator should go off.

GAUGE CONTROL MODULE CONNECTOR (36P)

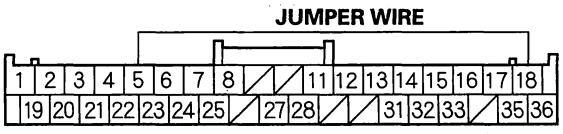

Wire side of female terminals

Does the SRS indicator go off?

YES—Faulty SRS unit or poor contact at SRS unit connector A (28P) and the SRS unit; check the connection. If the connection is OK, replace the SRS unit (see page 23-213). ■

NO—Faulty SRS indicator circuit in the gauge control module or poor contact at gauge control module connector (36P); check the connection. If the connection is OK, replace the gauge control module. ■

Protected by AR

Component Replacement/Inspection After Deployment

NOTE:
- Before doing any SRS repairs, use the HDS SRS menu method to check for DTCs; read the DTC for the less obvious deployed parts (seat belt tensioners, front impact sensors, side airbag sensors, etc.)
- Do not mix TRW and Denso impact sensors. Impact sensors and the SRS unit must be of the same manufacturer.

After a collision where the seat belt tensioners deployed, replace these items:
- SRS unit
- Seat belt tensioners
- Front impact sensors

After a collision where the front airbag(s) deployed, replace these items:
- SRS unit
- Deployed airbag(s)
- Seat belt tensioners
- Front impact sensors

After a collision where the side airbag(s) deployed, replace these items:
- SRS unit
- Deployed side airbag(s)
- Seat belt tensioner(s) for the side(s) that deployed.
- Side impact sensor(s) (first) for the side(s) that deployed
- Side impact sensor(s) (second) for the side(s) that deployed (4-door)

After a collision where the side curtain airbag(s) deployed, replace these items:
- SRS unit
- Deployed side curtain airbag(s)
- Seat belt tensioner(s) for the side(s) that deployed
- Side impact sensor(s) (first) for the side(s) that deployed
- Side impact sensor(s) (second) for the side(s) that deployed (4-door)
- Roof trim
- A-pillar trim
- B-pillar trim
- C-pillar trim
- Front grab handle
- Sunvisor
- All related trim clips

After a moderate to severe side or rear collision, inspect for damage on the side curtain airbag or other related components. According to the degree of damage, replace components as needed.

After a collision, where a side curtain airbag has deployed, replace all trim clips on that side, even if they appear to be undamaged. Replace the clips on these parts:
- A-pillar trim
- B-pillar trim
- C-pillar trim
- Front grab handle
- Sunvisor

A-Pillar

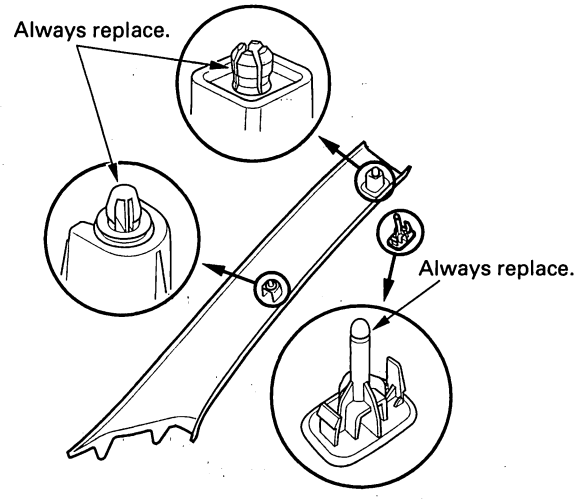

B-Pillar (4-door)

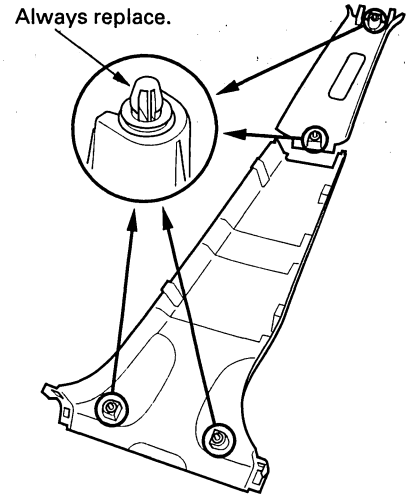

BACK

Protected by AR

C-Pillar (4-door)

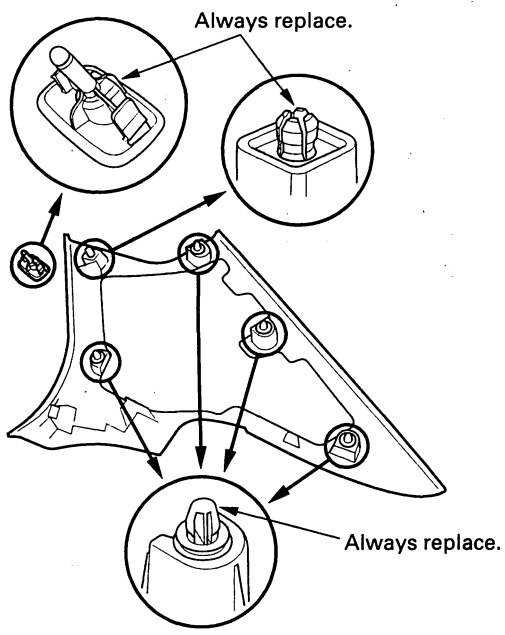

B-Pillar (2-door)

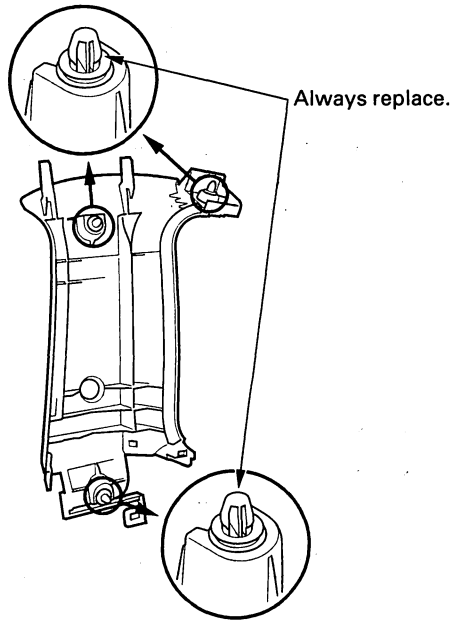

C-Pillar (2-door)

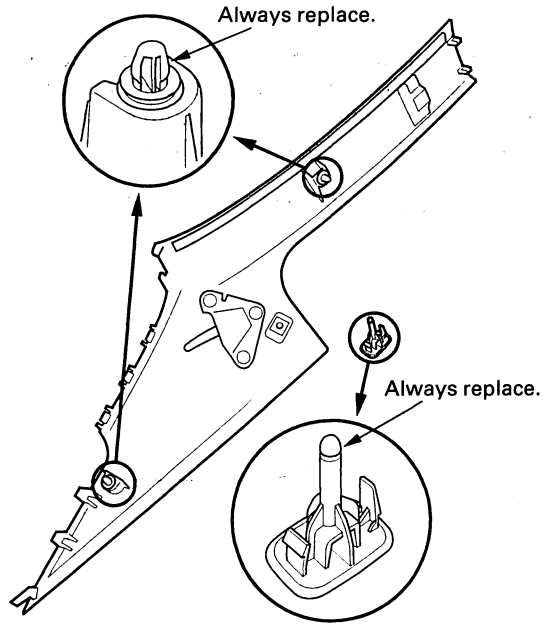

During the repair process, inspect these areas:

- Inspect all the SRS wire harnesses. Replace, don't repair, any damaged harnesses.
- Inspect the cable reel for heat damage. If there is any damage, replace the cable reel.

After the vehicle is completely repaired, turn the ignition switch ON (II). If the SRS indicator comes on for about 6 seconds and then goes off, the SRS is OK. If the indicator does not function properly, use the HDS SRS Menu Method to read the DTC. If you cannot retrieve a code, go to SRS Symptom Troubleshooting.

(cont'd)

Protected by AR

Component Replacement/Inspection After Deployment (cont'd)

Checking and Adjusting the Headliner/Pillar Trim Overlap

To prevent the side curtain airbag from accidentally deploying and damaged the pillar trim, the overlap between the headliner and pillar trim must be less then 15 mm. To check the overlap, do this:

1. Install the headliner (A) and the pillar trim (B).

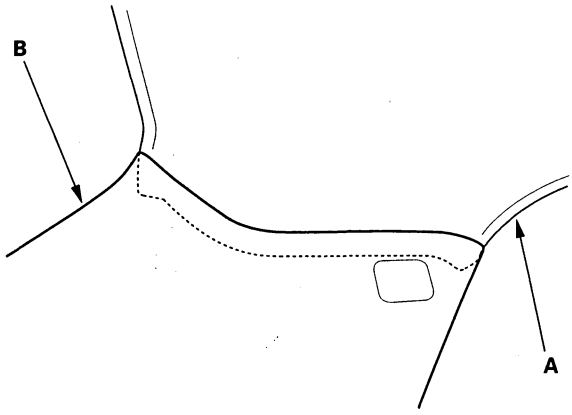

2. Using masking tape on the headliner, mark the upper edge of each pillar trim.

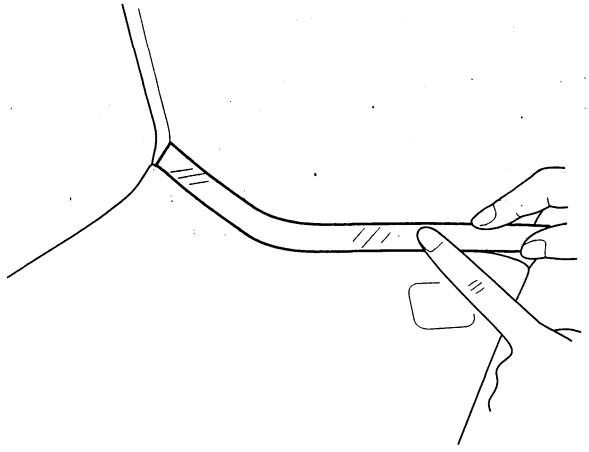

3. Remove the pillar trims, and measure the headliner overlap.

- '04-06 2-Door Models: If the overlap is less than 12 mm, remove the tape, and install the pillar trims.
- '04-06 2-Door Models: If the overlap is more than 12 mm, go to step 4.
- If the overlap is less than 15 mm, remove the tape, and install the pillar trims.
- If the overlap is more than 15 mm, go to step 4.

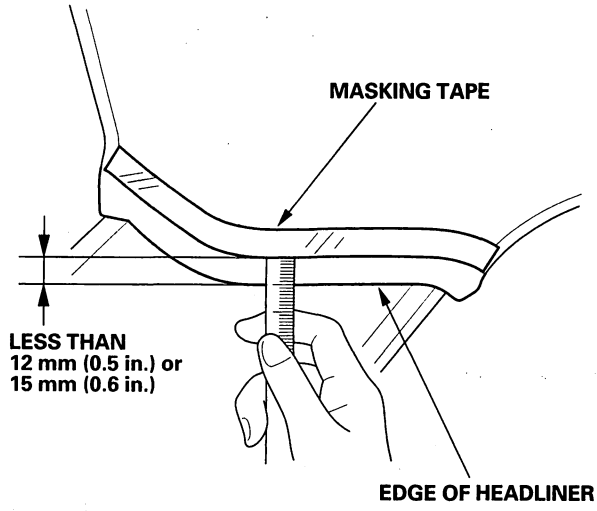

4. Carefully trim the headliner with a utility knife, reducing the overlap to less than 12 mm ('04-06 Models, 2-door) or 15 mm.

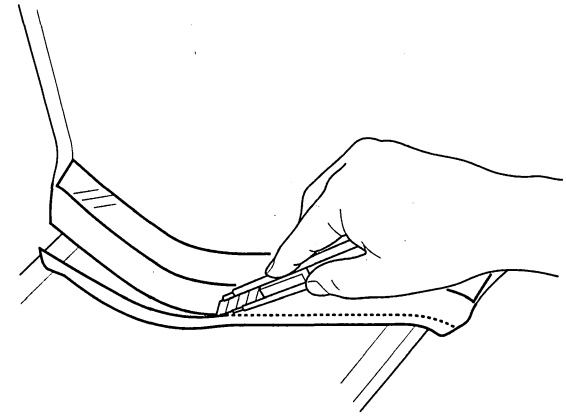

5. Remove the tape, and install the pillar trim.

BACK

Protected by AR

Driver's Airbag Replacement

Removal

1. Disconnect the battery negative cable, and wait at least 3 minutes before beginning work.
2. Remove the access panel (A) from the steering wheel, then disconnect the driver's airbag 4P connector (B) from the cable reel.

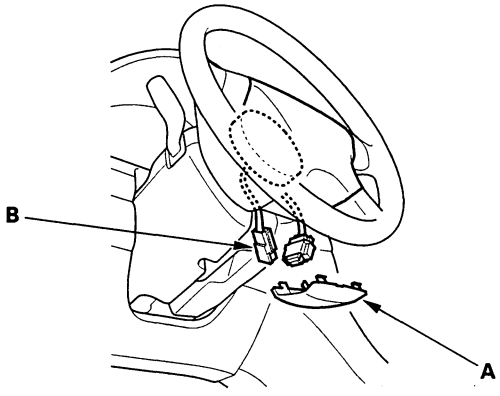

3. Remove the two Torx bolts (A) using a Torx T30 bit.

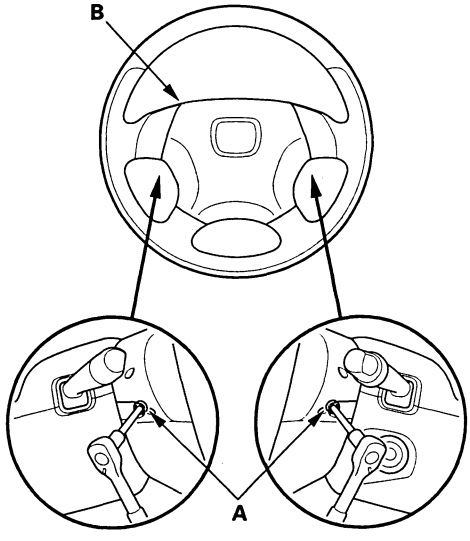

4. Disconnect the horn switch connector (1P), then remove the driver's airbag (B).

Installation

1. Connect the horn switch connector (1P) (A) to the driver's airbag.

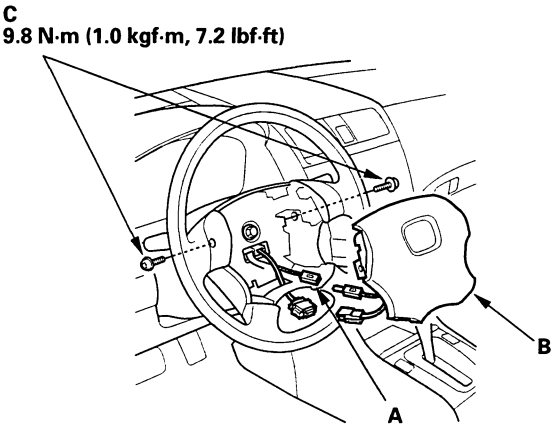

2. Place the new driver's airbag (B) in the steering wheel, and secure it with new Torx bolts (C).
3. Connect the cable reel to the driver's airbag 4P connector (A), then install the access panel (B) on the steering wheel.

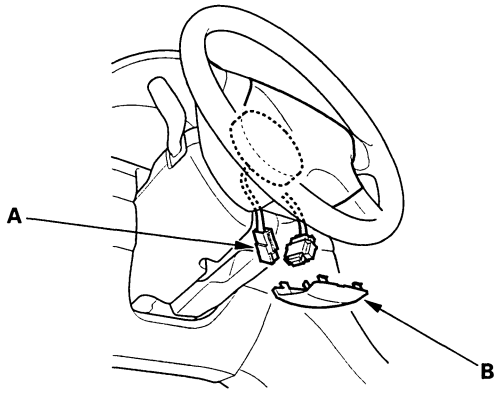

4. Connect the battery negative cable.
5. After installing the airbag, confirm proper system operation:
   - Turn the ignition switch ON (II); the SRS indicator should come on for about 6 seconds and then go off.
   - Make sure the horn button works.

Protected by AR

Front Passenger's Airbag Replacement

Removal

1. Disconnect the battery negative cable, and wait at least 3 minutes before beginning work.
2. Remove the glove box (see page 20-132).
3. Disconnect the front passenger's airbag 4P connector (A) from dashboard wire harness.

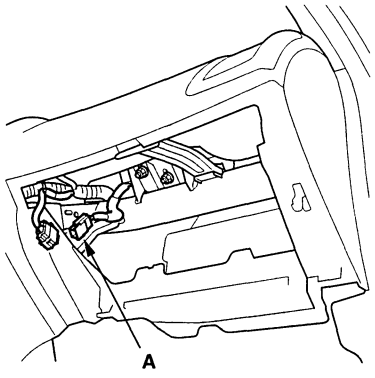

4. Disconnect the passenger's A-pillar trim.
   - Without side curtain airbag (see page 20-94).
   - With side curtain airbag (see page 20-99).
5. Remove the three mounting nuts (A) from the bracket. Cover the lid and dashboard with a cloth, and pry carefully with a flat-tip screwdriver to lift the front passenger's airbag (B) out of the dashboard.

   NOTE: The airbag lid has pawls on each side which attach it to the dashboard.

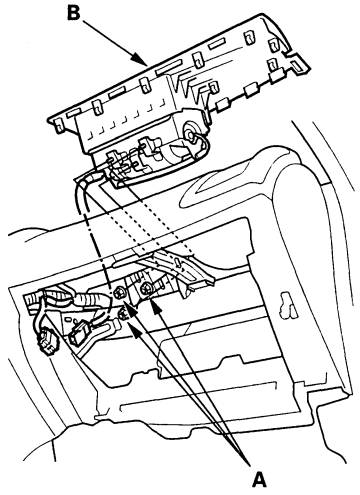

Installation

1. Place the new front passenger's airbag (A) into the dashboard. Tighten the front passenger's airbag mounting nuts (B).

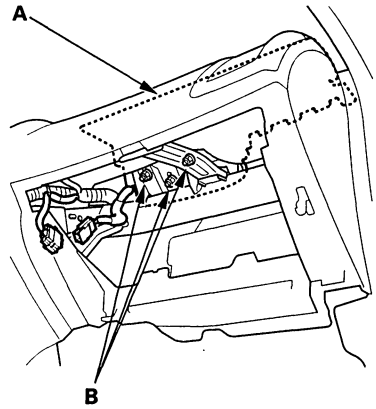

9.8 N·m (1.0 kgf·m, 7.2 lbf·ft)

2. Connect the front passenger's airbag 4P connector (A) to dashboard wire harness, then reinstall the glove box and passenger's front pillar trim.

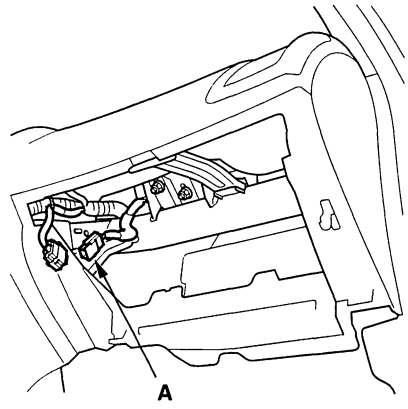

3. Reconnect the battery negative cable.
4. After installing the airbag, confirm proper system operation: Turn the ignition switch ON (II); the SRS indicator should come on for about 6 seconds and then go off.

BACK

Protected by AR

Side Airbag Replacement

NOTE: Review the seat replacement procedure before performing repairs or service.

Removal

1. Disconnect the battery negative cable, and wait at least 3 minutes before beginning work.

2. Disconnect the side airbag harness 2P connectors (A).

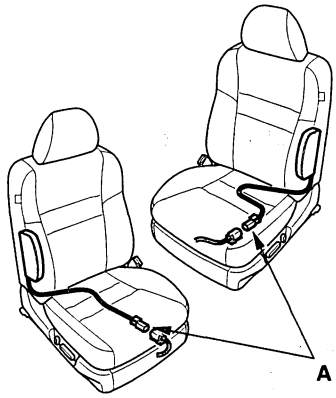

3. Remove the seat assembly (see page 20-144) and seat-back cover (see page 20-166).

4. Remove the mounting nut (A) and the side airbag (B).

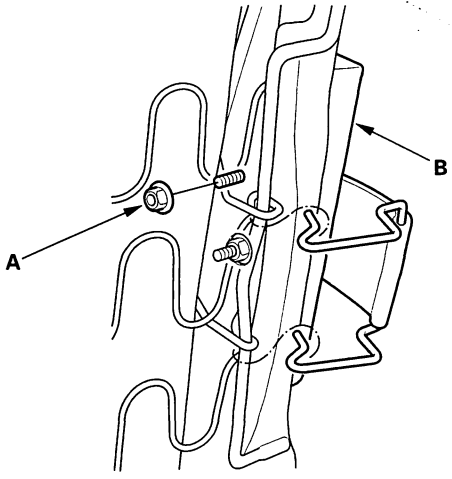

Installation

NOTE:
- If the side airbag lid is secured by a tape, remove the tape.
- Do not open the lid of the side airbag cover.
- Use new mounting nuts tightened to the specified torque.
- Make sure that the seat-back cover is installed properly. Improper installation may prevent proper deployment.
- Be sure to install the harness wires so that they are not pinched or interfering with other parts.

1. Place the new side airbag on the seat-back frame (A). Tighten the side airbag mounting nuts (B).

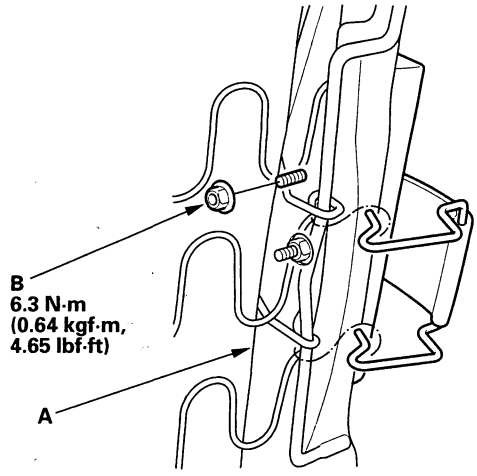

2. Install the seat-back cover in the reverse order of removal (see page 20-166).

3. Install the seat assembly (see page 20-144), then connect the side airbag harness 2P connector.

4. Move the front seat and the seat-back through their full ranges of movement, making sure the harness wires are not pinched or interfering with other parts.

5. Reconnect the battery negative cable.

6. Connect the HDS and clear the DTCs (see page 23-31).

7. After installing the side airbag, confirm proper system operation: Turn the ignition switch ON (II); the SRS indicator should come on for about 6 seconds and then go off.

BACK

Protected by AR

Side Curtain Airbag Replacement

Removal

NOTE:
- Review the interior trim replacement procedure before performing repair or service.
- Removal of the side curtain airbag must be performed according to the precautions/procedures described at the beginning of the SRS.
- The side curtain airbag system consists of the side curtain airbag module, including the roof trim and front grab handle. When the side curtain airbag has been deployed, these parts should be replaced.

1. Disconnect the battery negative cable, and wait at least 3 minutes before beginning work.
2. Remove the headliner (see page 20-117).
3. Remove the antenna coil (see page 22-380).
4. Disconnect the side curtain airbag subharness from the side curtain airbag 2P connector (A).

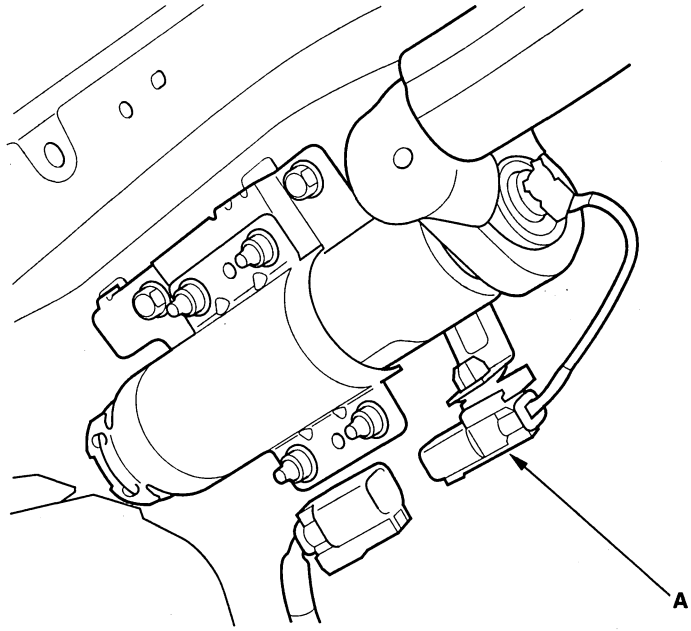

BACK

Protected by AR

5. Remove the mounting bolts (A) from the bracket.

4-door

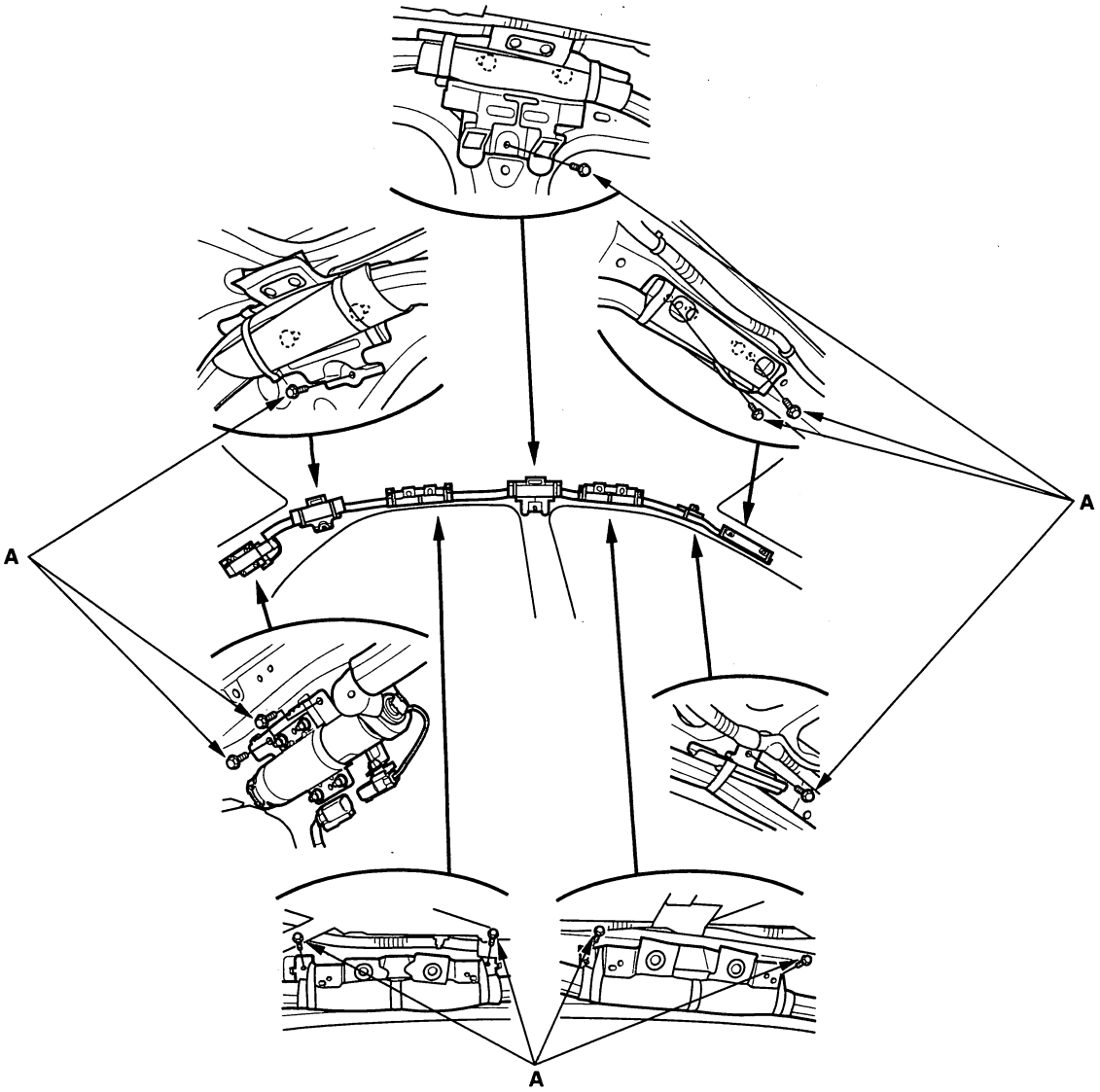

(cont'd)

Protected by AR

Side Curtain Airbag Replacement (cont'd)

2-door

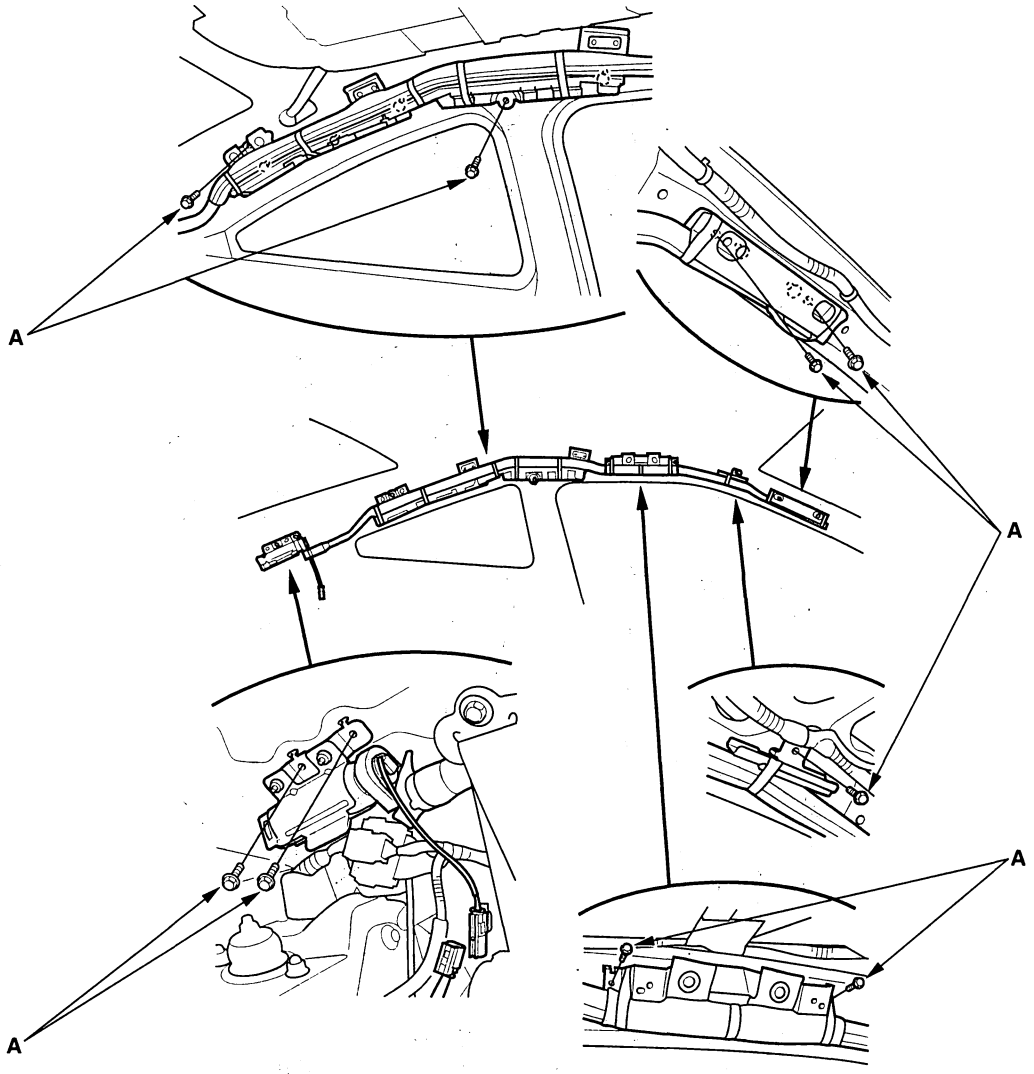

6. Remove the side curtain airbag assembly.

BACK

Protected by AR

Installation

NOTE:
- Installation of the side curtain airbag must be performed according to the precautions/procedures described at the beginning of the SRS.
- If the airbag is frayed, or has only other visible damage, replace it. Do not attempt to repair an airbag.
- When you install the airbag, make sure it is not twisted, and not caught between the inflator brackets by the bracket bolts.
- Make sure that the side curtain airbag inflator retainer is installed properly, otherwise the airbag could accidentally deploy and cause damage or injuries.

1. Place the new side curtain airbag assembly on the side of the roof. Tighten the side curtain airbag mounting bolts (A).

4-door

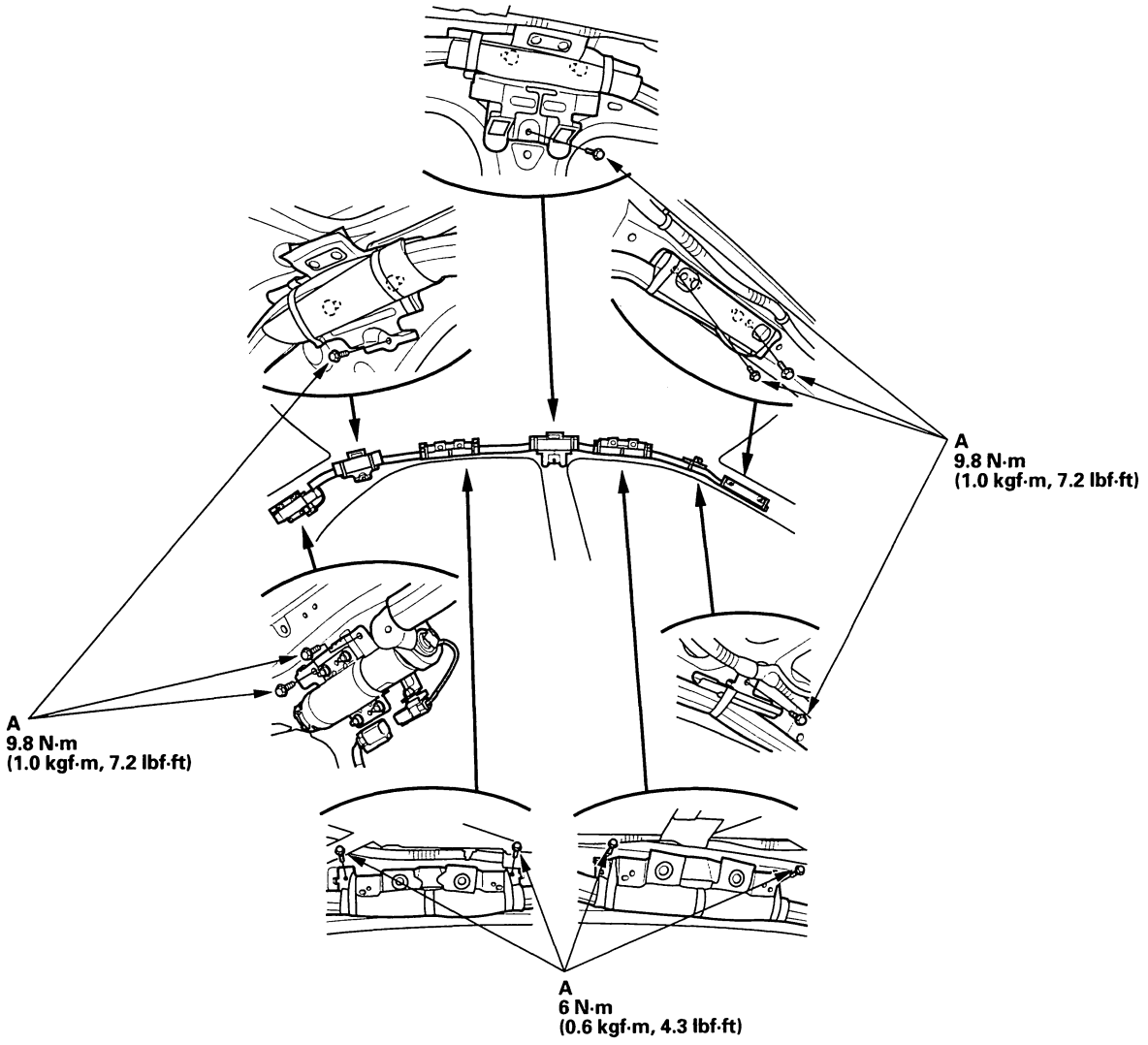

(cont'd)

Protected by AR

Side Curtain Airbag Replacement (cont'd)

2-door

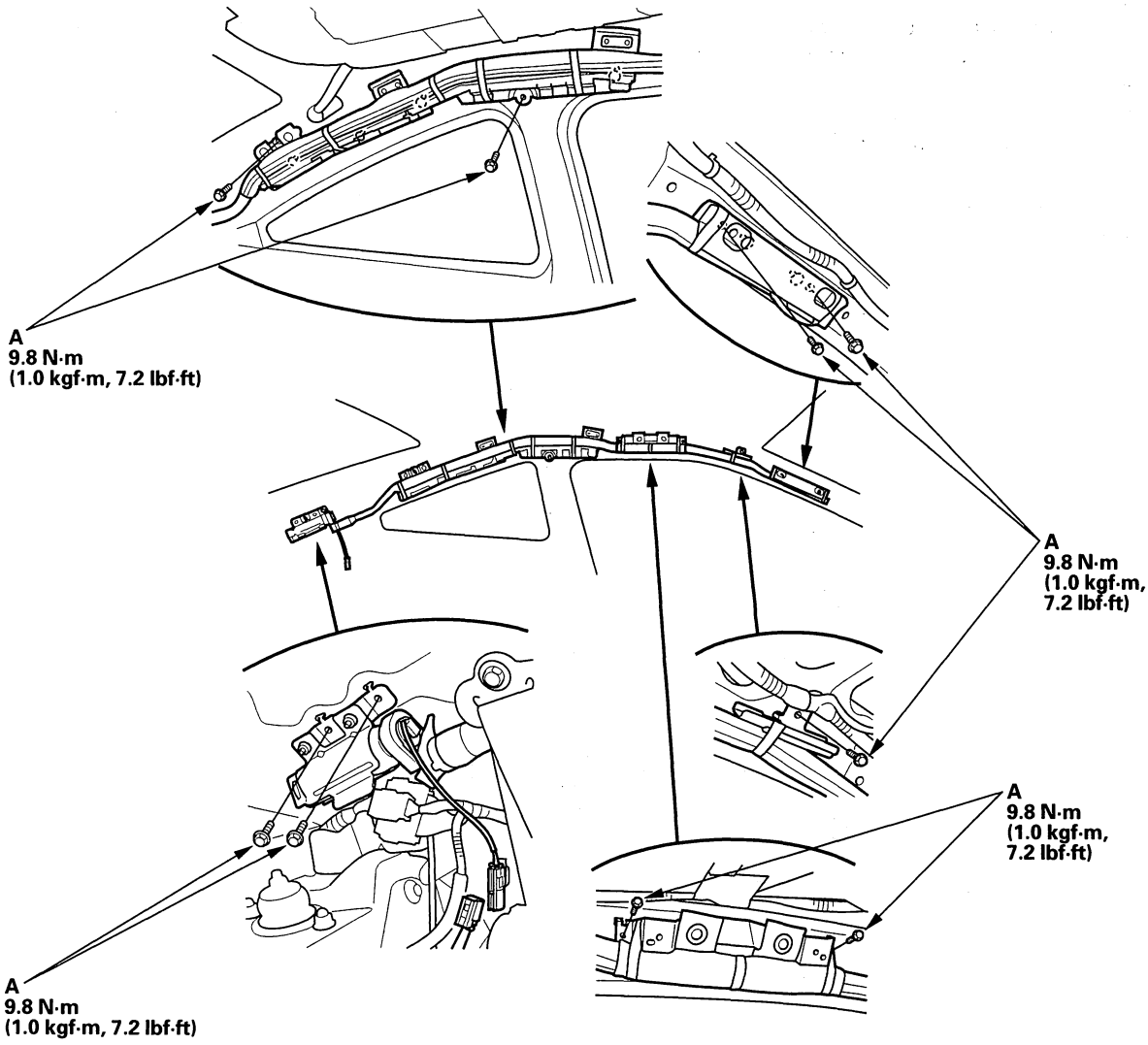

BACK

Protected by AR

2. Connect the side curtain airbag subharness to the side curtain airbag 2P connector (A).

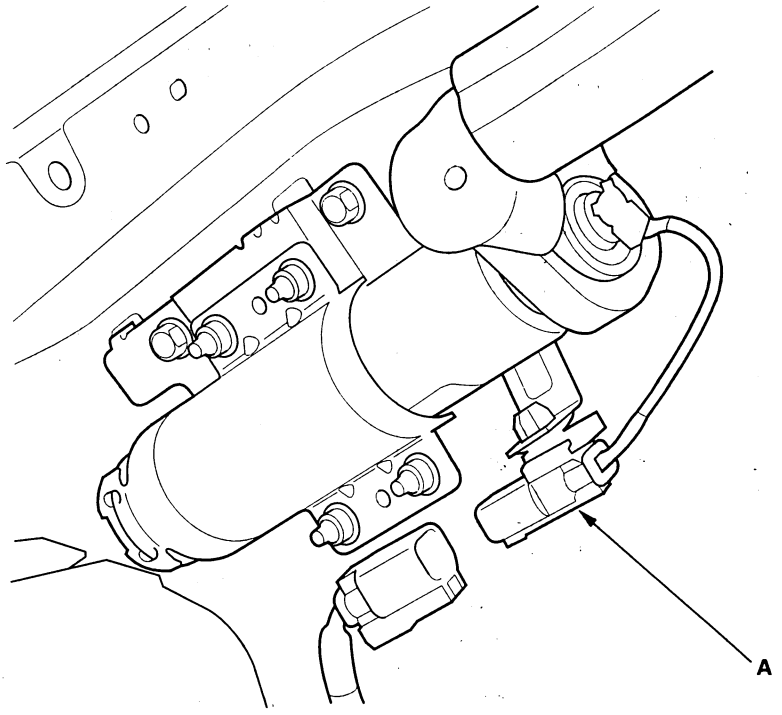

3. Reconnect the battery negative cable.
4. Connect the HDS and clear the DTCs (see page 23-31).
5. After installing the side curtain airbag, confirm proper system operation: Turn the ignition switch ON (II); the SRS indicator should come on for about 6 seconds and then go off.
6. Install all removed parts.
7. Confirm proper headliner/pillar trim overlap (see page 23-194).

Protected by AR

Airbag Disposal

Special Tools Required
Deployment tool 07HAZ-SG00500

Before scrapping any airbags, side airbags, side curtain airbags, or seat belt tensioners (including those in a whole vehicle to be scrapped), the part(s) must be deployed. If the vehicle is still within the warranty period, the Honda District Manager must give approval and/or special instruction before deploying the part(s). Only after the part(s) have been deployed (as the result of vehicle collision, for example), can they be scrapped. If the parts appear intact (not deployed), treat them with extreme caution. Follow this procedure.

Deploying Airbags in the Vehicle

If an SRS equipped vehicle is to be entirely scrapped, its airbags, side airbags, side curtain airbags, and seat belt tensioners should be deployed while still in the vehicle. These parts should not be considered as salvageable parts and should never be installed in another vehicle.

1. Turn the ignition switch OFF, then disconnect the battery negative cable, and wait at least 3 minutes.
2. Confirm that each airbag, side airbag, side curtain airbag, or seat belt tensioner is securely mounted.
3. Confirm that the deployment tool is functioning properly by following the check procedure on the tool label.

Driver's Airbag

4. Remove the access panel (A) from the steering wheel, then disconnect the driver's airbag 4P connector (B) from the cable reel.

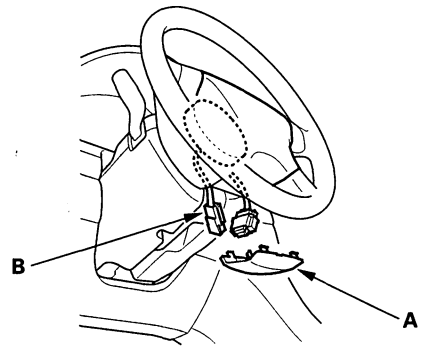

Front Passenger's Airbag

5. Remove the glove box, then disconnect the front passenger's airbag 4P connector (A) from dashboard wire harness.

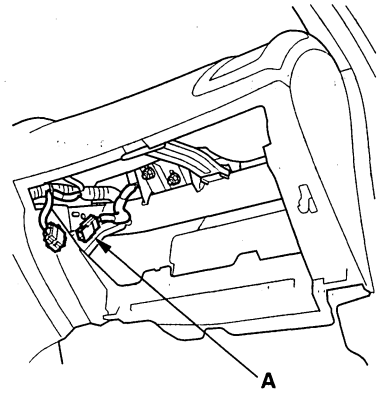

BACK

Protected by AR

Side Airbag

6. Disconnect the side airbag 2P connector (A) from the floor wire harness.

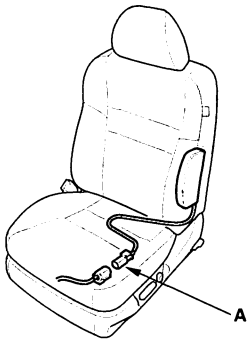

Side curtain airbag

7. Disconnect the side curtain airbag 2P connector (A) from the side curtain airbag subharness.

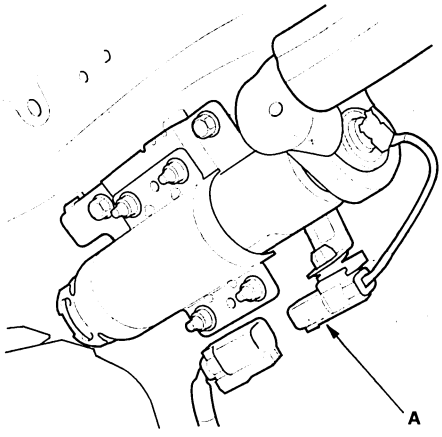

Seat belt tensioner

8. Disconnect the seat belt tensioner 4P connector (A) from the floor wire harness. Pull the seat belt out all the way and cut it.

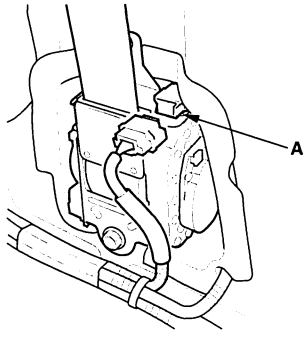

9. Cut off each connector, strip the ends of the wires, and connect the deployment tool alligator clips (A) to the wires. Place the deployment tool at least 30 feet (10 meters) away from the vehicle.

NOTE: The driver's and front passenger's airbags have dual inflators. The like color wires go to the individual inflators.

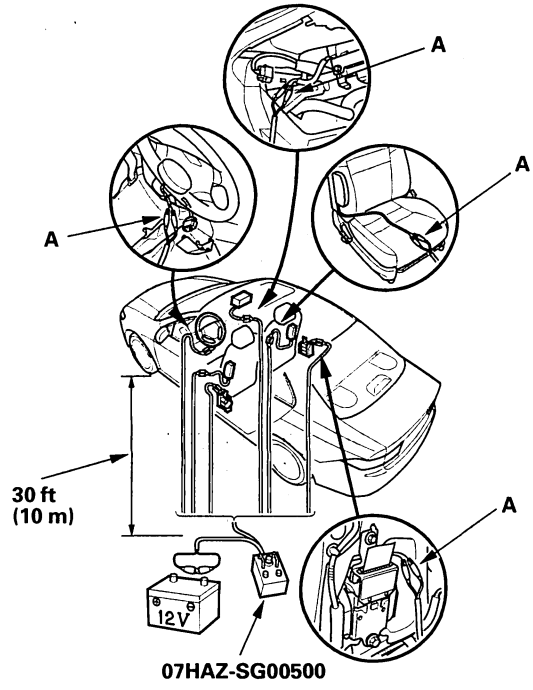

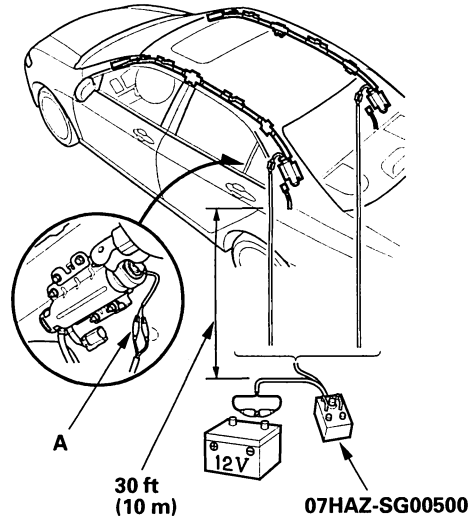

(cont'd)

Protected by AR

Airbag Disposal (cont'd)

10. Connect a 12 volt battery to the tool.

    - If the green light on the tool comes on, the igniter circuit is defective and cannot deploy the component. Go to Disposal of Damaged Components.
    - If the red light on the tool comes on, the component is ready to be deployed.

11. Push the tool's deployment switch. The airbags and tensioners should deploy (deployment is both highly audible and visible: a loud noise and rapid inflation of the bag, followed by slow deflation).

    - If the components deploy and the green light on the tool comes on, continue with this procedure.
    - If a component does not deploy, yet the green light comes ON, its igniter is defective. Go to Disposal of Damaged Components.
    - During deployment, the airbags can become hot enough to burn you. Wait 30 minutes after deployment before touching the airbags.

12. Dispose of the complete airbag. No part of it can be reused. Place it in a sturdy plastic bag (A), and seal it securely. Dispose of the deployed airbag according to your local regulations.



Deploying Components Out of the Vehicle

If an intact airbag or tensioner has been removed from a scrapped vehicle, or has been found defective or damaged during transit, storage, or service, it should be deployed as follows:

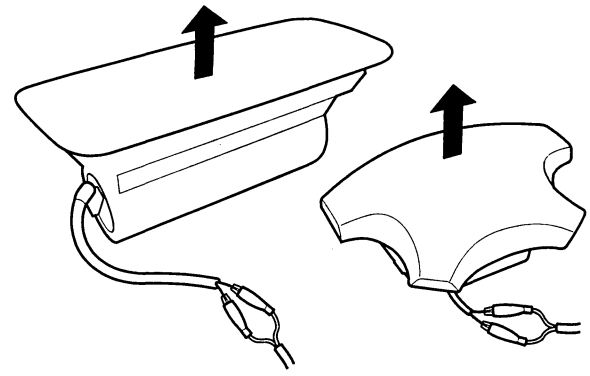

1. Confirm that the deployment tool is functioning properly by following the check procedure on the tool label.

2. Position the airbag face up, outdoors, on flat ground, at least 30 feet (10 meters) from any obstacles or people.

3. Follow steps 9 of the through 12 Deploying Airbags in the Vehicle.

   NOTE: The driver's and front passenger's airbags have dual inflators. The like color wires go to the individual inflators.

BACK

Protected by AR

Disposal of Damaged Components

1. If installed in a vehicle, follow the removal procedure for the driver's airbag (see page 23-197), front passenger's airbag (see page 23-198), side airbag (see page 23-199), side curtain airbag (see page 23-200), and seat belt tensioner (see page 23-5).

2. In all cases, make a short circuit by cutting, stripping, and twisting together the two inflator wires.

   NOTE: The driver's and front passenger's airbags have dual inflators. The like color wires go to the individual inflators.

3. Package the component in exactly the same packaging that the new replacement part came in.

4. Mark the outside of the box "DAMAGED AIRBAG NOT DEPLOYED", "DAMAGED SIDE AIRBAG NOT DEPLOYED", "DAMAGED SIDE CURTAIN AIRBAG NOT DEPLOYED", "DAMAGED SEAT BELT TENSIONER NOT DEPLOYED" so it does not get confused with your parts stock.

5. Contact your Honda District Parts & Service Manager for how and where to return it for disposal.

Deployment Tool Check

1. Connect the yellow clips to both switch protector handles on the tool; connect the tool to a battery.

2. Push the operation switch: green means the tool is OK; red means the tool is faulty.

3. Disconnect the yellow clips from the battery.

Protected by AR

Cable Reel Replacement

Removal

1. Make sure the wheels are aligned straight ahead.
2. Disconnect the battery negative cable, and wait at least 3 minutes.
3. Remove the driver's airbag (see page 23-197).
4. Disconnect the connector (A) from the cable reel, then remove the steering wheel bolt (B).

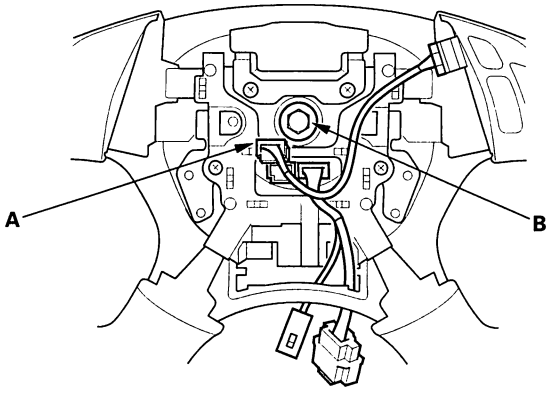

5. Align the front wheels straight ahead, then remove the steering wheel with a steering wheel puller (see step 5 on page 17-22). Do not tap on the steering wheel or steering column shaft when removing the steering wheel.
6. Remove the dashboard lower cover (A).

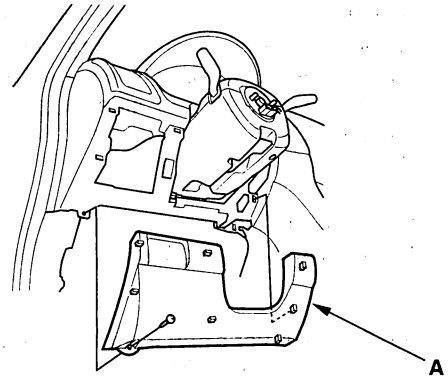

7. Remove the column cover screws (A), then remove the column covers (B, C).

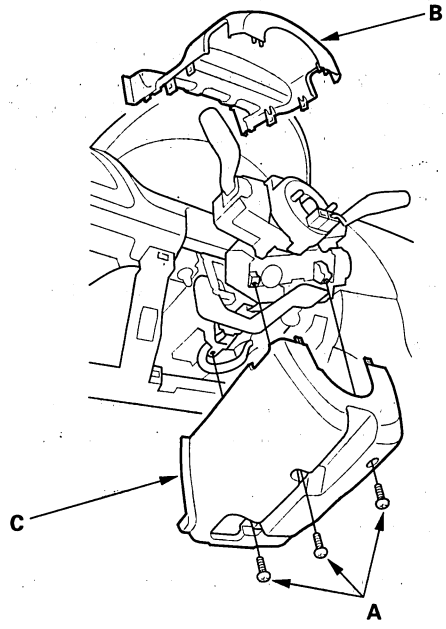

BACK

Protected by AR

8. Disconnect the dashboard wire harness 4P connector (A) from the cable reel 4P connector (B), then disconnect the dashboard wire harness 5P or 13P connector (C) from the cable reel (D).

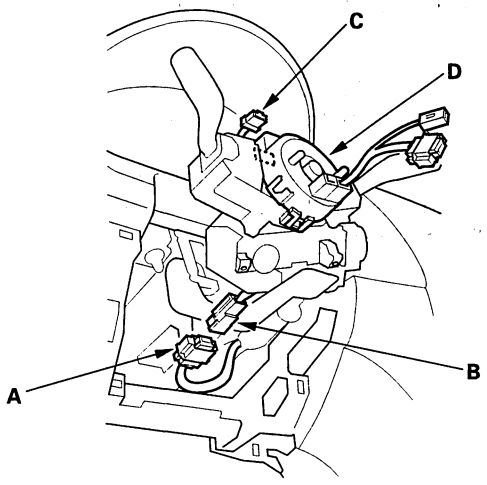

9. Release the lock tab (A) under the cable reel connector with a 90 ° hook shaped tool (B). Slide the tool below the cable reel connector just above the lock tab. Release the lower lock tab (C), and slide the cable reel off the column.

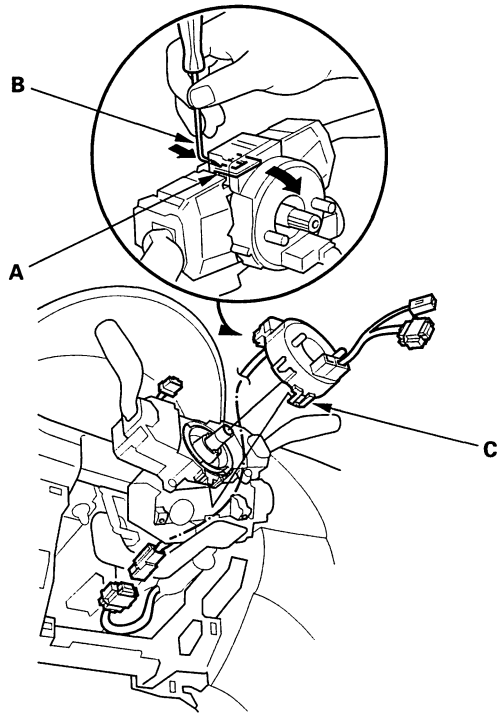

Installation

1. Before installing the steering wheel, align the front wheels straight ahead.
2. Disconnect the battery negative cable, and wait at least 3 minutes.
3. Set the turn signal cancelling sleeve (A) so that the projections (B) are aligned vertically.

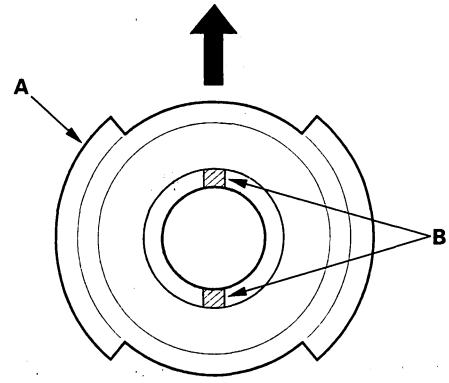

4. Carefully install the cable reel (A) on the steering column shaft. Then connect the 5P or 13P connector (B) to the cable reel, and connect the 4P connector (C) to the dashboard wire harness 4P connector (D).

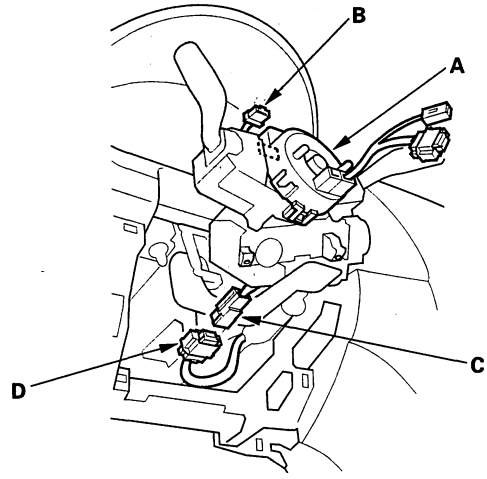

(cont'd)

Protected by AR

Cable Reel Replacement (cont'd)

5. Install the steering column covers.

6. If necessary, center the cable reel. (New replacement cable reels come centered.) Do this by first rotating the cable reel clockwise until it stops. Then rotate it counterclockwise (about 3 turns) until the arrow mark on the cable reel label points straight up.

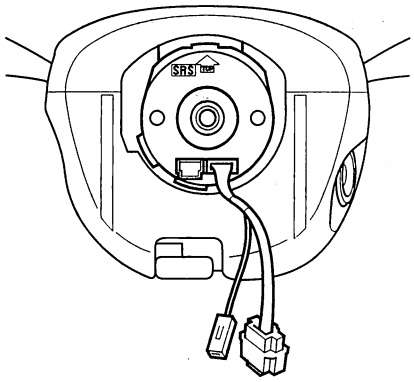

7. Align the projections on the cable reel with the holes on the steering wheel (see step 2 on page 17-24). Install the steering wheel with a new steering wheel bolt (A), then reconnect the connector (B).

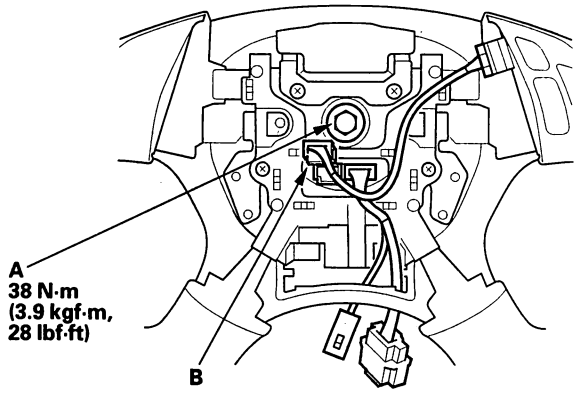

8. Install the driver's airbag (see page 23-197).

9. Reconnect the battery negative cable.

10. After installing the cable reel, confirm proper system operation:

    - Turn the ignition switch ON (II); the SRS indicator should come on for about 6 seconds and then go off.
    - After the SRS indicator has turned off, turn the steering wheel fully left and right to confirm the indicator does not come on.
    - Make sure the horn works.

BACK

Protected by AR

SRS Unit Replacement

NOTE: Make sure the SRS unit and the impact sensors are of the same manufacturer.

Removal

1. Disconnect the battery negative cable, and wait at least 3 minutes before beginning work.
2. Disconnect both seat belt tensioner connectors (see step 6 on page 23-29).
3. Remove the center console and front panel (see page 20-125).
4. Remove the center pocket (see page 20-132).
5. Remove the center holder (see page 20-125).
6. Remove the driver's and passenger's center lower cover (see page 20-136).
7. Remove the heater vent ducts (see page 20-136).
8. Disconnect the connectors and remove the Torx bolts (A), then pull out the SRS unit.

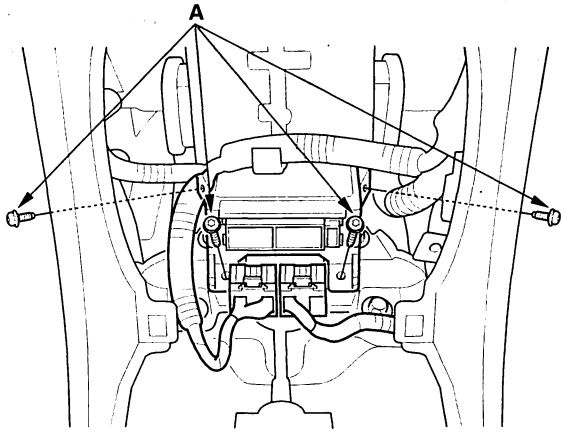

Installation

1. Install the new SRS unit (A) with Torx bolts (B), then connect the connectors (C) to the SRS unit; push them into position until they click.

   NOTE: Be sure the SRS unit is sitting squarely against its bracket before torquing the Torx bolts.

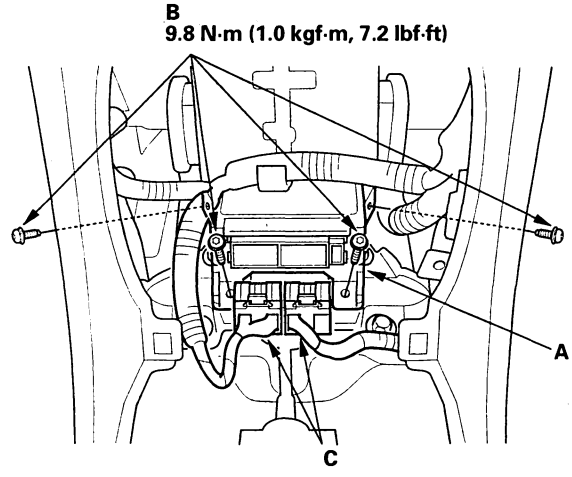

2. Reconnect both seat belt tensioner connectors (see step 6 on page 23-29).
3. Reconnect the battery negative cable.
4. After installing the SRS unit, confirm proper system operation: Turn the ignition switch ON (II); the SRS indicator should come on for about 6 seconds and then go off.
5. Install all removed parts.

Protected by AR

Side Impact Sensor (First) Replacement

NOTE:
- Review the seat replacement procedure before doing repairs or service.
- Make sure the SRS unit and the impact sensors are of the same manufacturer.

Removal

1. Disconnect the battery negative cable, and wait at least 3 minutes before beginning work.
2. Disconnect the appropriate side airbag 2P connector (see step 4 on page 23-28).
3. Remove the seat assembly (see page 20-144).
4. Remove the front door sill trim and the center pillar lower trim panel.
   - 2-door (see page 20-90)
   - 4-door (see page 20-91)
5. Disconnect the floor wire harness 2P connector from the side impact sensor (first).
6. Remove the Torx bolts (A) using a Torx T30 bit, then remove the side impact sensor (first) (B).

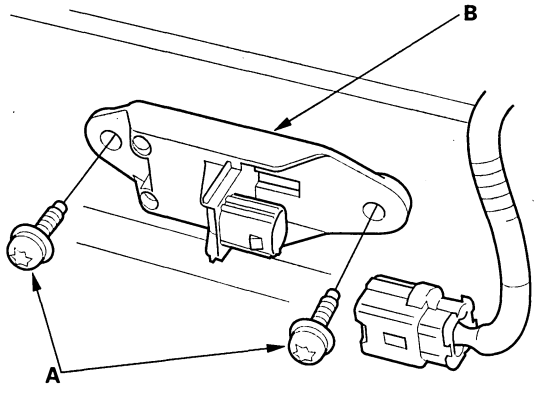

Installation

1. Install the new side impact sensor (first) (A) with the Torx bolts (B), then connect the floor wire harness 2P connector (C) to the side impact sensor.

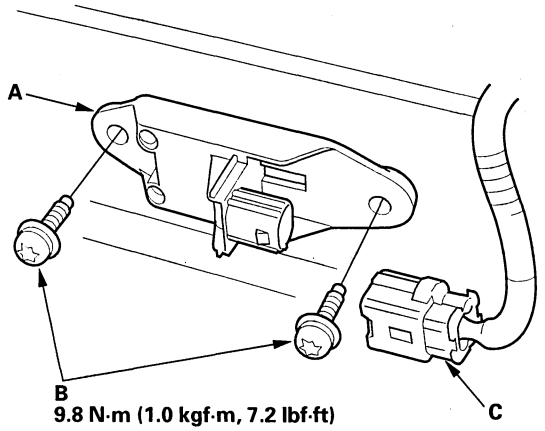

2. Reconnect the battery negative cable.
3. Install all removed parts.
4. After installing the side impact sensor (first), confirm proper system operation: Turn the ignition switch ON (II); the SRS indicator should come on for about 6 seconds and then go off.

BACK

Protected by AR

Side Impact Sensor (Second) Replacement

NOTE: Make sure the SRS unit and the impact sensors are of the same manufacturer.

Removal

1. Disconnect the battery negative cable, and wait at least 3 minutes before beginning work.
2. Disconnect the appropriate side curtain airbag 2P connector (see step 5 on page 23-28).
3. Disconnect the side impact sensor (second) 2P connector (A) from the side curtain airbag subharness.

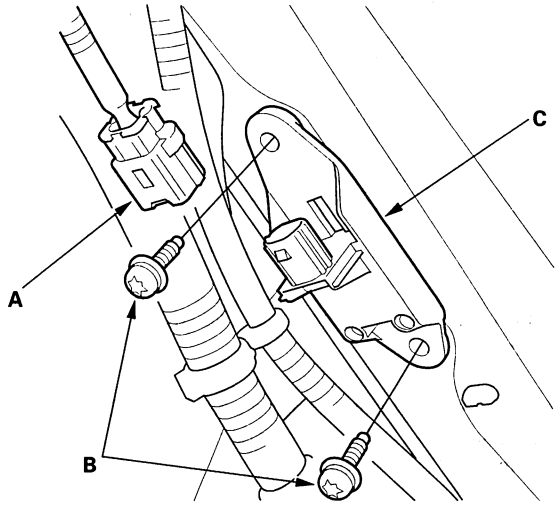

4. Remove the Torx bolts (B) using a Torx T30 bit, then remove the side impact sensor (second) (C).

Installation

1. Install the new side impact sensor (second) (A) with the Torx bolts (B), then connect the side curtain airbag subharness 2P connector (C) to the side impact sensor (second).

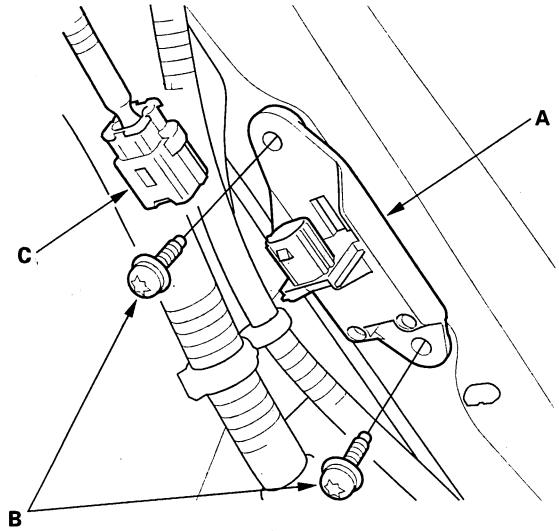

9.8 N·m (1.0 kgf·m, 7.2 lbf·ft)

2. Reconnect the battery negative cable.
3. Install all removed parts.
4. After installing the side impact sensor (second), confirm proper system operation: Turn the ignition switch ON (II); the SRS indicator should come on for about 6 seconds and then go off.

BACK

Protected by AR

OPDS/ODS Unit Replacement

NOTE: Review the seat replacement procedure (see page 20-144) before doing repairs or service.

Removal

1. Disconnect the battery negative cable, and wait at least 3 minutes before beginning work.
2. Disconnect the front passenger's side airbag harness 2P connector (see step 4 on page 23-28).
3. Remove the front passenger's seat assembly (see page 20-144) and seat-back cover (see page 20-166).
4. Remove the cover (A), then disconnect the OPDS unit 8P/ODS unit 18P connector D and sensor connectors (B) from the OPDS/ODS unit (C).

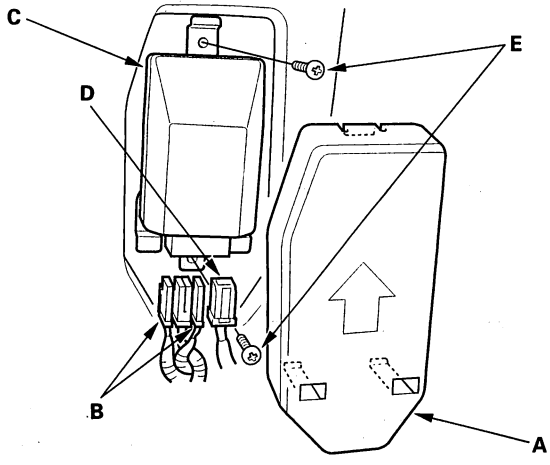

5. Remove the two screws (E) and the OPDS/ODS unit.

Installation

1. Place the new OPDS/ODS unit (A) on the seat-back frame. Tighten the two screws (B), and connect the OPDS unit harness 8P/ODS unit harness 18P connector D and sensor connectors (C) to the OPDS/ODS unit. Reinstall the cover (E).

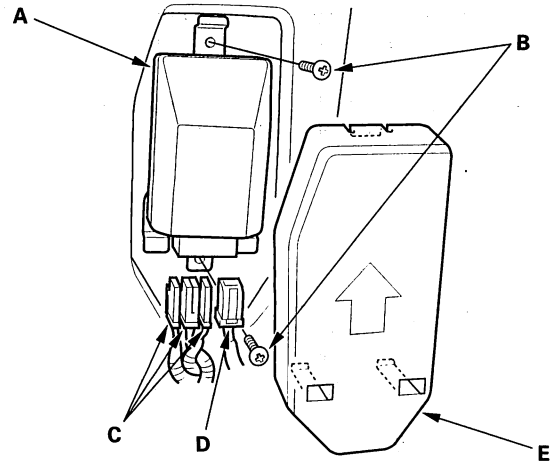

2. Install the seat-back cover in the reverse order of removal.
3. Install the front passenger's seat assembly (see page 20-144), then connect the side airbag harness 2P connector.
4. Reconnect the battery negative cable.
5. Set the seat-back in the normal position, and make sure there is nothing on the front passenger's seat.
6. Initialize the OPDS/ODS unit (see page 23-32).
7. Calibrate the OPDS/ODS unit ('06 model) (see page 23-33).
8. After installing the OPDS/ODS unit, confirm proper system operation: Turn the ignition switch ON (II); the SRS indicator should come on for about 6 seconds and then go off.

BACK

Protected by AR

Front Impact Sensor Replacement

NOTE: Make sure the SRS unit and the impact sensors are of the same manufacturer.

Removal

1. Disconnect the battery negative cable, and wait at least 3 minutes before beginning work.
2. Disconnect the driver's airbag 4P connector (see step 2 on page 23-28), the front passenger's airbag 4P connector (see step 3 on page 23-28), and both seat belt tensioner 2P connectors (see step 6 on page 23-29).
3. Remove the front bumper.
   - 2-door (see page 20-184)
   - 4-door (see page 20-185)
4. Remove the washer reservoir for the right side sensor or the intake air resonator for the left side sensor (see page 22-254).
5. Disconnect the engine compartment wire harness 2P connector (A), and remove the two Torx bolts (B) using a Torx T30 bit, then remove the front impact sensor (C).

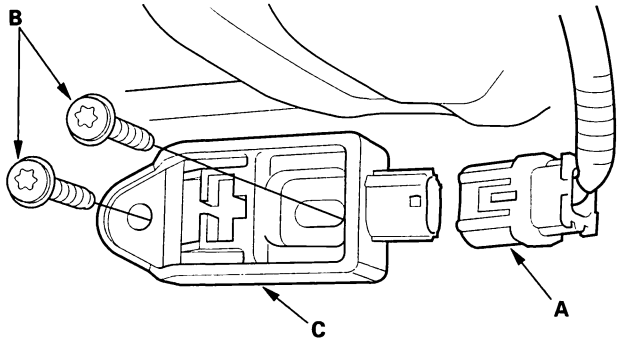

Installation

1. Install the new front impact sensor with new Torx bolts (A), then connect the engine compartment wire harness 2P connector (B) to the front impact sensor (C).

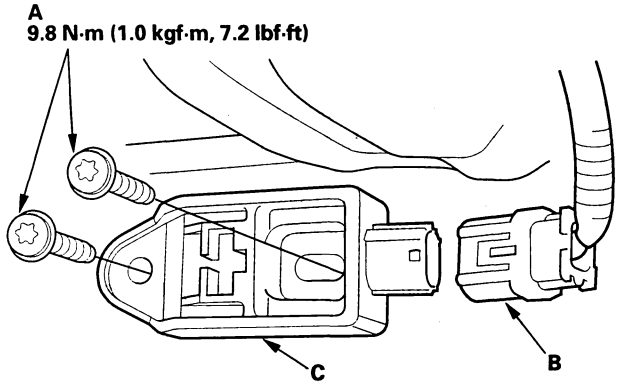

2. Reconnect the driver's airbag 4P connector (see page 23-28), the front passenger's airbag 4P connector (see page 23-28), and both seat belt tensioner 4P connectors (see page 23-29).
3. Reconnect the battery negative cable.
4. After installing the front impact sensor, confirm proper system operation: Turn the ignition switch ON (II); the SRS indicator should come on for about 6 seconds and then go off.
5. Install all removed parts.

Protected by AR

Front Passenger's Weight Sensor Replacement

Removal ('04-06 models)

NOTE: Removal of the front passenger's weight sensors must be performed according to the precautions/ procedures described at the beginning of SRS (see page 23-19).

1. Remove the front passenger's seat assembly (see page 20-144).
2. Remove the tamper-resistant Torx bolts attaching the seat to the weight sensors.
   - 2-door (see page 20-157)
   - 4-door (see page 20-158)
3. Remove the front passenger's weight sensors from the seat riser.
   - 2-door (see page 20-157)
   - 4-door (see page 20-158)

Installation ('04-06 models)

NOTE: Be sure to install the harness wires so they are not pinched or interfering with other parts.

1. Place the new front passenger's weight sensors on the front passenger's seat riser.
   - 2-door (see page 20-157)
   - 4-door (see page 20-158)
2. Install the seat onto the weight sensors.
3. Reinstall the front passenger's seat assembly (see page 20-144).
4. Reconnect the battery negative cable.
5. Calibrate the front passenger's weight sensor unit (see page 23-33) ('03-05 models) ODS unit ('06 model) (see page 23-33).
6. After installing the front passenger's weight sensors, confirm proper system operation: Turn the ignition switch ON (II); the SRS indicator should come on for about 6 seconds and then go off.

BACK

Protected by AR

Front Passenger's Weight Sensor Unit Replacement

NOTE: Review the seat replacement procedure (see page 20-144) before performing repair or service.

Removal ('04-05 models)

1. Make sure you have the anti-theft codes for the audio and the navigation system, then write down the audio presets.
2. Slide the seat all the way to the rear.
3. Disconnect the battery negative cable, and wait at least 3 minutes before beginning work.
4. Disconnect the front passenger's airbag 4P connector (see step 3 on page 23-28).
5. Disconnect the connectors. Remove the mounting nuts (A) and the front passenger's weight sensor unit (B) from the seat riser.

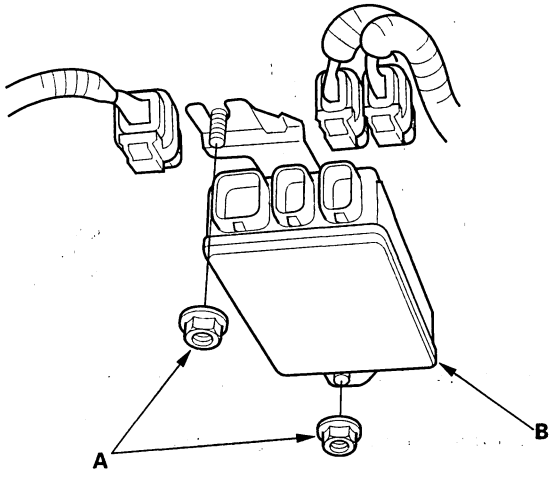

Installation ('04-05 models)

NOTE: Be sure to install the harness wires so they are not pinched or interfering with other parts.

1. Place the new front passenger's weight sensor unit on the seat riser. Tighten the two mounting nuts (A) and connect the connectors.

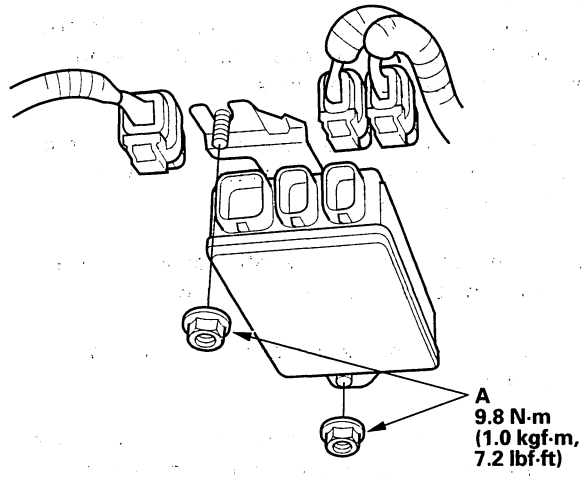

2. Reconnect the front passenger's airbag 4P connector (see page 23-28).
3. Reconnect the battery negative cable.
4. Calibrate the front passenger's weight sensor unit (see page 23-33).
5. After installing the front passenger's weight sensor unit, confirm proper system operation: Turn the ignition switch ON (II); the SRS indicator should come on for about 6 seconds and then go off.
6. Enter the anti-theft codes for the audio and the navigation system, then enter the customer's audio presets, and set the clock.

Protected by AR

Driver's Seat Position Sensor Replacement

Removal ('04-06 models)

NOTE:
- Removal of the driver's seat position sensor must be performed according to the precautions/procedures described at the beginning of SRS (see page 23-19).
- Before disconnecting the driver's seat position sensor 2P connector, disconnect the driver's airbag 4P connector.
- Do not turn the ignition switch ON (II), and do not connect the battery negative cable while removing the driver's seat position sensor.

1. Make sure you have the anti-theft codes for the audio and the navigation system, then write down the audio presets.
2. Disconnect the battery negative cable, and wait at least 3 minutes before beginning work.
3. Remove the driver's seat assembly (see page 20-144).
4. Disconnect the floor wire harness or seat position sensor harness 2P connector (A) from the driver's seat position sensor.

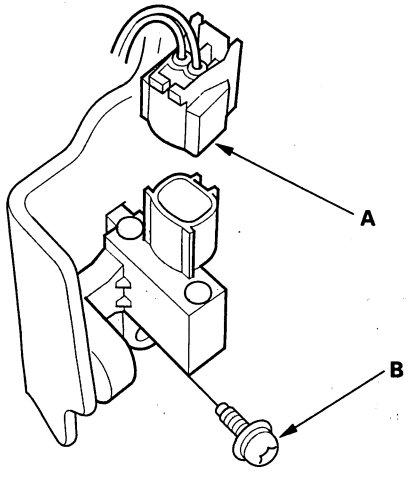

5. Using a Torx T30 bit, remove the Torx bolt (B), then remove the driver's seat position sensor.

Installation ('04-06 models)

NOTE:
- Be sure to install the harness wires so they are not pinched or interfering with other parts.
- Do not turn the ignition switch ON (II), and do not connect the battery negative cable while installing the driver's seat position sensor.
- After installing the driver's seat position sensor, make sure it is clean. Keep it away from dust.

1. Install the new driver's seat position sensor with a Torx bolt (A), then connect the floor wire harness or seat position sensor harness 2P connector to the driver's seat position sensor (B).

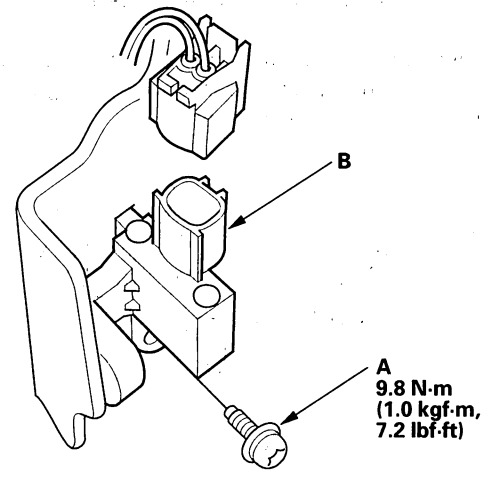

2. Install the driver's seat assembly (see page 20-144).
3. Reconnect the battery negative cable.
4. Check the operation of the driver's seat position sensor with the HDS (see page 23-37).
5. Enter the anti-theft codes for the audio and navigation system, then enter the customer's audio presets, and set the clock.

BACK

Protected by AR

Passenger's Airbag Cutoff Indicator Illumination Bulb Test

'04-06 models

1. Remove the upper panel (see page 20-131).
2. Push out the passenger's airbag cutoff indicator (A) from behind the upper panel.

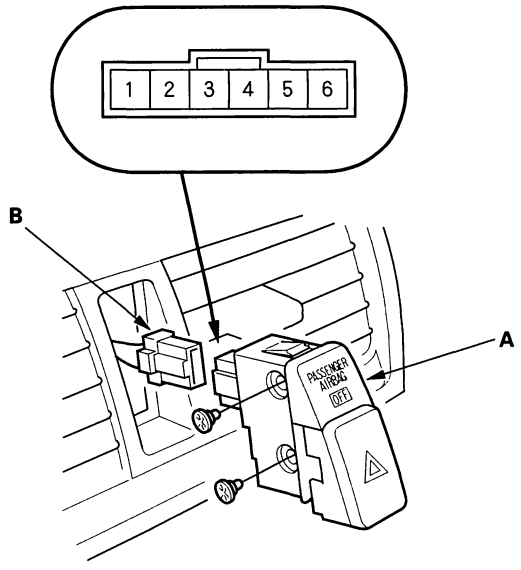

3. Disconnect the 6P connector (B) from the passenger's airbag cutoff indicator.
4. Check for continuity between the No. 3 and No. 4 terminals of the indicator. If there is no continuity, replace the bulb.
5. Install the parts in the reverse order of removal.

BACK

Protected by AR

BACK

Protected by AR

Service Manual Index

NOTE: Refer to the following list to look up DTCs, symptoms, fuses, connectors, wire harnesses, specifications, maintenance schedules, and general service information:

DTC Troubleshooting Indexes
ABS-TCS Components 19-39
Automatic Climate Control 21-82
Automatic Transaxle 14-8
Communication 22-100
Fuel and Emissions 11-8
Heating/Ventilation 21-12
SRS 23-38

Symptom Troubleshooting Indexes
ABS-TCS Components 19-40
Audio/Entertainment 22-333
Automatic Climate Control 21-83
Automatic Transaxle 14-11
Charging System 4-29
Cruise Control System 4-48
Fan Controls 10-15, 16
Fuel and Emissions 11-12
Heating/Ventilation 21-13
Lubrication System 8-4
Moonroof/Sunroof 20-67
Navigation 22-422, 490
SRS 23-47
Starting System 4-4
Steering 17-4

Fuse/Relay Indexes
Power Distribution 22-71
Under-dash Fuse/Relay Box 22-70
Under-hood Fuse/Relay Box 22-68
Under-hood Multi-relay Box 22-69

Connector and Wire Harness Indexes
Component Connectors (to harness) 22-14
Grounds (to components) 22-74
In-line Connectors (to harness) 22-13

Specifications section ..... Section 2

Maintenance section ..... Section 3

General Information section ..... Section 1

A

A/C
Description 21-16
Test 21-69

A/C Compressor
Replacement 21-59

A/C Compressor Clutch
Inspection 21-60
Overhaul 21-61

A/C Compressor Clutch Circuit
Troubleshooting 21-38

A/C Compressor Relief Valve
Replacement 21-62

A/C Condenser
Replacement 21-62

A/C Condenser Fan Circuit
Troubleshooting 21-36

A/C Pressure Switch Circuit
Troubleshooting 21-41, 120

A/C Signal Circuit
Troubleshooting 11-308

A/F (Air Fuel Ratio) Sensor
Replacement 11-222

A/T Assembly
Removal 14-209
Installation 14-219

A/T Clutch End Plate
Inspection 14-310

A/T Clutch Pressure Control Solenoid Valves
Test 14-197, 199
Replacement 14-198, 200

A/T Clutch Waved-plate
Inspection 14-309

A/T Countershaft Assembly
Description 14-24, 26
Disassembly/Inspection/ Reassembly 14-291

A/T Differential
Component Location Index 14-334

A/T Electronic Control System
Description 14-33

A/T Gear Position Indicator
Troubleshooting 14-246

A/T Gear Position Indicator System
Component Location Index 14-244
Circuit Diagram 14-245

A/T Hydraulic Controls
Description 14-45, 49
Test 14-189

A/T Mainshaft Assembly
Disassembly/Inspection/ Reassembly 14-288

A/T Reverse Idler Gear
Removal/Installation 14-273

A/T Secondary Shaft Assembly
Disassembly/Inspection/ Reassembly 14-294

A/T Shift Cable
Replacement 14-238
Adjustment 14-241

A/T Shift Lever
Removal 14-231
Installation 14-232
Disassembly/Reassembly 14-235, 237

ABS Indicator Circuit
Troubleshooting 19-60, 61

ABS Modulator-control Unit
Removal/Installation 19-65

ABS-TCS Components
Component Location Index 19-36
How-to Information 19-37
Description 19-41
Circuit Diagram 19-48

Accelerator Pedal
Replacement 11-369

Accessory Power Socket, Front
Test/Replacement 22-385

Accessory Power Socket, Rear
Test/Replacement 22-386

Accessory Power Sockets
Component Location Index 22-383
Circuit Diagram 22-384

Air Cleaner
Removal/Installation 11-361

Air Cleaner Element
Inspection/Replacement 11-361

Air Mix Control Motor
Test 21-43, 125
Replacement 21-44, 126

Airbag Cutoff Indicator, Front Passenger's
Test 23-221

Airbag, Driver's
Replacement 23-197
Repair 23-206

Airbag, Front Passenger's
Replacement 23-198

Alternator
Troubleshooting 4-34
Removal/Installation 4-40
Overhaul 4-41

Alternator Control Circuit
Troubleshooting 4-35

Alternator FR Signal Circuit
Troubleshooting 11-309, 311

Ambient Light
Replacement 22-221

APP (Accelerator Pedal Position) Sensor
Inspection 11-273
Replacement 11-274

ATF
Inspection 14-207
Replacement 14-208

ATF Cooler
Repair 14-228

ATF Cooler Lines and Hoses
Replacement 14-230

(cont'd)

BACK

Protected by AR

Service Manual Index

(cont'd)

ATF Feed Pipes, End Cover
Replacement 14-268

ATF Pump
Inspection 14-279

ATF Temperature Sensor
Test/Replacement 14-204

Audio Unit
Description 22-312

Audio/Entertainment
Component Location Index 22-310, 311
Circuit Diagram 22-325
How-to Information 22-328, 330, 332
Troubleshooting 22-334, 336, 337, 338, 339, 341, 342, 344, 345, 347, 348, 349, 350, 351, 352, 353, 354, 356, 358, 359, 360, 361
Test 22-362, 363, 364, 365, 366

Audio-HVAC Display Module
Troubleshooting 22-368
Removal/Installation 22-371

Audio-HVAC Display Panel
How-to Information
  Heating/Ventilation 21-11
Troubleshooting
  Heating/Ventilation 21-35
Removal/Installation
  Audio/Entertainment 22-372
Disassembly/Reassembly
  Audio Components 22-374

Audio-HVAC Subdisplay Unit
Replacement 22-377

Automatic Climate Control
Component Location Index 21-72
Description 21-86
Circuit Diagram 21-92

Automatic Transaxle
Description 14-22
Circuit Diagram 14-70, 72, 74
Test 14-186

B

Back-up Light
Replacement 22-203

Back-up Light Switch
Test 13-3

Back-up Lights
Circuit Diagram 22-182, 183

Ball Joint Boots
Replacement 18-18

Ball Joints
Removal 18-11

Battery
Test 22-78

Blower Motor
Replacement 21-53

Blower Power Transistor
Test 21-50

Blower Unit
Removal/Installation 21-52

Brake Booster
Test 19-18
Replacement 19-19

Brake Calipers
Overhaul 19-15, 24

Brake Discs
Inspection 19-14, 23

Brake Drums
Inspection 19-25

Brake Fluid Level Switch
Test 19-11

Brake Lights
Circuit Diagram 22-184, 185, 186

Brake Lines and Hoses
Inspection 19-31
Replacement 19-32

Brake Master Cylinder
Replacement 19-16
Inspection 19-17

Brake Pads
Inspection/Replacement 19-12, 21

Brake Pedal
Adjustment 19-6
Replacement 19-30

Brake Pedal Position Switch
Test 22-195

Brake Pedal Position Switch Signal Circuit
Troubleshooting 11-314

Brake Shoes
Replacement 19-27

Brake System Indicator Circuit
Circuit Diagram
  Conventional Brake
    Components 19-10
Troubleshooting
  ABS-TCS Components 19-62, 64

Brake Wheel Cylinders
Replacement 19-29

Bulb, Front Turn Signal Light
Replacement 22-198

Bumper Lower Grille
Replacement 20-186

Bumper Side Cover
Replacement 20-187

Bumper, Front
Removal/Installation 20-184, 185

Bumper, Rear
Removal/Installation 20-188, 189

C

C-pillar Trim
Removal/Installation 20-98

Cable Reel
Replacement 23-210

Camshaft
Inspection 6-36

Carpet
Replacement 20-122

Catalytic Converter System
How-to Information 11-59

Ceiling Light
Replacement 22-221

Center Console
Removal/Installation 20-125

Center Console Rear Cover
Replacement 20-128

Center Lower Pocket
Removal/Installation 20-132

Charging System
Component Location Index 4-28
Circuit Diagram 4-30

Charging System Indicator Circuit
Troubleshooting 4-31, 32

CKP (Crankshaft Position) Sensor
Replacement 11-225

CKP Pulse Plate
Replacement 6-23

Climate Control Power and Ground Circuits
Troubleshooting 21-119

Climate Control Unit
How-to Information 21-77

Clutch
Component Location Index 12-3
Replacement 12-10

Clutch Interlock Switch
Test 4-8

Clutch Master Cylinder
Replacement 12-6

Clutch Pedal
Adjustment 12-4
Replacement 12-5

Clutch Pedal Position Switch
Test 4-63

Clutch Slave Cylinder
Replacement 12-8

BACK

Protected by AR

CMP (Camshaft Position) Sensor
Replacement
Fuel Injection System (PGM-FI) 11-223
VTC System 11-297

CMP Pulse Plate
Replacement 6-30, 31

Combination Light Switch
Test/Replacement 22-206

Combination Switch Control Unit
Input Test 22-131

Connecting Rod Bearings
Replacement 7-8

Connecting Rod Bolts
Inspection 7-25

Connecting Rods
Inspection 7-5

Connectors
(See first page of this Index)

Console Armrest
Disassembly/Reassembly 20-126

Control Arms
Replacement 18-41

Control Shaft Bearing
Replacement 14-267

Control Shaft Oil Seal, End Cover
Replacement 14-267

Control Shaft Oil Seal, Torque Converter Housing
Replacement 14-287

Conventional Brake Components
Component Location Index 19-3
Test/Inspection 19-4
Troubleshooting 19-5
Repair 19-9

Coolant
Inspection 10-6
Replacement 10-6

Cooling System
Component Location Index 10-2

Countershaft Bearing, Torque Converter Housing
Replacement 14-285

Countershaft Bearings
Replacement 13-48

Countershaft Reverse Selector Hub
Removal 14-292
Installation 14-293

Cowl Cover
Replacement 20-199

Crankshaft
Removal 7-13
Inspection 7-15
Installation 7-26

Crankshaft Main Bearings
Replacement 7-6

Crankshaft Oil Seal, Transmission End
Installation 7-31

Crankshaft Pulley
Removal/Installation 6-11

Cross Member Gusset
Replacement 20-226

Cruise Control Actuator
Test 4-61
Replacement 4-62

Cruise Control Actuator Cable
Adjustment 4-63

Cruise Control Combination Switch
Test/Replacement 4-60

Cruise Control Communication Line Circuit
Troubleshooting 4-54

Cruise Control System
Component Location Index 4-46
Circuit Diagram 4-52, 53
Input Test 4-58

Cruise Control Unit
Input Test 4-55

Cylinder Head Assembly
Component Location Index 6-3
Inspection 6-6
Removal 6-28
Installation 6-46

Cylinder Head Cover
Removal 6-25
Installation 6-26

Cylinder Head, Bare
Inspection 6-32

D

Dampers, Front
Replacement 18-24

Dampers, Rear
Replacement 18-46

Dash Lights Brightness Control
Circuit Diagram 22-208, 209

Dash Vents
Removal/Installation 20-135

Dashboard
Removal/Installation 20-136
Replacement 20-140

Dashboard Lower Cover
Removal/Installation 20-130, 134

Dashboard Under Cover
Removal/Installation 20-130

Dashboard Upper Panel
Removal/Installation 20-131

Differential Carrier Bearing Outer Races, A/T
Replacement 14-337

Differential Carrier Bearings, A/T
Replacement 14-335
Inspection 14-339

Differential Carrier Bearings, M/T
Replacement 13-58

Differential Carrier, A/T
Inspection 14-334
Replacement 14-335

Differential Oil Seals, A/T
Replacement 14-336

Differential Oil Seals, M/T
Replacement 13-59

Differential Pinion Gears, M/T
Inspection 13-57

DLC Circuit
Troubleshooting 11-218

Door Courtesy Light
Replacement 22-223

Door Glass
Replacement 20-19, 30
Adjustment 20-35

Door Glass Weatherstrips
Replacement
Front Doors 20-21
Rear Doors 20-32

Door Key Cylinder Switches
Test 22-142

Door Latches
Replacement
Front Doors 20-16, 17
Rear Doors 20-28

Door Lock Actuators
Test 22-140

Door Lock Knob Switches
Test 22-141

Door Lock Switches
Test 22-157

Door Moldings
Replacement
Front Doors 20-23
Rear Doors 20-33
Trim 20-204

Door Outer Handles
Replacement
Front Doors 20-12, 14
Rear Doors 20-27

(cont'd)

BACK

Protected by AR

Service Manual Index

(cont'd)

Door Panels
Removal/Installation
Front Doors 20-9, 10
Rear Doors 20-25

Door Sash Trim
Replacement 20-20

Door Strikers
Adjustment 20-38

Door Weatherstrips
Replacement
Front Doors 20-24
Rear Doors 20-34

Drive Belt
Inspection 4-37
Replacement 4-37

Drive Belt Auto-tensioner
Inspection 4-38
Replacement 4-39

Drive Belt Auto-tensioner Pulley
Replacement 4-39

Drive Plate
Removal/Installation 14-218

DRL (Daytime Running Lights) Control Unit
Input Test 22-194

DTCs
(See first page of this Index)

Dust and Pollen Filter
Replacement 21-51

Dynamic Damper, Driveshafts
Replacement 16-10

E

ECM
Replacement 11-227

ECT Sensor
Replacement
Fan Controls 11-228
Fuel Injection System (PGM-FI) 11-223

EGR Passage
Replacement 10-12

EGR System
Component Location Index 11-374

EGR Valve
Replacement 11-386

Electronic Throttle Control System
Component Location Index 11-229

Emblems
Replacement 20-208, 209, 210

End Cover, A/T
Removal 14-264
Installation 14-329

Engine Assembly
Removal 5-2
Installation 5-10

Engine Block Assembly
Component Location Index 7-3

Engine Block, Bare
Inspection 7-16
Repair 7-18

Engine Mount Control System
Circuit Diagram 4-65
Troubleshooting 4-66

Engine Mounts
Component Location Index 4-64

Entry Light Control System
Component Location Index 22-224
Circuit Diagram 22-225

EVAP Canister
Replacement 11-421

EVAP Canister Purge Valve
Replacement 11-423

EVAP Canister Vent Shut Valve
Replacement 11-423, 424

EVAP Control System
Component Location Index 11-389

Evaporator Core
Replacement 21-57, 58

Evaporator Temperature Sensor
Replacement 21-49
Test 21-49

Exhaust Manifold
Removal/Installation 9-14

Exhaust Pipe
Replacement 9-15, 16

F

Fan Controls
Component Location Index 10-14
Circuit Diagram 10-17

Fender Fairing, Front
Replacement 20-213

Fender Trim
Replacement 20-198

Final Driven Gear, M/T
Replacement 13-57

Frame
Repair Chart 20-232

Frame Stiffener
Replacement 20-227

Front Doors
Component Location Index 20-3, 5
Adjustment 20-37

Front Driveshaft Assembly
Component Location Index 16-3
Inspection 16-4
Removal 16-4
Disassembly 16-6
Resassembly 16-11
Installation 16-19

Front Impact Sensors
Replacement 23-217

Front Seats
Component Location Index 20-142, 143, 22-387
Circuit Diagram 22-388, 389

Front Speakers
Replacement 22-378

Front Suspension
Component Location Index 18-3

Fuel and Emissions
Description 11-14

Fuel Fill Door
Adjustment 20-196

Fuel Filter
Replacement 11-344

Fuel Gauge Sending Unit
Test 11-351, 352

Fuel Injection System (PGM-FI)
Component Location Index 11-62

Fuel Lines and Hoses
Inspection 11-334
Removal 11-338
Installation 11-340

Fuel Pipe Protector
Replacement 20-214

Fuel Pressure Regulator
Replacement 11-343

Fuel Pump
Replacement 11-345, 346

Fuel Pump Circuit
Troubleshooting 11-326

Fuel Supply System
Component Location Index 11-317
Adjustment 11-330
Test 11-332

Fuel Tank
Repair 11-333
Replacement 11-347

Fuel Tank Pressure Sensor
Replacement 11-422

BACK

Protected by AR

Fuses
(See first page of this Index)

G

Gauge Control Module
How-to Information
Gauges 22-276
Multiplex Control System 22-99
Input Test
Multiplex Control System 22-127, 128
Replacement
Gauges 22-276

Gauges
Component Location Index 22-256
How-to Information 22-259
Circuit Diagram 22-261, 268

General Information
(See section 1)

Glove Box
Removal/Installation 20-132

Glove Box Lock Cylinder
Replacement 20-133

GPS Antenna
Removal/Installation 22-481, 550

Grille
Replacement 20-197

H

Hazard Warning Switch
Test 22-216

Headlight
Adjustment 22-196
Replacement 22-197

Headlights
Circuit Diagram 22-170, 174

Headliner
Removal/Installation 20-117

Heater Unit
Replacement 21-53

Heater Valve Cable
Adjustment 21-56

Heating/Ventilation
Component Location Index 21-3
Circuit Diagram 21-20

High Mount Brake Light
Replacement 22-204, 205

Hood
Adjustment 20-190

Hood Insulator
Replacement 20-192

Hood Latch
Replacement 20-221

Hood Opener Cable
Component Location Index 20-216
Replacement 20-217

Hood Release Handle
Replacement 20-222

Hood Seal
Replacement 20-192

Hood Switch
Test 22-157

Horn
Test/Replacement 22-161

Horn Switch
Test 22-162

Horns
Component Location Index 22-160
Circuit Diagram 22-161

HO2S, Secondary
Replacement 11-222

I

IAT (Intake Air Temperature) Sensor
Replacement 11-224

Idle Control System
Component Location Index 11-299
Inspection 11-315

Idle Gear
Replacement 14-301

Idle Gear Shaft
Removal/Installation 14-300

Idle Gear Shaft Bearing
Replacement 14-266

Ignition Coil Relay Circuit
Troubleshooting 4-25

Ignition Coil(s)
Removal/Installation 4-25

Ignition Key Light
Test 22-229

Ignition Key Switch
Test 22-229

Ignition Switch
Test 22-81

Ignition System
Component Location Index 4-22
Circuit Diagram 4-23
Inspection 4-24

Immobilizer Control Unit-Receiver
Replacement 22-414

Immobilizer System
Component Location Index 22-404
Description 22-405
Circuit Diagram 22-406
Troubleshooting 22-407, 412, 413

In-car Temperature Sensor
Replacement 21-122
Test 21-122

Injectors
Replacement 11-220

Inner Fender, Front
Replacement 20-211

Inner Fender, Rear
Replacement 20-214

Inside Rearview Mirror
Replacement 20-43

Instrument Panel
Removal/Installation 20-129

Instrument Visor
Removal/Installation 20-129

Intake Air Bypass Control Thermal Valve
Test 11-359
Replacement 11-360

Intake Air System
Component Location Index 11-355

Intake Manifold
Removal/Installation 9-2, 3

Interlock System
Component Location Index 14-251
Circuit Diagram 14-252, 253

Intermediate Shaft Assembly
Removal 16-21
Disassembly 16-22
Resassembly 16-23
Installation 16-25

Intput Shaft (Mainshaft) Speed Sensor
Replacement 14-201

K

Key Interlock Solenoid
Test 14-260

Key Interlock System Circuit
Troubleshooting 14-259

Keyless Entry Transmitter
Test 22-158
Repair 22-159

Keyless Entry/Security Alarm System
Component Location Index 22-133
Description 22-135
Circuit Diagram 22-137
How-to Information 22-155

(cont'd)

BACK

Protected by AR

Service Manual Index

(cont'd)

Knock Sensor
Replacement 11-224

Knuckle Bushings
Replacement 18-44

Knuckles
Replacement
Front Suspension 18-12
Rear Suspension 18-29

L

Leading Arms
Replacement 18-42

License Plate Light
Replacement 22-201

License Trim
Replacement 20-206

Lights, Exterior
Component Location Index 22-163
Circuit Diagram 22-178, 180

Lights, Interior
Component Location Index 22-217
Circuit Diagram 22-218

Lights-on Reminder
Circuit Diagram 22-291, 292

Low Fuel Indicator
Test 11-354

Lower Arms
Removal/Installation
Front Suspension 18-20
Replacement
Rear Suspension 18-40

Lubrication System
Component Location Index 8-3
Test 8-6

Lumbar Support
Replacement 20-163

M

M/T Assembly
Removal 13-4
Installation 13-11
Disassembly 13-19
Resassembly 13-51

M/T Change Lever
Inspection 13-24
Disassembly/Reassembly 13-25

M/T Countershaft Assembly
Inspection 13-36, 39
Disassembly 13-38
Resassembly 13-40

M/T Differential
Component Location Index 13-56
Adjustment 13-60

M/T Mainshaft Assembly
Inspection 13-28, 31
Disassembly 13-30
Resassembly 13-33
Adjustment 13-49

M/T Reverse Shift Fork
Inspection 13-24

M/T Shift Lever
Replacement 13-55

MAF (Mass Air Flow) Sensor
Replacement 11-226

Main Valve Body
Removal 14-274
Repair 14-276
Installation 14-277, 322
Disassembly/Inspection/
Reassembly 14-278

Mainshaft Bearing, A/T Housing
Removal 14-271
Installation 14-272

Mainshaft Bearing, Torque Converter Housing
Replacement 14-284

Mainshaft Bearings
Replacement 13-47

Mainshaft 5th Gear
Inspection 14-289

Maintenance
(See section 3)

Maintenance Required Indicator
Repair 22-278

Manual Aeat Linkage
Disassembly/Reassembly 20-156, 157, 158, 159

Map Light/Spotlight
Replacement 22-220

MAP Sensor
Replacement 11-226

MIL Circuit
Troubleshooting 11-205

Mirrors
Component Location Index 20-39

Mode Control Motor
Test 21-45
Replacement 21-46

Moonroof Control Unit
How-to Information 22-307
Input Test 22-308

Moonroof Drain Channel
Replacement 20-72, 73

Moonroof Drain Channel Slider
Replacement 20-84

Moonroof Frame
Replacement 20-78

Moonroof Glass
Adjustment 20-69
Replacement 20-70

Moonroof Inner Cable
Replacement 20-81

Moonroof Limit Switch
Adjustment 20-86
Replacement 22-305
Test 22-305

Moonroof Motor
Replacement 20-77
Test 22-306

Moonroof Sunshade
Replacement 20-74, 75

Moonroof Switch
Test 22-306

Moonroof Wind Deflector
Replacement 20-71

Moonroof/Sunroof
Component Location Index 20-65, 66, 22-301, 302
Test 20-87
Circuit Diagram 22-303, 304

MTF
Inspection/Replacement 13-3

Multiplex Control System
Component Location Index 22-82
Description 22-84, 106
Troubleshooting 22-91, 93, 94, 95, 96
Circuit Diagram 22-114

Multiplex Control Unit, Door
Input Test
Multiplex Control System 22-129
Repair
Power Windows 22-232

Multiplex Integrated Control Unit
Input Test
Entry Light Control System 22-226
Keyless Entry/Security Alarm System 22-143
Multiplex Control System 22-124, 293
Safety Indicator System 22-289

BACK

Protected by AR

N

Navigation
Component Location Index 22-417, 485
How-to Information 22-418, 486
Description 22-424, 492
Circuit Diagram 22-444, 512
Troubleshooting 22-447, 448, 450, 451, 453, 455, 456, 457, 458, 459, 460, 461, 462, 463, 515, 516, 518, 519, 521, 523, 524, 525, 526, 527, 528, 529, 530, 531
Test 22-464, 532
Repair 22-480, 549

Navigation Unit
Removal/Installation 22-481, 550

Navigation Unit DVD-ROM
Replacement 22-480, 549

O

Oil Filter
Replacement 8-7

Oil Filter Feed Pipe
Replacement 8-8

Oil Pan
Removal 7-11
Installation 7-29

Oil Pressure Switch
Replacement 8-5
Test 8-5

Oil Pump, Engine
Overhaul 8-9

Oil, Engine
Replacement 8-6

OPDS Unit
Replacement 23-216

Output Shaft (Countershaft) Speed Sensor
Replacement
A/T Electronic Control System 14-201
Fuel Injection System (PGM-FI) 11-225

Outside Air Temperature Indicator
Test 22-277

Outside Air Temperature Sensor
Replacement 21-123
Test 21-123

Outside Mirror Holders
Replacement 20-42

Outside Mirror Housing Cover
Replacement 20-43

Outside Power Mirror Actuators
Test 22-401
Replacement 22-402

Outside Power Mirror Switch
Test/Replacement 22-401

Outside Power Mirrors
Replacement 20-41
Component Location Index 22-398
Circuit Diagram 22-399
Test 22-400

P

Park Lever Position Stop
Inspection/Adjustment 14-266

Park Pin Switch
Replacement 14-263
Test 14-263

Parking Brake
Inspection/Adjustment 19-7

Parking Brake Cable
Replacement 19-33

Parking Brake Switch
Test 19-11

PCV Valve
Inspection 11-388
Replacement 11-388

Piston Rings
Replacement 7-22

Pistons
Replacement 7-19
Installation 7-24

Power Seat Linkage
Disassembly/Reassembly 20-160, 161

Power Seat Motors
Replacement
Front Seats 20-162
Test
Seats 22-392, 393

Power Seat Switch
Test/Replacement 22-390, 391

Power Steering Fluid
Replacement 17-12

Power Steering Lines and Hoses
Replacement 17-13

Power Steering Pump
Test 17-9, 10
Replacement 17-14
Overhaul 17-15

Power Window Motor, Driver's
Test 22-239

Power Window Motors, Passenger's
Test 22-240

Power Window Relay
Test 22-79

Power Window Switch, Master
Input Test 22-236
Replacement 22-241

Power Window Switches, Passenger's
Test/Replacement 22-241

Power Windows
Component Location Index 22-230
Description 22-231
Circuit Diagram 22-234

PSP (Power Steering Pressure) Switch Signal Circuit
Troubleshooting 11-312

Q

Quarter Window Glass
Replacement 20-59

R

Radiator
Test 10-3
Replacement 10-13

Radiator and A/C Condenser Fans Common Circuit
Troubleshooting 21-37

Radiator Cap
Test 10-3

Radiator Fan Assembly
Test 10-4

Radiator Fan Circuit
Troubleshooting 10-18, 20

Radiator Fan Switch
Replacement 10-23
Test 10-23

Radiator Fan Switch Circuit
Troubleshooting 10-22

Radio Remote Switch
Test 22-379

Rear Air Outlet
Replacement 20-215

Rear Door Hook Pin
Replacement 20-35

Rear Doors
Component Location Index 20-7

Rear Suspension
Component Location Index 18-4

Rear Window Defogger
Component Location Index 22-296
Circuit Diagram 22-297, 298

(cont'd)

BACK

Protected by AR

Service Manual Index

(cont'd)

Rear Window Defogger Wires
Test 22-299
Repair 22-300

Rear Window Glass
Replacement 20-51

Receiver/Dryer Desiccant
Replacement 21-64

Recirculation Control Motor
Test 21-47
Replacement 21-48

Recirculation Control Motor Circuit
Troubleshooting 21-33, 117

Refrigerant
Replacement 21-65, 66, 67
Test 21-68

Refrigerant Oil
Replacement 21-8

Regulator Valve Body
Disassembly/Inspection/
Reassembly 14-280, 281

Relay Control Module
Input Test 22-132

Resonator
Removal/Installation 11-362

Rocker Arm Assembly
Removal 6-33
Disassembly/Reassembly 6-34
Installation 6-45

Rocker Arm Oil Control Solenoid
Inspection 11-296
Removal/Installation 11-297

Rocker Arm Oil Pressure Switch
Removal/Installation 11-298

Rocker Arms
Test
VTEC System 6-7
Inspection
Rocker Arm Assembly 6-35

Roof Moldings
Replacement 20-200

S

Safety Indicator System
Component Location Index 22-286
Circuit Diagram 22-287, 288

Seat Access Cable
Replacement 20-165

Seat Armrest, Rear
Replacement 20-177

Seat Belts
Component Location Index 23-3, 4

Seat Belts, Front
Replacement 23-5
Inspection 23-15

Seat Belts, Rear
Replacement 23-12

Seat Cover, Front
Replacement 20-166

Seat Cushion Cover, Rear
Replacement 20-182

Seat Heater Elements
Test 22-396

Seat Heater Switches
Test 22-397

Seat Heaters
Component Location Index 22-394
Circuit Diagram 22-395

Seat Position Sensor, Driver's
Replacement 23-220

Seat Side Bolster Cover, Rear
Replacement 20-182

Seat Weight Sensor Unit
Replacement 23-219

Seat Weight Sensor, Front Passenger's
Replacement 23-218

Seat, Front
Removal/Installation 20-144
Disassembly/Reassembly 20-149, 150, 151, 152, 153, 154, 155

Seat, Rear
Removal/Installation 20-173, 174

Seat-back Cover, Rear
Replacement 20-179

Seat-back Latch, Rear
Replacement 20-175

Seat-back Lock Cylinder, Rear
Replacement 20-176

Secondary Shaft Bearing, Torque Converter Housing
Replacement 14-286

Secondary Shaft Bearings
Removal/Installation 14-295

Secondary Shaft 1st Gear
Inspection 14-298

Secondary Shaft 2nd Gear
Inspection 14-296

Servo Body
Disassembly/Inspection/
Reassembly 14-282

Shift Control Solenoid Valves
Test 14-191
Replacement 14-194
Removal/Installation 14-283

Shift Forks
Inspection 13-26
Disassembly/Reassembly 13-27

Shift Lock Solenoid
Test 14-261
Replacement 14-262

Shift Lock System Circuit
Troubleshooting 14-254

Side Airbag, Driver's
Replacement 23-199

Side Curtain Airbag
Replacement 23-200

Side Impact Sensors
Replacement 23-214, 215

Side Sill Panels
Replacement 20-205

Spark Plugs
Inspection 4-27

Specifications
(See section 2)

Splash Shield
Replacement 20-212

SRS
Component Location Index 23-17
Description 23-48
Circuit Diagram 23-52, 54, 56
Troubleshooting 23-186, 188, 190, 192
Inspection/Replacement 23-194

SRS Unit
Replacement 23-213

Stabilizer Bar
Replacement
Front Suspension 18-23
Rear Suspension 18-44

Stabilizer Links
Replacement
Front Suspension 18-22
Removal/Installation
Rear Suspension 18-43

Starter
Test 4-9, 10
Removal/Installation 4-11
Overhaul 4-12, 17

Starter Solenoid
Test 4-8

Starting System
Component Location Index 4-3
Circuit Diagram 4-5
Troubleshooting 4-6

Steering
Component Location Index 17-3
Troubleshooting 17-6
Inspection 17-7, 11

BACK

Protected by AR

Steering Column
Removal/Installation 17-25
Inspection 17-28

Steering Gearbox
Removal 17-30
Overhaul 17-36
Installation 17-52

Steering Gearbox Mount Bushing
Replacement 17-57

Steering Linkage
Inspection 17-8

Steering Lock
Replacement 17-28

Steering Rack Guide
Adjustment 17-29

Steering Wheel
Inspection 17-7
Removal 17-22
Disassembly/Reassembly 17-23
Installation 17-24

Subframes
Replacement 20-228

Sunlight Sensor
Replacement 21-124
Test 21-124

Suspension
Adjustment 18-6

Synchro Ring, Double-cone
Inspection 13-45

Synchro Sleeve
Inspection/Reassembly 13-45

T

Taillight
Replacement 22-199, 200, 202

Thermostat
Test 10-4
Replacement 10-8

Throttle Actuator Control Module
Replacement 11-274

Throttle Body
Test 11-356
Repair 11-357
Removal/Installation 11-366, 367
Disassembly/Reassembly 11-368

Throttle Cable
Adjustment 11-362, 363
Removal/Installation 11-364, 365

Tie-rod Ball Joint Boots
Replacement 17-57

Timing/Cam Chain
Removal 6-12
Installation 6-15
Inspection 6-22

Timing/Cam Chain Auto-tensioner
Removal/Installation 6-19

Timing/Cam Chain Case Oil Seal
Installation 6-21

Torque Converter
Description 14-66
Test 14-188

TP Sensor
Inspection 11-358

Trailing Arms
Removal/Installation 18-41

Transmission Housing
Removal 14-269
Installation 14-324

Transmission Range Switch
Test 14-247
Replacement 14-249

Trim
Component Location Index 20-88, 89
Removal/Installation 20-90, 91, 93, 94, 95, 96, 97, 99, 100, 102, 104, 105, 106, 108, 110, 112, 113, 114, 115, 116

Troubleshooting
(See first page of this Index)

Trunk Key Cylinder Switch
Test 22-156

Trunk Latch Switch
Test 22-222

Trunk Lid
Adjustment 20-193

Trunk Lid Latch
Replacement 20-224

Trunk Lid Lock Cylinder
Replacement 20-225

Trunk Lid Opener
Replacement 20-223

Trunk Lid Opener Cable
Replacement 20-218, 220

Trunk Lid Opener Solenoid
Test 22-156

Trunk Lid Spoiler
Replacement 20-207

Trunk Lid Torsion Bar
Replacement 20-194

Trunk Lid Weatherstrip
Replacement 20-195

Trunk Light Assembly
Test/Replacement 22-222

Trunk Pass-through Cover Key Cylinder
Replacement 20-178

Turn Signal/Hazard Relay
Input Test 22-214

Turn Signal/Hazard Warning Lights
Component Location Index 22-210
Circuit Diagram 22-212

U

Under-dash Fuse/Relay Box
Removal/Installation 22-77

Under-hood Fuse/Relay Box
Removal/Installation 22-75

Upper Arms
Replacement
Front Suspension 18-19
Removal/Installation
Rear Suspension 18-39

V

Valve Guides
Inspection 6-39
Replacement 6-40

Valve Seats
Repair 6-42

Valves
Adjustment 6-9
Removal 6-38
Inspection 6-39
Installation 6-44

Vanity Mirror Lights
Test 22-223

Voice Control Switch
Removal/Installation 22-482, 551

VTC Actuator
Inspection 6-8
Removal/Installation 6-31

VTC Oil Control Solenoid Valve
Test/Removal/Installation 11-295

VTC System
Component Location Index 11-275

W

Washer Fluid Level Switch
Test 22-254

Washer Fluid Reservoir
Replacement 22-254

(cont'd)

BACK

Protected by AR

Service Manual Index

(cont'd)

Washer Motor, Windshield
Test 22-252

Washer Tube, Windshield
Replacement 22-255

Water Passage
Replacement 10-9

Water Pump
Inspection 10-5
Replacement 10-5

Wheel Bearings
Inspection 18-9

Wheel Speed Sensors
Inspection 19-67
Replacement 19-68

Wheels and Tires
Inspection 18-10

Window Antenna Coil
Replacement 22-380

Window Antenna Wires
Repair 22-381
Test 22-381

Windows
Component Location Index 20-44, 45

Windshield Glass
Replacement 20-46

Wiper Motor, Windshield
Test 22-252
Replacement 22-253

Wiper/Washer
Component Location Index 22-243
Circuit Diagram 22-244

Wiper/Washer Switch
Test/Replacement 22-250
Input Test 22-251

Wire Harnesses
(See first page of this Index)

Wiring System
How-to Information 22-3
Relay and Control Unit Locations ... 22-7, 8, 11, 12

X

XM Receiver
Replacement 22-382

XM Satellite Antenna
Troubleshooting 22-370
Replacement 22-382

1

1st/3rd Clutch Assembly
Disassembly 14-302
Inspection 14-308
Resassembly 14-316

2

2nd Clutch Transmission Fluid Pressure Switch
Replacement 14-202

3

3rd Clutch Transmission Fluid Pressure Switch
Replacement 14-203

BACK

Protected by AR

BACK

Protected by AR

ACCORD

2003-2006
Service Manual
V6 Supplement

Protected by AR

General Information

Chassis and Paint Codes
2003 4-door Model 1-2
2003 2-door Model 1-3

Chassis and Paint Codes
2004 4-door Model 1-4
2004 2-door Model 1-5

Chassis and Paint Codes
2005 4-door Model 1-6
2005 2-door Model 1-7

Chassis and Paint Codes
2006 4-door Model 1-8
2006 2-door Model 1-9

Identification Number Locations 1-10

Danger/Warning/Caution Label Locations 1-11

Under-hood Emission Control Label 1-12

Protected by AR

Chassis and Paint Codes

2003 4-door Model

Vehicle Identification Number

1HG CM6 6 3 * 3 A 000001
a b c d e f g h

a. Manufacturer, Make and Type of Vehicle
1HG: HONDA OF AMERICA MFG., INC., U.S.A.
HONDA passenger vehicle
JHM: HONDA MOTOR CO., LTD.
HONDA passenger vehicle
b. Line, Body and Engine Type
CM6: ACCORD/J30A4
c. Body Type and Transmission Type
6: 4-door Sedan/5-speed Automatic
d. Vehicle Grade (Series)
U.S. model
3: LX V6
5: EX V6
8: EX V6 with Navigation
Canada model
3: LX V6
4: EX V6
5: EX V6 with Side Curtain Airbag
e. Check Digit
f. Model Year
3: 2003
g. Factory Code
A:Marysville, Ohio Factory in U.S.A.
C:Saitama Factory in Japan
h. Serial Number
000001—: U.S. model
800001—: Canada model

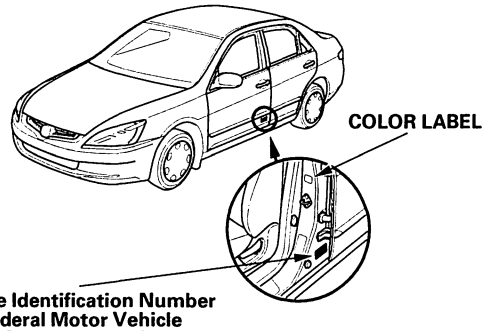

Vehicle Identification Number and Federal Motor Vehicle Safety Standard Certification.

Vehicle Identification Number and Canadian Motor Vehicle Safety Standard Certification.

Engine Number

J30A4 - 1000001
a b

a. Engine Type
J30A4: 3.0 L SOHC VTEC Sequential Multiport Fuel-injected engine
b. Serial Number
1HG: 1000001—
JHM: 1500001—

Transmission Number

BAYA - 1000001
a b

a. Transmission Type
BAYA: 5-speed Automatic
MAYA: 5-speed Automatic
b. Serial Number

Paint Code

Code	Color	U.S.	Canada
B-92P	Nighthawk Black Pearl	○	○
B-96P	Eternal Blue Pearl	○	○
G-508P	Noble Green Pearl	○	
NH-578	Taffeta White	○	
NH-623M	Satin Silver Metallic	○	○
NH-658P	Graphite Pearl	○	○
R-522P	Redondo Red Pearl	○	○
YR-538M	Desert Mist Metallic	○	○

BACK

Protected by AR

2003 2-door Model

Vehicle Identification Number

1HG CM8 2 2 * 3 A 000001

a b c d e f g h

a. Manufacturer, Make and Type of Vehicle
1HG: HONDA OF AMERICA MFG., INC., U.S.A.
HONDA passenger vehicle
b. Line, Body and Engine Type
CM8: ACCORD COUPE/J30A4
c. Body Type and Transmission Type
2: 2-door Coupe/5-speed Automatic
1: 2-door Coupe/6-speed Manual
d. Vehicle Grade (Series)
U.S. model
2: LX V6
6: EX V6, EX V6 with Side Curtain Airbag
7: EX V6 with Navigation
Canada model
2: LX V6
5: EX V6
6: EX V6, EX V6 with Side Curtain Airbag
e. Check Digit
f. Model Year
3: 2003
g. Factory Code
A:Marysville, Ohio Factory in U.S.A.
h. Serial Number
000001—: U.S. model
800001—: Canada model

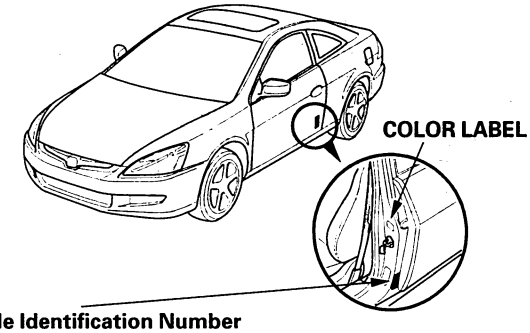

Vehicle Identification Number and Federal Motor Vehicle Safety Standard Certification.

Vehicle Identification Number and Canadian Motor Vehicle Safety Standard Certification.

Engine Number

J30A4 - 1000001

a b

a. Engine Type
J30A4: 3.0 L SOHC VTEC Sequential Multiport Fuel-injected engine
b. Serial Number

Transmission Number

BAYA - 1000001

a b

a. Transmission Type
BAYA: 5-speed Automatic
MAYA: 5-speed Automatic
ATC6: 6-speed Manual
b. Serial Number

Paint Code

Code	Color	U.S.	Canada
B-92P	Nighthawk Black Pearl	○	○
B-517P	Sapphire Blue Pearl	○	○
G-508P	Noble Green Pearl	○	
NH-578	Taffeta White	○	
NH-623M	Satin Silver Metallic	○	○
NH-658P	Graphite Pearl	○	
R-94	San Marino Red	○	
R-522P	Redondo Red Pearl		○
YR-538M	Desert Mist Metallic	○	○

Protected by AR

Chassis and Paint Codes (cont'd)

2004 4-door Model

Vehicle Identification Number

1HG CM6 6 3 * 4 A 000001
a b c d e f g h

a. Manufacturer, Make and Type of Vehicle
1HG: HONDA OF AMERICA MFG., INC., U.S.A.
HONDA passenger vehicle
JHM: HONDA MOTOR CO., LTD.
HONDA passenger vehicle
b. Line, Body and Engine Type
CM6: ACCORD/J30A4
c. Body Type and Transmission Type
6: 4-door Sedan/5-speed Automatic
d. Vehicle Grade (Series)
U.S. model
3: LX V6
5: EX V6
8: EX V6 with Navigation
Canada model
3: LX V6
4: EX V6
5: EX V6 with Side Curtain Airbag
e. Check Digit
f. Model Year
4: 2004
g. Factory Code
A:Marysville, Ohio Factory in U.S.A.
C:Saitama Factory in Japan
h. Serial Number
000001—: U.S. model
800001—: Canada model

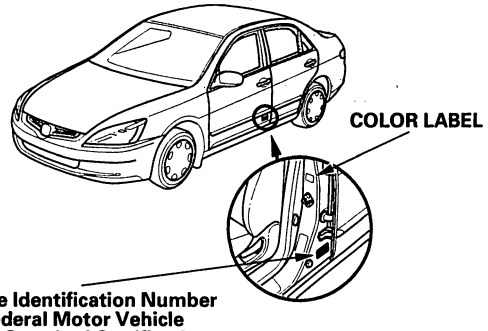

Vehicle Identification Number and Federal Motor Vehicle Safety Standard Certification.

Vehicle Identification Number and Canadian Motor Vehicle Safety Standard Certification.

Engine Number

J30A4 - 2000001
a b

a. Engine Type
J30A4: 3.0 L SOHC VTEC Sequential Multiport Fuel-injected engine
b. Serial Number
1HG: 2000001—
JHM: 2500001—

Transmission Number

BAYA - 6000001
a b

a. Transmission Type
BAYA: 5-speed Automatic
MAYA: 5-speed Automatic
b. Serial Number
BAYA: 6000001—
MAYA: 2000001—

Paint Code

Code	Color	U.S.	Canada
B-92P	Nighthawk Black Pearl	○	○
B-96P	Eternal Blue Pearl	○	○
G-516P	Deep Green Pearl	○	○
NH-578	Taffeta White	○	
NH-623M	Satin Silver Metallic	○	○
NH-658P	Graphite Pearl	○	○
R-522P	Redondo Red Pearl	○	○
YR-538M	Desert Mist Metallic	○	○

BACK

Protected by AR

2004 2-door Model

Vehicle Identification Number

1HG CM8 2 2 * 4 A 000001

a b c d e f g h

a. Manufacturer, Make and Type of Vehicle
1HG: HONDA OF AMERICA MFG., INC., U.S.A.
HONDA passenger vehicle
b. Line, Body and Engine Type
CM8: ACCORD COUPE/J30A4
c. Body Type and Transmission Type
2: 2-door Coupe/5-speed Automatic
1: 2-door Coupe/6-speed Manual
d. Vehicle Grade (Series)
U.S. model
2: LX V6
6: EX V6
7: EX V6 with Navigation
Canada model
2: LX V6
5: EX V6
6: EX V6 with Side Curtain Airbag
e. Check Digit
f. Model Year
4: 2004
g. Factory Code
A:Marysville, Ohio Factory in U.S.A.
h. Serial Number
000001—: U.S. model
800001—: Canada model

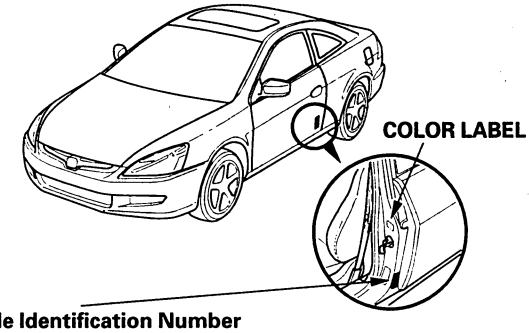

Vehicle Identification Number and Federal Motor Vehicle Safety Standard Certification.

Vehicle Identification Number and Canadian Motor Vehicle Safety Standard Certification.

Engine Number

J30A4 - 2000001

a b

a. Engine Type
J30A4: 3.0 L SOHC VTEC Sequential Multiport Fuel-injected engine
b. Serial Number

Transmission Number

BAYA - 6000001

a b

a. Transmission Type
BAYA: 5-speed Automatic
MAYA: 5-speed Automatic
ATC6: 6-speed Manual
b. Serial Number
BAYA: 6000001—
MAYA: 2000001—
ATC6: 2000001—

Paint Code

Code	Color	U.S.	Canada
B-92P	Nighthawk Black Pearl	○	○
B-517P	Sapphire Blue Pearl	○	○
G-516P	Deep Green Pearl	○	
NH-578	Taffeta White	○	
NH-623M	Satin Silver Metallic	○	○
NH-658P	Graphite Pearl	○	○
R-94	San Marino Red	○	
R-522P	Redondo Red Pearl		○
YR-538M	Desert Mist Metallic	○	

Protected by AR

Chassis and Paint Codes (cont'd)

2005 4-door Model

Vehicle Identification Number

1HG CM6 6 3 * 5 A 000001

a b c d e f g h

a. Manufacturer, Make and Type of Vehicle
1HG: HONDA OF AMERICA MFG., INC., U.S.A.
HONDA passenger vehicle
JHM: HONDA MOTOR CO., LTD.
HONDA passenger vehicle

b. Line, Body and Engine Type
CM6: ACCORD/J30A4

c. Body Type and Transmission Type
6: 4-door Sedan/5-speed Automatic

d. Vehicle Grade (Series)
U.S. model
3: LX V6
5: EX V6
8: EX V6 with Navigation
Canada model
3: LX V6
5: EX V6

e. Check Digit

f. Model Year
5: 2005

g. Factory Code
A:Marysville, Ohio Factory in U.S.A.
C:Saitama Factory in Japan

h. Serial Number
000001—: U.S. model
800001—: Canada model

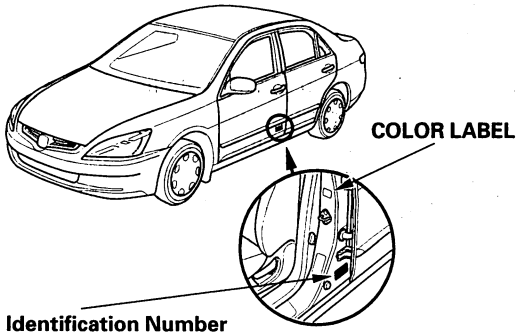

Vehicle Identification Number and Federal Motor Vehicle Safety Standard Certification.

Vehicle Identification Number and Canadian Motor Vehicle Safety Standard Certification.

Engine Number

J30A4 - 3000001

a b

a. Engine Type
J30A4: 3.0 L SOHC VTEC Sequential Multiport Fuel-injected engine

b. Serial Number
1HG: 3000001—
JHM: 3500001—

Transmission Number

BAYA - 7000001

a b

a. Transmission Type
BAYA: 5-speed Automatic
MAYA: 5-speed Automatic

b. Serial Number
BAYA: 7000001—
MAYA: 3000001—

Paint Code

Code	Color	U.S.	Canada
B-92P	Nighthawk Black Pearl	○	○
B-96P	Eternal Blue Pearl	○	○
G-516P	Deep Green Pearl	○	○
NH-578	Taffeta White	○	
NH-623M	Satin Silver Metallic	○	○
NH-658P	Graphite Pearl	○	○
R-522P	Redondo Red Pearl	○	○
YR-538M	Desert Mist Metallic	○	○

BACK

Protected by AR

2005 2-door Model

Vehicle Identification Number

1HG CM8 2 2 * 5 A 000001
a b c d e f g h

a. Manufacturer, Make and Type of Vehicle
1HG: HONDA OF AMERICA MFG., INC., U.S.A.
HONDA passenger vehicle
b. Line, Body and Engine Type
CM8: ACCORD COUPE/J30A4
c. Body Type and Transmission Type
2: 2-door Coupe/5-speed Automatic
1: 2-door Coupe/6-speed Manual
d. Vehicle Grade (Series)
U.S. model
2: LX V6
6: EX V6
7: EX V6 with Navigation
Canada model
2: LX V6
6: EX V6
e. Check Digit
f. Model Year
5: 2005
g. Factory Code
A:Marysville, Ohio Factory in U.S.A.
h. Serial Number
000001—: U.S. model
800001—: Canada model

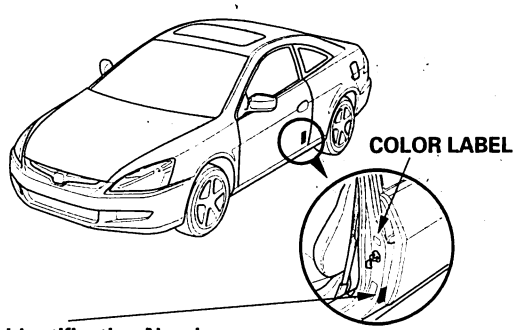

Vehicle Identification Number and Federal Motor Vehicle Safety Standard Certification.

Vehicle Identification Number and Canadian Motor Vehicle Safety Standard Certification.

Engine Number

J30A4 - 3000001
a b

a. Engine Type
J30A4: 3.0 L SOHC VTEC Sequential Multiport Fuel-injected engine
b. Serial Number

Transmission Number

BAYA - 7000001
a b

a. Transmission Type
BAYA: 5-speed Automatic
MAYA: 5-speed Automatic
ATC6: 6-speed Manual
b. Serial Number
BAYA: 7000001—
MAYA: 3000001—
ATC6: 3000001—

Paint Code

Code	Color	U.S.	Canada
B-92P	Nighthawk Black Pearl	○	○
B-517P	Sapphire Blue Pearl	○	○
G-516P	Deep Green Pearl	○	
NH-578	Taffeta White	○	
NH-623M	Satin Silver Metallic	○	○
NH-658P	Graphite Pearl	○	○
R-94	San Marino Red	○	
R-522P	Redondo Red Pearl		○
YR-538M	Desert Mist Metallic	○	

Protected by AR

Chassis and Paint Codes (cont'd)

2006 4-door Model

Vehicle Identification Number

1HG CM6 6 3 * 6 A 000001

a b c d e f g h

a. Manufacturer, Make and Type of Vehicle
1HG: HONDA OF AMERICA MFG., INC., U.S.A.
HONDA passenger vehicle
b. Line, Body and Engine Type
CM6: ACCORD/J30A5
c. Body Type and Transmission Type
6: 4-door Sedan/5-speed Automatic
5: 4-door Sedan/6-speed Manual
d. Vehicle Grade (Series)
U.S. model
3: LX V6
5: EX V6
8: EX V6 with Navigation
Canada model
3: SE V6
5: EX V6
8: EX V6 with Navigation
e. Check Digit
f. Model Year
6: 2006
g. Factory Code
A:Marysville, Ohio Factory in U.S.A.
h. Serial Number
000001—: U.S. model
800001—: Canada model

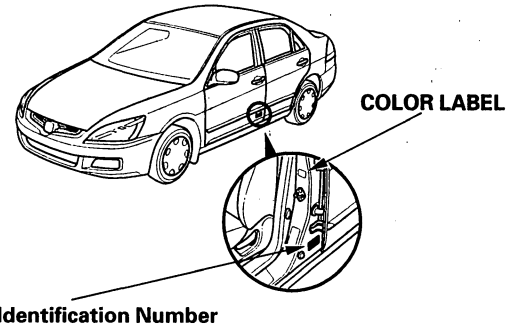

Vehicle Identification Number and Federal Motor Vehicle Safety Standard Certification.

Vehicle Identification Number and Canadian Motor Vehicle Safety Standard Certification.

Engine Number

J30A5 - 1000001

a b

a. Engine Type
J30A5: 3.0 L SOHC VTEC Sequential Multiport Fuel-injected engine
b. Serial Number

Transmission Number

BAYA - 8000001

a b

a. Transmission Type
BAYA: 5-speed Automatic
ATC6: 6-speed Manual
b. Serial Number
BAYA: 8000001—
ATC6: 4000001—

Paint Code

Code	Color	U.S.	Canada
B-92P	Nighthawk Black Pearl	○	○
B-517P	Sapphire Blue Pearl	○	○
B-536P	Royal Blue Pearl	○	○
NH-578	Taffeta White	○	
NH-658P	Graphite Pearl	○	○
NH-700M	Alabaster Silver Metallic	○	○
R-522P	Redondo Red Pearl	○	○
YR-538M	Desert Mist Metallic	○	○
YR-562P	Carbon Bronze Pearl	○	○

BACK

Protected by AR

2006 2-door Model

Vehicle Identification Number

1HG CM8 2 2 * 6 A 000001
a b c d e f g h

a. Manufacturer, Make and Type of Vehicle
1HG: HONDA OF AMERICA MFG., INC., U.S.A.
HONDA passenger vehicle
b. Line, Body and Engine Type
CM8: ACCORD COUPE/J30A5
c. Body Type and Transmission Type
2: 2-door Coupe/5-speed Automatic
1: 2-door Coupe/6-speed Manual
d. Vehicle Grade (Series)
U.S. model
2: LX V6
6: EX V6
7: EX V6 with Navigation
Canada model
2: LX V6
6: EX V6
7: EX V6 with Navigation
e. Check Digit
f. Model Year
6: 2006
g. Factory Code
A:Marysville, Ohio Factory in U.S.A.
h. Serial Number
000001—: U.S. model
800001—: Canada model

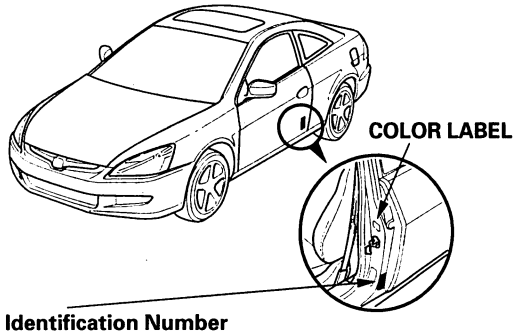

Vehicle Identification Number and Federal Motor Vehicle Safety Standard Certification.

Vehicle Identification Number and Canadian Motor Vehicle Safety Standard Certification.

Engine Number

J30A5 - 1000001
a b

a. Engine Type
J30A5: 3.0 L SOHC VTEC Sequential Multiport Fuel-injected engine
b. Serial Number

Transmission Number

BAYA - 8000001
a b

a. Transmission Type
BAYA: 5-speed Automatic
ATC6: 6-speed Manual
b. Serial Number
BAYA: 8000001—
ATC6: 4000001—

Paint Code

Code	Color	U.S.	Canada
B-92P	Nighthawk Black Pearl	○	○
B-517P	Sapphire Blue Pearl	○	○
B-542M	Cool Blue Metallic	○	○
NH-578	Taffeta White	○	
NH-658P	Graphite Pearl	○	○
NH-700M	Alabaster Silver Metallic	○	○
R-94	San Marino Red	○	○
YR-538M	Desert Mist Metallic	○	

Protected by AR

Identification Number Locations

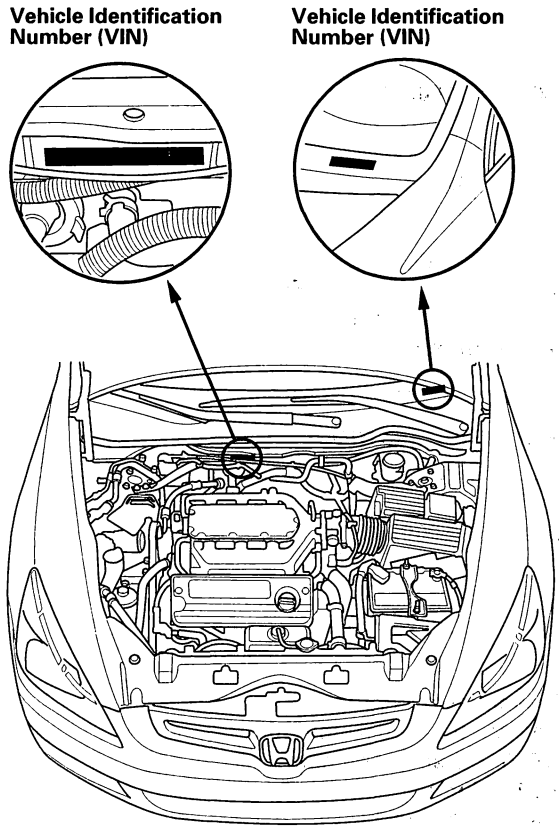

A/T Model:

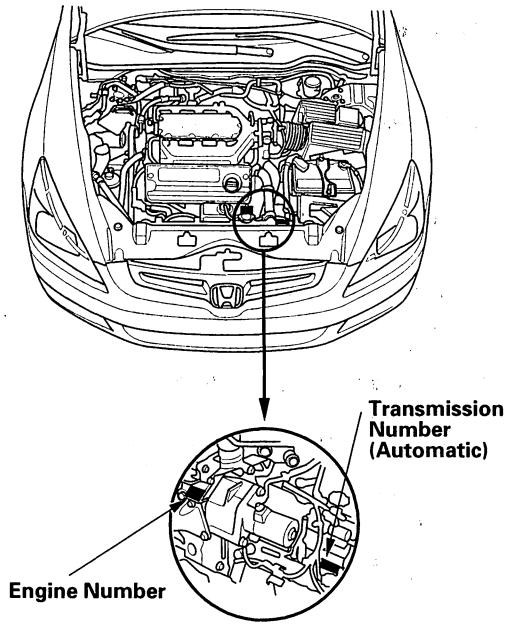

M/T Model:

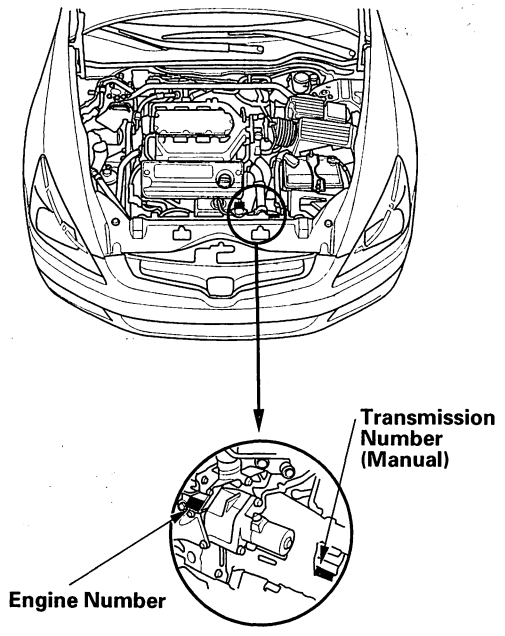

BACK

Protected by AR

Danger/Warning/Caution Label Locations

NOTE: FRONT PASSENGER (CHILD SEAT) AIRBAG WARNING TAG is installed on the glove box on the U.S. model.

Passenger's Compartment:

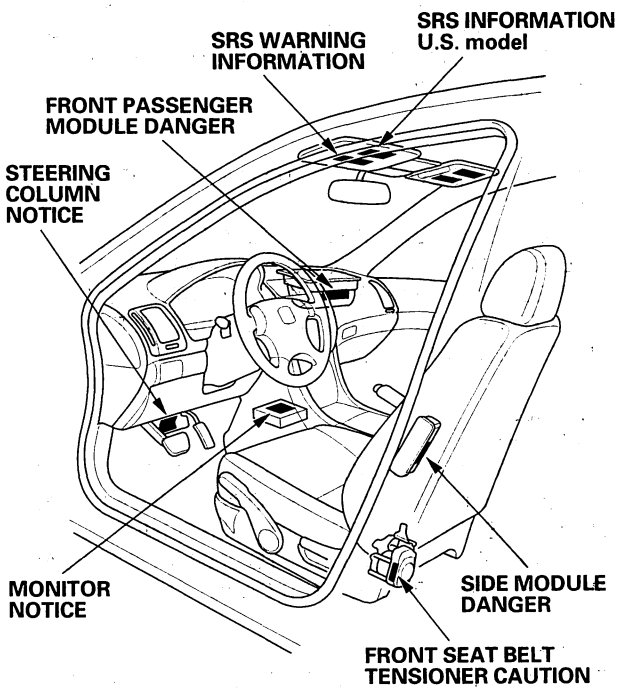

Steering Wheel:

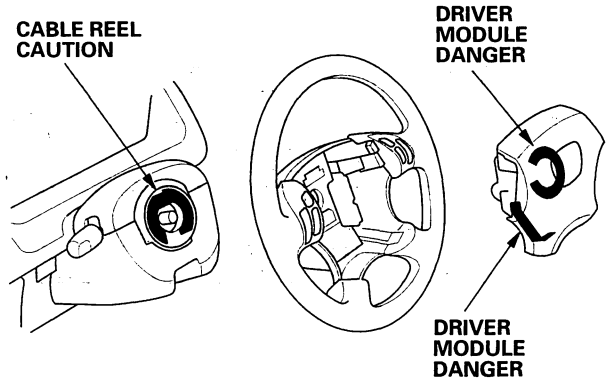

Rear Compartment:

NOTE: The illustration shows the 4-door Sedan model.

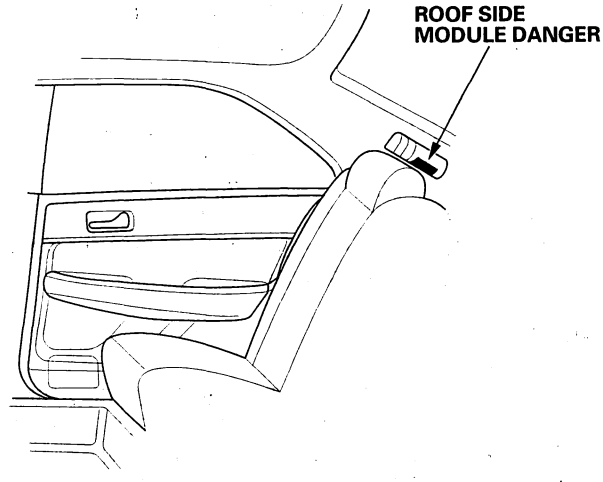

Protected by AR

Under-hood Emission Control Label

Emission Group Identification

Example:

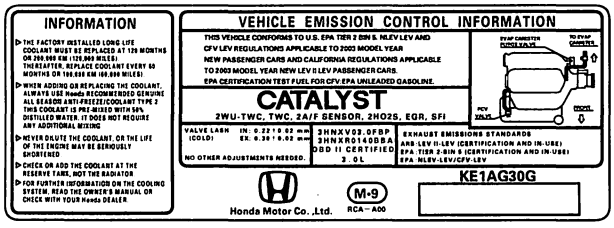

2003 Model

- KA (Federal)
  THIS VEHICLE CONFORMS TO U.S. EPA TIER 2 BIN 5 NLEV, LEV, AND CFV LEV REGULATIONS APPLICABLE TO 2003 MODEL YEAR NEW PASSENGER CARS AND CALIFORNIA REGULATIONS APPLICABLE TO 2003 MODEL YEAR NEW LEV II LEV PASSENGER CARS.

- KL (California)
  THIS VEHICLE CONFORMS TO U.S. EPA TIER 2 BIN 5 NLEV, LEV, AND CFV LEV REGULATIONS APPLICABLE TO 2003 MODEL YEAR NEW PASSENGER CARS AND CALIFORNIA REGULATIONS APPLICABLE TO 2003 MODEL YEAR NEW LEV II ULEV PASSENGER CARS.

2004 Model

- KA (Federal)
  THIS VEHICLE CONFORMS TO U.S. EPA TIER 2 BIN 5 AND CFV LEV REGULATIONS APPLICABLE TO 2004 MODEL YEAR NEW PASSENGER CARS AND CALIFORNIA REGULATIONS APPLICABLE TO 2004 MODEL YEAR NEW LEV II LEV PASSENGER CARS. EPA CERTIFICATION TEST FUEL FOR CFV: EPA UNLEADED GASOLINE.

- KL (California)
  THIS VEHICLE CONFORMS TO U.S. EPA TIER 2 BIN 5 AND CFV LEV REGULATIONS APPLICABLE TO 2004 MODEL YEAR NEW PASSENGER CARS AND CALIFORNIA REGULATIONS APPLICABLE TO 2004 MODEL YEAR NEW LEV II ULEV PASSENGER CARS. EPA CERTIFICATION TEST FUEL FOR CFV: EPA UNLEADED GASOLINE.

2005 Model

- KA (Federal)
  THIS VEHICLE CONFORMS TO U.S. EPA TIER 2 BIN 5 AND CFV LEV REGULATIONS APPLICABLE TO 2005 MODEL YEAR NEW PASSENGER CARS AND CALIFORNIA REGULATIONS APPLICABLE TO 2005 MODEL YEAR NEW LEV II LEV PASSENGER CARS. EPA CERTIFICATION TEST FUEL FOR CFV: EPA UNLEADED GASOLINE.

- KL (California)
  THIS VEHICLE CONFORMS TO U.S. EPA TIER 2 BIN 5 AND CFV LEV REGULATIONS APPLICABLE TO 2005 MODEL YEAR NEW PASSENGER CARS AND CALIFORNIA REGULATIONS APPLICABLE TO 2005 MODEL YEAR NEW LEV II ULEV PASSENGER CARS. EPA CERTIFICATION TEST FUEL FOR CFV: EPA UNLEADED GASOLINE.

2006 Model

- KA (Federal)
  THIS VEHICLE CONFORMS TO U.S. EPA TIER 2 BIN 5 REGULATIONS APPLICABLE TO 2006 MODEL YEAR NEW PASSENGER CARS AND CALIFORNIA REGULATIONS APPLICABLE TO 2006 MODEL YEAR NEW LEV II LEV PASSENGER CARS.

- KL (California)
  THIS VEHICLE CONFORMS TO U.S. EPA TIER 2 BIN 5 REGULATIONS APPLICABLE TO 2006 MODEL YEAR NEW PASSENGER CARS AND CALIFORNIA REGULATIONS APPLICABLE TO 2006 MODEL YEAR NEW LEV II ULEV PASSENGER CARS.

BACK

Protected by AR

Test Group and Evaporative Family

Test Group:

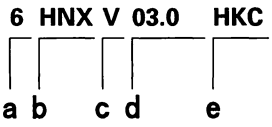

a. **Model Year**
   3: 2003
   4: 2004
   5: 2005
   6: 2006
b. **Manufacturer Subcode**
   HNX: HONDA
c. **Family Type**
   V: LDV
d. **Displacement Group**
e. **Sequence Characters**
   FBP: KA (Federal)
   HB4: KL (California)
   TBP: KA (Federal)
   4B4: KL (California) (grouped with 03.2)
   HKC: KA (Federal)
   NKR: KL (California)

Evaporative Family:

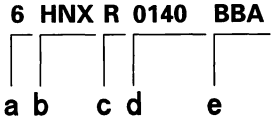

a. **Model Year**
   3: 2003
   4: 2004
   5: 2005
   6: 2006
b. **Manufacturer Subcode**
   HNX: HONDA
c. **Family Type**
   R: EVAP/ORVR
d. **Canister Work Capacity**
e. **Sequence Characters**

Protected by AR

BACK

Protected by AR

specs

Specifications

Standards and Service Limits

Engine Electrical 2-2
Engine Assembly 2-2
Cylinder Head 2-3
Engine Block 2-4
Engine Lubrication 2-5
Cooling 2-5
Fuel and Emissions 2-5
Clutch 2-5
Manual Transmission and M/T Differential 2-6
Automatic Transmission and A/T Differential 2-9
Steering 2-16
Suspension 2-16
Brakes 2-17
Air Conditioning 2-17

Design Specifications

Dimensions 2-18
Weight (U.S.A.) 2-18
Weight (CANADA) 2-18
Engine 2-18
Starter 2-18
Clutch 2-18
Manual Transmission 2-18
Automatic Transmission 2-19
Steering 2-19
Suspension 2-19
Tires 2-19
Wheel Alignment 2-19
Brakes 2-19
Air Conditioning 2-20
Electrical Ratings 2-20

Body Specifications

Illustration 2-21

Protected by AR

Standards and Service Limits

Engine Electrical

Item	Measurement	Qualification	Standard or New	Service Limit
Ignition coil	Rated voltage		12 V	
	Firing order		1—4—2—5—3—6	
Spark plug	Type		NGK: IZFR6K11 DENSO: SKJ20DR-M11	
	Gap		1.0—1.1 mm (0.039—0.043 in.)	———
Ignition timing	At idle Check the *red* mark	M/T (in neutral)	10±2 ° BTDC	
		A/T (in N or P position)	10±2 ° BTDC	
Drive belt	Tension		Auto tensioner	
Alternator (DELPHI)	Output	At 13.5 V and normal engine temperature	105 A	
Alternator (DENSO)	Output	At 13.5 V and normal engine temperature	110 A	
	Coil (rotor) resistance	At 68 °F (20 °C)	2.3—2.7 Ω	
	Slip ring O.D.		14.2—14.4 mm (0.56—0.57 in.)	13.8 mm (0.54 in.)
	Brush length		10.5 mm (0.41 in.)	1.5 mm (0.06 in.)
	Brush spring tension		2.94—3.53 N (0.30—0.36 kgf, 0.66—0.80 lbf)	
Starter	Output		1.6 kW	
	Commutator mica depth		0.4—0.5 mm (0.016—0.020 in.)	0.15 mm (0.006 in.)
	Commutator runout		0.02 mm (0.001 in.) max.	0.05 mm (0.002 in.)
	Commutator O.D.		28.0—28.1 mm (1.102—1.106 in.)	27.5 mm (1.083 in.)
	Brush length		15.8—16.2 mm (0.62—0.64 in.)	11.0 mm (0.43 in.)
	Brush spring tension (new)		15.7—17.7 N (1.60—1.80 kgf, 3.53—3.97 lbf)	

Engine Assembly

Item	Measurement	Qualification	Standard or New	Service Limit
Compression	Pressure Check the engine with the starter cranking	Minimum	930 kPa (9.5 kgf/cm², 135 psi)	———
		Maximum variation	200 kPa (2.0 kgf/cm², 28 psi)	———

BACK

Protected by AR

Cylinder Head

Item	Measurement	Qualification	Standard or New	Service Limit
Head	Warpage		———	0.05 mm (0.002 in.)
	Height		120.95—121.05 mm (4.762—4.766 in.)	———
Camshaft	End play		0.05—0.20 mm (0.002—0.008 in.)	0.20 mm (0.008 in.)
	Camshaft-to-holder oil clearance		0.050—0.089 mm (0.0020—0.0035 in.)	0.15 mm (0.006 in.)
	Total runout		0.03 mm (0.001 in.) max.	0.04 mm (0.002 in.)
	Cam lobe height	Intake, primary	35.041 mm (1.3796 in.)	———
		Intake, mid	36.445 mm (1.4348 in.)	———
		Intake, secondary	35.284 mm (1.3891 in.)	———
		Exhaust	36.326 mm (1.4302 in.)	———
Valve	Clearance (cold)	Intake	0.20—0.24 mm (0.008—0.009 in.)	———
		Exhaust	0.28—0.32 mm (0.011—0.013 in.)	———
	Stem O.D.	Intake	5.485—5.495 mm (0.2159—0.2163 in.)	5.455 mm (0.2148 in.)
		Exhaust	5.450—5.460 mm (0.2146—0.2150 in.)	5.420 mm (0.2134 in.)
	Stem-to-guide clearance	Intake	0.020—0.045 mm (0.0008—0.0018 in.)	0.08 mm (0.003 in.)
		Exhaust	0.055—0.080 mm (0.0022—0.0031 in.)	0.11 mm (0.004 in.)
Valve seat	Width	Intake	1.25—1.55 mm (0.049—0.061 in.)	2.00 mm (0.079 in.)
		Exhaust	1.25—1.55 mm (0.049—0.061 in.)	2.00 mm (0.079 in.)
	Stem installed height	Intake	46.75—47.55 mm (1.841—1.872 in.)	47.80 mm (1.882 in.)
		Exhaust	46.68—47.48 mm (1.838—1.869 in.)	47.73 mm (1.879 in.)
Valve spring	Free length	Intake	51.54 mm (2.029 in.)	———
		Exhaust	51.06 mm (2.010 in.)	———
Valve guide	I.D.	Intake	5.515—5.530 mm (0.2171—0.2177 in.)	5.55 mm (0.219 in.)
		Exhaust	5.515—5.530 mm (0.2171—0.2177 in.)	5.55 mm (0.219 in.)
	Installed height	Intake	21.20—22.20 mm (0.835—0.874 in.)	———
		Exhaust	20.63—21.63 mm (0.812—0.852 in.)	———
Rocker arm	Arm-to-shaft clearance	Intake	0.026—0.067 mm (0.0010—0.0026 in.)	0.067 mm (0.0026 in.)
		Exhaust	0.026—0.077 mm (0.0010—0.0030 in.)	0.077 mm (0.0030 in.)

Protected by AR

Standards and Service Limits

Engine Block

Item	Measurement	Qualification	Standard or New	Service Limit
Block	Warpage of deck		0.07 mm (0.003 in.) max.	0.10 mm (0.004 in.)
	Bore diameter		86.000—86.015 mm (3.3858—3.3864 in.)	86.065 mm (3.3884 in.)
	Bore taper		———	0.05 mm (0.002 in.)
	Reboring limit		———	0.5 mm (0.02 in.)
Piston	Skirt O.D. at 16.0 mm (0.63 in.) from bottom of skirt		85.975—85.985 mm (3.3848—3.3852 in.)	85.965 mm (3.3844 in.)
	Clearance in cylinder		0.015—0.040 mm (0.0006—0.0016 in.)	0.08 mm (0.003 in.)
	Ring groove width	Top	1.240—1.250 mm (0.0488—0.0492 in.)	1.27 mm (0.050 in.)
		Second	1.220—1.230 mm (0.0480—0.0484 in.)	1.25 mm (0.049 in.)
		Oil	2.805—2.825 mm (0.1104—0.1112 in.)	2.85 mm (0.112 in.)
Piston ring	Ring-to-groove clearance	Top	0.055—0.080 mm (0.0022—0.0031 in.)	0.15 mm (0.006 in.)
		Second	0.030—0.055 mm (0.0012—0.0022 in.)	0.13 mm (0.005 in.)
	Ring end gap	Top	0.20—0.35 mm (0.008—0.014 in.)	0.60 mm (0.024 in.)
		Second	0.40—0.55 mm (0.0016—0.022 in.)	0.70 mm (0.028 in.)
		Oil	0.20—0.70 mm (0.008—0.028 in.)	0.80 mm (0.031 in.)
Piston pin	O.D.		21.962—21.965 mm (0.8646—0.8648 in.)	21.954 mm (0.8643 in.)
	Pin-to-piston clearance		−0.0050 to +0.0010 mm (−0.00020 to +0.00004 in.)	0.004 mm (0.0002 in.)
Connecting rod	Pin-to-rod clearance		0.005—0.014 mm (0.0002—0.0006 in.)	0.019 mm (0.0007 in.)
	Small-end bore diameter		21.970—21.976 mm (0.8650—0.8652 in.)	———
	Large-end bore diameter (Normal)		56.0 mm (2.20 in.)	———
	End play installed on crankshaft		0.15—0.35 mm (0.006—0.014 in.)	0.45 mm (0.018 in.)
Crankshaft	Main journal diameter		71.976—72.000 mm (2.8337—2.8346 in.)	———
	Rod journal diameter		52.976—53.000 mm (2.0857—2.0866 in.)	———
	Rod/main journal taper		0.005 mm (0.0002 in.) max.	0.010 mm (0.0004 in.)
	Rod/main journal out-of-round		0.005 mm (0.0002 in.) max.	0.010 mm (0.0004 in.)
	End play		0.10—0.35 mm (0.004—0.014 in.)	0.45 mm (0.018 in.)
	Runout		0.020 mm (0.0008 in.) max.	0.03 mm (0.0012 in.)
Crankshaft bearing	Main bearing-to-journal oil clearance		0.020—0.044 mm (0.0008—0.0017 in.)	0.050 mm (0.0020 in.)
	Rod bearing clearance		0.020—0.044 mm (0.0008—0.0017 in.)	0.050 mm (0.0020 in.)

Engine Lubrication

Item	Measurement	Qualification	Standard or New	Service Limit
Engine oil	Capacity	Engine overhaul	5.0 L (5.3 US qt)	
		Oil change, including filter	4.3 L (4.5 US qt)	
		Oil change, without filter	4.0 L (4.2 US qt)	
Oil pump	Inner-to-outer rotor clearance		0.04—0.16 mm (0.002—0.006 in.)	0.20 mm (0.008 in.)
	Pump housing-to-outer rotor clearance		0.14—0.19 mm (0.006—0.007 in.)	0.20 mm (0.008 in.)
	Pump housing-to-outer rotor axial clearance		0.02—0.07 mm (0.001—0.003 in.)	0.12 mm (0.005 in.)
	Oil pressure with oil temperature at 176°F (80°C)	At idle	70 kPa (0.7 kgf/cm², 10 psi)	
		At 3,000 rpm	490 kPa (5.0 kgf/cm², 71 psi)	

BACK

Protected by AR

Cooling

Item	Measurement	Qualification	Standard or New
Radiator	Coolant capacity (includes engine, heater, hoses, and reservoir) Use Honda Long Life Antifreeze/ Coolant Type 2	M/T: engine overhaul	8.2 L (2.17 US gal)
		M/T: coolant change	6.6 L (1.74 US gal)
		A/T: engine overhaul	8.4 L (2.22 US gal)
		A/T: coolant change	6.7 L (1.77 US gal)
Reservoir	Coolant capacity		0.6 L (0.16 US gal)
Radiator cap	Opening pressure		93—123 kPa (0.95—1.25 kgf/cm², 14—18 psi)
Thermostat	Opening temperature	Begins to open	169—176 °F (76—80 °C)
		Fully open	194 °F (90 °C)
	Valve lift at fully open		10.0 mm (0.39 in.) min.

Fuel and Emissions

Item	Measurement	Qualification	Standard or New
Fuel pressure regulator	Pressure with fuel pressure gauge connected	2003-2004 models	330—380 kPa (3.4—3.9 kgf/cm², 48—55 psi)
		2005-2006 models	380—430 kPa (3.9—4.4 kgf/cm², 55—63 psi)
Fuel tank	Capacity		64.7 L (17.09 US gal)
Engine idle	Idle speed without load	A/T in N or P position	790±50 rpm
		M/T in neutral	750±50 rpm
	Idle speed with high electric load (A/C switch ON, temperature set to Max Cool, blower fan on High, rear window defogger ON, and headlights on high beams)	A/T in N or P position	790±50 rpm
		M/T in neutral	750±50 rpm

Clutch

Item	Measurement	Qualification	Standard or New	Service Limit
Clutch pedal	Height from the floor		191 mm (7.52 in.)	———
	Stroke		130—140 mm (5.12—5.51 in.)	———
	Play		10—18 mm (0.39—0.71 in.)	———
	Disengagement height from the floor		90.5 mm (3.56 in.) min.	———
Clutch disc	Rivet head depth		1.0 mm (0.039 in.) min.	0.2 mm (0.008 in.)
	Thickness		8.68—9.53 mm (0.342—0.375 in.)	7.2 mm (0.28 in.)
Pressure plate	Warpage		0.03 mm (0.001 in.) max.	0.15 mm (0.006 in.)
	Height of diaphragm spring fingers	Measured with special tool and feeler gauge	0.6 mm (0.02 in.) max.	0.8 mm (0.03 in.)

Protected by AR

Standards and Service Limits

Manual Transmission and M/T Differential

Item	Measurement	Qualification	Standard or New	Service Limit
Transmission fluid	Capacity	Fluid change	2.2 L (2.3 US qt)	
	Use Honda MTF	Overhaul	2.5 L (2.6 US qt)	
Mainshaft	End play		0.14—0.21 mm (0.006—0.008 in.)	Adjust
	Diameter of pilot bearing surface		19.967—19.980 mm (0.7861—0.7866 in.)	19.91 mm (0.784 in.)
	Diameter of 4th and 5th gears distance collar		35.987—36.000 mm (1.4168—1.4173 in.)	35.93 mm (1.415 in.)
	Diameter of ball bearing contact area (clutch housing side)		28.002—28.015 mm (1.1024—1.1030 in.)	27.95 mm (1.100 in.)
	Diameter of needle bearing contact area		41.984—42.000 mm (1.6529—1.6535 in.)	41.93 mm (1.651 in.)
	Diameter of 6th gear distance collar		32.987—33.000 mm (1.2987—1.2992 in.)	32.93 mm (1.296 in.)
	Diameter of ball bearing contact area (transmission housing side)		30.987—31.000 mm (1.2200—1.2205 in.)	30.93 mm (1.218 in.)
	Runout		0.02 mm (0.001 in.) max.	0.05 mm (0.002 in.)
Mainshaft 3rd gear	I.D.		47.009—47.025 mm (1.8507—1.8514 in.)	47.08 mm (1.854 in.)
	End play		0.06—0.19 mm (0.002—0.007 in.)	0.3 mm (0.01 in.)
	Thickness		23.89—23.97 mm (0.941—0.944 in.)	23.8 mm (0.94 in.)
Mainshaft 4th and 5th gear	I.D.		47.009—47.025 mm (1.8507—1.8514 in.)	47.08 mm (1.854 in.)
	End play		0.06—0.19 mm (0.002—0.007 in.)	0.3 mm (0.01 in.)
	Thickness		22.39—22.47 mm (0.881—0.885 in.)	22.3 mm (0.88 in.)
Mainshaft 6th gear	I.D.		44.009—44.025 mm (1.7326—1.7333 in.)	44.08 mm (1.735 in.)
	End play		0.06—0.19 mm (0.002—0.007 in.)	0.3 mm (0.01 in.)
	Thickness		21.89—21.97 mm (0.862—0.865 in.)	21.8 mm (0.86 in.)
Countershaft	Diameter of needle bearing contact area (clutch housing side)		43.974—43.990 mm (1.7313—1.7319 in.)	43.92 mm (1.729 in.)
	Diameter of distance collar contact area		42.975—42.991 mm (1.6919—1.6926 in.)	42.92 mm (1.690 in.)
	Diameter of ball bearing contact area (transmission housing side)		30.002—30.015 mm (1.1812—1.1817 in.)	29.95 mm (1.179 in.)
	Diameter of countershaft reverse gear		45.934—45.950 mm (1.8084—1.8091 in.)	45.88 mm (1.806 in.)
	Runout		0.02 mm (0.001 in.) max.	0.05 mm (0.002 in.)
	35 mm shim-to-bearing inner race clearance		0.04—0.10 mm (0.0016—0.0039 in.)	Adjust
Countershaft 1st gear	I.D.		57.010—57.029 mm (2.2445—2.2452 in.)	57.08 mm (2.247 in.)
	End play		0.04—0.17 mm (0.002—0.007 in.)	0.28 mm (0.011 in.)
	Thickness		22.91—22.99 mm (0.902—0.905 in.)	22.86 mm (0.900 in.)
Countershaft 2nd gear	I.D.		57.010—57.029 mm (2.2445—2.2452 in.)	57.08 mm (2.247 in.)
	End play		0.04—0.17 mm (0.002—0.007 in.)	0.28 mm (0.011 in.)
	Thickness		22.91—22.99 mm (0.902—0.905 in.)	22.86 mm (0.900 in.)
Countershaft reverse gear	I.D.		45.970—45.988 mm (1.8098—1.8105 in.)	46.04 mm (1.813 in.)
	O.D.		51.987—52.000 mm (2.0467—2.0472 in.)	51.93 mm (2.044 in.)
	Length		23.03—23.08 mm (0.907—0.909 in.)	———
Countershaft 2nd gear distance collar	I.D.		42.990—43.000 mm (1.6925—1.6929 in.)	43.05 mm (1.695 in.)
	O.D.		51.989—52.000 mm (2.0468—2.0472 in.)	51.94 mm (2.045 in.)
	Length		23.03—23.08 mm (0.907—0.909 in.)	———

BACK

Protected by AR

Item	Measurement	Qualification	Standard or New	Service Limit
Mainshaft 4th and 5th gear distance collar	I.D.		36.002—36.012 mm (1.4174—1.4178 in.)	36.06 mm (1.420 in.)
	O.D.		41.989—42.000 mm (1.6531—1.6535 in.)	41.94 mm (1.651 in.)
	Length	A	49.95—50.05 mm (1.967—1.970 in.)	———
	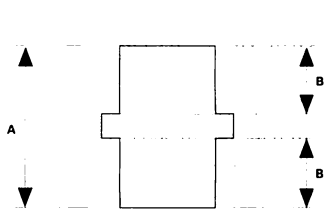	B	22.53—22.58 mm (0.887—0.889 in.)	———
Mainshaft 6th gear distance collar	I.D.		33.002—33.012 mm (1.2993—1.2997 in.)	33.06 mm (1.302 in.)
	O.D.		38.989—39.000 mm (1.5350—1.5354 in.)	38.94 mm (1.533 in.)
	Length		22.03—22.08 mm (0.867—0.869 in.)	———
Reverse shaft	O.D.		19.989—20.000 mm (0.7870—0.7874 in.)	19.93 mm (0.785 in.)
Reverse drive/ driven gear	I.D.		25.007—25.020 mm (0.9845—0.9850 in.)	25.07 mm (0.987 in.)
5th synchro ring	Ring-to-gear clearance	Ring pushed against gear	0.70—1.49 mm (0.028—0.059 in.)	0.4 mm (0.016 in.)
6th synchro ring	Ring-to-gear clearance	Ring pushed against gear	0.73—1.44 mm (0.029—0.057 in.)	0.4 mm (0.016 in.)
Double cone synchro	Outer synchro ring-to-synchro cone clearance	Ring pushed against gear	0.70—1.19 mm (0.028—0.047 in.)	0.3 mm (0.012 in.)
	Synchro cone-to-gear clearance	Ring pushed against gear	0.50—1.04 mm (0.020—0.041 in.)	0.3 mm (0.012 in.)
	Outer synchro ring-to-gear cone clearance	Ring pushed against gear	0.95—1.68 mm (0.037—0.066 in.)	0.6 mm (0.024 in.)
1st triple cone synchro	Outer synchro ring-to-synchro cone clearance	Ring pushed against gear	0.70—1.19 mm (0.028—0.047 in.)	0.3 mm (0.012 in.)
	Synchro cone-to-gear clearance	Ring pushed against gear	0.45—1.14 mm (0.018—0.045 in.)	0.3 mm (0.012 in.)
	Outer synchro ring-to-gear cone clearance	Ring pushed against gear	1.12—1.68 mm (0.044—0.066 in.)	0.6 mm (0.024 in.)
2nd triple cone synchro	Outer synchro ring-to-synchro cone clearance	Ring pushed against gear	0.70—1.19 mm (0.028—0.047 in.)	0.3 mm (0.012 in.)
	Synchro cone-to-gear clearance	Ring pushed against gear	0.60—1.88 mm (0.024—0.074 in.)	0.3 mm (0.012 in.)
	Outer synchro ring-to-gear cone clearance	Ring pushed against gear	0.87—1.82 mm (0.034—0.072 in.)	0.6 mm (0.024 in.)
1st/2nd, 3rd/4th, 5th/6th Shift fork	Finger thickness		7.4—7.6 mm (0.29—0.30 in.)	———
	Fork-to-synchro sleeve clearance		0.35—0.65 mm (0.014—0.026 in.)	1.0 mm (0.039 in.)
Reverse shift fork	Finger thickness		6.2—6.4 mm (0.24—0.25 in.)	———
	Fork-to-synchro sleeve clearance		0.35—0.65 mm (0.014—0.026 in.)	1.0 mm (0.039 in.)
Reverse shift lever	Finger thickness		6.400—6.650 mm (0.2520—0.2618 in.)	———
	Shift lever-to-shift fork clearance		0.05—0.50 mm (0.002—0.020 in.)	0.6 mm (0.024 in.)
	Shift lever diameter at contact area		13.0—13.2 mm (0.51—0.52 in.)	———
	Shift lever-to-interlock clearance		0—0.4 mm (0—0.015 in.)	0.5 mm (0.020 in.)
Shift piece	I.D.		14.000—14.068 mm (0.5512—0.5539 in.)	———
	Shift fork diameter at contact area		12.8—13.0 mm (0.50—0.51 in.)	———
	Shift piece-to-shift fork clearance		0.2—0.6 mm (0.008—0.024 in.)	0.7 mm (0.028 in.)

(cont'd)

Protected by AR

Standards and Service Limits

Manual Transmission and M/T Differential (cont'd)

Item	Measurement	Qualification	Standard or New	Service Limit
Shift arm	I.D.		15.973—16.005 mm (0.6289—0.6301 in.)	———
	Shift piece diameter at contact area		13.9—14.0 mm (0.54—0.55 in.)	———
	Shift arm-to-shift piece clearance		0.05—0.25 mm (0.002—0.010 in.)	0.5 mm (0.020 in.)
Select arm	I.D.		11.01—11.05 mm (0.433—0.435 in.)	———
	Interlock diameter at contact area		12.9—13.0 mm (0.50—0.51 in.)	———
	Select arm-to-interlock clearance		0.05—0.25 mm (0.002—0.010 in.)	0.5 mm (0.020 in.)
Oil pump	Oil pump thrust clearance		0.03—0.13 mm (0.001—0.005 in.)	0.15 mm (0.006 in.)
	Outer rotor-to-body clearance		0.1—0.2 mm (0.004—0.008 in.)	0.22 mm (0.009 in.)
	Inter rotor-to-outer rotor clearance		0.14 mm (0.006 in.)	0.2 mm (0.008 in.)
	Oil pump inner rotor I.D.		17.1—17.2 mm (0.67—0.68 in.)	———
	Oil pump shaft O.D.		16.8—17.0 mm (0.66—0.67 in.)	———
M/T differential carrier	Backlash		0.4—1.3 mm (0.016—0.051 in.)	———
	Driveshaft contact area I.D.		30.025—30.045 mm (1.1821—1.1829 in.)	———
	Carrier bearing starting torque (preload)		3.43—4.51 N·m (35—46 kgf·cm, 30—40 lbf·in.)	Adjust

BACK

Protected by AR

Automatic Transmission and A/T Differential

Item	Measurement	Qualification	Standard or New	Service Limit
ATF (Automatic Transmission Fluid)	Capacity Use Honda ATF-Z1	Fluid change	3.0 L (3.2 US qt)	
		Overhaul	7.0 L (7.4 US qt)	
ATF pressure	Line pressure	At 2,000 rpm in N or P position	900—960 kPa (9.2—9.8 kgf/cm², 130—140 psi)	850 kPa (8.7 kgf/cm², 120 psi)
	5th clutch pressure	At 2,000 rpm in D position	890—970 kPa (9.1—9.9 kgf/cm², 130—140 psi)	840 kPa (8.6 kgf/cm², 120 psi)
	4th clutch pressure	At 2,000 rpm in D position	890—970 kPa (9.1—9.9 kgf/cm², 130—140 psi)	840 kPa (8.6 kgf/cm², 120 psi)
	3rd clutch pressure	At 2,000 rpm in D3 position	890—970 kPa (9.1—9.9 kgf/cm², 130—140 psi)	840 kPa (8.6 kgf/cm², 120 psi)
	2nd clutch pressure	At 2,000 rpm in 2 position	890—970 kPa (9.1—9.9 kgf/cm², 130—140 psi)	840 kPa (8.6 kgf/cm², 120 psi)
	1st clutch pressure	At 2,000 rpm in 1 position	890—970 kPa (9.1—9.9 kgf/cm², 130—140 psi)	840 kPa (8.6 kgf/cm², 120 psi)
	1st-hold clutch pressure	At 2,000 rpm in 1 position	760—830 kPa (7.7—8.5 kgf/cm², 110—120 psi)	710 kPa (7.2 kgf/cm², 100 psi)
Torque converter	Stall speed Check with vehicle on level ground		2,000 rpm	1,850—2,150 rpm
Clutch	Clutch end-plate-to-top-disc clearance	1st	———	1.1—1.3 mm (0.043—0.051 in.)
		2nd (2003-2005 models)	———	0.7—0.9 mm (0.028—0.035 in.)
		2nd (2006 model)	———	0.85—1.05 mm (0.033—0.041 in.)
		3rd	———	0.7—0.9 mm (0.028—0.035 in.)
		4th, 5th (2003-2005 models)	———	0.55—0.75 mm (0.022—0.030 in.)
		4th, 5th (2006 model)	———	0.7—0.9 mm (0.028—0.035 in.)
		1st-hold	———	0.5—0.9 mm (0.020—0.035 in.)
	Clutch return spring free length	1st	68.3 mm (2.69 in.)	66.3 mm (2.61 in.)
		2nd	53.4 mm (2.10 in.)	51.4 mm (2.02 in.)
		3rd	52.0 mm (2.05 in.)	50.0 mm (1.97 in.)
		4th	33.5 mm (1.32 in.)	31.5 mm (1.24 in.)
		5th	37.4 mm (1.47 in.)	35.4 mm (1.39 in.)
	Clutch disc thickness		1.94 mm (0.076 in.)	———
	Clutch plate thickness	1st, 2nd	1.6 mm (0.063 in.)	When discolored
		3rd, 4th (2003-2004 models)	2.3 mm (0.091 in.)	When discolored
		4th (2005 model)	2.0 mm (0.079 in.)	When discolored
		4th (2006 model)	1.6 mm (0.063 in.)	When discolored
		5th (2003-2005 models)	2.0 mm (0.079 in.)	When discolored
		5th (2006 model)	1.6 mm (0.063 in.)	When discolored
		1st-hold	1.8 mm (0.071 in.)	When discolored
	1st clutch end plate thickness	Mark 1	3.10 mm (0.122 in.)	When discolored
		Mark 2	3.20 mm (0.126 in.)	When discolored
		Mark 3	3.30 mm (0.130 in.)	When discolored
		Mark 4	3.40 mm (0.134 in.)	When discolored
		Mark 5	3.50 mm (0.138 in.)	When discolored
		Mark 6	3.60 mm (0.142 in.)	When discolored
		Mark 7	3.70 mm (0.146 in.)	When discolored
		Mark 8	3.80 mm (0.150 in.)	When discolored
		Mark 9	3.90 mm (0.154 in.)	When discolored

(cont'd)

Protected by AR

Standards and Service Limits

Automatic Transmission and A/T Differential (cont'd)

Item	Measurement	Qualification	Standard or New	Service Limit
Clutch (cont'd)	1st-hold clutch end plate thickness		5.00 mm (0.197 in.)	When discolored
	2nd clutch end plate thickness	Mark 1	2.10 mm (0.083 in.)	When discolored
		Mark 2	2.20 mm (0.087 in.)	When discolored
		Mark 3	2.30 mm (0.091 in.)	When discolored
		Mark 4	2.40 mm (0.094 in.)	When discolored
		Mark 5	2.50 mm (0.098 in.)	When discolored
		Mark 6	2.60 mm (0.102 in.)	When discolored
		Mark 7	2.70 mm (0.106 in.)	When discolored
		Mark 8	2.80 mm (0.110 in.)	When discolored
		Mark 9	2.90 mm (0.114 in.)	When discolored
	3rd clutch end plate thickness (2003 model)	Mark 1	3.10 mm (0.083 in.)	When discolored
		Mark 2	3.20 mm (0.087 in.)	When discolored
		Mark 3	3.30 mm (0.091 in.)	When discolored
		Mark 4	3.40 mm (0.094 in.)	When discolored
		Mark 6	2.60 mm (0.102 in.)	When discolored
		Mark 7	2.70 mm (0.106 in.)	When discolored
		Mark 8	2.80 mm (0.110 in.)	When discolored
		Mark 9	2.90 mm (0.114 in.)	When discolored
		Mark 0	3.00 mm (0.118 in.)	When discolored
	3rd clutch end plate thickness (2004-2006 models)	Mark 1	2.10 mm (0.083 in.)	When discolored
		Mark 2	2.20 mm (0.087 in.)	When discolored
		Mark 3	2.30 mm (0.091 in.)	When discolored
		Mark 4	2.40 mm (0.094 in.)	When discolored
		Mark 5	2.50 mm (0.098 in.)	When discolored
		Mark 6	2.60 mm (0.102 in.)	When discolored
		Mark 7	2.70 mm (0.106 in.)	When discolored
		Mark 8	2.80 mm (0.110 in.)	When discolored
		Mark 9	2.90 mm (0.114 in.)	When discolored
		Mark 10	3.00 mm (0.118 in.)	When discolored
		Mark 11	3.10 mm (0.122 in.)	When discolored
	4th and 5th clutch end plate thickness	Mark 1	2.10 mm (0.083 in.)	When discolored
		Mark 2	2.20 mm (0.087 in.)	When discolored
		Mark 3	2.30 mm (0.091 in.)	When discolored
		Mark 4	2.40 mm (0.094 in.)	When discolored
		Mark 5	2.50 mm (0.098 in.)	When discolored
		Mark 6	2.60 mm (0.102 in.)	When discolored
		Mark 7	2.70 mm (0.106 in.)	When discolored
		Mark 8	2.80 mm (0.110 in.)	When discolored
		Mark 9	2.90 mm (0.114 in.)	When discolored
Valve body	Stator shaft needle bearing contact I.D.	Torque converter side	27.000—27.021 mm (1.0630—1.0638 in.)	When worn or damaged
		ATF pump side	29.000—29.021 mm (1.1417—1.1426 in.)	When worn or damaged
	ATF pump gear thrust clearance		0.03—0.06 mm (0.001—0.002 in.)	0.07 mm (0.003 in.)
	ATF pump gear-to-body clearance	Drive gear	0.210—0.265 mm (0.0083—0.0104 in.)	———
		Driven gear	0.070—0.125 mm (0.0028—0.0049 in.)	———
	ATF pump driven gear I.D.		14.016—14.034 mm (0.5518—0.5525 in.)	When worn or damaged
	ATF pump driven gear shaft O.D.		13.980—13.990 mm (0.5504—0.5508 in.)	When worn or damaged

BACK

Protected by AR

Item	Measurement	Qualification	Standard or New	Service Limit
Reverse shift fork	Fork finger thickness		5.60—6.00 mm (0.220—0.236 in.)	5.40 mm (0.213 in.)
Park gear and pawl			———	When worn or damaged
Servo body	Shift fork shaft bore I.D.		14.000—14.010 mm (0.5512—0.5516 in.)	———
	Shift fork shaft valve bore I.D.		37.000—37.039 mm (1.4567—1.4582 in.)	37.045 mm (1.4585 in.)
Regulator valve body	Sealing ring contact I.D.		32.000—32.025 mm (1.2598—1.2608 in.)	32.050 mm (1.2618 in.)
Accumulator body	Sealing ring contact I.D.		35.000—35.025 mm (1.3780—1.3789 in.)	35.05 mm (1.3799 in.)
Stator shaft	Sealing ring contact I.D.		29.000—29.021 mm (1.1417—1.1426 in.)	29.050 mm (1.1437 in.)
Mainshaft	Diameter of needle bearing contact area	At stator shaft	22.984—23.000 mm (0.9049—0.9055 in.)	When worn or damaged
		At 4th gear	52.975—52.991 mm (2.0856—2.0863 in.)	When worn or damaged
		At 5th gear collar	33.975—33.991 mm (1.3376—1.3382 in.)	When worn or damaged
	I.D. of 4th gear		59.000—59.019 mm (2.3228—2.3236 in.)	When worn or damaged
	I.D. of 5th gear		40.000—40.016 mm (1.5748—1.5754 in.)	When worn or damaged
	End play of 4th gear		0.03—0.11 mm (0.001—0.004 in.)	———
	End play of 5th gear		0.10—0.22 mm (0.004—0.009 in.)	———
	41 x 73 mm thrust shim thickness	No. 1	7.85 mm (0.309 in.)	When worn or damaged
		No. 2	7.90 mm (0.311 in.)	When worn or damaged
		No. 3	7.95 mm (0.313 in.)	When worn or damaged
		No. 4	8.00 mm (0.315 in.)	When worn or damaged
		No. 5	8.05 mm (0.317 in.)	When worn or damaged
		No. 6	8.10 mm (0.319 in.)	When worn or damaged
	Thrust washer thickness	27 x 47 x 5 mm	5.00 mm (0.197 in.)	When worn or damaged
	Length of 5th gear collar		58.5—58.6 mm (2.303—2.307 in.)	———
	5th gear collar flange thickness		4.45—4.60 mm (0.175—0.181 in.)	When worn or damaged
	Sealing ring thickness	32 mm sealing ring	1.87—1.97 mm (0.074—0.078 in.)	1.800 mm (0.071 in.)
		29 mm sealing ring	1.87—1.97 mm (0.074—0.078 in.)	1.800 mm (0.071 in.)
	Width of sealing ring groove		2.025 — 2.060 mm (0.080 — 0.081 in.)	2.080 mm (0.082 in.)
	Clutch feed pipe O.D.	4th clutch	5.97 — 5.98 mm (0.2350 — 0.2354 in.)	5.95 mm (0.2343 in.)
		5th clutch	11.47 — 11.48 mm (0.4516 — 0.4520 in.)	11.45 mm (0.4508 in.)
	Clutch feed pipe bushing I.D.	4th clutch	6.018 — 6.030 mm (0.2369 — 0.2374 in.)	6.045 mm (0.2380 in.)
		5th clutch	11.500 — 11.518 mm (0.4528 — 0.4535 in.)	11.530 mm (0.4539 in.)

(cont'd)

Protected by AR

Standards and Service Limits

Automatic Transmission and A/T Differential (cont'd)

Item	Measurement	Qualification	Standard or New	Service Limit
Countershaft	Diameter of needle bearing contact area	At 5th gear	34.975—34.991 mm (1.3770—1.3776 in.)	When worn or damaged
		At 2nd gear	39.979—40.000 mm (1.574—1.575 in.)	When worn or damaged
		At park gear	41.964—41.980 mm (1.6521—1.6528 in.)	When worn or damaged
		At right end	38.505—38.515 mm (1.5159—1.5163 in.)	When worn or damaged
	I.D. of 5th gear		41.000—41.016 mm (1.6142—1.6148 in.)	When worn or damaged
	I.D. of 3rd gear		50.000—50.016 mm (1.9685—1.9691 in.)	When worn or damaged
	I.D. of reverse gear		46.000—46.016 mm (1.8110—1.8116 in.)	When worn or damaged
	End play of 1st gear		0.00—0.33 mm (0.000—0.013 in.)	———
	End play of 5th gear		0.04—0.27 mm (0.002—0.011 in.)	———
	End play of 3rd gear		0.015—0.045 mm (0.0006—0.0018 in.)	———
	End play of reverse gear		0.10—0.25 mm (0.004—0.010 in.)	———
	31 x 63.5 x 8.5 mm splined washer difference	A	3.503—3.515 mm (0.1379—0.1384 in.)	When worn or damaged
		B	3.490—3.502 mm (0.1374—0.1379 in.)	When worn or damaged
		C	3.477—3.489 mm (0.1369—0.1374 in.)	When worn or damaged
		D	3.464—3.476 mm (0.1364—0.1369 in.)	When worn or damaged
	Length of distance collar	35 x 47 x 45.6 mm	45.56—45.60 mm (1.794—1.795 in.)	———
		35 x 47 x 7.8 mm	5.92—5.96 mm (0.233—0.235 in.)	———
	Cotter thickness		1.99—2.02 mm (0.078—0.080 in.)	———
	Reverse selector hub O.D.		55.87—55.90 mm (2.1996—2.2008 in.)	When worn or damaged
	Clutch feed pipe O.D.		8.97—8.98 mm (0.353—0.354 in.)	8.95 mm (0.352 in.)
	Clutch feed pipe bushing I.D.		9.000—9.015 mm (0.354—0.355 in.)	9.030 mm (0.356 in.)

BACK

Protected by AR

Item	Measurement	Qualification	Standard or New	Service Limit
Secondary shaft	Diameter of needle bearing contact area	At 1st gear	37.978—37.993 mm (1.4951—1.4958 in.)	When worn or damaged
		At 2nd gear	33.986—33.999 mm (1.3380—1.3385 in.)	When worn or damaged
	I.D. of 1st gear		44.000—44.016 mm (1.7323—1.7329 in.)	When worn or damaged
	I.D. of 2nd gear		40.000—40.016 mm (1.5748—1.5754 in.)	When worn or damaged
	End play of 1st gear		0.07—0.15 mm (0.003—0.006 in.)	———
	End play of 2nd gear		0.04—0.12 mm (0.002—0.005 in.)	———
	38 x 56.5 mm splined washer thickness	No. 1	6.85 mm (0.270 in.)	When worn or damaged
		No. 2	6.90 mm (0.272 in.)	When worn or damaged
		No. 3	6.95 mm (0.274 in.)	When worn or damaged
		No. 4	7.00 mm (0.276 in.)	When worn or damaged
		No. 5	7.05 mm (0.278 in.)	When worn or damaged
		No. 6	7.10 mm (0.280 in.)	When worn or damaged
	37 x 55 mm thrust shim thickness	No. 1	4.90 mm (0.193 in.)	When worn or damaged
		No. 2	4.95 mm (0.195 in.)	When worn or damaged
		No. 3	5.00 mm (0.197 in.)	When worn or damaged
		No. 4	5.05 mm (0.199 in.)	When worn or damaged
		No. 5	5.10 mm (0.201 in.)	When worn or damaged
		No. 6	5.15 mm (0.203 in.)	When worn or damaged
		No. 7	5.20 mm (0.205 in.)	When worn or damaged
	Cotter thickness		1.99—2.02 mm (0.078—0.080 in.)	———
	Sealing ring thickness		1.890—1.950 mm (0.074—0.077 in.)	1.800 mm (0.071 in.)
	Width of sealing ring groove		2.025—2.060 mm (0.080—0.081 in.)	2.080 mm (0.082 in.)
	Clutch feed pipe O.D.		7.97—7.98 mm (0.3138—0.3142 in.)	7.95 mm (0.3130 in.)
	Clutch feed pipe bushing I.D.		8.000—8.015 mm (0.3150—0.3156 in.)	8.030 mm (0.3161 in.)
Reverse idler gear	Diameter of needle bearing contact area	At reverse idler gear shaft	13.990—14.000 mm (0.5508—0.5512 in.)	When worn or damaged
	End play		0.06—0.38 mm (0.002—0.015 in.)	———
	I.D.		18.007—18.020 mm (0.7089—0.7094 in.)	When worn or damaged
	Thrust washer thickness	Transmission housing side	0.96—1.04 mm (0.038—0.041 in.)	———
		Reverse idler gear shaft holder side	0.97—1.05 mm (0.038—0.041 in.)	———
	I.D. of reverse idler gear shaft holder		14.006—14.024 mm (0.5514—0.5521 in.)	When worn or damaged
	I.D. of transmission housing of reverse idler gear shaft contact area		14.006—14.024 mm (0.5514—0.5521 in.)	———

(cont'd)

Protected by AR

Standards and Service Limits

Automatic Transmission and A/T Differential (cont'd)

Item	Measurement	Qualification	Standard or New			
			Wire Diameter	O.D.	Free Length	No. of Coils
Main valve body spring (see page 14-240)	Shift valve D spring		0.7 mm (0.028 in.)	6.6 mm (0.260 in.)	33.7 mm (1.327 in.)	11.6
	Shift valve C spring		0.8 mm (0.031 in.)	6.6 mm (0.260 in.)	49.1 mm (1.933 in.)	21.7
	Kick-down valve spring		0.8 mm (0.031 in.)	6.6 mm (0.260 in.)	49.1 mm (1.933 in.)	21.7
	Modulator valve spring		1.6 mm (0.063 in.)	10.4 mm (0.409 in.)	33.5 mm (1.319 in.)	9.8
	Relief valve spring		1.2 mm (0.047 in.)	11.1 mm (0.437 in.)	39.0 mm (1.535 in.)	9.9
	Lock-up shift valve spring		0.9 mm (0.035 in.)	7.6 mm (0.299 in.)	63.0 mm (2.480 in.)	22.4
	Cooler check valve spring		0.6 mm (0.024 in.)	5.8 mm (0.228 in.)	14.5 mm (0.571 in.)	6.8
	Torque converter check valve spring		1.2 mm (0.047 in.)	8.6 mm (0.339 in.)	34.4 mm (1.354 in.)	11.7
	Servo control valve spring		0.9 mm (0.035 in.)	6.4 mm (0.252 in.)	32.5 mm (1.280 in.)	17.5
	Reverse CPC valve spring		0.7 mm (0.028 in.)	6.1 mm (0.240 in.)	17.8 mm (0.701 in.)	7.9
Regulator valve body spring (see page 14-242)	Stator reaction spring	2003 model	5.5 mm (0.217 in.)	37.4 mm (1.472 in.)	30.3 mm (1.193 in.)	2.1
		2004-2006 models	4.5 mm (0.177 in.)	35.4 mm (1.394 in.)	30.3 mm (1.193 in.)	1.92
	Regulator valve spring A		1.9 mm (0.075 in.)	14.7 mm (0.579 in.)	80.6 mm (3.173 in.)	16.1
	Regulator valve spring B		1.6 mm (0.063 in.)	9.2 mm (0.362 in.)	44.0 mm (1.732 in.)	12.5
	Lock-up control valve spring		0.7 mm (0.028 in.)	6.6 mm (0.260 in.)	42.9 mm (1.689 in.)	15.3
	Lock-up timing valve spring		0.65 mm (0.026 in.)	6.6 mm (0.260 in.)	34.8 mm (1.370 in.)	15.6
Servo body spring (see page 14-243)	CPC valve B spring		0.7 mm (0.028 in.)	6.1 mm (0.240 in.)	17.8 mm (0.701 in.)	7.9
	CPC valve A spring		0.7 mm (0.028 in.)	6.1 mm (0.240 in.)	17.8 mm (0.701 in.)	7.9
	Shift valve B spring		0.8 mm (0.031 in.)	6.6 mm (0.260 in.)	49.1 mm (1.933 in.)	21.7
	Shift valve A spring		0.8 mm (0.031 in.)	6.6 mm (0.260 in.)	49.1 mm (1.933 in.)	21.7
Top accumulator body spring (see page 14-244)	Shift valve E spring		0.8 mm (0.031 in.)	7.1 mm (0.280 in.)	49.0 mm (1.929 in.)	17.2
	CPC valve C spring		0.7 mm (0.028 in.)	6.1 mm (0.240 in.)	17.8 mm (0.701 in.)	7.9
	5th accumulator spring A		2.2 mm (0.087 in.)	16.4 mm (0.646 in.)	75.7 mm (2.980 in.)	14.2
	5th accumulator spring B		2.0 mm (0.079 in.)	10.0 mm (0.394 in.)	45.5 mm (1.791 in.)	11.6
	4th/1st-hold accumulator spring		3.4 mm (0.134 in.)	19.6 mm (0.772 in.)	57.4 mm (2.260 in.)	8.4

BACK

Protected by AR

Item	Measurement	Qualification	Standard or New			
			Wire Diameter	O.D.	Free Length	No. of Coils
Accumulator body spring (see page 14-245)	1st accumulator spring B		2.3 mm (0.091 in.)	12.6 mm (0.496 in.)	42.0 mm (1.654 in.)	9.9
	1st accumulator spring A		2.4 mm (0.094 in.)	19.5 mm (0.768 in.)	67.7 mm (2.665 in.)	10.2
	2nd accumulator spring B		2.6 mm (0.102 in.)	13.0 mm (0.512 in.)	44.0 mm (1.732 in.)	9.0
	2nd accumulator spring A		2.5 mm (0.098 in.)	19.6 mm (0.772 in.)	57.7 mm (2.272 in.)	9.5
3rd accumulator spring (see page 14-246)	3rd accumulator spring		3.1 mm (0.122 in.)	19.6 mm (0.772 in.)	39.4 mm (1.551 in.)	5.5

Item	Measurement	Qualification	Standard or New	Service Limit
A/T differential carrier	Pinion shaft contact area I.D.		18.010—18.028 mm (0.7091—0.7098 in.)	———
	Carrier-to-pinion shaft clearance		0.023—0.057 mm (0.0009—0.0022 in.)	0.1 mm (0.004 in.)
	Driveshaft contact area I.D.		30.025—30.045 mm (1.182—1.182 in.)	———
	Carrier-to-driveshaft clearance		0.045—0.086 mm (0.002—0.003 in.)	0.12 mm (0.005 in.)
	Carrier-to-intermediate shaft clearance		0.080—0.116 mm (0.003—0.005 in.)	———
	Tapered roller bearing starting torque (preload)	For new bearing (2003-2005 models)	2.7—3.9 N·m (28—40 kgf·cm, 24—35 lbf·in.)	Adjust
		For new bearing (2006 model)	2.9—4.1 N·m (30—42 kgf·cm, 26—37 lbf·in.)	Adjust
		For used bearing (2003-2005 models)	2.5—3.6 N·m (25—37 kgf·cm, 22—32 lbf·in.)	Adjust
		For used bearing (2006 model)	2.7—3.8 N·m (27—39 kgf·cm, 23—34 lbf·in.)	Adjust
A/T differential pinion gear	Backlash		0.05—0.15 mm (0.002—0.006 in.)	———
	I.D.		18.042—18.066 mm (0.7103—0.7113 in.)	———
	Pinion gear-to-pinion shaft clearance		0.055—0.095 mm (0.0022—0.0037 in.)	0.12 mm (0.005 in.)

Protected by AR

Standards and Service Limits

Steering

Item	Measurement	Qualification	Standard or New
Steering wheel	Rotational play measured at outside edge with engine running		0—10 mm (0—0.39 in.)
	Starting load measured at outside edge with engine running		29 N (3.0 kgf, 6.6 lbf)
Gearbox	Angle of rack guide screw loosened from locked position		20 ° max. (SHOWA)
			15 °±5 ° (TKS)
Pump	Output pressure with shut-off valve closed		7,940—8,630 kPa (81—88 kgf/cm², 1,150—1,250 psi)
Power steering fluid	Capacity	Reservoir	0.4 L (0.42 US qt)
	Use Honda Power Steering Fluid	System overhaul	1.1 L (1.16 US qt)

Suspension

Item	Measurement	Qualification	Standard or New	Service Limit
Wheel alignment	Camber	Front	0 °00 ′±45 ′	
		Rear	−1 °00 ′±30 ′	
	Caster	Front	3 °15 ′±45 ′	
	Total Toe-in	Front	0±2 mm (0±1/16 in.)	
		Rear	2±2 mm (1/16±1/16 in.)	
	Front wheel turning angle	Inside wheel (2003-2005 models)	38 °50 ′±2 °	
		Inside wheel (2006 model)	35 °20 ′±2 °	
		Outside wheel (2003-2005 models)	31 °40 ′ (Reference)	
		Outside wheel (2006 model)	29 °40 ′ (Reference)	
Wheel	Aluminum wheel runout	Axial	0—0.7 mm (0—0.03 in.)	2.0 mm (0.08 in.)
		Radial	0—0.7 mm (0—0.03 in.)	1.5 mm (0.06 in.)
	Steel wheel runout	Axial	0—1.0 mm (0—0.04 in.)	2.0 mm (0.08 in.)
		Radial	0—1.0 mm (0—0.04 in.)	1.5 mm (0.06 in.)
Wheel bearing	End play	Front	0—0.05 mm (0—0.002 in.)	
		Rear	0—0.05 mm (0—0.002 in.)	

BACK

Protected by AR

Brakes

Item	Measurement	Qualification	Standard or New	Service Limit
Parking brake lever	Distance traveled when lever pulled with 196 N (20 kgf, 44 lbf) of force		6 to 9 clicks	
Brake pedal	Pedal height (carpet removed)		172 mm (6 13/16 in.)	
	Free play		1—5 mm (1/16—3/16 in.)	
Brake disc	Thickness	Front (A/T model)	22.9—23.1 mm (0.90—0.91 in.)	21.0 mm (0.83 in.)
		Front (M/T model)	27.9—28.1 mm (1.10—1.11 in.)	26.0 mm (1.02 in.)
		Rear	9.9—10.1 mm (0.39—0.40 in.)	8.0 mm (0.31 in.)
	Runout	Front	———	0.10 mm (0.004 in.)
		Rear	———	0.10 mm (0.004 in.)
	Parallelism	Front and rear	———	0.015 mm (0.0006 in.)
Brake pad	Thickness	Front	10.5—11.5 mm (0.41—0.45 in.)	1.6 mm (0.06 in.)
		Rear	9.0 mm (0.35 in.)	1.6 mm (0.06 in.)

Air Conditioning

Item	Measurement	Qualification	Standard or New
Refrigerant	Type		HFC-134a (R-134a)
	Capacity of system		500—550 g (17.6—19.4 oz)
Refrigerant oil	Type		DENSO: ND-OIL 8 (P/N 38897-PR7-A01AH or 38899-PR7-A01)
	Capacity of components	Condenser	25 mL (5/6 fl oz)
		Evaporator	45 mL (1 1/2 fl oz)
		Each line and hose	10 mL (1/3 fl oz)
		Receiver	10 mL (1/3 fl oz)
		Compressor	160—175 mL (5 1/3—5 2/3 fl oz)
Compressor	Starter coil resistance	At 68 °F (20 °C)	3.9—4.3 Ω
	Pulley-to-pressure plate clearance		0.35—0.60 mm (0.014—0.024 in.)

Protected by AR

Design Specifications

Item	Measurement	Qualification	Specification
DIMENSIONS 4-door	Overall length	2003-2005 models	4,813 mm (189.5 in.)
		2006 model	4,854 mm (191.1 in.)
	Overall width		1,820 mm (71.7 in.)
	Overall height	LX (2003-2005 models)	1,453 mm (57.2 in.)
		EX (2003-2005 models)	1,456 mm (57.3 in.)
		2006 model	1,456 mm (57.3 in.)
	Wheelbase	2003-2005 models	2,715 mm (106.9 in.)
		2006 model	2,740 mm (107.9 in.)
	Track	Front	1,553 mm (61.1 in.)
		Rear	1,554 mm (61.2 in.)
	Seating capacity		five (5)
DIMENSIONS 2-door	Overall length	2003-2005 models	4,766 mm (187.6 in.)
		2006 model	4,770 mm (187.8 in.)
	Overall width		1,810 mm (71.3 in.)
	Overall height	2003-2005 models	1,415 mm (55.7 in.)
		2006 model	1,418 mm (55.8 in.)
	Wheelbase		2,670 mm (105.1 in.)
	Track	Front	1,553 mm (61.1 in.)
		Rear	1,554 mm (61.2 in.)
	Seating capacity		five (5)
WEIGHT (U.S.A.)	Gross Vehicle Weight Rating (GVWR)	2003-2005 models	4,300 lbs
		2006 model	4,345 lbs
WEIGHT (CANADA)	Gross Vehicle Weight Rating (GVWR)	2003-2005 models	1,950 kg
		2006 model	1,970 kg
ENGINE	Type		Water-cooled, 4-stroke SOHC VTEC V6 gasoline engine
	Cylinder arrangement		60 ° V6-cylinder, transverse
	Bore and stroke		86 x 86 mm (3.39 x 3.39 in.)
	Displacement		2,997 cm^3 (183 cu in.)
	Compression ratio		10.0
	Valve train		Belt driven, SOHC VTEC 4 valves per cylinder
	Lubrication system		Forced, wet sump, with trochoid pump
	Oil pump displacement	At 6,300 rpm	52.8 L (55.8 US qt)/minute
	Water pump displacement	At 6,000 rpm	95.5 L (101 US qt)/minute
	Fuel required		UNLEADED gasoline with 86 pump octane number or higher
STARTER	Type		Gear reduction
	Normal output		1.6 kW
	Normal voltage		12 V
	Hour rating		30 seconds
	Rotation direction		Clockwise as viewed from gear end
CLUTCH	Clutch type		Single plate dry, diaphragm spring
	Clutch friction material surface area		264 cm^2 (40.85 sq in.)
MANUAL TRANSMISSION	Type	ATC6	Synchronized, 6-speed forward, 1 reverse
	Primary reduction		Direct 1:1
	Gear ratio	1st	3.933
		2nd	2.478
		3rd	1.700
		4th	1.250
		5th	0.976
		6th	0.771
		Reverse	4.008
	Final reduction	Type	Single helical gear
		Gear ratio	3.286

BACK

Protected by AR

Item	Measurement	Qualification	Specification
AUTOMATIC TRANSMISSION	Type		Electronically controlled automatic, 5-speed forward, 1 reverse
	Primary reduction		Direct 1:1
	Gear ratio	1st	2.563
		2nd	1.552
		3rd	1.022
		4th	0.727
		5th	0.520
		Reverse	1.846
	Final reduction	Type	Single helical gear
		Gear ratio	4.429
STEERING	Type		Power-assisted rack and pinion
	Overall ratio		15.21
	Turns, lock-to-lock		2.98
	Steering wheel diameter		380 mm (15.0 in.)
SUSPENSION	Type	Front	Independent double wishbone, coil spring, with stabilizer
		Rear	Independent double wishbone, coil spring, with stabilizer
	Shock absorber	Front	Telescopic, hydraulic, nitrogen gas-filled
		Rear	Telescopic, hydraulic, nitrogen gas-filled
TIRES	Size (2003-2005 models)	Front and rear (without 2-door EX M/T model)	P205/60R16 91V M+S
		Front and rear (EX M/T model)	P215/50R17 93V M+S
		Spare (without EX M/T model)	T135/90D15 100M
		Spare (EX M/T model)	T135/80R16 101M
	Size (2006 model)	Front and rear	T215/50R17 93V M+S
		Spare (without 2-door EX model)	T135/90D15 100M
		Spare (2-door EX model)	T135/80R16 101M
WHEEL ALIGNMENT	Camber	Front	0 °
		Rear	−1 °
	Caster	Front	3 °15 ′
	Total Toe-in	Front	0 mm (0 in.)
		Rear	2 mm (1/16 in.)
BRAKES	Type of service brake	Front	Power-assisted self-adjusting ventilated disc
		Rear	Power-assisted self-adjusting solid disk
	Type of parking brake		Mechanical actuating, rear wheels
	Pad friction surface area	Front: US model	56 cm^2 (8.7 sq in.) x 2
		Front: Canada model	57 cm^2 (8.8 sq in.) x 2
	Shoe friction surface area	Rear	28 cm^2 (4.3 sq in.) x 2

(cont'd)

Protected by AR

Design Specifications

(cont'd)

Item	Measurement	Qualification	Specification
AIR CONDITIONING	Compressor	Type	Swash plate
		Capacity	188 mL (11.47 cu in.)/rev.
		Maximum speed	7,922 rpm
		Lubricant capacity	160 mL (5 1/3 fl oz)
		Lubricant type	ND-OIL 8 (DENSO)
	Condenser	Type	Corrugated fin
	Evaporator	Type	Corrugated fin
	Blower	Type	Radial
		Motor type	210 W/12 V
		Speed control	Infinite variable
		Maximum capacity	505 m^3/h (17,805 cu ft/h)
	Temperature control		Air-mix type
	Compressor clutch	Type	Dry, single plate, Poly V-belt drive
		Electrical power consumption at 68 °F (20 °C)	35 W maximum at 12 V
	Refrigerant	Type	HFC-134a (R-134a)
		Capacity	500—550 g (17.6—19.4 oz)
ELECTRICAL RATINGS	Battery		12 V—52 AH/5 hours
	Fuses	Under-hood fuse/relay box	100 A, 50 A, 40 A, 30 A, 20 A, 15 A, 10 A, 7.5 A
		Under-dash fuse/relay box	30 A, 20 A, 15 A, 10 A, 7.5 A
	Light bulbs	Headlight high beam	12 V—60 W
		Headlight low beam	12 V—55 W
		Front turn signal/front side marker lights	12 V—21/5 W (two filaments)
		Rear turn signal lights	12 V—21 W Amber color
		Brake/taillights	12 V—21/5 W (two filaments)
		Inner/taillights (4-door)	12 V—5 W
		High-mount brake light	12 V—21 W
		Back-up lights	12 V—21 W (4-door), 12 V—16 W (2-door)
		License plate light	12 V—5 W
		Ceiling light	12 V—8 W
		Spotlights	12 V—8 W
		Trunk light	12 V—5 W
		Door courtesy lights	12 V—3.8 W
		Glove box light	12 V—3.4 W
		Vanity mirror lights	12 V—1.1W
		Gauge lights	12 V—LED (non-replaceable)
		Indicator, panel, ambient light	12 V—LED, 14 V—0.56 W, 0.84 W

BACK

Protected by AR

Body Specifications

4-door: 2003-2005 models

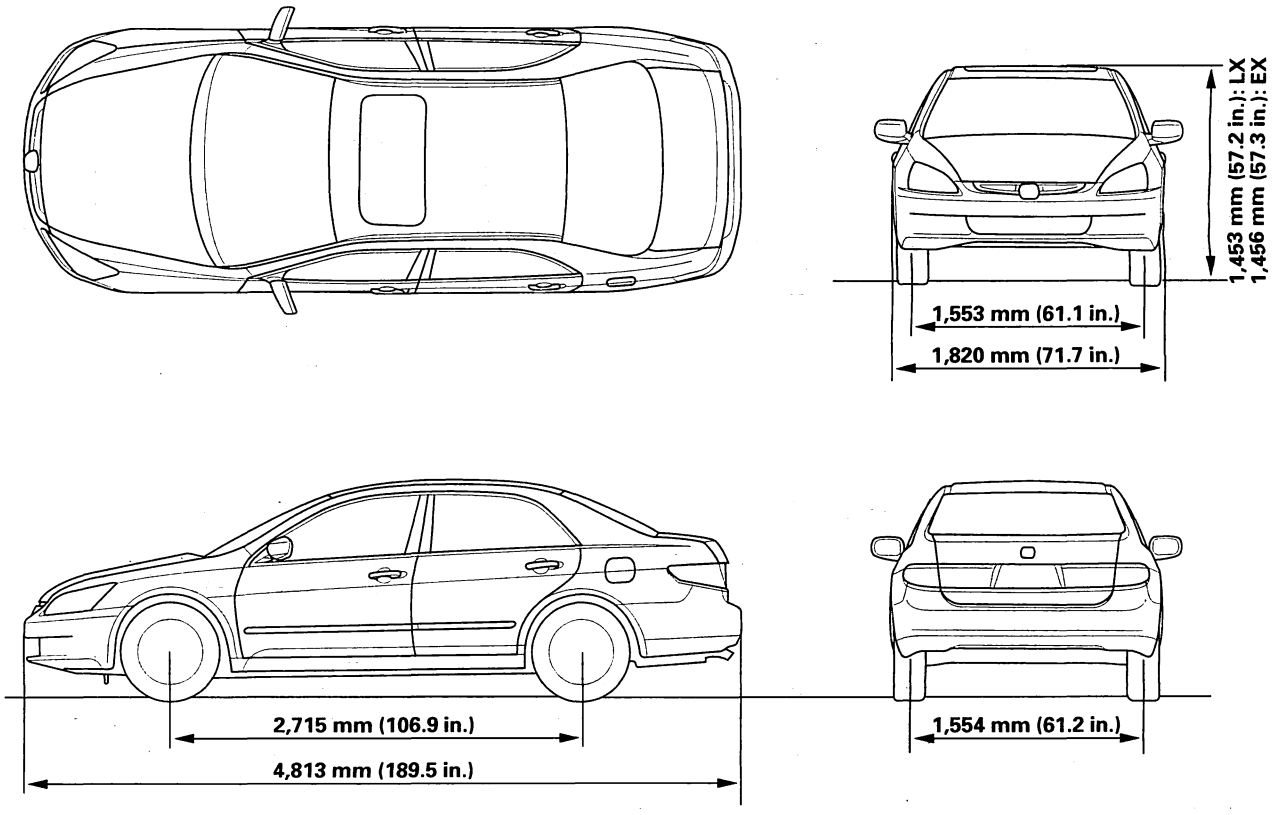

Protected by AR

Body Specifications

2-door: 2003-2005 models

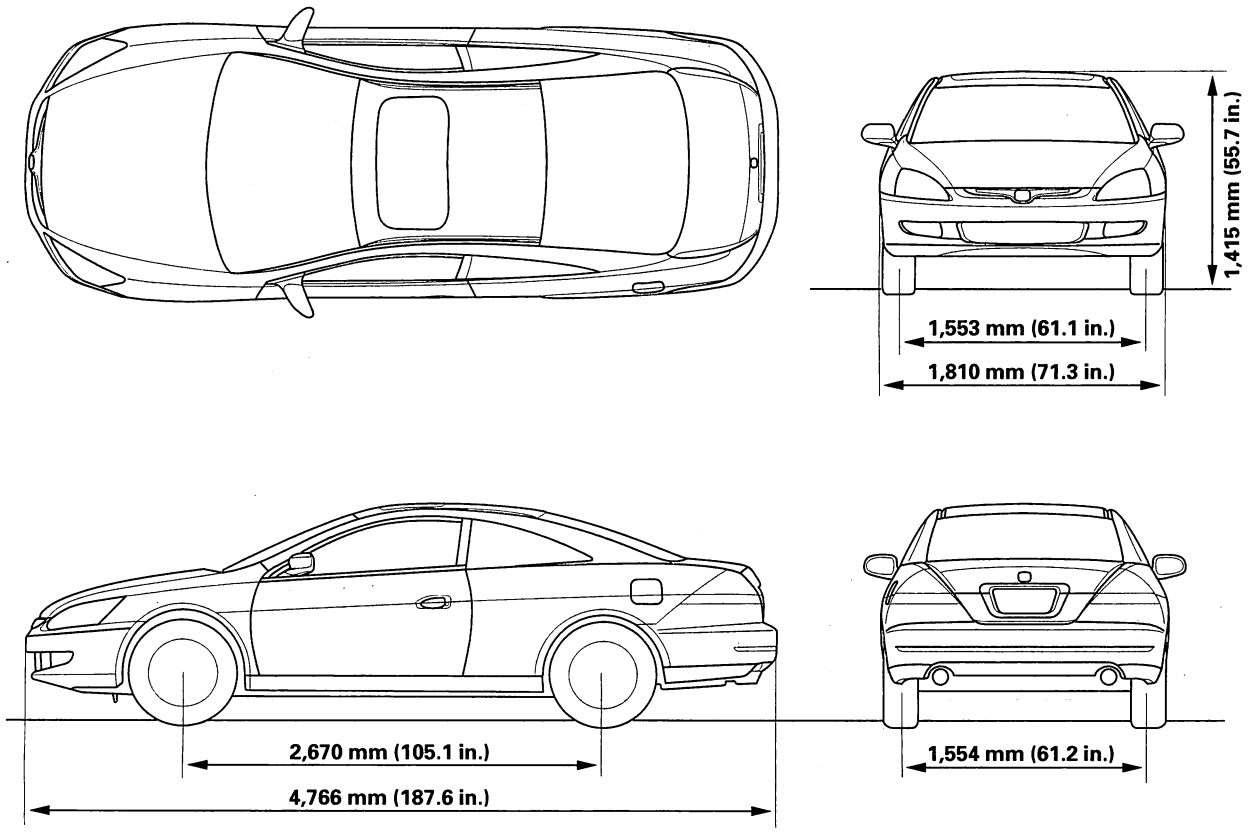

Protected by AR

4-door: 2006 model

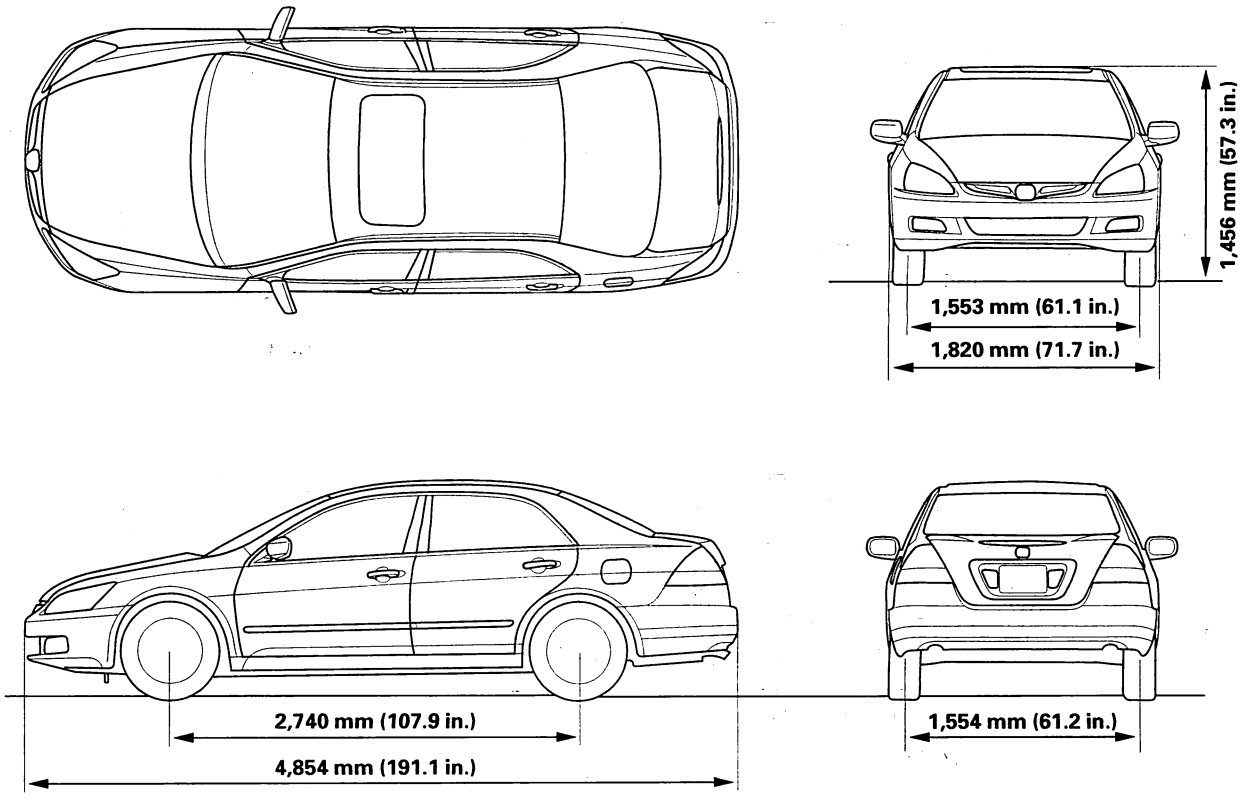

Protected by AR

Body Specifications

2-door: 2006 model

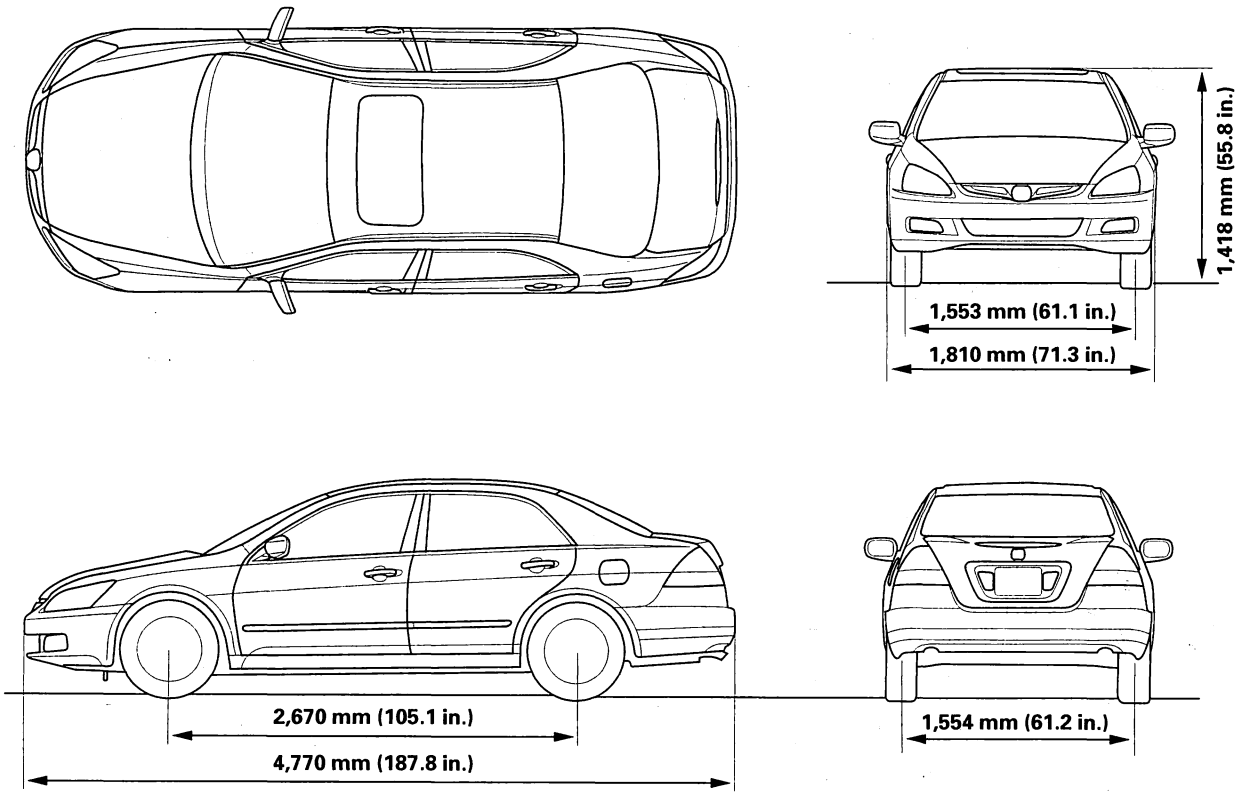

Protected by AR

Maintenance

Lubricants and Fluids **3-2**

Maintenance Schedule
Listed by Distance/Time for Normal Conditions
2003-2005 Models 3-4
Listed by Distance/Time for Severe Conditions
2003-2005 Models 3-7

Maintenance Minder
Maintenance Display
2006 Model 3-11
Engine Oil Life Indicator
2006 Model 3-12
Resetting the Engine Oil Life Indicator
2006 Model 3-13
Maintenance Main Items
2006 Model 3-14
Maintenance Sub Items
2006 Model 3-15

Protected by AR

Lubricants and Fluids

For details of lubrication points and type of lubricants to be applied, refer to the illustrated index and various work procedures (such as Assembly/Reassembly, Replacement, Overhaul, Installation, etc.) contained in each section.

Lubrication Points		Lubricant
A	Engine	Honda Motor Oil: P/N 08798-9023 (5W-20) Look for the API Certification seal on the oil container as shown below. Make sure it says "For Gasoline Engines." SAE viscosity: see chart below.
B	Manual Transmission	Honda Manual Transmission Fluid (MTF): P/N 08798-9016 Always use Honda MTF. Using motor oil can cause stiffer shifting because it does not contain the proper additives.
	Automatic Transmission	Honda Automatic Transmission Fluid (ATF)-Z1: P/N 08200-9001 Always use Honda ATF-Z1. Using a non-Honda ATF can Affect shift quality.
C	Brake system (includes ABS line)*1, (includes VSA line)*2	Honda DOT 3 Brake Fluid : P/N 08798-9008
D	Clutch line	Honda DOT 3 Brake Fluid : P/N 08798-9008 Always use Honda DOT 3 Brake Fluid. Using a non-Honda brake fluid can cause corrosion and decrease the life of the system.
E F G H	Shift lever (manual transmission) Release fork (manual transmission) Shift and select cable ends Throttle cable end (throttle link)*1	Super High Temp Grease: P/N 08798-9002
I J	Throttle cable end (below dashboard) Caliper piston boot, calipper pins, and boots	Honda Silicone Grease: P/N 08C30-B0234M
K L M N O P Q R S	Brake booster clevis Clutch master cylinder clevis Battery terminals Pedal linkage Fuel fill door Hood hinges and hood latch Door hinges: upper and lower Trunk hinges Power steering gearbox	Multipurpose grease
T	Power steering system	Honda Power Steering Fluid Always use Honda Power Steering Fluid. Using any other type of power steering fluid or automatic transmission fluid can cause increased wear and poor steering in cold weather.
U	Air conditioning compressor	Compressor oil: DENSO ND-OIL 8 (P/N 38897-PR7-A01AH or 38899-PR7-A01) for refrigerant HFC-134a (R-134a)

* 1: 2003-2005 Models
* 2: 2006 Model

API CERTIFICATION SEAL



Recommended Engine Oil
Engine oil viscosity for ambient temperature ranges

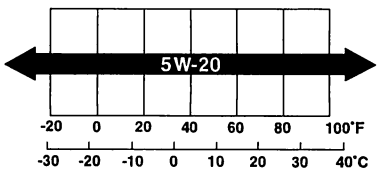

BACK

Protected by AR

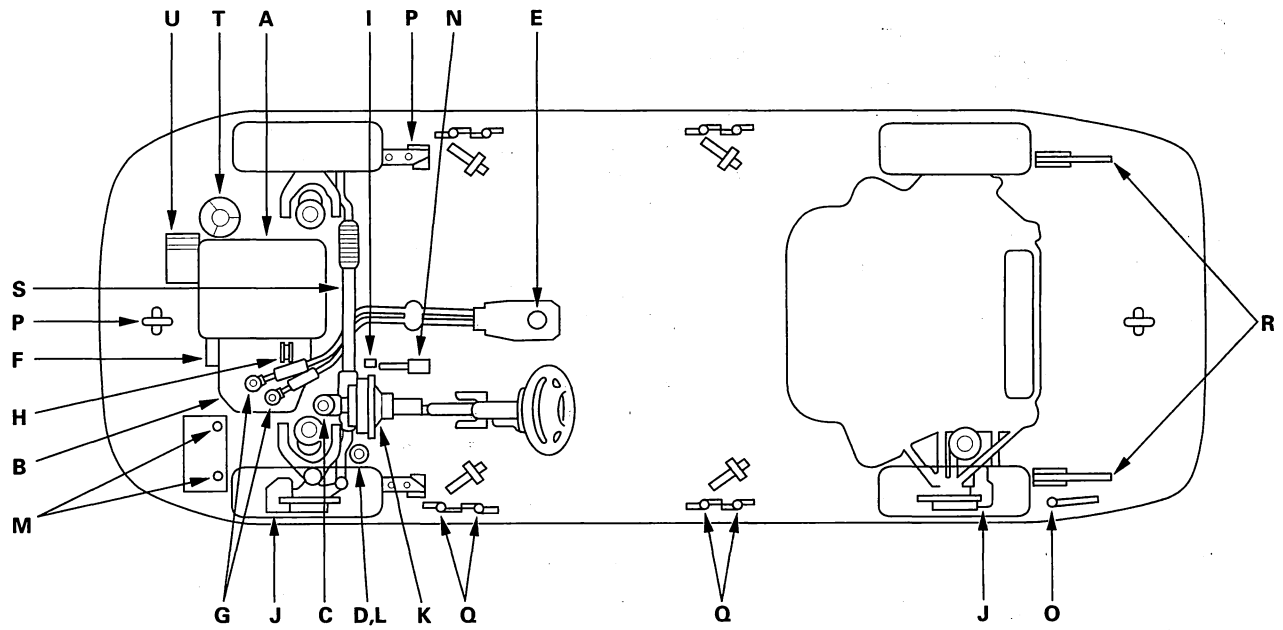

Protected by AR

Maintenance Schedule

Listed by Distance/Time for Normal Conditions

2003-2005 Models

Follow the Normal Schedule if the severe driving conditions specified in the Maintenance Schedule for Severe Conditions do not apply, and if only OCCASIONALLY driven in severe driving conditions. Follow the Severe Conditions schedule if the vehicle is driven MAINLY in Canada.

Distance		Time	Maintenance Items
7,500 miles	12,000 km	———	Do items in A.
15,000 miles	24,000 km	1 year	Do items in A and B.
22,500 miles	36,000 km	———	Do items in A.
30,000 miles	48,000 km	2 years	Do items in A, B, and C.
37,500 miles	60,000 km	———	Do items in A.
45,000 miles	72,000 km	3 years	Do items in A and B.
———	———	3 years	Replace brake fluid (see page 19-9)*1. Use Honda DOT 3 Brake Fluid.
52,500 miles	84,000 km	———	Do items in A.
60,000 miles	96,000 km	4 years	Do items in A, B, and C.
67,500 miles	108,000 km	———	Do items in A.
75,000 miles	120,000 km	5 years	Do items in A and B.
82,500 miles	132,000 km	———	Do items in A.
90,000 miles	144,000 km	6 years	Do items in A, B, and C.
———	———	6 years	Replace brake fluid (see page 19-9)*1. Use Honda DOT 3 Brake Fluid.
97,500 miles	156,000 km	———	Do items in A.
105,000 miles	168,000 km	7 years	Do items in A, B, and D.
112,500 miles	180,000 km	———	Do items in A.
120,000 miles	192,000 km	8 years	Do items in A, B, C, E, F, and G.
127,500 miles	204,000 km	———	Do items in A.
135,000 miles	216,000 km	9 years	Do items in A and B.
———	———	9 years	Replace brake fluid (see page 19-9)*1. Use Honda DOT 3 Brake Fluid.
142,500 miles	228,000 km	———	Do items in A.
150,000 miles	240,000 km	10 years	Do items in A, B, and C.
157,500 miles	252,000 km	———	Do items in A.
165,000 miles	264,000 km	———	Inspect idle speed (see page 11-301). Idle speed: M/T 750±50 rpm, A/T 790±50 rpm in N or P position.
165,000 miles	264,000 km	11 years	Do items in A and B.

* 1: Refer to the 2003-2006 ACCORD Service Manual (P/N 61SDA08).

BACK

Protected by AR

2003-2005 Models

Do the items in parts A, B, C, D, E, F, and G as required for the mileage/time interval listed.

Part	Maintenance Items
A	Replace engine oil (see page 8-6) every 7,500 miles (12,000 km) or 1 year. Engine oil capacity without oil filter: 4.0 L (4.2 US qt).
	Rotate tires, and check tire inflation and condition every 7,500 miles (12,000 km). Follow the pattern shown in the Owner's Manual.
B	Replace engine oil filter (see page 8-7) every 15,000 miles (24,000 km) or 1 year. Engine oil capacity with oil filter: 4.3 L (4.5 US qt).
	Check front brake (see page 19-2) and rear brake (see page 19-21)*1 every 15,000 miles (24,000 km) or 1 year. • Check pads and discs for wear (thickness), damage, and cracks. • Check calipers for damage, leaks, and tightness of mount bolts.
	Check parking brake adjustment (see page 19-7)*1 every 15,000 miles (24,000 km) or 1 year. Check the number of clicks (6 to 9) when parking brake lever pulled with 196 N (20 kgf, 44 lbf) of force.
	Inspect tie-rod ends, steering gearbox, and gearbox boot (see page 17-3)*1 every 15,000 miles (24,000 km) or 1 year. • Check rack grease and steering linkage. • Check boots for damage and leaking grease. • Check fluid lines for damage or leaks.
	Inspect suspension components (see page 18-3)*1 every 15,000 miles (24,000 km) or 1 year. • Check bolts for tightness. • Check condition of ball joint boots for deterioration and damage.
	Inspect driveshaft boots (see page 16-4)*1 every 15,000 miles (24,000 km) or 1 year. Check boots for cracks and boot bands for tightness.
	Inspect brake hoses and lines including ABS (see page 19-31)*1 every 15,000 miles (24,000 km) or 1 year. Check the master cylinder and ABS modulator control-unit for damage or leakage.
	Inspect all fluid levels and condition of fluids every 15,000 miles (24,000 km) or 1 year. • Manual transmission fluid (MTF) (2-door model only) (see page 13-10). • Automatic transmission fluid (ATF-Z1) (see page 14-185). • Power steering fluid (see page 17-10). • Brake fluid (see page 19-9)*1. • Windshield washer fluid. • Engine coolant (see page 10-6).
	Inspect exhaust system, 2003-2005 models (see page 9-15)*1, 2006 model (see page 9-6) every 15,000 miles (24,000 km) or 1 year. Check catalytic converter heat shield, exhaust pipe, and muffler for damage, leaks, and tightness.
	Inspect fuel lines and connections (see page 11-319)* every 15,000 miles (24,000 km) or 1 year. Check for loose connections, cracks, and deterioration; retighten loose connections, and replace damage parts.

* 1: Refer to the 2003-2006 ACCORD Service Manual (P/N 61SDA08).

NOTE: According to state and federal regulations, failure to do the maintenance items marked with an asterisk (*) will not void the customer's emissions warranties. However, Honda recommends that all maintenance services be done at the recommended intervals to ensure long-term reliability.

(cont'd)

Protected by AR

Maintenance Schedule

Listed by Distance/Time for Normal Conditions (cont'd)

Do the items in parts A, B, C, D, E, F, and G as required for the mileage/time interval listed.

Part	Maintenance Items
C	Inspect drive belt (see page 4-35) every 30,000 miles (48,000 km) or 2 years. Inspect auto tensioner indicator; no adjustment needed.
	Replace dust and pollen filter (see page 21-51)*1 every 30,000 miles (48,000 km) or 2 years. • Replace the filter as often (at 15,000 miles/24,000 km intervals) if the vehicle is driven mostly in urban area that have high concentrations of soot in the air from industry and diesel-powered vehicles. • Replace the filter whenever airflow from the heating and cooling system is less than normal.
	Replace air cleaner element (see page 11-344) every 30,000 miles (48,000 km), (independent of time).
D	Inspect the valve clearance (see page 6-8) every 105,000 miles (168,000 km), otherwise adjust only if noisy. Intake: 0.20—0.24 mm (0.008—0.009 in.), Exhaust: 0.28—0.32 mm (0.011—0.013 in.).
	Replace spark plugs (see page 4-23) every 105,000 miles (168,000 km). Use IZFR6K11 (NGK) or SKJ20DR-M11 (DENSO).
	Replace timing belt (see page 6-14), and inspect water pump (see page 10-5) every 105,000 miles (168,000 km) or 7 years.
E	Replace automatic transmission fluid (see page 14-186) at 120,000 miles (192,000 km) or 6 years, then replace every 90,000 miles (144,000 km) or 5 years. Capacitiy: 3.0 L (3.2 US qt); use Honda ATF-Z1.
F	Replace manual transmission fluid (2-door model only) (see page 13-10) every 120,000 miles (192,000 km) or 8 years. Capacitiy: 2.2 L (2.3 US qt); use Honda MTF.
G	Replace engine coolant (see page 10-6) at 120,000 miles (192,000 km) or 10 years, then every 60,000 miles (96,000 km) or 5 years. Capacitiy: M/T 6.6 L (1.74 US gal), A/T 6.7 L (1.77 US gal); use Honda Long Life Antifreeze/coolant Type 2.

* 1: Refer to the 2003-2006 ACCORD Service Manual (P/N 61SDA08).

BACK

Protected by AR

Listed by Distance/Time for Severe Conditions

2003-2005 Models

Use the Severe Conditions schedule if the vehicle is driven MAINLY in Canada or in any of the following conditions; if only OCCASIONALLY driven in these conditions, use the Normal Conditions schedule.

Severe Driving Conditions

- Driving less than 5 miles (8 km) per trip or, in freezing temperatures, driving less than 10 miles (16 km) per trip.
- Driving in extremely hot over 90°F (32°C) conditions.
- Extensive idling, or long periods of stop-and-go driving, such as a taxi or a commercial delivery vehicle.
- Trailer towing, driving with a loaded roof rack, or driving in mountainous conditions.
- Driving on muddy, dusty, or de-iced roads.

Distance		Time	Maintenance Items
3,750 miles	6,000 km	———	Do items in A.
7,500 miles	12,000 km	———	Do items in A and B.
11,250 miles	18,000 km	———	Do items in A.
15,000 miles	24,000 km	1 year	Do items in A, B, and C.
18,750 miles	30,000 km	———	Do items in A.
22,500 miles	36,000 km	———	Do items in A and B.
26,250 miles	42,000 km	———	Do items in A.
30,000 miles	48,000 km	2 years	Do items in A, B, C, and D.
33,750 miles	54,000 km	———	Do items in A.
37,500 miles	60,000 km	———	Do items in A and B.
41,250 miles	66,000 km	———	Do items in A.
45,000 miles	72,000 km	3 years	Do items in A, B, and C.
———	———	3 years	Replace brake fluid (see page 19-9)*1. Use Honda DOT 3 Brake Fluid.
48,750 miles	78,000 km	———	Do items in A.
52,500 miles	84,000 km	———	Do items in A and B.
56,250 miles	90,000 km	———	Do items in A.
60,000 miles	96,000 km	4 years	Do items in A, B, C, D, E, and F.
63,750 miles	102,000 km	———	Do items in A.
67,500 miles	108,000 km	———	Do items in A and B.
71,250 miles	114,000 km	———	Do items in A.
75,000 miles	120,000 km	5 years	Do items in A , B, and C.
78,750 miles	126,000 km	———	Do items in A.
82,500 miles	132,000 km	———	Do items in A and B.
86,250 miles	138,000 km	———	Do items in A.
90,000 miles	144,000 km	6 years	Do items in A, B, C, D, and E.
———	———	6 years	Replace brake fluid (see page 19-9)*1. Use Honda DOT 3 Brake Fluid.
93,750 miles	150,000 km	———	Do items in A.
97,500 miles	156,000 km	———	Do items in A and B.

* 1: Refer to the 2003-2006 ACCORD Service Manual (P/N 61SDA08).

(cont'd)

Protected by AR

Maintenance Schedule

Listed by Distance/Time for Severe Conditions (cont'd)

Severe Driving Conditions
- Driving less than 5 miles (8 km) per trip or, in freezing temperatures, driving less than 10 miles (16 km) per trip.
- Driving in extremely hot over 90°F (32°C) conditions.
- Extensive idling, or long periods of stop-and-go driving, such as a taxi or a commercial delivery vehicle.
- Trailer towing, driving with a loaded roof rack, or driving in mountainous conditions.
- Driving on muddy, dusty, or de-iced roads.

Distance		Time	Maintenance Items
101,250 miles	162,000 km	———	Do items in A.
105,000 miles	168,000 km	7 years	Do items in A, B, C, G, and H.
108,750 miles	174,000 km	———	Do items in A.
112,500 miles	180,000 km	———	Do items in A and B.
116,250 miles	186,000 km	———	Do items in A.
120,000 miles	192,000 km	8 years	Do items in A, B, C, D, E, F, and I.
123,750 miles	198,000 km	———	Do items in A.
127,500 miles	204,000 km	———	Do items in A and B.
131,250 miles	210,000 km	———	Do items in A.
135,000 miles	216,000 km	9 years	Do items in A, B, and C.
———	———	9 years	Replace brake fluid (see page 19-9)*1. Use Honda DOT 3 Brake Fluid.
138,750 miles	222,000 km	———	Do items in A.
142,500 miles	228,000 km	———	Do items in A and B.
146,250 miles	234,000 km	———	Do items in A.
150,000 miles	240,000 km	10 years	Do items in A, B, C, D, and E.
153,750 miles	246,000 km	———	Do items in A.
157,500 miles	252,000 km	———	Do items in A and B.
161,250 miles	258,000 km	———	Do items in A.
165,000 miles	264,000 km	———	Inspect idle speed (see page 11-301). Idle speed: M/T 750±50 rpm, A/T 790±50 rpm in P or N position.
165,000 miles	264,000 km	11 years	Do items in A, B, and C.
———	———	12 years	Replace brake fluid (see page 19-9)*1. Use Honda DOT 3 Brake Fluid.

* 1: Refer to the 2003-2006 ACCORD Service Manual (P/N 61SDA08).

BACK

Protected by AR

2003-2005 Models

Use the Severe Conditions schedule if the vehicle is driven MAINLY in Canada or in any of the following conditions. If only OCCASIONALLY driven in these conditions, use the Normal Conditions schedule.

Do the items in parts A, B, C, D, E, F, G, H, and I as required for the mileage/time interval listed.

Part	Maintenance Items
A	Replace engine oil (see page 8-6) every 3,750 miles (6,000 km) or 6 months. Engine oil capacity without oil filter: 4.0 L (4.2 US qt).
	Replace engine oil filter (see page 8-6) every 3,750 miles (6,000 km) or 6 months. Engine oil capacity with oil filter: 4.3 L (4.5 US qt).
B	Check front brake (see page 19-2),and rear brake (see page 19-21)*1 every 7,500 miles (12,000 km) or 6 months. • Check pads and discs for wear (thickness), damage, and cracks. • Check calipers for damage, leaks, and tightness of mount bolts.
	Rotate tires, and check tire inflation and condition every 7,500 miles (12,000 km). Follow the pattern shown in the Owner's Manual.
	Inspect tie-rod ends, steering gearbox, and gearbox boot (see page 17-3)*1 every 7,500 miles (12,000 km) or 6 months. • Check rack grease and steering linkage. • Check boots for damage and leaking grease. • Check fluid lines for damage or leaks.
	Inspect suspension components (see page 18-3)*1 every 7,500 miles (12,000 km) or 6 months. • Check bolts for tightness. • Check condition of ball joint boots for deterioration and damage.
	Inspect driveshaft boots (see page 16-4)*1 every 7,500 miles (12,000 km) or 6 months. Check boots for cracks and boot bands for tightness.
C	Replace air cleaner element (see page 11-344) every 15,000 miles (24,000 km).
	Lubricate all hinges, locks, and latches, every 15,000 miles (24,000 km) or 1 year.
	Check parking brake adjustment (see page 19-7)*1 every 15,000 miles (24,000 km) or 1 year. Check the number of clicks (6 to 9) when parking brake lever pulled with 196 N (20 kgf, 44 lbf) of force.
	Inspect brake hoses and lines including ABS (see page 19-31)*1 every 15,000 miles (24,000 km) or 1 year. Check the master cylinder and ABS modulator-control unit for damage or leakage.
	Inspect all fluid levels and condition of fluids every 15,000 miles (24,000 km) or 1 year. • Manual transmission fluid (MTF) (2-door model only) (see page 13-10). • Automatic transmission fluid (ATF-Z1) (see page 14-185). • Power steering fluid (see page 17-10). • Brake fluid (see page 19-9)*1. • Windshield washer fluid. • Engine coolant (see page 10-6).
	Inspect exhaust system (see page 9-6)* every 15,000 miles (24,000 km) or 1 year. Check catalytic converter heat shield, exhaust pipe, and muffler for damage, leaks, and tightness.
	Inspect fuel lines and connections (see page 11-319)* every 15,000 miles (24,000 km) or 1 year. Check loose connections, cracks, and deterioration; retighten loose connections, and replace damage parts.
	Check lights and controls every 15,000 miles (24,000 km) or 1 year. Check function of interior lights (see page 22-217)*1, and exterior lights (see page 22-163)*1, and position of the headlights (see page 22-196)*1.
	Inspect vehicle underbody every 15,000 miles (24,000 km) or 1 year. Check the paint for damage, scratches, stone chipping, and dents.

* 1: Refer to the 2003-2006 ACCORD Service Manual (P/N 61SDA08).

NOTE: According to state and federal regulations, failure to do the maintenance items marked with an asterisk (*) will not void the customer's emissions warranties. However, Honda recommends that all maintenance services be done at the recommended intervals to ensure long-term reliability.

(cont'd)

Protected by AR

Maintenance Schedule

Listed by Distance/Time for Severe Conditions (cont'd)

Do the items in parts A, B, C, D, E, F, G, H, and I as required for the mileage/time interval listed.

Part	Maintenance Items
D	Inspect drive belt (see page 4-35) every 30,000 miles (48,000 km) or 2 years. Inspect auto tensioner indicator; no adjustment needed.
	Replace dust and pollen filter (see page 21-51)*1 every 30,000 miles (48,000 km) or 2 years. • Replace the filter as often (at 15,000 miles/24,000 km intervals) if the vehicle is driven mostly in urban area that have high concentrations of soot in the air from industry and diesel-powered vehicles. • Replace the filter whenever airflow from the heating and cooling/climate control system is less than normal.
E	Replace automatic transmission fluid (see page 14-186) at 60,000 miles (96,000 km) or 3 years, then replace every 30,000 miles (48,000 km) or 2 years. Capacitiy: 3.0 L (3.2 US qt); use Honda ATF-Z1.
F	Replace manual transmission fluid (2-door model only) (see page 13-10) every 60,000 miles (96,000 km) or 4 years. Capacitiy: 2.2 L (2.3 US qt); use Honda MTF.
G	Inspect the valve clearance (see page 6-8) every 105,000 miles (168,000 km), otherwise adjust only if noisy. Intake: 0.20—0.24 mm (0.008—0.009 in.), Exhaust: 0.28—0.32 mm (0.011—0.013 in.).
	Replace spark plugs (see page 4-23) every 105,000 miles (168,000 km). Use IZFR6K11 (NGK) or SKJ20DR-M11 (DENSO).
H	Replace timing belt (see page 6-14) and inspect water pump (see page 10-5) every 60,000 miles (100,000 km) or 7 years.
I	Replace engine coolant (see page 10-6) at 120,000 miles (192,000 km) or 10 years, then every 60,000 miles (96,000 km) or 5 years. Capacitiy: M/T 6.6 L (1.74 US gal), A/T 6.7 L (1.77 US gal); use Honda Long Life Antifreeze/coolant Type 2.

* 1: Refer to the 2003-2006 ACCORD Service Manual (P/N 61SDA08).

BACK

Protected by AR

Maintenance Minder

Maintenance Display

2006 Model

The Maintenance Minder is an important feature of the information display. Based on engine operating conditions and accumulated engine revolutions, the Accord's onboard computer (ECM/PCM) calculates the remaining engine oil life. The system also displays the code for other scheduled maintenance items needing service.

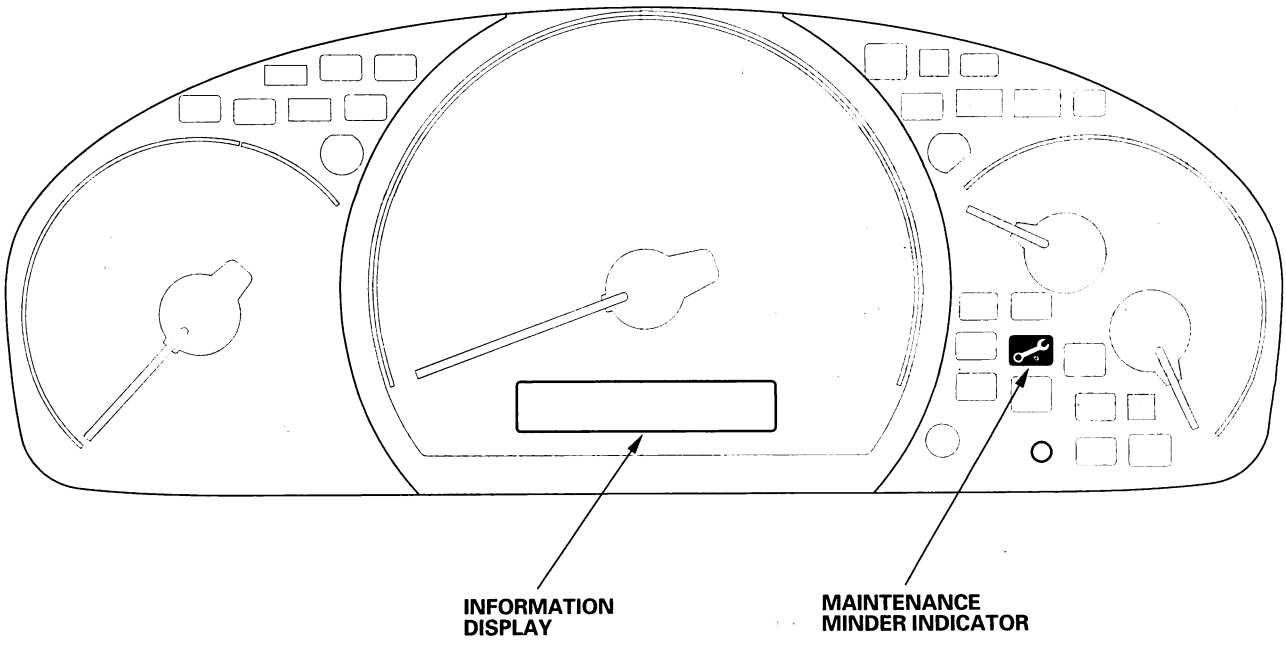

Protected by AR

Engine Oil Life Indicator

2006 Model

1. To see the current engine oil life, turn the ignition switch to ON (II), and push and release the trip meter select/reset knob instrument panel repeatedly until the engine oil life indicator is displayed.

2. If the oil life is 15 percent or less, you will see the oil life indicator (A) for several seconds every time you turn the ignition switch to ON (II). The maintenance minder indicator also comes on, and the maintenance item code(s) for other maintenance items needing service are displayed next to the engine oil life indicator.

   - Complete list of maintenance main items "A" (B) (see page 3-14).
   - Complete list of maintenance sub items "B" (C) (see page 3-15).

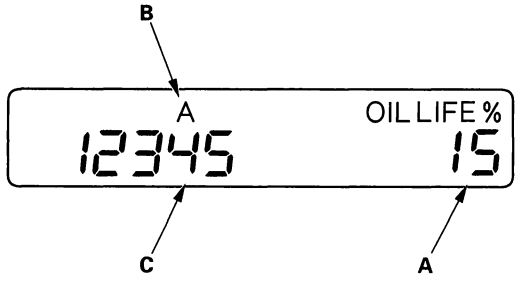

3. When the remaining engine oil life is less then 5 percent, you will see "SERVICE OIL LIFE" message in the smart maintenance display along with the same maintenance item code(s) every time you turn the ignition switch to ON (II).

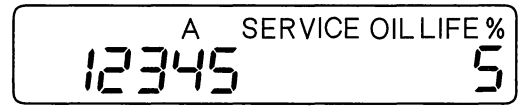

4. When the oil life is 0 percent, the remaining oil life indicator blinks when the ignition switch is in the ON (II) position.

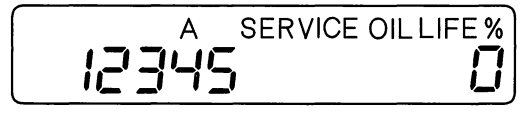

BACK

Protected by AR

5. If you still do not perform the indicated maintenance, you will see a negative mileage, for example "—10," blinking in the display. This negative mileage means that you should have performed the indicated maintenance 10 miles ago.



Resetting the Engine Oil Life Indicator

2006 Model

1. Turn the ignition switch to ON (II).
2. Press the trip meter select/reset knob on the instrument panel repeatedly until the engine oil life indicator is displayed.
3. Press and hold the trip meter select/reset knob for about 10 seconds until the engine oil life and maintenance item code(s) blink, then release the knob.

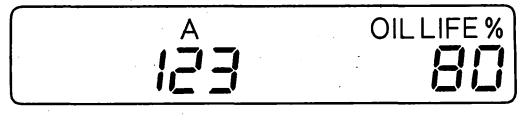

4. Press and hold the trip meter select/reset knob again for about 5 seconds. The maintenance item code(s) disappear and the engine oil life resets to "100," then release the knob.

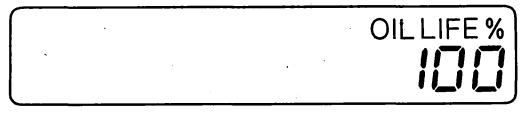

Protected by AR

Maintenance Minder

Maintenance Main Items

2006 Model

If you do not see the maintenance minder indicator or the maintenance schedule display more than 12 months after the display is reset, change the engine oil every year.

NOTE:
- Independent of the maintenance messages in the smart maintenance display, replace the brake fluid every 3 years.
- Inspect idle speed every 160,000 miles (256,000 km).
- Adjust the valves during services A, B, 1, 2 or 3 if they are noisy.

Symbol	Maintenance Main Items
A	Replace engine oil (see page 8-6). Engine oil capacity without oil filter: 4.0 L (4.2 US qt).
B	Replace engine oil and oil filter (see page 8-7). Engine oil capacity with oil filter: 4.2 L (4.4 US qt).
	Rotate tires, and check tire inflation and condition. Follow the pattern shown in the Owner's Manual.
	Check front brake (see page 19-2) and rear brakes (see page 19-21)*1. • Check pads and discs for wear (thickness), damage, and cracks. • Check calipers for damage, leaks, and tightness of mounting bolts. • Check brake linings for cracking, glazing, wear, or contamination.
	Check parking brake adjustment (see page 19-7)*1. Check the number of clicks (4 to 5) when the parking brake pedal is pressed with 294 N (30 kgf, 66 lbf) of force.
	Inspect tie-rod ends, steering gearbox, and gearbox boots (see page 17-8)*1. • Check rack grease and steering linkage. • Check boots for damage and leaking grease. • Check fluid lines for damage and leaks.
	Inspect suspension components (see page 18-3)*1. • Check bolts for tightness. • Check condition of ball joint boots for deterioration and damage.
	Inspect driveshaft boots (see page 16-4). Check boots for cracks and boot bands for tightness.
	Inspect brake hoses and lines including VSA (see page 19-31)*1. Check the master cylinder and VSA modulator for damage and leakage.
	Inspect all fluid levels and condition of fluids. • Automatic transmission fluid (ATF-Z1) (see page 14-185). • Power steering fluid (see page 17-10)*1. • Brake fluid (see page 19-9)*1. • Windshield washer fluid. • Engine coolant (see page 10-6).
	Inspect exhaust system (see page 9-6)*. Check catalytic converter heat shields, exhaust pipes, and muffler for damage, leaks, and tightness.
	Inspect fuel lines and connections (see page 11-319)*. Check for loose connections, cracks, and deterioration; retighten loose connections and replace damaged parts.

* 1: Refer to the 2003-2006 ACCORD Service Manual (P/N 61SDA08).

NOTE: According to state and federal regulations, failure to do the maintenance items marked with an asterisk (*) will not void the customer's emissions warranties. However, Honda recommends that all maintenance services be done at the recommended interval, to ensure long-term reliability.

BACK

Protected by AR

Maintenance Sub Items

2006 Model

Number	Maintenance Sub Items
1	Rotate tires, and check tire inflation and condition. Follow the pattern shown in the Owner's Manual.
2	Replace air cleaner element (see page 11-344). Replace every 15,000 miles (24,000 km), If the vehicle is driven primarily in dusty conditions.
	Replace dust and pollen filter (see page 21-51)*1. • If you drive primarily in urban areas that have high concentrations of soot in the air from industry and from diesel-powered vehicles, replace every 15,000 miles (24,000 km). • Replace the filter whenever airflow from the heating and cooling/climate control system is less than normal.
	Inspect drive belt (see page 4-35). Look for cracks and damage, then check the position of the drive belt auto-tensioner indicator.
3	Replace automatic transmission fluid (see page 14-186). • Driving in mountainous areas at very low vehicle speed or trailer towing results in higher transmission temperatures. This requires transmission fluid changes more frequently than recommended by the Maintenance Minder. If you regularly drive your vehicle under these conditions, have the transmission fluid changed at 60,000 miles (10,000 km), then every 30,000 miles (48,000 km). • Capacity: 3.1 L (3.3 US qt); use Honda ATF-Z1.
4	Replace spark plugs (see page 4-20). Use SKJ20DR-M11 (DENSO).
	Replace timing belt (see page 6-20), if the vehicle is regularly driven in very high temperatures (over 110°F, 43°C), or in very low temperatures (under −20°F, −29°C), replace every 60,000 miles (U.S.)/ 100,000 km (Canada) and inspect water pump (see page 10-5).
	Inspect the valve clearance (cold) (see page 6-8). • Otherwise, adjust only if noisy. • Intake: 0.20—0.24 mm (0.008—0.009 in.), Exhaust: 0.28—0.32 mm (0.011—0.013 in.).
5	Replace engine coolant (see page 10-6). Capacity (including the reserve tank): M/T 6.6 L (1.74 US gal), A/T 6.7 L (1.77 US gal); use Honda Long Life Antifreeze/Coolant Type 2.

* 1: Refer to the 2003-2006 ACCORD Service Manual (P/N 61SDA08).

Protected by AR

SUPPLEMENTAL RESTRAINT SYSTEM (SRS) (If engine electrical maintenance is required)

The Accord SRS includes a driver's airbag in the steering wheel hub, a passenger's airbag in the dashboard above the glove box, seat belt tensioners in the front seat belt retractors, side curtain airbags in the sides of the roof, and side airbags in the front seat-backs. Information necessary to safely service the SRS is included in the 2003-2006 Accord Service Manual, P/N 61SDA08. Items marked with an asterisk (*) on the contents page include or are located near SRS components. Servicing, disassembling, or replacing these items require special precautions and tools, and should be done only by an authorized Honda dealer.

- To avoid rendering the SRS inoperative, which could lead to personal injury or death in the event of a severe frontal or side collision, all SRS service work must be performed by an authorized Honda dealer.
- Improper service procedures, including incorrect removal and installation of the SRS, could lead to personal injury caused by unintentional deployment of the airbags and/or side airbags.
- Do not bump or impact the SRS unit, front impact sensors, or side impact sensors when the ignition switch is ON (II), or for at least 3 minutes after the ignition switch is turned OFF; otherwise, the system may fail in a collision, or the airbags may deploy.
- SRS electrical connectors are identified by yellow color coding. Related components are located in the steering column, front console, dashboard, dashboard lower panel, in the dashboard above the glove box, in the front seats, in the roof side, and around the floor. Do not use electrical test equipment on these circuits.

BACK

Protected by AR

Engine Electrical

Engine Electrical
Special Tools 4-2

Starting System
Component Location Index 4-3
Symptom Troubleshooting Index 4-4
Circuit Diagram 4-5
Starter Circuit Troubleshooting 4-6
Clutch Interlock Switch Test 4-8
Starter Solenoid Test 4-8
Starter Performance Test 4-9
Starter Removal and Installation 4-10
Starter Overhaul 4-12

Ignition System
Component Location Index 4-17
Circuit Diagram 4-18
Ignition Timing Inspection 4-19
Ignition Coil Removal/ Installation 4-20
Ignition Coil Relay Circuit Troubleshooting 4-21
Spark Plug Inspection 4-23

Charging System
Component Location Index 4-24
Symptom Troubleshooting Index 4-25
Circuit Diagram 4-26
Charging System Indicator Circuit Troubleshooting 4-28
Alternator and Regulator Circuit Troubleshooting 4-31
Alternator Control Circuit Troubleshooting 4-33
Drive Belt Inspection 4-35
Drive Belt Replacement 4-35
Drive Belt Auto-tensioner Inspection 4-36
Drive Belt Auto-tensioner Replacement 4-37
Tensioner Pulley Replacement 4-38
Alternator Removal and Installation 4-38
Alternator Overhaul 4-41

Cruise Control
Component Location Index 4-45
Circuit Diagram 4-46
Symptom Troubleshooting Index 4-47
Cruise Control Input Test 4-49
* Cruise Control Combination Switch Test/Replacement 4-51
Clutch Pedal Position Switch Test 4-51

Engine Mount Control System
Component Location Index 4-52
Circuit Diagram 4-53
Troubleshooting 4-54

NOTE: Refer to the 2003-2006 Accord Service Manual, P/N 61SDA07 for items not shown in this section.

ENGINE

Outline of Model Change

The J30A5 engine has been added.

Protected by AR

Special Tools

Ref. No.	Tool Number	Description	Qty
①	07746-0010300	Attachment, 42 x 47 mm	1
②	07749-0010000	Driver	1

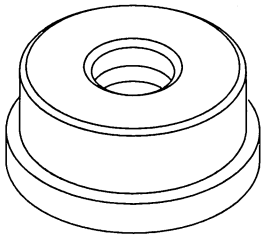

①

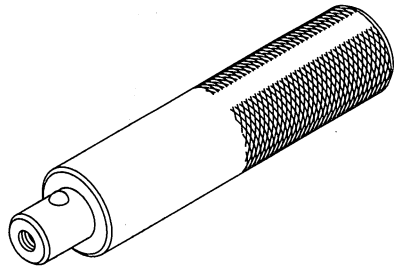

②

BACK

Protected by AR

Component Location Index

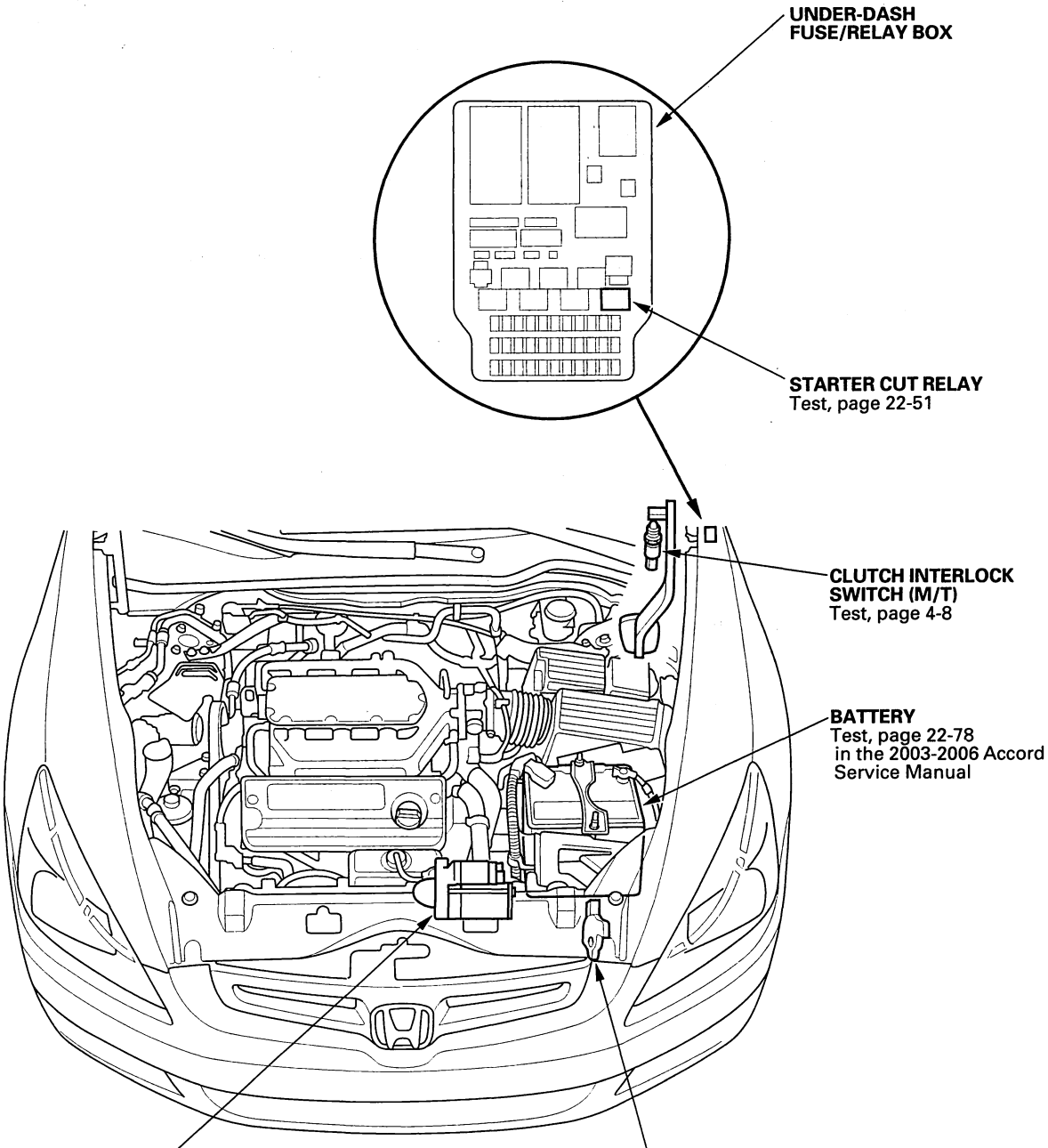

Protected by AR

Symptom Troubleshooting Index

Symptom	Diagnostic procedure	Also check for
Engine does not start (does not crank)	1. Check for PGM-FI DTCs. 2. Check for loose battery terminals or connections. 3. Test the battery for a low charge, refer to the 2003-2006 Accord Service Manual (see page 22-78). 4. Check the starter (see page 4-6). 5. Check the starter cut relay (see page 22-51). 6. Check the transmission range switch (A/T) (see page 14-215). 7. Check the clutch interlock switch (M/T) (see page 4-8). 8. Check the ignition switch or wire, refer to the 2003-2006 Accord Service Manual (see page 22-81).	Poor ground at G101, G102 (A/T) or G501 (M/T)
Engine cranks, but does not start	1. Check for PGM-FI DTCs. 2. Check the fuel pressure (see page 11-315). 3. Check for a plugged or damaged fuel line (see page 11-319). 4. Check for a plugged fuel filter (see page 11-326). 5. Check the throttle body (see page 11-343). 6. Check for low engine compression (see page 6-6). 7. Check for a damaged or broken timing belt.	
Engine is hard to start	1. Check for PGM-FI DTCs. 2. Check the fuel pressure (see page 11-315). 3. Check for a plugged or damaged fuel line (see page 11-319). 4. Check for a plugged fuel filter (see page 11-326). 5. Check for a restricted three way catalytic converter (TWC) or exhaust system.	
Engine cranks slowly	1. Check for loose battery terminals or connections. 2. Test the battery for a low charge, refer to the 2003-2006 Accord Service Manual (see page 22-78). 3. Check the starter for binding (see page 4-9). 4. Check for excessive drag in the engine.	

BACK

Protected by AR

Circuit Diagram

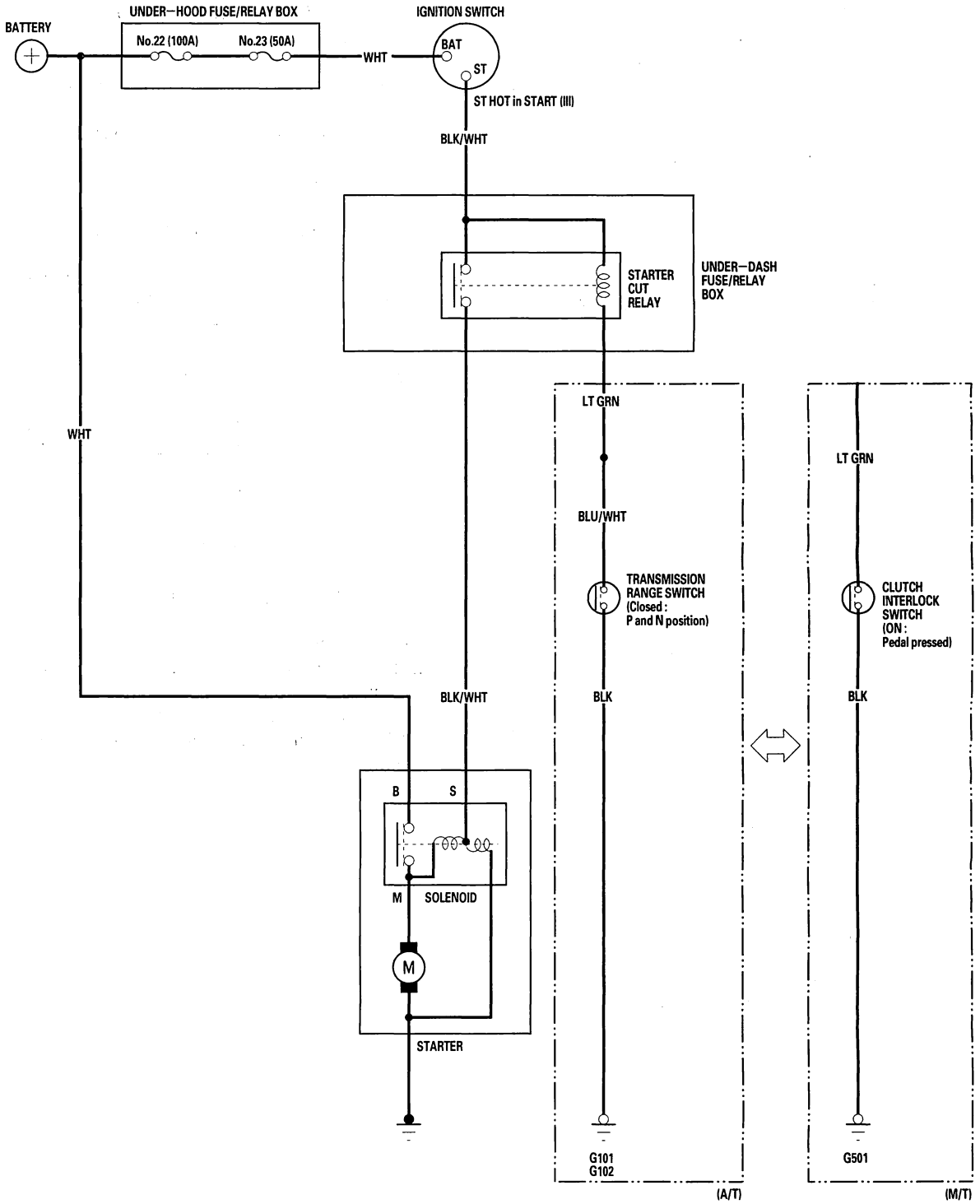

Protected by AR

Starter Circuit Troubleshooting

NOTE:
- Air temperature must be between 59 and 100°F (15 and 38°C) during this procedure.
- After this inspection, you must select engine control module (ECM)/powertrain control module (PCM) reset using the Honda Diagnostic System (HDS) (see page 11-4), otherwise the ECM/PCM will continues to stop the fuel injectors from operating.
- The battery must be in good condition and fully charged.

Recommended Procedure:
- Use a starter system tester.
- Connect and operate the equipment in accordance with the manufacturer's instructions.

Alternate Procedure

1. Hook up the following equipment:

   - Ammeter, 0—400A
   - Voltmeter, 0—20 V (accurate within 0.1 volt)

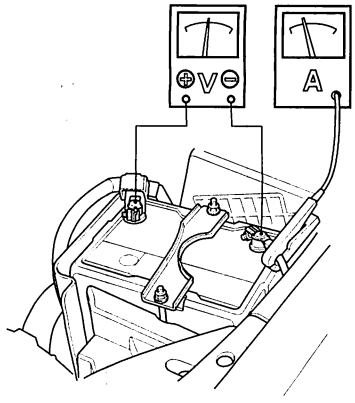

2. Connect the HDS to the data link connector (DLC) (see step 2 on page 11-3).

3. Turn the ignition switch ON (II), and select PGM-FI, INSPECTION, then ALL INJECTORS OFF on the HDS.

4. With the shift lever in N or P (A/T) or the clutch pedal pressed (M/T), turn the ignition switch to START (III).

   Does the starter crank the engine normally?

   YES—The starting system is OK. Go to step 10.

   NO—Go to step 5.

5. Check the battery condition. Check electrical connections at the battery, the negative battery cable to body, the engine ground cables and the starter for looseness and corrosion. Then try cranking the engine again.

   Does the starter crank the engine?

   YES—Repairing the loose connection corrected the problem. The starting system is OK. Go to step 10.

   NO—Check the following:

   - If the starter will not crank the engine at all, go to step 6.
   - If it cranks the engine erratically or too slowly, go to step 8.
   - If it does not disengage from the flywheel or torque converter ring gear when you release the key, check the following:
     - Solenoid plunger and switch malfunction
     - Dirty drive gear or damaged overrunning clutch

BACK

Protected by AR

6. Make sure the transmission is in Neutral, then disconnect the BLK/WHT wire (A) from the starter solenoid S terminal. Connect a jumper wire from the battery positive terminal to the solenoid terminal.

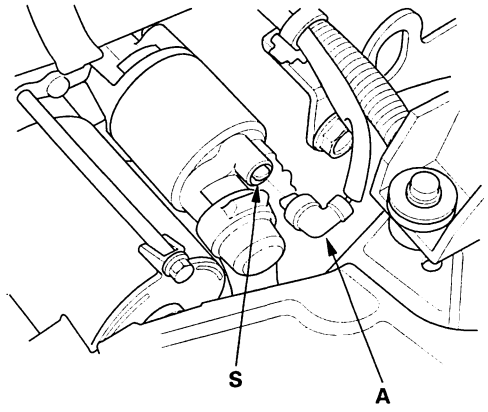

Does the starter crank the engine?

YES—Check the following items in the order listed until you find the open circuit: ■

- The BLK/WHT wire and connectors between the under-dash fuse/relay box and the ignition switch, and between the under-dash fuse/relay box and the starter.
- The ignition switch, refer to the 2003-2006 Accord Service Manual (see page 22-81).
- The transmission range switch and connector (A/T) or the clutch interlock switch and connector (M/T).
- The starter cut relay.

NO—Remove the starter, and repair or replace as necessary. ■

7. While cranking the engine, check the cranking voltage and current draw.

Is the cranking voltage greater than or equal to 8.5 V and is the current draw less than or equal to 380 A?

YES—Go to step 8.

NO—Replace the starter, or remove and disassemble it, and check for the following: ■

- Drag in the starter armature
- Shorted armature winding
- Excessive drag in the engine

8. Check the engine speed while cranking the engine.

Is the engine speed above 100 rpm?

YES—Go to step 9.

NO—Replace the starter, or remove and disassemble it, and check for the following: ■

- Open circuit in starter armature commutator segments
- Excessively worn starter brushes
- Open circuit in commutator brushes
- Dirty or damaged helical splines or drive gear
- Faulty drive gear clutch

9. Remove the starter, and inspect its drive gear and the flywheel or torque converter ring gear for damage. Replace any damaged parts.

10. Select ECM/PCM reset (see page 11-4) to cancel ALL INJECTORS OFF on the HDS.

Protected by AR

Clutch Interlock Switch Test

1. Disconnect the clutch interlock switch 2P connector (A).

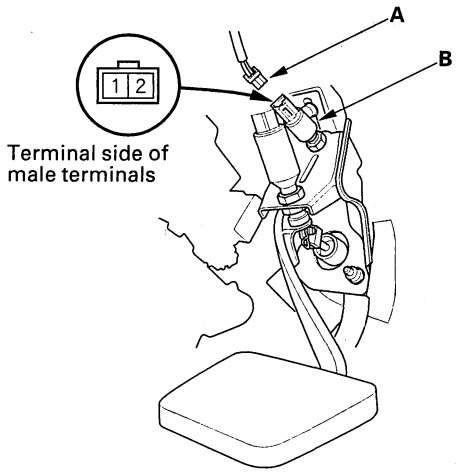

2. Remove the clutch interlock switch (B).
3. Check for continuity between the terminals according to the table.
   - If the continuity is not as specified, replace the clutch interlock switch.
   - If OK, install the clutch interlock switch, and adjust the pedal height (see page 12-6).

Terminal / Clutch Interlock Switch	1	2
PRESSED	○	○
RELEASED		

Starter Solenoid Test

1. Make sure you have the anti-theft codes for the radio and the navigation system, then write down the customer's audio presets. Make sure the ignition switch is OFF.
2. Disconnect the negative cable from the battery first, then disconnect the positive cable.
3. Remove the starter cable (A), BLK/WHT wire (B), and motor cable (C).

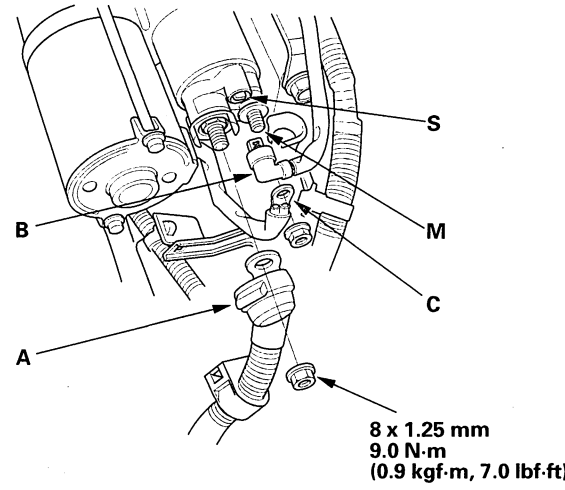

4. Check the hold-in coil for continuity between the S terminal and the armature housing (ground). There should be continuity.
   - If there is continuity, go to step 5.
   - If there is no continuity, replace the solenoid.
5. Check the pull-in coil for continuity between the S terminal and the M terminal. There should be continuity.
   - If there is continuity, the solenoid is OK.
   - If there is no continuity, replace the solenoid.

BACK

Protected by AR

6. Install in the reverse order of removal.
7. Connect the positive cable to the battery first, then connect the negative cable.
8. Enter the anti-theft codes for the radio and the navigation system, then enter the customer's audio presets.
9. Do the power window control unit reset procedure, refer to the 2003-2006 Accord Service Manual (see page 22-232).
10. Set the clock.

Starter Performance Test

1. Disconnect the wire from the M terminal.
2. Make a connection as shown using as heavy a wire as possible (preferably equivalent to the wire used for the vehicle). To avoid damaging the starter, never leave the battery connected for more than 10 seconds.

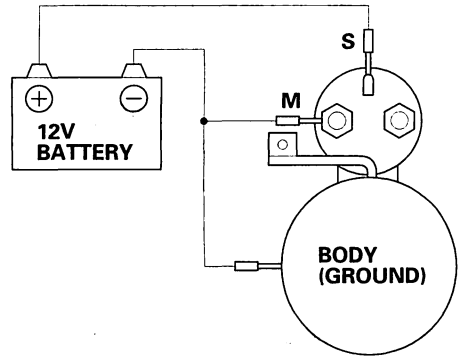

3. Connect the battery as shown. Make sure you disconnect the starter motor wire from the solenoid. If the starter pinion moves out, it is working properly.
4. Disconnect the battery from the M terminal. If the pinion does not retract, the hold-in coil of the solenoid is working properly.

Specifications
Electric Current: 80A or less
Motor Speed: 2,600 rpm or more

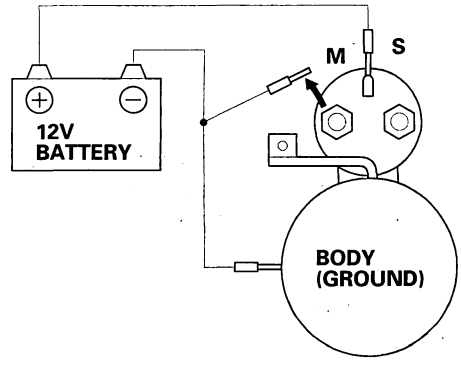

(cont'd)

Protected by AR

Starter Performance Test (cont'd)

5. Disconnect the battery from the starter body. If the pinion retracts immediately, it is working properly.

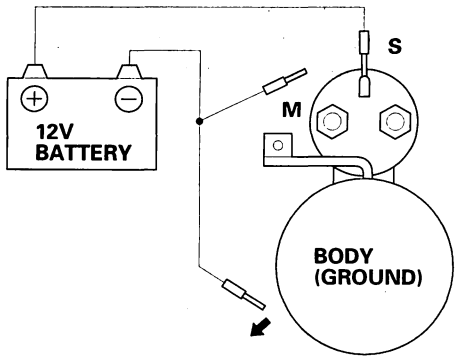

6. Firmly the starter in a vise
7. Reconnect the wire to the M terminal.
8. Connect the starter to the battery as shown, and check that the motor turns and keeps rotating.

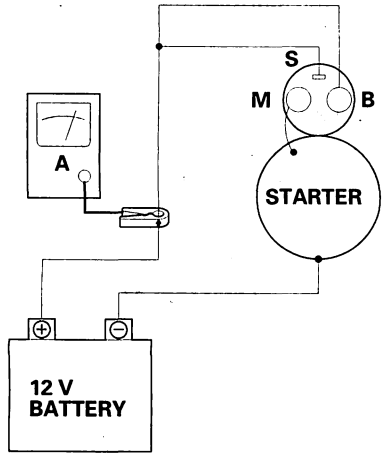

9. If the electric current and motor speed meet the specifications when the battery voltage is at 11.5 V, the starter is working properly.

Specifications
Electric Current: 80A or less
Motor Speed: 2,600 rpm or more

Starter Removal and Installation

Removal

1. Make sure you have the anti-theft codes for the radio, and the navigation system, then write down the customer's audio presets. Make sure the ignition switch is OFF.
2. Disconnect the negative cable from the battery first, then disconnect the positive cable.
3. Remove the battery.
4. Remove the harness clamp (A).

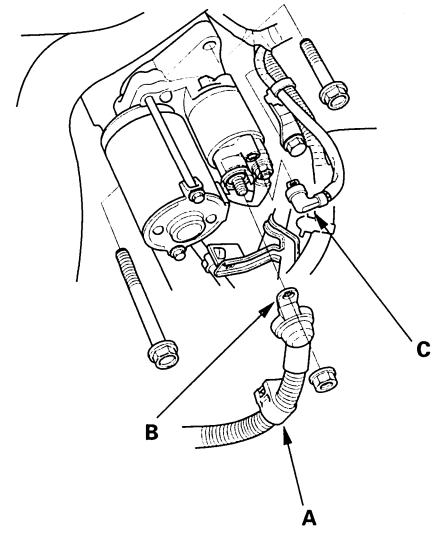

5. Disconnect the starter cable (B) from the B terminal, then disconnect the BLK/WHT wire (C) from the S terminal.
6. Remove the two bolts holding the starter, then remove the starter.

BACK

Protected by AR

Installation

1. Install the starter (A). Make sure the crimped side of the ring terminal is facing out.

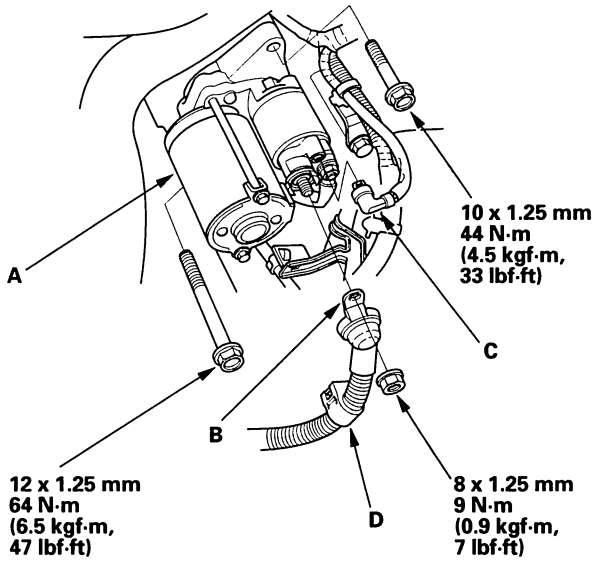

2. Connect the cable (B) to the B teminal, then connect the BLK/WHT (C) to the S terminal.
3. Install the hamess cramp (D).
4. Instal the battery.
5. Connect the positive cable to the battery first, then connect the negative cable.
6. Start the engine to make sure the starter works properly.
7. Enter the anti-theft codes for the radio and the navigation system, then enter the customer's audio presets.
8. Do the power window control unit reset procedure, refer to the 2003-2006 Accord Service Manual (see page 22-232).
9. Set the clock.

Protected by AR

Starter Overhaul

Disassembly/Reassembly

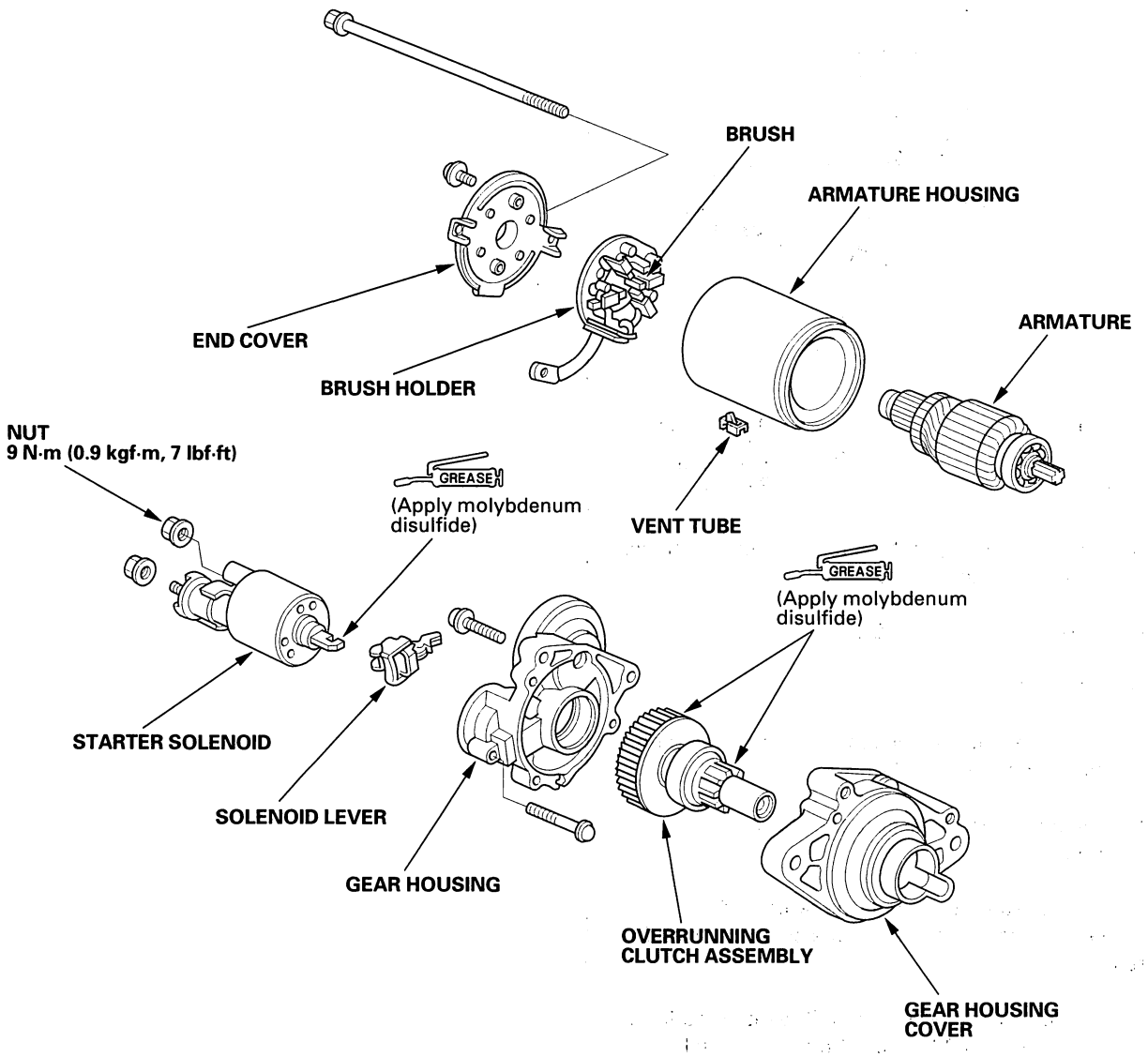

BACK

Protected by AR

Armature Inspection and Test

1. Remove the starter (see page 4-10).
2. Disassemble the starter as shown at the beginning of this procedure.
3. Inspect the armature for wear or damage from contact with the permanent magnet. If there is wear or damage, replace the armature.

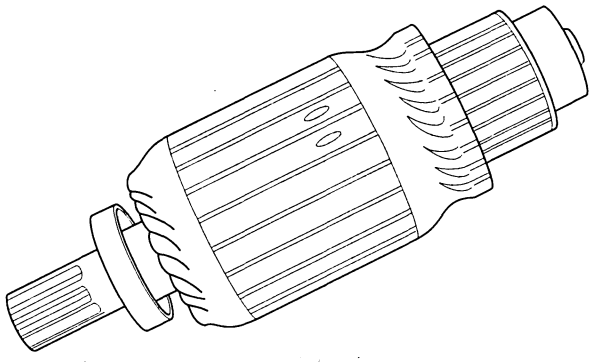

4. Check the commutator (A) surface. If the surface is dirty or burnt, resurface with emery cloth or a lathe within the following specifications, or recondition with #500 or #600 sandpaper (B).

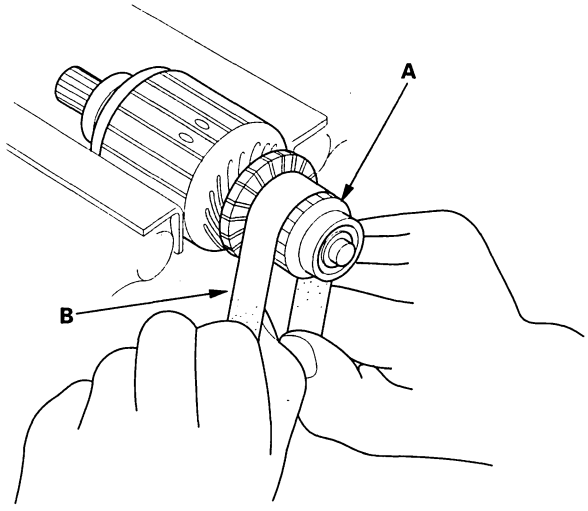

5. Check the commutator diameter. If the diameter is below the service limit, replace the armature.

Commutator Diameter
Standard (New): 28.0—28.1 mm (1.102—1.106 in.)
Service Limit: 27.5 mm (1.083 in.)

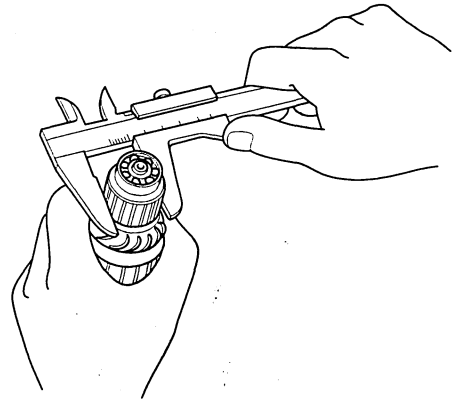

6. Measure the commutator (A) runout.

- If the commutator runout is within the service limit, check the commutator for carbon dust or brass chips between the segments.
- If the commutator runout is not within the service limit, replace the armature.

Commutator Runout
Standard (New): 0.02 mm (0.001 in.) max.
Service Limit: 0.05 mm (0.002 in.)

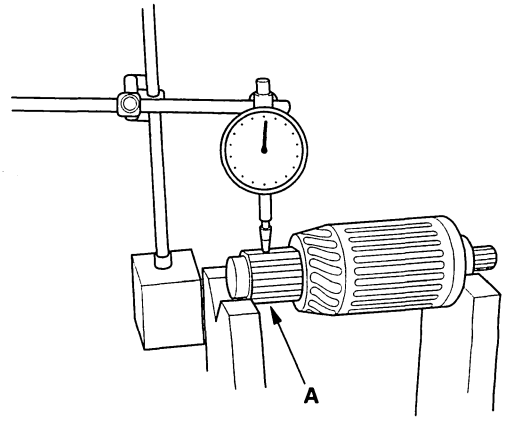

(cont'd)

Protected by AR

Starter Overhaul (cont'd)

7. Check the mica depth (A). If the mica is too high (B), undercut the mica with a hacksaw blade to the proper depth. Cut away all the mica (C) between the commutator segments. The undercut should not be too shallow, too narrow, or V-shaped (D).

Commutator Mica Depth
Standard (New): 0.4—0.5 mm (0.016—0.020 in.)
Service Limit: 0.15 mm (0.006 in.)

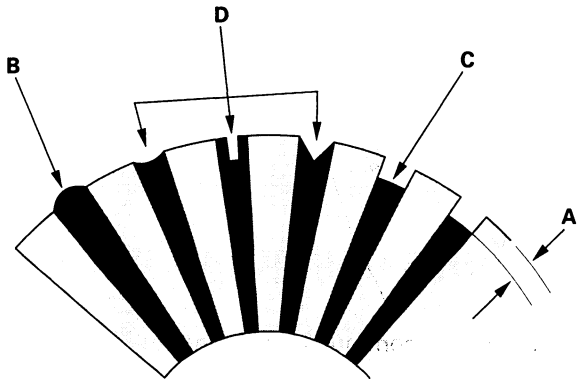

8. Check for continuity between the segments of the commutator. If there is an open circuit between any segments, replace the armature.

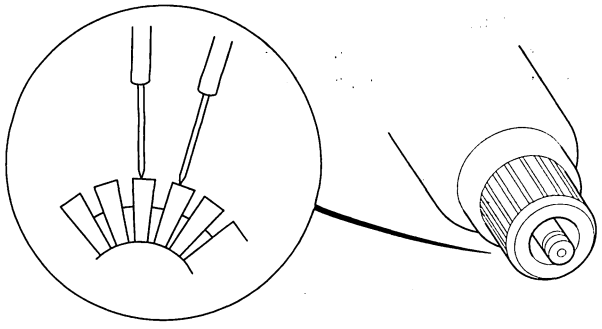

9. Place the armature (A) on an armature tester (B). Hold a hacksaw blade (C) on the armature core. If the blade is attracted to the core or vibrates while the core is turned, the armature is shorted. Replace the armature.

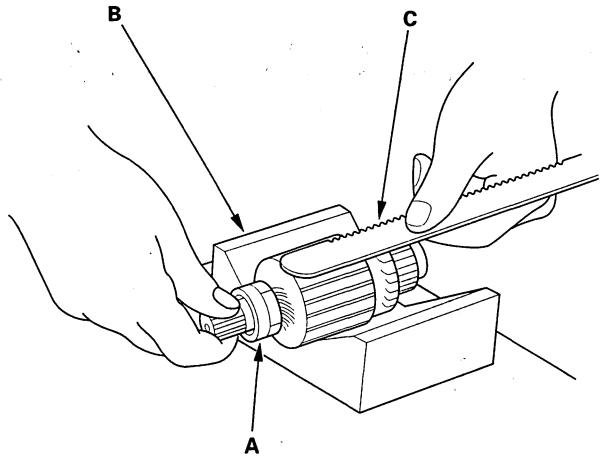

10. Check with an ohmmeter for continuity between the commutator (A) and armature coil core (B), and between the commutator and armature shaft (C). If there is continuity, replace the armature.

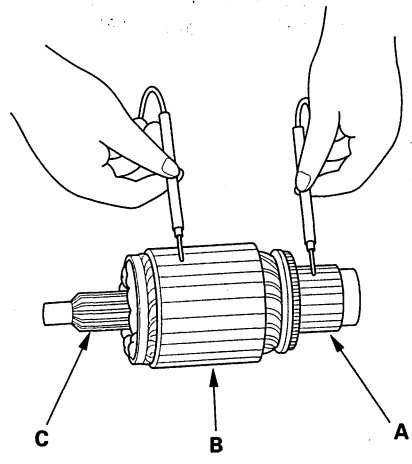

BACK

Protected by AR

Starter Brush Inspection

11. Measure the brush length. If it is not within the service limit, replace the brush holder assembly.

Brush Length
Standard (New): 15.8—16.2 mm (0.62—0.64 in.)
Service Limit: 11.0 mm (0.43 in.)

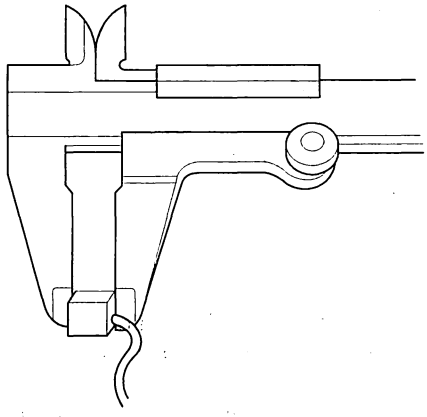

Starter Brush Holder Test

12. Check for continuity between the (+) brush holder (A) and (—) brush holder (B). If there is continuity, replace the brush holder assembly.

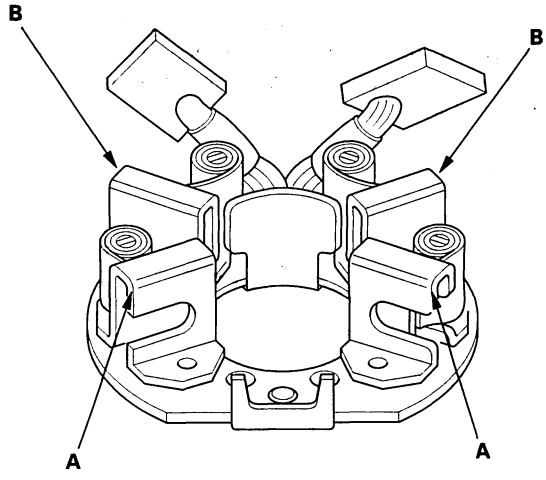

Brush Spring Inspection

13. Insert the brush (A) into the brush holder, and bring the brush into contact with the commutator, then attach a spring scale (B) to the spring (C). Measure the spring tension at the moment the spring lifts off the brush. If the spring tension is not within specification, replace the spring.

Spring Tension:
15.7—17.7 N (1.60—1.80 kgf, 3.53—3.97 lbf)

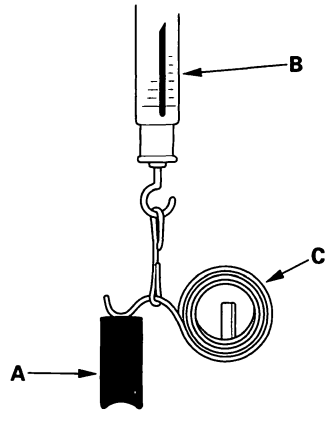

(cont'd)

Protected by AR

Starter Overhaul (cont'd)

14. Pry back each brush spring with a screwdriver, then position the brush about halfway out of its holder, and release the spring to hold it there.

    NOTE: To seat new brushes, slip a strip of #500 or #600 sandpaper, with the grit side up, between the commutator and each brush, and smoothly rotate the armature. The contact surface of the brushes will be sanded to the same contour as the commutator.

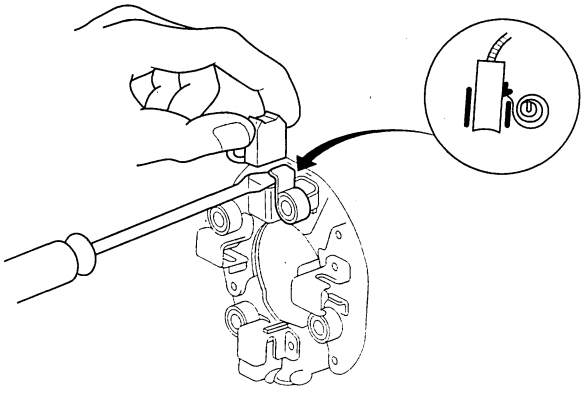

15. Install the armature in the housing. Next, pry back each brush spring again, and push the brush down until it seats against the commutator, then release the spring against the end of the brush.

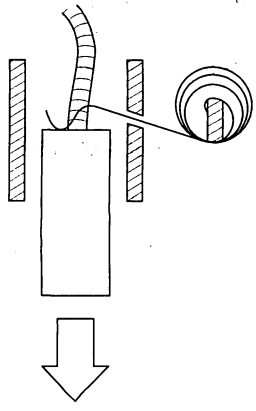

16. Install the starter end cover (A) to retain the brush holder (B).

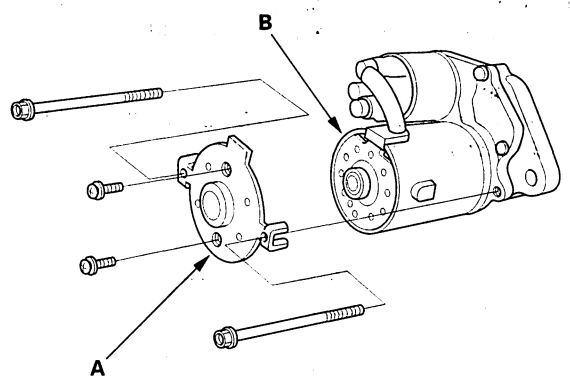

Overrunning Clutch Inspection

17. Slide the overrunning clutch along the shaft. Replace it if it does not slide smoothly.

18. Rotate the overrunning clutch (A) in both directions. It should lock and move upward in one direction and rotate smoothly in the other direction. If it does not lock in either direction or if it locks both directions, then replace it.

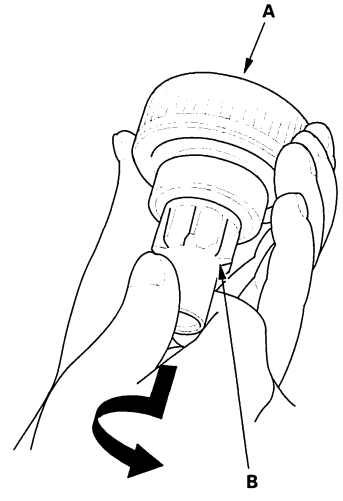

19. If the starter drive gear (B) is worn or damaged, replace the overrunning clutch assembly; the gear is not available separately. Check the condition of the torque converter ring gear to see if the starter drive gear teeth are damaged.

20. Reassemble the starter in the reverse order of disassembly.

BACK

Protected by AR

Component Location Index

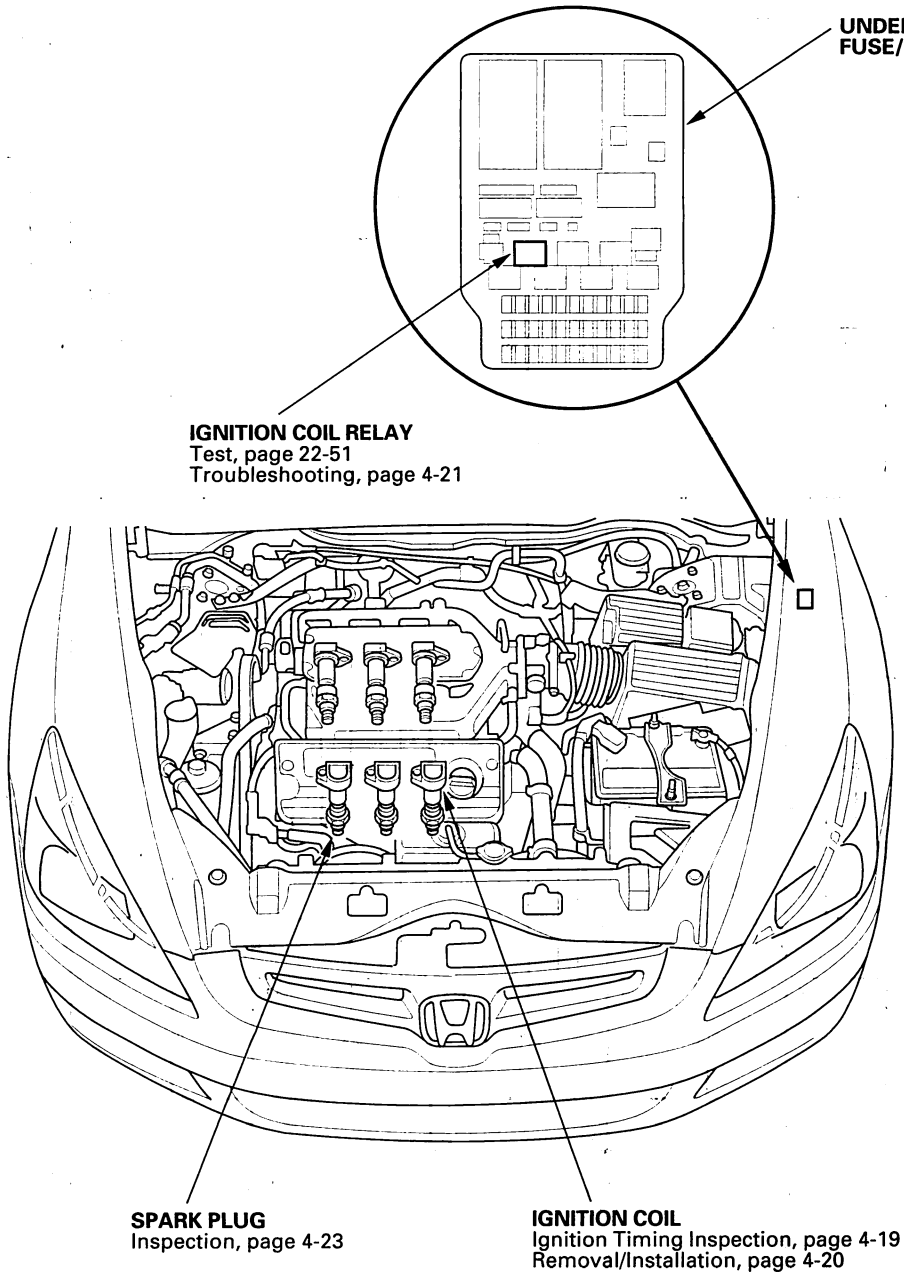

Protected by AR

Ignition System

Circuit Diagram

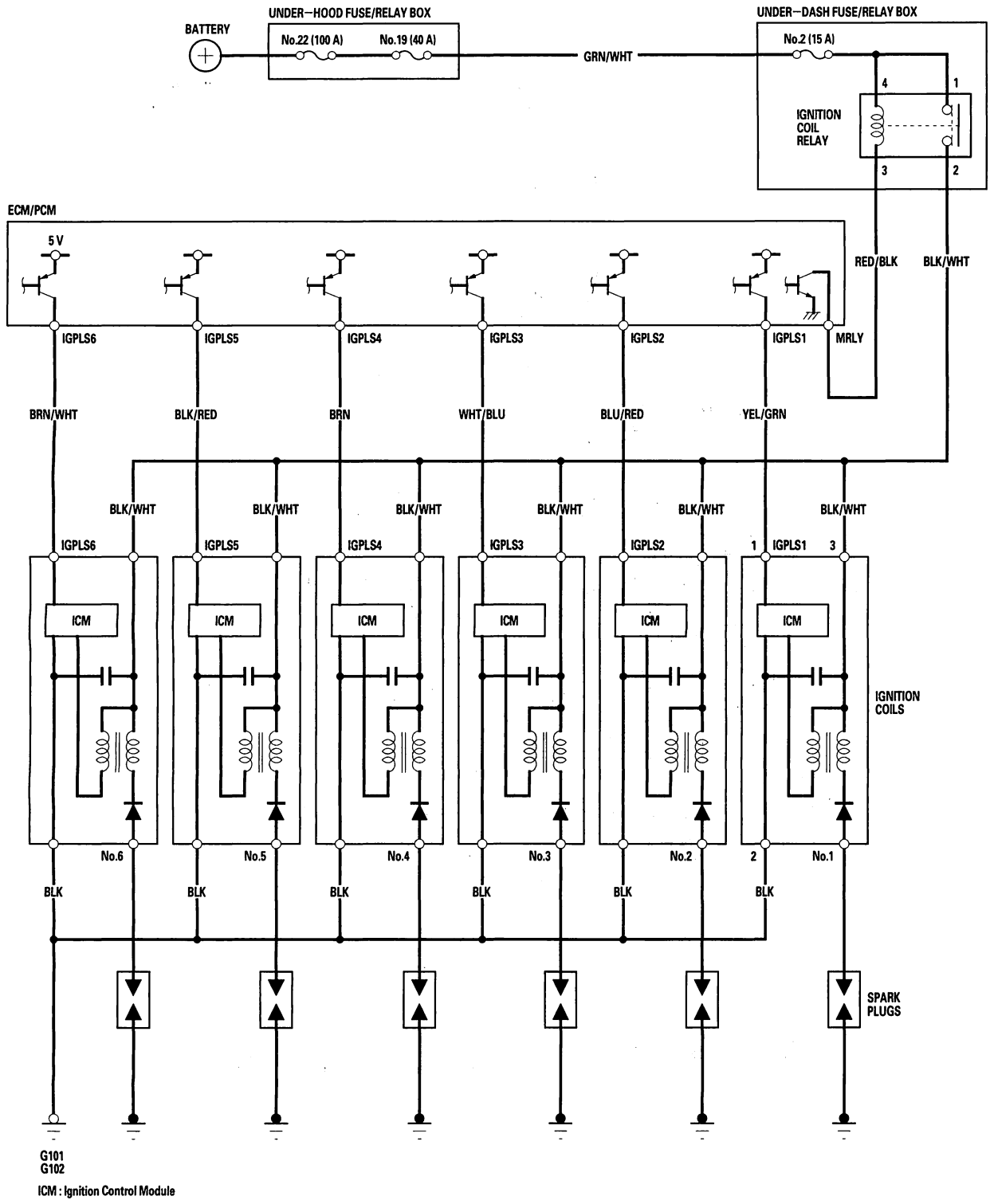

ICM : Ignition Control Module

BACK

Protected by AR

Ignition Timing Inspection

1. Connect the Honda Diagnostic System (HDS) to the data link connector (DLC) (see step 2 on page 11-3), and check for DTCs. If a DTC is present, diagnose and repair the cause before inspecting the ignition timing.
2. Start the engine. Hold the engine speed at 3,000 rpm with no load (in Neutral) until the radiator fan comes on, then let it idle.
3. Check the idle speed (see page 11-301).
4. Select "SCS" mode using the HDS.
5. Connect the timing light to the service loop.

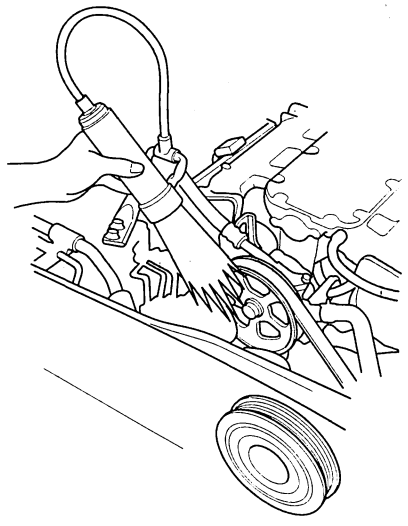

6. Aim the light toward the pointer (A) on the timing belt cover. Check the ignition timing under a no load condition (headlights, blower fan, rear window defogger, and air conditioner are turned off).

Ignition Timing
M/T: 10°±2° BTDC (RED mark (B)) at idle in Neutral
A/T: 10°±2° BTDC (RED mark (B)) at idle in Park or Neutral

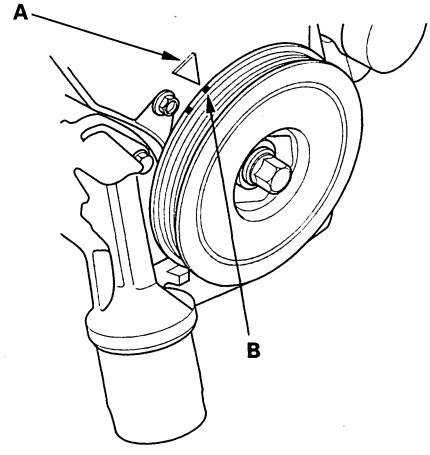

7. If the ignition timing differs from the specification, check the cam timing. If the cam timing is OK, update the engine control module (ECM)/ powertrain control module (PCM) if it does not have the latest software (see page 11-6), or substitute a known-good ECM/PCM (see page 11-7), then recheck. If the system works properly, and the ECM/PCM was substituted, replace the original ECM/PCM (see page 11-224).
8. Disconnect the HDS and the timing light.

Protected by AR

Ignition Coil Removal/Installation

1. Remove the ignition coil cover.

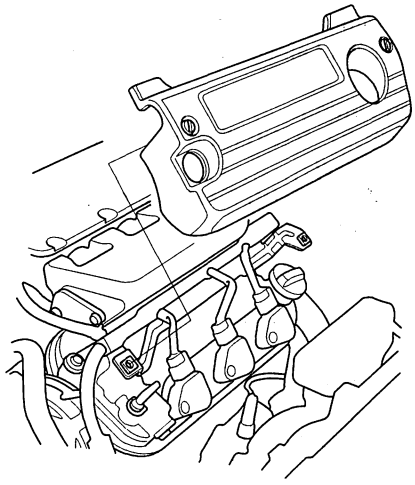

2. Disconnect the ignition coil connectors (A), then remove the front bank ignition coils (B).

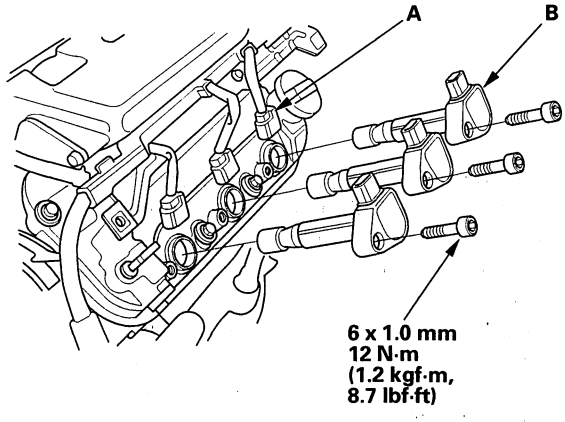

3. Disconnect the ignition coil connectors (A), then remove the rear bank ignition coils (B).

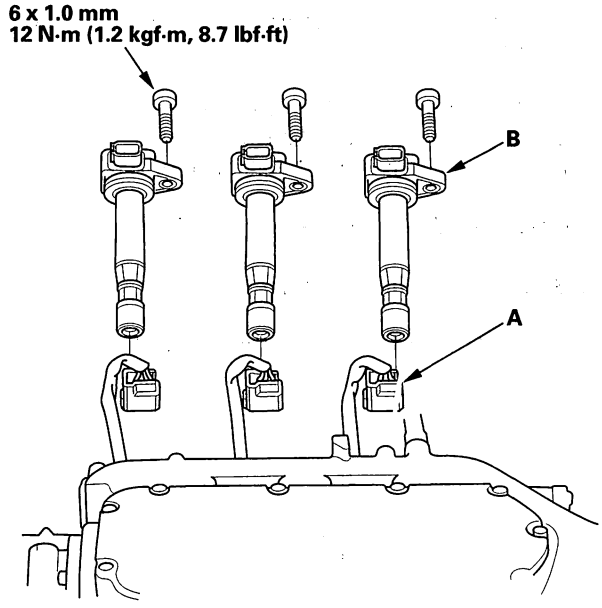

4. Install the ignition coils in the reverse order of removal.

BACK

Protected by AR

Ignition Coil Relay Circuit Troubleshooting

1. Check the No. 2 (15 A) fuse in the driver's under-dash fuse/relay box.

   Is the fuse OK?

   YES—Go to step 2.

   NO—Replace the fuse. ■

2. Remove the ignition coil relay from the under-dash fuse/relay box, and test it (see page 22-51).

   Is the relay OK?

   YES—Go to step 3.

   NO—Replace the ignition coil relay. ■

3. Measure the voltage between ignition coil relay 4P socket terminal No. 1 and body ground, then terminal No. 4 and body ground.

IGNITION COIL RELAY 4P SOCKET

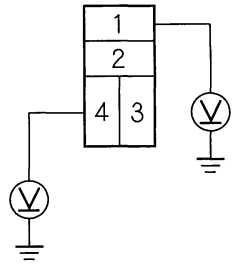

Terminal side of female terminals

Is there battery voltage?

YES—Go to step 4.

NO—Replace the under-dash fuse/relay box. ■

4. Check for continuity between ignition coil relay 4P socket terminal No. 2 and the No. 1 ignition coil 3P connector terminal No. 3.

IGNITION COIL RELAY 4P SOCKET

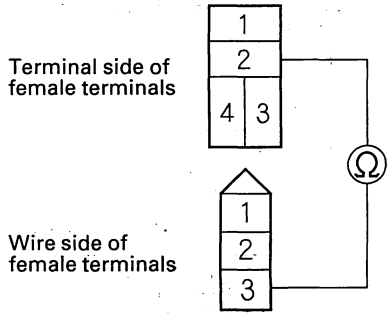

No.1 IGNITION COIL 3P CONNECTOR

Is there continuity?

YES—Go to step 5.

NO—Repair an open in the wire between ignition coil relay 4P socket terminal No. 2 and No. 1 ignition coil 3P connector terminal No. 3. ■

5. Check for continuity between ignition coil relay 4P socket terminal No. 3 and body ground.

IGNITION COIL RELAY 4P SOCKET

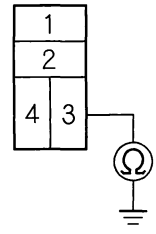

Terminal side of female terminals

Is there continuity?

YES—Repair a short in the wire between ignition coil relay 4P socket terminal No. 3 and the PCM (E5). ■

NO—Go to step 6.

(cont'd)

Protected by AR

Ignition Coil Relay Circuit Troubleshooting (cont'd)

6. Check for continuity between ignition coil relay 4P socket terminal No. 3 and engine control module (ECM)/ powertrain control module (PCM) connector terminal A5.

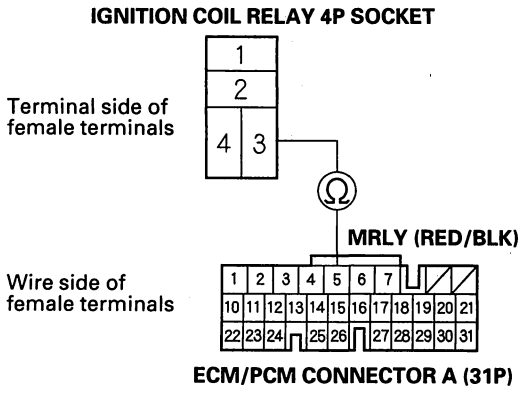

Is there continuity?

YES—The system is OK at this time. Check for loose or poor connections at the ignition coil relay and the ECM/PCM (A5).■

NO—Repair an open in the wire between ignition coil relay 4P socket terminal No. 3 and the ECM/PCM (A5).■

BACK

Protected by AR

Spark Plug Inspection

1. Inspect the electrodes and ceramic insulator.

   - Burned or worn electrodes may be caused by:
     - Advanced ignition timing
     - Loose spark plug
     - Plug heat range too hot
     - Insufficient cooling

   - Fouled plug may be caused by:
     - Retarded ignition timing
     - Oil in combustion chamber
     - Incorrect spark plug gap
     - Plug heat range too cold
     - Excessive idling/low speed running
     - Clogged air cleaner element
     - Deteriorated ignition coils

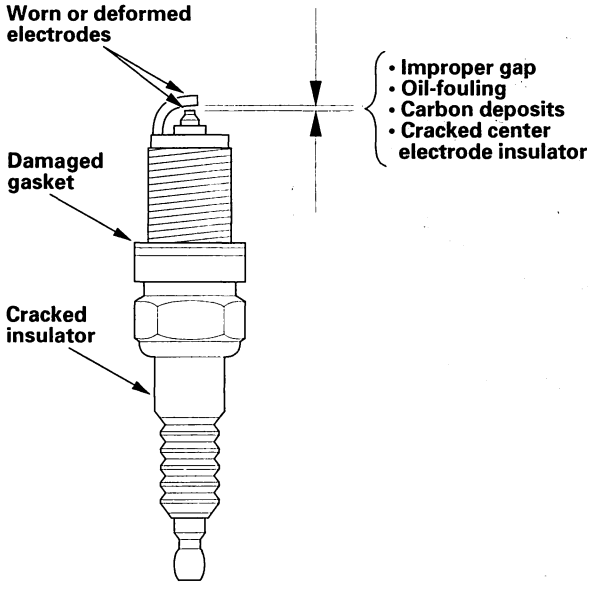

2. Do not adjust the gap (A) of iridium tip plugs ; replace the spark plug if the gap is out of specification.

   Electrode Gap
   Standard (New): 1.0—1.1 mm (0.039—0.043 in.)

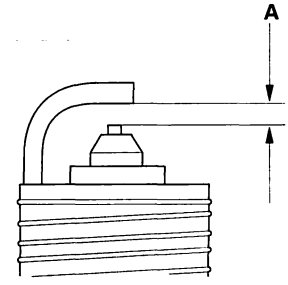

3. Replace the plug at the specified interval or if the center electrode is rounded (A). Use only the spark plugs listed.

   Spark Plugs
   NGK: IZFR6K11
   DENSO: SKJ20DR-M11

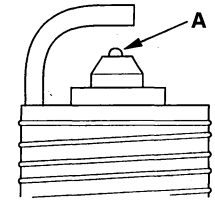

4. Apply a small amount of anti-seize compound to the plug threads, and screw the plugs into the cylinder head, finger-tight. Then torque them to 18 N·m (1.8 kgf·m, 13 lbf·ft).

Protected by AR

Charging System

Component Location Index

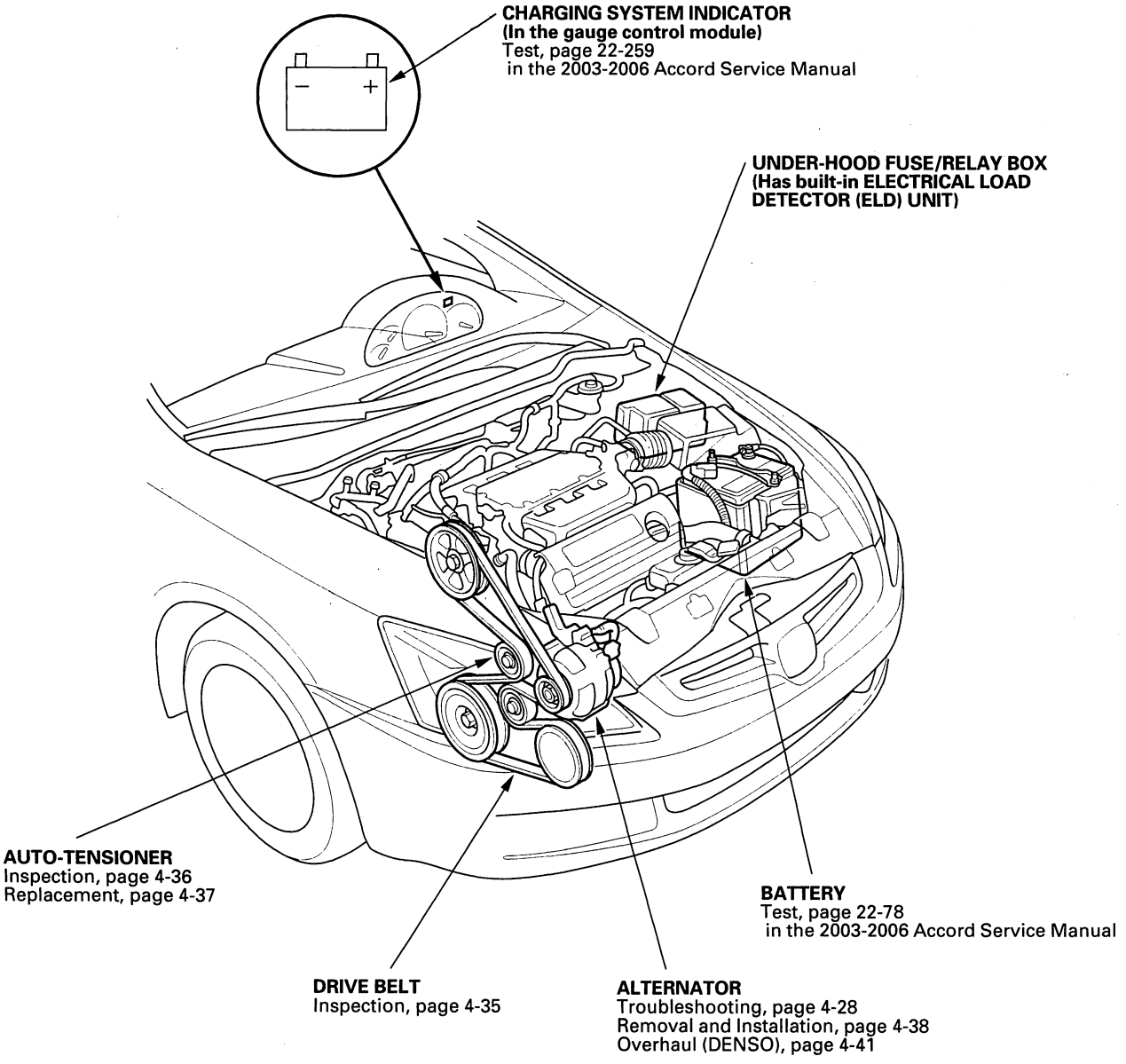

BACK

Protected by AR

Symptom Troubleshooting Index

2003-2004 Models

Symptom	Diagnostic procedure	Also check for
Charging system indicator does not come on with the ignition switch ON (II)	Troubleshoot the charging system indicator circuit (see page 4-28).	
Charging system indicator stays on	1. Troubleshoot the charging system indicator circuit (see page 4-28). 2. Check for a broken drive belt (see page 4-35). 3. Check the drive belt auto-tensioner (see page 4-36).	
Battery discharged	1. Check for a poor connection and for open or shorted wire(s) in charging system. 2. Check for parasitic electrical current draw. 3. Check for a broken drive belt (see page 4-35). 4. Check the drive belt auto-tensioner (see page 4-36). 5. Troubleshoot the alternator and regulator circuit (see page 4-31). 6. Check for a poor connection at the battery terminal. 7. Test the battery, refer to the 2003-2006 Accord Service Manual (see page 22-78).	
Battery overcharged	1. Troubleshoot the alternator and regulator circuit (see page 4-31). 2. Test the battery, refer to the 2003-2006 Accord Service Manual (see page 22-78).	

2005-2006 Models

Symptom	Diagnostic procedure	Also check for
Charging system indicator does not come on with the ignition switch ON (II)	Troubleshoot the charging system indicator circuit (see page 4-29).	
Charging system indicator stays on	1. Check for PGM-FI DTCs (see page 11-3). 2. Troubleshoot the charging system indicator circuit (see page 4-29). 3. Check for a broken drive belt (see page 4-35). 4. Check the drive belt auto-tensioner (see page 4-36).	
Battery discharged	1. Check for parasitic electrical current draw. 2. Check for a broken drive belt (see page 4-35). 3. Check the drive belt auto-tensioner (see page 4-36). 4. Troubleshoot the alternator and regulator circuit (see page 4-31). 5. Check for a poor connection at the battery terminal. 6. Test the battery, refer to the 2003-2006 Accord Service Manual (see page 22-78).	
Battery overcharged	1. Troubleshoot the alternator and regulator circuit (see page 4-31). 2. Test the battery, refer to the 2003-2006 Accord Service Manual (see page 22-78).	

Protected by AR

Charging System

Circuit Diagram

Alternator manufactured by DELPHI (2003-2005 Models)

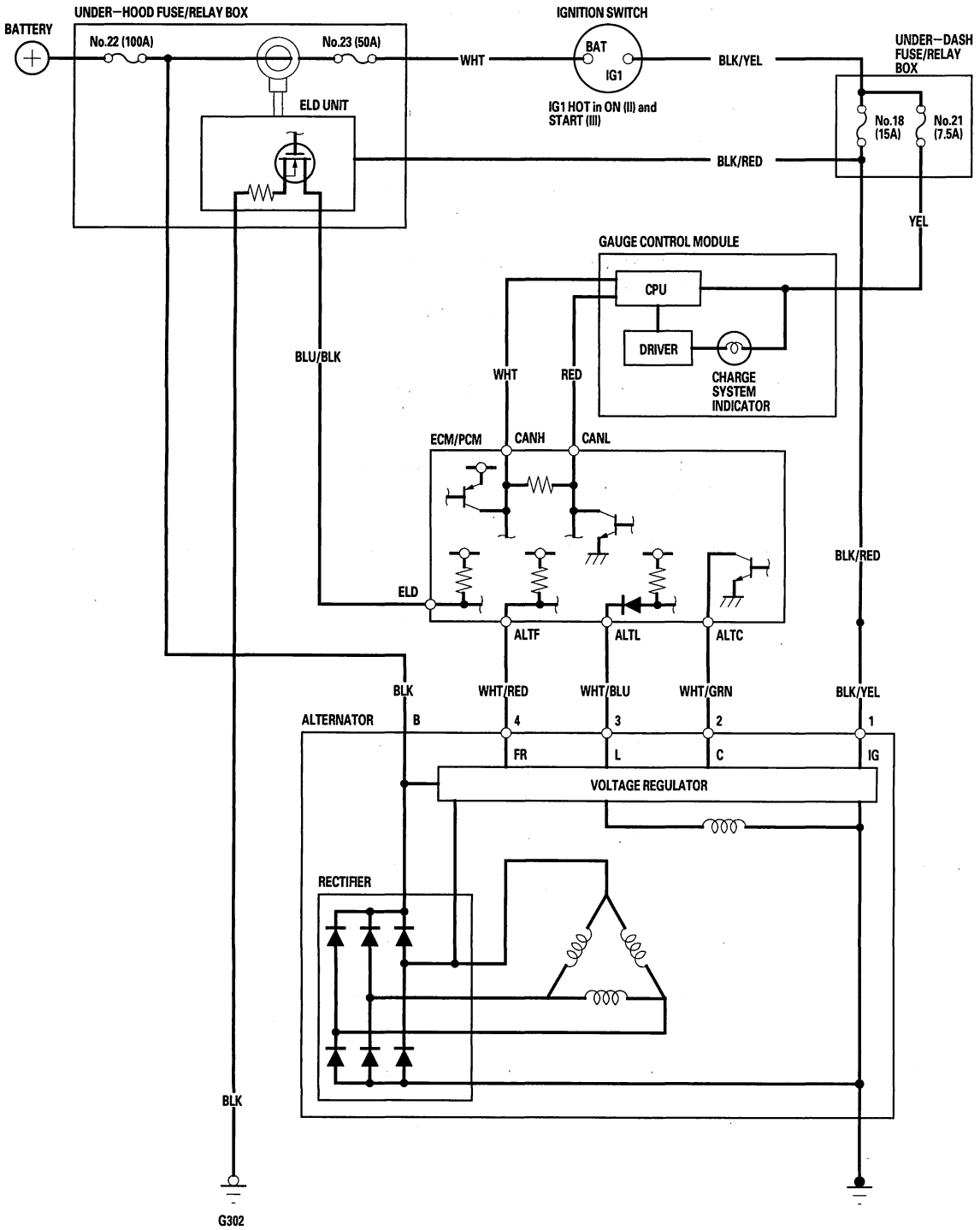

BACK

Protected by AR

Alternator manufactured by DENSO (2005-2006 Models)

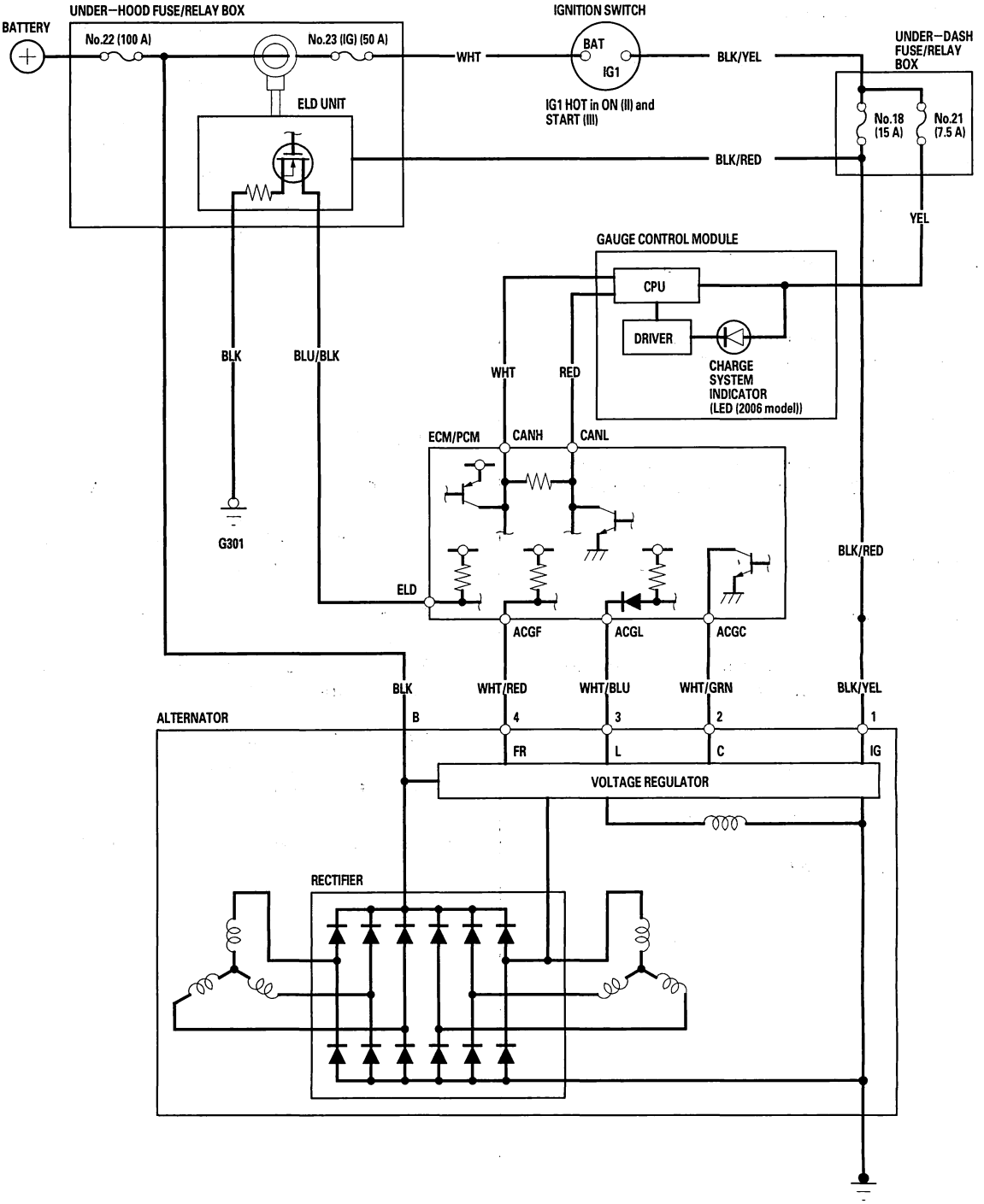

Protected by AR

Charging System Indicator Circuit Troubleshooting

2003-2004 Models

1. Turn the ignition switch ON (II).

   Does the charging system indicator come on?

   YES—Go to step 2.

   NO—Go to step 3.

2. Start the engine.

   Does the charging system indicator go off?

   YES—Charging system indicator circuit is OK. Go to the alternator and regulator circuit troubleshooting (see page 4-31).■

   NO—Go to step 3.

3. Do the gauge control module self-test procedure, refer to the 2003-2006 Accord Service Manual (see page 22-259).

   Does the charging system indicator flash?

   YES—Go to step 4.

   NO—Replace the gauge control module, refer to the 2003-2006 Accord Service Manual (see page 22-276).■

4. Turn the ignition switch OFF.

5. Disconnect the alternator 4P connector.

6. Turn the ignition switch ON (II).

7. Measure the voltage between alternator 4P connector terminal No. 1 and body ground.

   ALTERNATOR 4P CONNECTOR

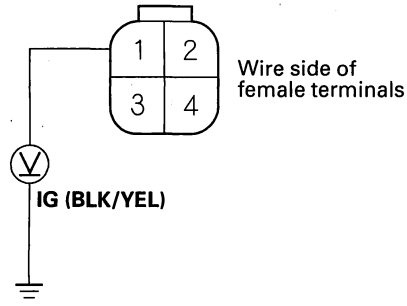

   Is there battery voltage?

   YES—Go to step 8.

   NO—Check for a blown No. 18 (15A) fuse in the under-dash fuse/relay box. If the fuse is OK, repair open in the wire between the alternator and under-dash fuse/relay box.■

8. Connect the Honda Diagnostic System (HDS) to the data link connector (DLC) (see step 2 on page 11-3). Turn the ignition switch ON (II), and jump the SCS line with the HDS, then turn the ignition switch OFF.

   NOTE: This step must be done to protect the engine control module (ECM)/powertrain control module (PCM) from damage.

9. Disconnect ECM/PCM connector E (31P).

BACK

Protected by AR

10. Check for continuity between ECM/PCM connector terminal E11 and alternator 4P connector terminal No. 3.

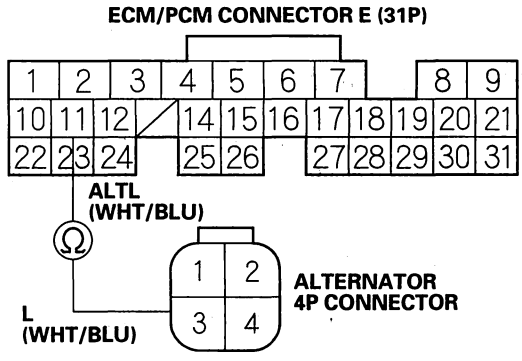

Wire side of female terminals

Is there continuity?

YES—Go to step 11.

NO—Repair an open in the wire between the alternator and the ECM/PCM. ■

11. Check for continuity between ECM/PCM connector terminal E11 and body ground.

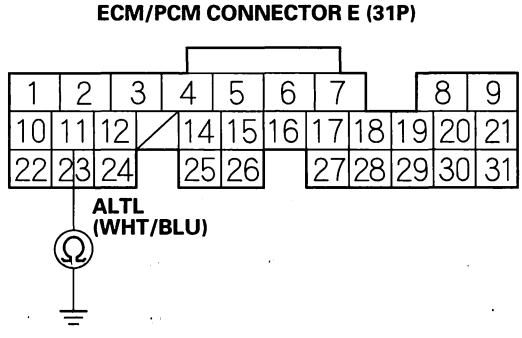

Wire side of female terminals

Is there continuity?

YES—Repair a short in the wire between the alternator and the ECM/PCM. ■

NO—Go to the alternator and regulator circuit troubleshooting (see page 4-31). ■

2005-2006 Models

1. Turn the ignition switch ON (II).

   Does the charging system indicator come on?

   YES—Go to step 2.

   NO—Go to step 11.

2. Shift to Park or Neutral, and start the engine. Hold the engine speed at 2,000 rpm for 1 minute.

   Does the charging system indicator go off?

   YES—Charging system indicator circuit is OK. Go to the alternator and regulator circuit troubleshooting (see step 1 on page 4-32). ■

   NO—Go to step 3.

3. Do the gauge control module self-test procedure, refer to the 2003-2006 Accord Service Manual (see page 22-259).

   Does the charging system indicator flash?

   YES—Go to step 4.

   NO—Replace the gauge control module, refer to the 2003-2006 Accord Service Manual (see page 22-276). ■

4. Turn the ignition switch OFF.

5. Disconnect the alternator 4P connector.

6. Turn the ignition switch ON (II).

   Does the charging system indicator go off?

   YES—Replace the alternator (see page 4-38) or repair the alternator (see page 4-41). ■

   NO—Go to step 7.

(cont'd)

Protected by AR

Charging System Indicator Circuit Troubleshooting (cont'd)

7. Turn the ignition switch OFF.

8. Connect the Honda Diagnostic System (HDS) to the data link connector (DLC) (see step 2 on page 11-3). Turn the ignition switch ON (II), and jump the SCS line with the HDS, then turn the ignition switch OFF.

   NOTE: This step must be done to protect the engine control module (ECM)/powertrain control module (PCM) from damage.

9. Disconnect ECM/PCM connector E (31P).

10. Check for continuity between ECM/PCM connector terminal E11 and body ground.

ECM/PCM CONNECTOR E (31P)

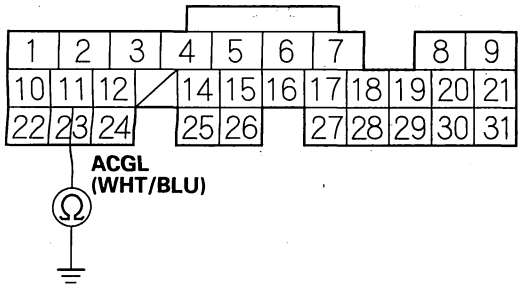

Wire side of female terminals

Is there continuity?

YES—Repair a short in the wire between the alternator and the ECM/PCM. ■

NO—Update the ECM/PCM if it does not have the latest software (see page 11-6), or substitute a known-good ECM/PCM (see page 11-7), then recheck. If the symptom/indication goes away with a known-good ECM/PCM, replace the original ECM/PCM (see page 11-224). ■

11. Do the gauge control module self-test procedure, refer to the 2003-2006 Accord Service Manual (see page 22-259).

    Does the charging system indicator flash?

    YES—Go to step 12.

    NO—Replace the gauge control module, refer to the 2003-2006 Accord Service Manual (see page 22-276). ■

12. Turn the ignition switch OFF.

13. Disconnect the alternator 4P connector.

14. Connect alternator 4P connector terminal No.3 and body ground with a jumper wire.

ALTERNATOR 4P CONNECTOR

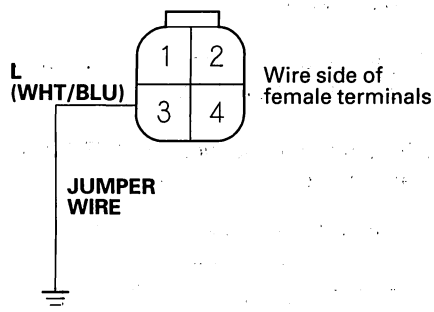

15. Turn the ignition switch ON (II).

    Does the charging system indicator come on?

    YES—Replace the alternator (see page 4-38) or repair the alternator (see page 4-41). ■

    NO—Go to step 16.

BACK

Protected by AR

16. Turn the ignition switch OFF.

17. Connect the HDS to the DLC (see step 2 on page 11-3). Turn the ignition switch ON (II), and jump the SCS line with the HDS, then turn the ignition switch OFF.

    NOTE: This step must be done to protect the ECM/PCM from damage.

18. Disconnect ECM/PCM connector E (31P).

19. Check for continuity between ECM/PCM connector terminal E11 and body ground.

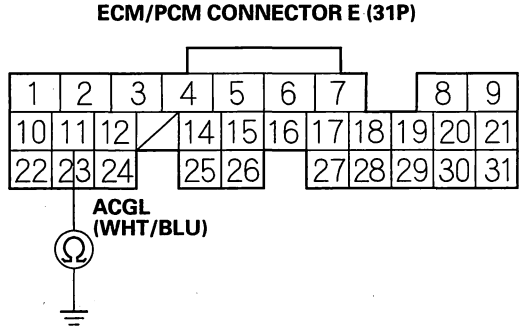

Wire side of female terminals

Is there continuity?

YES—Update the ECM/PCM if it does not have the latest software (see page 11-6), or substitute a known-good ECM/PCM (see page 11-7), then recheck. If the symptom/indication goes away with a known-good ECM/PCM, replace the original ECM/PCM (see page 11-224).■

NO—Repair an open in the wire between the alternator and the ECM/PCM.■

Alternator and Regulator Circuit Troubleshooting

DELPHI (2003-2005 Models)

1. Make sure the battery connections are good, and the battery is sufficiently charged, refer to the 2003-2006 Accord Service Manual (see page 22-78).

2. Remove the ignition cover (see page 4-19).

3. Connect a VAT-40 (or equivalent tester), and turn the selector switch to position 1 (starting).

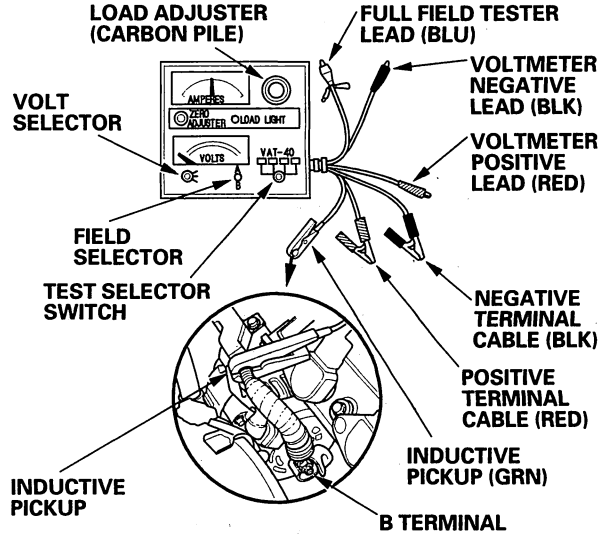

4. Start the engine. Hold the engine at 3,000 rpm, with no load until the radiator fan comes on, then let it idle.

5. Raise the engine speed to 2,000 rpm, and hold it there.

   Is the voltage over 15.1 V?

   YES—Replace the alternator (see page 4-38).■

   NO—Go to step 5.

(cont'd)

Protected by AR

Alternator and Regulator Circuit Troubleshooting (cont'd)

6. Release the accelerator pedal, and let the engine idle.
7. Make sure all accessories are turned off. Turn the selector switch to position 2 (charging).
8. Remove the inductive pickup, and zero the ammeter.
9. Place the inductive pickup over the B terminal wire of the alternator so the arrow points away from the alternator.
10. Raise the engine speed to 2,000 rpm, and hold it there.

    Is the voltage less than 13.5 V?

    YES—Go to alternator control circuit troubleshooting (see page 4-33).. ■

    NO—Go to step 10.

11. Apply a load with the VAT-40 until the battery voltage drops within 12—13.5 V.

    Is the amperage 60A or more?

    YES—The charging system is OK. ■

    NOTE: If the charge system indicator is still on, replace the alternator.

    NO—Replace the alternator (see page 4-38) or repair the alternator (see page 4-41). ■

DENSO (2005-2006 Models)

1. Make sure the battery connections are good, and the battery is sufficiently charged, refer to the 2003-2006 Accord Service Manual (see page 22-78).
2. Remove the ignition cover (see page 4-19).
3. Connect a VAT-40 (or equivalent tester), and turn the selector switch to position 1 (starting).

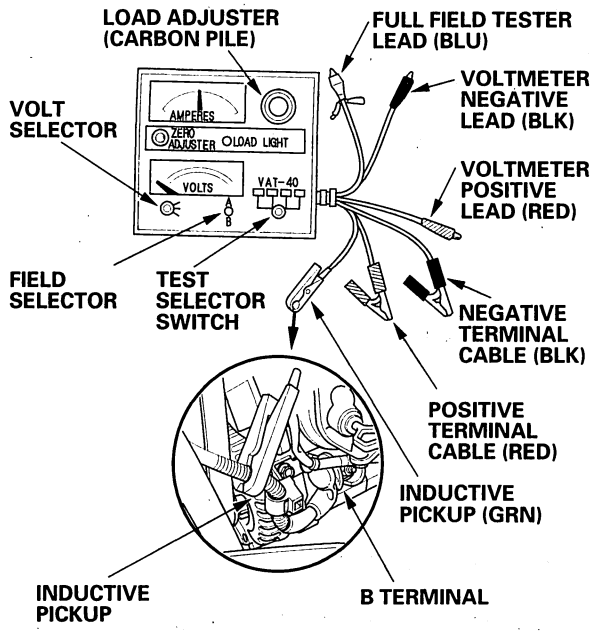

4. Shift to Park or Neutral, and start the engine. Hold the engine at 3,000 rpm, with no load until the radiator fan comes on, then let it idle.
5. Raise the engine speed to 2,000 rpm, and hold it there.

   Is the voltage over 15.1 V?

   YES—Replace the alternator (see page 4-38) or rear housing assembly (see page 4-41). ■

   NO—Go to step 5.

BACK

Protected by AR

6. Release the accelerator pedal, and let the engine idle.

7. Make sure all accessories are turned off. Turn the selector switch to position 2 (charging).

8. Remove the inductive pickup, and zero the ammeter.

9. Place the inductive pickup over the B terminal wire of the alternator so that the arrow points away from the alternator.

10. Raise the engine speed to 2,000 rpm, and hold it there.

    Is the voltage less than 13.5 V?

    YES—Go to alternator control circuit troubleshooting (see page 4-33). ■

    NO—Go to step 10.

11. Apply a load with the VAT-40 until the battery voltage drops to between 12—13.5 V.

    Is the amperage 87.5A or more?

    YES—The charging system is OK. ■

    NOTE: If the charge system indicator is still on, replace the alternator (see page 4-38).

    NO—Replace or replace the alternator (see page 4-38) or repair the alternator (see page 4-41). ■

Alternator Control Circuit Troubleshooting

1. Check for proper operation of the electrical load detector (ELD) with the HDS.

2. Connect the Honda Diagnostic System (HDS) to the data link connector (DLC) (see step 2 on page 11-3), and check for DTCs. If a DTC is present, diagnose and repair the cause before continuing with this test.

3. Disconnect the alternator 4P connector from the alternator.

4. Start the engine, and turn on the headlights to high beam.

5. Measure the voltage between alternator 4P connector terminal No. 2 and the positive terminal of the battery.

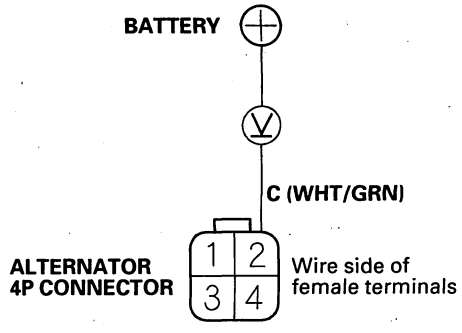

Is there 1 V or less?

YES—Go to step 6.

NO—Go to step 9.

6. Jump the SCS line with the HDS, then turn the ignition switch OFF.

   NOTE: This step must be done to protect the engine control module (ECM)/powertrain control module (PCM) from damage.

7. Disconnect engine control module ECM/PCM connector E (31P).

(cont'd)

Protected by AR

Alternator Control Circuit Troubleshooting (cont'd)

8. Check for continuity between ECM/PCM connector terminal E24 and body ground.

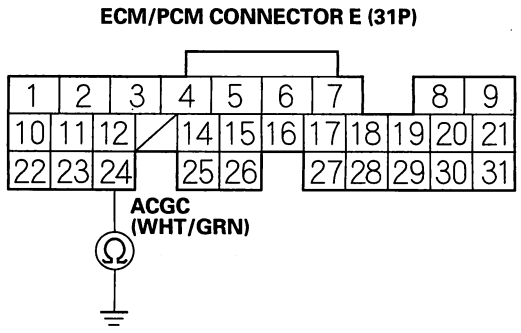

Wire side of female terminals

Is there continuity?

YES—Repair short in the wire between the alternator and the ECM/PCM. ■

NO—Update the ECM/PCM if it does not have the latest software (see page 11-6), or substitute a known-good ECM/PCM (see page 11-7), then recheck. If the symptom/indication goes away with a known-good ECM/PCM, replace the original ECM/PCM (see page 11-224). ■

9. Jump the SCS line with the HDS, then turn the ignition switch OFF.

   NOTE: This step must be done to protect the engine control module (ECM)/powertrain control module (PCM) for damage.

10. Disconnect ECM/PCM connector E (31P).

11. Check for continuity between ECM/PCM connector terminal E24 and alternator 4P connector terminal No. 2.

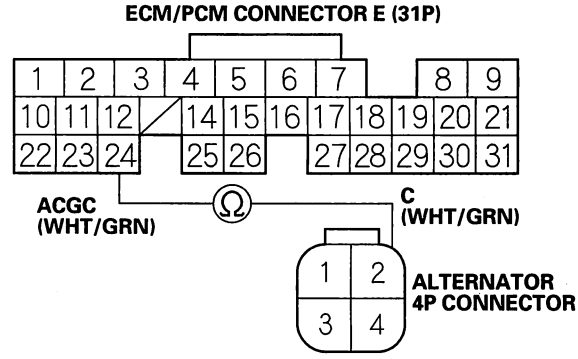

Wire side of female terminals

Is there continuity?

YES—Replace the alternator (see page 4-38) or repair the alternator (see page 4-41). ■

NO—Repair an open in the wire between the alternator and the ECM/PCM. ■

BACK

Protected by AR

Drive Belt Inspection

1. Inspect the belt for cracks and damage. If the belt is cracked or damaged, replace it.

2. Check that the auto-tensioner indicator (A) is within the standard range (B) as shown. If it is out of the standard range, replace the drive belt (see page 4-35).

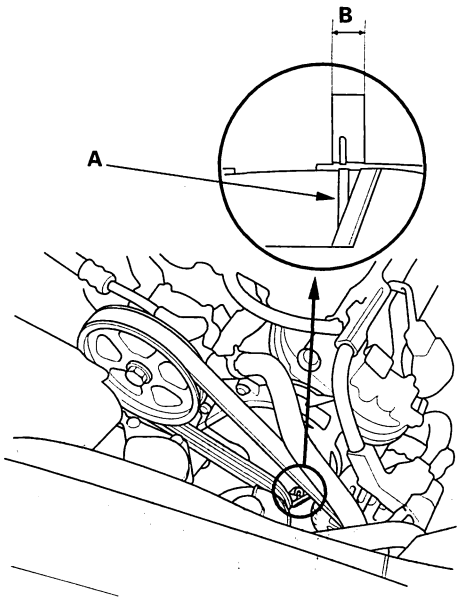

Drive Belt Replacement

Special Tools Required
Belt tension release tool Snap-on YA9317 or equivalent, commercially available

1. Move the auto-tensioner (A) with the belt tension release tool to relieve tension from the drive belt (B), then remove the drive belt.

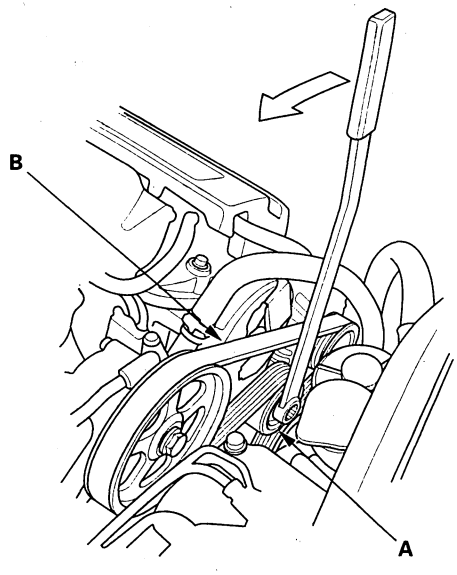

2. Install the new belt in the reverse order of removal.

Protected by AR

Drive Belt Auto-tensioner Inspection

Special Tools Required
Belt tension release tool Snap-on YA9317 or equivalent, commercially available

1. Turn the ignition switch ON(II), then make sure to turn the A/C switch OFF.

2. With the engine OFF, check the position of the auto-tensioner indicator's point (A). Start the engine, then check the position again with the engine idling. If the position of the indicator moves or fluctuates very much, replace the auto-tensioner (see page 4-37).

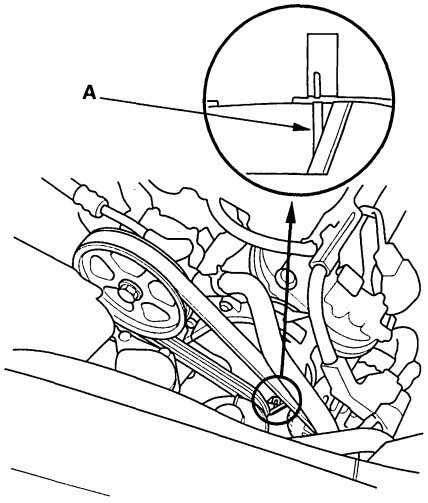

3. Check for abnormal noise from the tensioner pulley. If you hear abnormal noise, replace the auto-tensioner pulley (see page 4-38).

4. Remove the drive belt (see page 4-35).

5. Move the auto-tensioner within its limit with the belt tension release tool in the direction shown. Check that the tensioner moves smoothly and without any abnormal noise. If the tensioner does not move smoothly or you hear abnormal noises, replace the auto-tensioner (see page 4-37).

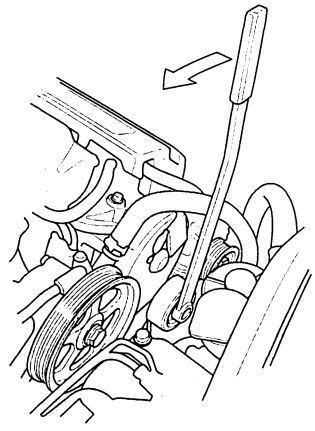

6. Remove the auto-tensioner (see page 4-37).

7. Clamp the auto-tensioner (A) by using a 10 mm bolt (B), 8 mm bolt (C), and a vise (D) as shown. Do not clamp the auto-tensioner itself.

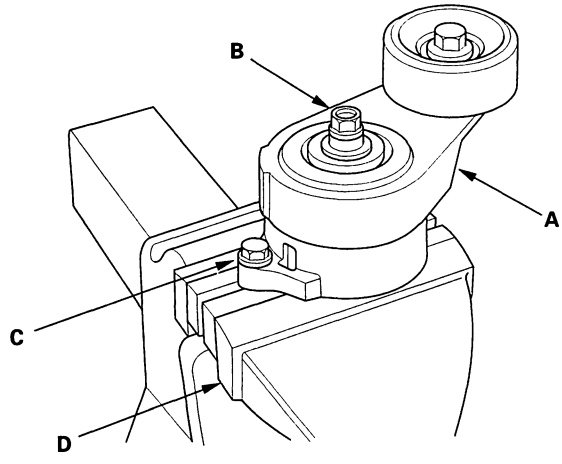

BACK

Protected by AR

8. Attach a torque wrench (A) to the pulley bolt. measure the torque when the tensioner is turned counterclockwise. If the torque is less than the specified value, replace the auto-tensioner.

Aut-tensioner Spring Torque:
50.5 N·m (5.15 kgf·m, 37.2 lbf·ft)

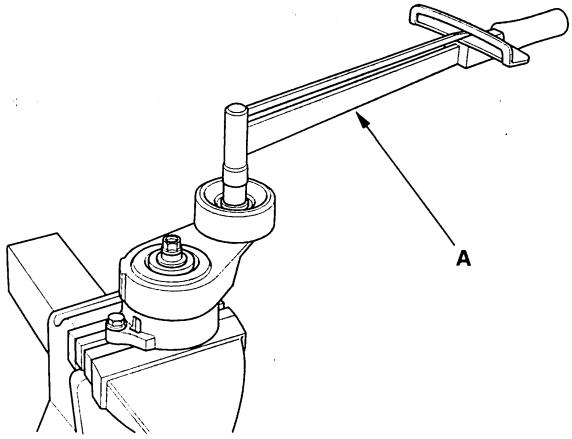

Drive Belt Auto-tensioner Replacement

1. Remove the drive belt (see page 4-35).
2. Remove the splash shield (see step 31 on page 5-5).
3. Remove the auto-tensioner.

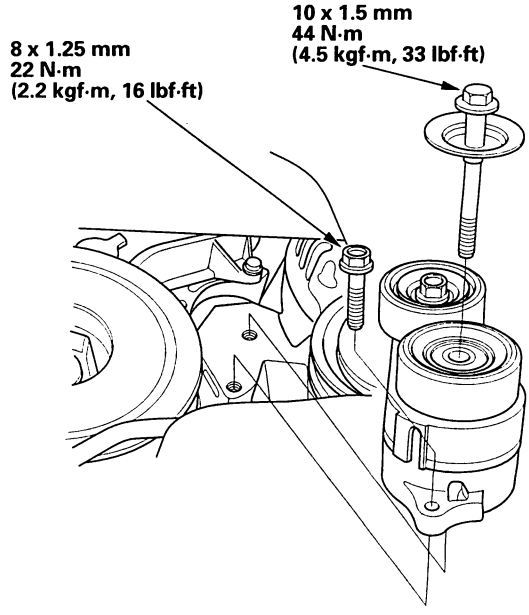

4. Install the auto-tensioner in the reverse order of removal.

Protected by AR

Tensioner Pulley Replacement

1. Remove the auto-tensioner (see page 4-37).
2. Remove the pulley bolt (A) (left-hand threads), and remove the tensioner pulley (B).

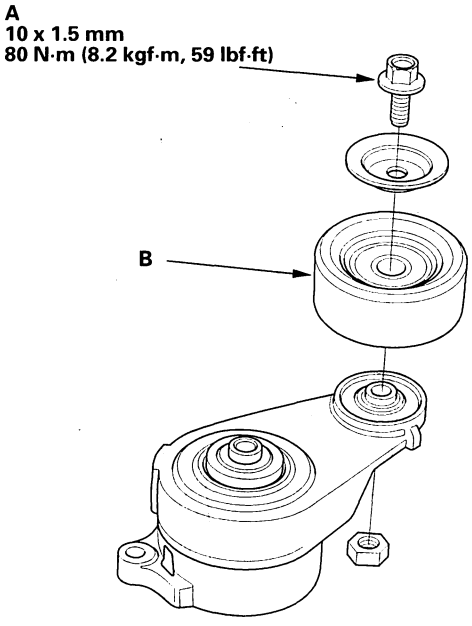

3. Install the tensioner pulley in the reverse order of removal.

Alternator Removal and Installation

Removal

1. Make sure you have the anti-theft codes for the radio, and the navigation system, then write down the customer's audio presets. Make sure the ignition switch is OFF.
2. Disconnect the negative cable from the battery first, then disconnect the positive cable.
3. Disconnect the fan motor connector (A) and compressor clutch connector (B), then remove the reserve tank (C).

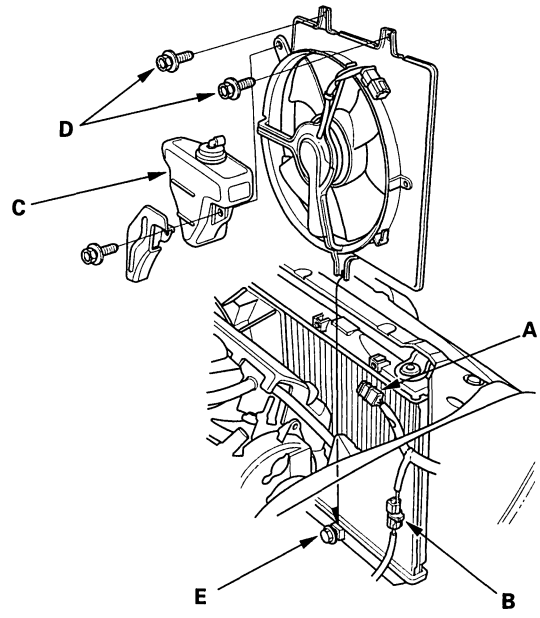

4. Remove the two bolts (D), and loosen a bolt (E), then remove the condenser fan shroud.

BACK

Protected by AR

5. Remove the drive belt (see page 4-35).

6. Disconnect the alternator connector (A) and BLK wire (B) from the alternator.

DELPHI (2003-2005 Models)

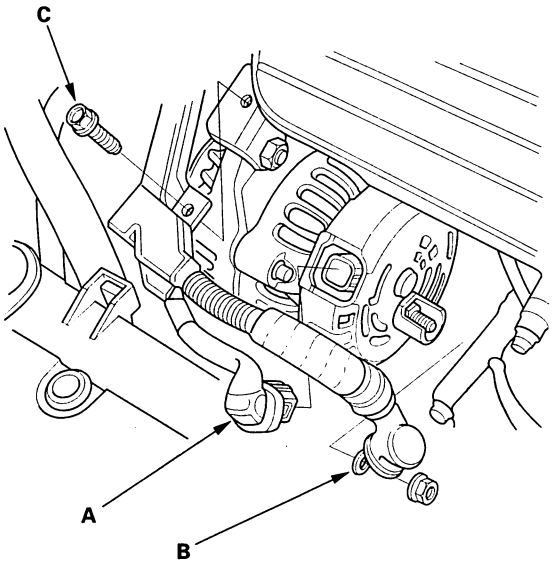

DENSO (2005-2006 Models)

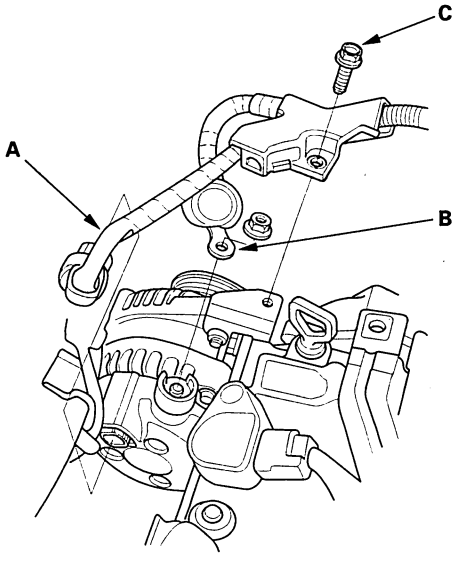

7. Remove the bolt (C) securing the harness holder.

8. Remove the mounting bolt (A) and alternator bracket mounting bolt (B), then remove the alternator.

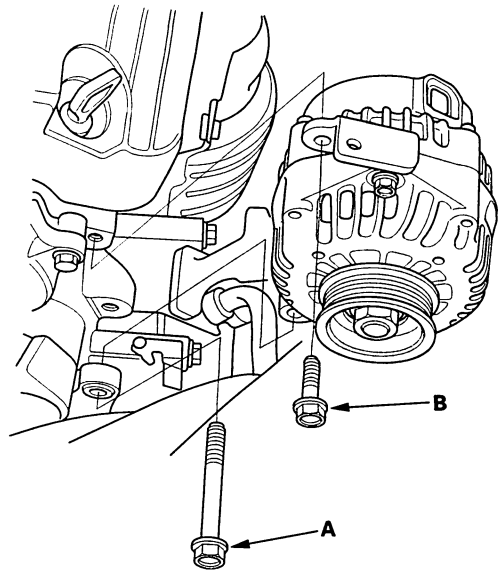

Installation

1. Install the alternator.

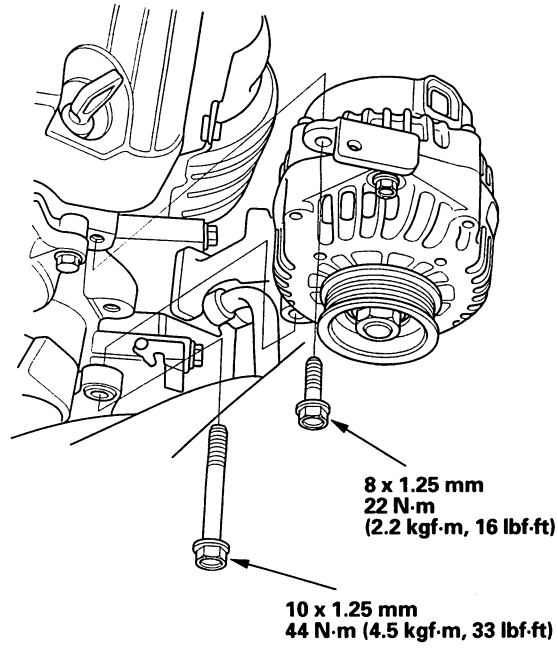

(cont'd)

Protected by AR

Alternator Removal and Installation (cont'd)

2. Connect the alternator connector (A) and the BLK wire (B) to the alternator.

DELPHI (2003-2005 Models)

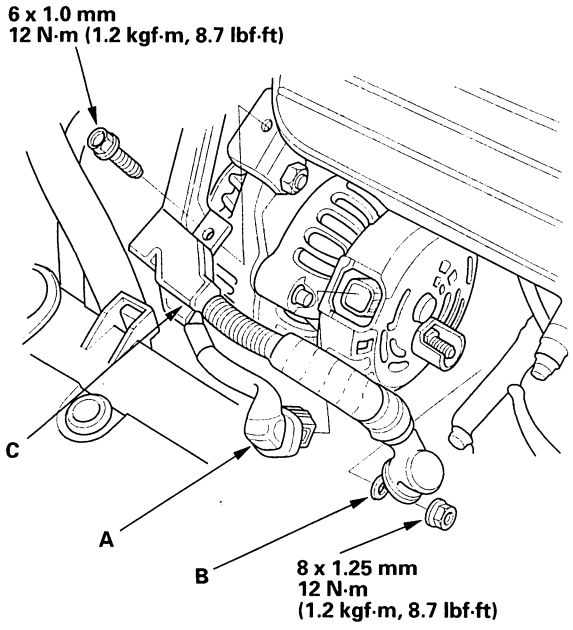

DENSO (2005-2006 Models)

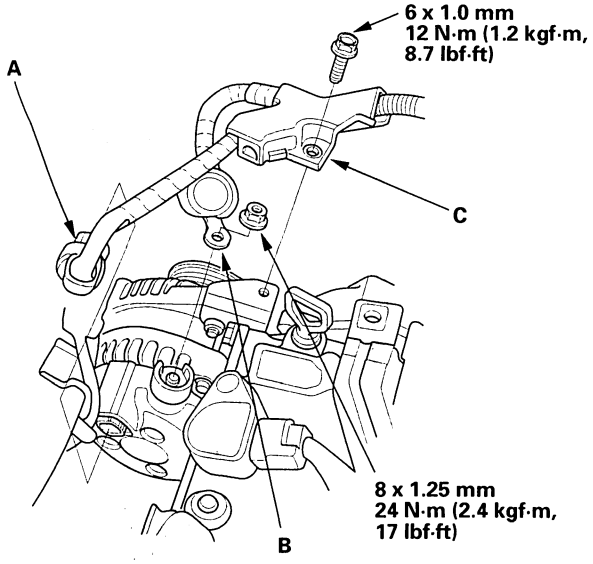

3. Install the harness holder (C).

4. Install the drive belt (see page 4-35).

5. Install the condenser fan shroud (A), and reserve tank(B), then connect the fan motor connector (C) and compressor clutch connector (D).

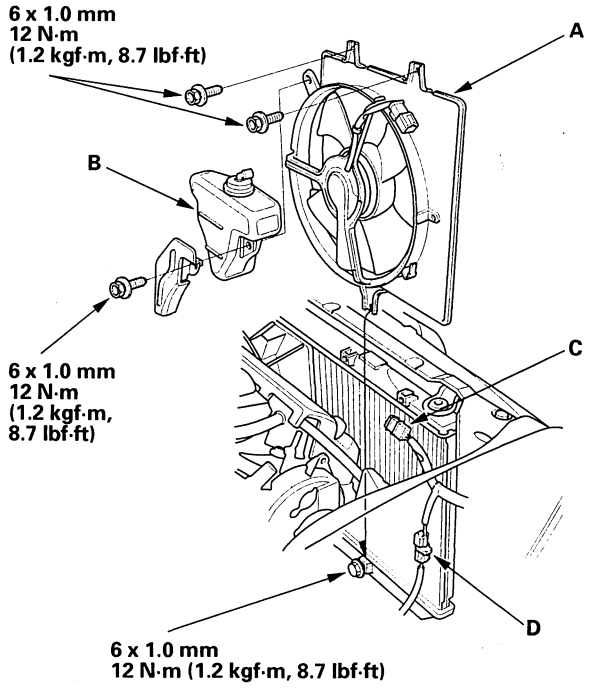

6. Connect the positive cable to the battery first, then connect the negative cable.

7. Enter the anti-theft codes for the radio and the navigation system, then enter the customer's audio presets.

8. Do the power window control unit reset procedure, refer to the 2003-2006 Accord Service Manual (see page 22-232).

9. Set the clock.

BACK

Protected by AR

Alternator Overhaul

Exploded View

DENSO

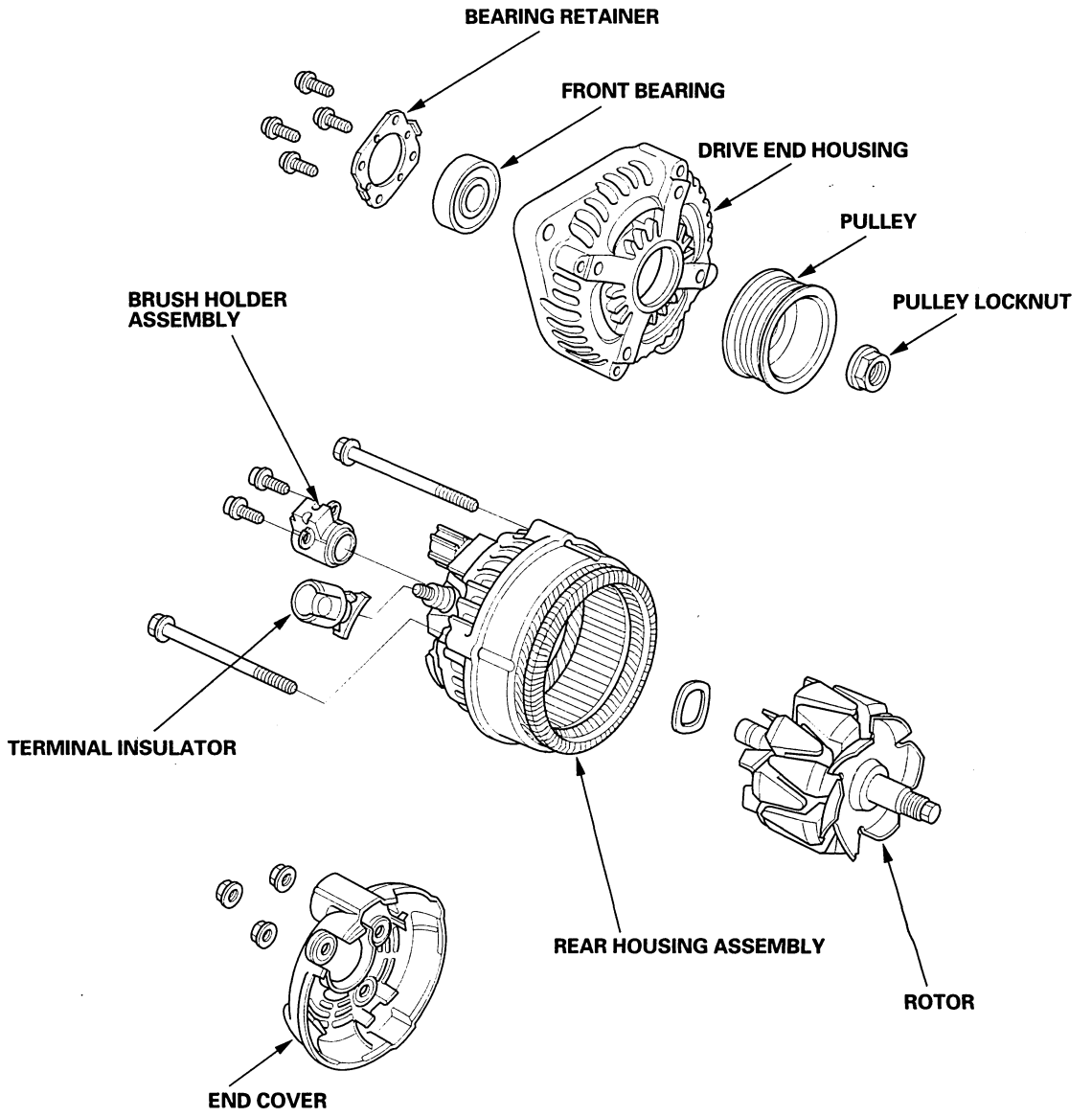

(cont'd)

Protected by AR

Alternator Overhaul (cont'd)

Special Tools Required
- Driver 07749-0010000
- Attachment, 42 x 47 mm 07746-0010300

NOTE: Refer to the Exploded View as needed during this procedure.

Alternator Disassembly

1. Test the alternator and regulator before you remove them (see page 4-31).

2. Remove the alternator (see page 4-38).

3. If the front bearing needs replacing, remove the pulley locknut with a 10 mm wrench (A) and a 22 mm wrench (B). If necessary, use an impact wrench.

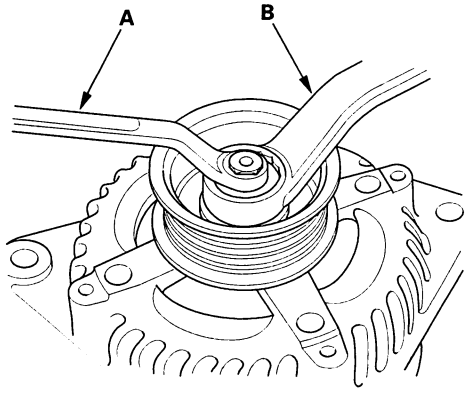

4. Remove the three flange nuts.

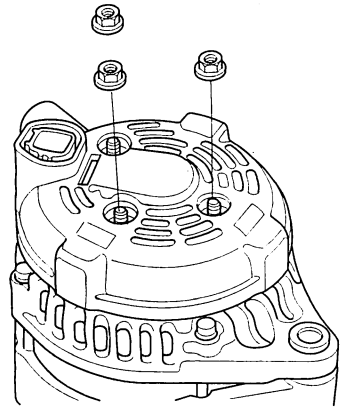

5. Remove the end cover (A) and the insulator (B).

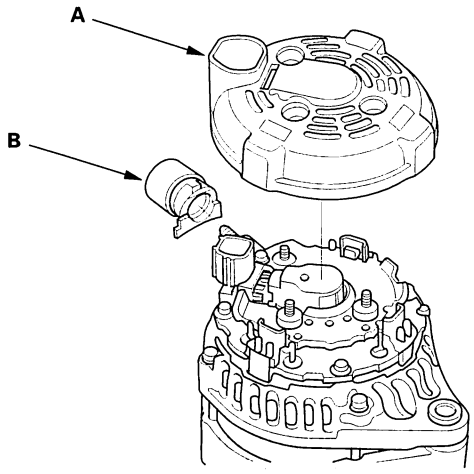

6. Remove the brush holder (A).

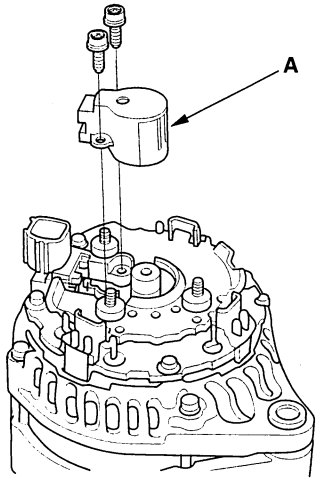

BACK

Protected by AR

7. Remove the four bolts, then remove the rear housing assembly (A) and washer (B).

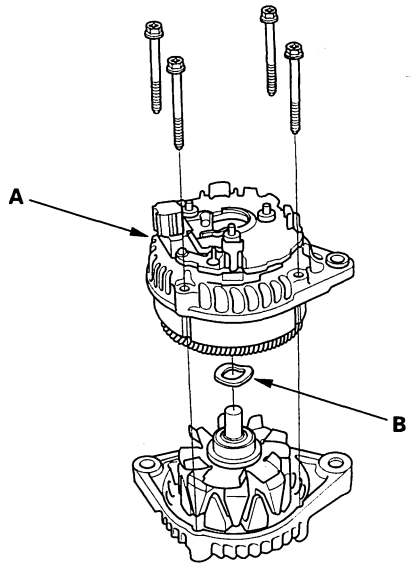

8. If you are not replacing the front bearing, go to step 13. Remove the rotor from the drive end housing.

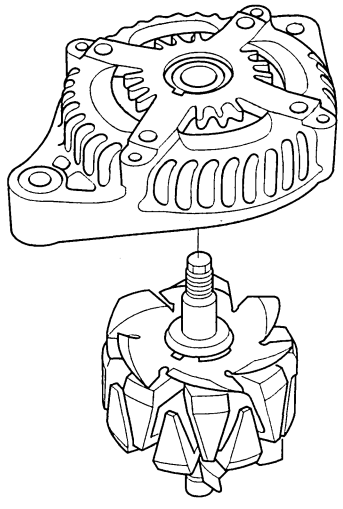

9. Inspect the rotor shaft for scoring, and inspect the bearing journal surface in the drive end housing for seizure marks.
   - If the rotor is damaged, replace the rotor assembly.
   - If the rotor is OK, go to step 10.

10. Remove the front bearing retainer plate.

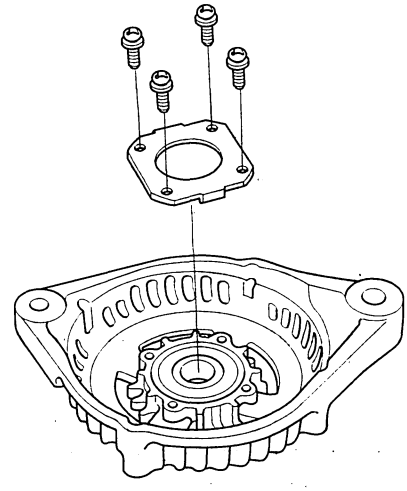

11. Drive out the front bearing with a brass drift and hammer.

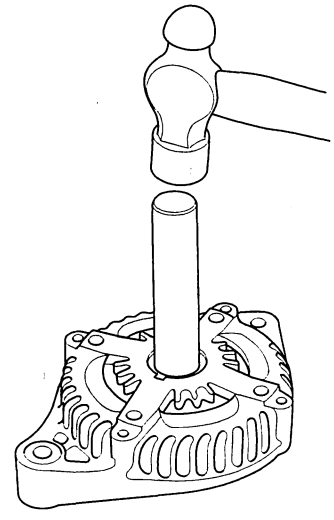

(cont'd)

Protected by AR

Alternator Overhaul (cont'd)

12. With a hammer, driver, and attachment, install a new front bearing in the drive end housing.

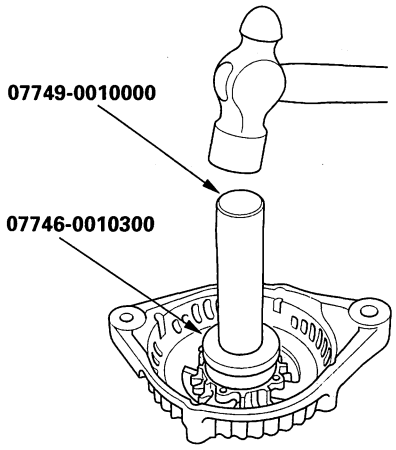

Alternator Brush Inspection

13. Measure the length of both brushes (A) with vernier calipers (B).

- If either brush is shorter than the service limit, replace the brush holder assembly.
- If the brush length is OK, go to step 14.

Alternator Brush Length
Standard (New): 10.5 mm (0.41 in.)
Service Limit: 1.5 mm (0.06 in.)

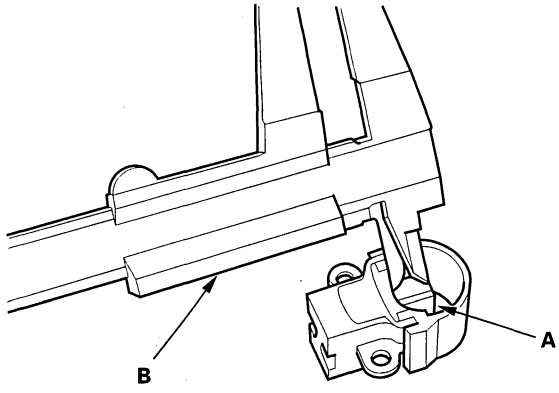

Rotor Slip Ring Test

14. Check for continuity between the slip rings (A).

- If there is continuity, go to step 15.
- If there is no continuity, replace the rotor assembly.

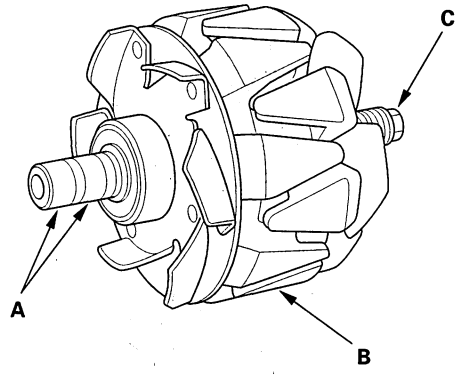

15. Check for continuity between each slip ring and the rotor (B) and the rotor shaft (C).

- If there is no continuity, replace the rear housing assembly, and go to step 16.
- If there is continuity, replace the rotor assembly.

16. Assemble the alternator in the reverse order of disassembly, and note these items:

- Be careful not to get any grease or oil on the slip rings.
- If you removed the pulley, tighten its locknut to 110 N·m (11.2 kgf·m, 81.0 lbf·ft) when you reinstall it.

BACK

Protected by AR

Component Location Index

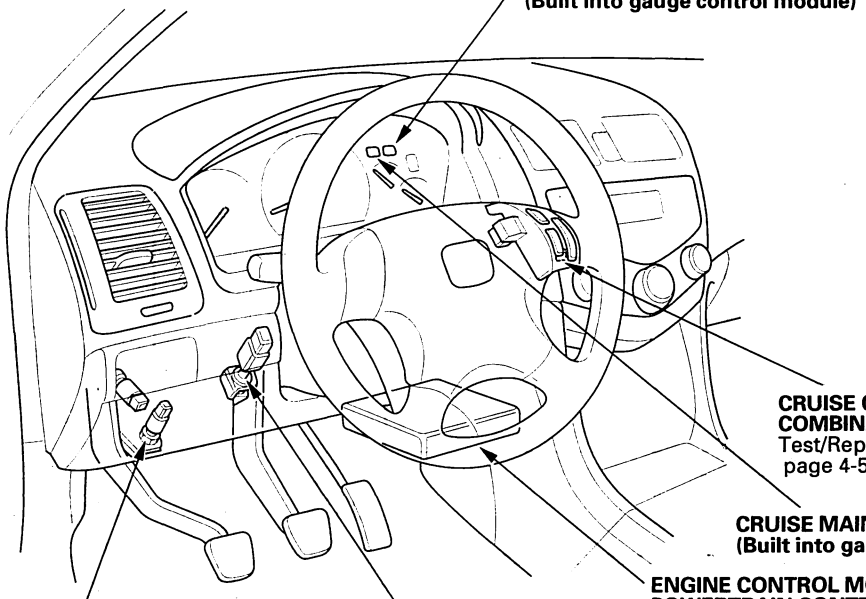

CRUISE CONTROL INDICATOR
(Built into gauge control module)

CRUISE CONTROL COMBINATION SWITCH
Test/Replacement,
page 4-51

CRUISE MAIN INDICATOR
(Built into gauge control module)

ENGINE CONTROL MODULE (ECM)/ POWERTRAIN CONTROL MODULE (PCM)
Cruise Control Input Test, page 4-49

CLUTCH PEDAL POSITION SWITCH (M/T)
Test, page 4-51
Clutch Pedal Adjustment, page 12-6

BRAKE PEDAL POSITION SWITCH
Test, page 22-195
in the 2003-2006 Accord Service Manual
Pedal Height Adjustment, page 19-6
in the 2003-2006 Accord Service Manual

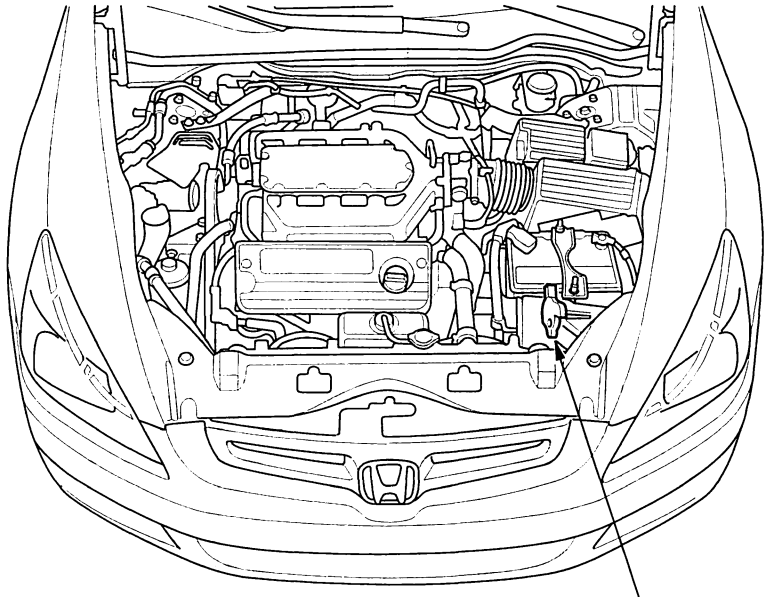

TRANSMISSION RANGE SWITCH (A/T)
Test, page 14-214
Replacement, page 14-218

Protected by AR

Cruise Control

Circuit Diagram

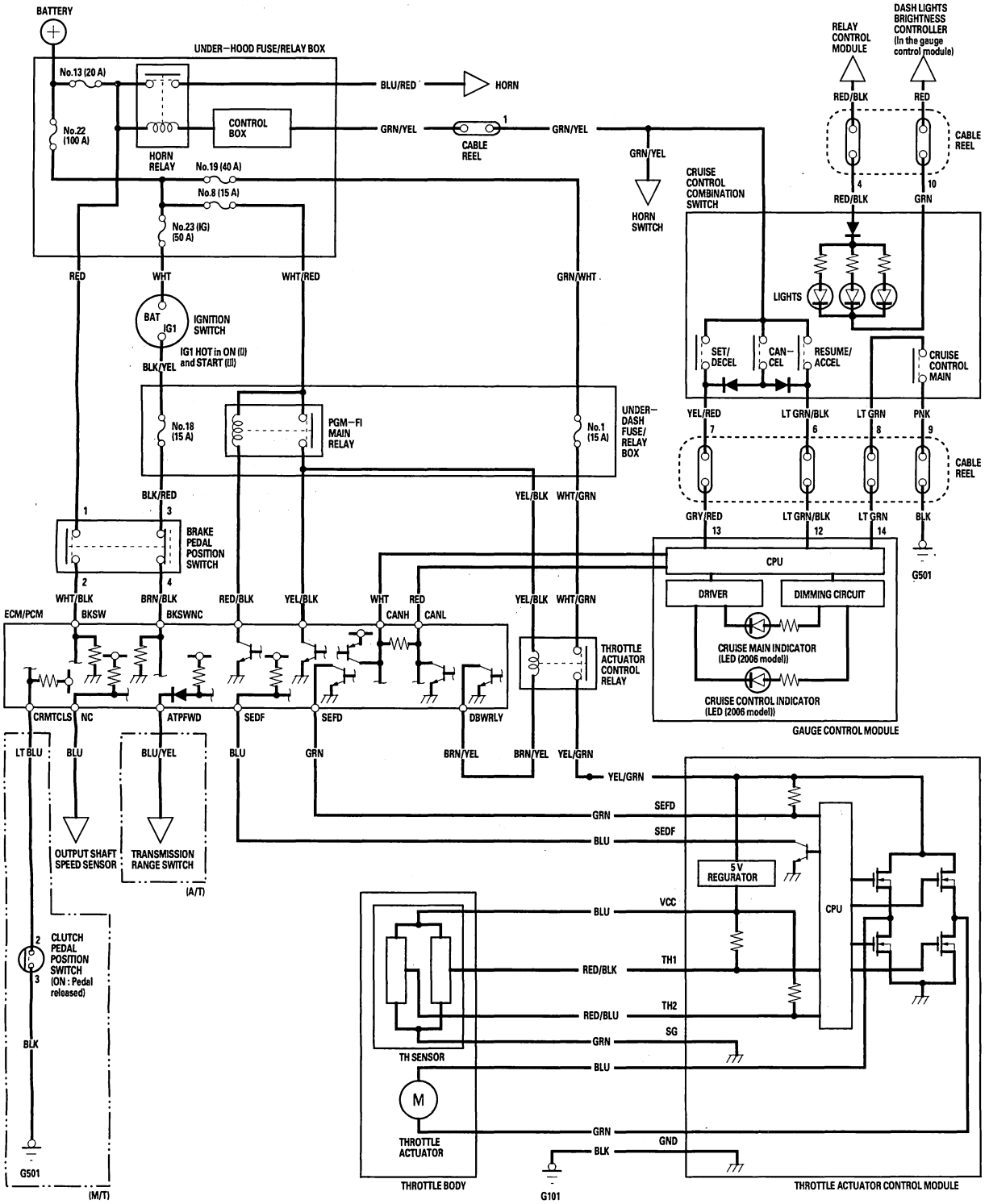

BACK

Protected by AR

Symptom Troubleshooting Index

Symptom	Diagnostic procedure	Also check for
Cruise control cannot be set	1. Check for PGM-FI and body DTCs. 2. Check the No. 13 (20 A) fuse in the under-hood fuse/relay box, and the No. 18 (15 A) fuse in the under-dash fuse/relay box. 3. Do the cruise control input test (see page 4-49). 4. Do the cruise control combination switch test (see page 4-51).	Poor ground G501
Cruise control can be set, but the CRUISE MAIN indicator does not come on	1. Check for PGM-FI and body DTCs. 2. Do the gauge control module self-diagnostic function procedure, refer to the 2003-2006 Accord Service Manual (see page 22-259). 3. Do the cruise control input test (see page 4-49). Test the cruise control master button signal input.	Faulty gauge control module
Cruise control can be set, but the CRUISE CONTROL indicator does not come on	1. Check for PGM-FI and body DTCs. 2. Do the gauge control module self-diagnostic function, procedure, refer to the 2003-2006 Accord Service 3. Manual (see page 22-259). Do the cruise control input test (see page 4-49). Test the cruise control indicator signal input.	Faulty gauge control module
Vehicle does not decelerate or accelerate accordingly when the set/decel or resume/accel switch is pressed	1. Check for PGM-FI and body DTCs. 2. Do the cruise control input test (see page 4-49). Test the cruise control Set/decel and Resume/accel switch signal inputs. 3. Do the cruise control combination switch test (see page 4-51).	Open circuit, loose or disconnected terminals: YEL/RED or GRY/RED wire
Set speed does not cancel when the brake pedal is pressed	1. Check for PGM-FI and body DTCs. 2. Check the No. 13 (20 A) fuse in the under-hood fuse/relay box, and No. 18 (15 A) fuse in the under-dash fuse/relay box. 3. Do the cruise control input test (see page 4-49). Test the brake pedal position switch signal input. 4. Do the brake pedal position switch test, refer to the 2003-2006 Accord Service Manual (see page 22-195).	• Short in the BRN/BLK wire • Faulty brake pedal position switch
Set speed does not cancel (engine rpm stays high) when the clutch pedal is pressed (M/T)	1. Check for PGM-FI and body DTCs. 2. Do the cruise control input test (see page 4-49). Test the clutch pedal position switch signal input. 3. Do the clutch pedal position switch test (see page 4-51).	• Short in the LT BLU wire • Faulty clutch pedal position switch
Set speed does not cancel when the cruise control main switch is turned off	1. Check for PGM-FI and body DTCs. 2. Do the cruise control input test (see page 4-49). Test the cruise control main switch signal input. 3. Do the cruise control combination switch test (see page 4-51).	Short to ground in the LT GRN wire
Set speed does not cancel when the cancel switch is pressed	1. Check for PGM-FI and body DTCs. 2. Check the No. 13 (20 A) fuse in the under-hood fuse/relay box. 3. Do the cruise control input test (see page 4-49). Test the cruise control Cancel switch signal input. 4. Do the cruise control combination switch test (see page 4-51).	Open circuit, loose or disconnected terminals: YEL/RED or GRY/RED wire

(cont'd)

Protected by AR

Symptom Troubleshooting Index (cont'd)

Symptom	Diagnostic procedure	Also check for
Set speed will not resume when the resume/accel switch is pressed (with the cruise control main switch turned on, and set speed temporarily canceled by pressing the brake pedal)	1. Check for PGM-FI and body DTCs. 2. Check the brake pedal position switch adjustment, refer to the 2003-2006 Accord Service Manual (see page 19-6). 3. Check the No. 13 (20 A) fuse in the under-hood fuse/relay box, and No. 18 (15 A) fuse in the under-dash fuse/relay box. 4. Do the cruise control input test (see page 4-46). Test the cruise control Resume/accel switch signal input. Test the brake pedal position switch signal input. 5. Do the cruise control combination switch test (see page 4-51).	• Open circuit, loose or disconnected terminals: LT GRN/BLK, GRY/RED wire • Faulty brake pedal position switch
Set speed will not resume when the resume/accel switch is pressed (with the cruise control main switch turned on, and set speed temporarily canceled by pressing the clutch pedal) (M/T)	1. Check for PGM-FI and body DTCs. 2. Check the clutch pedal position switch adjustment (see page 12-4). 3. Do the cruise control input test (see page 4-46). Test the cruise control Resume/accel switch signal input. Test the clutch pedal position switch signal input. 4. Do the cruise control combination switch test (see page 4-51).	• Open circuit, loose or disconnected terminals: LT GRN/BLK wire • Faulty clutch pedal position switch

BACK

Protected by AR

Cruise Control Input Test

1. Connect the Honda Diagnostic System (HDS) to the data link connector (DLC) (see step 2 on page 11-3).
2. Go to B-CAN System Diagnosis Test Mode A, and check for DTCs.
3. Go to PGM-FI, and check for DTCs.
4. Turn the ignition switch ON (II).
5. Do the following tests while monitoring parameters in the PGM-FI DATA LIST with the HDS.

   NOTE: Intermittent failures are often caused by loose circuit connections. While monitoring cruise control inputs, flex their circuits, and note if any of the test result change.

Signal to be tested	Test condition	Parameter: Desired result	Possible cause if result is not obtained
Brake switch signal	Brake pedal pressed, then released	CRUISE BRAKE SW should indicate OFF when the brake pedal is pressed and ON when the brake pedal is released.	• Faulty brake pedal position switch • Blown No. 18 (15A) fuse in the under-dash fuse/relay box • An open in the wire between the ECM/PCM and the brake pedal position switch • A wire shorted to ground between the ECM/PCM and the brake pedal position switch
Clutch pedal position switch signal (M/T)	Clutch pedal pressed, then released	SHIFT/CLUTCH SW should indicate OFF when the clutch pedal is pressed and ON when the clutch pedal is released.	• Faulty clutch pedal position switch • An open in the wire between the ECM and the clutch pedal position switch • A wire shorted to ground between the ECM and the clutch pedal position switch • Poor ground G501
Transmission range switch signal (A/T)	Shift in lever D, D3, or 2 position	SHIFT/CLUTCH SW should indicate OFF in P, R, and N position and ON in D, D3, and 2 position.	• Faulty transmission range switch • An open in the wire between the PCM and the transmission range switch • A wire shorted to ground between the PCM and the transmission range switch • Poor ground G101
Cruise control main switch signal	Cruise control main switch ON and OFF	CRUISE CONTROL MAIN SW should indicate ON when the cruise control main switch is turned ON and OFF when the cruise control main switch is turned OFF.	• Faulty cruise control main switch • An open in the wire between the gauge control module and the cruise control main switch • A wire shorted to ground between the gauge assembly and the cruise control main switch • An open in the wire between the cruise control main switch and ground
Set switch signal	Set/decel switch pressed and released	CRUISE CONTROL SET SW should indicate ON when the Set/decel switch is pressed and OFF when the Set/decel switch is released.	• Faulty cruise control combination switch • An open in the wire between the gauge control module and the cruise control combination switch • A wire shorted to ground between the gauge control module and the cruise control combination switch

(cont'd)

Protected by AR

Cruise Control Input Test (cont'd)

Signal to be tested	Test condition	Parameter: Desired result	Possible cause if result is not obtained
Resume switch signal	Resume/accel switch pressed and released	CRUISE CONTROL RESUME SW should indicate ON when the resume/accel switch is pressed and OFF when the resume/accel switch is released.	• Faulty cruise control combination switch • An open in the wire between the gauge control module and the cruise control combination switch • A wire shorted to ground between the gauge control module and the cruise control combination switch
Cancel switch signal	Cancel switch pressed and released	CRUISE CONTROL CANCEL SW should indicate ON when the cancel switch is pressed and OFF when the cancel switch is released.	Faulty cruise control combination switch
Cruise control indicator signal	Start the engine, turn the cruise control main switch on, and drive the vehicle to speeds over 25 mph (40 km/h). Set and cancel the cruise control	CRUISE INDICATOR should indicate ON when the cruise control is set and OFF when the cruise control is canceled.	• Faulty gauge control module • A burnt cruise control indicator bulb (2003-2005 models).

BACK

Protected by AR

Cruise Control Combination Switch Test/Replacement

SRS components are located in this area. Review the SRS component locations, refer to the 2003-2006 Accord Service Manual (see page 23-17), and the precautions and procedures, refer to the 2003-2006 Accord Service Manual (see page 23-19), before performing repairs or service.

1. Remove the driver's airbag, refer to the 2003-2006 Accord Service Manual (see page 23-197).
2. Remove the two screws, then disconnect the connector, and remove the switch.

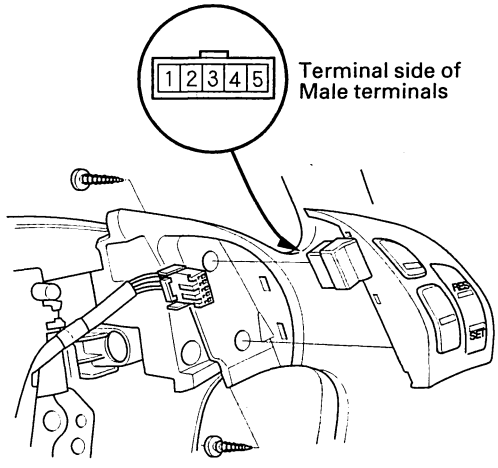

3. Check for continuity between the terminals in each switch position according to the table.
   - If there is continuity, and it matches the table, but switch failure occurred on the cruise control unit input test, check and repair the wire harness on the switch circuit.
   - If there is no continuity in one or both positions, replace the switch.

Terminal / Position	1	2	3		4	5
Cruise control main switch (ON)	○	○				
Cruise control main switch (OFF)						
Set/decel (PRESSED)			○			○
Resume/accel (PRESSED)			○		○	
Cancel (PRESSED)			○	▶		○
				▶	○	

Clutch Pedal Position Switch Test

1. Disconnect the 3P connector from the clutch pedal position switch (A).

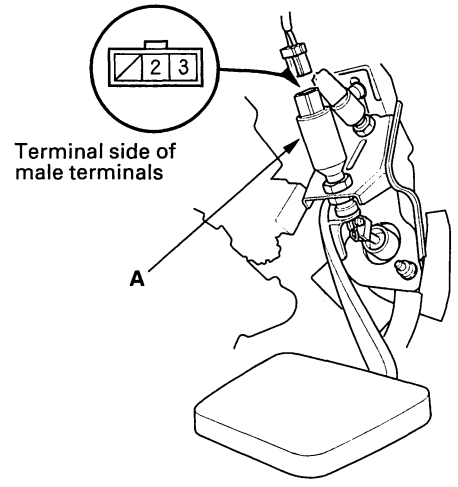

2. Remove the clutch pedal position switch.
3. Check for continuity between the terminals according to the table.
   - If the continuity is not as specified, replace the clutch pedal position switch.
   - If OK, install the clutch pedal position switch, and adjust the pedal height (see page 12-6).

Terminal / Clutch Pedal Position Switch	1	2	3
PRESSED			
RELEASED		○	○

Protected by AR

Engine Mount Control System

Component Location Index

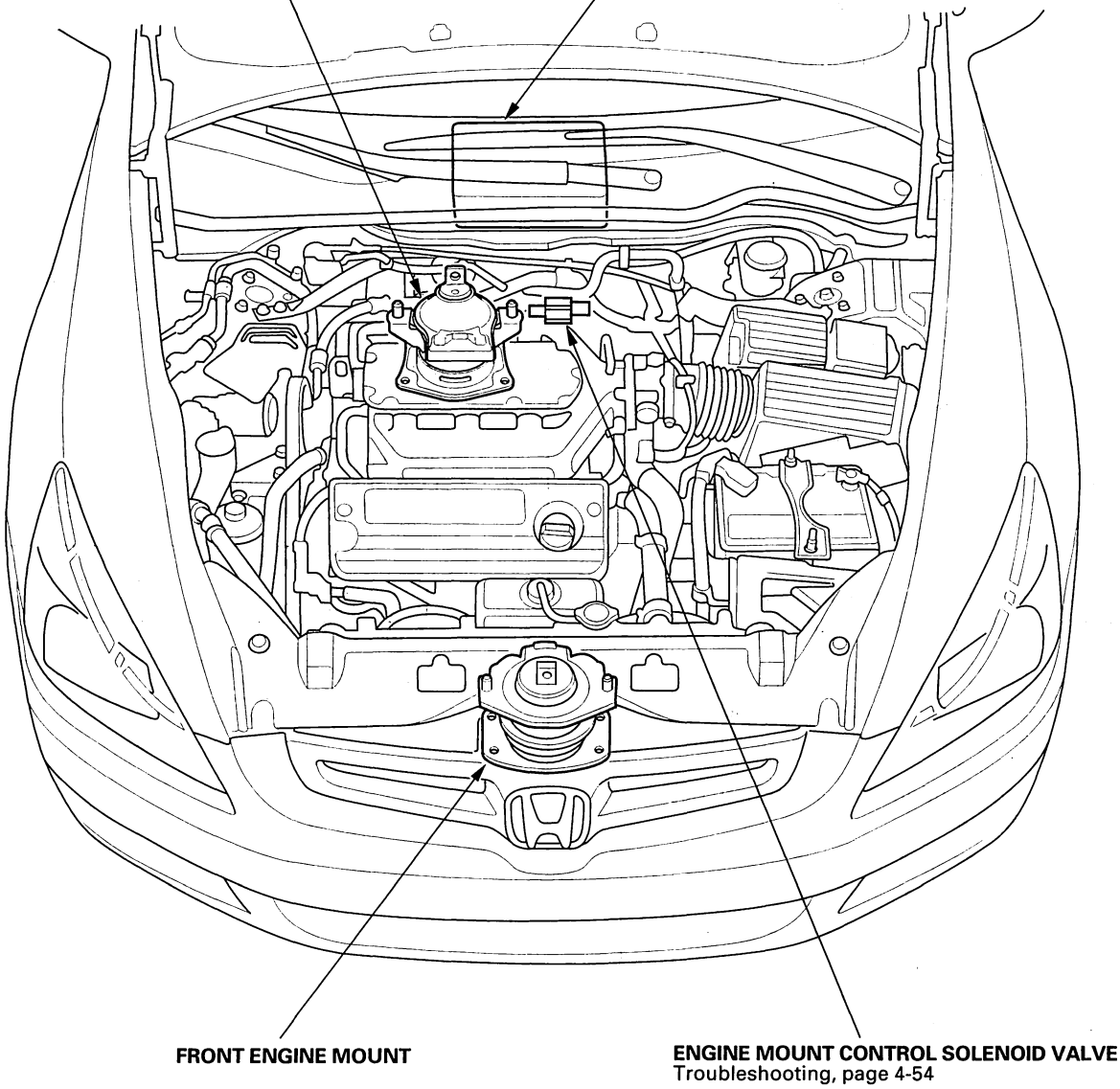

BACK

Protected by AR

Circuit Diagram

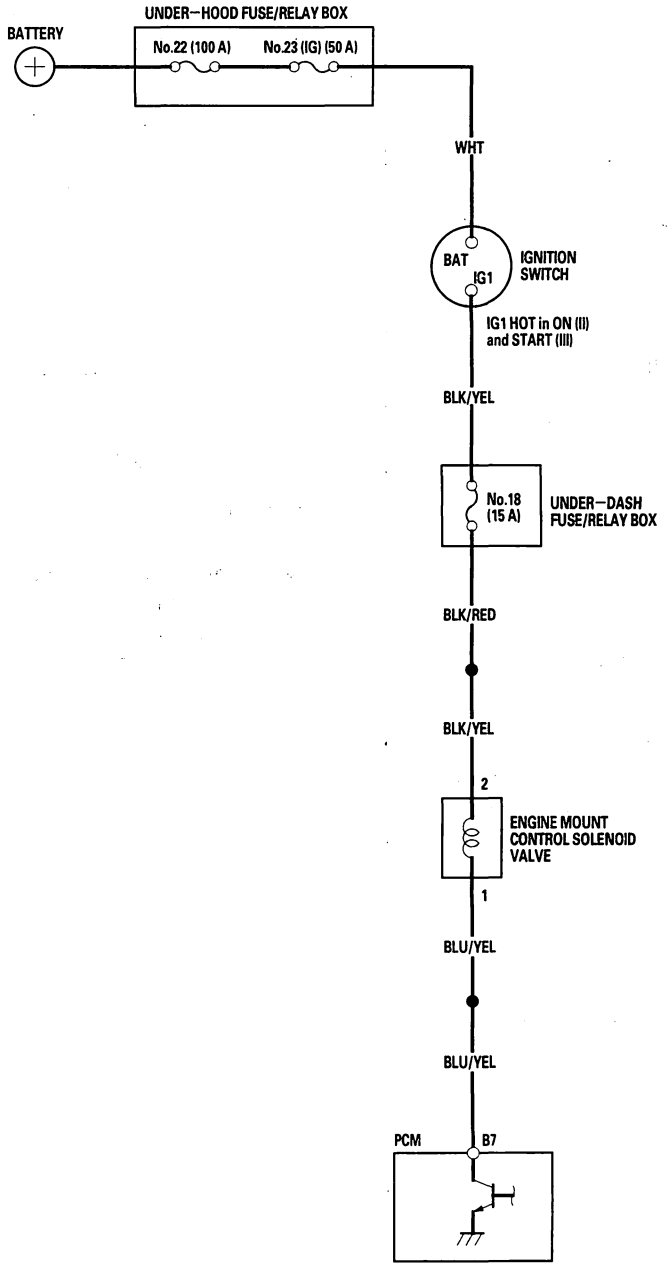

Protected by AR

Engine Mount Control System

Troubleshooting

Special Tools Required
Vacuum pump/gauge, 0—30 in.Hg
Snap-on YA4000A or equivalent, commercially available

NOTE: Check the vacuum hoses and lines for damage and proper connections before troubleshooting.

Follow this procedure if the engine vibrates excessively when idling.

1. Start the engine, and let it idle (see page 11-301).
2. Raise the engine speed from idling to 2,000 rpm.
3. Check the MOUNT CTRL SOL in the PGM-FI DATA LIST with the Honda Diagnostic System (HDS).

   Is ON indicated at idling and OFF indicated at 2,000 rpm?

   YES—Go to step 4.

   NO—Update the engine control module (ECM) / powertrain control module (PCM) if it does not have the latest software (see page 11-6), or substitute a known-good ECM/PCM (see page 11-7), then recheck. If the engine mount control system works properly, and the ECM/PCM was updated, the troubleshooting is complete. If the ECM/PCM was substituted, replace the original ECM/PCM (see page 11-224). ■
4. Turn the igniton switch OFF.
5. Disconnect the engine mount control solenoid valve 2P connector from the engine mount control solenoid valve.
6. Turn the ignition switch ON (II).
7. Measure the voltage between engine mount control solenoid valve 2P connector terminal No. 2 and body ground.

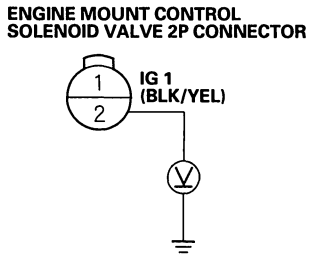

Is there battery voltage?

YES—Go to step 8.

NO—Repair an open in the wire between the engine mount control solenoid valve 2P connecter terminal No.2 and No. 18 (15 A) fuse in the under-dash fuse/relay box. ■

BACK

Protected by AR

8. Measure the voltage between engine mount control solenoid valve 2P connector terminals No. 1 and No. 2, with the engine at idle.

ENGINE MOUNT CONTROL SOLENOID VALVE 2P CONNECTOR

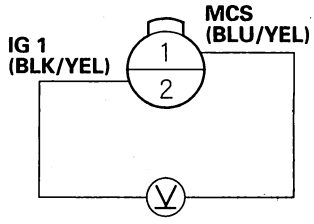

Wire side of female terminals

Is there battery voltage?

YES—Go to step 9.

NO—Repair an open in the wire between ECM/PCM (B7) and the engine mount control solenoid valve 2P connector. If the wire is OK, update the ECM/PCM if it does not have the latest software (see page 11-6), or substitute a known-good ECM/PCM (see page 11-7), and recheck. If the engine mount control system works properly, and the ECM/PCM was updated, the troubleshooting is complete. If the ECM/PCM was substituted, replace the original ECM/PCM (see page 11-224).■

9. Raise the engine speed above 1,000 rpm.

10. Measure the voltage between engine mount control solenoid valve 2P connector terminals No. 1 and No. 2.

ENGINE MOUNT CONTROL SOLENOID VALVE 2P CONNECTOR

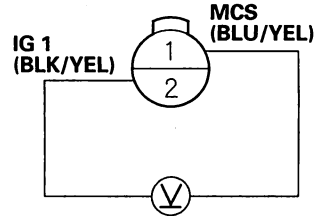

Wire side of female terminals

Is there battery voltage?

YES—Repair a short to body ground in the wire between ECM/PCM (B7) and the engine mount control solenoid valve. If the wire is OK, update the ECM/PCM if it does not have the latest software (see page 11-6), or substitute a known-good ECM/PCM (see page 11-7), and recheck. If the engine mount control system works properly, and the ECM/PCM was updated, the troubleshooting is complete. If the ECM/PCM was substituted, replace the original ECM/PCM (see page 11-224).■

NO—Go to step 11.

(cont'd)

Protected by AR

Engine Mount Control System

Troubleshooting (cont'd)

11. Disconnect the vacuum hose (A) that is closest to the solenoid connector from the engine mount control solenoid valve (B), and connect a commercially available vacuum pump/gauge, 0—30 in.Hg, to the hose. Apply about 20 in.Hg of vacuum, and wait for 20 seconds.

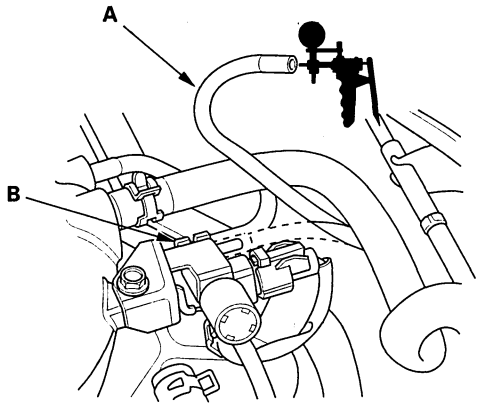

Does the engine mounts hold vacuum?

YES—Go to step 12.

NO—Either the vacuum hose or one of the engine mounts has a vacuum leak. Repair as needed. ■

12. Release the vacuum, then apply vacuum again.

Is there a noticeable change in idle smoothness with and without vacuum applied?

YES—Go to step 13.

NO—Replace the front engine mount and/or rear engine mount. ■

13. Connect a commercially available vacuum pump/gauge, 0—30 in.Hg, to the engine mount control solenoid valve port (A) that is closest to the solenoid connector.

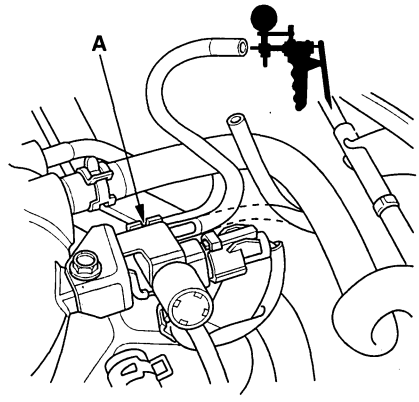

Is there manifold vacuum at idle, and a decrease in manifold vacuum when you raise the engine speed above 1,000 rpm?

YES—The system is OK. ■

NO—Replace the engine mount control solenoid valve. ■

BACK

Protected by AR

Engine Mechanical

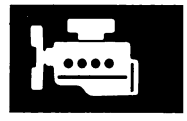

Engine Assembly

Engine Removal 5-2
Engine Installation 5-11
Engine Mount Replacement 5-22

Cylinder Head 6-1

Engine Block 7-1

Engine Lubrication 8-1

Intake Manifold and Exhaust System 9-1

NOTE: Refer to the 2003-2006 Accord Service Manual, P/N 61SDA08 for items not shown in this section.

Outline of Model Change

The J30A5 engine has been added.

Protected by AR

Engine Assembly

Engine Removal

Special Tools Required
- Front subframe adapter VSB02C000016
- Engine support hanger, A and Reds AAR-T-12566 (available through Honda Tool and Equipment program, 888-424-6857)
- Engine hanger balance bar VSB02000019

NOTE:
- Use fender covers to avoid damaging painted surfaces.
- To avoid damage, unplug the wiring connectors carefully while holding the connector portion.
- Mark all wiring and hoses to avoid misconnection. Also, be sure that they do not contact other wiring, hoses, or interfere with other parts.

1. Make sure you have the anti-theft codes for the radio and navigation system, then write down the customer's audio presets. Make sure the ignition switch is OFF.

2. Remove the windshield wiper arms, then remove the cowl cover, refer to the 2003-2006 Accord Service Manual (see page 20-199).

3. Remove the bulkhead cover:
   - 2-door, refer to the 2003-2006 Accord Service Manual (see page 20-197)
   - 4-door, refer to the 2003-2006 Accord Service Manual (see page 20-197)

4. Remove the support struts from the engine hood. Move the engine hood to a vertical position, then reinstall the right side support strut as shown.

   NOTE: Do not attempt to close the hood with the support strut in the vertical position, as it will damage the support strut and hood.

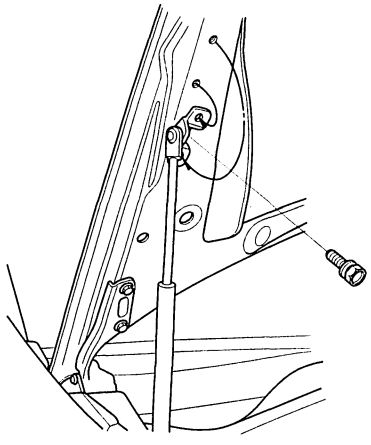

5. Relieve the fuel pressure (see page 11-315).

6. Drain the power steering system fluid, then plug the fluid reservoir and return hose (see page 17-10).

7. Disconnect the negative cable from the battery first, then disconnect the positive cable.

8. Remove the battery.

9. Remove the air cleaner housing (see page 11-344).

10. Remove the harness clamp (A).

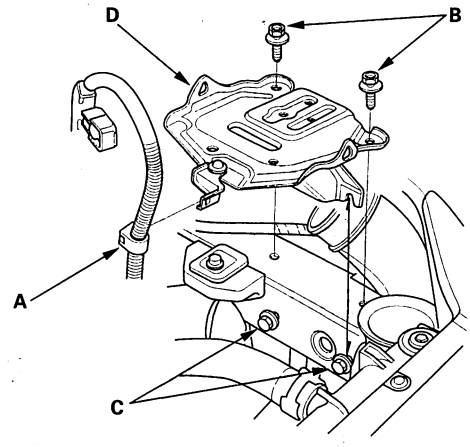

11. Remove the two bolts (B), and loosen the two bolts (C) securing the battery base, then remove the battery base (D).

12. Remove the battery cables (A) from the under-hood fuse/relay box, then disconnect the harness connector (B).

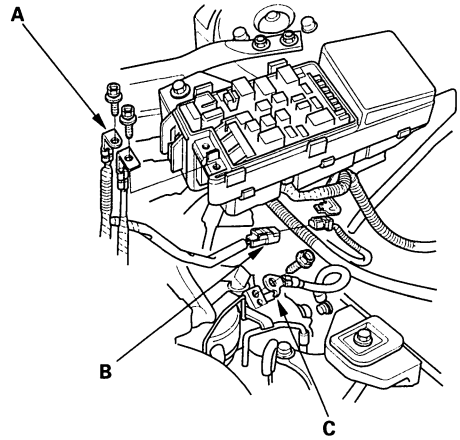

13. Remove the ground cable (C).

BACK

Protected by AR

14. Remove the brake booster vacuum hose (A), evaporative emission (EVAP) canister hose (B) and vacuum hose (C).

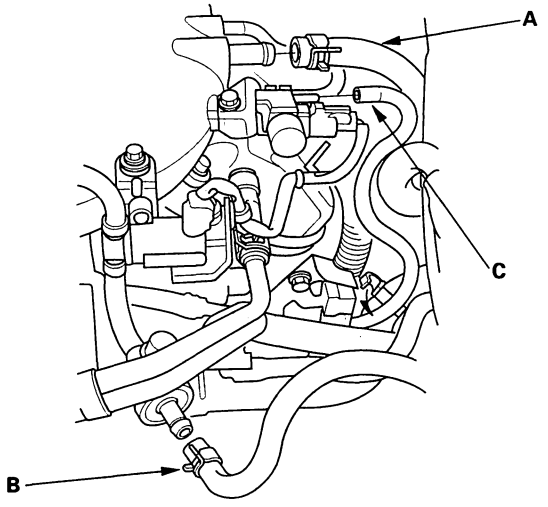

15. Remove the harness clamp (A), and disconnect the engine wire harness connectors (B) on the left side of the engine compartment.

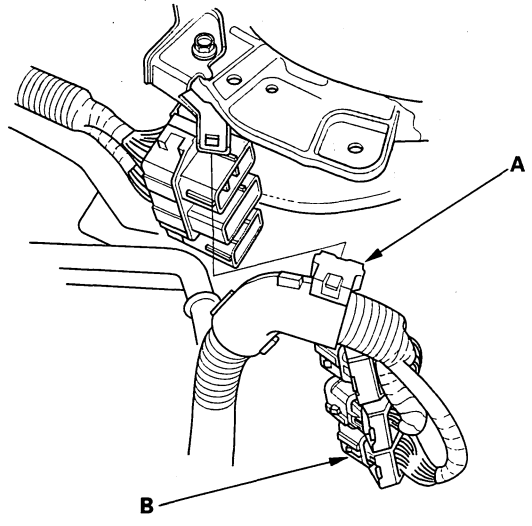

16. Remove the drive belt (see page 4-35).

17. Remove the power steering (P/S) pump outlet line (A) from the P/S pump, then plug the outlet line and the P/S pump.

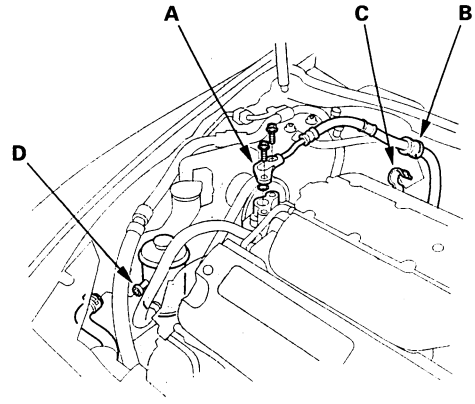

18. Remove the P/S hose (B) from the clamp (C).

19. Remove the power steering system fluid reservoir (D) from the clamp.

20. Remove the steering joint cover (A).

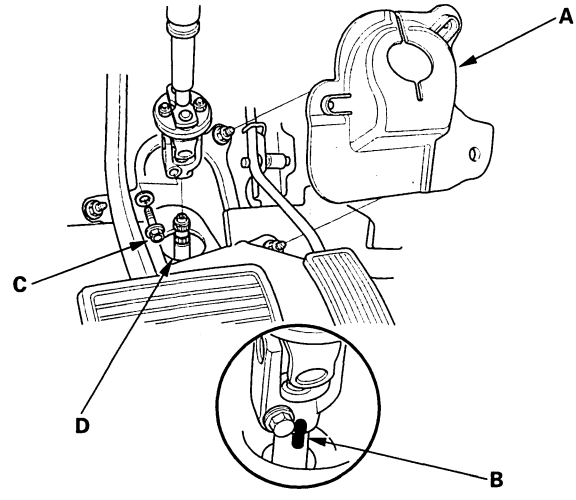

21. Looking the steering wheel. Make a reference mark (B) across the steering joint and steering gearbox pinion shaft. Remove the steering joint bolt (C), and disconnect the steering joint from the steering gearbox pinion shaft (D). To prevent damage to the cable reel, do not turn the steering wheel once the steering joint has been removed.

(cont'd)

Protected by AR

Engine Removal (cont'd)

22. Disconnect the fan motor connector (A) and compressor clutch connector (B), then remove the reserve tank (C).

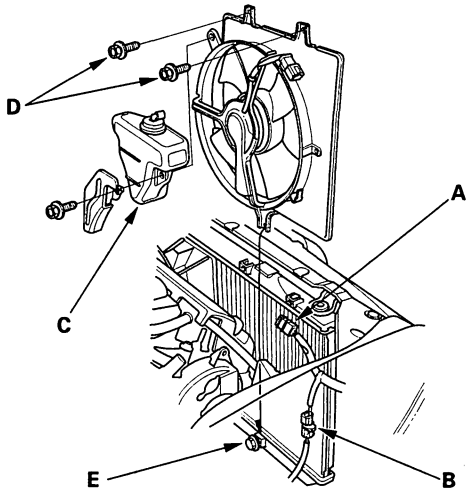

23. Remove the two bolts (D), and loosen the bolt (E), then remove the condenser fan shroud.

24. Remove the four bolts securing the A/C compressor.

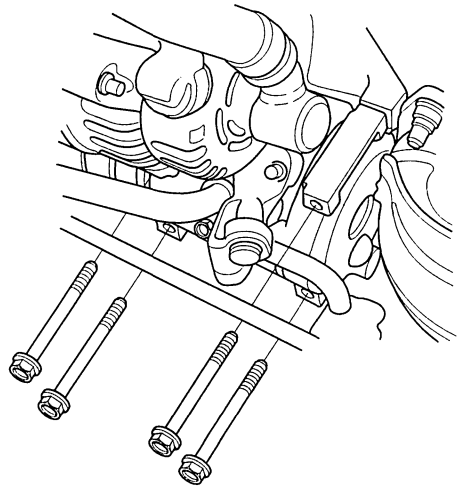

25. M/T model: Remove the ground cable (A) from the shift cable holder, then remove the three bolts securing the shift cable holder (B).

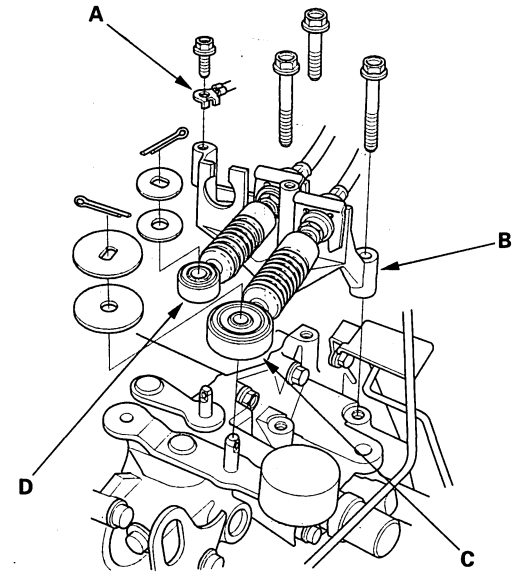

26. M/T model: Remove the shift cable (C) and select cable (D). Do not bend the cables excessively.

27. M/T model: Remove the clutch slave cylinder (A), and clutch line bracket mounting bolt (B). Do not operate the clutch pedal once the slave cylinder has been removed.

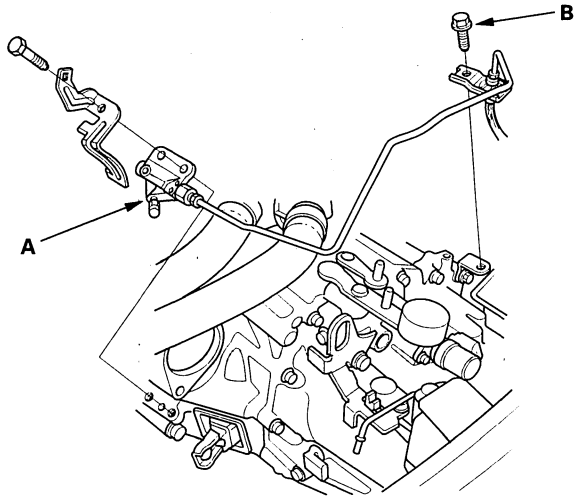

BACK

Protected by AR

28. Remove the radiator cap.

29. Raise the vehicle on the hoist to full height.

30. Remove the front wheels.

31. Remove the splash shield.

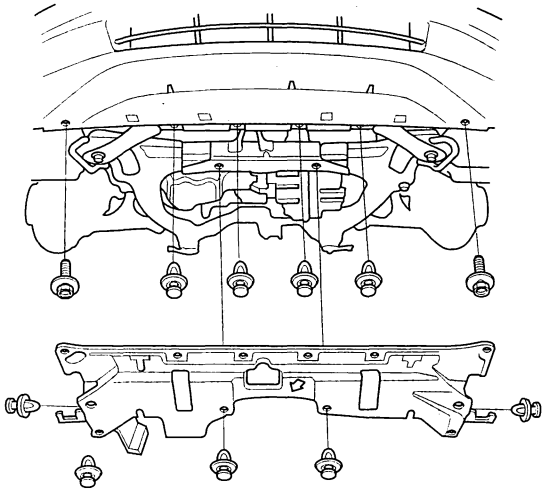

32. Loosen the drain plug in the radiator, and drain the engine coolant (see page 10-6).

33. Drain the transmission fluid:

    - Manual transmission (see page 13-10)
    - Automatic transmission (see page 14-186)

34. Drain the engine oil (see page 8-6).

35. Disconnect the stabilizer links, refer to the 2003-2006 Accord Service Manual (see page 18-22).

36. Remove the damper fork, refer to the 2003-2006 Accord Service Manual (see page 18-25).

37. Separate the tie-rod end ball joints from the knuckles (see step 8 on page 17-21).

38. Separate the knuckles from the lower arms, refer to the 2003-2006 Accord Service Manual (see page 18-20).

39. Remove the driveshafts (see step 10 on page 16-5). Coat all precision-finished surfaces with clean engine oil. Tie plastic bags over the driveshaft ends.

40. Remove exhaust pipe A.

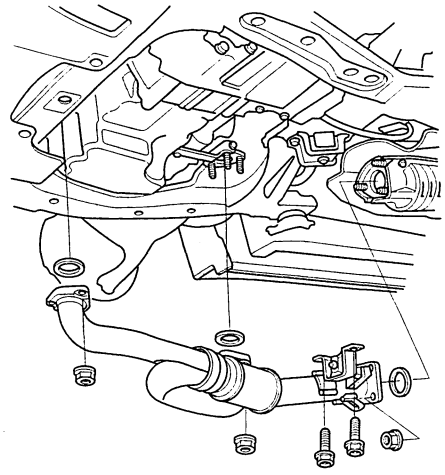

41. A/T model: Remove the bolts (A) securing the shift cable holder (B), then remove the shift cable cover (C). To prevent damage to the control lever joint, be sure to remove the bolts securing the shift cable holder before removing the bolts securing the shift cable cover.

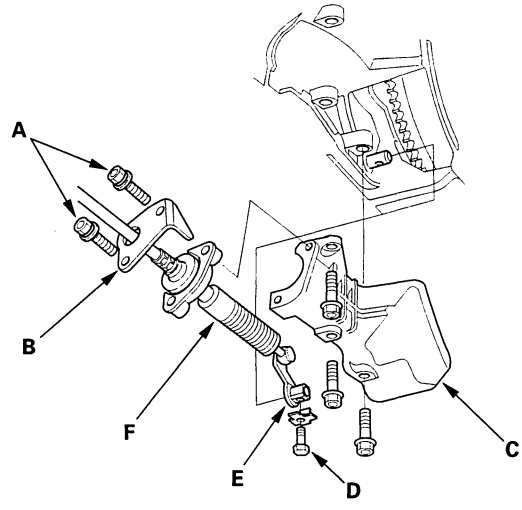

42. A/T model: Remove the lock bolt (D) securing the control lever (E), then remove the shift cable (F) with the control lever. Do not bend the shift cable excessively.

(cont'd)

Protected by AR

Engine Removal (cont'd)

43. Remove the P/S hose, then plug the line and the hose.

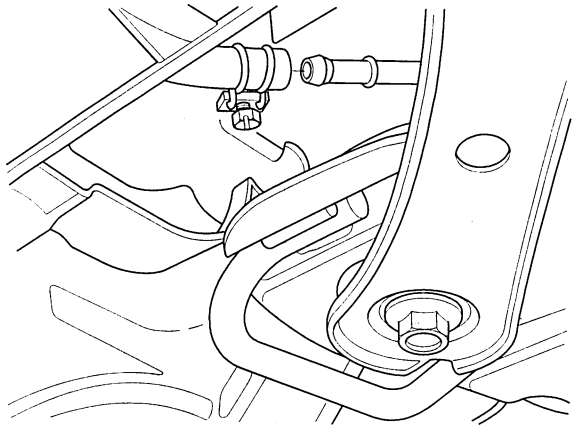

44. Disconnect the power steering pressure switch connector.

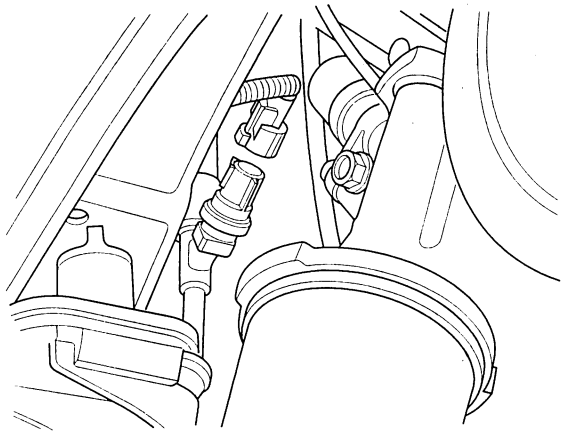

45. Remove the nuts securing the transmission lower front mount and transmission lower rear mount.

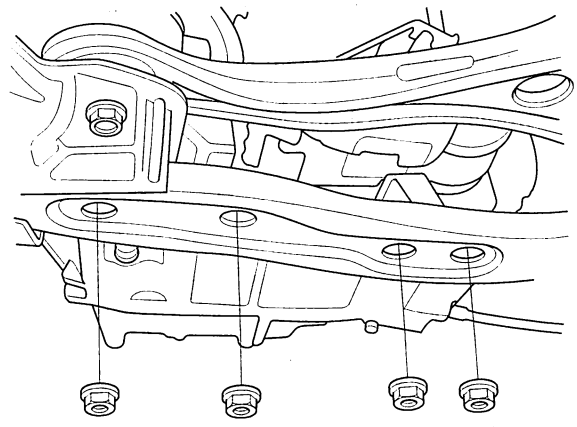

46. Lower the vehicle on the hoist.

47. Remove the upper radiator hose (A) and lower radiator hose (B).

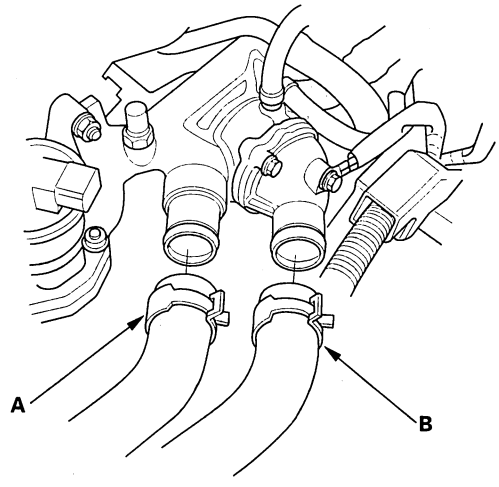

BACK

Protected by AR

48. Remove the heater hoses.

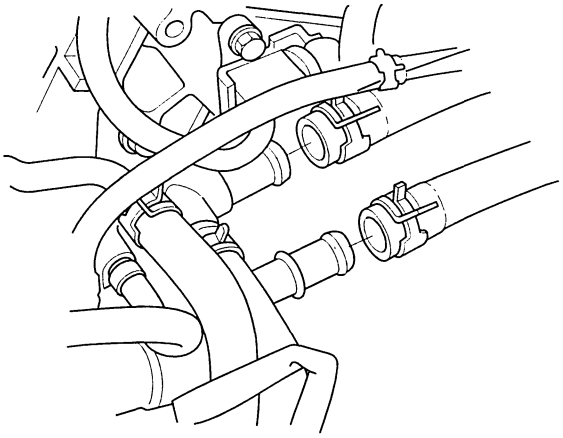

49. Remove the connector bracket from the front cylinder head; use the bracket bolt to attach engine balancer bar front arm.

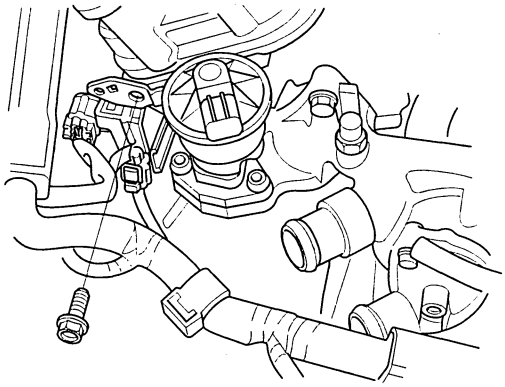

50. Remove the harness clamp bracket from the rear cylinder head; use the bracket bolt to attach engine balancer bar rear arm.

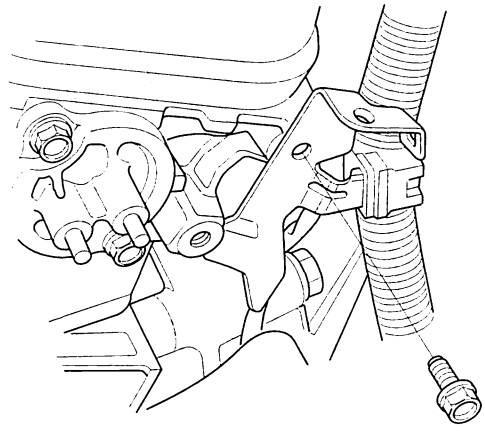

51. Lift and support the engine with engine hanger (A) and engine balancer bar (B).
Attach the front arm (C) to the front cylinder head with a spacer (D) and the connector bracket bolt (10 x 1.25 mm) (E). Attach the rear arm (F) to the rear cylinder head with the harness clamp bracket bolt (8 x 1.25 mm) (G).

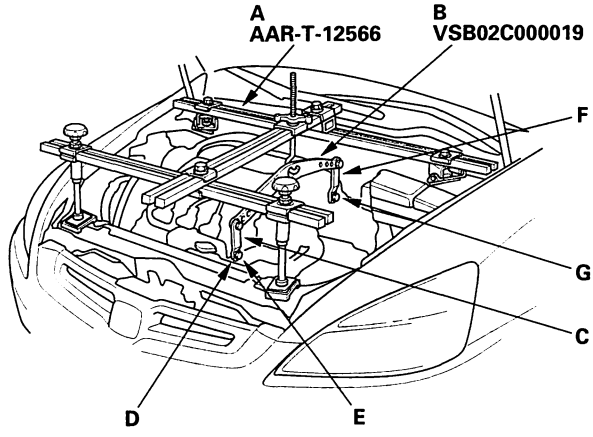

(cont'd)

Protected by AR

Engine Removal (cont'd)

52. M/T model: Remove the ground cable (A).

M/T:

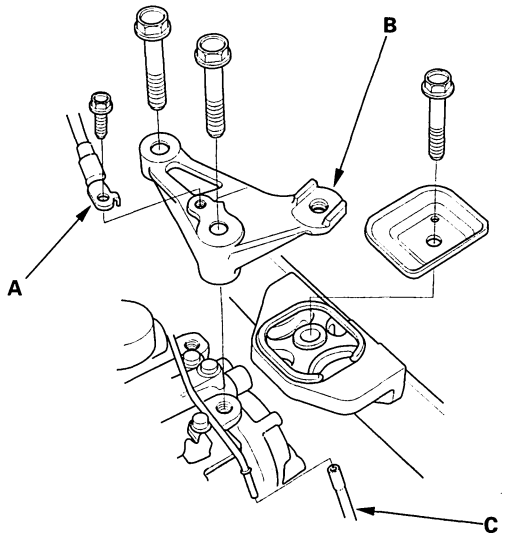

A/T:

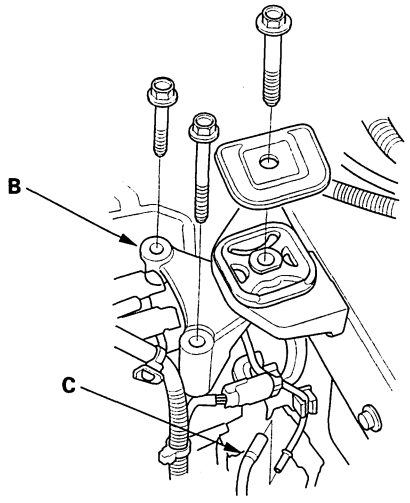

53. Remove the transmission upper mount bracket (B), and remove the vacuum hose (C).

54. Remove the front mount stop (A), then remove the front mount bolt (B).

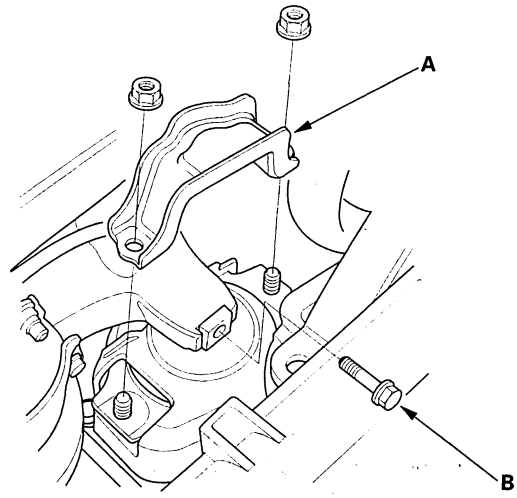

55. Remove the rear mount stop (A), then remove the rear mount bolt (B).

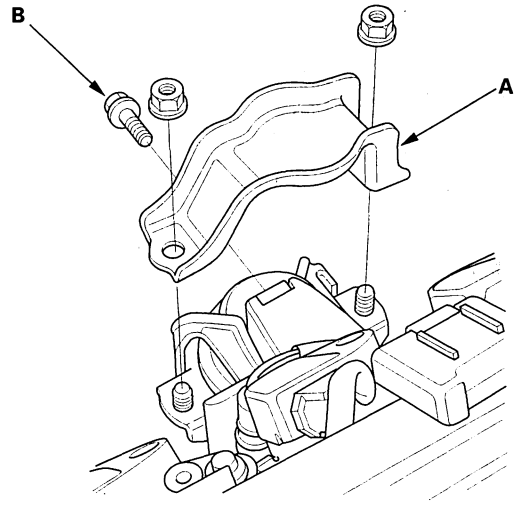

BACK

Protected by AR

56. M/T model: Remove the two bolts securing the shift cable bracket.

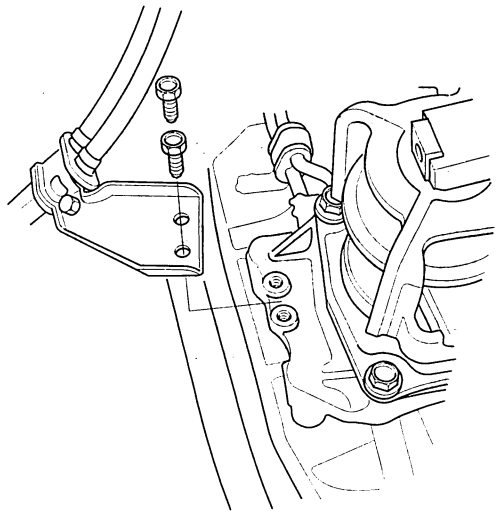

57. Raise the vehicle on the hoist to full height.

58. Make the appropriate lines (A) at the subframe that line up with the edge of the subframe stiffer (B).

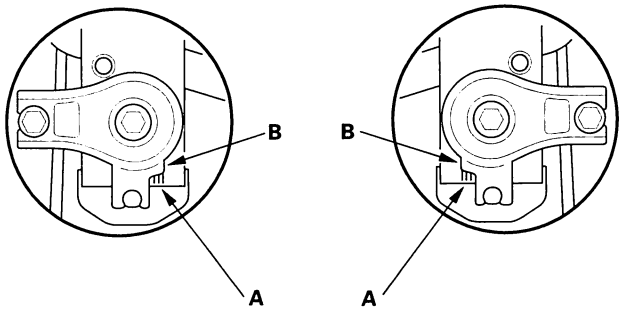

59. Attach the special tool to the subframe by hanging the belt (A) over the front of the subframe (B), then secure the belt with its stop (C).

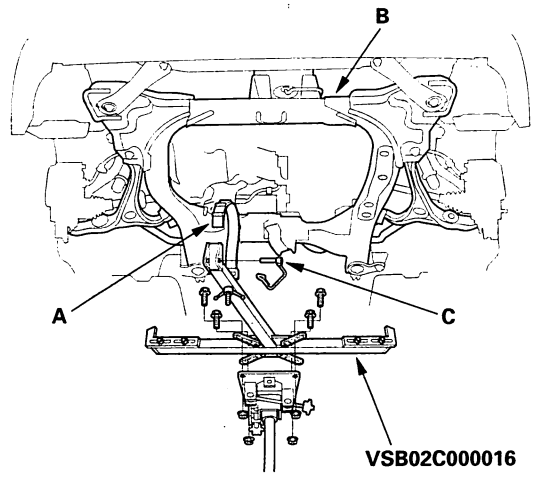

60. Raise the jack, then line up the slots in the special tool arms with the bolt holes on the corner of the jack base, then securely attach them with four bolts.

61. Remove the subframe mid mounts (A), then remove the subframe (B).

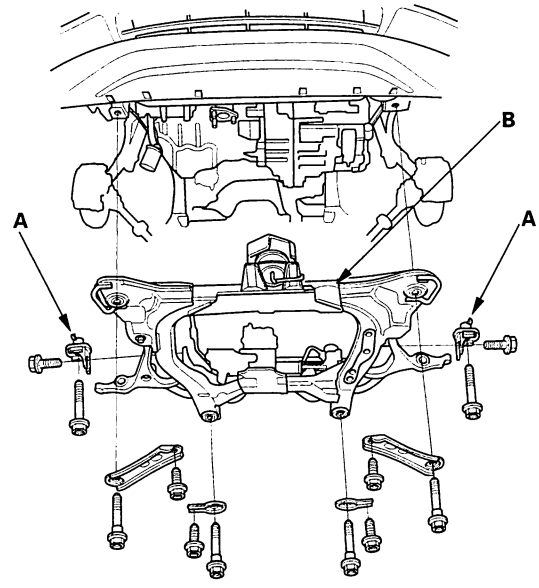

(cont'd)

Protected by AR

Engine Removal (cont'd)

62. Lower the vehicle and attach a chain hoist (A) to the engine hook (B) and transmission hook (C). Lift up on the engine/transmission assembly until it's securely supported by the chain hoist, and remove the engine support hanger from the engine and vehicle.

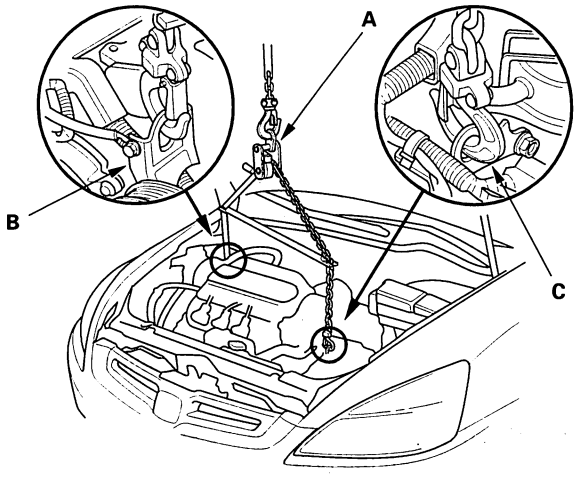

63. Remove the two bolts securing the side engine mount bracket.

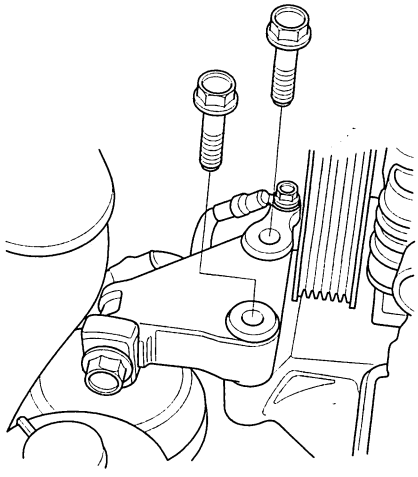

64. Check that the engine/transmission is completely free of vacuum hoses, fuel and coolant hoses, and electrical wiring.

65. Slowly lower the engine/transmission assembly about 150 mm (6 in.). Check once again that all hoses and electrical wiring are disconnected and free from the engine/transmission, then lower it all the way.

66. Disconnect the chain hoist from the engine/transmission assembly.

67. Raise the vehicle all the way, and remove the engine/transmission assembly from under the vehicle.

BACK

Protected by AR

Engine Installation

Special Tools Required
- Front subframe adapter VSB02C000016
- Engine support hanger, A and Reds AAR-T-12566
  (available through Honda Tool and Equipment program, 888-424-6857)
- Engine hanger balance bar VSB02000019

1. Install the accessory brackets and tighten their bolts and nuts to the specified torques.

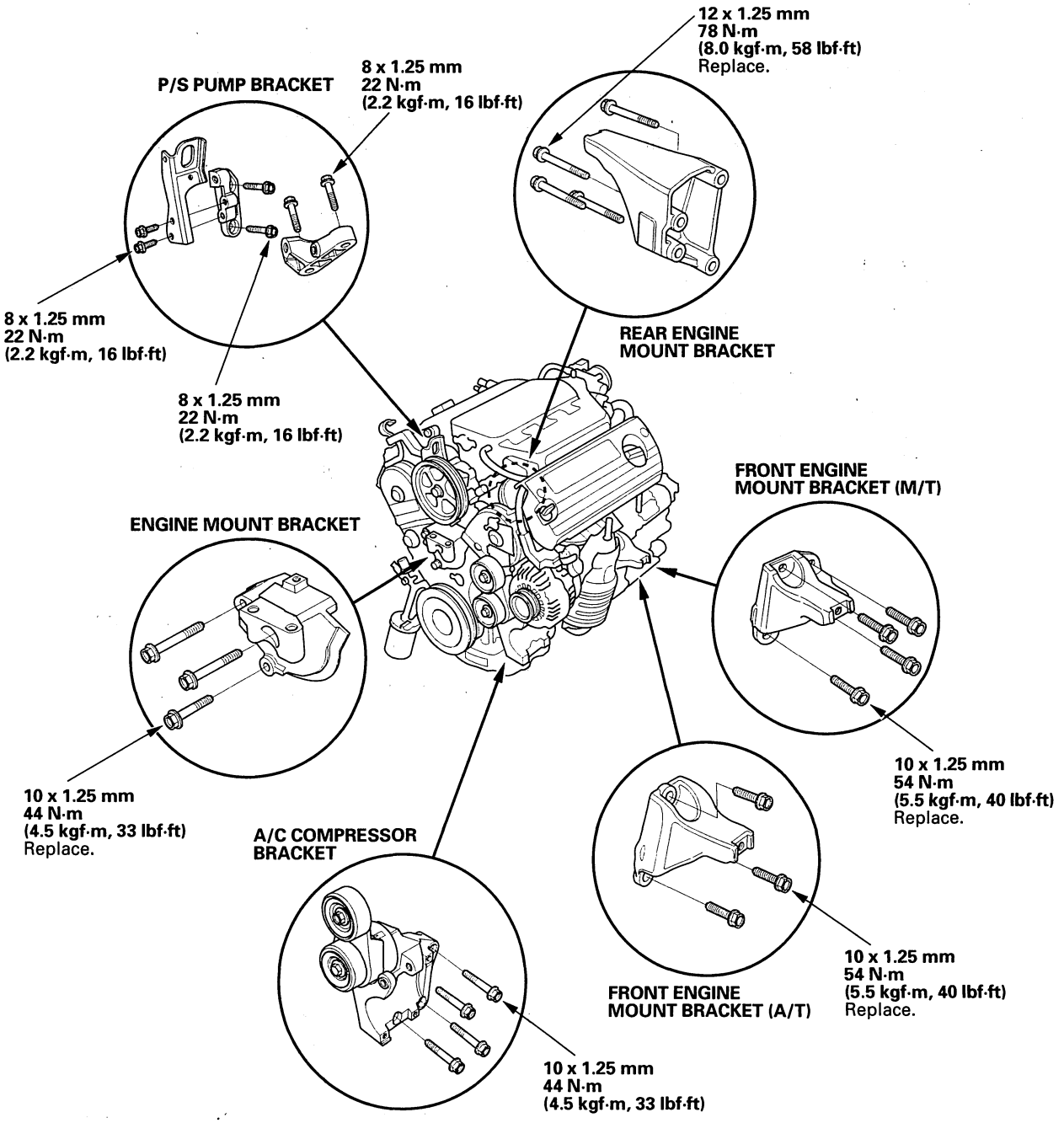

(cont'd)

Protected by AR

Engine Installation (cont'd)

2. Position the engine/transmission assembly under the vehicle. Be sure that they are properly aligned. Carefully lower the vehicle until the engine and transmission are properly positioned in the engine compertment. Make sure the vehicle is not resting on any part of the engine or transmission. Lift and support the engine with a chain hoist (A) and carefully raise the engine/transmission assembly into place.

   NOTE: Reinstall the mounting bolts/support nuts in the sequence given in following steps. Failure to follow this sequence may cause excessive noise and vibration, and reduce engine mount life.

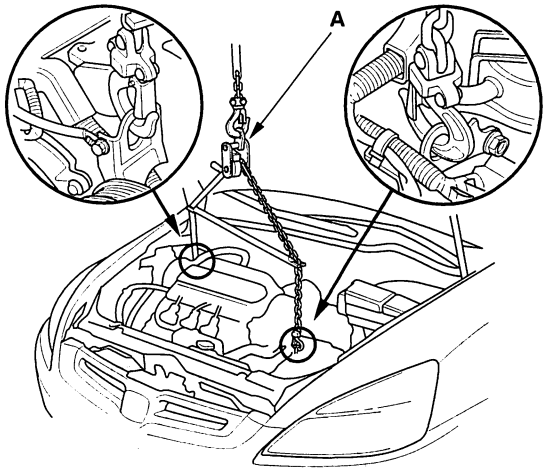

3. Inatall the engine balancer bar (VSB02C000019); attach the front arm (A) to the front cylinder head with a spacer (B) and 10 x 1.25 mm bolt (C), attach the rear arm (D) to the rear cylinder head with 8 x 1.25 mm bolt (E).

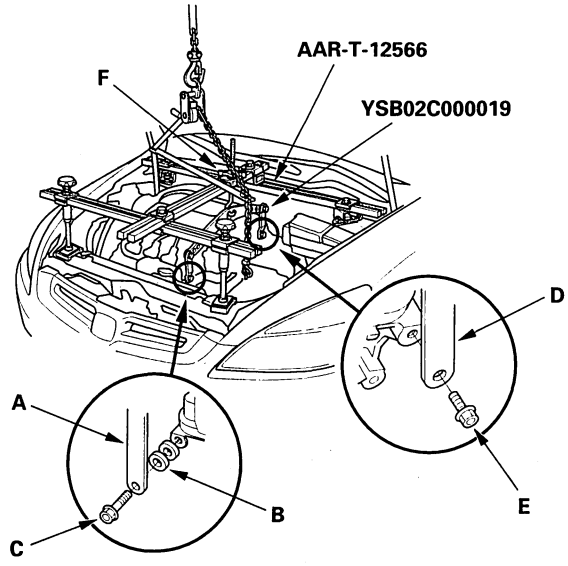

4. Install the engine support hanger (AAR-T-12566) to the vehicle, and attach the hook to the slotted hole in the engine balancer bar. Tighten the wing nut (F) by hand to lift and support the engine/transmission assembly.

5. Install and tighten the two bolts securing the upper bracket.

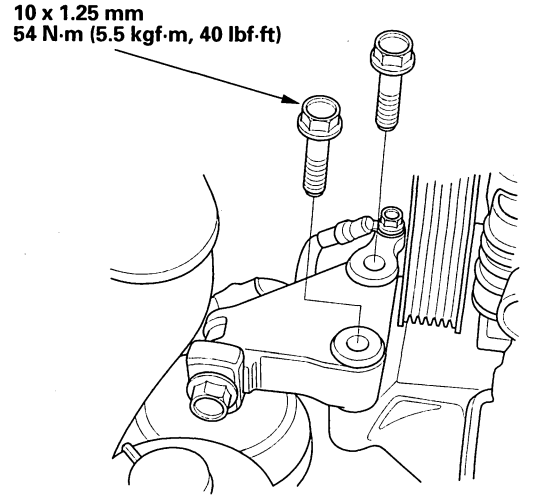

6. Remove the chain hoist, then raise the vehicle on the hoist to full height.

BACK

Protected by AR

7. Raise the vehicle on the hoist to full height.

8. Attach the front subframe adapter to the subframe by hanging the belt (A) over the front of the subframe (B), then secure the belt with its stop (C). Raise the subframe up to the body with a jack.

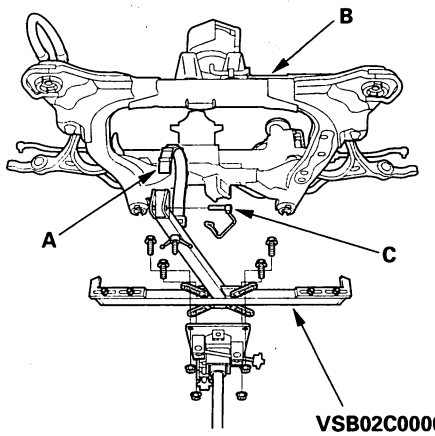

9. Loosely install the four front subframe mounting bolts (A) and the four 12 x 1.25 mm bolts (B), (C) with the stiffeners.

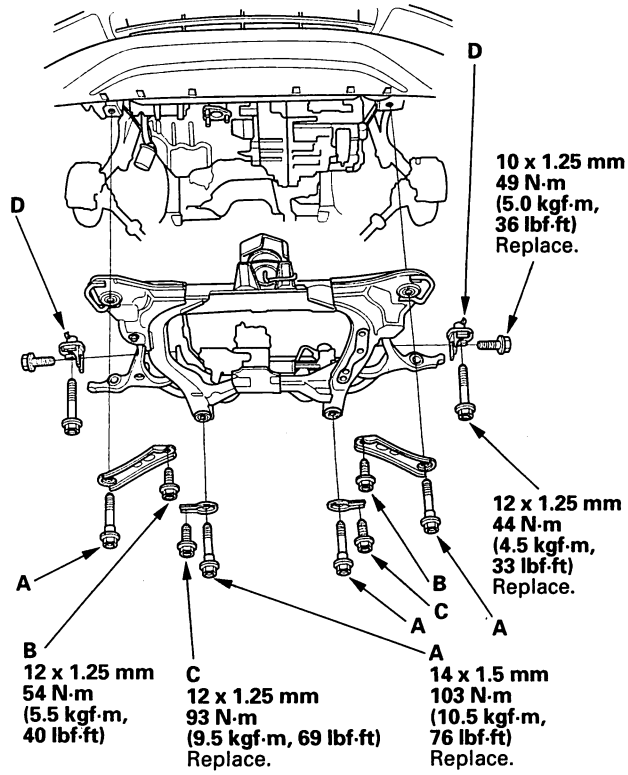

10. Loosely install the subframe mid mounts (D).

(cont'd)

Protected by AR

Engine Installation (cont'd)

11. Align the reference marks (A) with the edge of the subframe stiffener (B), then tighten the subframe mounting bolts, and 12 x 1.25 mm bolts.

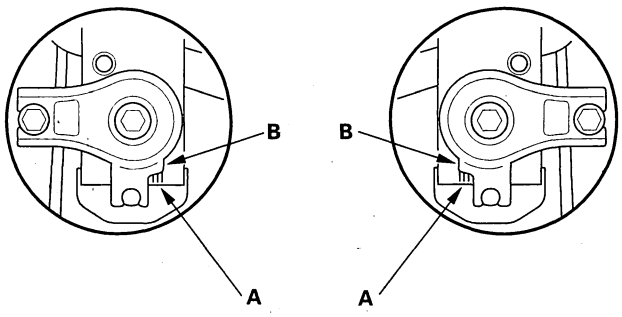

12. Remove the jack and front subframe adapter.

13. Tighten the bolts securing the subframe mid mounts.

14. Tighten the nuts securing the transmission lower rear mount.

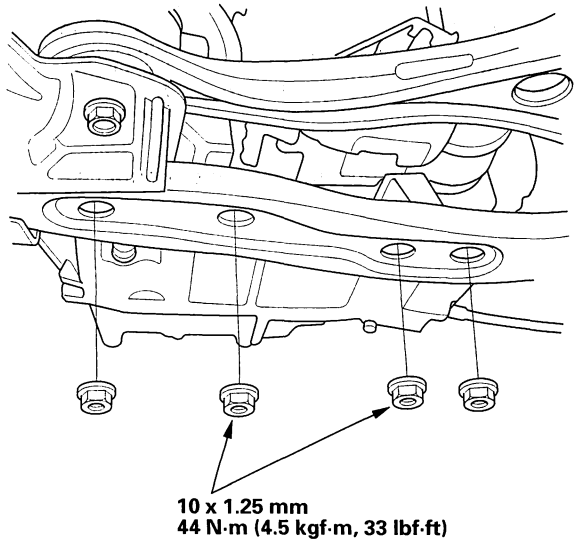

15. Lower the vehicle on the hoist, then remove the engine hanger and balancer bar.

16. M/T model: Tighten the two bolts securing the shift cable bracket.

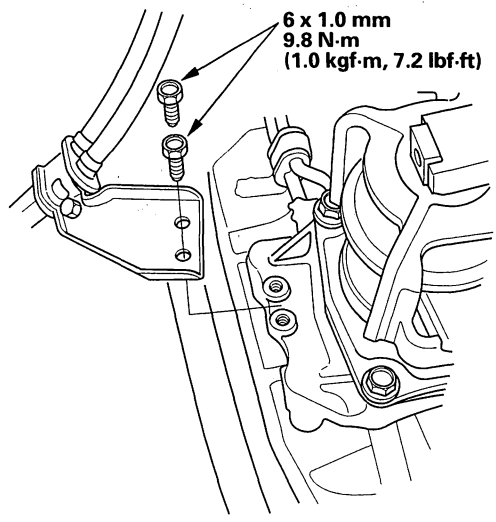

17. Tighten the rear mount bolt (A), then install the rear mount stop (B).

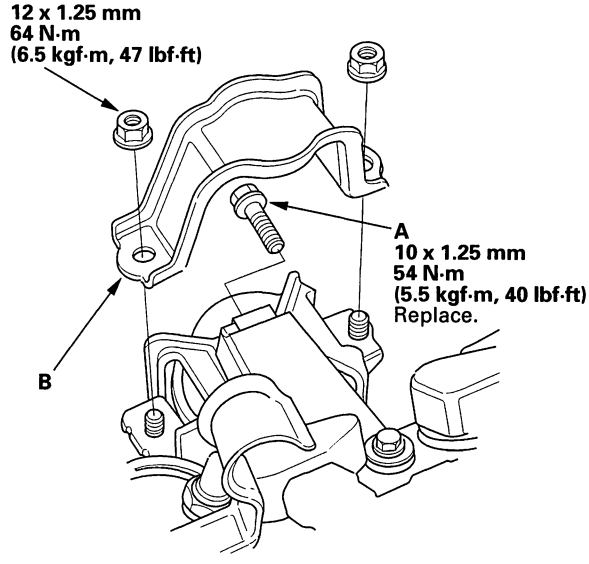

BACK

Protected by AR

18. Tighten the front mount bolt (A), then install the front mount stop (B).

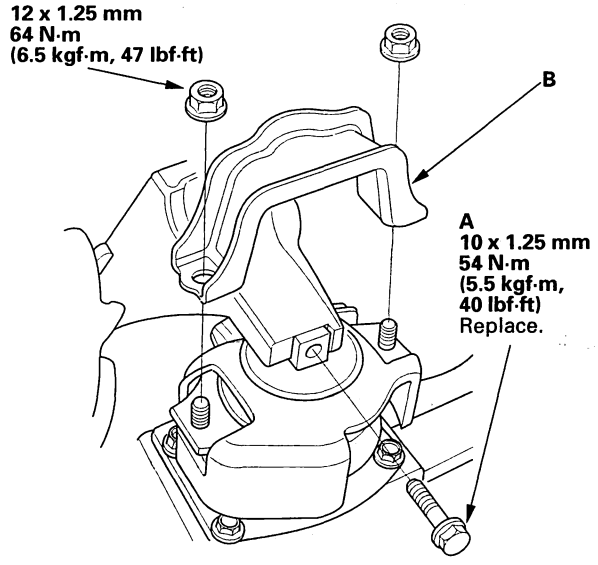

19. Install the transmission upper mount bracket (A), then tighten the bolts in the numbered sequence shown.

M/T:

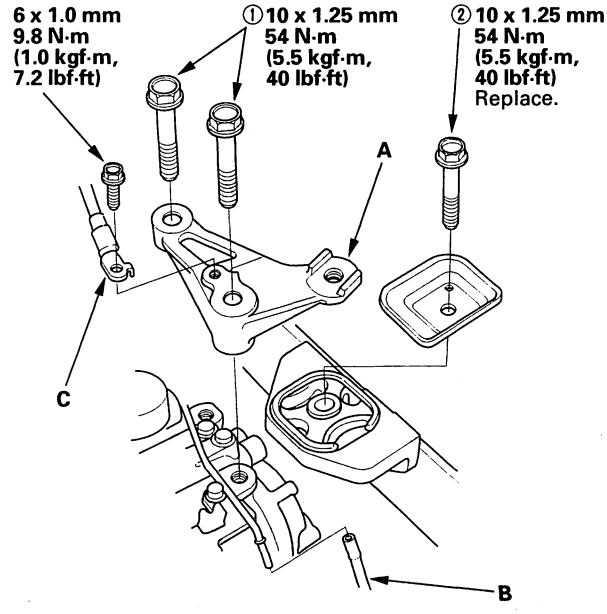

A/T:

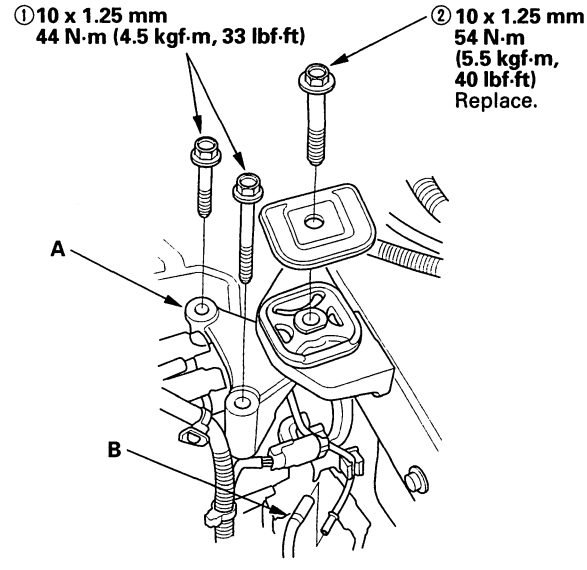

20. Install the vacuum hose (B).

21. M/T model: Install the ground cable (C).

(cont'd)

Protected by AR

Engine Installation (cont'd)

22. Raise the vehicle on the hoist to full height.

23. Connect the power steering pressure switch connector.

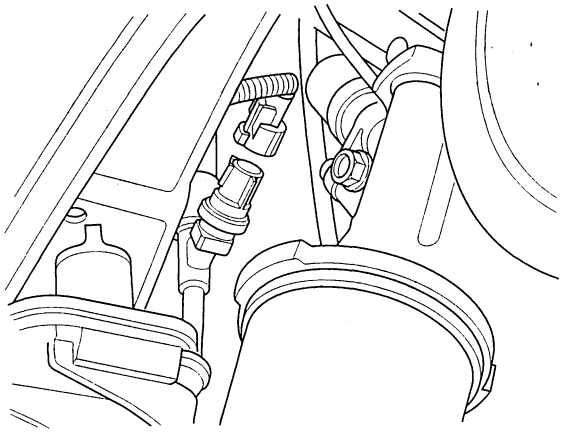

24. Install the power steering (P/S) hose.

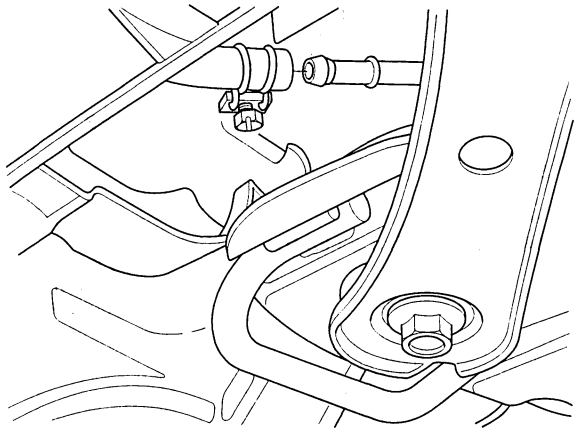

25. A/T model: Install the control lever (A) with the shift cable on the control shaft. Do not bend the shift cable excessively.

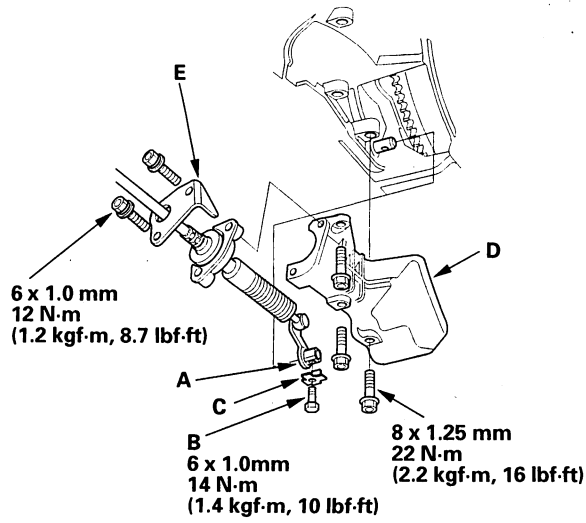

26. A/T model: Install the lock bolt (B) with a new lock washer (C), then bend the lock washer tab against the bolt.

27. A/T model: Install the shift cable cover (D), then install the shift cable holder (E) on the shift cable cover.

28. Install exhaust pipe A using new gaskets (B) and new self-locking nuts (C).

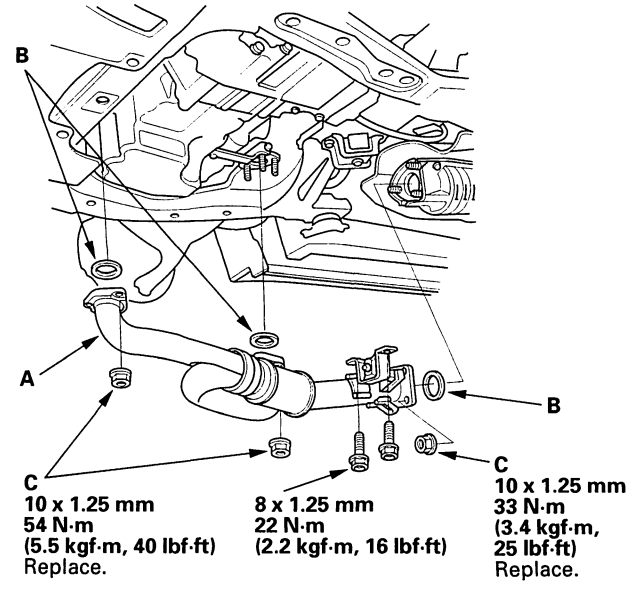

BACK

Protected by AR

29. Install a new set ring on the end of each driveshaft, then install the driveshafts. Make sure each ring "clicks" into place in the differential and intermediate shaft.

30. Connect the suspension lower arm to the knuckles, refer to the 2003-2006 Accord Service Manual (see step 8 on page 18-21).

31. Connect the tie-rod end ball joints to the knuckles (see step 21 on page 17-40).

32. Install the damper fork, refer to the 2003-2006 Accord Service Manual (see step 2 on page 18-27).

33. Connect the stabilizer links, refer to the 2003-2006 Accord Service Manual (see page 18-22).

34. Install the splash shield.

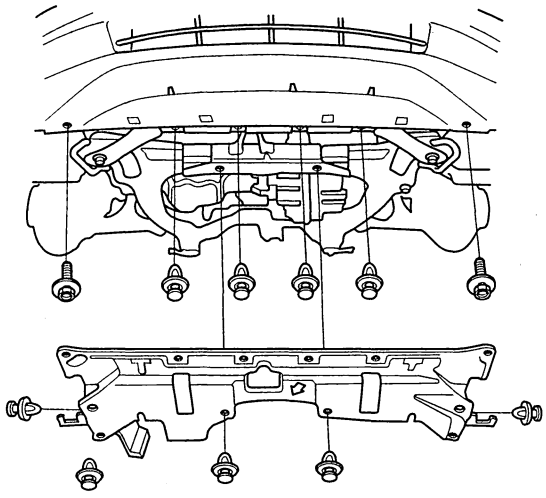

35. Install the front wheels.

36. Lower the vehicle on the hoist.

37. Install the heater hoses.

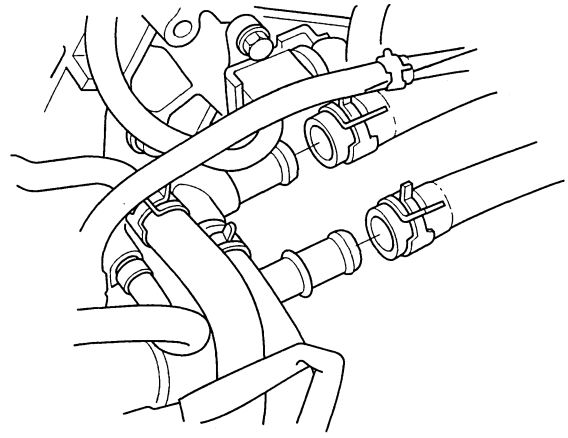

38. Install the upper radiator hose (A) and lower radiator hose (B).

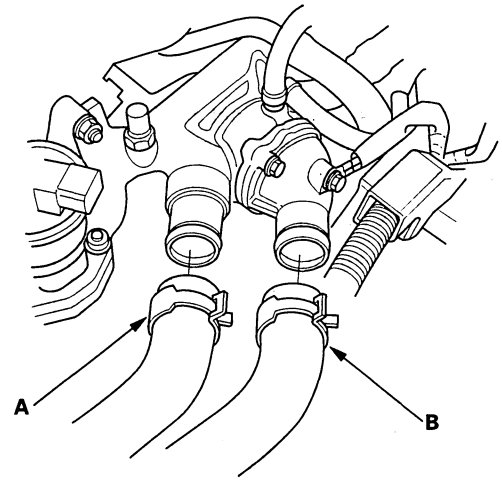

(cont'd)

Protected by AR

Engine Installation (cont'd)

39. M/T model: Install the clutch slave cylinder (A) and clutch line bracket mounting bolt (B).

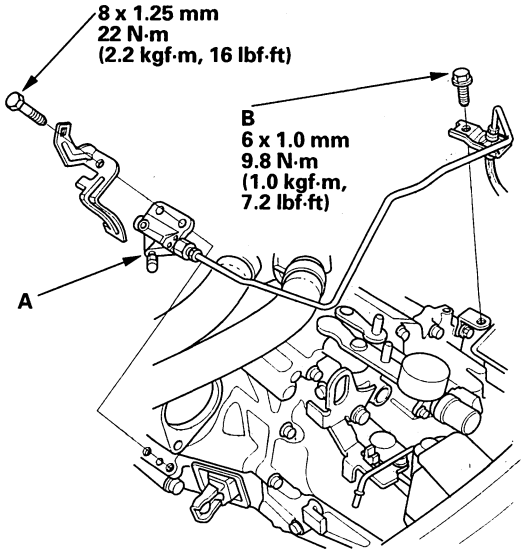

40. M/T model: Install the select cable (A) and shift cable (B) with the plastic washers (C), washers (D), and new cotter pins (E).

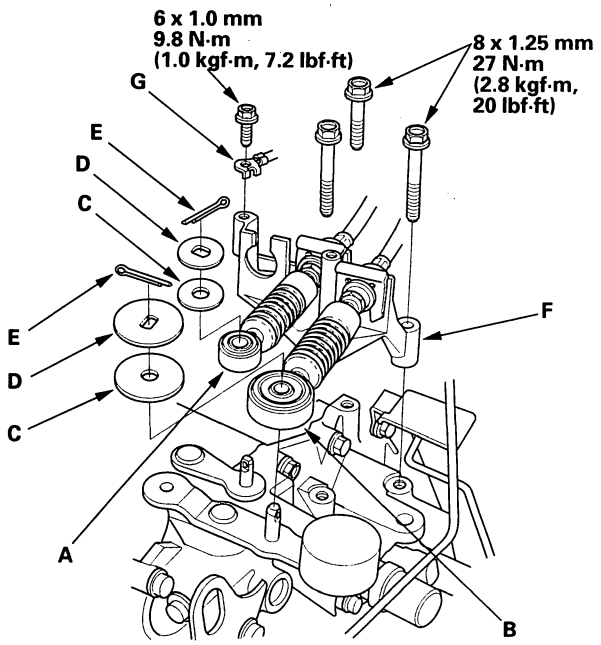

41. M/T model: Install the shift cable holder (F) and ground cable (G).

42. Install the A/C compressor.

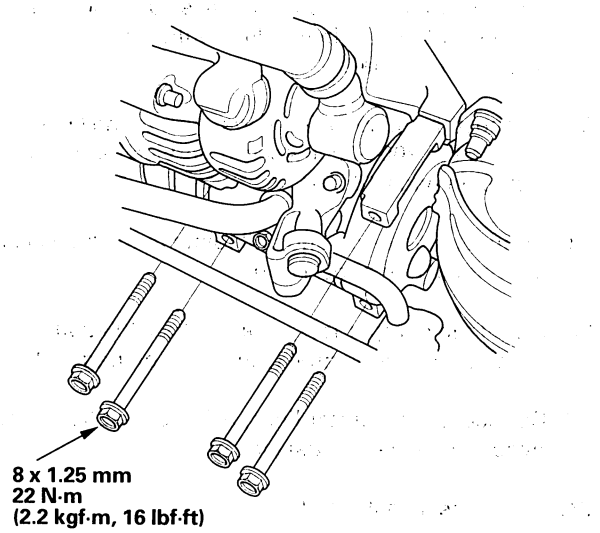

43. Install the condenser fan shroud (A), and reserve tank (B), then connect the fan motor connector (C) and compressor clutch connector (D).

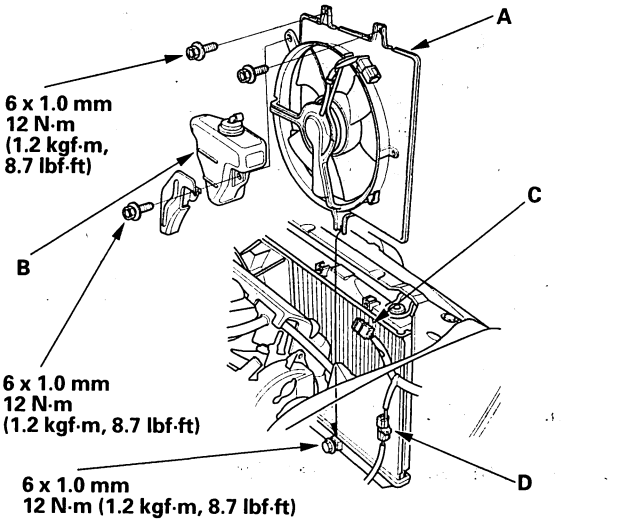

BACK

Protected by AR

44. Align the reference mark (A) on the steering joint and steering gearbox pinion shaft. Connect the steering joint (B) to the steering gearbox pinion shaft (C). Tighten the steering joint bolt.

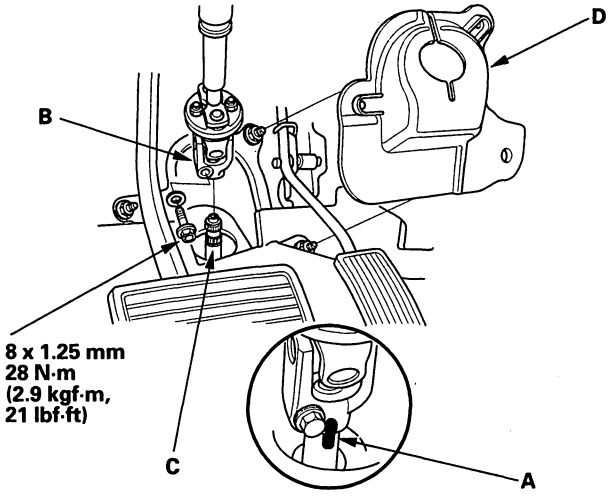

45. Install the steering joint cover (D).

46. Install the P/S pump outlet line (A) with a new O-ring (B) to the pump (C), and install the P/S hose (D) in its clamp (E).

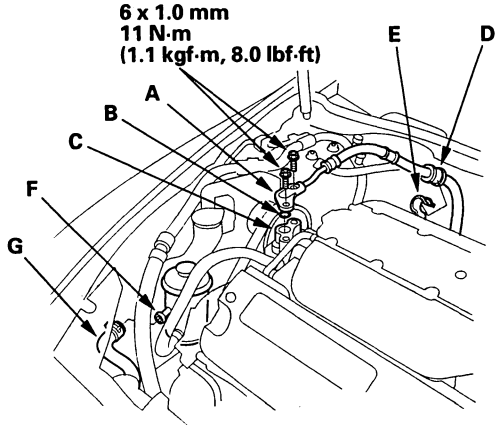

47. Install the power steering system fluid reservoir (F) to the clamp, then install the return hose (G) to the fluid reservoir.

48. Install the harness clamp bracket to the rear cylinder head.

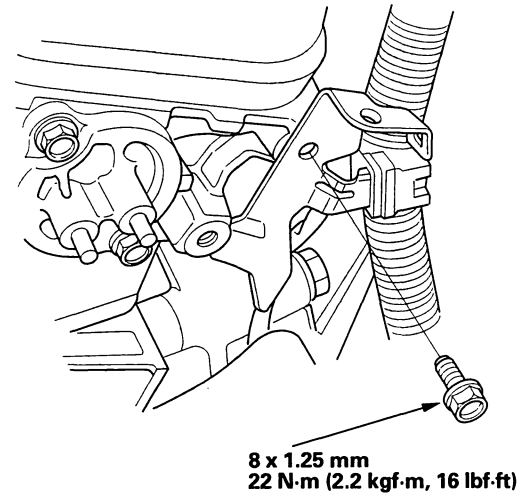

49. Install the connecting bracket to the front cylinder head.

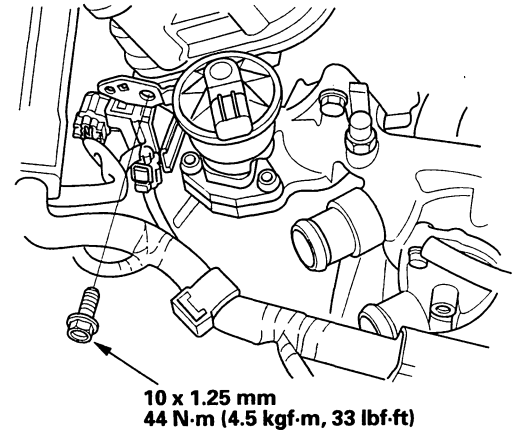

(cont'd)

Protected by AR

Engine Installation (cont'd)

50. Install the drive belt (see page 4-35).

51. Install the fuel line (see page 11-323).

52. Connect the engine wire harness connectors (A), then install the harness clamp (B).

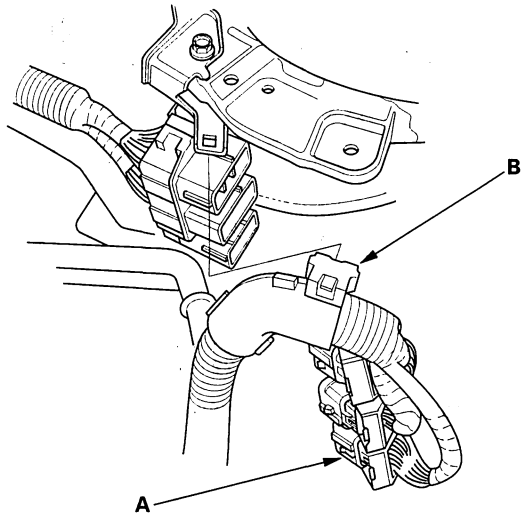

53. Install the brake booster vacuum hose (A), evaporative emission (EVAP) canister hose (B), and vacuum hose (C).

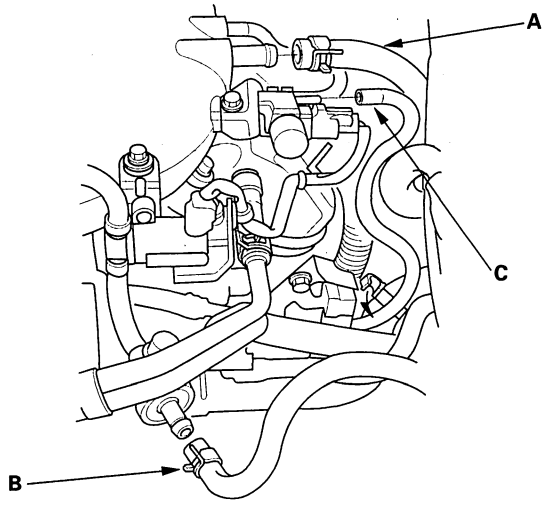

54. Install the ground cable (A), and connect the harness connector (B).

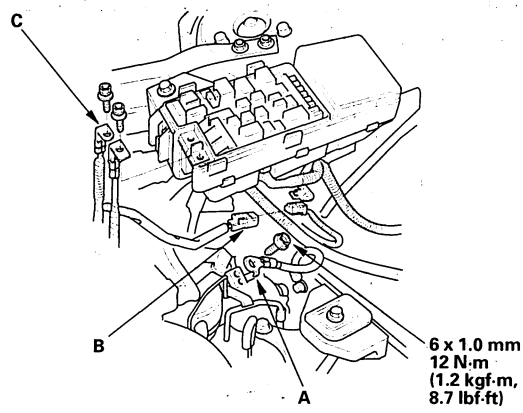

55. Install the battery cables (C).

56. Install the battery base (A), then install the harness clamp (B).

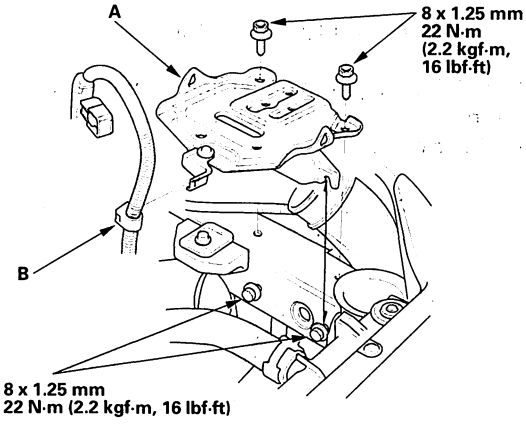

57. Install the air cleaner housing, refer to the 2003-2006 Accord Service Manual (see page 11-361).

58. Install the battery. Clean the battery posts and cable terminals with sandpaper, then assemble them and apply grease to prevent corrosion.

59. A/T model: Move the shift lever to each gear, and verify that the A/T gear position indicator follows the transmission range switch.

60. Inspect for fuel leaks. Turn the ignition switch ON (II) (do not operate the starter) so the fuel pump runs for about 2 seconds and pressurizes the fuel line. Repeat this operation two or three times, then check for fuel leakage at any point in the fuel line.

BACK

Protected by AR

61. Refill the engine with engine oil (see step 3 on page 8-6).

62. Refill the transmission with fluid:

    - Manual transmission (see page 13-10)
    - Automatic transmission (see page 14-186)

63. Refill the radiator with engine coolant, and bleed air from the cooling system with the heater valve open (see step 8 on page 10-7).

64. Refill the power steering system fluid (see page 17-10).

65. Perform the engine control module (ECM)/ powertrain control module (PCM) reset procedure (see page 11-4).

66. Do the crankshaft position (CKP) pattern clear/CKP pattern learn procedure (see page 11-4).

67. Inspect the idle speed, refer to the 2003-2006 Accord Service Manual (see page 11-315).

68. Inspect the ignition timing (see page 4-19).

69. Install the cowl cover and windshield wiper arms, refer to the 2003-2006 Accord Service Manual (see page 20-199).

70. Install the bulkhead cover:

    - 2-door, refer to the 2003-2006 Accord Service Manual (see page 20-184)
    - 4-door, refer to the 2003-2006 Accord Service Manual (see page 20-185)

71. Check the wheel alignment, refer to the 2003-2006 Accord Service Manual (see page 18-6).

72. Enter the anti-theft codes for the radio and the navigation system, then enter the customer's audio presets.

73. Do the power window control unit reset procedure, refer to the 2003-2006 Accord Service Manual (see page 22-232).

74. Set the clock.

Protected by AR

Engine Assembly

Engine Mount Replacement

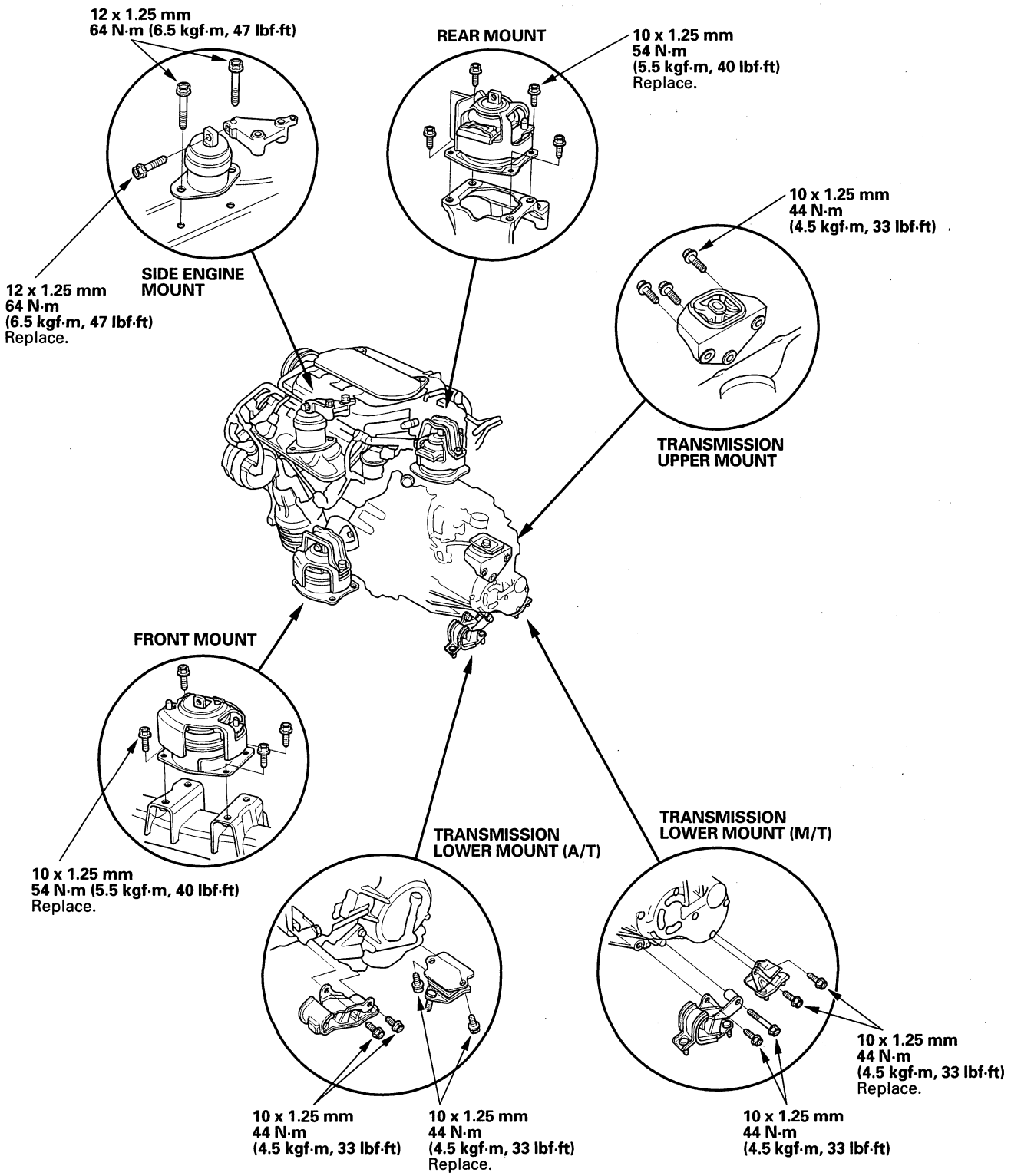

BACK

Protected by AR

Engine Mechanical

Cylinder Head

Special Tools 6-2
Component Location Index 6-3
Engine Compression Inspection 6-6
VTEC Rocker Arm Test 6-7
Valve Clearance Adjustment 6-8
Crankshaft Pulley Removal and Installation 6-11
Timing Belt Inspection 6-13
Timing Belt Removal 6-14
Timing Belt Installation 6-16
Timing Belt Replacement 6-20
Timing Belt Drive Pulley Replacement 6-26
Timing Belt Adjuster Replacement 6-26
Cylinder Head Cover Removal 6-27
Cylinder Head Cover Installation 6-28
Cylinder Head Removal 6-30
Camshaft Replacement 6-33
Cylinder Head Inspection for Warpage 6-35
Rocker Arm Assembly Removal 6-35
Rocker Arm and Shaft Disassembly/Reassembly 6-36
Rocker Arm and Shaft Inspection 6-37
Camshaft Inspection 6-39
Valve, Spring, and Valve Seal Removal 6-42
Valve Inspection 6-43
Valve Stem-to-Guide Clearance Inspection 6-43
Valve Guide Replacement 6-44
Valve Seat Reconditioning 6-46
Valve, Spring, and Valve Seal Installation 6-48
Camshaft, Rocker Arm, Camshaft Seal, and Pulley Installation 6-49
Cylinder Head Installation 6-50
Camshaft Oil Seal Installation - In Car 6-56
Sealing Bolt Installation 6-56

NOTE: Refer to the 2003-2006 Accord Service Manual, P/N 61SDA08 for items not shown in this section.

BACK

Outline of Model Change

The J30A5 engine has been added.

Protected by AR

Cylinder Head

Special Tools

Ref. No.	Tool Number	Description	Qty
①	07AAJ-PNAA100	Air Pressure Regulator	1
②	07HAH-PJ7A100	Valve Guide Reamer, 5.5 mm	1
③	07JAA-001020A	Socket, 19 mm	1
④	07JAB-001020A	Holder Handle	1
⑤	07MAB-PY3010A	Holder Attachment, 50 mm, Offset	1
⑥	07PAD-0010000	Stem Seal Driver	1
⑦	07VAJ-P8A010A	VTEC Air Adapter	1
⑧	070AJ-0030100	VTEC Air Stopper	1
⑨	07742-0010100	Valve Guide Driver, 5.5 mm	1
⑩	07757-PJ1010A	Valve Spring Compressor Attachment	1

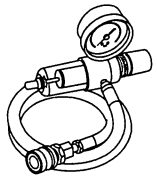

①

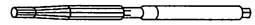

②

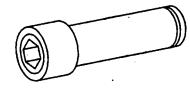

③

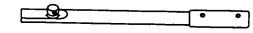

④

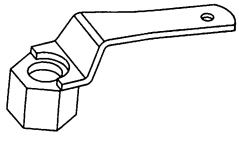

⑤

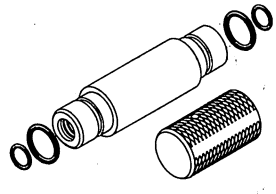

⑥

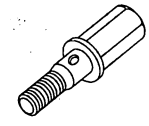

⑦

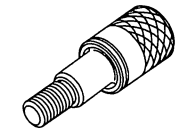

⑧

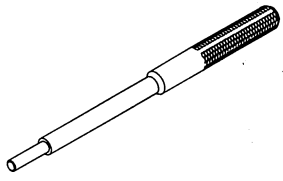

⑨

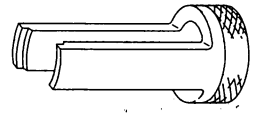

⑩

BACK

Protected by AR

Component Location Index

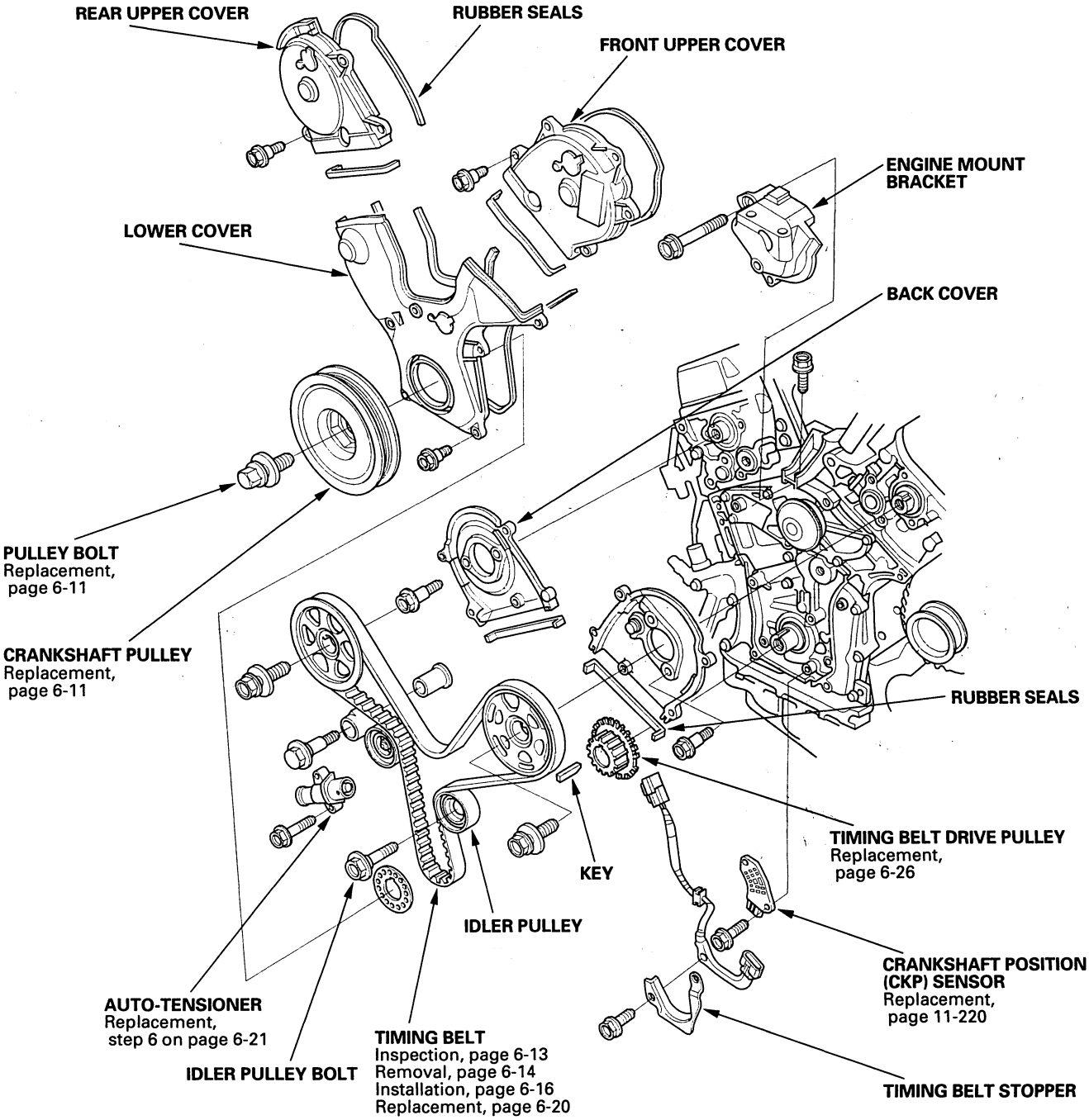

(cont'd)

Protected by AR

Component Location Index (cont'd)

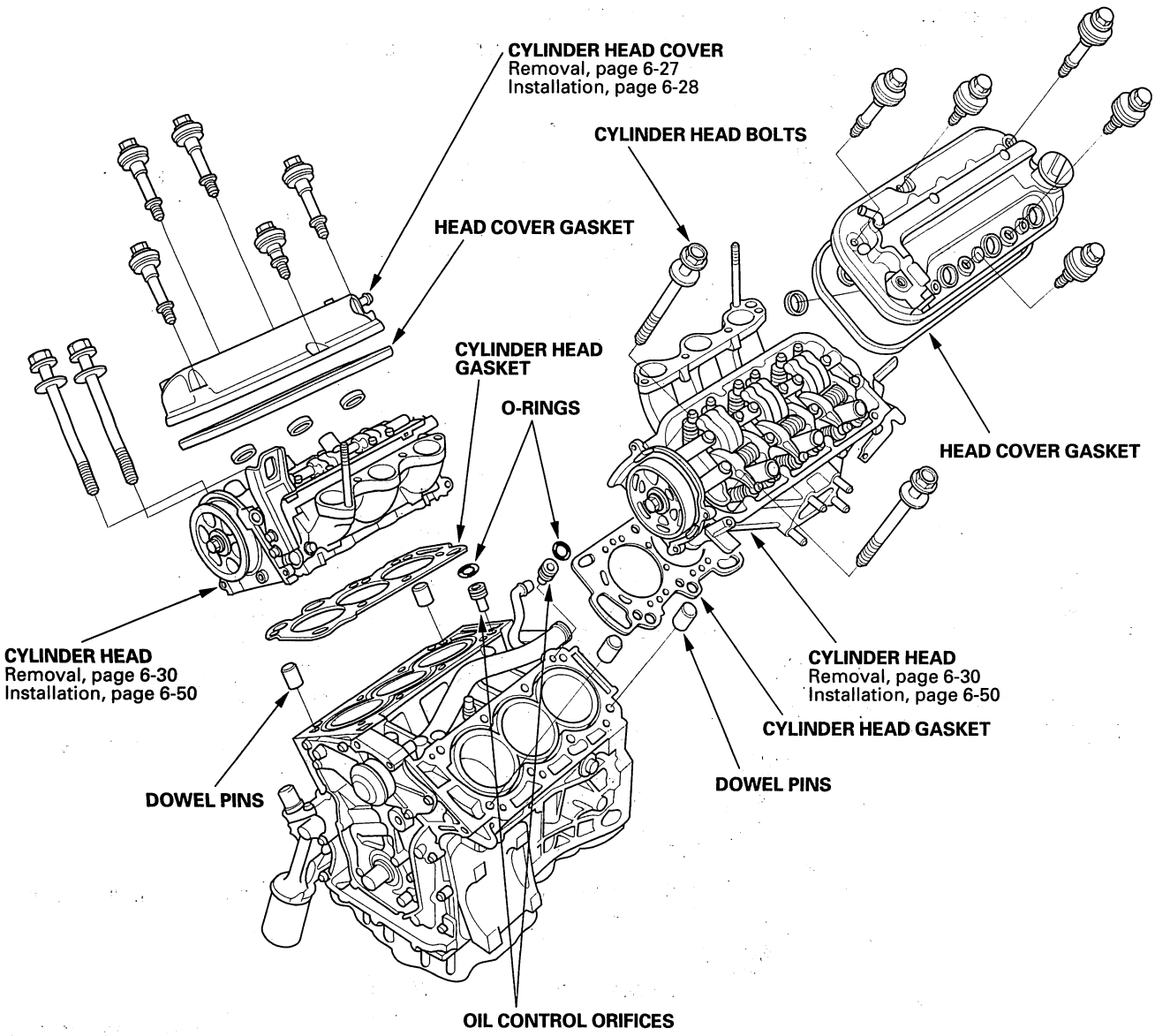

BACK

Protected by AR

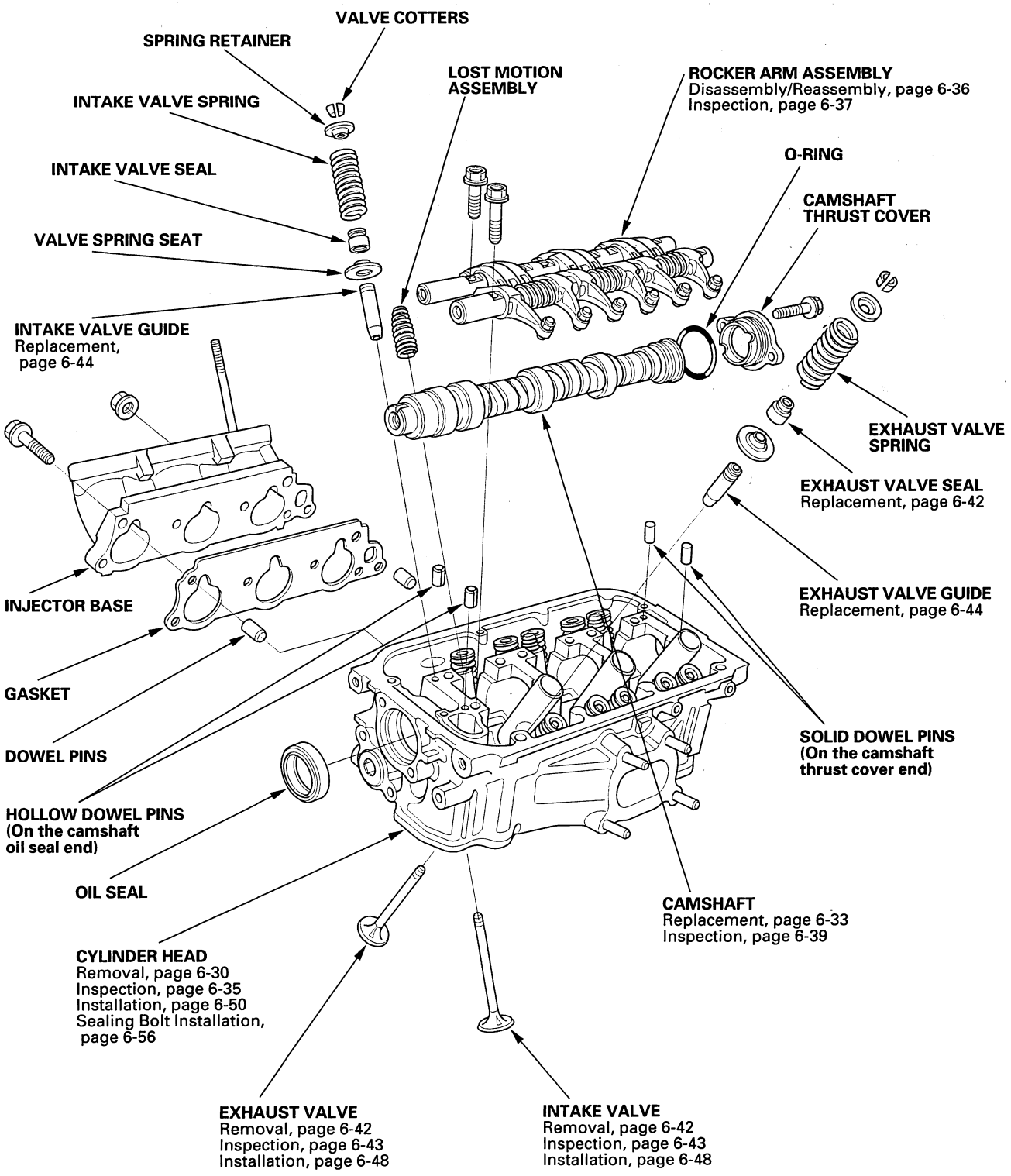

BACK

Protected by AR

Engine Compression Inspection

NOTE: After this inspection, you must select engine control module (ECM)/powertrain control module (PCM) reset using the Honda Diagnostic System (HDS) (see page 11-4), otherwise ECM/PCM continues to stop the fuel injectors from operating.

1. Warm up the engine to normal operating temperature (cooling fan comes on).
2. Turn the ignition switch OFF.
3. Connect the HDS to the data link connector (DLC) (see page 11-3).
4. Select PGM-FI, INSPECTION, and then ALL INJECTORS OFF on the HDS.
5. Remove the six ignition coils (see page 4-20).
6. Remove the six spark plugs.
7. Attach the compression gauge to the spark plug hole.

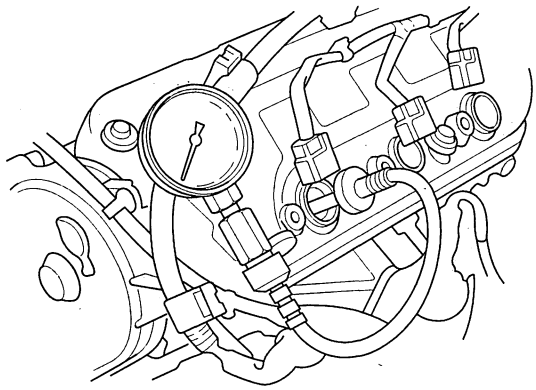

8. Open the throttle fully, then crank the engine with the starter motor and measure the compression.

   Compression Pressure:
   Above 930 kPa (9.5 kgf/cm², 135 psi)

9. Measure the compression on the remaining cylinders.

   Maximum Variation:
   Within 200 kPa (2.0 kgf/cm², 28 psi)

10. If the compression is not within specifications, check the following items, then remeasure the compression.

    - Damaged or worn valves and seats
    - Damaged cylinder head gaskets
    - Damaged or worn piston rings
    - Damaged or worn piston and cylinder bore

11. Select ECM/PCM reset (see page 11-4) to cancel the ALL INJECTORS OFF function on the HDS.

BACK

Protected by AR

VTEC Rocker Arm Test

Special Tools Required
- VTEC air adapter 07VAJ-P8A010A
- VTEC air stopper 070AJ-0030100
- Air pressure regulator 07AAJ-PNAA100

1. Start the engine and let it run for 5 minutes, then turn OFF the ignition switch.

2. Remove the cylinder head covers (see page 6-27).

3. Set the No. 1 piston at top dead center (TDC) (see step 2 on page 6-8).

4. Push on the intake mid rocker arm (A) for the No. 1 cylinder. The mid rocker arm should move independently of the primary rocker arm (B) and secondary rocker arm (C).

   - If the intake mid rocker arm does not move, remove the mid, primary, and secondary intake rocker arms as an assembly, then check that the pistons in the mid and primary rocker arms move smoothly. If any rocker arm needs replacing, replace the mid, primary, and secondary rocker arms as an assembly, and retest.
   - If the mid rocker arm moves freely repeat the above procedure for the remaining intake mid rocker arms with each piston at TDC. When all the mid rocker arms pass the test, go to step 5.

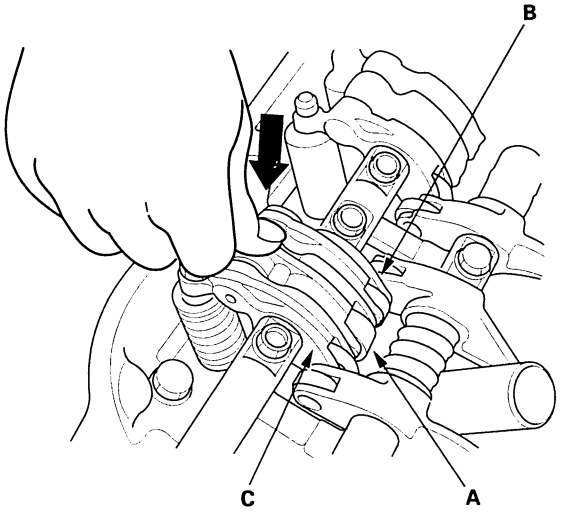

5. Check that the air pressure on the shop air compressor gauge indicates over 690 kPa (7.0 kgf/cm², 100 psi).

6. Inspect the valve clearance (see step 3 on page 6-9).

7. Remove the No. 1 and No. 6 intake rocker shaft mounting bolts, then install and connect the special tools as shown.

FRONT:

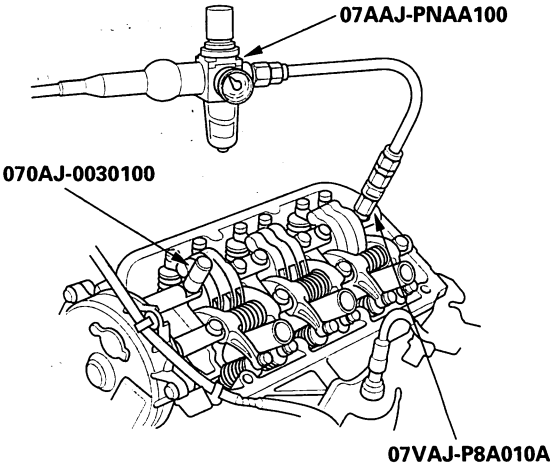

REAR:

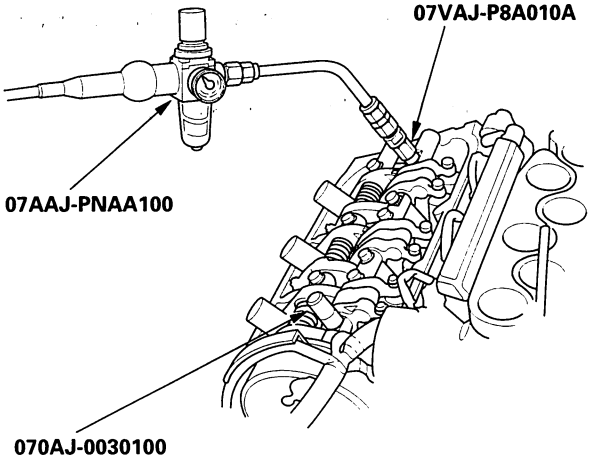

8. Loosen the valve on the regulator, and apply the specified air pressure.

   Specified Air Pressure:
   440—540 kPa (4.5—5.5 kgf/cm², 64—78 psi)

   NOTE: If the synchronizing pistons do not move after applying air pressure, move the primary or secondary rocker arm up and down manually.

(cont'd)

Protected by AR

VTEC Rocker Arm Test (cont'd)

9. Make sure that the intake primary rocker arm (A) and intake secondary rocker arm (B) are mechanically connected by the piston and that the mid rocker arm (C) does not move when pushed manually. If any intake mid rocker arm moves independently of the primary and secondary rocker arms, replace the rocker arms as a set.

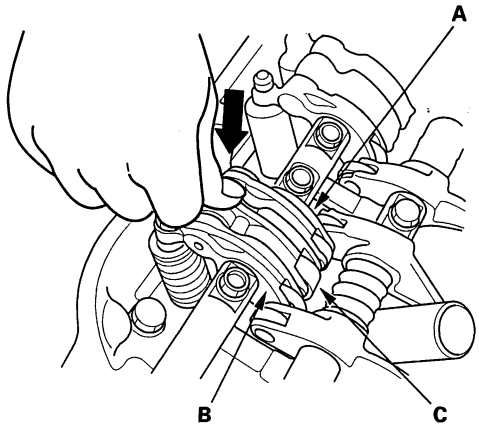

10. Remove the special tools.
11. Tighten the rocker shaft bolts to 24 N·m (2.4 kgf·m, 17 lbf·ft)
12. Install the cylinder head covers (see page 6-28).

Valve Clearance Adjustment

NOTE: Adjust the valves only when the cylinder head temperature is less than 100 °F (38 °C).

1. Remove the cylinder head covers (see page 6-27).
2. Set the No. 1 piston at top dead center (TDC). Align the pointer (A) on the front upper cover with the No. 1 piston TDC mark (B) on the front camshaft pulley.

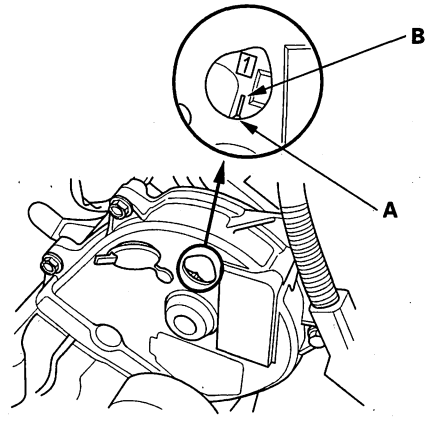

BACK

Protected by AR

3. Select the correct thickness feeler gauge for the valves you're going to check.

Valve Clearance
Intake: 0.20—0.24 mm (0.008—0.009 in.)
Exhaust: 0.28—0.32 mm (0.011—0.013 in.)

Adjusting screw locations:

REAR:

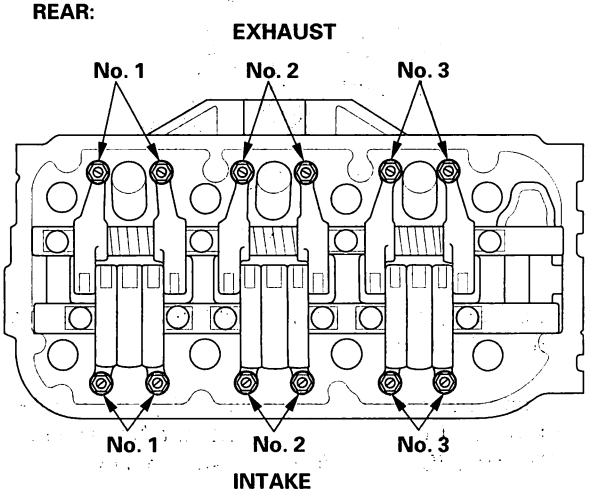

FRONT:

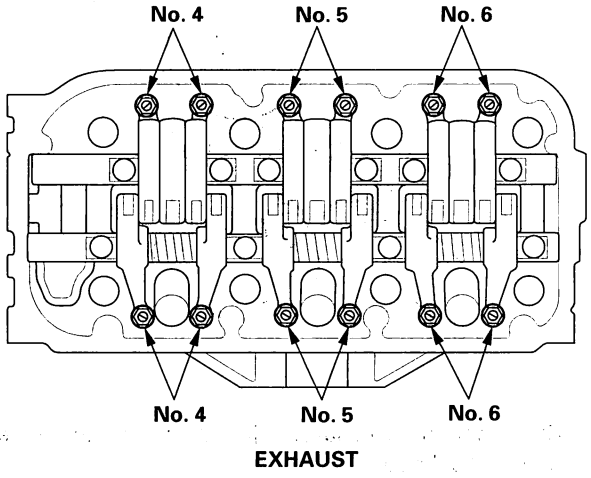

4. Insert the feeler gauge (A) between the adjusting screw and the end of the valve stem on No. 1 cylinder, and slide it back and forth; you should feel a slight amount of drag.

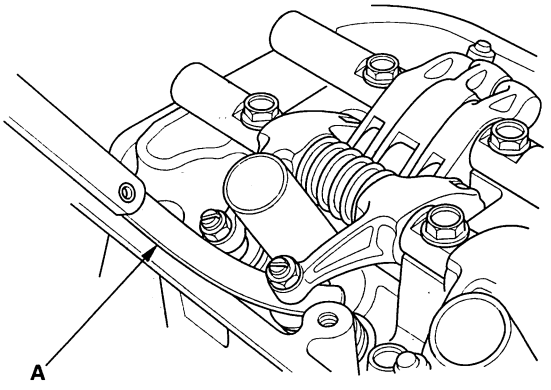

5. If you feel too much or too little drag, loosen the locknut (A), and turn the adjusting screw (B) until the drag on the feeler gauge is correct.

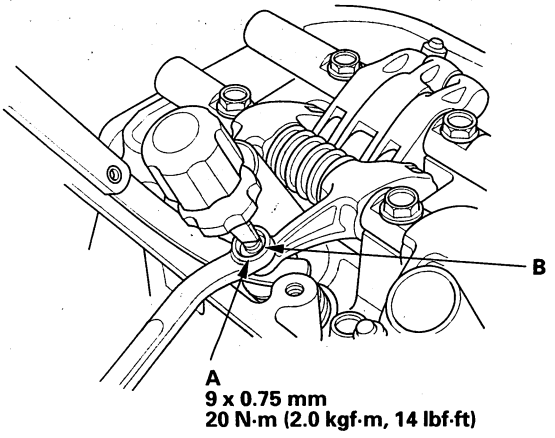

6. Tighten the locknut and recheck the clearance. Repeat the adjustment, if necessary.

(cont'd)

Protected by AR

Valve Clearance Adjustment (cont'd)

7. Rotate the crankshaft clockwise. Align the pointer (A) on the front upper cover with the No. 4 piston TDC mark (B) on the front camshaft pulley.

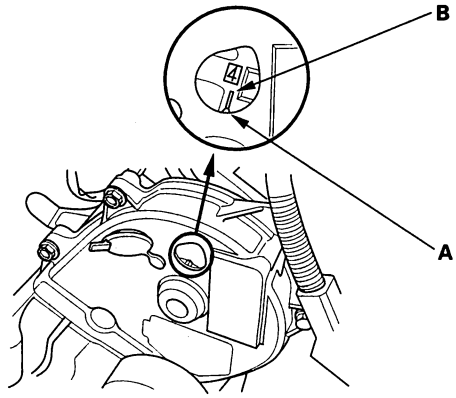

8. Check and, if necessary, adjust the valve clearance on No. 4 cylinder.

9. Rotate the crankshaft clockwise. Align the pointer (A) on the front upper cover with the No. 2 piston TDC mark (B) on the front camshaft pulley.

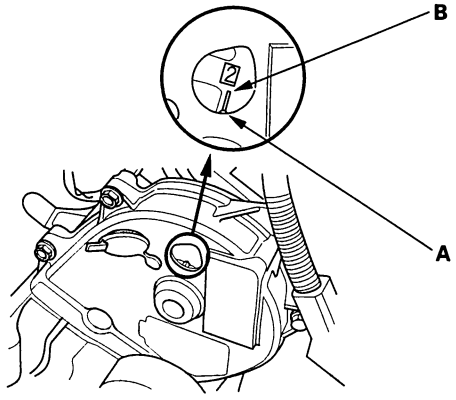

10. Check and, if necessary, adjust the valve clearance on No. 2 cylinder.

11. Rotate the crankshaft clockwise. Align the pointer (A) on the front upper cover with the No. 5 piston TDC mark (B) on the front camshaft pulley.

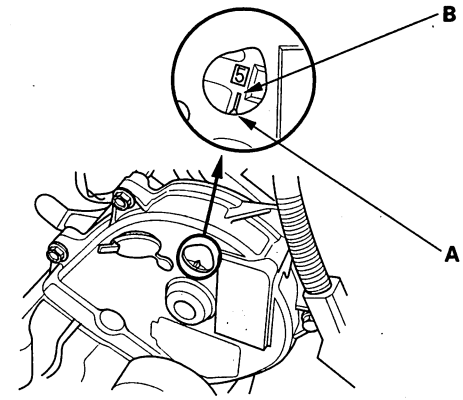

12. Check and, if necessary, adjust the valve clearance on No. 5 cylinder.

13. Rotate the crankshaft clockwise. Align the pointer (A) on the front upper cover with the No. 3 piston TDC mark (B) on the front camshaft pulley.

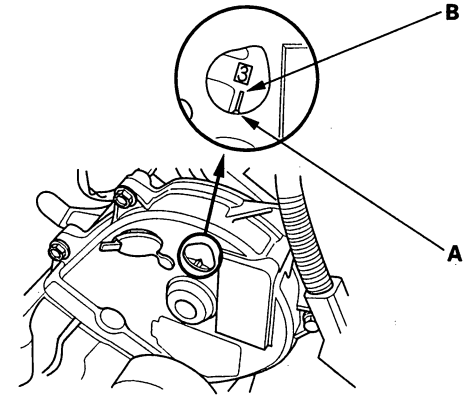

14. Check and, if necessary, adjust the valve clearance on No. 3 cylinder.

BACK

Protected by AR

15. Rotate the crankshaft clockwise. Align the pointer (A) on the front upper cover with the No. 6 piston TDC mark (B) on the front camshaft pulley.

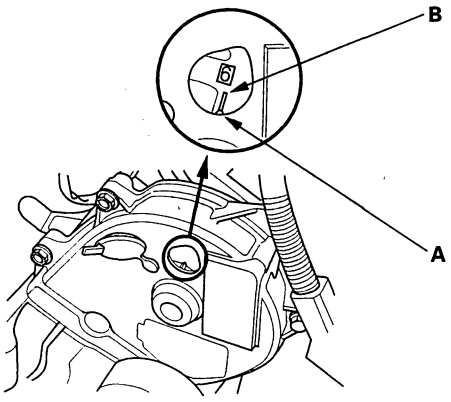

16. Check and, if necessary, adjust the valve clearance on No. 6 cylinder.

17. Install the cylinder head covers (see page 6-28).

Crankshaft Pulley Removal and Installation

Special Tools Required
- Holder handle 07JAB-001020A
- Holder attachment, 50 mm, offset 07MAB-PY3010A
- Socket, 19 mm 07JAA-001020A, or a commercially available 19 mm socket

Removal

1. Remove the right front tire/wheel.

2. Remove the splash shield.

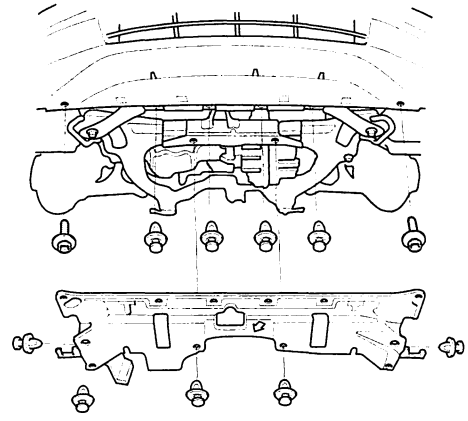

3. Remove the drive belt (see page 4-35).

4. Hold the pulley with the holder handle (A) and holder attachment (B).

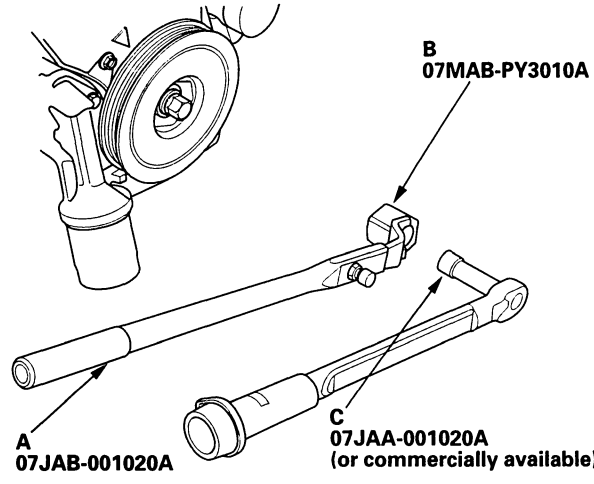

5. Remove the bolt with a heavy duty 19 mm socket (C) and breaker bar, then remove the crankshaft pulley.

(cont'd)

Protected by AR

Crankshaft Pulley Removal and Installation (cont'd)

Installation

1. Remove any oil or clean the pulleys (A), crankshaft (B), bolt (C), and washer (D). Lubricate with new engine oil as shown.

   ×: **Remove any oil**
   ○: **Clean**
   ●: **Lubricate with new engine oil**

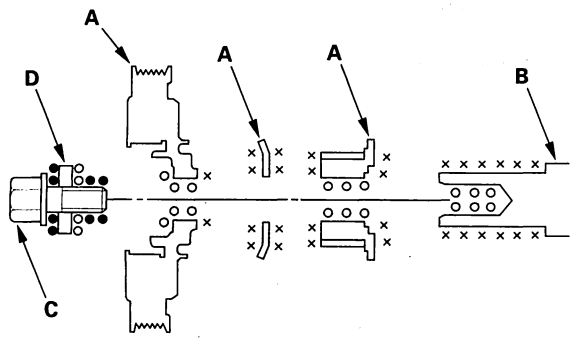

2. Install the crankshaft pulley, and tighten the bolt. Do not use an impact wrench.

   –1 Hold the pulley with the holder handle (A) and holder attachment (B), then tighten the bolt to 64 N·m (6.5 kgf·m, 47 lbf·ft) with a torque wrench and 19 mm socket (C).
   –2 Mark (D) the bolt head and crankshaft pulley as shown, then tighten the bolt an additional 60 ° (The mark on the bolt head line up with the mark on the crankshaft pulley).

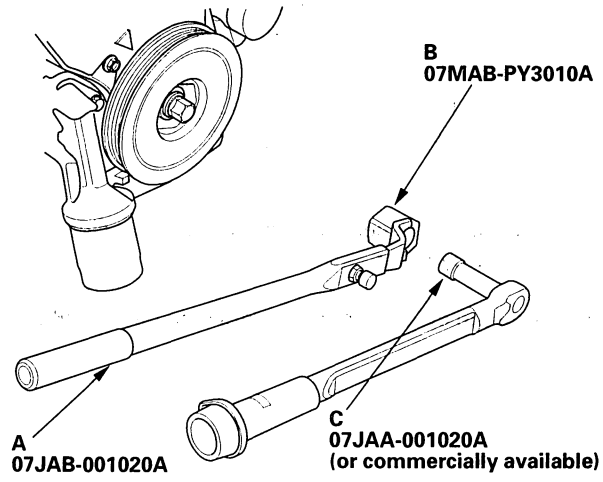

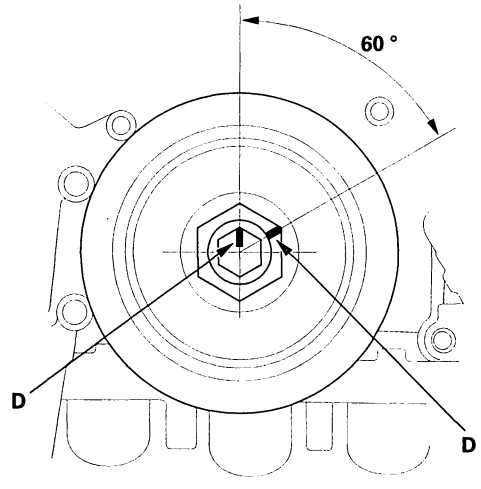

3. Install the drive belt (see page 4-35).
4. Install the splash shield.
5. Install the right front tire/wheel.

BACK

Protected by AR

Timing Belt Inspection

1. Remove the ignition coil cover.

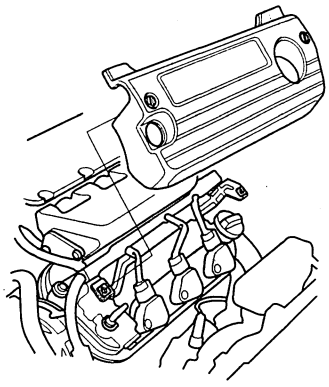

2. Remove the drive belt auto-tensioner (see page 4-37).

3. Remove the front upper cover.

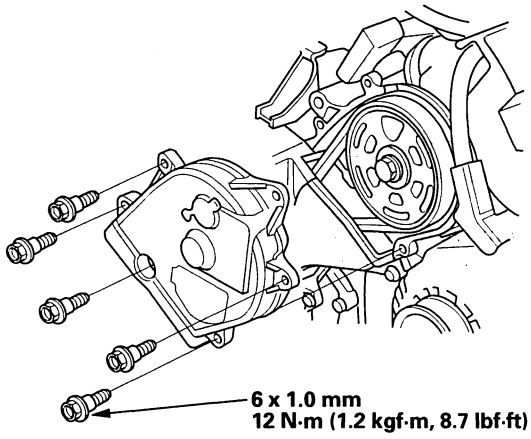

4. Inspect the timing belt for cracks and oil or coolant soaking. Replace the belt if it is cracked or soaked. Remove any oil or solvent that gets on the belt.

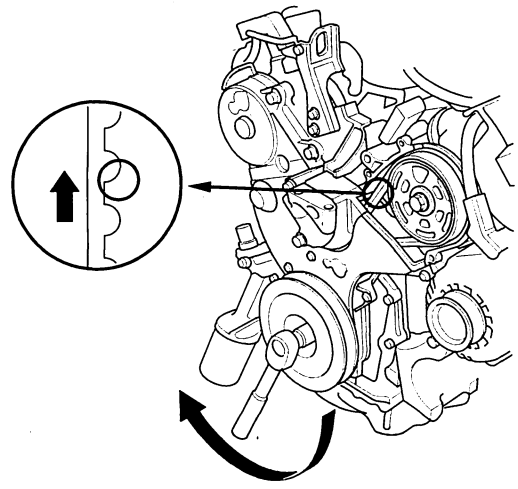

Protected by AR

Timing Belt Removal

1. Turn the crankshaft so its white mark (A) lines up with the pointer (B).

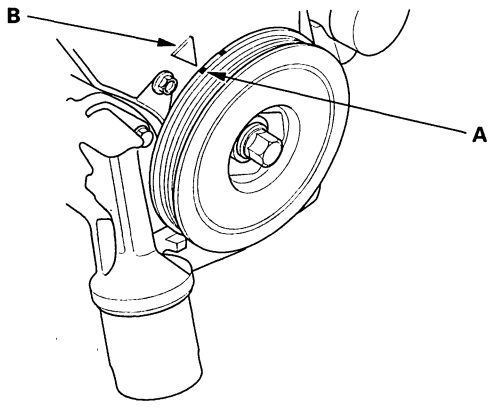

2. Check that the No. 1 piston top dead center (TDC) mark (A) on the front camshaft pulley and the pointer (B) on the front upper cover are aligned.

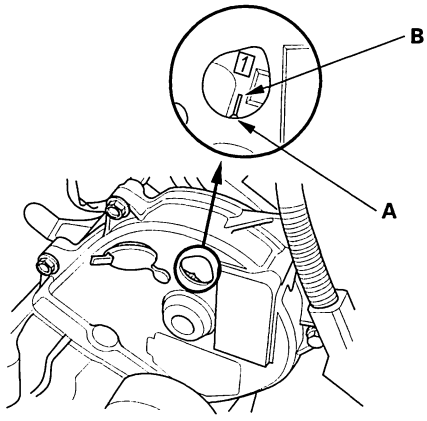

3. Remove the right front tire/wheel.

4. Remove the splash shield.

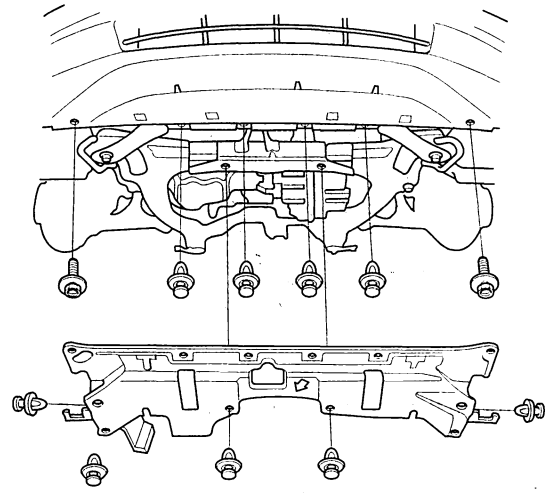

5. Remove the drive belt (see page 4-35).

6. Remove the drive belt auto-tensioner (see page 4-37).

7. Support the engine with a jack and wood block under the oil pan.

8. Remove the ground cable (A), then remove the side engine mount bracket (B).

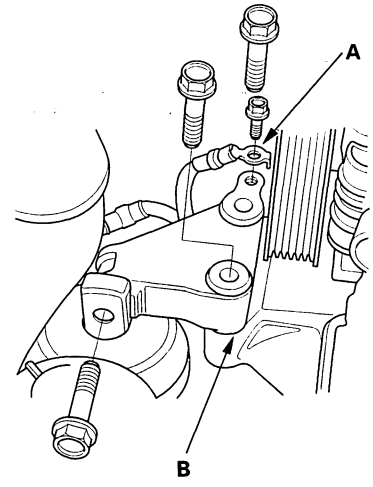

BACK

Protected by AR

9. Remove the front upper cover (A) and rear upper cover (B).

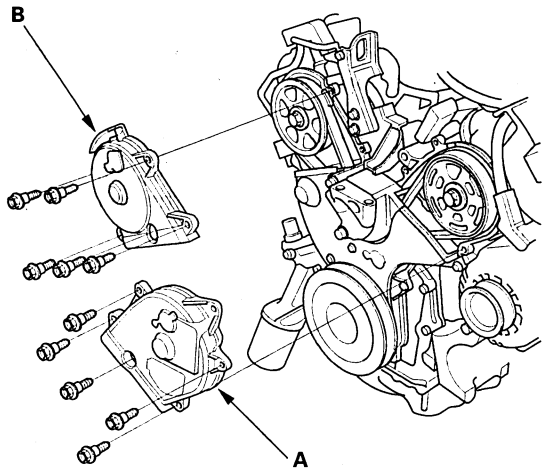

10. Remove the crankshaft pulley (see step 4 on page 6-11).

11. Remove the lower cover.

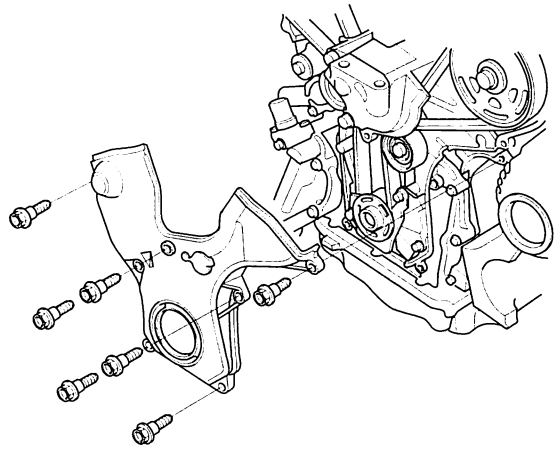

12. Remove one of the battery clamp bolts from the battery tray, and grind the end of it as shown.

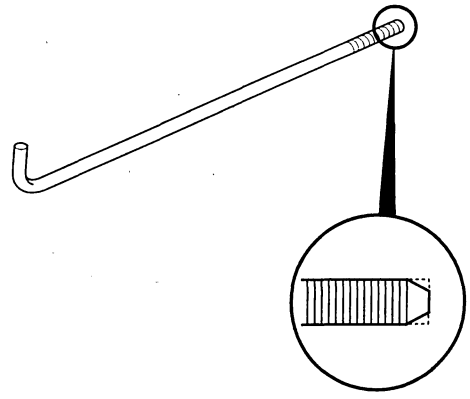

13. Screw the battery clamp bolt in as shown to hold the timing belt adjuster in its current position. Tighten it by hand; do not use a wrench.

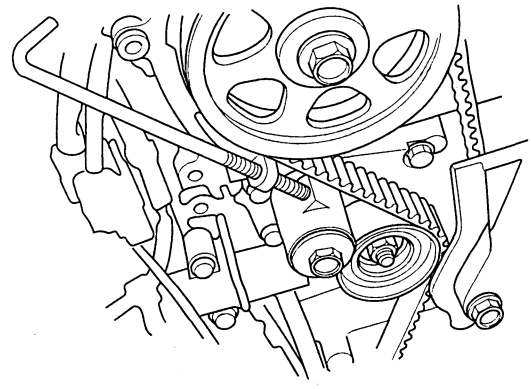

(cont'd)

Protected by AR

Timing Belt Removal (cont'd)

14. Remove the engine mount bracket.

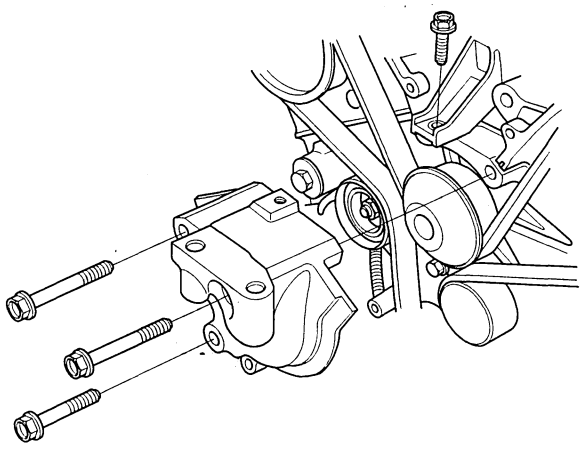

15. Remove the idler pulley bolt (A) and idler pulley (B), then remove the timing belt.

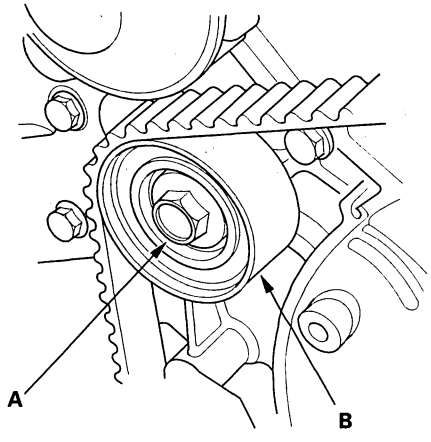

Timing Belt Installation

NOTE: The following procedure is for installation of a used belt. If you are installing a new belt, refer to the timing belt replacement procedure (see page 6-20).

1. Clean the timing belt pulleys, timing belt guide plate, and the upper and lower covers.

2. Set the timing belt drive pulley to top dead center (TDC) by aligning the TDC mark (A) on the tooth of the timing belt drive pulley with the pointer (B) on the oil pump.

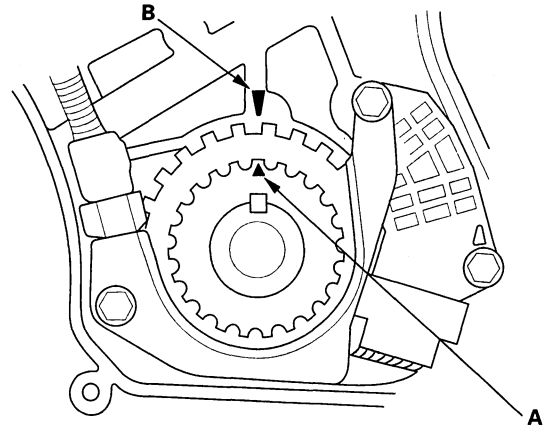

BACK

Protected by AR

3. Set the camshaft pulleys to TDC by aligning the TDC marks (A) on the camshaft pulleys with the pointers (B) on the back covers.

FRONT:

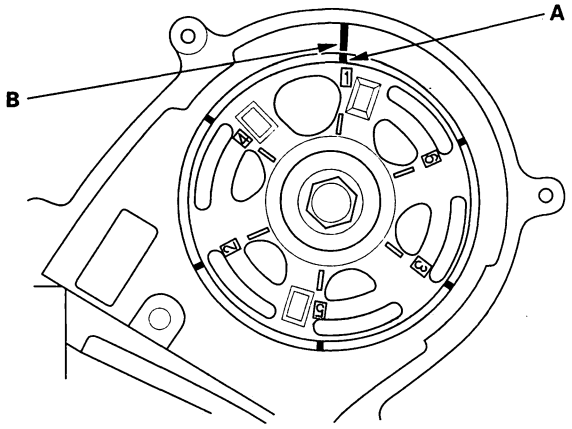

REAR:

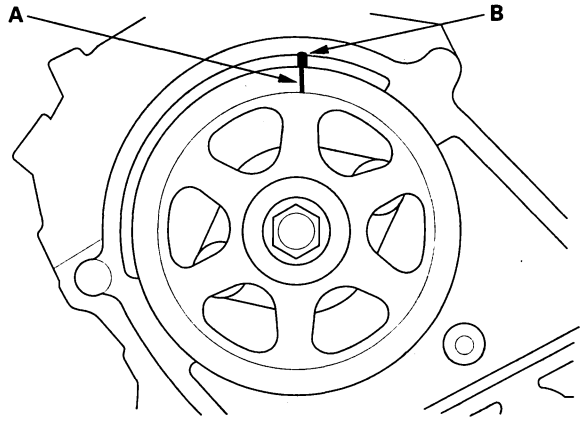

4. Apply liquid thread lock (P/N 08713-0001) to the idler pulley bolt, then loosely install the idler pulley.

5. If the auto-tensioner has extended and the timing belt cannot be installed, perform the timing belt replacement procedure (see page 6-20).

6. Install the timing belt in a counterclockwise sequence starting with the drive pulley. Take care not to damage the timing belt when installing it.

   –1 Drive pulley (A)
   –2 Idler pulley (B)
   –3 Front camshaft pulley (C)
   –4 Water pump pulley (D)
   –5 Rear camshaft pulley (E)
   –6 Adjusting pulley (F)

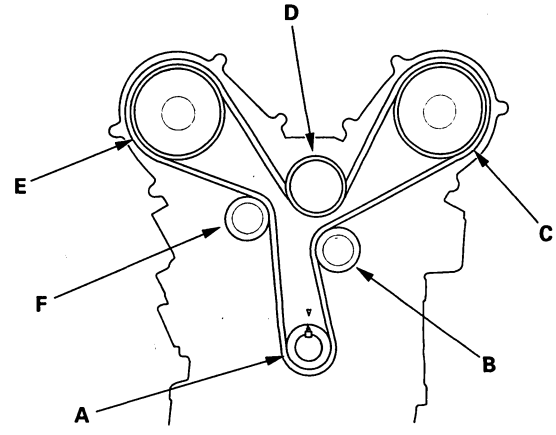

7. Tighten the idler pulley bolt.

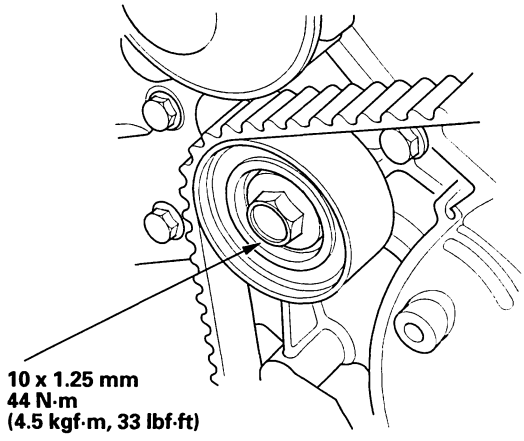

(cont'd)

Protected by AR

Timing Belt Installation (cont'd)

8. Remove the battery clamp bolt from the back cover.

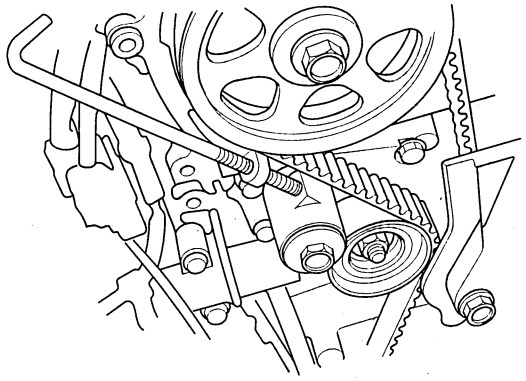

9. Install the engine mount bracket.

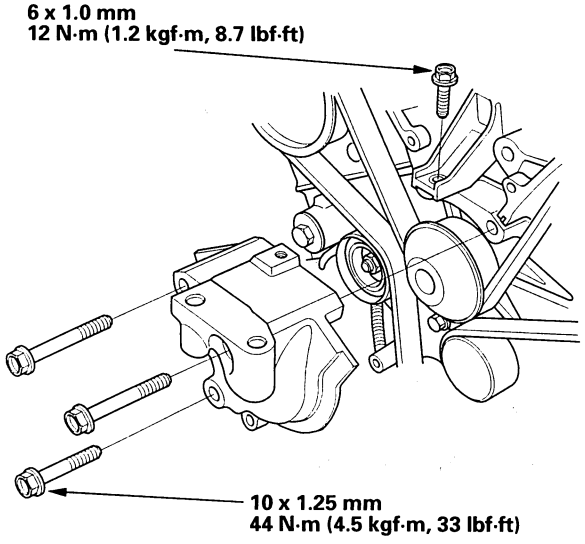

10. Install the timing belt guide plate as shown.

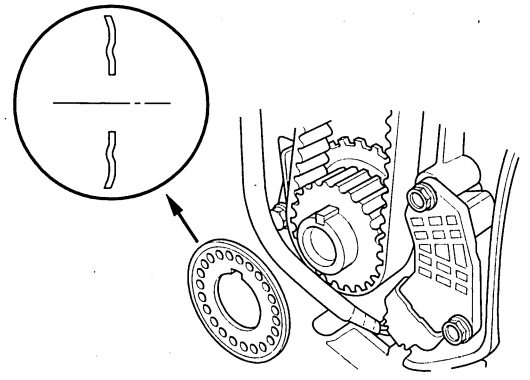

11. Install the lower cover.

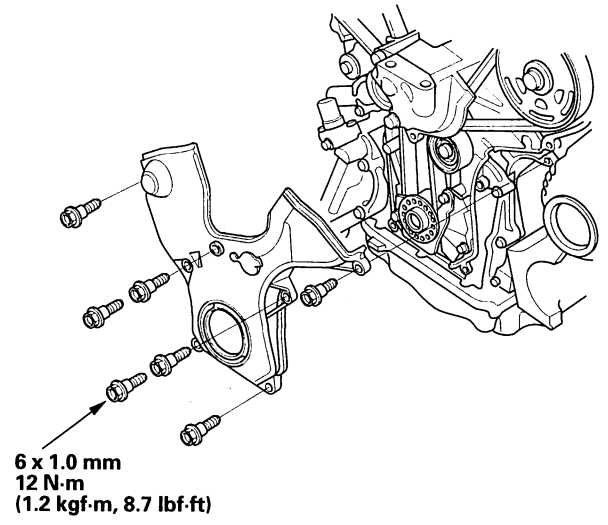

12. Install the crankshaft pulley (see page 6-12).

BACK

Protected by AR

13. Install the front upper cover (A) and rear upper cover (B).

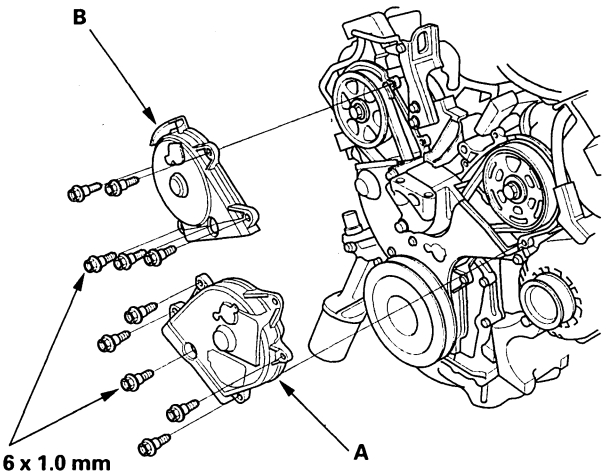

14. Rotate the crankshaft pulley about five or six turns clockwise so the timing belt positions itself on the pulleys.

15. Turn the crankshaft pulley so its white mark (A) lines up with the pointer (B).

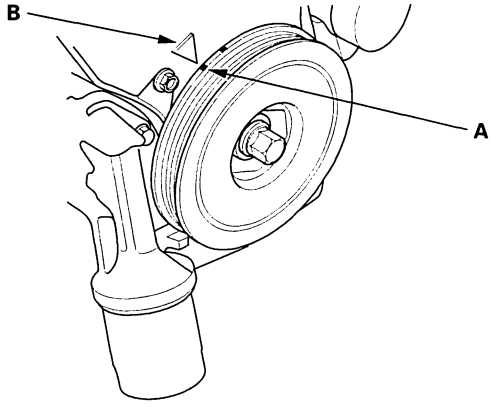

16. Check the camshaft pulley marks.

- If the camshaft pulley marks are at TDC, go to step 17.
- If the camshaft pulley marks are not at TDC, remove the timing belt and repeat steps 2 through 16.

FRONT CAMSHAFT PULLEY:

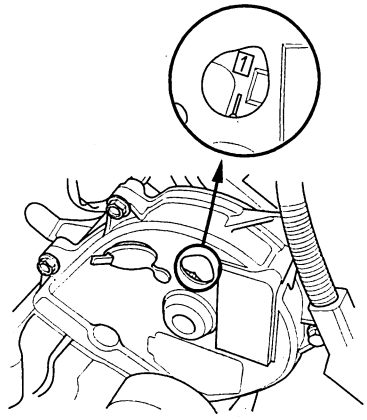

REAR CAMSHAFT PULLEY:

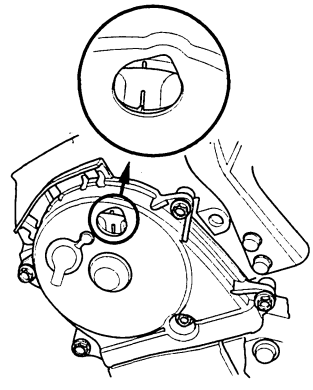

(cont'd)

Protected by AR

Timing Belt Installation (cont'd)

17. Install the side engine mount bracket (A), then tighten the bolts in the numbered sequence shown.

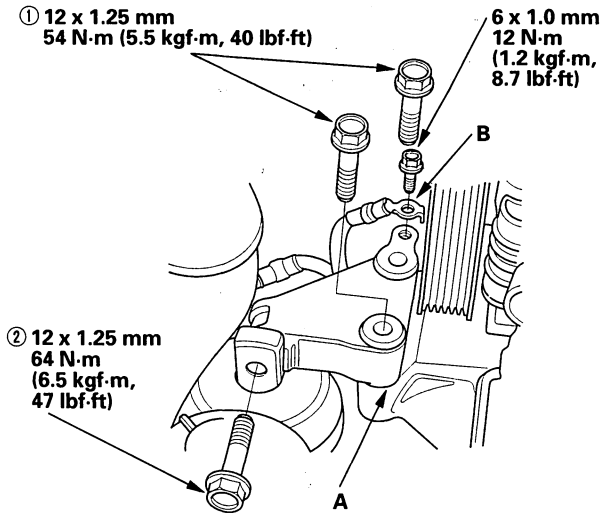

18. Install the ground cable (B).
19. Install the drive belt auto-tensioner (see page 4-37).
20. Install the drive belt (see page 4-35).
21. Install the splash shield.
22. Install the right front tire/wheel.
23. Do the crankshaft position (CKP) pattern clear/CKP pattern learn procedure (see page 11-4).

Timing Belt Replacement

1. Remove the timing belt (see page 6-14).
2. Clean the timing belt pulleys, timing belt guide plate, and the upper and lower covers.
3. Set the timing belt drive pulley to TDC by aligning the TDC mark (A) on the tooth of the timing belt drive pulley with the pointer (B) on the oil pump.

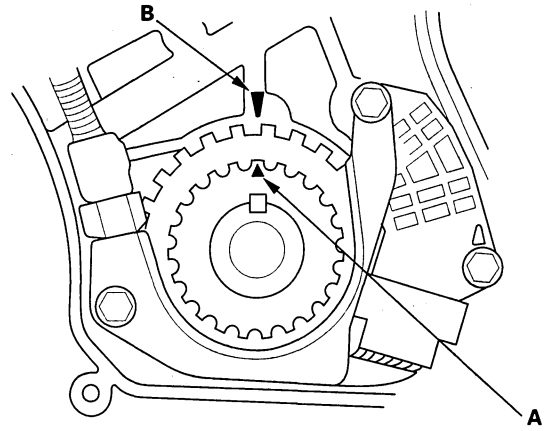

BACK

Protected by AR

4. Set the camshaft pulleys to TDC by aligning the TDC marks (A) on the camshaft pulleys with the pointers (B) on the back covers.

FRONT:

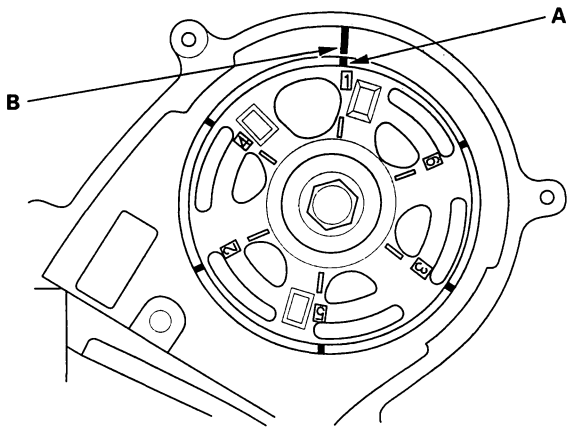

REAR:

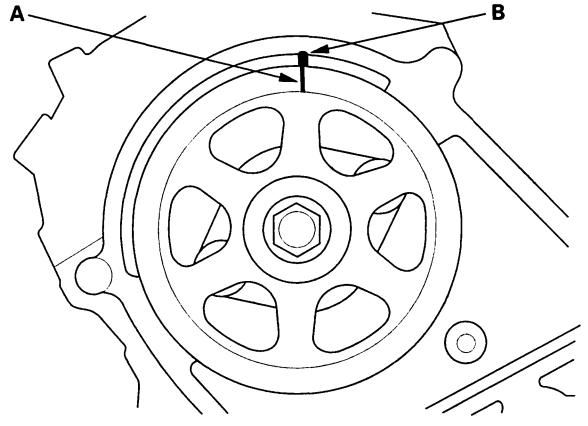

5. Remove the battery clamp bolt from the back cover.

6. Remove the auto-tensioner.

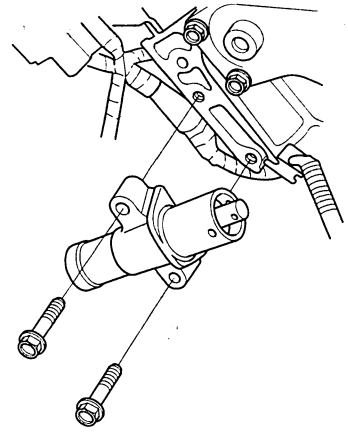

7. Align the holes on the rod and housing of the auto-tensioner.

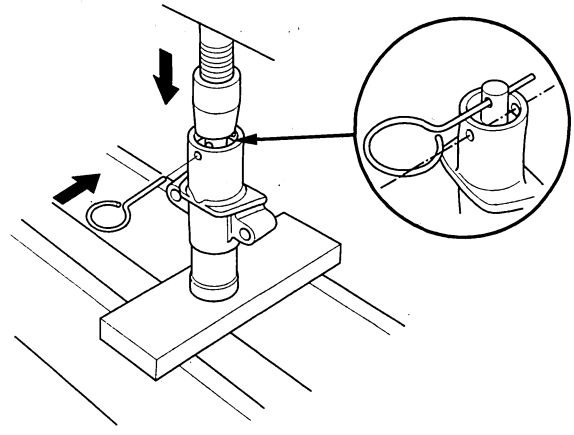

8. Use a hydraulic press to slowly compress the auto-tensioner. Insert a 2.0 mm (0.08 in.) pin through the housing and the rod.

NOTE: The compression pressure should not exceed 9,800 N (1,000 kgf, 2,200 lbf).

(cont'd)

Protected by AR

Timing Belt Replacement (cont'd)

9. Install the auto-tensioner.

   NOTE: Make sure the pin stays in place.

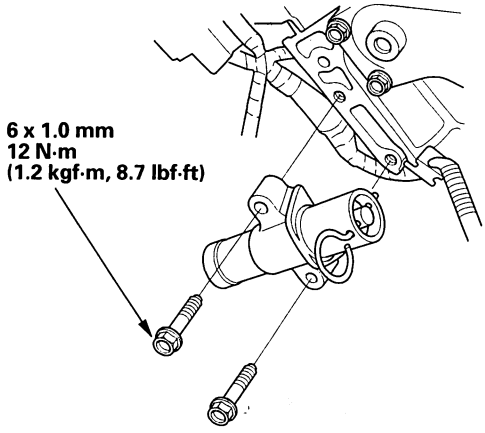

10. Screw the battery clamp bolt in as shown to hold the timing belt adjuster. Tighten it by hand; do not use a wrench.

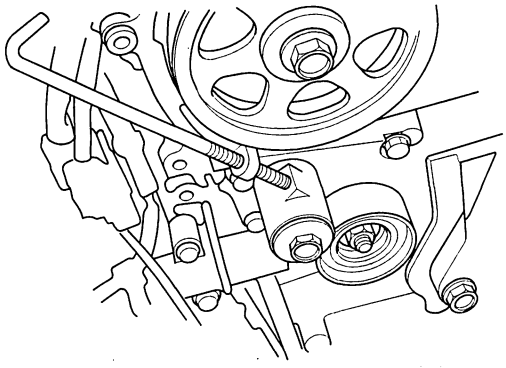

11. Apply liquid thread lock (P/N 08713-0001) to the idler pulley bolt, then loosely install the idler pulley.

12. Install the timing belt in a counterclockwise sequence starting with the drive pulley.

   –1 Drive pulley (A)
   –2 Idler pulley (B)
   –3 Front camshaft pulley (C)
   –4 Water pump pulley (D)
   –5 Rear camshaft pulley (E)
   –6 Adjusting pulley (F)

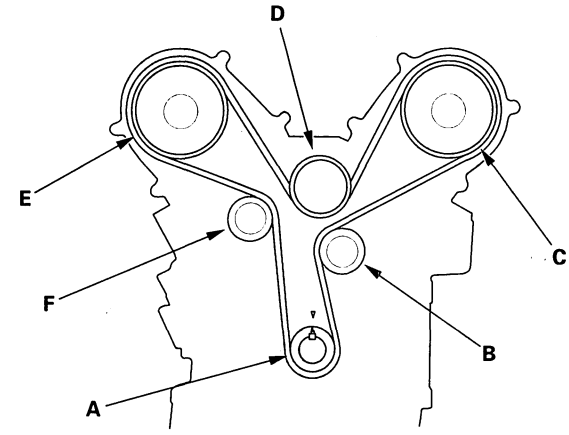

13. Tighten the idler pulley bolt.

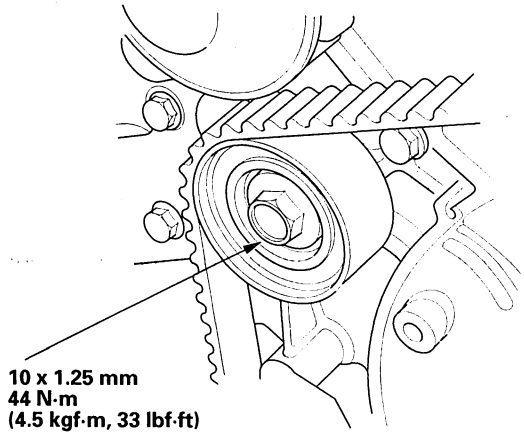

BACK

Protected by AR

14. Remove the pin from the auto-tensioner.

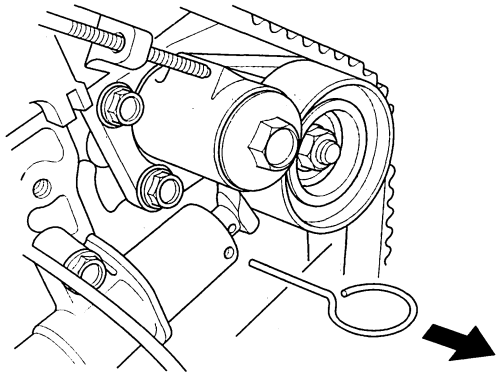

15. Remove the battery clamp bolt from the back cover.

16. Install the engine mount bracket.

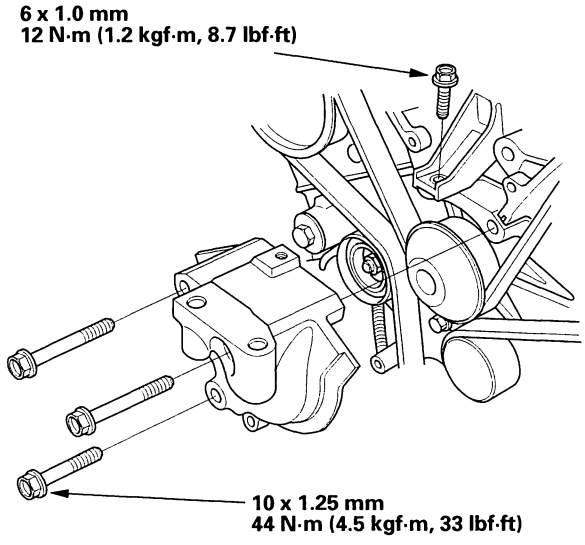

17. Install the timing belt guide plate as shown.

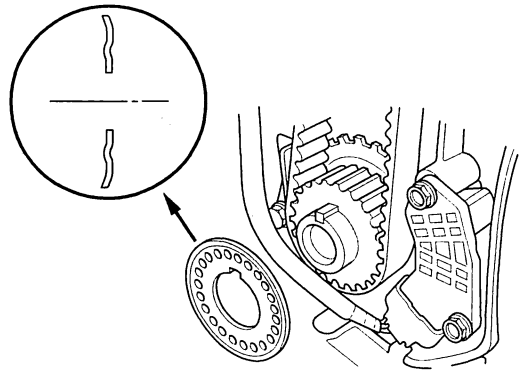

(cont'd)

Protected by AR

Timing Belt Replacement (cont'd)

18. Install the lower cover.

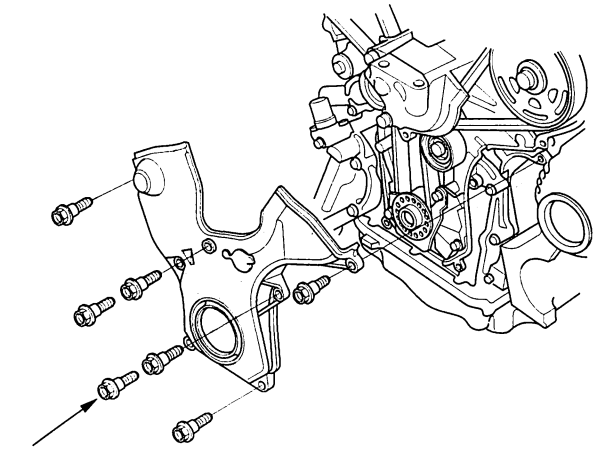

19. Install the crankshaft pulley (see page 6-12).

20. Install the front upper cover (A) and rear upper cover (B).

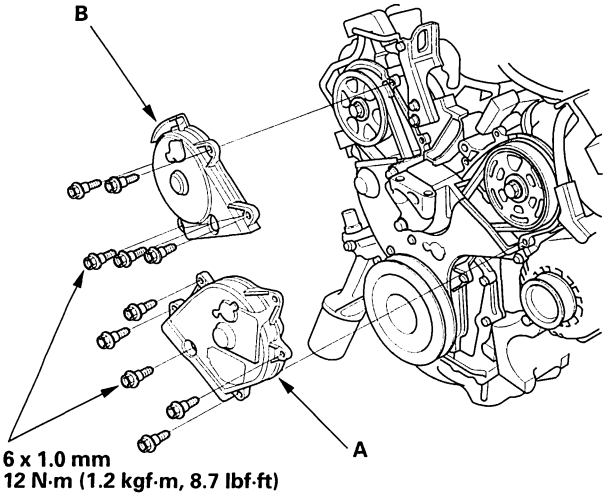

21. Rotate the crankshaft pulley about five or six turns clockwise so the timing belt positions itself on the pulleys.

22. Turn the crankshaft pulley so its white mark (A) lines up with the pointer (B).

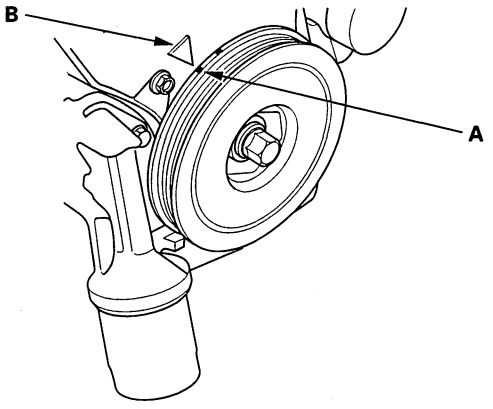

BACK

Protected by AR

23. Check the camshaft pulley marks.

    - If the camshaft pulley marks are at TDC, go to step 24.
    - If the camshaft pulley marks are not at TDC, remove the timing belt and repeat steps 2 through 23.

FRONT CAMSHAFT PULLEY:

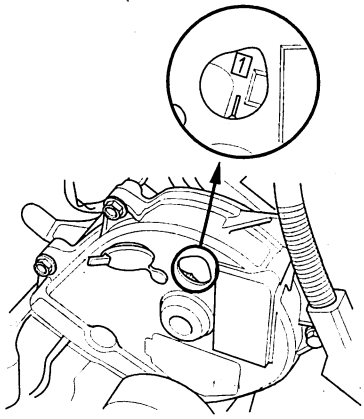

REAR CAMSHAFT PULLEY:

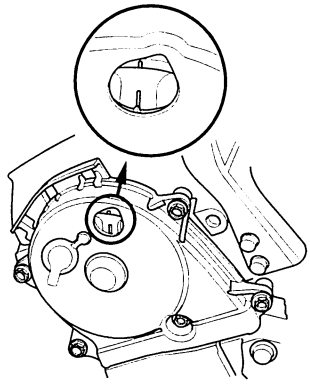

24. Install the side engine mount bracket (A), then tighten the bolts in the numbered sequence shown.

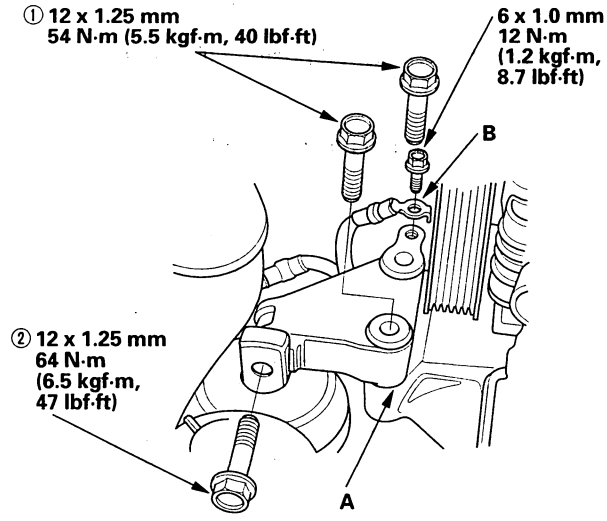

25. Install the ground cable (B).
26. Install the drive belt auto-tensioner (see page 4-37).
27. Install the drive belt (see page 4-35).
28. Install the splash shield.
29. Install the right front tire/wheel.
30. Do the crankshaft position (CKP) pattern clear/CKP pattern learn procedure (see page 11-4).

Protected by AR

Timing Belt Drive Pulley Replacement

1. Remove the timing belt (see page 6-14).
2. Remove the crankshaft position (CKP) sensor (see page 11-220).
3. Remove the timing belt drive pulley.

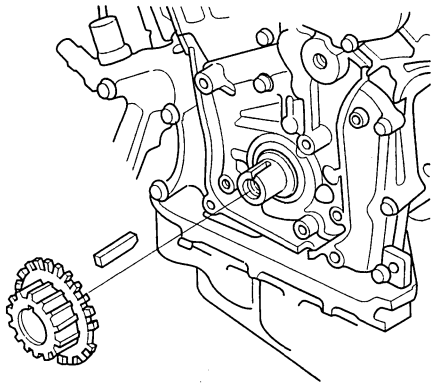

4. Install the new timing belt drive pulley.
5. Install the CKP sensor (see page 11-220).
6. Install the timing belt (see page 6-16).

Timing Belt Adjuster Replacement

1. Remove the timing belt (see page 6-14).
2. Remove the auto-tensioner (see step 5 on page 6-17).
3. Remove the bolt (A), then remove the timing belt adjuster (B) and collar (C).

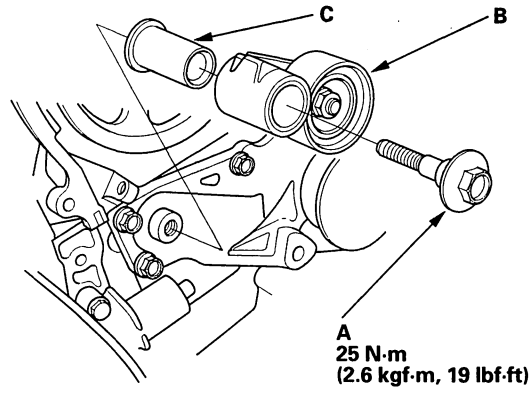

4. Install the timing belt adjuster.
5. Install the timing belt (see page 6-16).

BACK

Protected by AR

Cylinder Head Cover Removal

1. Remove the intake manifold (see page 9-3).
2. Remove the six ignition coils (see page 4-20).
3. Remove the three bolts (A) securing the harness holder, and remove the dipstick (B).

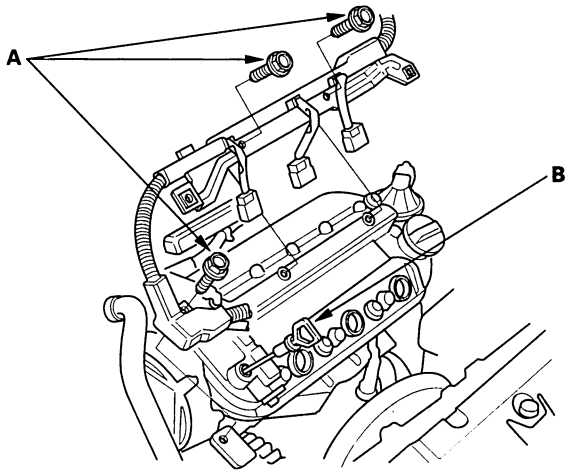

4. Remove the bolt (A) securing the power steering hose clamp.

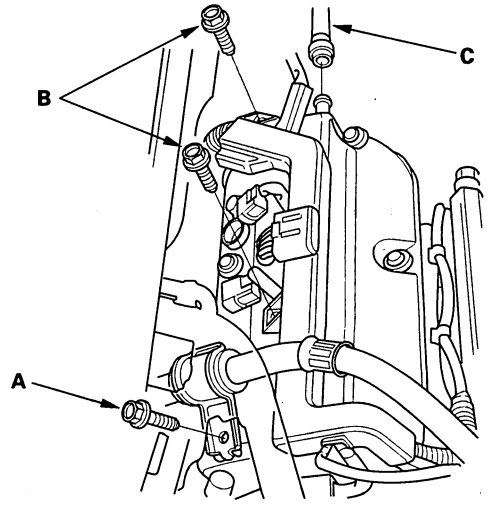

5. Remove the two bolts (B) securing the harness holder.
6. Remove the breather hose (C).
7. Remove the cylinder head covers.

FRONT:

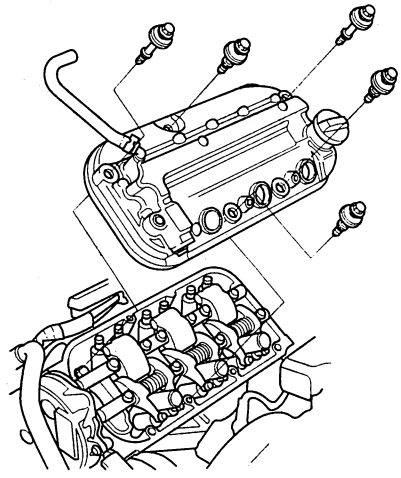

REAR:

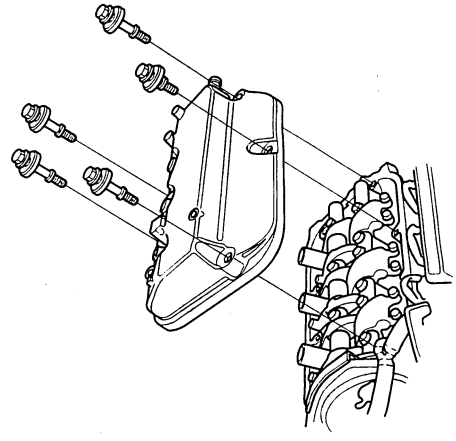

BACK

Protected by AR

Cylinder Head Cover Installation

1. Check the spark plug seals for damage. If the seal is damaged, replace it.
2. Clean the head cover contacting surfaces with a shop towel.
3. Set the spark plug seals (A) on the spark plug tubes, and install the cylinder head covers (B).

FRONT:

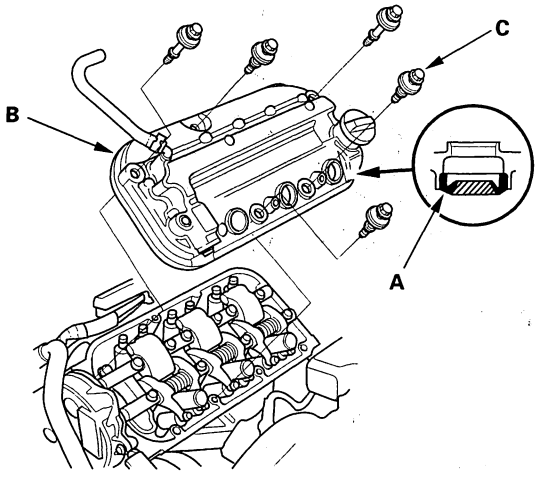

REAR:

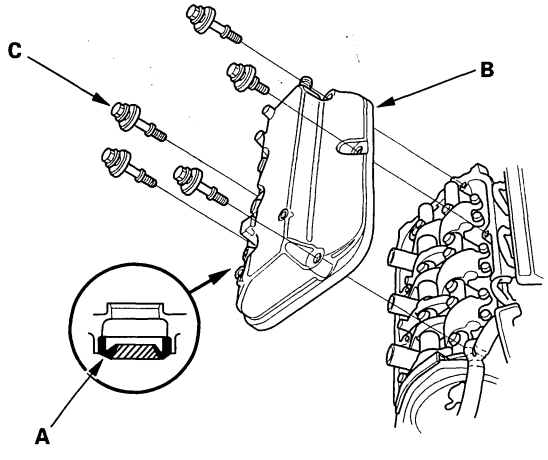

4. Visually check the spark plug seals for damage.
5. Inspect the cover washers (C). Replace any washer that is damaged or deteriorated.
6. Tighten the bolts in two or three steps. In the final step, tighten all bolts in sequence, 12 N·m (1.2 kgf·m, 8.7 lbf·ft).

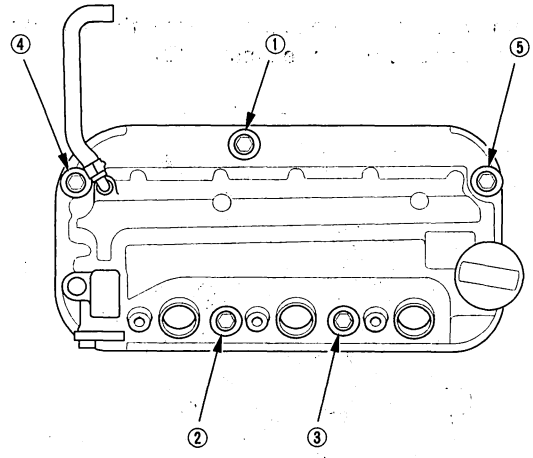

7. Install the breather hose (A).

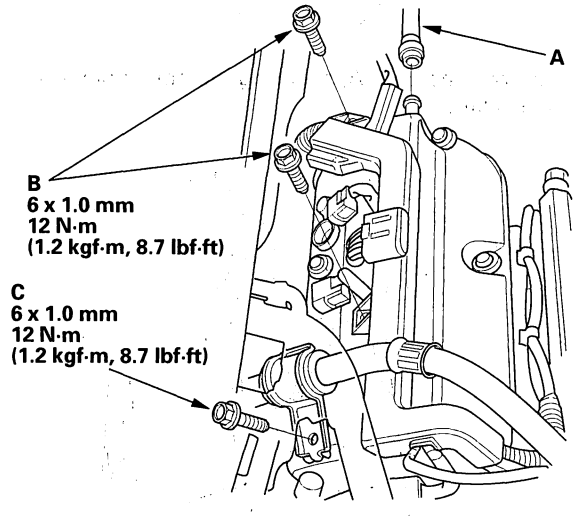

8. Tighten the two bolts (B) securing the harness holder.
9. Tighten the bolt (C) securing the power steering hose bracket.

BACK

Protected by AR

10. Tighten the three bolts (A) securing the harness holder, and install the dipstick (B).

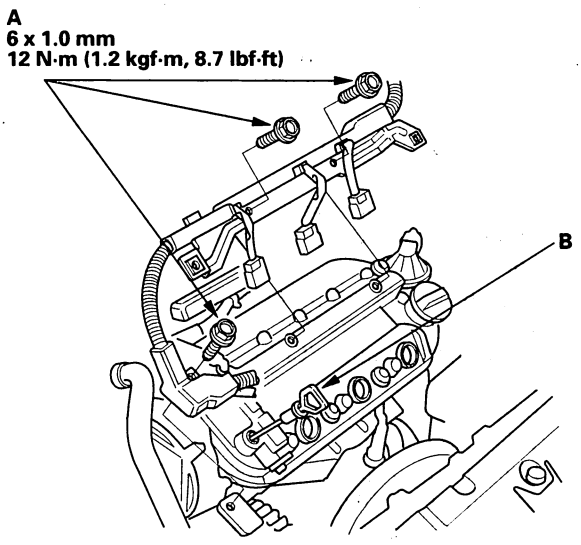

11. Install the six ignition coils (see page 4-20).

12. Install the intake manifold (see page 9-4).

Protected by AR

Cylinder Head Removal

NOTE:
- Use fender covers to avoid damaging painted surfaces.
- To avoid damage, unplug the wiring connectors carefully while holding the connector portion.
- To avoid damaging the cylinder head, wait until the engine coolant temperature drops below 100 °F (38 °C) before loosening the cylinder head bolts.
- Mark all wiring and hoses to avoid misconnection. Also, be sure that they do not contact other wiring or hoses, or interfere with other parts.

1. Make sure you have the anti-theft codes for the radio and navigation system, then write down the customer's audio presets. Make sure the ignition switch is OFF.
2. Relieve the fuel pressure (see page 11-315).
3. Disconnect the negative cable from the battery.
4. Drain the engine coolant (see page 10-6).
5. Remove the air cleaner, refer to the 2003-2006 Accord Service Manual (see page 11-361).
6. Remove the drive belt (see page 4-35).
7. Remove the timing belt (see page 6-14).
8. Remove the power steering (P/S) pump (A), and P/S hose clamp (B).

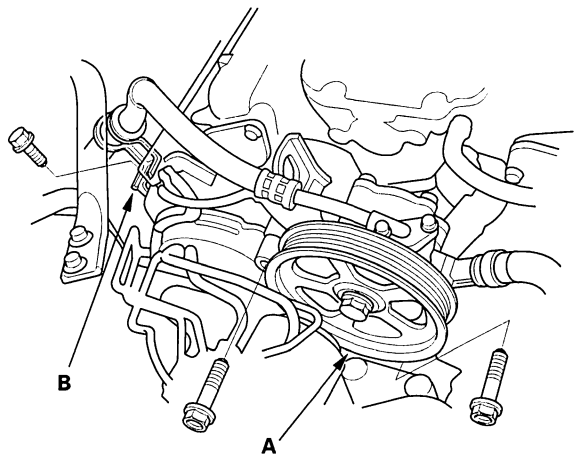

9. Remove the alternator (see page 4-38).
10. Remove the intake manifold (see page 9-3).
11. Remove the six ignition coils (see page 4-20).
12. Remove these engine wire harness connectors and wire harness clamps from the cylinder head.
    - Six injector connectors
    - Engine coolant temperature (ECT) sensor 1 connector
    - Engine coolant temperature (ECT) sensor 2 connector (2005-2006 models)
    - Crankshaft position (CKP) sensor connector
    - Exhaust gas recirculation (EGR) valve connector
    - Rocker arm oil control solenoid (VTEC solenoid valve) connector
    - Rocker arm oil pressure switch (VTEC oil pressure switch) connector
    - Oil pressure switch connector
    - Two air fuel ratio (A/F) sensor connectors
    - Two secondary heated oxygen sensor (secondary HO2S) connectors
13. Remove the upper radiator hose (A), and lower radiator hose (B).

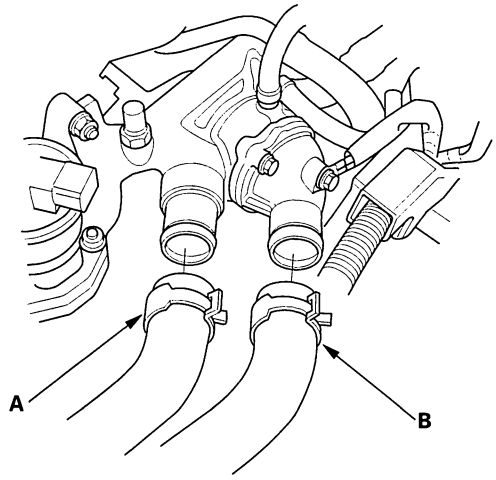

BACK

Protected by AR

14. Remove the heater hose (A) and water bypass hoses (B).

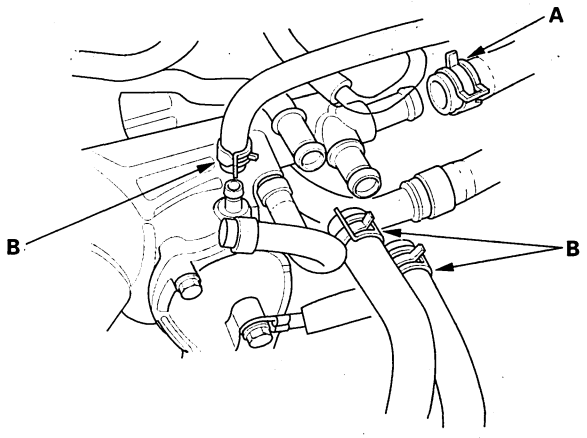

15. Remove the ground cable (A).

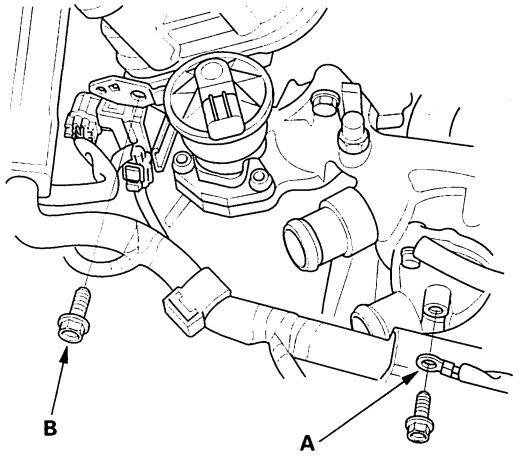

16. Remove the bolt (B) securing the harness bracket.

17. Remove the fuel rails.

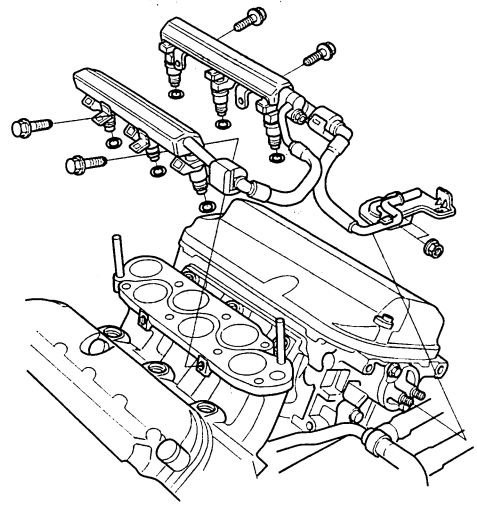

18. Remove the bolt securing the harness bracket.

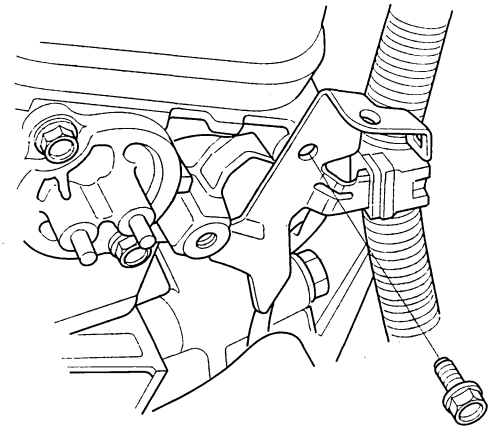

(cont'd)

Protected by AR

Cylinder Head Removal (cont'd)

19. Remove the front and rear warm up three way catalytic converter (WU-TWC) (see page 11-354).

20. Remove the water passage.

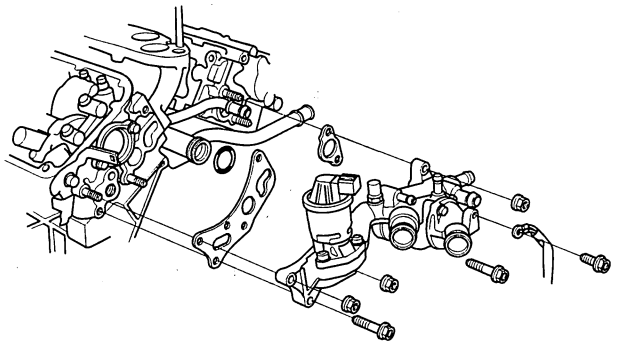

21. Remove the front and rear camshaft pulleys (A) and front and rear back covers (B).

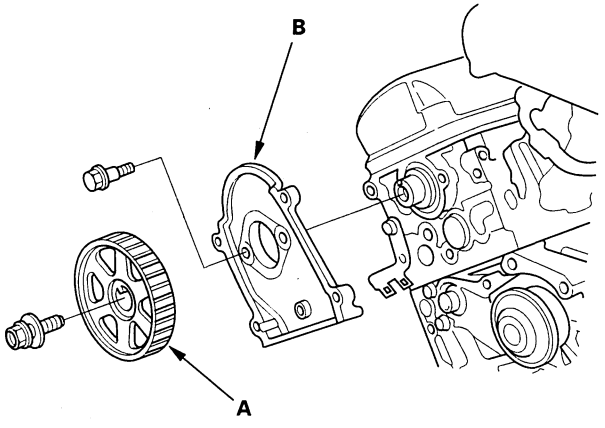

22. Remove the cylinder head covers (see page 6-27).

23. Remove the cylinder head bolts. To prevent warpage, unscrew the bolts in sequence 1/3 turn at a time; repeat the sequence until all bolts are loosened.

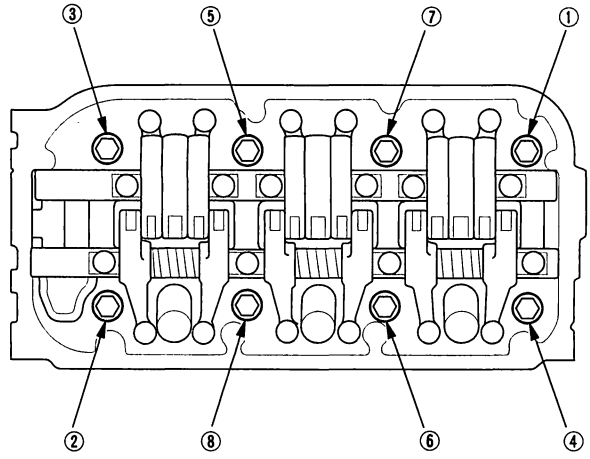

24. Remove the cylinder heads.

BACK

Protected by AR

Camshaft Replacement

FRONT

1. Make sure you have the anti-theft codes for the radio and the navigation system, then write down the customer's audio presets. Make sure the ignition switch is OFF.
2. Disconnect the negative cable from the battery first, then disconnect the positive cable.
3. Remove the battery.
4. Drain the engine coolant (see page 10-6).
5. Remove the upper radiator hose.

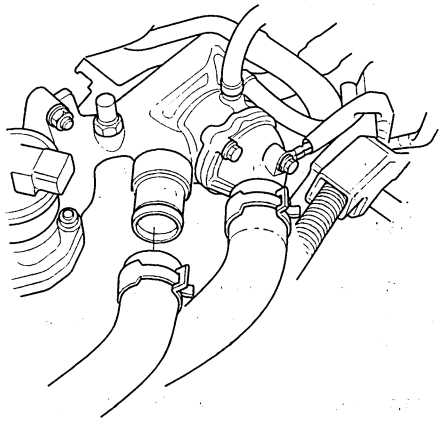

6. Remove the exhaust gas recirculation (EGR) valve (see page 11-368).
7. Remove the timing belt (see page 6-14).
8. Remove the rocker arm assembly (see page 6-35).
9. Remove the front camshaft pulley.
10. Remove the thrust cover (A), then remove the front camshaft (B).

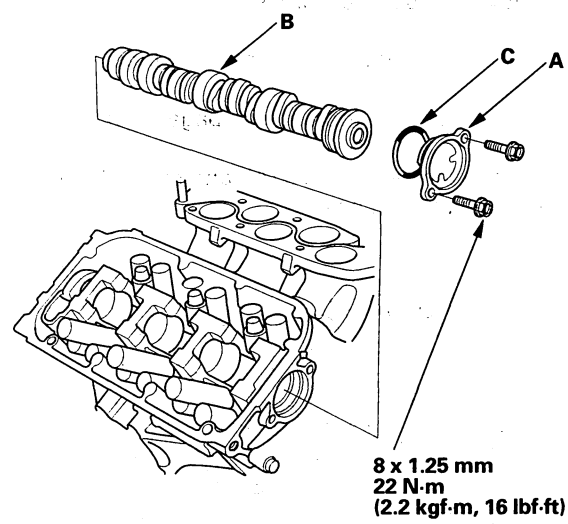

11. Install the front camshaft in the reverse order of removal with a new O-ring (C). Apply new engine oil to the journals and camshaft lobes.
12. Apply new engine oil to the threads of the camshaft pulley mounting bolt, then install the front camshaft pulley (see step 11 on page 6-50).
13. Install the rocker arm assembly, then tighten the mounting bolts (see step 8 on page 6-49).
14. Install the timing belt (see page 6-16).
15. Adjust the valve clearance (see page 6-8).
16. Fill the radiator with engine coolant and bleed the air out (see step 8 on page 10-7).
17. Install the battery. Clean the battery posts and cable terminals with sandpaper, then assemble them and apply grease to prevent corrosion.
18. Do the crankshaft position (CKP) pattern clear/CKP pattern learn procedure (see page 11-4).
19. Enter the anti-theft codes for the radio and the navigation system, then enter the customer's audio and XM radio channel presets. Set the clock.
20. Do the power window control unit reset procedure, refer to the 2003-2006 Accord Service Manual (see page 22-232).

(cont'd)

Protected by AR

Camshaft Replacement (cont'd)

REAR

1. Relieve the fuel pressure (see page 11-315).
2. Remove the under-hood fuse/relay box.
3. Drain the engine coolant (see page 10-6).
4. Remove the heater hose (A), and two nuts (B) securing the fuel line.

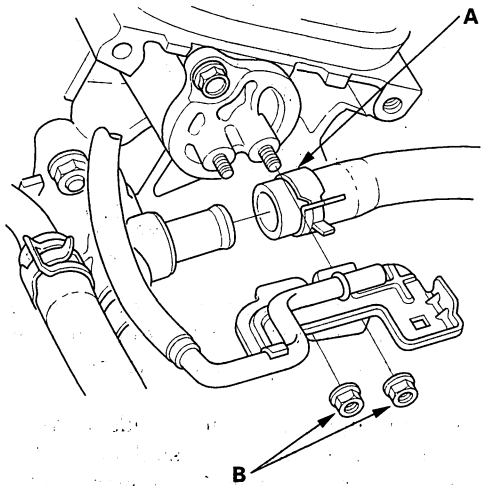

5. Remove the timing belt (see page 6-14).
6. Remove the rocker arm assembly (see page 6-35).
7. Remove the rear camshaft pulley.
8. Remove the thrust cover (A), then remove the rear camshaft (B).

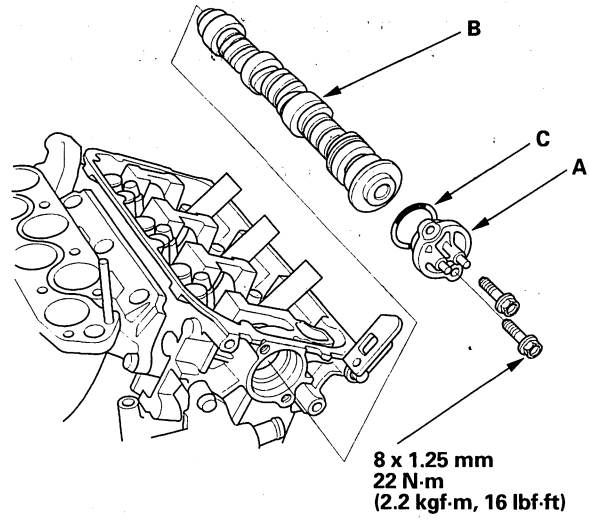

9. Install the rear camshaft in the reverse order of removal with a new O-ring (C). Apply new engine oil to the journals and camshaft lobes.
10. Apply new engine oil to the threads of the camshaft pulley mounting bolt, then install the rear camshaft pulley (see step 11 on page 6-50).
11. Install the rocker arm assembly, then tighten the mounting bolts (see step 8 on page 6-49).
12. Install the timing belt (see page 6-16).
13. Adjust the valve clearance (see page 6-8).
14. Fill the radiator with engine coolant and bleed the air out (see step 8 on page 10-7).
15. Do the crankshaft position (CKP) pattern clear/CKP pattern learn procedure (see page 11-4).

BACK

Protected by AR

Cylinder Head Inspection for Warpage

1. Remove the cylinder head (see page 6-30).
2. Inspect the camshaft (see page 6-39).
3. Check the cylinder head for warpage. Measure along the edges, and three ways across the center.
   - If warpage is less than 0.05 mm (0.002 in.), cylinder head resurfacing is not required.
   - If warpage is between 0.05 mm (0.002 in.) and 0.2 mm (0.008 in.), resurface the cylinder head.
   - Maximum resurface limit is 0.2 mm (0.008 in.) based on a height of 121 mm (4.76 in.).

Cylinder Head Height
Standard (New): 120.95—121.05 mm (4.762—4.766 in.)

PRECISION STRAIGHT EDGE

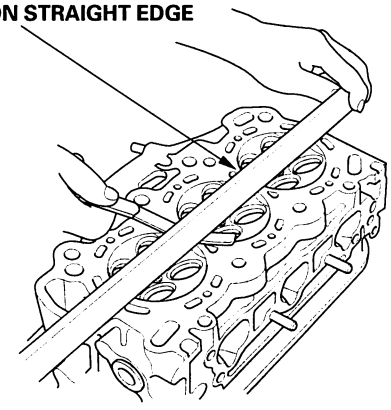

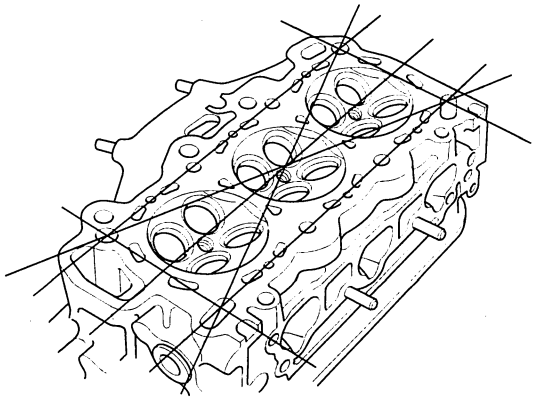

Rocker Arm Assembly Removal

1. Remove the cylinder head cover (see page 6-27).
2. Loosen the adjusting screws (A).

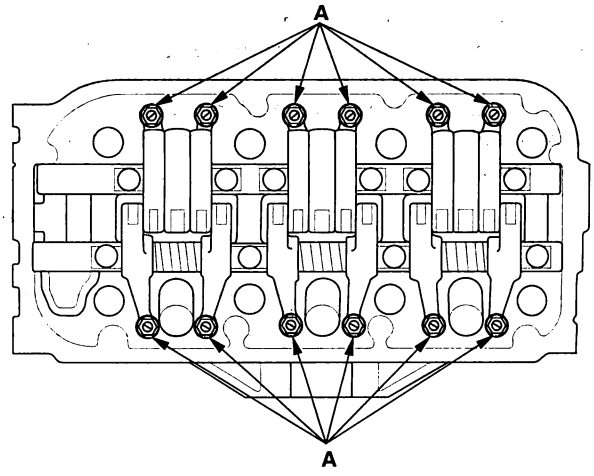

3. Remove the bolts and the rocker arm assembly.
   - –1 Unscrew the rocker shaft mounting bolts two turns at a time, in a crisscross pattern, to prevent damaging the valves or rocker arm assembly.
   - –2 When removing the rocker arm assembly, do not remove the rocker shaft mounting bolts. The bolts will keep the springs and the rocker arms on the shafts.

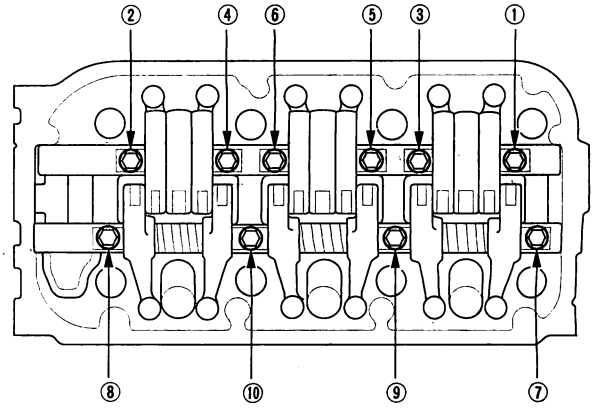

Protected by AR

Rocker Arm and Shaft Disassembly/Reassembly

NOTE:
- Identify parts as they are removed so they can be reinstalled in their original locations.
- Inspect the rocker shafts and rocker arms (see page 6-37).
- Rocker arms must be installed in the same positions if reused.
- When removing or installing the rocker arm assembly, do not remove the rocker shaft mounting bolts. The bolts will keep the springs and rocker arms on the shaft.
- Bundle the intake rocker arms with rubber bands to keep them together as a set.
- Prior to reassembling, clean all the parts in solvent, dry them and apply new engine oil to any contact points.
- When replacing the intake rocker arm assembly, remove the fastening hardware from the new intake rocker arm assembly.

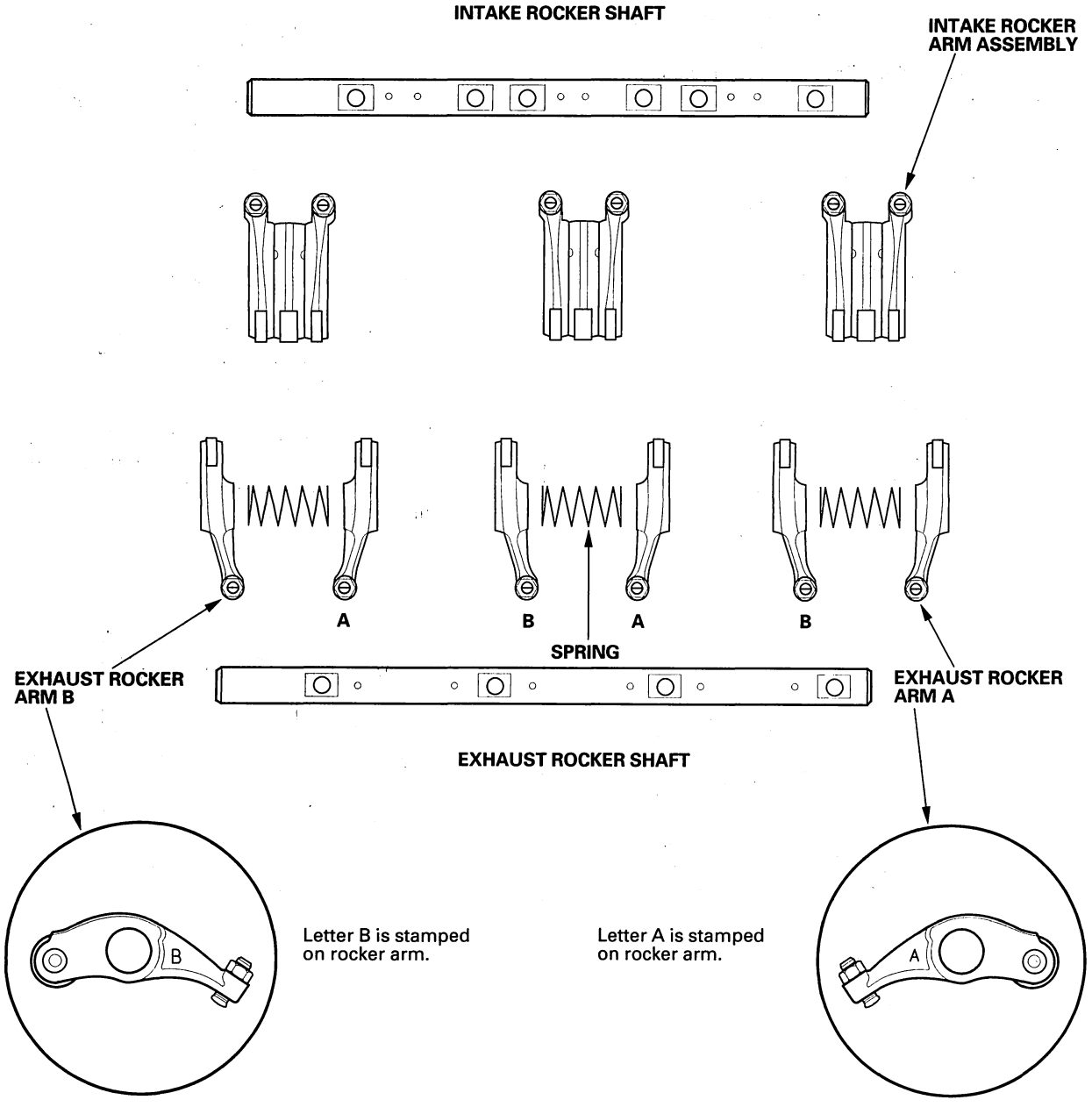

BACK

Protected by AR

Rocker Arm and Shaft Inspection

1. Remove the rocker arm assembly (see page 6-35), then disassemble the rocker arm assembly (see page 6-36).

2. Measure the diameter of the shaft at the first rocker location.

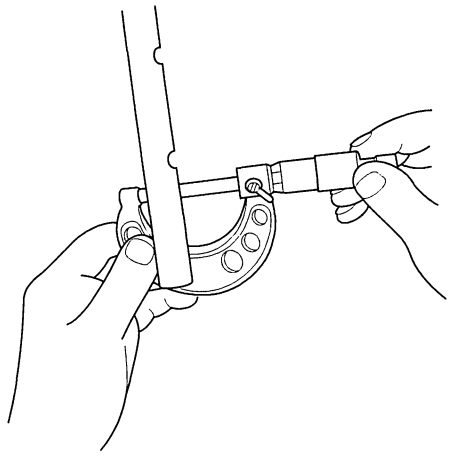

3. Zero the gauge (A) to the shaft diameter.

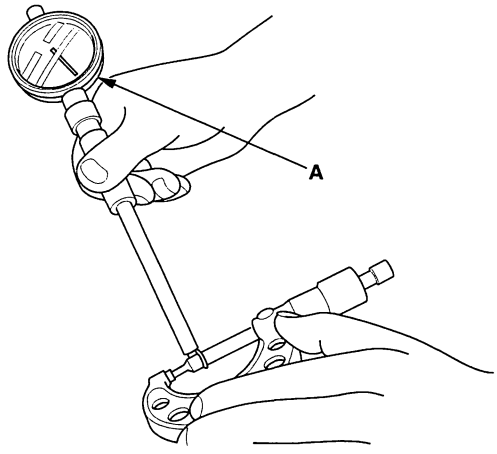

4. Measure the inside diameter of the rocker arm, and check it for an out-of-round condition.

Rocker Arm-to-Shaft Clearance
Standard (New):
Intake: 0.026—0.067 mm (0.0010—0.0026 in.)
Service Limit: 0.067 mm (0.0026 in.)
Standard (New):
Exhaust: 0.026—0.077 mm (0.0010—0.0030 in.)
Service Limit: 0.077 mm (0.0030 in.)

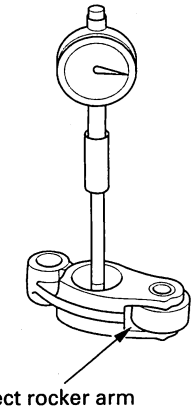

5. Repeat for all rockers and both shafts. If the clearance is over the limit, replace the rocker shaft and all over-tolerance rocker arms. If any intake rocker arm needs replacement, replace all three rocker arms in that set (primary, mid, and secondary).

(cont'd)

Protected by AR

Rocker Arm and Shaft Inspection (cont'd)

VTEC Rocker Arms

6. Inspect the rocker arm synchronizing pistons (A). Slide them into the rocker arms. If they do not move smoothly, replace the rocker arm set.

   NOTE:
   - Apply new engine oil to the pistons when reassembling.
   - When reassembling the primary rocker arm (B), carefully apply air pressure to the oil passage of the rocker arm.

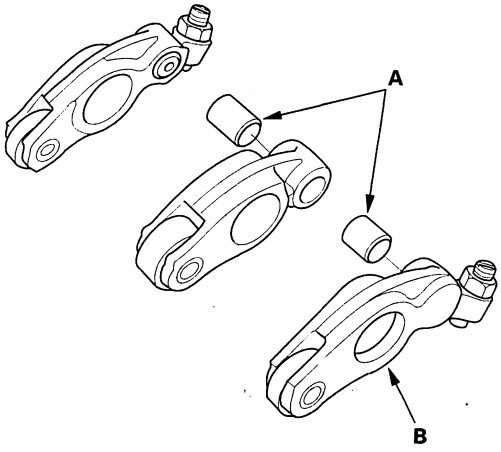

7. Install the rocker arm assembly (see page 6-49).

BACK

Protected by AR

Camshaft Inspection

1. Remove the cylinder head (see page 6-30).
2. Remove the rocker arms (see page 6-35).
3. Put the rocker shafts on the cylinder head, then tighten the bolts to the specified torque.

   NOTE: Apply new engine oil to the threads and flange of the exhaust rocker shaft mounting bolts.

   Specified torque
   8 x 1.25 mm: 24 N·m (2.4 kgf·m, 17 lbf·ft)

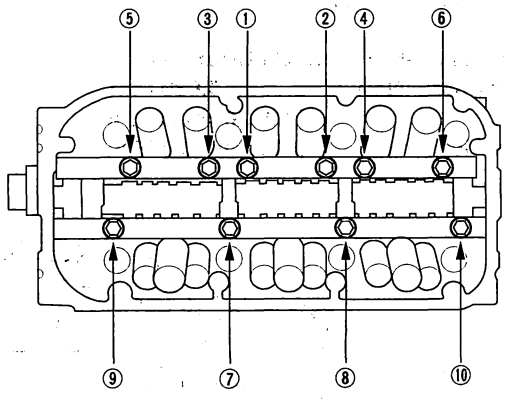

4. Seat the camshaft by pushing it toward the rear of the cylinder head.
5. Zero the dial indicator against the end of the camshaft. Push the camshaft back and forth and read the end play. If the end play is beyond the service limit, replace the thrust cover and recheck. If it is still beyond the service limit, replace the camshaft.

   Camshaft End Play
   Standard (New): 0.05—0.20 mm (0.002—0.008 in.)
   Service Limit: 0.20 mm (0.008 in.)

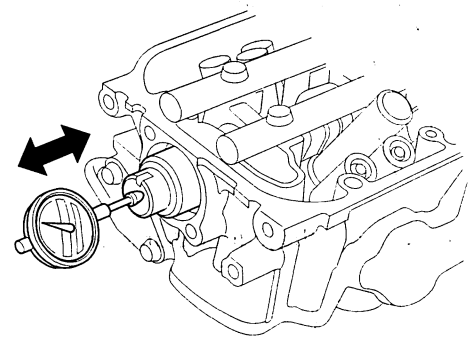

6. Remove the camshaft thrust cover (A), then pull out the camshaft (B).

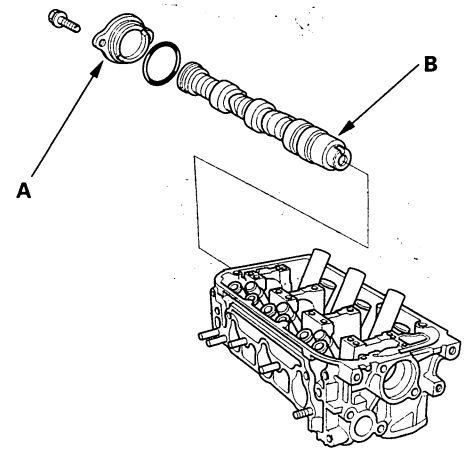

(cont'd)

Protected by AR

Camshaft Inspection (cont'd)

7. Wipe the camshaft clean, then inspect the lift ramps. Replace the camshaft if any lobes are pitted, scored, or excessively worn.

8. Measure the diameter of each camshaft journal.

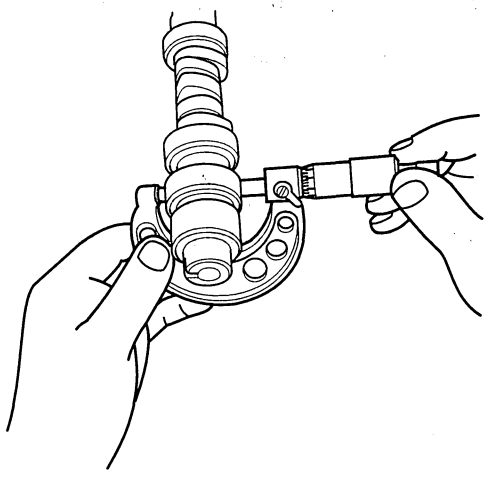

9. Zero the gauge to the journal diameter.

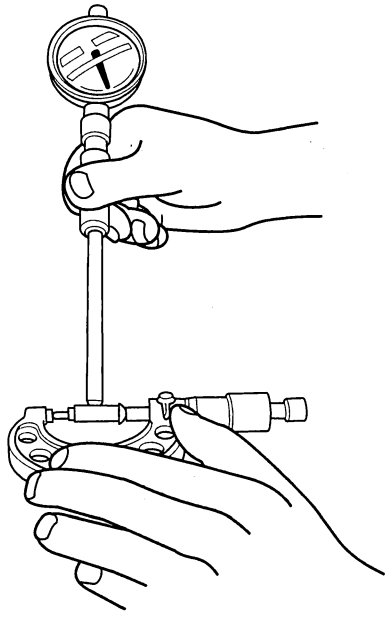

10. Clean the camshaft bearing surfaces in the cylinder head. Measure the inside diameter of each camshaft bearing surface, and check for an out-of-round condition.

- If the camshaft-to-holder clearance is within limits, go to step 12.
- If the camshaft-to-holder clearance is beyond the service limit and the camshaft has been replaced, replace the cylinder head.
- If the camshaft-to-holder clearance is beyond the service limit and the camshaft has not been replaced, go to step 11.

Camshaft-to-Holder Oil Clearance

Standard (New):	**0.050—0.089 mm (0.0020—0.0035 in.)**
Service Limit:	**0.15 mm (0.006 in.)**

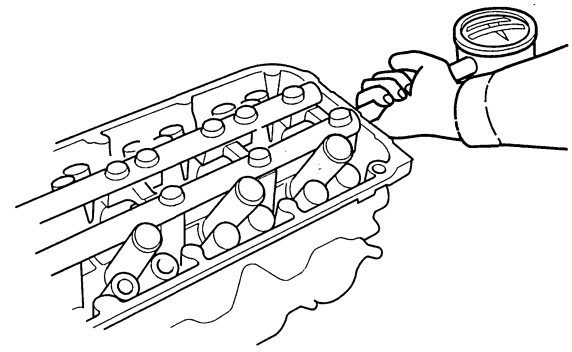

BACK

Protected by AR

11. Check total runout with the camshaft supported on V-blocks.

    - If the total runout of the camshaft is within the service limit, replace the cylinder head.
    - If the total runout is beyond the service limit, replace the camshaft and recheck the oil clearance. If the oil clearance is still out of tolerance, replace the cylinder head.

Camshaft Total Runout
Standard (New): 0.03 mm (0.001 in.) max.
Service Limit: 0.04 mm (0.002 in.)

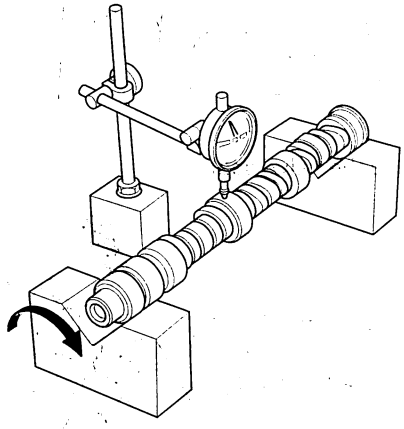

12. Measure cam lobe height.

Cam Lobe Height Standard (New):

	INTAKE	EXHAUST
PRI	35.041 mm (1.3796 in.)	36.326 mm (1.4302 in.)
MID	36.445 mm (1.4348 in.)	
SEC	35.284 mm (1.3891 in.)	

PRI: Primary MID: Mid SEC: Secondary
IN: Intake EX: Exhaust T/B: Timing belt

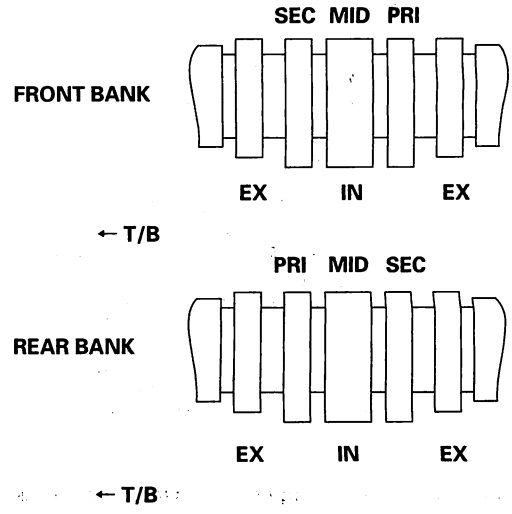

Protected by AR

Valve, Spring, and Valve Seal Removal

Special Tools Required
Valve spring compressor attachment
07757-PJ1010A

Identify the valves and valve springs as they are removed so that each item can be reinstalled in its original position.

1. Remove the cylinder head (see page 6-30).

2. Using an appropriate-sized socket (A) and plastic mallet (B), lightly tap the valve retainer to loosen the valve cotters.

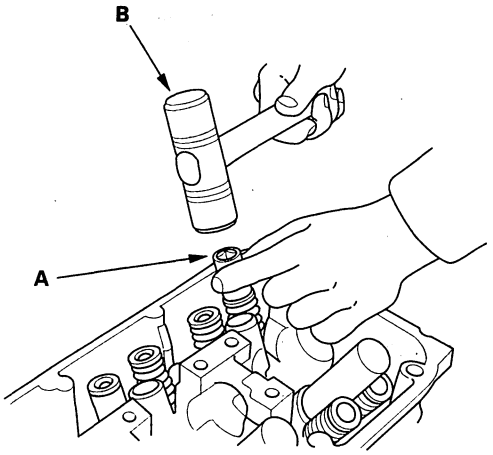

3. Install the valve spring compressor. Compress the spring and remove the valve cotters.

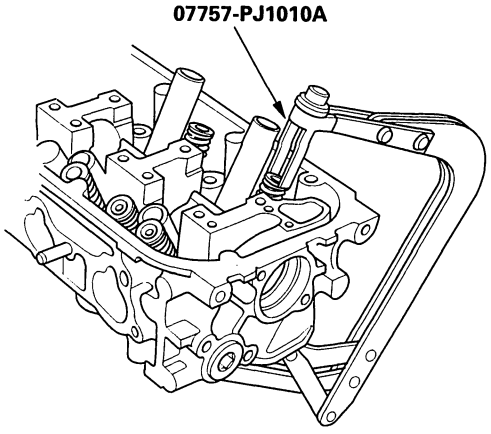

4. Remove the valve spring compressor, then remove the valve retainer, valve spring, and valve.

5. Install the valve guide seal remover (A).

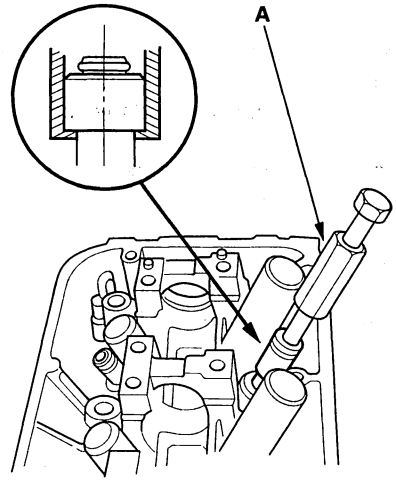

6. Remove the valve seal.

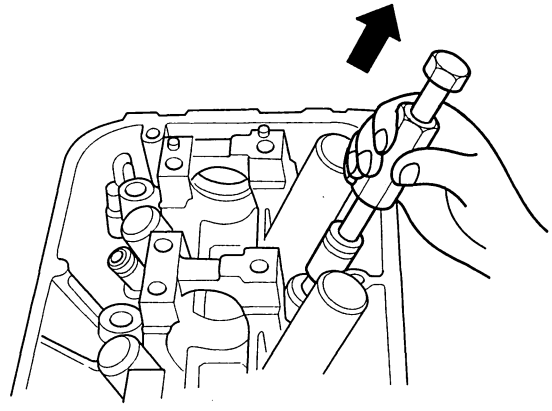

BACK

Protected by AR

Valve Inspection

1. Remove the valves (see page 6-42).
2. Measure the valve in these areas.

Intake Valve Dimensions
A Standard (New): 34.90—35.10 mm (1.374—1.382 in.)
B Standard (New): 115.70—116.30 mm (4.555—4.579 in.)
C Standard (New): 5.485—5.495 mm (0.2159—0.2163 in.)
C Service Limit: 5.455 mm (0.2148 in.)

Exhaust Valve Dimensions
A Standard (New): 29.90—30.10 mm (1.177—1.185 in.)
B Standard (New): 113.90—114.50 mm (4.484—4.508 in.)
C Standard (New): 5.450—5.460 mm (0.2146—0.2150 in.)
C Service Limit: 5.420 mm (0.2134 in.)

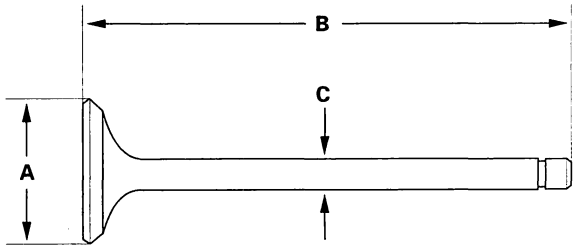

Valve Stem-to-Guide Clearance Inspection

1. Remove the valves (see page 6-42).
2. Slide the valve out of its guide about 10 mm (0.39 in.), then measure the guide-to-stem clearance with a dial indicator while rocking the stem in the direction of normal thrust (wobble method).

- If the measurement exceeds the service limit, recheck it using a new valve.
- If the measurement is now within the service limit, reassemble using a new valve.
- If the measurement with a new valve still exceeds the service limit, go to step 3.

Intake Valve Stem-to-Guide Clearance
Standard (New): 0.04—0.09 mm (0.002—0.004 in.)
Service Limit: 0.16 mm (0.006 in.)

Exhaust Valve Stem-to-Guide Clearance
Standard (New): 0.11—0.16 mm (0.004—0.006 in.)
Service Limit: 0.22 mm (0.009 in.)

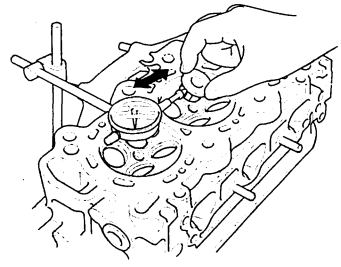

3. Subtract the O.D. of the valve stem, measured with a micrometer, from the I.D. of the valve guide, measured with an inside micrometer or ball gauge. Take the measurements in three places along the valve stem and three places inside the valve guide. The difference between the largest guide measurement and the smallest stem measurement should not exceed the service limit.

Intake Valve Stem-to-Guide Clearance
Standard (New): 0.020—0.045 mm (0.0008—0.0018 in.)
Service Limit: 0.08 mm (0.003 in.)

Exhaust Valve Stem-to-Guide Clearance
Standard (New): 0.055—0.080 mm (0.0022—0.0031 in.)
Service Limit: 0.11 mm (0.004 in.)

Protected by AR

Valve Guide Replacement

Special Tools Required
- Valve guide driver, 5.5 mm 07742-0010100
- Valve guide reamer, 5.5 mm 07HAH-PJ7A100

1. Inspect valve stem-to-guide clearance (see page 6-43).

2. As illustrated, use a commercially available air-impact valve guide driver (A) modified to fit the diameter of the valve guides. In most cases, the same procedure can be done using the special tool and a conventional hammer.

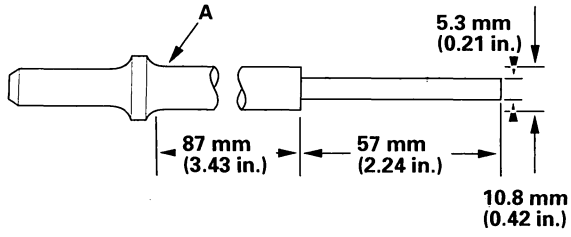

3. Select the proper replacement guides, and chill them in the freezer section of a refrigerator for about an hour.

4. Use a hot plate or oven to evenly heat the cylinder head to 300 °F (150 °C). Monitor the temperature with a cooking thermometer. Do not get the head hotter than 300 °F (150 °C); excessive heat may loosen the valve seats.

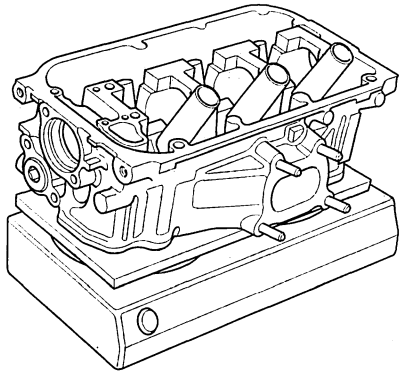

5. Working from the camshaft side, use the driver and an air hammer to drive the guide about 2 mm (0.1 in.) towards the combustion chamber. This will knock off some of the carbon and make removal easier. Hold the air hammer directly in line with the valve guide to prevent damaging the driver. Wear safety goggles or a face shield.

6. Turn the head over, and drive the guide out toward the camshaft side of the head.



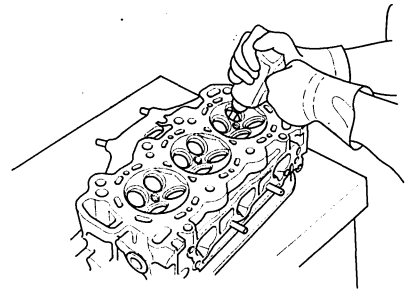

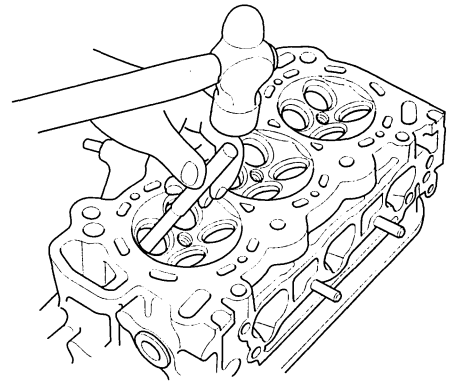

7. If a valve guide still won't move, drill it out with a 8 mm (5/16 in.) bit, then try again.

   NOTE: Drill guides only in extreme cases; you could damage the cylinder head if the guide breaks.

8. Remove the new guide(s) from the freezer, one at a time, as you need them.

BACK

Protected by AR

9. Apply a thin coat of clean engine oil to the outside of the new valve guide. Install the guide from the camshaft side of the head; use the special tool to drive the guide to the specified installed height (A) of the guide (B). If you have all 12 guides to do, you may have to reheat the head.

Valve Guide Installed Height
Intake: 21.20—22.20 mm (0.835—0.874 in.)
Exhaust: 20.63—21.63 mm (0.812—0.852 in.)

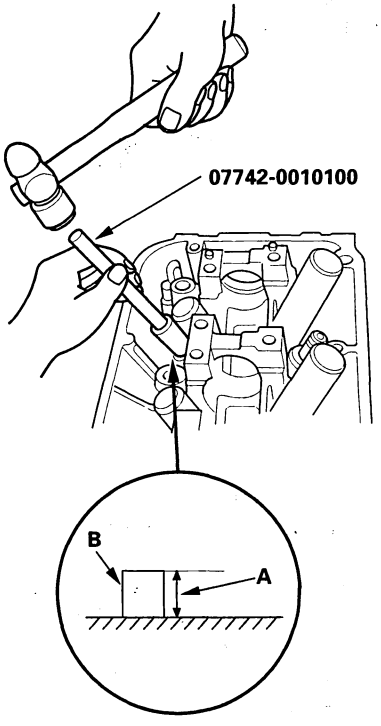

10. Coat both the reamer and the valve guide with cutting oil.

11. Rotate the reamer clockwise the full length of the valve guide bore.

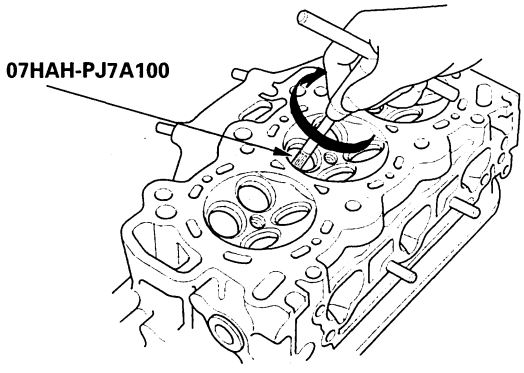

12. Continue to rotate the reamer clockwise while removing it from the bore.

13. Thoroughly wash the guide in detergent and water to remove any cutting residue.

14. Check the clearance with a valve (see page 6-43). Verify that a valve slides in the intake and exhaust valve guides without exerting pressure.

Protected by AR

Valve Seat Reconditioning

1. Inspect valve stem-to-guide clearance (see page 6-43). If the valve guides are worn, replace them (see page 6-44) before cutting the valve seats.

2. Renew the valve seats in the cylinder head using a valve seat cutter.

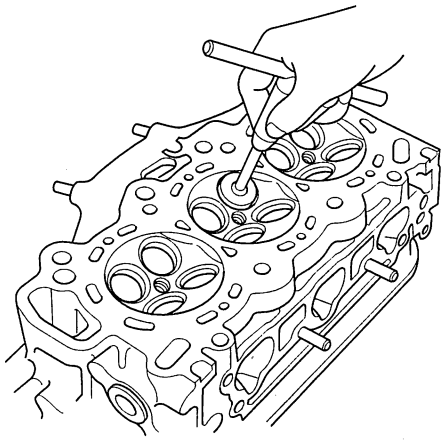

3. Carefully cut a 45 ° seat, removing only enough material to ensure a smooth and concentric seat.

4. Bevel the upper edge of the seat with the 30 ° cutter and the lower edge of the seat with the 67.5 ° cutter (intake seat) or the 60 ° cutter (exhaust seat). Check the width of the seat and adjust accordingly.

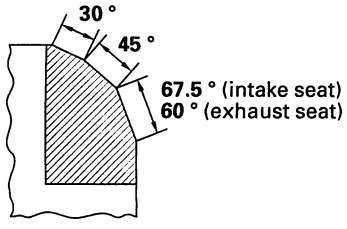

5. Make one more very light pass with the 45 ° cutter to remove any possible burrs caused by the other cutters.

Valve Seat Width
Standard (New): 1.25—1.55 mm (0.049—0.061 in.)
Service Limit: 2.00 mm (0.079 in.)

6. After resurfacing the seat, inspect it for even valve seating: Apply Prussian Blue compound (A) to the valve face. Insert the valve in its original location in the head, then lift it and snap it closed against the seat several times.

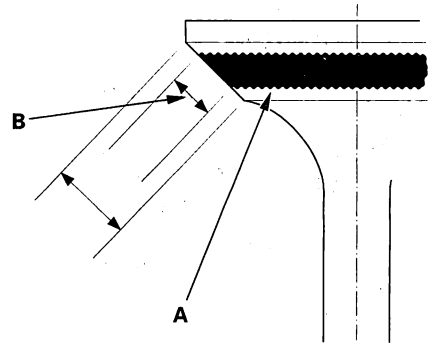

7. The actual valve seating surface (B), as shown by the blue compound, should be centered on the seat.

- If it is too high (closer to the valve stem), you must make a second cut with the 67.5 ° cutter (intake seat) or the 60 ° cutter (exhaust seat) to move it down, then one more cut with the 45 ° cutter to restore seat width.
- If it is too low (closer to the valve edge), you must make a second cut with the 30 ° cutter to move it up, then one more cut with the 45 ° cutter to restore seat width.

NOTE: The final cut should always be made with the 45 ° cutter.

BACK

Protected by AR

8. Insert the intake and exhaust valves in the head, and measure the valve stem installed height (A).

Intake Valve Stem Installed Height
Standard (New): 46.75—47.55 mm (1.841—1.872 in.)
Service Limit: 47.80 mm (1.882 in.)

Exhaust Valve Stem Installed Height
Standard (New): 46.68—47.48 mm (1.838—1.869 in.)
Service Limit: 47.73 mm (1.879 in.)

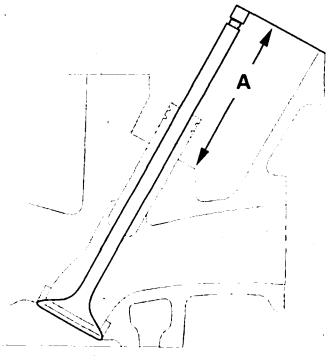

9. If the valve stem installed height is over the service limit, replace the valve and recheck. If it is still over the service limit, replace the cylinder head; the valve seat in the head is too deep.

Protected by AR

Valve, Spring, and Valve Seal Installation

Special Tools Required
- Stem seal driver 07PAD-0010000
- Valve spring compressor attachment 07757-PJ1010A

1. Coat the valve stems with new engine oil. Install the valves in the valve guides.
2. Check that the valves move up and down smoothly.
3. Install the spring seats on the cylinder head.
4. Install the new valve seals (A) using the valve guide seal installer (B).

   NOTE: Exhaust valve seals (C) have a black spring (D) and intake valve seals (E) have a white spring (F). They are not interchangeable.

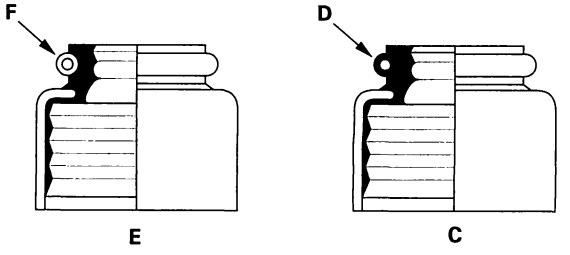

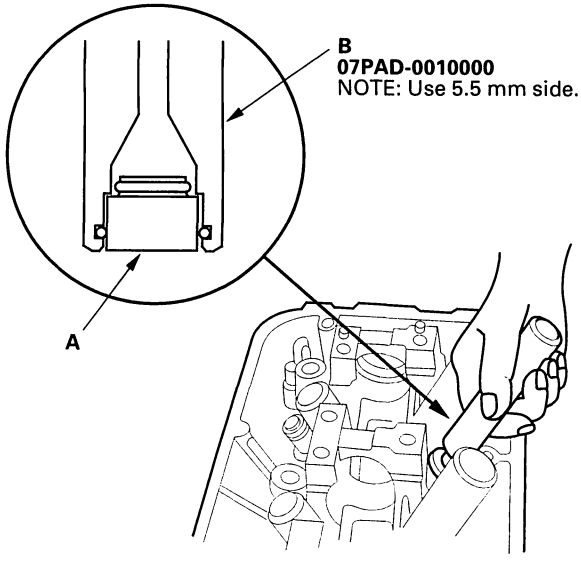

5. Install the valve spring and valve retainer. Place the end of the valve spring with closely wound coils toward the cylinder head.
6. Install the valve spring compressor. Compress the spring and install the valve cotters.

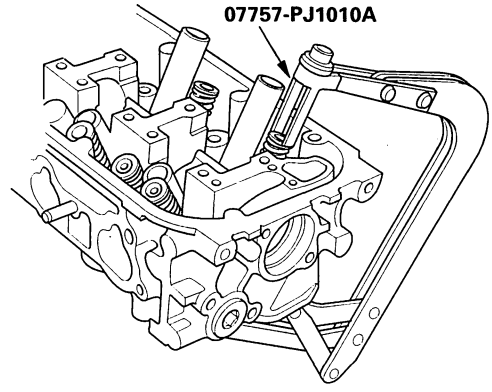

7. Remove the valve spring compressor.
8. Lightly tap the end of each valve stem two or three times with a plastic mallet (A) to ensure proper seating of the valve and valve cotters. Tap the valve stem only along its axis so you do not bend the stem.

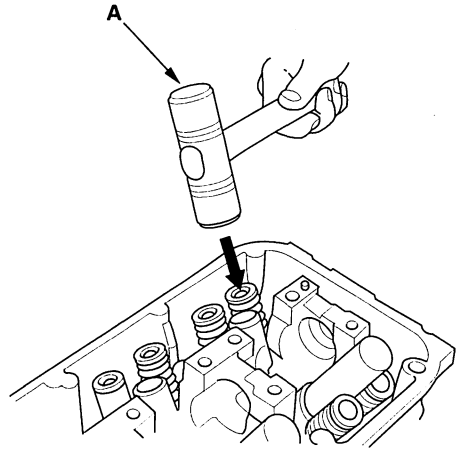

BACK

Protected by AR

Camshaft, Rocker Arm, Camshaft Seal, and Pulley Installation

1. Apply a light coat of oil around the camshaft oil seal.

2. Gently tap the new camshaft oil seal (A) into the cylinder head.

   –1 Tap the camshaft oil seal in squarely.
   –2 Install the oil seal about 0.5—1.5 mm (0.02—0.06 in.) below the surface of the cylinder head.

FRONT:

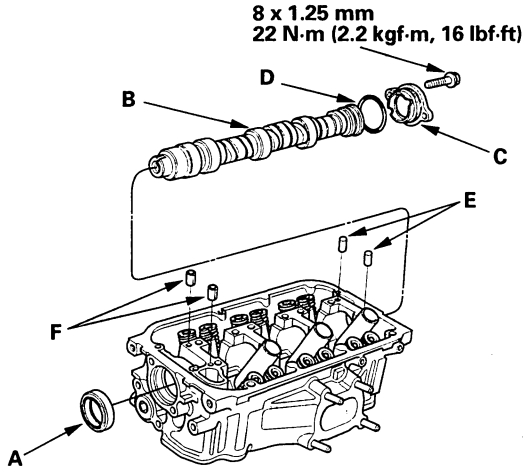

REAR:

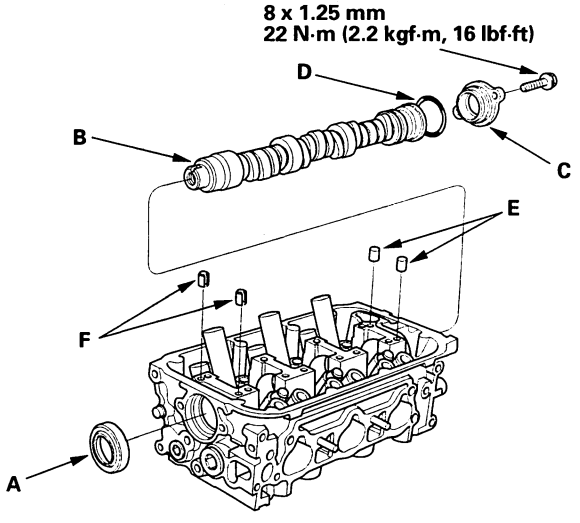

3. Insert the camshaft (B) into the cylinder head, then install the camshaft thrust cover (C). Always use a new O-ring (D).

4. Check that the oil seal lips are not distorted.

5. Install the solid dowel pins (E) and the hollow dowel pins (F).

6. Reassemble the rocker arm assembly (see page 6-36).

7. Loosen the valve adjusting screws.

8. Set the rocker arm assembly in place, and loosely install the bolts. Make sure that the rocker arms are properly positioned on the valve stems.

9. Tighten each bolt two turns at a time in the sequence shown to ensure that the rockers do not bind on the valves.

   NOTE: Apply new engine oil to the threads and flange of the exhaust rocker shaft mounting bolts.

Specified torque
8 x 1.25 mm: 24 N·m (2.4 kgf·m, 17 lbf·ft)

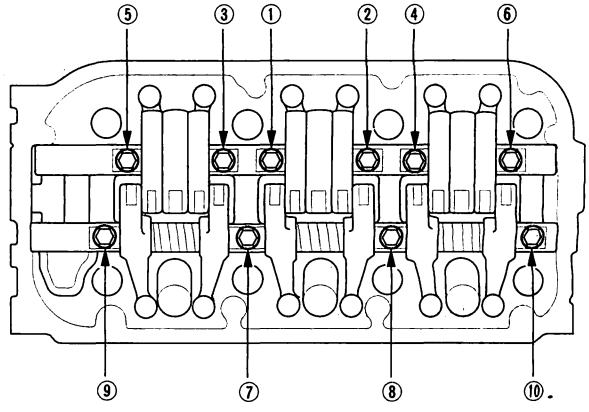

(cont'd)

Protected by AR

Camshaft, Rocker Arm, Camshaft Seal, and Pulley Installation (cont'd)

10. Install the injector base (A). Always use a new gasket (B).

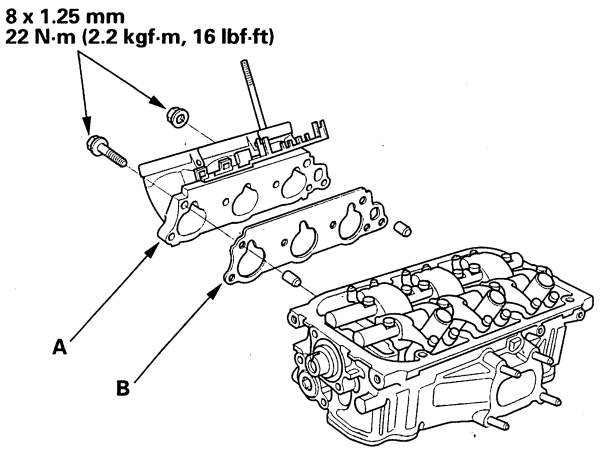

11. Apply new engine oil to the threads of the camshaft pulley mounting bolt (A). Install the back cover (B), then install the camshaft pulley (C).

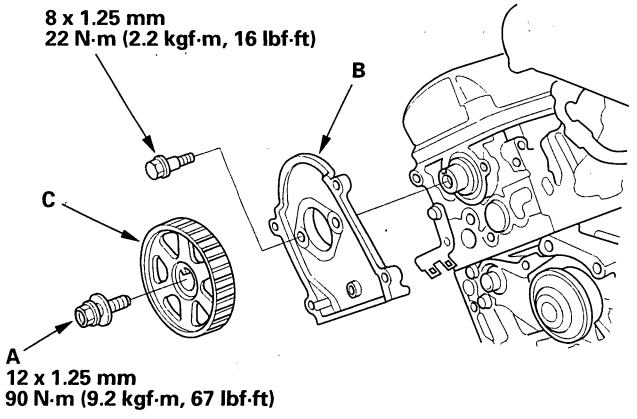

Cylinder Head Installation

1. Clean the cylinder head and block surface.

2. Clean and install the oil control orifices (A) with new O-rings (B).

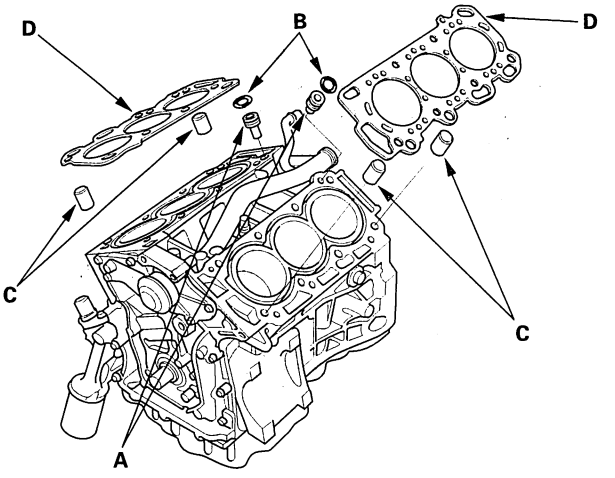

3. Install the dowel pins (C) and new cylinder head gaskets (D).

4. Clean the timing belt pulleys, timing belt guide plate, and the upper and lower covers.

5. Set the timing belt drive pulley to top dead center (TDC) by aligning the TDC mark (A) on the tooth of the timing belt drive pulley with the pointer (B) on the oil pump.

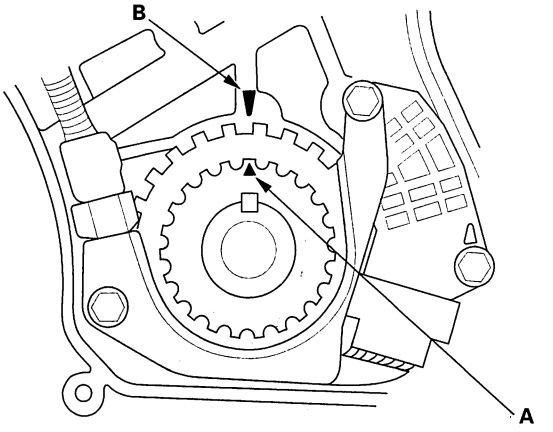

BACK

Protected by AR

6. Set the camshaft pulleys to TDC by aligning the TDC marks (A) on the camshaft pulleys with the pointers (B) on the back covers.

FRONT:

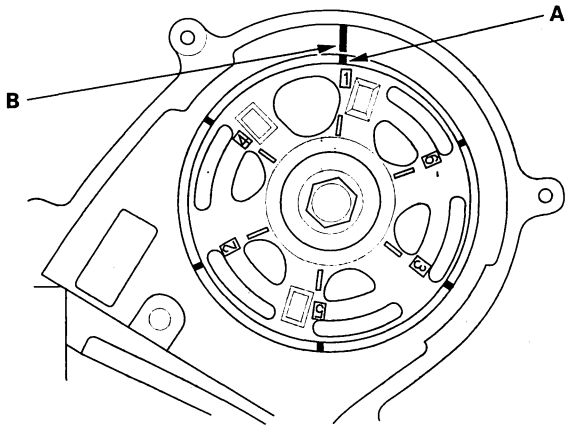

REAR:

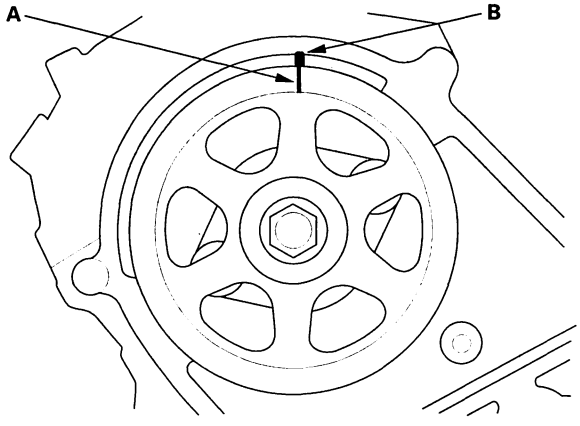

7. Put the cylinder head onto the engine block. If the head bolt is dodecagon type, go to step 8. Or if the head bolt is hexagon type, go to step 13.

Dodecagon Bolt Type

8. Measure the diameter of each cylinder head bolt at point A and point B.

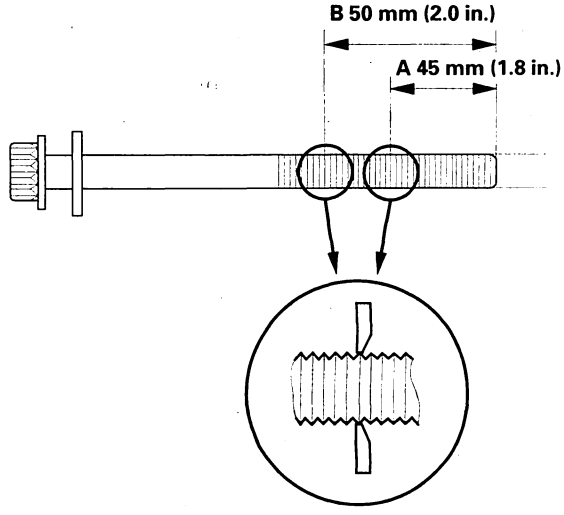

9. If either diameter is less than 10.6 mm (0.42 in.), replace the cylinder head bolt.

(cont'd)

Protected by AR

Cylinder Head Installation (cont'd)

10. Apply engine oil to the threads and under the bolt heads of all cylinder head bolts.

11. Tighten the cylinder head bolts in sequence to 39 N·m (4.0 kgf·m, 29 lbf·ft). Use a beam-type torque wrench. When using a preset-type torque wrench, be sure to tighten slowly and do not overtighten. If a bolt makes any noise while you are torquing it, loosen the bolt and retighten it from the first step.

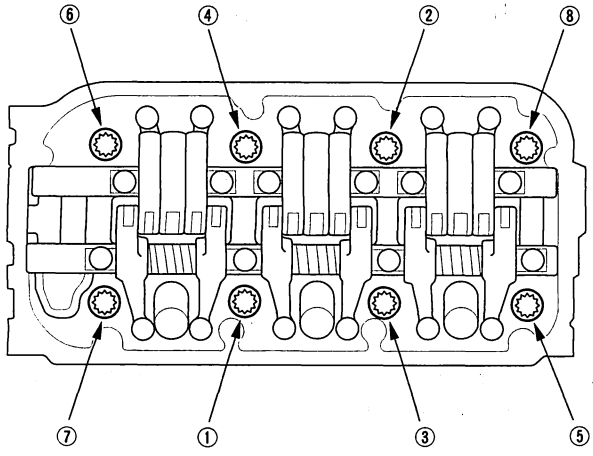

12. After torquing, tighten all cylinder head bolts in two steps (90 ° per step). If you are using a new cylinder head bolt, tighten the bolt an extra 90 °, then go to step 15.

    NOTE: Remove the cylinder head bolt if you tightened it beyond the specified angle, and go back to step 8 of the procedure. Do not loosen it back to the specified angle.

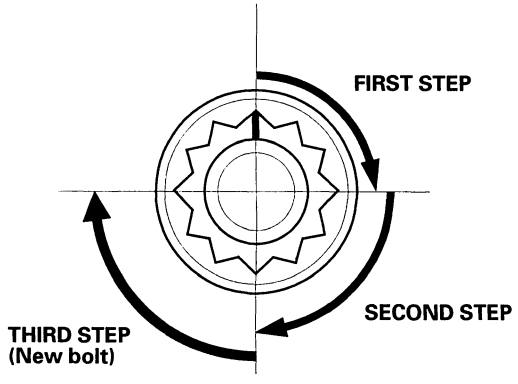

Hexagon Bolt Type

13. Apply new engine oil to the threads and flanges of the cylinder head bolts.

14. Tighten the cylinder head bolts sequentially in three steps.

    NOTE: Perform each step twice.

    1st Step Torque: 39 N·m (4.0 kgf·m, 29 lbf·ft)
    2nd Step Torque: 69 N·m (7.0 kgf·m, 51 lbf·ft)
    3rd Step Torque: 98.1 N·m (10.0 kgf·m, 72.3 lbf·ft)

    Use a beam-type torque wrench. When using a preset-type torque wrench, be sure to tighten slowly and not to overtighten. If a bolt makes any noise while you are torquing it, loosen the bolt, and retighten it from the first step, then go to step 15.

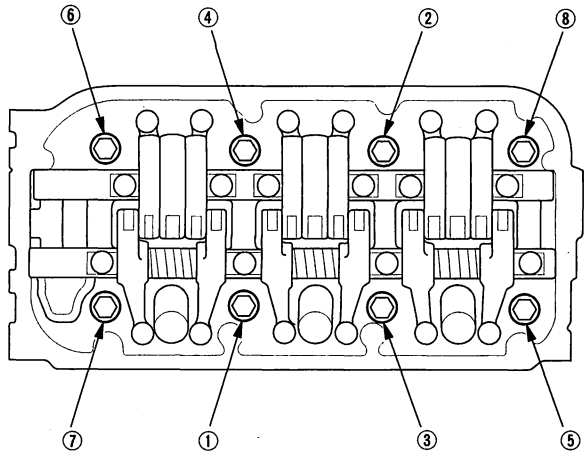

BACK

Protected by AR

15. Install the front and rear warm up three way catalytic converter (WU-TWC) (see page 11-354).

16. Install the water passage (A). Always use a new O-ring (B) and new gaskets (C).

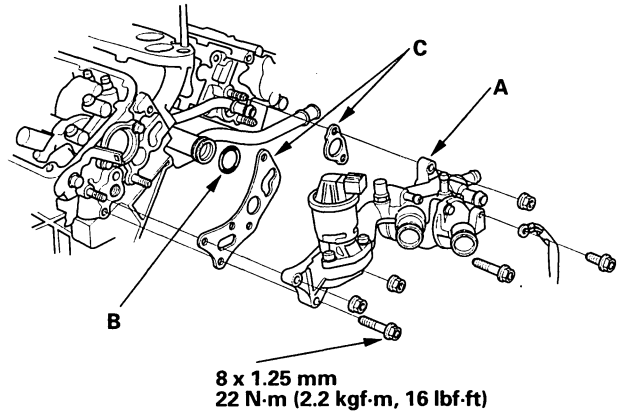

17. Tighten the bolt securing the harness bracket.

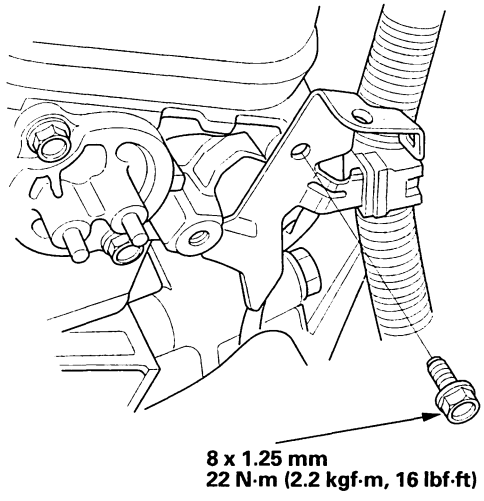

18. Set the new O-ring on the injectors, then install the fuel rails.

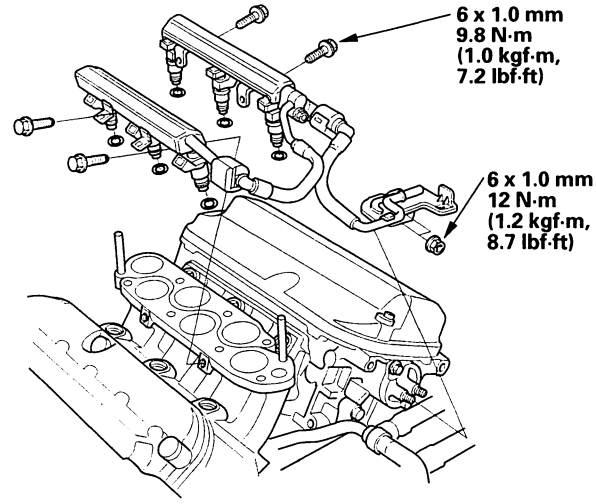

19. Install the ground cable (A).

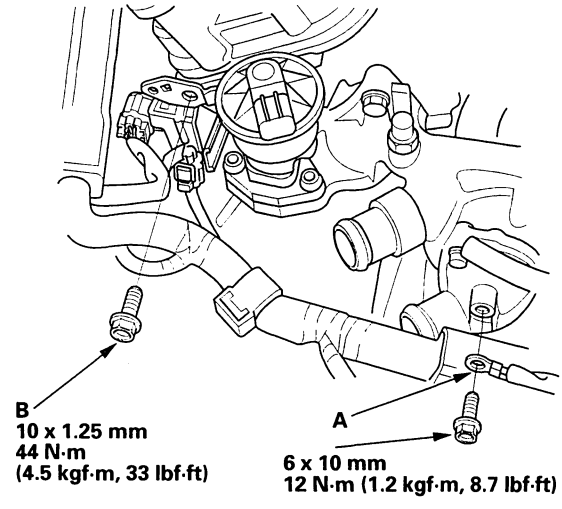

20. Tighten the bolt (B) securing the harness bracket.

(cont'd)

Protected by AR

Cylinder Head Installation (cont'd)

21. Install the heater hose (A) and water bypass hoses (B).

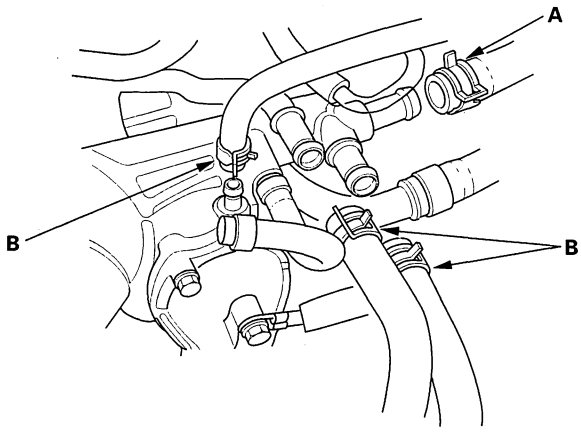

22. Install the upper radiator hose (A), and lower radiator hose (B).

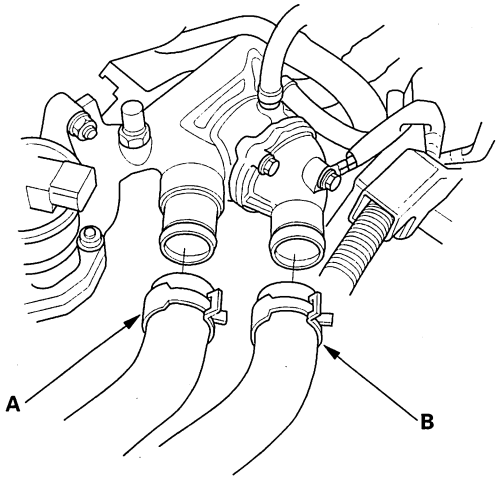

23. Install the power steering (P/S) pump (A) and P/S hose bracket (B).

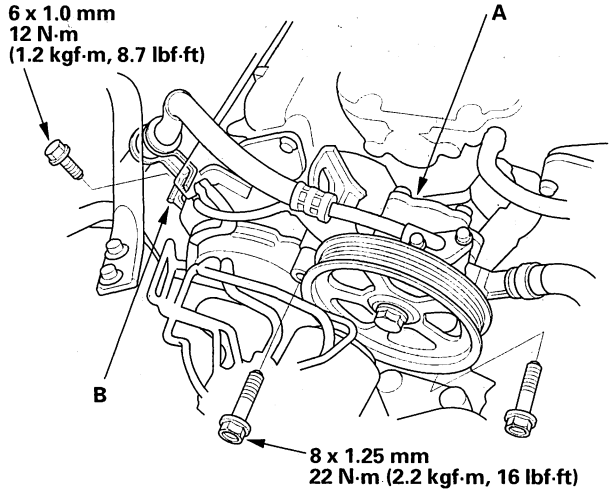

24. Install the timing belt (see page 6-16).
25. Adjust the valve clearance (see page 6-8).
26. Install the cylinder head covers (see page 6-28).
27. Install the intake manifold (see page 9-4).
28. Install the alternator (see page 4-38).
29. Install the drive belt.
30. Install the fuel line (see page 11-323).
31. Clean the battery posts and cable terminals with sandpaper. Assemble them and apply grease to prevent corrosion.
32. After installation, check that all tubes, hoses, and connectors are installed correctly.
33. Inspect for fuel leaks. Turn the ignition switch ON (II) (do not operate the starter) so the fuel pump runs for about 2 seconds and pressurizes the fuel line. Repeat this operation two or three times, then check for fuel leakage at any point in the fuel line.

BACK

Protected by AR

34. Refill the radiator with engine coolant, and bleed air from the cooling system with the heater valve open (see step 8 on page 10-7).

35. Perform the power window control unit reset procedure, refer to the 2003-2006 Accord Service Manual (see page 22-232).

36. Inspect the idle speed (see page 11-301).

37. Inspect the ignition timing (see page 4-19).

38. Enter the anti-theft codes for the radio and the navigation system, then enter the customer's audio presets.

39. Set the clock.

Protected by AR

Camshaft Oil Seal Installation - In Car

Special Tools Required
Camshaft oil seal driver 07PAF-0030100

1. Remove the timing belt (see page 6-14).
2. Remove the camshaft pulley and back cover (see step 21 on page 6-32).
3. Remove the camshaft oil seal.
4. Dry the camshaft oil seal housing.
5. Apply a light coat of multipurpose grease to the lip of the camshaft oil seal.
6. Using the special tool (A), washer (B), and a 12 x 75 x 1.25 mm bolt (C), press in the camshaft oil seal (D) about 0.5—1.5 mm (0.02—0.06 in.) below the surface of the cylinder head.

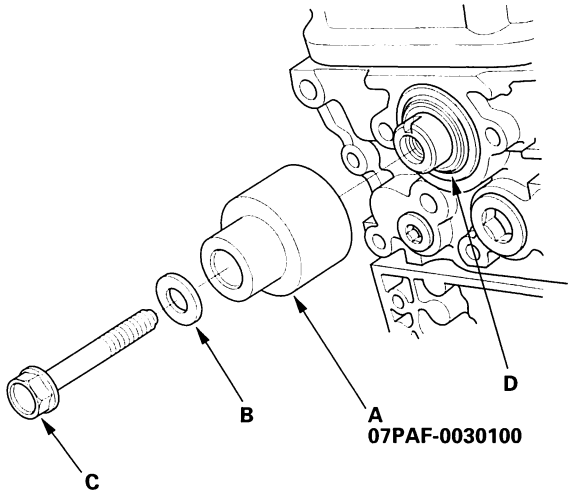

7. Apply new engine oil to the threads of the camshaft pulley mounting bolt. Install the back cover, then install the camshaft pulley (see step 11 on page 6-50).
8. Install the timing belt (see page 6-16).

Sealing Bolt Installation

NOTE: When installing the sealing bolt (A), always use new washer (B).

FRONT:

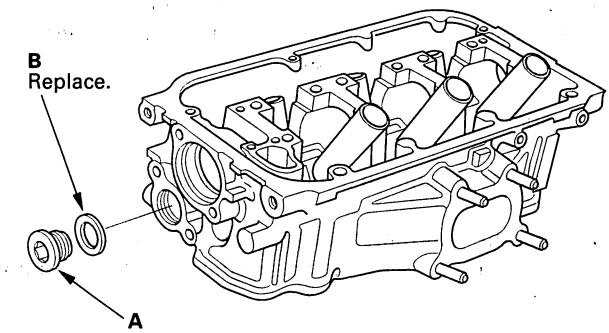

REAR:

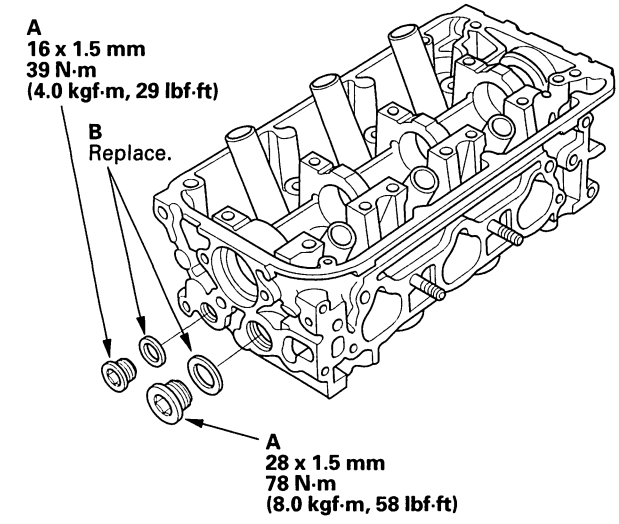

BACK

Protected by AR

Engine Mechanical

Engine Block

Special Tools 7-2
Component Location Index 7-3
Connecting Rod and Crankshaft End Play Inspection 7-6
Crankshaft Main Bearing Replacement 7-7
Connecting Rod Bearing Replacement 7-9
Oil Pan Removal 7-11
Crankshaft and Piston Removal 7-11
Crankshaft Inspection 7-14
Block and Piston Inspection 7-15
Cylinder Bore Honing 7-17
Piston, Pin, and Connecting Rod Replacement 7-18
Piston Ring Replacement 7-21
Crankshaft and Piston Installation 7-23
Oil Pan Installation 7-29
Pulley End Crankshaft Oil Seal Installation - In Car ... 7-30
Transmission End Crankshaft Oil Seal Installation - In Car 7-30
Drain Bolt Installation 7-31

NOTE: Refer to the 2003-2006 Accord Service Manual, P/N 61SDA08 for items not shown in this section.

BACK

Outline of Model Change

The J30A5 engine has been added.

Protected by AR

Engine Block

Special Tools

Ref. No.	Tool Number	Description	Qty
①	070AD-RCA0100	Oil Seal Driver, 64 mm	1
②	070AD-RCAA200	Driver Attachment, 106 mm	1
③	07749-0010000	Driver	1

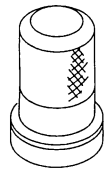

①

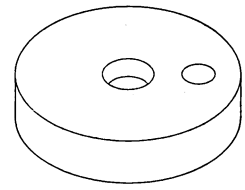

②

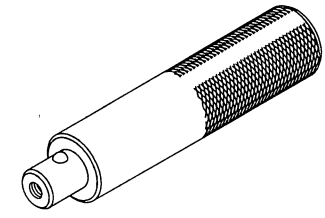

③

BACK

Protected by AR

Component Location Index

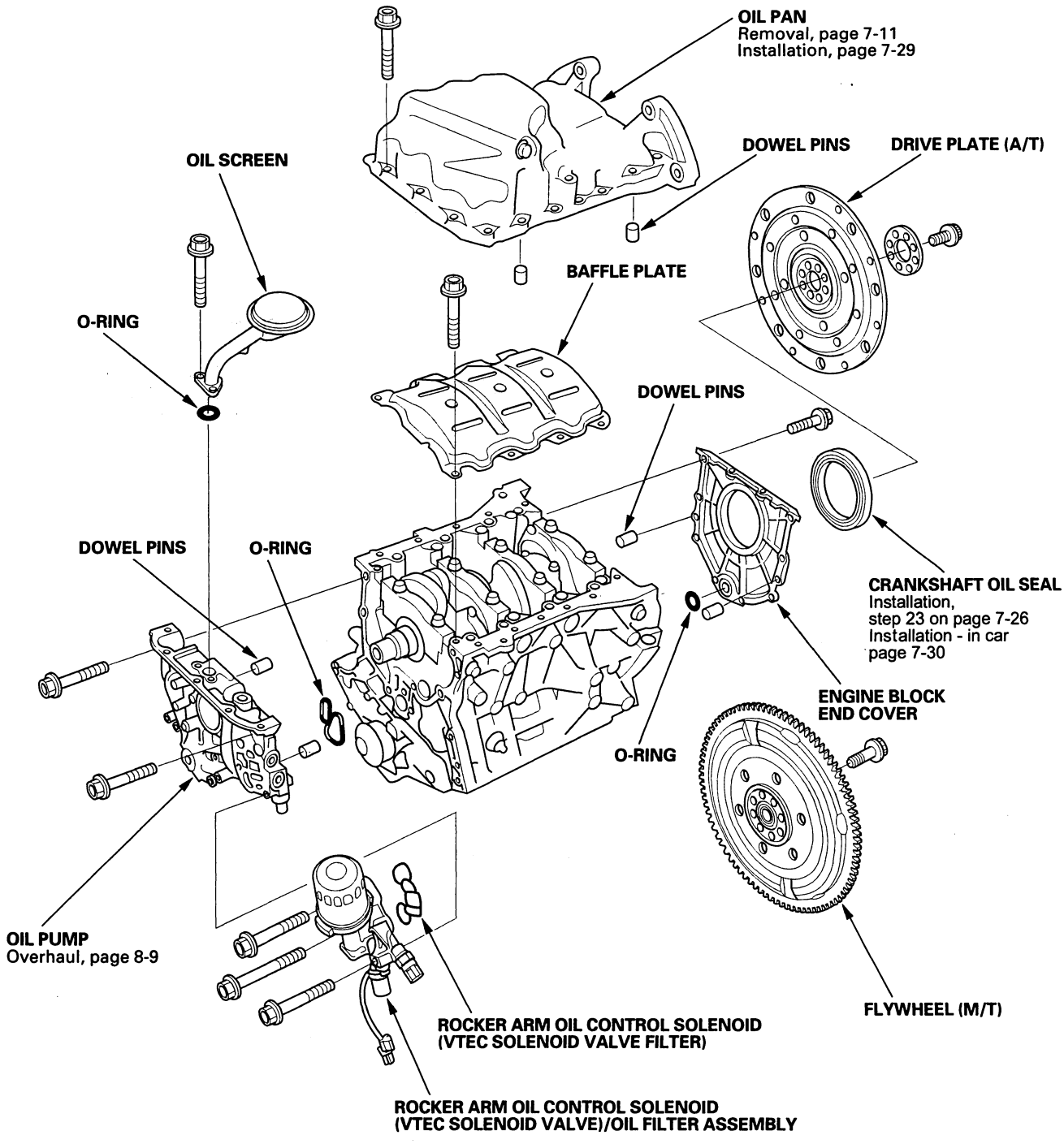

(cont'd)

BACK

Protected by AR

Component Location Index (cont'd)

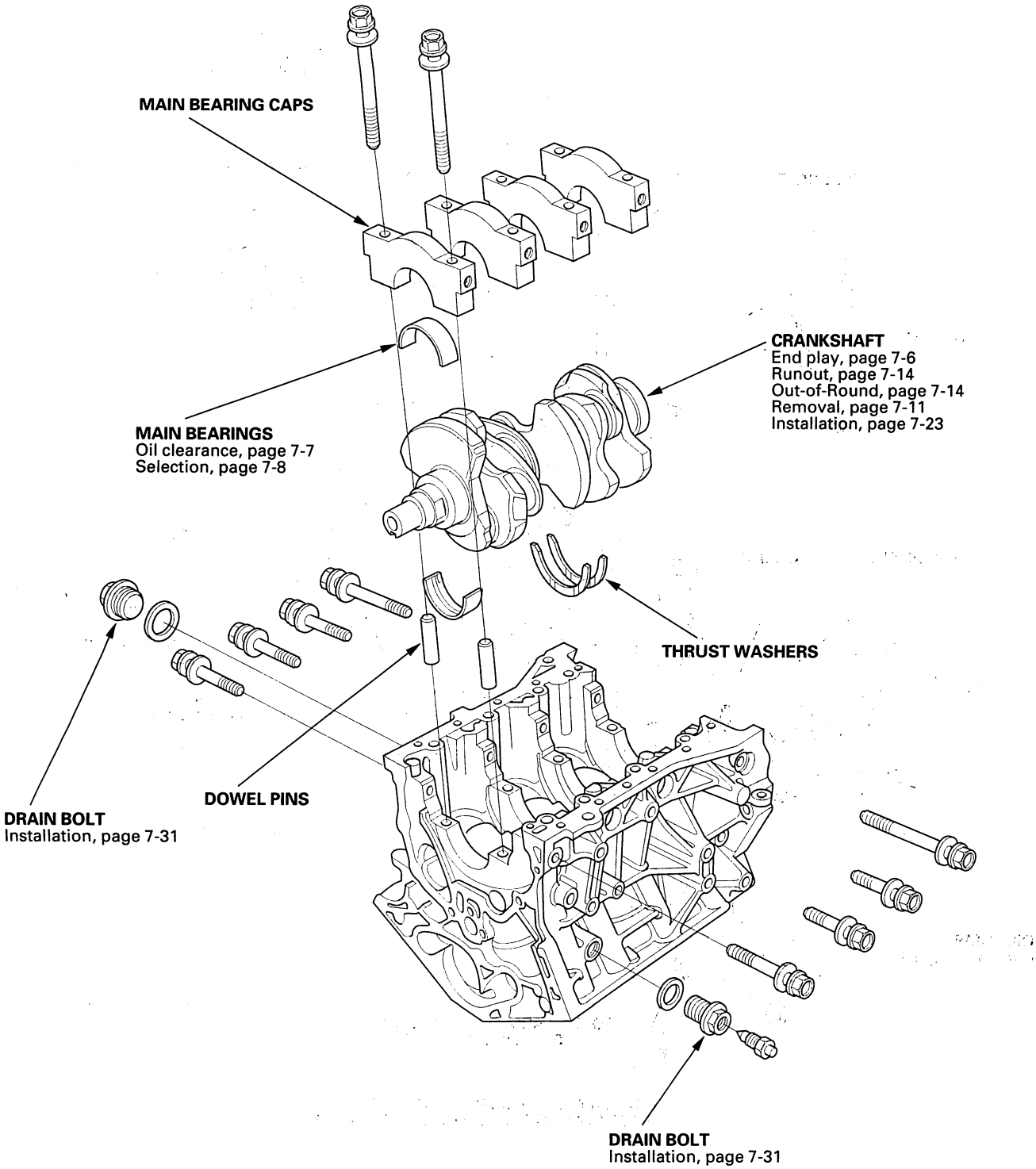

BACK

Protected by AR

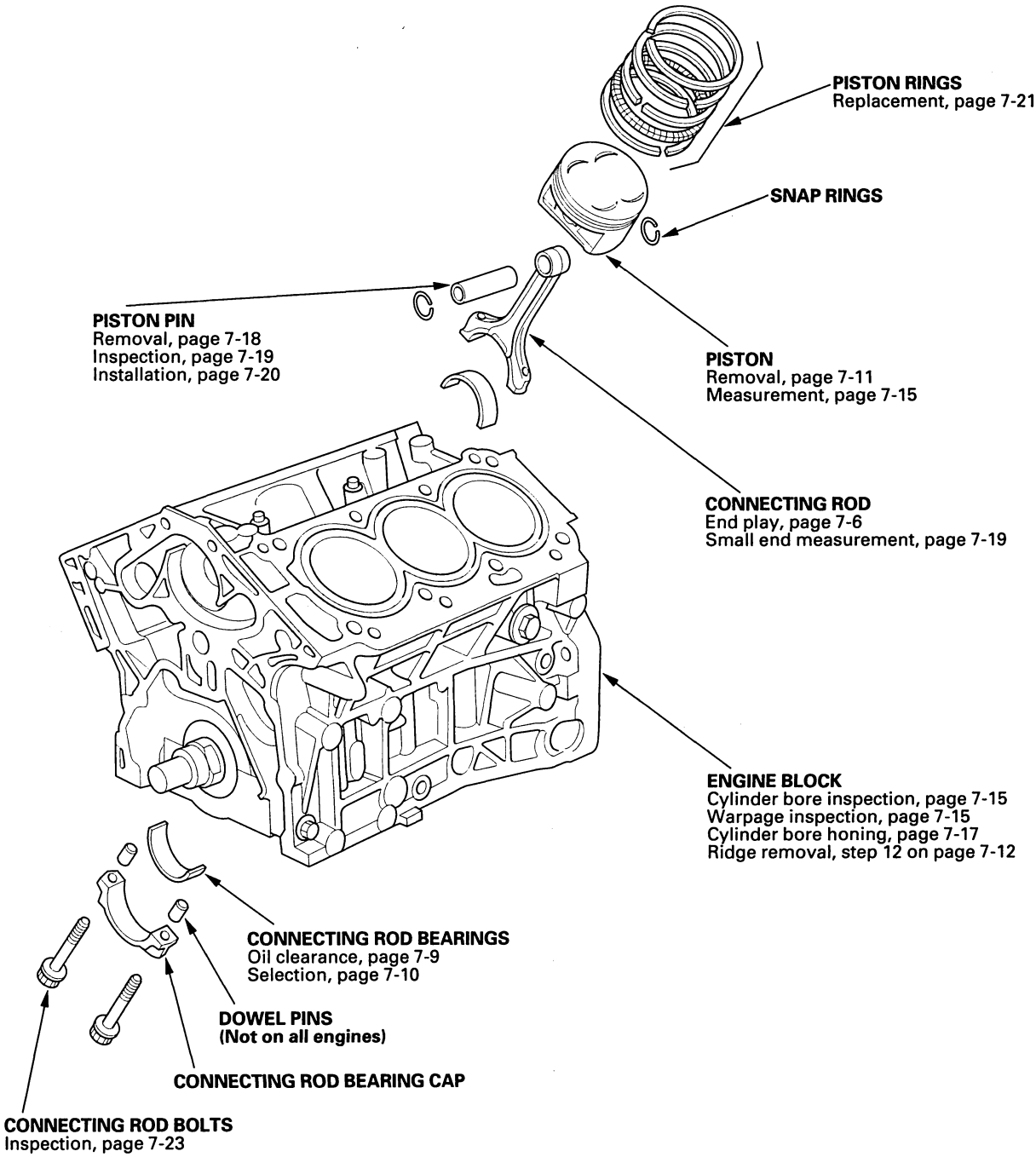

Protected by AR

Connecting Rod and Crankshaft End Play Inspection

1. Remove the oil pump (see page 8-10).
2. Remove the baffle plate (see step 11 on page 7-12).
3. Measure the connecting rod end play with a feeler gauge (A) between the connecting rod (B) and crankshaft (C).

   Connecting Rod End Play
   Standard (New): 0.15—0.35 mm (0.006—0.014 in.)
   Service Limit: 0.45 mm (0.018 in.)

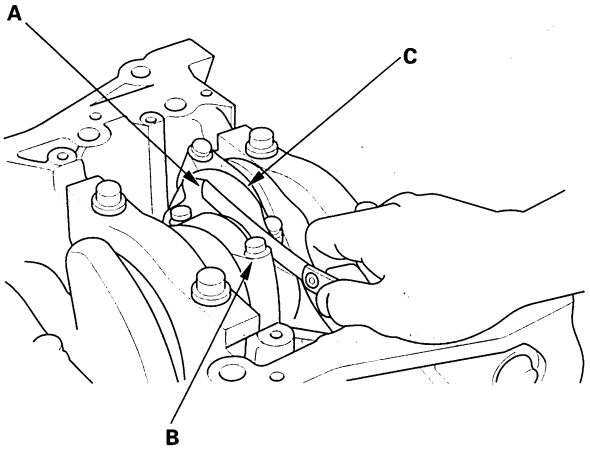

4. If the connecting rod end play is out-of-tolerance, install a new connecting rod and recheck. If it is still out-of-tolerance, replace the crankshaft (see step 12 on page 7-12).
5. Push the crankshaft firmly away from the dial indicator, and zero the dial against the end of the crankshaft. Then pull the crankshaft firmly back toward the indicator; the dial reading should not exceed the service limit.

   Crankshaft End Play
   Standard (New): 0.10—0.35 mm (0.004—0.014 in.)
   Service Limit: 0.45 mm (0.018 in.)

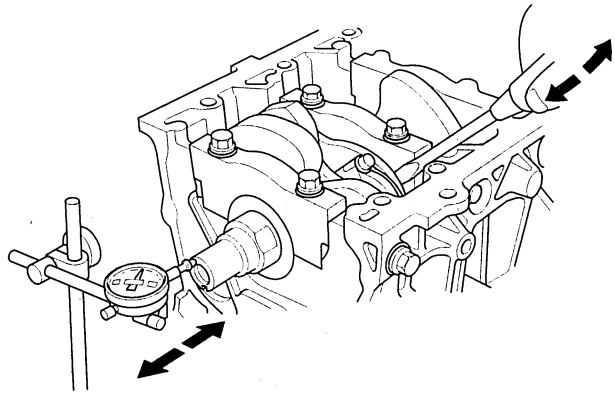

6. If the end play is excessive, replace the thrust washers and recheck. If it is still out-of-tolerance, replace the crankshaft (see step 12 on page 7-12).

BACK

Protected by AR

Crankshaft Main Bearing Replacement

Main Bearing Clearance Inspection

1. Remove the main caps and bearing halves (see page 7-11).

2. Clean each main journal and bearing half with a clean shop towel.

3. Place one strip of plastigage across each main journal.

   NOTE: If the engine is still in the vehicle when you bolt the main cap down to check the clearance, the weight of the crankshaft and drive plate will flatten the plastigage further than just the torque on the cap bolt and give you an incorrect reading. For an accurate reading, support the crank with a jack under the counterweights, and check only one bearing at a time.

4. Reinstall the bearings and caps, then torque the bearing cap bolts to 74 N·m (7.5 kgf·m, 54 lbf·ft), and the bearing cap side bolts to 49 N·m (5.0 kgf·m, 36 lbf·ft) in the proper sequence (see step 21 on page 7-25).

   NOTE: Do not rotate the crankshaft during inspection.

5. Remove the cap and bearing half, and measure the widest part of the plastigage.

   Main Bearing-to-Journal Oil Clearance
   Standard (New): 0.020—0.044 mm (0.0008—0.0017 in.)
   Service Limit: 0.050 mm (0.0020 in.)

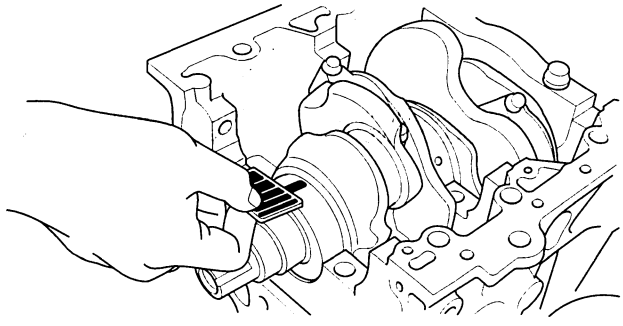

6. If the plastigage measures too wide or too narrow, remove the crankshaft, and remove the upper half of the bearing. Install a new, complete bearing with the same color code, and recheck the clearance. Do not file, shim, or scrape the bearings or the caps to adjust clearance.

7. If the plastigage shows the clearance is still incorrect, try the next larger or smaller bearing (the color listed above or below that one), and check again. If the proper clearance cannot be obtained by using the appropriate larger or smaller bearings, replace the crankshaft and start over.

(cont'd)

Protected by AR

Crankshaft Main Bearing Replacement (cont'd)

Main Bearing Selection

Crankshaft Bore Code Location

Letters or bars have been stamped on the end of the block as a code for the size of each of the four main journal bores.

Use them, and the numbers stamped on the crankshaft (codes for main journal size), to choose the correct bearings. If the codes are indecipherable because of an accumlation of dirt and dust, do not scrub them with a wire brush or scraper. Clean them only with solvent or detergent.

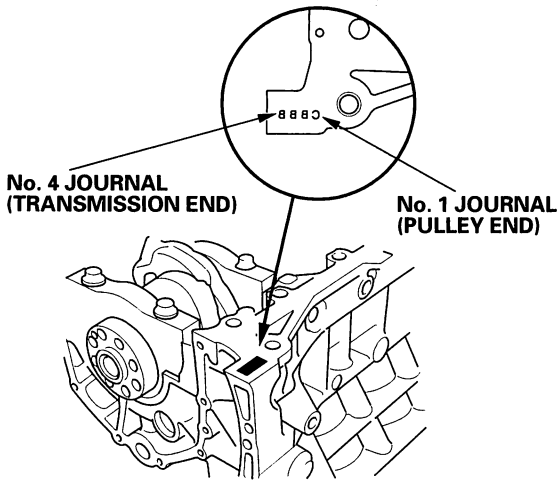

Bearing Identification

Color code is on the edge of the bearing

	Larger crank bore →			
	A or I	B or II	C or III	D or IIII
Smaller bearing (Thicker) ↓				
1 or I	Red/ Pink	Pink	Pink/ Yellow	Yellow
2 or II	Pink	Pink/ Yellow	Yellow	Yellow/ Green
3 or III	Pink/ Yellow	Yellow	Yellow/ Green	Green
4 or IIII	Yellow	Yellow/ Green	Green	Green/ Brown
5 or IIIII	Yellow/ Green	Green	Green/ Brown	Brown
6 or IIIIII	Green	Green/ Brown	Brown	Brown/ Black

Smaller main journal

Smaller bearing (Thicker)

NOTE: When using bearing halves of different colors, it does not matter which color is used in the top or bottom.

Main journal code locations (Numbers or Bars)

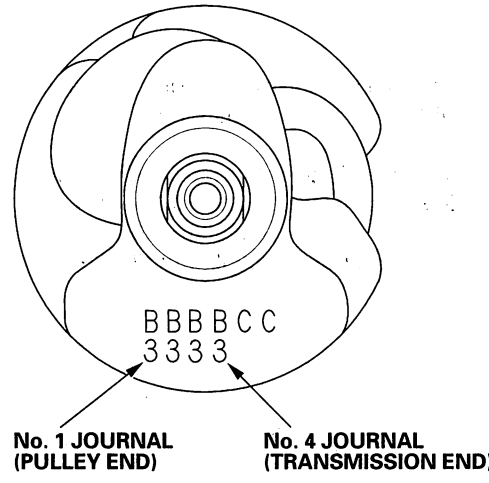

BACK

Protected by AR

Connecting Rod Bearing Replacement

Rod Bearing Clearance Inspection

1. Remove the connecting rod cap and bearing half (see page 7-11).
2. Clean the crankshaft rod journal and bearing half with a clean shop towel.
3. Place a strip of plastigage across the rod journal.
4. Reinstall the bearing half and cap, and torque the bolts.

   Tightening torque:
   20 N·m (2.0 kgf·m, 14 lbf·ft) + 90 °
   Apply new engine oil to the bolt threads.

   NOTE: Do not rotate the crankshaft during inspection.

5. Remove the rod cap and bearing half, and measure the widest part of the plastigage.

   Connecting Rod Bearing-to-Journal Oil Clearance
   Standard (New): 0.020—0.044 mm
   (0.0008—0.0017 in.)
   Service Limit: 0.050 mm (0.0020 in.)

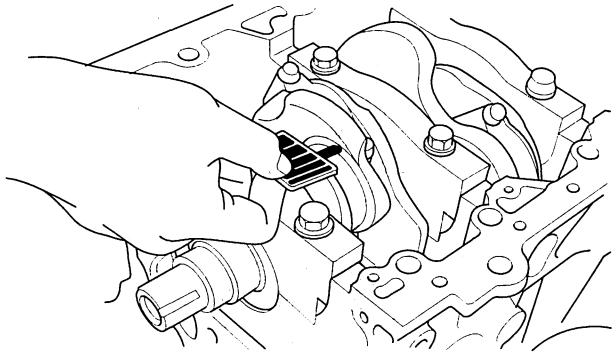

6. If the plastigage measures too wide or too narrow, remove the upper half of the bearing, then install a new, complete bearing with the same color code, and recheck the clearance. Do not file, shim, or scrape the bearings or the caps to adjust clearance.
7. If the plastigage shows the clearance is still incorrect, try the next larger or smaller bearing (the color listed above or below that one), and check clearance again. If the proper clearance cannot be obtained by using the appropriate larger or smaller bearings, replace the crankshaft and start over.

(cont'd)

Protected by AR

Connecting Rod Bearing Replacement (cont'd)

Rod Bearing Selection

Each rod falls into one of four tolerance ranges (from 0 to 0.024 mm (0.0009 in.), in 0.006 mm (0.0002 in.) increments) depending on the size of its big end bore. It's then stamped with a number or bar (1, 2, 3, or 4/I, II, III, or IIII) indicating the range. You may find any combination of 1, 2, 3, or 4/I, II, III, or IIII in any engine.

Normal Bore Size: 56.0 mm (2.20 in.)

Inspect the connecting rod for cracks and heat damage.

Connecting Rod Journal Code Locations
Numbers or bars have been stamped on the side of each connecting rod as a code for the size of the big end. Use them, and the letters or bars stamped on the crank (codes for rod journal size), to choose the correct bearings. If the codes are indecipherable because of an accumulation of dirt and dust, do not scrub them with a wire brush or scraper. Clean them only with solvent or detergent.

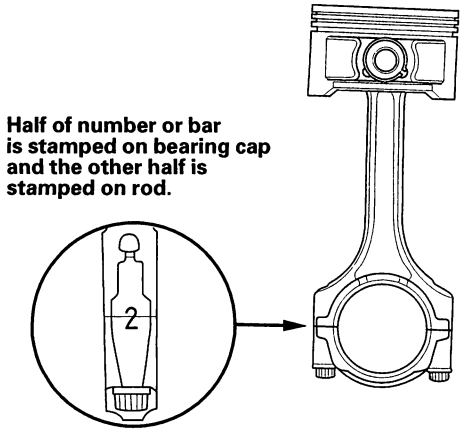

Bearing Identification

Color code is on the edge of the bearing

Smaller rod journal	Larger big end bore → 1 or I	2 or II	3 or III	4 or IIII
A or I	Pink	Pink/ Yellow	Yellow	Yellow/ Green
B or II	Pink/ Yellow	Yellow	Yellow/ Green	Green
C or III	Yellow	Yellow/ Green	Green	Green/ Brown
D or IIII	Yellow/ Green	Green	Green/ Brown	Brown
E or IIIII	Green	Green/ Brown	Brown	Brown/ Black
F or IIIIII	Green/ Brown	Brown	Brown/ Black	Black

Smaller bearing (Thicker) ↓

NOTE: When using bearing halves of different colors, it does not matter which color is used in the top or bottom.

Connecting rod journal code locations (Letters or Bars)

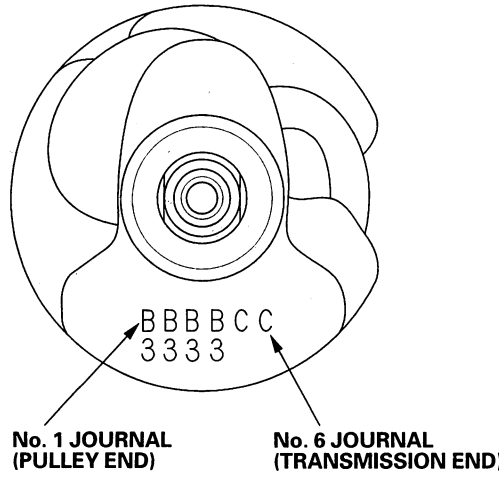

BACK

Protected by AR

Oil Pan Removal

1. If the engine is out of the vehicle, go to step 5.
2. Raise the vehicle on the hoist to full height.
3. Drain the engine oil (see page 8-6).
4. Remove exhaust pipe A (see step 40 on page 5-5).
5. Remove the torque converter cover (A) and the two bolts (B) securing the transmission.

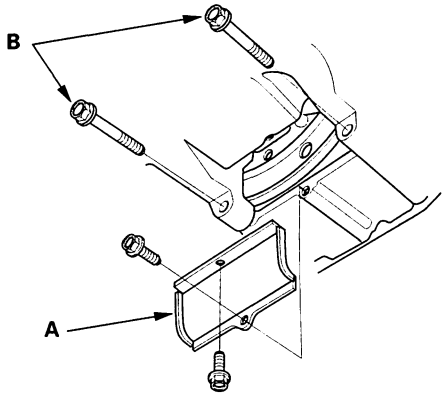

6. Remove the bolts securing the oil pan.
7. Using a flat blade screwdriver, separate the oil pan from the block in the places shown.

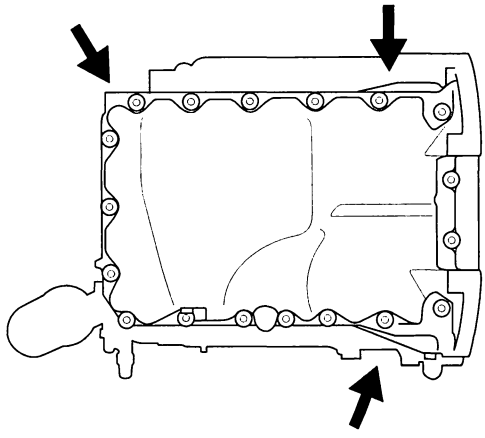

8. Remove the oil pan.

Crankshaft and Piston Removal

1. Remove the engine assembly (see page 5-2).
2. Remove the transmission:
   - Manual transmission (see page 13-11)
   - Automatic transmission (see page 14-187)
3. M/T model: Remove the pressure plate (see page 12-11), cluch disc (see page 12-11), and flywheel (see page 12-13).
4. A/T model: Remove the drive plate (see page 14-197).
5. Remove the cylinder heads (see page 6-30).
6. Remove the crankshaft position (CKP) sensor (see page 11-221).
7. Remove the timing belt drive pulley from the crankshaft.
8. Remove the oil pan (see page 7-11).
9. Remove the engine block end cover.

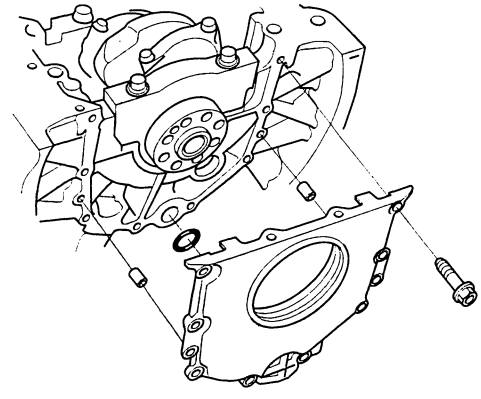

(cont'd)

Protected by AR

Crankshaft and Piston Removal (cont'd)

10. Remove the rocker arm oil control solenoid (VTEC solenoid valve)/oil filter assembly.

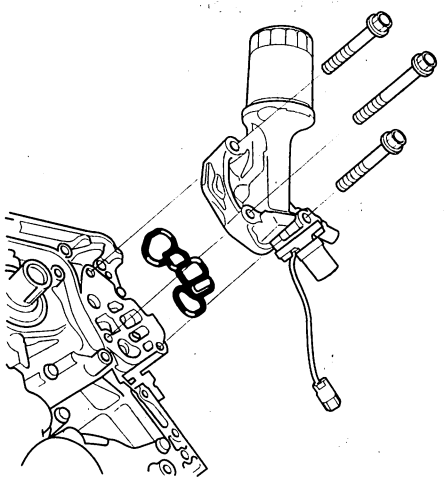

11. Remove the oil screen (A), baffle plate (B), and oil pump (C).

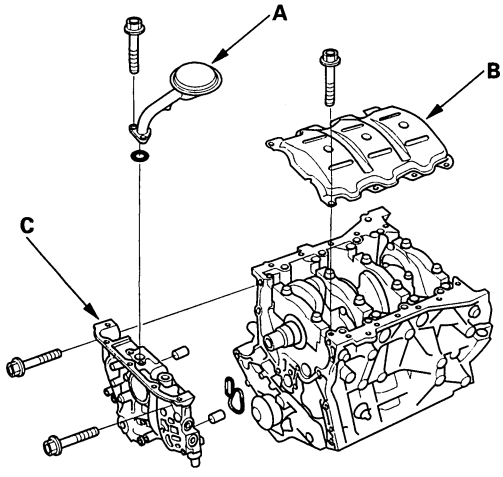

12. If you can feel a ridge of metal or hard carbon around the top of any cylinder, remove it with a ridge reamer (A). Follow the reamer manufacturer's instructions. If the ridge is not removed, it may damage the pistons as they are pushed out.

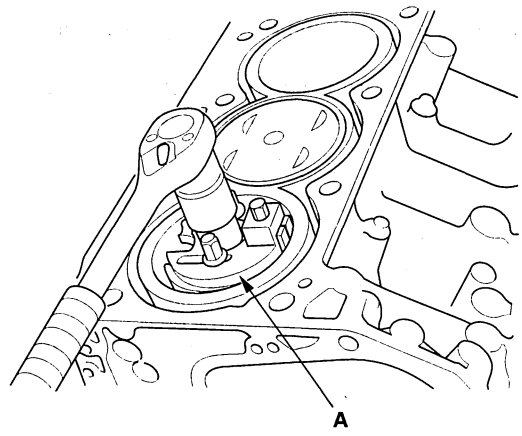

BACK

Protected by AR

13. Remove the bearing from the cap. Keep all caps/ bearings in order.

14. Remove the upper bearing halves from the connecting rods, and set them aside with their respective caps.

15. Remove the connecting rod caps after setting the crank pin at bottom dead center (BDC) for each cylinder. Remove the piston assembly by pushing on the connecting rod. Take care not to damage the crank pin or cylinder with the connecting rod.

CORRECT

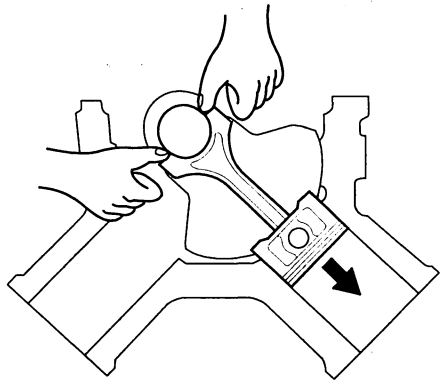

INCORRECT

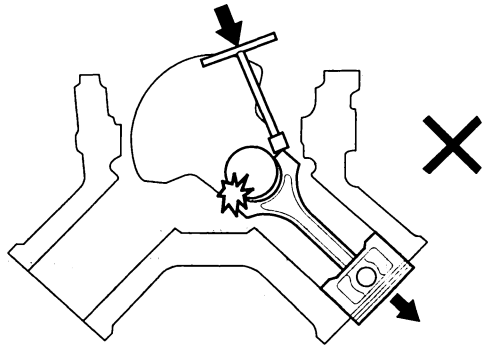

16. After removing a piston/connecting rod assembly, reinstall the cap on the rod.

17. To avoid confusion during reassembly, mark each piston/connecting rod assembly with its cylinder number.

18. Unscrew the bearing cap bolts and bearing cap side bolts in sequence 1/3 turn at a time; repeat the sequence until all bolts are loosened.

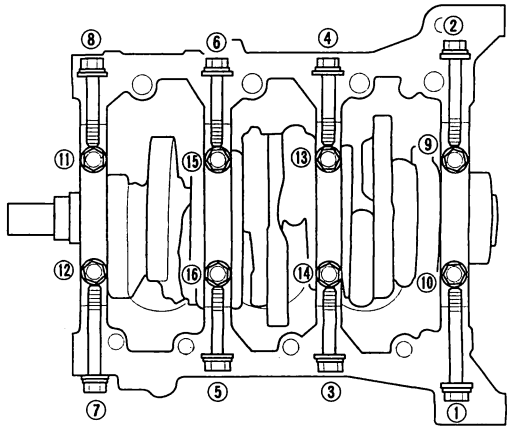

(cont'd)

Protected by AR

Crankshaft and Piston Removal (cont'd)

19. Remove the bearing cap bolts (A) and bearing cap side bolts (B), then remove the bearing cap (C).

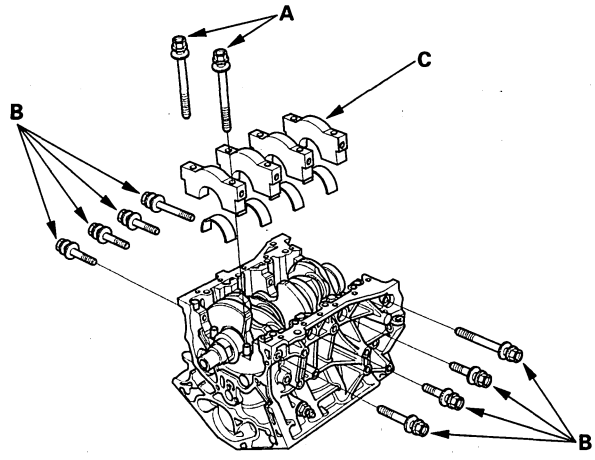

20. Lift the crankshaft (A) out of the engine block, being careful not to damage the journals.

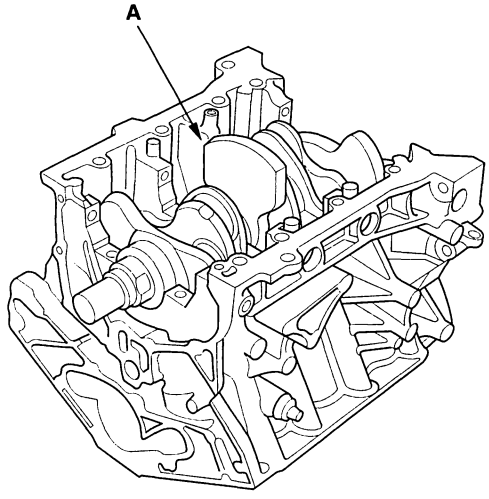

21. Reinstall the main caps and bearings on the engine block in the proper order.

Crankshaft Inspection

Out-of-Round and Taper

1. Remove the crankshaft from the engine block (see page 7-11).
2. Clean the crankshaft oil passages with pipe cleaners or a suitable brush.
3. Check the keyway and threads.
4. Measure out-of-round at the middle of each rod and main journal in two places. The difference between measurements on each journal must not be more than the service limit.

Journal Out-of-Round
Standard (New): 0.005 mm (0.0002 in.) max.
Service Limit: 0.010 mm (0.0004 in.)

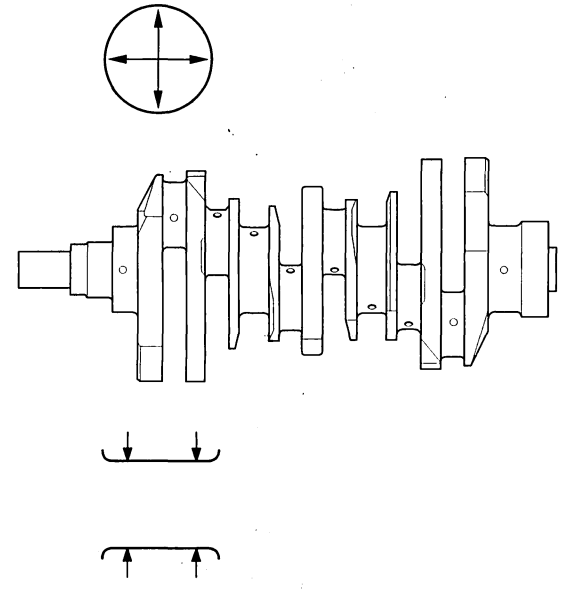

5. Measure taper at the edges of each rod and main journal. The difference between measurements on each journal must not be more than the service limit.

Journal Taper
Standard (New): 0.005 mm (0.0002 in.) max.
Service Limit: 0.010 mm (0.0004 in.)

BACK

Protected by AR

Block and Piston Inspection

Straightness

6. Place the engine block on the surface plate.
7. Clean and install the bearings on the No. 1 and No. 4 journal of the engine block.
8. Lower the crankshaft into the block.
9. Measure the runout on all of the main journals. Rotate the crankshaft two complete revolutions. The difference between measurements on each journal must not be more than the service limit.

Crankshaft Total Runout
Standard (New): 0.020 mm (0.0008 in.) max.
Service Limit: 0.030 mm (0.0012 in.)

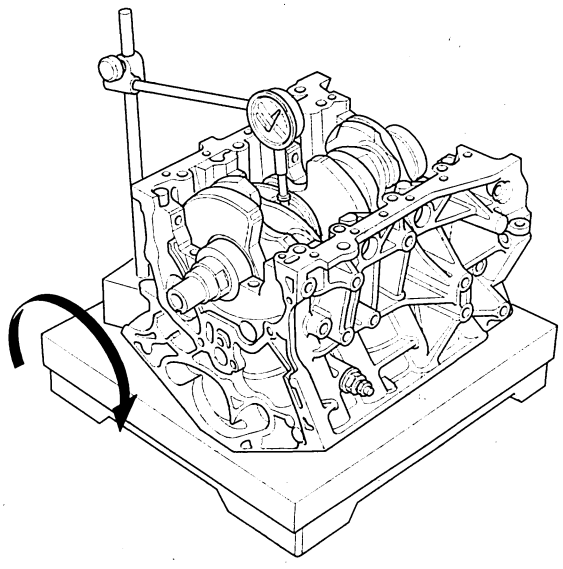

1. Remove the piston from the engine block (see page 7-11).
2. Check the piston for distortion or cracks.
3. Measure the piston diameter at a point 16.0 mm (0.63 in.) from the bottom of the skirt.

Piston Diameter
Standard (New): 85.975—85.985 mm (3.3848—3.3852 in.)
Service Limit: 85.965 mm (3.3844 in.)

Oversize Piston Diameter
0.25: 86.225—86.235 mm (3.3947—3.3951 in.)
0.50: 86.475—86.485 mm (3.4045—3.4049 in.)

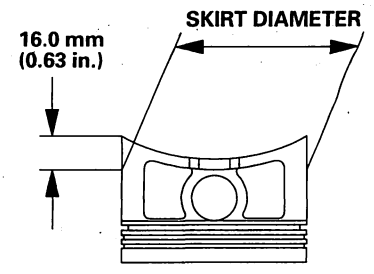

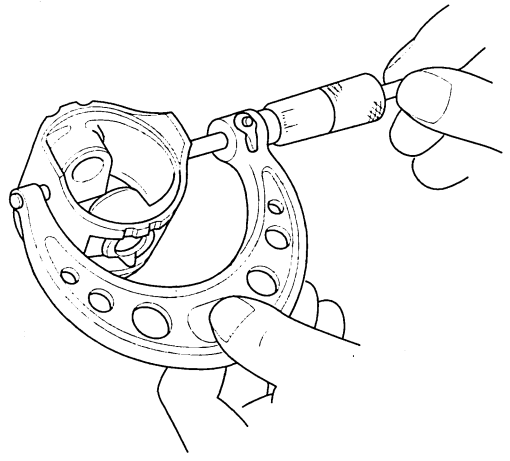

(cont'd)

Protected by AR

Block and Piston Inspection (cont'd)

4. Measure wear and taper in direction X and Y at three levels in each cylinder as shown. If measurements in any cylinder are beyond the oversize bore service limit, replace the block. If the block has to be rebored, refer to step 7 after reboring.

Cylinder Bore Size
Standard (New): 86.000—86.015 mm (3.3858—3.3864 in.)
Service Limit: 86.065 mm (3.3884 in.)

Oversize
0.25: 86.250—86.265 mm (3.3957—3.3963 in.)
0.50: 86.500—86.515 mm (3.4055—3.4061 in.)
Reboring Limit: 0.5 mm (0.02 in.)

Bore Taper
Limit: (Difference between first and third measurement) 0.05 mm (0.002 in.)

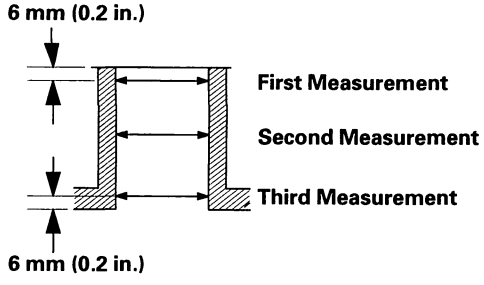

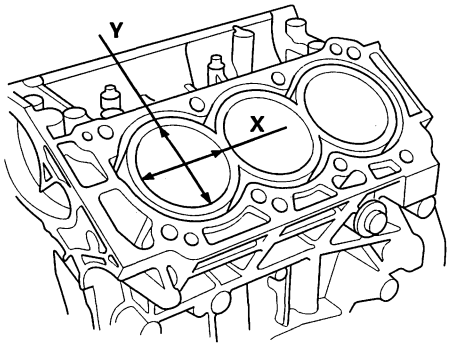

5. Scored or scratched cylinder bores must be honed (see page 7-17).

6. Check the top of the engine block for warpage. Measure along the edges and across the center as shown.

Engine Block Warpage
Standard (New): 0.07 mm (0.003 in.) max.
Service Limit: 0.10 mm (0.004 in.)

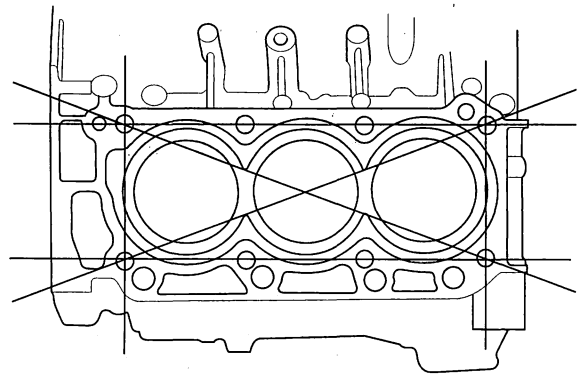

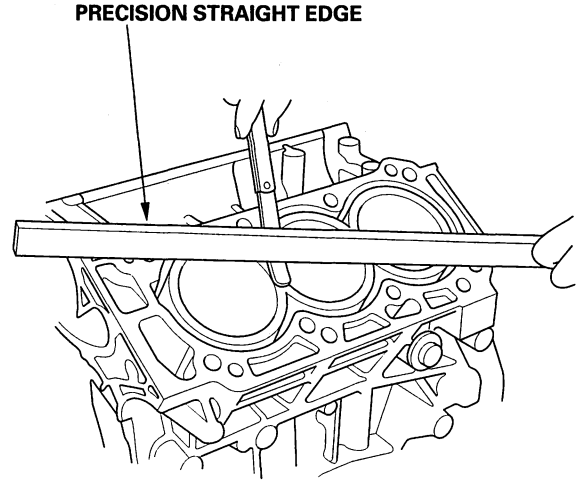

BACK

Protected by AR

Cylinder Bore Honing

7. Calculate the difference between cylinder bore diameter and piston diameter. If the clearance is near or exceeds the service limit, inspect the piston and engine block for excessive wear.

Piston-to-Cylinder Bore Clearance
Standard (New): 0.015—0.040 mm (0.0006—0.0016 in.)
Service Limit: 0.08 mm (0.003 in.)

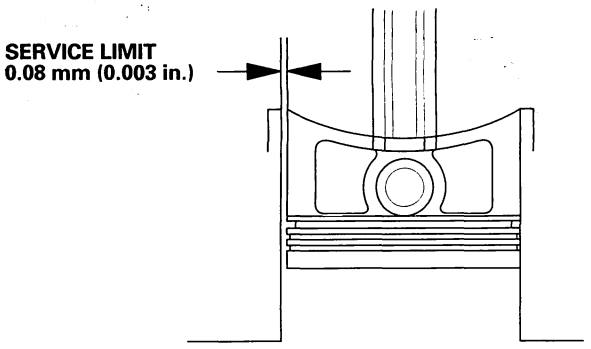

1. Measure the cylinder bores (see step 4 on page 7-16). If the engine block is to be reused, hone the cylinders and remeasure the bores. Only scored or scratched cylinder bores must be honed.

2. Hone the cylinder bores with honing oil and a fine (400 grit) stone in a 60 degree crosshatch pattern.

   NOTE:
   - Use only a rigid hone with 400 grit or finer stone, such as Sunnen, Ammco, or equivalent.
   - Do not use stones that are worn or broken.

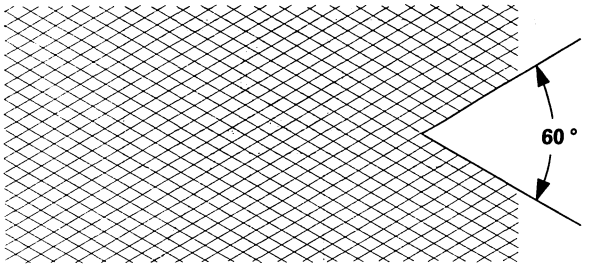

3. When honing is complete, thoroughly clean the engine block of all metal particles. Wash the cylinder bores with hot soapy water, then dry and oil them immediately to prevent rusting. Never use solvent, it will only redistribute the grit on the cylinder walls.

4. If scoring or scratches are still present in the cylinder bores after honing to the service limit, rebore the engine block. Some light vertical scoring and scratching is acceptable if it is not deep enough to catch your fingernail and does not run the full length of the bore.

Protected by AR

Piston, Pin, and Connecting Rod Replacement

Disassembly

1. Remove the piston from the engine block (see page 7-11).

2. Apply new engine oil to the piston pin snap rings (A) and turn them in the ring grooves until the end gaps are lined up with the cutouts in the piston pin bores (B).

   NOTE: Take care not to damage the ring grooves.

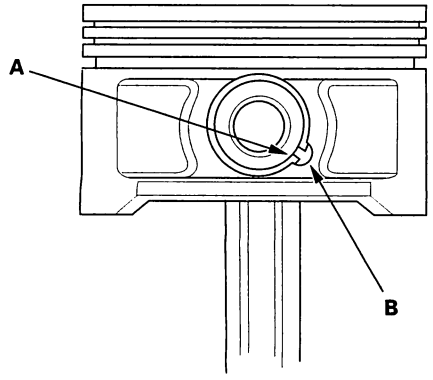

3. Remove snap rings (A) from both sides of the piston. Start at the cutout in the piston pin bore. Remove the snap rings carefully so they do not go flying or get lost. Wear eye protection.

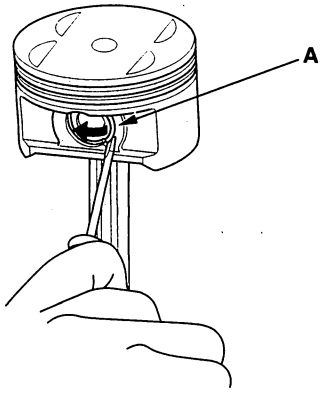

4. Heat the piston and connecting rod assembly to about 158 °F (70 °C), then remove the piston pin.

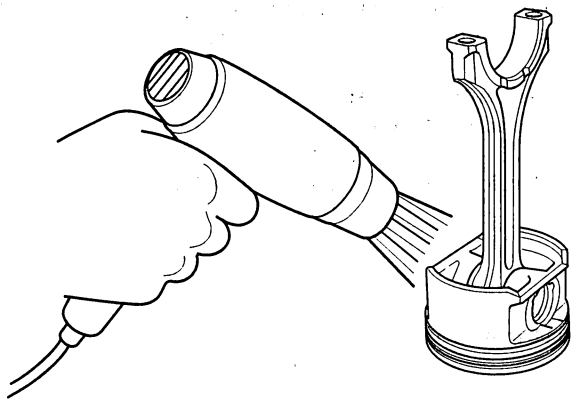

BACK

Protected by AR

Inspection

NOTE: Inspect the piston, piston pin, and connecting rod when they are at room temperature.

1. Measure the diameter of the piston pin.

Piston Pin Diameter
Standard (New): 21.962—21.965 mm (0.8646—0.8648 in.)
Service Limit: 21.954 mm (0.8643 in.)

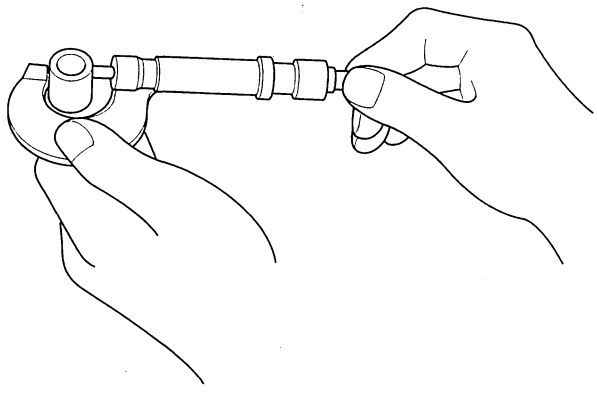

2. Zero the dial indicator to the piston pin diameter.

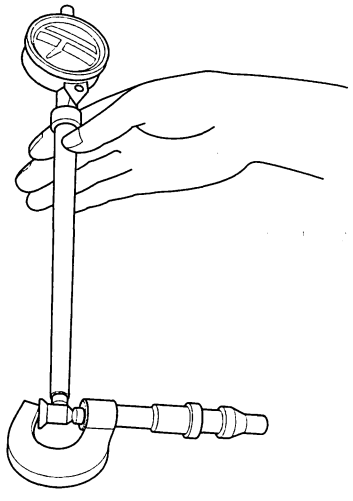

3. Check the difference between the piston pin diameter and piston pin hole diameter on the piston.

Piston Pin-to-Piston Clearance
Standard (New): −0.0050 to +0.0010 mm (−0.00020 to +0.00004 in.)
Service Limit: 0.004 mm (0.0002 in.)

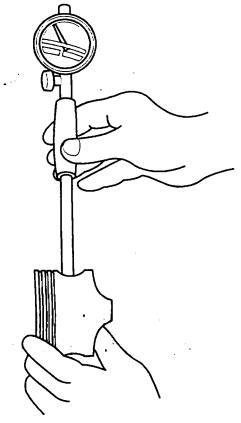

4. Measure the piston pin-to-connecting rod clearance.

Piston Pin-to-Connecting Rod Clearance
Standard (New): 0.005—0.014 mm (0.0002—0.0006 in.)
Service Limit: 0.019 mm (0.0007 in.)

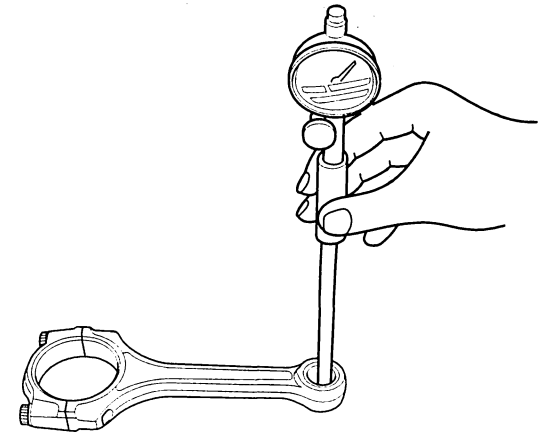

(cont'd)

Protected by AR

Piston, Pin, and Connecting Rod Replacement (cont'd)

Reassembly

1. Install a piston pin snap ring (A).

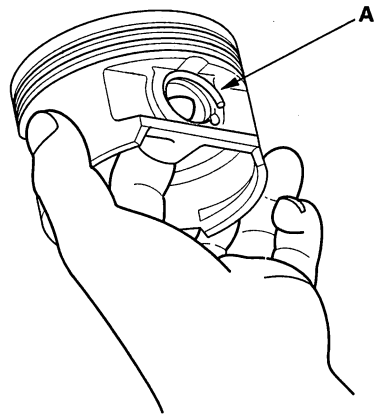

2. Coat the piston pin bore in the piston, the bore in the connecting rod, and the piston pin with new engine oil.

3. Heat the piston to about 158 °F (70 °C).

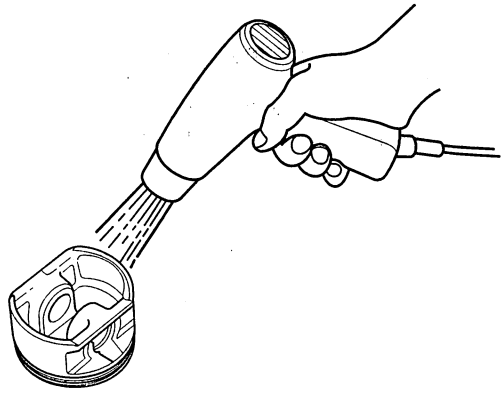

4. Assemble the piston (A) and connecting rod (B) with the embossed marks (C) on the same side. Install the piston pin (D).

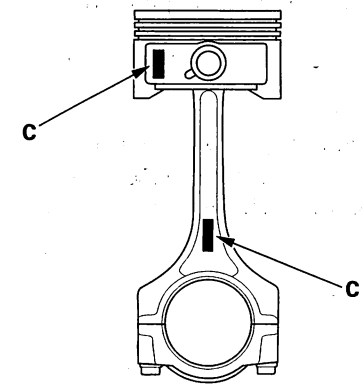

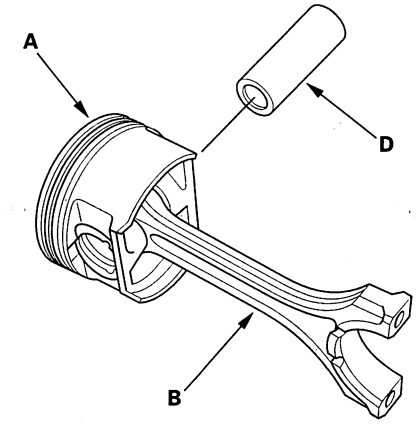

5. Install the remaining snap ring.

BACK

Protected by AR

Piston Ring Replacement

1. Remove the piston from the engine block (see page 7-11).

2. Using a ring expander (A), remove the old piston rings (B).

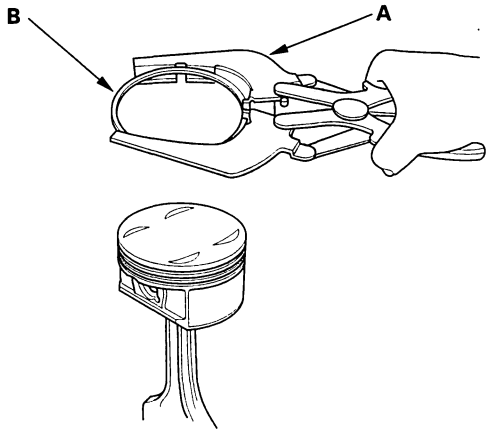

3. Clean all the ring grooves thoroughly with a squared-off broken ring, or a ring groove cleaner with a blade to fit the piston grooves. File down the blade, if necessary.
   The top ring and second ring grooves are 1.2 mm (0.05 in.) wide, and the oil ring groove is 2.8 mm (0.11 in.) wide.
   Do not use a wire brush to clean the ring grooves, or cut the ring grooves deeper with the cleaning tool.

   NOTE: If the piston is to be separated from the connecting rod, do not install new rings yet.

4. Using a piston, push a new ring (A) into the cylinder bore 15—20 mm (0.6—0.8 in.) from the bottom.

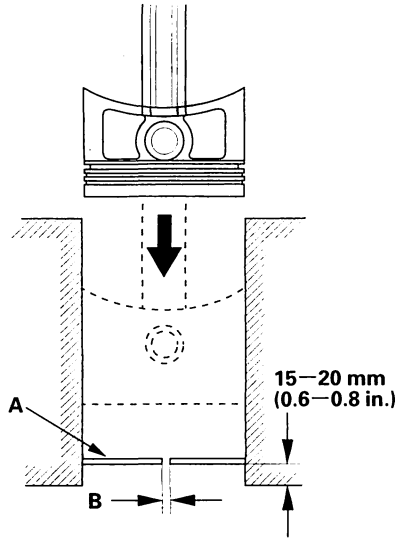

5. Measure the piston ring end-gap (B) with a feeler gauge:

   - If the gap is too small, check to see *if you have* the proper rings for your engine.
   - If the gap is too large, recheck the cylinder bore diameter against the wear limits (see step 4 on page 7-16). If the bore is over the service limit, the engine block must be rebored.

Piston Ring End-Gap
Top Ring:
Standard (New): 0.20—0.35 mm (0.008—0.014 in.)
Service Limit: 0.60 mm (0.024 in.)
Second Ring:
Standard (New): 0.40—0.55 mm (0.016—0.022 in.)
Service Limit: 0.70 mm (0.028 in.)
Oil Ring:
Standard (New): 0.20—0.70 mm (0.008—0.028 in.)
Service Limit: 0.80 mm (0.031 in.)

(cont'd)

Protected by AR

Piston Ring Replacement (cont'd)

6. Install the rings as shown. The top ring (A) has a 1A mark and the second ring (B) has a 2B mark. The manufacturing marks (C) must be facing upward.

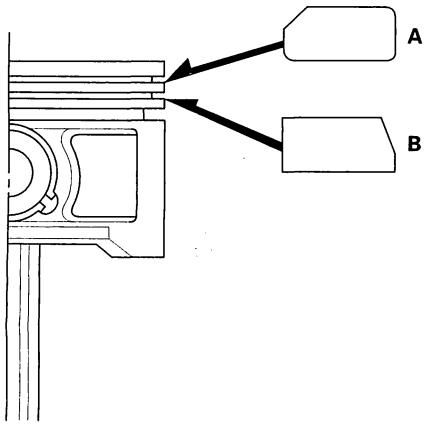

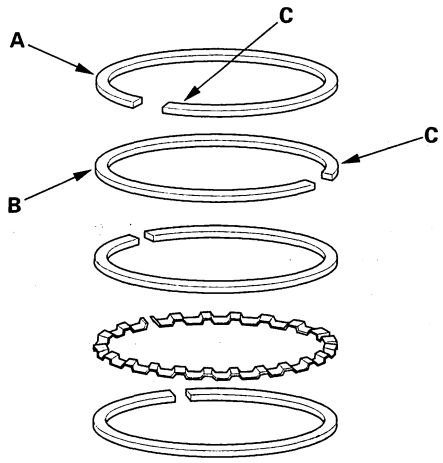

Piston Ring Dimensions:

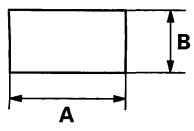

Top Ring (Standard)
A: 3.1 mm (0.12 in.)
B: 1.2 mm (0.05 in.)

Second Ring (Standard)
A: 3.4 mm (0.13 in.)
B: 1.2 mm (0.05 in.)

7. After installing a new set of rings, measure the ring-to-groove clearance:

Top Ring Clearance
Standard (New): 0.055—0.080 mm (0.0022—0.0031 in.)
Service Limit: 0.15 mm (0.006 in.)

Second Ring Clearance
Standard (New): 0.030—0.055 mm (0.0012—0.0022 in.)
Service Limit: 0.13 mm (0.005 in.)

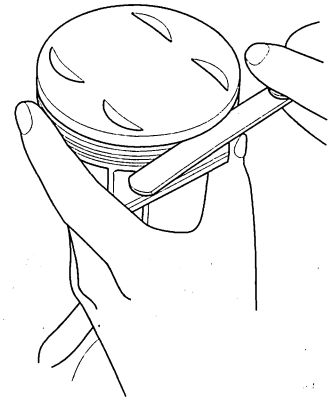

8. Rotate the rings in their grooves to make sure they do not bind.

9. Position the ring end gaps as shown:

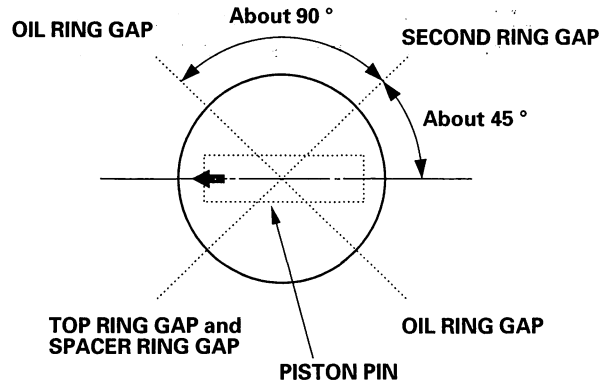

BACK

Protected by AR

Crankshaft and Piston Installation

Special Tools Required
- Driver 07749-0010000
- Driver attachment, 106 mm 070AD-RCAA200

1. Check the connecting rod bearing clearance with plastigage (see page 7-9).
2. Check the main bearing clearance with plastigage (see page 7-7).
3. Install the bearing halves in the engine block and connecting rods.
4. Apply new engine oil to inside of the main bearings and rod bearings.
5. Lower the crankshaft (A) into the engine block.

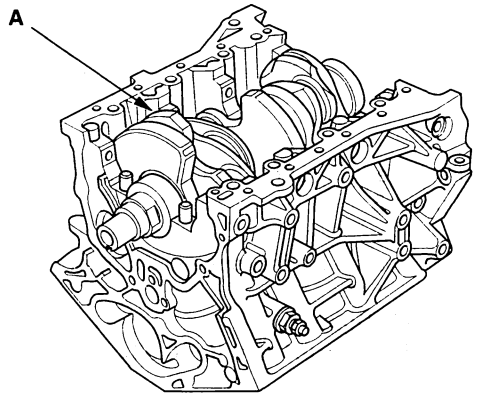

6. Apply new engine oil to the side with the thrust washer groove. Install the thrust washers (A) in the No. 3 journal.

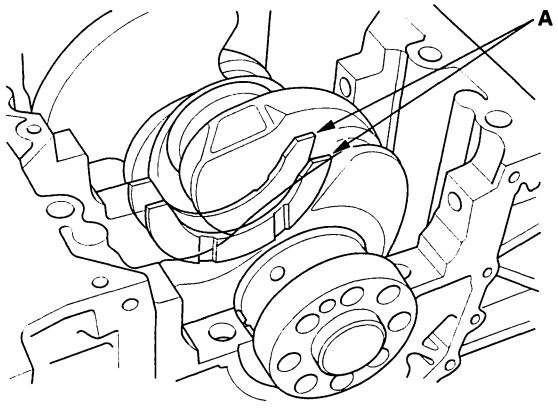

7. Install the bearings (A) and bearing caps (B) with the arrow (C) facing the timing belt end of the engine.

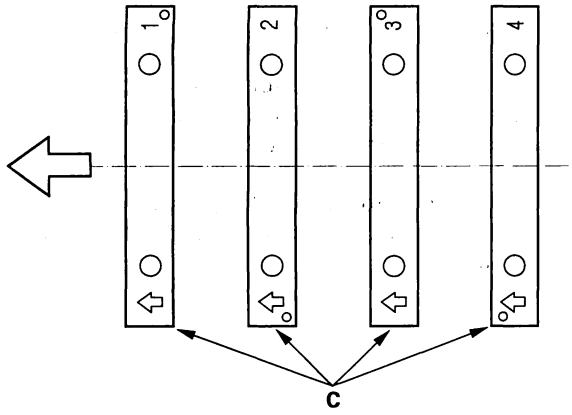

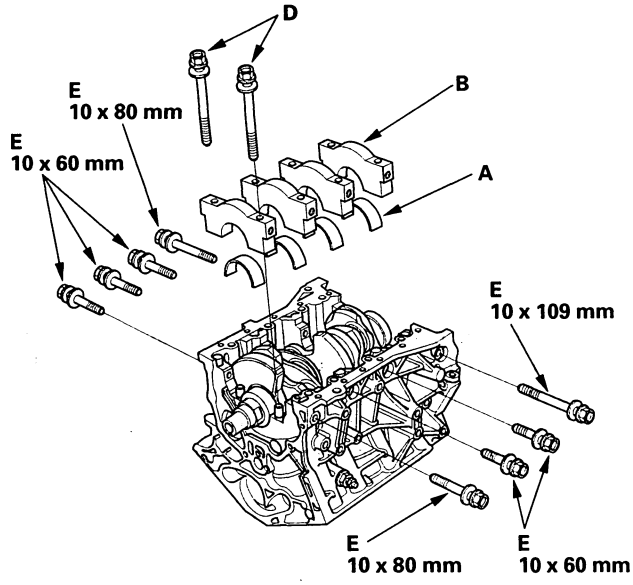

8. Apply new engine oil to the bolt threads and flanges, then loosely install the bearing cap bolts (D) and bearing cap side bolts (E).

(cont'd)

Protected by AR

Crankshaft and Piston Installation (cont'd)

9. Set the crankshaft to bottom dead center (BDC) for the cylinder you are installing the piston in.

10. Apply new engine oil to the piston, inside of the ring compressor, and the cylinder bore.

11. Attach the ring compressor to the piston/connecting rod assembly, and check that the bearing is securely in place.

12. Position the piston/connecting rod assembly with the arrow (A) facing the timing belt side of the engine.

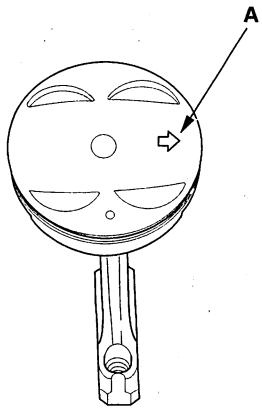

13. Position the piston/connecting rod assembly in the cylinder, and tap it in using the wooden handle of a hammer (A). Maintain downward force on the ring compressor (B) to prevent the rings from expanding before entering the cylinder bore.

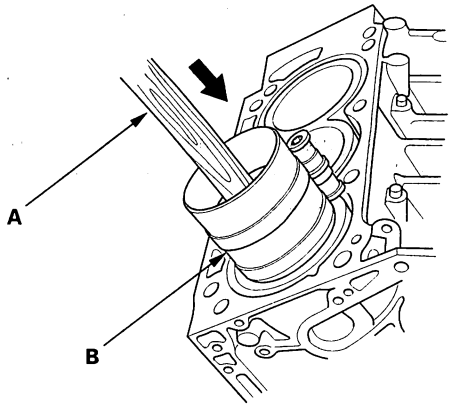

14. Stop after the ring compressor pops free, and check the connecting rod-to-crank journal alignment before pushing the piston into place.

15. Measure the diameter of each connecting rod bolt at point A and point B.

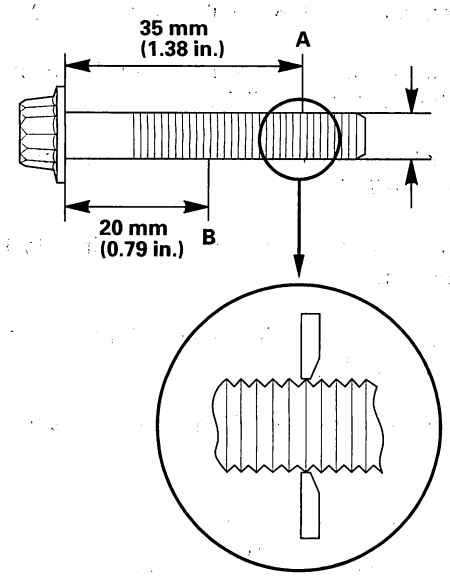

16. Calculate the difference in diameter between point A and point B.

Point A—Point B = Difference in Diameter

Difference in Diameter
Specification: 0—0.1 mm (0—0.004 in.)

17. If the difference in diameter is out of tolerance, replace the connecting rod bolt.

BACK

Protected by AR

18. Line up the mark (A) on the connecting rod and cap, then install the cap.

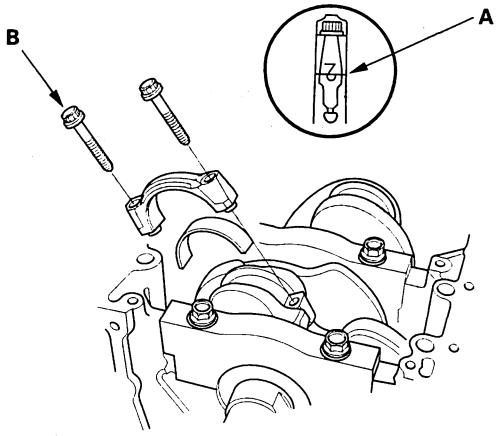

19. Apply new engine oil to the bolt threads and flanges. Torque the bolts (B) to 20 N·m (2.0 kgf·m, 14 lbf·ft).

20. Mark the connecting rod (A) and bolt head (B) as shown.

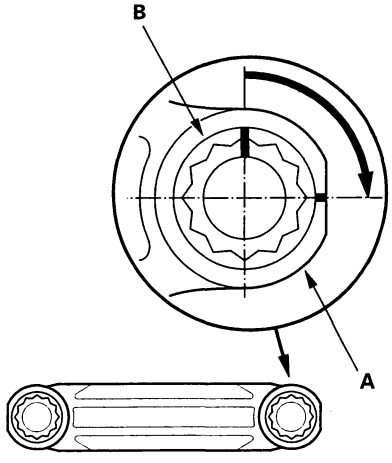

21. Tighten the bolt until the mark on the bolt head lines up with the mark on the connecting rod (turn the bolt 90 °).

NOTE: Remove the connecting rod bolt if you tightened it beyond the specified angle, and go back to step 15 of the procedure. Do not loosen it back to the specified angle.

22. Tighten the bearing cap bolts, and then the bearing cap side bolts to the specified torque in the sequence as shown. Repeat the torque sequence again to measure the bolts are properly torqued.

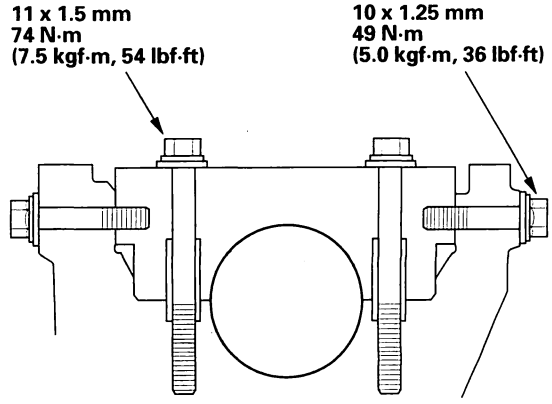

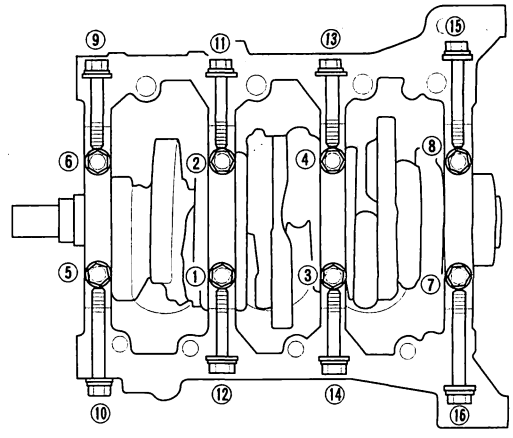

(cont'd)

Protected by AR

Crankshaft and Piston Installation (cont'd)

23. Apply a light coat of multipurpose grease to the crankshaft and to the lip of the seal.

24. Drive the new crankshaft oil seal until the driver attachment bottoms on the engine block end cover.

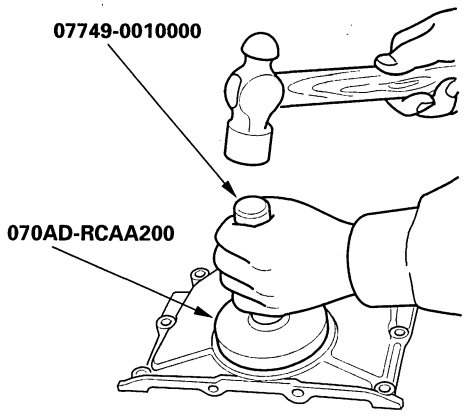

25. Remove all of the old liquid gasket from the engine block end cover mating surfaces, bolts, and bolt holes.

26. Clean and dry the engine block end cover mating surfaces.

27. Apply liquid gasket, P/N 08717-0004, 08718-0001, 08718-0002, 08718-0003, or 08718-0009, evenly to the engine block mating surface of the engine block end cover.

NOTE: Do not install components if too much time has passed after applying the liquid gasket (for P/N 08718-0002, no more than 4 minutes, for all others, no more than 5 minutes). Instead, remove the old residue and reapply the liquid gasket.

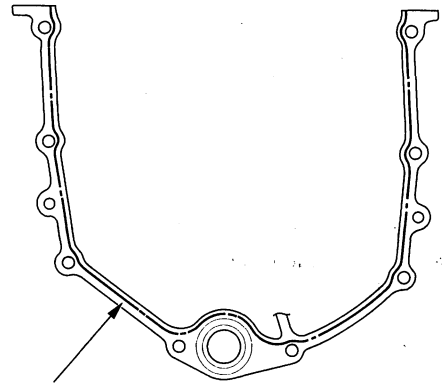

28. Install the dowel pins (A), new O-ring (B), and the engine block end cover (C) on the engine block.

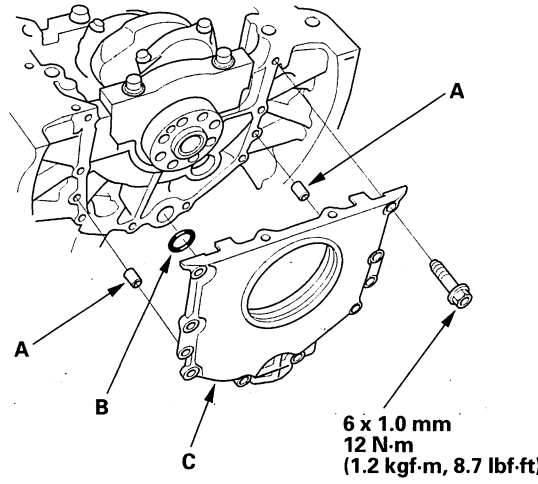

29. Clean the excess grease off the crankshaft, and check the seal for distortion.

BACK

Protected by AR

30. Install a new crankshaft oil seal in the oil pump (see step 2 on page 8-12).

31. Remove all of the old liquid gasket from the oil pump mating surfaces, bolts, and bolt holes.

32. Clean and dry the oil pump mating surfaces.

33. Apply liquid gasket, P/N 08717-0004, 08718-0001, 08718-0002, 08718- 0003, or 08718-0009, evenly to the engine block mating surface of the oil pump.

    NOTE: Do not install components if too much time has passed after applying the liquid gasket (for P/N 08718-0002, no more than 4 minutes, for all others, no more than 5 minutes). Instead, remove the old residue and reapply the liquid gasket.

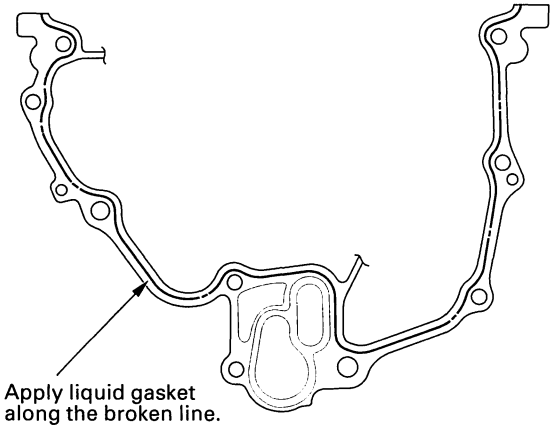

34. Grease the lip of the oil seal, and apply oil to the new O-ring (A).

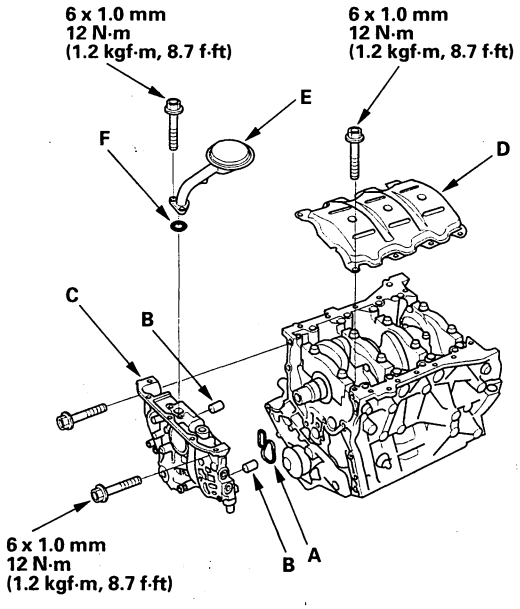

35. Install the dowel pins (B), then align the inner rotor with the crankshaft, and install the oil pump (C).

36. Clean the excess grease off the crankshaft, and check the seal for distortion.

37. Install the baffle plate (D), then install the oil screen (E) with new O-ring (F).

38. Install the rocker arm oil control solenoid (VTEC solenoid valve)/oil filter assembly (A), with a new rocker arm oil control solenoid (VTEC solenoid valve) filter (B).

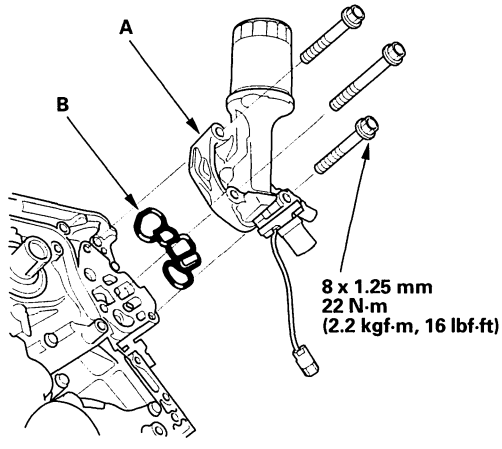

(cont'd)

Protected by AR

Crankshaft and Piston Installation (cont'd)

39. Install the oil pan (see page 7-29).

40. Install the crankshaft position (CKP) sensor (see page 11-221).

41. Install the cylinder heads (see page 6-50).

42. M/T model: Install the flywheel (see page 12-13), clutch disc (see page 12-11), and pressure plate (see page 12-11).

43. A/T model: Install the drive plate (see page 14-197).

44. Install the transmission:

    - Manual transmission (see page 13-19)
    - Automatic tansmission (see page 14-198)

45. Install the engine assembly (see page 5-11).

    NOTE: When any crankshaft or connecting rod bearing is replaced, after assembly it is necessary to run the engine at idling speed until it reaches normal operating temperature, then continue to run it for about 15 minutes.

BACK

Protected by AR

Oil Pan Installation

1. Remove all of the old liquid gasket from the oil pan mating surfaces, bolts, and bolt holes.
2. Clean and dry the oil pan mating surfaces.
3. Apply liquid gasket, P/N 08717-0004, 08718-0001, 08718-0002, 08718-0003, or 08718-0009, evenly to the oil pan mating surface of the engine block.

   NOTE: Do not install components if too much time has passed after applying the liquid gasket (for P/N 08718-0002, no more than 4 minutes, for all others, no more than 5 minutes). Instead, remove the old residue and reapply the liquid gasket.

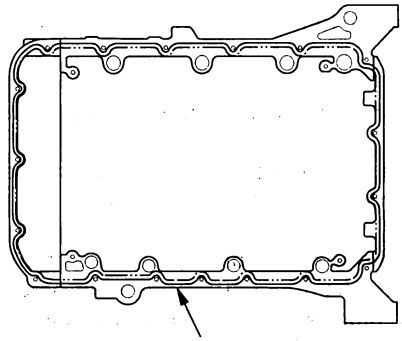

4. Install the oil pan on the engine block.
5. Tighten the bolts in two or three steps. In the final step, tighten all bolts, in sequence, to 12 N·m (1.2 kgf·m, 8.7 lbf·ft).

   NOTE: After assembly, wait at least 30 minutes before filling the engine with oil.

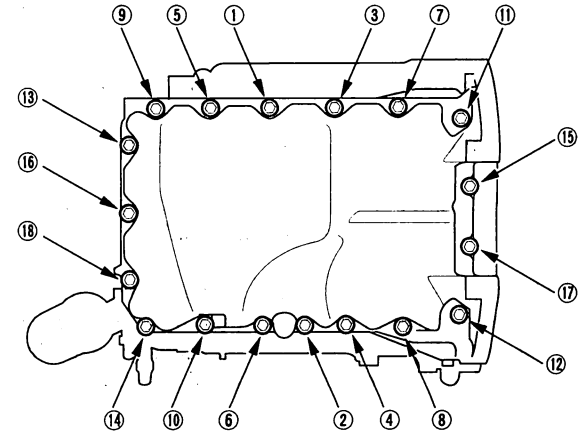

6. Tighten the two bolts (A) securing the transmission, then install the torque converter cover (B).

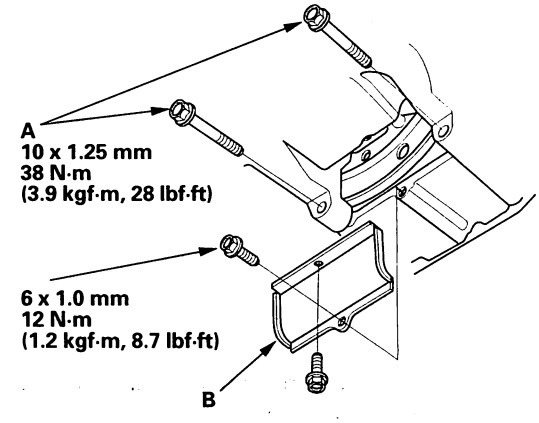

7. If the engine is still in the vehicle, do the following steps.
8. Install exhaust pipe A using new gaskets and new self-locking nuts (see step 28 on page 5-16).
9. Install the splash shield (see step 34 on page 5-17).
10. Refill the engine with oil (see step 4 on page 8-6).
11. Lower the vehicle on the hoist.

BACK

Protected by AR

Pulley End Crankshaft Oil Seal Installation - In Car

Special Tools Required
Oil seal driver, 64 mm 070AD-RCA0100

1. Remove the crankshaft position (CKP) sensor, timing belt, and timing belt drive pulley (see page 6-26).
2. Remove the pulley and crankshaft oil seal.
3. Clean and dry the crankshaft oil seal housing.
4. Apply a light coat of multipurpose grease to the crankshaft and to the lip of the seal.
5. Using the seal driver, drive in the crankshaft oil seal until the driver bottoms against the oil pump. When the seal is in place, clean any excess grease off the crankshaft, and check that the oil seal lip is not distorted.

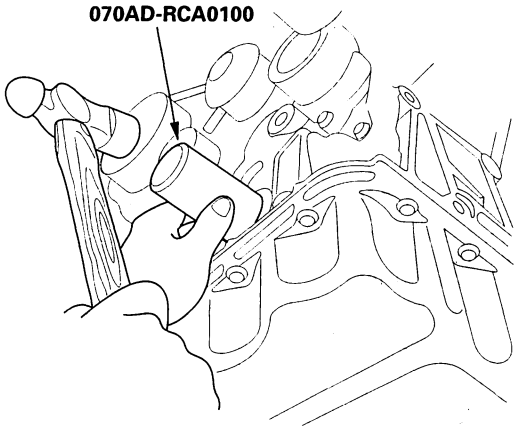

6. Install the timing belt drive pulley, CKP sensor, and timing belt (see page 6-26).

Transmission End Crankshaft Oil Seal Installation - In Car

Special Tools Required
- Driver 07749-0010000
- Driver attachment 106 070AD-RCAA200

1. Remove the transmission:
   - Manual transmission (see page 13-11)
   - Automatic transmission (see page 14-187)
2. M/T model: Removal the pressure plate (see page 12-11), clutch disc (see page 12-11), and flywheel (see page 12-13).
3. A/T model: Removal the drive plate (see page 14-197).
4. Clean and dry the crankshaft oil seal housing.
5. Apply a light coat of multipurpose grease to the crankshaft and to the lip of the seal.
6. Using the special tools, drive in the crankshaft oil seal until the driver attachment bottoms against the engine block end cover. Align the hole in the driver attachment with the pin on the crankshaft.

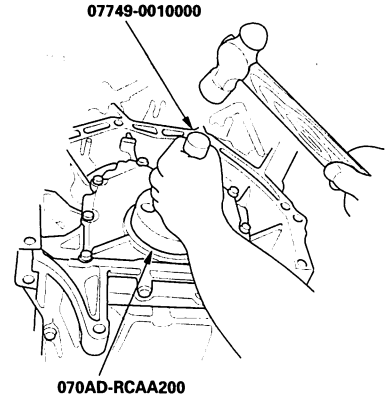

7. Clean any excess grease off the crankshaft, and check that the oil seal lip is not distorted.
8. M/T model: Install the flywheel (see page 12-13), clutch disc (see page 12-11), and pressure plate (see page 12-11).
9. A/T model: Install the drive plate (see page 14-197).
10. Install the transmission:
    - Manual transmission (see page 13-19)
    - Automatic transmission (see page 14-198)

BACK

Protected by AR

Drain Bolt Installation

NOTE: When installing the drain bolt, always use new washer.

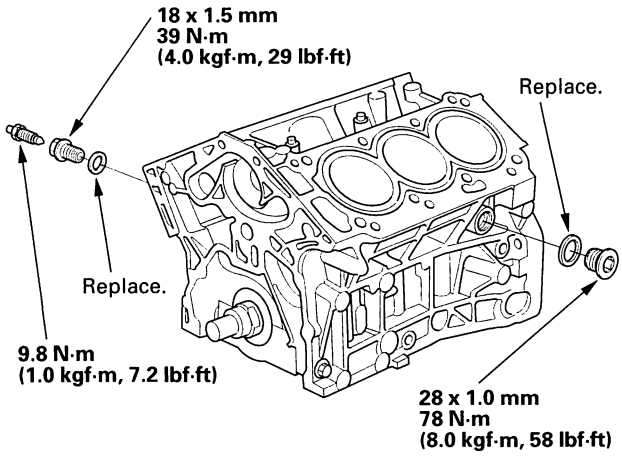

Protected by AR

BACK

Protected by AR

Engine Mechanical

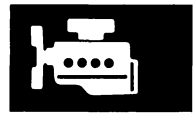

Engine Lubrication

Special Tools 8-2
Component Location Index 8-3
Symptom Troubleshooting Index 8-4
Oil Pressure Switch Test 8-5
Oil Pressure Switch Replacement 8-5
Oil Pressure Test 8-6
Engine Oil Replacement 8-6
Engine Oil Filter Replacement 8-7
Oil Filter Feed Pipe Replacement 8-8
Oil Pump Overhaul 8-9

NOTE: Refer to the 2003-2006 Accord Service Manual, P/N 61SDA08 for items not shown in this section.

BACK

Outline of Model Change

The J30A5 engine has been added.

Protected by AR

Engine Lubrication

Special Tools

Ref. No.	Tool Number	Description	Qty
①	07HAA-PJ70100	Oil Filter Wrench	1
②	070AD-RCAA100	Oil Seal Driver, 64 mm	1

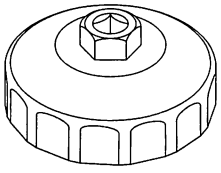

①

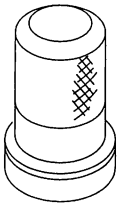

②

BACK

Protected by AR

Component Location Index

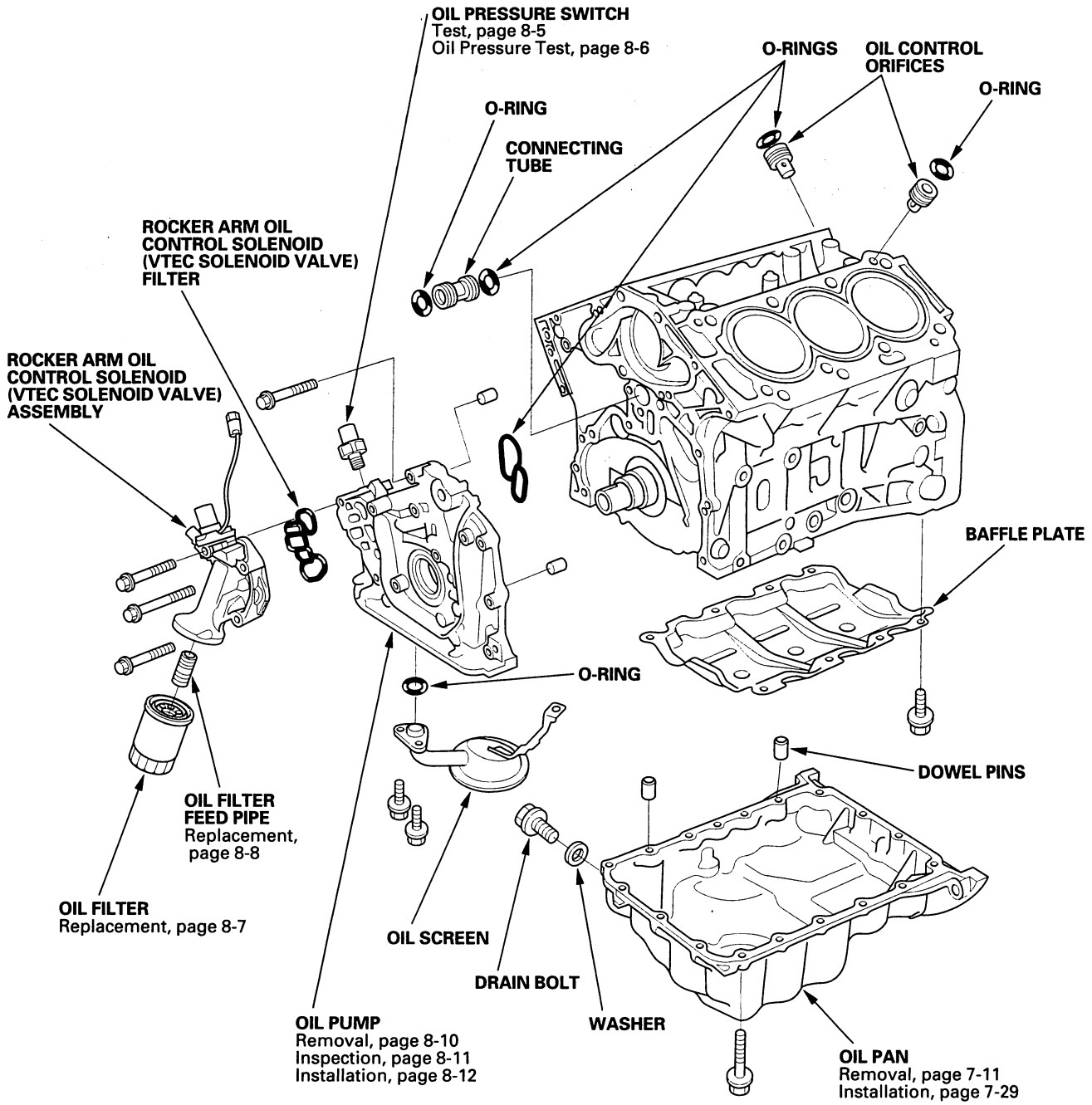

BACK

Protected by AR

Symptom Troubleshooting Index

Symptom	Diagnostic procedure	Also check for
Excessive engine oil consumption	1. Check the loose of the engine oil fill cap, oil drain bolt, and oil filter. 2. Check for oil leaks. 3. Check for worn valve guide(s) (see page 6-43) or worn valve stem seal(s) (see page 6-42). 4. Check for damaged or worn piston ring(s) (see page 7-21). 5. Check for damaged or worn engine internal parts (cylinder wall, pistons, etc.) (see page 7-15).	
Low oil pressure indicator does not come on with the ignition switch ON (II)	1. Do the gauge control module self-diagnostic function (see page 22-69). 2. Test the oil pressure switch (see page 8-5).	An open in the wire between the gauge control module and the oil pressure switch
Low oil pressure indicator stays on	1. Check the engine oil level. 2. Do the gauge control module self-diagnostic function (see page 22-69). 3. Test the oil pressure switch (see page 8-5). 4. Check the engine oil pressure (see page 8-6). 5. Check the oil filter for clogging. 6. Check the oil screen for clogging. 7. Check the relief valve. 8. Test the oil pump (see page 8-11).	A wire shorted to ground between the gauge control module and the oil pressure switch

BACK

Protected by AR

Oil Pressure Switch Test

1. Remove the YEL/RED wire (A) from the engine oil pressure switch (B).

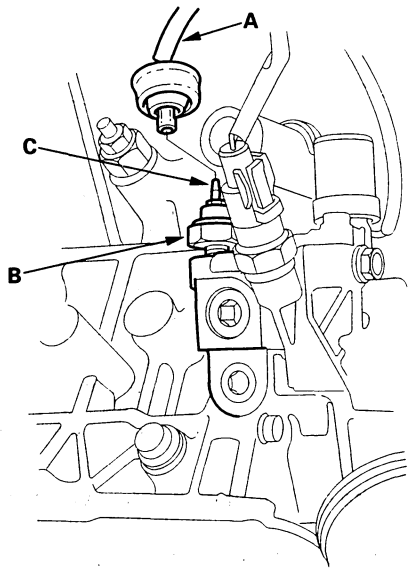

2. Check for continuity between the positive terminal (C) and the engine (ground). There should be continuity with the engine stopped. There should be no continuity with the engine running.

Oil Pressure Switch Replacement

1. Disconnect the oil pressure switch connector, then remove the oil pressure switch.

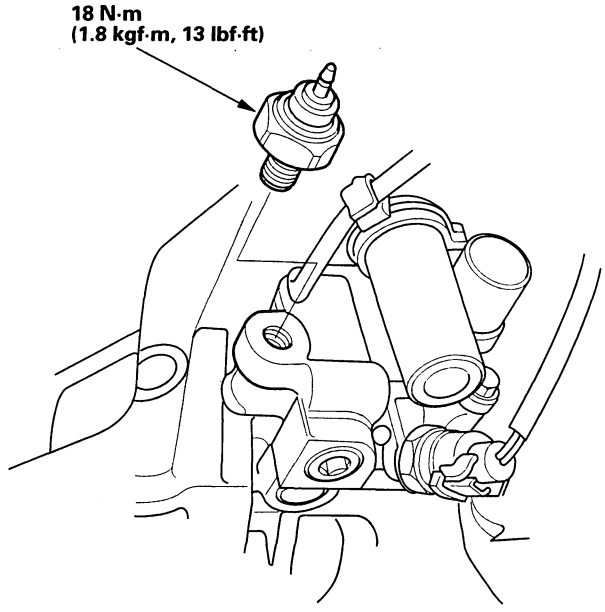

2. Remove all of the old liquid gasket from the switch and switch mounting hole.

3. Apply a very small amount of liquid gasket to the oil pressure switch threads, then install the oil pressure switch.

   NOTE: Using too much liquid gasket may cause liquid gasket to enter the oil passage or the end of the new oil pressure switch.

Protected by AR

Engine Lubrication

Oil Pressure Test

If the low oil pressure indicator stays on with the engine running, check the engine oil level. If the oil level is correct:

1. Remove the engine oil pressure switch, then install an oil pressure gauge (A).

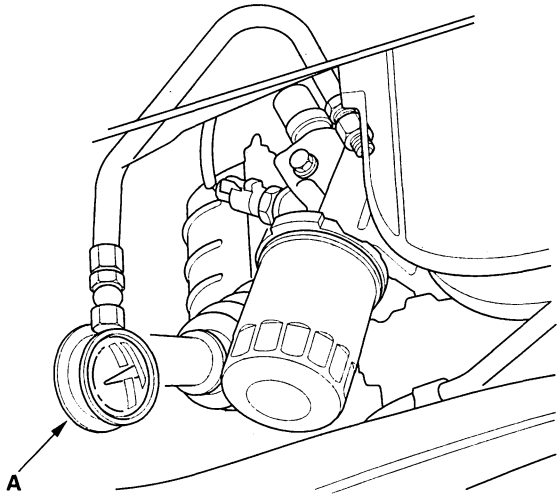

2. Start the engine. Shut it off immediately if the gauge registers no oil pressure. Repair the problem before continuing.

3. Allow the engine to reach operating temperature (fan comes on at least twice). The pressure should be:

   Engine Oil Temperature: 176 °F (80 °C)
   Engine Oil Pressure:
   At Idle: 70 kPa (0.7 kgf/cm², 10 psi) min.
   At 3,000 rpm: 490 kPa (5.0 kgf/cm², 71 psi) min.

4. If oil pressure is NOT within specifications, inspect these items:

   - Check the oil screen for clogging.
   - Inspect the oil pump (see page 8-11).

Engine Oil Replacement

1. Warm up the engine.

2. Remove the drain bolt (A), and drain the engine oil.

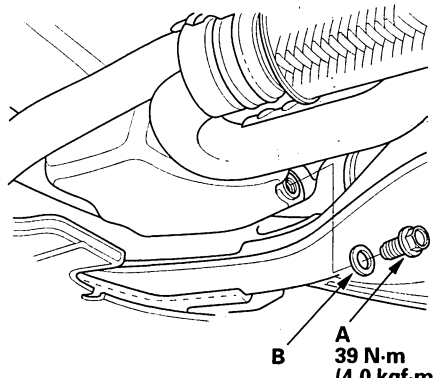

3. Reinstall the drain bolt with a new washer (B).

4. Refill with the recommended oil (see page 3-2).

   Capacity
   At oil change:
   4.0 L (4.2 US qt)
   At oil change including filter:
   4.3 L (4.5 US qt)
   After engine overhaul:
   5.0 L (5.3 US qt)

5. Run the engine for more than 3 minutes, then check for oil leakage.

6. 2006 model: Reset the engine oil life indicator (see page 3-13).

BACK

Protected by AR

Engine Oil Filter Replacement

Special Tools Required
Oil filter wrench 07HAA-PJ70100

1. Remove the oil filter with the special tool.
2. Inspect the filter to make sure the rubber seal is not stuck to the oil filter seating surface of the engine.
3. Inspect the threads (A) and rubber seal (B) on the new filter. Clean the seat on the engine block, then apply a light coat of new engine oil to the filter rubber seal. Use only filters with a built-in bypass system.

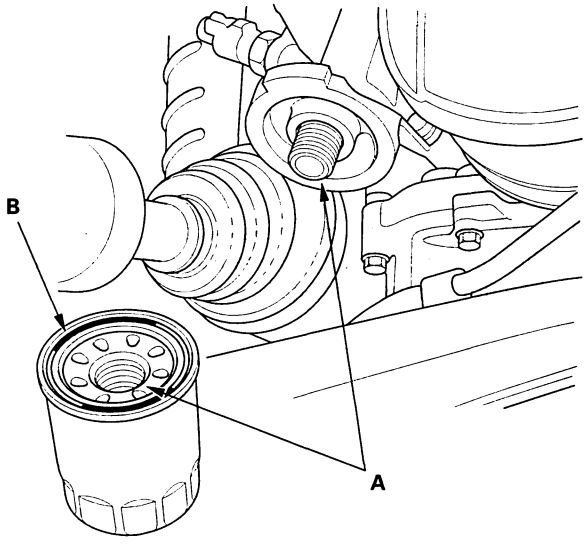

4. Install the oil filter by hand.
5. After the rubber seal seats, tighten the oil filter clockwise with the special tool.

Tighten: 3/4 turn clockwise
Tightening torque: 12 N·m (1.2 kgf·m, 8.7 lbf·ft)

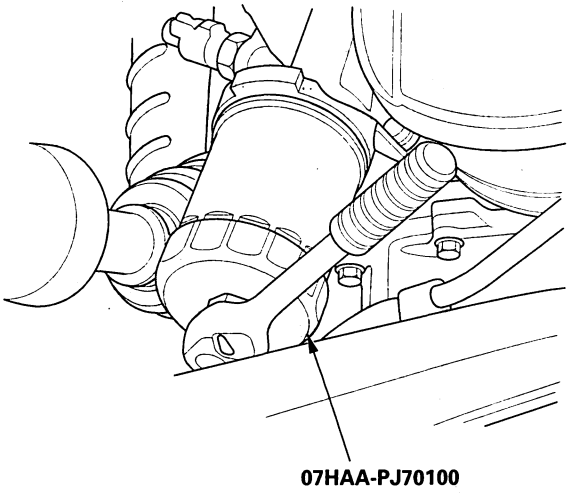

(cont'd)

Protected by AR

Engine Oil Filter Replacement (cont'd)

6. If four numbers or marks (1 to 4 or ▼ to ▼▼▼▼) are printed around the outside of the filter, you can use the following procedure to tighten the filter.

   - Spin the filter on until its seal lightly seats against the block, and note which number or mark is at the bottom.
   - Tighten the filter by turning it clockwise three numbers or marks from the one you noted. For example, if mark ▼ is at the bottom when the seal is lightly seated, tighten the filter until the mark ▼▼▼▼ comes around to the bottom.

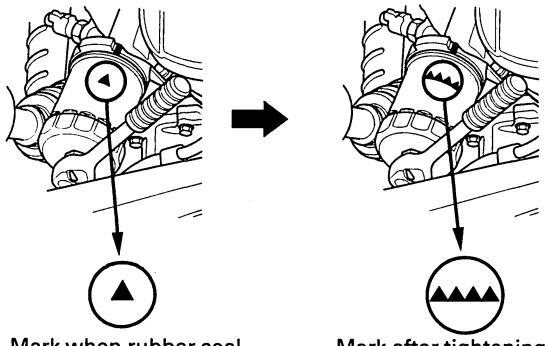

Mark when rubber seal is seated.

Mark after tightening.

Number or Mark when rubber seal is seated	1 or ▼	2 or ▼▼	3 or ▼▼▼	4 or ▼▼▼▼
Number or Mark after tightening	4 or ▼▼▼▼	1 or ▼	2 or ▼▼	3 or ▼▼▼

7. After installation, fill the engine with oil up to the specified level, run the engine for more than 3 minutes, then check for oil leakage.

8. 2006 model: Reset the engine oil life indicator (see page 3-13).

Oil Filter Feed Pipe Replacement

1. Remove the filter (see page 8-7).

2. Remove the oil filter feed pipe.

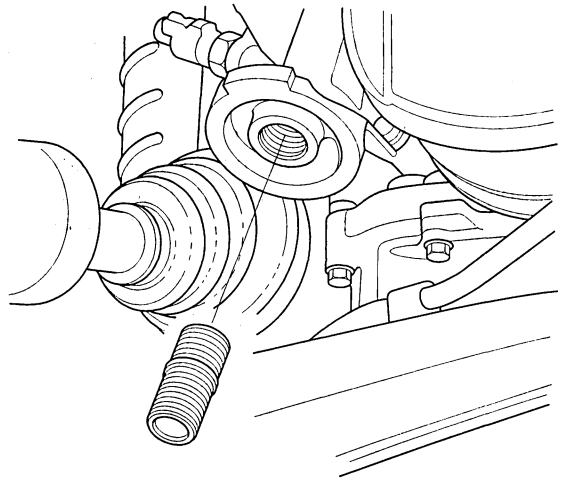

3. Install two 20 x 1.5 mm nuts (A) onto the new oil filter feed pipe, and hold one nut with a wrench, then tighten the other nut.

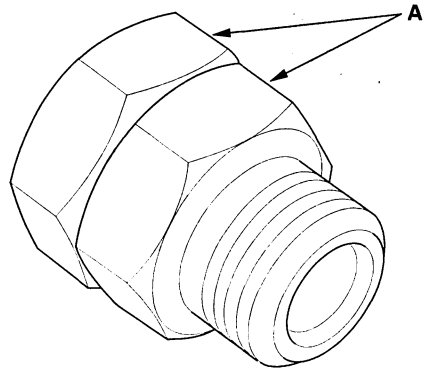

4. Tighten the oil filter feed pipe to 49 N·m (5.0 kgf·m, 36 lbf·ft), then remove the nuts from the oil filter feed pipe.

BACK

Protected by AR

Oil Pump Overhaul

Exploded View

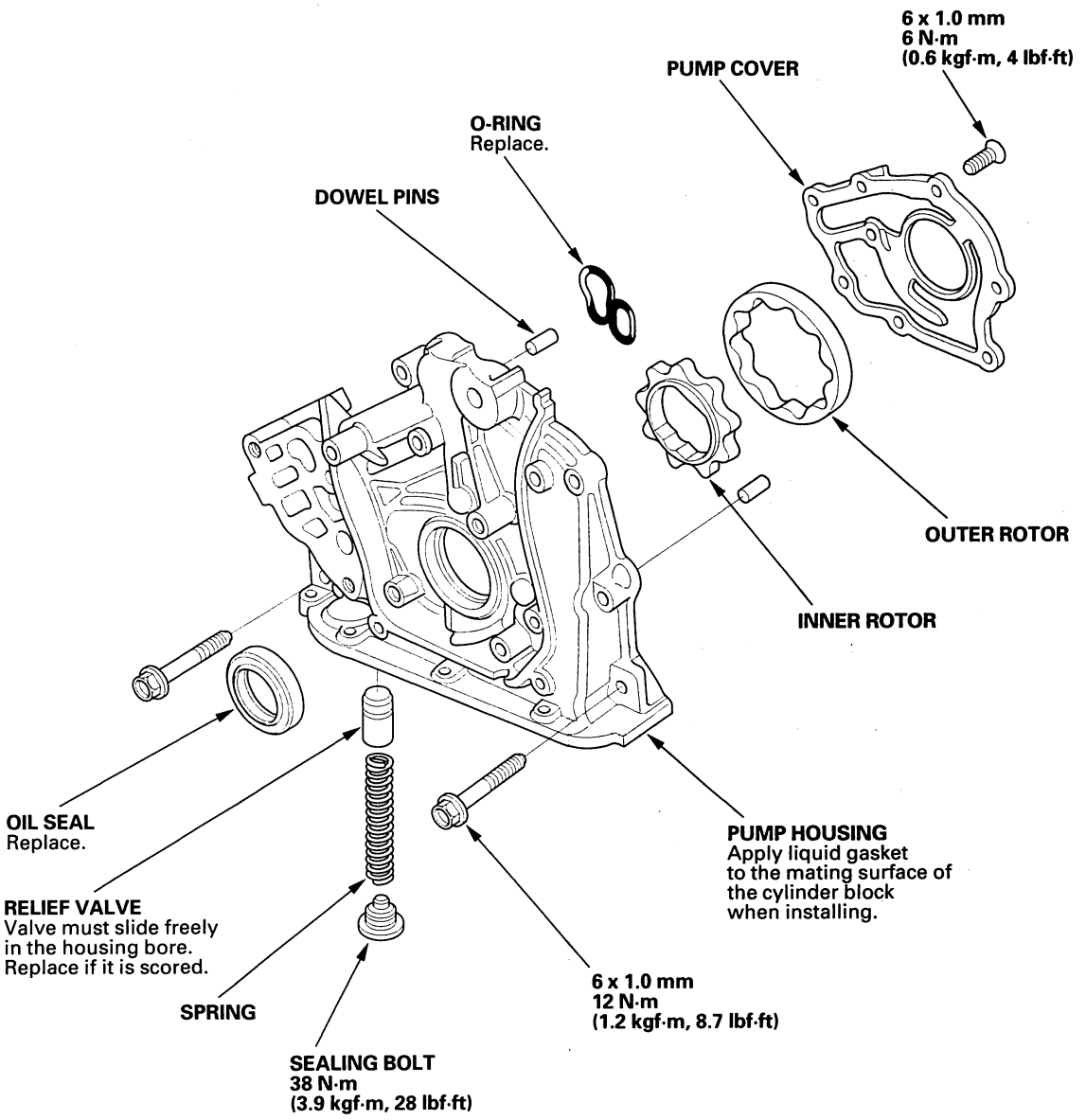

(cont'd)

Protected by AR

Oil Pump Overhaul (cont'd)

Special Tools Required
- Oil seal driver, 64 mm 070AD-RCA0100
- Engine support hanger, A and Reds AAR-T-12566 (available through Honda Tool and Equipment program, 888-424-6857)
- Engine hanger balance bar VSB02C000019

Removal

1. Drain the engine oil (see page 8-6).
2. Remove the bulkhead cover:
   - 2-door, refer to the 2003-2006 Accord Service Manual (see page 20-197)
   - 4-door, refer to the 2003-2006 Accord Service Manual (see page 20-197)
3. Remove the windshield wiper arms, then remove the cowl cover, refer to the 2003-2006 Accord Service Manual (see page 20-193).
4. Remove the connector bracket from the front cylinder head; use the bracket bolt hole to attach engine balancer bar front arm (see step 49 on page 5-7).
5. Remove the harness clamp bracket from the rear cylinder head; use the bracket bolt hole to attach engine balancer bar rear arm (see step 50 on page 5-7).
6. Lift and support the engine with engine hanger and engine balancer bar. Attach the front arm to the front cylinder head with a spacer and the connector bracket bolt (10 x 1.25 mm). Attach the rear arm to the rear cylinder head with the harness clamp bracket bolt (8 x 1.25 mm), refer to the 2003-2006 Accord Service Manual (see step 51 on page 5-9).
7. Remove the timing belt (see page 6-16).
8. Remove the crankshaft position (CKP) sensor (see page 11-220).
9. Remove the rocker arm oil control solenoid (VTEC solenoid valve) and oil filter assembly (see page 11-289).
10. Remove the oil pan (see page 7-29).
11. Remove the oil screen (A), then remove the oil pump (B).

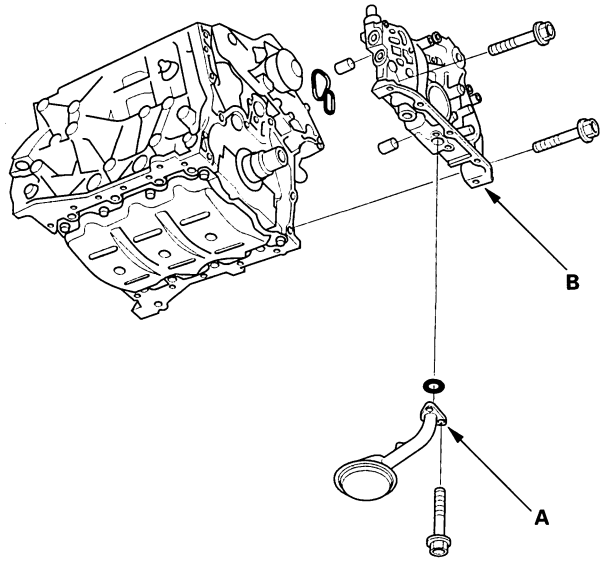

BACK

Protected by AR

Inspection

1. Remove the screws from the pump housing, then separate the housing and cover.

2. Check the inner-to-outer rotor radial clearance between the inner rotor (A) and outer rotor (B). If the inner-to-outer rotor clearance exceeds the service limit, replace the oil pump assembly.

Inner Rotor-to-Outer Rotor Radial Clearance
Standard (New): 0.04—0.16 mm (0.002—0.006 in.)
Service Limit: 0.20 mm (0.008 in.)

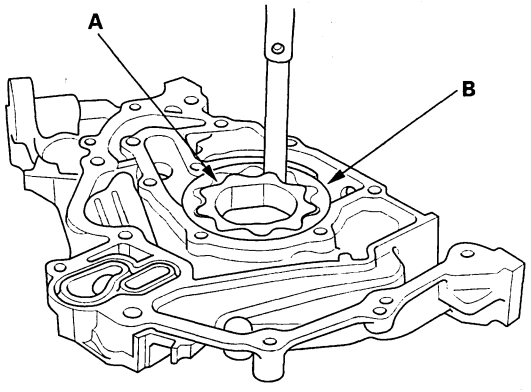

3. Check the housing-to-rotor axial clearance between the rotors (A) and pump housing (B). If the housing-to-rotor axial clearance exceeds the service limit, replace the oil pump assembly.

Housing-to-Rotor Axial Clearance
Standard (New): 0.02—0.07 mm (0.001—0.003 in.)
Service Limit: 0.12 mm (0.005 in.)

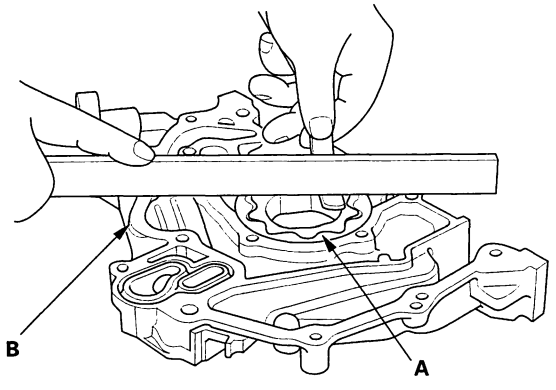

4. Check the housing-to-outer rotor radial clearance between the outer rotor (A) and pump housing (B). If the housing-to-outer rotor radial clearance exceeds the service limit, replace the oil pump assembly.

Housing-to-Outer Rotor Radial Clearance
Standard (New): 0.14—0.19 mm (0.006—0.007 in.)
Service Limit: 0.20 mm (0.008 in.)

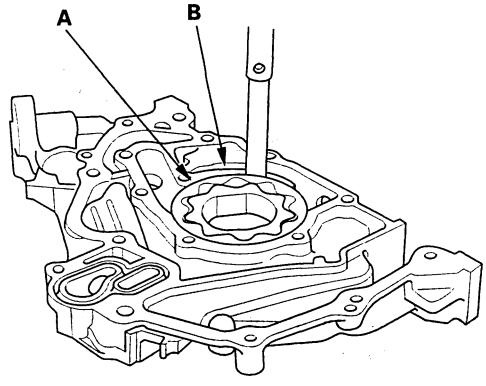

5. Inspect both rotors and pump housing for scoring or other damage. Replace the parts, if necessary.

6. Apply liquid thread lock to the pump housing screws, then install the oil pump cover.

7. Check that the oil pump turns freely.

(cont'd)

Protected by AR

Oil Pump Overhaul (cont'd)

Installation

1. Remove the old oil seal from the oil pump.
2. Gently tap in the new oil seal until the special tool bottoms on the pump.

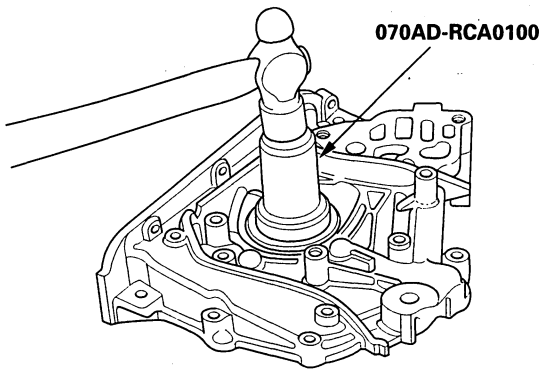

3. Remove all of the old liquid gasket from the oil pump mating surfaces, bolts, and bolt holes.
4. Clean and dry the oil pump mating surfaces.
5. Install the oil pump (A).
   - –1 Apply liquid gasket, P/N 08717-0004, 08718-0001, 08718-0002, 08718-0003, or 08718-0009, evenly to the block mating surface of the oil pump.

     NOTE: Do not install components if too much time has passed after applying the liquid gasket (for P/N 08718-0002, no more than 4 minutes, for all others, no more than 5 minutes). Instead, remove the old residue and reapply the liquid gasket.

   - –2 Grease the lip of the oil seal, and apply oil to the new O-rings (B).
   - –3 Install the dowel pins (C), then align the inner rotor with the crankshaft and install the oil pump.
   - –4 Clean the excess grease off the crankshaft, and check the seal for distortion.

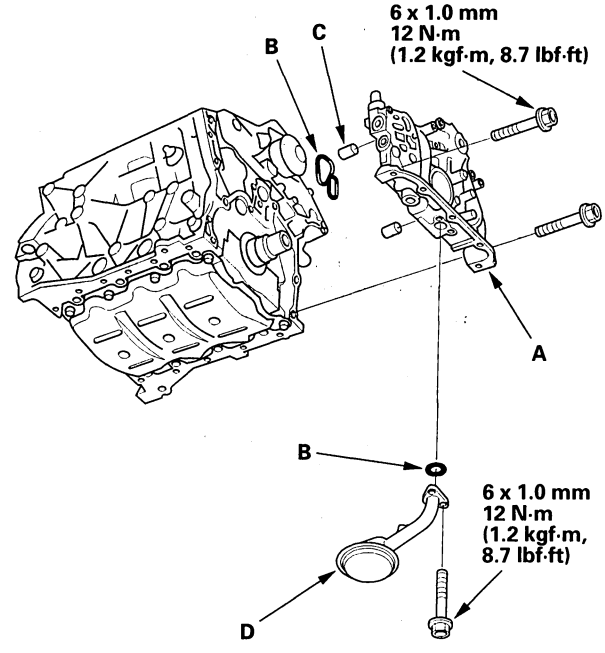

6. Install the oil screen (D).

BACK

Protected by AR

7. Install the oil pan (see page 7-29).
8. Install the rocker arm oil control solenoid (VTEC solenoid valve) and oil filter assembly (see page 11-289).
9. Install the CKP sensor (see page 11-220).
10. Install the idler pulley.
11. Install the timing belt (see page 6-16).
12. Remove the engine balance bar and hanger.
13. Install the connector bracket to the front cylinder head (see step 49 on page 5-19).
14. Install the harness clamp bracket to the rear cylinder head (see step 48 on page 5-19).
15. Install the cowl cover and windshield wiper arms, refer to the 2003-2006 Accord Service Manual (see page 20-199).
16. Install the front bulkhead cover:
    - 2-door, refer to the 2003-2006 Accord Service Manual (see page 20-184)
    - 4-door, refer to the 2003-2006 Accord Service Manual (see page 20-185)
17. Refill the engine with engine oil (see page 8-6).

Protected by AR

BACK

Protected by AR

Engine Mechanical



Intake Manifold and Exhaust System

Intake Manifold Removal and Installation 9-2
Exhaust Pipe and Muffler Replacement 9-6

NOTE: Refer to the 2003-2006 Accord Service Manual, P/N 61SDA08 for items not shown in this section.

BACK

Outline of Model Change

The J30A5 engine has been added.

Protected by AR

Intake Manifold and Exhaust System

Intake Manifold Removal and Installation

Exploded View

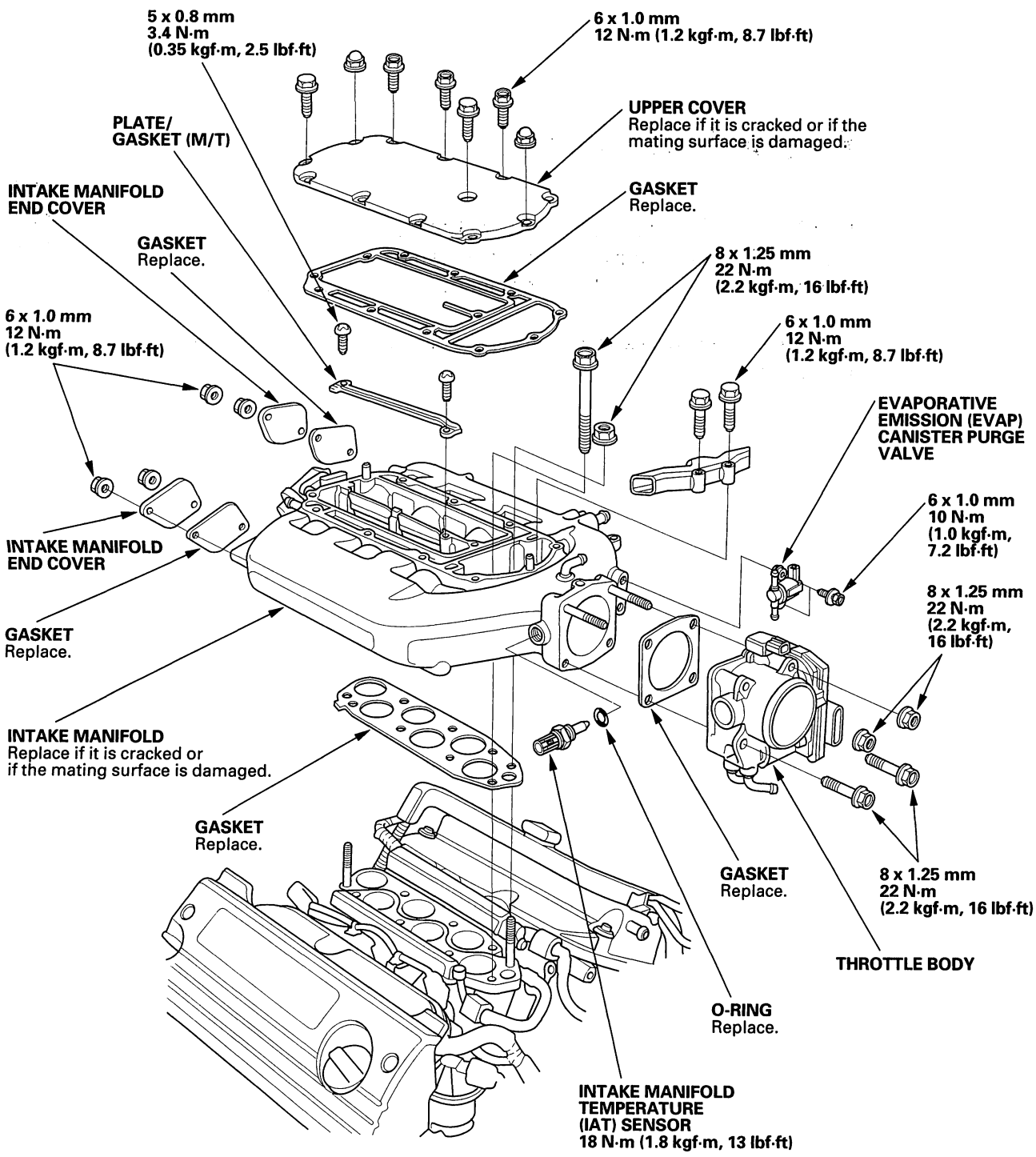

BACK

Protected by AR

Removal

1. Remove the ignition coil cover (see page 4-20).

2. Remove the breather pipe, then remove the air intake duct.

3. Remove the positive crankcase ventilation (PCV) hose (A), brake booster vacuum hose (B), evaporative emission (EVAP) canister hose (C), and vacuum hose (D).

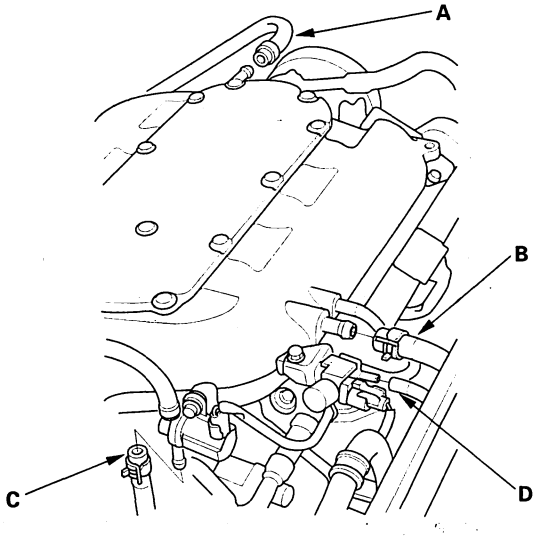

4. Remove the water bypass hoses (A), and plug them.

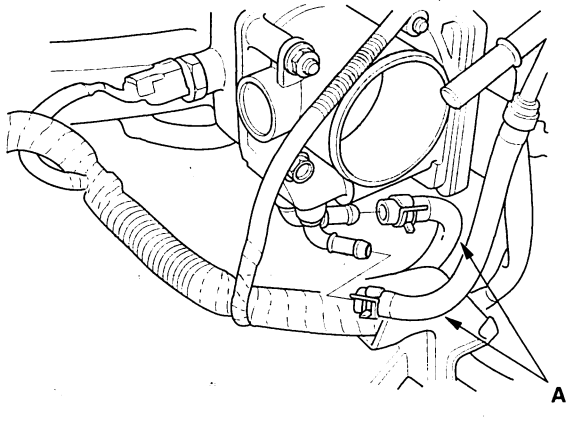

5. Remove these engine wire harness connectors and wire harness clamps from the intake manifold.

   - Intake air temperature (IAT) sensor connector
   - Throttle actuator connector
   - Manifold absolute pressure (MAP) sensor connector
   - Evaporative emission (EVAP) canister purge valve connector
   - Engine mount control solenoid valve connector
   - Intake manifold tuning (IMT) (Intake manifold runner control (IMRC)) actuator connector (M/T)

6. Remove the upper cover mounting bolts and nuts sequentially in two or three steps, then remove the upper cover.

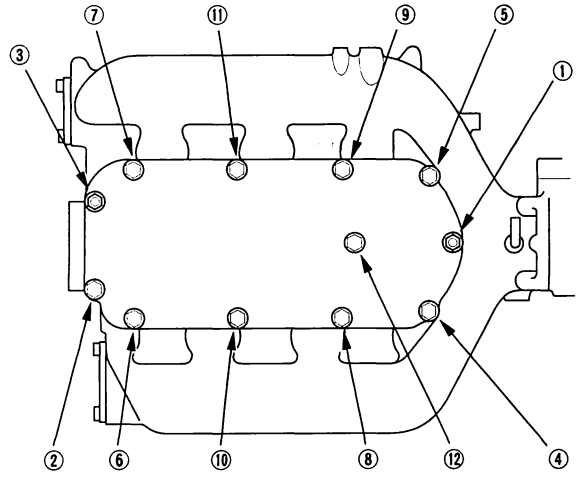

(cont'd)

BACK

Protected by AR

Intake Manifold Removal and Installation (cont'd)

7. Remove the intake manifold mounting bolts and nuts sequentially in two or three steps, then remove the intake manifold and spacer.

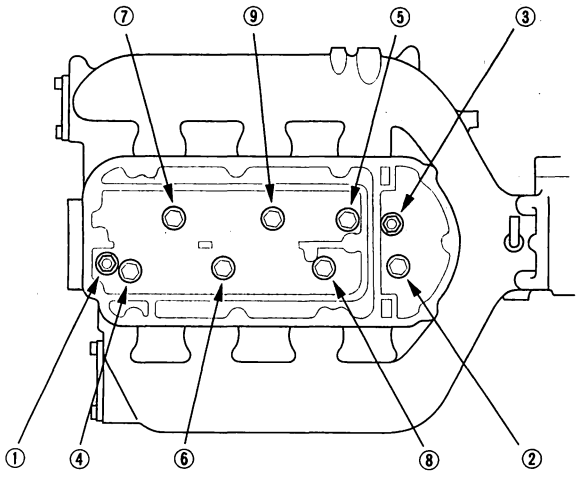

8. Remove the intake manifold.

Installation

1. Put a new gasket and the spacer on the injector base.

2. Install the intake manifold. Tighten the bolts and nuts sequentially in two or three steps. Always use a new intake manifold gasket.

Specified torque
8 x 1.25 mm: 22 N·m (2.2 kgf·m, 16 lbf·ft)

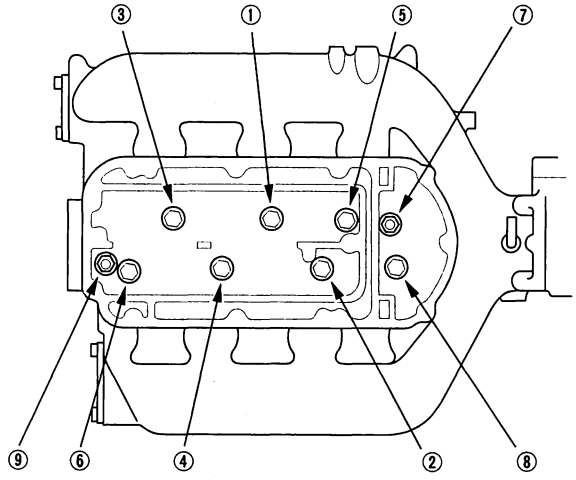

3. Install the upper cover. Tighten the bolts and nuts sequentially in two or three steps. Always use a new gasket.

Specified torque
6 x 1.0 mm: 12 N·m (1.2 kgf·m, 8.7 lbf·ft)

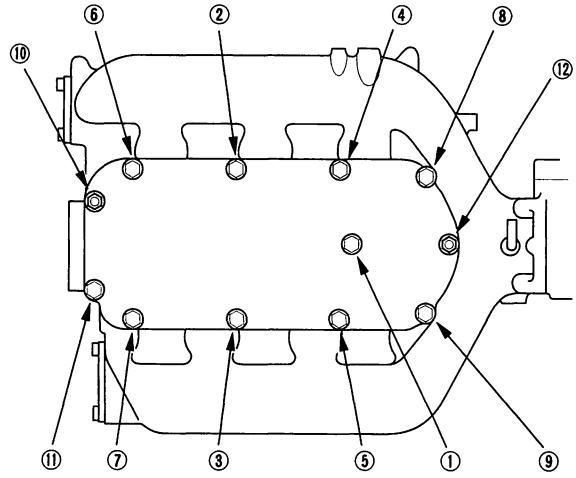

BACK

Protected by AR

4. Install the water bypass hoses (A).

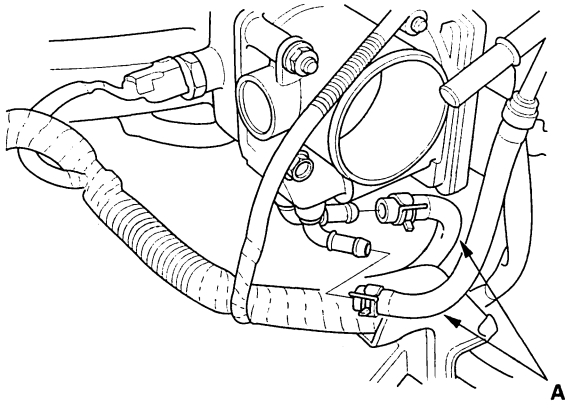

5. Connect the engine wire harness connectors, and install the wire harness clamps to the intake manifold.

   - Intake air temperature (IAT) sensor connector
   - Throttle actuator connector
   - Manifold absolute pressure (MAP) sensor connector
   - Evaporative emission (EVAP) canister purge valve connector
   - Engine mount control solenoid valve connector
   - Intake manifold tuning (IMT) (Intake manifold runner control (IMRC)) actuator connector (M/T)

6. Install the positive crankcase ventilation (PCV) hose (A), brake booster vacuum hose (B), evaporative emission (EVAP) canister hose (C), and vacuum hose (D).

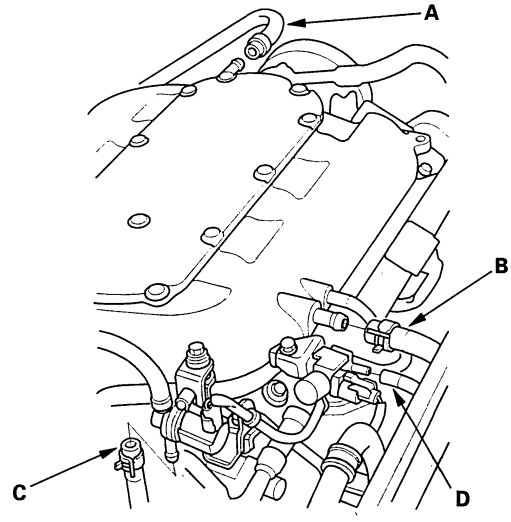

7. Install the air intake duct, then install the breather pipe.

8. Clean up any spilled engine coolant.

9. After installation, check that all tubes, hoses, and connectors are installed correctly.

10. Install the ignition coil cover (see page 4-20).

11. Refill the radiator with engine coolant, then bleed air from the cooling system with the heater valve open (see step 8 on page 10-7).

Protected by AR

Intake Manifold and Exhaust System

Exhaust Pipe and Muffler Replacement

NOTE: Use new gaskets and self-locking nuts when reassembling.

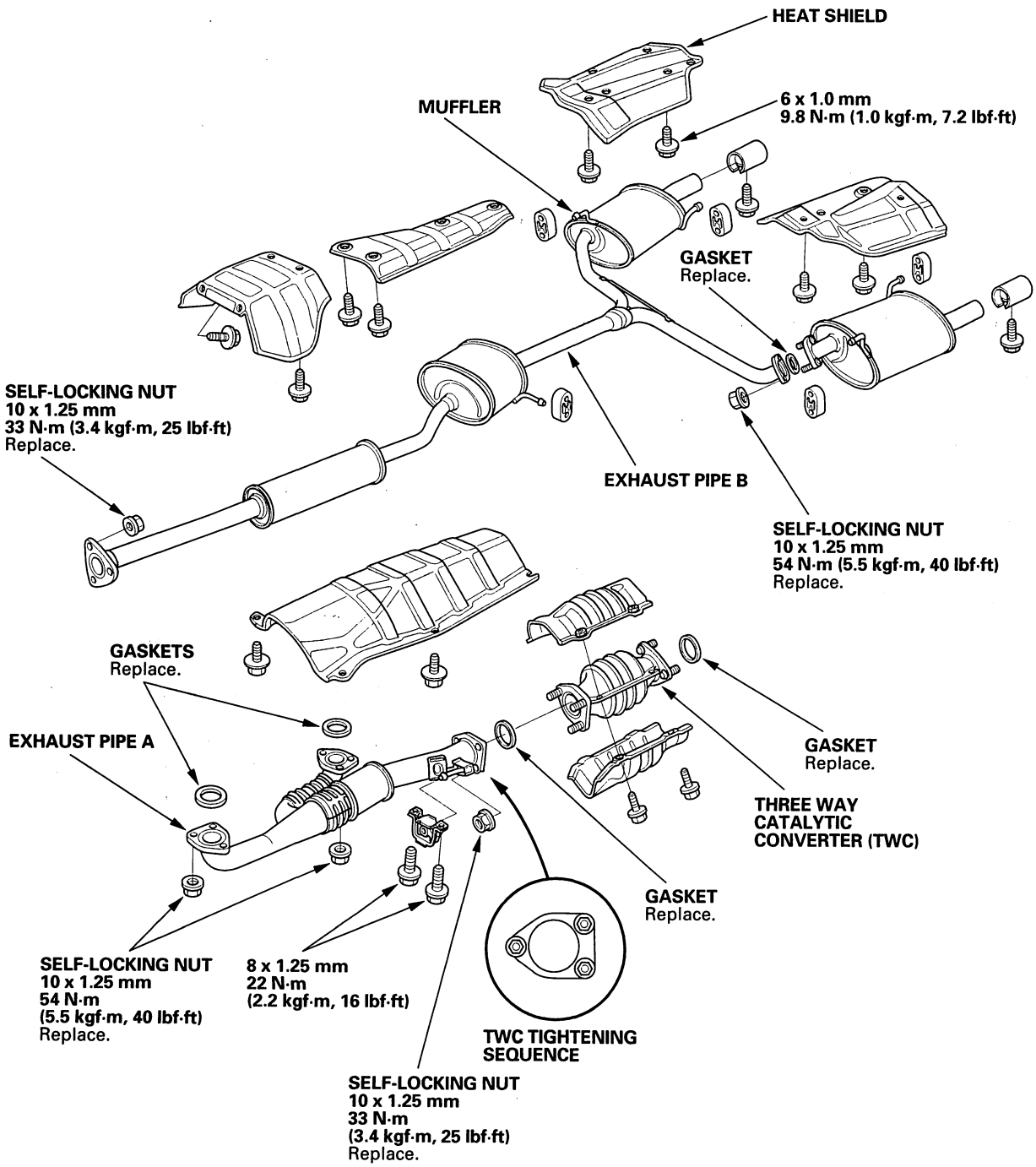

BACK

Protected by AR

Engine Cooling

Cooling System

Component Location Index 10-2
Radiator Cap Test 10-3
Radiator Test 10-3
Fan Motor Test 10-4
Thermostat Test 10-4
Water Pump Inspection 10-5
Water Pump Replacement 10-5
Coolant Check 10-6
Coolant Replacement 10-6
Thermostat Replacement 10-8
Water Passage Replacement 10-9
Radiator and Fan Replacement 10-10

Fan Controls

Component Location Index 10-11
Symptom Troubleshooting Index 10-12
Circuit Diagram 10-13
Radiator Fan High Speed Circuit Troubleshooting 10-14

NOTE: Refer to the 2003-2006 Accord Service Manual, P/N 61SDA08 for items not shown in this section.

BACK

Outline of Model Change

The J30A5 engine has been added.

Protected by AR

Cooling System

Component Location Index

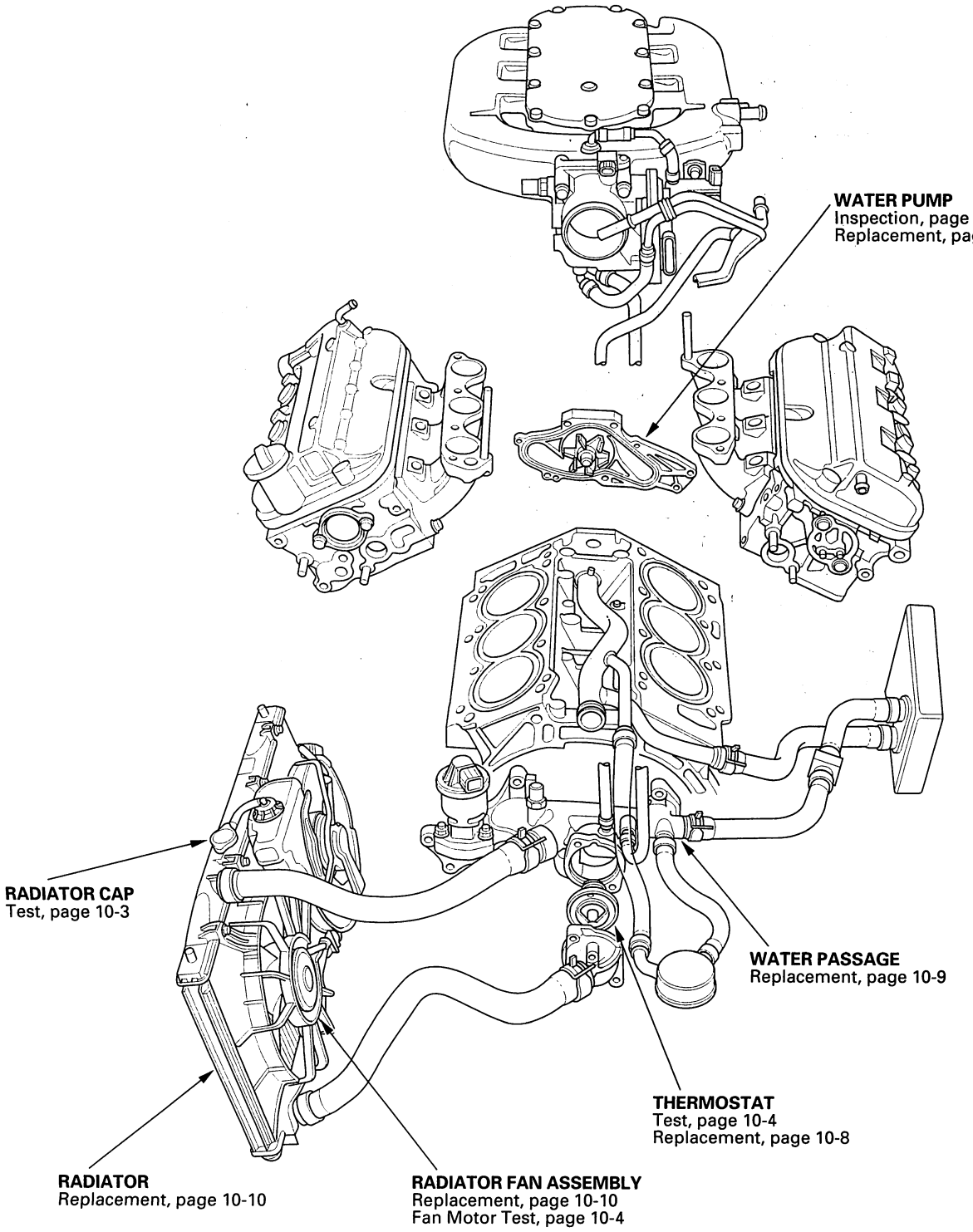

BACK

Protected by AR

Radiator Cap Test

1. Remove the radiator cap (A), wet its seal with engine coolant, then install it on a commercially available pressure tester (B).

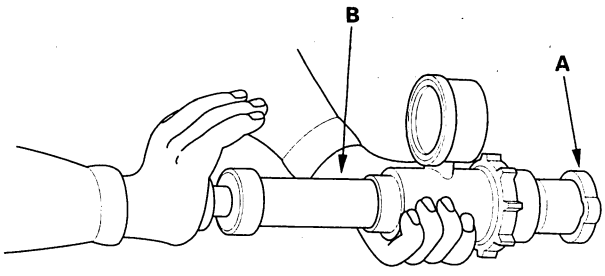

2. Apply a pressure of 93—123 kPa (0.95—1.25 kgf/cm², 14—18 psi).
3. Check for a drop in pressure.
4. If the pressure drops, replace the cap.

Radiator Test

1. Wait until the engine is cool, then carefully remove the radiator cap, and fill the radiator with engine coolant to the top of the filler neck.
2. Attach a commercially available pressure tester (A) to the radiator, and apply a pressure of 93—123 kPa (0.95—1.25 kgf/cm², 14—18 psi).

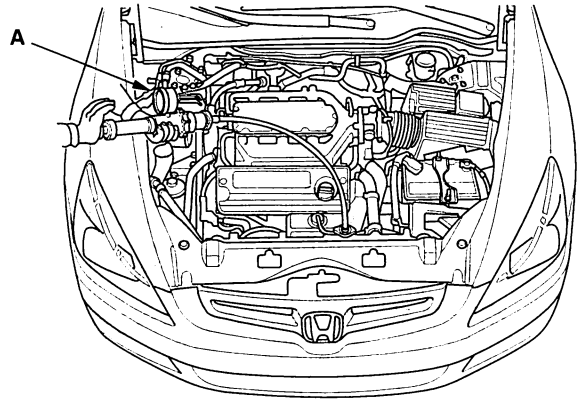

3. Inspect for engine coolant leaks and a drop in pressure.
4. Remove the tester, then reinstall the radiator cap.

Protected by AR

Fan Motor Test

1. Disconnect the 2P connectors from the radiator fan motor (A) and condenser fan motor (B).

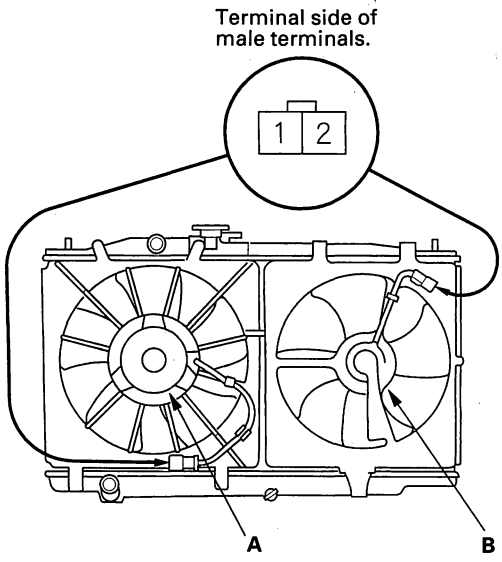

2. Test each motor by connecting battery power to the terminal No. 1 and ground to the terminal No. 2.

3. If the motor fails to run or does not run smoothly, replace it (see page 10-10).

Thermostat Test

Replace the thermostat if it is open at room temperature.

To test a closed thermostat:

1. Suspend the thermostat (A) in a container of water. Do not let the thermometer (B) touch the bottom of the hot container.

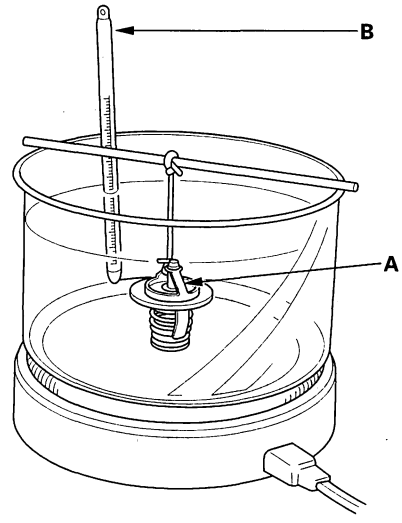

2. Heat the water and check the temperature with a thermometer. Check the temperature at which the thermostat first opens, and at which it is fully open.

3. Measure the lift height of the thermostat when it is fully open.

Standard Thermostat

Lift Height:	**Above 10.0 mm (0.39 in.)**
Starts Opening:	**169—176 °F (76—80 °C)**
Fully Open:	**194 °F (90 °C)**

BACK

Protected by AR

Water Pump Inspection

1. Remove the timing belt (see page 6-14).
2. Turn the water pump pulley counterclockwise. Check that it turns freely. If it doesn't turn smoothly, replace the water pump (see page 10-5).

   NOTE: When you check the water pump pulley, you may see a small amount of "weeping" from the bleed holes (A). This is normal.

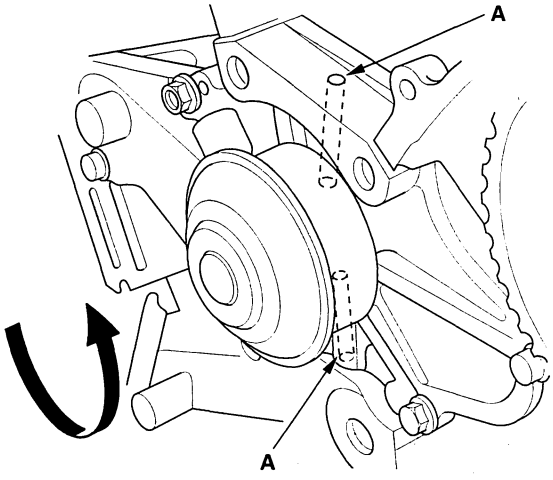

3. Install the timing belt (see page 6-16).

Water Pump Replacement

1. Drain the engine coolant (see page 10-6).
2. Remove the timing belt (see page 6-14).
3. Remove the timing belt adjuster (see page 6-26).
4. Remove the water pump (A) by removing the five bolts.

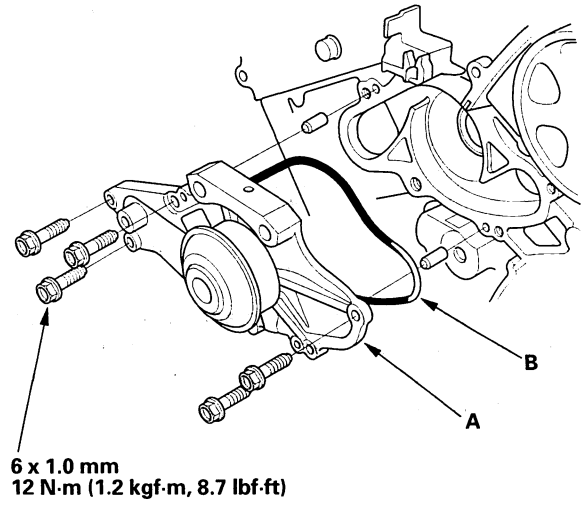

5. Inspect and clean the O-ring groove and the mating surface with the engine block.
6. Install the water pump with a new O-ring (B) in the reverse order of removal.
7. Clean up any spilled engine coolant.
8. Install the timing belt adjuster (see page 6-26).
9. Install the timing belt (see page 6-16).
10. Refill the radiator with engine coolant, then bleed the air from the cooling system (see step 8 on page 10-7).

Protected by AR

Coolant Check

1. Look at the coolant level in the coolant reservoir. Make sure it is between the MAX mark (A) and MIN mark (B).

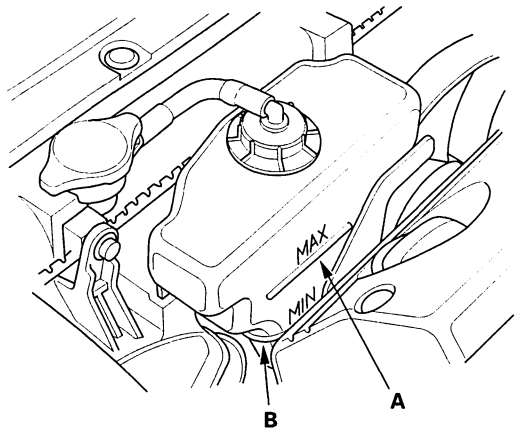

2. If the coolant level in the coolant reservoir is at or below the MIN mark, add coolant to bring it between the MIN and MAX mark, then inspect the cooling system for leaks.

Coolant Replacement

1. Start the engine. Set the heater temperature control dial to maximum heat, then turn off the ignition switch. Make sure the engine and radiator are cool to the touch.
2. Remove the radiator cap.
3. Loosen the drain plug (A), and drain the coolant.

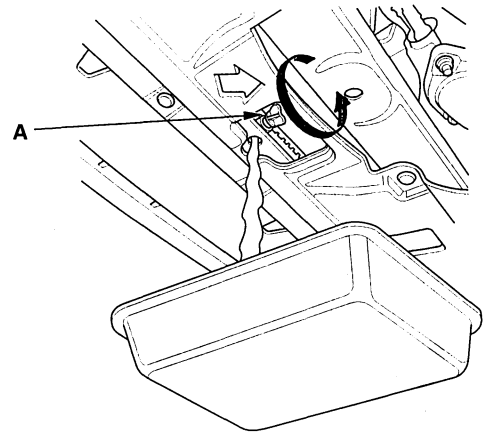

4. Install a rubber hose (A) on the drain bolt (B) located at the rear of the cylinder block, then loosen the drain bolt.

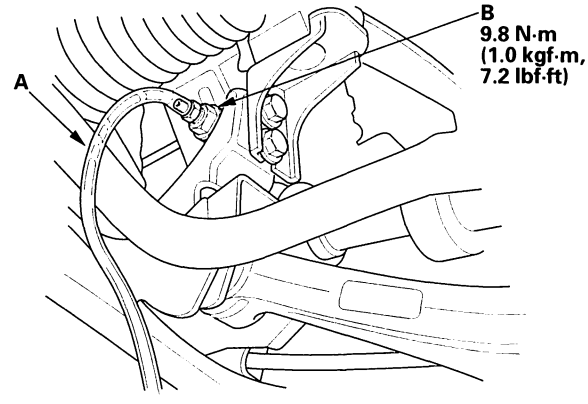

5. When the coolant stops draining, tighten the drain bolt. Remove the rubber hose.
6. Tighten the radiator drain plug securely.

BACK

Protected by AR

7. Remove, drain, and reinstall the reserve tank.

8. Fill the reserve tank to the MAX mark (A) with Honda Long Life Antifreeze/Coolant Type 2 (P/N OL999-9001).

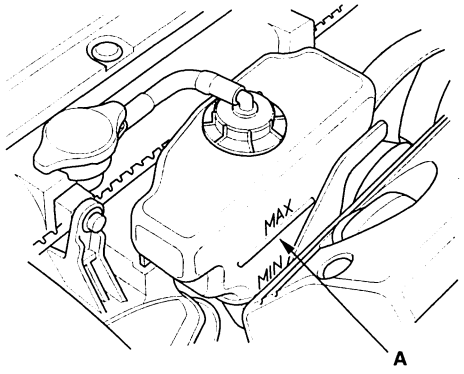

9. Pour Honda Long Life Antifreeze/Coolant Type 2 into the radiator up to the base of the filler neck.

   NOTE:
   - Always use Honda Long Life Antifreeze/Coolant Type 2 (P/N OL999-9001). Using a non-Honda coolant can result in corrosion, causing the cooling system to malfunction or fail.
   - Honda Long Life Antifreeze/Coolant Type 2 is a mixture of 50 % antifreeze and 50 % water. Do not add water.

   Engine Coolant Refill Capacities (including the reserve tank capacity of 0.6 L (0.16 US gal))
   After Coolant Change:
   M/T: 6.6 L (1.74 US gal)
   A/T: 6.7 L (1.77 US gal)
   After Engine Overhaul:
   M/T: 8.2 L (2.17 US gal)
   A/T: 8.4 L (2.22 US gal)

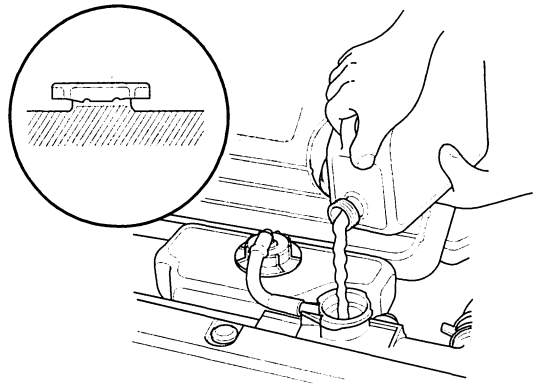

10. Install the radiator cap loosely.

11. Start the engine and let it run until it warms up (the radiator fan comes on at least twice).

12. Turn off the engine. Check the level in the radiator and add Honda Long Life Antifreeze/Coolant Type 2, if needed.

13. Put the radiator cap on tightly, then run the engine again, and check for leaks.

14. Clean up any spilled engine coolant.

Protected by AR

Thermostat Replacement

1. Make sure you have the anti-theft codes for the radio and navigation system, then write down the customer's audio presets. Make sure the ignition switch is OFF.
2. Disconnect the negative cable from the battery first, then the positive cable, then remove the battery.
3. Drain the engine coolant (see page 10-6).
4. Remove the ground cable and thermostat cover, then remove the thermostat.

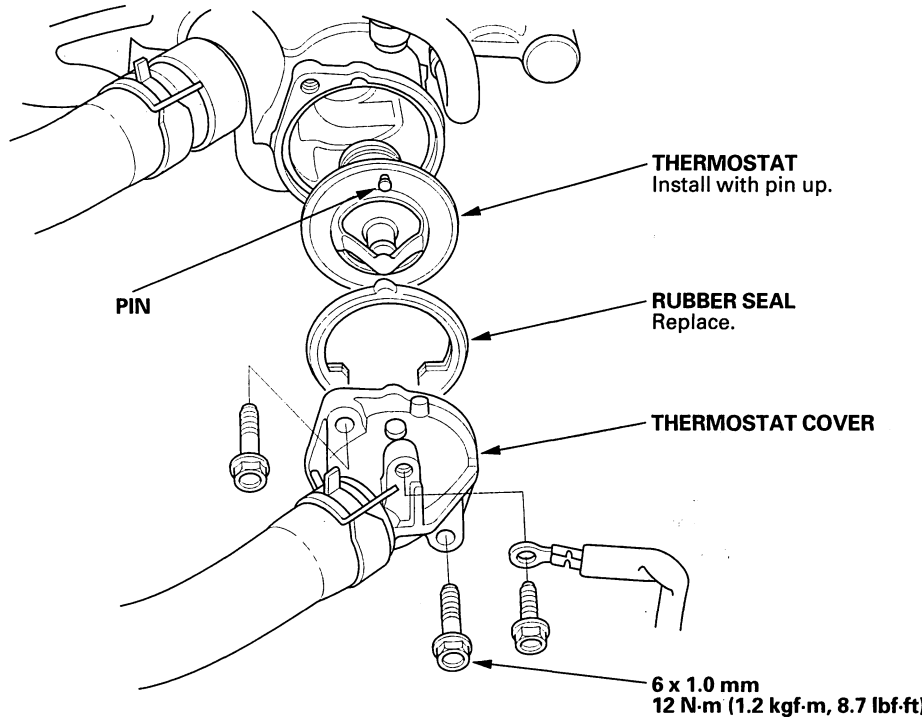

5. Install the thermostat with new rubber seal.
6. Install the battery. Clean the battery posts and cable terminals with sandpaper, then assemble them and apply grease to prevent corrosion.
7. Refill the radiator with engine coolant, then bleed air from the cooling system (see step 8 on page 10-7).
8. Clean up any spilled engine coolant.
9. Enter the anti-theft codes for the radio and the navigation system, then enter the customer's audio presets.
10. Do the power window control unit reset procedure, refer to the 2003-2006 Accord Service Manual (see page 22-232).
11. Set the clock.

BACK

Protected by AR

Water Passage Replacement

1. Make sure you have the anti-theft codes for the radio and navigation system, then write down the customer's audio presets. Make sure the ignition switch is OFF.
2. Disconnect the negative cable from the battery first, then the positive cable. Remove the battery.
3. Drain the engine coolant (see page 10-6).
4. Remove the vacuum hoses, breather pipe, and the intake air duct.
5. Remove the upper radiator hose, lower radiator hose, heater hoses, and water bypass hoses from the water passage. Remove the water passage.

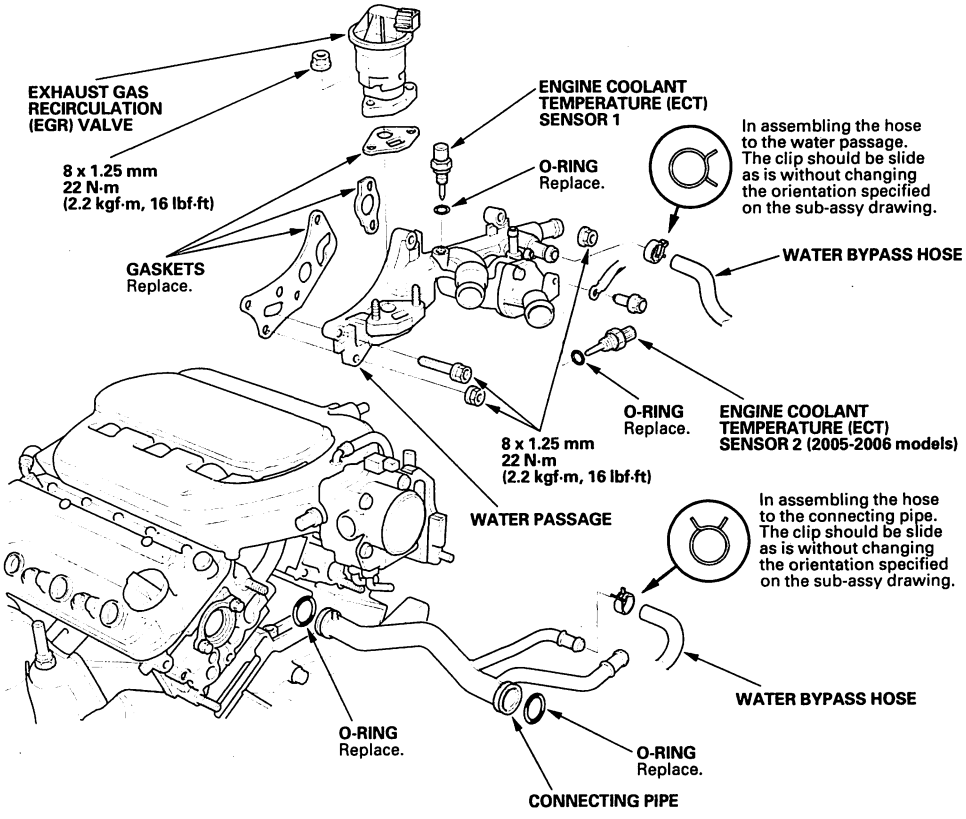

6. Install the water passage in the reverse order of removal.
7. Install the battery. Clean the battery posts and cable terminals with sandpaper, then assemble them and apply grease to prevent corrosion.
8. Refill the radiator with engine coolant, then bleed air from the cooling system (see step 8 on page 10-7).
9. Clean up any spilled engine coolant.
10. Enter the anti-theft codes for the radio and the navigation system, then enter the customer's audio presets.
11. Do the power window control unit reset procedure, refer to the 2003-2006 Accord Service Manual (see page 22-232).
12. Set the clock.

Protected by AR

Radiator and Fan Replacement

1. Drain engine coolant (see page 10-6).
2. Remove the front bulkhead cover:
   - 2-door, refer to the 2003-2006 Accord Service Manual (see page 20-184)
   - 4-door, refer to the 2003-2006 Accord Service Manual (see page 20-185)
3. A/T model: Remove the automatic transmission fluid (ATF) cooler hoses from the radiator (see page 14-232).
4. Remove the upper radiator hose and lower radiator hose from the radiator.

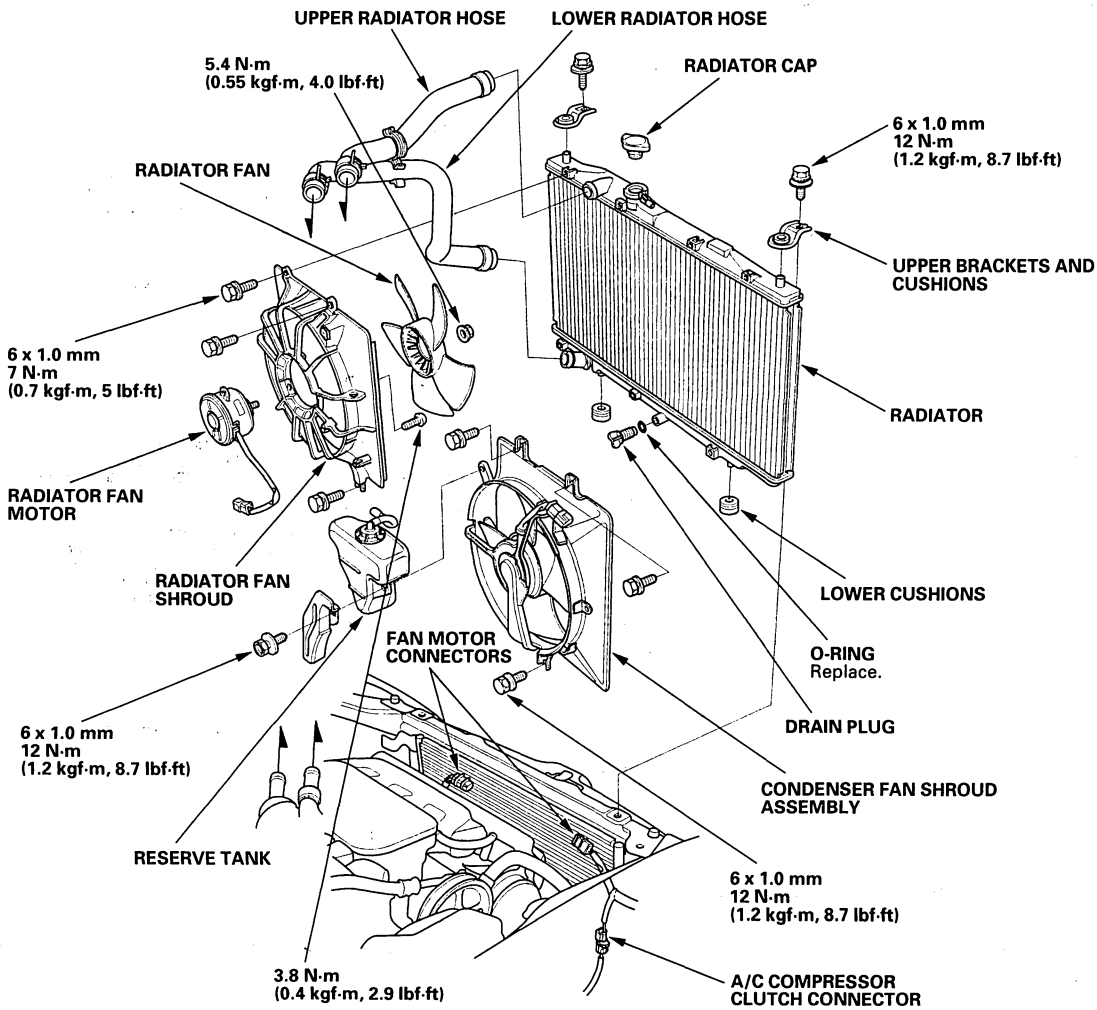

5. Remove the harness clamps and A/C compressor clutch connector.
6. Remove the upper bracket cushions, then pull up the radiator.
7. Disconnect the fan motor connectors, then remove the fan shroud assemblies and other parts from the radiator.
8. Install the radiator in the reverse order of removal. Make sure the upper and lower cushions are set securely.
9. Fill the radiator with engine coolant, then bleed air from the cooling system (see step 8 on page 10-7).

BACK

Protected by AR

Component Location Index

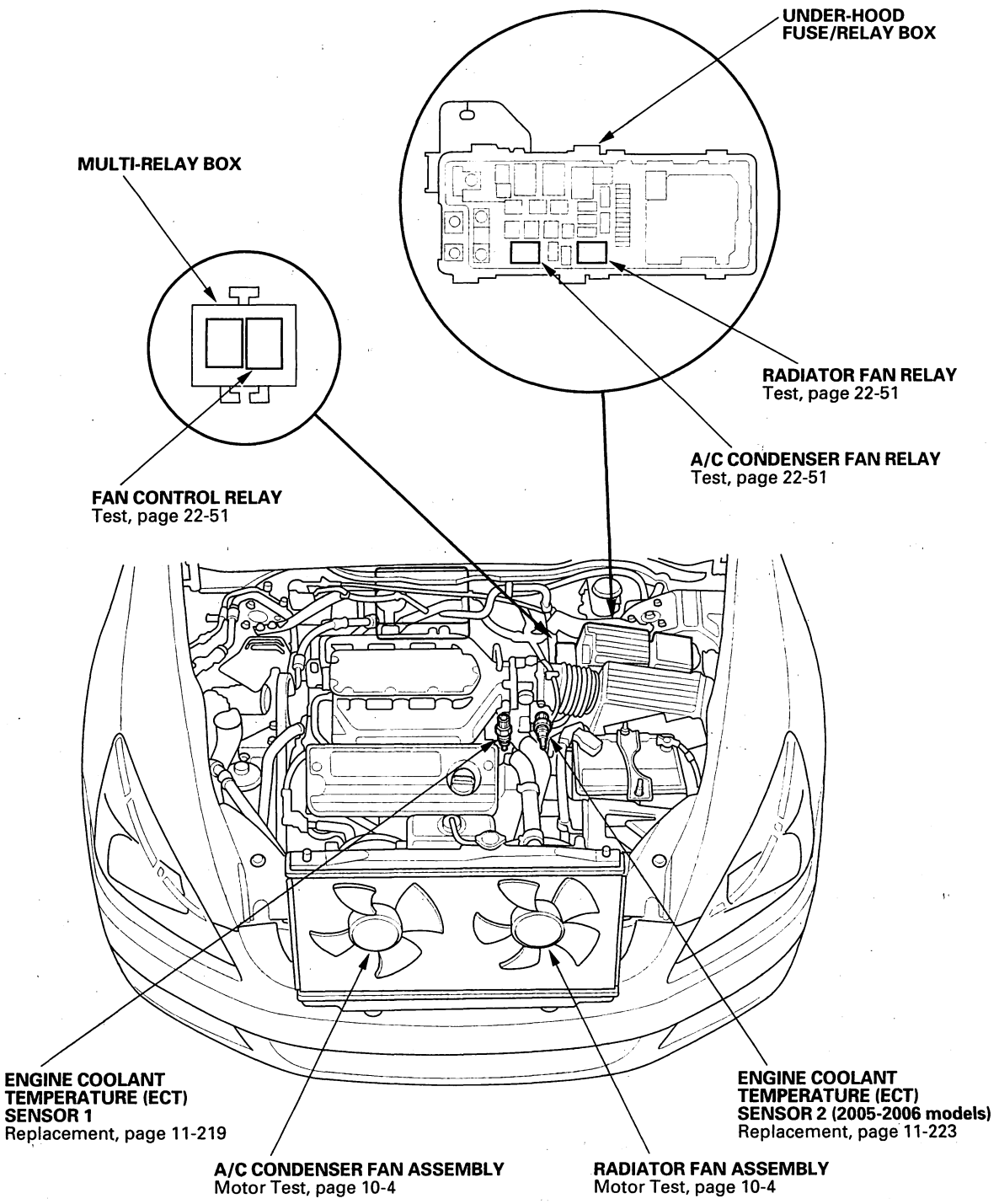

Protected by AR

Symptom Troubleshooting Index

Symptom	Diagnostic Procedure	Also check for
Engine overheats	1. Inspect the water pump (see page 10-5). 2. Check the thermostat (see page 10-4). 3. Check for any engine coolant leakage (from gaskets, hoses, O-rings, etc.). 4. Check for dirt, leaves, or insects on radiator and condenser. 5. Check for a damaged or deformed fan shroud. 6. Check for a plugged or deteriorated radiator hoses. 7. Check the radiator cap (see page 10-3). 8. Inspect the fan motors (see page 10-4) or fan relays (see page 22-51). 9. Check for plugged heater core or hoses. 10. Check the coolant level. 11. Check for deteriorated coolant. 12. Check for a damaged cylinder head gasket.	
The radiator fan runs at low speed, but does not run at high speed when the engine coolant temperature is above 206 °F (97 °C)	Radiator fan high speed circuit troubleshooting (see page 10-14).	Cleanliness and tightness of all connectors
With the A/C off and the engine coolant temperature at 206 °F (97 °C) or below, the A/C condenser fan runs at high speed and the radiator fan does not run. When the engine coolant temperature is above 206 °F (97 °C), both fans run at high speed	Remove the fan control relay, and test. • If the relay is faulty, replace it. • If the relay is OK, check for a short in the wire between fan control relay 5P socket terminal No. 1 and condenser fan motor 2P connector terminal No. 1.	Cleanliness and tightness of all connectors
The radiator fan and the A/C condenser fan run at high speed with the ignition switch ON (II), the A/C off, and the engine coolant temperature below 204 °F (95 °C)	Check for a short in the wire between radiator fan relay 4P socket terminal No. 4 and ECM/PCM connector terminal A7.	Cleanliness and tightness of all connectors
Both the radiator fan and the A/C condenser fan run at low speed with the ignition switch ON (II) and the A/C off	Check for a short in the wire between A/C condenser fan relay 4P socket terminal No. 4 and ECM/PCM connector terminal A6.	Cleanliness and tightness of all connectors
Both the radiator fan and the A/C condenser fan do not run at low speed with the A/C on	Radiator and A/C condenser fans low speed circuit troubleshooting (see page 21-22).	Cleanliness and tightness of all connectors
The A/C condenser fan does not run at all. The radiator fan does not run at low speed, but it runs at high speed	A/C condenser fans high speed circuit troubleshooting (see page 21-25).	Cleanliness and tightness of all connectors
Both the radiator fan and the A/C condenser fan do not run at high speed when the engine coolant temperature is above 206 °F (97 °C)	Check for an open in the wire between radiator fan relay 4P socket terminal No. 4 and ECM/PCM connector terminal A7.	Cleanliness and tightness of all connectors

BACK

Protected by AR

Circuit Diagram

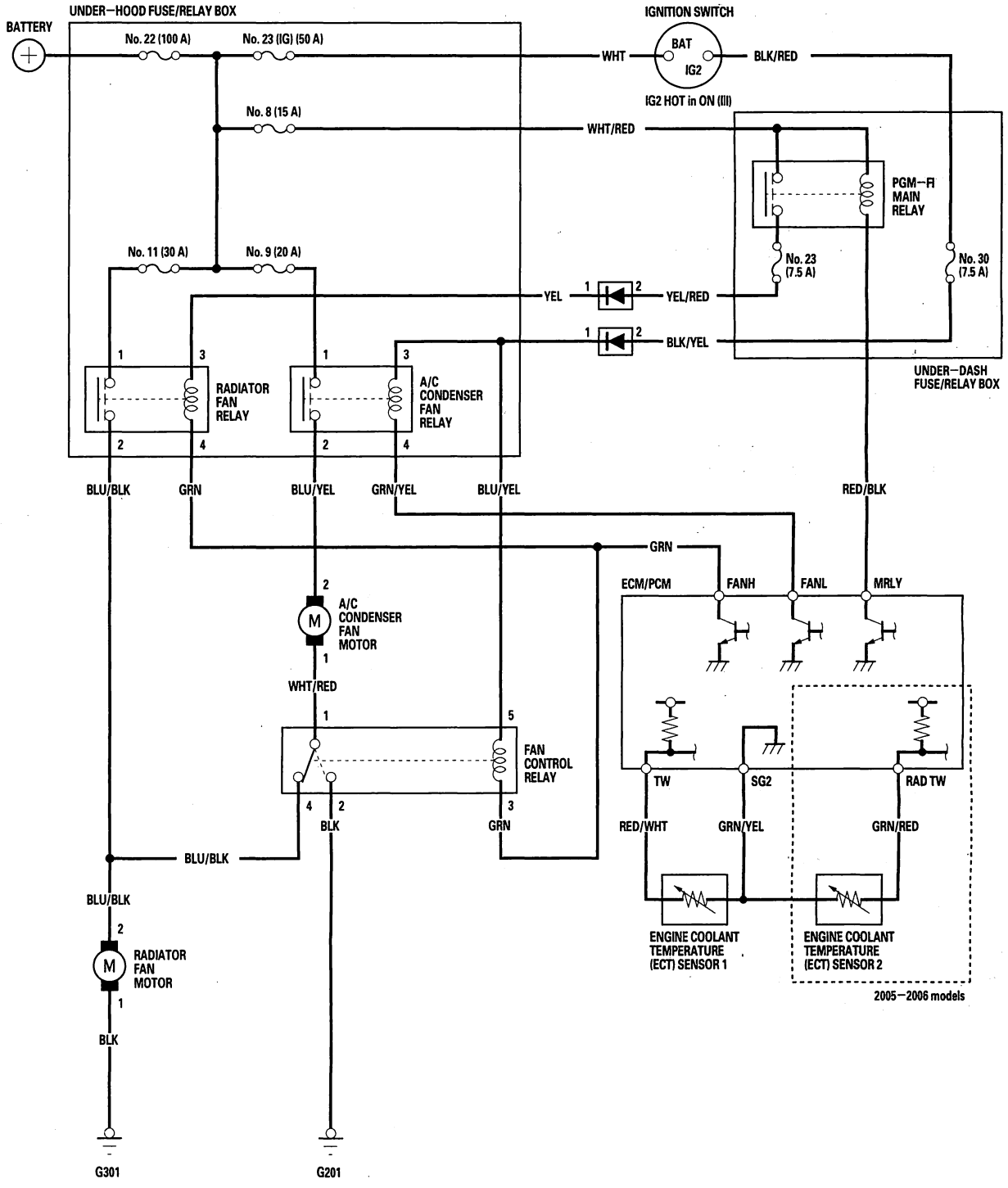

Protected by AR

Radiator Fan High Speed Circuit Troubleshooting

1. Check the No. 11 (30 A) fuse in the under-hood fuse/relay box, and the No. 23 (7.5 A) fuse in the under-dash fuse/relay box.

   Are the fuses OK?

   YES—Go to step 2.

   NO—Replace the fuse(s) and recheck. ■

2. Remove the radiator fan relay from the under-hood fuse/relay box and test it (see page 22-51).

   Is the relay OK?

   YES—Go to step 3.

   NO—Replace the radiator fan relay. ■

3. Measure the voltage between radiator fan relay 4P socket terminal No. 1 and body ground.

   RADIATOR FAN RELAY 4P SOCKET

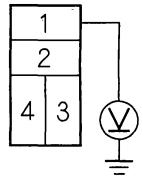

   Terminal side of female terminals

   Is there battery voltage?

   YES—Go to step 4.

   NO—Repair an open in the wire between radiator fan relay 4P socket terminal No. 1 and the under-hood fuse/relay box. ■

4. Connect radiator fan relay 4P socket terminals No. 1 and No. 2 with a jumper wire.

   RADIATOR FAN RELAY 4P SOCKET

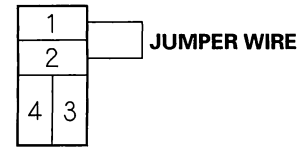

   Terminal side of female terminals

   Does the radiator fan run at high speed?

   YES—Go to step 5.

   NO—Repair an open in the wire between radiator fan relay 4P socket terminal No. 2 and radiator fan motor 2P connector terminal No. 2. ■

5. Turn the ignition switch ON (II).

6. Measure voltage between radiator fan relay 4P socket terminal No. 3 and body ground.

   RADIATOR FAN RELAY 4P SOCKET

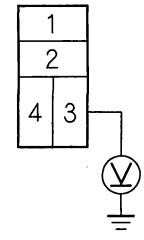

   Terminal side of female terminals

   Is there battery voltage?

   YES—Repair an open in the wire between radiator fan relay 4P socket terminal No. 4 and engine control module (ECM)/ the powertrain control module (PCM) (A3). ■

   NO—Repair an open in the wire between radiator fan relay 4P socket terminal No. 3 and the under-dash fuse/relay box. ■

BACK

Protected by AR

Fuel and Emissions

Fuel and Emissions Systems
Special Tools 11-2
General Troubleshooting Information 11-3
DTC Troubleshooting Index 11-9
Symptom Troubleshooting Index 11-14
System Description 11-16
How to Set Readiness Codes 11-54

PGM-FI System
Component Location Index 11-57
DTC Troubleshooting 11-59
MIL Circuit Troubleshooting 11-204
DLC Circuit Troubleshooting 11-213
Injector Replacement 11-215
A/F Sensor Replacement 11-217
Secondary HO2S Replacement 11-218
ECT Sensor/ECT Sensor 1 Replacement 11-219
IAT Sensor Replacement 11-219
CKP Sensor Replacement 11-220
Knock Sensor Replacement 11-220
CMP Sensor Replacement 11-221
Input Shaft (Mainshaft) Speed Sensor Replacement 11-222
Output Shaft (Countershaft) Speed Sensor Replacement 11-222
MAP Sensor Replacement 11-223
ECT Sensor 2 Replacement 11-223
ECM/PCM Replacement 11-224

Electronic Throttle Control System
Component Location Index 11-225
DTC Troubleshooting 11-226
APP Sensor Signal Inspection 11-277
APP Sensor Replacement 11-278
Throttle Actuator Control Module Replacement 11-278

VTEC
Component Location Index 11-279
DTC Troubleshooting 11-280
Rocker Arm Oil Control Solenoid (VTEC Solenoid Valve) Test 11-288
Rocker Arm Oil Control Solenoid (VTEC Solenoid Valve) Replacement 11-289
Rocker Arm Oil Pressure Switch (VTEC Oil Pressure Switch) Removal/Installation 11-289

Idle Control System
Component Location Index 11-290
DTC Troubleshooting 11-291
A/C Signal Circuit Troubleshooting 11-294
Alternator FR Signal Circuit Troubleshooting 11-295
PSP Switch Signal Circuit Troubleshooting 11-298
Brake Pedal Position Switch Signal Circuit Troubleshooting 11-300
Idle Speed Inspection 11-301
ECM/PCM Idle Learn Procedure 11-302

Fuel Supply System
Component Location Index 11-303
DTC Troubleshooting 11-304
Fuel Pump Circuit Troubleshooting 11-311
Fuel Pressure Relieving 11-315
Fuel Pressure Test 11-317
Fuel Tank Draining 11-318
Fuel Line Inspection 11-319
Fuel Line/Quick-Connect Fitting Precautions 11-321
Fuel Line/Quick-Connect Fitting Removal 11-322
Fuel Line/Quick-Connect Fitting Installation 11-323
Fuel Pressure Regulator Replacement 11-326
Fuel Fillter Replacement 11-326
Fuel Pump/Fuel Gauge Sending Unit Replacement 11-327
Fuel Tank Replacement 11-328
Fuel Gauge Sending Unit Test 11-331
Low Fuel Indicator Test 11-333

Intake Air System
Component Location Index 11-334
DTC Troubleshooting 11-336
Throttle Body Test 11-343
Throttle Body Cleaning 11-343
Air Cleaner Removal/Installation 11-344
Air Cleaner Element Inspection/Replacement 11-344
Resonator Removal/Installation 11-345
IMT (IMRC) Actuator Replacement 11-346
Throttle Cable Adjustment 11-346
Throttle Cable Removal/Installation 11-347
Throttle Body Removal/Installation 11-348
Accelerator Pedal Replacement 11-349

Catalytic Converter System
DTC Troubleshooting 11-350
Warm Up Three Way Catalytic Converter Removal/Installation 11-354

EGR System
Component Location Index 11-356
DTC Troubleshooting 11-357
EGR Valve Replacement 11-368

PCV System
DTC Troubleshooting 11-369
PCV Valve Inspection 11-370
PCV Valve Replacement 11-370

EVAP System
Component Location Index 11-371
DTC Troubleshooting 11-372
EVAP Canister Replacement 11-402
FTP Sensor Replacement 11-403
EVAP Canister Purge Valve Replacement 11-403
EVAP Canister Vent Shut Valve Replacement 11-404

NOTE: Refer to the 2003-2006 Accord Service Manual, P/N 61SDA08 for items not shown in this section.

Outline of Accord V6 Model Change

J30A4 engine has been added.

Protected by AR

Special Tools

Ref. No.	Tool Number	Description	Qty
①	07AAA-S0XA100	Fuel Sender Wrench	1
②	07AAJ-S6MA150	Fuel Pressure Gauge Attachment Set	1
③	07JAZ-001000B	Vacuum/Pressure Gauge, 0—4 in.Hg	1
④	07SAZ-001000A	Backprobe Set	2
⑤	07NAJ-P07010A	Pressure Gauge Adapter	1
⑥	07ZAJ-S5A0200	Oil Pressure Hose	1
⑦-1	07406-0020201	A/T Pressure Hose	1
⑦-2	07406-0070300	A/T Low Pressure Gauge W/Panel	1
⑦-3	07MAJ-PY4011A	A/T Pressure Hose, 2,210 mm	1
⑦-4	07MAJ-PY40120	A/T Pressure Hose, Adapter	1
⑧	07406-004000A	Fuel Pressure Gauge	1

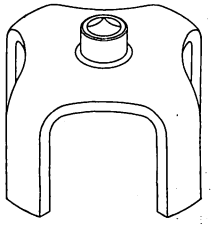

①

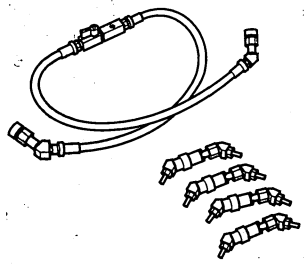

②

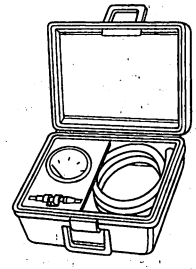

③

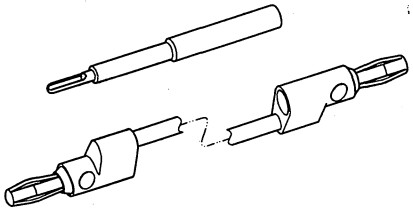

④

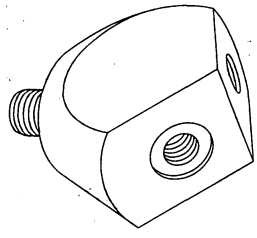

⑤

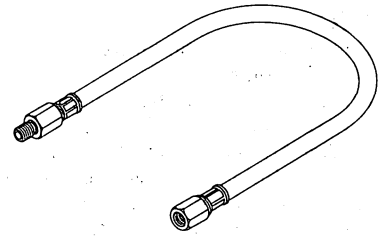

⑥

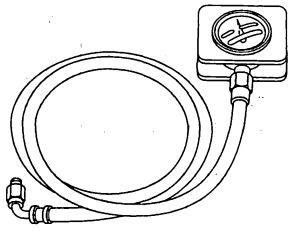

⑦-1, ⑦-2, ⑦-3, ⑦-4

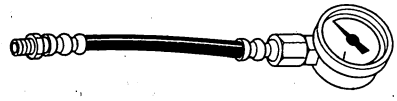

⑧

BACK

Protected by AR

General Troubleshooting Information

Intermittent Failures

The term "intermittent failure" means a system may have had a failure, but it checks OK now. If the malfunction indicator lamp (MIL) on the dash does not come on, check for poor connections or loose pins at all connectors related to the circuit that you are troubleshooting. If the MIL was on but then went out, the original problem may have been intermittent.

Opens and Shorts

"Open" and "Short" are common electrical terms. An open is a break in a wire or at a connection. A short is an accidental connection of a wire to ground or to another wire. In simple electronics, this usually means something won't work at all. With complex electronics (such as ECMs and PCMs) this can sometimes mean something works, but not the way it's supposed to.

How to Use the HDS (Honda Diagnostic System)

If the MIL (Malfunction Indicator Lamp) has come on

1. Start the engine, and check the MIL (A).

   NOTE: If the ignition switch is turned ON (II), and the engine is not started, the MIL stays on for 15—20 seconds (see page 11-54).

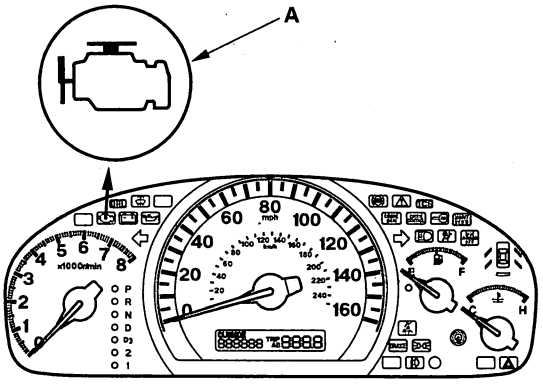

2. If the MIL stays on, connect the HDS to the data link connector (DLC) (A) located under the driver's side of the dashboard.

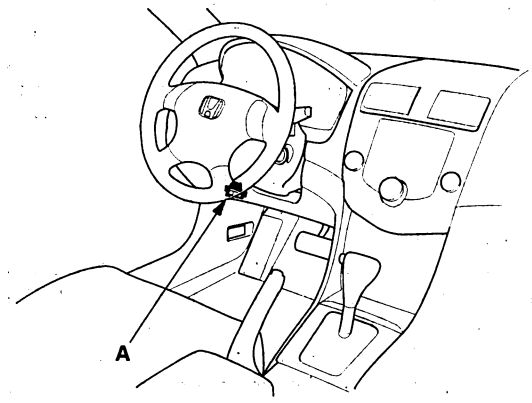

3. Turn the ignition switch ON (II).

4. Check the diagnostic trouble code (DTC) and note it. Also check the freeze data and/or on board snapshot data, and download any data found. Then refer to the indicated DTC's troubleshooting, and begin the appropriate troubleshooting procedure.

   NOTE:
   - Freeze data indicates the engine conditions when the first malfunction, misfire, or fuel trim malfunction was detected.
   - The HDS can read the DTC, freeze data, current data, and other engine control module (ECM)/ powertrain control module (PCM) data.
   - For specific operations, refer to the user's manual that came with the HDS.

5. If no DTCs are found, go to MIL troubleshooting (see page 11-204).

If the MIL did not stay on

If the MIL did not stay on but there is a driveability problem, do the symptom troubleshooting.

If you can't duplicate the DTC

Some of the troubleshooting requires you to reset the ECM/PCM and try to duplicate the DTC. If the problem is intermittent and you can't duplicate the code, do not continue through the procedure. To do so will only result in confusion and possibly, a needlessly replaced ECM/PCM.

(cont'd)

BACK

Protected by AR

General Troubleshooting Information (cont'd)

HDS Clear Command

The ECM/PCM stores various specific data to correct the system even if there is no electrical power such as when the battery negative terminal or No. 8 FI ECU (ECM/PCM) (15 A) fuse are disconnected. Stored data based on failed parts should be cleared by using the "CLEAR COMMAND" of the HDS, if parts are replaced.

The HDS has three kinds of clear commands to meet this purpose. They are DTC clear, ECM/PCM reset, and CKP pattern clear. DTC clear command erases all stored DTC codes, freeze data, readiness codes, and the on-board snapshot. This must be done with the HDS after reproducing the DTC during troubleshooting.
The ECM/PCM reset command erases all stored DTC codes, freeze data, readiness codes, on-board snapshot, and all specific data to correct the system except CKP pattern. If the CKP pattern data in the ECM/PCM was cleared, you must do the CKP pattern learn procedure.
The CKP pattern clear command erases only CKP pattern data. This command is for repair of a misfire or the CKP sensor.

Scan Tool Clear Command

If you are using a generic scan tool to clear commands, be aware that there is only one setting for clearing the ECM/PCM, and it clears all commands at the same time (CKP pattern learn, idle learn, readiness codes, freeze data, on-board sanpshot, and DTCs). After you clear all commands, you then need to do these procedures, in this order: ECM/PCM idle learn procedure (see page 11-302); CKP pattern learn procedure; Test-drive to set readiness codes to complete (see page 11-54).

DTC Clear

1. Clear the DTC with the HDS while the engine is stopped.
2. Turn the ignition switch OFF.
3. Turn the ignition switch ON (II), and wait for 30 seconds.
4. Turn the ignition switch OFF, and disconnect the HDS from the DLC.

ECM/PCM Reset

This command clears stored specific data from each vehicle such as DTCs, freeze data, on-board snapshot, and readiness codes. It does not clear CKP pattern data.

1. Reset the ECM/PCM with the HDS while the engine is stopped.
2. Turn the ignition switch OFF.
3. Turn the ignition switch ON (II), and wait for 30 seconds.
4. Turn the ignition switch OFF, and disconnect the HDS from the DLC.
5. Do the ECM/PCM idle learn procedure (see page 11-302).

CKP Pattern Clear/CKP Pattern Learn

NOTE: The ECT needs to be at 176 °F (80 °C) or higher.

1. Clear the CKP pattern while the engine is stopped.
2. Turn the ignition switch OFF.
3. Turn the ignition switch ON (II), and wait for 30 seconds.
4. Test-drive the vehicle on a level road: decelerate (with the throttle fully closed) from an engine speed of 2,500 rpm to 1,000 rpm with the A/T in 2 position, or M/T in 1st gear.
5. Stop the vehicle, but keep the engine running.
6. Check PULSER F/B LEARN in the DATA LIST with the HDS. If it is NOT COMPLETED, go to step 4. If it is COMPLETED, go to step 7.

BACK

Protected by AR

7. Test-drive the vehicle on a level road: decelerate (with the throttle fully closed) from an engine speed of 5,000 rpm to 3,000 rpm with the A/T in 2 position, or M/T in 1st gear.
8. Stop the vehicle, but keep the engine running.
9. Check the PULSER F/B LEARN (HIGH RPM) in the DATA LIST with the HDS. If it is NOT COMPLETED, go to step 7. If it is COMPLETED, go to step 10.
10. Turn the ignition switch OFF.
11. Turn the ignition switch ON (II), and wait for 30 seconds. The CKP learning procedure is completed.

How to End a Troubleshooting Session (required after any troubleshooting)

1. Reset the ECM/PCM with the HDS.
2. Do the ECM/PCM idle learn procedure (see page 11-302).
3. Turn the ignition switch OFF.
4. Disconnect the HDS from the DLC.

   NOTE: The ECM/PCM is part of the immobilizer system. If you replace the ECM/PCM, it will have a different immobilizer code. In order for the engine to start, you must rewrite the immobilizer code with the HDS.

How to Remove the ECM/PCM Connectors for Testing

If DTC troubleshooting requires voltage or resistance checks at the ECM/PCM connectors, remove the ECM/PCM connectors and test it:

1. Turn the ignition switch OFF.
2. Jump the SCS line with the HDS.
3. Remove the center lower cover (A).

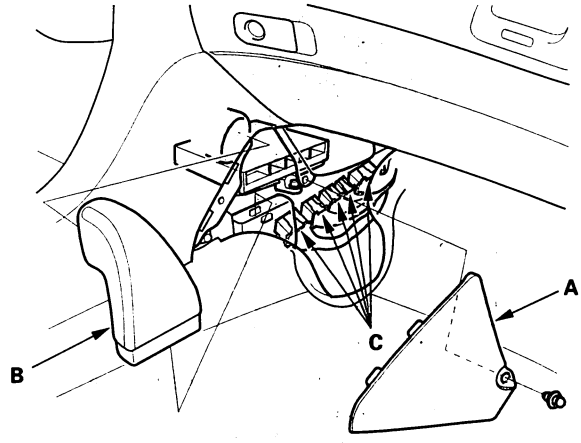

4. Remove the duct (B).
5. Disconnect ECM/PCM connectors (C).
6. Open the SCS line with the HDS.

(cont'd)

BACK

Protected by AR

General Troubleshooting Information (cont'd)

How to Troubleshoot Circuits at the ECM/PCM

Special Tools Required
- Digital multimeter KS-AHM-32-003 (1) or a commercially available digital multimeter
- Backprobe set 07SAZ-001000A (2)

1. Connect the backprobe adapters (A) to the stacking patch cords (B), and connect the cords to a digital multimeter.

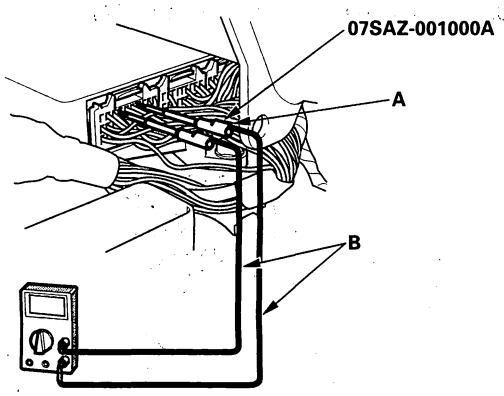

2. Using the wire insulation as a guide for the contoured tip of the backprobe adapter, gently slide the tip into the connector from the wire side until it touches the end of the wire terminal.

3. If you cannot get to the wire side of the connector or the wire side is sealed (A), disconnect the connector, and probe the terminals (B) from the terminal side. Do not force the probe into the connector.

NOTICE
Do not puncture the insulation on a wire. Punctures can cause poor or intermittent electrical connections.

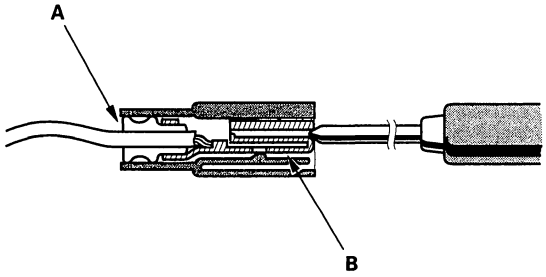

ECM/PCM Updating and Substitution for Testing

Special Tools Required
Honda interface module (HIM) EQS05A35570

Use this procedure when you have to substitute a known-good ECM/PCM in a troubleshooting procedure. Update the ECM/PCM only if the ECM/PCM does not have the latest software loaded.

NOTE: Do not turn the ignition switch OFF while updating the ECM/PCM. If you turn the ignition switch OFF before completion, the ECM/PCM can be damaged.

How to Update the ECM/PCM

NOTE:
- To ensure the latest program is installed, do an ECM/PCM update whenever the ECM/PCM is substituted or replaced.
- You can not update an ECM/PCM with the program it already has. It will only accept a new program.
- Before you update the ECM/PCM, make sure the vehicle's battery is fully charged.
- To prevent ECM/PCM damage, do not operate anything electrical (audio system, brakes, A/C, power windows, moonroof, door locks, etc.) during the update.
- If you need to diagnose the Honda interface module (HIM) because the HIM's red (#3) light came on or was flashing during the update, leave the ignition switch in the ON (II) position when you disconnect the HIM from the data link connector (DLC). This will prevent ECM/PCM damage.
- High temperature in the engine compartment might cause the ECM/PCM to become too hot to run the update. If the engine has been running before this procedure, open the hood and cool the engine compartment.

1. Turn the ignition switch ON (II). Do not start the engine.

BACK

Protected by AR

2. Connect the HDS to the data link connector (DLC) (A) located under the driver's side of the dashboard.

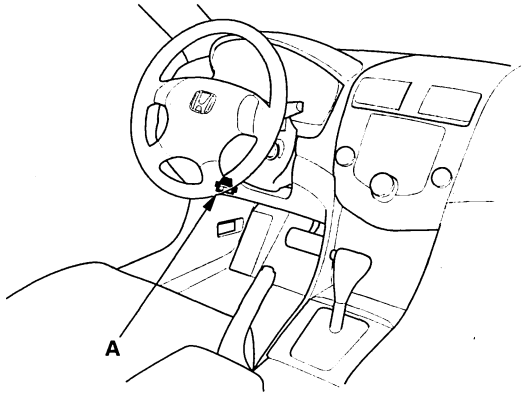

3. Select the INSPECTION MENU with the HDS.
4. Do the TP POSITION CHECK in the ETCS TEST.
5. If the HDS does not have the update function, disconnect the HDS from the vehicle and connect the Honda interface module (HIM).
6. If the software in the ECM/PCM is the latest, disconnect the HDS or the HIM from the DLC, and go back to the procedure that you were doing.
   If the software in the ECM/PCM is not the latest, do the ECM/PCM update procedure as described on the HIM label or in the ECM/PCM update system.

   NOTE: If the ECM/PCM update system requires you to cool the ECM/PCM, follow what is shown in the screen.
7. Do the ECM/PCM idle learn procedure (see page 11-302).
8. Do the CKP pattern clear/pattern learn procedure.

How to Substitute the ECM/PCM

1. Connect the HDS to the data link connector (DLC) (A) located under the driver's side of the dashboard.

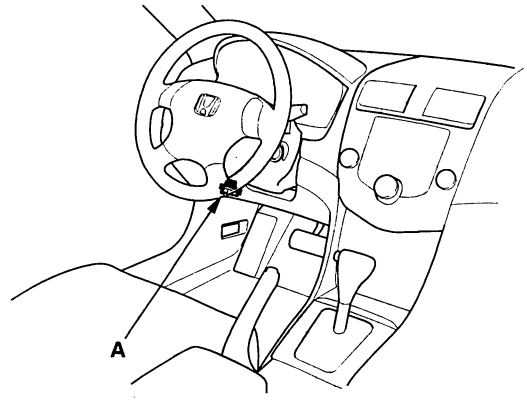

2. Make sure the HDS communicates with the ECM/PCM. If it doesn't, skip steps 3 to 5 and clean the throttle body after this procedure.
3. Turn the ignition switch ON (II).
4. Select the INSPECTION MENU with the HDS.
5. Do the TP POSITION CHECK in the ETCS TEST.
6. Turn the ignition switch OFF.

(cont'd)

Protected by AR

General Troubleshooting Information (cont'd)

7. Jump the SCS line with the HDS.
8. Remove the center lower covers (A).

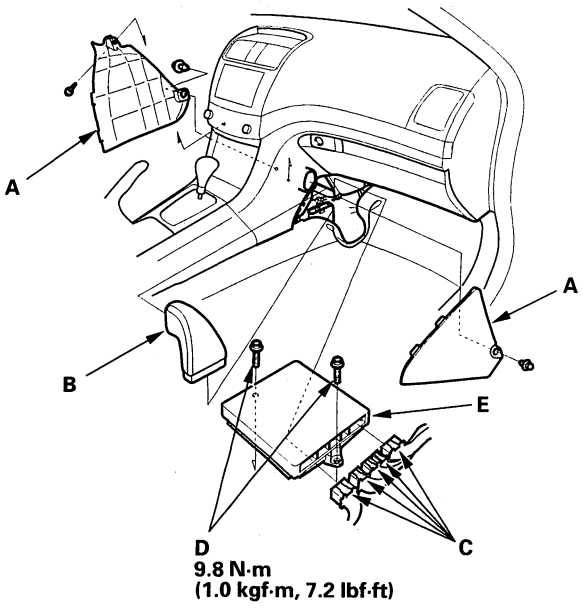

9. Remove the duct (B).
10. Disconnect ECM/PCM connectors (C).
11. Remove the bolts (D), then remove the ECM/PCM (E).
12. Install a known-good ECM/PCM in the reverse order of removal.
13. Open the SCS with the HDS.
14. Turn the ignition switch ON (II).

NOTE:
2005-2006 models: DTC P0630 "VIN Not Programmed or Mismatch" may be stored because the VIN has not been programmed into the ECM/PCM; ignore it, and continue this procedure.

15. Input the VIN to the ECM/PCM with the HDS.
16. Rewrite the immobilizer code with the ECM/PCM replacement procedure in the HDS; it allows you to start the engine.
17. Reset the ECM/PCM with the HDS.
18. Do the ECM/PCM idle learn procedure (see page 11-302).
19. Do the CKP pattern clear/pattern learn procedure with the HDS.

OBD Status

The OBD status shows the current system status of each DTC and all of the parameters. This function is used to see if the technician's repair was successfully finished. The results of diagnostic tests for the DTC are displayed as:

- PASSED: On board diagnosis is successfully finished.
- FAILED: On board diagnosis has finished but failed.
- EXECUTING: The vehicle is in enable criteria conditions for the DTC and the on board diagnosis is running.
- NOT COMPLETED: The on board diagnosis was running but is out of the enable conditions for the DTC.
- OUT OF CONDITION: The vehicle has stayed out of the enable conditions for the DTC.

BACK

Protected by AR

DTC Troubleshooting Index

DTC (MIL indication *1)	Two Drive Cycle Method	Detection Item	MIL	Note
P0107 (3) *8	—	Manifold Absolute Pressure (MAP) Sensor Circuit Low Voltage	ON	(see page 11-59)
P0107 (3) *6	—	Manifold Absolute Pressure (MAP) Sensor Circuit Low Voltage	ON	(see page 11-62)
P0108 (3)	—	Manifold Absolute Pressure (MAP) Sensor Circuit High Voltage	ON	(see page 11-64)
P0111 (10) *6	—	Intake Air Temperature (IAT) Sensor Circuit Range/Performance Problem	ON	(see page 11-66)
P0112 (10) *8	—	Intake Air Temperature (IAT) Sensor Circuit Low Voltage	ON	(see page 11-67)
P0112 (10) *6	—	Intake Air Temperature (IAT) Sensor Circuit Low Voltage	ON	(see page 11-69)
P0113 (10)	—	Intake Air Temperature (IAT) Sensor Circuit High Voltage	ON	(see page 11-71)
P0116 (86) *8	○	Engine Coolant Temperature (ECT) Sensor Range/Performance Problem	ON	(see page 11-73)
P0116 (86) *6	○	Engine Coolant Temperature (ECT) Sensor 1 Range/Performance Problem	ON	(see page 11-74)
P0117 (6) *8	—	Engine Coolant Temperature (ECT) Sensor Circuit Low Voltage	ON	(see page 11-75)
P0117 (6) *6	—	Engine Coolant Temperature (ECT) Sensor/Engine Coolant Temperature (ECT) Sensor 1 Circuit Low Voltage	ON	(see page 11-77)
P0118 (6)	—	Engine Coolant Temperature (ECT) Sensor/Engine Coolant Temperature (ECT) Sensor 1 Circuit High Voltage	ON	(see page 11-79)
P0122 (7)	—	Throttle Position (TP) Sensor A Circuit Low Voltage	ON	(see page 11-226)
P0123 (7)	—	Throttle Position (TP) Sensor A Circuit High Voltage	ON	(see page 11-229)
P0125 (86) *8	○	Engine Coolant Temperature (ECT) Sensor Slow Response	ON	(see page 11-81)
P0125 (86) *6	○	Engine Coolant Temperature (ECT) Sensor Slow Response	ON	(see page 11-82)
P0128 (87) *8	○	Cooling System Malfunction	ON	(see page 11-83)
P0128 (87) *6	○	Cooling System Malfunction	ON	(see page 11-85)
P0133 (157) *8	○	Rear Air Fuel Ratio (A/F) Sensor (Bank 1, Sensor 1) Circuit Slow Response	ON	(see page 11-87)
P0133 (157) *6	○	Rear Air Fuel Ratio (A/F) Sensor (Bank 1, Sensor 1) Circuit Slow Response	ON	(see page 11-88)
P0134 (151)	—	Rear Air Fuel Ratio (A/F) Sensor (Bank 1, Sensor 1) Heater System Malfunction	ON	(see page 11-89)
P0135 (151)	—	Rear Air Fuel Ratio (A/F) Sensor (Bank 1, Sensor 1) Heater Circuit Malfunction	ON	(see page 11-91)
P0137 (161) *8	○	Rear Secondary Heated Oxygen Sensor (Secondary HO2S (Bank 1, Sensor 2)) Circuit Low Voltage	ON	(see page 11-95)
P0137 (161) *6	○	Rear Secondary Heated Oxygen Sensor (Secondary HO2S (Bank 1, Sensor 2)) Circuit Low Voltage	ON	(see page 11-97)
P0138 (161) *8	○	Rear Secondary Heated Oxygen Sensor (Secondary HO2S (Bank 1, Sensor 2)) Circuit High Voltage	ON	(see page 11-99)
P0138 (161) *6	○	Rear Secondary Heated Oxygen Sensor (Secondary HO2S (Bank 1, Sensor 2)) Circuit High Voltage	ON	(see page 11-102)
P0139 (161) *8	○	Rear Secondary Heated Oxygen Sensor (Secondary HO2S (Bank 1, Sensor 2)) Circuit Slow Response	ON	(see page 11-105)
P0139 (161) *6	○	Rear Secondary Heated Oxygen Sensor (Secondary HO2S (Bank 1, Sensor 2)) Circuit Slow Response	ON	(see page 11-106)
P0141 (163)	—	Rear Secondary Heated Oxygen Sensor (Secondary HO2S (Bank 1, Sensor 2)) Heater Circuit Malfunction	ON	(see page 11-107)
P0153 (158) *8	○	Front Air Fuel Ratio (A/F) Sensor (Bank 2, Sensor 1) Circuit Slow Response	ON	(see page 11-87)
P0153 (158) *6	○	Front Air Fuel Ratio (A/F) Sensor (Bank 2, Sensor 1) Circuit Slow Response	ON	(see page 11-88)
P0154 (152)	—	Front Air Fuel Ratio (A/F) Sensor (Bank 2, Sensor 1) Heater System Malfunction	ON	(see page 11-89)
P0155 (152)	—	Front Air Fuel Ratio (A/F) Sensor (Bank 2, Sensor 1) Heater Circuit Malfunction	ON	(see page 11-91)
P0157 (162) *8	○	Front Secondary Heated Oxygen Sensor (Secondary HO2S (Bank 2, Sensor 2)) Circuit Low Voltage	ON	(see page 11-95)
P0157 (162) *6	○	Front Secondary Heated Oxygen Sensor (Secondary HO2S (Bank 2, Sensor 2)) Circuit Low Voltage	ON	(see page 11-97)
P0158 (162) *8	○	Front Secondary Heated Oxygen Sensor (Secondary HO2S (Bank 2, Sensor 2)) Circuit High Voltage	ON	(see page 11-99)
P0158 (162) *6	○	Front Secondary Heated Oxygen Sensor (Secondary HO2S (Bank 2, Sensor 2)) Circuit High Voltage	ON	(see page 11-102)
P0159 (162) *8	○	Front Secondary Heated Oxygen Sensor (Secondary HO2S (Bank 2, Sensor 2)) Circuit Slow Response	ON	(see page 11-105)
P0159 (162) *6	○	Front Secondary Heated Oxygen Sensor (Secondary HO2S (Bank 2, Sensor 2)) Circuit Slow Response	ON	(see page 11-106)

NOTE: The above DTCs are indicated when the PGM-FI system is selected in the HDS.
Some automatic transmission DTCs cause the MIL to come on. If the MIL is on and no DTCs are indicated in the PGM-FI system, select the A/T system, and check for automatic transmission DTCs.

* 1: The above DTCs are indicated by a blinking MIL when the SCS service signal line is jumped with the HDS.
* 6: 2005-2006 models
* 8: 2003-2004 models

(cont'd)

BACK

Protected by AR

DTC Troubleshooting Index (cont'd)

DTC (MIL indication *1)	Two Drive Cycle Method	Detection Item	MIL	Note
P0161 (164)	———	Front Secondary Heated Oxygen Sensor (Secondary HO2S (Bank 2, Sensor 2)) Heater Circuit Malfunction	ON	(see page 11-107)
P0171 (153)	○	Rear Bank (Bank 1) Fuel System Too Lean	ON	(see page 11-111)
P0172 (153)	○	Rear Bank (Bank 1) Fuel System Too Rich	ON	(see page 11-111)
P0174 (154)	○	Front Bank (Bank 2) Fuel System Too Lean	ON	(see page 11-111)
P0175 (154)	○	Front Bank (Bank 2) Fuel System Too Rich	ON	(see page 11-111)
P0222 (7)	———	Throttle Position (TP) Sensor B Circuit Low Voltage	ON	(see page 11-232)
P0223 (7)	———	Throttle Position (TP) Sensor B Circuit High Voltage	ON	(see page 11-235)
P0300 (77), and any combination of the following P0301 (71), P0302 (72), P0303 (73), P0304 (74), P0305 (75), P0306 (76)	○	Random Misfire Detected	ON	(see page 11-112)
P0301 (71)	○	No. 1 Cylinder Misfire Detected	ON	(see page 11-115)
P0302 (72)	○	No. 2 Cylinder Misfire Detected	ON	(see page 11-115)
P0303 (73)	○	No. 3 Cylinder Misfire Detected	ON	(see page 11-115)
P0304 (74)	○	No. 4 Cylinder Misfire Detected	ON	(see page 11-115)
P0305 (75)	○	No. 5 Cylinder Misfire Detected	ON	(see page 11-115)
P0306 (76)	○	No. 6 Cylinder Misfire Detected	ON	(see page 11-115)
P0325 (23)	———	Knock Sensor Circuit Malfunction	ON	(see page 11-123)
P0335 (4)	———	Crankshaft Position (CKP) Sensor A No Signal	ON	(see page 11-125)
P0339 (4)	———	Crankshaft Position (CKP) Sensor A Intermittent Interruption	ON	(see page 11-128)
P0340 (9)	———	Camshaft Position (CMP) Sensor No Signal	ON	(see page 11-129)
P0344 (9)	———	Camshaft Position (CMP) Sensor Intermittent Interruption	ON	(see page 11-131)
P0385 (54)	———	Crankshaft Position (CKP) Sensor B No Signal	ON	(see page 11-125)
P0389 (54)	———	Crankshaft Position (CKP) Sensor B Intermittent Interruption	ON	(see page 11-128)
P0401 (80)	○	Exhaust Gas Recirculation (EGR) Insufficient Flow	ON	(see page 11-357)
P0404 (12)	○	Exhaust Gas Recirculation (EGR) Control Circuit Range/Performance Problem	ON	(see page 11-358)
P0406 (12)	———	Exhaust Gas Recirculation (EGR) Valve Position Sensor Circuit High Voltage	ON	(see page 11-361)

NOTE: The above DTCs are indicated when the PGM-FI system is selected in the HDS.
Some automatic transmission DTCs cause the MIL to come on. If the MIL is on and no DTCs are indicated in the PGM-FI system, select the A/T system, and check for automatic transmission DTCs.

* 1: The above DTCs are indicated by a blinking MIL when the SCS service signal line is jumped with the HDS.

BACK

Protected by AR

DTC (MIL indication *1)	Two Drive Cycle Method	Detection Item	MIL	Note
P0420 (165) *8	○	Rear Bank Catalyst System Efficiency Below Threshold (Bank 1)	ON	(see page 11-350)
P0420 (165) *6	○	Rear Bank Catalyst System Efficiency Below Threshold (Bank 1)	ON	(see page 11-352)
P0430 (166) *8	○	Front Bank Catalyst System Efficiency Below Threshold (Bank 2)	ON	(see page 11-350)
P0430 (166) *6	○	Front Bank Catalyst System Efficiency Below Threshold (Bank 2)	ON	(see page 11-352)
P0442 (90) *8	○	Evaporative Emission (EVAP) System Small Leak Detected	ON	(see page 11-372)
P0443 (92)	———	Evaporative Emission (EVAP) Canister Purge Valve Circuit Malfunction	ON	(see page 11-375)
P0455 (90) *6	○	Evaporative Emission (EVAP) System Very Small Leak Detected	ON	(see page 11-372)
P0451 (91)	○	Fuel Tank Pressure (FTP) Sensor Range/Performance Problem	ON	(see page 11-379)
P0452 (91) *8	———	Fuel Tank Pressure (FTP) Sensor Circuit Low Voltage	ON	(see page 11-380)
P0452 (91) *6	———	Fuel Tank Pressure (FTP) Sensor Circuit Low Voltage	ON	(see page 11-383)
P0453 (91)	———	Fuel Tank Pressure (FTP) Sensor Circuit High Voltage	ON	(see page 11-386)
P0456 (90)	○	Evaporative Emission (EVAP) System Very Small Leak Detected	ON	(see page 11-372)
P0457 (90)	○	Evaporative Emission (EVAP) System Leak Detected/Fuel Cap Loose or Missing	ON	(see page 11-389)
P0461 (121) *6	———	Fuel Level Sensor (Fuel Gauge Sending Unit) Range/Performance Problem	OFF	(see page 11-304)
P0462 (121) *6	———	Fuel Level Sensor (Fuel Gauge Sending Unit) Circuit Low Voltage	OFF	(see page 11-305)
P0463 (121) *6	———	Fuel Level Sensor (Fuel Gauge Sending Unit) Circuit High Voltage	OFF	(see page 11-307)
P0496 (92)	○	Evaporative Emission (EVAP) System High Purge Flow	ON	(see page 11-391)
P0497 (90)	○	Evaporative Emission (EVAP) System Low Purge Flow	ON	(see page 11-392)
P0498 (117)	———	Evaporative Emission (EVAP) Canister Vent Shut Valve Control Circuit Low Voltage	ON	(see page 11-395)
P0499 (117)	———	Evaporative Emission (EVAP) Canister Vent Shut Valve Control Circuit High Voltage	ON	(see page 11-398)
P0506 (14)	○	Idle Control System RPM Lower than Expected	ON	(see page 11-291)
P0507 (14)	○	Idle Control System RPM Higher than Expected	ON	(see page 11-293)
P0562 (34) *6	———	Charging System Low Voltage	OFF	(see page 11-132)
P0563 (34)	———	Engine Control Module (ECM)/Powertrain Control Module (PCM) Power Source Circuit Unexpected Voltage	ON	(see page 11-133)
P0602 (196) *9	———	Engine Control Module (ECM)/Powertrain Control Module (PCM) Programming Error	OFF	(see page 11-136)
P0603 (131)	———	Engine Control Module (ECM)/Powertrain Control Module (PCM) Internal Control Module Keep Alive Memory (KAM) Error	ON	(see page 11-136)
P0630 (139) *6	———	VIN Not Programmed or Mismatch	ON	(see page 11-137)
P0641 (133) *6	———	Sensor Reference Voltage A Malfunction	ON	(see page 11-138)
P0685 (135)	○	Engine Control Module (ECM)/Powertrain Control Module (PCM) Power Control Circuit/Internal Circuit Malfunction	ON	(see page 11-142)
P0700 (70) *2, *3	———	Automatic Transaxle System Malfunction	ON	(see page 11-142)
P0700 (70) *3	———	Automatic Transaxle System Malfunction	OFF	(see page 11-142)
P0715 (123) *4	———	Input Shaft (Mainshaft) Speed Sensor Circuit Malfunction	OFF	(see page 11-143)
P0720 (122) *4	———	Output Shaft (Countershaft) Speed Sensor Circuit Malfunction	ON	(see page 11-145)
P1109 (90) *6	———	Barometric Pressure (BARO) Sensor Circuit Out of Range High	ON	(see page 11-148)

NOTE: The above DTCs are indicated when the PGM-FI system is selected in the HDS.
Some automatic transmission DTCs cause the MIL to come on. If the MIL is on and no DTCs are indicated in the PGM-FI system, select the A/T system, and check for automatic transmission DTCs.

* 1: The above DTCs are indicated by a blinking MIL when the SCS service signal line is jumped with the HDS.
* 2: The D indicator and the MIL may come on simultaneously.
* 3: A/T
* 4: M/T
* 6: 2005-2006 models
* 8: 2003-2004 models
* 9: 2006 model

(cont'd)

BACK

Protected by AR

DTC Troubleshooting Index (cont'd)

DTC (MIL indication *1)	Two Drive Cycle Method	Detection Item	MIL	Note
P1077 (106) *4	○	Intake Manifold Tuning (IMT) (Intake Manifold Runner Control (IMRC)) Valve Stuck in High RPM Position	ON	(see page 11-336)
P1078 (106) *4	○	Intake Manifold Tuning (IMT) (Intake Manifold Runner Control (IMRC)) Valve Stuck in Low RPM Position	ON	(see page 11-339)
P1116 (86) *6	—	Engine Coolant Temperature (ECT) Sensor Performance Problem	ON	(see page 11-149)
P1128 (5)	○	Manifold Absolute Pressure (MAP) Sensor Signal Lower Than Expected	ON	(see page 11-151)
P1129 (5)	○	Manifold Absolute Pressure (MAP) Sensor Signal Higher Than Expected	ON	(see page 11-152)
P1172 (158) *6	—	Rear Air Fuel Ratio (A/F) Sensor (Bank 1, Sensor 1) Circuit Out of Range High	ON	(see page 11-154)
P1174 (158) *6	—	Front Air Fuel Ratio (A/F) Sensor (Bank 2, Sensor 1) Circuit Out of Range High	ON	(see page 11-154)
P1297 (20)	—	Electrical Load Detector (ELD) Circuit Low Voltage	OFF	(see page 11-155)
P1298 (20)	—	Electrical Load Detector (ELD) Circuit High Voltage	OFF	(see page 11-157)
P1454 (91)	○	Fuel Tank Pressure (FTP) Sensor Range/Performance Problem	ON	(see page 11-399)
P1549 (34) *6	—	Charging System High Voltage	OFF	(see page 11-159)
P16BB (116) *6	—	Alternator B Terminal Circuit Low Voltage	OFF	(see page 11-160)
P16BC (116) *6	—	Alternator FR Terminal Circuit/IGP Circuit Low Voltage	OFF	(see page 11-161)
P1683 (40)	—	Throttle Valve Default Position Spring Performance Problem	ON	(see page 11-238)
P1684 (40)	—	Throttle Valve Return Spring Performance Problem	ON	(see page 11-239)
P2101 (40)	—	Throttle Actuator System Malfunction	ON	(see page 11-240)
P2108 (40)	—	Throttle Actuator Control Module Problem	ON	(see page 11-242)
P2118 (40)	—	Throttle Actuator Current Range/Performance Problem	ON	(see page 11-243)
P2122 (37) *8	—	Accelerator Pedal Position (APP) Sensor A (Throttle Position (TP) Sensor D) Circuit Low Voltage	ON	(see page 11-244)
P2122 (37) *6	—	Accelerator Pedal Position (APP) Sensor A (Throttle Position (TP) Sensor D) Circuit Low Voltage	ON	(see page 11-248)
P2123 (37)	—	Accelerator Pedal Position (APP) Sensor A (Throttle Position (TP) Sensor D) Circuit High Voltage	ON	(see page 11-251)
P2127 (37) *8	—	Accelerator Pedal Position (APP) Sensor B (Throttle Position (TP) Sensor E) Circuit Low Voltage	ON	(see page 11-253)
P2127 (37) *6	—	Accelerator Pedal Position (APP) Sensor B (Throttle Position (TP) Sensor E) Circuit Low Voltage	ON	(see page 11-257)
P2128 (37)	—	Accelerator Pedal Position (APP) Sensor B (Throttle Position (TP) Sensor E) Circuit High Voltage	ON	(see page 11-260)
P2135 (7)	—	Throttle Position (TP) Sensor A/B Voltage Incorrect Correlation	ON	(see page 11-262)
P2138 (37)	—	Accelerator Pedal Position (APP) Sensor A/B (Throttle Position (TP) Sensor D/E) Incorrect Voltage Correlation	ON	(see page 11-264)
P2176 (40)	—	Throttle Actuator Control System Idle Position Not Learned	ON	(see page 11-266)
P2183 (192) *6	—	Engine Coolant Temperature (ECT) Sensor 2 Circuit Range/Performance Problem	ON	(see page 11-163)
P2184 (192) *6	—	Engine Coolant Temperature (ECT) Sensor 2 Circuit Low Voltage	ON	(see page 11-165)
P2185 (192) *6	—	Engine Coolant Temperature (ECT) Sensor 2 Circuit High Voltage	ON	(see page 11-167)
P2195 (155)	—	Rear Air Fuel Ratio (A/F) Sensor (Bank 1, Sensor 1) Signal Stuck Lean	ON	(see page 11-169)
P2197 (156)	—	Front Air Fuel Ratio (A/F) Sensor (Bank 2, Sensor 1) Signal Stuck Lean	ON	(see page 11-169)
P2227 (13)	○	Barometric Pressure (BARO) Sensor Range/Performance Problem	ON	(see page 11-170)
P2228 (13) *8	—	Barometric Pressure (BARO) Sensor Circuit Low Voltage	ON	(see page 11-171)
P2228 (13) *6	—	Barometric Pressure (BARO) Sensor Circuit Low Voltage	ON	(see page 11-173)
P2229 (13)	—	Barometric Pressure (BARO) Sensor Circuit High Voltage	ON	(see page 11-173)
P2237 (155)	—	Rear Air Fuel Ratio (A/F) Sensor (Bank 1, Sensor 1) IP Line High Voltage	ON	(see page 11-174)
P2238 (155)	—	Rear Air Fuel Ratio (A/F) Sensor (Bank 1, Sensor 1) IP Line Low Voltage	ON	(see page 11-176)
P2240 (156)	—	Front Air Fuel Ratio (A/F) Sensor (Bank 2, Sensor 1) IP Line High Voltage	ON	(see page 11-174)
P2241 (156)	—	Front Air Fuel Ratio (A/F) Sensor (Bank 2, Sensor 1) IP Line Low Voltage	ON	(see page 11-176)

NOTE: The above DTCs are indicated when the PGM-FI system is selected in the HDS.
Some automatic transmission DTCs cause the MIL to come on. If the MIL is on and no DTCs are indicated in the PGM-FI system, select the A/T system, and check for automatic transmission DTCs.

* 1: The above DTCs are indicated by a blinking MIL when the SCS service signal line is jumped with the HDS.
* 4: M/T
* 6: 2005-2006 models
* 8: 2003-2004 models

BACK

Protected by AR

DTC (MIL indication *1)	Two Drive Cycle Method	Detection Item	MIL	Note
P2243 (155)	—	Rear Air Fuel Ratio (A/F) Sensor (Bank 1, Sensor 1) VCENT Line High Voltage	ON	(see page 11-178)
P2245 (155)	—	Rear Air Fuel Ratio (A/F) Sensor (Bank 1, Sensor 1) VCENT Line Low Voltage	ON	(see page 11-180)
P2247 (156)	—	Front Air Fuel Ratio (A/F) Sensor (Bank 2, Sensor 1) VCENT Line High Voltage	ON	(see page 11-178)
P2249 (156)	—	Front Air Fuel Ratio (A/F) Sensor (Bank 2, Sensor 1) VCENT Line Low Voltage	ON	(see page 11-180)
P2251 (155)	—	Rear Air Fuel Ratio (A/F) Sensor (Bank 1, Sensor 1) VS Line High Voltage	ON	(see page 11-182)
P2252 (155)	—	Rear Air Fuel Ratio (A/F) Sensor (Bank 1, Sensor 1) VS Line Low Voltage	ON	(see page 11-184)
P2254 (156)	—	Front Air Fuel Ratio (A/F) Sensor (Bank 2, Sensor 1) VS Line High Voltage	ON	(see page 11-182)
P2255 (156)	—	Front Air Fuel Ratio (A/F) Sensor (Bank 2, Sensor 1) VS Line Low Voltage	ON	(see page 11-184)
P2270 (161) *6	—	Rear Secondary Heated Oxygen Sensor (Secondary HO2S (Bank 1, Sensor 2)) Circuit Signal Stuck Lean	ON	(see page 11-186)
P2271 (161) *6	—	Rear Secondary Heated Oxygen Sensor (Secondary HO2S (Bank 1, Sensor 2)) Circuit Signal Stuck Rich	ON	(see page 11-186)
P2272 (162) *6	—	Front Secondary Heated Oxygen Sensor (Secondary HO2S (Bank 2, Sensor 2)) Circuit Signal Stuck Lean	ON	(see page 11-186)
P2273 (162) *6	—	Front Secondary Heated Oxygen Sensor (Secondary HO2S (Bank 2, Sensor 2)) Circuit Signal Stuck Rich	ON	(see page 11-186)
P2279 (109)	○	Intake Air System Leak	ON	(see page 11-369)
P2413 (12)	○	Exhaust Gas Recirculation (EGR) System Malfunction	ON	(see page 11-363)
P2422 (117)	○	Evaporative Emission (EVAP) Canister Vent Shut Valve Stuck Closed Malfunction	ON	(see page 11-399)
P2552 (40)	—	Throttle Actuator Control Module Relay Malfunction	ON	(see page 11-268)
P2610 (132) *6	—	Engine Control Module (ECM)/Powertrain Control Module (PCM) Ignition Off Internal Timer Performance Problem	ON	(see page 11-187)
P2627 (155) *8	—	Rear Air Fuel Ratio (A/F) Sensor (Bank 1, Sensor 1) LABEL Circuit Low Voltage	ON	(see page 11-188)
P2627 (155) *6	—	Rear Air Fuel Ratio (A/F) Sensor (Bank 1, Sensor 1) LABEL Circuit Low Voltage	ON	(see page 11-191)
P2628 (155)	—	Rear Air Fuel Ratio (A/F) Sensor (Bank 1, Sensor 1) LABEL Circuit High Voltage	ON	(see page 11-193)
P2630 (156) *8	—	Front Air Fuel Ratio (A/F) Sensor (Bank 2, Sensor 1) LABEL Circuit Low Voltage	ON	(see page 11-188)
P2630 (156) *6	—	Front Air Fuel Ratio (A/F) Sensor (Bank 2, Sensor 1) LABEL Circuit Low Voltage	ON	(see page 11-191)
P2631 (156)	—	Front Air Fuel Ratio (A/F) Sensor (Bank 2, Sensor 1) LABEL Circuit High Voltage	ON	(see page 11-193)
P2646 (22)	—	Rocker Arm Oil Pressure Switch (VTEC Oil Pressure Switch) Circuit Low Voltage	ON	(see page 11-280)
P2647 (22)	—	Rocker Arm Oil Pressure Switch (VTEC Oil Pressure Switch) Circuit High Voltage	ON	(see page 11-282)
P2648 (21)	—	Rocker Arm Oil Control Solenoid (VTEC Solenoid Valve) Circuit Low Voltage	ON	(see page 11-284)
P2649 (21)	—	Rocker Arm Oil Control Solenoid (VTEC Solenoid Valve) Circuit High Voltage	ON	(see page 11-286)
P2A00 (157)	—	Rear A/F Sensor Circuit Range/Performance Problem (Bank 1, Sensor 1)	ON	(see page 11-195)
P2A03 (158)	—	Front A/F Sensor Circuit Range/Performance Problem (Bank 2, Sensor 1)	ON	(see page 11-195)
U0073 (126) *10	—	F-CAN Malfunction (BUS-OFF)	OFF	(see page 11-196)
U0073 (126) *9	—	F-CAN Malfunction (BUS-OFF)	ON	(see page 11-198)
U0107 (30)	—	Lost Communication With Throttle Actuator Control Module	ON	(see page 11-270)
U0121 (126) *10	—	F-CAN Malfunction (TCS-Engine Control Module (ECM)/Powertrain Control Module (PCM))	OFF	(see page 11-200)
U0122 (126) *9	—	F-CAN Malfunction (VSA-Engine Control Module (ECM)/Powertrain Control Module (PCM))	OFF	(see page 11-202)
U0155 (126) *10	—	F-CAN Malfunction (Gauge Control Module-Engine Control Module (ECM)/Powertrain Control Module (PCM))	OFF	(see page 11-196)
U0155 (126) *9	—	F-CAN Malfunction (BUS-OFF)	ON	(see page 11-198)

NOTE: The above DTCs are indicated when the PGM-FI system is selected in the HDS.
Some automatic transmission DTCs cause the MIL to come on. If the MIL is on and no DTCs are indicated in the PGM-FI system, select the A/T system, and check for automatic transmission DTCs.

* 1: The above DTCs are indicated by a blinking MIL when the SCS service signal line is jumped with the HDS.
* 6: 2005-2006 models
* 8: 2003-2004 models
* 9: 2006 model
* 10: 2003-2005 models

BACK

Protected by AR

Symptom Troubleshooting Index

When the vehicle has one of these symptoms, check for a diagnostic trouble code (DTC) with the HDS. If there is no DTC, do the diagnostic procedure for the symptom, in the sequence listed, until you find the cause.

Symptom	Diagnostic procedure	Also check for
Engine will not start (MIL works OK, no DTCs set)	1. Test the battery, refer to the 2003-2006 Accord Service Manual (see page 22-78). 2. Test the starter solenoid (see page 4-8). 3. Check the fuel pressure (see page 11-317). 4. Troubleshoot the fuel pump circuit (see page 11-311).	• Low compression • No ignition spark • Intake air leaks • Locked up engine • Broken timing belt • Contaminated fuel
Engine will not start (MIL comes on and stays on, or never comes on at all, no DTCs set)	Troubleshoot the MIL circuit (see page 11-204).	
Engine will not start (immobilizer indicator stays on or flashes)	Troubleshoot the immobilizer system (see page 22-110).	
Engine starts but stalls immediately (MIL works OK, no DTCs set, immobilizer indicator stays on or flashes)	Troubleshoot the immobilizer system (see page 22-110).	
Engine is hard to start (MIL works OK, no DTCs set)	1. Test the battery, refer to the 2003-2006 Accord Service Manual (see page 22-78). 2. Check the fuel pressure (see page 11-317). 3. Clean the throttle body (see page 11-343).	• Low compression • Intake air leaks • Contaminated fuel • Weak spark
Cold fast idle too low (MIL works OK, no DTCs set)	1. Do the ECM/PCM idle learn procedure (see page 11-302). 2. Check the idle speed (see page 11-301). 3. Clean the throttle body (see page 11-343).	
Cold fast idle too high (MIL works OK, no DTCs set)	1. Do the ECM/PCM idle learn procedure (see page 11-302). 2. Check the idle speed (see page 11-301). 3. Inspect/adjust the throttle cable (see page 11-346). 4. Do the throttle position learning check (see page 11-343).	
Idle speed fluctuates (MIL works OK, no DTCs set)	1. Do the ECM/PCM idle learn procedure (see page 11-302). 2. Check the idle speed (see page 11-301). 3. Inspect/adjust the throttle cable (see page 11-346). 4. Do the carbon accumulation check (see page 11-343).	Intake vacuum leaks
After warming up, idle speed is below specification without load (MIL works OK, no DTCs set)	1. 2003-2004 models: Troubleshoot the alternator FR signal circuit (see page 11-295). 2. 2005-2006 models: Troubleshoot the alternator FR signal circuit (see page 11-297). 3. Do the carbon accumulation check (see page 11-343).	

BACK

Protected by AR

Symptom	Diagnostic procedure	Also check for
After warming up, idle speed is above specification without load (MIL works OK, no DTCs set)	1. Inspect/adjust the throttle cable (see page 11-346). 2. 2003-2004 models: Troubleshoot the alternator FR signal circuit (see page 11-295). 3. 2005-2006 models: Troubleshoot the alternator FR signal circuit (see page 11-297). 4. Inspect the APP sensor (see page 11-277).	
Low power (MIL works OK, no DTCs set)	1. Check the fuel pressure (see page 11-317). 2. Inspect/adjust the throttle cable (see page 11-346).	• Low compression • Incorrect camshaft timing • Incorrect engine oil level
Engine stalls (MIL works OK, no DTCs set)	1. Do the ECM/PCM idle learn procedure (see page 11-302). 2. Check the fuel pressure (see page 11-317). 3. Check the idle speed (see page 11-301). 4. Troubleshoot the brake pedal position switch signal circuit (see page 11-300).	• Intake air leaks • Faulty harness and sensor connections
Difficult to refuel (MIL works OK, no DTCs set)	1. Check the fuel vent tube between the EVAP canister and the fuel tank. 2. Check the fuel tank vapor recirculation tube between the fuel pipe and the fuel tank. 3. Replace the fuel tank (see page 11-328).	Malfunctioning gas station filling nozzle.
Fuel overflows during refueling (No DTCs set)	Replace the fuel tank (see page 11-328).	Malfunctioning gas station filling nozzle.

Protected by AR

System Description

Electronic Control System

The functions of the fuel and emission control systems are managed by the engine control module (ECM) on vehicles with manual transmissions or the powertrain control module (PCM) on vehicles with automatic transmissions.

Self-diagnosis
The ECM/PCM detects a failure of a signal from a sensor or from another control unit and stores a Temporary DTC or a DTC in erasable memory (RAM). Depending on the failure, a DTC is stored in either the first or the second drive cycle. When a DTC is stored, the ECM/PCM turns on the malfunction indicator lamp (MIL) by supplying ground to the MIL circuit.

- **One Drive Cycle Detection Method**
  When an abnormality occurs in the signal from a sensor or from another control unit, the ECM/PCM stores a DTC for the failure in the RAM and turns on the MIL immediately.

- **Two Drive Cycle Detection Method**
  When an abnormality occurs in the signal from a sensor or from another control unit in the first drive cycle, the ECM/PCM stores a Temporary DTC for the failure in RAM. The MIL does not come on at this time. If the failure continues in the second drive cycle, the ECM/PCM stores a DTC in erasable memory and turns on the MIL.

Fail-safe Function
When an abnormality occurs in the signal from a sensor or from another control unit, the ECM/PCM ignores that signal and assumes, pre-programmed value that allows the engine to continue running. This causes a DTC to be stored and the MIL to come on.

MIL Bulb Check and Readiness Code Condition
When the ignition switch is turned ON (II), the ECM/PCM supplies ground to the MIL circuit for about 15 to 20 seconds to check the bulb condition. If any readiness codes are not set to complete, the MIL flashes five times. If all readiness codes are set to complete, the MIL goes off.

Self Shut Down (SSD) Mode
After the ignition switch is turned OFF, the ECM/PCM stays on (up to 15 minutes). If the ECM/PCM connector is disconnected during this time, the ECM/PCM may be damaged. To cancel this mode, disconnect the negative cable from the battery or jump the SCS line with the HDS after the ignition switch is turned OFF.

BACK

Protected by AR

ECM/PCM Electrical Connections

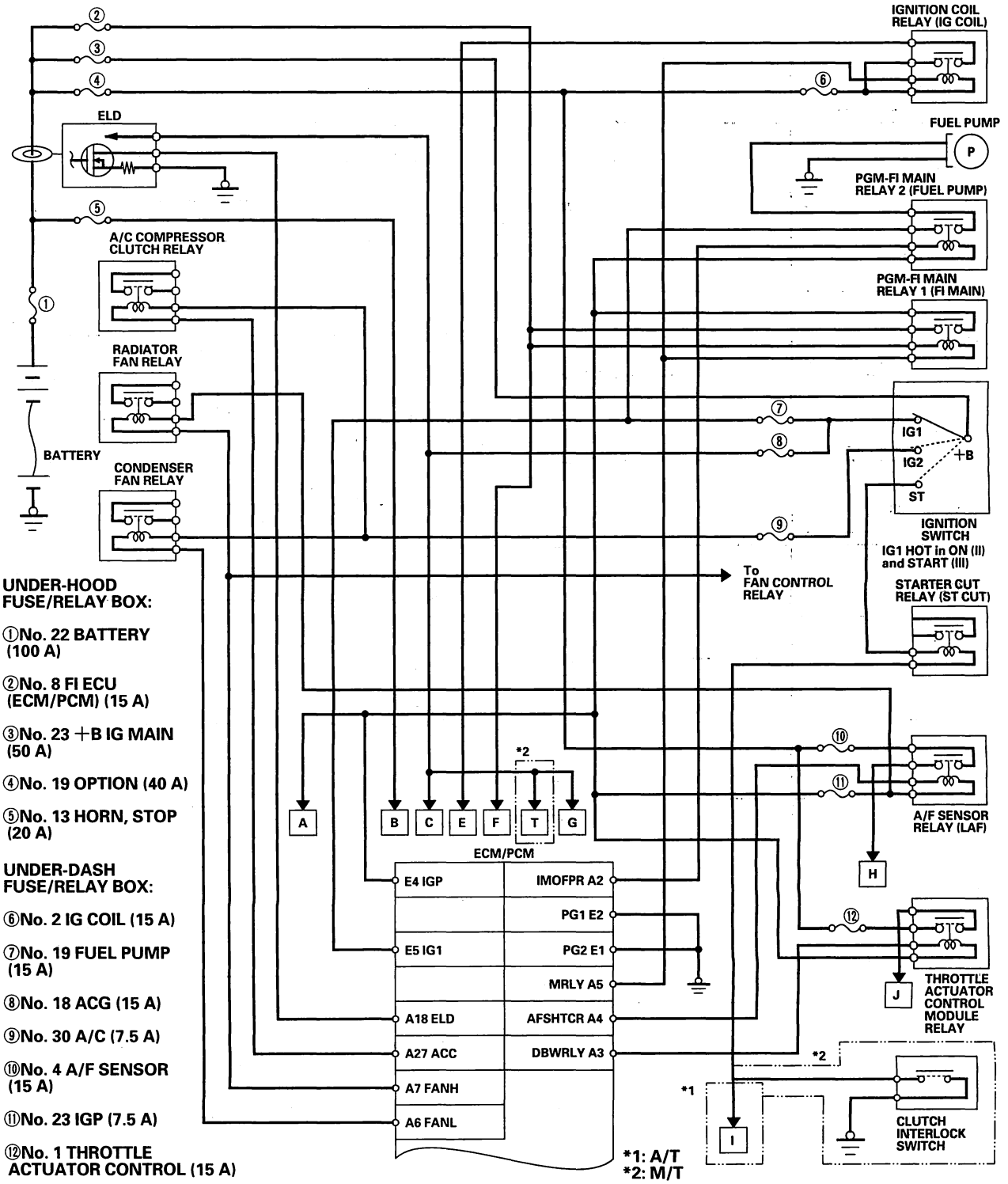

UNDER-HOOD FUSE/RELAY BOX:

①No. 22 BATTERY (100 A)

②No. 8 FI ECU (ECM/PCM) (15 A)

③No. 23 +B IG MAIN (50 A)

④No. 19 OPTION (40 A)

⑤No. 13 HORN, STOP (20 A)

UNDER-DASH FUSE/RELAY BOX:

⑥No. 2 IG COIL (15 A)

⑦No. 19 FUEL PUMP (15 A)

⑧No. 18 ACG (15 A)

⑨No. 30 A/C (7.5 A)

⑩No. 4 A/F SENSOR (15 A)

⑪No. 23 IGP (7.5 A)

⑫No. 1 THROTTLE ACTUATOR CONTROL (15 A)

(cont'd)

BACK

Protected by AR

System Description (cont'd)

ECM/PCM Electrical Connections (cont'd)

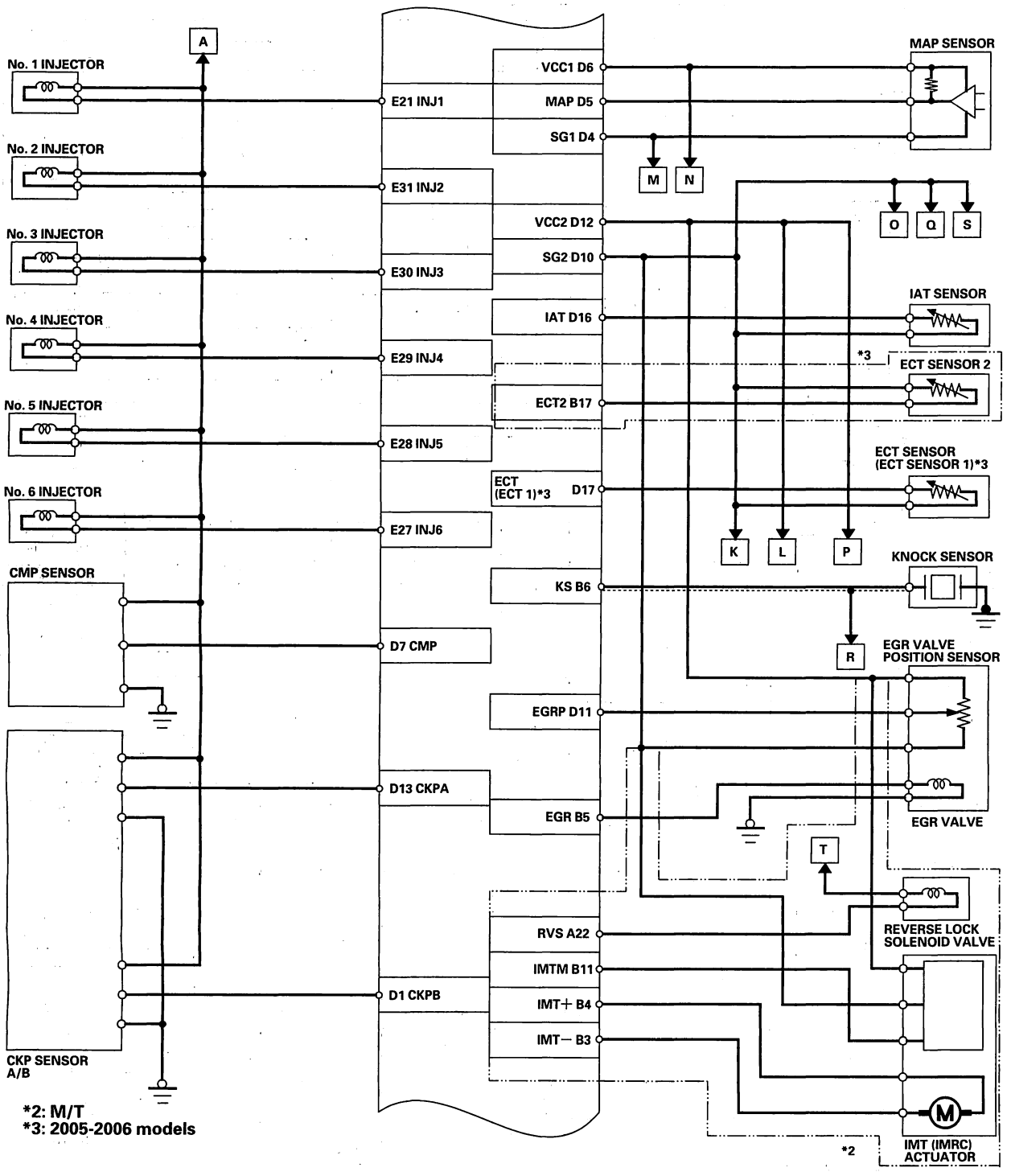

BACK

Protected by AR

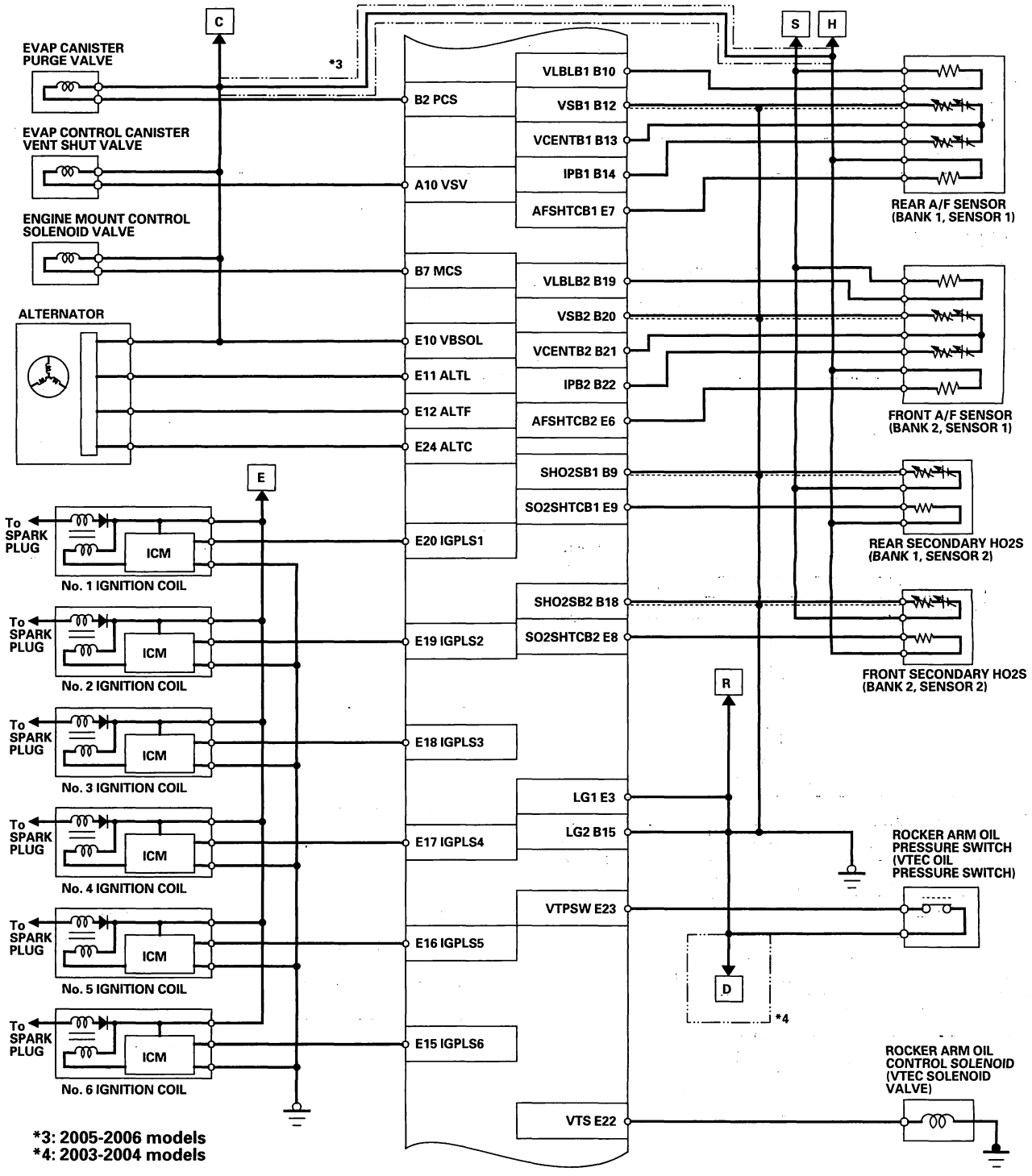

(cont'd)

BACK

Protected by AR

System Description (cont'd)

ECM/PCM Electrical Connections (cont'd)

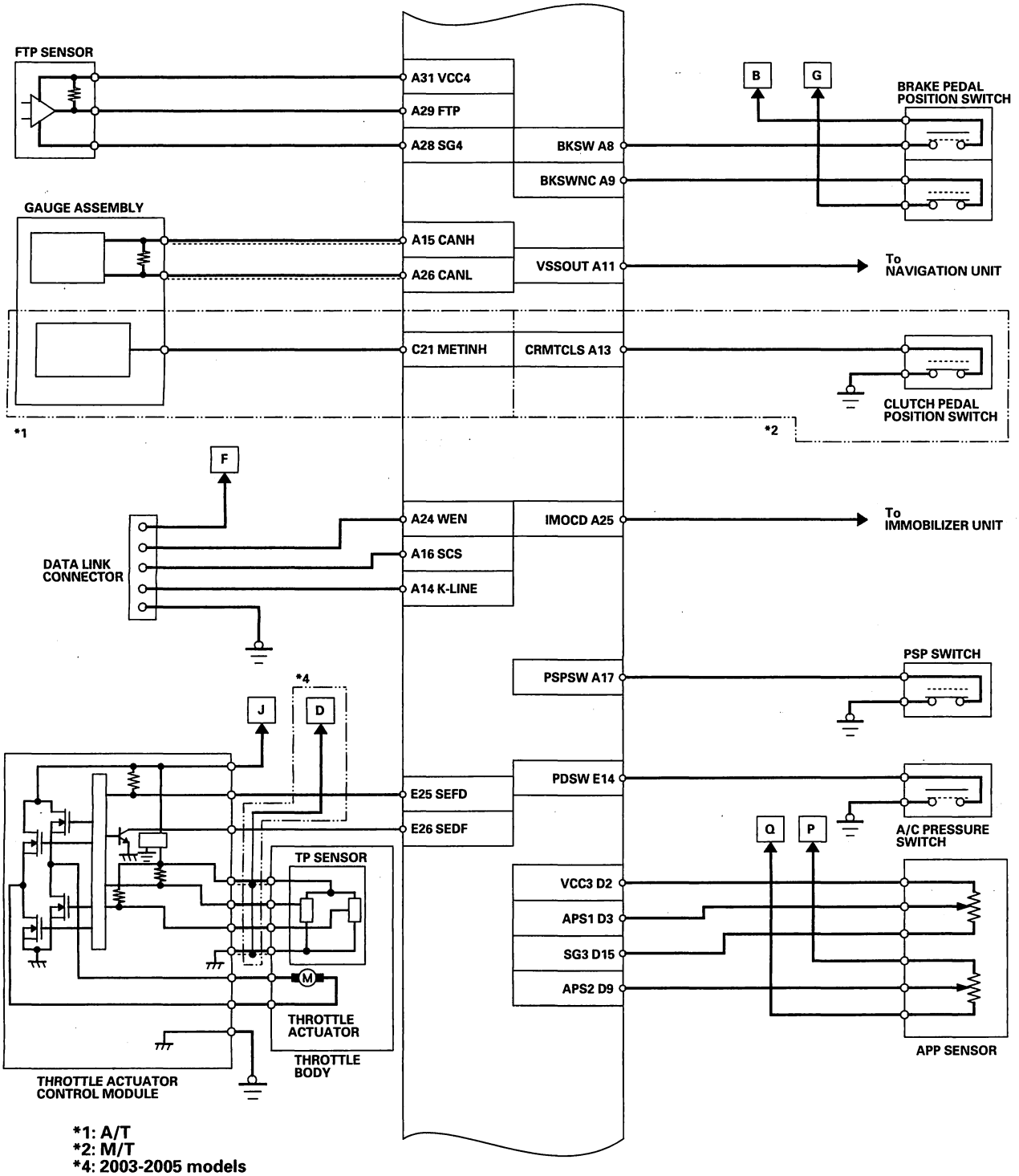

*1: A/T
*2: M/T
*4: 2003-2005 models

BACK

Protected by AR

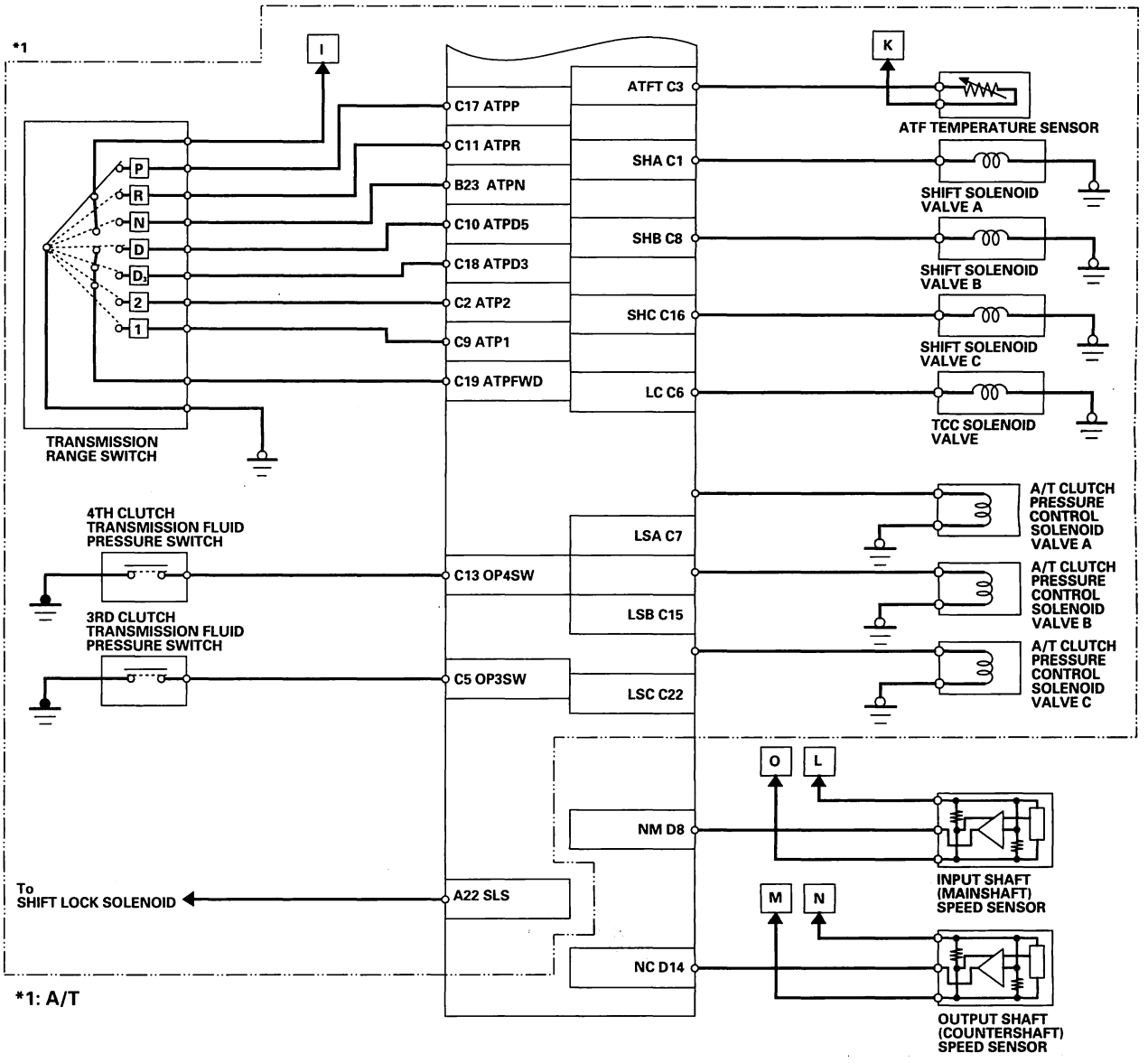

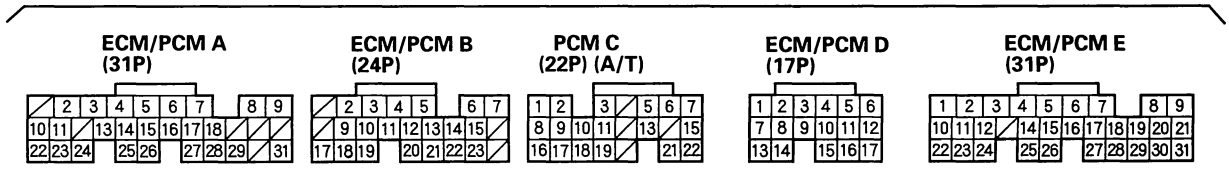

TERMINAL LOCATIONS

(cont'd)

BACK

Protected by AR

System Description (cont'd)

Vacuum Hose Routing

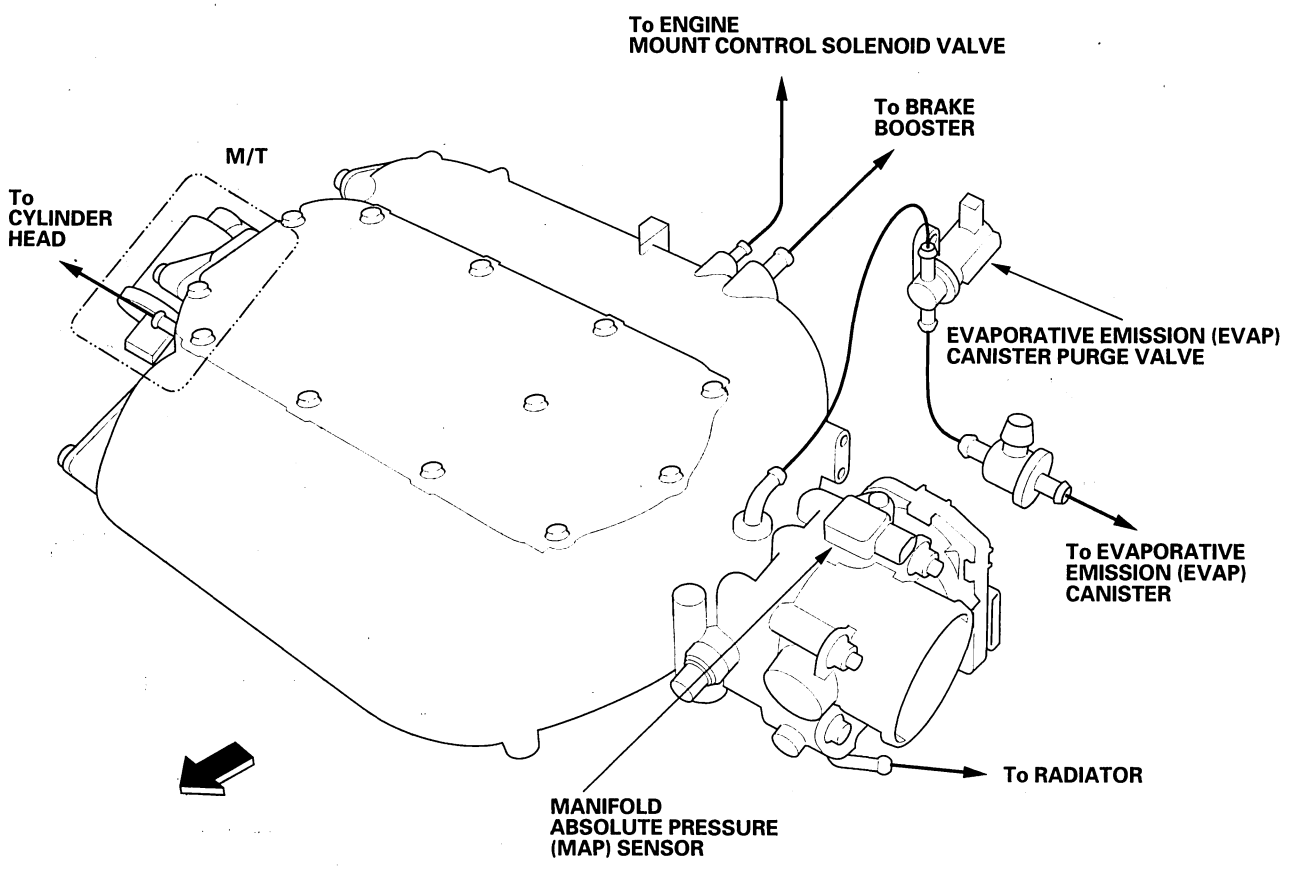

*: This illustration shows 2003-2005 models.

BACK

Protected by AR

Vacuum Distribution

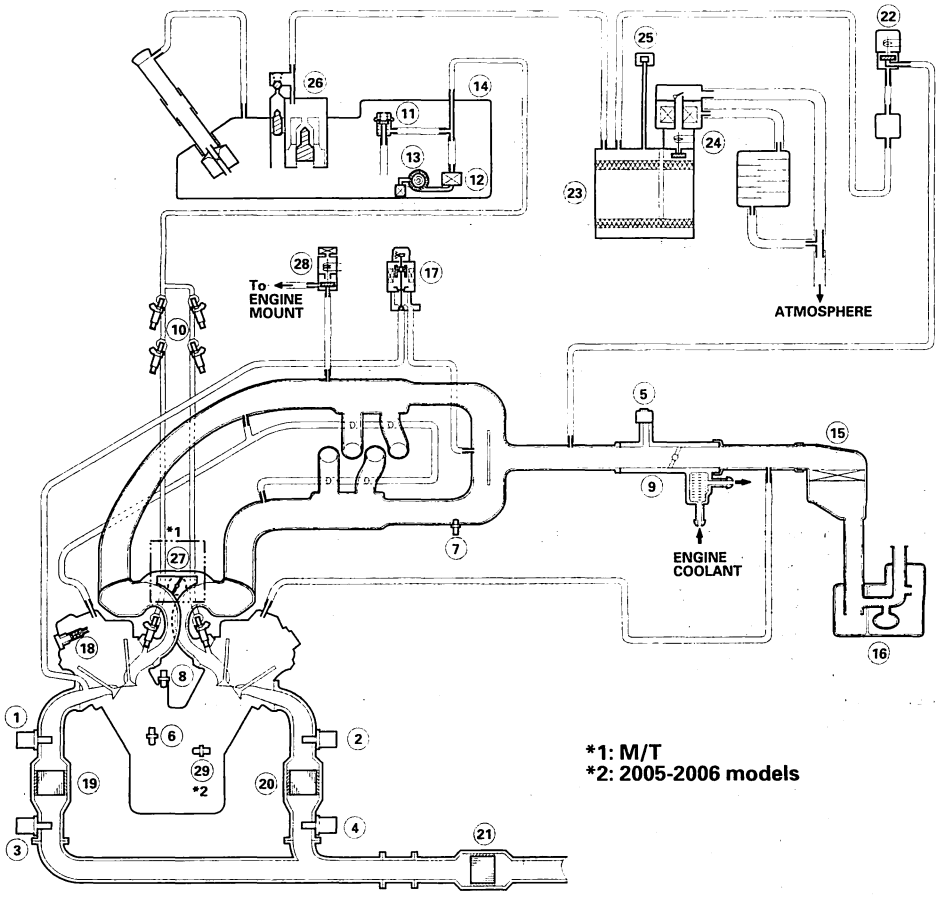

*1: M/T
*2: 2005-2006 models

① FRONT AIR FUEL RATIO (A/F) SENSOR (BANK 2, SENSOR 1)
② REAR AIR FUEL RATIO (A/F) SENSOR (BANK 1, SENSOR 1)
③ FRONT SECONDARY HEATED OXYGEN SENSOR (SECNODARY HO2S) (BANK 2, SENSOR 2)
④ REAR SECONDARY HEATED OXYGEN SENSOR (SECNODARY HO2S) (BANK 1, SENSOR 2)
⑤ MANIFOLD ABSOLUTE PRESSURE (MAP) SENSOR
⑥ ENGINE COOLANT TEMPERATURE (ECT) SENSOR (2003-2004 models) (ENGINE GOOLANT TEMPERATURE (ECT) SENSOR 1 (2005-2006 models)
⑦ INTAKE AIR TEMPERATURE (IAT) SENSOR
⑧ KNOCK SENSOR
⑨ THROTTLE BODY
⑩ INJECTOR
⑪ FUEL PRESSURE REGULATOR
⑫ FUEL FILTER
⑬ FUEL PUMP
⑭ FUEL TANK
⑮ AIR CLEANER
⑯ RESONATOR
⑰ EXHAUST GAS RECIRCULATION (EGR) VALVE and POSITION SENSOR
⑱ POSITIVE CRANKCASE VENTILATION (PCV) VALVE
⑲ FRONT WARM UP THREE WAY CATALYTIC CONVERTER
⑳ REAR WARM UP THREE WAY CATALYTIC CONVERTER
㉑ THREE WAY CATALYTIC CONVERTER
㉒ EVAPORATIVE EMISSION (EVAP) CANISTER PURGE VALVE
㉓ EVAPORATIVE EMISSION (EVAP) CANISTER
㉔ EVAPORATIVE EMISSION (EVAP) CANISTER VENT SHUT VALVE
㉕ FUEL TANK PRESSURE (FTP) SENSOR
㉖ FUEL TANK VAPOR CONTROL VALVE
㉗ INTAKE MANIFOLD TUNING (IMT) (INTAKE MANIFOLD RUNNER CONTROL (IMRC)) ACTUATOR
㉘ ENGINE MOUNT CONTROL SOLENOID VALVE
㉙ ENGINE COOLANT TEMPERATURE (ECT) SENSOR 2 (2005-2006 models)

(cont'd)

BACK

Protected by AR

System Description (cont'd)

ECM/PCM Inputs and Outputs at Connector A (31P)

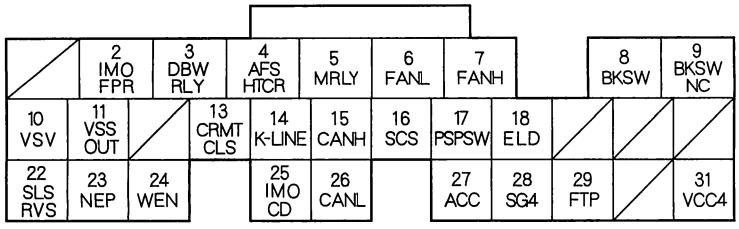

Wire side of female terminals

NOTE: Standard battery voltage is 12 V.

Terminal number	Wire color	Terminal name	Description	Signal
2	GRN/YEL	IMOFPR (IMMOBILIZER FUEL PUMP RELAY)	Drives PGM-FI main relay 2 (FUEL PUMP)	0 V for 2 seconds after turning ignition switch ON (II), then battery voltage
3	BRN/YEL	DBWRLY (THROTTLE ACTUATOR CONTROL MODULE (DBW) RELAY)	Drives throttle actuator control module (DBW) relay	With ignition switch ON (II): about 0 V
4	PNK	AFSHTCR (AIR FUEL RATIO (A/F) SENSOR RELAY)	Drives A/F sensor relay	With ignition switch ON (II): about 0 V
5	RED/BLK	MRLY (PGM-FI MAIN RELAY)	Drives PGM-FI main relay 1 (FI MAIN) Power source for DTC memory	With ignition switch ON (II): about 0 V With ignition switch OFF: battery voltage
6	GRN/WHT	FANL (RADIATOR FAN RELAY LOW)	Drives condenser fan relay	With ignition switch ON (II): battery voltage
7	GRN	FANH (RADIATOR FAN RELAY, FAN CONTROL RELAY HIGH)	Drives radiator fan relay, fan control relay	With ignition switch ON (II): battery voltage
8	WHT/BLK	BKSW (BRAKE PEDAL POSITION SWITCH)	Detects brake pedal position switch signal	With brake pedal released: about 0 V With brake pedal pressed: battery voltage
9	BRN/BLK	BKSWNC (BRAKE PEDAL POSITION SWITCH)	Detects brake pedal position switch signal	With ignition switch ON (II) and brake pedal released: battery voltage With ignition switch ON (II) and brake pedal pressed: about 0 V
10	LT GRN/RED	VSV (EVAPORATIVE EMISSION (EVAP) CANISTER VENT SHUT VALVE)	Drives EVAP canister vent shut valve	With ignition switch ON (II): battery voltage
11	BLU/WHT	VSSOUT (VEHICLE SPEED SENSOR OUTPUT SIGNAL)	Sends vehicle speed sensor signal	Depending on vehicle speed: pulses
13*2	LT BLU	CRMTCLS (CLUTCH PEDAL POSITION SWITCH)	Detects clutch pedal position switch signal	With ignition switch ON (II) and clutch pedal released: about 0 V With ignition switch ON (II) and clutch pedal pressed: battery voltage
14	BLU	K-LINE	Sends and receives HDS signal	With ignition switch ON (II) and the HDS disconnected: pulses or battery voltage
15	WHT	CANH (CAN COMMUNICATION SIGNAL HIGH)	Sends communication signal	With ignition switch ON (II): pulses

* 2: M/T

BACK

Protected by AR

ECM/PCM Inputs and Outputs at Connector A (31P)

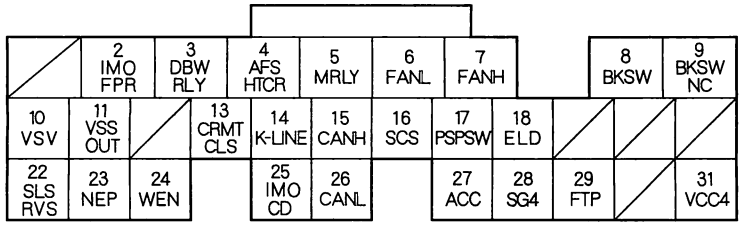

Wire side of female terminals

NOTE: Standard battery voltage is 12 V.

Terminal number	Wire color	Terminal name	Description	Signal
16	BRN	SCS (SERVICE CHECK SIGNAL)	Detects service check signal	With the service check signal shorted with the HDS: about 0 V With the service check signal opened: about 5.0 V
17	BLU/YEL	PSPSW (POWER STEERING PRESSURE SWITCH SIGNAL)	Detects PSP switch signal	At idle with steering wheel in straight ahead position: about 0 V At idle with steering wheel at full lock: battery voltage
18	BLU/BLK	ELD (ELECTRICAL LOAD DETECTOR (ELD))	Detects ELD signal	With ignition switch ON (II): about 0.1—4.8 V (depending on electrical load)
22*1	YEL/BLK	SLS (SHIFT LOCK SOLENOID)	Drives shift lock solenoid	With ignition switch ON (II), in Park, brake pedal pressed, and accelerator released: about 0 V
22*2	GRN/WHT	RVS (REVERSE LOCK SOLENOID VALVE)	Drives reverse lock solenoid valve	With vehicle speed below 9 mph (15 km/h): battery voltage With vehicle speed above 13 mph (20 km/h): about 0 V
23	BLU/RED	NEP	Not used	
24	RED/WHT	WEN (WRITE ENABLE SIGNAL)	Detects write enable signal	With ignition switch ON (II): about 0 V
25	RED/BLU	IMOCD (IMMOBILIZER CODE)	Detects immobilizer signal	
26	RED	CANL (CAN COMMUNICATION SIGNAL LOW)	Sends communication signal	With ignition switch ON (II): pulses
27	RED	ACC (A/C CLUTCH RELAY)	Drives A/C clutch relay	With compressor ON: about 0 V With compressor OFF: battery voltage
28	GRN/BLK	SG4 (SENSOR GROUND)	Sensor ground	Less than 1.0 V at all times
29	LT GRN	FTP (FUEL TANK PRESSURE (FTP) SENSOR)	Detects FTP sensor signal	With ignition switch ON (II) and fuel fill cap removed: about 2.5 V
31	YEL/GRN	VCC4 (SENSOR VOLTAGE)	Provides sensor voltage	With ignition switch ON (II): about 5.0 V With ignition switch OFF: about 0 V

* 1: A/T
* 2: M/T

(cont'd)

Protected by AR

System Description (cont'd)

ECM/PCM Inputs and Outputs at Connector B (24P)

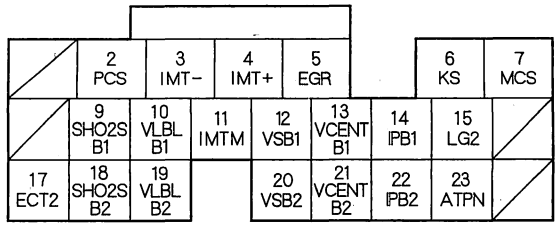

Wire side of female terminals

NOTE: Standard battery voltage is 12 V.

Terminal number	Wire color	Terminal name	Description	Signal
2	RED/YEL	PCS (EVAPORATIVE EMISSION (EVAP) CANISTER PURGE VALVE)	Drives EVAP canister purge valve	With engine running, engine coolant below 140 °F (60 °C): battery voltage With engine running, engine coolant above 140 °F (60 °C): duty controlled
3*2	WHT/RED	IMT− (INTAKE MANIFOLD TUNING (IMT) (INTAKE MANIFOLD RUNNER CONTROL (IMRC)) ACTUATOR −SIDE)	Ground for IMT (IMRC) actuator	With ignition switch ON (II): about 0 V
4*2	WHT/BLU	IMT+ (INTAKE MANIFOLD TUNING (IMT) (INTAKE MANIFOLD RUNNER CONTROL (IMRC)) ACTUATOR +SIDE)	Drives IMT (IMRC) actuator	With ignition switch ON (II): about 0 V With engine speed above 4,200 rpm: momentary battery voltage
5	BLU/RED	EGR (EXHAUST GAS RECIRCULATION (EGR) VALVE)	Drives EGR valve	With EGR operating: duty controlled With EGR not operating: about 0 V
6	RED/BLU	KS (KNOCK SENSOR)	Detects knock sensor signal	With engine knocking: pulses
7	BLU/YEL	MCS (ENGINE MOUNT CONTROL SOLENOID VALVE)	Drives engine mount control solenoid valve	At idle: about 0 V Above idle: battery voltage
9	GRN	SHO2SB1 (SECONDARY HEATED OXYGEN SENSOR (SECONDARY HO2S) BANK 1, SENSOR 2)	Detects rear secondary HO2S (Bank 1, sensor 2) signal	With throttle fully opened from idle with fully warmed up engine: above 0.6 V With throttle quickly closed: below 0.4 V
10	WHT	VLBLB1 (LABEL RESISTER BANK 1)	Detects rear A/F sensor (Bank 1, sensor 1) LABEL signal	With engine running: 0.4−4.6 V
11*2	WHT/BLK	IMTM (INTAKE MANIFOLD TUNING (IMT) (INTAKE MANIFOLD RUNNER CONTROL (IMRC)) ACTUATOR MOONITOR)	Detects IMT (IMRC) actuator position	With engine running: about 5.0 V With engine speed above 4,200 rpm: about 0 V

* 1: A/T
* 2: M/T

BACK

Protected by AR

ECM/PCM Inputs and Outputs at Connector B (24P)

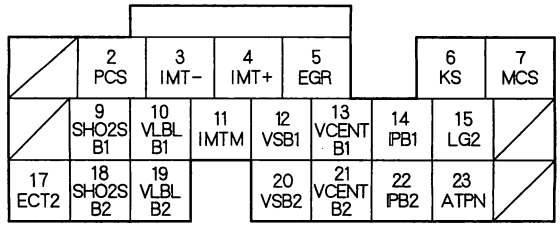

Wire side of female terminals

NOTE: Standard battery voltage is 12 V.

Terminal number	Wire color	Terminal name	Description	Signal
12	BLU	VSB1 (VS CELL +BANK 1)	Detects the rear A/F sensor (Bank 1, sensor 1) VS CELL signal	With engine running: 3.4—4.8 V
13	RED	VCENTB1 (VIRTUAL GROUND BANK 1)	Reference voltage supply for rear A/F sensor (Bank 1, sensor 1)	With fully warmed up engine at idle: 3.4—3.8 V
14	GRN	IPB1 (IP CELL +BANK 1)	Detects rear A/F sensor (Bank 1, sensor 1) pump cell	With engine running: 2.0—5.6 V
15	BRN/YEL	LG2 (LOGIC GROUND)	Ground circuit for the PCM	Less than 1.0 V at all times
17*3	GRN/RED	ECT2 (ENGINE COOLANT TEMPERATURE (ECT) SENSOR 2)	Detects ECT sensor 2 signal	With ignition switch ON (II): about 0.1—4.8 V (depending on engine coolant temperature)
18	WHT	SHO2SB2 (SECONDARY HEATED OXYGEN SENSOR (SECONDARY HO2S) BANK 2, SENSOR 2)	Detects front secondary HO2S (Bank 2, sensor 2) signal	With throttle fully opened from idle with fully warmed up engine: above 0.6 V With throttle quickly closed: below 0.4 V
19	WHT/RED	VLBLB2 (LABEL RESISTER BANK 2)	Detects front A/F (Bank 2, sensor 1) LABEL signal	With engine running: 0.4—4.6 V
20	RED/BLU	VSB2 (VS CELL +BANK 2)	Detects front A/F sensor (Bank 2, sensor 1) VS CELL signal	With engine fully warmed up and running: 3.4—4.8 V
21	RED/WHT	VCENTB2 (VIRTUAL GROUND BANK 2)	Reference voltage supply for front A/F sensor (Bank 2, sensor 1)	With fully warmed up engine at idle: 3.4—3.8 V
22	GRN/RED	IPB2 (IP CELL +BANK 2)	Detects front A/F sensor (Bank 2, sensor 1) pump cell	With engine running: 2.0—5.6 V
23*1	RED/BLK	ATPN (TRANSMISSION RANGE SWITCH NEUTRAL POSITION)	Detects transmission range switch Neutral position signal	In Neutral position: about 0 V In any other position: battery voltage

* 1: A/T
* 3: 2005-2006 models

(cont'd)

Protected by AR

System Description (cont'd)

PCM Inputs and Outputs at Connector C (22P)

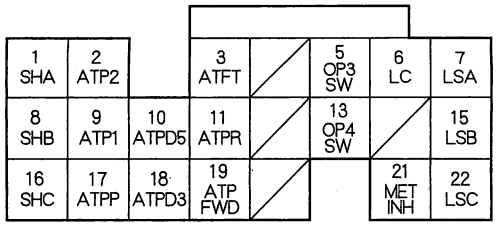

Wire side of female terminals

NOTE: Standard battery voltage is 12 V.

Terminal number	Wire color	Terminal name	Description	Signal
1*1	BLU/YEL	SHA (SHIFT SOLENOID VALVE A)	Drives shift solenoid valve A	With engine running in 1, 2, D3 or D (in 1st, 2nd gear), or D (in 5th gear): battery voltage With engine running in Neutral, Park, R, or D (in 4th gear), D, D3 (in 3rd gear): about 0 V
2*1	BLU	ATP2 (TRANSMISSION RANGE SWITCH 2)	Detects transmission range switch 2 signal	In 2: about 0 V In any other position: about 5.0 V
3*1	BLU/YEL	ATFT (ATF TEMPERATURE SENSOR)	Detects ATF temperature signal	With ignition ON (II): about 0.2—4.0 V (about 1.8 V at operating temperature) (depending on ATF temperature)
5*1	BLU/WHT	OP3SW (3RD CLUTCH TRANSMISSION FLUID PRESSURE SWITCH)	Detects 3rd clutch transmission fluid pressure switch input	With ignition switch ON (II): • Without 3rd clutch pressure: battery voltage • With 3rd clutch pressure: about 0 V
6*1	YEL	LC (TORQUE CONVERTER CLUTCH (TCC) SOLENOID VALVE)	Drives TCC solenoid valve	With lock-up ON: battery voltage With lock-up OFF: about 0 V
7*1	RED	LSA (A/T CLUTCH PRESSURE CONTROL SOLENOID VALVE A)	Drives A/T clutch pressure control solenoid valve A	With ignition switch ON(II): duty controlled
8*1	GRN/WHT	SHB (SHIFT SOLENOID VALVE B)	Drives shift solenoid valve B	With engine running 1, 2, D3 or D (in 1st, 2nd, 3rd gear), or Neutral, Park, or R: battery voltage With engine running in D (in 4th, 5th gear): about 0 V
9*1	BRN	ATP1 (TRANSMISSION RANGE SWITCH 1ST POSITION)	Detects transmission range switch 1 signal input	In 1: about 0 V In any other position: battery voltage
10*1	YEL/GRN	ATPD5 (TRANSMISSION RANGE SWITCH D POSITION)	Detects transmission range switch D signal input	In D: about 0 V In any other position: battery voltage
11*1	WHT	ATPR (TRANSMISSION RANGE SWITCH R POSITION)	Detects transmission range switch R signal input	In R: about 0 V In any other position: battery voltage
13*1	BLU/YEL	OP4SW (4TH CLUTCH TRANSMISSION FLUID PRESSURE SWITCH)	Detects 4th clutch transmission fluid pressure switch input	With ignition switch ON (II): • Without 4th clutch pressure: battery voltage • With 4th clutch pressure: about 0 V

* 1: A/T

BACK

Protected by AR

PCM Inputs and Outputs at Connector C (22P)

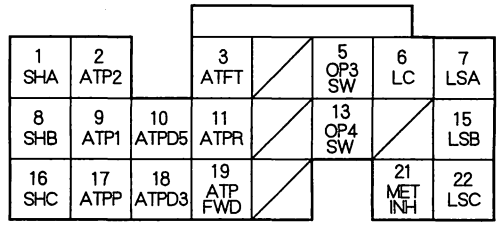

Wire side of female terminals

NOTE: Standard battery voltage is 12 V.

Terminal number	Wire color	Terminal name	Description	Signal
15*1	BRN/WHT	LSB (A/T CLUTCH PRESSURE CONTROL SOLENOID VALVE B)	Drives A/T clutch pressure control solenoid valve B	With ignition switch ON (II): duty controlled
16*1	GRN	SHC (SHIFT SOLENOID VALVE C)	Drives shift solenoid valve C	With engine running in 1, or D, D3 (in 1st, 3rd, 5th gear): battery voltage With engine running in Neutral, Park, R, 2, D (in 4th gear), D, D3 (in 2nd gear): about 0 V
17*1	BLU/BLK	ATPP (TRANSMISSION RANGE SWITCH PARK)	Detects transmission range switch Park signal	In Park: about 0 V In any other position: battery voltage
18*1	RED	ATPD3 (TRANSMISSION RANGE SWITCH D3)	Detects transmission range switch D3 signal	In D3: about 0 V In any other position: battery voltage
19*1	BLU/YEL	ATPFWD (TRANSMISSION RANGE SWITCH D3/D/2)	Detects transmission range switch D3/D/2 signal	In D3, D2: about 0 V In any other position: battery voltage
21*1	GRN/WHT	METINH (METER DISPLAY INHIBIT SIGNAL)	Sends inhibit signal	With ignition switch ON (II): battery voltage
22*1	GRN/RED	LSC (A/T CLUTCH PRESSURE CONTROL SOLENOID VALVE C)	Drives A/T clutch pressure control solenoid valve C	With ignition switch ON (II): duty controlled

* 1: A/T

(cont'd)

Protected by AR

System Description (cont'd)

ECM/PCM Inputs and Outputs at Connector D (17P)

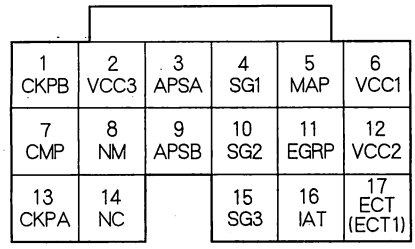

Wire side of female terminals

NOTE: Standard battery voltage is 12 V.

Terminal number	Wire color	Terminal name	Description	Signal
1	BLU/RED	CKPB (CRANKSHAFT POSITION (CKP) SENSOR B)	Detects CKP sensor B signal	With engine running: pulses
2	YEL/GRN	VCC3 (SENSOR VOLTAGE)	Provides sensor voltage	With ignition switch ON (II): about 5.0 V With ignition switch OFF: about 0 V
3	RED/BLU	APSA (ACCELERATOR PEDAL POSITION (APP) SENSOR A)	Detects APP sensor A signal	With ignition switch ON (II) and accelerator pedal pressed: about 4.5 V With ignition switch ON (II) and accelerator pedal released: about 0.5 V
4	GRN/WHT	SG1 (SENSOR GROUND)	Sensor ground	Less than 1.0 V at all times
5	GRN/RED	MAP (MANIFOLD ABSOLUTE PRESSURE (MAP) SENSOR)	Detects MAP sensor signal	With ignition switch ON (II): about 3.0 V At idle: about 1.0 V (depending on engine speed)
6	YEL/RED	VCC1 (SENSOR VOLTAGE)	Provides sensor voltage	With ignition switch ON (II): about 5.0 V With ignition switch OFF: about 0 V
7	YEL	CMP (CAMSHAFT POSITION (CMP) SENSOR)	Detects CMP sensor signal	With engine running: pulses
8	RED	NM (INPUT SHAFT (MAINSHAFT) SPEED SENSOR)	Detects input shaft (mainshaft) speed sensor signals	With ignition switch ON (II): 0 V or about 5.0 V With engine at idling in N position: about 2.5 V
9	RED/YEL	APSB (ACCELERATOR PEDAL POSITION (APP) SENSOR B)	Detects APP sensor B signal	With ignition switch ON (II) and accelerator pedal pressed: about 2.3 V With ignition switch ON (II) and accelerator pedal released: about 0.2 V
10	GRN/YEL	SG2 (SENSOR GROUND)	Sensor ground	Less than 1.0 V at all times
11	WHT/BLK	EGRP (EXHAUST GAS RECIRCULATION (EGR) VALVE POSITION SENSOR)	Detects EGR valve position sensor signal	With engine running: 1.2—3.0 V (depending on EGR valve lift)
12	YEL/BLU	VCC2 (SENSOR VOLTAGE)	Provides sensor voltage	With ignition switch ON (II): about 5.0 V With ignition switch OFF: about 0 V
13	BLU	CKPA (CRANKSHAFT POSITION (CKP) SENSOR A)	Detects CKP sensor A signal	With engine running: pulses
14	BLU	NC (OUTPUT SHAFT (COUNTERSHAFT) SPEED SENSOR)	Detects output shaft (countershaft) speed sensor signals	With ignition switch ON (II) and front wheels rotated by hand: pulses
15	GRN	SG3 (SENSOR GROUND)	Sensor ground	Less than 1.0 V at all times
16	RED/YEL	IAT (INTAKE AIR TEMPERATURE (IAT) SENSOR)	Detects IAT sensor signal	With ignition switch ON (II): about 0.1—4.8 V (depending on intake air temperature)
17	RED/WHT	ECT (ENGINE COOLANT TEMPERATURE (ECT) SENSOR)*4 ECT1 (ENGINE COOLANT TEMPERATURE (ECT) SENSOR 1)*3	Detects ECT sensor*4 (ECT sensor 1)*3 signal	With ignition switch ON (II): about 0.1—4.8 V (depending on engine coolant temperature)

* 3: 2005-2006 models
* 4: 2003-2004 models

BACK

Protected by AR

ECM/PCM Inputs and Outputs at Connector E (31P)

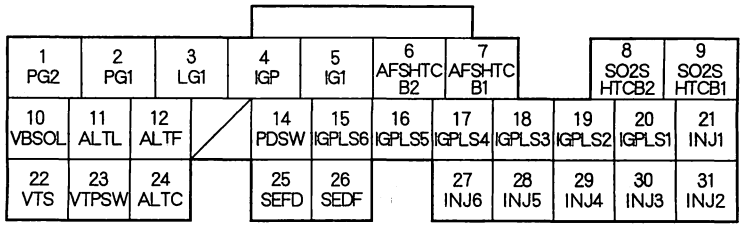

Wire side of female terminals

NOTE: Standard battery voltage is 12 V.

Terminal number	Wire color	Terminal name	Description	Signal
1	BLK	PG2 (POWER GROUND)	Ground circuit for ECM/ PCM circuit	Less than 1.0 V at all times
2	BLK	PG1 (POWER GROUND)	Ground circuit for ECM/ PCM circuit	Less than 1.0 V at all times
3	BRN/YEL	LG1 (LOGIC GROUND)	Ground circuit for ECM/ PCM circuit	Less than 1.0 V at all times
4	YEL/BLK	IGP (POWER SOURCE)	Power source for ECM/PCM circuit	With ignition switch ON (II): battery voltage With ignition switch OFF: about 0 V
5	BLK/YEL	IG1 (IGNITION SIGNAL)	Detects ignition signal	With ignition switch ON (II): battery voltage With ignition switch OFF: about 0 V
6	GRN/WHT	AFSHTCB2 (AIR FUEL RATIO (A/F) SENSOR HEATER CONTROL BANK 2)	Drives front A/F sensor heater (Bank 2, sensor 1)	With ignition switch ON (II): battery voltage With fully warmed up engine running: about 0 V or pulses
7	BLK/WHT	AFSHTCB1 (AIR FUEL RATIO (A/F) SENSOR HEATER CONTROL BANK 1)	Drives rear A/F sensor heater (Bank 1, sensor 1)	With ignition switch ON (II): battery voltage With fully warmed up engine running: about 0 V or pulses
8	GRN/RED	SO2SHTCB2 (SECONDARY HEATED OXYGEN SENSOR (SECONDARY HO2S) HEATER CONTROL BANK 2)	Drives front secondary HO2S heater (Bank 2, sensor 2)	With ignition switch ON (II): battery voltage With fully warmed up engine running: duty controlled
9	BLK/WHT	SO2SHTCB1 (SECONDARY HEATED OXYGEN SENSOR (SECONDARY HO2S) HEATER CONTROL BANK 1)	Drives rear secondary HO2S heater (Bank 1, sensor 2)	With ignition switch ON (II): battery voltage With fully warmed up engine running: duty controlled
10	BLK/YEL	VBSOL (POWER SOURCE FOR SOLENOID VALVES)	Power source for solenoid valve	With ignition switch ON (II): battery voltage With ignition switch OFF: about 0 V
11	WHT/BLU	ALTL (ALTERNATOR L SIGNAL)	Detects alternator L signal	With ignition switch ON (II): about 0 V With engine running: battery voltage
12	WHT/RED	ALTF (ALTERNATOR FR SIGNAL)	Detects alternator FR signal	With engine running: 0—5.0 V (depending on electrical load)
14	RED/GRN	PDSW (A/C PRESSURE SWITCH)	Detects A/C pressure switch signal	With A/C pressure switch ON: about 0 V With A/C pressure switch OFF: battery voltage

(cont'd)

Protected by AR

System Description (cont'd)

ECM/PCM Inputs and Outputs at Connector E (31P)

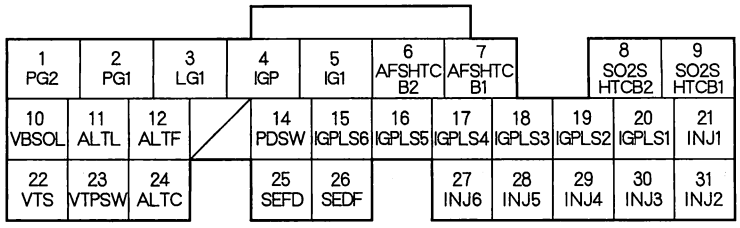

Wire side of female terminals

NOTE: Standard battery voltage is 12 V.

Terminal number	Wire color	Terminal name	Description	Signal
15	BRN/WHT	IGPLS6 (No. 6 IGNITION COIL PULSE)	Drives No. 6 ignition coil	With ignition switch ON (II): about 0 V With engine running: pulses
16	BLK/RED	IGPLS5 (No. 5 IGNITION COIL PULSE)	Drives No. 5 ignition coil	
17	BRN	IGPLS4 (No. 4 IGNITION COIL PULSE)	Drives No. 4 ignition coil	
18	WHT/BLU	IGPLS3 (No. 3 IGNITION COIL PULSE)	Drives No. 3 ignition coil	
19	BLU/RED	IGPLS2 (No. 2 IGNITION COIL PULSE)	Drives No. 2 ignition coil	
20	YEL/GRN	IGPLS1 (No. 1 IGNITION COIL PULSE)	Drives No. 1 ignition coil	
21	BRN	INJ1 (No. 1 INJECTOR)	Drives No. 1 injector	At idle: duty controlled With ignition switch ON (II): battery voltage
22	GRN/YEL	VTS (ROCKER ARM OIL CONTROL SOLENOID (VTEC SOLENOID VALVE))	Drives rocker arm oil control solenoid (VTEC solenoid valve)	At idle: about 0 V
23	BLU/BLK	VTPSW (ROCKER ARM OIL PRESSURE SWITCH (VTEC OIL PRESSURE SWITCH))	Detects rocker arm oil pressure switch (VTEC oil pressure switch signal)	With engine at low speed: about 0 V With engine at high speed: battery voltage
24	WHT/GRN	ALTC (ALTERNATOR CONTROL)	Sends alternator control signal	With engine running and fully warmed up: battery voltage (depending on electrical load)
25	GRN	SEFD (THROTTLE ACTUATOR CONTROL SERIAL SIGNAL)	Sends throttle actuator control serial signal	
26	BLU	SEDF (THROTTLE ACTUATOR CONTROL SERIAL SIGNAL)	Detects throttle actuator control serial signal	
27	WHT/BLU	INJ6 (No. 6 INJECTOR)	Drives No. 6 injector	At idle: duty controlled With ignition switch ON (II): battery voltage
28	BLK/RED	INJ5 (No. 5 INJECTOR)	Drives No. 5 injector	
29	YEL	INJ4 (No. 4 INJECTOR)	Drives No. 4 injector	
30	BLU	INJ3 (No. 3 INJECTOR)	Drives No. 3 injector	
31	RED	INJ2 (No. 2 INJECTOR)	Drives No. 2 injector	

BACK

Protected by AR

PGM-FI System

The programmed fuel injection (PGM-FI) system is a sequential multiport fuel injection system.

Air Conditioning (A/C) Compressor Clutch Relay
When the ECM receives a demand for cooling from the A/C system, it delays the compressor from being energized and enriches the mixture to assure smooth transition to the A/C mode.

Air Fuel Ratio (A/F) Sensor
The A/F sensor operates over a wide air/fuel range. The A/F sensor is installed upstream of the TWC, and sends signals to the ECM/PCM which varies the duration of fuel injection accordingly.

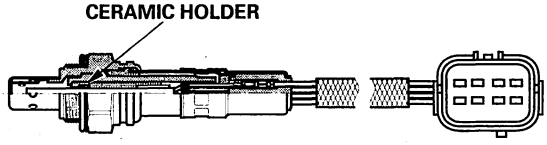

Barometric Pressure (BARO) Sensor
The BARO sensor is inside the ECM/PCM. It converts atmospheric pressure into a voltage signal that is used by the ECM/PCM to modify the basic duration of the fuel injection discharge.

Camshaft Position (CMP) Sensor
The CMP sensor input is used by the ECM/PCM to determines ignition timing at start up (cranking) and when crank angle is abnormal.

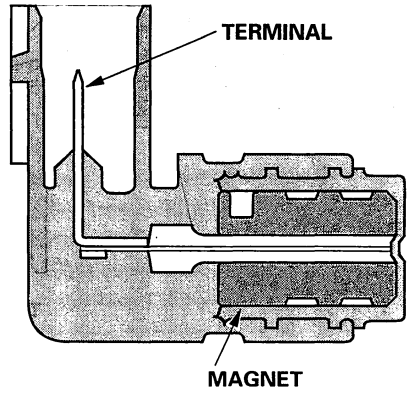

Crankshaft Position (CKP) Sensor
This CKP sensor detects crankshaft speed and is used by the ECM/PCM to determine ignition timing and timing for fuel injection of each cylinder as well as detecting engine misfire.

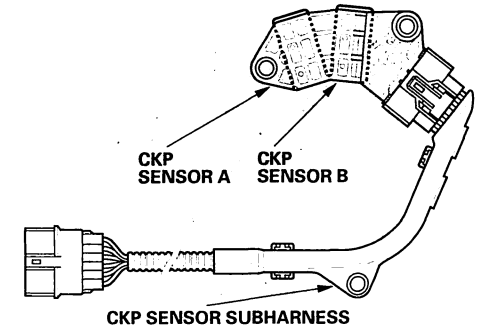

Engine Coolant Temperature (ECT) Sensor (2005-2006 models: Engine Coolant Temperatute (ECT) Sensor 1)
The ECT sensor (2005-2006 models: ECT sensor 1) is a temperature dependent resistor (thermistor). The resistance of the thermistor decreases as the engine coolant temperature increases.

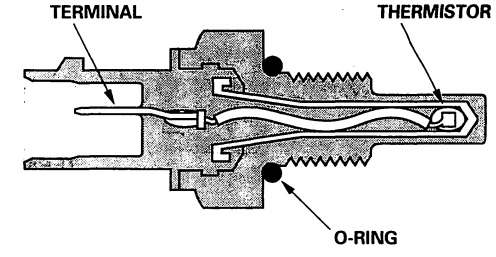

Ignition Timing Control
The ECM/PCM contains the memory for basic ignition timing at various engine speeds and manifold absolute pressure. It also adjusts the timing according to engine coolant temperature.

Injector Timing and Duration
The ECM/PCM contains the memory for basic discharge duration at various engine speeds and manifold pressures. The basic discharge duration, after being read out from the memory, is further modified by signals sent from various sensors to obtain the final discharge duration.
By monitoring long term fuel trim, the ECM/PCM detects long term malfunctions in the fuel system and sets a diagnostic trouble code (DTC).

(cont'd)

Protected by AR

System Description (cont'd)

Input Shaft (Mainshaft) Speed Sensor
This sensor detects mainshaft speed.

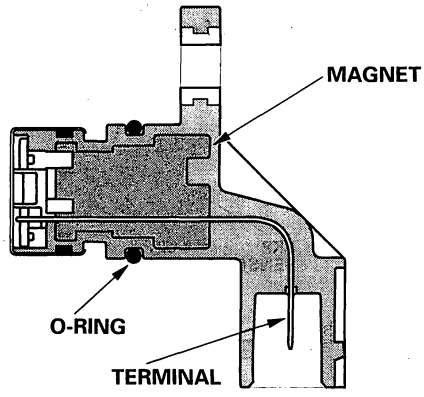

Intake Air Temperature (IAT) Sensor
The IAT sensor is a temperature dependent resistor (thermistor). The resistance of the thermistor decreases as the intake air temperature increases.

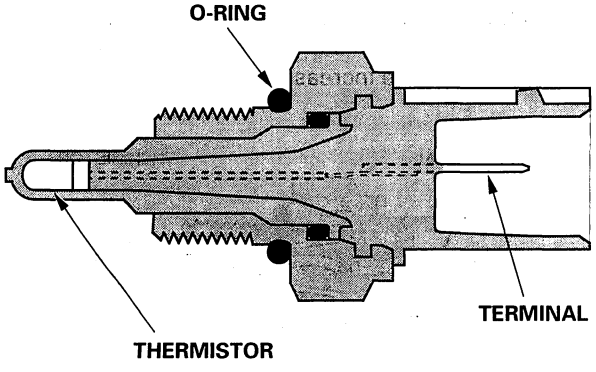

Knock Sensor
The knock control system adjusts the ignition timing to minimize knock.

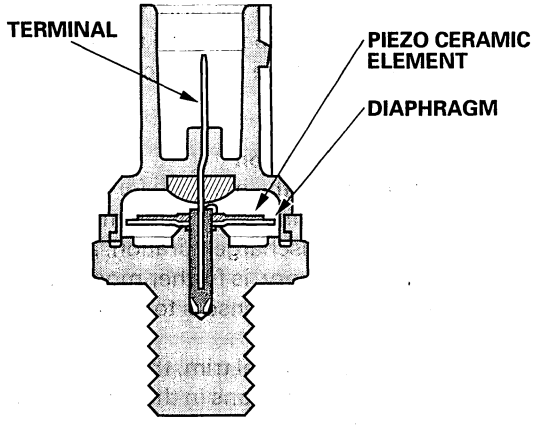

Malfunction Indicator Lamp (MIL) Indication (In relation to Readiness Codes)
The vehicle has certain "readiness codes" that are part of the on-board diagnostics for the emissions systems. If the vehicle's battery has been disconnected or gone dead, if the DTCs have been cleared, or if the ECM/PCM has been reset, these codes are reset. In some states, part of the emissions testing is to make sure these codes are set to complete. If all of them are not set to complete, the vehicle may fail the test, or the test cannot be finished.

To check if the readiness codes are set to complete, turn the ignition switch ON (II), but do not start the engine. The MIL will come on for 15—20 seconds. If it then goes off, the readiness codes are complete. If it flashes five times, one or more readiness codes are not complete. To set each code, drive the vehicle or run the engine as described in the procedures (see page 11-54).

Manifold Absolute Pressure (MAP) Sensor
The MAP sensor converts manifold absolute pressure into electrical signals to the ECM/PCM.

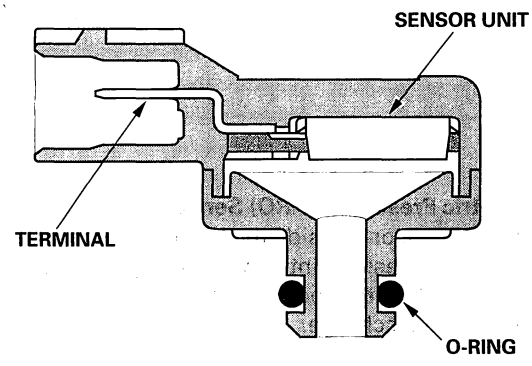

Output Shaft (Countershaft) Speed Sensor
This sensor detects countershaft speed.

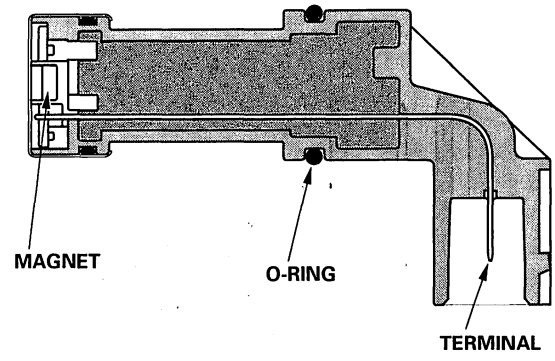

BACK

Protected by AR

Secondary Heated Oxygen Sensor (Secondary HO2S)
The secondary HO2S detects the oxygen content in the exhaust gas downstream of the warm up three way catalytic converter (WU-TWC), and sends signals to the ECM/PCM. To stabilize its output, the sensor has an internal heater. The ECM/PCM compares the HO2S output with the A/F sensor output to determine catalyst efficiency. The secondary HO2S is on the WU-TWC.

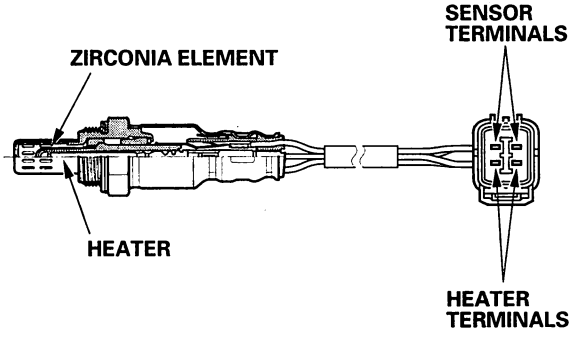

Electronic Throttle Control System

The throttle is electronically controlled by the electronic throttle control system. Refer to the system diagram to see a functional layout of the system.

Idle control: When the engine is idling, the ECM/PCM controls the throttle actuator to maintain the proper idle speed according to engine loads.

Acceleration control: When the accelerator pedal is pressed, the ECM/PCM opens the throttle valve depending on the accelerator pedal position (APP) sensor signal.

Cruise control: The ECM/PCM controls the throttle actuator to maintain set speed when the cruise control is operating. The throttle actuator takes the place of the cruise control actuator.

Accelerator Pedal Position (APP) Sensor
As the accelerator pedal position changes, the sensor varies the signal voltage to the ECM/PCM.

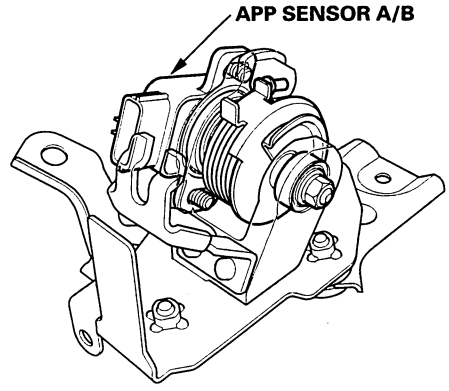

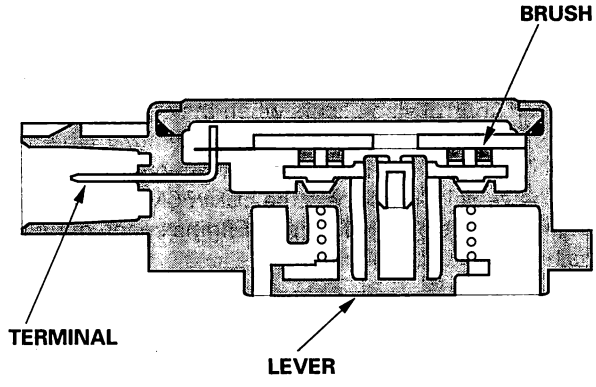

Throttle Body
The throttle body is a single-barrel side draft type. The lower portion of the throttle valve is heated by engine coolant from the cylinder head to prevent icing of the throttle plate.

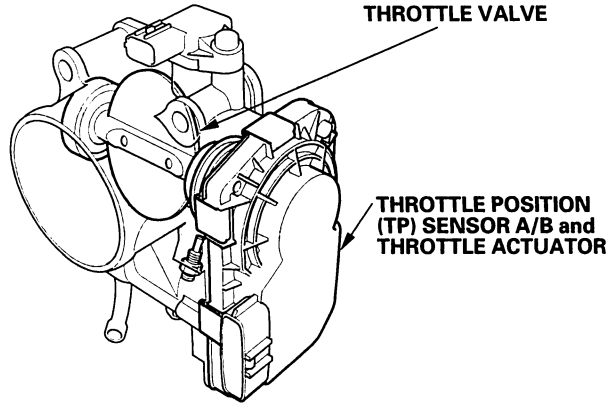

(cont'd)

Protected by AR

System Description (cont'd)

Idle Control System

When the engine is cold, the A/C compressor is on, the transmission is in gear, the brake pedal is pressed, the power steering load is high, or the alternator is charging, the ECM/PCM controls current to the throttle actuator to maintain the correct idle speed.

Brake Pedal Position Switch
The brake pedal position switch signals the ECM/PCM when the brake pedal is pressed.

Power Steering Pressure (PSP) Switch
The PSP switch signals the ECM/PCM when the power steering load is high.

Fuel Supply System

Fuel Cutoff Control
During deceleration with the throttle valve closed, current to the injectors is cut off to improve fuel economy at engine speeds over 850 rpm (M/T: 950 rpm). Fuel cutoff control also occurs when the engine speed exceeds 6,900 rpm, regardless of the position of the throttle valve, to protect the engine from over-revving. When the vehicle is stopped, the ECM/PCM cuts the fuel at engine speeds over 5,000 rpm. Engine speed of fuel cut is lower on a cold engine.

Fuel Pump Control
When the ignition is turned on, the ECM/PCM grounds PGM-FI main relay 2 (FUEL PUMP) which feeds current to the fuel pump for 2 seconds to pressurize the fuel system. With the engine running, the ECM/PCM grounds PGM-FI main relay 2 (FUEL PUMP) and feeds current to the fuel pump. When the engine is not running and the ignition is on, the ECM/PCM cuts ground to PGM-FI main relay 2 (FUEL PUMP) which cuts current to the fuel pump.

PGM-FI Main Relay 1 and 2
PGM-FI main relay 1 (FI MAIN) is energized whenever the ignition switch is ON (II) to supply battery voltage to the ECM/PCM, power to the injectors, and power for PGM-FI main relay 2 (FUEL PUMP). PGM-FI main relay 2 (FUEL PUMP) is energized to supply power to the fuel pump for 2 seconds when the ignition switch is turned ON (II), and when the engine is cranking or running.

Catalytic Converter System

Warm Up/Three Way Catalytic Converter (WU-TWC) and Three Way Catalytic Converter (TWC)
The WU-TWC/TWC converts hydrocarbons (HC), carbon monoxide (CO), and oxides of nitrogen (NOx) in the exhaust gas to carbon dioxide (CO_2), nitrogen (N_2), and water vapor.

WU-TWC

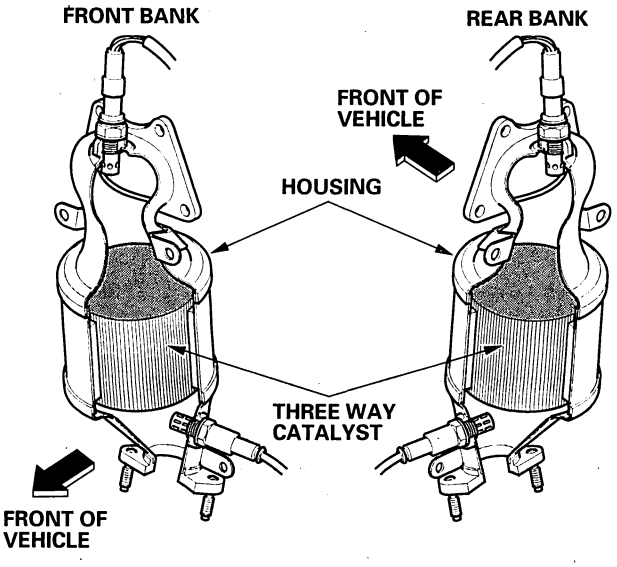

TWC

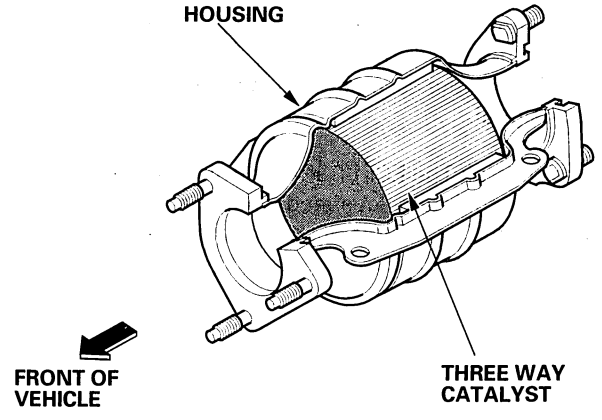

BACK

Protected by AR

Exhaust Gas Recirculation (EGR) System

Refer to the system diagram to see a functional layout of the system.

EGR Valve
The EGR valve lowers peak combustion temperatures and reduces oxides of nitrogen emissions (NOx) by recirculating exhaust gas through the intake manifold and into the combustion chambers.

Positive Crankcase Ventilation (PCV) System

The PCV valve prevents blow-by gasses from escaping into the atmosphere by venting them into the intake manifold.

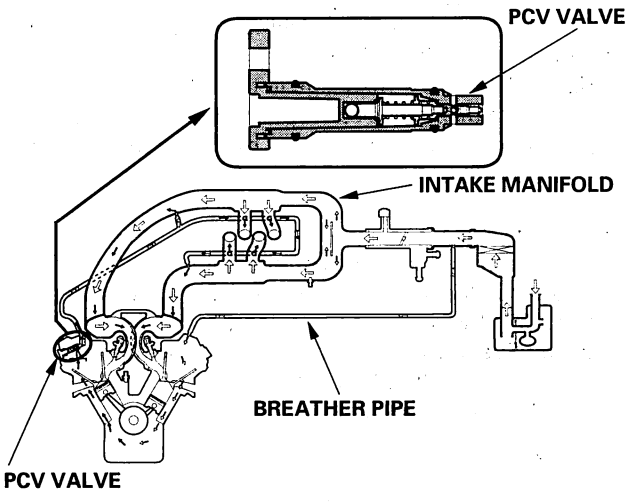

Evaporative Emission (EVAP) Control System

Refer to the system diagram to see a functional layout of the system.

EVAP Canister
The EVAP canister temporarily stores fuel vapor from the fuel tank until it can be purged from the EVAP canister into the engine and burned.

EVAP Canister Purge Valve
When the engine coolant temperature is below 140 °F (60 °C), the ECM/PCM turns off the EVAP canister purge valve which cuts vacuum to the EVAP canister.

Fuel Tank Pressure (FTP) Sensor
The FTP sensor converts fuel tank absolute pressure into an electrical input to the ECM/PCM.

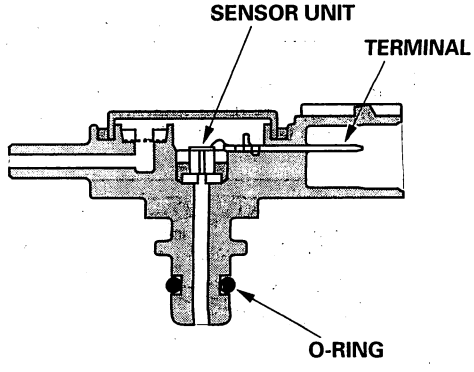

EVAP Canister Vent Shut Valve
The EVAP canister vent shut valve is on the EVAP canister.
The EVAP canister vent shut valve controls the venting of the EVAP canister.

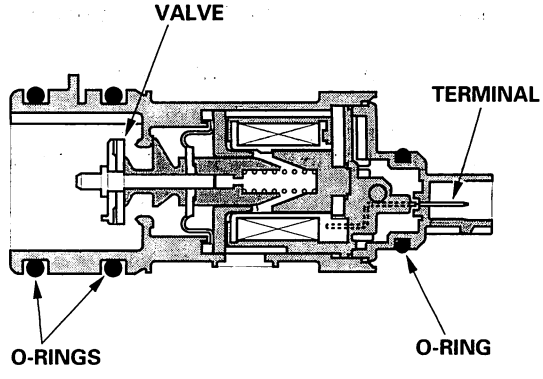

(cont'd)

Protected by AR

System Description (cont'd)

Fuel Cap Warning Message

The ECM/PCM detects whether the fuel fill cap is loose or missing under certain conditions and alerts the driver by showing the information in the odometer/outside temperature display. If the ECM/PCM detects a small volume leak, the MIL may come on during the second drive cycle and store a DTC.

First drive cycle
During the first drive cycle after a cold start, the ECM/PCM alerts the driver to check the fuel fill cap by showing a "CHECK FUEL CAP" message in the odometer/outside temperature display (A), and it stores Temporary DTC P0457 "Evaporative Emission (EVAP) System Leak Detected/Fuel Cap Loose or Missing". Tightening the fuel cap does not make the message go off immediately.

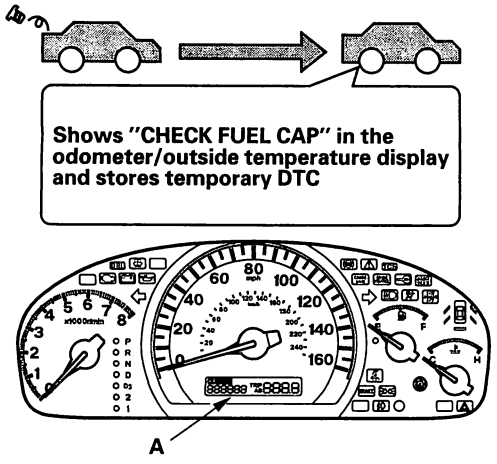

To make the message go off (with the HDS)

Procedure

1. Tighten the fuel fill cap three clicks (2003-2004 models), or until it clicks (2005-2006 models).
2. Clear the Temporary DTC with the HDS.
3. Verify there is no leak by doing the EVAP FUNCTION TEST in the INSPECTION MENU with the HDS.

To make the message go off (without the HDS)

Procedure

1. Tighten the fuel fill cap three clicks (2003-2004 models), or until it clicks (2005-2006 models).
2. Turn the ignition switch OFF.
3. Start the engine, and drive at a steady speed over 28 mph (45 km/h), without moving the accelerator pedal, for about 1 minute. Do step 2 and 3 several times.

Second drive cycle
During the second drive cycle after a cold start, if the fuel fill cap is still loose or missing, the ECM/PCM alerts the driver to check the fuel fill cap by showing a "CHECK FUEL CAP" message in the odometer/outside temperature display as same as the first drive cycle. Tightening the fuel cap does not make the message go off immediately.

Third drive cycle
During the third drive cycle after a cold start, if the fuel fill cap is still loose or missing, the ECM/PCM stores DTC P0457 "Evaporative Emission (EVAP) System Leak Detected/Fuel Cap Loose or Missing". The malfunction indicator lamp (MIL) (A) comes on, and the "CHECK FUEL CAP" message goes off.

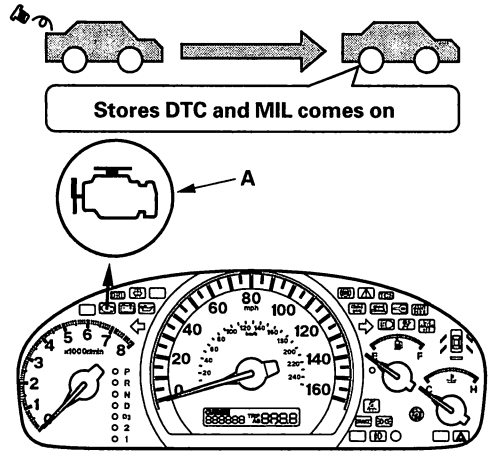

BACK

Protected by AR

Electronic Throttle Control System Diagram

The electronic throttle control system consists of the throttle actuator, throttle position (TP) sensor A/B, accelerator pedal position (APP) sensor A/B, throttle actuator control module, and the ECM/PCM. The throttle is electronically controlled by this system.

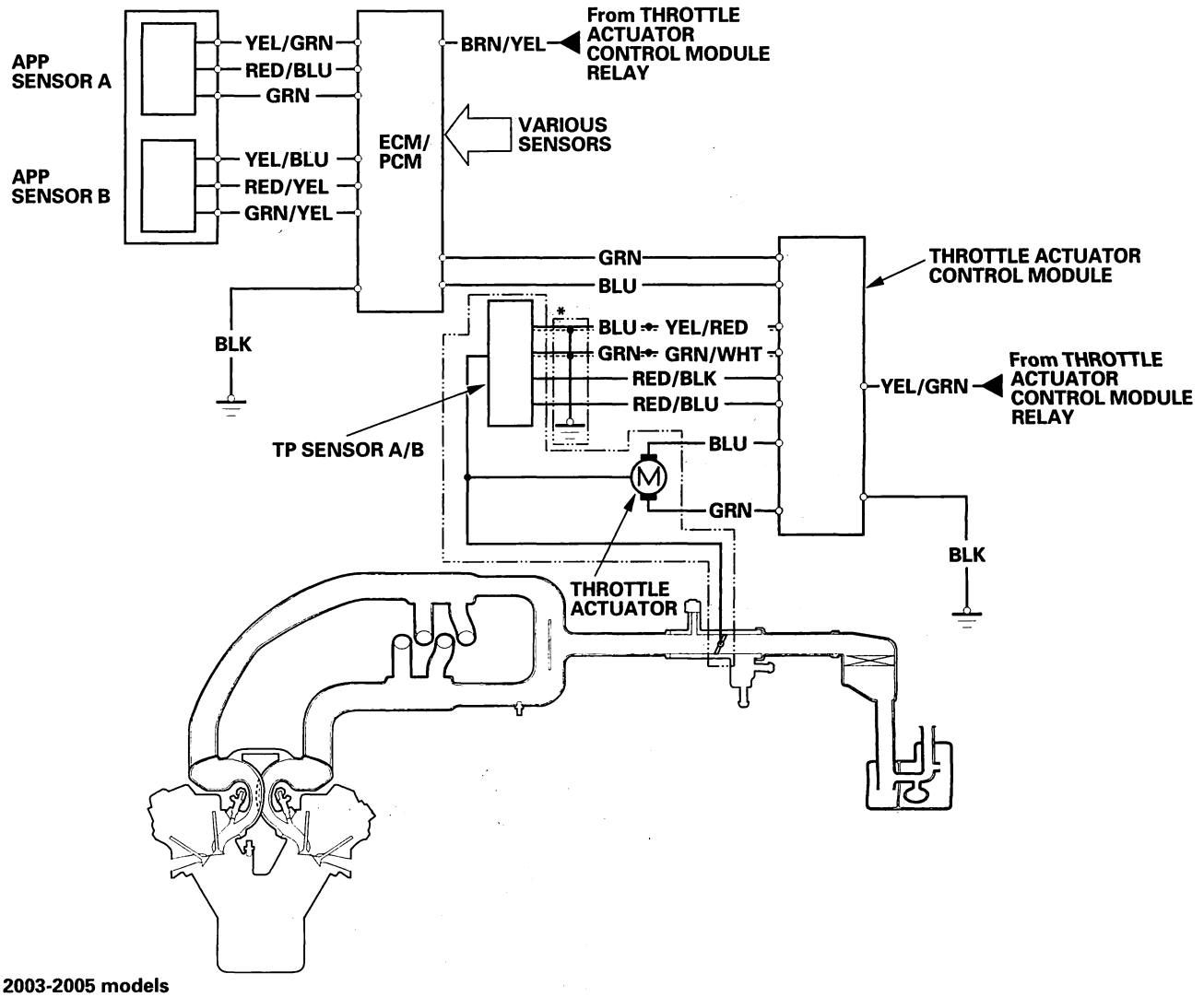

*: 2003-2005 models

(cont'd)

BACK

Protected by AR

System Description (cont'd)

Intake Manifold Tuning (IMT) (Intake Manifold Runner Control (IMRC)) System

Engine power is achieved by closing and opening the intake manifold tuning (IMT) (intake manifold runner control (IMRC)) actuator. When the valve is closed, there is high torque at low engine speed. When the valve is open, there is high torque at high engine speed.
The intake manifold tuning (IMT) (intake manifold runner control (IMRC)) valve actuator has a sensor that detects the IMT (IMRC) valve position and sends it to the ECM/PCM.

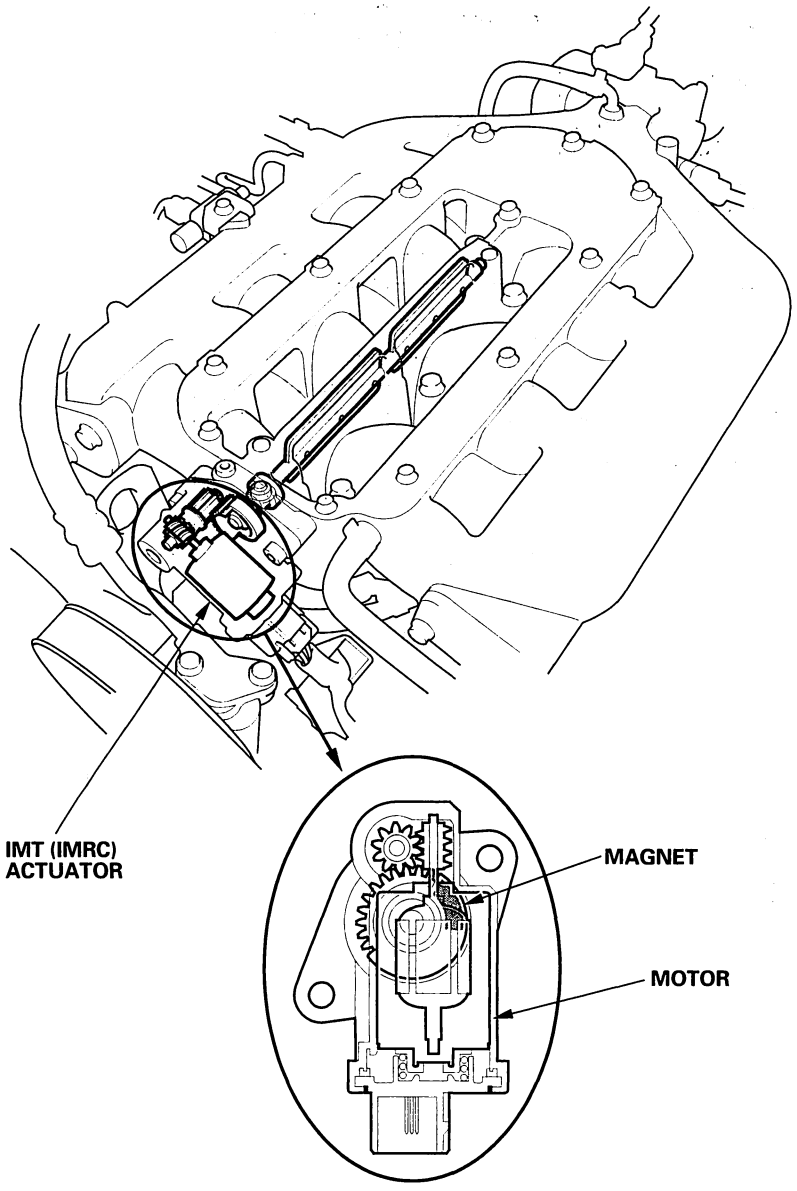

BACK

Protected by AR

Exhaust Gas Recirculation (EGR) System Diagram

The EGR system reduces oxides of nitrogen (NOx) emissions by recirculating exhaust gas through the EGR valve and the intake manifold into the combustion chambers. The ECM/PCM memory includes the ideal EGR valve position for varying operating conditions.

The EGR valve position sensor detects the amount of EGR valve lift and sends it to the ECM/PCM. The ECM/PCM then compares it with the ideal lift in its memory (based on signals sent from other sensors). If there is any difference between the two, the ECM/PCM cuts current to the EGR valve.

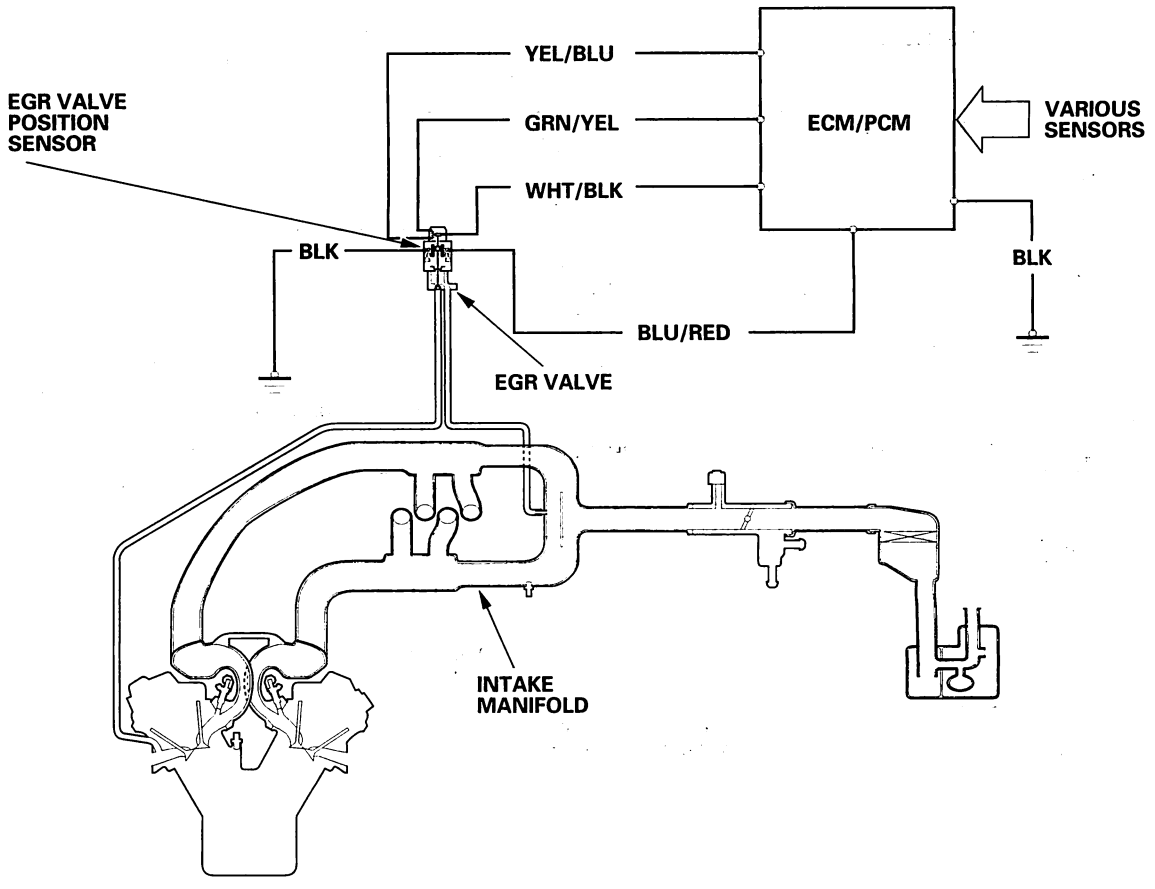

(cont'd)

BACK

Protected by AR

System Description (cont'd)

Evaporative Emission (EVAP) Control Diagram

The EVAP controls minimize the amount of fuel vapor escaping to the atmosphere. Vapor from the fuel tank is temporarily stored in the EVAP canister until it can be purged from the canister into the engine and burned.

- The EVAP canister is purged by drawing fresh air through it and into a port on the intake manifold. The purging vacuum is controlled by the EVAP canister purge valve, which operates whenever engine coolant temperature is above 140 °F (60 °C).
- During refueling, the fuel tank vapor control valve opens with the pressure in the fuel tank, and feeds the fuel vapor to the EVAP canister.

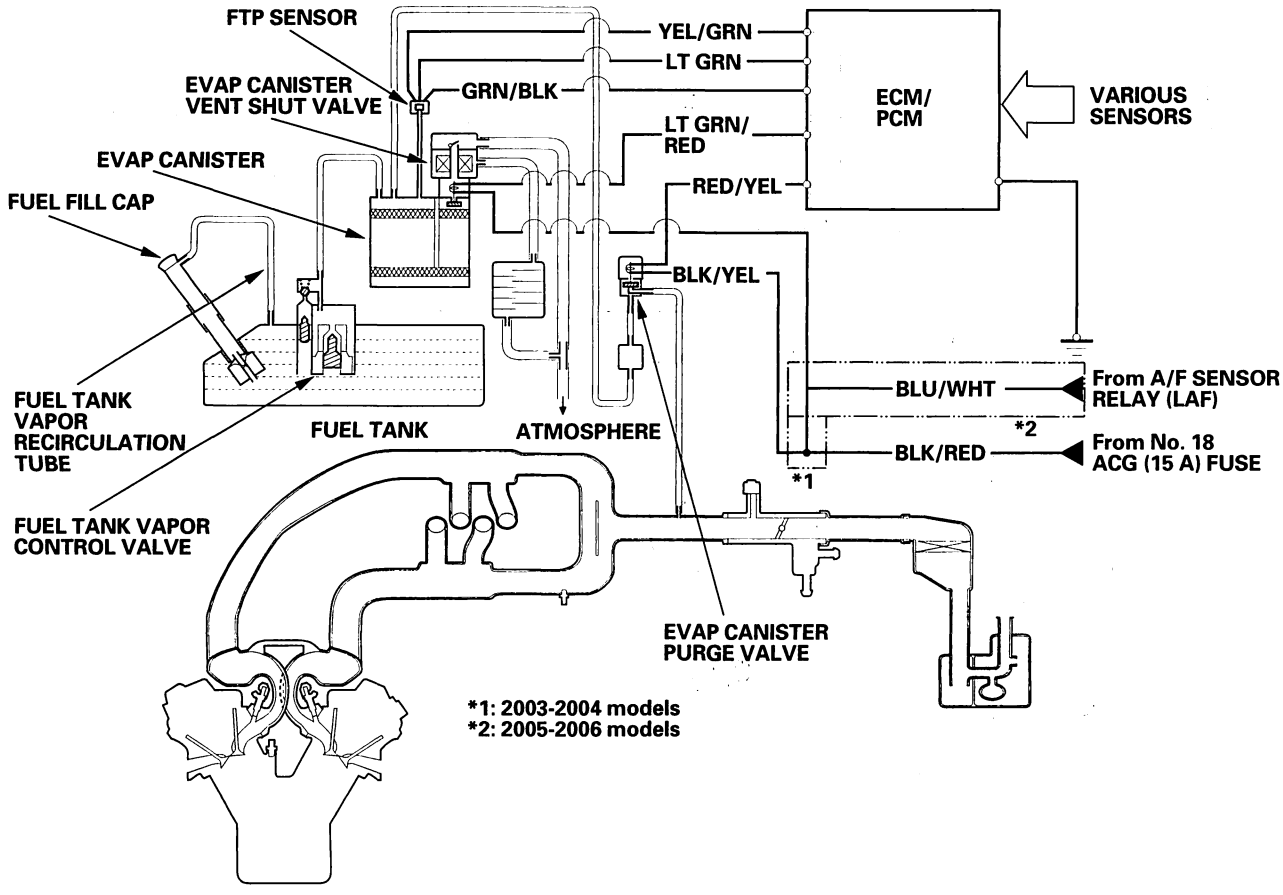

BACK

Protected by AR

ECM/PCM Circuit Diagram

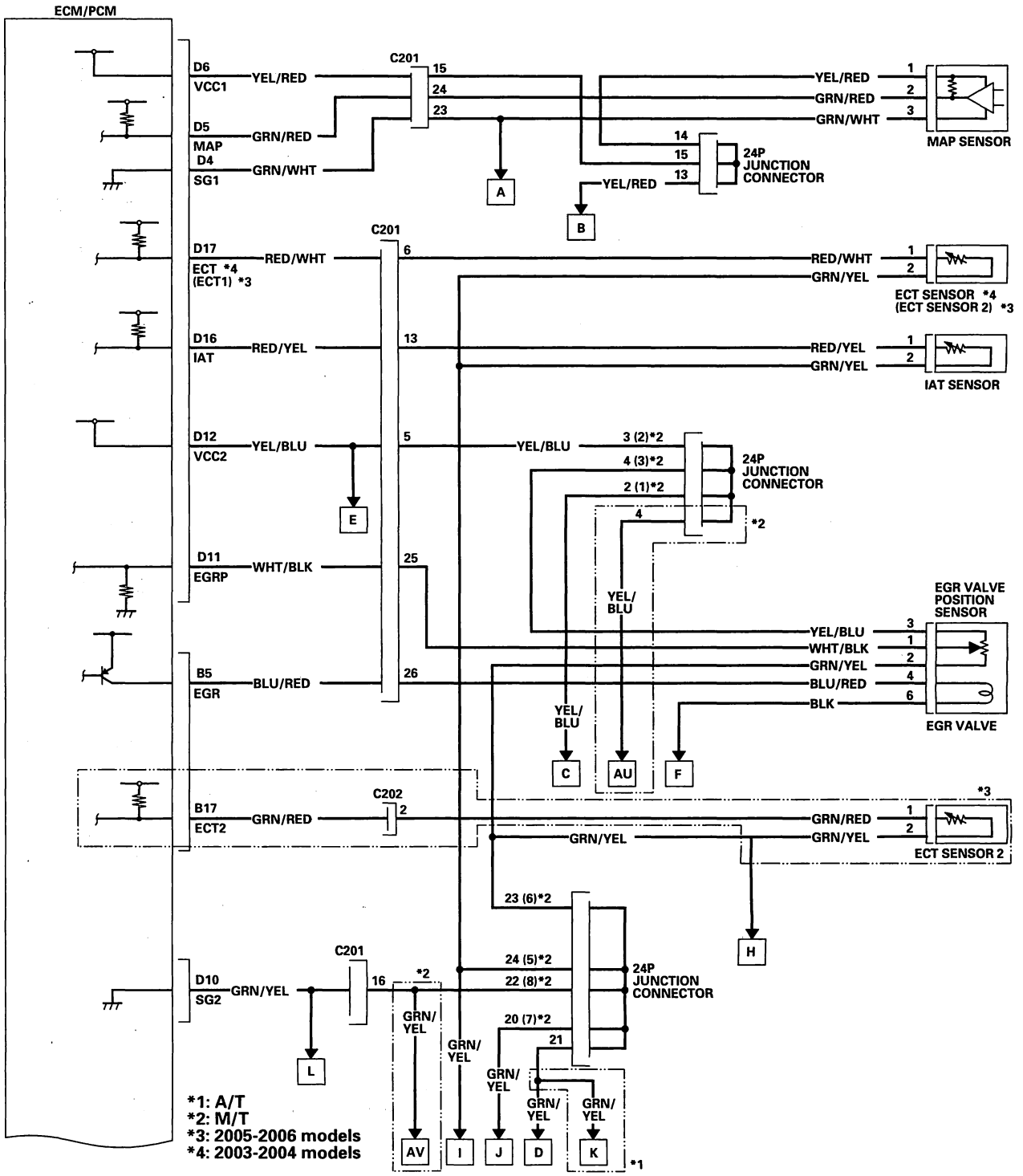

(cont'd)

BACK

Protected by AR

System Description (cont'd)

ECM/PCM Circuit Diagram (cont'd)

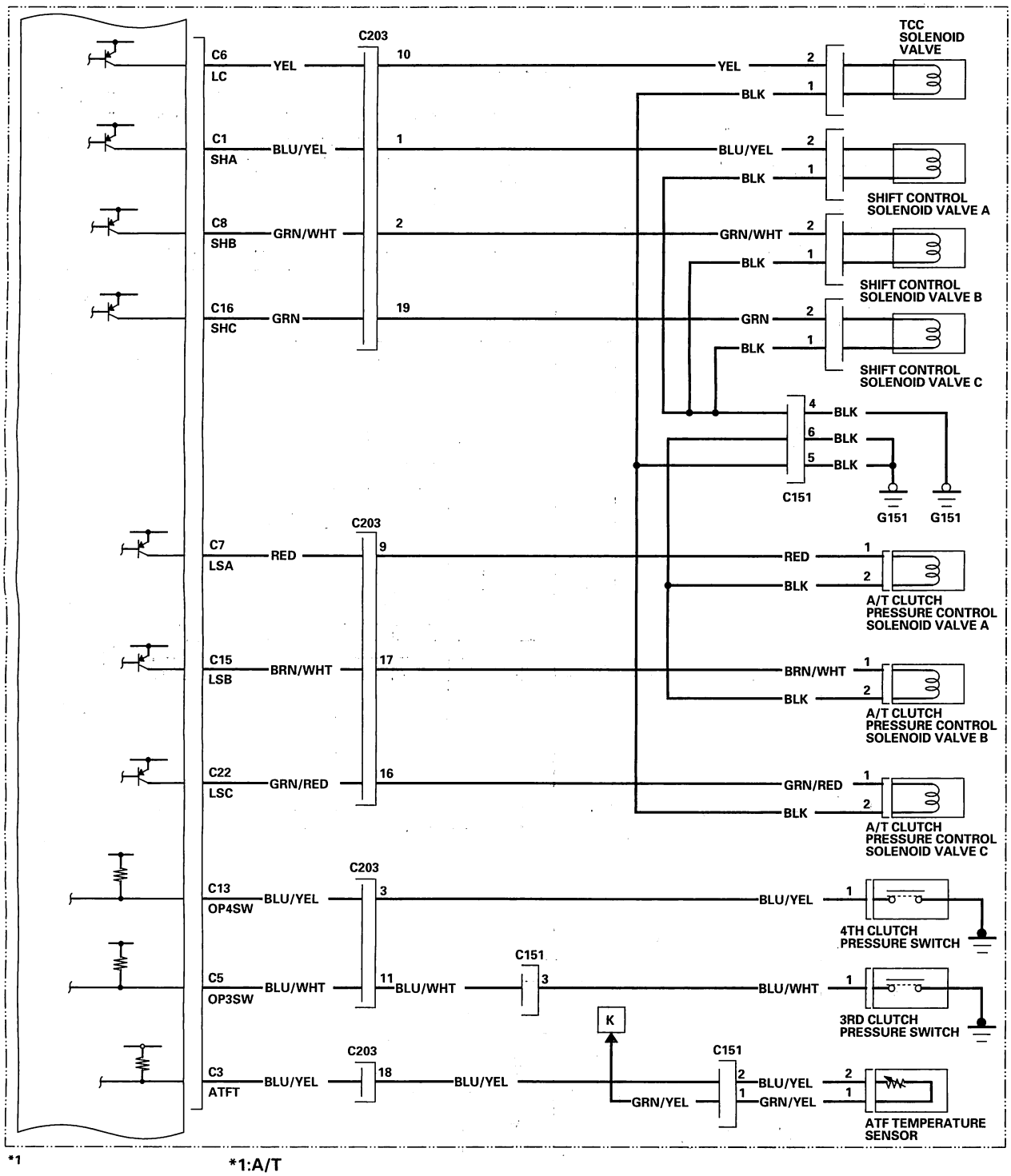

BACK

Protected by AR

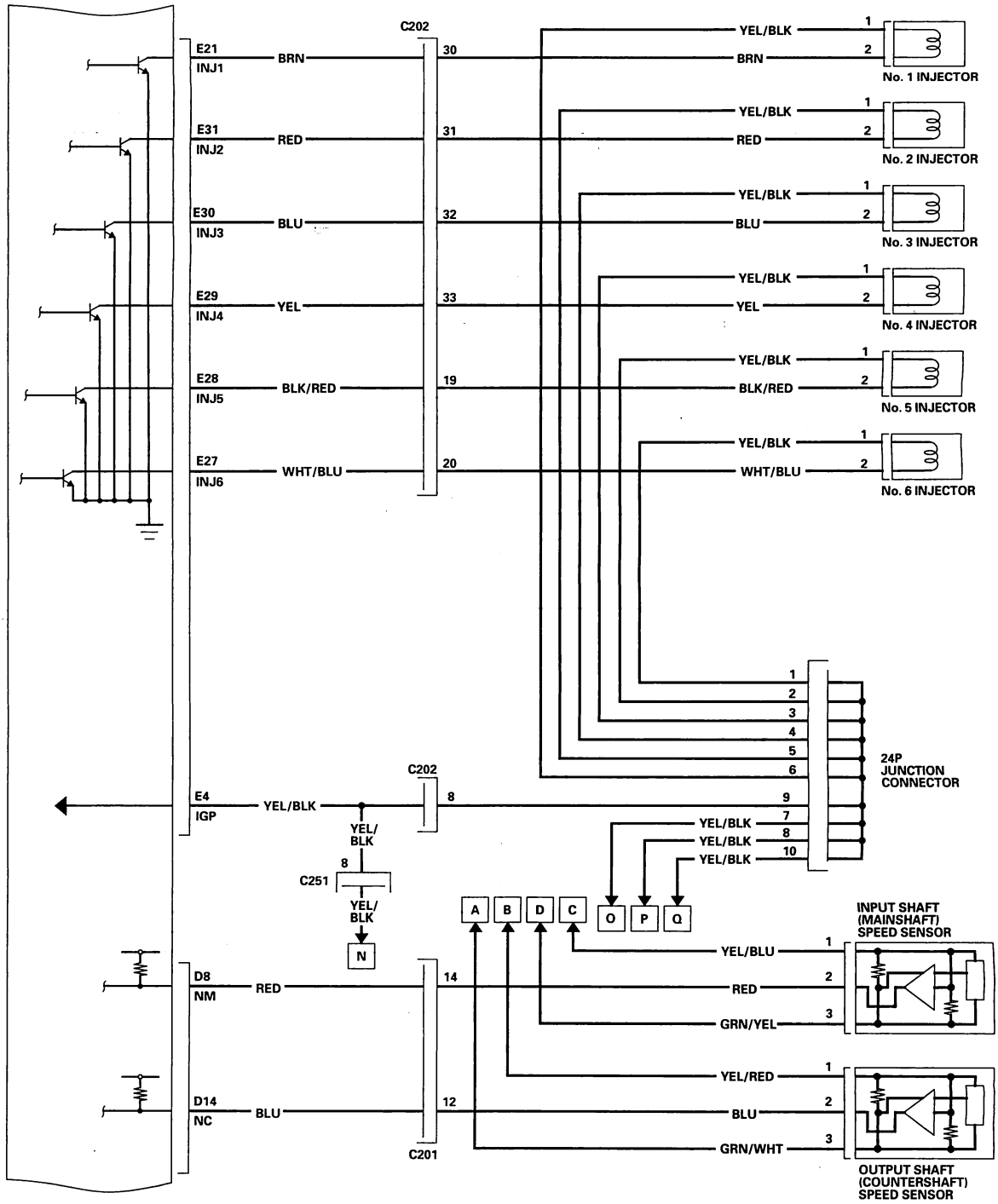

(cont'd)

BACK

Protected by AR

System Description (cont'd)

ECM/PCM Circuit Diagram (cont'd)

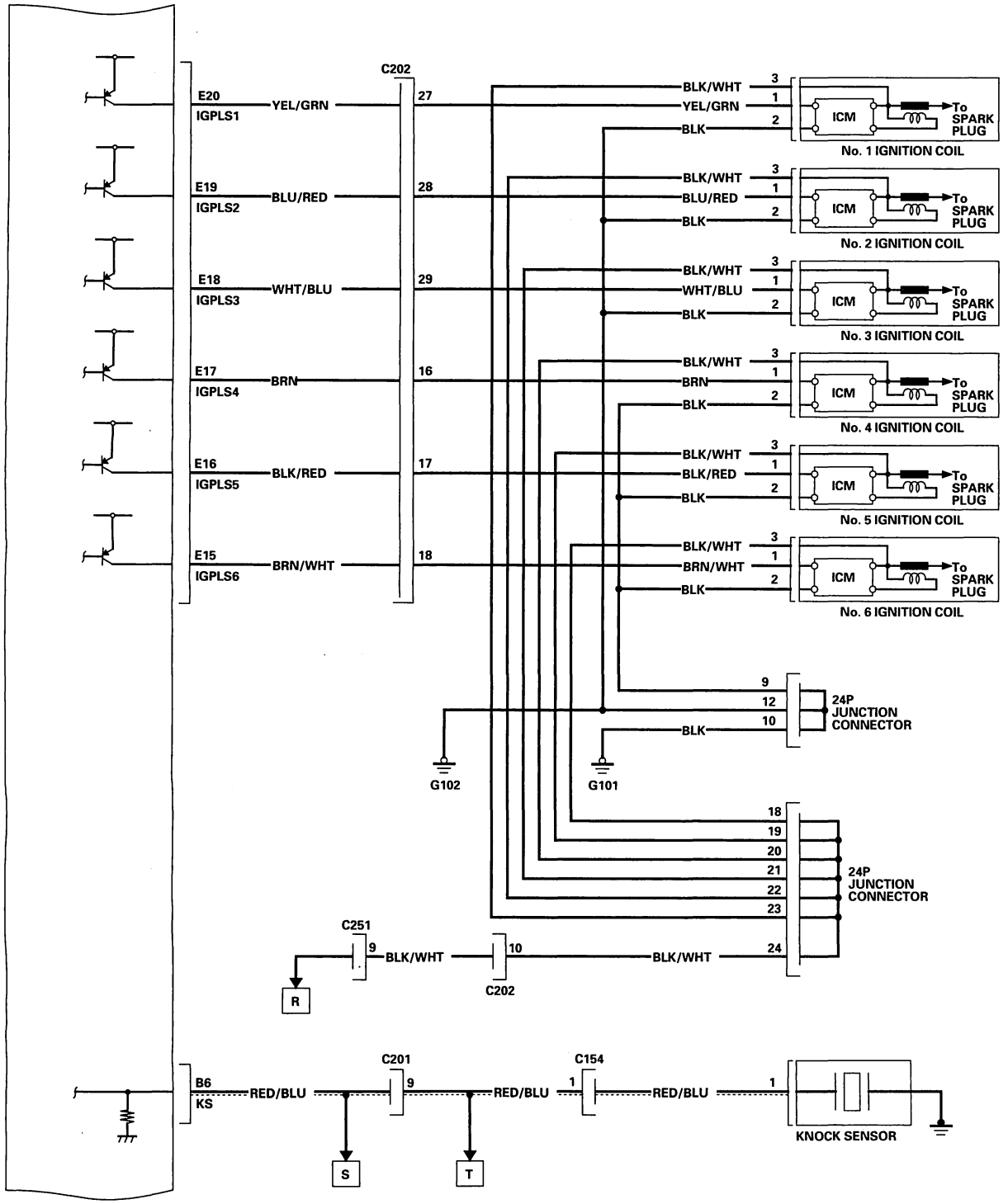

BACK

Protected by AR

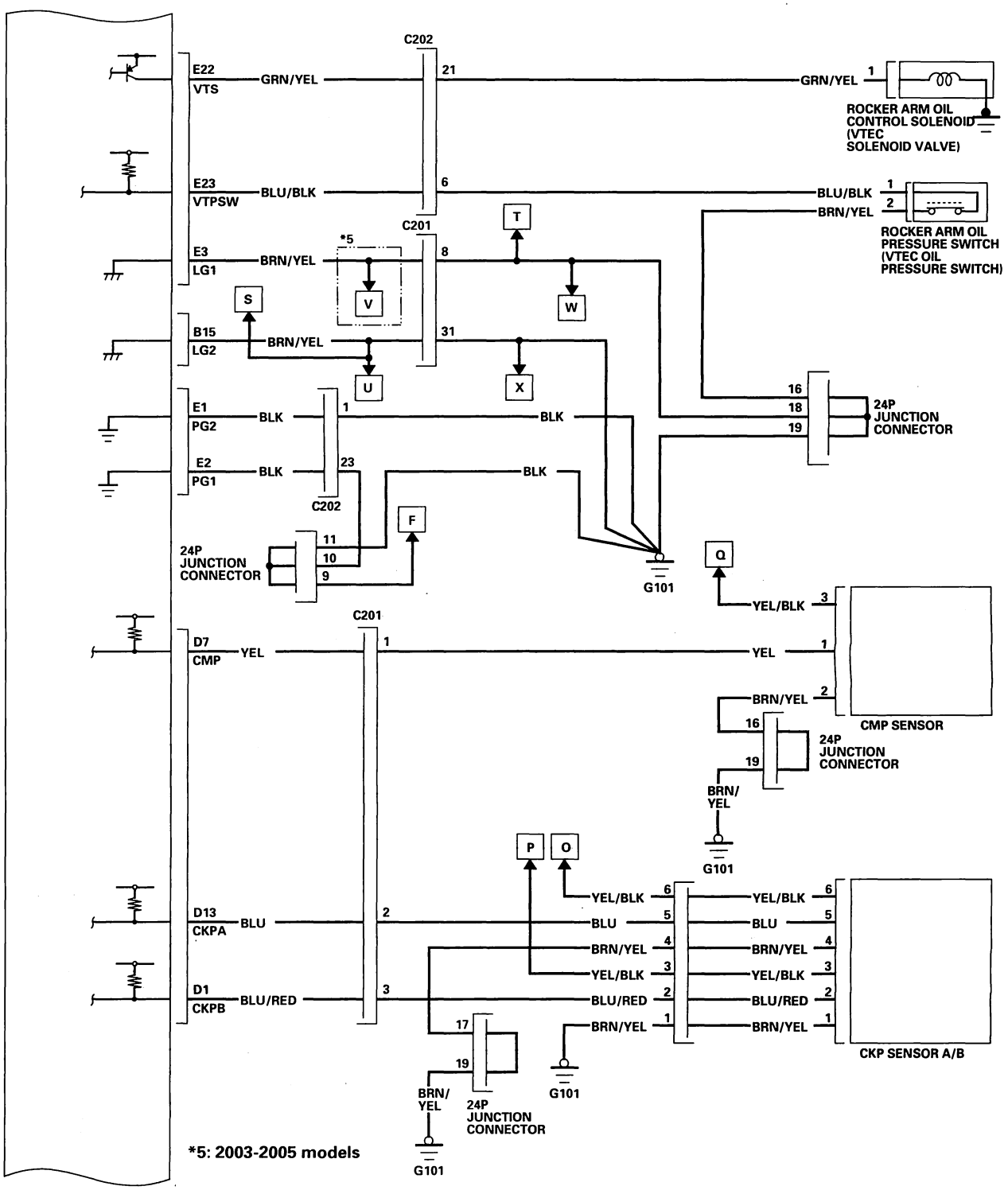

(cont'd)

BACK

Protected by AR

System Description (cont'd)

ECM/PCM Circuit Diagram (cont'd)

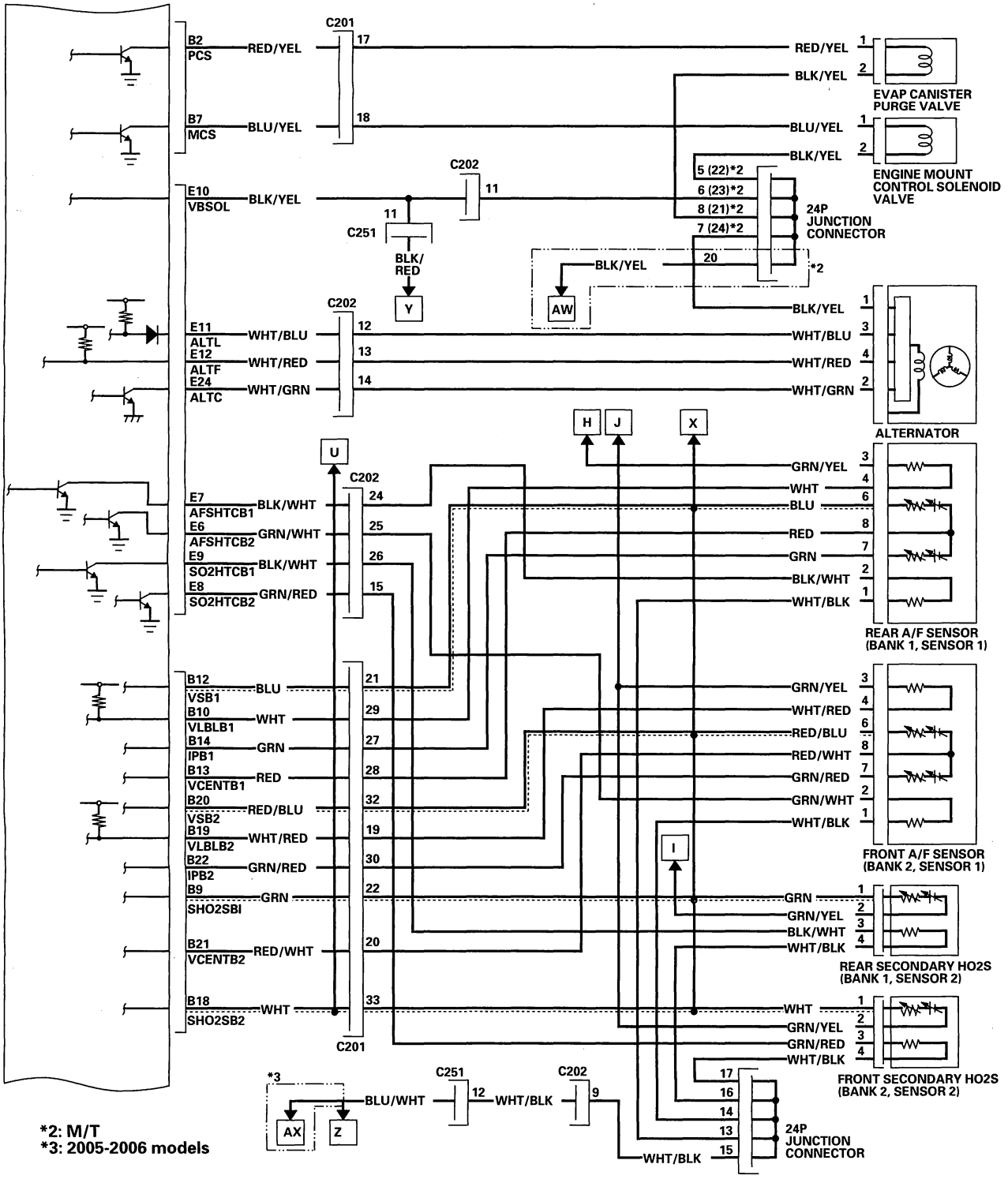

*2: M/T
*3: 2005-2006 models

BACK

Protected by AR

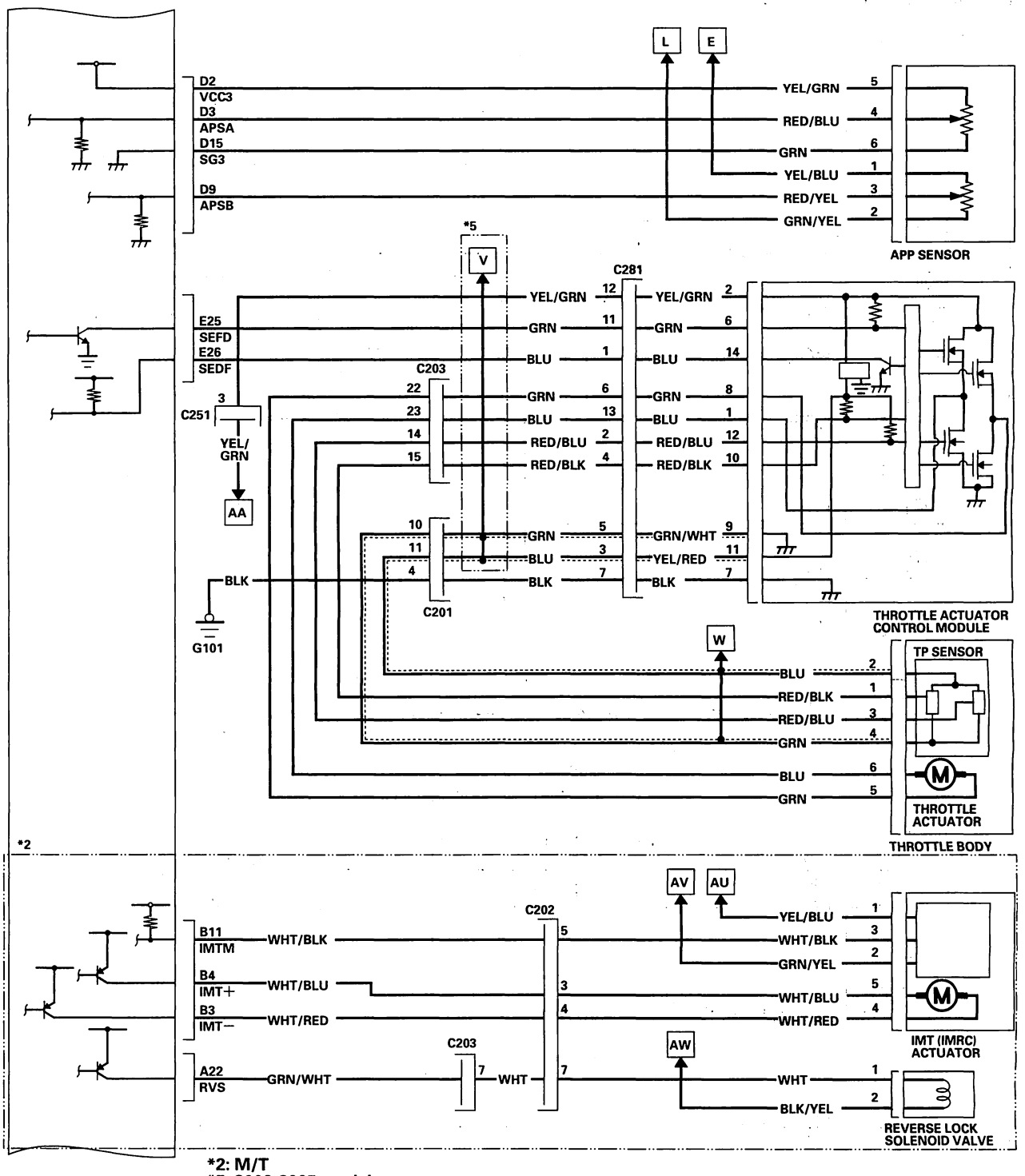

*2: M/T
*5: 2003-2005 models

(cont'd)

BACK

Protected by AR

System Description (cont'd)

ECM/PCM Circuit Diagram (cont'd)

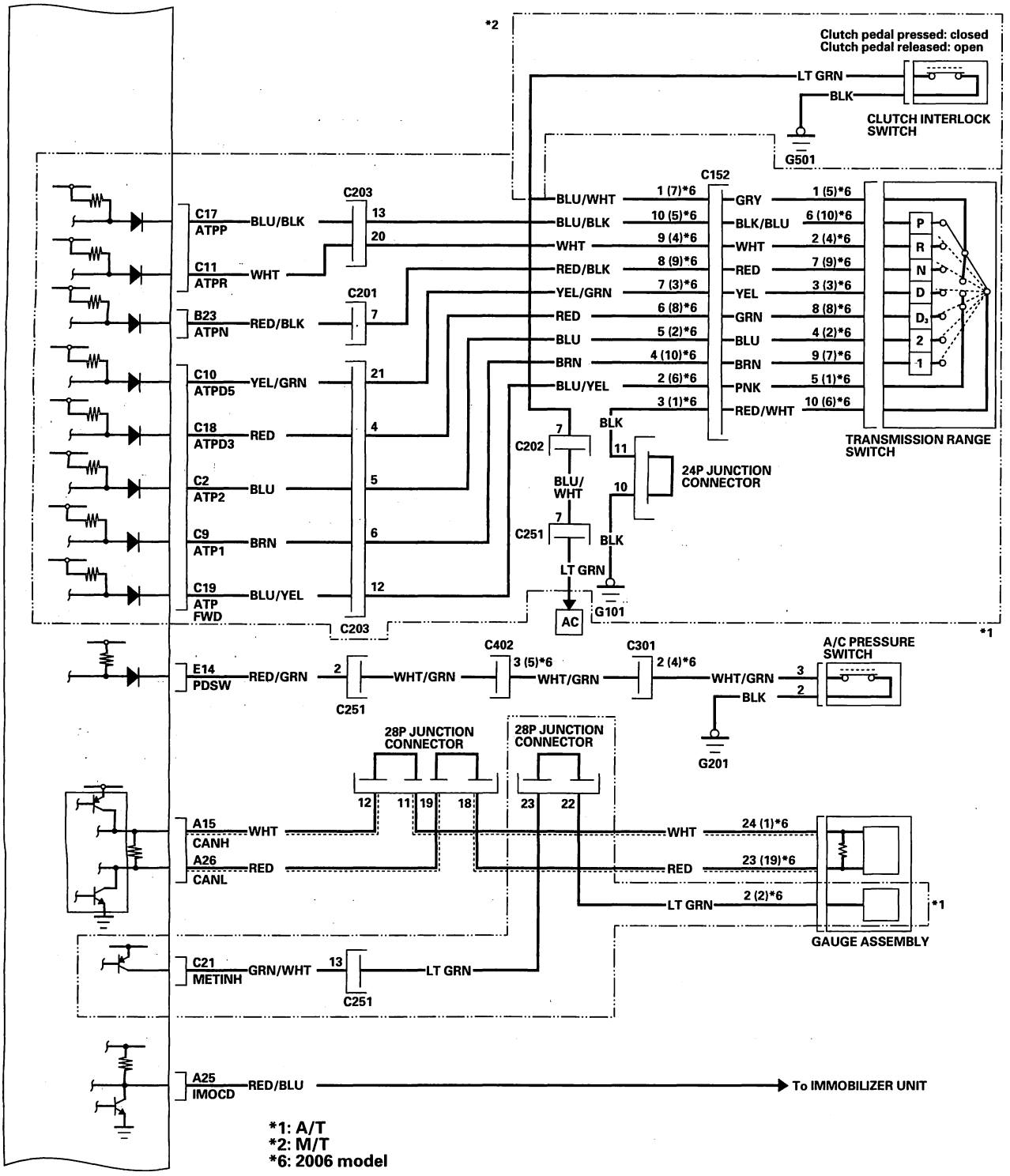

BACK

Protected by AR

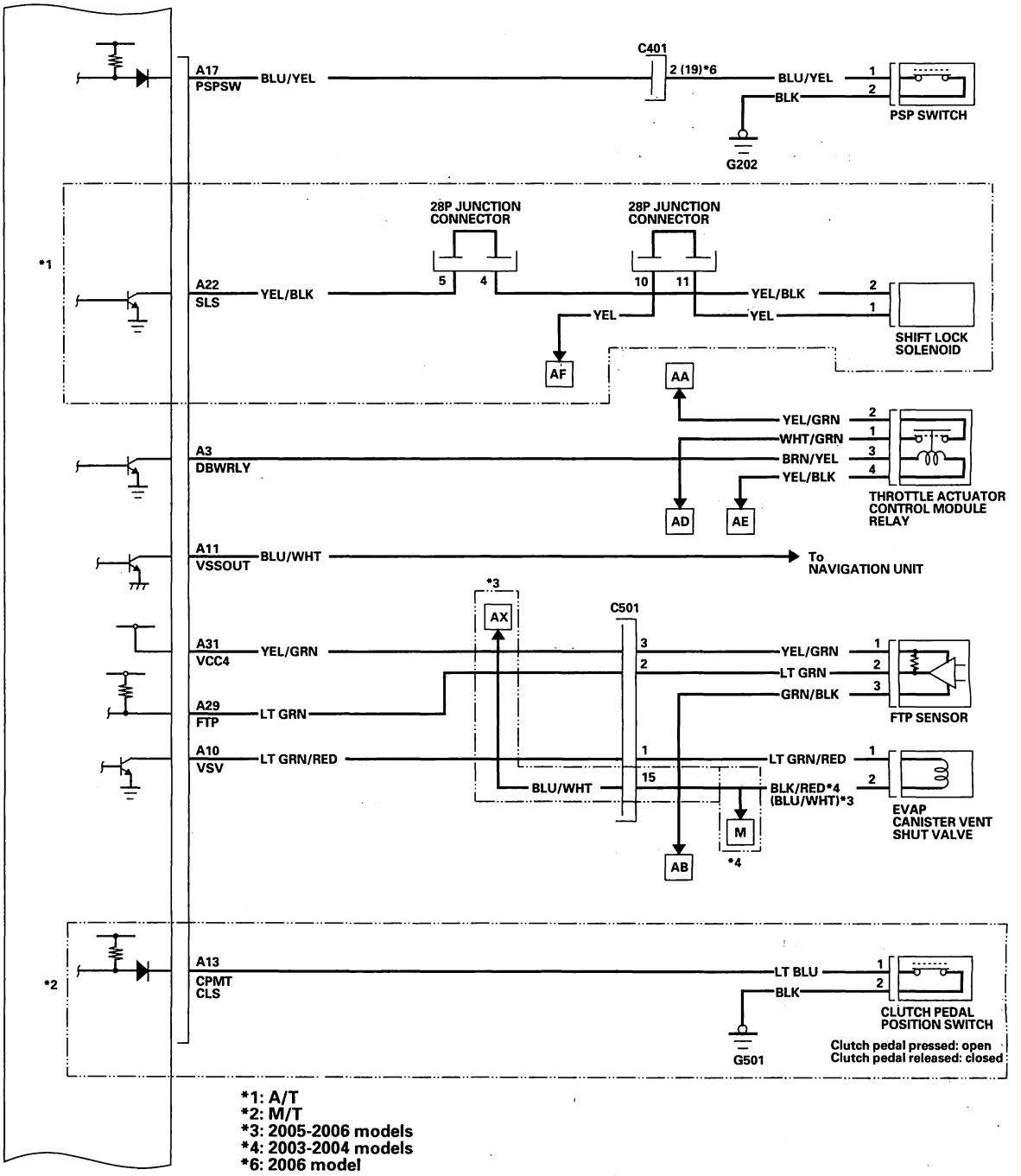

*1: A/T
*2: M/T
*3: 2005-2006 models
*4: 2003-2004 models
*6: 2006 model

(cont'd)

BACK

Protected by AR

System Description (cont'd)

ECM/PCM Circuit Diagram (cont'd)

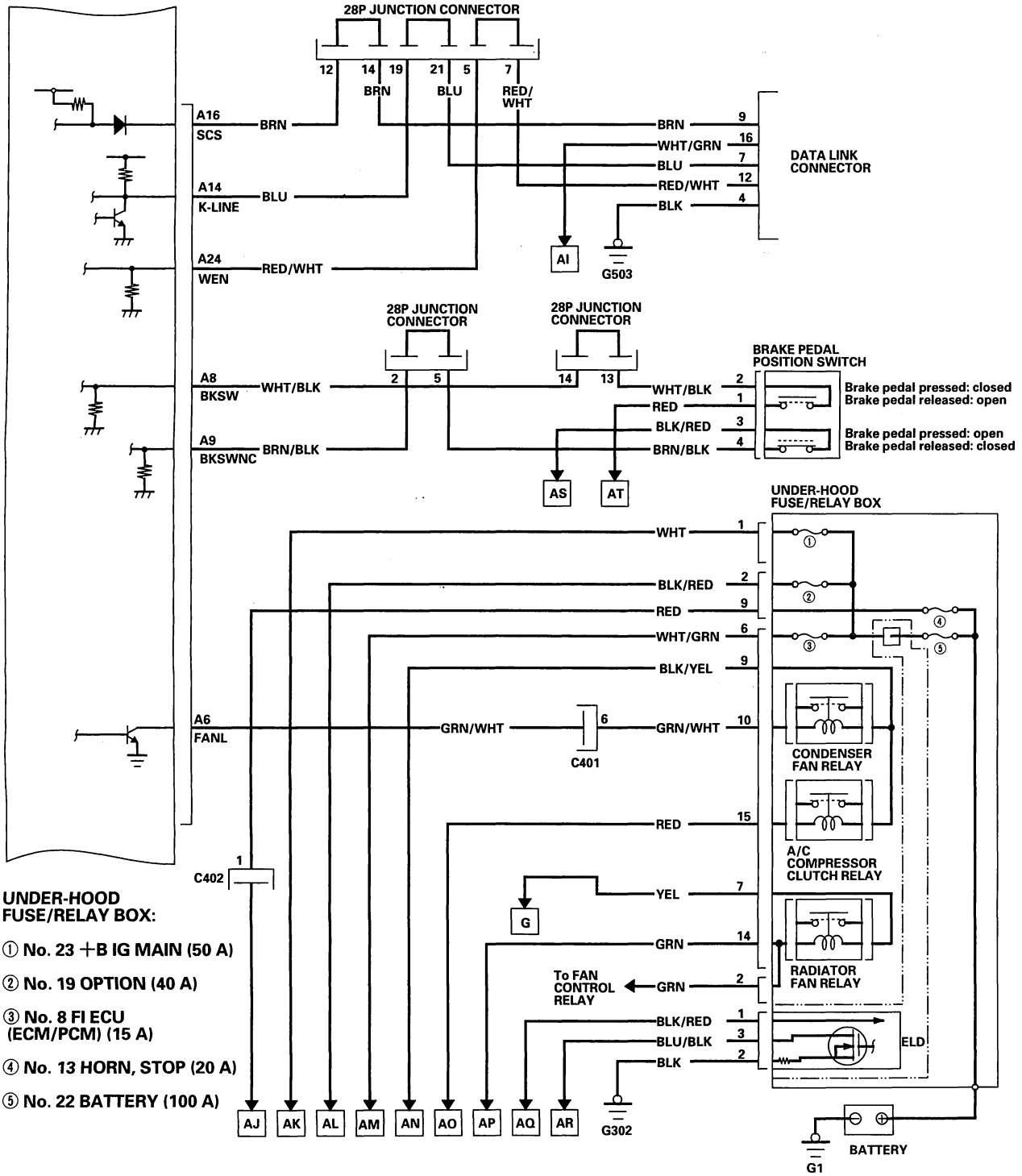

BACK

Protected by AR

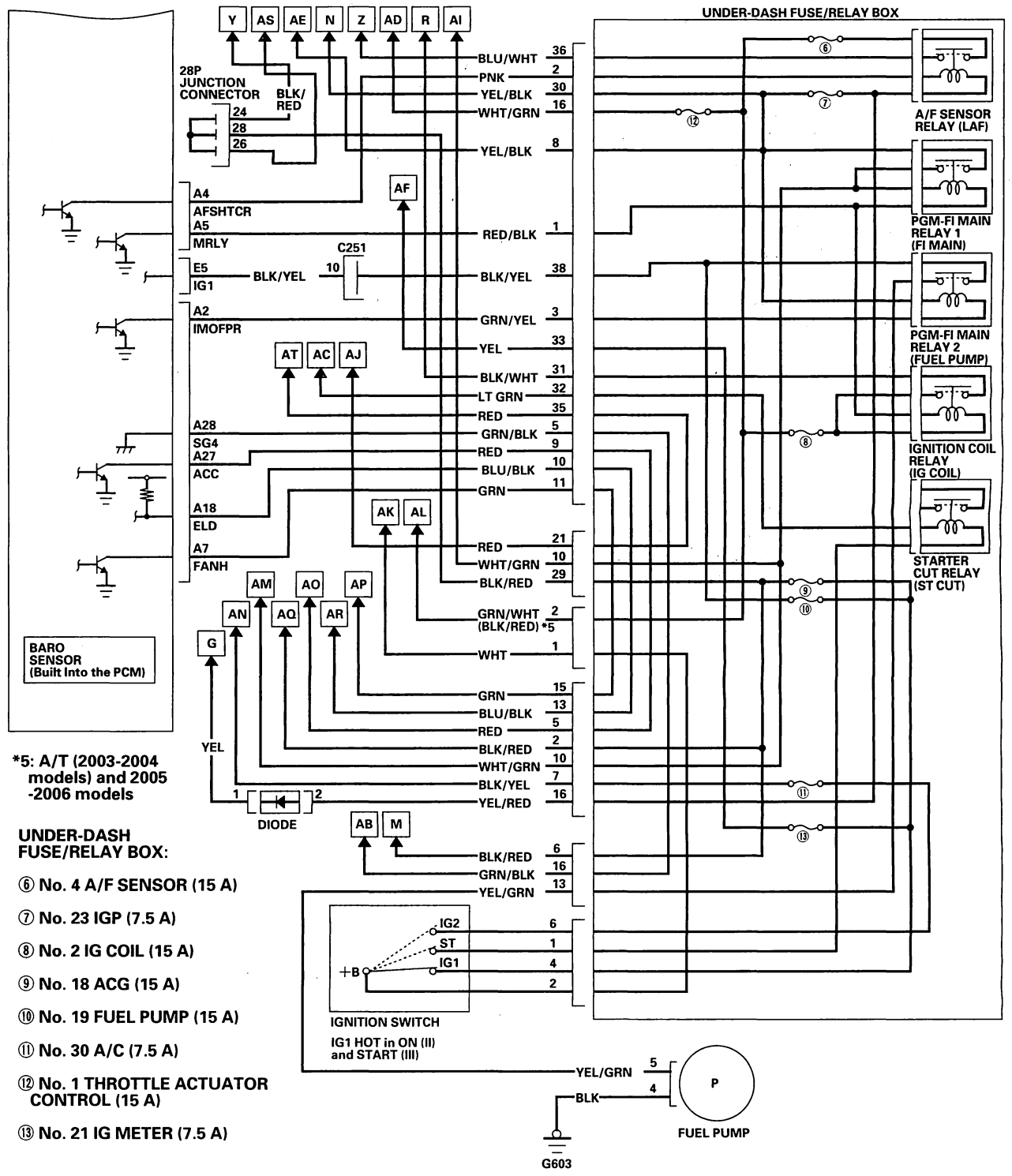

*5: A/T (2003-2004 models) and 2005 -2006 models

UNDER-DASH FUSE/RELAY BOX:

⑥ No. 4 A/F SENSOR (15 A)

⑦ No. 23 IGP (7.5 A)

⑧ No. 2 IG COIL (15 A)

⑨ No. 18 ACG (15 A)

⑩ No. 19 FUEL PUMP (15 A)

⑪ No. 30 A/C (7.5 A)

⑫ No. 1 THROTTLE ACTUATOR CONTROL (15 A)

⑬ No. 21 IG METER (7.5 A)

BACK

Protected by AR

How to Set Readiness Codes

Malfunction Indicator Lamp (MIL) Indication (In Relation to Readiness Codes)

The vehicle has certain "readiness codes" that are part of the on-board diagnostics for the emissions systems. If the vehicle's battery has been disconnected or gone dead, if the DTCs have been cleared, or if the ECM/PCM has been reset, these readiness codes are reset. In some states, part of the emissions testing is to make sure these codes are set to complete. If all of them are not set to complete, the vehicle may fail the emission test, or the test cannot be finished.

To check if the readiness codes are set to complete, turn the ignition switch ON (II), but do not start the engine. The MIL will come on for 15—20 seconds. If it then goes off, the readiness codes are complete. If it flashes five times, one or more readiness codes are not set to complete. To set readiness codes from incomplete to complete, do the procedure for the appropriate code.

To check the status of a specific DTC system, check the OBD status in the DTC MENU with the HDS (see page 11-8). This screen displays the code, the current data list of the enable criteria, and the status of the readiness testing.

Catalytic Converter Monitor and Readiness Code

NOTE:
- Do not turn the ignition switch off during the procedure.
- All readiness codes are cleared when the battery is disconnected or when the ECM/PCM is cleared with the HDS.
- Low ambient temperatures or excessive stop-and-go traffic may increase the drive time needed to switch the readiness code from incomplete to complete.
- The readiness code will not switch to complete until all the enable criteria are met.
- If a fault in the secondary HO2S system caused the MIL to come on, the readiness code cannot be set to complete until you correct the fault.

Enable Criteria

- ECT at 158 °F (70 °C) or higher.
- Intake air temperature (IAT) at —13 °F (—25 °C) or higher.
- Vehicle speed sensor (VSS) reads more than 3 mph (5 km/h).

Procedure

1. Connect the HDS to the vehicle's data link connector (DLC), and bring up the READINESS CODEs screen for Catalyst in the DTCs MENU.
2. Start the engine.
3. Test-drive the vehicle under stop-and-go conditions with short periods of steady cruise. After about 5 miles (8 km), the readiness code should switch to completed.
4. If the readiness code is still not set to complete, check for a Temporary DTC with the HDS. If there is no DTC, one or more of the enable criteria were probably not met; repeat the procedure.

BACK

Protected by AR

Evaporative Emission (EVAP) Control System Monitor and Readiness Code

NOTE: All readiness codes are cleared when the battery is disconnected or when the ECM/PCM is cleared with the HDS.

Enable Criteria

- Battery voltage is higher than 10.5 V.
- Engine at idle.
- ECT sensor between 176 °F (80 °C) and 212 °F (100 °C).
- MAP sensor less than 46.6 kPa (14 in.Hg, 350 mmHg).
- Vehicle speed 0 mph (0 km/h).
- IAT sensor between 32 °F (0 °C) and 212 °F (100 °C).

Procedure

1. Connect the HDS to the vehicle's data link connector (DLC).
2. Start the engine.
3. Select EVAP TEST in the INSPECTION MENU with the HDS, then select the FUNCTION TEST in the EVAP TEST MENU.
   - If the functions are normal, readiness is complete.
   - If the functions are not normal, go to the next step.
4. If the readiness code is still not set to complete, check for a Temporary DTC. If there is no DTC, one or more of the enable criteria were probably not met; repeat the procedure.

Air Fuel Ratio (A/F) Sensor Monitor and Readiness Code

NOTE:
- Do not turn the ignition switch off during the procedure.
- All readiness codes are cleared when the battery is disconnected or when the ECM/PCM is cleared with the HDS.

Enable Criteria

ECT at 158 °F (70 °C) or higher.

Procedure

1. Start the engine.
2. Test-drive the vehicle under stop-and-go conditions with short periods of steady cruise. During the drive, decelerate (with the throttle fully closed) for 5 seconds. After about 3.5 miles (5.6 km), the readiness code should switch from incomplete to complete.
3. Check the readiness codes screen for the Air Fuel Ratio (A/F) Sensor in the DTCs MENU with the HDS.
   - If the screen shows complete, readiness is complete.
   - If the screen shows not complete, go to the next step.
4. Check for a Temporary DTC. If there is no DTC, the enable criteria was probably not met. Select the DATA LIST Menu. Check the ECT in the ALL DATA LIST with the HDS. If the ECT is lower than 158 °F (70 °C), run the engine until it is higher than 158 °F (70 °C), then repeat the procedure.

(cont'd)

Protected by AR

How to Set Readiness Codes (cont'd)

Air Fuel Ratio (A/F) Sensor Heater Monitor Readiness Code

NOTE: All readiness codes are cleared when the battery is disconnected or when the ECM/PCM is cleared with the HDS.

Procedure

1. Start the engine, and let it idle for 1 minute. The readiness code should switch from incomplete to complete.
2. If the readiness code is still not set to complete, check for a Temporary DTC. If there is no DTC, repeat the procedure.

Misfire Monitor and Readiness Code

- This readiness code is always set to available because misfiring is continuously monitored.
- Monitoring pauses, and the misfire counter resets, if the vehicle is driven over a rough road.
- Monitoring also pauses, and the misfire counter holds at its current value, if the throttle position changes more than a predetermined value, or if driving conditions fall outside the range of any related enable criteria.

Fuel System Monitor and Readiness Code

- This readiness code is always set to available because the fuel system is continuously monitored during closed loop operation.
- Monitoring pauses when the catalytic converter, EVAP control system, and A/F sensor monitors are active.
- Monitoring also pauses when any related enable criteria are not being met. Monitoring resumes when the enable criteria is again being met.

Comprehensive Component Monitor and Readiness Code

This readiness code is always set to available because the comprehensive component monitor is continuously running whenever the engine is cranking or running.

EGR Monitor and Readiness Code

NOTE:
- Do not turn the ignition switch off during the procedure.
- All readiness codes are cleared when the battery is disconnected or when the ECM/PCM is cleared with the HDS.

Enable Criteria

ECT at 176 °F (80 °C) or higher.

Procedure

1. Connect the HDS to the vehicle's data link connector (DLC).
2. Start the engine.
3. Drive at a steady speed with the A/T in D or M/T in 4th gear, 50—62 mph (80—100 km/h) or above for more than 10 seconds.
4. With the A/T in D or M/T in 4th gear, decelerate from 62 mph (100 km/h) or above by completely releasing the throttle for at least 5 seconds. If the engine is stopped during this procedure, go to step 2 and do the procedure again.
5. Check the OBD status screen for DTC P0401 in the DTC's MENU with the HDS.
   - If it is passed, readiness is complete.
   - If it is not passed, go to step 3 and retest.

BACK

Protected by AR

Component Location Index

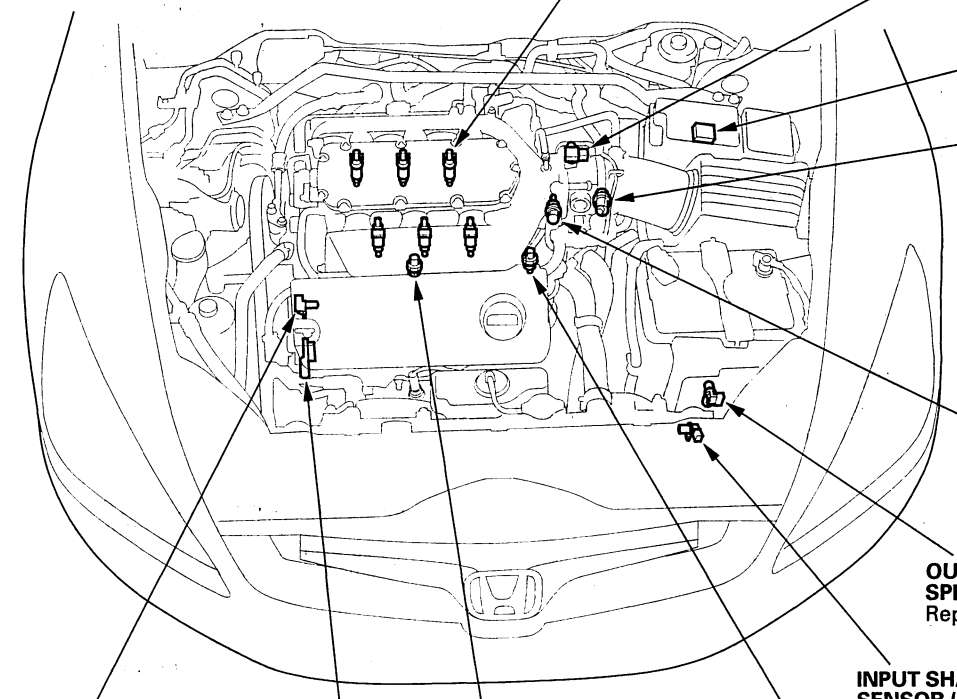

INJECTORS
Replacement, page 11-215

MANIFOLD ABSOLUTE PRESSURE (MAP) SENSOR
Replacement, page 11-223

ELECTRICAL LOAD DETECTOR (ELD)

ENGINE COOLANT TEMPERATURE (ECT) SENSOR 2 (2005-2006 models)
Replacement, page 11-223

INTAKE AIR TEMPERATURE (IAT) SENSOR
Replacement, page 11-219

OUTPUT SHAFT (COUNTERSHAFT) SPEED SENSOR (M/T)
Replacement, page 11-222

INPUT SHAFT (MAINSHAFT) SPEED SENSOR (M/T)
Replacement, page 11-222

CAMSHAFT POSITION (CMP) SENSOR
Replacement, page 11-221

KNOCK SENSOR
Replacement, page 11-220

ENGINE COOLANT TEMPERATURE (ECT) SENSOR (2005-2006 models: ENGINE COOLANT TEMPERATURE (ECT) SENSOR 1)
Replacement, page 11-219

CRANKSHAFT POSITION (CKP) SENSOR
Replacement, page 11-220

(cont'd)

Protected by AR

Component Location Index (cont'd)

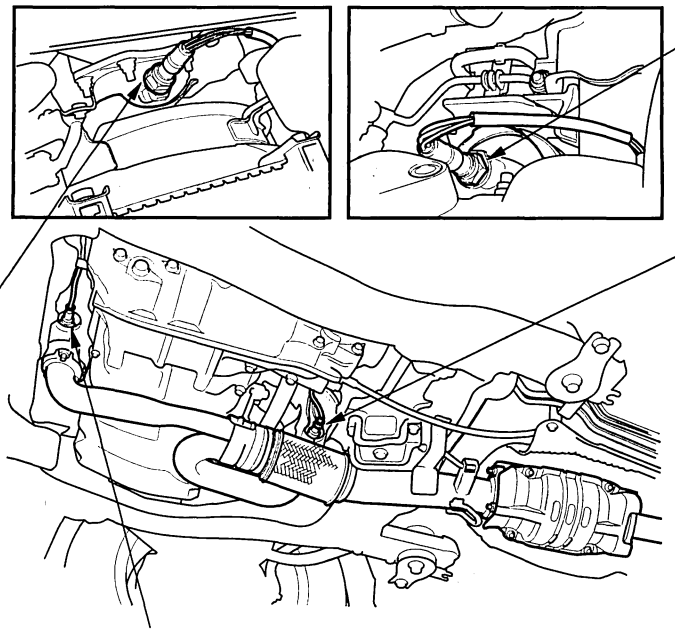

REAR AIR FUEL RATIO (A/F) SENSOR (BANK 1, SENSOR 1)
Replacement, page 11-217

REAR SECONDARY HEATED OXYGEN SENSOR (SECONDARY HO2S) (BANK 1, SENSOR 2)
Replacement, page 11-218

FRONT AIR FUEL RATIO (A/F) SENSOR (BANK 2, SENSOR 1)
Replacement, page 11-217

FRONT SECONDARY HEATED OXYGEN SENSOR (SECONDARY HO2S) (BANK 2, SENSOR 2)
Replacement, page 11-218

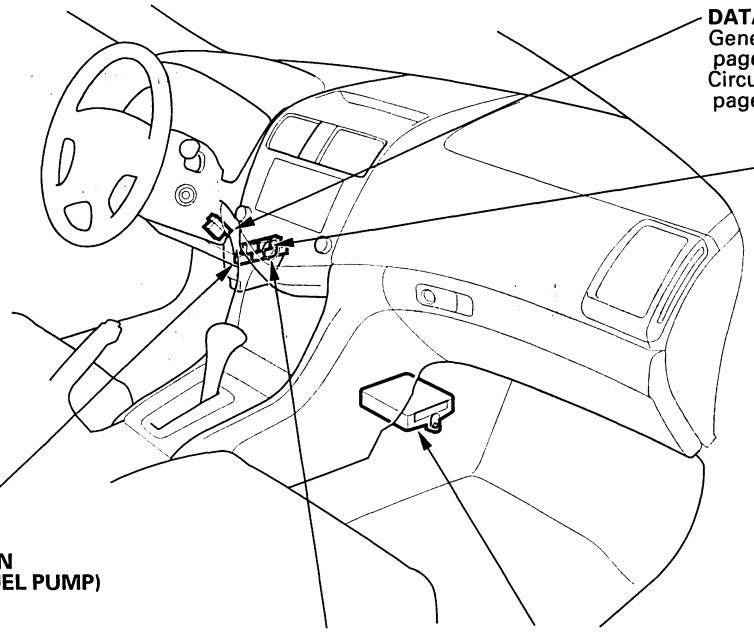

DATA LINK CONNECTOR (DLC)
General Troubleshooting Information, page 11-3
Circuit Troubleshooting, page 11-213

PGM-FI MAIN RELAY 1 (FI MAIN)

PGM-FI MAIN RELAY 2 (FUEL PUMP)

AIR FUEL RATIO (A/F) SENSOR RELAY (LAF)

ENGINE CONTROL MODULE (ECM)/ POWERTRAIN CONTROL MODULE (PCM)
General Troubleshooting Information, page 11-3
Replacement, page 11-224

BACK

Protected by AR

DTC P0107: MAP Sensor Circuit Low Voltage (2003-2004 models)

NOTE: Before you troubleshoot, record all freeze data and any on-board snapshot, and review the general troubleshooting information (see page 11-3).

1. Turn the ignition switch ON (II).
2. Clear the DTC with the HDS.
3. Turn the ignition switch OFF.
4. Turn the ignition switch ON (II).
5. Check for Temporary DTCs or DTCs with the HDS.

   Are DTC P0107, P0112, P0117, P2122, P2127, P2228, P0452, P2627, and P2630 indicated at the same time?

   YES—Go to step 17.

   NO—Go to step 6.
6. Check the MAP SENSOR in the DATA LIST with the HDS.

   Is about 3 kPa (1.0 in.Hg, 26 mmHg), or 0.23 V or less indicated?

   YES—Go to step 7.

   NO—Intermittent failure, system is OK at this time. Check for poor connections or loose terminals at the MAP sensor and the ECM/PCM. ■
7. Turn the ignition switch OFF.
8. Disconnect the MAP sensor 3P connector.
9. Turn the ignition switch ON (II).
10. Check the MAP SENSOR in the DATA LIST with the HDS.

    Is about 3 kPa (1.0 in.Hg, 26 mmHg), or 0.23 V or less indicated?

    YES—Go to step 13.

    NO—Go to step 11.
11. Measure voltage between MAP sensor 3P connector terminals No. 1 and No. 3.

MAP SENSOR 3P CONNECTOR

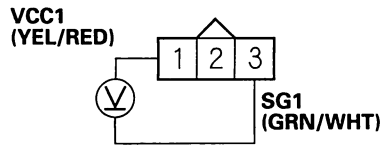

Wire side of female terminals

Is there about 5 V?

YES—Go to step 26.

NO—Go to step 12.

12. Measure voltage between ECM/PCM connector terminals D4 and D6.

ECM/PCM CONNECTOR D (17P)

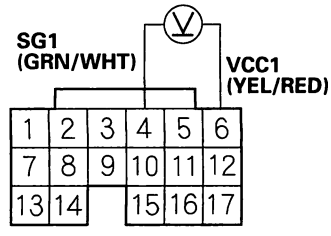

Wire side of female terminals

Is there about 5 V?

YES—Repair open in the wire between the ECM/PCM (D6) and the MAP sensor, then go to step 28.

NO—Go to step 33.

(cont'd)

Protected by AR

DTC Troubleshooting (cont'd)

13. Turn the ignition switch OFF.
14. Jump the SCS line with the HDS.
15. Disconnect ECM/PCM connector D (17P).
16. Check for continuity between MAP sensor 3P connector terminal No. 2 and body ground.

MAP SENSOR 3P CONNECTOR

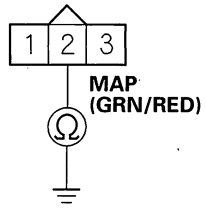

Wire side of female terminals

Is there continuity?

YES—Repair short in the wire between the ECM/PCM (D5) and the MAP sensor, then go to step 28.

NO—Go to step 33.

17. Turn the ignition switch OFF.
18. Jump the SCS line with the HDS.
19. Disconnect ECM/PCM connectors A (31P) and D (17P).
20. Disconnect the connectors from these parts:
    - MAP sensor
    - IMT (IMRC) actuator
    - APP sensor
    - EGR valve
    - FTP sensor
    - Input shaft (mainshaft) speed sensor
    - Output shaft (countershaft) speed sensor
21. Check for continuity between body ground and ECM/PCM connector terminals A31, D2, D6, and D12 individually.

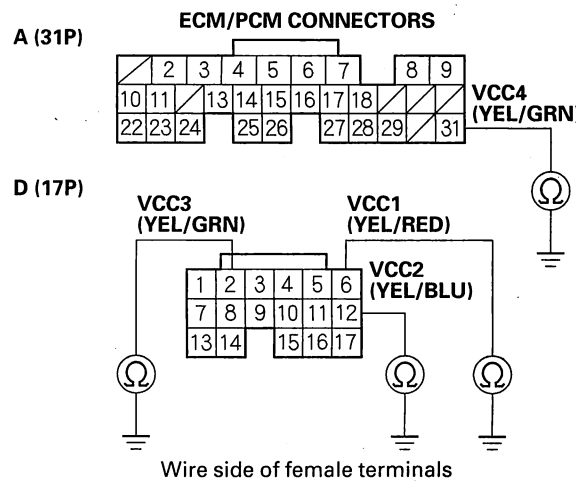

Wire side of female terminals

Is there continuity?

YES—Repair short in the wire between the ECM/PCM (A31, D2, D6, or D12) and each sensor, then go to step 28.

NO—Go to step 22.

BACK

Protected by AR

22. Reconnect ECM/PCM connectors A (31P) and D (17P).

23. Turn the ignition switch ON (II).

24. Measure voltage between ECM/PCM connector terminal D6 and body ground.

ECM/PCM CONNECTOR D (17P)

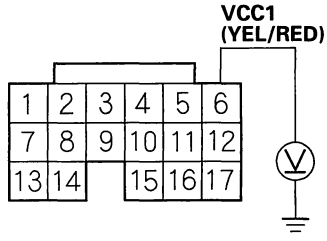

Wire side of female terminals

Is there about 5 V?

YES—Go to step 25.

NO—Go to step 33.

25. Continue to monitor voltage at ECM/PCM connector terminal D6 while reconnecting these parts, one at a time:

- MAP sensor
- APP sensor
- IMT (IMRC) actuator
- EGR valve
- FTP sensor
- Input shaft (mainshaft) speed sensor
- Output shaft (countershaft) speed sensor

Did the voltage drop to about 0 V?

YES—Replace the part that caused the voltage to drop, then go to step 28.

NO—Go to step 33.

26. Turn the ignition switch OFF.

27. Replace the MAP sensor (see page 11-223).

28. Reconnect all connectors.

29. Turn the ignition switch ON (II).

30. Reset the ECM/PCM with the HDS.

31. Do the ECM/PCM idle learn procedure (see page 11-302).

32. Check for Temporary DTCs or DTCs with the HDS.

Are any Temporary DTCs or DTCs indicated?

YES—If DTC P0107 is indicated, check for poor connections or loose terminals at the MAP sensor and the ECM/PCM, then go to step 1. If any other Temporary DTCs or DTCs are indicated, go to the indicated DTC's troubleshooting.

NO—Troubleshooting is complete. ■

33. Update the ECM/PCM if it does not have the latest software, or substitute a known-good ECM/PCM (see page 11-6).

34. Check for Temporary DTCs or DTCs with the HDS.

Are any Temporary DTCs or DTCs indicated?

YES—If DTC P0107 is indicated, check for poor connections or loose terminals at the MAP sensor and the ECM/PCM, then go to step 1. If any other Temporary DTCs or DTCs are indicated, go to the indicated DTC's troubleshooting.

NO—If the ECM/PCM was updated, troubleshooting is complete. If the ECM/PCM was substituted, replace the original ECM/PCM (see page 11-224). ■

Protected by AR

DTC Troubleshooting (cont'd)

DTC P0107: MAP Sensor Circuit Low Voltage (2005-2006 models)

NOTE: Before you troubleshoot, record all freeze data and any on-board snapshot, and review the general troubleshooting information (see page 11-3).

1. Turn the ignition switch ON (II).
2. Check the MAP SENSOR in the DATA LIST with the HDS.

   Is about 3 kPa (1.0 in.Hg, 26 mmHg), or 0.23 V or less indicated?

   YES—Go to step 3.

   NO—Intermittent failure, system is OK at this time. Check for poor connections or loose terminals at the MAP sensor and the ECM/PCM.■
3. Turn the ignition switch OFF.
4. Disconnect the MAP sensor 3P connector.
5. Turn the ignition switch ON (II).
6. Check the MAP SENSOR in the DATA LIST with the HDS.

   Is about 3 kPa (1.0 in.Hg, 26 mmHg), or 0.23 V or less indicated?

   YES—Go to step 9.

   NO—Go to step 7.
7. Measure voltage between MAP sensor 3P connector terminals No. 1 and No. 3.

MAP SENSOR 3P CONNECTOR

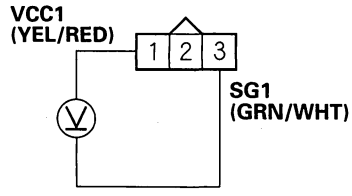

Wire side of female terminals

Is there about 5 V?

YES—Go to step 13.

NO—Go to step 8.

8. Measure voltage between ECM/PCM connector terminals D4 and D6.

ECM/PCM CONNECTOR D (17P)

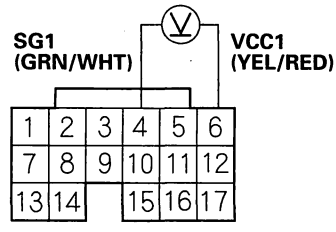

Wire side of female terminals

Is there about 5 V?

YES—Repair open in the wire between the ECM/PCM (D6) and the MAP sensor, then go to step 15.

NO—Go to step 20.

BACK

Protected by AR

9. Turn the ignition switch OFF.
10. Jump the SCS line with the HDS.
11. Disconnect ECM/PCM connector D (17P).
12. Check for continuity between MAP sensor 3P connector terminal No. 2 and body ground.

MAP SENSOR 3P CONNECTOR

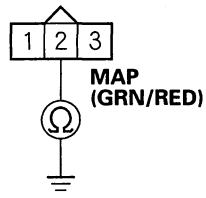

Wire side of female terminals

Is there continuity?

YES—Repair short in the wire between the ECM/PCM (D5) and the MAP sensor, then go to step 15.

NO—Go to step 20.

13. Turn the ignition switch OFF.
14. Replace the MAP sensor (see page 11-223).
15. Reconnect all connectors.
16. Turn the ignition switch ON (II).
17. Reset the ECM/PCM with the HDS.
18. Do the ECM/PCM idle learn procedure (see page 11-302).
19. Check for Temporary DTCs or DTCs with the HDS.

Are any Temporary DTCs or DTCs indicated?

YES—If DTC P0107 is indicated, check for poor connections or loose terminals at the MAP sensor and the ECM/PCM, then go to step 1. If any other Temporary DTCs or DTCs are indicated, go to the indicated DTC's troubleshooting.

NO—Troubleshooting is complete. ■

20. Update the ECM/PCM if it does not have the latest software, or substitute a known-good ECM/PCM (see page 11-6).
21. Check for Temporary DTCs or DTCs with the HDS.

Are any Temporary DTCs or DTCs indicated?

YES—If DTC P0107 is indicated, check for poor connections or loose terminals at the MAP sensor and the ECM/PCM, then go to step 1. If any other Temporary DTCs or DTCs are indicated, go to the indicated DTC's troubleshooting.

NO—If the ECM/PCM was updated, troubleshooting is complete. If the ECM/PCM was substituted, replace the original ECM/PCM (see page 11-224). ■

Protected by AR

DTC Troubleshooting (cont'd)

DTC P0108: MAP Sensor Circuit High Voltage

NOTE: Before you troubleshoot, record all freeze data and any on-board snapshot, and review the general troubleshooting information (see page 11-3).

1. Turn the ignition switch ON (II).
2. Check the MAP SENSOR in the DATA LIST with the HDS.

   Is 160 kPa (47.1 in.Hg, 1,197 mmHg), or 4.49 V or more indicated?

   YES—Go to step 3.

   NO—Intermittent failure, system is OK at this time. Check for poor connections or loose terminals at the MAP sensor and the ECM/PCM. ■
3. Turn the ignition switch OFF.
4. Disconnect the MAP sensor 3P connector.
5. Connect MAP sensor 3P connector terminals No. 2 and No. 3 with a jumper wire.

MAP SENSOR 3P CONNECTOR

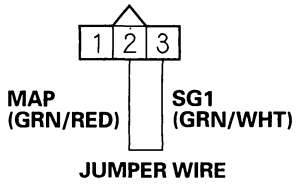

Wire side of female terminals

6. Turn the ignition switch ON (II).
7. Check the MAP SENSOR in the DATA LIST with the HDS.

   Is 160 kPa (47.1 in.Hg, 1,197 mmHg), or 4.49 V or more indicated?

   YES—Go to step 8.

   NO—Go to step 19.
8. Remove the jumper wire from MAP sensor 3P connector.
9. Measure voltage between MAP sensor 3P connector terminals No. 1 and No. 3.

MAP SENSOR 3P CONNECTOR

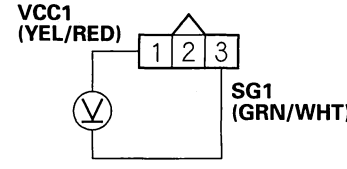

Wire side of female terminals

Is there about 5 V?

YES—Go to step 15.

NO—Go to step 10.

10. Turn the ignition switch OFF.
11. Jump the SCS line with the HDS.
12. Disconnect ECM/PCM connector D (17P).
13. Connect MAP sensor 3P connector terminal No. 3 to body ground with a jumper wire.

MAP SENSOR 3P CONNECTOR

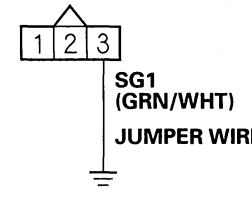

Wire side of female terminals

BACK

Protected by AR

14. Check for continuity between ECM/PCM connector terminal D4 and body ground.

ECM/PCM CONNECTOR D (17P)

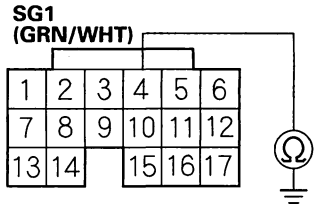

Wire side of female terminals

Is there continuity?

YES—Go to step 26.

NO—Repair open in the wire between the ECM/PCM (D4) and the MAP sensor, then go to step 21.

15. Turn the ignition switch OFF.

16. Connect ECM/PCM connector terminals D4 and D5 with a jumper wire.

ECM/PCM CONNECTOR D (17P)

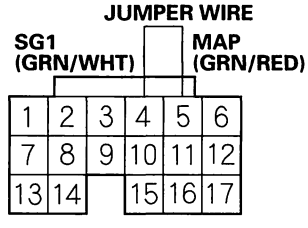

Wire side of female terminals

17. Turn the ignition switch ON (II).

18. Check the MAP SENSOR in the DATA LIST with the HDS.

Is 160 kPa (47.1 in.Hg, 1,197 mmHg), or 4.49 V or more indicated?

YES—Go to step 26.

NO—Repair open in the wire between the ECM/PCM (D5) and the MAP sensor, then go to step 21.

19. Turn the ignition switch OFF.

20. Replace the MAP sensor (see page 11-223).

21. Reconnect all connectors.

22. Turn the ignition switch ON (II).

23. Reset the ECM/PCM with the HDS.

24. Do the ECM/PCM idle learn procedure (see page 11-302).

25. Check for Temporary DTCs or DTCs with the HDS.

Are any Temporary DTCs or DTCs indicated?

YES—If DTC P0108 is indicated, check for poor connections or loose terminals at the MAP sensor and the ECM/PCM, then go to step 1. If any other Temporary DTCs or DTCs are indicated, go to the indicated DTC's troubleshooting.

NO—Troubleshooting is complete.■

26. Update the ECM/PCM if it does not have the latest software, or substitute a known-good ECM/PCM (see page 11-6).

27. Check for Temporary DTCs or DTCs with the HDS.

Are any Temporary DTCs or DTCs indicated?

YES—If DTC P0108 is indicated, check for poor connections or loose terminals at the MAP sensor and the ECM/PCM, then go to step 1. If any other Temporary DTCs or DTCs are indicated, go to the indicated DTC's troubleshooting.

NO—If the ECM/PCM was updated, troubleshooting is complete. If the ECM/PCM was substituted, replace the original ECM/PCM (see page 11-224).■

BACK

Protected by AR

DTC Troubleshooting (cont'd)

DTC P0111: IAT Sensor Circuit Range/ Performance Problem (2005-2006 models)

NOTE: Before you troubleshoot, record all freeze data and any on-board snapshot, and review the general troubleshooting information (see page 11-3).

1. Check for poor connections or loose terminals at the ECT sensor and the IAT sensor.

   Are the connections and terminals OK?

   YES—Go to step 2.

   NO—Repair the connectors or terminals, then go to step 15.

2. Remove the IAT sensor (see page 11-219).
3. Allow IAT sensor to cool to 77 °F (25 °C).
4. Note the ambient temperature.
5. Connect the IAT sensor to the 2P connector, but do not install in the intake manifold.
6. Turn the ignition switch ON (II).
7. Note the value of IAT SENSOR quickly in the DATA LIST with the HDS.
8. Compare the value of IAT SENSOR and the ambient temperature.

   Does the value of IAT SENSOR differ 5.4 °F (3 °C) or more?

   YES—Go to step 13.

   NO—Go to step 9.

9. Disconnect the IAT sensor from the 2P connector.
10. Blow hot air on the IAT sensor with a heat gun.
11. Connect IAT sensor to the 2P connector, but do not install in the intake manifold.
12. Check the IAT SENSOR in the DATA LIST with the HDS.

    Does the IAT SENSOR change 58 °F (32 °C) or more?

    YES—Intermittent failure, system is OK at this time. Check for poor connections or loose terminals at the IAT sensor and the ECM/PCM. ■

    NO—Go to step 13.

13. Turn the ignition switch OFF.
14. Replace the IAT sensor (see page 11-219).
15. Turn the ignition switch ON (II).
16. Reset the ECM/PCM with the HDS.
17. Do the ECM/PCM idle learn procedure (see page 11-302).
18. Check for Temporary DTCs or DTCs with the HDS.

    Are any Temporary DTCs or DTCs indicated?

    YES—If DTC P0111 is indicated, check for poor connections or loose terminals at the IAT sensor and the ECM/PCM, then go to step 1. If any other Temporary DTCs or DTCs are indicated, go to the indicated DTC's troubleshooting.

    NO—Troubleshooting is complete. ■

BACK

Protected by AR

DTC P0112: IAT Sensor Circuit Low Voltage (2003-2004 models)

NOTE: Before you troubleshoot, record all freeze data and any on-board snapshot, and review the general troubleshooting information (see page 11-3).

1. Turn the ignition switch ON (II).
2. Clear the DTC with the HDS.
3. Turn the ignition switch OFF.
4. Turn the ignition switch ON (II).
5. Check for Temporary DTCs or DTCs with the HDS.

   Are DTC P0107, P0112, P0117, P2122, P2127, P2228, P0452, P2627, and P2630 indicated at the same time?

   YES—Go to step 15.

   NO—Go to step 6.
6. Check the IAT SENSOR in the DATA LIST with the HDS.

   Is about 356 °F (180 °C) or more, or 0.08 V or less indicated?

   YES—Go to step 7.

   NO—Intermittent failure, system is OK at this time. Check for poor connections or loose terminals at the IAT sensor and the ECM/PCM. ■
7. Turn the ignition switch OFF.
8. Disconnect the IAT sensor 2P connector.
9. Turn the ignition switch ON (II).
10. Check the IAT SENSOR in the DATA LIST with the HDS.

    Is about 356 °F (180 °C) or more, or 0.08 V or less indicated?

    YES—Go to step 11.

    NO—Go to step 24.
11. Turn the ignition switch OFF.
12. Jump the SCS line with the HDS.
13. Disconnect ECM/PCM connector D (17P).
14. Check for continuity between IAT sensor 2P connector terminal No. 1 and body ground.

IAT SENSOR 2P CONNECTOR

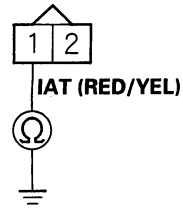

Wire side of female terminals

Is there continuity?

YES—Repair short in the wire between the IAT sensor and the ECM/PCM (D16), then go to step 26.

NO—Go to step 31.

15. Turn the ignition switch OFF.
16. Jump the SCS line with the HDS.
17. Disconnect ECM/PCM connectors A (31P) and D (17P).
18. Disconnect the connectors from these parts:

    - MAP sensor
    - APP sensor
    - IMT (IMRC) actuator
    - EGR valve
    - FTP sensor
    - Input shaft (mainshaft) speed sensor
    - Output shaft (countershaft) speed sensor

(cont'd)

Protected by AR

DTC Troubleshooting (cont'd)

19. Check for continuity between body ground and ECM/PCM connector terminals A31, D2, D6, and D12 individually.

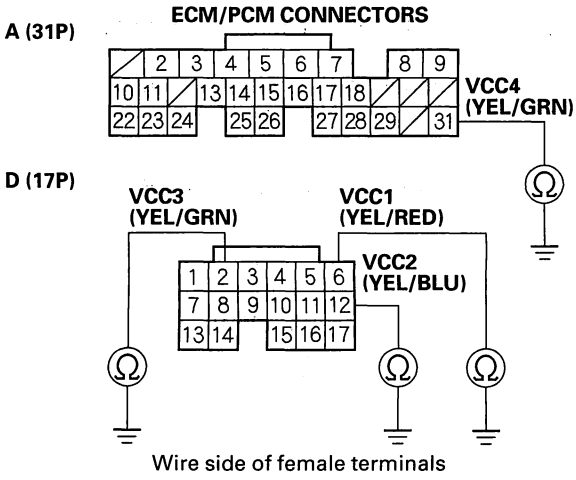

Is there continuity?

YES—Repair short in the wire between the ECM/PCM (A31, D2, D6, or D12) and each part, then go to step 26.

NO—Go to step 20.

20. Reconnect ECM/PCM connectors A (31P) and D (17P).

21. Turn the ignition switch ON (II).

22. Measure voltage between ECM/PCM connector terminal D6 and body ground.

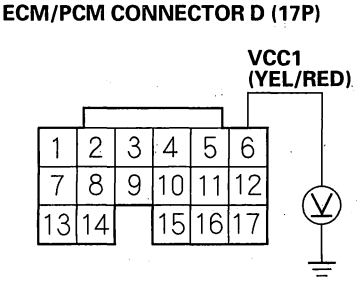

Is there about 5 V?

YES—Go to step 23.

NO—Go to step 31.

23. Continue to monitor voltage at the ECM/PCM connector terminal D6 while reconnecting these parts, one at a time:

- MAP sensor
- APP sensor
- IMT (IMRC) actuator
- EGR valve
- FTP sensor
- Input shaft (mainshaft) speed sensor
- Output shaft (countershaft) speed sensor

Did the voltage drop to about 0 V?

YES—Replace the part that caused the voltage to drop, then go to step 26.

NO—Go to step 31.

BACK

Protected by AR

24. Turn the ignition switch OFF.
25. Replace the IAT sensor (see page 11-219).
26. Reconnect all connectors.
27. Turn the ignition switch ON (II).
28. Reset the ECM/PCM with the HDS.
29. Do the ECM/PCM idle learn procedure (see page 11-302).
30. Check for Temporary DTCs or DTCs with the HDS.

    Are any Temporary DTCs or DTCs indicated?

    YES—If DTC P0112 is indicated, check for poor connections or loose terminals at the IAT sensor and the ECM/PCM, then go to step 1. If any other Temporary DTCs or DTCs are indicated, go to the indicated DTC's troubleshooting.

    NO—Troubleshooting is complete. ■
31. Update the ECM/PCM if it does not have the latest software, or substitute a known-good ECM/PCM (see page 11-6).
32. Check for Temporary DTCs or DTCs with the HDS.

    Are any Temporary DTCs or DTCs indicated?

    YES—If DTC P0112 is indicated, check for poor connections or loose terminals at the IAT sensor and the ECM/PCM, then go to step 1. If any other Temporary DTCs or DTCs are indicated, go to the indicated DTC's troubleshooting.

    NO—If the ECM/PCM was updated, troubleshooting is complete. If the ECM/PCM was substituted, replace the original ECM/PCM (see page 11-224). ■

DTC P0112: IAT Sensor Circuit Low Voltage (2005-2006 models)

NOTE: Before you troubleshoot, record all freeze data and any on-board snapshot, and review the general troubleshooting information (see page 11-3).

1. Turn the ignition switch ON (II).
2. Check the IAT SENSOR in the DATA LIST with the HDS.

   Is about 356 °F (180 °C) or more, or 0.08 V or less indicated?

   YES—Go to step 3.

   NO—Intermittent failure, system is OK at this time. Check for poor connections or loose terminals at the IAT sensor and the ECM/PCM. ■
3. Turn the ignition switch OFF.
4. Disconnect the IAT sensor 2P connector.
5. Turn the ignition switch ON (II).
6. Check the IAT SENSOR in the DATA LIST with the HDS.

   Is about 356 °F (180 °C) or more, or 0.08 V or less indicated?

   YES—Go to step 7.

   NO—Go to step 11.

(cont'd)

Protected by AR

DTC Troubleshooting (cont'd)

7. Turn the ignition switch OFF.
8. Jump the SCS line with the HDS.
9. Disconnect ECM/PCM connector D (17P).
10. Check for continuity between IAT sensor 2P connector terminal No. 1 and body ground.

IAT SENSOR 2P CONNECTOR

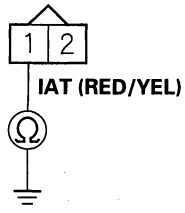

Wire side of female terminals

Is there continuity?

YES—Repair short in the wire between the IAT sensor and the ECM/PCM (D16), then go to step 13.

NO—Go to step 18.

11. Turn the ignition switch OFF.
12. Replace the IAT sensor (see page 11-219).
13. Reconnect all connectors.
14. Turn the ignition switch ON (II).
15. Reset the ECM/PCM with the HDS.
16. Do the ECM/PCM idle learn procedure (see page 11-302).
17. Check for Temporary DTCs or DTCs with the HDS.

    Are any Temporary DTCs or DTCs indicated?

    YES—If DTC P0112 is indicated, check for poor connections or loose terminals at the IAT sensor and the ECM/PCM, then go to step 1. If any other Temporary DTCs or DTCs are indicated, go to the indicated DTC's troubleshooting.

    NO—Troubleshooting is complete.■
18. Update the ECM/PCM if it does not have the latest software, or substitute a known-good ECM/PCM (see page 11-6).
19. Check for Temporary DTCs or DTCs with the HDS.

    Are any Temporary DTCs or DTCs indicated?

    YES—If DTC P0112 is indicated, check for poor connections or loose terminals at the IAT sensor and the ECM/PCM, then go to step 1. If any other Temporary DTCs or DTCs are indicated, go to the indicated DTC's troubleshooting.

    NO—If the ECM/PCM was updated, troubleshooting is complete. If the ECM/PCM was substituted, replace the original ECM/PCM (see page 11-224).■

BACK

Protected by AR

DTC P0113: IAT Sensor Circuit High Voltage

NOTE: Before you troubleshoot, record all freeze data and any on-board snapshot, and review the general troubleshooting information (see page 11-3).

1. Turn the ignition switch ON (II).
2. Check the IAT SENSOR in the DATA LIST with the HDS.

   Is about −40 °F (−40 °C) or less, or 4.90 V or more indicated?

   YES—Go to step 3.

   NO—Intermittent failure, system is OK at this time. Check for poor connections or loose terminals at the IAT sensor and the ECM/PCM. ■
3. Turn the ignition switch OFF.
4. Disconnect the IAT sensor 2P connector.
5. Connect IAT sensor 2P connector terminals No. 1 and No. 2 with a jumper wire.

IAT SENSOR 2P CONNECTOR

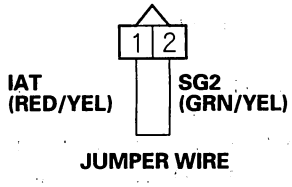

Wire side of female terminals

6. Turn the ignition switch ON (II).
7. Check the IAT SENSOR in the DATA LIST with the HDS.

   Is about −40 °F (−40 °C) or less, or 4.90 V or more indicated?

   YES—Go to step 8.

   NO—Go to step 18.
8. Turn the ignition switch OFF.
9. Remove the jumper wire from the IAT sensor 2P connector.
10. Turn the ignition switch ON (II).
11. Measure voltage between IAT sensor 2P connector terminal No. 1 and body ground.

IAT SENSOR 2P CONNECTOR

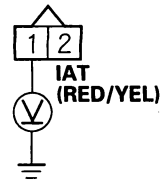

Wire side of female terminals

Is there about 5 V?

YES—Go to step 12.

NO—Go to step 17.

12. Turn the ignition switch OFF.
13. Jump the SCS line with the HDS.
14. Disconnect ECM/PCM connector D (17P).
15. Connect IAT sensor 2P connector terminal No. 2 to body ground with a jumper wire.

IAT SENSOR 2P CONNECTOR

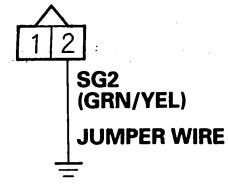

Wire side of female terminals

(cont'd)

Protected by AR

DTC Troubleshooting (cont'd)

16. Check for continuity between ECM/PCM connector terminal D10 and body ground.

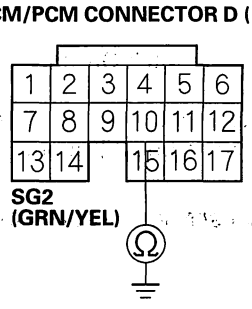

Wire side of female terminals

Is there continuity?

YES—Go to step 25.

NO—Repair open in the wire between the ECM/PCM (D10) and the IAT sensor, then go to step 20.

17. Measure voltage between ECM/PCM connector terminal D16 and body ground.

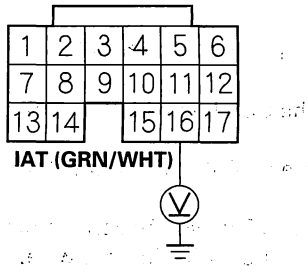

Wire side of female terminals

Is there about 5 V?

YES—Repair open in the wire between the ECM/PCM (D16) and the IAT sensor, then go to step 20.

NO—Go to step 25.

18. Turn the ignition switch OFF.

19. Replace the IAT sensor (see page 11-219).

20. Reconnect all connectors.

21. Turn the ignition switch ON (II).

22. Reset the ECM/PCM with the HDS.

23. Do the ECM/PCM idle learn procedure (see page 11-302).

24. Check for Temporary DTCs or DTCs with the HDS.

Are any Temporary DTCs or DTCs indicated?

YES—If DTC P0113 is indicated, check for poor connections or loose terminals at the IAT sensor and the ECM/PCM, then go to step 1. If any other Temporary DTCs or DTCs are indicated, go to the indicated DTC's troubleshooting.

NO—Troubleshooting is complete. ■

25. Update the ECM/PCM if it does not have the latest software, or substitute a known-good ECM/PCM (see page 11-6).

26. Check for Temporary DTCs or DTCs with the HDS.

Are any Temporary DTCs or DTCs indicated?

YES—If DTC P0113 is indicated, check for poor connections or loose terminals at the IAT sensor and the ECM/PCM, then go to step 1. If any other Temporary DTCs or DTCs are indicated, go to the indicated DTC's troubleshooting.

NO—If the ECM/PCM was updated, troubleshooting is complete. If the ECM/PCM was substituted, replace the original ECM/PCM (see page 11-224). ■

BACK

Protected by AR

DTC P0116: ECT Sensor Range/Performance Problem (2003-2004 models)

NOTE: Before you troubleshoot, record all freeze data and any on-board snapshot, and review the general troubleshooting information (see page 11-3).

1. Turn the ignition switch ON (II).
2. Check the ECT SENSOR in the DATA LIST with the HDS.

   Is about 176 °F (80 °C) or more, or 0.86 V or less indicated?

   YES—Go to step 3.

   NO—Go to step 7.
3. Note the coolant temperature from step 2.
4. Turn the ignition switch OFF.
5. Let the engine cool for 1 hour.
6. Check the ECT SENSOR in the DATA LIST with the HDS.

   Did the ECT change 3.6 °F (2 °C) or more?

   YES—Intermittent failure, system is OK at this time. Check the thermostat and the cooling system (see page 10-4).■

   NO—Go to step 10.
7. Note the coolant temperature.
8. Start the engine. Hold the engine speed at 3,000 rpm without load (in Park or neutral) until the radiator fan comes on, then let it idle.
9. Check the ECT SENSOR in the DATA LIST with the HDS.

   Does the ECT change 3.6 °F (2 °C) or more?

   YES—Intermittent failure, system is OK at this time. Check the thermostat and the cooling system (see page 10-4).■

   NO—Go to step 10.
10. Turn the ignition switch OFF.
11. Replace the ECT sensor (see page 11-219).
12. Turn the ignition switch ON (II).
13. Reset the ECM/PCM with the HDS.
14. Do the ECM/PCM idle learn procedure (see page 11-302).
15. Allow the engine to cool to between 23 °F (−5 °C) and 77 °F (25 °C).
16. Start the engine, and let it idle for 20 minutes.
17. Check for Temporary DTCs or DTCs with the HDS.

    Are any Temporary DTCs or DTCs indicated?

    YES—If DTC P0116 is indicated, check for poor connections or loose terminals at the ECT sensor and the ECM/PCM, then go to step 1. If any other Temporary DTCs or DTCs are indicated, go to the indicated DTC's troubleshooting.

    NO—Go to step 18.
18. Monitor the OBD STATUS for DTC P0116 in the DTCs MENU with the HDS.

    Does the screen indicate PASSED?

    YES—Troubleshooting is complete.■

    NO—If the screen indicates FAILED, check for poor connections or loose terminals at the ECT sensor and the ECM/PCM, then go to step 1. If the screen indicates NOT COMPLETED, go to step 15 and recheck.

Protected by AR

DTC Troubleshooting (cont'd)

DTC P0116: ECT Sensor 1 Range/ Performance Problem (2005-2006 models)

NOTE: Before you troubleshoot, record all freeze data and any on-board snapshot, and review the general troubleshooting information (see page 11-3).

1. Turn the ignition switch ON (II).
2. Check ECT SENSOR 1 in the DATA LIST with the HDS.

   Is about 176 °F (80 °C) or more, or 0.78 V or less indicated?

   YES—Go to step 6.

   NO—Go to step 3.
3. Note the value of ECT SENSOR 1 in the DATA LIST with the HDS.
4. Start the engine. Hold the engine speed at 3,000 rpm without load (in Park or neutral) until the radiator fan comes on, then let it idle.
5. Check ECT SENSOR 1 in the DATA LIST with the HDS.

   Does ECT SENSOR 1 change 18 °F (10 °C) or more?

   YES—Intermittent failure, system is OK at this time. Check for poor connections or loose terminals at ECT sensor 1 and the ECM/PCM. ■

   NO—Go to step 11.
6. Note the value of ECT SENSOR 1 in the DATA LIST with the HDS.
7. Turn the ignition switch OFF.
8. Open the hood, and let the engine cool for 3 hours.
9. Turn the ignition switch ON (II).
10. Check ECT SENSOR 1 in the DATA LIST with the HDS.

    Does ECT SENSOR 1 change 18 °F (10 °C) or more?

    YES—Intermittent failure, system is OK at this time. Check for poor connections or loose terminals at ECT sensor 1 and the ECM/PCM. ■

    NO—Go to step 11.
11. Turn the ignition switch OFF.
12. Replace ECT sensor 1 (see page 11-219).
13. Turn the ignition switch ON (II).
14. Reset the ECM/PCM with the HDS.
15. Do the ECM/PCM idle learn procedure (see page 11-302).
16. Check for Temporary DTCs or DTCs with the HDS.

    Are any Temporary DTCs or DTCs indicated?

    YES—If DTC P0116 is indicated, check for poor connections or loose terminals at ETC sensor 1 and the ECM/PCM, then go to step 1. If any other Temporary DTSs or DTCs are indicated, go to the indicated DTC's troubleshooting.

    NO—Troubleshooting is complete. ■

BACK

Protected by AR

DTC P0117: ECT Sensor Circuit Low Voltage (2003-2004 models)

NOTE: Before you troubleshoot, record all freeze data and any on-board snapshot, and review the general troubleshooting information (see page 11-3).

1. Turn the ignition switch ON (II).
2. Clear the DTC with the HDS.
3. Turn the ignition switch OFF.
4. Turn the ignition switch ON (II).
5. Check for Temporary DTCs or DTCs with the HDS.

   Are DTC P0107, P0112, P0117, P2122, P2127, P2228, P0452, P2627, and P2630 indicated at same time?

   YES—Go to step 15.

   NO—Go to step 6.
6. Check the ECT SENSOR in the DATA LIST with the HDS.

   Is about 356 °F (180 °C) or more, or 0.08 V or less indicated?

   YES—Go to step 7.

   NO—Intermittent failure, system is OK at this time. Check for poor connections or loose terminals at the ECT sensor and the ECM/PCM. ■
7. Turn the ignition switch OFF.
8. Disconnect the ECT sensor 2P connector.
9. Turn the ignition switch ON (II).
10. Check the ECT SENSOR in the DATA LIST with the HDS.

    Is about 356 °F (180 °C) or more, or 0.08 V or less indicated?

    YES—Go to step 11.

    NO—Go to step 24.
11. Turn the ignition switch OFF.
12. Jump the SCS line with the HDS.
13. Disconnect ECM/PCM connector D (17P).
14. Check for continuity between ECT sensor 2P connector terminal No. 1 and body ground.

ECT SENSOR 2P CONNECTOR

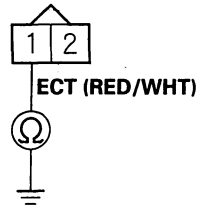

Wire side of female terminals

Is there continuity?

YES—Repair short in the wire between the ECT sensor and the ECM/PCM (D17), then go to step 26.

NO—Go to step 31.

15. Turn the ignition switch OFF.
16. Jump the SCS line with the HDS.
17. Disconnect ECM/PCM connectors A (31P) and D (17P).
18. Disconnect the connectors from these parts:

    - MAP sensor
    - APP sensor
    - IMT (IMRC) actuator
    - EGR valve
    - FTP sensor
    - Input shaft (mainshaft) speed sensor
    - Output shaft (countershaft) speed sensor

(cont'd)

Protected by AR

DTC Troubleshooting (cont'd)

19. Check for continuity between body ground and ECM/PCM connector terminals A31, D2, D6, and D12 individually.

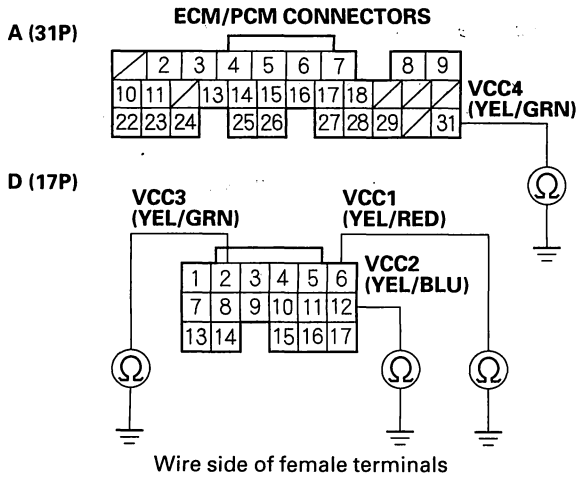

Wire side of female terminals

Is there continuity?

YES—Repair short in the wire between the ECM/PCM (A31, D2, D6, or D12) and each part, then go to step 26.

NO—Go to step 20.

20. Reconnect ECM/PCM connectors A (31P) and D (17P).

21. Turn the ignition switch ON (II).

22. Measure voltage between ECM/PCM connector terminal D6 and body ground.

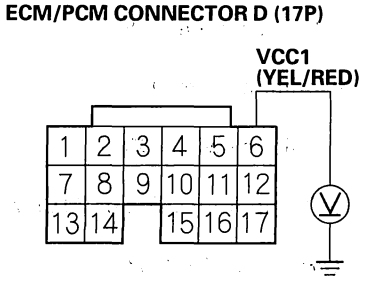

Wire side of female terminals

Is there about 5 V?

YES—Go to step 23.

NO—Go to step 31.

23. Continue to monitor voltage at the ECM/PCM connector terminal D6 while reconnecting these parts, one at a time:

- MAP sensor
- APP sensor
- IMT (IMRC) actuator
- EGR valve
- FTP sensor
- Input shaft (mainshaft) speed sensor
- Output shaft (countershaft) speed sensor

Did the voltage drop to about 0 V?

YES—Replace the part that caused the voltage to drop, then go to step 26.

NO—Go to step 31.

BACK

Protected by AR

24. Turn the ignition switch OFF.
25. Replace the ECT sensor (see page 11-219).
26. Reconnect all connectors.
27. Turn the ignition switch ON (II).
28. Reset the ECM/PCM with the HDS.
29. Do the ECM/PCM idle learn procedure (see page 11-302).
30. Check for Temporary DTCs or DTCs with the HDS.

    Are any Temporary DTCs or DTCs indicated?

    YES—If DTC P0117 is indicated, check for poor connections or loose terminals at the ECT sensor and the ECM/PCM, then go to step 1. If any other Temporary DTCs or DTCs are indicated, go to the indicated DTC's troubleshooting.

    NO—Troubleshooting is completed. ■
31. Update the ECM/PCM if it does not have the latest software, or substitute a known-good ECM/PCM (see page 11-6).
32. Check for Temporary DTCs or DTCs with the HDS.

    Are any Temporary DTCs or DTCs indicated?

    YES—If DTC P0117 is indicated, check for poor connections or loose terminals at the ECT sensor and the ECM/PCM, then go to step 1. If any other Temporary DTCs or DTCs are indicated, go to the indicated DTC's troubleshooting.

    NO—If the ECM/PCM was updated, troubleshooting is complete. If the ECM/PCM was substituted, replace the original ECM/PCM (see page 11-224). ■

DTC P0117: ECT Sensor 1 Circuit Low Voltage (2005-2006 models)

NOTE: Before you troubleshoot, record all freeze data and any on-board snapshot, and review the general troubleshooting information (see page 11-3).

1. Turn the ignition switch ON (II).
2. Check ECT SENSOR 1 in the DATA LIST with the HDS.

    Is about 356 °F (180 °C) or more, or 0.08 V or less indicated?

    YES—Go to step 3.

    NO—Intermittent failure, system is OK at this time. Check for poor connections or loose terminals at ECT sensor 1 and the ECM/PCM. ■
3. Turn the ignition switch OFF.
4. Disconnect ECT sensor 1 2P connector.
5. Turn the ignition switch ON (II).
6. Check ECT SENSOR 1 in the DATA LIST with the HDS.

    Is about 356 °F (180 °C) or more, or 0.08 V or less indicated?

    YES—Go to step 7.

    NO—Go to step 11.

(cont'd)

Protected by AR

DTC Troubleshooting (cont'd)

7. Turn the ignition switch OFF.
8. Jump the SCS line with the HDS.
9. Disconnect ECM/PCM connector D (17P).
10. Check for continuity between ECT sensor 1 2P connector terminal No. 1 and body ground.

ECT SENSOR 1 2P CONNECTOR

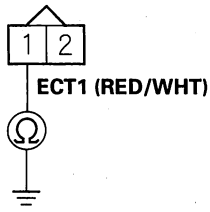

Wire side of female terminals

Is there continuity?

YES—Repair short in the wire between ECT sensor 1 and the ECM/PCM (D17), then go to step 13.

NO—Go to step 18.

11. Turn the ignition switch OFF.
12. Replace ECT sensor 1 (see page 11-219).
13. Reconnect all connectors.
14. Turn the ignition switch ON (II).
15. Reset the ECM/PCM with the HDS.
16. Do the ECM/PCM idle learn procedure (see page 11-302).
17. Check for Temporary DTCs or DTCs with the HDS.

    Are any Temporary DTCs or DTCs indicated?

    YES—If DTC P0117 is indicated, check for poor connections or loose terminals at ECT sensor 1 and the ECM/PCM, then go to step 1. If any other Temporary DTCs or DTCs are indicated, go to the indicated DTC's troubleshooting.

    NO—Troubleshooting is complete. ■
18. Update the ECM/PCM if it does not have the latest software, or substitute a known-good ECM/PCM (see page 11-6).
19. Check for Temporary DTCs or DTCs with the HDS.

    Are any Temporary DTCs or DTCs indicated?

    YES—If DTC P0117 is indicated, check for poor connections or loose terminals at ECT sensor 1 and the ECM/PCM, then go to step 1. If any other Temporary DTCs or DTCs are indicated, go to the indicated DTC's troubleshooting.

    NO—If the ECM/PCM was updated, troubleshooting is complete. If the ECM/PCM was substituted, replace the original ECM/PCM (see page 11-224). ■

BACK

Protected by AR

DTC P0118: ECT Sensor/ECT Sensor 1 Circuit High Voltage

NOTE: Before you troubleshoot, record all freeze data and any on-board snapshot, and review the general troubleshooting information (see page 11-3).

1. Turn the ignition switch ON (II).
2. Check ECT SENSOR (1) in the DATA LIST with the HDS.

   Is about −40 °F (−40 °C) or less, or 4.90 V or more indicated?

   YES—Go to step 3.

   NO—Intermittent failure, system is OK at this time. Check for poor connections or loose terminals at the ECT sensor/ECT sensor 1 and the ECM/PCM. ■
3. Turn the ignition switch OFF.
4. Disconnect the ECT sensor/ECT sensor 1 2P connector.
5. Connect ECT sensor/ECT sensor 1 2P connector terminals No. 1 and No. 2 with a jumper wire.

ECT SENSOR/ECT SENSOR 1 2P CONNECTOR

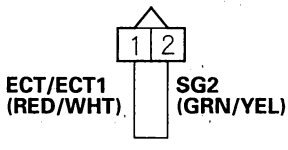

Wire side of female terminals

6. Turn the ignition switch ON (II).
7. Check the ECT SENSOR (1) in the DATA LIST with the HDS.

   Is about −40 °F (−40 °C) or less, or 4.90 V or more indicated?

   YES—Go to step 8.

   NO—Go to step 18.
8. Turn the ignition switch OFF.
9. Remove the jumper wire from the ECT sensor/ECT sensor 1 2P connector.
10. Turn the ignition switch ON (II).
11. Measure voltage between ECT sensor/ECT sensor 1 2P connector terminal No. 1 and body ground.

ECT SENSOR/ECT SENSOR 1 2P CONNECTOR

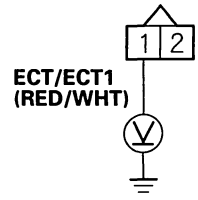

Wire side of female terminals

Is there about 5 V?

YES—Go to step 12.

NO—Go to step 17.

12. Turn the ignition switch OFF.
13. Jump the SCS line with the HDS.
14. Disconnect ECM/PCM connector D (17P).
15. Connect ECT sensor/ECT sensor 1 2P connector terminal No. 2 to body ground with a jumper wire.

ECT SENSOR/ECT SENSOR 1 2P CONNECTOR

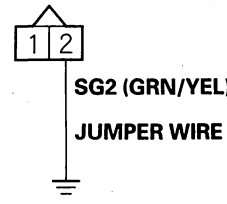

Wire side of female terminals

(cont'd)

Protected by AR

DTC Troubleshooting (cont'd)

16. Check for continuity between ECM/PCM connector terminal D10 and body ground.

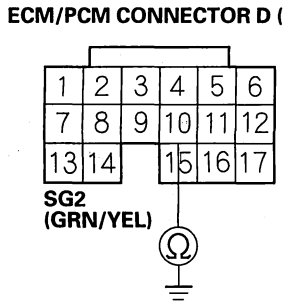

Wire side of female terminals

Is there continuity?

YES—Go to step 25.

NO—Repair open in the wire between the ECM/PCM (D10) and the ECT sensor/ECT sensor 1, then go to step 20.

17. Measure voltage between ECM/PCM connector terminal D17 and body ground.

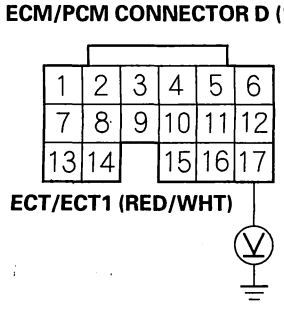

Wire side of female terminals

Is there about 5 V?

YES—Repair open in the wire between the ECM/PCM (D17) and the ECT sensor/ECT sensor 1, then go to step 20.

NO—Go to step 25.

18. Turn the ignition switch OFF.

19. Replace the ECT sensor/ECT sensor 1 (see page 11-219).

20. Reconnect all connectors.

21. Turn the ignition switch ON (II).

22. Reset the ECM/PCM with the HDS.

23. Do the ECM/PCM idle learn procedure (see page 11-302).

24. Check for Temporary DTCs or DTCs with the HDS.

Are any Temporary DTCs or DTCs indicated?

YES—If DTC P0118 is indicated, check for poor connections or loose terminals at the ECT sensor/ECT sensor 1 and the ECM/PCM, then go to step 1. If any other Temporary DTCs or DTCs are indicated, go to the indicated DTC's troubleshooting.

NO—Troubleshooting is complete. ■

25. Update the ECM/PCM if it does not have the latest software, or substitute a known-good ECM/PCM (see page 11-6).

26. Check for Temporary DTCs or DTCs with the HDS.

Are any Temporary DTCs or DTCs indicated?

YES—If DTC P0118 is indicated, check for poor connections or loose terminals at the ECT sensor/ECT sensor 1 and the ECM/PCM, then go to step 1. If any other Temporary DTCs or DTCs are indicated, go to the indicated DTC's troubleshooting.

NO—If the ECM/PCM was updated, troubleshooting is complete. If the ECM/PCM was substituted, replace the original ECM/PCM (see page 11-224). ■

BACK

Protected by AR

DTC P0125: ECT Sensor Slow Response (2003-2004 models)

NOTE: Before you troubleshoot, record all freeze data and any on-board snapshot, and review the general troubleshooting information (see page 11-3).

1. Start the engine, and let it idle.
2. Check the ECT SENSOR in the DATA LIST with the HDS.

   Is about 86 °F (30 °C) or less, or 2.61 V or more indicated?

   YES—Go to step 3.

   NO—Intermittent failure, system is OK at this time. Check the thermostat and the cooling system (see page 10-4).■
3. Let the engine idle for 6 minutes.
4. Check the ECT SENSOR in the DATA LIST with the HDS.

   Is about 86 °F (30 °C) or less, or 2.61 V or more indicated?

   YES—Go to step 5.

   NO—Intermittent failure, system is OK at this time. Check the thermostat and the cooling system (see page 10-4).■
5. Turn the ignition switch OFF.
6. Replace the ECT sensor (see page 11-219).
7. Turn the ignition switch ON (II).
8. Reset the ECM/PCM with the HDS.
9. Do the ECM/PCM idle learn procedure (see page 11-302).
10. Allow the engine to cool to between 23 °F (—5 °C) and 77 °F (25 °C).
11. Start the engine, and let it idle for 20 minutes.
12. Check for Temporary DTCs or DTCs with the HDS.

    Are any Temporary DTCs or DTCs indicated?

    YES—If DTC P0125 is indicated, check for poor connections or loose terminals at the ECT sensor and the ECM/PCM, then go to step 1. If any other Temporary DTCs or DTCs are indicated, go to the indicated DTC's troubleshooting.

    NO—Go to step 13.
13. Monitor the OBD STATUS for DTC P0125 in the DTCs MENU with the HDS.

    Does the screen indicate PASSED?

    YES—Troubleshooting is complete.■

    NO—If the screen indicates FAILED, check for poor connections or loose terminals at the ECT sensor and the ECM/PCM, then go to step 1. If the screen indicates NOT COMPLETED, go to step 10 and recheck.

Protected by AR

DTC Troubleshooting (cont'd)

DTC P0125: ECT Sensor 1 Slow Response (2005-2006 models)

NOTE: Before you troubleshoot, record all freeze data and any on-board snapshot, and review the general troubleshooting information (see page 11-3).

1. Start the engine, and let it idle for 5 minutes or more.
2. Check ECT SENSOR 1 in the DATA LIST with the HDS.

   Is about 10 °F (−12 °C) or less, or 4.45 V or more indicated?

   YES—Go to step 9.

   NO—Go to step 3.
3. Allow the engine to cool to 104 °F (40 °C) or less.
4. Note the value of ECT SENSOR 1 and ECT SENSOR 2 in the DATA LIST with the HDS.
5. Start the engine, and let it idle.
6. Let the engine idle until ECT SENSOR 1 goes up 49 °F (27 °C) or more from the recorded temperature.
7. Note the value of ECT SENSOR 2 in the DATA LIST with the HDS.
8. Compare ECT SENSOR 2 and the recorded temperature.

   Did ECT SENSOR 2 change 17 °F (9.5 °C) or more?

   YES—Intermittent failure, system is OK at this time. Check for poor connections or loose terminals at ECT sensor 1, ECT sensor 2 and the ECM/PCM. ■

   NO—Check the thermostat (see page 10-4), then go to step 9.
9. Turn the ignition switch OFF.
10. Replace ECT sensor 1 (see page 11-219).
11. Turn the ignition switch ON (II).
12. Reset the ECM/PCM with the HDS.
13. Do the ECM/PCM idle learn procedure (see page 11-302).
14. Allow the engine to cool to ambient temperature.
15. Start the engine, and let it idle for 20 minutes.
16. Check for Temporary DTCs or DTCs with the HDS.

    Are any Temporary DTCs or DTCs indicated?

    YES—If DTC P0125 is indicated, check for poor connections or loose terminals at ECT sensor 1, ECT sensor 2, and the ECM/PCM, then go to step 1. If any other Temporary DTCs or DTCs are indicated, go to the indicated DTC's troubleshooting.

    NO—Go to step 17.
17. Monitor the OBD STATUS for DTC P0125 in the DTCs MENU with the HDS.

    Does the screen indicate PASSED?

    YES—Troubleshooting is complete. ■

    NO—If the screen indicates FAILED, check for poor connections or loose terminals at ECT sensor 1, ECT sensor 2, and the ECM/PCM, then go to step 1. If the screen indicates NOT COMPLETED, go to step 14 and recheck.

BACK

Protected by AR

DTC P0128: Cooling System Malfunction (2003-2004 models)

NOTE:
- Before you troubleshoot, record all freeze data and any on-board snapshot, and review the general troubleshooting information (see page 11-3).
- If the DTCs listed below are stored at the same time as DTC P0128, troubleshoot those DTCs first, then recheck for P0128.

P0112, P0113: Intake air temperature (IAT) sensor
P0116, P0117, P0118: Engine coolant temperature (ECT) sensor
P0300: Random misfire
P0301, P0302, P0303, P0304: No. 1, No. 2, No. 3, No. 4, No. 5, or No. 6 cylinder misfire
P0335, P0339: Crankshaft position (CKP) sensor A
P0385, P0389: Crankshaft position (CKP) sensor B
P2227, P2228, P2229: Barometric pressure (BARO) sensor
P2646, P2647, P2648, P2649: VTEC system
P0506, P0507: Idle control system malfunction
DTC P0128 can occasionally set when the hood is opened while the engine is running.

1. Turn the ignition switch ON (II).
2. Clear the DTC with the HDS.
3. Turn the blower switch OFF.
4. Turn the A/C switch OFF.
5. Check the FAN CTRL in the DATA LIST with the HDS.

   Is it OFF?

   YES—Go to step 6.

   NO—Wait until the FAN CTRL is off, then go to step 6.
6. Check the ECT SENSOR in the DATA LIST with the HDS, then check the radiator fan operation.

   Does the radiator fan keep running when the engine coolant temperature less than 158 °F (70 °C)?

   YES—Check for symptoms in the cooling system and the radiator fan relay (see page 22-51). If the circuits and the relay are OK, go to step 21.

   NO—Go to step 7.
7. Start the engine. Hold the engine speed at 3,000 rpm without load (in Park or neutral) until the radiator fan comes on, then let it idle.
8. Turn the ignition switch OFF.
9. Turn the ignition switch ON (II).
10. Do the RADIATOR FAN TEST in the INSPECTION MENU with the HDS for 20 minutes.
11. Check the ECT SENSOR in the DATA LIST with the HDS.

    Is about 140 °F (60 °C) or less, or 1.25 V or more indicated?

    YES—Intermittent failure, system is OK at this time. ■

    NO—Go to step 12.
12. Turn the ignition switch OFF.
13. Let the engine cool until the coolant temperature is between 23 °F (—5 °C) and 95 °F (35 °C).
14. Replace the thermostat (see page 10-8).
15. Turn the ignition switch ON (II).

(cont'd)

Protected by AR

DTC Troubleshooting (cont'd)

16. Reset the ECM/PCM with the HDS.

17. Do the ECM/PCM idle learn procedure (see page 11-302).

18. Start the engine. Hold the engine speed at 3,000 rpm without load (in Park or neutral) until the radiator fan comes on, then let it idle.

19. Check for Temporary DTCs or DTCs with the HDS.

    Are any Temporary DTCs or DTCs indicated?

    YES—If DTC P0128 is indicated, check the cooling system (see page 10-4), then go to step 1. If any other Temporary DTCs or DTCs are indicated, go to the indicated DTC's troubleshooting.

    NO—Go to step 20.

20. Monitor the OBD STATUS for DTC P0128 in the DTCs MENU with the HDS.

    Does the screen indicate PASSED?

    YES—Troubleshooting is complete. ■

    NO—If the screen indicates FAILED, check the cooling system, then go to step 1. If the screen indicates NOT COMPLETED, go to step 18 and recheck.

21. Update the ECM/PCM if it does not have the latest software, or substitute a known-good ECM/PCM (see page 11-6).

22. Let the engine cool until the coolant temperature is between 23 °F (—5 °C) and 95 °F (35 °C).

23. Start the engine. Hold the engine speed at 3,000 rpm without load (in Park or neutral) until the radiator fan comes on, then let it idle.

24. Check for a Temporary DTCs or DTCs with the HDS.

    Are any Temporary DTCs or DTCs indicated?

    YES—If DTC P0128 is indicated, check for poor connections or loose terminals at the ECT sensor and the ECM/PCM, then go to step 1. If any other Temporary DTCs or DTCs are indicated, go to the indicated DTC's troubleshooting.

    NO—If the ECM/PCM was updated, troubleshooting is complete. If the ECM/PCM was substituted, replace the original ECM/PCM (see page 11-224). ■

BACK

Protected by AR

DTC P0128: Cooling System Malfunction (2005-2006 models)

NOTE: Before you troubleshoot, record all freeze data and any on-board snapshot, and review the general troubleshooting information (see page 11-3).

1. Turn the ignition switch ON (II).
2. Clear the DTC with the HDS.
3. Turn the blower switch OFF.
4. Turn the A/C switch OFF.
5. Check the FAN CTRL in the DATA LIST with the HDS.

   Is it OFF?

   YES—Go to step 6.

   NO—Wait until the FAN CTRL is off, then go to step 6.
6. Check the radiator fan operation.

   Does the radiator fan keep running?

   YES—Check for symptoms in the cooling system. If they are OK, go to step 20.

   NO—Go to step 7.
7. Let the engine cool until the coolant temperature is 104 °F (40 °C) or less.
8. Note the value of ECT SENSOR 1 and ECT SENSOR 2 in the DATA LIST with the HDS.
9. Start the engine, and let it idle.
10. Let the engine idle until ECT SENSOR 1 goes up 49 °F (27 °C) or more from the recorded temperature.
11. Check ECT SENSOR 2 in the DATA LIST with the HDS.
12. Compare the value of recorded ECT SENSOR 2 and the value of present ECT SENSOR 2.

    Did temperature rise 17 °F (9.5 °C) or more?

    YES—Intermittent failure, system is OK at this time. Check for poor connections or loose terminals at ECT sensor 1, ECT sensor 2, and the ECM/PCM. ■

    NO—Test the thermostat (see page 10-4), then go to step 13.
13. Turn the ignition switch ON (II).
14. Reset the ECM/PCM with the HDS.
15. Let the engine cool until the coolant temperature is between 21 °F (—6 °C) and 104 °F (40 °C).
16. Do the ECM/PCM idle learn procedure (see page 11-302).
17. Test-drive at a steady speed between 15—75 mph (24—120 km/h) for 10 minutes.
18. Check for Temporary DTCs or DTCs with the HDS.

    Are any temporary DTCs or DTCs indicated?

    YES—If DTC P0128 is indicated, check the cooling system, then go to step 1. If any other Temporary DTCs or DTCs are indicated, go to the indicated DTC's troubleshooting.

    NO—Go to step 19.
19. Monitor the OBD STATUS for DTC P0128 in the DTCs MENU with the HDS.

    Does the screen indicate PASSED?

    YES—Troubleshooting is complete. ■

    NO—If the screen indicates FAILED, check the cooling system, then go to step 1. If the screen indicates NOT COMPLETED, go to step 15 and recheck.

(cont'd)

Protected by AR

DTC Troubleshooting (cont'd)

20. Update the ECM/PCM if it does not have the latest software, or substitute a known-good ECM/PCM (see page 11-6).

21. Let the engine cool until the coolant temperature is between 21 °F (—6 °C) and 104 °F (40 °C).

22. Start the engine. Hold the engine speed at 3,000 rpm without load (in Park or neutral) until the radiator fan comes on, then let it idle.

23. Test-drive at a steady speed between 15—75 mph (24—120 km/h) for 10 minutes.

24. Check for Temporary DTCs or DTCs with the HDS.

    Are any Temporary DTCs or DTCs indicated?

    YES—If DTC P0128 is indicated, check for poor connections or loose terminals at ECT sensor 1, ECT sensor 2, and the ECM/PCM, then go to step 1. If any other Temporary DTCs or DTCs are indicated, go to the indicated DTC's troubleshooting.

    NO—If the ECM/PCM was updated, troubleshooting is complete. If the ECM/PCM was substituted, replace the original ECM/PCM (see page 11-224). ■

BACK

Protected by AR

DTC P0133: Rear A/F Sensor (Bank 1, Sensor 1) Slow Response (2003-2004 models)

DTC P0153: Front A/F Sensor (Bank 2, Sensor 1) Slow Response (2003-2004 models)

NOTE:
- Before you troubleshoot, record all freeze data and any on-board snapshot, and review the general troubleshooting information (see page 11-3).
- If DTC P0139 and/or P0159* is stored at the same time as DTC P0133 and/or P0153*, troubleshoot DTC P0139 and/or P0159* first, then recheck for DTC P0133 and/or P0153*.
- Information marked with an asterisk (*) applies to the front bank (Bank 2).

1. Turn the ignition switch ON (II).
2. Clear the DTC with the HDS.
3. Start the engine. Hold the engine speed at 3,000 rpm without load (in Park or neutral) until the radiator fan comes on, then let it idle.
4. Test-drive under these conditions:
   - Engine coolant temperature above 158 °F (70 °C)
   - A/T in D position (M/T in 5th gear)
   - Vehicle speed at 30 mph (48 km/h) or more, and engine speed between 1,350 and 2,350 rpm
5. Monitor the OBD STATUS for DTC P0139 and/or P0159* in the DTCs MENU with the HDS.

   Does the screen indicate FAILED?

   YES—Go to step 6.

   NO—If the screen indicates PASSED, intermittent failure, system is OK at this time. Check for poor connections or loose terminals at the A/F sensor (Sensor 1) and the ECM/PCM. If the screen indicates EXECUTING, keep driving until a result comes on. If the screen indicates OUT OF CONDITION, go to step 3 and recheck.
6. Turn the ignition switch OFF.
7. Replace the A/F sensor (Sensor 1) (see page 11-217).
8. Turn the ignition switch ON (II).
9. Reset the ECM/PCM with the HDS.
10. Do the ECM/PCM idle learn procedure (see page 11-302).
11. Test-drive under these conditions:
    - Engine coolant temperature above 158 °F (70 °C)
    - A/T in D position (M/T in 5th gear)
    - Vehicle speed at 30 mph (48 km/h) or more, and engine speed between 1,350 and 2,350 rpm
12. Check for Temporary DTCs or DTCs with the HDS.

    Are any Temporary DTCs or DTCs indicated?

    YES—If DTC P0139 and/or P0159* is indicated, check for poor connections or loose terminals at the A/F sensor (Sensor 1) and the ECM/PCM, then go to step 1. If any other Temporary DTCs or DTCs are indicated, go to the indicated DTC's troubleshooting.

    NO—Go to step 13.
13. Monitor the OBD STATUS for DTC P0139 and/or P0159* in the DTCs MENU with the HDS.

    Does the screen indicate PASSED?

    YES—Troubleshooting is complete. ■

    NO—If the screen indicates FAILED, check for poor connections or loose terminals at the A/F sensor (Sensor 1) and the ECM/PCM, then go to step 1. If the screen indicates EXECUTING, keep driving until a result comes on. If the screen indicates OUT OF CONDITION, go to step 10 and recheck.

Protected by AR

DTC Troubleshooting (cont'd)

DTC P0133: Rear A/F Sensor (Bank 1, Sensor 1) Slow Response (2005-2006 models)

DTC P0153: Front A/F Sensor (Bank 2, Sensor 1) Slow Response (2005-2006 models)

NOTE:
- Before you troubleshoot, record all freeze data and any on-board snapshot, and review the general troubleshooting information (see page 11-3).
- If DTC P0139 and/or P0159* is stored at the same time as DTC P0133 and/or P0153*, troubleshoot DTC P0139 and/or P0159* first, then recheck for DTC P0133 and/or P0153*.
- Information marked with an asterisk (*) applies to the front bank.

1. Turn the ignition switch ON (II).
2. Clear the DTC with the HDS.
3. Start the engine. Hold the engine speed at 3,000 rpm withtout load (in Park or neutral) until the radiator fan comes on, then let it idle.
4. Test-drive under these conditions:
   - Engine coolant temperature above 176 °F (80 °C)
   - A/T in D position (M/T in 3rd or 4th gear)
   - Drive the vehicle speed at 25 mph (40 km/h) or less for 5 minutes, then drive at steady speed between 26—81 mph (41—130 km/h)
5. Monitor the OBD STATUS for DTC P0133 and/or P0153* in the DTCs MENU with the HDS.

   Does the screen indicate FAILED?

   YES—Go to step 6.

   NO—If the screen indicates PASSED, intermittent failure, system is OK at this time. Check for poor connections or loose terminals at the A/F sensor (Sensor 1) and the ECM/PCM. If the screen indicates EXECUTING, keep driving until a result comes on. If the screen indicates OUT OF CONDITION, go to step 3 and recheck.
6. Turn the ignition switch OFF.
7. Replace the A/F sensor (Sensor 1) (see page 11-217).
8. Turn the ignition switch ON (II).
9. Reset the ECM/PCM with the HDS.
10. Do the ECM/PCM idle learn procedure (see page 11-302).
11. Start the engine. Hold the engine speed at 3,000 rpm without load (in Park or neutral) until the radiator fan comes on, then let it idle.
12. Test-drive under these conditions:
    - Engine coolant temperature above 176 °F (80 °C)
    - A/T in D position (M/T in 3rd or 4th gear)
    - Drive the vehicle speed at 25 mph (40 km/h) or less for 5 minute, then drive at steady speed between 26—81 mph (40—130 km/h)
13. Check for Temporary DTCs or DTCs with the HDS.

    Are any Temporary DTCs or DTCs indicated?

    YES—If DTC P0133 and/or P0153* is indicated, check for poor connections or loose terminals at the A/F sensor (Sensor 1) and the ECM/PCM, then go to step 1. If any other Temporary DTCs or DTCs are indicated, go to the indicated DTC's troubleshooting.

    NO—Go to step 14.
14. Monitor the OBD STATUS for DTC P0133 and/or P0153* in the DTCs MENU with the HDS.

    Does the screen indicate PASSED?

    YES—Troubleshooting is complete.■

    NO—If the screen indicates FAILED, check for poor connections or loose terminals at the A/F sensor (Sensor 1) and the ECM/PCM, then go to step 1. If the screen indicates EXECUTING, keep driving until a result comes on. If the screen indicates OUT OF CONDITION, go to step 11 and recheck.

BACK

Protected by AR

DTC P0134: Rear A/F Sensor (Bank 1, Sensor 1) Heater System Malfunction

DTC P0154: Front A/F Sensor (Bank 2, Sensor 1) Heater System Malfunction

NOTE:
- Before you troubleshoot, record all freeze data and any on-board snapshot, and review the general troubleshooting information (see page 11-3).
- If DTC P2251 and/or P2254* is stored at the same time as DTC P0134 and/or P0154*, troubleshoot DTC P2251 and/or P2254* first, then recheck for P0134 and/or P0154*.
- Information marked with an asterisk (*) applies to the front bank (Bank 2).

1. Turn the ignition switch ON (II).
2. Clear the DTC with the HDS.
3. Start the engine. Hold the engine speed at 3,000 rpm without load (in Park or neutral) until the radiator fan comes on, then let it idle 2 minutes.
4. Check for Temporary DTCs or DTCs with the HDS.

   Is DTC P0134 and/or P0154 indicated?*

   YES—Go to step 5.

   NO—Intermittent failure, system is OK at this time. Check for poor connections or loose terminals at the A/F sensor (Sensor 1) and the ECM/PCM. ■
5. Turn the ignition switch OFF.
6. Jump the SCS line with the HDS.
7. Disconnect the A/F sensor (Sensor 1) 8P connector.
8. Disconnect ECM/PCM connector B (24P).
9. Connect A/F sensor (Sensor 1) 8P connector terminal No. 6 to body ground with a jumper wire.

A/F SENSOR (SENSOR 1) 8P CONNECTOR

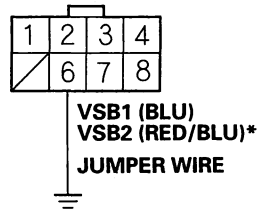

Wire side of female terminals

10. Check for continuity between ECM/PCM connector terminal B12 (B20)* and body ground.

ECM/PCM CONNECTOR B (24P)

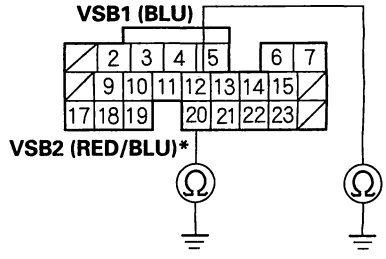

Wire side of female terminals

Is there continuity?

YES—Go to step 11.

NO—Repair open in the wire between the ECM/PCM (B12 (B20)*) and the A/F sensor (Sensor 1), then go to step 15.

(cont'd)

Protected by AR

DTC Troubleshooting (cont'd)

11. Remove the jumper wire from the A/F sensor (Sensor 1) 8P connector, then reconnect ECM/PCM connector B (24P).

12. Start the engine. Hold the engine speed at 3,000 rpm without load (in Park or neutral) until the radiator fan comes on, then let it idle 2 minutes.

13. Measure voltage between ECM/PCM connector terminals B12 (B20)* and D10.

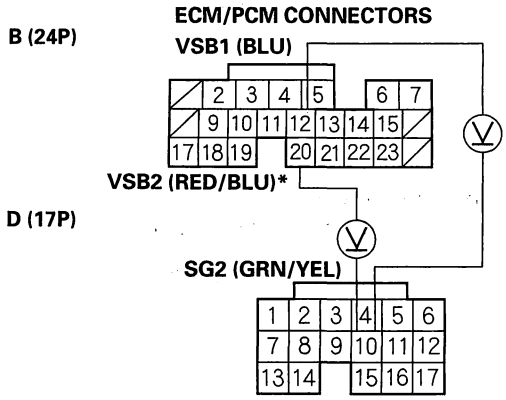

Wire side of female terminals

Is there about 0.2 V or less?

YES—Go to step 21.

NO—Go to step 14.

14. Replace the A/F sensor (see page 11-217).

15. Reconnect all connectors.

16. Turn the ignition switch ON (II).

17. Reset the ECM/PCM with the HDS.

18. Do the ECM/PCM idle learn procedure (see page 11-302).

19. Check for Temporary DTCs or DTCs with the HDS.

Are any Temporary DTCs or DTCs indicated?

YES—If DTC P0134 and/or P0154* is indicated, check for poor connections or loose terminals at the A/F sensor (Sensor 1) and the ECM/PCM, then go to step 1. If any other Temporary DTCs or DTCs are indicated, go to the indicated DTC's troubleshooting.

NO—Go to step 20.

20. Monitor the OBD STATUS for DTC P0134 and/or P0154* in the DTCs MENU with the HDS.

Does the screen indicate PASSED?

YES—Troubleshooting is complete.■

NO—If the screen indicates FAILED, check for poor connections or loose terminals at the A/F sensor (Sensor 1) and the ECM/PCM, then go to step 1. If the screen indicates NOT COMPLETED, go to step 18 and recheck.

21. Update the ECM/PCM if it does not have the latest software, or substitute a known-good ECM/PCM (see page 11-6).

22. Check for Temporary DTCs or DTCs with the HDS.

Are any Temporary DTCs or DTCs indicated?

YES—If DTC P0134 and/or P0154* is indicated, check for poor connections or loose terminals at the A/F sensor (Sensor 1) and the ECM/PCM, then go to step 1. If any other Temporary DTCs or DTCs are indicated, go to the indicated DTC's troubleshooting.

NO—If the ECM/PCM was updated, troubleshooting is complete. If the ECM/PCM was substituted, replace the original ECM/PCM (see page 11-224).■

BACK

Protected by AR

DTC P0135: Rear A/F Sensor (Bank 1, Sensor 1) Heater Circuit Malfunction

DTC P0155: Front A/F Sensor (Bank 2, Sensor 1) Heater Circuit Malfunction

NOTE:
- Before you troubleshoot, record all freeze data and any on-board snapshot, and review the general troubleshooting information (see page 11-3).
- Information marked with an asterisk (*) applies to the front bank (Bank 2).

1. Turn the ignition switch ON (II).
2. Clear the DTC with the HDS.
3. Start the engine.
4. Check for Temporary DTCs or DTCs with the HDS.

   Is DTC P0135 and/or P0155 indicated?*

   YES—Go to step 5.

   NO—Intermittent failure, system is OK at this time. Check for poor connections or loose terminals at the A/F sensor (Sensor 1), the A/F sensor relay and the ECM/PCM.■
5. Turn the ignition switch OFF.
6. Check these fuses:
   - No. 19 OPTION (40 A) fuse in the under-hood fuse/relay box.
   - No. 4 A/F SENSOR (15 A) fuse in the under-dash fuse/relay box.
   - No. 23 IGP (7.5 A) fuse in the under-dash fuse/relay box.

   Are any of the fuses blown?

   YES—Repair short in the wire between the A/F sensors, the A/F sensor relay, and the fuses, then go to step 23.

   NO—Go to step 7.
7. Disconnect the A/F sensor (Sensor 1) 8P connector.
8. At the sensor side, measure resistance between A/F sensor (Sensor 1) 8P connector terminals No. 1 and No. 2.

A/F SENSOR (SENSOR 1) 8P CONNECTOR

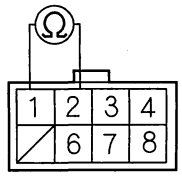

Terminal side of male terminals

Is there 2.5—3.2 Ω at room temperature?

YES—Go to step 9.

NO—Go to step 22.

9. Check for continuity between each terminal at the A/F sensor (Sensor 1) 8P connector and body ground.

A/F SENSOR (SENSOR 1) 8P CONNECTOR

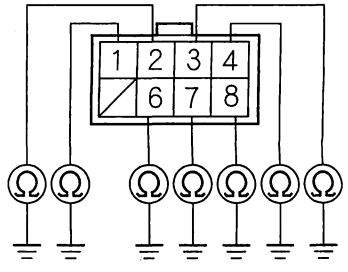

Terminal side of male terminals

Is there continuity?

YES—Go to step 22.

NO—Go to step 10.

(cont'd)

Protected by AR

DTC Troubleshooting (cont'd)

10. Check for continuity between A/F sensor (Sensor 1) 8P connector terminals No. 1 and No. 3, No. 4, No. 6, No. 7, and No. 8 individually.

A/F SENSOR (SENSOR 1) 8P CONNECTOR

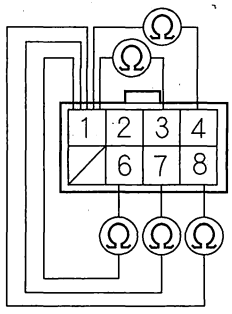

Terminal side of male terminals

Is there continuity?

YES—Go to step 22.

NO—Go to step 11.

11. Jump the SCS line with the HDS.

12. Disconnect ECM/PCM connector E (31P).

13. Check for continuity between ECM/PCM connector terminal E7 (E6)* and body ground.

ECM/PCM CONNECTOR E (31P)

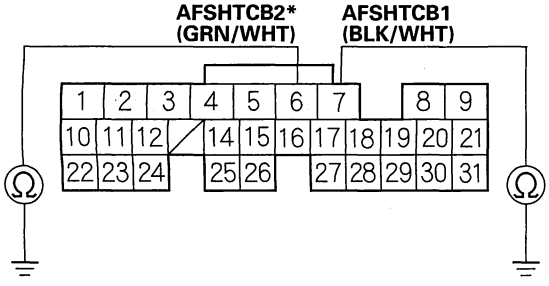

Wire side of female terminals

Is there continuity?

YES—Repair short in the wire between the ECM/PCM (E7 (E6)*) and the A/F sensor (Sensor 1), then go to step 23.

NO—Go to step 14.

14. Connect A/F sensor (Sensor 1) 8P connector terminal No. 2 to body ground with a jumper wire.

A/F SENSOR (SENSOR 1) 8P CONNECTOR

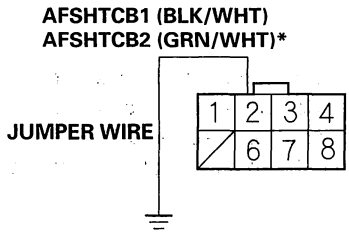

Wire side of female terminals

15. Check for continuity between ECM/PCM connector terminal E7 (E6)* and body ground.

ECM/PCM CONNECTOR E (31P)

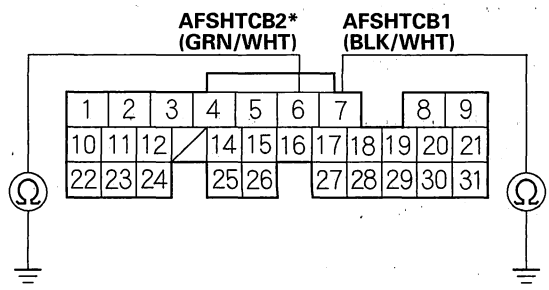

Wire side of female terminals

Is there continuity?

YES—Go to step 16.

NO—Repair open in the wire between the ECM/PCM (E7 (E6)*) and the A/F sensor (Sensor 1), then go to step 23.

BACK

Protected by AR

16. Remove the A/F sensor relay (A).

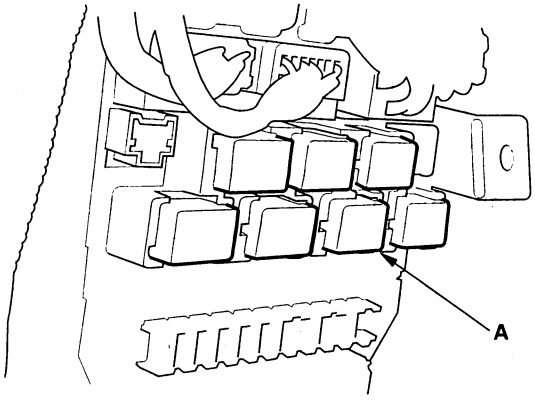

17. Connect A/F sensor (Sensor 1) 8P connector terminal No. 1 to body ground with a jumper wire.

A/F SENSOR (SENSOR 1) 8P CONNECTOR

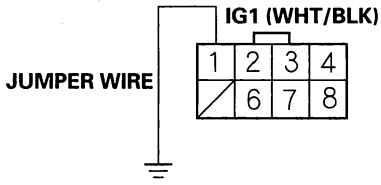

Wire side of female terminals

18. Check for continuity between A/F sensor relay 4P connector terminal No. 2 and body ground.

A/F SENSOR RELAY 4P CONNECTOR

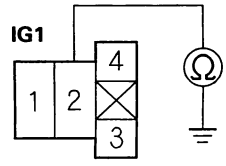

Terminal side of female terminals

Is there continuity?

YES—Go to step 19.

NO—Repair open in the wire between the A/F sensor (Sensor 1) and the A/F sensor relay, then go to step 23.

19. Disconnect ECM/PCM connector A (31P).

(cont'd)

Protected by AR

DTC Troubleshooting (cont'd)

20. Check for continuity between ECM/PCM connector terminal A4 and A/F sensor relay 4P connector terminal No. 4.

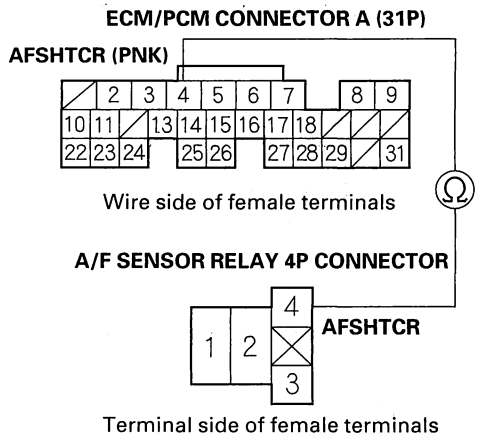

Is there continuity?

YES—Go to step 21.

NO—Repair open in the wire between the ECM/PCM (A4) and the A/F sensor relay, then go to step 23.

21. Check the A/F sensor relay (see page 22-51).

Is the A/F sensor relay OK?

YES—Go to step 29.

NO—Replace the A/F sensor relay, then go to step 23.

22. Replace the A/F sensor (Sensor 1) (see page 11-217).

23. Reconnect all connectors.

24. Turn the ignition switch ON (II).

25. Reset the ECM/PCM with the HDS.

26. Do the ECM/PCM idle learn procedure (see page 11-302).

27. Check for Temporary DTCs or DTCs with the HDS.

Are any Temporary DTCs or DTCs indicated?

YES—If DTC P0135 and/or P0155* is indicated, check for poor connections or loose terminals at the A/F sensor (Sensor 1), the A/F sensor relay, and the ECM/PCM, then go to step 1. If any other Temporary DTCs or DTCs are indicated, go to the indicated DTC's troubleshooting.

NO—Go to step 28.

28. Monitor the OBD STATUS for DTC P0135 and/or P0155* in the DTCs MENU with the HDS.

Does the screen indicate PASSED?

YES—Troubleshooting is complete.■

NO—If the screen indicates FAILED, check for poor connections or loose terminals at the A/F sensor (Sensor 1), the A/F sensor relay, and the ECM/PCM, then go to step 1. If the screen indicates NOT COMPLETED, go to step 26 and recheck.

29. Update the ECM/PCM if it does not have the latest software, or substitute a known-good ECM/PCM (see page 11-6).

30. Check for Temporary DTCs or DTCs with the HDS.

Are any Temporary DTCs or DTCs indicated?

YES—If DTC P0135 and/or P0155* is indicated, check for poor connections or loose terminals at the A/F sensor (Sensor 1), the A/F sensor relay, and the ECM/PCM, then go to step 1. If any other Temporary DTCs or DTCs are indicated, go to the indicated DTC's troubleshooting.

NO—If the ECM/PCM was updated, troubleshooting is complete. If the ECM/PCM was substituted, replace the original ECM/PCM (see page 11-224).■

BACK

Protected by AR

DTC P0137: Rear Secondary HO2S (Bank 1, Sensor 2) Circuit Low Voltage (2003-2004 models)

DTC P0157: Front Secondary HO2S (Bank 2, Sensor 2) Circuit Low Voltage (2003-2004 models)

NOTE:
- Before you troubleshoot, record all freeze data and any on-board snapshot, and review the general troubleshooting information (see page 11-3).
- Information marked with an asterisk (*) applies to the front bank (Bank 2).

1. Turn the ignition switch ON (II).
2. Clear the DTC with the HDS.
3. Start the engine. Hold the engine speed at 3,000 rpm without load (in Park or neutral) until the radiator fan comes on, then let it idle.
4. Check the HO2S S2 in the DATA LIST with the HDS.

   Does the voltage stay at 0.29 V or less?

   YES—Go to step 5.

   NO—Go to step 9.
5. Turn the ignition switch OFF.
6. Disconnect the secondary HO2S (Sensor 2) 4P connector.
7. Turn the ignition switch ON (II).
8. Check the HO2S S2 in the DATA LIST with the HDS.

   Does the voltage stay at 0.29 V or less?

   YES—Go to step 11.

   NO—Go to step 15.
9. Test-drive under these conditions:
   - Engine coolant temperature above 158 °F (70 °C)
   - A/T in D position (M/T in 4th gear)
   - Engine speed at 2,000—3,000 rpm
   - Drive about 10 minutes, then decelerate (with the throttle fully closed) for 5 seconds
10. Monitor the OBD STATUS for DTC P0137 and/or P0157* in the DTCs MENU with the HDS.

    Does the screen indicate FAILED?

    YES—Go to step 16.

    NO—If the screen indicates PASSED, intermittent failure, system is OK at this time. Check for poor connections or loose terminals at the secondary HO2S (Sensor 2) and the ECM/PCM. If the screen indicates EXECUTING, keep driving until a result comes on. If the screen indicates OUT OF CONDITION, go to step 9 and recheck.
11. Turn the ignition switch OFF.
12. Jump the SCS line with the HDS.
13. Disconnect ECM/PCM connector B (24P).
14. Check for continuity between secondary HO2S (Sensor 2) 4P connector terminal No. 1 and body ground.

SECONDARY HO2S (SENSOR 2) 4P CONNECTOR

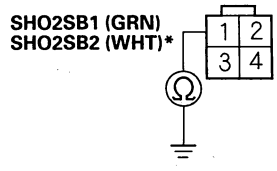

Wire side of female terminals

Is there continuity?

YES—Repair short in the wire between the ECM/PCM (B9 (B18)*) and the secondary HO2S (Sensor 2), then go to step 17.

NO—Go to step 25.

(cont'd)

Protected by AR

DTC Troubleshooting (cont'd)

15. Turn the ignition switch OFF.
16. Replace the secondary HO2S (Sensor 2) (see page 11-218).
17. Reconnect all connectors.
18. Turn the ignition switch ON (II).
19. Reset the ECM/PCM with the HDS.
20. Do the ECM/PCM idle learn procedure (see page 11-302).
21. Start the engine. Hold the engine speed at 3,000 rpm without load (in Park or neutral) until the radiator fan comes on, then let it idle.
22. Test-drive under these conditions:
    - Engine coolant temperature above 158 °F (70 °C)
    - A/T in D position (M/T in 4th gear)
    - Engine speed at 2,000—3,000 rpm
    - Drive about 10 minutes, then decelerate (with the throttle fully closed) for 5 seconds
23. Check for Temporary DTCs or DTCs with the HDS.

    Are any Temporary DTCs or DTCs indicated?

    YES—If DTC P0137 and/or P0157 * is indicated, check for poor connections or loose terminals at the secondary HO2S (Sensor 2) and the ECM/PCM, then go to step 1. If any other Temporary DTCs or DTCs are indicated, go to the indicated DTC's troubleshooting.

    NO—Go to step 24.
24. Monitor the OBD STATUS for DTC P0137 and/or P0157 * in the DTCs MENU with the HDS.

    Does the screen indicate PASSED?

    YES—Troubleshooting is complete. ■

    NO—If the screen indicates FAILED, check for poor connections or loose terminals at the secondary HO2S (Sensor 2) and the ECM/PCM, then go to step 1. If the screen indicates EXECUTING, keep driving until a result comes on. If the screen indicates OUT OF CONDITION, go to step 21 and recheck.
25. Update the ECM/PCM if it does not have the latest software, or substitute a known-good ECM/PCM (see page 11-6).
26. Start the engine. Hold the engine speed at 3,000 rpm without load (in Park or neutral) until the radiator fan comes on, then let it idle.
27. Test-drive under these conditions:
    - Engine coolant temperature above 158 °F (70 °C)
    - A/T in D position (M/T in 4th gear)
    - Engine speed at 2,000—3,000 rpm
    - Drive about 10 minutes, then decelerate (with the throttle fully closed) for 5 seconds
28. Check for Temporary DTCs or DTCs with the HDS.

    Are any Temporary DTCs or DTCs indicated?

    YES—If DTC P0137 and/or P0157 * is indicated, check for poor connections or loose terminals at the secondary HO2S (Sensor 2) and the ECM/PCM, then go step 1. If any other Temporary DTCs or DTCs are indicated, go to the indicated DTC's troubleshooting.

    NO—If the ECM/PCM was updated, troubleshooting is complete. If the ECM/PCM was substituted, replace the original ECM/PCM (see page 11-224). ■

BACK

Protected by AR

DTC P0137: Rear Secondary HO2S (Bank 1, Sensor 2) Circuit Low Voltage (2005-2006 models)

DTC P0157: Front Secondary HO2S (Bank 2, Sensor 2) Circuit Low Voltage (2005-2006 models)

NOTE:
- Before you troubleshoot, record all freeze data and any on-board snapshot, and review the general troubleshooting information (see page 11-3).
- Information marked with an asterisk (*) applies to the front bank (Bank 2).

1. Turn the ignition switch ON (II).
2. Clear the DTC with the HDS.
3. Start the engine. Hold the engine speed at 3,000 rpm without load (in Park or neutral) until the radiator fan comes on, then let it idle.
4. Check the HO2S S2 in the DATA LIST with the HDS.

   Does the voltage stay at 0.29 V or less?

   YES—Go to step 5.

   NO—Intermittent failure, system is OK at this time. Check for poor connections or loose terminals at the secondary HO2S (Sensor 2) and the ECM/PCM. ■
5. Turn the ignition switch OFF.
6. Disconnect the secondary HO2S (Sensor 2) 4P connector.
7. Turn the ignition switch ON (II).
8. Check the HO2S S2 in the DATA LIST with the HDS.

   Does the voltage stay at 0.29 V or less?

   YES—Go to step 9.

   NO—Go to step 13.
9. Turn the ignition switch OFF.
10. Jump the SCS line with the HDS.
11. Disconnect ECM/PCM connector B (24P).
12. Check for continuity between secondary HO2S (Sensor 2) 4P connector terminal No. 1 and body ground.

SECONDARY HO2S (SENSOR 2) 4P CONNECTOR

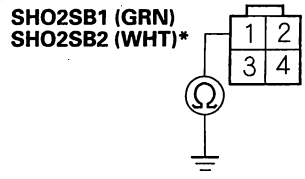

Wire side of female terminals

Is there continuity?

YES—Repair short in the wire between the ECM/PCM (B9 (B18)*) and the secondary HO2S (Sensor 2), then go to step 15.

NO—Go to step 23.
13. Turn the ignition switch OFF.
14. Replace the secondary HO2S (Sensor 2) (see page 11-218).
15. Reconnect all connectors.
16. Turn the ignition switch ON (II).
17. Reset the ECM/PCM with the HDS.
18. Do the ECM/PCM idle learn procedure (see page 11-302).
19. Start the engine. Hold the engine speed at 3,000 rpm without load (in Park or neutral) until the radiator fan comes on, then let it idle.

(cont'd)

Protected by AR

DTC Troubleshooting (cont'd)

20. Test-drive under these conditions:

    - Engine coolant temperature above 176 °F (80 °C)
    - A/T in D position (M/T in 4th gear)
    - Engine speed at 1,500—3,000 rpm
    - Drive 1 minute or more

21. Check for Temporary DTCs or DTCs with the HDS.

    Are any Temporary DTCs or DTCs indicated?

    YES—If DTC P0137 and/or P0157* is indicated, check for poor connections or loose terminals at the secondary HO2S (Sensor 2) and the ECM/PCM, then go to step 1. If any other Temporary DTCs or DTCs are indicated, go to the indicated DTC's troubleshooting.

    NO—Go to step 22.

22. Monitor the OBD STATUS for DTC P0137 and/or P0157* in the DTCs MENU with the HDS.

    Does the screen indicate PASSED?

    YES—Troubleshooting is complete.■

    NO—If the screen indicates FAILED, check for poor connections or loose terminals at the secondary HO2S (Sensor 2) and the ECM/PCM, then go to step 1. If the screen indicates EXECUTING, keep driving until a result comes on. If the screen indicates OUT OF CONDITION, go to step 19 and recheck.

23. Update the ECM/PCM if it does not have the latest software, or substitute a known-good ECM/PCM (see page 11-6).

24. Start the engine. Hold the engine speed at 3,000 rpm without load (in Park or neutral) until the radiator fan comes on, then let it idle.

25. Test-drive under these conditions:

    - Engine coolant temperature above 176 °F (80 °C)
    - A/T in D position (M/T in 4th gear)
    - Engine speed at 1,500—3,000 rpm
    - Drive 1 minute or more

26. Check for Temporary DTCs or DTCs with the HDS.

    Are any Temporary DTCs or DTCs indicated?

    YES—If DTC P0137 and/or P0157* is indicated, check for poor connections or loose terminals at the secondary HO2S (Sensor 2) and the ECM/PCM, then go step 1. If any other Temporary DTCs or DTCs are indicated, go to the indicated DTC's troubleshooting.

    NO—If the ECM/PCM was updated, troubleshooting is complete. If the ECM/PCM was substituted, replace the original ECM/PCM (see page 11-224).■

BACK

Protected by AR

DTC P0138: Rear Secondary HO2S (Bank 1, Sensor 2) Circuit High Voltage (2003-2004 models)

DTC P0158: Front Secondary HO2S (Bank 2, Sensor 2) Circuit High Voltage (2003-2004 models)

NOTE:
- Before you troubleshoot, record all freeze data and any on-board snapshot, and review the general troubleshooting information (see page 11-3).
- Information marked with an asterisk (*) applies to the front bank (Bank 2).

1. Turn the ignition switch ON (II).
2. Clear the DTC with the HDS.
3. Start the engine. Hold the engine speed at 3,000 rpm without load (in Park or neutral) until the radiator fan comes on, then let it idle.
4. Check the HO2S S2 in the DATA LIST with the HDS.

   Does the voltage stay at 0.75 V or more?

   YES—Go to step 7.

   NO—Go to step 5.
5. Test-drive under these conditions:

   - Engine coolant temperature above 158 °F (70 °C)
   - A/T in D position (M/T in 4th gear)
   - Engine speed at 2,000—3,000 rpm
   - Drive about 10 minutes, then decelerate (with the throttle fully closed) for 5 seconds
6. Monitor the OBD STATUS for DTC P0138 and/or P0158* in the DTCs MENU with the HDS.

   Does the screen indicate FAILED?

   YES—Go to step 19.

   NO—If the screen indicates PASSED, intermittent failure, system is OK at this time. Check for poor connections or loose terminals at the secondary HO2S (Sensor 2) and the ECM/PCM. If the screen indicates EXECUTING, keep driving until a result comes on. If the screen indicates OUT OF CONDITION, go to step 5 and recheck.
7. Turn the ignition switch OFF.
8. Disconnect the secondary HO2S (Sensor 2) 4P connector.
9. Connect secondary HO2S (Sensor 2) 4P connector terminals No. 1 and No. 2 with a jumper wire.

SECONDARY HO2S (SENSOR 2) 4P CONNECTOR

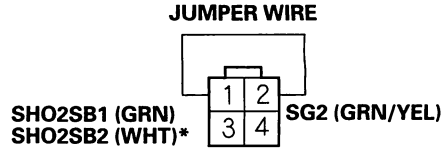

Wire side of female terminals

10. Turn the ignition switch ON (II).
11. Check the HO2S S2 in the DATA LIST with the HDS.

    Does the voltage stay at 0.75 V or more?

    YES—Go to step 12.

    NO—Go to step 19.
12. Turn the ignition switch OFF.
13. Jump the SCS line with the HDS.
14. Disconnect ECM/PCM connectors B (24P) and D (17P).

(cont'd)

Protected by AR

DTC Troubleshooting (cont'd)

15. Check for continuity between ECM/PCM connector terminals D10 and B9 (B18)*.

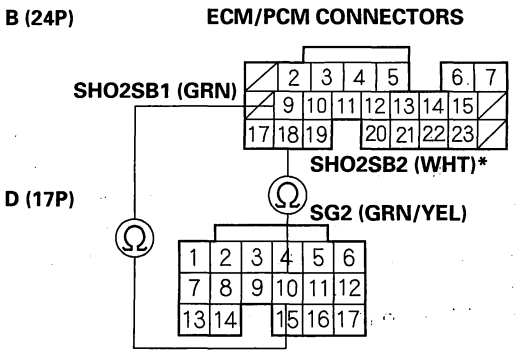

Wire side of female terminals

Is there continuity?

YES—Go to step 29.

NO—Go to step 16.

16. Remove the jumper wire from the secondary HO2S (Sensor 2) 4P connector.

17. Connect secondary HO2S (Sensor 2) 4P connector terminal No. 1 to body ground with a jumper wire.

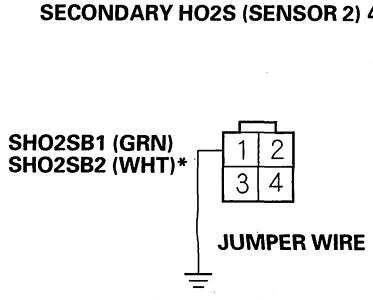

Wire side of female terminals

18. Check for continuity between ECM/PCM connector terminal B9 (B18)* and body ground.

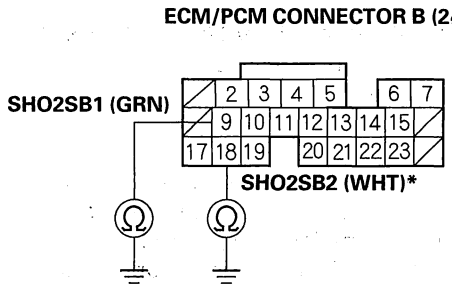

Wire side of female terminals

Is there continuity?

YES—Repair open in the wire between the ECM/PCM (D10) and the secondary HO2S (Sensor 2), then go to step 21.

NO—Repair open in the wire between the ECM/PCM (B9 (B18)*) and the secondary HO2S (Sensor 2), then go to step 21.

19. Turn the ignition switch OFF.

20. Replace the secondary HO2S (Sensor 2) (see page 11-218).

21. Reconnect all connectors.

22. Turn the ignition switch ON (II).

23. Reset the ECM/PCM with the HDS.

24. Do the ECM/PCM idle learn procedure (see page 11-302).

25. Start the engine. Hold the engine speed at 3,000 rpm without load (in Park or neutral) until the radiator fan comes on, then let it idle.

26. Test-drive under these conditions:

- Engine coolant temperature above 158 °F (70 °C)
- A/T in D position (M/T in 4th gear)
- Engine speed at 2,000—3,000 rpm
- Drive about 10 minutes, then decelerate (with the throttle fully closed) for 5 seconds

BACK

Protected by AR

27. Check for Temporary DTCs or DTCs with the HDS.

    Are any Temporary DTCs or DTCs indicated?

    YES—If DTC P0138 and/or P0158* is indicated, check for poor connections or loose terminals at the secondary HO2S (Sensor 2) and the ECM/PCM, then go to step 1. If any other Temporary DTCs or DTCs are indicated, go to the indicated DTC's troubleshooting.

    NO—Go to step 28.

28. Monitor the OBD STATUS for DTC P0138 and/or P0158* in the DTCs MENU with the HDS.

    Does the screen indicate PASSED?

    YES—Troubleshooting is complete. ■

    NO—If the screen indicates FAILED, check for poor connections or loose terminals at the secondary HO2S (Sensor 2) and the ECM/PCM, then go to step 1. If the screen indicates EXECUTING, keep driving until a result comes on. If the screen indicates OUT OF CONDITION, go to step 25 and recheck.

29. Update the ECM/PCM if it does not have the latest software, or substitute a known-good ECM/PCM (see page 11-6).

30. Start the engine. Hold the engine speed at 3,000 rpm without load (in Park or neutral) until the radiator fan comes on, then let it idle.

31. Test-drive under these conditions:

    - Engine coolant temperature above 158 °F (70 °C)
    - A/T in D position (M/T in 4th gear)
    - Engine speed at 2,000—3,000 rpm
    - Drive about 10 minutes, then decelerate (with the throttle fully closed) for 5 seconds

32. Check for Temporary DTCs or DTCs with the HDS.

    Are any Temporary DTCs or DTCs indicated?

    YES—If DTC P0138 and/or P0158* is indicated, check for poor connections or loose terminals at the secondary HO2S (Sensor 2) and the ECM/PCM, then go to step 1. If any other Temporary DTCs or DTCs are indicated, go to the indicated DTC's troubleshooting.

    NO—If the ECM/PCM was updated, troubleshooting is complete. If the ECM/PCM was substituted, replace the original ECM/PCM (see page 11-224). ■

Protected by AR

DTC Troubleshooting (cont'd)

DTC P0138: Rear Secondary HO2S (Bank 1, Sensor 2) Circuit High Voltage (2005-2006 models)

DTC P0158: Front Secondary HO2S (Bank 2, Sensor 2) Circuit High Voltage (2005-2006 models)

NOTE:
- Before you troubleshoot, record all freeze data and any on-board snapshot, and review the general troubleshooting information (see page 11-3).
- Information marked with an asterisk (*) applies to the front bank (Bank 2).

1. Turn the ignition switch ON (II).
2. Clear the DTC with the HDS.
3. Start the engine. Hold the engine speed at 3,000 rpm without load (in Park or neutral) until the radiator fan comes on, then let it idle.
4. Check the HO2S S2 in the DATA LIST with the HDS.

   Does the voltage stay at 1.25 V or more?

   YES—Go to step 5.

   NO—Intermittent failure, system is OK at this time. Check for poor connections or loose terminals at the secondary HO2S (Sensor 2) and the ECM/PCM. ■
5. Turn the ignition switch OFF.
6. Disconnect the secondary HO2S (Sensor 2) 4P connector.
7. Connect secondary HO2S (Sensor 2) 4P connector terminals No. 1 and No. 2 with a jumper wire.

SECONDARY HO2S (SENSOR 2) 4P CONNECTOR

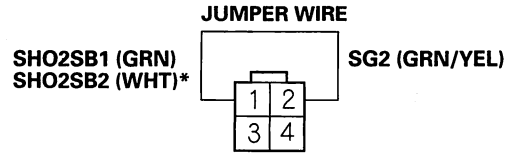

Wire side of female terminals

8. Turn the ignition switch ON (II).
9. Check the HO2S S2 in the DATA LIST with the HDS.

   Does the voltage stay at 1.25 V or more?

   YES—Go to step 10.

   NO—Go to step 19.
10. Turn the ignition switch OFF.
11. Remove the jumper wire from the secondary HO2S (Sensor 2) 4P connector.
12. Connect secondary HO2S (Sensor 2) 4P connector terminal No. 1 to body ground with a jumper wire.

SECONDARY HO2S (SENSOR 2) 4P CONNECTOR

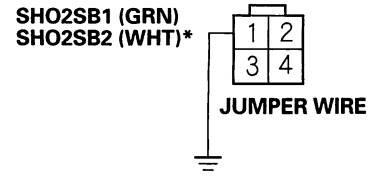

Wire side of female terminals

BACK

Protected by AR

13. Turn the ignition switch ON (II).

14. Check the HO2S S2 in the DATA LIST with the HDS.

    Does the voltage stay at 1.25 V or more?

    YES—Go to step 15.

    NO—Repair open in the wire between the ECM/PCM (D10) and the secondary HO2S (Sensor 2), then go to step 21.

15. Turn the ignition switch OFF.

16. Jump the SCS line with the HDS.

17. Disconnect ECM/PCM connector B (31P).

18. Check for continuity between PCM connector terminal B9 (B18)* and body ground.

ECM/PCM CONNECTOR B (24P)

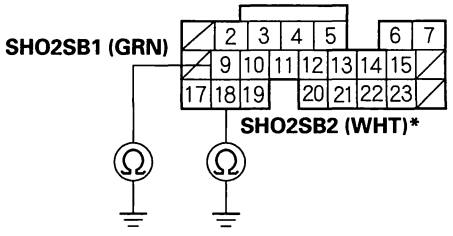

Wire side of female terminals

Is there continuity?

YES—Go to step 29.

NO—Repair open in the wire between the ECM/PCM (B9 (B18)*) and the secondary HO2S (Sensor 2), then go to step 21.

19. Turn the ignition switch OFF.

20. Replace the secondary HO2S (Sensor 2) (see page 11-218).

21. Reconnect all connectors.

22. Turn the ignition switch ON (II).

23. Reset the ECM/PCM with the HDS.

24. Do the ECM/PCM idle learn procedure (see page 11-302).

25. Start the engine. Hold the engine speed at 3,000 rpm without load (in Park or neutral) until the radiator fan comes on, then let it idle.

26. Test-drive under these conditions:

    - Engine coolant temperature above 176 °F (80 °C)
    - A/T in D position (M/T in 4th gear)
    - Engine speed at 1,500—3,000 rpm
    - Drive 1 minute or more

27. Check for Temporary DTCs or DTCs with the HDS.

    Are any Temporary DTCs or DTCs indicated?

    YES—If DTC P0138 and/or P0158* is indicated, check for poor connections or loose terminals at the secondary HO2S (Sensor 2) and the ECM/PCM, then go to step 1. If any other Temporary DTCs or DTCs are indicated, go to the indicated DTC's troubleshooting.

    NO—Go to step 28.

28. Monitor the OBD STATUS for DTC P0138 and/or P0158* in the DTCs MENU with the HDS.

    Does the screen indicate PASSED?

    YES—Troubleshooting is complete. ■

    NO—If the screen indicates FAILED, check for poor connections or loose terminals at the secondary HO2S (Sensor 2) and the ECM/PCM, then go to step 1. If the screen indicates EXECUTING, keep driving until a result comes on. If the screen indicates OUT OF CONDITION, go to step 19 and recheck.

(cont'd)

Protected by AR

DTC Troubleshooting (cont'd)

29. Update the ECM/PCM if it does not have the latest software, or substitute a known-good ECM/PCM (see page 11-6).

30. Start the engine. Hold the engine speed at 3,000 rpm without load (in Park or neutral) until the radiator fan comes on, then let it idle.

31. Test-drive under these conditions:

    - Engine coolant temperature above 176 °F (80 °C)
    - A/T in D position (M/T in 4th gear)
    - Engine speed at 1,500—3,000 rpm
    - Drive 1 minute or more

32. Check for Temporary DTCs or DTCs with the HDS.

    Are any Temporary DTCs or DTCs indicated?

    YES—If DTC P0138 and/or P0158* is indicated, check for poor connections or loose terminals at the secondary HO2S (Sensor 2) and the ECM/PCM, then go to step 1. If any other Temporary DTCs or DTCs are indicated, go to the indicated DTC's troubleshooting.

    NO—If the ECM/PCM was updated, troubleshooting is complete. If the ECM/PCM was substituted, replace the original ECM/PCM (see page 11-224).■

BACK

Protected by AR



DTC P0139: Rear Secondary HO2S (Bank 1, Sensor 2) Slow Response (2003-2004 models)

DTC P0159: Front Secondary HO2S (Bank 2, Sensor 2) Slow Response (2003-2004 models)

NOTE:
- Before you troubleshoot, record all freeze data and any on-board snapshot, and review the general troubleshooting information (see page 11-3).
- Information marked with an asterisk (*) applies to the front bank (Bank 2).

1. Turn the ignition switch ON (II).
2. Clear the DTC with the HDS.
3. Start the engine. Hold the engine speed at 3,000 rpm without load (in Park or neutral) until the radiator fan comes on, then let it idle.
4. Test-drive under these conditions:
   - Engine coolant temperature above 158 °F (70 °C)
   - A/T in D position (M/T in 4th gear)
   - Engine speed at 2,000—3,000 rpm
   - Drive about 10 minutes, then decelerate (with the throttle fully closed) for 5 seconds
5. Monitor the OBD STATUS for DTC P0139 and/or P0159* in the DTCs MENU with the HDS.

   Does the screen indicate FAILED?

   YES—Go to step 6.

   NO—If the screen indicates PASSED, intermittent failure, system is OK at this time. Check for poor connections or loose terminals at the secondary HO2S (Sensor 2) and the ECM/PCM. If the screen indicates EXECUTING, keep driving until a result comes on. If the screen indicates OUT OF CONDITION, go to step 3 and recheck.
6. Turn the ignition switch OFF.
7. Replace the secondary HO2S (Sensor 2) (see page 11-218).
8. Turn the ignition switch ON (II).
9. Reset the ECM/PCM with the HDS.
10. Do the ECM/PCM idle learn procedure (see page 11-302).
11. Start the engine. Hold the engine speed at 3,000 rpm without load (in Park or neutral) until the radiator fan comes on, then let it idle.
12. Test-drive under these conditions:
    - Engine coolant temperature above 158 °F (70 °C)
    - A/T in D position (M/T in 4th gear)
    - Engine speed at 2,000—3,000 rpm
    - Drive about 10 minutes, then decelerate (with the throttle fully closed) for 5 seconds
13. Check for Temporary DTCs or DTCs with the HDS.

    Are any Temporary DTCs or DTCs indicated?

    YES—If DTC P0139 and/or P0159* is indicated, check for poor connections or loose terminals at the secondary HO2S (Sensor 2) and the ECM/PCM, then go to step 1. If any other Temporary DTCs or DTCs are indicated, go to the indicated DTC's troubleshooting.

    NO—Go to step 14.
14. Monitor the OBD STATUS for DTC P0139 and/or P0159* in the DTCs MENU with the HDS.

    Does the screen indicate PASSED?

    YES—Troubleshooting is complete.■

    NO—If the screen indicates FAILED, check for poor connections or loose terminals at the secondary HO2S (Sensor 2) and the ECM/PCM, then go to step 1. If the screen indicates EXECUTING, keep driving until a result comes on. If the screen indicates OUT OF CONDITION, go to step 11 and recheck.

Protected by AR

DTC Troubleshooting (cont'd)

DTC P0139: Rear Secondary HO2S (Bank 1, Sensor 2) Slow Response (2005-2006 models)

DTC P0159: Front Secondary HO2S (Bank 2, Sensor 2) Slow Response (2005-2006 models)

NOTE:
- Before you troubleshoot, record all freeze data and any on-board snapshot, and review the general troubleshooting information (see page 11-3).
- Information marked with an asterisk (*) applies to the front bank (Bank 2).

1. Turn the ignition switch ON (II).
2. Clear the DTC with the HDS.
3. Start the engine. Hold the engine speed at 3,000 rpm without load (in Park or neutral) until the radiator fan comes on, then let it idle.
4. Test-drive under these conditions:
   - Engine coolant temperature above 176 °F (80 °C)
   - A/T in D position (M/T in 4th gear)
   - Vehicle speed between 33—55 mph (56—88 km/h)
   - Drive 5 minutes or more
5. Monitor the OBD STATUS for DTC P0139 and/or P0159* in the DTCs MENU with the HDS.

   Does the screen indicate FAILED?

   YES—Go to step 6.

   NO—If the screen indicates PASSED, intermittent failure, system is OK at this time. Check for poor connections or loose terminals at the secondary HO2S (Sensor 2) and the ECM/PCM. If the screen indicates EXECUTING, keep driving until a result comes on. If the screen indicates OUT OF CONDITION, go to step 3 and recheck.
6. Turn the ignition switch OFF.
7. Replace the secondary HO2S (Sensor 2) (see page 11-218).
8. Turn the ignition switch ON (II).
9. Reset the ECM/PCM with the HDS.
10. Do the ECM/PCM idle learn procedure (see page 11-302).
11. Start the engine. Hold the engine speed at 3,000 rpm without load (in Park or neutral) until the radiator fan comes on, then let it idle.
12. Test-drive under these conditions:
    - Engine coolant temperature above 176 °F (80 °C)
    - A/T in D position (M/T in 4th gear)
    - Vehicle speed between 33—55 mph (56—88 km/h)
    - Drive 5 minutes or more
13. Check for Temporary DTCs or DTCs with the HDS.

    Are any Temporary DTCs or DTCs indicated?

    YES—If DTC P0139 and/or P0159* is indicated, check for poor connections or loose terminals at the secondary HO2S (Sensor 2) and the ECM/PCM, then go to step 1. If any other Temporary DTCs or DTCs are indicated, go to the indicated DTC's troubleshooting.

    NO—Go to step 14.
14. Monitor the OBD STATUS for DTC P0139 and/or P0159* in the DTCs MENU with the HDS.

    Does the screen indicate PASSED?

    YES—Troubleshooting is complete.■

    NO—If the screen indicates FAILED, check for poor connections or loose terminals at the secondary HO2S (Sensor 2) and the ECM/PCM, then go to step 1. If the screen indicates EXECUTING, keep driving until a result comes on. If the screen indicates OUT OF CONDITION, go to step 11 and recheck.

BACK

Protected by AR

DTC P0141: Rear Secondary HO2S (Bank 1, Sensor 2) Heater Circuit Malfunction

DTC P0161: Front Secondary HO2S (Bank 2, Sensor 2) Heater Circuit Malfunction

NOTE:
- Before you troubleshoot, record all freeze data and any on-board snapshot, and review the general troubleshooting information (see page 11-3).
- Information marked with an asterisk (*) applies to the front bank (Bank 2).

1. Turn the ignition switch ON (II).
2. Clear the DTC with the HDS.
3. Start the engine.
4. Check for Temporary DTCs or DTCs with the HDS.

   Is DTC P0141 and/or P0161 indicated?*

   YES—Go to step 5.

   NO—Intermittent failure, system is OK at this time. Check for poor connections or loose terminals at the secondary HO2S (Sensor 2) and the ECM/PCM. ■
5. Turn the ignition switch OFF.
6. Check these fuses:
   - No. 19 OPTION (40 A) fuse in under-hood fuse/relay box.
   - No. 4 A/F SENSOR (15 A) fuse in under-dash fuse/relay box.
   - No. 23 IGP (7.5 A) fuse in under-dash fuse/relay box.

   Are any of the fuses blown?

   YES—Repair short in the wire between the A/F sensors, the A/F sensor relay, and the fuses, then go to step 22.

   NO—Go to step 7.
7. Disconnect the secondary HO2S (Sensor 2) 4P connector.
8. At the secondary HO2S (Sensor 2) side, measure resistance between secondary HO2S (Sensor 2) 4P connector terminals No. 3 and No. 4.

SECONDARY HO2S (SENSOR 2) 4P CONNECTOR

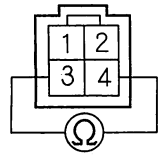

Terminal side of male terminals

Is there 5.4—6.6 Ω at room temperature?

YES—Go to step 9.

NO—Go to step 21.

9. Check for continuity between body ground and secondary HO2S (Sensor 2) 4P connector terminals No. 3 and No. 4 individually.

SECONDARY HO2S (SENSOR 2) 4P CONNECTOR

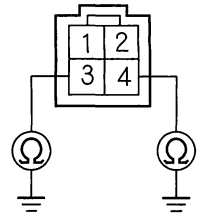

Terminal side of male terminals

Is there continuity?

YES—Go to step 21.

NO—Go to step 10.

(cont'd)

Protected by AR

DTC Troubleshooting (cont'd)

10. Jump the SCS line with the HDS.
11. Disconnect ECM/PCM connector E (31P).
12. Check for continuity between ECM/PCM connector terminal E9 (E8)* and body ground.

ECM/PCM CONNECTOR E (31P)

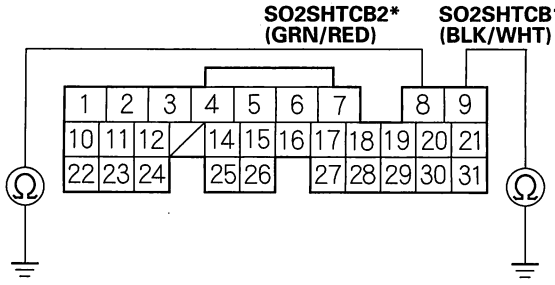

Wire side of female terminals

Is there continuity?

YES—Repair short in the wire between the ECM/PCM (E9 (E8)*) and the secondary HO2S (Sensor 2), then go to step 22.

NO—Go to step 13.

13. Connect secondary HO2S (Sensor 2) 4P connector terminal No. 3 to body ground with a jumper wire.

SECONDARY HO2S (SENSOR 2) 4P CONNECTOR

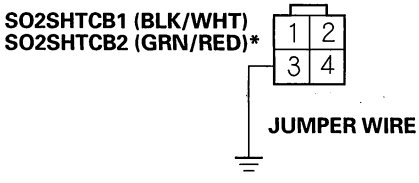

Wire side of female terminals

14. Check for continuity between ECM/PCM connector terminal E9 (E8)* and body ground.

ECM/PCM CONNECTOR E (31P)

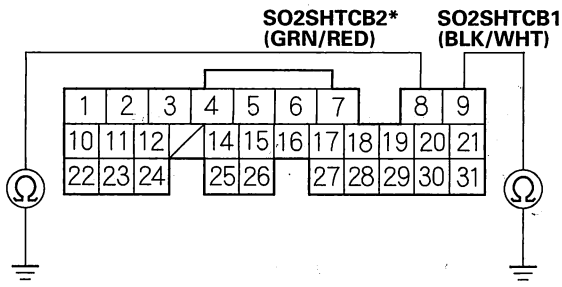

Wire side of female terminals

Is there continuity?

YES—Go to step 15.

NO—Repair open in the wire between the ECM/PCM (E9 (E8)*) and the secondary HO2S (Sensor 2), then go to step 22.

15. Remove the A/F sensor relay (A).

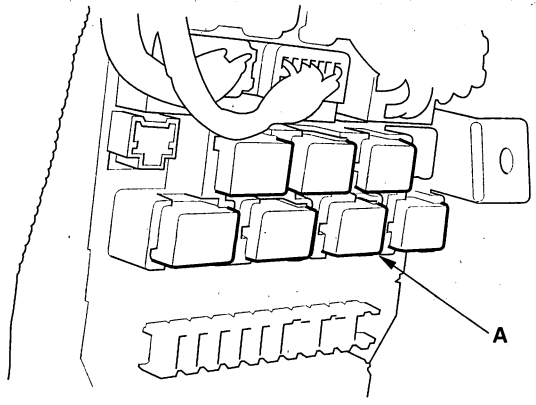

BACK

Protected by AR

16. Connect secondary HO2S (Sensor 2) 4P connector terminal No. 4 to body ground with a jumper wire.

SECONDARY HO2S (SENSOR 2) 4P CONNECTOR

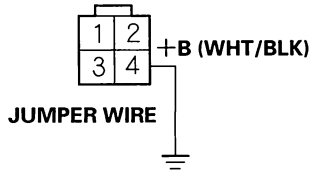

Wire side of female terminals

17. Check for continuity between A/F sensor relay 4P connector terminal No. 2 and body ground.

A/F SENSOR RELAY 4P CONNECTOR

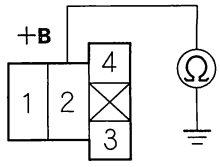

Terminal side of female terminals

Is there continuity?

YES—Go to step 18.

NO—Repair open in the wire between the A/F sensor (Sensor 1) and the A/F sensor relay, then go to step 22.

18. Disconnect ECM/PCM connector A (31P).

19. Check for continuity between ECM/PCM connector terminal A4 and A/F sensor relay 4P connector terminal No. 4.

ECM/PCM CONNECTOR A (31P)

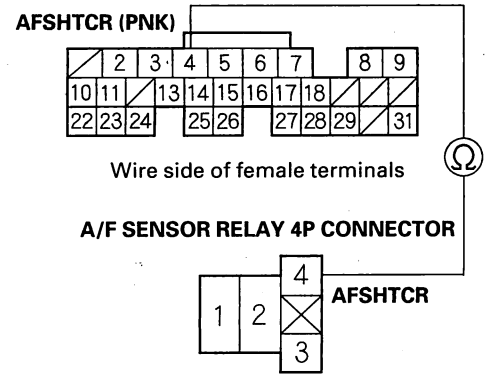

Wire side of female terminals

A/F SENSOR RELAY 4P CONNECTOR

Terminal side of female terminals

Is there continuity?

YES—Go to step 20.

NO—Repair open in the wire between the ECM/PCM (A4) and the A/F sensor relay, then go to step 22.

20. Test the A/F sensor relay (see page 22-51).

Is the A/F sensor relay OK?

YES—Go to step 28.

NO—Replace the A/F sensor relay, then go to step 22.

21. Replace the secondary HO2S (Sensor 2) (see page 11-218).

22. Reconnect all connectors.

23. Turn the ignition switch ON (II).

24. Reset the ECM/PCM with the HDS.

25. Do the ECM/PCM idle learn procedure (see page 11-302).

(cont'd)

Protected by AR

DTC Troubleshooting (cont'd)

26. Check for Temporary DTCs or DTCs with the HDS.

    Are any Temporary DTCs or DTCs indicated?

    YES—If DTC P0141 and/or P0161* is indicated, check for poor connections or loose terminals at the secondary HO2S (Sensor 2) and the ECM/PCM, then go to step 1. If any other Temporary DTCs or DTCs are indicated, go to the indicated DTC's troubleshooting.

    NO—Go to step 27.

27. Monitor the OBD STATUS for DTC P0141 and/or P0161* in the DTCs MENU with the HDS.

    Does the screen indicate PASSED?

    YES—Troubleshooting is complete. ■

    NO—If the screen indicates FAILED, check for poor connections or loose terminals at the secondary HO2S (Sensor 2) and the ECM/PCM, then go to step 1. If the screen indicates NOT COMPLETED, go to step 25 and recheck.

28. Update the ECM/PCM if it does not have the latest software, or substitute a known-good ECM/PCM (see page 11-6).

29. Check for Temporary DTCs or DTCs with the HDS.

    Are any Temporary DTCs or DTCs indicated?

    YES—If DTC P0141 and/or P0161* is indicated, check for poor connections or loose terminals at the secondary HO2S (Sensor 2) and the ECM/PCM, then go to step 1. If any other Temporary DTCs or DTCs are indicated, go to the indicated DTC's troubleshooting.

    NO—If the ECM/PCM was updated, troubleshooting is complete. If the ECM/PCM was substituted, replace the original ECM/PCM (see page 11-224). ■

BACK

Protected by AR

DTC P0171: Rear Bank (Bank 1) Fuel System Too Lean

DTC P0172: Rear Bank (Bank 1) Fuel System Too Rich

DTC P0174: Front Bank (Bank 2) Fuel System Too Lean

DTC P0175: Front Bank (Bank 2) Fuel System Too Rich

NOTE:
- Before you troubleshoot, record all freeze data and any on-board snapshot, and review the general troubleshooting information (see page 11-3).
- If some of the DTCs listed below are stored at the same time as DTC P0171, P0172, P0174, and/or P0175, troubleshoot those DTCs first, then recheck for P0171, P0172, P0174, and/or P0175.
  P0107, P0108, P1128, P1129: Manifold absolute pressure (MAP) sensor
  P0133, P0153, P1172*, P1173*, P2195, P2197, P2237, P2238, P2240, P2241, P2243, P2245, P2247, P2249, P2251, P2252, P2254, P2255, P2627, P2628, P2630, P2631, P2A00, P2A03: Air fuel ratio (A/F) sensor (Sensor 1)
  P0134, P0135, P0154, P0155: Air fuel ratio (A/F) sensor (Sensor 1) heater
  P0137, P0138, P0139, P0157, P0158, P0159, P2270*, P2271*, P2272*, P2273*: Secondary HO2S (Sensor 2)
  P0141, P0161: Secondary HO2S (Sensor 2) heater
  P2646, P2647, P2648, P2649: VTEC system
  P0401, P0404, P0406, P2413: Exhaust Gas Recirculation (EGR) system
  P2279: Intake air leakage
  *: 2005-2006 models only

1. Check the fuel pressure (see page 11-317).

   Is the fuel pressure OK?

   YES—Check the valve clearances and adjust if necessary. If the valve clearances are OK, replace the injectors (see page 11-215), then go to step 2.

   NO—If the pressure is too high, replace the fuel pressure regulator (see page 11-326), then go to step 2. If the pressure is too low, check the fuel pump, and the fuel feed pipe, then go to step 2.

2. Turn the ignition switch ON (II).

3. Reset the ECM/PCM with the HDS.

4. Do the ECM/PCM idle learn procedure (see page 11-302).

5. Start the engine. Hold the engine speed at 3,000 rpm without load (in Park or neutral) until the radiator fan comes on, then let it idle.

6. Test-drive under these conditions:

   - Engine coolant temperature above 158 °F (70 °C)
   - A/T in D position (M/T in 5th gear)
   - Drive at a steady speed between 25—55 mph (40—88 km/h) for 5 minutes, then drive at a steady speed between 15—75 mph (24—120 km/h) for 15 minutes.

   NOTE: DTC P0171, P0172, P0174, and/or P0175 may take up to 80 minutes of test driving to set. Using the HDS, monitor the long term fuel trim (LT FUEL TRIM) or the air fuel feed back average (AF FB AVE). If the long term fuel trim/air fuel feed back average stays within 0.85—1.18, there is no problem at this time.

7. Check for Temporary DTCs or DTCs with the HDS.

   Are any Temporary DTCs or DTCs indicated?

   YES—If DTC P0171, P0172, P0174, or P0175 is indicated, go to step 1. If any other Temporary DTCs or DTCs are indicated, go to the indicated DTC's troubleshooting.

   NO—Troubleshooting is complete.■

Protected by AR

DTC Troubleshooting (cont'd)

DTC P0300: Random Misfire and Any Combination of the Following:

DTC P0301: No. 1 Cylinder Misfire

DTC P0302: No. 2 Cylinder Misfire

DTC P0303: No. 3 Cylinder Misfire

DTC P0304: No. 4 Cylinder Misfire

DTC P0305: No. 5 Cylinder Misfire

DTC P0306: No. 6 Cylinder Misfire

Special Tools Required
- Pressure gauge adapter 07NAJ-P07010A
- A/T low pressure gauge w/panel 07406-0070300
- A/T pressure hose 07406-0020201
- A/T pressure hose, 2,210 mm 07MAJ-PY4011A
- A/T pressure adapter 07MAJ-PY40120
- Oil pressure hose 07ZAJ-S5A0200

NOTE:
- Before you troubleshoot, record all freeze data and any on-board snapshot, and review the general troubleshooting information (see page 11-3).
- If the misfire is frequent enough to trigger detection of increased emissions during two consecutive driving cycles, the MIL will come on, and DTC P0300 (and some combination of P0301 through P0306) will be stored.
- If the misfire is frequent enough to damage the catalyst, the MIL will blink whenever the misfire occurs, and DTC P0300 (and some combination of P0301 through P0306) will be stored. When the misfire stops, the MIL will remain on.
- Troubleshoot the following DTCs first, if any of them were stored along with the random misfire DTC(s):

P0107, P0108, P1128, P1129: Manifold absolute pressure (MAP) sensor
P0171, P0172, P0174, P0175: Fuel system
P0335, P0339, P0385, P0389: Crankshaft position (CKP) sensor A/B
P0506, P0507: Idle control system
P0340, P0344: Camshaft position (CMP) sensor
P0401, P0404, P0406, P2413: Exhaust gas recirculation (EGR) system

1. Turn the ignition switch ON (II).
2. Clear the DTC with the HDS.
3. Start the engine without load (in Park or neutral), then let it idle.
4. Monitor the OBD STATUS for DTC P0301, P0302, P0303, P0304, P0305, or P0306 in the DTCs MENU with the HDS.

   Does the screen indicate FAILED?

   YES—Go to step 9.

   NO—If the screen indicates PASSED, go to step 5. If the screen indicates EXECUTING, keep driving until a result comes on. If the screen indicates OUT OF CONDITION, wait for several minutes, then recheck.
5. Check the CYL1 MISFIRE, CYL2 MISFIRE, CYL3 MISFIRE, CYL4 MISFIRE, CYL5 MISFIRE, and/or CYL6 MISFIRE in the DATA LIST for 10 minutes with the HDS.

   Does CYL1 MISFIRE, CYL2 MISFIRE, CYL3 MISFIRE, CYL4 MISFIRE, CYL5 MISFIRE, and/or CYL6 MISFIRE show misfire counts?

   YES—Go to step 9.

   NO—Go to step 6.
6. Test-drive the vehicle for several minutes in the range of these recorded freeze data parameters:

   - Engine speed
   - Vehicle speed
   - Throttle position
   - CLV (calculated load value)

BACK

Protected by AR

7. Monitor the OBD STATUS for DTC P0301, P0302, P0303, P0304, P0305, or P0306 in the DTCs MENU with the HDS.

   Does the screen indicate FAILED?

   YES—Go to step 9.

   NO—If the screen indicates PASSED, go to step 8. If the screen indicates EXECUTING, keep driving until a result comes on. If the screen indicates OUT OF CONDITION, go to step 6 and recheck.

8. Check the CYL1 MISFIRE, CYL2 MISFIRE, CYL3 MISFIRE, CYL4 MISFIRE, CYL5 MISFIRE, and/or CYL6 MISFIRE in the DATA LIST for 10 minutes with the HDS.

   Does CYL1 MISFIRE, CYL2 MISFIRE, CYL3 MISFIRE, CYL4 MISFIRE, CYL5 MISFIRE, and/or CYL6 MISFIRE show misfire counts?

   YES—Go to step 9.

   NO—Intermittent failure, system is OK at this time. ■

9. Turn the ignition switch OFF.

10. Check the fuel quality.

    Is the quality good?

    YES—Go to step 11.

    NO—Drain the tank, and fill it with a known-good fuel, then go to step 20.

11. Inspect the spark plugs (see page 4-23). If the spark plugs are fouled or worn, replace them.

12. Test-drive the vehicle for several minutes in the range of these recorded freeze data parameters:

    - Engine speed
    - Vehicle speed
    - Throttle position
    - CLV (calculated load value)

13. Check the CYL1 MISFIRE, CYL2 MISFIRE, CYL3 MISFIRE, CYL4 MISFIRE, CYL5 MISFIRE, and/or CYL6 MISFIRE in the DATA LIST for 10 minutes with the HDS.

    Does CYL1 MISFIRE, CYL2 MISFIRE, CYL3 MISFIRE, CYL4 MISFIRE, CYL5 MISFIRE, and/or CYL6 MISFIRE show misfire counts?

    YES—Go to step 14.

    NO—Go to step 20.

14. Check the fuel pressure (see page 11-317).

    Is the fuel pressure OK?

    YES—Go to step 15.

    NO—
    - If the pressure is too high, replace the fuel pressure regulator (see page 11-326), then go to step 20.
    - If the pressure is too low, check the fuel pump, the fuel feed pipe, and the fuel filter. If they are OK, replace the fuel pressure regulator (see page 11-326), then go to step 20.

15. Turn the ignition switch OFF.

(cont'd)

Protected by AR

DTC Troubleshooting (cont'd)

16. Remove the rocker arm oil pressure switch (VTEC oil pressure switch) (A), and install the special tools as shown, then install the rocker arm oil pressure switch (VTEC oil pressure switch) in the pressure gauge adapter (B).

    NOTE: Install the switch in the reverse order of removal with a new O-ring.

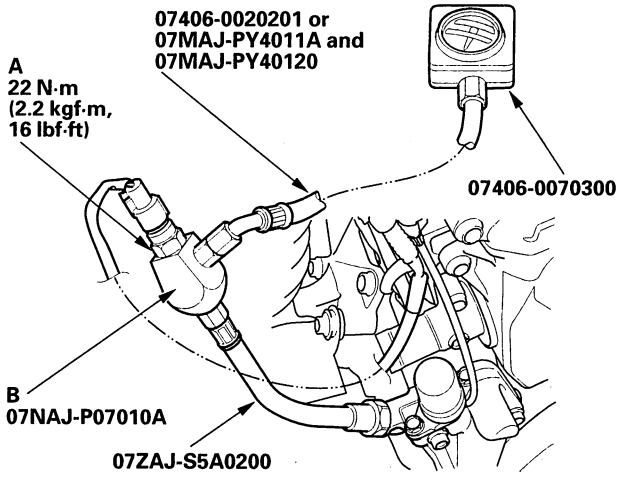

17. Reconnect the rocker arm oil pressure switch (VTEC oil pressure switch) 2P connector.

18. Start the engine. Hold the engine speed at 3,000 rpm without load (in Park or neutral) until the radiator fan comes on.

19. Check the oil pressure at engine speeds of 1,000 and 2,000 rpm. Keep the measuring time as short as possible (less than 1 minute) because the engine is running without load.

    Is the oil pressure below 49 kPa (7 psi, 0.5 kgf/cm²) ?

    YES—Check for air in the fuel line, then go to step 20.

    NO—Inspect the VTEC system (see page 6-7), then go to step 20.

20. Turn the ignition switch ON (II).

21. Reset the ECM/PCM with the HDS.

22. Clear the CKP pattern with the HDS.

23. Do the ECM/PCM idle learn procedure (see page 11-302).

24. Do the CKP pattern learn procedure (see page 11-4).

25. Test-drive the vehicle for several minutes in the range of these recorded freeze data parameters:

    - Engine speed
    - Vehicle speed
    - Throttle position
    - CLV (calculated load value)

26. Check for Temporary DTCs or DTCs with the HDS.

    Are any Temporary DTCs or DTCs indicated?

    YES—If DTC P0301, P0302, P0303, P0304, P0305, or P0306 are indicated, check for poor connections or loose terminals at the ignition coil, the injector, and the ECM/PCM, then go to troubleshooting DTC P0301, P0302, P0303, P0304, P0305 or P0306 (see page 11-115). If any other Temporary DTCs or DTCs are indicated, go to the indicated DTC's troubleshooting.

    NO—Go to step 27.

27. Monitor the OBD STATUS for DTC P0301, P0302, P0303, P0304, P0305, or P0306 in the DTCs MENU with the HDS.

    Does the screen indicate PASSED?

    YES—Troubleshooting is complete.■

    NO—If the screen indicates FAILED, go to step 1 and recheck. If the screen indicates EXECUTING, keep driving until a result comes on. If the screen indicates OUT OF CONDITION, go to step 25 and recheck.

BACK

Protected by AR

DTC P0301: No. 1 Cylinder Misfire

DTC P0302: No. 2 Cylinder Misfire

DTC P0303: No. 3 Cylinder Misfire

DTC P0304: No. 4 Cylinder Misfire

DTC P0305: No. 5 Cylinder Misfire

DTC P0306: No. 6 Cylinder Misfire

NOTE: Before you troubleshoot, record all freeze data and any on-board snapshot, and review the general troubleshooting information (see page 11-3).

1. Turn the ignition switch ON (II).
2. Clear the DTC with the HDS.
3. Start the engine without load (in Park or neutral), then let it idle.
4. Monitor the OBD STATUS for DTC P0301, P0302, P0303, P0304, P0305, or P0306 in the DTCs MENU with the HDS.

   Does the screen indicate FAILED?

   YES—Go to step 9.

   NO—If the screen indicates PASSED, go to step 5. If the screen indicates EXECUTING, keep driving until a result comes on. If the screen indicates OUT OF CONDITION, wait for several minutes, and recheck.
5. Check the CYL1 MISFIRE, CYL2 MISFIRE, CYL3 MISFIRE, CYL4 MISFIRE, CYL5 MISFIRE, and/or CYL6 MISFIRE in the DATA LIST for 10 minutes with the HDS.

   Does CYL1 MISFIRE, CYL2 MISFIRE, CYL3 MISFIRE, CYL4 MISFIRE, CYL5 MISFIRE, and/or CYL6 MISFIRE show misfire counts?

   YES—Go to step 9.

   NO—Go to step 6.
6. Test-drive the vehicle for several minutes in the range of these recorded freeze data parameters:

   - Engine speed
   - Vehicle speed
   - Throttle position
   - CLV (calculated load value)
7. Monitor the OBD STATUS for DTC P0301, P0302, P0303, P0304, P0305, or P0306 in the DTCs MENU with the HDS.

   Does the screen indicate FAILED?

   YES—Go to step 9.

   NO—If the screen indicates PASSED, go to step 8. If the screen indicates EXECUTING, keep driving until a result comes on. If the screen indicates OUT OF CONDITION, go to step 6 and recheck.
8. Check the CYL1 MISFIRE, CYL2 MISFIRE, CYL3 MISFIRE, CYL4 MISFIRE, CYL5 MISFIRE, and/or CYL6 MISFIRE in the DATA LIST for 10 minutes with the HDS.

   Does CYL1 MISFIRE, CYL2 MISFIRE, CYL3 MISFIRE, CYL4 MISFIRE, CYL5 MISFIRE, and/or CYL6 MISFIRE show misfire counts?

   YES—Go to step 9.

   NO—Intermittent failure, system is OK at this time. Check the fuel and ignition system circuit connectors for loose wires or poor connections. ■
9. Turn the ignition switch OFF.
10. Exchange the ignition coil from the problem cylinder with one from another cylinder.
11. Test-drive the vehicle for several minutes in the range of these recorded freeze data parameters:

    - Engine speed
    - Vehicle speed
    - Throttle position
    - CLV (calculated load value)

(cont'd)

Protected by AR

DTC Troubleshooting (cont'd)

12. Check the CYL1 MISFIRE, CYL2 MISFIRE, CYL3 MISFIRE, CYL4 MISFIRE, CYL5 MISFIRE, and/or CYL6 MISFIRE in the DATA LIST for 10 minutes with the HDS.

    Does CYL1 MISFIRE, CYL2 MISFIRE, CYL3 MISFIRE, CYL4 MISFIRE, CYL5 MISFIRE, and/or CYL6 MISFIRE show misfire counts?

    YES—Go to step 13.

    NO—Intermittent misfire due to poor contact at the ignition coil connector (no misfire at this time). Make sure the coil connections are secure. ■

13. Determine which cylinder had the misfire.

    Does the misfire occur in the cylinder where the ignition coil was moved?

    YES—Replace the faulty ignition coil (see page 4-20), then go to step 55.

    NO—Go to step 14.

14. Turn the ignition switch OFF.

15. Exchange the spark plug from the problem cylinder with one from another cylinder.

16. Test-drive the vehicle for several minutes in the range of these recorded freeze data parameters:

    - Engine speed
    - Vehicle speed
    - Throttle position
    - CLV (calculated load value)

17. Check the CYL1 MISFIRE, CYL2 MISFIRE, CYL3 MISFIRE, CYL4 MISFIRE, CYL5 MISFIRE, and/or CYL6 MISFIRE in the DATA LIST for 10 minutes with the HDS.

    Does CYL1 MISFIRE, CYL2 MISFIRE, CYL3 MISFIRE, CYL4 MISFIRE, CYL5 MISFIRE, and/or CYL6 MISFIRE show misfire counts?

    YES—Go to step 18.

    NO—Intermittent misfire due to spark plug fouling (no misfire at this time). ■

18. Determine which cylinder had the misfire.

    Does the misfire occur in the cylinder where the spark plug was moved?

    YES—Replace the faulty spark plug, then go to step 55.

    NO—Go to step 19.

19. Turn the ignition switch OFF.

20. Exchange the injector from the problem cylinder with one from the another cylinder.

21. Start the engine, and let it idle for 2 minutes.

22. Test-drive the vehicle for several minutes in the range of these recorded freeze data parameters:

    - Engine speed
    - Vehicle speed
    - Throttle position
    - CLV (calculated load value)

23. Check the CYL1 MISFIRE, CYL2 MISFIRE, CYL3 MISFIRE, CYL4 MISFIRE, CYL5 MISFIRE, and/or CYL6 MISFIRE in the DATA LIST for 10 minutes with the HDS.

    Does CYL1 MISFIRE, CYL2 MISFIRE, CYL3 MISFIRE, CYL4 MISFIRE, CYL5 MISFIRE, and/or CYL6 MISFIRE show misfire counts?

    YES—Go to step 24.

    NO—Intermittent misfire due to bad contact in the injector connector (no misfire at this time). Check for poor connections or loose terminals at the injector. ■

24. Determine which cylinder had the misfire.

    Does the misfire occur in the cylinder where the injector was exchanged?

    YES—Replace the faulty injector (see page 11-215), then go to step 55.

    NO—Go to step 25.

25. Turn the ignition switch OFF.

BACK

Protected by AR

26. Disconnect the ignition coil 3P connector from the problem cylinder.
27. Turn the ignition switch ON (II).
28. Measure voltage between ignition coil 3P connector terminal No. 3 and body ground.

IGNITION COIL 3P CONNECTOR

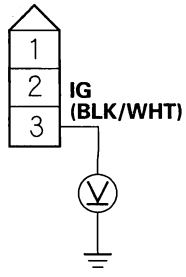

Wire side of female terminals

Is there battery voltage?

YES—Go to step 29.

NO—Repair open in the wire between the ignition coil and the ignition coil relay, then go to step 55.

29. Turn the ignition switch OFF.
30. Check for continuity between ignition coil 3P connector terminal No. 2 and body ground.

IGNITION COIL 3P CONNECTOR

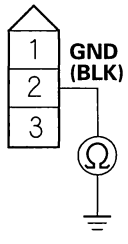

Wire side of female terminals

Is there continuity?

YES—Go to step 31.

NO—Repair open in the wire between the ignition coil and G101, then go to step 55.

31. Turn the ignition switch OFF.
32. Jump the SCS line with the HDS.
33. Disconnect ECM/PCM connector E (31P).
34. Check for continuity between body ground and the appropriate ECM/PCM connector terminal (see table).

ECM/PCM CONNECTOR E (31P)

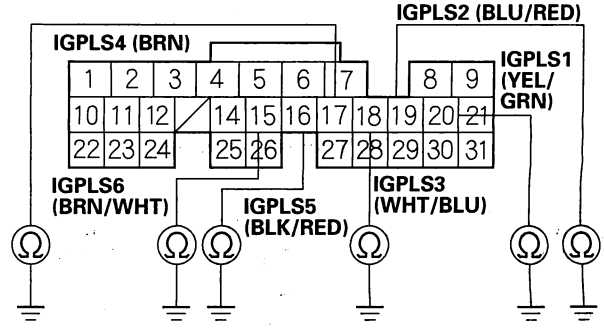

Wire side of female terminals

PROBLEM CYLINDER	DTC	ECM/PCM TERMINAL	WIRE COLOR
No. 1	P0301	E20	YEL/GRN
No. 2	P0302	E19	BLU/RED
No. 3	P0303	E18	WHT/BLU
No. 4	P0304	E17	BRN
No. 5	P0305	E16	BLK/RED
No. 6	P0306	E15	BRN/WHT

Is there continuity?

YES—Repair short in the wire between the ECM/PCM and the ignition coil, then go to step 55.

NO—Go to step 35.

(cont'd)

Protected by AR

DTC Troubleshooting (cont'd)

35. Connect appropriate ignition coil 3P connector terminal No. 1 to body ground with a jumper wire (see table).

IGNITION COIL 3P CONNECTOR

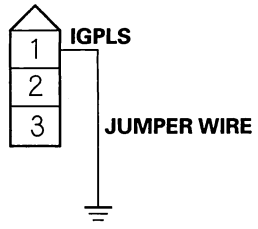

Wire side of female terminals

PROBLEM CYLINDER	DTC	ECM/PCM TERMINAL	WIRE COLOR
No. 1	P0301	E20	YEL/GRN
No. 2	P0302	E19	BLU/RED
No. 3	P0303	E18	WHT/BLU
No. 4	P0304	E17	BRN
No. 5	P0305	E16	BLK/RED
No. 6	P0306	E15	BRN/WHT

36. Check for continuity between body ground and the appropriate ECM/PCM connector terminal (see table).

ECM/PCM CONNECTOR E (31P)

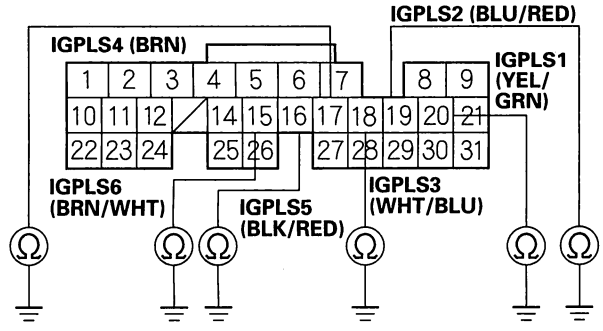

Wire side of female terminals

PROBLEM CYLINDER	DTC	ECM/PCM TERMINAL	WIRE COLOR
No. 1	P0301	E20	YEL/GRN
No. 2	P0302	E19	BLU/RED
No. 3	P0303	E18	WHT/BLU
No. 4	P0304	E17	BRN
No. 5	P0305	E16	BLK/RED
No. 6	P0306	E15	BRN/WHT

Is there continuity?

YES—Go to step 37.

NO—Repair open in the wire between the ECM/PCM and the ignition coil, then go to step 55.

BACK

Protected by AR

37. Reconnect the ignition coil 3P connector and ECM/PCM connector E (31P).

38. Do an engine compression and a cylinder leakdown test.

    Did the engine pass both tests?

    YES—Go to step 39.

    NO—Repair the engine, then go to step 55.

39. Do the VTEC rocker arm test (see page 6-7).

    Did the engine pass the test?

    YES—Go to step 40.

    NO—Repair the VTEC rocker arm, then go to step 55.

40. Turn the ignition switch OFF.

41. Jump the SCS line with the HDS.

42. Disconnect ECM/PCM connector E (31P).

43. Turn the ignition switch ON (II).

44. Measure voltage between body ground and the appropriate ECM/PCM connector terminal (see table).

ECM/PCM CONNECTOR E (31P)

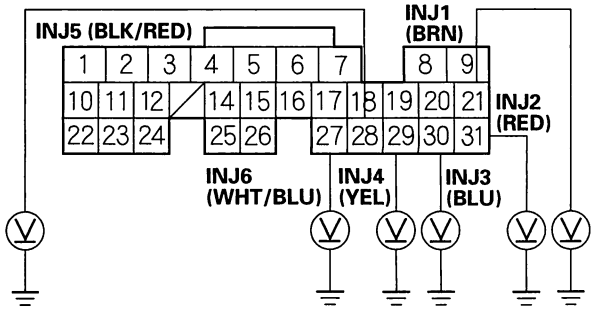

Wire side of female terminals

PROBLEM CYLINDER	DTC	ECM/PCM TERMINAL	WIRE COLOR
No. 1	P0301	E21	BRN
No. 2	P0302	E31	RED
No. 3	P0303	E30	BLU
No. 4	P0304	E29	YEL
No. 5	P0305	E28	BLK/RED
No. 6	P0306	E27	WHT/BLU

Is there battery voltage?

YES—Go to step 54.

NO—Go to step 45.

45. Turn the ignition switch OFF.

46. Remove the intake manifold (see page 9-3).

47. Disconnect the injector 2P connector from the problem cylinder.

48. Turn the ignition switch ON (II).

49. Measure voltage between injector 2P connector terminal No. 1 and body ground.

INJECTOR 2P CONNECTOR

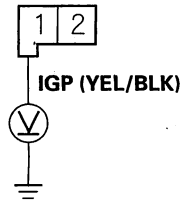

Wire side of female terminals

Is there battery voltage?

YES—Go to step 50.

NO—Repair open in the wire between the injector and the PGM-FI main relay 1 (FI MAIN), then go to step 55.

(cont'd)

Protected by AR

DTC Troubleshooting (cont'd)

50. Turn the ignition switch OFF.

51. Check for continuity between body ground and the appropriate ECM/PCM connector terminal (see table).

ECM/PCM CONNECTOR E (31P)

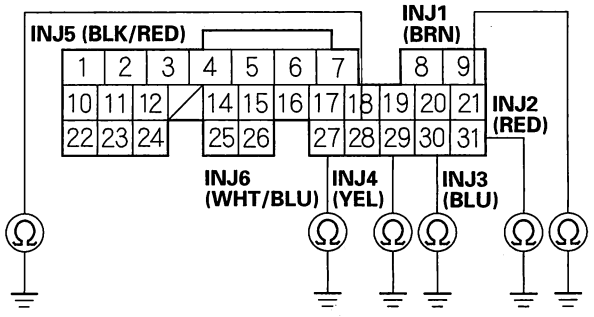

Wire side of female terminals

PROBLEM CYLINDER	DTC	ECM/PCM TERMINAL	WIRE COLOR
No. 1	P0301	E21	BRN
No. 2	P0302	E31	RED
No. 3	P0303	E30	BLU
No. 4	P0304	E29	YEL
No. 5	P0305	E28	BLK/RED
No. 6	P0306	E27	WHT/BLU

Is there continuity?

YES—Repair short in the wire between the ECM/PCM and the injector, then go to step 55.

NO—Go to step 52.

52. Connect appropriate injector 2P connector terminal No. 2 to body ground with a jumper wire (see table).

INJECTOR 2P CONNECTOR

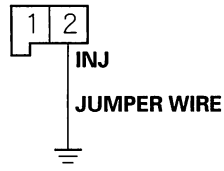

Wire side of female terminals

PROBLEM CYLINDER	DTC	WIRE COLOR
No. 1	P0301	BRN
No. 2	P0302	RED
No. 3	P0303	BLU
No. 4	P0304	YEL
No. 5	P0305	BLK/RED
No. 6	P0306	WHT/BLU

BACK

Protected by AR

53. Check for continuity between body ground and the appropriate ECM/PCM connector terminal (see table).

ECM/PCM CONNECTOR E (31P)

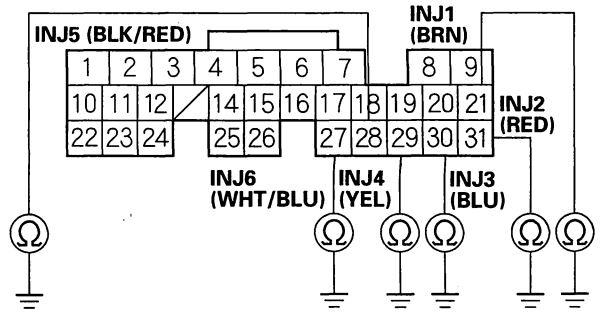

Wire side of female terminals

PROBLEM CYLINDER	DTC	ECM/PCM TERMINAL	WIRE COLOR
No. 1	P0301	E21	BRN
No. 2	P0302	E31	RED
No. 3	P0303	E30	BLU
No. 4	P0304	E29	YEL
No. 5	P0305	E28	BLK/RED
No. 6	P0306	E27	WHT/BLU

Is there continuity?

YES—Go to step 54.

NO—Repair open in the wire between the ECM/PCM and the injector, then go to step 55.

54. Measure resistance between injector 2P connector terminals No. 1 and No. 2.

INJECTOR 2P CONNECTOR

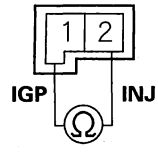

Terminal side of male terminals

Is there 10— 13 Ω ?

YES—Go to step 64.

NO—Replace the injector (see page 11-215), then go to step 55.

(cont'd)

Protected by AR

DTC Troubleshooting (cont'd)

55. Reconnect all connectors.

56. Turn the ignition switch ON (II).

57. Reset the ECM/PCM with the HDS.

58. Clear the CKP pattern with the HDS.

59. Do the ECM/PCM idle learn procedure (see page 11-302).

60. Do the CKP pattern learn procedure (see page 11-4).

61. Test-drive the vehicle for several minutes in the range of these recorded freeze data parameters:

    - Engine speed
    - Vehicle speed
    - Throttle position
    - CLV (calculated load value)

62. Check for Temporary DTCs or DTCs with the HDS.

    Are any Temporary DTCs or DTCs indicated?

    YES—If DTC P0301, P0302, P0303, P0304, P0305, or P0306 are indicated, check for poor connections or loose terminals at the ignition coil, the injector, and the ECM/PCM, then go to troubleshooting DTC P0301, P0302, P0303, P0304, P0305, or P0306 (see page 11-112). If any other Temporary DTCs or DTCs are indicated, go to the indicated DTC's troubleshooting.

    NO—Go to step 63.

63. Monitor the OBD STATUS for DTC P0301, P0302, P0303, P0304, P0305, or P0306 in the DTCs MENU with the HDS.

    Does the screen indicate PASSED?

    YES—Troubleshooting is complete. ■

    NO—If the screen indicates FAILED, go to step 1 and recheck. If the screen indicates EXECUTING, keep driving until a result comes on. If the screen indicates OUT OF CONDITION, go to step 61 and recheck.

64. Update the ECM/PCM if it does not have the latest software, or substitute a known-good ECM/PCM (see page 11-6).

65. Test-drive the vehicle for several minutes in the range of these recorded freeze data parameters:

    - Engine speed
    - Vehicle speed
    - Throttle position
    - CLV (calculated load value)

66. Check for Temporary DTCs or DTCs with the HDS.

    Are any Temporary DTCs or DTCs indicated?

    YES—If DTC P0301, P0302, P0303, P0304, P0305, or P0306 are indicated, check for poor connections or loose terminals at the injector, the ignition coil, and the ECM/PCM, then go to step 1. If any other Temporary DTCs or DTCs are indicated, go to the indicated DTC's troubleshooting.

    NO—If the ECM/PCM was updated, troubleshooting is complete. If the ECM/PCM was substituted, replace the original ECM/PCM (see page 11-224). ■

BACK

Protected by AR

DTC P0325: Knock Sensor Circuit Malfunction

NOTE: Before you troubleshoot, record all freeze data and any on-board snapshot, and review the general troubleshooting information (see page 11-3).

1. Turn the ignition switch ON (II).
2. Clear the DTC with the HDS.
3. Start the engine. Hold the engine speed at 3,000 rpm without load (in Park or neutral) until the radiator fan comes on, then let it idle.
4. Hold the engine speed at 3,000—4,000 rpm for at least 10 seconds.
5. Check for Temporary DTCs or DTCs with the HDS.

   Is DTC P0325 indicated?

   YES—Go to step 6.

   NO—Intermittent failure, system is OK at this time. Check for poor connections or loose terminals at the knock sensor and the ECM/PCM. ■
6. Turn the ignition switch OFF.
7. Jump the SCS line with the HDS.
8. Disconnect the knock sensor subharness 1P connector.
9. Disconnect ECM/PCM connector B (24P).
10. Check for continuity between ECM/PCM connector terminal B6 and body ground.

ECM/PCM CONNECTOR B (24P)

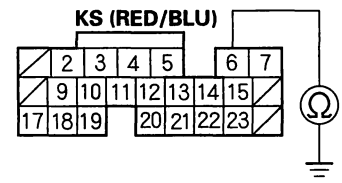

Wire side of female terminals

Is there continuity?

YES—Repair short in the wire between the ECM/PCM (B6) and the knock sensor subharness, then go to step 19.

NO—Go to step 11.

11. Connect the engine wire harness 1P connector (C154) terminal to body ground with a jumper wire.

ENGINE WIRE HARNESS 1P CONNECTOR (C154)

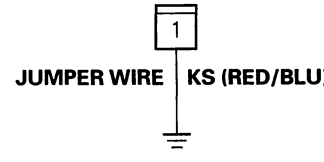

Wire side of female terminals

(cont'd)

Protected by AR

DTC Troubleshooting (cont'd)

12. Check for continuity between ECM/PCM connector terminal B6 and body ground.

ECM/PCM CONNECTOR B (24P)

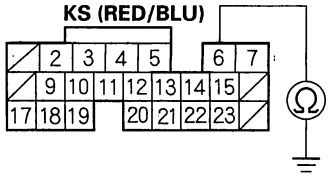

Wire side of female terminals

Is there continuity?

YES—Go to step 13.

NO—Repair open in the wire between the ECM/PCM (B6) and the knock sensor subharness, then go to step 19.

13. Remove the intake manifold (see page 9-3).

14. Disconnect the knock sensor 1P connector.

15. Check for continuity between the knock sensor subharness 1P connector terminal and body ground.

KNOCK SENSOR SUBHARNESS 1P CONNECTOR

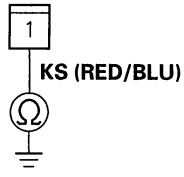

Wire side of female terminals

Is there continuity OK?

YES—Repair short in the knock sensor subharness, then go to step 18.

NO—Go to step 16.

16. Check the knock sensor subharness 1P connector and the knock sensor for an open.

Is the harness OK?

YES—Go to step 17.

NO—Repair open in the knock sensor subharness, then go to step 19.

17. Replace the knock sensor (see page 11-220).

18. Install the intake manifold (see page 9-4).

19. Reconnect all connectors.

20. Turn the ignition switch ON (II).

21. Reset the ECM/PCM with the HDS.

22. Do the ECM/PCM idle learn procedure (see page 11-302).

23. Hold the engine speed at 3,000—4,000 rpm for at least 10 seconds.

24. Check for Temporary DTCs or DTCs with the HDS.

Are any Temporary DTCs or DTCs indicated?

YES—Go to step 26.

NO—Go to step 25.

25. Monitor the OBD STATUS for DTC P0325 in the DTCs MENU with the HDS.

Does the screen indicate PASSED?

YES—Troubleshooting is complete.■

NO—If the screen indicates FAILED, go to step 1. If the screen indicates NOT COMPLETED, go to step 20 and recheck.

BACK

Protected by AR

26. Update the ECM/PCM if it does not have the latest software, or substitute a known-good ECM/PCM (see page 11-6).

27. Hold the engine speed at 3,000—4,000 rpm for at least 10 seconds.

28. Check for Temporary DTCs or DTCs with the HDS.

    Are any Temporary DTCs or DTCs indicated?

    YES—If DTC P0325 is indicated, check for poor connections or loose terminals at the knock sensor and the ECM/PCM, then go to step 1. If any other Temporary DTCs or DTCs are indicated, go to the indicated DTC's troubleshooting.

    NO—If the ECM/PCM was updated, troubleshooting is complete. If the ECM/PCM was substituted, replace the original ECM/PCM (see page 11-224).■

DTC P0335: CKP Sensor A No Signal

DTC P0385: CKP Sensor B No Signal

NOTE:
- Before you troubleshoot, record all freeze data and any on-board snapshot, and review the general troubleshooting information (see page 11-3).
- Information marked with an asterisk (*) applies to CKP sensor B.

1. Turn the ignition switch ON (II).

2. Clear the DTC with the HDS.

3. Start the engine.

4. Check for Temporary DTCs or DTCs with the HDS.

   Is DTC P0335 and/or P0385 indicated?

   YES—Go to step 5.

   NO—Intermittent failure, system is OK at this time. Check for poor connections or loose terminals at CKP sensor A/B and the ECM/PCM.■

5. Turn the ignition switch OFF.

6. Disconnect the CKP sensor A/B 6P connector (see page 11-220).

7. Turn the ignition switch ON (II).

(cont'd)

Protected by AR

DTC Troubleshooting (cont'd)

8. Measure voltage between CKP sensor A/B 6P connector terminal No. 6 (No. 3)* and body ground.

CKP SENSOR A/B 6P CONNECTOR

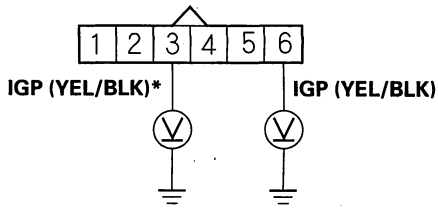

Wire side of female terminals

Is there battery voltage?

YES—Go to step 9.

NO—Repair open in the wire between CKP sensor A/B and PGM-FI main relay 1 (FI MAIN), then go to step 18.

9. Measure voltage between CKP sensor A/B 6P connector terminal No. 5 (No. 2)* and body ground.

CKP SENSOR A/B 6P CONNECTOR

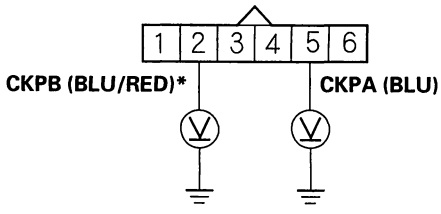

Wire side of female terminals

Is there about 5 V?

YES—Go to step 10.

NO—Go to step 11.

10. Measure voltage between CKP sensor A/B 6P connector terminal No. 4 (No. 1)* and No. 6 (No. 3)*.

CKP SENSOR A/B 6P CONNECTOR

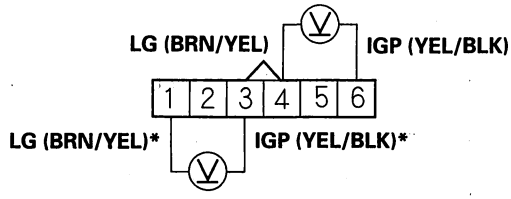

Wire side of female terminals

Is there battery voltage?

YES—Go to step 16.

NO—Repair open in the wire between CKP sensor A/B and G101, then go to step 18.

BACK

Protected by AR

11. Measure voltage between ECM/PCM connector terminal D13 (D1)* and body ground.

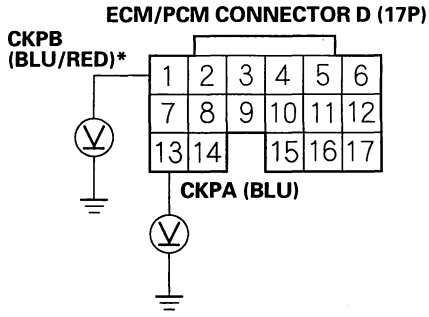

Wire side of female terminals

Is there about 5 V?

YES—Repair open in the wire between the ECM/PCM (D13 (D1)*) and CKP sensor A/B, then go to step 18.

NO—Go to step 12.

12. Turn the ignition switch OFF.
13. Jump the SCS line with the HDS.
14. Disconnect ECM/PCM connector D (17P).
15. Check for continuity between ECM/PCM connector terminal D13 (D1)* and body ground.

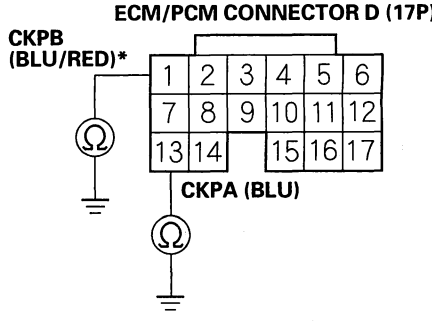

Wire side of female terminals

Is there continuity?

YES—Repair short in the wire between the ECM/PCM (D13 (D1)*) and CKP sensor A/B, then go to step 18.

NO—Go to step 25.

16. Turn the ignition switch OFF.
17. Replace CKP sensor A/B (see page 11-220).
18. Reconnect all connectors.
19. Turn the ignition switch ON (II).
20. Reset the ECM/PCM with the HDS.
21. Clear the CKP pattern with the HDS.
22. Do the ECM/PCM idle learn procedure (see page 11-302).
23. Do the CKP pattern learn procedure (see page 11-4).
24. Check for Temporary DTCs or DTCs with the HDS.

    Are any Temporary DTCs or DTCs indicated?

    YES—If DTC P0335 and/or P0385* is indicated, check for poor connections or loose terminals at CKP sensor A/B and the ECM/PCM, then go to step 1. If any other Temporary DTCs or DTCs are indicated, go to the indicated DTC's troubleshooting.

    NO—Troubleshooting is complete. ■

25. Update the ECM/PCM if it does not have the latest software, or substitute a known-good ECM/PCM (see page 11-6).
26. Check for Temporary DTCs or DTCs with the HDS.

    Are any Temporary DTCs or DTCs indicated?

    YES—If DTC P0335 and/or P0385* is indicated, check for poor connections or loose terminals at CKP sensor A/B and the ECM/PCM, then go to step 1. If any other Temporary DTCs or DTCs are indicated, go to the indicated DTC's troubleshooting.

    NO—If the ECM/PCM was updated, troubleshooting is complete. If the ECM/PCM was substituted, replace the original ECM/PCM (see page 11-224). ■

Protected by AR

DTC Troubleshooting (cont'd)

DTC P0339: CKP Sensor A Intermittent Interruption

DTC P0389: CKP Sensor B Intermittent Interruption

NOTE:
- Before you troubleshoot, record all freeze data and any on-board snapshot, and review the general troubleshooting information (see page 11-3).
- Information marked with an asterisk (*) applies to CKP sensor B.

1. Turn the ignition switch ON (II).
2. Clear the DTC with the HDS.
3. Start the engine, and let it idle 10 seconds.
4. Check the CKP A or B* NOISE count in the DATA LIST with the HDS.

   Are 0 counts indicated?

   YES—Go to step 7.

   NO—Go to step 5.
5. Test-drive the vehicle for several minutes in the range of these recorded freeze data parameters:

   - Engine speed
   - Vehicle speed
6. Check the CKP A or B* NOISE count in the DATA LIST with the HDS.

   Are 0 counts indicated?

   YES—Go to step 7.

   NO—Intermittent failure, system is OK at this time. Check for poor connections or loose terminals at CKP sensor A/B and the ECM/PCM. ■
7. Check for poor or loose connections at these connectors and terminals:

   - CKP sensor A/B
   - ECM/PCM
   - Engine ground
   - Body ground

   Are the connections OK?

   YES—Go to step 8.

   NO—Reconnect the connectors or terminals, then go to step 11.
8. Check for damage to the CKP sensor A/B pulse plate on the timing belt drive pulley (see page 6-3).

   Is there damage?

   YES—Replace the CKP sensor A/B pulse plate/ timing belt drive pulley (see page 6-3), then go to step 11.

   NO—Go to step 9.
9. Turn the ignition switch OFF.
10. Replace CKP sensor A/B (see page 11-220).
11. Turn the ignition switch ON (II).
12. Reset the ECM/PCM with the HDS.
13. Clear the CKP pattern with the HDS.
14. Do the ECM/PCM idle learn procedure (see page 11-302).
15. Do the CKP pattern learn procedure (see page 11-4).
16. Start the engine, and let it idle for 10 seconds.
17. Check for Temporary DTCs or DTCs with the HDS.

    Are any Temporary DTCs or DTCs indicated?

    YES—If DTC P0339 and/or P0389 is indicated, check for poor connections or loose terminals at CKP sensor A/B and the ECM/PCM, then go to step 1. If any other Temporary DTCs or DTCs are indicated, go to the indicated DTC's troubleshooting.

    NO—Troubleshooting is complete. ■

BACK

Protected by AR

DTC P0340: CMP Sensor No Signal

NOTE: Before you troubleshoot, record all freeze data and any on-board snapshot, and review the general troubleshooting information (see page 11-3).

1. Turn the ignition switch ON (II).
2. Clear the DTC with the HDS.
3. Start the engine.
4. Check for Temporary DTCs or DTCs with the HDS.

   Is DTC P0340 indicated?

   YES—Go to step 5.

   NO—Intermittent failure, system is OK at this time. Check for poor connections or loose terminals at the CMP sensor and the ECM/PCM. ■
5. Turn the ignition switch OFF.
6. Disconnect the CMP sensor 3P connector.
7. Turn the ignition switch ON (II).
8. Measure voltage between CMP sensor 3P connector terminal No. 3 and body ground.

CMP SENSOR 3P CONNECTOR

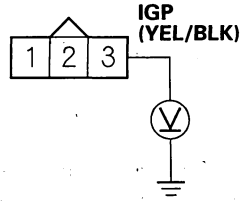

Wire side of female terminals

Is there battery voltage?

YES—Go to step 9.

NO—Repair open in the wire between the CMP sensor and PGM-FI main relay 1 (FI MAIN), then go to step 19.

9. Measure voltage between CMP sensor 3P connector terminal No. 1 and body ground.

CMP SENSOR 3P CONNECTOR

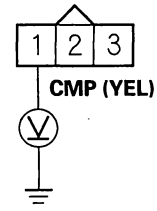

Wire side of female terminals

Is there about 5 V?

YES—Go to step 10.

NO—Go to step 11.

10. Measure voltage between CMP sensor 3P connector terminal No. 2 and No. 3.

CMP SENSOR 3P CONNECTOR

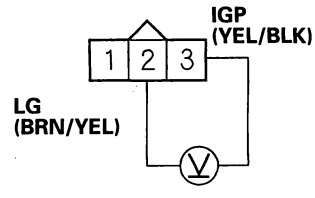

Wire side of female terminals

Is there battery voltage?

YES—Go to step 16.

NO—Repair open in the wire between the CMP sensor and G101, then go to step 19.

(cont'd)

Protected by AR

DTC Troubleshooting (cont'd)

11. Measure voltage between ECM/PCM connector terminal D7 and body ground.

ECM/PCM CONNECTOR D (17P)

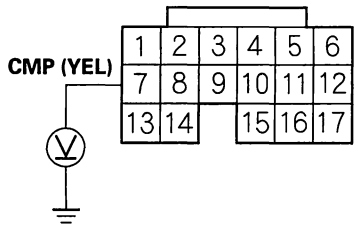

Wire side of female terminals

Is there about 5 V?

YES—Repair open in the wire between the ECM/PCM (D7) and the CMP sensor, then go to step 18.

NO—Go to step 12.

12. Turn the ignition switch OFF.
13. Jump the SCS line with the HDS.
14. Disconnect ECM/PCM connector D (17P).
15. Check for continuity between ECM/PCM connector terminal D7 and body ground.

ECM/PCM CONNECTOR D (17P)

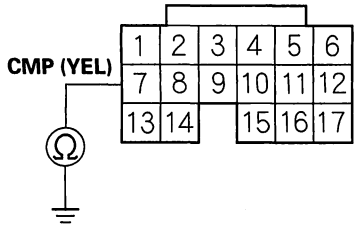

Wire side of female terminals

Is there continuity?

YES—Repair short in the wire between the ECM/PCM (D7) and the CMP sensor, then go to step 18.

NO—Go to step 26.

16. Turn the ignition switch OFF.
17. Replace the CMP sensor (see page 11-221).
18. Reconnect all connectors.
19. Turn the ignition switch ON (II).
20. Reset the ECM/PCM with the HDS.
21. Clear the CKP pattern with the HDS.
22. Do the ECM/PCM idle learn procedure (see page 11-302).
23. Do the CKP pattern learn procedure (see page 11-4).
24. Start the engine.
25. Check for Temporary DTCs or DTCs with the HDS.

Are any Temporary DTCs or DTCs indicated?

YES—If DTC P0340 is indicated, check for poor connections or loose terminals at the CMP sensor and the ECM/PCM, then go to step 1. If any other Temporary DTCs or DTCs are indicated, go to the indicated DTC's troubleshooting.

NO—Troubleshooting is complete. ■

26. Update the ECM/PCM if it does not have the latest software, or substitute a known-good ECM/PCM (see page 11-6).
27. Check for Temporary DTCs or DTCs with the HDS.

Are any Temporary DTCs or DTCs indicated?

YES—If DTC P0340 is indicated, check for poor connections or loose terminals at the CMP sensor and the ECM/PCM, then go to step 1. If any other Temporary DTCs or DTCs are indicated, go to the indicated DTC's troubleshooting.

NO—If the ECM/PCM was updated, troubleshooting is complete. If the ECM/PCM was substituted, replace the original ECM/PCM (see page 11-224). ■

BACK

Protected by AR

DTC P0344: CMP Sensor Intermittent Interruption

NOTE: Before you troubleshoot, record all freeze data and any on-board snapshot, and review the general troubleshooting information (see page 11-3).

1. Turn the ignition switch ON (II).
2. Clear the DTC with the HDS.
3. Start the engine, and let it idle for 10 seconds.
4. Check the CMP NOISE 2 count in the DATA LIST with the HDS.

   Are 0 counts indicated?

   YES—Go to step 7.

   NO—Go to step 5.
5. Test-drive the vehicle for several minutes in the range of these recorded freeze data parameters:

   - Engine speed
   - Vehicle speed
6. Check the CMP NOISE 2 count in the DATA LIST with the HDS.

   Are 0 counts indicated?

   YES—Go to step 7.

   NO—Intermittent failure, system is OK at this time. Check for poor connections or loose terminals at the CMP sensor and the ECM/PCM. ■
7. Check for poor or loose connections at these connectors and terminals:

   - CMP sensor
   - ECM/PCM
   - Engine ground
   - Body ground

   Are the connections OK?

   YES—Go to step 8.

   NO—Reconnect the connectors or terminals, then go to step 11.
8. Check for damage to the CMP sensor pulse projection on the front camshaft pulley (see page 11-221).

   Is there damage?

   YES—Replace the front camshaft pulley (see page 11-221), then go to step 11.

   NO—Go to step 9.
9. Turn the ignition switch OFF.
10. Replace the CMP sensor (see page 11-221).
11. Turn the ignition switch ON (II).
12. Reset the ECM/PCM with the HDS.
13. Clear the CKP pattern with the HDS.
14. Do the ECM/PCM idle learn procedure (see page 11-302).
15. Do the CKP pattern learn procedure (see page 11-4).
16. Start the engine, and let it idle for 10 seconds.
17. Check for Temporary DTCs or DTCs with the HDS.

    Are any Temporary DTCs or DTCs indicated?

    YES—If DTC P0344 is indicated, check for poor connections or loose terminals at the CKP sensor and the ECM/PCM, then go to step 1. If any other Temporary DTCs or DTCs are indicated, go to the indicated DTC's troubleshooting.

    NO—Troubleshooting is complete. ■

Protected by AR

DTC Troubleshooting (cont'd)

DTC P0562: Charging System Low Voltage (2005-2006 models)

NOTE:
- Before you troubleshoot, record all freeze data and any on-board snapshot, and review the general troubleshooting information (see page 11-3).
- If any high current load accessories are installed, this DTC can be set.
- If DTC P16BB and/or P16BC is stored at the same time as DTC P0562, troubleshoot DTC P16BB and/or P16BC first, then recheck for DTC P0562.

1. Turn the ignition switch ON (II).
2. Clear the DTC with the HDS.
3. Start the engine.
4. Check under these conditions:
   - A/C on
   - Temperature control at maximum cool
   - Blower fan at maximum speed
   - Rear window defogger on
   - Headlights on high beam
5. Hold the engine speed at 2,000 rpm (in Park or neutral) for 1 minute.
6. Check for Temporary DTCs or DTCs with the HDS.

   Is DTC P0562 indicated?

   YES—Replace the alternator (see page 4-38), then go to step 7.

   NO—Intermittent failure, system is OK at this time. Check for poor connections or loose terminals at the alternator and the under-hood fuse/relay box, and check the battery performance, refer to the 2003-2006 Accord Service Manual (see page 22-78). ■
7. Turn the ignition switch ON (II).
8. Reset the ECM/PCM with the HDS.
9. Do the ECM/PCM idle learn procedure (see page 11-302).
10. Start the engine.
11. Check under these conditions:
    - A/C on
    - Temperature control at maximum cool
    - Blower fan at maximum speed
    - Rear window defogger on
    - Headlights on high beam
12. Hold the engine speed at 2,000 rpm (in Park or neutral) for 1 minute.
13. Check for Temporary DTCs or DTCs with the HDS.

    Are any Temporary DTCs or DTCs indicated?

    YES—If DTC P0562 is indicated, check for poor connections or loose terminals at the alternator and the under-hood fuse/relay box, then go to step 1. If any other Temporary DTCs or DTCs are indicated, go to the indicated DTC's troubleshooting.

    NO—Troubleshooting is complete. ■

BACK

Protected by AR

DTC P0563: ECM/PCM Power Source Circuit Unexpected Voltage

NOTE: Before you troubleshoot, record all freeze data and any on-board snapshot, and review the general troubleshooting information (see page 11-3).

1. Turn the ignition switch ON (II).
2. Clear the DTC with the HDS.
3. Turn the ignition switch OFF.
4. Wait 10 seconds.
5. Turn the ignition switch ON (II).
6. Check for Temporary DTCs or DTCs with the HDS.

   Is DTC P0563 indicated?

   YES—Go to step 7.

   NO—Intermittent failure, system is OK at this time. Check for poor connections or loose terminals at the No. 8 FI-ECU (ECM/PCM) (15 A) fuse in the under-hood fuse/relay box and the ECM/PCM. ■
7. Turn the ignition switch OFF.
8. Jump the SCS line with the HDS.
9. Disconnect ECM/PCM connector A (31P).
10. Measure voltage between ECM/PCM connector terminal A5 and body ground.

ECM/PCM CONNECTOR A (31P)

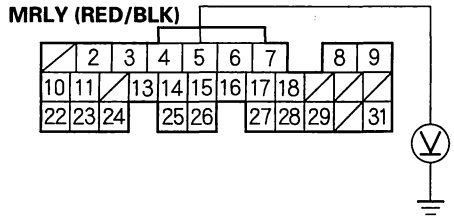

Wire side of female terminals

Is there battery voltage?

YES—Go to step 13.

NO—Go to step 11.

11. Remove the left kick panel, refer to the 2003-2006 Accord Service Manual 2-door (see page 20-90); 4-door (see page 20-91). Then remove PGM-FI main relay 1 (FI MAIN) (A) from the under-dash fuse/relay box.

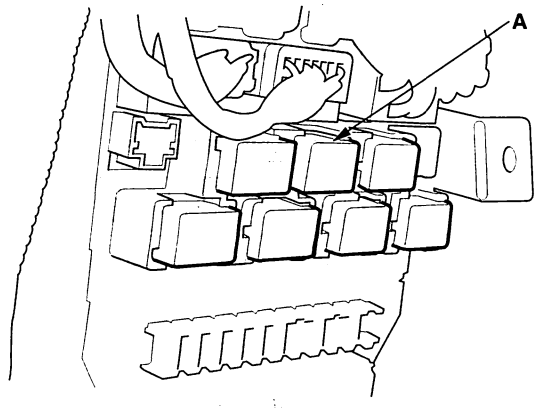

(cont'd)

Protected by AR

DTC Troubleshooting (cont'd)

12. Check for continuity between ECM/PCM connector terminal A5 and body ground.

ECM/PCM CONNECTOR A (31P)

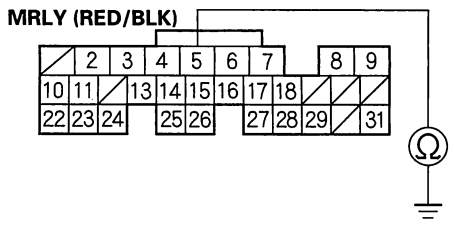

Wire side of female terminals

Is there continuity?

YES—Repair short in the wire between the ECM/PCM (A5) and PGM-FI main relay 1 (FI MAIN), then go to step 20.

NO—Go to step 19.

13. Reconnect ECM/PCM connector A (31P).

14. Measure voltage between ECM/PCM connector terminal A5 and body ground.

ECM/PCM CONNECTOR A (31P)

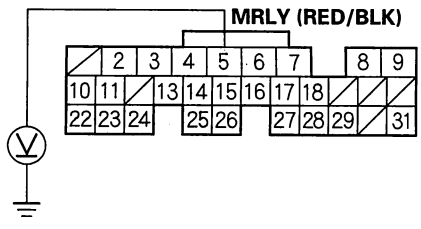

Wire side of female terminals

Is there battery voltage?

YES—Go to step 15.

NO—Go to step 27.

15. Disconnect ECM/PCM connector E (31P).

16. Measure voltage between ECM/PCM connector terminal E4 and body ground.

ECM/PCM CONNECTOR E (31P)

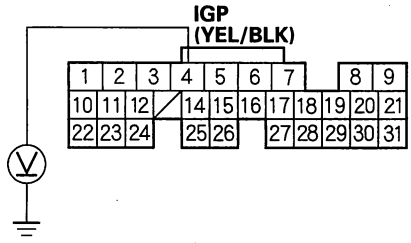

Wire side of female terminals

Is there battery voltage?

YES—Go to step 17.

NO—Go to step 27.

17. Remove the left kick panel, refer to the 2003-2006 Accord Service Manual 2-door (see page 20-90); 4-door (see page 20-91). Then remove PGM-FI main relay 1 (FI MAIN) (A) from the under-dash fuse/relay box.

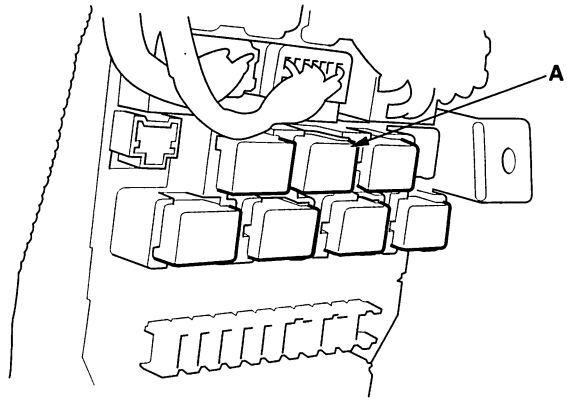

BACK

Protected by AR

18. Measure voltage between ECM/PCM connector terminal E4 and body ground.

ECM/PCM CONNECTOR E (31P)

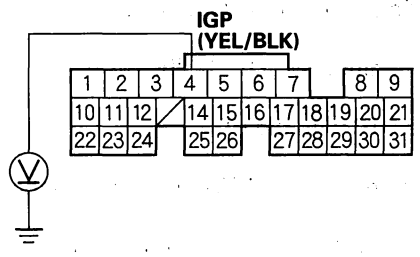

Wire side of female terminals

Is there battery voltage?

YES—Repair short to power in the wire between the ECM/PCM (E4) and PGM-FI main relay 1 (FI MAIN), then go to step 20.

NO—Go to step 19.

19. Replace PGM-FI main relay 1 (FI MAIN).

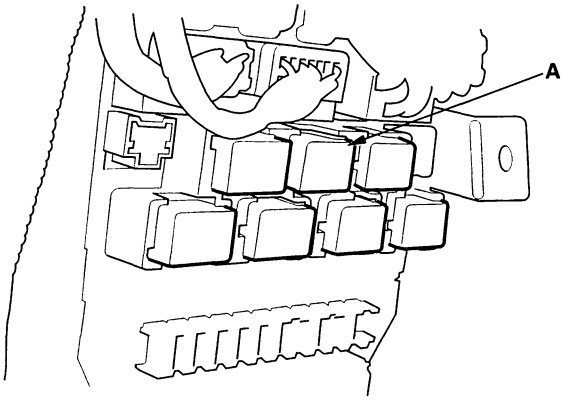

20. Reconnect all connectors.

21. Turn the ignition switch ON (II).

22. Reset the ECM/PCM with the HDS.

23. Turn the ignition switch OFF.

24. Wait 10 seconds.

25. Do the ECM/PCM idle learn procedure (see page 11-302).

26. Check for Temporary DTCs or DTCs with the HDS.

Are any Temporary DTCs or DTCs indicated?

YES—If DTC P0563 is indicated, check for poor connections or loose terminals at PGM-FI main relay 1 (FI MAIN) and the ECM/PCM, then go to step 1. If any other Temporary DTCs or DTCs are indicated, go to the indicated DTC's troubleshooting.

NO—Troubleshooting is complete. ■

27. Update the ECM/PCM if it does not have the latest software, or substitute a known-good ECM/PCM (see page 11-6).

28. Check for Temporary DTCs or DTCs with the HDS.

Are any Temporary DTCs or DTCs indicated?

YES—If DTC P0563 is indicated, check for poor connections or loose terminals at PGM-FI main relay 1 (FI MAIN) and the ECM/PCM, then go to step 1. If any other Temporary DTCs or DTCs are indicated, go to the indicated DTC's troubleshooting.

NO—If the ECM/PCM was updated, troubleshooting is complete. If the ECM/PCM was substituted, replace the original ECM/PCM (see page 11-224). ■

Protected by AR

DTC Troubleshooting (cont'd)

DTC P0602: ECM/PCM Programming Error (2006 model)

NOTE:
- Before you troubleshoot, record all freeze data and any on-board snapshot, and review the general troubleshooting information (see page 11-3).
- This DTC is indicated when update is not completed.
- Do not turn the ignition switch OFF while updating the ECM/PCM. If you turn the ignition switch OFF before completion, the ECM/PCM can be damaged.

1. Do the ECM/PCM update procedure (see page 11-6).
2. Check for Temporary DTCs or DTCs with the HDS.

   Is DTC P0602 indicated?

   YES—Replace the original ECM/PCM (see page 11-224).■

   NO—Update is complete.■

DTC P0603: ECM/PCM Internal Control Module Keep Alive Memory (KAM) Error

NOTE: Before you troubleshoot, record all freeze data and any on-board snapshot, and review the general troubleshooting information (see page 11-3).

1. Turn the ignition switch ON (II).
2. Clear the DTC with the HDS.
3. Check for Temporary DTCs or DTCs with the HDS.

   Are any Temporary DTCs or DTCs indicated?

   YES—Update the ECM/PCM if it does not have the latest software, or substitute a known-good ECM/PCM (see page 11-6), then recheck. If the symptom/indication goes away with a known-good ECM/PCM, replace the original ECM/PCM (see page 11-224).■

   NO—Intermittent failure, system is OK at this time.■

BACK

Protected by AR

DTC P0630: VIN Not Programmed or Mismatch (2005-2006 models)

NOTE:
- Before you troubleshoot, record all freeze data and any on-board snapshot, and review the general troubleshooting information (see page 11-3).
- This DTC is stored only when the ECM/PCM does not have the VIN information of the vehicle. Use the HDS to input the missing VIN information.

1. Turn the ignition switch ON (II).
2. Check the VIN with the HDS.

   Does the HDS show the vehicle's VIN?

   YES—Go to step 5.

   NO—Go to step 3.
3. Input the VIN to the ECM/PCM with the HDS.

   Does the screen show COMPLETE?

   YES—Go to step 5.

   NO—Go to step 4.
4. Check for DTCs with the HDS.

   Is DTC P0603 indicated?

   YES—Go to the DTC P0603 troubleshooting. ■

   NO—Update the ECM/PCM if it does not have the latest software, or substitute a known-good ECM/PCM (see page 11-6), then recheck. If the symptom/indication goes away with a known-good ECM/PCM, replace the original ECM/PCM (see page 11-224). ■
5. Clear the DTC with the HDS.
6. Turn the ignition switch OFF.
7. Turn the ignition switch ON (II), and wait 5 seconds.
8. Check for Temporary DTCs or DTCs with the HDS.

   Are any Temporary DTCs or DTCs indicated?

   YES—If DTC P0630 is indicated, update the ECM/PCM if it does not have the latest software, or substitute a known-good ECM/PCM (see page 11-6), then recheck. If any other Temporary DTCs or DTCs are indicated, go to the indicated DTC's troubleshooting. ■

   NO—Intermittent failure, system is OK at this time. ■

Protected by AR

DTC Troubleshooting (cont'd)

DTC P0641: Sensor Reference Voltage A Malfunction (2005-2006 models)

NOTE: Before you troubleshoot, record all freeze data and any on-board snapshot, and review the general troubleshooting information (see page 11-3).

1. Turn the ignition switch ON (II).
2. Clear the DTC with the HDS.
3. Check for Temporary DTCs or DTCs with the HDS.

   Is DTC P0641 indicated?

   YES—Go to step 4.

   NO—Intermittent failure, system is OK at this time. Check for poor connections or loose terminals at the ECM/PCM and these connectors: ■

   - MAP sensor
   - APP sensor
   - IMT (IMRC) actuator
   - EGR valve
   - FTP sensor
   - Input shaft (mainshaft) speed sensor
   - Output shaft (countershaft) speed sensor

4. Turn the ignition switch OFF.
5. Disconnect the MAP sensor 3P connector.
6. Turn the ignition switch ON (II).
7. Clear the DTC with the HDS.
8. Check for Temporary DTCs or DTCs with the HDS.

   Is DTC P0641 indicated?

   YES—Go to step 9.

   NO—Replace the MAP sensor (see page 11-223), then go to step 43.

9. Turn the ignition switch OFF.
10. Disconnect the APP sensor 6P connector.
11. Turn the ignition switch ON (II).
12. Clear the DTC with the HDS.
13. Check for Temporary DTCs or DTCs with the HDS.

    Is DTC P0641 indicated?

    YES—Go to step 14.

    NO—Replace the APP sensor (see page 11-278), then go to step 43.

BACK

Protected by AR

14. Turn the ignition switch OFF.
15. Disconnect the IMT (IMRC) actuator 5P connector.
16. Turn the ignition switch ON (II).
17. Clear the DTC with the HDS.
18. Check for Temporary DTCs or DTCs with the HDS.

    Is DTC P0641 indicated?

    YES—Go to step 19.

    NO—Replace the IMT (IMRC) actuator (see page 11-346), then go to step 43.
19. Turn the ignition switch OFF.
20. Disconnect the EGR valve 6P connector.
21. Turn the ignition switch ON (II).
22. Clear the DTC with the HDS.
23. Check for Temporary DTCs or DTCs with the HDS.

    Is DTC P0641 indicated?

    YES—Go to step 24.

    NO—Replace the EGR valve (see page 11-368), then go to step 43.
24. Turn the ignition switch OFF.
25. Disconnect the FTP sensor 3P connector.
26. Turn the ignition switch ON (II).
27. Clear the DTC with the HDS.
28. Check for Temporary DTCs or DTCs with the HDS.

    Is DTC P0641 indicated?

    YES—Go to step 29.

    NO—Replace the FTP sensor (see page 11-403), then go to step 43.
29. Turn the ignition switch OFF.
30. Disconnect the input shaft (mainshaft) speed sensor 3P connector.
31. Turn the ignition switch ON (II).
32. Clear the DTC with the HDS.
33. Check for Temporary DTCs or DTCs with the HDS.

    Is DTC P0641 indicated?

    YES—Go to step 34.

    NO—Replace the input shaft (mainshaft) speed sensor (see page 11-222), then go to step 43.
34. Turn the ignition switch OFF.
35. Disconnect the output shaft (countershaft) speed sensor 3P connector.
36. Turn the ignition switch ON (II).
37. Clear the DTC with the HDS.
38. Check for Temporary DTCs or DTCs with the HDS.

    Is DTC P0641 indicated?

    YES—Go to step 39.

    NO—Replace the output shaft (countershaft) speed sensor (see page 11-222), then go to step 43.
39. Turn the ignition switch OFF.
40. Jump the SCS line with the HDS.
41. Disconnect ECM/PCM connectors A (31P) and D (17P).

(cont'd)

Protected by AR

DTC Troubleshooting (cont'd)

42. Check for continuity between body ground and ECM/PCM connector terminals A31, D2, D6 and D12 individually.

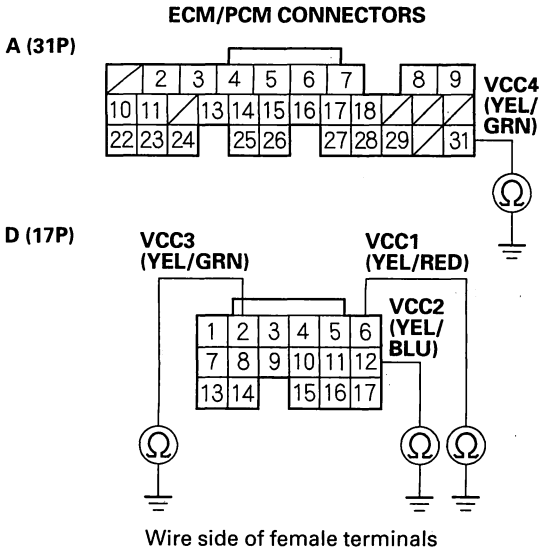

Is there continuity?

YES—Repair short in the wire between the ECM/PCM (A31, D2, D6, or D12) and each sensor, then go to step 43.

NO—Go to step 49.

43. Turn the ignition switch OFF.

44. Reconnect all connectors.

45. Turn the ignition switch ON (II).

46. Reset the ECM/PCM with the HDS.

47. Do the ECM/PCM idle learn procedure (see page 11-302).

48. Check for Temporary DTCs or DTCs with the HDS.

Are any Temporary DTCs or DTCs indicated?

YES—If DTC P0641 is indicated, check for poor connections or loose terminals at the ECM/PCM and these connectors:

- MAP sensor
- APP sensor
- IMT (IMRC) actuator
- EGR valve
- FTP sensor
- Input shaft (mainshaft) speed sensor
- Output shaft (countershaft) speed sensor

After checking above, go to step 1. If any other Temporary DTCs or DTCs are indicated, go to the indicated DTC's troubleshooting.

NO—Troubleshooting is complete. ■

BACK

Protected by AR

49. Update the ECM/PCM if it does not have the latest software, or substitute a known-good ECM/PCM (see page 11-6).

50. Check for Temporary DTCs or DTCs with the HDS.

    Are any Temporary DTCs or DTCs indicated?

    YES—If DTC P0641 is indicated, check for poor connections or loose terminals at the ECM/PCM and these connectors:

    - MAP sensor
    - APP sensor
    - IMT (IMRC) actuator
    - EGR valve
    - FTP sensor
    - Input shaft (mainshaft) speed sensor
    - Output shaft (countershaft) speed sensor

    After checking above, go to step 1. If any other Temporary DTCs or DTCs are indicated, go to the indicated DTC's troubleshooting.

    NO—If the ECM/PCM was updated, troubleshooting is complete. If the ECM/PCM was substituted, replace the original ECM/PCM (see page 11-224). ■

Protected by AR

DTC Troubleshooting (cont'd)

DTC P0685: ECM/PCM Power Control Circuit/ Internal Circuit Malfunction

NOTE:
- Before you troubleshoot, record all freeze data and any on-board snapshot, and review the general troubleshooting information (see page 11-3).
- If the problem does not return after clearing the DTC, or if this DTC intermittently stored, check for loose terminals at the IGP line connectors before you replace the ECM/PCM.

1. Turn the ignition switch ON (II).
2. Clear the DTC with the HDS.
3. Check for Temporary DTCs or DTCs with the HDS.

   Are any Temporary DTCs or DTCs indicated?

   YES—Update the ECM/PCM if it does not have the latest software, or substitute a known-good ECM/ PCM (see page 11-6), then recheck. If the symptom/ indication goes away with a known-good ECM/PCM, replace the original ECM/PCM (see page 11-224).■

   NO—Intermittent failure, system is OK at this time.■

DTC P0700: A/T Control System Malfunction

NOTE:
- Before you troubleshoot, record all freeze data and any on-board snapshot, and review the general troubleshooting information (see page 11-3).
- This DTC is stored when there is a problem in the A/T control system. Check for A/T DTCs with the HDS, and go to the indicated DTC's troubleshooting.

BACK

Protected by AR

DTC P0715: Input shaft (Mainshaft) Speed Sensor Circuit Malfunction

NOTE: Before you troubleshoot, record all freeze data and any on-board snapshot, and review the general troubleshooting information (see page 11-3).

1. Start the engine, and let it idle.
2. Check the M SHAFT SPD in the DATA LIST with the HDS.

   Is any input shaft (mainshaft) speed indicated?

   YES—Intermittent failure, system is OK at this time. Check for poor connections or loose terminals at the input shaft (mainshaft) speed sensor and the ECM. ■

   NO—Go to step 3.
3. Turn the ignition switch OFF.
4. Disconnect the input shaft (mainshaft) speed sensor 3P connector.
5. Turn the ignition switch ON (II).
6. Measure voltage between input shaft (mainshaft) speed sensor 3P connector terminal No. 1 and body ground.

INPUT SHAFT (MAINSHAFT) SPEED SENSOR 3P CONNECTOR

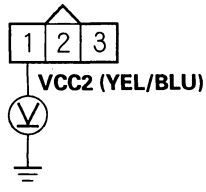

Wire side of female terminals

Is there about 5 V?

YES—Go to step 7.

NO—Repair open in the wire between the ECM (D12) and the input shaft (mainshaft) speed sensor, then go to step 16.

7. Measure voltage between input shaft (mainshaft) speed sensor 3P connector terminal No. 2 and body ground.

INPUT SHAFT (MAINSHAFT) SPEED SENSOR 3P CONNECTOR

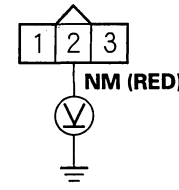

Wire side of female terminals

Is there about 5 V?

YES—Go to step 8.

NO—Go to step 9.

8. Measure voltage between input shaft (mainshaft) speed sensor 3P connector terminal No. 1 and No. 3.

INPUT SHAFT (MAINSHAFT) SPEED SENSOR 3P CONNECTOR

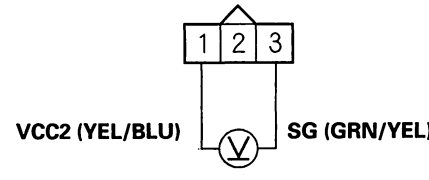

Wire side of female terminals

Is there about 5 V?

YES—Go to step 14.

NO—Repair open in the wire between the ECM (D10) and the input shaft (mainshaft) speed sensor, then go to step 16.

(cont'd)

Protected by AR

DTC Troubleshooting (cont'd)

9. Measure voltage between ECM connector terminal D8 and body ground.

ECM CONNECTOR D (17P)

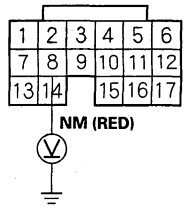

Wire side of female terminals

Is there about 5 V?

YES—Repair open in the wire between the ECM (D8) and the input shaft (mainshaft) speed sensor, then go to step 16.

NO—Go to step 10.

10. Turn the ignition switch OFF.
11. Jump the SCS line with the HDS.
12. Disconnect ECM connector D (17P).
13. Check for continuity between ECM connector terminal D8 and body ground.

ECM CONNECTOR D (17P)

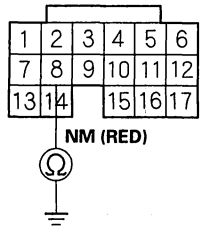

Wire side of female terminals

Is there continuity?

YES—Repair short in the wire between the ECM (D8) and the input shaft (mainshaft) speed sensor, then go to step 16.

NO—Go to step 22.

14. Turn the ignition switch OFF.
15. Replace the input shaft (mainshaft) speed sensor (see page 11-222).
16. Reconnect all connectors.
17. Turn the ignition switch ON (II).
18. Reset the ECM with the HDS.
19. Do the ECM idle learn procedure (see page 11-302).
20. Test-drive under these conditions:

- Engine coolant temperature above 158 °F (70 °C)
- Transmission in 3rd gear
- Engine speed at 2,000—3,000 rpm
- Drive for several minutes

21. Check for Temporary DTCs or DTCs with the HDS.

Are any Temporary DTCs or DTCs indicated?

YES—If DTC P0715 is indicated, check for poor connections or loose terminals at the input shaft (mainshaft) speed sensor and the ECM, then go to step 1. If any other Temporary DTCs or DTCs are indicated, go to the indicated DTC's troubleshooting.

NO—Troubleshooting is complete.■

22. Update the ECM if it does not have the latest software, or substitute a known-good ECM (see page 11-6).
23. Test-drive under these conditions:

- Engine coolant temperature above 158 °F (70 °C)
- Transmission in 3rd gear
- Engine speed at 2,000—3,000 rpm
- Drive for several minutes

24. Check for Temporary DTCs or DTCs with the HDS.

Are any Temporary DTCs or DTCs indicated?

YES—If DTC P0715 is indicated, check for poor connections or loose terminals at the input shaft (mainshaft) speed sensor and the ECM, then go to step 1. If any other Temporary DTCs or DTCs are indicated, go to the indicated DTC's troubleshooting.

NO—If the ECM was updated, troubleshooting is complete. If the ECM was substituted, replace the original ECM (see page 11-224).■

BACK

Protected by AR

DTC P0720: Output Shaft (Countershaft) Speed Sensor Circuit Malfunction

NOTE: Before you troubleshoot, record all freeze data and any on-board snapshot, and review the general troubleshooting information (see page 11-3).

1. Start the engine. Hold the engine speed at 3,000 rpm without load (in neutral) until the radiator fan comes on, then let it idle.
2. Test-drive the vehicle several miles.
3. Check the C SHAFT SPD in the DATA LIST with the HDS.

   Is any vehicle speed indicated?

   YES—Intermittent failure, system is OK at this time. Check for poor connections or loose terminals at the output shaft (countershaft) speed sensor and the ECM. ■

   NO—Go to step 4.
4. Turn the ignition switch OFF.
5. Disconnect the output shaft (countershaft) speed sensor 3P connector.
6. Turn the ignition switch ON (II).
7. Measure voltage between output shaft (countershaft) speed sensor 3P connector terminal No. 1 and body ground.

   OUTPUT SHAFT (COUNTERSHAFT) SPEED SENSOR 3P CONNECTOR

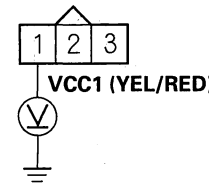

   Wire side of female terminals

   Is there about 5 V?

   YES—Go to step 8.

   NO—Repair open in the wire between the ECM (D6) and the output shaft (countershaft) speed sensor, then go to step 17.
8. Measure voltage between output shaft (countershaft) speed sensor 3P connector terminal No. 2 and body ground.

   OUTPUT SHAFT (COUNTERSHAFT) SPEED SENSOR 3P CONNECTOR

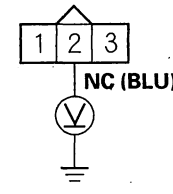

   Wire side of female terminals

   Is there about 5 V?

   YES—Go to step 9.

   NO—Go to step 10.

(cont'd)

Protected by AR

DTC Troubleshooting (cont'd)

9. Measure voltage between output shaft (countershaft) speed sensor 3P connector terminals No. 1 and No. 3.

OUTPUT SHAFT (COUNTERSHAFT) SPEED SENSOR 3P CONNECTOR

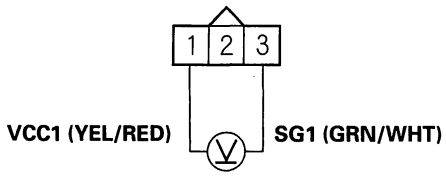

Wire side of female terminals

Is there about 5 V?

YES—Go to step 15.

NO—Repair open in the wire between the ECM (D4) and the output shaft (countershaft) speed sensor, then go to step 17.

10. Measure voltage between ECM connector terminal D14 and body ground.

ECM CONNECTOR D (17P)

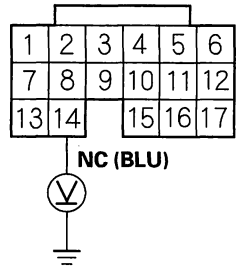

Wire side of female terminals

Is there about 5 V?

YES—Repair open in the wire between the ECM (D14) and the output shaft (countershaft) speed sensor, then go to step 17.

NO—Go to step 11.

11. Turn the ignition switch OFF.

12. Jump the SCS line with the HDS.

13. Disconnect ECM connector D (17P).

14. Check for continuity between ECM connector terminal D14 and body ground.

ECM CONNECTOR D (17P)

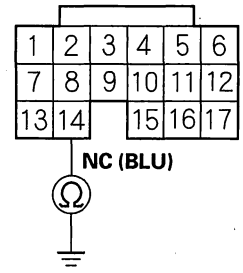

Wire side of female terminals

Is there continuity?

YES—Repair short in the wire between the ECM (D14) and the output shaft (countershaft) speed sensor, then go to step 17.

NO—Go to step 24.

BACK

Protected by AR

15. Turn the ignition switch OFF.

16. Replace the output shaft (countershaft) speed sensor (see page 11-222).

17. Reconnect all connectors.

18. Turn the ignition switch ON (II).

19. Reset the ECM with the HDS.

20. Do the ECM idle learn procedure (see page 11-302).

21. Test-drive under these conditions:

    - Engine coolant temperature above 158 °F (70 °C)
    - Transmission in 5th gear
    - Engine speed at 2,000—3,000 rpm
    - Drive for several minutes, then decelerate (with the throttle fully closed) for 8 seconds

22. Check for Temporary DTCs or DTCs with the HDS.

    Are any Temporary DTCs or DTCs indicated?

    YES—If DTC P0720 is indicated, check for poor connections or loose terminals at the output shaft (countershaft) speed sensor and the ECM, then go to step 1. If any other Temporary DTCs or DTCs are indicated, go to the indicated DTC's troubleshooting.

    NO—Go to step 22.

23. Monitor the OBD STATUS for DTC P0720 in the DTCs MENU with the HDS.

    Does the screen indicate PASSED?

    YES—Troubleshooting is complete. ■

    NO—If the screen indicates FAILED, go to step 1 and recheck. If the screen indicates NOT COMPLETED, go to step 20 and recheck.

24. Update the ECM if it does not have the latest software, or substitute a known-good ECM (see page 11-6).

25. Test-drive under these conditions:

    - Engine coolant temperature above 158 °F (70 °C)
    - Transmission in 5th gear
    - Engine speed at 2,000—3,000 rpm
    - Drive for several minutes, then decelerate (with the throttle fully closed) for 8 seconds

26. Check for Temporary DTCs or DTCs with the HDS.

    Are any Temporary DTCs or DTCs indicated?

    YES—If DTC P0720 is indicated, check for poor connections or loose terminals at the output shaft (countershaft) speed sensor and the ECM, then go to step 1. If any other Temporary DTCs or DTCs are indicated, go to the indicated DTC's troubleshooting.

    NO—If the ECM was updated, troubleshooting is complete. If the ECM was substituted, replace the original ECM (see page 11-224). ■

Protected by AR

DTC Troubleshooting (cont'd)

DTC P1109: BARO Sensor Circuit Out of Range High
(2005-2006 models)

NOTE: Before you troubleshoot, record all freeze data and any on-board snapshot, and review the general troubleshooting information (see page 11-3).

1. Reset the ECM/PCM with the HDS.
2. Start the engine.
3. Check for Temporary DTCs or DTCs with the HDS.

   Is DTC P1109 indicated?

   YES—Update the ECM/PCM if it does not have the latest software, or substitute a known-good ECM/PCM (see page 11-6), then recheck. If the symptom/indication goes away with a known-good ECM/PCM, replace the original ECM/PCM (see page 11-224).■

   NO—Intermittent failure, system is OK at this time.■

BACK

Protected by AR

DTC P1116: ECT Sensor 1 Performance Problem (2005-2006 models)

NOTE:
- Before you troubleshoot, record all freeze data and any on-board snapshot, and review the general troubleshooting information (see page 11-3).
- If DTC P0111 is stored at the same time as DTC P1116, troubleshoot DTC P0111 first, then recheck for DTC P1116.

1. Check for poor connections or loose terminals at ECT sensor 1 and ECT sensor 2.

   Are the connections and terminals OK?

   YES—Go to step 2.

   NO—Repair the connectors or terminals, then go to step 27.

2. Turn the ignition switch ON (II).

3. Check for Temporary DTCs or DTCs with the HDS.

   Are DTC P1116 and P2183 indicated at the same time?

   YES—Go to step 15.

   NO—Go to step 4.

4. Start the engine, and let it idle for 10 minutes.

5. Check ECT SENSOR 1 in the DATA LIST with the HDS.

   Is about 129 °F (54 °C) or less, or 1.54 V or more indicated?

   YES—Replace ECT sensor 1 (see page 11-219), then go to step 27.

   NO—Go to step 6.

6. Turn the ignition switch OFF.

7. Drain the coolant (see page 10-6).

8. Remove ECT sensor 1 (see page 11-219).

9. Allow ECT sensor 1 to cool to 77 °F (25 °C).

10. Note the ambient temperature.

11. Connect ECT sensor 1 to the 2P connector, but do not install it on in the engine.

12. Turn the ignition switch ON (II).

13. Note the value of ECT SENSOR 1 quickly in the DATA LIST with the HDS.

14. Compare the value of ECT SENSOR 1 and the ambient temperature.

    Does the value of ECT SENSOR 1 differ 5.4 °F (3 °C) or more?

    YES—Replace ECT sensor 1 (see page 11-219), then go to step 27.

    NO—Intermittent failure, system is OK at this time. Check for poor connections or loose terminals at ECT sensor 1, ECT sensor 2, and the ECM/PCM. ■

15. Start the engine, and let it idle for 10 minutes.

16. Check ECT SENSOR 1 in the DATA LIST with the HDS.

    Is about 118 °F (48 °C) or less, or 1.75 V or more indicated?

    YES—Replace ECT sensor 1 (see page 11-219), then go to step 27.

    NO—Go to step 17.

17. Let the engine idle for 10 minutes.

18. Check ECT SENSOR 2 in the DATA LIST with the HDS.

    Is about 131 °F (55 °C) or less, or 1.50 V or more indicated?

    YES—Replace ECT sensor 2 (see page 11-223), then go to step 27.

    NO—Go to step 19.

(cont'd)

Protected by AR

DTC Troubleshooting (cont'd)

19. Turn the ignition switch OFF.
20. Drain the coolant (see page 10-6).
21. Remove ECT sensor 1 (see page 11-219), and ECT sensor 2 (see page 11-223).
22. Allow the sensors to cool to 77 °F (25 °C).
23. Note the ambient temperature.
24. Connect ECT sensor 1 to the 2P connector, and ECT sensor 2 to the 2P connector, but do not install them into the engine.
25. Note the value of ECT SENSOR 1 and ECT SENSOR 2 quickly in the DATA LIST with the HDS.
26. Compare the value of ECT SENSOR 1 and the ambient temperature, and the value of ECT SENSOR 2 and the ambient temperature individually.

    Does one of the sensors differ more than 5.4 °F (3 °C) from the ambient temperature?

    YES—Replace the sensor, that differed more than 5.4 °F (3 °C) from the ambient temperature, then go to step 27.

    NO—Intermittent failure, system is OK at this time. Check for poor connections or loose terminals at ECT sensor 1, ECT sensor 2, and the ECM/PCM. ■
27. Turn the ignition switch ON (II).
28. Reset the ECM/PCM with the HDS.
29. Do the ECM/PCM idle learn procedure (see page 11-302).
30. Check for Temporary DTCs or DTCs with the HDS.

    Are any Temporary DTCs or DTCs indicated?

    YES—If DTC P1116 is indicated, check for poor connections or loose terminals at ECT sensor 1, ECT sensor 2, and the ECM/PCM, then go to step 1. If any other Temporary DTCs or DTCs are indicated, go to the indicated DTC's troubleshooting.

    NO—Troubleshooting is complete. ■

BACK

Protected by AR

DTC P1128: MAP Sensor Signal Lower Than Expected

NOTE: Before you troubleshoot, record all freeze data and any on-board snapshot, and review the general troubleshooting information (see page 11-3).

1. Turn the ignition switch ON (II).
2. Check the MAP SENSOR in the DATA LIST with the HDS.

   Is there less than 54.1 kPa (16.0 in.Hg, 406 mmHg) or 1.61 V held for more than 5 seconds?

   YES—Go to step 7.

   NO—Go to step 3.
3. Clear the DTC with the HDS.
4. Start the engine. Hold the engine speed at 3,000 rpm without load (in Park or neutral) until the radiator fan comes on, then let it idle.
5. Test-drive under these conditions:

   - Engine coolant temperature above 158 °F (70 °C)
   - Engine speed between 1,400 and 6,500 rpm
   - A/T in D position (M/T in 3rd gear)
   - Vehicle speed accelerated from 16 mph (25 km/h) to 31 mph (50 km/h) under half throttle
6. Monitor the OBD STATUS for DTC P1128 in the DTCs MENU with the HDS.

   Does the screen indicate FAILED?

   YES—Go to step 7.

   NO—If the screen indicates PASSED, intermittent failure, system is OK at this time. Check for poor connections or loose terminals at the MAP sensor and the ECM/PCM. If the screen indicates NOT COMPLETED, go to step 4 and recheck.
7. Turn the ignition switch OFF.
8. Replace the MAP sensor (see page 11-223).
9. Turn the ignition switch ON (II).
10. Reset the ECM/PCM with the HDS.
11. Do the ECM/PCM idle learn procedure (see page 11-302).
12. Start the engine. Hold the engine speed at 3,000 rpm without load (in Park or neutral) until the radiator fan comes on, then let it idle.
13. Test-drive under these conditions:

    - Engine coolant temperature above 158 °F (70 °C)
    - Engine speed between 1,400 and 6,500 rpm
    - A/T in D position (M/T in 3rd gear)
    - Vehicle speed accelerated from 16 mph (25 km/h) to 31 mph (50 km/h) under half throttle
14. Check for Temporary DTCs or DTCs with the HDS.

    Are any Temporary DTCs or DTCs indicated?

    YES—If DTC P1128 is indicated, check for poor connections or loose terminals at the MAP sensor and the ECM/PCM, then go to step 1. If any other Temporary DTCs or DTCs are indicated, go to the indicated DTC's troubleshooting.

    NO—Go to step 15.
15. Monitor the OBD STATUS for DTC P1128 in the DTCs MENU with the HDS.

    Does the screen indicate PASSED?

    YES—Troubleshooting is complete. ■

    NO—If the screen indicates FAILED, check for poor connections or loose terminals at the MAP sensor and the ECM/PCM, then go to step 1. If the screen indicates NOT COMPLETED, go to step 13 and recheck.

Protected by AR

DTC Troubleshooting (cont'd)

DTC P1129: MAP Sensor Signal Higher than Expected

NOTE: Before you troubleshoot, record all freeze data and any on-board snapshot, and review the general troubleshooting information (see page 11-3).

1. Check for vacuum leaks in these parts:

   - PCV valve
   - PCV hose
   - EVAP canister purge valve
   - Throttle body
   - Intake manifold
   - Brake booster hose

   Are there any vacuum leaks?

   YES—Repair or replace parts with vacuum leaks, then go to step 9.

   NO—Go to step 2.

2. Start the engine. Hold the engine speed at 3,000 rpm without load (in Park or neutral) until the radiator fan comes on, then let it idle.

3. Check the MAP SENSOR in the DATA LIST with the HDS.

   Is there more than 36.9 kPa (11.0 in.Hg, 277 mmHg) or 1.14 V held for more than 5 seconds?

   YES—Go to step 7.

   NO—Go to step 4.

4. Clear the DTC with the HDS.

5. Test-drive under these conditions:

   - Engine coolant temperature above 158 °F (70 °C)
   - Engine speed between 1,400 and 6,500 rpm
   - A/T in D position (M/T in 5th gear)
   - Vehicle speed decelerated from more than 50 mph (80 km/h) with the throttle fully closed for at least 5 seconds

6. Monitor the OBD STATUS for DTC P1129 in the DTCs MENU with the HDS.

   Does the screen indicate FAILED?

   YES—Go to step 7.

   NO—If the screen indicates PASSED, intermittent failure, system is OK at this time. Check for poor connections or loose terminals at the MAP sensor and the ECM/PCM. If the screen indicates NOT COMPLETED, go to step 5 and recheck.

7. Turn the ignition switch OFF.

8. Replace the MAP sensor (see page 11-223).

9. Turn the ignition switch ON (II).

10. Reset the ECM/PCM with the HDS.

11. Do the ECM/PCM idle learn procedure (see page 11-302).

12. Start the engine. Hold the engine speed at 3,000 rpm without load (in Park or neutral) until the radiator fan comes on, then let it idle.

13. Test-drive under these conditions:

    - Engine coolant temperature above 158 °F (70 °C)
    - Engine speed between 1,400 and 6,500 rpm
    - A/T in D position (M/T in 5th gear)
    - Vehicle speed decelerated from more than 50 mph (80 km/h) with the throttle fully closed for at least 5 seconds

14. Check for Temporary DTCs or DTCs with the HDS.

    Are any Temporary DTCs or DTCs indicated?

    YES—If DTC P1129 is indicated, check for poor connections or loose terminals at the MAP sensor and the ECM/PCM, then go to step 1. If any other Temporary DTCs or DTCs are indicated, go to the indicated DTC's troubleshooting.

    NO—Go to step 15.

BACK

Protected by AR

15. Monitor the OBD STATUS for DTC P1129 in the DTCs MENU with the HDS.

    Does the screen indicate PASSED?

    YES—Troubleshooting is complete. ■

    NO—If the screen indicates FAILED, check for poor connections or loose terminals at the MAP sensor and the ECM/PCM, then go to step 1. If the screen indicates NOT COMPLETED, go to step 12 and recheck.

Protected by AR

DTC Troubleshooting (cont'd)

DTC P1172: Rear A/F Sensor (Bank 1, Sensor 1) Out of Range High (2005-2006 models)

DTC P1174: Front A/F Sensor (Bank 2, Sensor 1) Out of Range High (2005-2006 models)

NOTE:
- Before you troubleshoot, record all freeze data and any on-board snapshot, and review the general troubleshooting information (see page 11-3).
- Information marked with an asterisk (*) applies to the front bank (Bank 2).

1. Turn the ignition switch ON (II).
2. Clear the DTC with the HDS.
3. Start the engine. Hold the engine speed at 3,000 rpm without load (in Park or neutral) until the radiator fan comes on, then let it idle.
4. Monitor the OBD STAUS for P1172 and/or P1174* in the DTCs MENU with the HDS.

   Dose the screen indicate FAILED?

   YES—Go to step 5.

   NO—If the screen indicates PASSED, intermittent failure, system is OK at this time. Check for poor connections or loose terminals at the A/F sensor (Sensor 1) and the ECM/PCM. If the screen indicates EXECUTING, keep driving until a result comes on. If the screen indicates OUT OF CONDITION, go to step 3 and recheck.
5. Turn the ignition switch OFF.
6. Replace the A/F sensor (Sensor 1) (see page 11-217).
7. Turn the ignition switch ON (II).
8. Reset the ECM/PCM with the HDS.
9. Do the ECM/PCM idle learn procedure (see page 11-302).
10. Start the engine. Hold the engine speed at 3,000 rpm withtout load (in Park or neutral) until the radiator fan comes on, then let it idle.
11. Check for Temporary DTCs or DTCs with the HDS.

    Are any Temporary DTCs or DTCs indicated?

    YES—If DTC P1172 and/or P1174* is indicated, check for poor connections or loose terminals at the A/F sensor (Sensor 1) and the ECM/PCM, then go to step 1. If any other Temporary DTCs or DTCs are indicated, go to the indicated DTC's troubleshooting.

    NO—Go to step 12.
12. Monitor the OBD STATUS for DTC P1172 and/or P1174* in the DTCs MENU with the HDS.

    Does the screen indicate PASSED?

    YES—Troubleshooting is complete. ■

    NO—If the screen indicates FAILED, check for poor connections or loose terminals at the A/F sensor (Sensor 1) and the ECM/PCM, then go to step 1. If the screen indicates EXECUTING, keep driving until a result comes on. If the screen indicates OUT OF CONDITION, go to step 10 and recheck.

BACK

Protected by AR

DTC P1297: ELD Circuit Low Voltage

NOTE: Before you troubleshoot, record all freeze data and any on-board snapshot, and review the general troubleshooting information (see page 11-3).

1. Turn the ignition switch ON (II).
2. Check the ELD in the DATA LIST with the HDS.

   Is 72 A or more indicated?

   YES—Go to step 3.

   NO—Intermittent failure, system is OK at this time. Check for poor connections or loose terminals at the ELD and the ECM/PCM. ■
3. Turn the ignition switch OFF.
4. Disconnect the ELD 3P connector.
5. Turn the ignition switch ON (II).
6. Check the ELD in the DATA LIST with the HDS.

   Is 72 A or more indicated?

   YES—Go to step 7.

   NO—Go to step 11.
7. Turn the ignition switch OFF.
8. Jump the SCS line with the HDS.
9. Disconnect ECM/PCM connector A (31P).
10. Check for continuity between ECM/PCM connector terminal A18 and body ground.

ECM/PCM CONNECTOR A (31P)

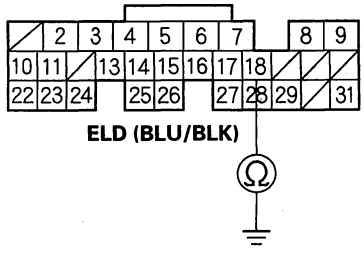

Wire side of female terminals

Is there continuity?

YES—Repair short in the wire between the ECM/PCM (A18) and the ELD, then go to step 13.

NO—Go to step 20.

11. Turn the ignition switch OFF.
12. Replace the under-hood fuse/relay box (see page 22-44).
13. Reconnect all connectors.
14. Turn the ignition switch ON (II).
15. Reset the ECM/PCM with the HDS.
16. Do the ECM/PCM idle learn procedure (see page 11-302).
17. Start the engine.
18. Turn on the headlights.

(cont'd)

Protected by AR

DTC Troubleshooting (cont'd)

19. Check for Temporary DTCs or DTCs with the HDS.

    Are any Temporary DTCs or DTCs indicated?

    YES—If DTC P1297 is indicated, check for poor connections or loose terminals at the ELD and the ECM/PCM, then go to step 1. If any other Temporary DTCs or DTCs are indicated, go to the indicated DTC's troubleshooting.

    NO—Troubleshooting is complete. ■

20. Update the ECM/PCM if it does not have the latest software, or substitute a known-good ECM/PCM (see page 11-6).

21. Start the engine.

22. Turn on the headlights.

23. Check for Temporary DTCs or DTCs with the HDS.

    Are any Temporary DTCs or DTCs indicated?

    YES—If DTC P1297 is indicated, check for poor connections or loose terminals at the ELD and the ECM/PCM, then go to step 1. If any other Temporary DTCs or DTCs are indicated, go to the indicated DTC's troubleshooting.

    NO—If the ECM/PCM was updated, troubleshooting is complete. If the ECM/PCM was substituted, replace the original ECM/PCM (see page 11-224). ■

BACK

Protected by AR

DTC P1298: ELD Circuit High Voltage

NOTE: Before you troubleshoot, record all freeze data and any on-board snapshot, and review the general troubleshooting information (see page 11-3).

1. Start the engine, and let it idle.
2. Check the ELD in the DATA LIST with the HDS.

   Is 0.2 A or less indicated?

   YES—Go to step 3.

   NO—Intermittent failure, system is OK at this time. Check for poor connections or loose terminals at the ELD and the ECM/PCM. ■
3. Turn the ignition switch OFF.
4. Disconnect the ELD 3P connector.
5. Turn the ignition switch ON (II).
6. Measure voltage between ELD 3P connector terminal No. 1 and body ground.

ELD 3P CONNECTOR

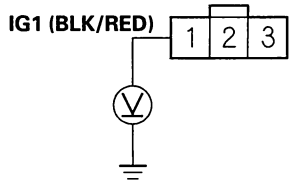

Wire side of female terminals

Is there battery voltage?

YES—Go to step 7.

NO—Repair open in the wire between the No. 18 ACG (15 A) fuse and the ELD, then go to step 14.

7. Turn the ignition switch OFF.
8. Connect ELD 3P connector terminal No. 3 to body ground with a jumper wire.

ELD 3P CONNECTOR

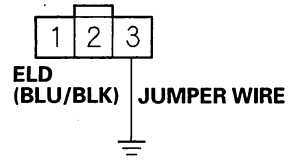

Wire side of female terminals

9. Jump the SCS line with the HDS.
10. Disconnect ECM/PCM connector A (31P).
11. Check for continuity between ECM/PCM connector terminal A18 and body ground.

ECM/PCM CONNECTOR A (31P)

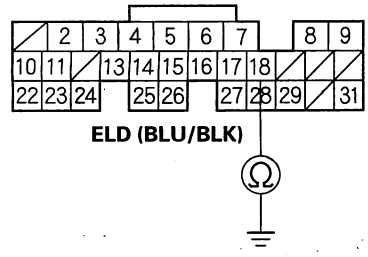

Wire side of female terminals

Is there continuity?

YES—Go to step 12.

NO—Repair open in the wire between the ECM/PCM (A18) and the ELD, then go to step 14.

(cont'd)

Protected by AR

DTC Troubleshooting (cont'd)

12. Check for continuity between ELD 3P connector terminal No. 2 and body ground.

ELD 3P CONNECTOR

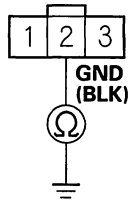

Wire side of female terminals

Is there continuity?

YES—Go to step 13.

NO—Repair open in the wire between the ELD and G302, then go to step 14.

13. Replace the under-hood fuse/relay box (see page 22-44).

14. Reconnect all connectors.

15. Turn the ignition switch ON (II).

16. Reset the ECM/PCM with the HDS.

17. Do the ECM/PCM idle learn procedure (see page 11-302).

18. Check for Temporary DTCs or DTCs with the HDS.

Are any Temporary DTCs or DTCs indicated?

YES—Go to step 19.

NO—Troubleshooting is complete. ■

19. Update the ECM/PCM if it does not have the latest software, or substitute a known-good ECM/PCM (see page 11-6).

20. Check for Temporary DTCs or DTCs with the HDS.

Are any Temporary DTCs or DTCs indicated?

YES—If DTC P1298 is indicated, check for poor connections or loose terminals at the ELD and the ECM/PCM, then go to step 1. If any other Temporary DTCs or DTCs are indicated, go to the indicated DTC's troubleshooting.

NO—If the ECM/PCM was updated, troubleshooting is complete. If the ECM/PCM was substituted, replace the original ECM/PCM (see page 11-224). ■

BACK

Protected by AR

DTC P1549: Charging System High Voltage (2005-2006 models)

NOTE:
- Before you troubleshoot, record all freeze data and any on-board snapshot, and review the general troubleshooting information (see page 11-3).
- If a high voltage battery (24 V, etc.) is connected to the vehicle, this DTC can be stored.

1. Turn the ignition switch ON (II).
2. Clear the DTC with the HDS.
3. Start the engine.
4. Check under these conditions:
   - A/C off
   - Headlights off
   - Rear window defogger off
5. Hold the engine speed at 2,000 rpm (in Park or neutral) for 1 minute.
6. Check for Temporary DTCs or DTCs with the HDS.

   Is DTC P1549 indicated?

   YES—Replace the alternator (see page 4-38), then go to step 7.

   NO—Intermittent failure, system is OK at this time. Check for poor connections or loose terminals at the alternator and the under-hood fuse/relay box. ■
7. Turn the ignition switch ON (II).
8. Reset the ECM/PCM with the HDS.
9. Do the ECM/PCM idle learn procedure (see page 11-302).
10. Start the engine.
11. Check under these conditions:
    - A/C off
    - Headlights off
    - Rear window defogger off
12. Hold the engine speed at 2,000 rpm (in Park or neutral) for 1 minute.
13. Check for Temporary DTCs or DTCs with the HDS.

    Are any Temporary DTCs or DTCs indicated?

    YES—If DTC P1549 is indicated, check for poor connections or loose terminals at the alternator and the under-hood fuse/relay box, then go to step 1. If any other Temporary DTCs or DTCs are indicated, go to the indicated DTC's troubleshooting.

    NO—Troubleshooting is complete. ■

Protected by AR

DTC Troubleshooting (cont'd)

DTC P16BB: Alternator B Terminal Circuit Low Voltage
(2005-2006 models)

NOTE: Before you troubleshoot, record all freeze data and any on-board snapshot, and review the general troubleshooting information (see page 11-3).

1. Turn the ignition switch ON (II).
2. Clear the DTC with the HDS.
3. Start the engine.
4. Check under these conditions:
   - A/C on
   - Temperature control at maximum cool
   - Blower fan at maximum speed
   - Rear window defogger on
   - Headlights on high beam
5. Hold the engine speed at 2,000 rpm (in Park or neutral) for 1 minute.
6. Check for Temporary DTCs or DTCs with the HDS.

   Is DTC P16BB indicated?

   YES—Go to step 7.

   NO—Intermittent failure, system is OK at this time. Check for poor connections or loose terminals at the alternator and the under-hood fuse/relay box, and check the battery performance, refer to the 2003-2006 Accord Service Manual (see page 22-78). ■
7. Check for poor connections or loose terminals at the alternator and the under-hood fuse/relay box (+B line).

   Are the connections and terminals OK?

   YES—Go to step 8.

   NO—Repair the connectors or terminals, then go to step 9.
8. Check for an open in the wire between the alternator and under-hood fuse/relay box at the starter subharness.

   Is the harness OK?

   YES—Relace the alternator (see page 4-38), then go to step 9.

   NO—Repair open in the wire between the alternator and the under-hood fuse/relay box, then go to step 9.
9. Turn the ignition switch ON (II).
10. Reset the ECM/PCM with the HDS.
11. Do the ECM/PCM idle learn procedure (see page 11-302).
12. Start the engine.
13. Check under these conditions:
    - A/C on
    - Temperature control at maximum cool
    - Blower fan at maximum speed
    - Rear window defogger on
    - Headlights on high beam
14. Hold the engine speed at 2,000 rpm (in Park or neutral) for 1 minute.
15. Check for Temporary DTCs or DTCs with the HDS.

    Are any Temporary DTCs or DTCs indicated?

    YES—If DTC P16BB is indicated, check for poor connections or loose terminals at the alternator and the under-hood fuse/relay box, then go to step 1. If any other Temporary DTCs or DTCs are indicated, go to the indicated DTC's troubleshooting.

    NO—Troubleshooting is complete. ■

BACK

Protected by AR

DTC P16BC: Alternator FR Terminal Circuit/ IGP Circuit Low Voltage (2005-2006 models)

NOTE: Before you troubleshoot, record all freeze data and any on-board snapshot, and review the general troubleshooting information (see page 11-3).

1. Check for poor connections at the alternator 4P connector.

   Are the connections OK?

   YES—Go to step 2.

   NO—Reconnect the connector, then go to step 18.

2. Turn the ignition switch ON (II).
3. Clear the DTC with the HDS.
4. Start the engine.
5. Check under these conditions:

   - A/C on
   - Temperature control at maximum cool
   - Blower fan at maximum speed
   - Rear window defogger on
   - Headlights on high beam

6. Hold the engine speed at 2,000 rpm (in Park or neutral) for 1 minute.
7. Check for Temporary DTCs or DTCs with the HDS.

   Is DTC P16BC indicated?

   YES—Go to step 8.

   NO—Intermittent failure, system is OK at this time. Check for poor connections or loose terminals at the alternator. ■

8. Turn the ignition switch OFF.
9. Disconnect the alternator 4P connector.
10. Turn the ignition switch ON (II).
11. Measure voltage between alternator 4P connector terminal No. 1 and body ground.

ALTERNATOR 4P CONNECTOR

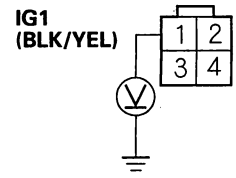

Wire side of female terminals

Is there battery voltage?

YES—Go to step 12.

NO—Repair open in the wire between the alternator (IG1 line) and the No. 18 ACG (15 A) fuse in under-dash fuse/relay box, then go to step 18.

12. Measure voltage between alternator 4P connector terminal No. 4 and body ground.

ALTERNATOR 4P CONNECTOR

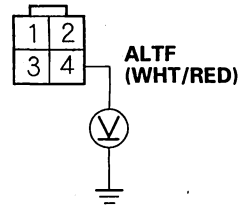

Wire side of female terminals

Is there about 5 V?

YES—Replace the alternator (see page 4-38), then go to step 18.

NO—Go to step 13.

(cont'd)

Protected by AR

DTC Troubleshooting (cont'd)

13. Turn the ignition switch OFF.
14. Jump the SCS line with the HDS.
15. Disconnect ECM/PCM connector E (31P).
16. Connect alternator 4P connector terminal No. 4 to body ground with a jumper wire.

ALTERNATOR 4P CONNECTOR

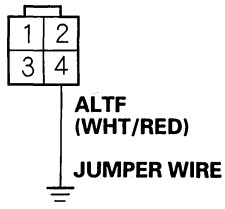

Wire side of female terminals

17. Check for coutinuity between ECM/PCM connector terminal E12 and body ground.

ECM/PCM CONNECTOR E (31P)

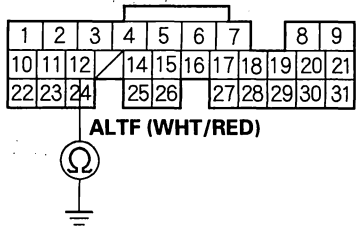

Wire side of female terminals

Is there continuity?

YES—Go to step 26.

NO—Repair open in the wire between the ECM/PCM (E12) and the alternator, then go to step 18.

18. Reconnect all connectors.
19. Turn the ignition switch ON (II).
20. Reset the ECM/PCM with the HDS.
21. Do the ECM/PCM idle learn procedure (see page 11-302).
22. Start the engine.
23. Check under these conditions:
    - A/C on
    - Temperature control at maximum cool
    - Blower fan at maximum speed
    - Rear window defogger on
    - Headlights on high beam
24. Hold the engine speed at 2,000 rpm (in Park or neutral) for 1 minute.
25. Check for Temporary DTCs or DTCs with the HDS.

    Are any Temporary DTCs or DTCs indicated?

    YES—If DTC P16BC is indicated, check for poor connections or loose terminals at the alternator and the ECM/PCM, then go to step 1. If any other Temporary DTCs or DTCs are indicated, go to the indicated DTC's troubleshooting.

    NO—Troubleshooting is complete. ■

BACK

Protected by AR

26. Update the ECM/PCM if it does not have the latest software, or substitute a known-good ECM/PCM (see page 11-6).

27. Start the engine.

28. Check under these conditions:

    - A/C on
    - Temperature control at maximum cool
    - Blower fan at maximum speed
    - Rear window defogger on
    - Headlights on high beam

29. Hold the engine speed at 2,000 rpm (in Park or neutral) for 1 minute.

30. Check for Temporary DTCs or DTCs with the HDS.

    Are any Temporary DTCs or DTCs indicated?

    YES—If DTC P16BC is indicated, check for poor connections or loose terminals at the alternator and the ECM/PCM, then go to step 1. If any other Temporary DTCs or DTCs are indicated, go to the indicated DTC's troubleshooting.

    NO—If the ECM/PCM was updated, troubleshooting is complete. If the ECM/PCM was substituted, replace the original ECM/PCM (see page 11-224). ■

DTC P2183: ECT Sensor 2 Circuit Range/ Performance Problem (2005-2006 models)

NOTE:
- Before you troubleshoot, record all freeze data and any on-board snapshot, and review the general troubleshooting information (see page 11-3).
- If DTC P0111 is stored at the same time as DTC P2183, troubleshoot DTC P0111 first, then recheck for DTC P2183.

1. Check for poor connections or loose terminals at ECT sensor 1 and ECT sensor 2.

   Are the connections and terminals OK?

   YES—Go to step 2.

   NO—Repair the connectors or terminals, then go to step 27.

2. Turn the ignition switch ON (II).

3. Check for Temporary DTC s or DTCs with the HDS.

   Are DTC P1116 and P2183 indicated at the same time?

   YES—Go to step 15.

   NO—Go to step 4.

4. Start the engine, and let it idle for 10 minutes.

5. Check ECT SENSOR 2 in the DATA LIST with the HDS.

   Is about 131 °F (55 °C) or less, or 1.50 V or more indicated?

   YES—Replace ECT sensor 2 (see page 11-223), then go to step 27.

   NO—Go to step 6.

(cont'd)

Protected by AR

DTC Troubleshooting (cont'd)

6. Turn the ignition switch OFF.
7. Drain the coolant (see page 10-6).
8. Remove ECT sensor 2 (see page 11-223).
9. Allow ECT sensor 2 to cool to 77 °F (25 °C).
10. Note the ambient temperature.
11. Connect ECT sensor 2 to the 2P connector, but do not install it on the engine.
12. Turn the ignition switch ON (II).
13. Note the value of ECT SENSOR 2 quickly in the DATA LIST with the HDS.
14. Compare the value of ECT SENSOR 2 and the ambient temperature.

    Does ECT SENSOR 2 differ 5.4 °F (3 °C) or more?

    YES—Replace ECT sensor 2 (see page 11-223), then go to step 27.

    NO—Intermittent failure, system is OK at this time. Check for poor connections or loose terminals at ECT sensor 1, ECT sensor 2, and the ECM/PCM. ■
15. Start the engine, and let it idle for 10 minutes.
16. Check ECT SENSOR 1 in the DATA LIST with the HDS.

    Is about 118 °F (48 °C) or less, or 1.75 V or more indicated?

    YES—Replace ECT sensor 1 (see page 11-219), then go to step 27.

    NO—Go to step 17.
17. Let the engine idle for 10 minutes.
18. Check ECT SENSOR 2 in the DATA LIST with the HDS.

    Is about 131 °F (55 °C) or less, or 1.50 V or more indicated?

    YES—Replace ECT sensor 2 (see page 11-223), then go to step 27.

    NO—Go to step 19.
19. Turn the ignition switch OFF.
20. Drain the coolant (see page 10-6).
21. Remove ECT sensor 1 (see page 11-219), and ECT sensor 2 (see page 11-223).
22. Allow the sensors to cool to 77 °F (25 °C).
23. Note the ambient temperature.

BACK

Protected by AR

24. Connect ECT sensor 1 to the 2P connector, and ECT sensor 2 to the 2P connector, but do not install them into the engine.

25. Note the value of ECT SENSOR 1 and ECT SENSOR 2 quickly in the DATA LIST with the HDS.

26. Compare the value of ECT SENSOR 1 and the ambient temperature, and the value of ECT SENSOR 2 and the ambient temperature individually.

    Does one of the sensors differ more than 5.4 °F (3 °C) from the ambient temperature?

    YES—Replace the sensor that differed more than 5.4 °F (3 °C) from the ambient temperature, then go to step 27.

    NO—Intermittent failure, system is OK at this time. Check for poor connections or loose terminals at ECT sensor 1, ECT sensor 2, and the ECM/PCM. ■

27. Turn the ignition switch ON (II).

28. Reset the ECM/PCM with the HDS.

29. Do the ECM/PCM idle learn procedure (see page 11-302).

30. Check for Temporary DTCs or DTCs with the HDS.

    Are any Temporary DTCs or DTCs indicated?

    YES—If DTC P2183 is indicated, check for poor connections or loose terminals at ECT sensor 1, ECT sensor 2, and the ECM/PCM, then go to step 1. If any other Temporary DTCs or DTCs are indicated, go to the indicated DTC's troubleshooting.

    NO—Troubleshooting is complete. ■

DTC P2184: ECT Sensor 2 Circuit Low Voltage (2005-2006 models)

NOTE: Before you troubleshoot, record all freeze data and any on-board snapshot, and review the general troubleshooting information (see page 11-3).

1. Turn the ignition switch ON (II).

2. Check ECT SENSOR 2 in the DATA LIST with the HDS.

   Is about 356 °F (180 °C) or more, or 0.08 V or less indicated?

   YES—Go to step 3.

   NO—Intermittent failure, system is OK at this time. Check for poor connections or loose terminals at ECT sensor 2 and the ECM/PCM. ■

3. Turn the ignition switch OFF.

4. Disconnect ECT sensor 2 2P connector.

5. Turn the ignition switch ON (II).

6. Check ECT SENSOR 2 in the DATA LIST with the HDS.

   Is about 356 °F (180 °C) or more, or 0.08 V or less indicated?

   YES—Go to step 7.

   NO—Go to step 11.

(cont'd)

Protected by AR

DTC Troubleshooting (cont'd)

7. Turn the ignition switch OFF.
8. Jump the SCS line with the HDS.
9. Disconnect ECM/PCM connector B (24P).
10. Check for continuity between ECT sensor 2 2P connector terminal No. 1 and body ground.

ECT SENSOR 2 2P CONNECTOR

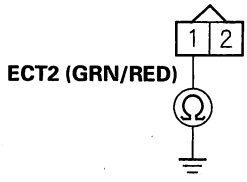

Wire side of female terminals

Is there continuity?

YES—Repair short in the wire between ECT sensor 2 and the ECM/PCM (B17), then go to step 13.

NO—Go to step 18.

11. Turn the ignition switch OFF.
12. Replace ECT sensor 2 (see page 11-223).
13. Reconnect all connectors.
14. Turn the ignition switch ON (II).
15. Reset the ECM/PCM with the HDS.
16. Do the ECM/PCM idle learn procedure (see page 11-302).
17. Check for Temporary DTCs or DTCs with the HDS.

    Are any Temporary DTCs or DTCs indicated?

    YES—If DTC P2184 is indicated, check for poor connections or loose terminals at ECT sensor 2 and the ECM/PCM, then go to step 1. If any other Temporary DTCs or DTCs are indicated, go to the indicated DTC's troubleshooting.

    NO—Troubleshooting is complete. ■
18. Update the ECM/PCM if it does not have the latest software, or substitute a known-good ECM/PCM (see page 11-6).
19. Check for Temporary DTCs or DTCs with the HDS.

    Are any Temporary DTCs or DTCs indicated?

    YES—If DTC P2184 is indicated, check for poor connections or loose terminals at ECT sensor 2 and the ECM/PCM, then go to step 1. If any other Temporary DTCs or DTCs are indicated, go to the indicated DTC's troubleshooting.

    NO—If the ECM/PCM was updated, troubleshooting is complete. If the ECM/PCM was substituted, replace the original ECM/PCM (see page 11-224). ■

BACK

Protected by AR

DTC P2185: ECT Sensor 2 Circuit High Voltage (2005-2006 models)

NOTE: Before you troubleshoot, record all freeze data and any on-board snapshot, and review the general troubleshooting information (see page 11-3).

1. Turn the ignition switch ON (II).
2. Check ECT SENSOR 2 in the DATA LIST with the HDS.

   Is about −40 °F (−40 °C) or less, or 4.90 V or more indicated?

   YES—Go to step 3.

   NO—Intermittent failure, system is OK at this time. Check for poor connections or loose terminals at ECT sensor 2 and the ECM/PCM. ■
3. Turn the ignition switch OFF.
4. Disconnect ECT sensor 2 2P connector.
5. Connect ECT sensor 2 2P connector terminals No. 1 and No. 2 with a jumper wire.

ECT SENSOR 2 2P CONNECTOR

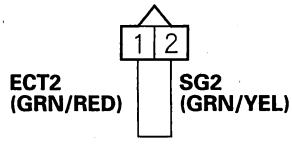

Wire side of female terminals

6. Turn the ignition switch ON (II).
7. Check ECT SENSOR 2 in the DATA LIST with the HDS.

   Is about −40 °F (−40 °C) or less, or 4.90 V or more indicated?

   YES—Go to step 8.

   NO—Go to step 18.
8. Turn the ignition switch OFF.
9. Remove the jumper wire from ECT sensor 2 2P connector.
10. Turn the ignition switch ON (II).
11. Measure voltage between ECT sensor 2 2P connector terminal No. 1 and body ground.

ECT SENSOR 2 2P CONNECTOR

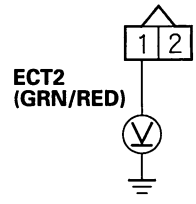

Wire side of female terminals

Is there about 5 V?

YES—Go to step 12.

NO—Go to step 17.

12. Turn the ignition switch OFF.
13. Jump the SCS line with the HDS.
14. Disconnect ECM/PCM connector D (17P).
15. Connect ECT sensor 2 2P connector terminal No. 2 to body ground with a jumper wire.

ECT SENSOR 2 2P CONNECTOR

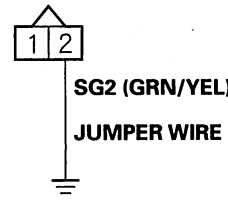

Wire side of female terminals

(cont'd)

Protected by AR

DTC Troubleshooting (cont'd)

16. Check for continuity between ECM/PCM connector terminal D10 and body ground.

ECM/PCM CONNECTOR D (17P)

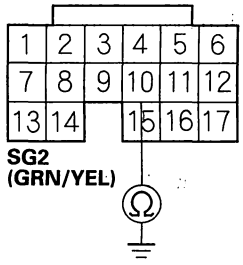

Wire side of female terminals

Is there continuity?

YES—Go to step 25.

NO—Repair open in the wire between the ECM/PCM (D10) and ECT sensor 2, then go to step 20.

17. Measure voltage between ECM/PCM connector terminal B17 and body ground.

ECM/PCM CONNECTOR B (24P)

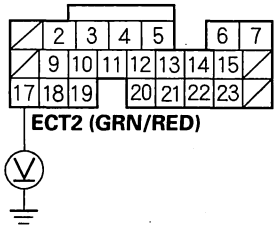

Wire side of female terminals

Is there about 5 V?

YES—Repair open in the wire between the ECM/PCM (B17) and ECT sensor 2, then go to step 20.

NO—Go to step 25.

18. Turn the ignition switch OFF.
19. Replace ECT sensor 2 (see page 11-223).
20. Reconnect all connectors.
21. Turn the ignition switch ON (II).
22. Reset the ECM/PCM with the HDS.
23. Do the ECM/PCM idle learn procedure (see page 11-302).
24. Check for Temporary DTCs or DTCs with the HDS.

    Are any Temporary DTCs or DTCs indicated?

    YES—If DTC P2185 is indicated, check for poor connections or loose terminals at ECT sensor 2 and the ECM/PCM, then go to step 1. If any other Temporary DTCs or DTCs are indicated, go to the indicated DTC's troubleshooting.

    NO—Troubleshooting is complete. ■

25. Update the ECM/PCM if it does not have the latest software, or substitute a known-good ECM/PCM (see page 11-6).
26. Check for Temporary DTCs or DTCs with the HDS.

    Are any Temporary DTCs or DTCs indicated?

    YES—If DTC P2185 is indicated, check for poor connections or loose terminals at ECT sensor 2 and the ECM/PCM, then go to step 1. If any other Temporary DTCs or DTCs are indicated, go to the indicated DTC's troubleshooting.

    NO—If the ECM/PCM was updated, troubleshooting is complete. If the ECM/PCM was substituted, replace the original ECM/PCM (see page 11-224). ■

BACK

Protected by AR

DTC P2195: Rear A/F Sensor (Bank 1, Sensor 1) Signal Stuck Lean

DTC P2197: Front A/F Sensor (Bank 2, Sensor 1) Signal Stuck Lean

NOTE:
- Before you troubleshoot, record all freeze data and any on-board snapshot, and review the general troubleshooting information (see page 11-3).
- Information marked with an asterisk (*) applies to the front bank (Bank 2).
- If the vehicle was out of fuel and the engine stalled before this DTC was stored, refuel and clear the DTC with the HDS.
- If DTC P2101, P2108, P2118, P2135, P2138, P2176, U0107 or a combination of P2122 and P2127, P2122 and P2138, or P2127 and P2138 is stored at the same time, troubleshoot them first then recheck for DTC P2195 and/or P2197*.

1. Inspect the condition of the A/F sensor (Sensor 1).

   Is it loose in the exhaust pipe?

   YES—Go to step 6.

   NO—Go to step 2.

2. Turn the ignition switch ON (II).
3. Clear the DTC with the HDS.
4. Start the engine. Hold the engine speed at 3,000 rpm without load (in Park or neutral) until the radiator fan comes on, then let it idle.
5. Check for Temporary DTCs or DTCs with the HDS.

   Are any Temporary DTCs or DTCs indicated?

   YES—If DTC P2195 and/or P2197* is indicated, check for poor connections or loose terminals at the A/F sensor (Sensor 1) and the ECM/PCM, then go to step 8. If any other Temporary DTCs or DTCs are indicated, go to the indicated DTC's troubleshooting.

   NO—Intermittent failure, system is OK at this time. Check for poor connections or loose terminals at the A/F sensor (Sensor 1) and the ECM/PCM. ■

6. Turn the ignition switch OFF.
7. Reinstall the A/F sensor (Sensor 1) (see page 11-217).
8. Turn the ignition switch ON (II).
9. Reset the ECM/PCM with the HDS.
10. Do the ECM/PCM idle learn procedure (see page 11-302).
11. Check for Temporary DTCs or DTCs with the HDS.

    Are any Temporary DTCs or DTCs indicated?

    YES—If DTC P2195 and/or P2197* is indicated, check for poor connections or loose terminals at the A/F sensor (Sensor 1) and the ECM/PCM, then go to step 6. If any other Temporary DTCs or DTCs are indicated, go to the indicated DTC's troubleshooting.

    NO—Go to step 12.

12. Monitor the OBD STATUS for DTC P2195 and/or P2197* in the DTCs MENU with the HDS.

    Does the screen indicate PASSED?

    YES—Troubleshooting is complete. ■

    NO—If the screen indicates FAILED, check for poor connections or loose terminals at the A/F sensor (Sensor 1) and the ECM/PCM, then then go to step 2. If the screen indicates NOT COMPLETED, go to step 5 and recheck.

Protected by AR

DTC Troubleshooting (cont'd)

DTC P2227: BARO Sensor Range/ Performance Problem

NOTE:
- Before you troubleshoot, record all freeze data and any on-board snapshot, and review the general troubleshooting information (see page 11-3).
- If DTC P0107, P0108, P1128, and/or P1129 are stored at the same time as DTC P2227, troubleshoot those DTCs first, then recheck for DTC P2227.

1. Turn the ignition switch ON (II), and wait 2 seconds.
2. Check the BARO SENSOR in the DATA LIST with the HDS.

   Is about 101 kPa (29.9 in.Hg, 760 mmHg), or about 2.9 V at sea level indicated?

   YES—Go to step 3.

   NO—Go to step 7.
3. Clear the DTC with the HDS.
4. Start the engine. Hold the engine speed at 3,000 rpm without load (in Park or neutral) until the radiator fan comes on, then let it idle.
5. Test-drive under these conditions, then connect the HDS:
   - Engine coolant temperature above 158 °F (70 °C)
   - A/T in D position (M/T in 4th gear)
   - Throttle position between 14 degrees and 45 degrees for 2 seconds
6. Monitor the OBD STATUS for DTC P2227 in the DTCs MENU with the HDS.

   Does the screen indicate FAILED?

   YES—Go to step 7.

   NO—If the screen indicates PASSED, intermittent failure, system is OK at this time. If the screen indicates NOT COMPLETED, go to step 4 and recheck.
7. Update the ECM/PCM if it does not have the latest software, or substitute a known-good ECM/PCM (see page 11-6).
8. Check for Temporary DTCs or DTCs with the HDS.

   Are any Temporary DTCs or DTCs indicated?

   YES—If DTC P2227 is indicated, check for poor connections or loose terminals at the ECM/PCM, then go to step 1. If any other Temporary DTCs or DTCs are indicated, go to the indicated DTC's troubleshooting.

   NO—If the ECM/PCM was updated, troubleshooting is complete. If the ECM/PCM was substituted, replace the original ECM/PCM (see page 11-224). ■

BACK

Protected by AR

DTC P2228: BARO Sensor Circuit Low Voltage (2003-2004 models)

NOTE: Before you troubleshoot, record all freeze data and any on-board snapshot, and review the general troubleshooting information (see page 11-3).

1. Turn the ignition switch ON (II).
2. Clear the DTC with the HDS.
3. Turn the ignition switch OFF.
4. Turn the ignition switch ON (II).
5. Check for Temporary DTCs or DTCs with the HDS.

   Are DTC P0107, P0112, P0117, P2122, P2127, P2228, P0452, P2627, and P2630 indicated at the same time?

   YES—Go to step 7.

   NO—Go to step 6.

6. Check the BARO SENSOR in the DATA LIST with the HDS.

   Is about 53 kPa (15.6 in.Hg, 397 mmHg), or 1.58 V or less indicated?

   YES—Go to step 16.

   NO—Intermittent failure, system is OK at this time. ■

7. Turn the ignition switch OFF.
8. Jump the SCS line with the HDS.
9. Disconnect ECM/PCM connectors A (31P) and D (17P).
10. Disconnect the connectors from these parts:
    - MAP sensor
    - APP sensor
    - IMT (IMRC) actuator
    - EGR valve
    - FTP sensor
    - Input shaft (mainshaft) speed sensor
    - Output shaft (countershaft) speed sensor
11. Check for continuity between body ground and ECM/PCM connector terminals A31, D2, D6, and D12 individually.

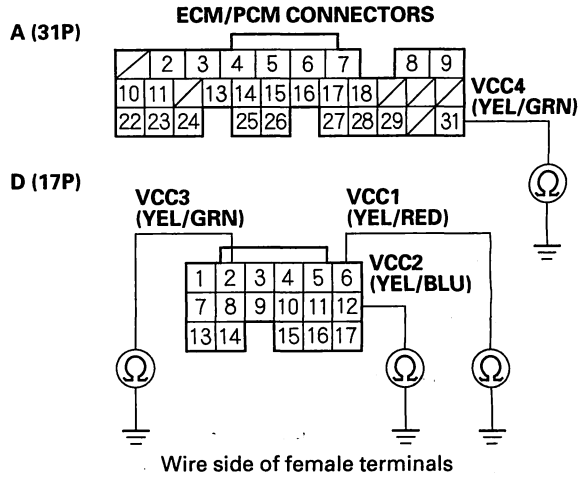

Is there continuity?

YES—Repair short in the wire between the ECM/PCM (A31, D2, D6, or D12) and each part, then go to step 18.

NO—Go to step 12.

(cont'd)

Protected by AR

DTC Troubleshooting (cont'd)

12. Reconnect ECM/PCM connectors A (31P) and D (17P).

13. Turn the ignition switch ON (II).

14. Measure voltage between ECM/PCM connector terminal D6 and body ground.

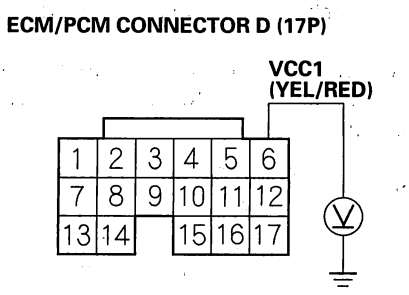

Wire side of female terminals

Is there about 5 V?

YES—Go to step 15.

NO—Go to step 16.

15. Continue to monitor voltage at ECM/PCM connector terminal D6 while reconnecting these parts, one at a time:

- MAP sensor
- APP sensor
- IMT (IMRC) actuator
- EGR valve
- FTP sensor
- Input shaft (mainshaft) speed sensor
- Output shaft (countershaft) speed sensor

Did the voltage drop to about 0 V?

YES—Replace the part that caused the voltage to drop, then go to step 20.

NO—Go to step 16.

16. Update the ECM/PCM if it does not have the latest software, or substitute a known-good ECM/PCM (see page 11-6).

17. Check for Temporary DTCs or DTCs with the HDS.

Are any Temporary DTCs or DTCs indicated?

YES—If DTC P2228 is indicated, check for poor connections or loose terminals at the ECM/PCM, then go to step 1. If any other Temporary DTCs or DTCs are indicated, go to the indicated DTC's troubleshooting.

NO—If the ECM/PCM was updated, troubleshooting is complete. If the ECM/PCM was substituted, replace the original ECM/PCM (see page 11-224). ■

18. Reconnect all connectors.

19. Turn the ignition switch ON (II).

20. Reset the ECM/PCM with the HDS.

21. Do the ECM/PCM idle learn procedure (see page 11-302).

22. Turn the ignition switch OFF.

23. Turn the ignition switch ON (II).

24. Check for Temporary DTCs or DTCs with the HDS.

Are any Temporary DTCs or DTCs indicated?

YES—If DTC P2228 is indicated, check for poor connections or loose terminals at the ECM/PCM, then go to step 1. If any other Temporary DTCs or DTCs are indicated, go to the indicated DTC's troubleshooting.

NO—Troubleshooting is complete. ■

BACK

Protected by AR

DTC P2228: BARO Sensor Circuit Low Voltage (2005-2006 models)

NOTE: Before you troubleshoot, record all freeze data and any on-board snapshot, and review the general troubleshooting information (see page 11-3).

1. Turn the ignition switch ON (II).
2. Check the BARO SENSOR in the DATA LIST with the HDS.

   Is about 53 kPa (15.6 in.Hg, 397 mmHg), or 1.58 V or less indicated?

   YES—Go to step 3.

   NO—Intermittent failure, system is OK at this time. ■
3. Update the ECM/PCM if it does not have the latest software, or substitute a known-good ECM/PCM (see page 11-6).
4. Check for Temporary DTCs or DTCs with the HDS.

   Are any Temporary DTCs or DTCs indicated?

   YES—If DTC P2228 is indicated, check for poor connections or loose terminals at the ECM/PCM, then go to step 1. If any other Temporary DTCs or DTCs are indicated, go to the indicated DTC's troubleshooting.

   NO—If the ECM/PCM was updated, troubleshooting is complete. If the ECM/PCM was substituted, replace the original ECM/PCM (see page 11-224). ■

DTC P2229: BARO Sensor Circuit High Voltage

NOTE: Before you troubleshoot, record all freeze data and any on-board snapshot, and review the general troubleshooting information (see page 11-3).

1. Turn the ignition switch ON (II).
2. Check the BARO SENSOR in the DATA LIST with the HDS.

   Is about 160 kPa (47.2 in.Hg, 1,200 mmHg), or 4.5 V or higher indicated?

   YES—Go to step 3.

   NO—Intermittent failure, system is OK at this time. ■
3. Update the ECM/PCM if it does not have the latest software, or substitute a known-good ECM/PCM (see page 11-6).
4. Check for Temporary DTCs or DTCs with the HDS.

   Are any Temporary DTCs or DTCs indicated?

   YES—If DTC P2229 is indicated, check for poor connections or loose terminals at the ECM/PCM, then go to step 1. If any other Temporary DTCs or DTCs are indicated, go to the indicated DTC's troubleshooting.

   NO—If the ECM/PCM was updated, troubleshooting is complete. If the ECM/PCM was substituted, replace the original ECM/PCM (see page 11-224). ■

Protected by AR

DTC Troubleshooting (cont'd)

DTC P2237: Rear A/F Sensor (Bank 1, Sensor 1) IP Line High Voltage

DTC P2240: Front A/F Sensor (Bank 2, Sensor 1) IP Line High Voltage

NOTE:
- Before you troubleshoot, record all freeze data and any on-board snapshot, and review the general troubleshooting information (see page 11-3).
- If DTC P2237 and/or P2240* is stored at the same time as DTC P0134 and/or P0154*, troubleshoot DTC P2237 and/or P2240* first, then recheck for P0134 and/or P0154*.
- Information marked with an asterisk (*) applies to the front bank (Bank 2).

1. Turn the ignition switch ON (II).
2. Clear the DTC with the HDS.
3. Start the engine. Hold the engine speed at 3,000 rpm without load (in Park or neutral) until the radiator fan comes on, then let it idle for 2 minutes.
4. Check for Temporary DTCs or DTCs with the HDS.

   Is DTC P2237 and/or P2240 indicated?*

   YES—Go to step 5.

   NO—Intermittent failure, system is OK at this time. Check for poor connections or loose terminals at the A/F sensor (Sensor 1) and the ECM/PCM. ■
5. Turn the ignition switch OFF.
6. Jump the SCS line with the HDS.
7. Disconnect the A/F sensor (Sensor 1) 8P connector.
8. Disconnect ECM/PCM connector B (24P).
9. Connect A/F sensor (Sensor 1) 8P connector terminal No. 7 to body ground with a jumper wire.

A/F SENSOR (SENSOR 1) 8P CONNECTOR

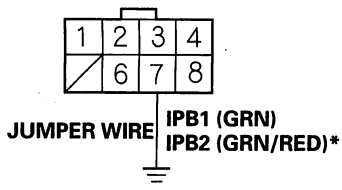

Wire side of female terminals

10. Check for continuity between ECM/PCM connector terminal B14 (B22)* and body ground.

ECM/PCM CONNECTOR B (24P)

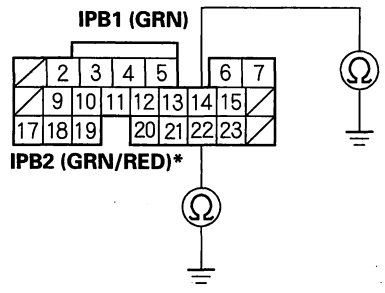

Wire side of female terminals

Is there continuity?

YES—Go to step 11.

NO—Repair open in the wire between the ECM/PCM (B14 (B22)*) and the A/F sensor (Sensor 1), then go to step 15.

BACK

Protected by AR

11. Remove the jumper wire from the A/F sensor (Sensor 1) 8P connector, then reconnect ECM/PCM connector B (24P).

12. Start the engine. Hold the engine speed at 3,000 rpm without load (in Park or neutral) until the radiator fan comes on, then let it idle for 2 minutes.

13. Measure voltage between ECM/PCM connector terminals B14 (B22)* and D10.

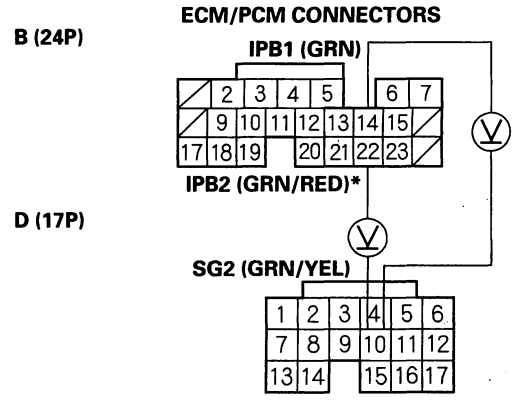

Wire side of female terminals

Is there about 0.2 V or less?

YES—Go to step 21.

NO—Go to step 14.

14. Replace the A/F sensor (Sensor 1) (see page 11-217).

15. Reconnect all connectors.

16. Turn the ignition switch ON (II).

17. Reset the ECM/PCM with the HDS.

18. Do the ECM/PCM idle learn procedure (see page 11-302).

19. Check for Temporary DTCs or DTCs with the HDS.

Are any Temporary DTCs or DTCs indicated?

YES—If DTC P2237 and/or P2240* is indicated, check for poor connections or loose terminals at the A/F sensor (Sensor 1) and the ECM/PCM, then go to step 1. If any other Temporary DTCs or DTCs are indicated, go to the indicated DTC's troubleshooting.

NO—Go to step 20.

20. Monitor the OBD STATUS for DTC P2237 and/or P2240* in the DTCs MENU with the HDS.

Does the screen indicate PASSED?

YES—Troubleshooting is complete. ■

NO—If the screen indicates FAILED, check for poor connections or loose terminals at the A/F sensor (Sensor 1) and the ECM/PCM, then go to step 1. If the screen indicates NOT COMPLETED, go to step 18 and recheck.

21. Update the ECM/PCM if it does not have the latest software, or substitute a known-good ECM/PCM (see page 11-6).

22. Check for Temporary DTCs or DTCs with the HDS.

Are any Temporary DTCs or DTCs indicated?

YES—If DTC P2237 and/or P2240* is indicated, check for poor connections or loose terminals at the A/F sensor (Sensor 1) and the ECM/PCM, then go to step 1. If any other Temporary DTCs or DTCs are indicated, go to the indicated DTC's troubleshooting.

NO—If the ECM/PCM was updated, troubleshooting is complete. If the ECM/PCM was substituted, replace the original ECM/PCM (see page 11-224). ■

Protected by AR

DTC Troubleshooting (cont'd)

DTC P2238: Rear A/F Sensor (Bank 1, Sensor 1) IP Line Low Voltage

DTC P2241: Front A/F Sensor (Bank 2, Sensor 1) IP Line Low Voltage

NOTE:
- Before you troubleshoot, record all freeze data and any on-board snapshot, and review the general troubleshooting information (see page 11-3).
- Information marked with an asterisk (*) applies to the front bank (Bank 2).

1. Turn the ignition switch ON (II).
2. Clear the DTC with the HDS.
3. Start the engine. Hold the engine speed at 3,000 rpm without load (in Park or neutral) until the radiator fan comes on, then let it idle for 2 minutes.
4. Check for Temporary DTCs or DTCs with the HDS.

   Is DTC P2238 and/or P2241 indicated?*

   YES—Go to step 5.

   NO—Intermittent failure, system is OK at this time. Check for poor connections or loose terminals at the A/F sensor (Sensor 1) and the ECM/PCM. ■
5. Turn the ignition switch OFF.
6. Jump the SCS line with the HDS.
7. Disconnect the A/F sensor (Sensor 1) 8P connector.
8. Disconnect ECM/PCM connector B (24P).
9. Check for continuity between ECM/PCM connector terminal B14 (B22)* and body ground.

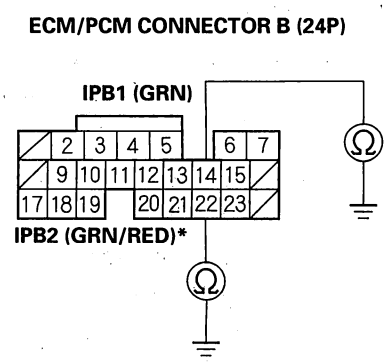

   Is there continuity?

   YES—Repair short in the wire between the ECM/PCM (B14 (B22)*) and the A/F sensor (Sensor 1), then go to step 14.

   NO—Go to step 10.
10. Reconnect ECM/PCM connector B (24P).
11. Start the engine. Hold the engine speed at 3,000 rpm without load (in Park or neutral) until the radiator fan comes on, then let it idle for 2 minutes.

BACK

Protected by AR

12. Measure voltage between ECM/PCM connector terminals B14 (B22)* and D10.

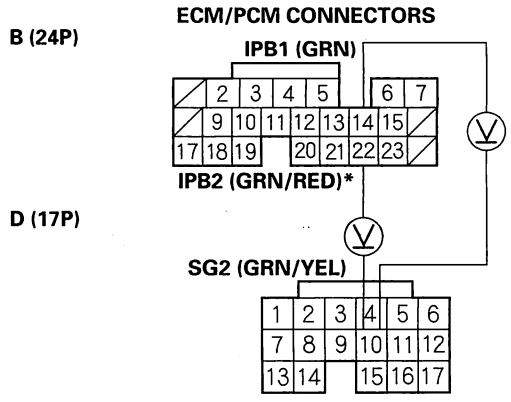

Wire side of female terminals

Is there about 0.2 V or less?

YES—Go to step 20.

NO—Go to step 13.

13. Replace the A/F sensor (see page 11-217).

14. Reconnect all connectors.

15. Turn the ignition switch ON (II).

16. Reset the ECM/PCM with the HDS.

17. Do the ECM/PCM idle learn procedure (see page 11-302).

18. Check for Temporary DTCs or DTCs with the HDS.

Are any Temporary DTCs or DTCs indicated?

YES—If DTC P2238 and/or P2241* is indicated, check for poor connections or loose terminals at the A/F sensor (Sensor 1) and the ECM/PCM, then go to step 1. If any other Temporary DTCs or DTCs are indicated, go to the indicated DTC's troubleshooting.

NO—Go to step 19.

19. Monitor the OBD STATUS for DTC P2238 and/or P2241* in the DTCs MENU with the HDS.

Does the screen indicate PASSED?

YES—Troubleshooting is complete.■

NO—If the screen indicates FAILED, check for poor connections or loose terminals at the A/F sensor (Sensor 1) and the ECM/PCM, then go to step 1. If the screen indicates NOT COMPLETED, go to step 17 and recheck.

20. Update the ECM/PCM if it does not have the latest software, or substitute a known-good ECM/PCM (see page 11-6).

21. Check for Temporary DTCs or DTCs with the HDS.

Are any Temporary DTCs or DTCs indicated?

YES—If DTC P2238 and/or P2241* is indicated, check for poor connections or loose terminals at the A/F sensor (Sensor 1) and the ECM/PCM, then go to step 1. If any other Temporary DTCs or DTCs are indicated, go to the indicated DTC's troubleshooting.

NO—If the ECM/PCM was updated, troubleshooting is complete. If the ECM/PCM was substituted, replace the original ECM/PCM (see page 11-224).■

Protected by AR

DTC Troubleshooting (cont'd)

DTC P2243: Rear A/F Sensor (Bank 1, Sensor 1) VCENT Line High Voltage

DTC P2247: Front A/F Sensor (Bank 2, Sensor 1) VCENT Line High Voltage

NOTE:
- Before you troubleshoot, record all freeze data and any on-board snapshot, and review the general troubleshooting information (see page 11-3).
- Information marked with an asterisk (*) applies to the front bank (Bank 2).

1. Turn the ignition switch ON (II).
2. Clear the DTC with the HDS.
3. Start the engine. Hold the engine speed at 3,000 rpm without load (in Park or neutral) until the radiator fan comes on, then let it idle for 2 minutes.
4. Check for Temporary DTCs or DTCs with the HDS.

   Is DTC P2243 and/or P2247 indicated?*

   YES—Go to step 5.

   NO—Intermittent failure, system is OK at this time. Check for poor connections or loose terminals at the A/F sensor (Sensor 1) and the ECM/PCM. ■
5. Turn the ignition switch OFF.
6. Jump the SCS line with the HDS.
7. Disconnect the A/F sensor (Sensor 1) 8P connector.
8. Disconnect ECM/PCM connector B (24P).
9. Connect A/F sensor (Sensor 1) 8P connector terminal No. 8 to body ground with a jumper wire.

A/F SENSOR (SENSOR 1) 8P CONNECTOR

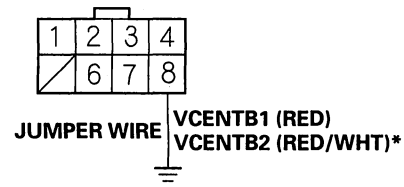

Wire side of female terminals

10. Check for continuity between ECM/PCM connector terminal B13 (B21)* and body ground.

ECM/PCM CONNECTOR B (24P)

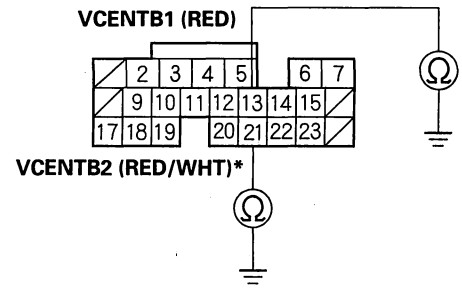

Wire side of female terminals

Is there continuity?

YES—Go to step 11.

NO—Repair open in the wire between the ECM/PCM (B13 (B21)*) and the A/F sensor (Sensor 1), then go to step 15.

BACK

Protected by AR

11. Remove the jumper wire from the A/F sensor (Sensor 1) 8P connector, then reconnect ECM/PCM connector B (24P).

12. Start the engine. Hold the engine speed at 3,000 rpm without load (in Park or neutral) until the radiator fan comes on, then let it idle for 2 minutes.

13. Measure voltage between ECM/PCM connector terminals B13 (B21)* and D10.

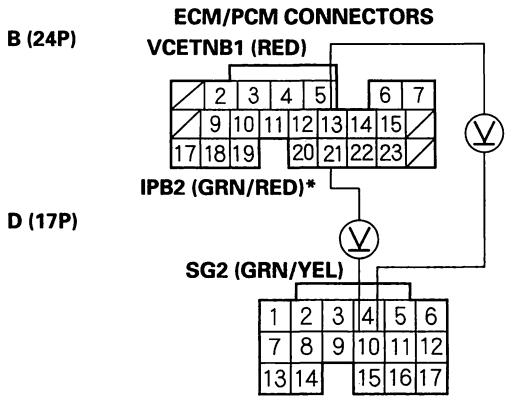

Wire side of female terminals

Is there about 0.2 V or less?

YES—Go to step 21.

NO—Go to step 14.

14. Replace the A/F sensor (Sensor 1) (see page 11-217).

15. Reconnect all connectors.

16. Turn the ignition switch ON (II).

17. Reset the ECM/PCM with the HDS.

18. Do the ECM/PCM idle learn procedure (see page 11-302).

19. Check for Temporary DTCs or DTCs with the HDS.

Are any Temporary DTCs or DTCs indicated?

YES—If DTC P2243 and/or P2247* is indicated, check for poor connections or loose terminals at the A/F sensor (Sensor 1) and the ECM/PCM, then go to step 1. If any other Temporary DTCs or DTCs are indicated, go to the indicated DTC's troubleshooting.

NO—Go to step 20.

20. Monitor the OBD STATUS for DTC P2243 and/or P2247* in the DTCs MENU with the HDS.

Does the screen indicate PASSED?

YES—Troubleshooting is complete.■

NO—If the screen indicates FAILED, check for poor connections or loose terminals at the A/F sensor (Sensor 1) and the ECM/PCM, then go to step 1. If the screen indicates NOT COMPLETED, go to step 18 and recheck.

21. Update the ECM/PCM if it does not have the latest software, or substitute a known-good ECM/PCM (see page 11-6).

22. Check for Temporary DTCs or DTCs with the HDS.

Are any Temporary DTCs or DTCs indicated?

YES—If DTC P2243 and/or P2247* is indicated, check for poor connections or loose terminals at the A/F sensor (Sensor 1) and the ECM/PCM, then go to step 1. If any other Temporary DTCs or DTCs are indicated, go to the indicated DTC's troubleshooting.

NO—If the ECM/PCM was updated, troubleshooting is complete. If the ECM/PCM was substituted, replace the original ECM/PCM (see page 11-224).■

Protected by AR

DTC Troubleshooting (cont'd)

DTC P2245: Rear A/F Sensor (Bank 1, Sensor 1) VCENT Line Low Voltage

DTC P2249: Front A/F Sensor (Bank 2, Sensor 1) VCENT Line Low Voltage

NOTE:
- Before you troubleshoot, record all freeze data and any on-board snapshot, and review the general troubleshooting information (see page 11-3).
- Information marked with an asterisk (*) applies to the front bank (Bank 2).

1. Turn the ignition switch ON (II).
2. Clear the DTC with the HDS.
3. Start the engine. Hold the engine speed at 3,000 rpm without load (in Park or neutral) until the radiator fan comes on, then let it idle for 2 minutes.
4. Check for Temporary DTCs or DTCs with the HDS.

   Is DTC P2245 and/or P2249 indicated?*

   YES—Go to step 5.

   NO—Intermittent failure, system is OK at this time. Check for poor connections or loose terminals at the A/F sensor (Sensor 1) and the ECM/PCM. ■
5. Turn the ignition switch OFF.
6. Jump the SCS line with the HDS.
7. Disconnect the A/F sensor (Sensor 1) 8P connector.
8. Disconnect ECM/PCM connector B (24P).
9. Check for continuity between ECM/PCM connector terminal B13 (B21)* and body ground.

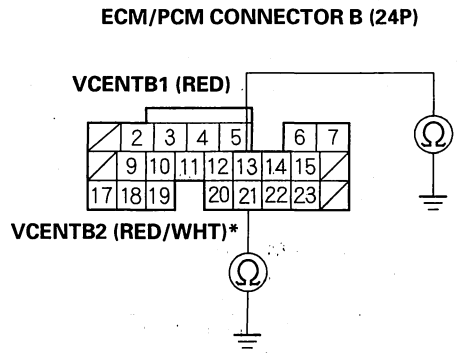

   Is there continuity?

   YES—Repair short in the wire between the ECM/PCM (B13 (B21)*) and the A/F sensor (Sensor 1), then go to step 14.

   NO—Go to step 10.
10. Reconnect ECM/PCM connector B (24P).
11. Start the engine. Hold the engine speed at 3,000 rpm without load (in Park or neutral) until the radiator fan comes on, then let it idle.

BACK

Protected by AR

12. Measure voltage between ECM/PCM connector terminals B13 (B21)* and D10.

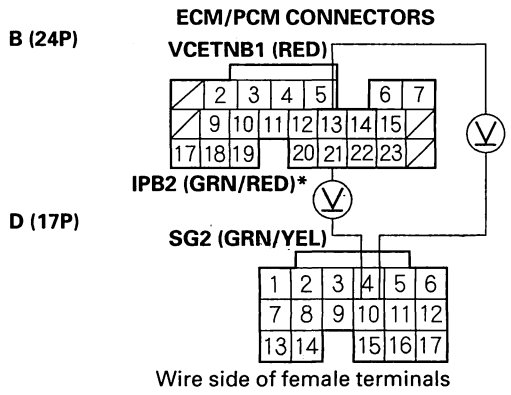

Is there about 0.2 V or less?

YES—Go to step 20.

NO—Go to step 13.

13. Replace the A/F sensor (Sensor 1) (see page 11-217).

14. Reconnect all connectors.

15. Turn the ignition switch ON (II).

16. Reset the ECM/PCM with the HDS.

17. Do the ECM/PCM idle learn procedure (see page 11-302).

18. Check for Temporary DTCs or DTCs with the HDS.

Are any Temporary DTCs or DTCs indicated?

YES—If DTC P2245 and/or P2249* is indicated, check for poor connections or loose terminals at the A/F sensor (Sensor 1) and the ECM/PCM, then go to step 1. If any other Temporary DTCs or DTCs are indicated, go to the indicated DTC's troubleshooting.

NO—Go to step 19.

19. Monitor the OBD STATUS for DTC P2245 and/or P2249* in the DTCs MENU with the HDS.

Does the screen indicate PASSED?

YES—Troubleshooting is complete. ■

NO—If the screen indicates FAILED, check for poor connections or loose terminals at the A/F sensor (Sensor 1) and the ECM/PCM, then go to step 1. If the screen indicates NOT COMPLETED, go to step 17 and recheck.

20. Update the ECM/PCM if it does not have the latest software, or substitute a known-good ECM/PCM (see page 11-6).

21. Check for Temporary DTCs or DTCs with the HDS.

Are any Temporary DTCs or DTCs indicated?

YES—If DTC P2245 and/or P2249* is indicated, check for poor connections or loose terminals at the A/F sensor (Sensor 1) and the ECM/PCM, then go to step 1. If any other Temporary DTCs or DTCs are indicated, go to the indicated DTC's troubleshooting.

NO—If the ECM/PCM was updated, troubleshooting is complete. If the ECM/PCM was substituted, replace the original ECM/PCM (see page 11-224). ■

Protected by AR

DTC Troubleshooting (cont'd)

DTC P2251: Rear A/F Sensor (Bank 1, Sensor 1) VS Line High Voltage

DTC P2254: Front A/F Sensor (Bank 2, Sensor 1) VS Line High Voltage

NOTE:
- Before you troubleshoot, record all freeze data and any on-board snapshot, and review the general troubleshooting information (see page 11-3).
- If DTC P2251 and/or P2254* is stored at the same time as DTC P0134 and/or P0154*, troubleshoot DTC P2251 and/or P2254* first, then recheck for P0134 and/or P0154*.
- Information marked with an asterisk (*) applies to the front bank (Bank 2).

1. Turn the ignition switch ON (II).
2. Clear the DTC with the HDS.
3. Start the engine. Hold the engine speed at 3,000 rpm without load (in Park or neutral) until the radiator fan comes on, then let it idle for 2 minutes.
4. Check for Temporary DTCs or DTCs with the HDS.

   Is DTC P2251 and/or P2254 indicated?*

   YES—Go to step 5.

   NO—Intermittent failure, system is OK at this time. Check for poor connections or loose terminals at the A/F sensor (Sensor 1) and the ECM/PCM. ■
5. Turn the ignition switch OFF.
6. Jump the SCS line with the HDS.
7. Disconnect the A/F sensor (Sensor 1) 8P connector.
8. Disconnect ECM/PCM connector B (24P).
9. Connect A/F sensor (Sensor 1) 8P connector terminal No. 6 to body ground with a jumper wire.

A/F SENSOR (SENSOR 1) 8P CONNECTOR

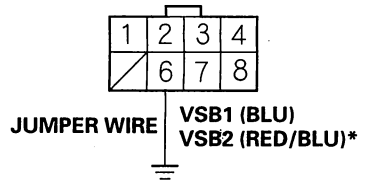

Wire side of female terminals

10. Check for continuity between ECM/PCM connector terminal B12 (B20)* and body ground.

ECM/PCM CONNECTOR B (24P)

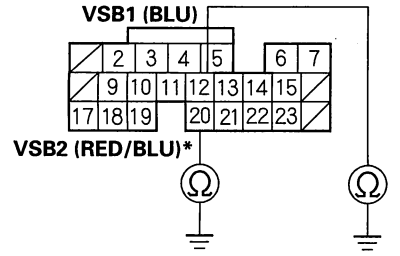

Wire side of female terminals

Is there continuity?

YES—Go to step 11.

NO—Repair open in the wire between the ECM/PCM (B12 (B20)*) and the A/F sensor (Sensor 1), then go to step 15.

BACK

Protected by AR

11. Remove the jumper wire from the A/F sensor (Sensor 1) 8P connector, then reconnect ECM/PCM connector B (24P).

12. Start the engine. Hold the engine speed at 3,000 rpm without load (in Park or neutral) until the radiator fan comes on, then let it idle for 2 minutes.

13. Measure voltage between ECM/PCM connector terminals B12 (B20)* and D10.

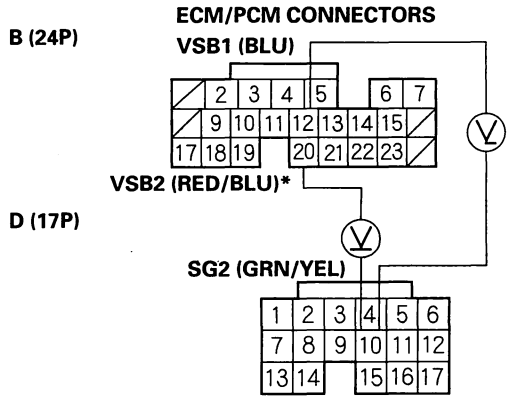

Wire side of female terminals

Is there about 0.2 V or less?

YES—Go to step 21.

NO—Go to step 14.

14. Replace the A/F sensor (see page 11-217).

15. Reconnect all connectors.

16. Turn the ignition switch ON (II).

17. Reset the ECM/PCM with the HDS.

18. Do the ECM/PCM idle learn procedure (see page 11-302).

19. Check for Temporary DTCs or DTCs with the HDS.

Are any Temporary DTCs or DTCs indicated?

YES—If DTC P2251 and/or P2254* is indicated, check for poor connections or loose terminals at the A/F sensor (Sensor 1) and the ECM/PCM, then go to step 1. If any other Temporary DTCs or DTCs are indicated, go to the indicated DTC's troubleshooting.

NO—Go to step 20.

20. Monitor the OBD STATUS for DTC P2251 and/or P2254* in the DTCs MENU with the HDS.

Does the screen indicate PASSED?

YES—Troubleshooting is complete. ■

NO—If the screen indicates FAILED, check for poor connections or loose terminals at the A/F sensor (Sensor 1) and the ECM/PCM, then go to step 1. If the screen indicates NOT COMPLETED, go to step 18 and recheck.

21. Update the ECM/PCM if it does not have the latest software, or substitute a known-good ECM/PCM (see page 11-6).

22. Check for Temporary DTCs or DTCs with the HDS.

Are any Temporary DTCs or DTCs indicated?

YES—If DTC P2251 and/or P2254* is indicated, check for poor connections or loose terminals at the A/F sensor (Sensor 1) and the ECM/PCM, then go to step 1. If any other Temporary DTCs or DTCs are indicated, go to the indicated DTC's troubleshooting.

NO—If the ECM/PCM was updated, troubleshooting is complete. If the ECM/PCM was substituted, replace the original ECM/PCM (see page 11-224). ■

Protected by AR

DTC Troubleshooting (cont'd)

DTC P2252: Rear A/F Sensor (Bank 1, Sensor 1) VS Line Low Voltage

DTC P2255: Front A/F Sensor (Bank 2, Sensor 1) VS Line Low Voltage

NOTE:
- Before you troubleshoot, record all freeze data and any on-board snapshot, and review the general troubleshooting information (see page 11-3).
- Information marked with an asterisk (*) applies to the front bank (Bank 2).

1. Turn the ignition switch ON (II).
2. Clear the DTC with the HDS.
3. Start the engine. Hold the engine speed at 3,000 rpm without load (in Park or neutral) until the radiator fan comes on, then let it idle for 2 minutes.
4. Check for Temporary DTCs or DTCs with the HDS.

   Is DTC P2252 and/or P2255 indicated?*

   YES—Go to step 5.

   NO—Intermittent failure, system is OK at this time. Check for poor connections or loose terminals at the A/F sensor (Sensor 1) and the ECM/PCM. ■
5. Turn the ignition switch OFF.
6. Jump the SCS line with the HDS.
7. Disconnect the A/F sensor (Sensor 1) 8P connector.
8. Disconnect ECM/PCM connector B (24P).
9. Check for continuity between ECM/PCM connector terminal B12 (B20)* and body ground.

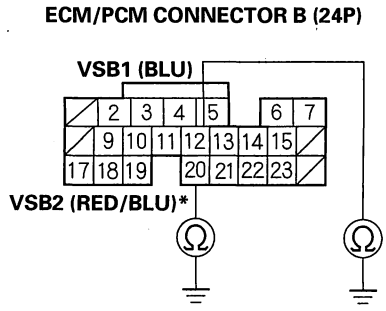

Wire side of female terminals

Is there continuity?

YES—Repair short in the wire between the ECM/PCM (B12 (B20)*) and the A/F sensor (Sensor 1), then go to step 14.

NO—Go to step 10.

10. Reconnect ECM/PCM connector B (24P).
11. Start the engine. Hold the engine speed at 3,000 rpm without load (in Park or neutral) until the radiator fan comes on, then let it idle for 2 minutes.

BACK

Protected by AR

12. Measure voltage between ECM/PCM connector terminals B12 (B20)* and D10.

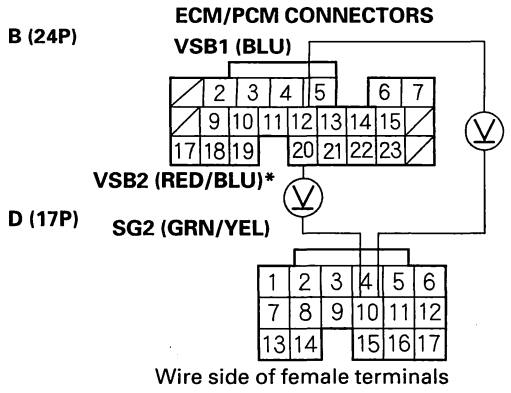

Is there about 0.2 V or less?

YES—Go to step 20.

NO—Go to step 13.

13. Replace the A/F sensor (Sensor 1) (see page 11-217).

14. Reconnect all connectors.

15. Turn the ignition switch ON (II).

16. Reset the ECM/PCM with the HDS.

17. Do the ECM/PCM idle learn procedure (see page 11-302).

18. Check for Temporary DTCs or DTCs with the HDS.

Are any Temporary DTCs or DTCs indicated?

YES—If DTC P2252 and/or P2255* is indicated, check for poor connections or loose terminals at the A/F sensor (Sensor 1) and the ECM/PCM, then go to step 1. If any other Temporary DTCs or DTCs are indicated, go to the indicated DTC's troubleshooting.

NO—Go to step 19.

19. Monitor the OBD STATUS for DTC P2252 and/or P2255* in the DTCs MENU with the HDS.

Does the screen indicate PASSED?

YES—Troubleshooting is complete.■

NO—If the screen indicates FAILED, check for poor connections or loose terminals at the A/F sensor (Sensor 1) and the ECM/PCM, then go to step 1. If the screen indicates NOT COMPLETED, go to step 17 and recheck.

20. Update the ECM/PCM if it does not have the latest software, or substitute a known-good ECM/PCM (see page 11-6).

21. Check for Temporary DTCs or DTCs with the HDS.

Are any Temporary DTCs or DTCs indicated?

YES—If DTC P2252 and/or P2255* is indicated, check for poor connections or loose terminals at the A/F sensor (Sensor 1) and the ECM/PCM, then go to step 1. If any other Temporary DTCs or DTCs are indicated, go to the indicated DTC's troubleshooting.

NO—If the ECM/PCM was updated, troubleshooting is complete. If the ECM/PCM was substituted, replace the original ECM/PCM (see page 11-224).■

BACK

Protected by AR

DTC Troubleshooting (cont'd)

DTC P2270: Rear Secondary HO2S (Bank 1, Sensor 2) Circuit Signal Stuck Lean (2005-2006 models)

DTC P2271: Rear Secondary HO2S (Bank 1, Sensor 2) Circuit Signal Stuck Rich (2005-2006 models)

DTC P2272: Front Secondary HO2S (Bank 2, Sensor 2) Circuit Signal Stuck Lean (2005-2006 models)

DTC P2273: Front Secondary HO2S (Bank 2, Sensor 2) Circuit Signal Stuck Rich (2005-2006 models)

NOTE:
- Before you troubleshoot, record all freeze data and any on-board snapshot, and review the general troubleshooting information (see page 11-3).
- Information marked with an asterisk (*) applies to the front bank (Bank 2).

1. Turn the ignition switch ON (II).
2. Clear the DTC with the HDS.
3. Start the engine. Hold the engine speed at 3,000 rpm without load (in Park or neutral) until the radiator fan comes on, then let it idle.
4. Test-drive under these conditions:
   - Engine coolant temperature above 176 °F (80 °C)
   - Vehicle speed between 35—55 mph (56—88 km/h)
   - Drive 1 minute or more
5. Monitor the OBD STATUS for DTC P2270, P2271, P2272* and/or P2273* in the DTCs MENU with the HDS.

   Does the screen indicate FAILED?

   YES—Go to step 6.

   NO—If the screen indicates PASSED, intermittent failure, system is OK at this time. Check for poor connections or loose terminals at the secondary HO2S (Sensor 2) and the ECM/PCM. If the screen indicates EXECUTING, keep driving until a result comes on. If the screen indicates OUT OF CONDITION, go to step 3 and recheck.
6. Turn the ignition switch OFF.
7. Replace the secondary HO2S (Sensor 2) (see page 11-218).
8. Turn the ignition switch ON (II).
9. Reset the ECM/PCM with the HDS.
10. Do the ECM/PCM idle learn procedure (see page 11-302).
11. Start the engine. Hold the engine speed at 3,000 rpm without load (in Park or neutral) until the radiator fan comes on, then let it idle.
12. Test-drive under these conditions:
    - Engine coolant temperature above 176 °F (80 °C)
    - Vehicle speed between 35—55 mph (56—88 km/h)
    - Drive 1 minute or more
13. Check for Temporary DTCs or DTCs with the HDS.

    Are any Temporary DTCs or DTCs indicated?

    YES—If DTC P2270, P2271, P2272* and/or P2273* is indicated, check for poor connections or loose terminals at the secondary HO2S (Sensor 2) and the ECM/PCM, then go to step 1. If any other Temporary DTCs or DTCs are indicated, go to the indicated DTC's troubleshooting.

    NO—Go to step 14.
14. Monitor the OBD STATUS for DTC P2270, P2271, P2272* and/or P2273* in the DTCs MENU with the HDS.

    Does the screen indicate PASSED?

    YES—Troubleshooting is complete. ■

    NO—If the screen indicates FAILED, check for poor connections or loose terminals at the secondary HO2S (Sensor 2) and the ECM/PCM, then go to step 1. If the screen indicates EXECUTING, keep driving until a result comes on. If the screen indicates OUT OF CONDITION, go to step 11 and recheck.

BACK

Protected by AR

DTC P2610: ECM/PCM Ignition Off Internal Timer Performance Problem (2005-2006 models)

NOTE: Before you troubleshoot, record all freeze data and any on-board snapshot, and review the general troubleshooting information (see page 11-3).

1. Turn the ignition switch ON (II).
2. Clear the DTC with the HDS.
3. Check for Temporary DTCs or DTCs with the HDS.

   Is DTC P2610 indicated?

   YES—Update the ECM/PCM if it does not have the latest software, or substitute a known-good ECM/PCM (see page 11-6), then recheck. If the symptom/indication goes away with a known-good ECM/PCM, replace the original ECM/PCM (see page 11-224). ■

   NO—Intermittent failure, system is OK at this time. ■

Protected by AR

DTC Troubleshooting (cont'd)

DTC P2627: Rear A/F Sensor (Bank 1, Sensor 1) Label Circuit Low Voltage (2003-2004 models)

DTC P2630: Front A/F Sensor (Bank 2, Sensor 1) Label Circuit Low Voltage (2003-2004 models)

NOTE:
- Before you troubleshoot, record all freeze data and any on-board snapshot, and review the general troubleshooting information (see page 11-3).
- Information marked with an asterisk (*) applies to the front bank (Bank 2).

1. Turn the ignition switch ON (II).
2. Clear the DTC with the HDS.
3. Start the engine. Hold the engine speed at 3,000 rpm without load (in Park or neutral) until the radiator fan comes on, then let it idle for 2 minutes.
4. Check for Temporary DTCs or DTCs with the HDS.

   Are DTC P0107, P0112, P0117, P2122, P2127, P2228, P0452, P2627, and P2630 indicated at same time?

   YES—Go to step 12.

   NO—Go to step 5.
5. Check for Temporary DTCs or DTCs with the HDS.

   Is DTC P2627 and/or P2630 indicated?*

   YES—Go to step 6.

   NO—Intermittent failure, system is OK at this time. Check for poor connections or loose terminals at the A/F sensor (Sensor 1) and the ECM/PCM. ■
6. Turn the ignition switch OFF.
7. Jump the SCS line with the HDS.
8. Disconnect ECM/PCM connector B (24P).
9. Check for continuity between ECM/PCM connector terminal B10 (B19)* and body ground.

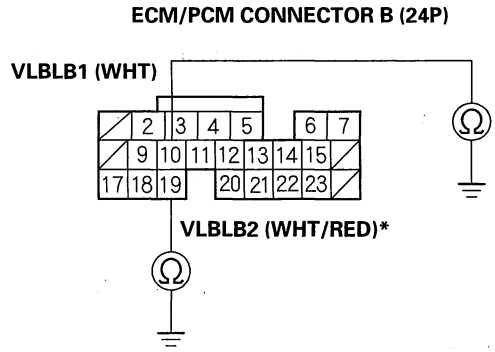

   Is there continuity?

   YES—Go to step 10.

   NO—Go to step 27.
10. Disconnect the A/F sensor (Sensor 1) 8P connector.
11. Check for continuity between ECM/PCM connector terminal B10 (B19)* and body ground.

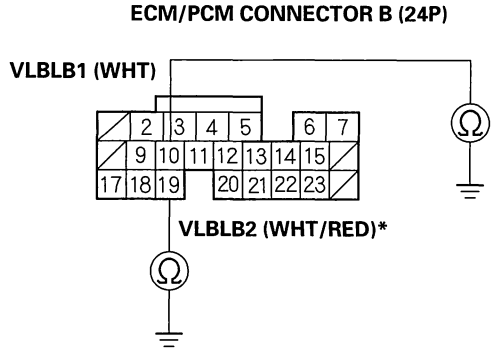

   Is there continuity?

   YES—Repair short in the wire between the ECM/PCM (B10 (B19)*) and the A/F sensor (Sensor 1), then go to step 22.

   NO—Go to step 21.

BACK

Protected by AR

12. Turn the ignition switch OFF.
13. Jump the SCS line with the HDS.
14. Disconnect ECM/PCM connectors A (31P) and D (17P).
15. Disconnect the connectors from these parts:
    - MAP sensor
    - APP sensor
    - IMT (IMRC) actuator
    - EGR sensor
    - FTP sensor
    - Input shaft (mainshaft) speed sensor
    - Output shaft (countershaft) sensor
16. Check for continuity between body ground and ECM/PCM connector terminals A31, D2, D6, and D12 individually.

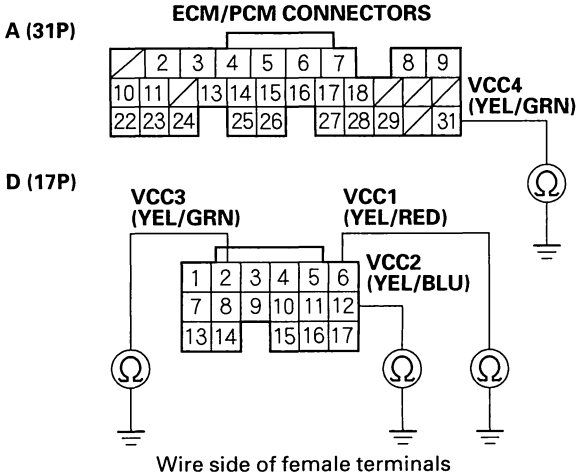

Wire side of female terminals

Is there continuity?

YES—Repair short in the wire between the ECM/PCM (A31, D2, D6, or D12) and each part, then go to step 22.

NO—Go to step 17.

17. Reconnect ECM/PCM connectors A (31P) and D (17P).
18. Turn the ignition switch ON (II).
19. Measure voltage between ECM/PCM connector terminal D6 and body ground.

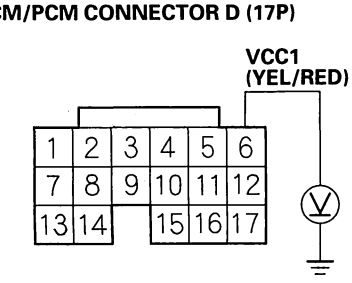

Wire side of female terminals

Is there about 5 V?

YES—Go to step 20.

NO—Go to step 27.

20. Continue to monitor voltage at the ECM/PCM connector terminal D6 while reconnecting these parts, one at a time:
    - MAP sensor
    - APP sensor
    - IMT (IMRC) actuator
    - EGR sensor
    - FTP sensor
    - Input shaft (mainshaft) speed sensor
    - Output shaft (countershaft) sensor

Did the voltage drop to about 0 V?

YES—Replace the part that caused the voltage to drop, then go to step 22.

NO—Go to step 27.

(cont'd)

Protected by AR

DTC Troubleshooting (cont'd)

21. Replace the A/F sensor (Sensor 1) (see page 11-217).
22. Reconnect all connectors.
23. Turn the ignition switch ON (II).
24. Reset the ECM/PCM with the HDS.
25. Do the ECM/PCM idle learn procedure (see page 11-302).
26. Check for Temporary DTCs or DTCs with the HDS.

    Are any Temporary DTCs or DTCs indicated?

    YES—If DTC P2627 and/or P2630* is indicated, check for poor connections or loose terminals at the A/F sensor (Sensor 1) and the ECM/PCM, then go to step 1. If any other Temporary DTCs or DTCs are indicated, go to the indicated DTC's troubleshooting.

    NO—Troubleshooting is complete. ■

27. Update the ECM/PCM if it does not have the latest software, or substitute a known-good ECM/PCM (see page 11-6).
28. Check for Temporary DTCs or DTCs with the HDS.

    Are any Temporary DTCs or DTCs indicated?

    YES—If DTC P2627 and/or P2630* is indicated, check for poor connections or loose terminals at the A/F sensor (Sensor 1) and the ECM/PCM, then go to step 1. If any other Temporary DTCs or DTCs are indicated, go to the indicated DTC's troubleshooting.

    NO—If the ECM/PCM was updated, troubleshooting is complete. If the ECM/PCM was substituted, replace the original ECM/PCM (see page 11-224). ■

BACK

Protected by AR

DTC P2627: Rear A/F Sensor (Bank 1, Sensor 1) LABEL Circuit Low Voltage (2005-2006 models)

DTC P2630: Front A/F Sensor (Bank 2, Sensor 1) LABEL Circuit Low Voltage (2005-2006 models)

NOTE:
- Before you troubleshoot, record all freeze data and any on-board snapshot, and review the general troubleshooting information (see page 11-3).
- Information marked with an asterisk (*) applies to the front bank (Bank 2).

1. Turn the ignition switch ON (II).
2. Clear the DTC with the HDS.
3. Start the engine. Hold the engine speed at 3,000 rpm without load (in Park or neutral) until the radiator fan comes on, then let it idle for 2 minutes.
4. Check for Temporary DTCs or DTCs with the HDS.

   Is DTC P2627 and/or P2630 indicated?*

   YES—Go to step 5.

   NO—Intermittent failure, system is OK at this time. Check for poor connections or loose terminals at the A/F sensor (Sensor 1) and the ECM/PCM. ■
5. Turn the ignition switch OFF.
6. Jump the SCS line with the HDS.
7. Disconnect ECM/PCM connector B (24P).
8. Check for continuity between ECM/PCM connector terminal B10 (B19)* and body ground.

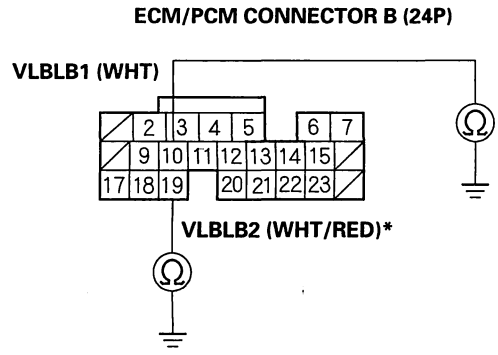

   Is there continuity?

   YES—Go to step 9.

   NO—Go to step 17.
9. Disconnect the A/F sensor (Sensor 1) 8P connector.
10. Check for continuity between ECM/PCM connector terminal B10 (B19)* and body ground.

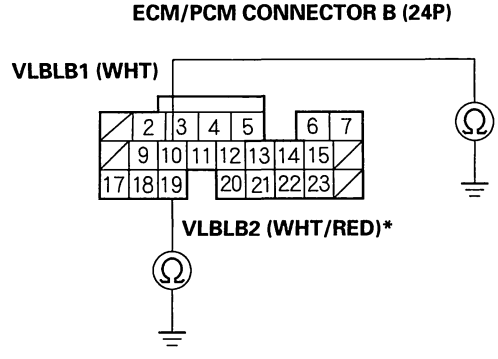

    Is there continuity?

    YES—Repair short in the wire between the ECM/PCM (B10 (B19)*) and the A/F sensor (Sensor 1), then go to step 12.

    NO—Go to step 11.

(cont'd)

Protected by AR

DTC Troubleshooting (cont'd)

11. Replace the A/F sensor (Sensor 1) (see page 11-217).
12. Reconnect all connectors.
13. Turn the ignition switch ON (II).
14. Reset the ECM/PCM with the HDS.
15. Do the ECM/PCM idle learn procedure (see page 11-302).
16. Check for Temporary DTCs or DTCs with the HDS.

    Are any Temporary DTCs or DTCs indicated?

    YES—If DTC P2627 and/or P2630* is indicated, check for poor connections or loose terminals at the A/F sensor (Sensor 1) and the ECM/PCM, then go to step 1. If any other Temporary DTCs or DTCs are indicated, go to the indicated DTC's troubleshooting.

    NO—Troubleshooting is complete.■

17. Update the ECM/PCM if it does not have the latest software, or substitute a known-good ECM/PCM (see page 11-6).
18. Check for Temporary DTCs or DTCs with the HDS.

    Are any Temporary DTCs or DTCs indicated?

    YES—If DTC P2627 and/or P2630* is indicated, check for poor connections or loose terminals at the A/F sensor (Sensor 1) and the ECM/PCM, then go to step 1. If any other Temporary DTCs or DTCs are indicated, go to the indicated DTC's troubleshooting.

    NO—If the ECM/PCM was updated, troubleshooting is complete. If the ECM/PCM was substituted, replace the original ECM/PCM (see page 11-224).■

BACK

Protected by AR

DTC P2628: Rear A/F Sensor (Bank 1, Sensor 1) Label Circuit High Voltage

DTC P2631: Front A/F Sensor (Bank 2, Sensor 1) Label Circuit High Voltage

NOTE:
- Before you troubleshoot, record all freeze data and any on-board snapshot, and review the general troubleshooting information (see page 11-3).
- Information marked with an asterisk (*) applies to the front bank (Bank 2).

1. Turn the ignition switch ON (II).
2. Clear the DTC with the HDS.
3. Start the engine. Hold the engine speed at 3,000 rpm without load (in Park or neutral) until the radiator fan comes on, then let it idle for 2 minutes.
4. Check for Temporary DTCs or DTCs with the HDS.

   Is DTC P2628 and/or P2631 indicated?*

   YES—Go to step 5.

   NO—Intermittent failure, system is OK at this time. Check for poor connections or loose terminals at the A/F sensor (Sensor 1) and the ECM/PCM.■
5. Turn the ignition switch OFF.
6. Jump the SCS line with the HDS.
7. Disconnect the A/F sensor (Sensor 1) 8P connector.
8. Disconnect ECM/PCM connector B (24P).
9. Connect A/F sensor (Sensor 1) 8P connector terminal No. 4 to body ground with a jumper wire.

A/F SENSOR (SENSOR 1) 8P CONNECTOR

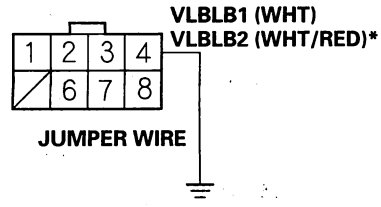

Wire side of female terminals

10. Check for continuity between ECM/PCM connector terminal B10 (B19)* and body ground.

ECM/PCM CONNECTOR B (24P)

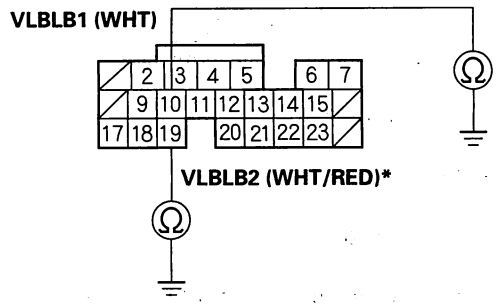

Wire side of female terminals

Is there continuity?

YES—Go to step 11.

NO—Repair open in the wire between the ECM/PCM (B10 (B19)*) and the A/F sensor (Sensor 1), then go to step 15.

(cont'd)

Protected by AR

DTC Troubleshooting (cont'd)

11. Remove the jumper wire from the A/F sensor (Sensor 1) 8P connector, then reconnect ECM/PCM connector B (24P).

12. Start the engine. Hold the engine speed at 3,000 rpm without load (in Park or neutral) until the radiator fan comes on, then let it idle.

13. Measure voltage between ECM/PCM connector terminals B10 (B19)* and D10.

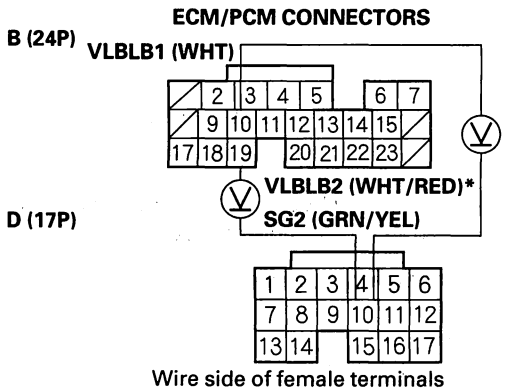

Is there about 5 V?

YES—Go to step 14.

NO—Go to step 20.

14. Replace the A/F sensor (Sensor 1) (see page 11-217).

15. Reconnect all connectors.

16. Turn the ignition switch ON (II).

17. Reset the ECM/PCM with the HDS.

18. Do the ECM/PCM idle learn procedure (see page 11-302).

19. Check for Temporary DTCs or DTCs with the HDS.

Are any Temporary DTCs or DTCs indicated?

YES—If DTC P2628 and/or P2631* is indicated, check for poor connections or loose terminals at the A/F sensor (Sensor 1) and the ECM/PCM, then go to step 1. If any other Temporary DTCs or DTCs are indicated, go to the indicated DTC's troubleshooting.

NO—Troubleshooting is complete. ■

20. Update the ECM/PCM if it does not have the latest software, or substitute a known-good ECM/PCM (see page 11-6).

21. Check for Temporary DTCs or DTCs with the HDS.

Are any Temporary DTCs or DTCs indicated?

YES—If DTC P2628 and/or P2631* is indicated, check for poor connections or loose terminals at the A/F sensor (Sensor 1) and the ECM/PCM, then go to step 1. If any other Temporary DTCs or DTCs are indicated, go to the indicated DTC's troubleshooting.

NO—If the ECM/PCM was updated, troubleshooting is complete. If the ECM/PCM was substituted, replace the original ECM/PCM (see page 11-224). ■

BACK

Protected by AR

DTC P2A00: Rear A/F Sensor (Bank 1, Sensor 1) Range/Performance Problem

DTC P2A03: Front A/F Sensor (Bank 2, Sensor 1) Range/Performance Problem

NOTE:
- Before you troubleshoot, record all freeze data and any on-board snapshot, and review the general troubleshooting information (see page 11-3).
- Information marked with an asterisk (*) applies to the front bank (Bank 2).

1. Turn the ignition switch ON (II).
2. Clear the DTC with the HDS.
3. Start the engine. Hold the engine speed at 3,000 rpm without load (in Park or neutral) until the radiator fan comes on, then let it idle.
4. Test-drive under these conditions:
   - Engine coolant temperature above 158 °F (70 °C)
   - A/T in D position (M/T in 3rd gear)
   - Vehicle speed at 30 mph (48 km/h) or more, and engine speed at 2,600 rpm or less
   - Drive at an engine speed of 1,600 rpm. Accelerate to full open throttle for 5 seconds, then slow down with the throttle completely closed.
5. Monitor the OBD STATUS for DTC P2A00 and/or P2A03* in the DTCs MENU with the HDS.

   Does the screen indicate FAILED?

   YES—Go to step 7.

   NO—If the screen indicates PASSED, intermittent failure, system is OK at this time. Check for poor connections or loose terminals at the A/F sensor (Sensor 1) and the ECM/PCM. If it is EXECUTING, keep driving until a result comes on. If the screen indicates OUT OF CONDITION, go to step 3 and recheck.
6. Turn the ignition switch OFF.
7. Replace the A/F sensor (Sensor 1) (see page 11-217).
8. Turn the ignition switch ON (II).
9. Reset the ECM/PCM with the HDS.
10. Do the ECM/PCM idle learn procedure (see page 11-302).
11. Test-drive under these conditions:
    - Engine coolant temperature above 158 °F (70 °C)
    - A/T in D position (M/T in 3rd gear)
    - Vehicle speed at 30 mph (48 km/h) or more, and engine speed at 2,600 rpm or less
    - Drive at an engine speed of 1,600 rpm. Accelerate to full open throttle for 5 seconds, then slow down with the throttle completely closed.
12. Check for Temporary DTCs or DTCs with the HDS.

    Are any Temporary DTCs or DTCs indicated?

    YES—If DTC P2A00 and/or P2A03* is indicated, check for poor connections or loose terminals at the A/F sensor (Sensor 1) and the ECM/PCM, then go to step 1. If any other Temporary DTCs or DTCs are indicated, go to the indicated DTC's troubleshooting.

    NO—Go to step 13.
13. Monitor the OBD STATUS for DTC P2A00 and/or P2A03* in the DTCs MENU with the HDS.

    Does the screen indicate PASSED?

    YES—Troubleshooting is complete.■

    NO—If the screen indicates FAILED, check for poor connections or loose terminals at the A/F sensor (Sensor 1) and the ECM/PCM, then go to step 1. If the screen indicates EXECUTING, keep driving until a result comes on. If the screen indicates OUT OF CONDITION, go to step 10 and recheck.

Protected by AR

DTC Troubleshooting (cont'd)

DTC U0073: F-CAN Malfunction (Bus-Off) (2003-2005 models)

DTC U0155: F-CAN Malfunction (Gauge Control Module-ECM/PCM) (2003-2005 models)

NOTE: Before you troubleshoot, record all freeze data and any on-board snapshot, and review the general troubleshooting information (see page 11-3).

1. Turn the ignition switch ON (II).
2. Clear the DTC with the HDS.
3. Check for Temporary DTCs or DTCs with the HDS.

   Is DTC U0073 and/or U0155 indicated?

   YES—Go to step 4.

   NO—Intermittent failure, system is OK at this time. Check for poor connections or loose terminals at the gauge control module, the ABS/TCS control unit, the navigation unit, and the ECM/PCM. ■
4. Check for DTCs in the Body Electrical system DTCs menu with the HDS.

   Is DTC B1168, B1169, and/or B1178 indicated?

   YES—Go to step 5.

   NO—Do the gauge control module input test, refer to the 2003-2006 Accord Service Manual (see page 22-127). ■
5. Turn the ignition switch OFF.
6. Remove the gauge control module, refer to the 2003-2006 Accord Service Manual (see page 22-276).
7. Disconnect the gauge module 30P connector.
8. Disconnect the ABS/TCS control unit 47P connector.
9. If equipped with the Honda navigation system, disconnect the navigation unit 20P connector.
10. Jump the SCS line with the HDS.
11. Disconnect ECM/PCM connector A (31P).
12. Check for continuity between ECM/PCM connector terminals A15, A26, and body ground individually.

ECM/PCM CONNECTOR A (31P)

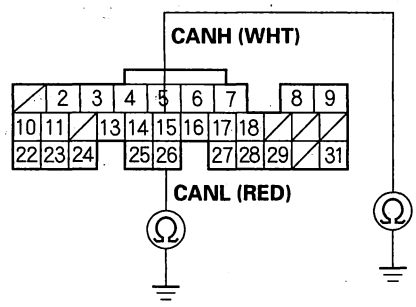

Wire side of female terminals

Is there continuity?

YES—Repair short in the wire between the gauge control module, the ABS/TCS control unit, the navigation unit, and the ECM/PCM (A15 (A26)*), then go to step 17.

NO—Go to step 13.

*: CANL line

13. Check for continuity between ECM/PCM connector terminals A15 and A26.

ECM/PCM CONNECTOR A (31P)

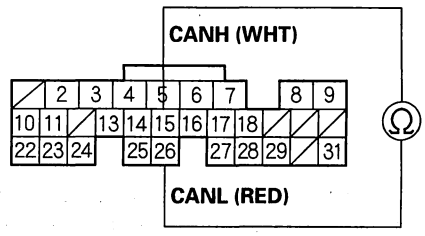

Wire side of female terminals

Is there continuity?

YES—Repair short in the wires between the ECM/PCM A15 (CANH line) and A26 (CANL line), then go to step 17.

NO—Go to step 14.

BACK

Protected by AR

14. Check for continuity between ECM/PCM connector terminal A15 and the following connector terminals:

Connector	Terminal
Gauge control module 30P	No. 24 (WHT)
ABS/TCS control unit 47P	No. 14 (WHT)
Navigation unit 20P	No. 8 (WHT)

Is there continuity between the ECM/PCM terminal and each of the terminals in the chart?

YES—Go to step 15.

NO—Repair open in the wire between the ECM/PCM and the appropriate connector, then go to step 17.

15. Check for continuity between ECM/PCM connector terminal A26 and the following connector terminals:

Connector	Terminal
Gauge control module 30P	No. 23 (RED)
ABS/TCS control unit 47P	No. 30 (RED)
Navigation unit 20P	No. 18 (RED)

Is there continuity between the ECM/PCM terminal and each of the terminals in the chart?

YES—Go to step 16.

NO—Repair open in the wire between the ECM/PCM and the appropriate connector, then go to step 17.

16. Using the following chart, select the row that most closely represents the combination of DTCs retrieved from the PGM-FI, ABS/TCS, and Body Electrical systems: Check connections at the control module indicated in the last column. If all connections are OK, substitute another control module. After substituting the control module, check for DTCs with the HDS.

PGM-FI	ABS/TCS	Body Electrical	Control module
U0155	86-1	B1168 B1169 B1178	Gauge Control Module
U0073 U0121 U0155	68-1 86-1	B1168 B1169 B1178	ECM/PCM
U0073 U0121 U0155	68-1 86-1	B1168 B1178	ABS/TCS control unit

Are the DTCs still indicated?

YES—Substitute the remaining control modules, one at time, until the DTCs are no longer present, then replace the control module that made the DTCs go away. After replacing the faulty control module, go to step 17.

NO—Replace the faulty control module, then go to step 17.

17. Reconnect all connectors.

18. Turn the ignition switch ON (II).

19. Reset the ECM/PCM with the HDS.

20. Do the ECM/PCM idle learn procedure (see page 11-302).

21. Check for Temporary DTCs or DTCs with the HDS.

Are any Temporary DTCs or DTCs indicated?

YES—If DTC U0073 and/or U0155 is indicated, check for poor connections or loose terminals at the gauge assembly, the ABS/TCS control unit, the navigation unit, and the ECM/PCM, then go to step 1. If any other Temporary DTCs or DTCs are indicated, go to the indicated DTC's troubleshooting.

NO—Troubleshooting is complete.■

Protected by AR

DTC Troubleshooting (cont'd)

DTC U0073: F-CAN Malfunction (Bus-Off) (2006 model)

DTC U0155: F-CAN Malfunction (Gauge Control Module-ECM/PCM) (2006 model)

NOTE: Before you troubleshoot, record all freeze data and any on-board snapshot, and review the general troubleshooting information (see page 11-3).

1. Turn the ignition switch ON (II).
2. Clear the DTC with the HDS.
3. Check for Temporary DTCs or DTCs with the HDS.

   Is DTC U0073 and/or U0155 indicated?

   YES—Go to step 4.

   NO—Intermittent failure, system is OK at this time. Check for poor connections or loose terminals at the gauge control module, the VSA control unit, the navigation unit, and the ECM/PCM.■
4. Check for DTCs in the DTCs MENU in the Body Electrical system with the HDS.

   Is DTC B1168, B1169 and/or B1178 indicated?

   YES—Go to step 5.

   NO—Perform the gauge control module input test, refer to the 2003-2006 Accord Service Manual (see page 22-128).■
5. Turn the ignition switch OFF.
6. Remove the gauge control module, refer to the 2003-2006 Accord Service Manual (see page 22-276).
7. Disconnect the gauge control module 36P connector.
8. Disconnect the VSA control unit 37P connector.
9. If equipped with the navigation system, disconnect the navigation unit 20P connector.
10. Jump the SCS line with the HDS.
11. Disconnect ECM/PCM connector A (31P).
12. Check for continuity between ECM/PCM connector terminals A15, A26, and body ground individually.

ECM/PCM CONNECTOR A (31P)

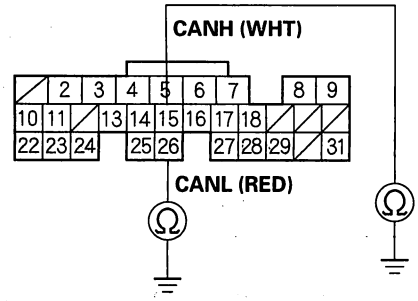

Wire side of female terminals

Is there continuity?

YES—Repair short in the wire between the gauge control module, the VSA control unit, the navigation unit, and the ECM/PCM (A15 (A26)*), then go to step 17.

NO—Go to step 13.

*: CANL line

13. Check for continuity between ECM/PCM connector terminals A15 and A26.

ECM/PCM CONNECTOR A (31P)

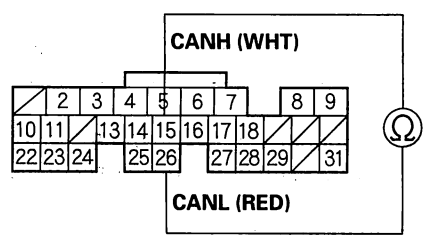

Wire side of female terminals

Is there continuity?

YES—Repair short in the wires between the ECM/PCM A15 (CANH line) and A26 (CANL line), then go to step 17.

NO—Go to step 14.

BACK

Protected by AR

14. Check for continuity between ECM/PCM connector terminal A15 and these connector terminals:

Connector	Terminal
Gauge control module 36P	No. 1 (WHT)
VSA control unit 37P	No. 13 (WHT)
Navigation unit 20P	No. 8 (WHT)

Is there continuity between the ECM/PCM terminal and each of the terminals in the chart?

YES—Go to step 15.

NO—Repair open in the wire between the ECM/PCM and the appropriate connector, then go to step 17.

15. Check for continuity between ECM/PCM connector terminal A26 and these connector terminals:

Connector	Terminal
Gauge control module 36P	No. 19 (RED)
VSA control unit 37P	No. 22 (RED)
Navigation unit 20P	No. 18 (RED)

Is there continuity between the ECM/PCM terminal and each of the terminals in the chart?

YES—Go to step 16.

NO—Repair open in the wire between the ECM/PCM and the appropriate connector, then go to step 17.

16. Using the following chart, select the row that most closely represents the combination of DTCs retrieved from the PGM-FI, VSA, and Body Electrical systems: Check connections at the control module indicated in the last column. If all connections are OK, substitute a known-good control module. After substituting the control module, check for DTCs with the HDS.

PGM-FI	VSA	Body Electrical	Control module
U0155	86-1	B1168 B1169 B1178	Gauge Control Module
U0073 U0122 U0155	68-1 86-1	B1168 B1169 B1178	ECM/PCM
U0073 U0122 U0155	68-1 86-1	B1168 B1178	VSA control unit

Are the DTCs still indicated?

YES—Substitute the remaining control modules, one at time, until the DTCs are no longer present, then replace the control module that made the DTCs go away. After replacing the faulty control module, go to step 17.

NO—Replace the faulty control module, then go to step 17.

17. Reconnect all the connectors.

18. Turn the ignition switch ON (II).

19. Reset the ECM/PCM with the HDS.

20. Do the ECM/PCM idle learn procedure (see page 11-302).

21. Check for Temporary DTCs or DTCs with the HDS.

Are any Temporary DTCs or DTCs indicated?

YES—If DTC U0073 and/or U0155 is indicated, check for poor connections or loose terminals at the gauge assembly, the VSA control unit, the navigation unit, and the ECM/PCM, then go to step 1. If any other Temporary DTCs or DTCs are indicated, go to the indicated DTC's troubleshooting.

NO—Troubleshooting is complete.■

Protected by AR

DTC Troubleshooting (cont'd)

DTC U0121: F-CAN Malfunction (TCS-ECM/PCM) (2003-2005 models)

NOTE:
- Before you troubleshoot, record all freeze data and any on-board snapshot, and review the general troubleshooting information (see page 11-3).
- If DTC U0073 is stored at the same time as DTC U0121, troubleshoot DTC U0073 first, then recheck for DTC U0121.

1. Turn the ignition switch ON (II).
2. Clear the DTC with the HDS.
3. Check for Temporary DTCs or DTCs with the HDS.

   Is DTC U0121 indicated?

   YES—Go to step 4.

   NO—Intermittent failure, system is OK at this time. Check for poor connections or loose terminals at the gauge assembly, the ABS/TCS control unit, and the ECM/PCM. ■
4. Check for a DTC in the DTCs MENU with the HDS.

   Is TCS DTC 86 indicated?

   YES—Go to step 5.

   NO—Go to step 9.
5. Turn the ignition switch OFF.
6. Disconnect the ABS/TCS control unit 47P connector.
7. Check for continuity between ABS/TCS control unit 47P connector terminals No. 14 and No. 30.

ABS/TCS CONTROL UNIT 47P CONNECTOR

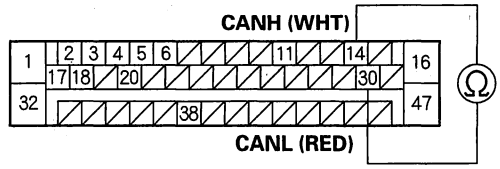

Wire side of female terminals

Is there continuity?

YES—Go to step 8.

NO—Repair open in the wire between the ABS/TCS control unit (No. 14 (No. 30)*) and the ECM/PCM (A15 (A26)*), then go to step 14.

*: CANL line

8. Check for a poor connection at the cabin wire harness/dashboard wire harness 20P connector.

   Is the connection OK?

   YES—Substitute a known-good ABS/TCS control unit, then go to step 14 and recheck. If no DTCs are indicated, replace the original ABS/TCS control unit, then go to step 14.

   NO—Repair the poor connection at the cabin wire harness/dashboard wire harness 20P connector, then go to step 14.

BACK

Protected by AR

9. Turn the ignition switch OFF.
10. Disconnect the ABS/TCS control unit 47P connector.
11. Turn the ignition switch ON (II).
12. Measure voltage between ABS/TCS control unit 47P connector terminal No. 38 and body ground.

ABS/TCS CONTROL UNIT 47P CONNECTOR

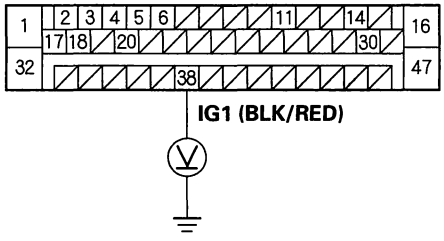

Wire side of female terminals

Is there battery voltage?

YES—Go to step 13.

NO—Check the No. 18 ACG (15 A) fuse in the under-dash fuse/relay box. If the fuse is OK, repair open in the wire between the No. 18 ACG (15 A) fuse and the ABS/TCS control unit, then go to step 14.

13. Check for continuity between ABS/TCS control unit 47P connector terminal No. 32 and body ground.

ABS/TCS CONTROL UNIT 47P CONNECTOR

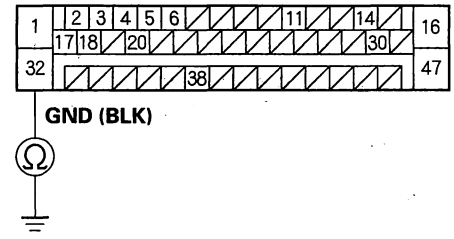

Wire side of female terminals

Is there continuity?

YES—Substitute a known-good ABS/TCS control unit, then go to step 14 and recheck. If no DTCs are indicated, replace the original ABS/TCS control unit, then go to step 14.

NO—Repair open in the wire between the ABS/TCS control unit and G203, then go to step 14.

14. Reconnect the ABS/TCS control unit 47P connector.
15. Turn the ignition switch ON (II).
16. Reset the ECM/PCM with the HDS.
17. Do the ECM/PCM idle learn procedure (see page 11-302).
18. Check for Temporary DTCs or DTCs with the HDS.

Are any Temporary DTCs or DTCs indicated?

YES—If DTC U0121 is indicated, check for poor connections or loose terminals at the gauge assembly, the ABS/TCS control unit, and the ECM/PCM, then go to step 1. If any other Temporary DTCs or DTCs are indicated, go to the indicated DTC's troubleshooting.

NO—Troubleshooting is complete.■

Protected by AR

DTC Troubleshooting (cont'd)

DTC U0122: F-CAN Malfunction (VSA-ECM/PCM)
(2006 model)

NOTE:
- Before you troubleshoot, record all freeze data and any on-board snapshot, and review the general troubleshooting information (see page 11-3).
- If DTC U0073 is stored at the same time as DTC U0122, troubleshoot DTC U0073 first, then recheck for DTC U0122.

1. Turn the ignition switch ON (II).
2. Clear the DTC with the HDS.
3. Check for Temporary DTCs or DTCs with the HDS.

   Is DTC U0122 indicated?

   YES—Go to step 4.

   NO—Intermittent failure, system is OK at this time. Check for poor connections or loose terminals at the gauge assembly, the VSA control unit, and the ECM/PCM. ■
4. Check for DTCs in the DTCs MENU with the HDS.

   Is VSA DTC 86 indicated?

   YES—Go to step 5.

   NO—Go to step 9.
5. Turn the ignition switch OFF.
6. Disconnect the VSA control unit 37P connector.
7. Check for continuity between VSA control unit 37P connector terminals No. 13 and No. 22.

VSA CONTROL UNIT 37P CONNECTOR

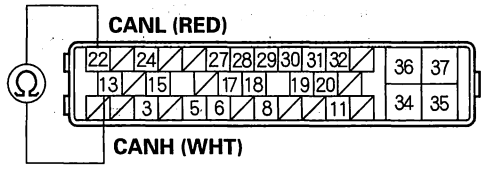

Wire side of female terminals

Is there continuity?

YES—Go to step 8.

NO—Repair open in the wire between the VSA control unit (No. 13 (No. 22)*) and the ECM/PCM (A15 (A26)*), then go to step 14.

*: CANL line

8. Check for a poor connection at the cabin wire harness/dashboard wire harness 20P connector.

   Is the connection OK?

   YES—Substitute a known-good VSA control unit, then go to step 14 and recheck. If no DTCs are indicated, replace the original VSA control unit, then go to step 14.

   NO—Repair the poor connection at the cabin wire harness/dashboard wire harness 20P connector, then go to step 14.

BACK

Protected by AR

9. Turn the ignition switch OFF.
10. Disconnect the VSA control unit 37P connector.
11. Turn the ignition switch ON (II).
12. Measure voltage between VSA control unit 37P connector terminal No. 5 and body ground.

VSA CONTROL UNIT 37P CONNECTOR

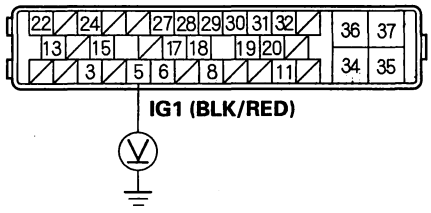

Wire side of female terminals

Is there battery voltage?

YES—Go to step 13.

NO—Check the No. 18 ACG (15 A) fuse in the under-dash fuse/relay box. If the fuse is OK, repair open in the wire between the No. 18 ACG (15 A) fuse and the VSA control unit, then go to step 14.

13. Check for continuity between VSA control unit 37P connector terminal No. 34 and body ground.

VSA CONTROL UNIT 37P CONNECTOR

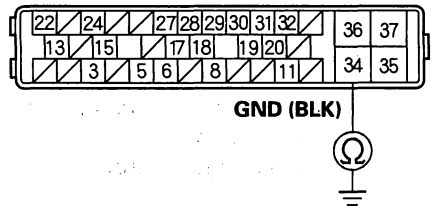

Wire side of female terminals

Is there continuity?

YES—Substitute a known-good VSA control unit, then go to step 14 and recheck. If no DTCs are indicated, replace the original VSA control unit, then go to step 14.

NO—Repair open in the wire between the VSA control unit and G203, then go to step 14.

14. Reconnect the VSA control unit 37P connector.
15. Turn the ignition switch ON (II).
16. Reset the ECM/PCM with the HDS.
17. Do the ECM/PCM idle learn procedure (see page 11-302).
18. Check for Temporary DTCs or DTCs with the HDS.

Are any Temporary DTCs or DTCs indicated?

YES—If DTC U0122 is indicated, check for poor connections or loose terminals at the gauge assembly, the VSA control unit, and the ECM/PCM, then go to step 1. If any other Temporary DTCs or DTCs are indicated, go to the indicated DTC's troubleshooting.

NO—Troubleshooting is complete.■

Protected by AR

MIL Circuit Troubleshooting

1. Turn the ignition switch ON (II).
2. Do the gauge self-diagnostic procedure (see page 22-69).

   Does the MIL indicator flash?

   YES—Go to step 3.

   NO—Substitute a known-good gauge control module, and recheck. If the MIL circuit is OK, replace the original gauge control module. ■
3. Turn the ignition switch OFF.
4. Turn the ignition switch ON (II), and watch the MIL.

   Does the MIL stay off?

   YES—Go to step 17.

   NO—Go to step 5.
5. Turn the ignition switch OFF.
6. Turn the ignition switch ON (II), wait 20 seconds, and watch the MIL.

   Does the MIL stay on more than 20 seconds or flash more than 5 times?

   YES—Go to step 7.

   NO—The MIL circuit is OK. ■
7. Turn the ignition switch OFF.
8. Connect the HDS (see page 11-3).
9. Turn the ignition switch ON (II), and read the HDS.

   Does the HDS communicate with the ECM/PCM?

   YES—Go to step 10.

   NO—Go to "DLC Circuit Troubleshooting" (see page 11-213). ■
10. Check for Temporary DTCs or DTCs with the HDS.

    Are any Temporary DTCs or DTCs indicated?

    YES—Go to the indicated DTC's troubleshooting. ■

    NO—Go to step 11.
11. Check the MIL in the DATA LIST with the HDS.

    Does it indicate ON?

    YES—Go to step 12.

    NO—Substitute a known-good gauge control module, and recheck. If the MIL circuit is OK, replace the original gauge control module. ■
12. Check the SCS in the DATA LIST with the HDS.

    Is a short indicated?

    YES—Go to step 13.

    NO—Update the ECM/PCM if it does not have the latest software, or substitute a known-good ECM/PCM (see page 11-6), then recheck. If the symptom/indication goes away with a known-good ECM/PCM, replace the original ECM/PCM (see page 11-224). ■
13. Turn the ignition switch OFF.
14. Jump the SCS line with the HDS.
15. Disconnect ECM/PCM connector A (31P).

BACK

Protected by AR

16. Check for continuity between ECM/PCM connector terminal A16 and body ground.

ECM/PCM CONNECTOR A (31P)

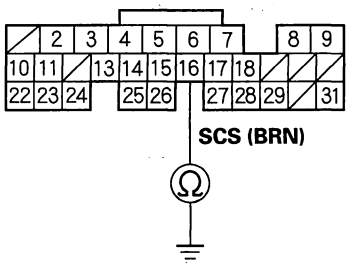

Wire side of female terminals

Is there continuity?

YES—Repair short in the wire between the ECM/PCM (A16) and the DLC. ■

NO—Update the ECM/PCM if it does not have the latest software, or substitute a known-good ECM/PCM (see page 11-6), then recheck. If the symptom/indication goes away with a known-good ECM/PCM, replace the original ECM/PCM (see page 11-224). ■

17. Try to start the engine.

Does the engine start and idle smoothly?

YES—Go to step 18.

NO—Go to step 22.

18. Turn the ignition switch OFF.

19. Connect the HDS (see page 11-3).

20. Turn the ignition switch ON (II), and read the HDS.

Does the HDS communicate with the ECM/PCM?

YES—Go to step 21.

NO—Go to "DLC Circuit Troubleshooting" (see page 11-213). ■

21. Check for Temporary DTCs or DTCs with the HDS.

Is DTC U0073 and/or U0155 indicated?

YES—Go to the indicated DTC's troubleshooting. ■

NO—Update the ECM/PCM if it does not have the latest software, or substitute a known-good ECM/PCM (see page 11-6), then recheck. If the symptom/indication goes away with a known-good ECM/PCM, replace the original ECM/PCM (see page 11-224). ■

22. Turn the ignition swtich OFF.

23. Inspect the No. 23 +B IG MAIN (50 A) fuse in the under-hood fuse/relay box.

Is the fuse OK?

YES—Repair open in the wire between the No. 20 IG (50 A) fuse and the ignition switch.
If the wire is OK, go to step 24.

NO—Repair short in the wire between No. 23 +B IG MAIN (50 A) fuse and the under-dash fuse/relay box. Also replace the No. 23 +B IG MAIN (50 A) fuse. ■

(cont'd)

Protected by AR

MIL Circuit Troubleshooting (cont'd)

24. Inspect the No. 8 FI ECU (ECM/PCM) (15 A) fuse in the under-hood fuse/relay box.

    Is the fuse OK?

    YES—Go to step 31.

    NO—Go to step 25.

25. Remove the blown No. 8 FI ECU (ECM/PCM) (15 A) fuse from the under-dash fuse/relay box.

26. Remove the left kick panel, refer to the 2003-2006 Accord Service Manual 2-door (see page 20-90); 4-door (see page 20-91), then remove PGM-FI main relay 1 (FI MAIN) (A) from the under-dash fuse/relay box.

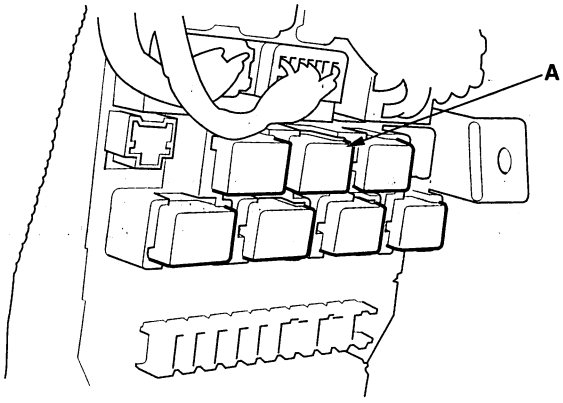

27. Check for continuity between body ground and PGM-FI main relay 1 (FI MAIN) 4P connector terminals No. 2 and No. 3 individually.

PGM-FI MAIN RELAY 1 (FI MAIN) 4P CONNECTOR

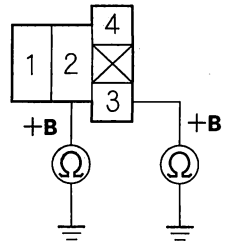

Terminal side of female terminals

Is there continuity?

YES—Repair short in the wire between the No. 8 FI ECU (PCM) (15 A) and PGM-FI main relay 1 (FI MAIN). Also replace the No. 8 FI ECU (ECM/PCM) (15 A) fuse.■

NO—Go to step 28.

BACK

Protected by AR

28. Disconnect each of the components or connectors below, one at a time, and check for continuity between PGM-FI main relay 1 (FI MAIN) 4P connector terminal No. 1 and body ground.

    - PGM-FI main relay 2 (FUEL PUMP)
    - A/F sensor relay
    - Throttle actuator control module relay
    - ECM/PCM connector E (31P)
    - Each injector 2P connector
    - Camshaft position (CMP) sensor 3P connector
    - Crankshaft position (CKP) sensor A/B 6P connector

PGM-FI MAIN RELAY 1 (FI MAIN) 4P CONNECTOR

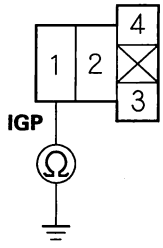

Terminal side of female terminals

Does continuity go away when one of the above components is disconnected?

YES—Replace the component that made the short to body ground go away when disconnected. If the item is the ECM/PCM, update the ECM/PCM if it does not have the latest software, or substitute a known-good ECM/PCM (see page 11-6), then recheck. If the symptom/indication goes away with a known-good ECM/PCM, replace the original ECM/PCM (see page 11-224). Also replace the No. 8 FI ECU (ECM/PCM) (15 A) fuse.■

NO—Go to step 29.

29. Disconnect the connectors of all these components.

    - PGM-FI main relay 2 (FUEL PUMP)
    - A/F sensor relay
    - Throttle actuator control module relay
    - ECM/PCM connector E (31P)
    - Injectors
    - Camshaft position (CMP) sensor
    - Crankshaft position (CKP) sensor A/B

30. Check for continuity between PGM-FI main relay 1 (FI MAIN) 4P connector terminal No. 1 and body ground.

PGM-FI MAIN RELAY 1 (FI MAIN) 4P CONNECTOR

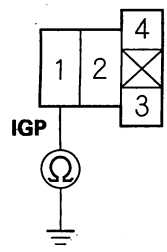

Terminal side of female terminals

Is the fuse OK?

YES—Repair short in the wire between PGM-FI main relay 1 (FI MAIN) and each item. Also replace the No. 8 FI ECU (ECM/PCM) (15 A) fuse.■

NO—Replace the PGM-FI main relay (FI MAIN). Also replace the No. 8 FI ECU (ECM/PCM) (15 A) fuse.■

31. Inspect the No. 19 FUEL PUMP (15 A) fuse in the under-dash fuse/relay box.

Is there continuity?

YES—Go to step 44.

NO—Go to step 32.

32. Remove the blown No. 19 FUEL PUMP (15 A) fuse in the under-dash fuse/relay box.

33. Jump the SCS line with the HDS.

34. Disconnect ECM/PCM connector E (31P).

(cont'd)

BACK

Protected by AR

MIL Circuit Troubleshooting (cont'd)

35. Check for continuity between ECM/PCM connector terminal E5 and body ground.

ECM/PCM CONNECTOR E (31P)

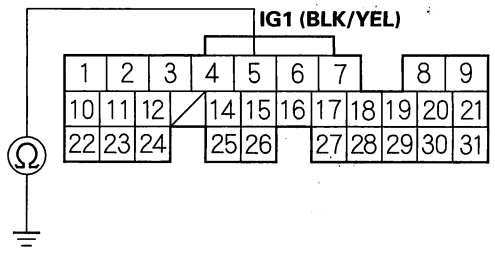

Wire side of female terminals

Is there continuity?

YES—Go to step 36.

NO—Replace the No. 19 FUEL PUMP (15 A) fuse, and update the ECM/PCM if it does not have the latest software, or substitute a known-good ECM/PCM (see page 11-6), then recheck. If the symptom/indication goes away with a known-good ECM/PCM, replace the original ECM/PCM (see page 11-224).■

36. Remove the kick panel, refer to the 2003-2006 Accord Service Manual 2-door (see page 20-90); 4-door (see page 20-91). Then remove PGM-FI main relay 2 (FUEL PUMP) (A) from the under-dash fuse/relay box.

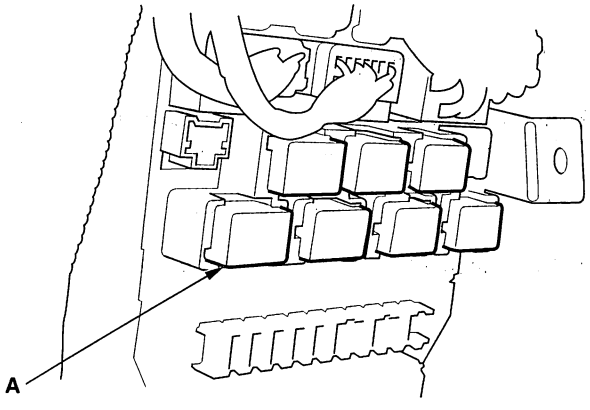

37. Check for continuity between ECM/PCM connector terminal E5 and body ground.

ECM/PCM CONNECTOR E (31P)

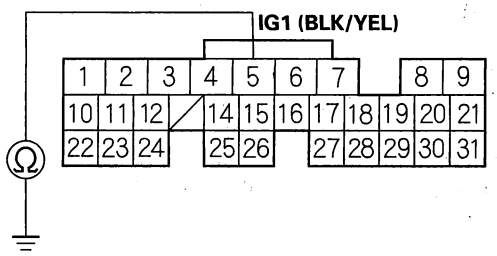

Wire side of female terminals

Is there continuity?

YES—Repair short in the wire between the No. 19 FUEL PUMP (15 A) fuse and the ECM/PCM (E5), or between the No. 19 FUEL PUMP (15 A) fuse and PGM-FI main relay 2 (FUEL PUMP), or between the No. 19 FUEL PUMP (15 A) fuse and the immobilizer control unit. Also replace the No. 19 FUEL PUMP (15 A) fuse.■

NO—Go to step 38.

38. Remove the trunk floor trim panel.

39. Remove the access panel from the floor.

40. Disconnect the fuel pump 5P connector.

BACK

Protected by AR

41. Check for continuity between fuel pump 5P connector terminal No. 5 and body ground.

FUEL PUMP 5P CONNECTOR

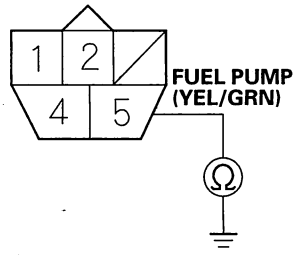

Wire side of female terminals

Is there continuity?

YES—Repair short in the wire between the fuel pump and PGM-FI main relay 2 (FUEL PUMP). Also replace the No. 19 FUEL PUMP (15 A) fuse.■

NO—Go to step 42.

42. Reinstall PGM-FI main relay 2 (FUEL PUMP) (A).

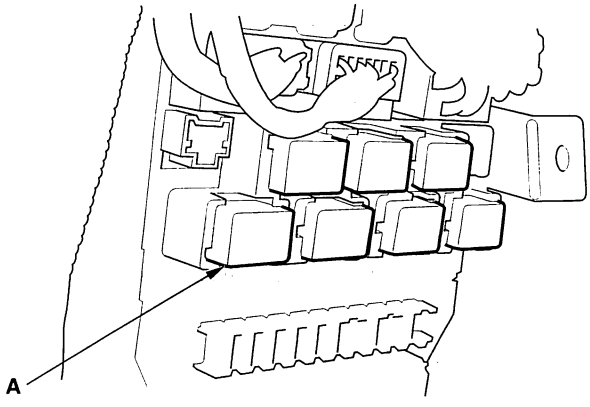

43. Check for continuity between fuel pump 5P connector terminal No. 5 and body ground.

FUEL PUMP 5P CONNECTOR

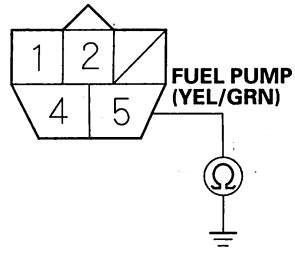

Wire side of female terminals

Is there continuity?

YES—Replace PGM-FI main relay 2 (FUEL PUMP). Also replace the No. 19 FUEL PUMP (15 A) fuse.■

NO—Check the fuel pump, and replace it if necessary (see page 11-327). Also replace the No. 19 FUEL PUMP (15 A) fuse.■

44. Jump the SCS line with the HDS.

45. Disconnect ECM/PCM connector E (31P).

46. Turn the ignition switch ON (II).

(cont'd)

Protected by AR

MIL Circuit Troubleshooting (cont'd)

47. Measure voltage between ECM/PCM connector terminal E5 and body ground.

ECM/PCM CONNECTOR E (31P)

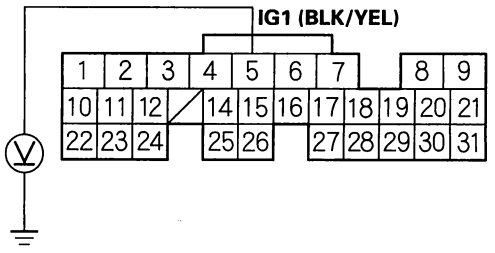

Wire side of female terminals

Is there battery voltage?

YES—Go to step 48.

NO—Repair open in the wire between the No. 19 FUEL PUMP (15 A) fuse and the ECM/PCM (E5). ■

48. Measure voltage between ECM/PCM connector terminal A5 and body ground.

ECM/PCM CONNECTOR A (31P)

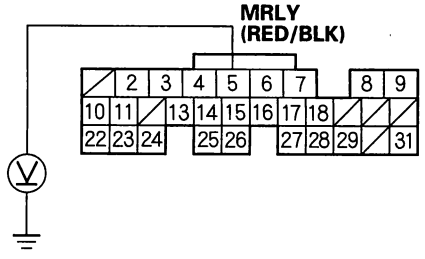

Wire side of female terminals

Is there battery voltage?

YES—Go to step 53.

NO—Go to step 49.

49. Turn the ignition switch OFF.

50. Remove the kick panel, refer to the 2003-2006 Accord Service Manual 2-door (see page 20-90); 4-door (see page 20-91). Then remove PGM-FI main relay 1 (FI MAIN) (A) from the under-dash fuse/ relay box.

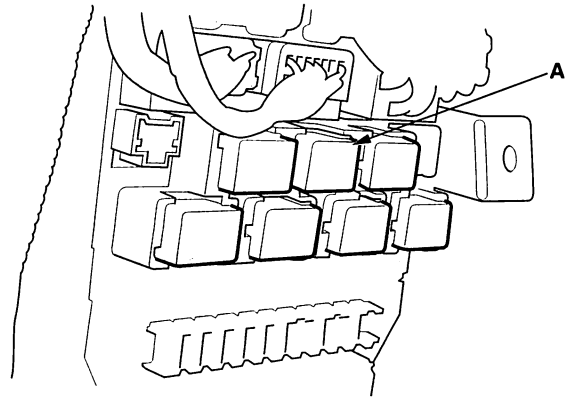

51. Measure voltage between PGM-FI main relay 1 (FI MAIN) 4P connector terminal No. 3 and body ground.

PGM-FI MAIN RELAY 1 (FI MAIN) 4P CONNECTOR

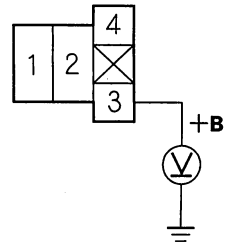

Terminal side of female terminals

Is there battery voltage?

YES—Go to step 52.

NO—Repair open in the wire between the No. 8 FI ECU (ECM/PCM) (15 A) fuse and PGM-FI main relay 1 (FI MAIN). ■

BACK

Protected by AR

52. Check for continuity between PGM-FI main relay 1 (FI MAIN) 4P connector terminal No. 4 and ECM/PCM connector terminal A5.

PGM-FI MAIN RELAY 1 (FI MAIN) 4P CONNECTOR

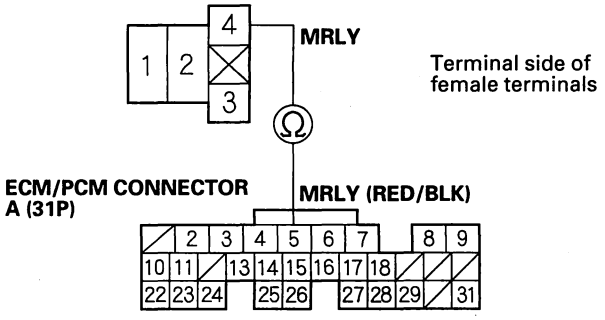

Is there continuity?

YES—Test PGM-FI main relay 1 (FI MAIN) (see page 22-51). If the relay is OK, update the ECM/PCM if it does not have the latest software, or substitute a known-good ECM/PCM (see page 11-6), then recheck. If the symptom/indication goes away with a known-good ECM/PCM, replace the original ECM/PCM (see page 11-224).■

NO—Repair open in the wire between PGM-FI main relay 1 (FI MAIN) and the ECM/PCM (A5).■

53. Reconnect ECM/PCM connector E (31P).

54. Turn the ignition switch ON (II).

55. Measure voltage between body ground and ECM/PCM connector terminal E4.

ECM/PCM CONNECTOR E (31P)

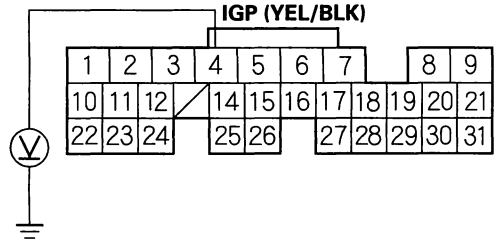

Is there battery voltage?

YES—Go to step 62.

NO—Go to step 56.

56. Turn the ignition switch OFF.

57. Remove the kick panel, refer to the 2003-2006 Accord Service Manual 2-door (see page 20-90); 4-door (see page 20-91). Then remove PGM-FI main relay 1 (FI MAIN) (A) from the under-dash fuse/relay box.

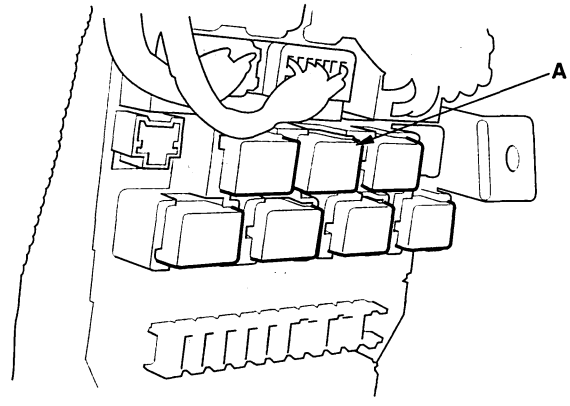

58. Turn the ignition switch ON (II).

(cont'd)

Protected by AR

MIL Circuit Troubleshooting (cont'd)

59. Measure voltage between PGM-FI main relay 1 (FI MAIN) 4P connector terminal No. 2 and body ground.

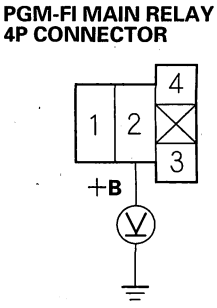

Terminal side of female terminals

Is there battery voltage?

YES—Go to step 60.

NO—Repair open in the wire between the No. 8 FI ECU (ECM/PCM) (15 A) fuse and PGM-FI main relay 1 (FI MAIN). ■

60. Turn the ignition switch OFF.

61. Check for continuity between PGM-FI main relay 1 (FI MAIN) 4P connector terminal No. 1 and ECM/PCM connector terminal E4.

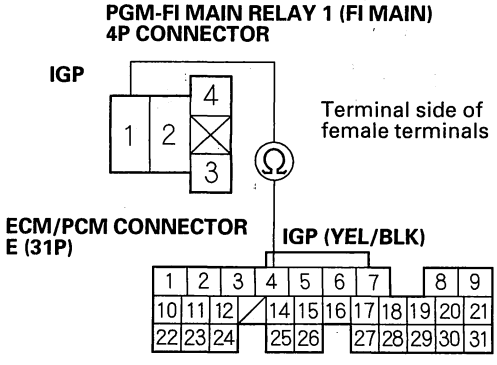

Wire side of female terminals

Is there continuity?

YES—Replace PGM-FI main relay 1 (FI MAIN). ■

NO—Repair open in the wire between PGM-FI main relay 1 (FI MAIN) and the ECM/PCM (E4). ■

62. Measure voltage between body ground and ECM/PCM connector terminals B15, E1, E2, and E3 individually.

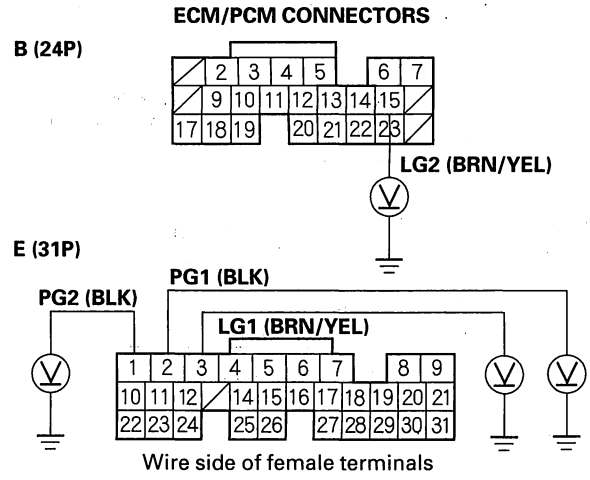

Wire side of female terminals

Is there more than 0.2 V?

YES—Repair open in the wire(s) that had more than 0.2 V between G101 and the ECM/PCM (B15, E1, E2, E3). ■

NO—Update the ECM/PCM if it does not have the latest software, or substitute a known-good ECM/PCM (see page 11-6), then recheck. If the symptom/indication goes away with a known-good ECM/PCM, replace the original ECM/PCM (see page 11-224). ■

BACK

Protected by AR

DLC Circuit Troubleshooting

NOTE:
- If the ECM/PCM does not communicate with the HDS, do this troubleshooting procedure.
- Check that MIL circuit is normal, then do this troubleshooting.

1. Measure voltage between DLC terminal No. 16 and body ground.

DATA LINK CONNECTOR (DLC)

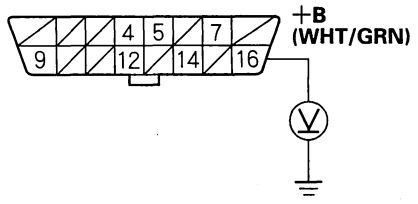

Terminal side of female terminals

Is there battery voltage?

YES—Go to step 2.

NO—Repair open in the wire between DLC terminal No. 16 and the No. 8 FI ECU (ECM/PCM) (15 A) fuse in the under-hood fuse/relay box.■

2. Measure voltage between DLC terminals No. 4 and No. 16.

DATA LINK CONNECTOR (DLC)

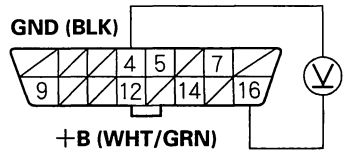

Terminal side of female terminals

Is there battery voltage?

YES—Go to step 3.

NO—Repair open in the wire between DLC terminal No. 4 and body ground (G501).■

3. Measure voltage between DLC terminals No. 5 and No. 16.

DATA LINK CONNECTOR (DLC)

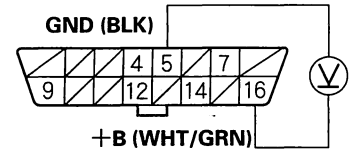

Terminal side of female terminals

Is there battery voltage?

YES—Go to step 4.

NO—Repair open in the wire between DLC terminal No. 5 and body ground (G503).■

4. Turn the ignition switch ON (II).

5. Measure voltage between DLC terminals No. 5 and No. 7.

DATA LINK CONNECTOR (DLC)

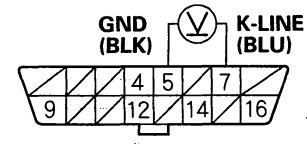

Terminal side of female terminals

Is there 8.5 V or more?

YES—Go to step 11.

NO—Go to step 6.

6. Turn the ignition switch OFF.

7. Jump the SCS line with the HDS.

(cont'd)

Protected by AR

DLC Circuit Troubleshooting (cont'd)

8. Disconnect ECM/PCM connector E (31P).
9. Check for continuity between DLC terminal No. 7 and body ground.

DATA LINK CONNECTOR (DLC)

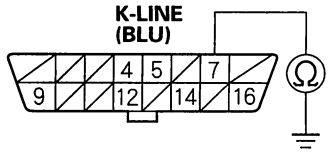

Terminal side of female terminals

Is there continuity?

YES—Repair short to ground in the wire between DLC terminal No. 7 and the ECM/PCM (A14). After repairing the wire, check for a DTC with the HDS and go to the indicated DTC's troubleshooting. ■

NO—Go to step 10.

10. Check for continuity between DLC terminal No. 7 and ECM/PCM terminal A14.

ECM/PCM CONNECTOR A (31P)

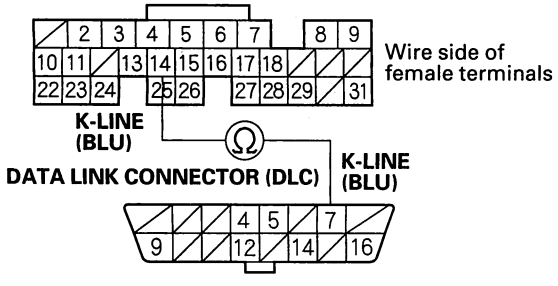

Terminal side of female terminals

Is there continuity?

YES—Update the ECM/PCM if it does not have the latest software, or substitute a known-good ECM/PCM (see page 11-6), then recheck. If the symptom/indication goes away with a known-good ECM/PCM, replace the original ECM/PCM (see page 11-224). ■

NO—Repair open in the wire between DLC terminal No. 7 and the ECM/PCM (A14). After repairing the wire, check for Temporary DTCs or DTCs with the HDS and go to the indicated DTC's troubleshooting. ■

11. Turn the ignition switch OFF.
12. Jump the SCS line with the HDS.
13. Disconnect ECM/PCM connector A (31P).
14. Turn the ignition switch ON (II).
15. Measure voltage between DLC terminals No. 5 and No. 7.

DATA LINK CONNECTOR (DLC)

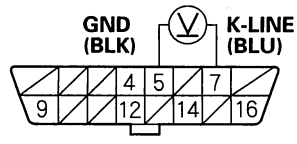

Terminal side of female terminals

Is there 0 V?

YES—Update the ECM/PCM if it does not have the latest software, or substitute a known-good ECM/PCM (see page 11-6), then recheck. If the symptom/indication goes away with a known-good ECM/PCM, replace the original ECM/PCM (see page 11-224). ■

NO—Repair short to power in the wire between DLC terminal No. 7 and the ECM/PCM (A14). After repairing the wire, check for Temporary DTCs or DTCs with the HDS, and go to the indicated DTC's troubleshooting. ■

BACK

Protected by AR

Injector Replacement

1. Relieve fuel pressure (see page 11-315).
2. Remove the intake manifold (see page 9-2).
3. Disconnect the connectors from the injectors (A).

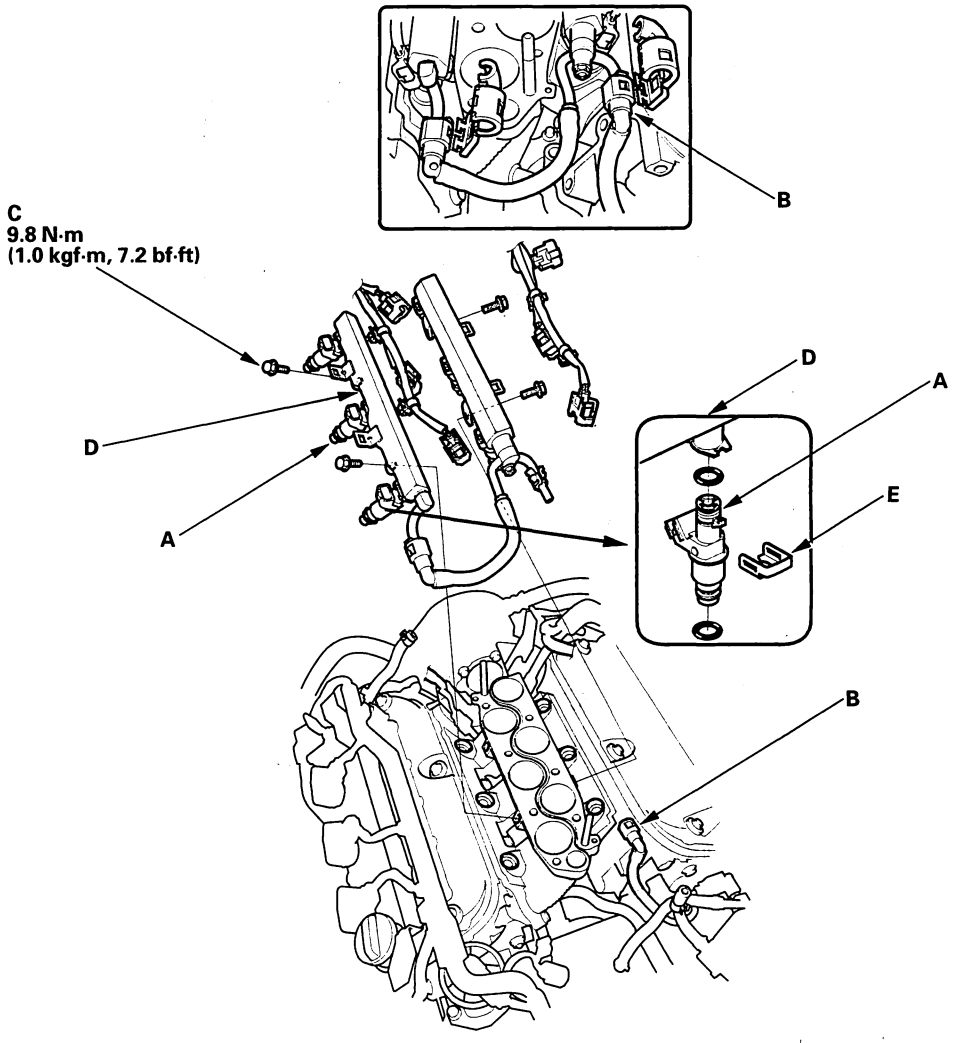

4. Disconnect the quick-connect fittings (B).
5. Remove the fuel rail mounting bolts (C) from the fuel rail (D).
6. Remove the injector clip (E) from the injector.
7. Remove the injector from the fuel rail.

(cont'd)

Protected by AR

Injector Replacement (cont'd)

8. Coat the new O-rings (A) with clean engine oil, and insert the injectors (B) into the fuel rail (C).

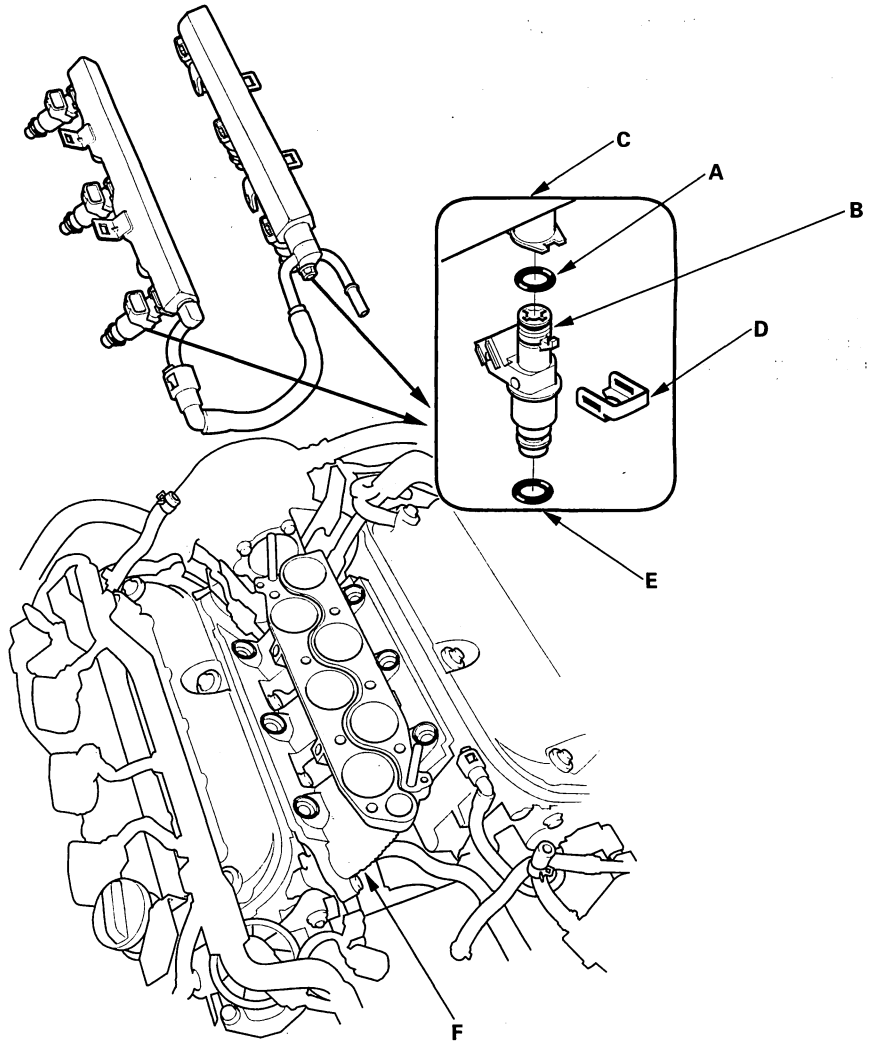

9. Install the injector clip (D).
10. Coat the injector O-rings (E) with clean engine oil.
11. Install the injectors in the injector base (F).
12. Install the fuel rail mounting nuts.
13. Connect the connectors on the injectors.
14. Connect the quick-connect fittings.
15. Turn the ignition switch ON (II), but do not operate the starter. After the fuel pump runs for about 2 seconds, the fuel rail will be pressurized. Repeat this two or three times, then check for fuel leakage.

BACK

Protected by AR

A/F Sensor Replacement

Special Tools Required
O2 sensor socket wrench, Snap-on YA8875, SP Tools 93750, or equivalent, commercially available

Front Bank (Bank 2)

1. Disconnect the front A/F sensor (Bank 2) 8P connector (A), then remove the front A/F sensor (B).

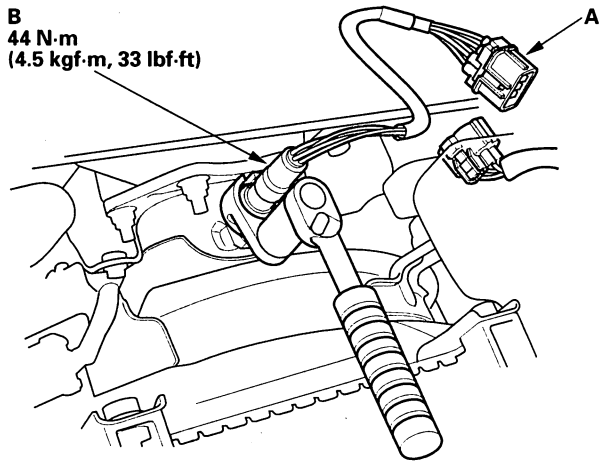

2. Install the front A/F sensor in the reverse order of removal.

Rear Bank (Bank 1)

1. Disconnect the rear A/F sensor (Bank 1) 8P connector (A), then remove the rear A/F sensor (B).

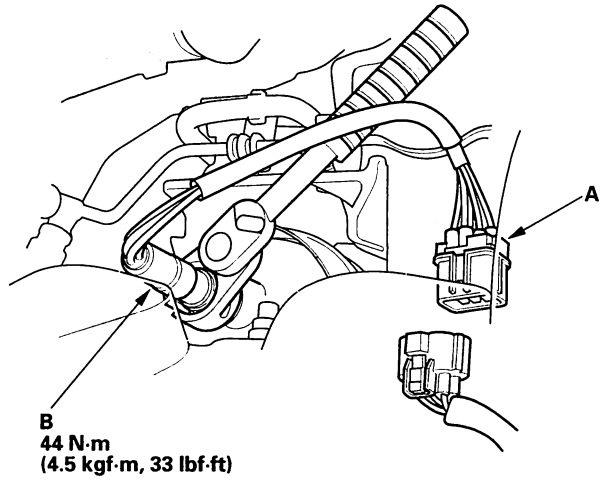

2. Install the rear A/F sensor in the reverse order of removal.

BACK

Protected by AR

Secondary HO2S Replacement

Special Tools Required
O2 sensor socket wrench, Snap-on YA8875, SP Tools 93750, or equivalent, commercially available

Front Bank (Bank 2)

1. Disconnect the front secondary HO2S (Bank 2) 4P connector (A), then remove the front secondary HO2S (B).

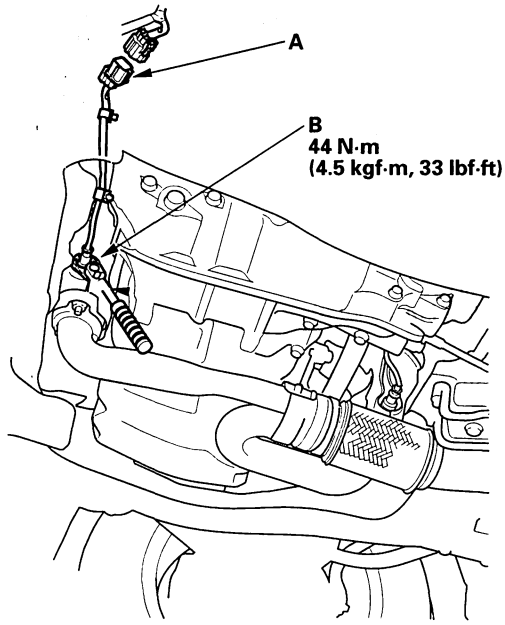

2. Install the front secondary HO2S in the reverse order of removal.

Rear Bank (Bank 1)

1. Disconnect the rear secondary HO2S (Bank 1) 4P connector (A), then remove the rear secondary HO2S (B).

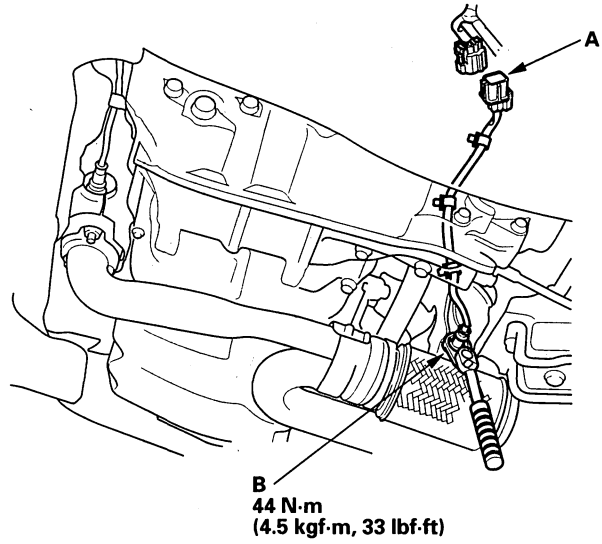

2. Install the rear secondary HO2S in the reverse order of removal.

BACK

Protected by AR

ECT Sensor/ECT Sensor 1 Replacement

1. Remove the air cleaner (see page 11-344).
2. Disconnect the ECT sensor/ECT sensor 1 connector (A).

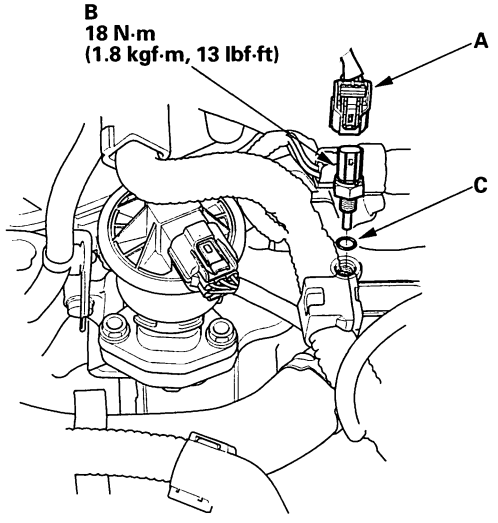

3. Remove the ECT sensor/ECT sensor 1 (B).
4. Install the sensor in the reverse order of removal with a new O-ring (C). Then refill the radiator with engine coolant (see page 10-6).

IAT Sensor Replacement

1. Disconnect the IAT sensor connector (A).

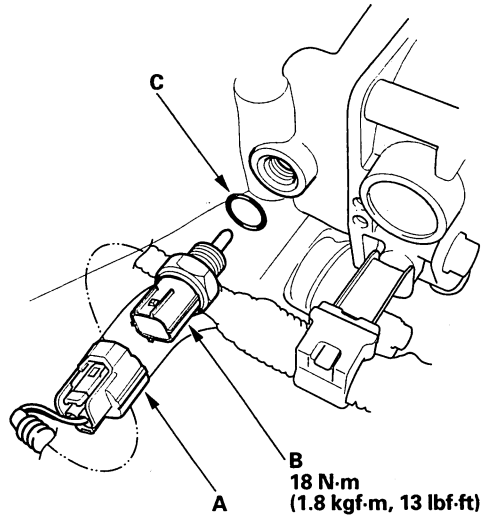

2. Remove the IAT sensor (B).
3. Install the sensor in the reverse order of removal with a new O-ring (C).

BACK

Protected by AR

CKP Sensor Replacement

1. Move the auto-tensioner to remove tension from the drive belt, then remove the belt (see page 4-35).
2. Remove the crankshaft pulley (see page 6-11).
3. Remove the upper and lower timing belt covers from the engine (see step 9 on page 6-15).
4. Remove the CKP sensor A/B (A) from the oil pump.

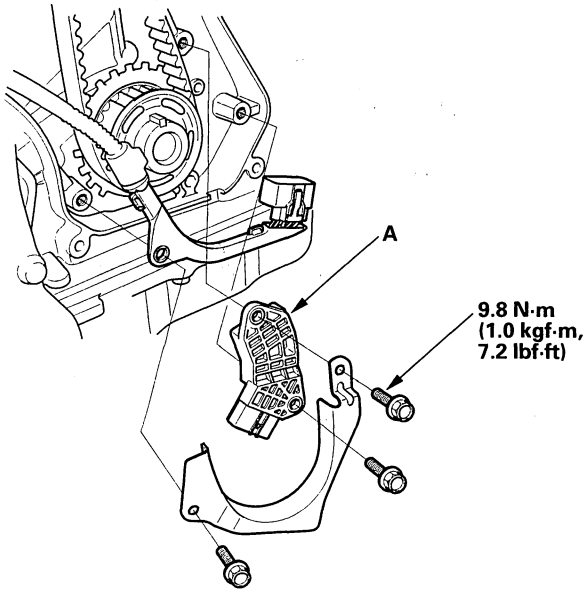

5. Install the sensor in the reverse order of removal.
6. Do the CKP pattern clear/pattern learn procedure (see page 11-4).

Knock Sensor Replacement

1. Remove the intake manifold (see page 9-2).
2. Remove the fuel rails and the intake runner base.
3. Disconnect the knock sensor connector (A), then remove the knock sensor (B).

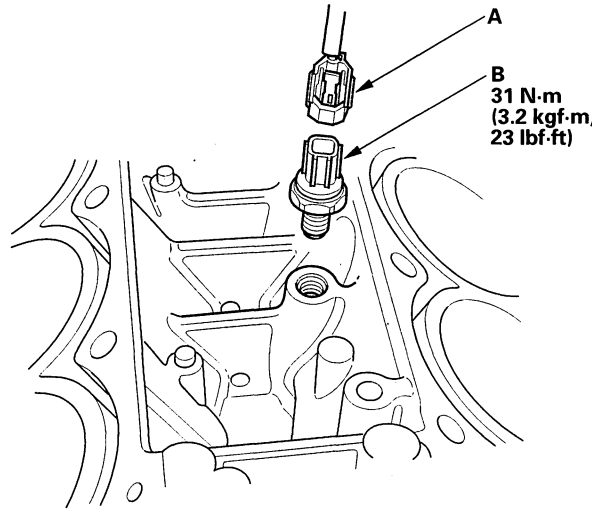

4. Install the sensor in the reverse order of removal.

BACK

Protected by AR

CMP Sensor Replacement

1. Set the No. 1 piston at top dead center (see page 6-14).
2. Remove the upper covers from the engine (see step 9 on page 6-15).
3. To hold the timing belt adjuster in its current position, thread in the battery clamp bolt hand-tight (see step 13 on page 6-15).
4. Loosen the idler pulley bolt about five or six turns, then remove the timing belt from the front camshaft pulley (see step 15 on page 6-16).
5. Remove the front camshaft pulley (A).

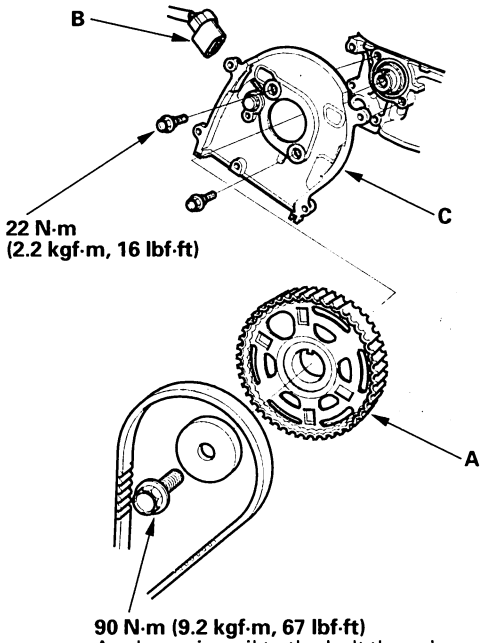

6. Disconnect the CMP sensor connector (B), then remove the back cover (C).
7. Remove the CMP sensor (A) from the back cover.

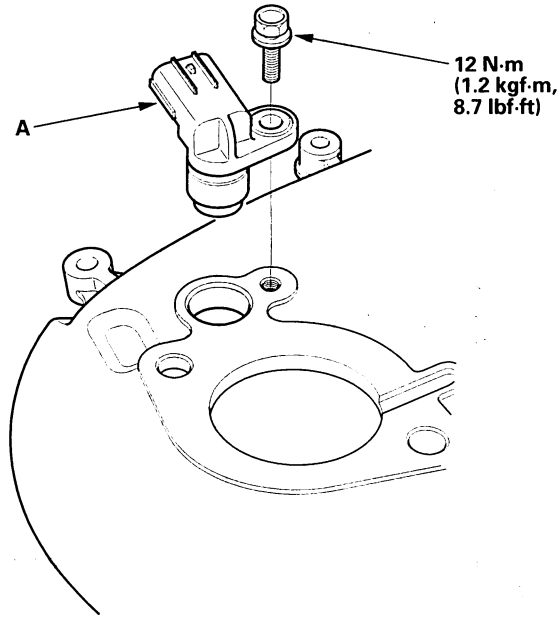

8. Install the sensor in the reverse order of removal. To install the timing belt (see page 6-16).
9. Do the CKP pattern clear/pattern learn procedure (see page 11-4).

Protected by AR

Input Shaft (Mainshaft) Speed Sensor Replacement

1. Disconnect the input shaft (mainshaft) speed sensor 3P connector (A).

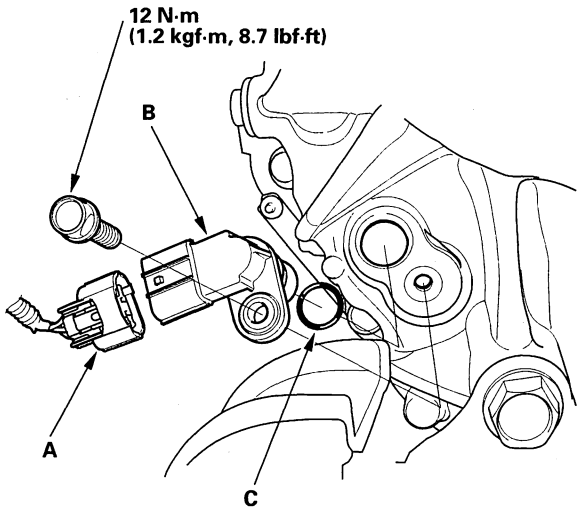

2. Remove the input shaft (mainshaft) speed sensor (B).

3. Install the sensor in the reverse order of removal with a new O-ring (C).

Output Shaft (Countershaft) Speed Sensor Replacement

1. Disconnect the output shaft (countershaft) speed sensor 3P connector (A).

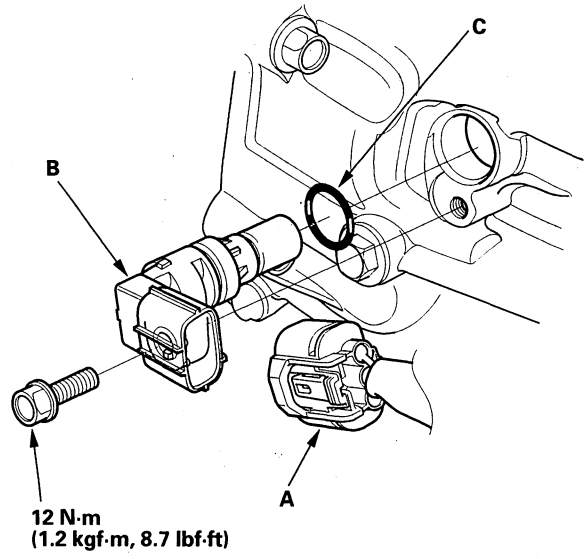

2. Remove the output shaft (countershaft) speed sensor (B).

3. Install the sensor in the reverse order of removal with a new O-ring (C).

BACK

Protected by AR

MAP Sensor Replacement

1. Disconnect the MAP sensor connector (A).

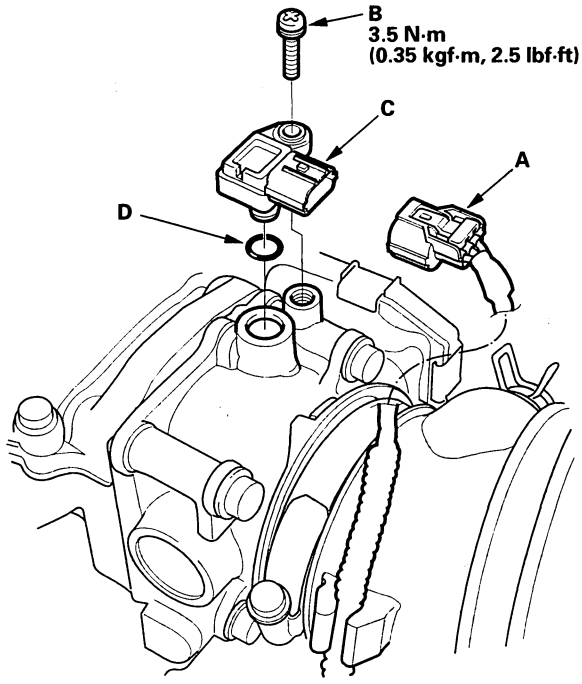

2. Remove the screw (B).
3. Remove the MAP sensor (C).
4. Install the sensor in the reverse order of removal with a new O-ring (D).

ECT Sensor 2 Replacement

1. Remove the throttle body (see page 11-348).
2. Disconnect the ECT sensor 2 connector (A).

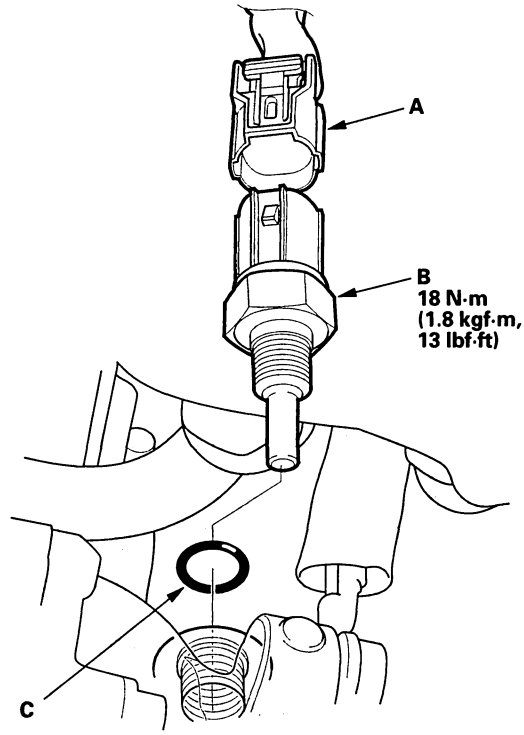

3. Remove ECT sensor 2 (B).
4. Install the sensor in the reverse order of removal with a new O-ring (C), then refill the radiator with engine coolant (see page 10-6).

Protected by AR

ECM/PCM Replacement

1. Connect the HDS to the data link connector (DLC) (A) located under the driver's side of the dashboard.

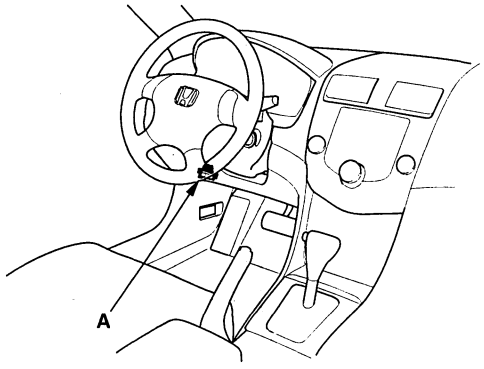

2. Turn the ignition switch ON (II).
3. Make sure the HDS communicates with the ECM/PCM. If it doesn't, skip steps 4 to 6 and 17 and clean the throttle body (see page 11-343) and replace the engine oil (see page 8-6) after this procedure
4. Select the INSPECTION MENU with the HDS.
5. Do the TP POSITION CHECK in the ETCS TEST.
6. Select READ DATA in REPLACE ECM/PCM with the HDS.
7. Turn the ignition switch OFF.
8. Jump the SCS line with the HDS.
9. Remove the center lower covers (A).

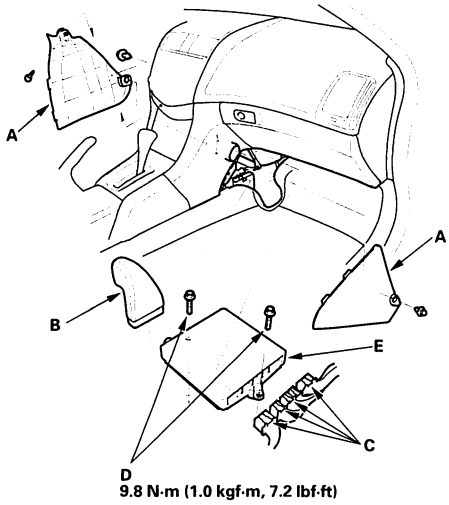

10. Remove the duct (B).
11. Disconnect ECM/PCM connectors (C).
12. Remove the bolts (D), then remove the ECM/PCM (E).
13. Install the ECM/PCM in the reverse order of removal.
14. Open the SCS line with the HDS.
15. Turn the ignition switch ON (II).

    NOTE:
    2005-2006 models: DTC P0630 "VIN Not Programmed or Mismatch" may be stored because the VIN has not been programmed into the ECM/PCM; ignore it, and continue this procedure.

16. Input the VIN to the ECM/PCM with the HDS.
17. Select WRITE DATA in the REPLACE ECM/PCM with the HDS.
18. Rewrite the immobilizer code with the ECM/PCM replacement procedure in the HDS; it allows you to start the engine.
19. Reset the ECM/PCM with the HDS.
20. Do the ECM/PCM idle learn procedure (see page 11-302).
21. Do the CKP pattern clear/pattern learn procedure (see page 11-4).

BACK

Protected by AR

Component Location Index

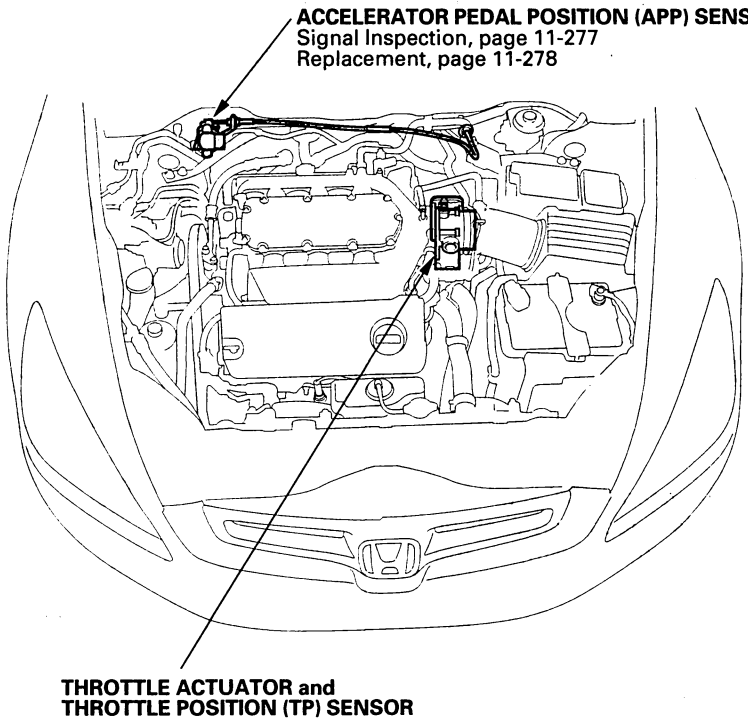

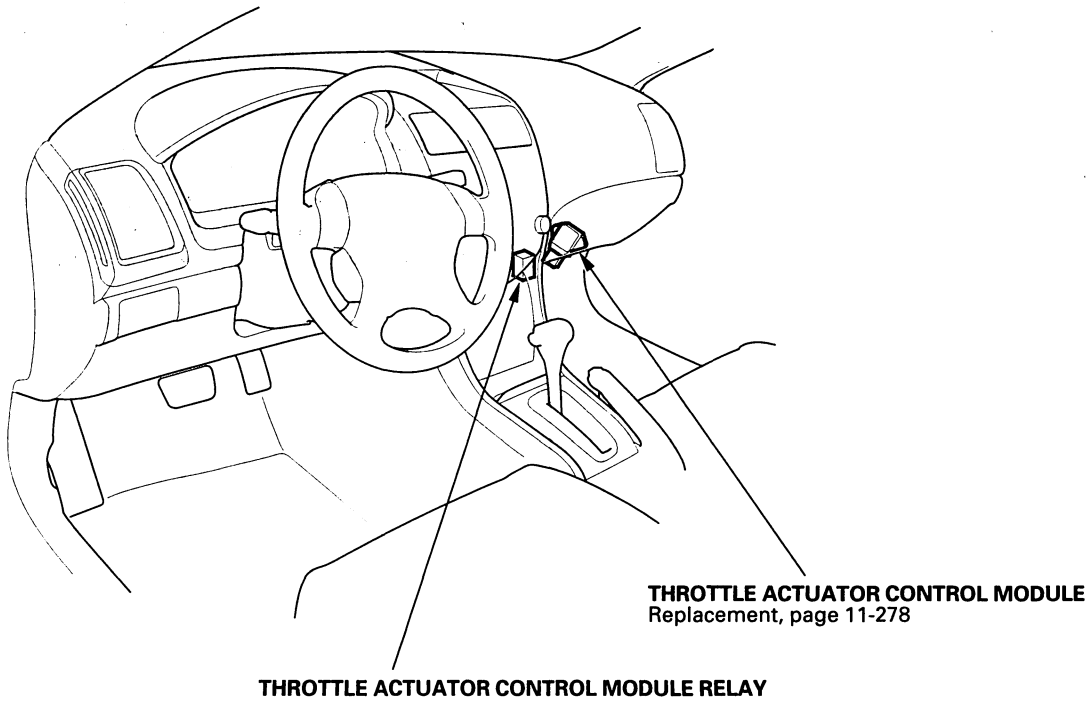

BACK

Protected by AR

DTC Troubleshooting

DTC P0122: TP Sensor A Circuit Low Voltage

NOTE: Before you troubleshoot, record all freeze data and any on-board snapshot, and review the general troubleshooting information (see page 11-3).

1. Turn the ignition switch ON (II).
2. Clear the DTC with the HDS.
3. Check TP SENSOR A in the DATA LIST with the HDS.

   Is there about 0.3 V or less?

   YES—Go to step 4.

   NO—Intermittent failure, system is OK at this time. Check for poor connections or loose terminals at the throttle body and the throttle actuator control module. ■
4. Check for Temporary DTCs or DTCs with the HDS.

   Are DTC P0122 and P0222 indicated at the same time?

   YES—Check for poor connections or loose terminals at the throttle body, the throttle actuator control module, and at the ECM/PCM, then go to step 17. If the connections are OK, go to step 9.

   NO—Go to step 5.
5. Turn the ignition switch OFF.
6. Disconnect the throttle body 6P connector.
7. Disconnect the throttle actuator control module 16P connector.
8. Check for continuity between throttle body 6P connector terminal No. 1 and body ground.

THROTTLE BODY 6P CONNECTOR

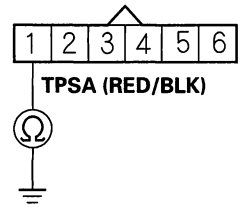

Wire side of female terminals

Is there continuity?

YES—Repair short in the wire between the throttle body and the throttle actuator control module (TPSA line), then go to step 17.

NO—Substitute a known-good throttle actuator control module (see page 11-278), then go to step 17 and recheck. If DTC P0122 is not indicated, replace the original throttle actuator control module (see page 11-278), then go to step 17. If DTC P0122 is indicated, go to step 15.

BACK

Protected by AR

9. Measure voltage between throttle body 6P connector terminal No. 2 and body ground.

THROTTLE BODY 6P CONNECTOR

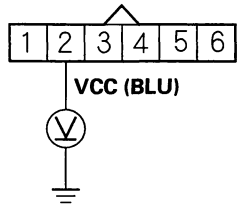

Wire side of female terminals

Is there about 5 V?

YES—Go to step 15.

NO—Go to step 10.

10. Turn the ignition switch OFF.
11. Disconnect the throttle actuator control module 16P connector.
12. Disconnect the throttle body 6P connector.
13. Connect throttle body 6P connector terminal No. 2 to body ground with a jumper wire.

THROTTLE BODY 6P CONNECTOR

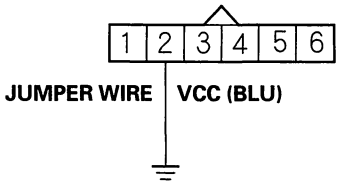

Wire side of female terminals

14. Check for continuity between throttle actuator control module 16P connector terminal No. 11 and body ground.

THROTTLE ACTUATOR CONTROL MODULE 16P CONNECTOR

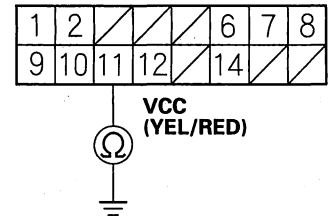

Wire side of female terminals

Is there continuity?

YES—Substitute a known-good throttle actuator control module (see page 11-278), then go to step 17 and recheck. If DTC P0122 is not indicated, replace the original throttle actuator control module (see page 11-278), then go to step 17. If DTC P0122 is indicated, go to step 15.

NO—Repair open in the wire between the throttle body and the throttle actuator control module (VCC line), then go to step 17.

(cont'd)

Protected by AR

DTC Troubleshooting (cont'd)

15. Turn the ignition switch OFF.
16. Replace the throttle body (see page 11-348).
17. Reconnect all connectors.
18. Turn the ignition switch ON (II).
19. Reset the ECM/PCM with the HDS.
20. Do the ECM/PCM idle learn procedure (see page 11-302).
21. Check for Temporary DTCs or DTCs with the HDS.

    Are any Temporary DTCs or DTCs indicated?

    YES—If DTC P0122 is indicated, check for poor connections or loose terminals at the throttle body and the throttle actuator control module, then go to step 1. If any other Temporary DTCs or DTCs are indicated, go to the indicated DTC's troubleshooting.

    NO—Troubleshooting is complete. ■

BACK

Protected by AR

DTC P0123: TP Sensor A Circuit High Voltage

NOTE: Before you troubleshoot, record all freeze data and any on-board snapshot, and review the general troubleshooting information (see page 11-3).

1. Turn the ignition switch ON (II).
2. Clear the DTC with the HDS.
3. Check TP SENSOR A in the DATA LIST with the HDS.

   Is there about 4.8 V or more?

   YES—Go to step 4.

   NO—Intermittent failure, system is OK at this time. Check for poor connections or loose terminals at the throttle body and the throttle actuator control module. ■
4. Check for Temporary DTCs or DTCs with the HDS.

   Are DTC P0123 and P0223 indicated at the same time?

   YES—Go to step 11.

   NO—Go to step 5.
5. Measure voltage between throttle body 6P connector terminal No. 1 and body ground.

THROTTLE BODY 6P CONNECTOR

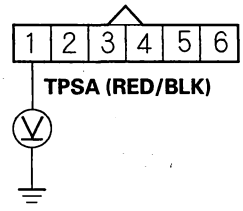

Wire side of female terminals

Is there about 5 V?

YES—Go to step 16.

NO—Go to step 6.

6. Turn the ignition switch OFF.
7. Disconnect the throttle actuator control module 16P connector.
8. Disconnect the throttle body 6P connector.
9. Connect throttle body 6P connector terminal No. 1 to body ground with a jumper wire.

THROTTLE BODY 6P CONNECTOR

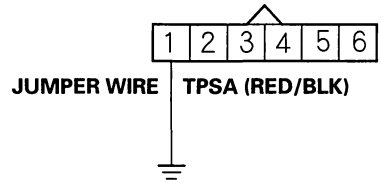

Wire side of female terminals

(cont'd)

Protected by AR

DTC Troubleshooting (cont'd)

10. Check for continuity between throttle actuator control module 16P connector terminal No. 10 and body ground.

THROTTLE ACTUATOR CONTROL MODULE 16P CONNECTOR

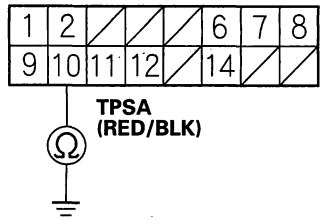

Wire side of female terminals

Is there continuity?

YES—Substitute a known-good throttle actuator control module (see page 11-278), then go to step 18 and recheck. If DTC P0123 is not indicated, replace the original throttle actuator control module (see page 11-278), then go to step 18. If DTC P0123 is indicated, go to step 16.

NO—Repair open in the wire between the throttle body and the throttle actuator control module (TPSA line), then go to step 18.

11. Turn the ignition switch OFF.

12. Disconnect the throttle body 6P connector.

13. Disconnect the throttle actuator control module 16P connector.

14. Connect throttle body 6P connector terminal No. 4 to body ground with a jumper wire.

THROTTLE BODY 6P CONNECTOR

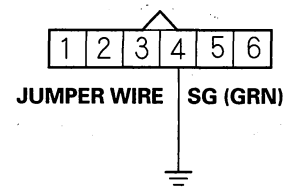

Wire side of female terminals

15. Check for continuity between throttle actuator control module 16P connector terminal No. 9 and body ground.

THROTTLE ACTUATOR CONTROL MODULE 16P CONNECTOR

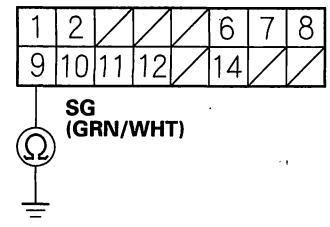

Wire side of female terminals

Is there continuity?

YES—Substitute a known-good throttle actuator control module (see page 11-278), then go to step 18 and recheck. If DTC P0123 is not indicated, replace the original throttle actuator control module (see page 11-278), then go to step 18. If DTC P0123 is indicated, go to step 16.

NO—Repair open in the wire between the throttle body and the throttle actuator control module (SG line), then go to step 18.

BACK

Protected by AR

16. Turn the ignition switch OFF.
17. Replace the throttle body (see page 11-348).
18. Reconnect all connectors.
19. Turn the ignition switch ON (II).
20. Reset the ECM/PCM with the HDS.
21. Do the ECM/PCM idle learn procedure (see page 11-302).
22. Check for Temporary DTCs or DTCs with the HDS.

    Are any Temporary DTCs or DTCs indicated?

    YES—If DTC P0123 is indicated, check for poor connections or loose terminals at the throttle body and the throttle actuator control module, then go to step 1. If any other Temporary DTCs or DTCs are indicated, go to the indicated DTC's troubleshooting.

    NO—Troubleshooting is complete. ■

Protected by AR

DTC Troubleshooting (cont'd)

DTC P0222: TP Sensor B Circuit Low Voltage

NOTE: Before you troubleshoot, record all freeze data and any on-board snapshot, and review the general troubleshooting information (see page 11-3).

1. Turn the ignition switch ON (II).
2. Clear the DTC with the HDS.
3. Check TP SENSOR B in the DATA LIST with the HDS.

   Is there about 0.3 V or less?

   YES—Go to step 4.

   NO—Intermittent failure, system is OK at this time. Check for poor connections or loose terminals at the throttle body and the throttle actuator control module.■
4. Check for Temporary DTCs or DTCs with the HDS.

   Are DTC P0122 and P0222 indicated at the same time?

   YES—Check for poor connections or loose terminals at the throttle body, the throttle actuator control module, and at the ECM/PCM, then go to step 17. If the connections are OK, go to step 9.

   NO—Go to step 5.
5. Turn the ignition switch OFF.
6. Disconnect the throttle body 6P connector.
7. Disconnect the throttle actuator control module 16P connector.
8. Check for continuity between throttle body 6P connector terminal No. 3 and body ground.

THROTTLE BODY 6P CONNECTOR

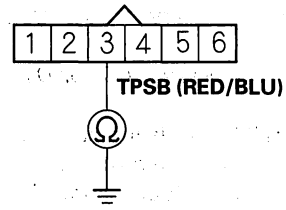

Wire side of female terminals

Is there continuity?

YES—Repair short in the wire between the throttle body and the throttle actuator control module (TPSB line), then go to step 17.

NO—Substitute a known-good throttle actuator control module (see page 11-278), then go to step 17 and recheck. If DTC P0222 is not indicated, replace the original throttle actuator control module (see page 11-278), then go to step 17. If DTC P0222 is indicated, go to step 15.

BACK

Protected by AR

9. Measure voltage between throttle body 6P connector terminal No. 2 and body ground.

THROTTLE BODY 6P CONNECTOR

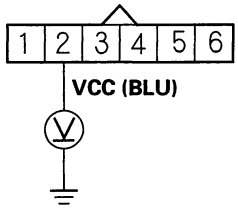

Wire side of female terminals

Is there about 5 V?

YES—Go to step 15.

NO—Go to step 10.

10. Turn the ignition switch OFF.
11. Disconnect the throttle actuator control module 16P connector.
12. Disconnect the throttle body 6P connector.
13. Connect throttle body 6P connector terminal No. 2 to body ground with a jumper wire.

THROTTLE BODY 6P CONNECTOR

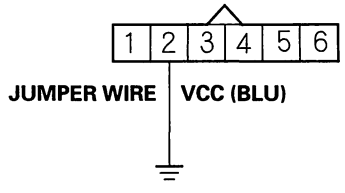

Wire side of female terminals

14. Check for continuity between throttle actuator control module 16P connector terminal No. 11 and body ground.

THROTTLE ACTUATOR CONTROL MODULE 16P CONNECTOR

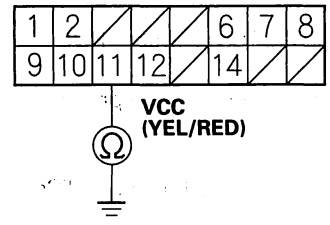

Wire side of female terminals

Is there continuity?

YES—Substitute a known-good throttle actuator control module (see page 11-278), then go to step 17 and recheck. If DTC P0222 is not indicated, replace the original throttle actuator control module (see page 11-278), then go to step 17. If DTC P0222 is indicated, go to step 15.

NO—Repair open in the wire between the throttle body and the throttle actuator control module (VCC line), then go to step 17.

(cont'd)

Protected by AR

DTC Troubleshooting (cont'd)

15. Turn the ignition switch OFF.
16. Replace the throttle body (see page 11-348).
17. Reconnect all connectors.
18. Turn the ignition switch ON (II).
19. Reset the ECM/PCM with the HDS.
20. Do the ECM/PCM idle learn procedure (see page 11-302).
21. Check for Temporary DTCs or DTCs with the HDS.

    Are any Temporary DTCs or DTCs indicated?

    YES—If DTC P0222 is indicated, check for poor connections or loose terminals at the throttle body and the throttle actuator control module, then go to step 1. If any other Temporary DTCs or DTCs are indicated, go to the indicated DTC's troubleshooting.

    NO—Troubleshooting is complete. ■

BACK

Protected by AR

DTC P0223: TP Sensor B Circuit High Voltage

NOTE: Before you troubleshoot, record all freeze data and any on-board snapshot, and review the general troubleshooting information (see page 11-3).

1. Turn the ignition switch ON (II).
2. Clear the DTC with the HDS.
3. Check TP SENSOR B in the DATA LIST with the HDS.

   Is there about 4.8 V or more?

   YES—Go to step 4.

   NO—Intermittent failure, system is OK at this time. Check for poor connections or loose terminals at the throttle body and the throttle actuator control module. ■
4. Check for Temporary DTCs or DTCs with the HDS.

   Are DTC P0123 and P0223 indicated at the same time?

   YES—Go to step 11.

   NO—Go to step 5.
5. Measure voltage between throttle body 6P connector terminal No. 3 and body ground.

THROTTLE BODY 6P CONNECTOR

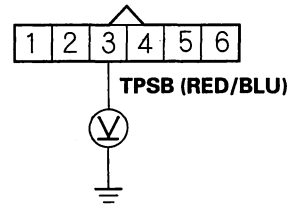

Wire side of female terminals

Is there about 5 V?

YES—Go to step 16.

NO—Go to step 6.

6. Turn the ignition switch OFF.
7. Disconnect the throttle actuator control module 16P connector.
8. Disconnect the throttle body 6P connector.
9. Connect throttle body 6P connector terminal No. 3 to body ground with a jumper wire.

THROTTLE BODY 6P CONNECTOR

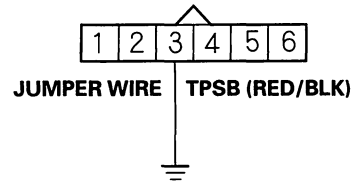

Wire side of female terminals

(cont'd)

Protected by AR

DTC Troubleshooting (cont'd)

10. Check for continuity between throttle actuator control module 16P connector terminal No. 12 and body ground.

THROTTLE ACTUATOR CONTROL MODULE 16P CONNECTOR

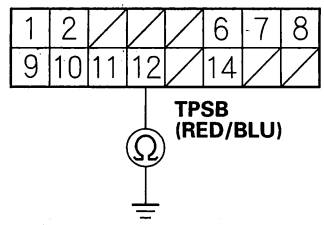

Wire side of female terminals

Is there continuity?

YES—Substitute a known-good throttle actuator control module (see page 11-278), then go to step 18 and recheck. If DTC P0223 is not indicated, replace the original throttle actuator control module (see page 11-278), then go to step 18. If DTC P0223 is indicated, go to step 16.

NO—Repair open in the wire between the throttle body and the throttle actuator control module (TPSB line), then go to step 18.

11. Turn the ignition switch OFF.

12. Disconnect the throttle body 6P connector.

13. Disconnect the throttle actuator control module 16P connector.

14. Connect throttle body 6P connector terminal No. 4 to body ground with a jumper wire.

THROTTLE BODY 6P CONNECTOR

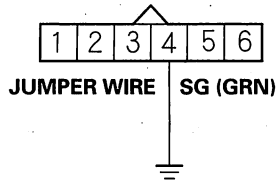

Wire side of female terminals

15. Check for continuity between throttle actuator control module 16P connector terminal No. 9 and body ground.

THROTTLE ACTUATOR CONTROL MODULE 16P CONNECTOR

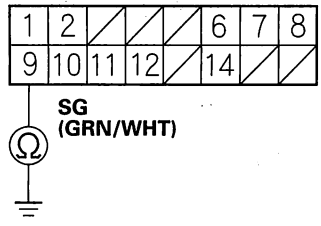

Wire side of female terminals

Is there continuity?

YES—Substitute a known-good throttle actuator control module (see page 11-278), then go to step 18 and recheck. If DTC P0223 is not indicated, replace the original throttle actuator control module (see page 11-278), then go to step 18. If DTC P0223 is indicated, go to step 16.

NO—Repair open in the wire between the throttle body and the throttle actuator control module (SG line), then go to step 18.

BACK

Protected by AR

16. Turn the ignition switch OFF.
17. Replace the throttle body (see page 11-348).
18. Reconnect all connectors.
19. Turn the ignition switch ON (II).
20. Reset the ECM/PCM with the HDS.
21. Do the ECM/PCM idle learn procedure (see page 11-302).
22. Check for Temporary DTCs or DTCs with the HDS.

    Are any Temporary DTCs or DTCs indicated?

    YES—If DTC P0223 is indicated, check for poor connections or loose terminals at the throttle body and the throttle actuator control module, then go to step 1. If any other Temporary DTCs or DTCs are indicated, go to the indicated DTC's troubleshooting.

    NO—Troubleshooting is complete. ■

Protected by AR

DTC Troubleshooting (cont'd)

DTC P1683: Throttle Valve Default Position Spring Performance Problem

⚠CAUTION

Do not insert your fingers into the installed throttle body when you turn the ignition switch ON (II) or while the ignition switch is ON (II). If you do, you will seriously injure your fingers if the throttle valve is activated.

NOTE: Before you troubleshoot, record all freeze data and any on-board snapshot, and review the general troubleshooting information (see page 11-3).

1. Turn the ignition switch ON (II).
2. Clear the DTC with the HDS.
3. Start the engine. Hold the engine speed at 3,000 rpm without load (in Park or neutral) until the radiator fan comes on, then let it idle.
4. Turn the ignition switch OFF, and wait 10 seconds.
5. Turn the ignition switch ON (II).
6. Check for Temporary DTCs or DTCs with the HDS.

   Is DTC P1683 indicated?

   YES—Go to step 7.

   NO—Intermittent failure, system is OK at this time. Check for poor connections or loose terminals at the throttle body and the throttle actuator control module. ■
7. Turn the ignition switch OFF.
8. Disconnect the intake air duct from the throttle body.
9. Push the throttle valve closed as shown.

   NOTE:
   - Do not operate the ignition switch during the check.
   - Be careful not to pinch your fingers during the check.

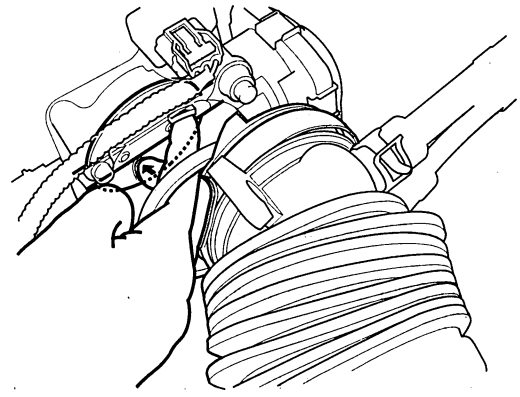

10. Release the throttle valve.

    Does the throttle valve return?

    YES—Clean the throttle body (see page 11-343), then go to step 13.

    NO—Go to step 11.
11. Turn the ignition switch OFF.
12. Replace the throttle body (see page 11-348).
13. Turn the ignition switch ON (II).
14. Reset the ECM/PCM with the HDS.
15. Do the ECM/PCM idle learn procedure (see page 11-302).
16. Turn the ignition switch OFF, and wait 10 seconds.
17. Turn the ignition switch ON (II).
18. Check for Temporary DTCs or DTCs with the HDS.

    Are any Temporary DTCs or DTCs indicated?

    YES—If DTC P1683 is indicated, check for poor connections or loose terminals at the throttle body and the throttle actuator control module, then go to step 1. If any other Temporary DTCs or DTCs are indicated, go to the indicated DTC's troubleshooting.

    NO—Troubleshooting is complete. ■

BACK

Protected by AR

DTC P1684: Throttle Valve Return Spring Performance Problem

⚠CAUTION

Do not insert your fingers into the installed throttle body when you turn the ignition switch ON (II) or while the ignition switch is ON (II). If you do, you will seriously injure your fingers if the throttle valve is activated.

NOTE: Before you troubleshoot, record all freeze data and any on-board snapshot, and review the general troubleshooting information (see page 11-3).

1. Turn the ignition switch ON (II).
2. Clear the DTC with the HDS.
3. Start the engine. Hold the engine speed at 3,000 rpm without load (in Park or neutral) until the radiator fan comes on, then let it idle.
4. Turn the ignition switch OFF, and wait 10 seconds.
5. Turn the ignition switch ON (II).
6. Check for Temporary DTCs or DTCs with the HDS.

   Is DTC P1684 indicated?

   YES—Go to step 7.

   NO—Intermittent failure, system is OK at this time. Check for poor connections or loose terminals at the throttle body and the throttle actuator control module. ■
7. Turn the ignition switch OFF.
8. Disconnect the intake air duct from the throttle body.
9. Push the throttle valve open as shown.

   NOTE:
   - Do not operate the ignition switch during the check.
   - Be careful not to pinch your fingers during the check.

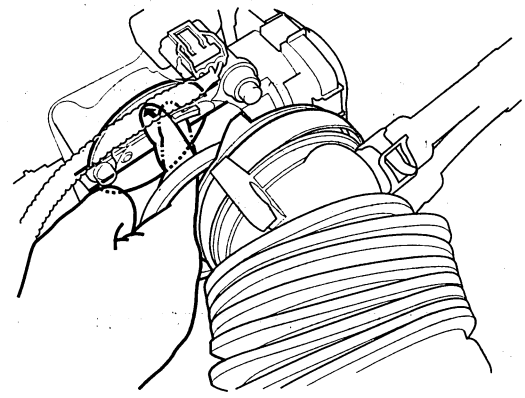

10. Release the throttle valve.

    Does the throttle valve return?

    YES—Clean the throttle body (see page 11-343), then go to step 13.

    NO—Go to step 11.
11. Turn the ignition switch OFF.
12. Replace the throttle body (see page 11-348).
13. Turn the ignition switch ON (II).
14. Reset the ECM/PCM with the HDS.
15. Do the ECM/PCM idle learn procedure (see page 11-302).
16. Turn the ignition switch OFF, and wait 10 seconds.
17. Turn the ignition switch ON (II).
18. Check for Temporary DTCs or DTCs with the HDS.

    Are any Temporary DTCs or DTCs indicated?

    YES—If DTC P1684 is indicated, check for poor connections or loose terminals at the throttle body and the throttle actuator control module, then go to step 1. If any other Temporary DTCs or DTCs are indicated, go to the indicated DTC's troubleshooting.

    NO—Troubleshooting is complete. ■

Protected by AR

DTC Troubleshooting (cont'd)

DTC P2101: Throttle Actuator System Malfunction

NOTE: Before you troubleshoot, record all freeze data and any on-board snapshot, and review the general troubleshooting information (see page 11-3).

1. Turn the ignition switch ON (II).
2. Clear the DTC with the HDS.
3. Do the ETCS TEST in the INSPECTION MENU with the HDS.
4. Check for Temporary DTCs or DTCs with the HDS.

   Is DTC P2101 indicated?

   YES—Go to step 7.

   NO—Go to step 5.
5. Test-drive the vehicle for several minutes in the range of these recorded freeze data parameters:

   - Engine speed
   - Vehicle speed
   - Accelerator position
6. Check for Temporary DTCs or DTCs with the HDS.

   Is DTC P2101 indicated?

   YES—Go to step 7.

   NO—Intermittent failure, system is OK at this time. Check for poor connections or loose terminals at the throttle body and at the throttle actuator control module, then clean the throttle body (see page 11-343).■
7. Turn the ignition switch OFF.
8. Disconnect the intake air duct from the throttle body.
9. Turn the ignition switch ON (II).
10. Clear the DTC with the HDS.
11. Do the ETCS TEST in the INSPECTION MENU with the HDS.
12. Visually check the throttle valve operation.

    NOTE: Be careful not to pinch your fingers during the check.

    Does the throttle valve operate smoothly?

    YES—Clean the throttle body (see page 11-343), then go to step 20 and recheck. If DTC P2101 is indicated, go to step 18.

    NO—Go to step 13.
13. Turn the ignition switch OFF.
14. Disconnect the throttle body 6P connector.
15. Disconnect the throttle actuator control module 16P connector.
16. Connect throttle body 6P connector terminals No. 5 and No. 6 with a jumper wire.

THROTTLE BODY 6P CONNECTOR

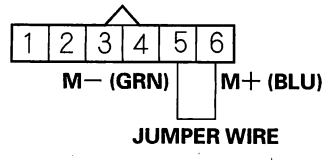

Wire side of female terminals

BACK

Protected by AR

17. Check for continuity between throttle actuator control module 16P connector terminals No. 1 and No. 8.

THROTTLE ACTUATOR CONTROL MODULE 16P CONNECTOR

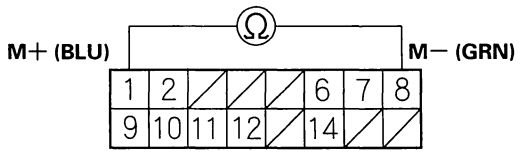

Wire side of female terminals

Is there continuity?

YES—Substitute a known-good throttle actuator control module (see page 11-278), then go to step 20 and recheck. If DTC P2101 is not indicated, replace the original throttle actuator control module (see page 11-278), then go to step 20. If DTC P2101 is indicated, go to step 18.

NO—Repair open in the wires between the throttle body and the throttle actuator control module (motor drive lines), then go to step 20.

18. Turn the ignition switch OFF.
19. Replace the throttle body (see page 11-348).
20. Reconnect all connectors.
21. Turn the ignition switch ON (II).
22. Reset the ECM/PCM with the HDS.
23. Do the ECM/PCM idle learn procedure (see page 11-302).
24. Test-drive the vehicle for several minutes in the range of these recorded freeze data parameters:

    - Engine speed
    - Vehicle speed
    - Accelerator position

25. Check for Temporary DTCs or DTCs with the HDS.

    Are any Temporary DTCs or DTCs indicated?

    YES—If DTC P2101 is indicated, check for poor connections or loose terminals at the throttle body and the throttle actuator control module, then clean the throttle body (see page 11-343), and go to step 1. If any other Temporary DTCs or DTCs are indicated, go to the indicated DTC's troubleshooting.

    NO—Troubleshooting is complete.■

Protected by AR

DTC Troubleshooting (cont'd)

DTC P2108: Throttle Actuator Control Module Problem

NOTE: Before you troubleshoot, record all freeze data and any on-board snapshot, and review the general troubleshooting information (see page 11-3).

1. Turn the ignition switch ON (II).
2. Clear the DTC with the HDS.
3. Turn the ignition switch OFF.
4. Turn the ignition switch ON (II).
5. Check for Temporary DTCs or DTCs with the HDS.

   Is DTC P2108 indicated?

   YES—Substitute a known-good throttle actuator control module (see page 11-278), and recheck. If DTC P2108 is not indicated, replace the original throttle actuator control module (see page 11-278). ■

   NO—Intermittent failure, system is OK at this time. Check for poor connections or loose terminals at the throttle body, the throttle actuator control module, and the ECM/PCM. ■

BACK

Protected by AR

DTC P2118: Throttle Actuator Current Range/ Performance Problem

NOTE: Before you troubleshoot, record all freeze data and any on-board snapshot, and review the general troubleshooting information (see page 11-3).

1. Disconnect the throttle actuator control module 16P connector.
2. Measure resistance between throttle actuator control module 16P connector terminals No. 1 and No. 8.

THROTTLE ACTUATOR CONTROL MODULE 16P CONNECTOR

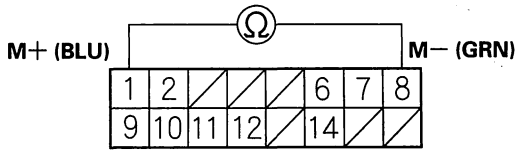

Wire side of female terminals

Is there about 1.0 Ω or less?

YES—Go to step 3.

NO—Substitute a known-good throttle actuator control module (see page 11-278), then go to step 6 and recheck. If DTC P2118 is not indicated, replace the original throttle actuator control module (see page 11-278), then go to step 6.

3. Disconnect the throttle body 6P connector.
4. At the throttle body side, measure resistance between throttle body 6P connector terminals No. 5 and No. 6 with the throttle fully closed.

THROTTLE BODY 6P CONNECTOR

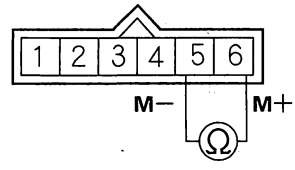

Terminal side of male terminals

Is there about 1.0 Ω or less?

YES—Go to step 5.

NO—Repair short in the wires between the throttle body and the throttle actuator control module (motor drive lines), then go to step 6.

5. Replace the throttle body (see page 11-348).
6. Reconnect all connectors.
7. Turn the ignition switch ON (II).
8. Reset the ECM/PCM with the HDS.
9. Do the ECM/PCM idle learn procedure (see page 11-302).
10. Turn the ignition switch OFF.
11. Turn the ignition switch ON (II).
12. Slowly press the accelerator pedal to the floor.
13. Check for Temporary DTCs or DTCs with the HDS.

Are any Temporary DTCs or DTCs indicated?

YES—If DTC P2118 is indicated, check for poor connections or loose terminals at the throttle body and the throttle actuator control module, then go to step 1. If any other Temporary DTCs or DTCs are indicated, go to the indicated DTC's troubleshooting.

NO—Troubleshooting is complete. ■

Protected by AR

DTC Troubleshooting (cont'd)

DTC P2122: APP Sensor A (Throttle Position Sensor D) Circuit Low Voltage (2003-2004 models)

NOTE: Before you troubleshoot, record all freeze data and any on-board snapshot, and review the general troubleshooting information (see page 11-3).

1. Turn the ignition switch ON (II).
2. Clear the DTC with the HDS.
3. Check for Temporary DTCs or DTCs with the HDS.

   Are DTC P0107, P0112, P0117, P0452, P2122, P2127, P2228, P2627 and P2630 indicated at the same time?

   YES—Go to step 20.

   NO—Go to step 4.
4. Check APP SENSOR A in the DATA LIST with the HDS.

   Is there about 0.2 V or less?

   YES—Go to step 5.

   NO—Intermittent failure, system is OK at this time. Check for poor connections or loose terminals at APP sensor A and the ECM/PCM. ■
5. Turn the ignition switch OFF.
6. Disconnect the APP sensor 6P connector.
7. Turn the ignition switch ON (II).
8. Measure voltage between APP sensor 6P connector terminals No. 5 and No. 6.

APP SENSOR 6P CONNECTOR

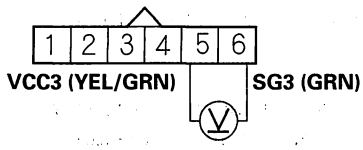

Wire side of female terminals

Is there about 5 V?

YES—Go to step 9.

NO—Go to step 19.

9. Turn the ignition switch OFF.
10. Jump the SCS line with the HDS.
11. Disconnect ECM/PCM connector D (17P).
12. Check for continuity between APP sensor 6P connector terminal No. 4 and body ground.

APP SENSOR 6P CONNECTOR

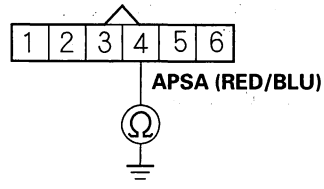

Wire side of female terminals

Is there continuity?

YES—Repair short in the wire between APP sensor A and the ECM/PCM (D3), then go to step 31.

NO—Go to step 13.

BACK

Protected by AR

13. Connect APP sensor 6P connector terminal No. 4 to body ground with a jumper wire.

APP SENSOR 6P CONNECTOR

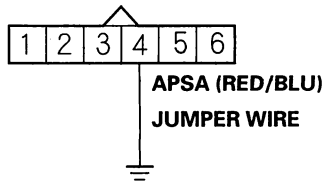

Wire side of female terminals

14. Check for continuity between ECM/PCM connector terminal D3 and body ground.

ECM/PCM CONNECTOR D (17P)

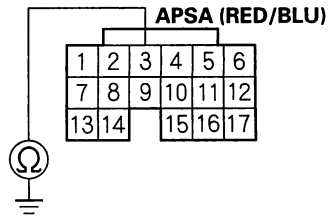

Wire side of female terminals

Is there continuity?

YES—Go to step 15.

NO—Repair open in the wire between APP sensor A and the ECM/PCM (D3), then go to step 31.

15. Reconnect ECM/PCM connector D (17P).

16. Connect APP sensor 6P connector terminals No. 4 and No. 5 with a jumper wire.

APP SENSOR 6P CONNECTOR

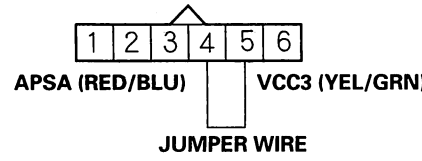

Wire side of female terminals

17. Turn the ignition switch ON (II).

18. Check APP SENSOR A in the DATA LIST with the HDS.

Is there about 0.2 V or less?

YES—Go to step 36.

NO—Go to step 29.

(cont'd)

Protected by AR

DTC Troubleshooting (cont'd)

19. Measure voltage between ECM/PCM connector terminals D2 and D15.

ECM/PCM CONNECTOR D (17P)

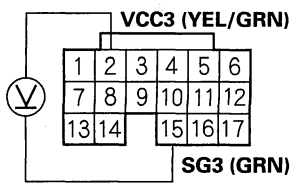

Wire side of female terminals

Is there about 5 V?

YES—Repair open in the wire between APP sensor A and the ECM/PCM (D2), then go to step 31.

NO—Go to step 36.

20. Turn the ignition switch OFF.

21. Jump the SCS line with the HDS.

22. Disconnect ECM/PCM connectors A (31P) and D (17P).

23. Disconnect the connectors from these parts:

- MAP sensor
- IMT (IMRC) actuator
- APP sensor
- EGR valve
- FTP sensor
- Input shaft (mainshaft) speed sensor
- Output shaft (countershaft) speed sensor

24. Check for continuity between body ground and ECM/PCM connector terminals A31, D2, D6 and D12 individually.

ECM/PCM CONNECTORS

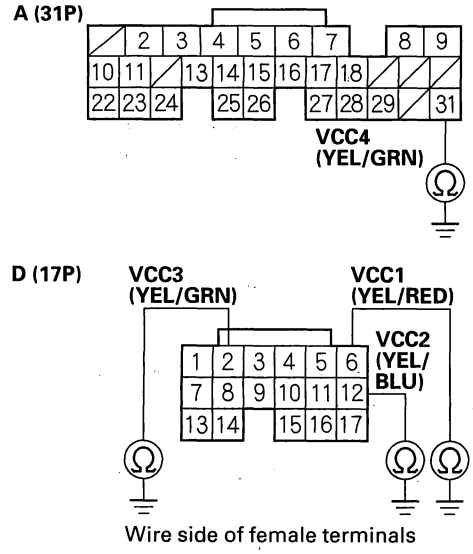

Wire side of female terminals

Is there continuity?

YES—Repair short in the wire between the ECM/PCM (A31, D2, D6, or D12) and each part, then go to step 31.

NO—Go to step 25.

BACK

Protected by AR

25. Reconnect ECM/PCM connectors A (31P) and D (17P).

26. Turn the ignition switch ON (II).

27. Measure voltage between ECM/PCM connector terminal D6 and body ground.

ECM/PCM CONNECTOR D (17P)

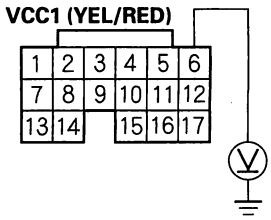

Wire side of female terminals

Is there about 5 V?

YES—Go to step 28.

NO—Go to step 36.

28. Continue to monitor voltage at ECM/PCM connector terminal D6 while reconnecting these parts, one at a time:

- MAP sensor
- IMT (IMRC) actuator
- APP sensor
- EGR valve
- FTP sensor
- Input shaft (mainshaft) speed sensor
- Output shaft (countershaft) speed sensor

Did the voltage drop to about 0 V?

YES—Replace the sensor that caused the voltage to drop, then go to step 31.

NO—Go to step 36.

29. Turn the ignition switch OFF.

30. Replace the APP sensor (see page 11-278).

31. Reconnect all connectors.

32. Turn the ignition switch ON (II).

33. Reset the ECM/PCM with the HDS.

34. Do the ECM/PCM idle learn procedure (see page 11-302).

35. Check for Temporary DTCs or DTCs with the HDS.

Are any Temporary DTCs or DTCs indicated?

YES—If DTC P2122 is indicated, check for poor connections or loose terminals at APP sensor A and the ECM/PCM, then go to step 1. If any other Temporary DTCs or DTCs are indicated, go to the indicated DTC's troubleshooting.

NO—Troubleshooting is complete. ■

36. Update the ECM/PCM if it does not have the latest software, or substitute a known-good ECM/PCM (see page 11-6).

37. Check for Temporary DTCs or DTCs with the HDS.

Are any Temporary DTCs or DTCs indicated?

YES—If DTC P2122 is indicated, check for poor connections or loose terminals at APP sensor A and the ECM/PCM, then go to step 1. If any other Temporary DTCs or DTCs are indicated, go to the indicated DTC's troubleshooting.

NO—If the ECM/PCM was updated, troubleshooting is complete. If the ECM/PCM was substituted, replace the original ECM/PCM (see page 11-224). ■

Protected by AR

DTC Troubleshooting (cont'd)

DTC P2122: APP Sensor A (Throttle Position Sensor D) Circuit Low Voltage (2005-2006 models)

NOTE: Before you troubleshoot, record all freeze data and any on-board snapshot, and review the general troubleshooting information (see page 11-3).

1. Turn the ignition switch ON (II).
2. Check APP SENSOR A in the DATA LIST with the HDS.

   Is there about 0.2 V or less?

   YES—Go to step 3.

   NO—Intermittent failure, system is OK at this time. Check for poor connections or loose terminals at APP sensor A and the ECM/PCM. ■
3. Turn the ignition switch OFF.
4. Disconnect the APP sensor 6P connector.
5. Turn the ignition switch ON (II).
6. Measure voltage between APP sensor 6P connector terminals No. 5 and No. 6.

APP SENSOR 6P CONNECTOR

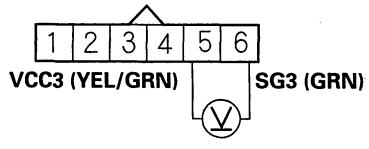

Wire side of female terminals

Is there about 5 V?

YES—Go to step 7.

NO—Go to step 17.

7. Turn the ignition switch OFF.
8. Jump the SCS line with the HDS.
9. Disconnect ECM/PCM connector D (17P).
10. Check for continuity between APP sensor 6P connector terminal No. 4 and body ground.

APP SENSOR 6P CONNECTOR

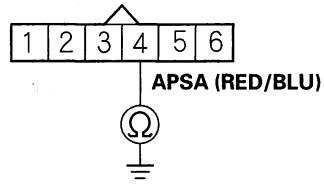

Wire side of female terminals

Is there continuity?

YES—Repair short in the wire between APP sensor A and the ECM/PCM (D3), then go to step 20.

NO—Go to step 11.

11. Connect APP sensor 6P connector terminal No. 4 to body ground with a jumper wire.

APP SENSOR 6P CONNECTOR

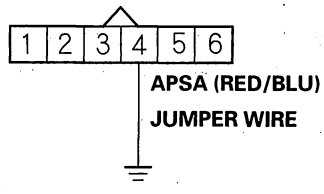

Wire side of female terminals

BACK

Protected by AR

12. Check for continuity between ECM/PCM connector terminal D3 and body ground.

ECM/PCM CONNECTOR D (17P)

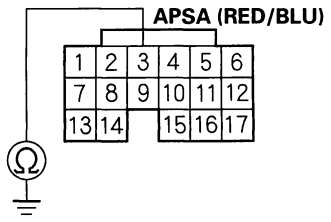

Wire side of female terminals

Is there continuity?

YES—Go to step 13.

NO—Repair open in the wire between APP sensor A and the ECM/PCM (D3), then go to step 20.

13. Reconnect ECM/PCM connector D (17P).

14. Connect APP sensor 6P connector terminals No. 4 and No. 5 with a jumper wire.

APP SENSOR 6P CONNECTOR

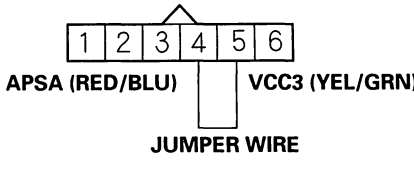

Wire side of female terminals

15. Turn the ignition switch ON (II).

16. Check APP SENSOR A in the DATA LIST with the HDS.

Is there about 0.2 V or less?

YES—Go to step 25.

NO—Go to step 18.

17. Measure voltage between ECM/PCM connector terminals D2 and D15.

ECM/PCM CONNECTOR D (17P)

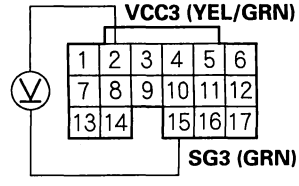

Wire side of female terminals

Is there about 5 V?

YES—Repair open in the wire between APP sensor A and the ECM/PCM (D2), then go to step 20.

NO—Go to step 25.

(cont'd)

Protected by AR

DTC Troubleshooting (cont'd)

18. Turn the ignition switch OFF.
19. Replace the APP sensor (see page 11-278).
20. Reconnect all connectors.
21. Turn the ignition switch ON (II).
22. Reset the ECM/PCM with the HDS.
23. Do the ECM/PCM idle learn procedure (see page 11-302).
24. Check for Temporary DTCs or DTCs with the HDS.

    Are any Temporary DTCs or DTCs indicated?

    YES—If DTC P2122 is indicated, check for poor connections or loose terminals at APP sensor A and the ECM/PCM, then go to step 1. If any other Temporary DTCs or DTCs are indicated, go to the indicated DTC's troubleshooting.

    NO—Troubleshooting is complete. ■
25. Update the ECM/PCM if it does not have the latest software, or substitute a known-good ECM/PCM (see page 11-6).
26. Check for Temporary DTCs or DTCs with the HDS.

    Are any Temporary DTCs or DTCs indicated?

    YES—If DTC P2122 is indicated, check for poor connections or loose terminals at APP sensor A and the ECM/PCM, then go to step 1. If any other Temporary DTCs or DTCs are indicated, go to the indicated DTC's troubleshooting.

    NO—If the ECM/PCM was updated, troubleshooting is complete. If the ECM/PCM was substituted, replace the original ECM/PCM (see page 11-224). ■

BACK

Protected by AR

DTC P2123: APP Sensor A (Throttle Position Sensor D) Circuit High Voltage

NOTE: Before you troubleshoot, record all freeze data and any on-board snapshot, and review the general troubleshooting information (see page 11-3).

1. Turn the ignition switch ON (II).
2. Check APP SENSOR A in the DATA LIST with the HDS.

   Is there about 4.9 V or more?

   YES—Go to step 3.

   NO—Intermittent failure, system is OK at this time. Check for poor connections or loose terminals at APP sensor A and the ECM/PCM. ■
3. Turn the ignition switch OFF.
4. Disconnect the APP sensor 6P connector.
5. Turn the ignition switch ON (II).
6. Measure voltage between APP sensor 6P connector terminals No. 5 and No. 6.

APP SENSOR 6P CONNECTOR

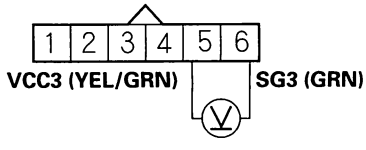

Wire side of female terminals

Is there about 5 V?

YES—Go to step 8.

NO—Go to step 7.

7. Measure voltage between ECM/PCM connector terminals D2 and D15.

ECM/PCM CONNECTOR D (17P)

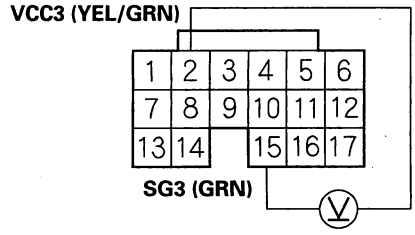

Wire side of female terminals

Is there about 5 V?

YES—Repair open in the wire between APP sensor A and the ECM/PCM (D15), then go to step 10.

NO—Go to step 15.

8. Turn the ignition switch OFF.
9. Replace the APP sensor (see page 11-278).
10. Reconnect the APP sensor 6P connector.
11. Turn the ignition switch ON (II).
12. Reset the ECM/PCM with the HDS.
13. Do the ECM/PCM idle learn procedure (see page 11-302).
14. Check for Temporary DTCs or DTCs with the HDS.

    Are any Temporary DTCs or DTCs indicated?

    YES—If DTC P2123 is indicated, check for poor connections or loose terminals at APP sensor A and the ECM/PCM, then go to step 1. If any other Temporary DTCs or DTCs are indicated, go to the indicated DTC's troubleshooting.

    NO—Troubleshooting is complete. ■

(cont'd)

Protected by AR

DTC Troubleshooting (cont'd)

15. Update the ECM/PCM if it does not have the latest software, or substitute a known-good ECM/PCM (see page 11-6).

16. Check for Temporary DTCs or DTCs with the HDS.

    Are any Temporary DTCs or DTCs indicated?

    YES—If DTC P2123 is indicated, check for poor connections or loose terminals at APP sensor A and the ECM/PCM, then go to step 1. If any other Temporary DTCs or DTCs are indicated, go to the indicated DTC's troubleshooting.

    NO—If the ECM/PCM was updated, troubleshooting is complete. If the ECM/PCM was substituted, replace the original ECM/PCM (see page 11-224). ■

BACK

Protected by AR

DTC 2127: APP Sensor B (Throttle Position Sensor E) Circuit Low Voltage (2003-2004 models)

NOTE: Before you troubleshoot, record all freeze data and any on-board snapshot, and review the general troubleshooting information (see page 11-3).

1. Turn the ignition switch ON (II).
2. Clear the DTC with the HDS.
3. Check for Temporary DTCs or DTCs with the HDS.

   Are DTC P0107, P0112, P0117, P0452, P2122, P2127, P2228, P2627 and P2630 indicated at the same time?

   YES—Go to step 20.

   NO—Go to step 4.
4. Check APP SENSOR B in the DATA LIST with the HDS.

   Is there about 0.2 V or less?

   YES—Go to step 5.

   NO—Intermittent failure, system is OK at this time. Check for poor connections or loose terminals at APP sensor B and the ECM/PCM.■
5. Turn the ignition switch OFF.
6. Disconnect the APP sensor 6P connector.
7. Turn the ignition switch ON (II).
8. Measure voltage between APP sensor 6P connector terminals No. 1 and No. 2.

APP SENSOR 6P CONNECTOR

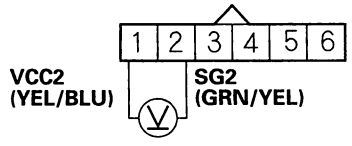

Wire side of female terminals

Is there about 5 V?

YES—Go to step 9.

NO—Go to step 19.

9. Turn the ignition switch OFF.
10. Jump the SCS line with the HDS.
11. Disconnect ECM/PCM connector D (17P).
12. Check for continuity between APP sensor 6P connector terminal No. 3 and body ground.

APP SENSOR 6P CONNECTOR

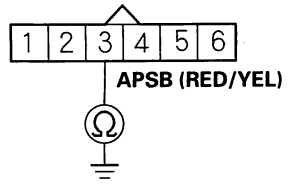

Wire side of female terminals

Is there continuity?

YES—Repair short in the wire between APP sensor B and the ECM/PCM (D9), then go to step 31.

NO—Go to step 13.

(cont'd)

Protected by AR

DTC Troubleshooting (cont'd)

13. Connect APP sensor 6P connector terminal No. 3 to body ground with a jumper wire.

APP SENSOR 6P CONNECTOR

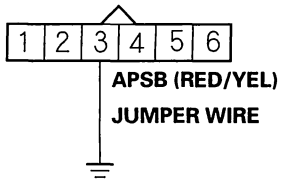

Wire side of female terminals

14. Check for continuity between ECM/PCM connector terminal D9 and body ground.

ECM/PCM CONNECTOR D (17P)

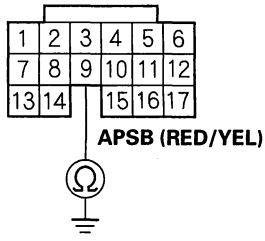

Wire side of female terminals

Is there continuity?

YES—Go to step 15.

NO—Repair open in the wire between APP sensor B and the ECM/PCM (D9), then go to step 31.

15. Reconnect ECM/PCM connector D (17P).

16. Connect APP sensor 6P connector terminals No. 1 and No. 3 with a jumper wire.

APP SENSOR 6P CONNECTOR

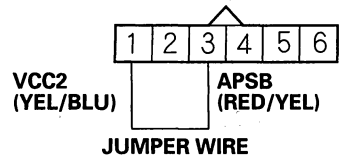

Wire side of female terminals

17. Turn the ignition switch ON (II).

18. Check APP SENSOR B in the DATA LIST with the HDS.

Is there about 0.2 V or less?

YES—Go to step 36.

NO—Go to step 29.

BACK

Protected by AR

19. Measure voltage between ECM/PCM connector terminals D10 and D12.

ECM/PCM CONNECTOR D (17P)

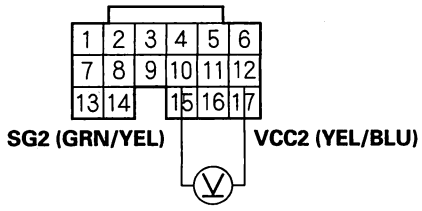

Wire side of female terminals

Is there about 5 V?

YES—Repair open in the wire between APP sensor B and the ECM/PCM (D12), then go to step 31.

NO—Go to step 36.

20. Turn the ignition switch OFF.

21. Jump the SCS line with the HDS.

22. Disconnect ECM/PCM connectors A (31P) and D (17P).

23. Disconnect the connectors from these parts:

- MAP sensor
- IMT (IMRC) actuator
- APP sensor
- EGR valve
- FTP sensor
- Input shaft (mainshaft) speed sensor
- Output shaft (countershaft) speed sensor

24. Check for continuity between body ground and ECM/PCM connector terminals A31, D2, D6 and D12 individually.

ECM/PCM CONNECTORS

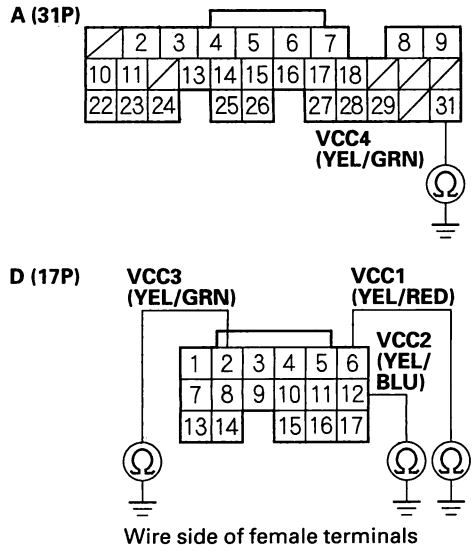

Wire side of female terminals

Is there continuity?

YES—Repair short in the wire between the ECM/PCM (A31, D2, D6, or D12) and each part, then go to step 31.

NO—Go to step 25.

(cont'd)

Protected by AR

DTC Troubleshooting (cont'd)

25. Reconnect ECM/PCM connectors A (31P) and D (17P).

26. Turn the ignition switch ON (II).

27. Measure voltage between ECM/PCM connector terminal D6 and body ground.

ECM/PCM CONNECTOR D (17P)

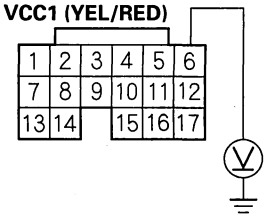

Wire side of female terminals

Is there about 5 V?

YES—Go to step 28.

NO—Go to step 36.

28. Continue to monitor voltage at ECM/PCM connector terminal D6 while reconnecting these parts, one at a time:

- MAP sensor
- IMT (IMRC) actuator
- APP sensor
- EGR valve
- FTP sensor
- Input shaft (mainshaft) speed sensor
- Output shaft (countershaft) speed sensor

Did the voltage drop to about 0 V?

YES—Replace the sensor that caused the voltage to drop, then go to step 31.

NO—Go to step 36.

29. Turn the ignition switch OFF.

30. Replace the APP sensor (see page 11-278).

31. Reconnect all connectors.

32. Turn the ignition switch ON (II).

33. Reset the ECM/PCM with the HDS.

34. Do the ECM/PCM idle learn procedure (see page 11-302).

35. Check for Temporary DTCs or DTCs with the HDS.

Are any Temporary DTCs or DTCs indicated?

YES—If DTC P2127 is indicated, check for poor connections or loose terminals at APP sensor B and the ECM/PCM, then go to step 1. If any other Temporary DTCs or DTCs are indicated, go to the indicated DTC's troubleshooting.

NO—Troubleshooting is complete. ■

36. Update the ECM/PCM if it does not have the latest software, or substitute a known-good ECM/PCM (see page 11-6).

37. Check for Temporary DTCs or DTCs with the HDS.

Are any Temporary DTCs or DTCs indicated?

YES—If DTC P2127 is indicated, check for poor connections or loose terminals at APP sensor B and the ECM/PCM, then go to step 1. If any other Temporary DTCs or DTCs are indicated, go to the indicated DTC's troubleshooting.

NO—If the ECM/PCM was updated, troubleshooting is complete. If the ECM/PCM was substituted, replace the original ECM/PCM (see page 11-224). ■

BACK

Protected by AR

DTC P2127: APP Sensor B (Throttle Position Sensor E) Circuit Low Voltage (2005-2006 models)

NOTE: Before you troubleshoot, record all freeze data and any on-board snapshot, and review the general troubleshooting information (see page 11-3).

1. Turn the ignition switch ON (II).
2. Check APP SENSOR B in the DATA LIST with the HDS.

   Is there about 0.2 V or less?

   YES—Go to step 3.

   NO—Intermittent failure, system is OK at this time. Check for poor connections or loose terminals at APP sensor B and the ECM/PCM. ■
3. Turn the ignition switch OFF.
4. Disconnect the APP sensor 6P connector.
5. Turn the ignition switch ON (II).
6. Measure voltage between APP sensor 6P connector terminals No. 1 and No. 2.

APP SENSOR 6P CONNECTOR

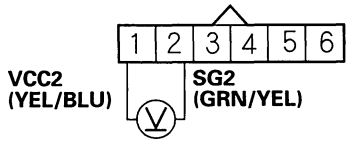

Wire side of female terminals

Is there about 5 V?

YES—Go to step 7.

NO—Go to step 17.

7. Turn the ignition switch OFF.
8. Jump the SCS line with the HDS.
9. Disconnect ECM/PCM connector D (17P).
10. Check for continuity between APP sensor 6P connector terminal No. 3 and body ground.

APP SENSOR 6P CONNECTOR

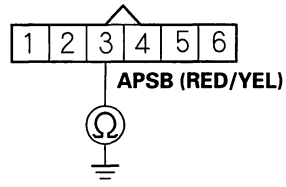

Wire side of female terminals

Is there continuity?

YES—Repair short in the wire between APP sensor B and the ECM/PCM (D9), then go to step 20.

NO—Go to step 11.

11. Connect APP sensor 6P connector terminal No. 3 to body ground with a jumper wire.

APP SENSOR 6P CONNECTOR

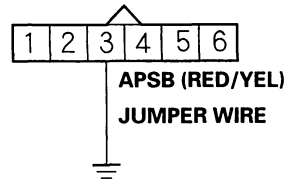

Wire side of female terminals

(cont'd)

Protected by AR

DTC Troubleshooting (cont'd)

12. Check for continuity between ECM/PCM connector terminal D9 and body ground.

ECM/PCM CONNECTOR D (17P)

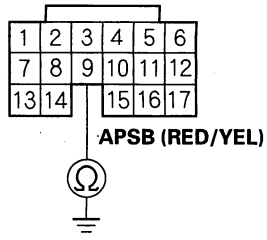

Wire side of female terminals

Is there continuity?

YES—Go to step 13.

NO—Repair open in the wire between APP sensor B and the ECM/PCM (D9), then go to step 20.

13. Reconnect ECM/PCM connector D (17P).

14. Connect APP sensor 6P connector terminals No. 1 and No. 3 with a jumper wire.

APP SENSOR 6P CONNECTOR

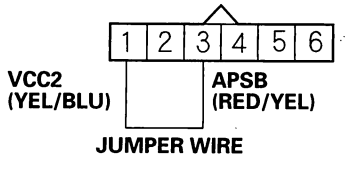

Wire side of female terminals

15. Turn the ignition switch ON (II).

16. Check APP SENSOR B in the DATA LIST with the HDS.

Is there about 0.2 V or less?

YES—Go to step 25.

NO—Go to step 18.

17. Measure voltage between ECM/PCM connector terminals D10 and D12.

ECM/PCM CONNECTOR D (17P)

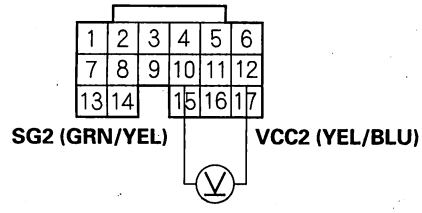

Wire side of female terminals

Is there about 5 V?

YES—Repair open in the wire between APP sensor B and the ECM/PCM (D12), then go to step 20.

NO—Go to step 25.

BACK

Protected by AR

18. Turn the ignition switch OFF.
19. Replace the APP sensor (see page 11-278).
20. Reconnect all connectors.
21. Turn the ignition switch ON (II).
22. Reset the ECM/PCM with the HDS.
23. Do the ECM/PCM idle learn procedure (see page 11-302).
24. Check for Temporary DTCs or DTCs with the HDS.

    Are any Temporary DTCs or DTCs indicated?

    YES—If DTC P2127 is indicated, check for poor connections or loose terminals at APP sensor B and the ECM/PCM, then go to step 1. If any other Temporary DTCs or DTCs are indicated, go to the indicated DTC's troubleshooting.

    NO—Troubleshooting is complete. ■
25. Update the ECM/PCM if it does not have the latest software, or substitute a known-good ECM/PCM (see page 11-6).
26. Check for Temporary DTCs or DTCs with the HDS.

    Are any Temporary DTCs or DTCs indicated?

    YES—If DTC P2127 is indicated, check for poor connections or loose terminals at APP sensor B and the ECM/PCM, then go to step 1. If any other Temporary DTCs or DTCs are indicated, go to the indicated DTC's troubleshooting.

    NO—If the ECM/PCM was updated, troubleshooting is complete. If the ECM/PCM was substituted, replace the original ECM/PCM (see page 11-224). ■

Protected by AR

DTC Troubleshooting (cont'd)

DTC P2128: APP Sensor B (Throttle Position Sensor E) Circuit High Voltage

NOTE: Before you troubleshoot, record all freeze data and any on-board snapshot, and review the general troubleshooting information (see page 11-3).

1. Turn the ignition switch ON (II).
2. Check APP SENSOR B in the DATA LIST with the HDS.

   Is there about 4.9 V or more?

   YES—Go to step 3.

   NO—Intermittent failure, system is OK at this time. Check for poor connections or loose terminals at APP sensor B and the ECM/PCM. ■
3. Turn the ignition switch OFF.
4. Disconnect the APP sensor 6P connector.
5. Turn the ignition switch ON (II).
6. Measure voltage between APP sensor 6P connector terminals No. 1 and No. 2.

APP SENSOR 6P CONNECTOR

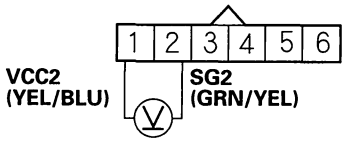

Wire side of female terminals

Is there about 5 V?

YES—Go to step 8.

NO—Go to step 7.

7. Measure voltage between ECM/PCM connector terminals D10 and D12.

ECM/PCM CONNECTOR D (17P)

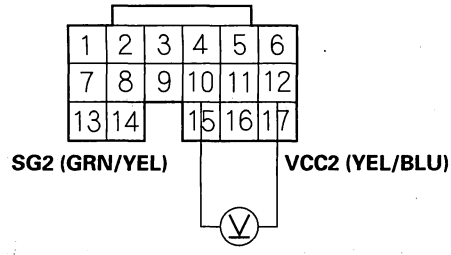

Wire side of female terminals

Is there about 5 V?

YES—Repair open in the wire between APP sensor B and the ECM/PCM (D10), then go to step 10.

NO—Go to step 15.

8. Turn the ignition switch OFF.
9. Replace the APP sensor (see page 11-278).
10. Reconnect the APP sensor 6P connector.
11. Turn the ignition switch ON (II).
12. Reset the ECM/PCM with the HDS.
13. Do the ECM/PCM idle learn procedure (see page 11-302).
14. Check for Temporary DTCs or DTCs with the HDS.

    Are any Temporary DTCs or DTCs indicated?

    YES—If DTC P2128 is indicated, check for poor connections or loose terminals at APP sensor B and the ECM/PCM, then go to step 1. If any other Temporary DTCs or DTCs are indicated, go to the indicated DTC's troubleshooting.

    NO—Troubleshooting is complete. ■

BACK

Protected by AR

15. Update the ECM/PCM if it does not have the latest software, or substitute a known-good ECM/PCM (see page 11-6).

16. Check for Temporary DTCs or DTCs with the HDS.

    Are any Temporary DTCs or DTCs indicated?

    YES—If DTC P2128 is indicated, check for poor connections or loose terminals at APP sensor B and the ECM/PCM, then go to step 1. If any other Temporary DTCs or DTCs are indicated, go to the indicated DTC's troubleshooting.

    NO—If the ECM/PCM was updated, troubleshooting is complete. If the ECM/PCM was substituted, replace the original ECM/PCM (see page 11-224). ■

Protected by AR

DTC Troubleshooting (cont'd)

DTC P2135: TP Sensor A/B Voltage Incorrect Correlation

⚠CAUTION

Do not insert your fingers into the installed throttle body when you turn the ignition switch ON (II) or while the ignition switch is ON (II). If you do, you will seriously injure your fingers if the throttle valve is activated.

NOTE: Before you troubleshoot, record all freeze data and any on-board snapshot, and review the general troubleshooting information (see page 11-3).

1. Turn the ignition switch ON (II).
2. Clear the DTC with the HDS.
3. Do the ETCS TEST in the INSPECTION MENU with the HDS.
4. Check for Temporary DTCs or DTCs with the HDS.

   Is DTC P2135 indicated?

   YES—Go to step 5.

   NO—Intermittent failure, system is OK at this time. Check for poor connections or loose terminals at the throttle body and the throttle actuator control module.■
5. Turn the ignition switch OFF.
6. Disconnect the intake air duct from the throttle body.
7. Turn the ignition switch ON (II).
8. Clear the DTC with the HDS.
9. Visually check the throttle valve operation.

   Does the valve temporarily move to the fully closed position?

   YES—Go to step 15.

   NO—Go to step 10.
10. Turn the ignition switch OFF.
11. Disconnect the throttle actuator control module 16P connector.
12. Check for continuity between throttle actuator control module 16P connector terminals No. 10 and No. 12.

THROTTLE ACTUATOR CONTROL MODULE 16P CONNECTOR

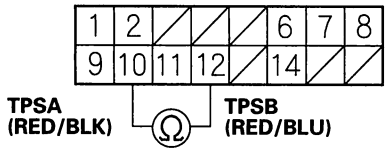

Wire side of female terminals

Is there continuity?

YES—Go to step 13.

NO—Substitute a known-good throttle actuator control module (see page 11-278), then go to step 17 and recheck. If DTC P2135 is not indicated, replace the original throttle actuator control module (see page 11-278), then go to step 17.

BACK

Protected by AR

13. Disconnect the throttle body 6P connector.

14. Check for continuity between throttle actuator control module 16P connector terminals No. 10 and No. 12.

THROTTLE ACTUATOR CONTROL MODULE 16P CONNECTOR

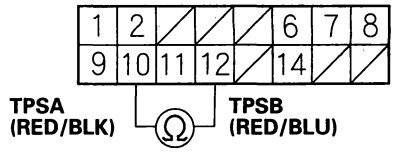

Wire side of female terminals

Is there continuity?

YES—Repair short in the wires between the TPSA line and the TPSB line, then go to step 17.

NO—Go to step 15.

15. Turn the ignition switch OFF.

16. Replace the throttle body (see page 11-348).

17. Reconnect all connectors.

18. Turn the ignition switch ON (II).

19. Reset the ECM/PCM with the HDS.

20. Do the ECM/PCM idle learn procedure (see page 11-302).

21. Check for Temporary DTCs or DTCs with the HDS.

Are any Temporary DTCs or DTCs indicated?

YES—If DTC P2135 is indicated, check for poor connections or loose terminals at the throttle body and the throttle actuator control module, then go to step 1. If any other Temporary DTCs or DTCs are indicated, go to the indicated DTC's troubleshooting.

NO—Troubleshooting is complete. ■

Protected by AR

DTC Troubleshooting (cont'd)

DTC P2138: APP Sensor A/B (Throttle Position Sensor D/E) Incorrect Voltage Correlation

NOTE: Before you troubleshoot, record all freeze data and any on-board snapshot, and review the general troubleshooting information (see page 11-3).

1. Turn the ignition switch ON (II).
2. Clear the DTC with HDS.
3. Press the accelerator pedal to the floor.
4. Check for Temporary DTCs or DTCs with the HDS.

   Is DTC P2138 indicated?

   YES—Go to step 5.

   NO—Intermittent failure, system is OK at this time. Check for poor connections or loose terminals at the APP sensor and the ECM/PCM. ■
5. Check APP SENSOR A and APP SENSOR B in the DATA LIST with the HDS.

   Are they the same voltage?

   YES—Go to step 6.

   NO—Go to step 11.
6. Turn the ignition switch OFF.
7. Jump the SCS line with the HDS.
8. Disconnect the APP sensor 6P connector.
9. Disconnect ECM/PCM connector D (17P).
10. Check for continuity between ECM/PCM connector terminals D3 and D9.

ECM/PCM CONNECTOR D (17P)

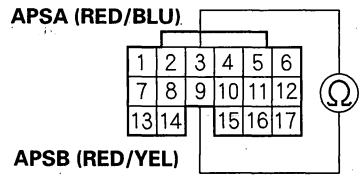

Wire side of female terminals

Is there continuity?

YES—Repair short in the wires between the ECM/PCM terminals (D3, D9), then go to step 13.

NO—Go to step 21.

11. Turn the ignition switch OFF.
12. Replace the APP sensor (see page 11-278).
13. Reconnect all connectors.
14. Turn the ignition switch ON (II).
15. Reset the ECM/PCM with the HDS.
16. Do the ECM/PCM idle learn procedure (see page 11-302).
17. Turn the ignition switch OFF.
18. Turn the ignition switch ON (II).
19. Press the accelerator pedal to the floor.

BACK

Protected by AR

20. Check for Temporary DTCs or DTCs with the HDS.

    Are any Temporary DTCs or DTCs indicated?

    YES—If DTC P2138 is indicated, check for poor connections or loose terminals at the APP sensor and the ECM/PCM, then go to step 1. If any other Temporary DTCs or DTCs are indicated, go to the indicated DTC's troubleshooting.

    NO—Troubleshooting is complete. ■

21. Update the ECM/PCM if it does not have the latest software, or substitute a known-good ECM/PCM (see page 11-6).

22. Turn the ignition switch OFF.

23. Turn the ignition switch ON (II).

24. Press the accelerator pedal to the floor.

25. Check for Temporary DTCs or DTCs with the HDS.

    Are any Temporary DTCs or DTCs indicated?

    YES—If DTC P2138 is indicated, check for poor connections or loose terminals at the APP sensor and the ECM/PCM, then go to step 1. If any other Temporary DTCs or DTCs are indicated, go to the indicated DTC's troubleshooting.

    NO—If the ECM/PCM was updated, troubleshooting is complete. If the ECM/PCM was substituted, replace the original ECM/PCM (see page 11-224). ■

Protected by AR

DTC Troubleshooting (cont'd)

DTC P2176: Throttle Actuator Control System Idle Position Not Learned

⚠CAUTION

Do not insert your fingers into the installed throttle body when you turn the ignition switch ON (II) or while the ignition switch is ON (II). If you do, you will seriously injure your fingers if the throttle valve is activated.

NOTE:
- Before you troubleshoot, record all freeze data and any on-board snapshot, and review the general troubleshooting information (see page 11-3).
- If DTC P2135 is stored at the same time as DTC P2176, troubleshoot DTC P2135 first, then recheck for DTC P2176.

1. Turn the ignition switch ON (II).
2. Clear the DTC with the HDS.
3. Turn the ignition switch OFF.
4. Turn the ignition switch ON (II), and wait 10 seconds.
5. Check for Temporary DTCs or DTCs with the HDS.

   Is DTC P2176 indicated?

   YES—Go to step 6.

   NO—Intermittent failure, system is OK at this time. Check for poor connections or loose terminals at the throttle body and the throttle actuator control module, then clean the throttle body (see page 11-343).■
6. Turn the ignition switch OFF.
7. Disconnect the intake air duct from the throttle body.
8. Turn the ignition switch ON (II).
9. Clear the DTC with the HDS.
10. Do the ETCS TEST in the INSPECTION MENU with the HDS.
11. Visually check the throttle valve operation.

    NOTE: Be careful not to pinch your fingers. Keep your hands away from the throttle valve.

    Does the throttle valve move to its fully closed position?

    YES—Go to step 12.

    NO—Go to step 13.
12. Check for sludge or carbon on the throttle valve.

    Is there sludge or carbon on the throttle valve?

    YES—Clean the throttle body (see page 11-343), then go to step 21 and recheck.

    NO—Go to step 18.
13. Turn the ignition switch OFF.
14. Disconnect the throttle body 6P connector.
15. Disconnect the throttle actuator control module 16P connector.
16. Connect throttle body 6P connector terminals No. 5 and No. 6 with a jumper wire.

THROTTLE BODY 6P CONNECTOR

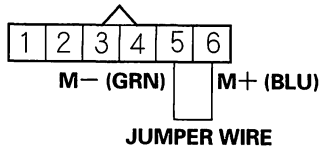

Wire side of female terminals

BACK

Protected by AR

17. Check for continuity between throttle actuator control module 16P connector terminals No. 1 and No. 8.

THROTTLE ACTUATOR CONTROL MODULE 16P CONNECTOR

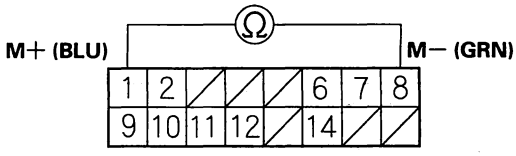

Wire side of female terminals

Is there continuity?

YES—Substitute a known-good throttle actuator control module (see page 11-278), then go to step 20 and recheck. If DTC P2176 is not indicated, replace the original throttle actuator control module (see page 11-278), then go to step 20.

NO—Repair open in the wires between the throttle body and the throttle actuator control module (motor drive lines), then go to step 20.

18. Turn the ignition switch OFF.
19. Replace the throttle body (see page 11-348).
20. Reconnect all connectors.
21. Turn the ignition switch ON (II).
22. Reset the ECM/PCM with the HDS.
23. Do the ECM/PCM idle learn procedure (see page 11-302).
24. Turn the ignition switch OFF.
25. Turn the ignition switch ON (II), and wait 10 seconds.
26. Check for Temporary DTCs or DTCs with the HDS.

Are any Temporary DTCs or DTCs indicated?

YES—If DTC P2176 is indicated, check for poor connections or loose terminals at the throttle body and the throttle actuator control module, then clean the throttle body (see page 11-343), and go to step 1. If any other Temporary DTCs or DTCs are indicated, go to the indicated DTC's troubleshooting.

NO—Troubleshooting is complete. ■

Protected by AR

DTC Troubleshooting (cont'd)

DTC P2552: Throttle Actuator Control Module Relay Malfunction

NOTE: Before you troubleshoot, record all freeze data and any on-board snapshot, and review the general troubleshooting information (see page 11-3).

1. Turn the ignition switch ON (II).
2. Clear the DTC with the HDS.
3. Do the ETCS TEST in the INSPECTION MENU with the HDS.

   Is the RELAY Circuit OK?

   YES—Intermittent failure, system is OK at this time. Check for poor connections or loose terminals at the throttle actuator control module relay, the throttle actuator control module, and the ECM/PCM. ■

   NO—Go to step 4.
4. Turn the ignition switch OFF.
5. Jump the SCS line with the HDS.
6. Remove the throttle actuator control module relay (A).

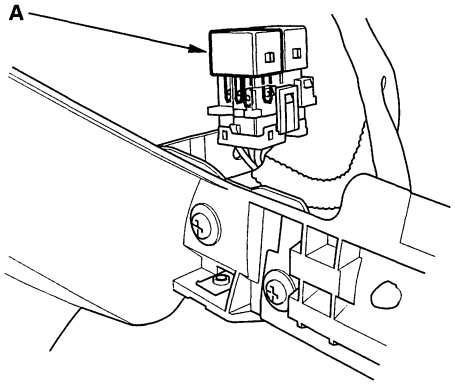

7. Disconnect ECM/PCM connector A (31P).
8. Check for continuity between ECM/PCM connector terminal A3 and body ground.

ECM/PCM CONECTOR A (31P)

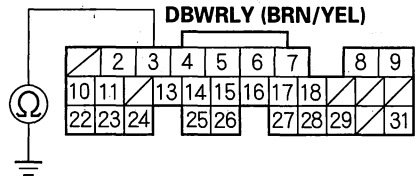

Wire side of female terminals

Is there continuity?

YES—Repair short in the wire between the throttle actuator control module relay and the ECM/PCM (A3), then go to step 10.

NO—Go to step 9.

9. Test the throttle actuator control module relay (see page 22-51).

   Is the relay OK?

   YES—Go to step 17.

   NO—Replace the throttle actuator control module relay, then go to step 10.

BACK

Protected by AR

10. Reconnect ECM/PCM connector A (31P).
11. Turn the ignition switch ON (II).
12. Reset the ECM/PCM with the HDS.
13. Do the ECM/PCM idle learn procedure (see page 11-302).
14. Turn the ignition switch OFF.
15. Turn the ignition switch ON (II), and wait 10 seconds.
16. Check for Temporary DTCs or DTCs with the HDS.

    Are any Temporary DTCs or DTCs indicated?

    YES—If DTC P2552 is indicated, check for poor connections or loose terminals at the throttle actuator control module relay, the throttle actuator control module, and the ECM/PCM, then go to step 1. If any other Temporary DTCs or DTCs are indicated, go to the indicated DTC's troubleshooting.

    NO—Troubleshooting is complete. ■
17. Update the ECM/PCM if it does not have the latest software, or substitute a known-good ECM/PCM (see page 11-6).
18. Check for Temporary DTCs or DTCs with the HDS.

    Are any Temporary DTCs or DTCs indicated?

    YES—If DTC P2552 is indicated, check for poor connections or loose terminals at the throttle actuator control module relay, the throttle actuator control module, and the ECM/PCM, then go to step 1. If any other Temporary DTCs or DTCs are indicated, go to the indicated DTC's troubleshooting.

    NO—If the ECM/PCM was updated, troubleshooting is complete. If the ECM/PCM was substituted, replace the original ECM/PCM (see page 11-224). ■

Protected by AR

DTC Troubleshooting (cont'd)

DTC U0107: Lost Communication With Throttle Actuator Control Module

NOTE: Before you troubleshoot, record all freeze data and any on-board snapshot, and review the general troubleshooting information (see page 11-3).

1. Turn the ignition switch ON (II).
2. Clear the DTC with the HDS.
3. Check for Temporary DTCs or DTCs with the HDS.

   Is DTC U0107 indicated?

   YES—Check for poor connections or loose terminals at the throttle body, the throttle actuator control module, and the ECM/PCM, then go to step 50. If the connections are OK, go to step 6.

   NO—Go to step 4.
4. Start the engine.
5. Check for Temporary DTCs or DTCs with the HDS.

   Is DTC U0107 indicated?

   YES—Go to step 46.

   NO—Intermittent failure, system is OK at this time. Check for poor connections or loose terminals at the throttle body, the throttle actuator control module relay, the throttle actuator control module, and the ECM/PCM. ■
6. Clear the DTC with the HDS.
7. Turn the ignition switch OFF.
8. Disconnect the intake air duct from the throttle body.
9. Press the accelerator pedal to the floor.
10. Turn the ignition switch ON (II).
11. Check the throttle valve operation.

    Does it open after the throttle valve closes?

    YES—Go to step 12.

    NO—Go to step 13.
12. Check the throttle valve again.

    Does the throttle valve open fully?

    YES—Go to step 40.

    NO—Go to step 34.
13. Turn the ignition switch OFF.
14. Disconnect the throttle actuator control module 16P connector.
15. Check for continuity between throttle actuator control module 16P connector terminal No. 7 and body ground.

THROTTLE ACTUATOR CONTROL MODULE 16P CONNECTOR

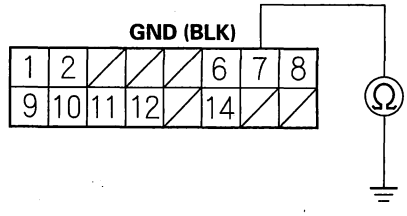

Wire side of female terminals

Is there continuity?

YES—Go to step 16.

NO—Repair open in the wire between the throttle body, the throttle actuator control module, and G101, then go to step 50.

BACK

Protected by AR

16. Remove the throttle actuator control module relay (A).

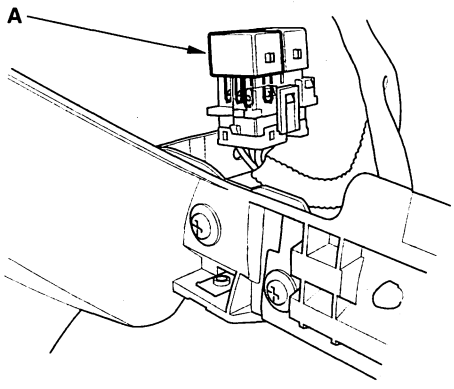

17. Measure voltage between throttle actuator control module relay 4P connector terminal No. 2 and body ground.

THROTTLE ACTUATOR CONTROL MODULE RELAY 4P CONNECTOR

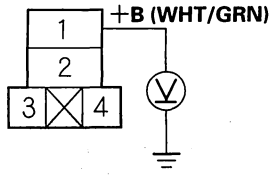

Wire side of female terminals

Is there battery voltage?

YES—Go to step 19.

NO—Go to step 18.

18. Check the No. 1 THROTTLE ACTUATOR CONTROL (15 A) fuse in under-dash fuse/relay box.

Is the fuse OK?

YES—Repair open in the wire between the throttle actuator control module relay (+B line) and the No. 1 THROTTLE ACTUATOR CONTROL (15 A) fuse, then go to step 50.

NO—Repair short in the wire between the throttle actuator control module relay (+B line) and the No. 1 THROTTLE ACTUATOR CONTROL (15 A) fuse, then go to step 50.

19. Install the throttle actuator control module relay.

20. Turn the ignition switch ON (II).

21. Measure voltage between throttle actuator control module 16P connector terminal No. 2 and body ground.

THROTTLE ACTUATOR CONTROL MODULE 16P CONNECTOR

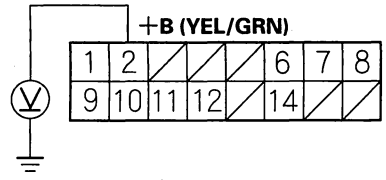

Wire side of female terminals

Is there battery voltage for about 2 seconds?

YES—Substitute a known-good throttle actuator control module (see page 11-278), then go to step 50 and recheck. If DTC U0107 is not indicated, replace the original throttle actuator control module (see page 11-278), then go to step 50.

NO—Go to step 22.

22. Turn the ignition switch OFF.

23. Remove the throttle actuator control module relay (A).

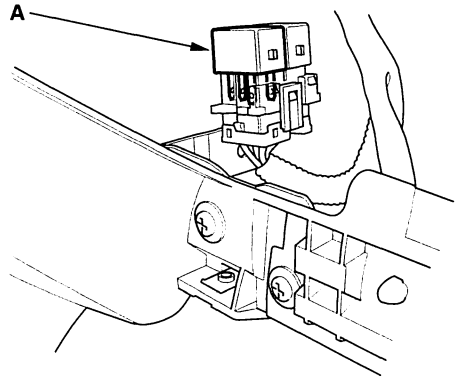

(cont'd)

Protected by AR

DTC Troubleshooting (cont'd)

24. Check the throttle actuator control module relay (see page 22-51).

    Is the throttle actuator control module relay OK?

    YES—Go to step 25.

    NO—Replace the throttle actuator control module relay, then go to step 50.

25. Turn the ignition switch ON (II).

26. Measure voltage between throttle actuator control module relay 4P connector terminal No. 4 and body ground.

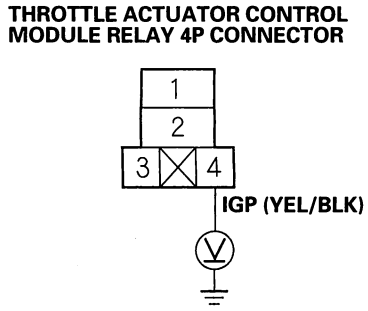

Wire side of female terminals

Is there battery voltage?

YES—Go to step 27.

NO—Repair open in the wire between the throttle actuator control module relay and PGM-FI main relay 1 (FI MAIN), then go to step 50.

27. Turn the ignition switch OFF.

28. Jump the SCS line with the HDS.

29. Disconnect ECM/PCM connector A (31P).

30. Check for continuity between ECM/PCM connector terminal A3 and throttle actuator control module relay 4P connector terminal No. 3.

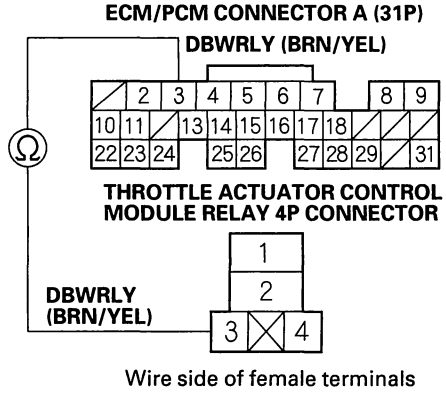

Wire side of female terminals

Is there continuity?

YES—Go to step 31.

NO—Repair open in the wire between the ECM/PCM (A3) and the throttle actuator control module relay, then go to step 50.

BACK

Protected by AR

31. Check for continuity between throttle actuator control module 16P connector terminal No. 2 and body ground.

THROTTLE ACTUATOR CONTROL MODULE 16P CONNECTOR

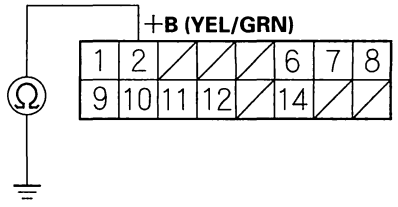

Wire side of female terminals

Is there continuity?

YES—Repair short in the wire between the throttle actuator control module and the throttle actuator control module relay (+B line), then go to step 50.

NO—Go to step 32.

32. Connect throttle actuator control module relay 4P connector terminal No. 2 to body ground with a jumper wire.

THROTTLE ACTUATOR CONTROL MODULE RELAY 4P CONNECTOR

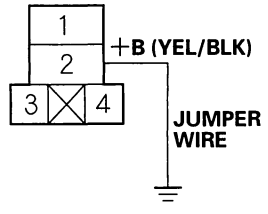

Wire side of female terminals

33. Check for continuity between throttle actuator control module 16P connector terminal No. 2 and body ground.

THROTTLE ACTUATOR CONTROL MODULE 16P CONNECTOR

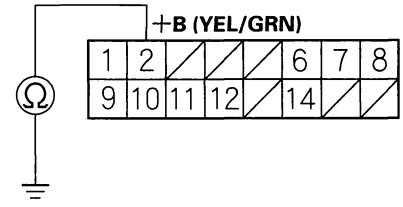

Wire side of female terminals

Is there continuity?

YES—Go to step 56.

NO—Repair open in the wire between the throttle actuator control module and the throttle actuator control module relay (+B line), then go to step 50.

(cont'd)

Protected by AR

DTC Troubleshooting (cont'd)

34. Turn the ignition switch OFF.
35. Jump the SCS line with the HDS.
36. Disconnect the throttle actuator control module 16P connector.
37. Disconnect ECM/PCM connector E (31P).
38. Check for continuity between ECM/PCM connector terminal E25 and body ground.

ECM/PCM CONNECTOR E (31P)

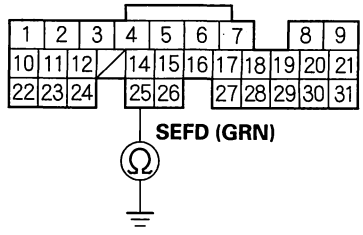

Wire side of female terminals

Is there continuity?

YES—Repair short in the wire between the ECM/PCM (E25) and the throttle actuator control module, then go to step 50.

NO—Go to step 39.

39. Check for continuity between ECM/PCM connector terminal E25 and throttle actuator control module 16P connector terminal No. 6.

ECM/PCM CONNECTOR E (31P)

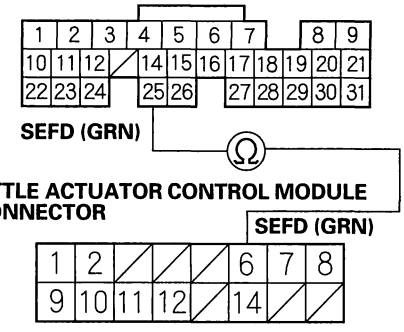

Wire side of female terminals

Is there continuity?

YES—Substitute a known-good throttle actuator control module (see page 11-278), then go to step 50 and recheck. If DTC U0107 is not indicated, replace the original throttle actuator control module (see page 11-278), then go to step 50. If DTC U0107 is indicated, then go to step 56.

NO—Repair open in the wire between the ECM/PCM (E25) and the throttle actuator control module, then go to step 50.

BACK

Protected by AR

40. Turn the ignition switch OFF.

41. Jump the SCS line with the HDS.

42. Disconnect the throttle actuator control module 16P connector.

43. Disconnect ECM/PCM connector E (31P).

44. Check for continuity between ECM/PCM connector terminal E26 and body ground.

ECM/PCM CONNECTOR E (31P)

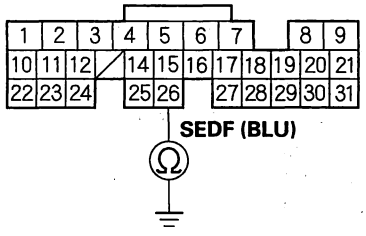

Wire side of female terminals

Is there continuity?

YES—Repair short in the wire between the ECM/PCM (E26) and the throttle actuator control module, then go to step 50.

NO—Go to step 45.

45. Check for continuity between ECM/PCM connector terminal E26 and throttle actuator control module 16P connector terminal No. 14.

ECM/PCM CONNECTOR E (31P)

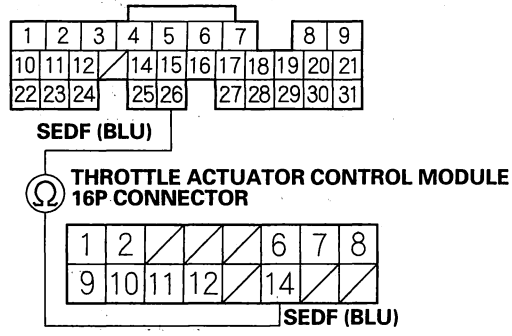

Wire side of female terminals

Is there continuity?

YES—Substitute a known-good throttle actuator control module (see page 11-278), then go to step 50 and recheck. If DTC U0107 is not indicated, replace the original throttle actuator control module (see page 11-278), then go to step 50. If DTC U0107 is indicated, then go to step 56.

NO—Repair open in the wire between the ECM/PCM (E26) and the throttle actuator control module, then go to step 50.

(cont'd)

Protected by AR

DTC Troubleshooting (cont'd)

46. Turn the ignition switch OFF.
47. Jump the SCS line with the HDS.
48. Disconnect ECM/PCM connectors B (24P) and E (31P).
49. Check for continuity between body ground and ECM/PCM connector terminals B15 and E3 individually.

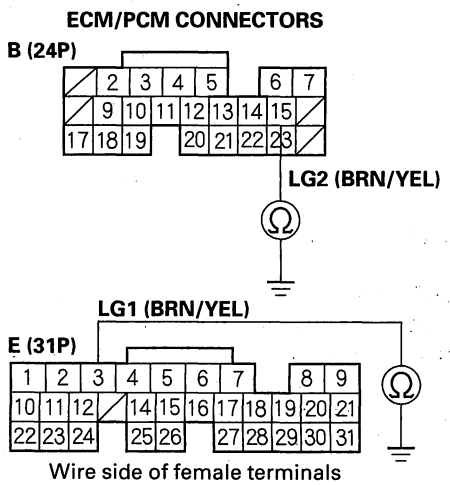

Is there continuity?

YES—Check for poor connections or loose terminals at the throttle body, the throttle actuator control module relay, the throttle actuator control module, and the ECM/PCM, then go to step 1.

NO—Repair open in the wire between the ECM/PCM (B15, E3) and G101, then go to step 50.

50. Turn the ignition switch OFF.
51. Reconnect all connectors.
52. Turn the ignition switch ON (II).
53. Reset the ECM/PCM with the HDS.
54. Do the ECM/PCM idle learn procedure (see page 11-302).
55. Check for Temporary DTCs or DTCs with the HDS.

    Are any Temporary DTCs or DTCs indicated?

    YES—If DTC U0107 is indicated, check for poor connections or loose terminals at the throttle body, the throttle actuator control module relay, the throttle actuator control module, and the ECM/PCM, then go to step 1. If any other Temporary DTCs or DTCs are indicated, go to the indicated DTC's troubleshooting.

    NO—Troubleshooting is complete. ■
56. Update the ECM/PCM if it does not have the latest software, or substitute a known-good ECM/PCM (see page 11-6).
57. Check for Temporary DTCs or DTCs with the HDS.

    Are any Temporary DTCs or DTCs indicated?

    YES—If DTC U0107 is indicated, check for poor connections or loose terminals at the throttle body, the throttle actuator control module relay, the throttle actuator control module, and the ECM/PCM, then go to step 1. If any other Temporary DTCs or DTCs are indicated, go to the indicated DTC's troubleshooting.

    NO—If the ECM/PCM was updated, troubleshooting is complete. If the ECM/PCM was substituted, replace the original ECM/PCM (see page 11-224). ■

BACK

Protected by AR

APP Sensor Signal Inspection

NOTE:
- This procedure checks the APP sensor in its fully closed position. In any other position, the APP sensor stores DTCs which are covered in other troubleshooting procedures.
- Check for Temporary DTCs or DTCs with the HDS before doing this procedure. If any DTCs are indicated, troubleshoot them first, then do this procedure.
- Press the accelerator pedal several times to check its. If it does not operate properly, check the pedal, the throttle cable, and the APP sensor individually. If you find a problem in one of them, replace the part(s) that caused the problem.

1. Connect the HDS to the data link connector (DLC) (A) located under the driver's side of the dashboard.

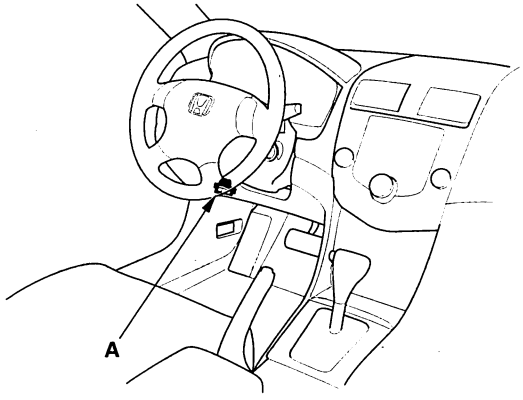

2. Turn the ignition switch ON (II).

3. Make sure the accelerator pedal is not pressed, then check the APP SENSOR in the DATA LIST with the HDS.

   - If it is below 2 %, the APP sensor is OK.
   - If it is above 2 %, adjust the throttle cable (see page 11-346), then go to step 4.

4. Make sure the accelerator pedal is not pressed, then check the APP SENSOR in the DATA LIST with the HDS.

   - If it is below 2 %, the APP sensor is OK.
   - If it is above 2 %, update the ECM/PCM if it does not have the latest software, or substitute a known-good ECM/PCM (see page 11-6), then go to step 5.

5. Make sure the accelerator pedal is not pressed, then check the APP SENSOR in the DATA LIST with the HDS.

   - If it is below 2 %, the APP sensor is OK.
   - If it is above 2 %, replace the APP sensor (see page 11-278), then go to step 1.

Protected by AR

APP Sensor Replacement

1. Remove the throttle cable (see page 11-347).
2. Disconnect the accelerator pedal position (APP) sensor 6P connector (A).

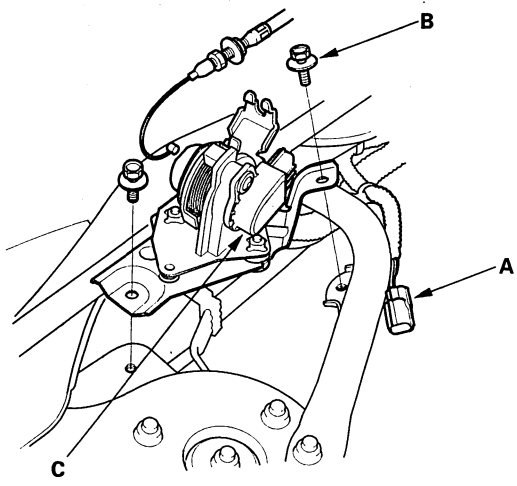

3. Remove the bolts (B) and the APP sensor (C).
4. Install the sensor in the reverse order of removal.

Throttle Actuator Control Module Replacement

1. Remove the right kick panel, refer to the 2003-2006 Accord Service Manual 2-door (see page 20-90); 4-door (see page 20-91).
2. Disconnect the throttle actuator control module 16P connector (A).

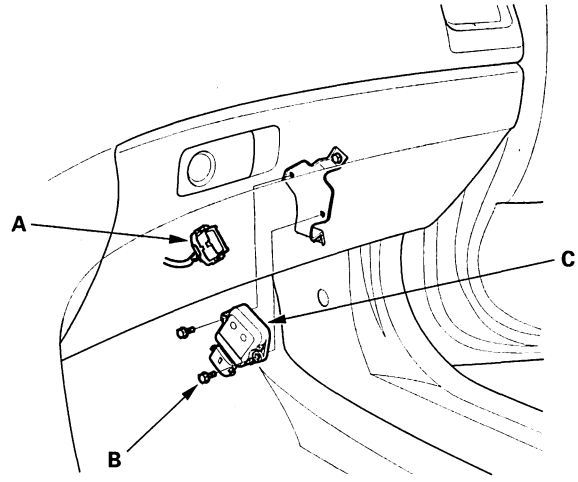

3. Remove the bolts (B) and the throttle actuator control module (C).
4. Install the control module in the reverse order of removal.

BACK

Protected by AR

Component Location Index

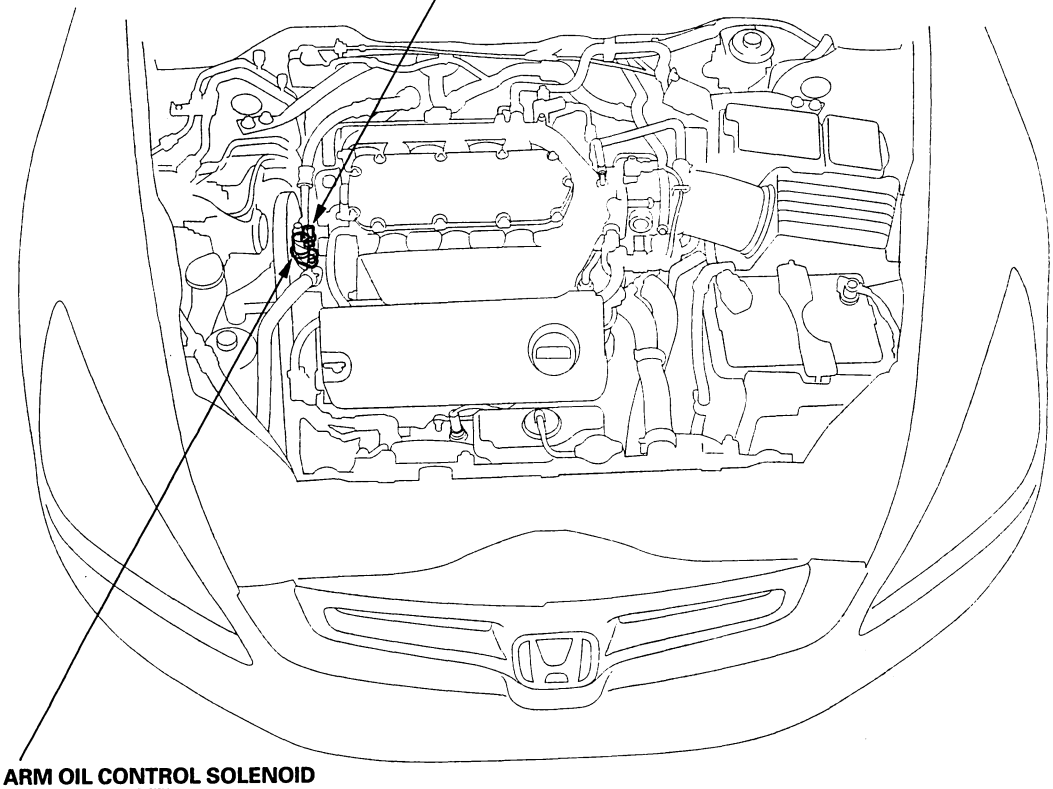

Protected by AR

DTC Troubleshooting

DTC P2646: Rocker Arm Oil Pressure Switch (VTEC Oil Pressure Switch) Circuit Low Voltage

Special Tools Required
- Pressure gauge adapter 07NAJ-P07010A
- A/T low pressure gauge w/panel 07406-0070300
- A/T pressure hose 07406-0020201
- A/T pressure hose, 2,210 mm 07MAJ-PY4011A
- A/T pressure adapter 07MAJ-PY40120
- Oil pressure hose 07ZAJ-S5A0200

NOTE: Before you troubleshoot, record all freeze data and any on-board snapshot, and review the general troubleshooting information (see page 11-3).

1. Check the engine oil level.

   Is the level OK?

   YES—Go to step 2.

   NO—Adjust the engine oil to the proper level, then go to step 19.

2. Turn the ignition switch ON (II).

3. Clear the DTC with the HDS.

4. Do the VTEC TEST in the INSPECTION MENU with the HDS.

   Is the result OK?

   YES—Intermittent failure, system is OK at this time. Check for poor connections or loose terminals at the rocker arm oil pressure switch (VTEC oil pressure switch), the rocker arm oil control solenoid (VTEC solenoid valve) and the ECM/PCM.■

   NO—Go to step 5.

5. Turn the ignition switch OFF.

6. Disconnect the rocker arm oil pressure switch (VTEC oil pressure switch) 2P connector.

7. Turn the ignition switch ON (II).

8. Check the VTEC PRES SW in the DATA LIST with the HDS.

   Is ON indicated?

   YES—Go to step 14.

   NO—Go to step 9.

9. Turn the ignition switch OFF.

10. Remove the rocker arm oil pressure switch (VTEC oil pressure switch) (A) and install the special tools as shown, then install the rocker arm oil pressure switch (VTEC oil pressure switch) on the oil pressure gauge adapter (B).

    NOTE: Install the switch in the reverse order of removal with a new O-ring.

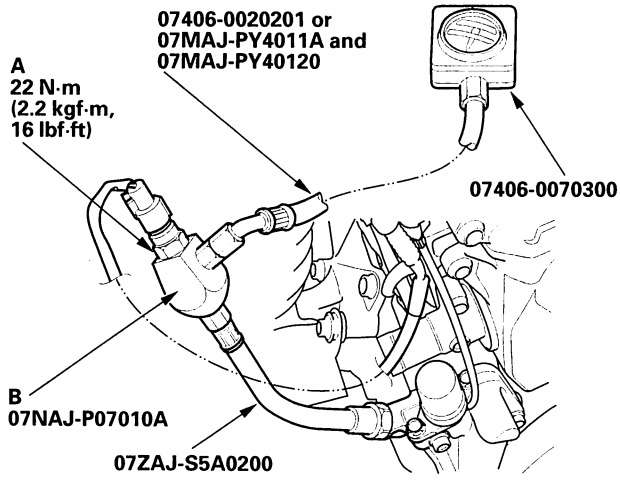

11. Start the engine.

12. Do the VTEC TEST in the INSPECTION MENU with the HDS.

13. Check the oil pressure.

    Does the oil pressure increase to at least 392 kPa (56.9 psi, 4.0 kgf/cm²)?

    YES—Replace the rocker arm oil pressure switch (VTEC oil pressure switch) (see page 11-289), then go to step 18.

    NO—Inspect the VTEC system. If it is OK. Replace the rocker arm oil control solenoid (VTEC solenoid valve) (see page 11-289), then go to step 18.

BACK

Protected by AR

14. Turn the ignition switch OFF.
15. Jump the SCS line with the HDS.
16. Disconnect ECM/PCM connector E (31P).
17. Check for continuity between ECM/PCM connector terminal E23 and body ground.

ECM/PCM CONNECTOR E (31P)

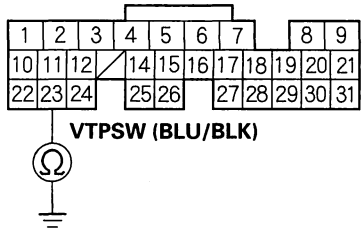

Wire side of female terminals

Is there continuity?

YES—Repair short in the wire between the ECM/PCM (E23) and the rocker arm oil pressure switch (VTEC oil pressure switch), then go to step 18.

NO—Go to step 25.

18. Reconnect all connectors.
19. Turn the ignition switch ON (II).
20. Reset the ECM/PCM with the HDS.
21. Do the ECM/PCM idle learn procedure (see page 11-302).
22. Do the VTEC TEST in the INSPECTION MENU with the HDS.
23. Check for Temporary DTCs or DTCs with the HDS.

    Are any Temporary DTCs or DTCs indicated?

    YES—If DTC P2646 is indicated, check for poor connections or loose terminals at the rocker arm oil pressure switch (VTEC oil pressure switch), the rocker arm oil control solenoid (VTEC solenoid valve), and the ECM/PCM, then go to step 1. If any other Temporary DTCs or DTCs are indicated, go to the indicated DTC's troubleshooting.

    NO—Go to step 24.

24. Monitor the OBD STATUS for DTC P2646 in the DTCs MENU with the HDS.

    Does the screen indicate PASSED?

    YES—Troubleshooting is complete.■

    NO—If the screen indicates FAILED, go to step 1 and recheck. If the screen indicates NOT COMPLETED, go to step 22 and recheck.

25. Update the ECM/PCM if it does not have the latest software, or substitute a known-good ECM/PCM (see page 11-6).
26. Do the VTEC TEST in the INSPECTION MENU with the HDS.
27. Check for Temporary DTCs or DTCs with the HDS.

    Are any Temporary DTCs or DTCs indicated?

    YES—If DTC P2646 is indicated, check for poor connections or loose terminals at the rocker arm oil pressure switch (VTEC oil pressure switch), the rocker arm oil control solenoid (VTEC solenoid valve), and the ECM/PCM, then go to step 1. If any other Temporary DTCs or DTCs are indicated, go to the indicated DTC's troubleshooting.

    NO—If the ECM/PCM was updated, troubleshooting is complete. If the ECM/PCM was substituted, replace the original ECM/PCM (see page 11-224).■

Protected by AR

DTC Troubleshooting (cont'd)

DTC P2647: Rocker Arm Oil Pressure Switch (VTEC Oil Pressure Switch) Circuit High Voltage

NOTE: Before you troubleshoot, record all freeze data and any on-board snapshot, and review the general troubleshooting information (see page 11-3).

1. Check the engine oil level.

   Is the level OK?

   YES—Go to step 2.

   NO—Adjust the engine oil to the proper level, then go to step 14.

2. Turn the ignition switch ON (II).

3. Clear the DTC with the HDS.

4. Do the VTEC TEST in the INSPECTION MENU with the HDS.

   Is the result OK?

   YES—Intermittent failure, system is OK at this time. Check for poor connections or loose terminals at the rocker arm oil pressure switch (VTEC oil pressure switch) and the ECM/PCM. ■

   NO—Go to step 5.

5. Check the result of step 4.

   - VTEC Switch Failure
   - VTEC Switch Open
   - VTEC Switch SIG Line Open
   - VTEC Switch GND Line Open

   Is the test result any of the above?

   YES—Go to step 6.

   NO—Check for poor connections or loose terminals at the rocker arm oil pressure switch (VTEC oil pressure switch). If it is OK, replace the rocker arm oil control solenoid (VTEC solenoid valve) (see page 11-289), then go to step 14.

6. Turn the ignition switch OFF.

7. Disconnect the rocker arm oil pressure switch (VTEC oil pressure switch) 2P connector.

8. At the rocker arm oil pressure switch (VTEC oil pressure switch), check for continuity between rocker arm oil pressure switch (VTEC oil pressure switch) 2P connector terminals No. 1 and No. 2.

ROCKER ARM OIL PRESSURE SWITCH (VTEC OIL PRESSURE SWITCH) 2P CONNECTOR

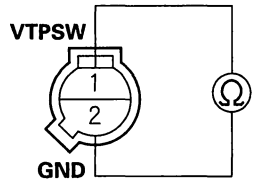

Terminal side of male terminals

Is there continuity?

YES—Go to step 9.

NO—Replace the rocker arm oil pressure switch (VTEC oil pressure switch) (see page 11-289), then go to step 13.

9. Turn the ignition switch ON (II).

BACK

Protected by AR

10. Measure voltage between rocker arm oil pressure switch (VTEC oil pressure switch) 2P connector terminal No. 1 and body ground.

ROCKER ARM OIL PRESSURE SWITCH (VTEC OIL PRESSURE SWITCH) 2P CONNECTOR

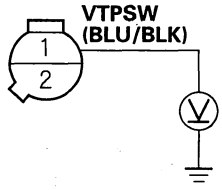

Wire side of female terminals

Is there battery voltage?

YES—Repair open in the wire between the rocker arm oil pressure switch (VTEC oil pressure switch) and G101, then go to step 13.

NO—Go to step 11.

11. Measure voltage between ECM/PCM connector terminal E23 and body ground.

ECM/PCM CONNECTOR E (31P)

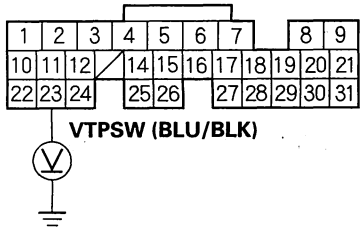

Wire side of female terminals

Is there battery voltage?

YES—Repair open in the wire between the ECM/PCM (E23) and the rocker arm oil pressure switch (VTEC oil pressure switch), then go to step 12.

NO—Go to step 19.

12. Turn the ignition switch OFF.

13. Reconnect the rocker arm oil pressure switch (VTEC oil pressure switch) 2P connector.

14. Turn the ignition switch ON (II).

15. Reset the ECM/PCM with the HDS.

16. Do the ECM/PCM idle learn procedure (see page 11-302).

17. Check for Temporary DTCs or DTCs with the HDS.

Are any Temporary DTCs or DTCs indicated?

YES—If DTC P2647 is indicated, check for poor connections or loose terminals at the rocker arm oil pressure switch (VTEC oil pressure switch) and the ECM/PCM, then go to step 1. If any other Temporary DTCs or DTCs are indicated, go to the indicated DTC's troubleshooting.

NO—Go to step 18.

18. Monitor the OBD STATUS for DTC P2647 in the DTCs MENU with the HDS.

Does the screen indicate PASSED?

YES—Troubleshooting is complete.■

NO—If the screen indicates FAILED, go to step 1 and recheck. If the screen indicates NOT COMPLETED, go to step 16 and recheck.

19. Update the ECM/PCM if it does not have the latest software, or substitute a known-good ECM/PCM (see page 11-6).

20. Check for Temporary DTCs or DTCs with the HDS.

Are any Temporary DTCs or DTCs indicated?

YES—If DTC P2647 is indicated, check for poor connections or loose terminals at the rocker arm oil pressure switch (VTEC oil pressure switch) and the ECM/PCM, then go to step 1. If any other Temporary DTCs or DTCs are indicated, go to the indicated DTC's troubleshooting.

NO—If the ECM/PCM was updated, troubleshooting is complete. If the ECM/PCM was substituted, replace the original ECM/PCM (see page 11-224).■

Protected by AR

DTC Troubleshooting (cont'd)

DTC P2648: Rocker Arm Oil Control Solenoid (VTEC Solenoid Valve) Circuit Low Voltage

NOTE: Before you troubleshoot, record all freeze data and any on-board snapshot, and review the general troubleshooting information (see page 11-3).

1. Turn the ignition switch ON (II).
2. Clear the DTC with the HDS.
3. Do the VTEC TEST in the INSPECTION MENU with the HDS.

   Is the result OK?

   YES—Intermittent failure, system is OK at this time. Check for poor connections or loose terminals at the rocker arm oil control solenoid (VTEC solenoid valve) and the ECM/PCM. ■

   NO—Go to step 4.
4. Turn the ignition switch OFF.
5. Disconnect the rocker arm oil control solenoid (VTEC solenoid valve) 1P connector.
6. Measure resistance between the rocker arm oil control solenoid (VTEC solenoid valve) 1P connector terminal and the solenoid valve body.

ROCKER ARM OIL CONTROL SOLENOID (VTEC SOLENOID VALVE) 1P CONNECTOR

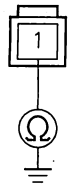

Terminal side of male terminals

Is there 14—30 Ω at room temperature?

YES—Go to step 7.

NO—Go to step 10.

7. Jump the SCS line with the HDS.
8. Disconnect ECM/PCM connector E (31P).
9. Check for continuity between ECM/PCM connector terminal E22 and body ground.

ECM/PCM CONNECTOR E (31P)

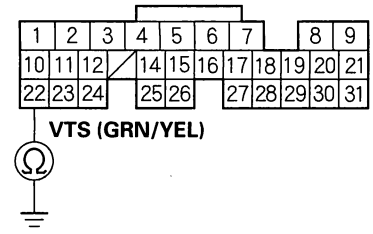

Wire side of female terminals

Is there continuity?

YES—Repair short in the wire between the ECM/PCM (E22) and the rocker arm oil control solenoid (VTEC solenoid valve), then go to step 11.

NO—Go to step 18.

10. Replace the rocker arm oil control solenoid (VTEC solenoid valve) (see page 11-289).
11. Reconnect all connectors.
12. Turn the ignition switch ON (II).
13. Reset the ECM/PCM with the HDS.

BACK

Protected by AR

14. Do the ECM/PCM idle learn procedure (see page 11-302).

15. Do the VTEC TEST in the INSPECTION MENU with the HDS.

16. Check for Temporary DTCs or DTCs with the HDS.

    Are any Temporary DTCs or DTCs indicated?

    YES—If DTC P2648 is indicated, check for poor connections or loose terminals at the rocker arm oil control solenoid (VTEC solenoid valve) and the ECM/PCM, then go to step 1. If any other Temporary DTCs or DTCs are indicated, go to the indicated DTC's troubleshooting.

    NO—Go to step 17.

17. Monitor the OBD STATUS for DTC P2648 in the DTCs MENU with the HDS.

    Does the screen indicate PASSED?

    YES—Troubleshooting is complete.■

    NO—If the screen indicates FAILED, go to step 1 and recheck. If the screen indicates NOT COMPLETED, go to step 15 and recheck.

18. Update the ECM/PCM if it does not have the latest software, or substitute a known-good ECM/PCM (see page 11-6).

19. Do the VTEC TEST in the INSPECTION MENU with the HDS.

20. Check for Temporary DTCs or DTCs with the HDS.

    Are any Temporary DTCs or DTCs indicated?

    YES—If DTC P2648 is indicated, check for poor connections or loose terminals at the rocker arm oil control solenoid (VTEC solenoid valve) and the ECM/PCM, then go to step 1. If any other Temporary DTCs or DTCs are indicated, go to the indicated DTC's troubleshooting.

    NO—If the ECM/PCM was updated, troubleshooting is complete. If the ECM/PCM was substituted, replace the original ECM/PCM (see page 11-224).■

Protected by AR

DTC Troubleshooting (cont'd)

DTC P2649: Rocker Arm Oil Control Solenoid (VTEC Solenoid Valve) Circuit High Voltage

NOTE: Before you troubleshoot, record all freeze data and any on-board snapshot, and review the general troubleshooting information (see page 11-3).

1. Turn the ignition switch ON (II).
2. Clear the DTC with the HDS.
3. Start the engine. Hold the engine speed at 3,000 rpm without load (in Park or neutral) until the radiator fan comes on, then let it idle.
4. Check for Temporary DTCs or DTCs with the HDS.

   Is DTC P2649 indicated?

   YES—Go to step 5.

   NO—Intermittent failure, system is OK at this time. Check for poor connections or loose terminals at the rocker arm oil control solenoid (VTEC solenoid valve) and the ECM/PCM. ■
5. Turn the ignition switch OFF.
6. Disconnect the rocker arm oil control solenoid (VTEC solenoid valve) 1P connector.
7. Measure resistance between the rocker arm oil control solenoid (VTEC solenoid valve) 1P connector terminal and the solenoid valve body.

ROCKER ARM OIL CONTROL SOLENOID (VTEC SOLENOID VALVE) 1P CONNECTOR

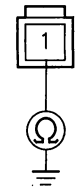

Terminal side of male terminals

Is there 14—30 Ω ?

YES—Go to step 8.

NO—Go to step 12.

8. Jump the SCS line with the HDS.
9. Disconnect ECM/PCM connector E (31P).
10. Connect the rocker arm oil control solenoid (VTEC solenoid valve) 1P connector terminal to body ground with a jumper wire.

ROCKER ARM OIL CONTROL SOLENOID (VTEC SOLENOID VALVE) 1P CONNECTOR

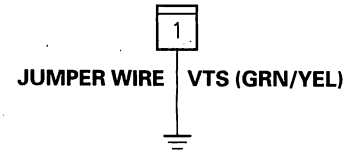

Wire side of female terminals

BACK

Protected by AR

11. Check for continuity between ECM/PCM connector terminal E22 and body ground.

ECM/PCM CONNECTOR E (31P)

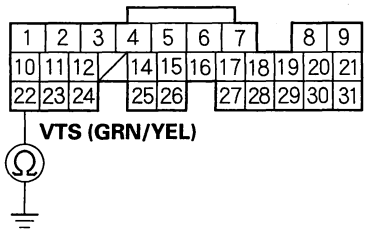

Wire side of female terminals

Is there continuity?

YES—Go to step 20.

NO—Repair open in the wire between the ECM/PCM (E22) and the rocker arm oil control solenoid (VTEC solenoid valve), then go to step 13.

12. Replace the rocker arm oil control solenoid (VTEC solenoid valve) (see page 11-289).

13. Reconnect all connectors.

14. Turn the ignition switch ON (II).

15. Reset the ECM/PCM with the HDS.

16. Do the ECM/PCM idle learn procedure (see page 11-302).

17. Start the engine. Hold the engine speed at 3,000 rpm without load (in Park or neutral) until the radiator fan comes on, then let it idle.

18. Check for Temporary DTCs or DTCs with the HDS.

Are any Temporary DTCs or DTCs indicated?

YES—If DTC P2649 is indicated, check for poor connections or loose terminals at the rocker arm oil control solenoid (VTEC solenoid valve) and the ECM/PCM, then go to step 1. If any other Temporary DTCs or DTCs are indicated, go to the indicated DTC's troubleshooting.

NO—Go to step 19.

19. Monitor the OBD STATUS for DTC P2649 in the DTCs MENU with the HDS.

Does the screen indicate PASSED?

YES—Troubleshooting is complete. ■

NO—If the screen indicates FAILED, go to step 1 and recheck. If the screen indicates NOT COMPLETED, go to step 17 and recheck.

20. Update the ECM/PCM if it does not have the latest software, or substitute a known-good ECM/PCM (see page 11-6).

21. Check for Temporary DTCs or DTCs with the HDS.

Are any Temporary DTCs or DTCs indicated?

YES—If DTC P2649 is indicated, check for poor connections or loose terminals at the rocker arm oil control solenoid (VTEC solenoid valve) and the ECM/PCM, then go to step 1. If any other Temporary DTCs or DTCs are indicated, go to the indicated DTC's troubleshooting.

NO—If the ECM/PCM was updated, troubleshooting is complete. If the ECM/PCM was substituted, replace the original ECM/PCM (see page 11-224). ■

Protected by AR

Rocker Arm Oil Control Solenoid (VTEC Solenoid Valve) Test

1. Disconnect the rocker arm oil control solenoid (VTEC solenoid valve) 1P connector.

2. Measure resistance between the rocker arm oil control solenoid (VTEC solenoid valve) 1P connector terminal (A) and body ground.

   - If the resistance is as specified, go to step 3.
   - If the resistance is not as specified, replace the rocker arm oil control solenoid (VTEC solenoid valve).

   Resistance: 14—30 Ω

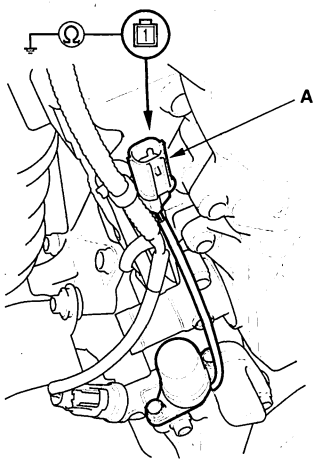

3. Remove the rocker arm oil control solenoid (VTEC solenoid valve)/oil filter assembly (A) from the oil pump, and check the rocker arm oil control solenoid (VTEC solenoid valve) filter (B) for a restriction. If there is a restriction, replace the rocker arm oil control solenoid (VTEC solenoid valve) filter, the engine oil filter, and the engine oil.

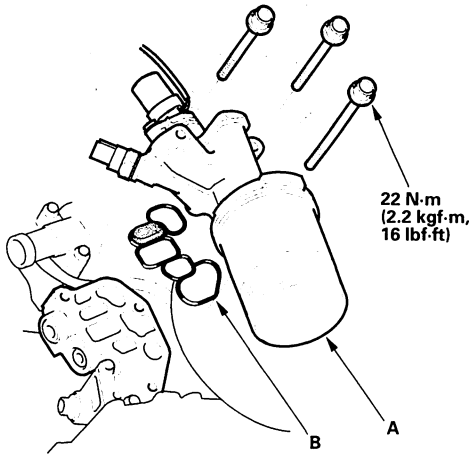

4. If the filter is not restricted, remove the rocker arm oil control solenoid (VTEC solenoid valve) (A) and push the valve (B) with your finger to check its movement. If the valve moves freely, it is normal, check the engine oil pressure (see page 8-6). If the valve binds or sticks, replace the rocker arm oil control valve (VTEC valve) assembly.

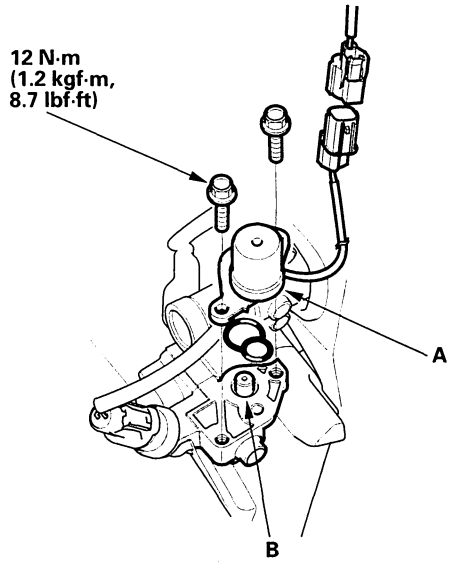

BACK

Protected by AR

Rocker Arm Oil Control Solenoid (VTEC Solenoid Valve) Replacement

1. Disconnect the rocker arm oil control solenoid (VTEC solenoid valve) connector (A).

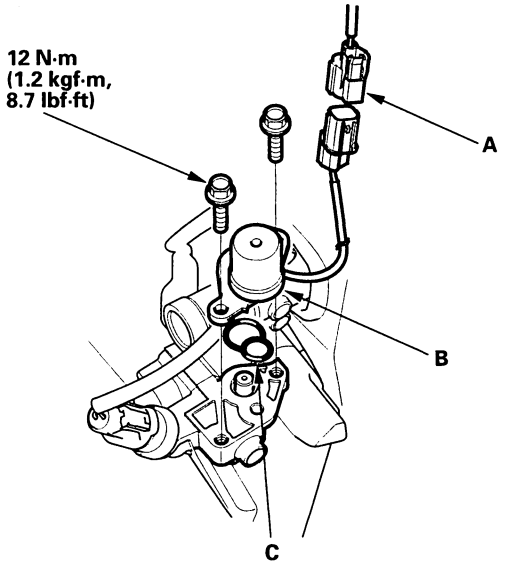

2. Remove the rocker arm oil control solenoid (VTEC solenoid valve) (B).

3. Install the parts in the reverse order of removal with a new O-ring (C).

Rocker Arm Oil Pressure Switch (VTEC Oil Pressure Switch) Removal/Installation

1. Disconnect the rocker arm oil pressure switch (VTEC oil pressure switch) connector (A), then remove the rocker arm oil pressure switch (VTEC oil pressure switch) (B).

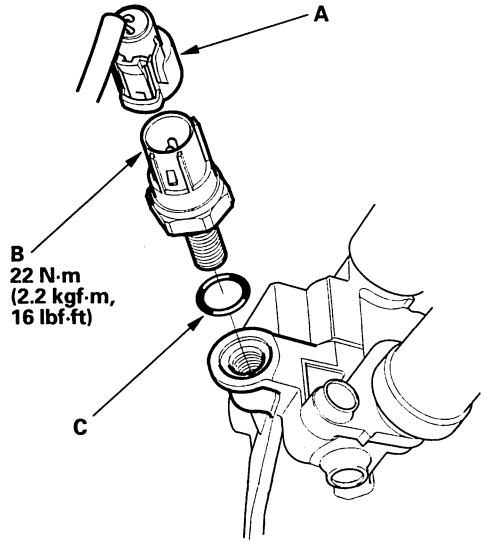

2. Install the switch in the reverse order of removal with a new O-ring (C).

Protected by AR

Idle Control System

Component Location Index

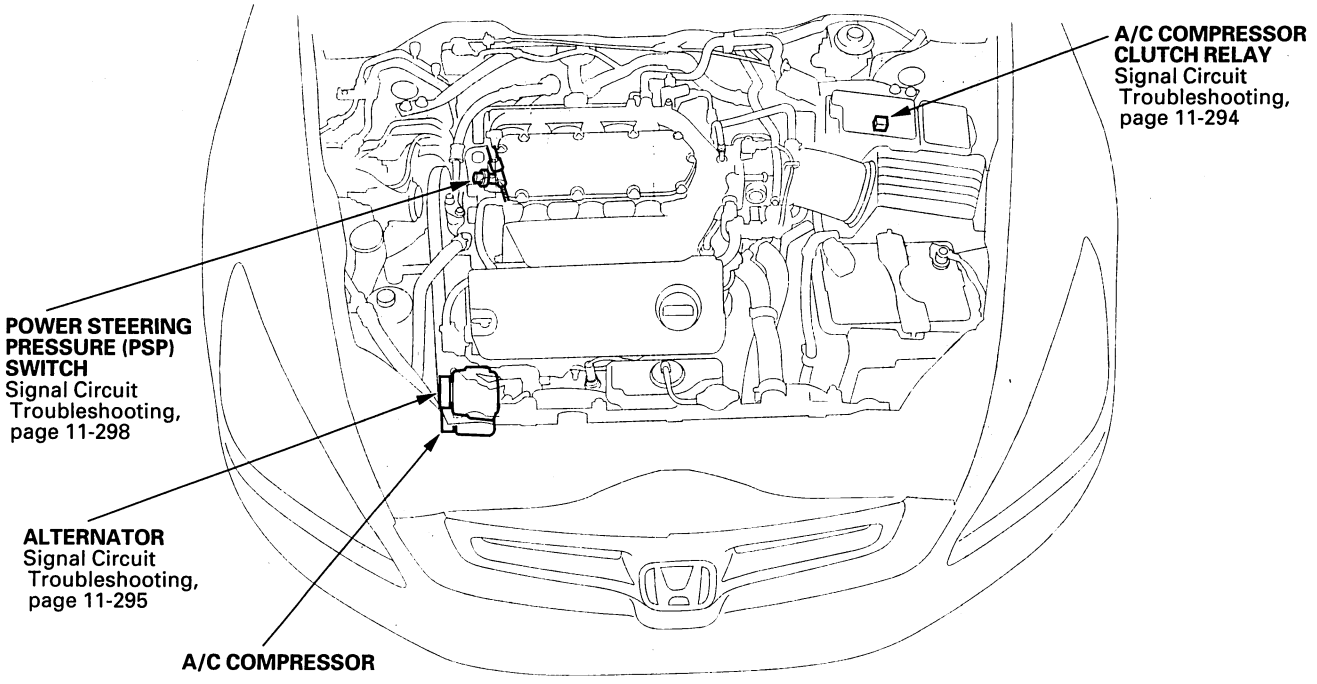

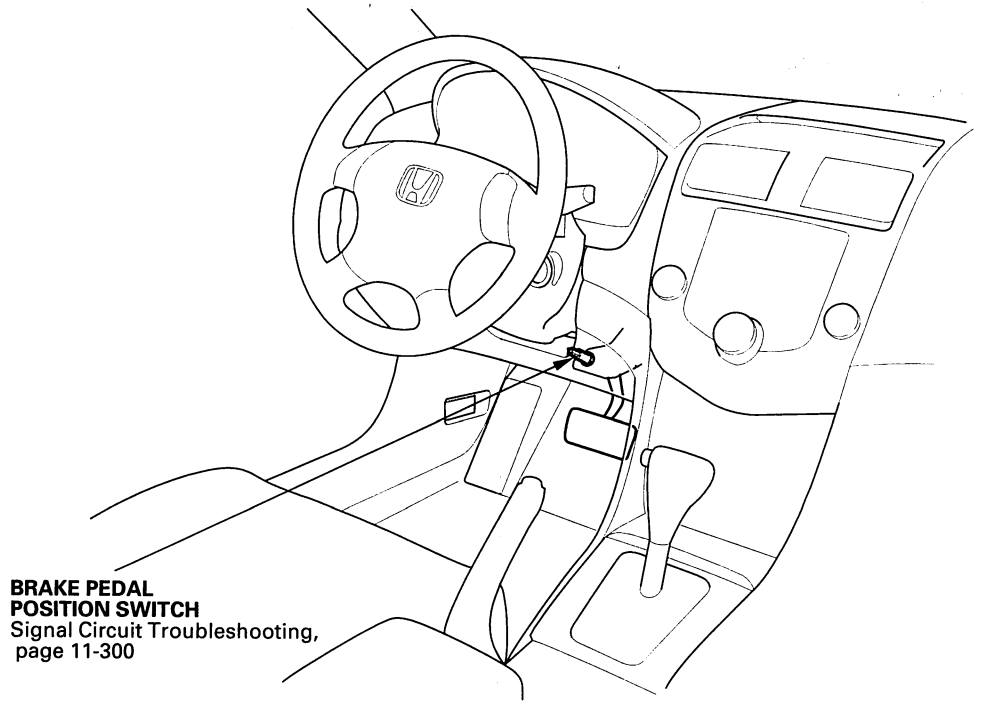

BACK

Protected by AR

DTC Troubleshooting

DTC P0506: Idle Control System RPM Lower Than Expected

NOTE: Before you troubleshoot, record all freeze data and any on-board snapshot, and review the general troubleshooting information (see page 11-3).

1. Turn the ignition switch ON (II).
2. Clear the DTC with the HDS.
3. Start the engine. Hold the engine speed at 3,000 rpm without load (in Park or neutral) until the radiator fan comes on, then let it idle.
4. Check this data in the DATA LIST with the HDS:
   - Engine coolant temperature above 158 °F (70 °C)
   - Intake air temperature above 32 °F (0 °C)
   - Vehicle speed is 0 mph (0 km/h)
   - ST FUEL TRIM between 0.73 and 1.47
   - FSS is CLOSED
5. Monitor the OBD STATUS for DTC P0506 in the DTCs MENU with the HDS.

   Does the screen indicate FAILED?

   YES—Go to step 6.

   NO—If the screen indicates PASSED, go to step 15. If the screen indicates EXECUTING, let the engine idle until a result comes on. If the screen indicates OUT OF CONDITION, go to step 4 and recheck.
6. Remove the intake air duct from the throttle body.
7. Check for dirt, carbon, or damage in the throttle bore.

   Is there dirt, carbon, or damage in the throttle bore?

   YES—If there is dirt or carbon, clean the throttle body (see page 11-343). Also check for damage at the air cleaner element (see page 11-344), then go to step 9. If there is damage in the throttle bore, go to step 8.

   NO—Check the A/C system or power steering system, then go to step 17.
8. Replace the throttle body (see page 11-348).
9. Reset the ECM/PCM with the HDS.
10. Do the ECM/PCM idle learn procedure (see page 11-302).
11. Start the engine. Hold the engine speed at 3,000 rpm without load (in Park or neutral) until the radiator fan comes on, then let it idle.
12. Check this data in the DATA LIST with the HDS:
    - Engine coolant temperature above 158 °F (70 °C)
    - Intake air temperature above 32 °F (0 °C)
    - Vehicle speed is 0 mph (0 km/h)
    - ST FUEL TRIM between 0.73 and 1.47
    - FSS is CLOSED

(cont'd)

Protected by AR

DTC Troubleshooting (cont'd)

13. Check for Temporary DTCs or DTCs with the HDS.

    Are any Temporary DTCs or DTCs indicated?

    YES—If DTC P0506 is indicated, go to step 1 and recheck. If any other Temporary DTCs or DTCs are indicated, go to the indicated DTC's troubleshooting.

    NO—Go to step 14.

14. Monitor the OBD STATUS for DTC P0506 in the DTCs MENU with the HDS.

    Does the screen indicate PASSED?

    YES—Troubleshooting is complete.■

    NO—If the screen indicates FAILED, go to step 1 and recheck. If the screen indicates EXECUTING, let the engine idle until a result comes on. If the screen indicates OUT OF CONDITION, go to step 12 and recheck.

15. Remove the intake air duct from the throttle body.

16. Check for dirt, carbon, or damage in the throttle bore.

    Is there dirt, carbon, or damage in the throttle bore?

    YES—If there is dirt or carbon, clean the throttle body (see page 11-343). Also check for damage at the air cleaner element (see page 11-344), then go to step 9. If there is damage in the throttle bore, go to step 8.

    NO—Go to step 17.

17. Recheck with different load conditions (turn on the headlights, blower motor, rear window defogger and/or A/C, changing the gear position, etc.)

18. Monitor the OBD STATUS for DTC P0506 in the DTCs MENU with the HDS.

    Does the screen indicate PASSED?

    YES—Intermittent failure, system is OK at this time.■

    NO—If the screen indicates FAILED, check the A/C system and/or power steering system, then go to step 1 and recheck. If the screen indicates EXECUTING, let the engine idle until a result comes on. If the screen indicates OUT OF CONDITION, go to step 17 and recheck.

BACK

Protected by AR

DTC P0507: Idle Control System RPM Higher Than Expected

NOTE: Before you troubleshoot, record all freeze data and any on-board snapshot, and review the general troubleshooting information (see page 11-3).

1. Turn the ignition switch ON (II).
2. Clear the DTC with the HDS.
3. Start the engine. Hold the engine speed at 3,000 rpm without load (in Park or neutral) until the radiator fan comes on, then let it idle.
4. Monitor the OBD STATUS for DTC P0507 in the DTCs MENU with the HDS.

   Does the screen indicate FAILED?

   YES—Go to step 5.

   NO—If the screen indicates PASSED, intermittent failure, system is OK at this time. If the screen indicates EXECUTING, let the engine idle until a result comes on. If the screen indicates OUT OF CONDITION, recheck with different load conditions (electrical, A/C, gear position, etc.), then go to step 3.

5. Check for vacuum leaks at these parts:

   - PCV valve
   - PCV hose
   - EVAP canister purge valve
   - Throttle body
   - Intake manifold
   - Brake booster hose

   Are there any leaks?

   YES—Repair or replace faulty parts, then go to step 6.

   NO—Go to step 6.

6. Turn the ignition switch ON (II).
7. Reset the ECM/PCM with the HDS.
8. Do the ECM/PCM idle learn procedure (see page 11-302).
9. Start the engine. Hold the engine speed at 3,000 rpm without load (in Park or neutral) until the radiator fan comes on, then let it idle.
10. Check for Temporary DTCs or DTCs with the HDS.

    Are any Temporary DTCs or DTCs indicated?

    YES—If DTC P0507 is indicated, check for poor connections or loose terminals at the throttle body and the ECM/PCM, then go to step 1. If any other Temporary DTCs or DTCs are indicated, go to the indicated DTC's troubleshooting.

    NO—Go to step 11.

11. Monitor the OBD STATUS for DTC P0507 in the DTCs MENU with the HDS.

    Does the screen indicate PASSED?

    YES—Troubleshooting is complete. ■

    NO—If the screen indicates FAILED, check for poor connections or loose terminals at the throttle body and the ECM/PCM, then go to step 1. If the screen indicates EXECUTING, let the engine idle until a result comes on. If the screen indicates OUT OF CONDITION, recheck with different load conditions (turn on the headlights, blower motor, or A/C; change the gear position, etc.), then go to step 9.

Protected by AR

A/C Signal Circuit Troubleshooting

1. Start the engine.
2. Turn the blower switch on.
3. Turn the A/C switch on.
4. Check the A/C CLUTCH in the DATA LIST with the HDS.

   Is it ON?

   YES—Go to step 5.

   NO—Go to the A/C pressure switch circuit troubleshooting (see page 21-62).■
5. Check the A/C system.

   Does the A/C system operate?

   YES—The air conditioning system circuit is OK.■

   NO—Go to step 6.
6. Turn the ignition switch OFF.
7. Turn the ignition switch ON (II).
8. Activate the A/C CLUTCH in the INSPECTION MENU with the HDS.

   Is there a clicking noise from the A/C compressor clutch?

   YES—Do the A/C system test (see page 21-48).■

   NO—Go to step 9.
9. Momentarily connect under-hood fuse/relay box 16P connector terminal No. 15 to body ground with a jumper wire several times.

UNDER-HOOD FUSE/RELAY BOX 16P CONNECTOR

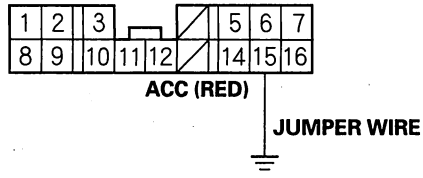

Wire side of female terminals

Is there clicking noise from the A/C compressor clutch?

YES—Repair open in the wire between the ECM/PCM (A27) and the A/C clutch relay.■

NO—Update the ECM/PCM if it does not have the latest software, or substitute a known-good ECM/PCM (see page 11-6), then recheck. If the symptom/indication goes away with a known-good ECM/PCM, replace the original ECM/PCM (see page 11-224).■

BACK

Protected by AR

Alternator FR Signal Circuit Troubleshooting

2003-2004 models

1. Start the engine, and let it idle.
2. Monitor the ALTERNATOR in the DATA LIST with the HDS.
3. Check if the indicated percentage varies when the headlight switch is on.

   Does the percentage vary?

   YES—The alternator signal circuit is OK.■

   NO—Go to step 4.
4. Turn the headlight switch and ignition switch OFF.
5. Disconnect the alternator 4P connector.
6. Turn the ignition switch ON (II).
7. Measure voltage between ECM/PCM connector terminals E3 and E12.

ECM/PCM CONNECTOR E (31P)

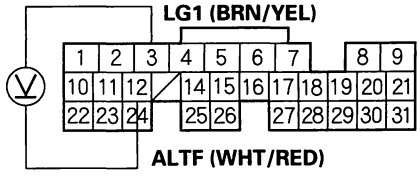

Wire side of female terminals

Is there about 5 V?

YES—Go to step 8.

NO—Go to step 13.

8. Turn the ignition switch OFF.
9. Jump the SCS line with the HDS.
10. Disconnect ECM/PCM connector E (31P).
11. Connect alternator 4P connector terminal No. 4 to body ground with a jumper wire.

ALTERNATOR 4P CONNECTOR

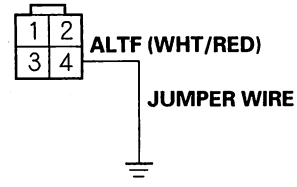

Wire side of female terminals

12. Check for continuity between body ground and ECM/PCM connector terminal E12.

ECM/PCM CONNECTOR E (31P)

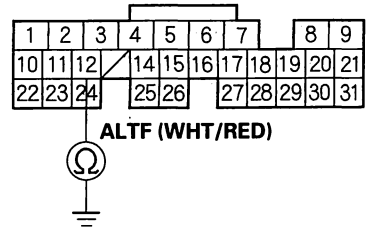

Wire side of female terminals

Is there continuity?

YES—Test the alternator.■

- 2003 4-door model (DELPHI) (see page 4-31)
- 2003-2006 models (DENSO) (see page 4-33)

NO—Repair open in the wire between the ECM/PCM (E12) and the alternator.■

(cont'd)

Protected by AR

Alternator FR Signal Circuit Troubleshooting (cont'd)

13. Turn the ignition switch OFF.
14. Jump the SCS line with the HDS.
15. Disconnect ECM/PCM connector E (31P).
16. Chcek for continuity between body ground and ECM/PCM connector terminal E12.

ECM/PCM CONNECTOR E (31P)

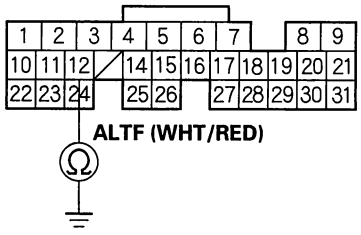

Wire side of female terminals

Is there continuity?

YES—Repair short in the wire between the ECM/PCM (E12) and the alternator.■

NO—Update the ECM/PCM if it does not have the latest software, or substitute a known-good ECM/PCM (see page 11-6), then recheck. If the symptom/indication goes away with a known-good ECM/PCM, replace the original ECM/PCM (see page 11-224).■

BACK

Protected by AR

2005-2006 models

1. Start the engine, and let it idle.
2. Monitor the ALTERNATOR in the DATA LIST with the HDS.
3. Check if the indicated percentage varies when the headlight switch is on.

   Does the percentage vary?

   YES—The alternator signal circuit is OK. ■

   NO—Go to step 4.
4. Turn the headlight switch and ignition switch OFF.
5. Jump the SCS line with the HDS.
6. Disconnect the alternator 4P connector.
7. Disconnect ECM/PCM connector B (24P).
8. Check for continuity between body ground and ECM/PCM connector terminal E12.

ECM/PCM CONNECTOR E (31P)

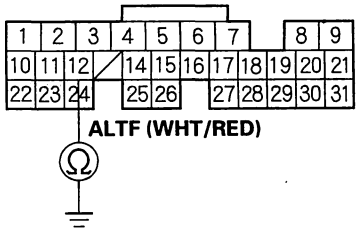

Wire side of female terminals

Is there continuity?

YES—Repair short in the wire between the ECM/PCM (E12) and the alternator. ■

NO—Update the ECM/PCM if it does not have the latest software, or substitute a known-good ECM/PCM (see page 11-6), then recheck. If the symptom/indication goes away with a known-good ECM/PCM, replace the original ECM/PCM (see page 11-224). ■

Protected by AR

PSP Switch Signal Circuit Troubleshooting

1. Start the engine, and let it idle.
2. Align the steering wheel straight ahead.
3. Check the PSP SWITCH in the DATA LIST with the HDS.

   Does it indicate ON?

   YES—Go to step 4.

   NO—Go to step 14.
4. Turn the steering wheel to the full lock position.
5. Check the PSP SWITCH in the DATA LIST with the HDS.

   Does it change to OFF?

   YES—The PSP switch signal circuit is OK. ■

   NO—Go to step 6.
6. Turn the ignition switch OFF.
7. Disconnect the PSP switch 2P connector.
8. Start the engine.
9. Check the PSP SWITCH in the DATA LIST with the HDS.

   Does it change to OFF?

   YES—Replace the PSP switch. ■

   NO—Go to step 10.
10. Turn the ignition switch OFF.
11. Jump the SCS line with the HDS.
12. Disconnect ECM/PCM connector A (31P).
13. Check for continuity between PSP switch 2P connector terminal No. 1 and body ground.

PSP SWITCH 2P CONNECTOR

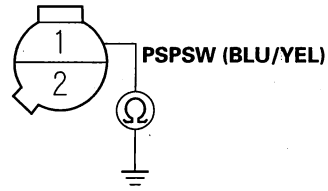

Wire side of female terminals

Is there continuity?

YES—Repair short in the wire between the ECM/PCM (A17) and the PSP switch. ■

NO—Update the ECM/PCM if it does not have the latest software, or substitute a known-good ECM/PCM (see page 11-6), then recheck. If the symptom/indication goes away with a known-good ECM/PCM, replace the original ECM/PCM (see page 11-224). ■

14. Turn the ignition switch OFF.
15. Disconnect the PSP switch 2P connector.
16. Connect PSP switch 2P connector terminals No. 1 and No. 2 with a jumper wire, then start the engine.

PSP SWITCH 2P CONNECTOR

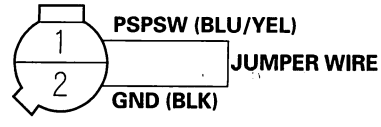

Wire side of female terminals

BACK

Protected by AR

17. Check the PSP SWITCH in the DATA LIST with the HDS.

    Does it change to ON?

    YES—Replace the PSP switch.■

    NO—Go to step 18.

18. Turn the ignition switch OFF.

19. Remove the jumper wire from the PSP switch 2P connector.

20. Jump the SCS line with the HDS.

21. Disconnect ECM/PCM connector A (31P).

22. Connect the PSP switch 2P connector terminal No. 1 to body ground with a jumper wire.

PSP SWITCH 2P CONNECTOR

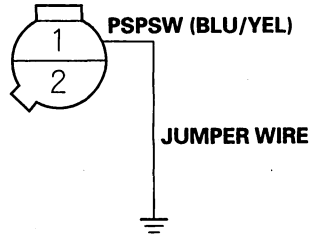

Wire side of female terminals

23. Check for continuity between body ground and ECM/PCM connector terminal A17.

ECM/PCM CONECTOR A (31P)

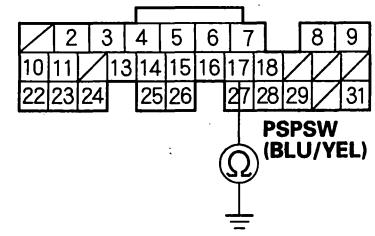

Wire side of female terminals

Is there continuity?

YES—Go to step 24.

NO—Repair open in the wire between the PSP switch and the ECM/PCM (A17).■

24. Check for continuity between PSP switch 2P connector terminal No. 2 and body ground.

PSP SWITCH 2P CONNECTOR

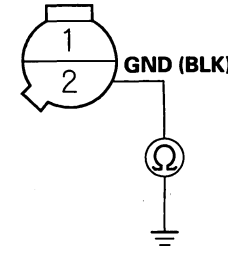

Wire side of female terminals

Is there continuity?

YES—Update the ECM/PCM if it does not have the latest software, or substitute a known-good ECM/PCM (see page 11-6), then recheck. If the symptom/indication goes away with a known-good ECM/PCM, replace the original ECM/PCM (see page 11-224).■

NO—Repair open in the wire between the PSP switch and G202.■

Protected by AR

Brake Pedal Position Switch Signal Circuit Troubleshooting

1. Turn the ignition switch ON (II).
2. Check the BRAKE SWITCH in the DATA LIST with the HDS.

   Does it indicate OFF?

   YES—Go to step 3.

   NO—Inspect the brake pedal position, refer to the 2003-2006 Accord Service Manual (see page 19-6). ■
3. Press the brake pedal, and check the BRAKE SWITCH in the DATA LIST with the HDS.

   Does it change to ON?

   YES—The brake pedal position switch signal circuit (BKSW line) is OK. ■

   NO—Go to step 4.
4. Turn the ignition switch OFF.
5. Jump the SCS line with the HDS.
6. Disconnect the brake pedal position switch 4P connector.
7. Disconnect ECM/PCM connector A (31P).
8. Check for continuity between ECM/PCM connector terminal A8 and body ground.

ECM/PCM CONNECTOR A (31P)

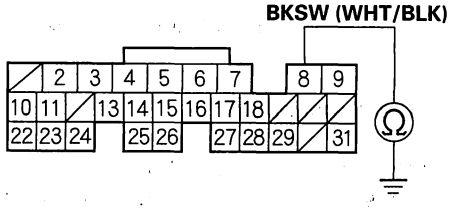

Wire side of female terminals

Is there continuity?

YES—Repair short in the wire between the ECM/PCM (A8) and the No. 13 HORN, STOP (20 A) fuse. Replace the No. 13 HORN, STOP (20 A) fuse. ■

NO—Go to step 9.

9. Check for continuity between ECM/PCM connector terminal A8 and brake pedal position switch 4P connector terminal No. 2.

ECM/PCM CONNECTOR A (31P)

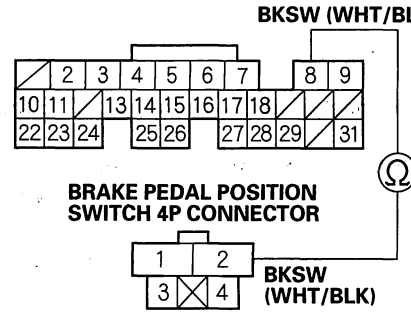

Wire side of female terminals

Is there continuity?

YES—Repair open in the wire between the brake pedal position switch and the No. 13 HORN, STOP (20 A) fuse. Inspect the brake pedal position switch, refer to the 2003-2006 Accord Service Manual (see page 19-6). ■

NO—Repair open in the wire between the ECM/PCM (A8) and the brake pedal position switch. ■

BACK

Protected by AR

Idle Speed Inspection

- Before checking the idle speed, check these items:
  - The malfuction indicator lamp (MIL) has not been reported on.
  - Ignition timing
  - Spark plugs
  - Air cleaner
  - PCV system
- Pull the parking brake lever up.

NOTE:

1. Disconnect the evaporative emission (EVAP) canister purge valve connector.

2. Connect the HDS to the date link connector (DLC) (A) located under the driver's side of the dashboard.

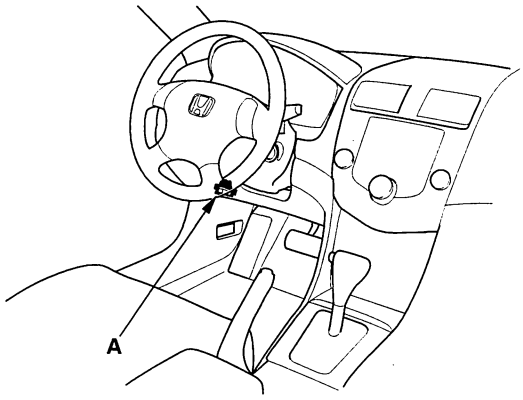

3. Start the engine. Hold the engine speed at 3,000 rpm without load (in Park or neutral) until the radiator fan comes on, then let it idle.

4. Check the idle speed without load conditions: headlights, blower fan, radiator fan, and air conditioner off.

Idle speed should be:

A/T	**790±50 rpm (in Park or neutral)**
M/T	**750±50 rpm (in neutral)**

5. Let the engine idle for 1 minute with high electric load (A/C switch on, temperature set to max cool, blower fan on High, and headlights on high beam).

Idle speed should be:

A/T	**790±50 rpm (in Park or neutral)**
M/T	**750±50 rpm (in neutral)**

NOTE: If the idle speed is not within specification, do the symptom troubleshooting.

6. Reconnect the EVAP canister purge valve connector.

Protected by AR

ECM/PCM Idle Learn Procedure

The idle learn procedure must be done so the ECM/PCM can learn the engine idle characteristics.

Do the idle learn procedure whenever you do any of these actions:

- Replace ECM/PCM
- Reset ECM/PCM
- Update ECM/PCM
- Replace or clean the throttle body.

NOTE: Erasing DTCs with the HDS does not require you to do the idle learn procedure.

Procedure

1. Make sure all electrical items (A/C, audio, rear window defogger, lights, etc.) are off.
2. Reset the ECM/PCM with the HDS.
3. Turn the ignition switch ON (II), and wait for 2 seconds.
4. Start the engine. Hold the engine speed at 3,000 rpm without load (in Park or neutral) until the radiator fan comes on, or until the engine coolant temperature reaches 194 °F (90 °C).
5. Let the engine idle for about 5 minutes with the throttle fully closed.

   NOTE: If the radiator fan comes on, do not include its running time in the 5 minutes.

BACK

Protected by AR

Component Location Index

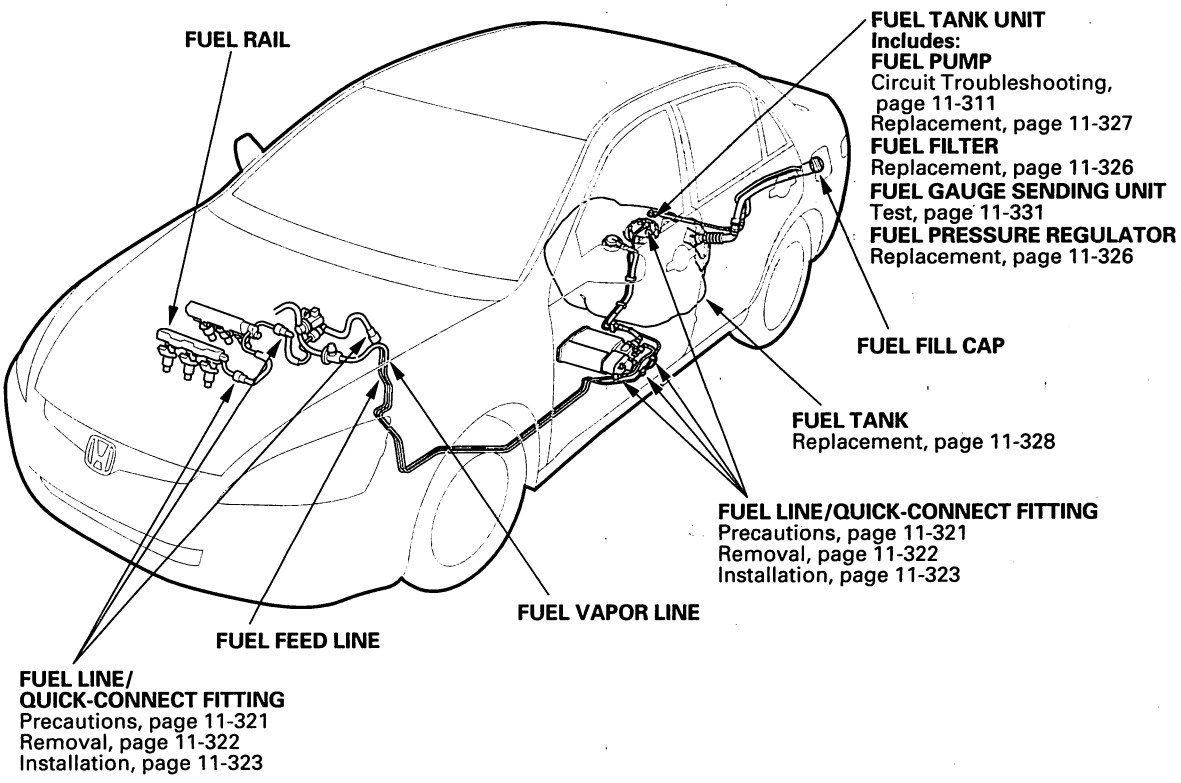

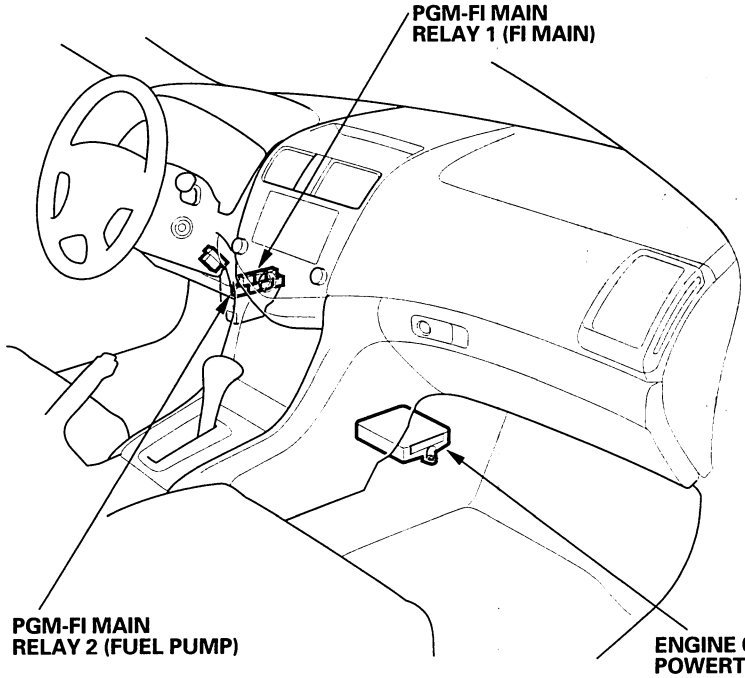

Protected by AR

DTC Troubleshooting

DTC P0461: Fuel Level Sensor (Fuel Gauge Sending Unit) Range/Performance Problem (2005-2006 models)

NOTE:
- Before you troubleshoot, record all freeze data and any on-board snapshot, and review the general troubleshooting information (see page 11-3).
- Because it requires 162 miles (260 km) of driving without refueling to complete this diagnosis, DTC P0461 cannot be duplicated during this troubleshooting.

1. Test the fuel gauge sending unit (see page 11-332).

   Is the fuel gauge sending unit OK?

   YES—Check for poor connections or loose terminals at the fuel gauge sending unit and the gauge assembly. ■

   NO—Replace the fuel gauge sending unit (see page 11-327), then go to step 2.

2. Turn the ignition switch ON (II).

3. Reset the ECM/PCM with the HDS.

4. Do the ECM/PCM idle learn procedure (see page 11-302).

5. Check for Temporary DTCs or DTCs with the HDS.

   Are any Temporary DTCs or DTCs indicated?

   YES—If DTC P0461 is indicated, check for poor connections or loose terminals at the fuel gauge sending unit and the gauge assembly, then go to step 1. If any other Temporary DTCs or DTCs are indicated, go to the indicated DTC's troubleshooting.

   NO—Troubleshooting is complete. ■

BACK

Protected by AR

DTC P0462: Fuel Level Sensor (Fuel Gauge Sending Unit) Circuit Low Voltage (2005-2006 models)

NOTE:
- Before you troubleshoot, record all freeze data and any on-board snapshot, and review the general troubleshooting information (see page 11-3).
- Information marked with an asterisk (*) applies to 2005 model.
- Information marked with double asterisk (**) applies to 2006 model.

1. Turn the ignition switch ON (II).
2. Clear the DTC with the HDS, and wait 5 seconds.
3. Check for Temporary DTCs or DTCs with the HDS.

   Is DTC P0462 indicated?

   YES—Go to step 4.

   NO—Intermittent failure, system is OK at this time. Check for poor connections or loose terminals at the gauge control module and the fuel gauge sending unit. ■
4. Turn the ignition switch OFF.
5. Remove the trunk floor trim panel.
6. Remove the access panel from the floor.
7. Disconnect the fuel tank unit 5P connector.
8. Turn the ignition switch ON (II).
9. Clear the DTC with the HDS, and wait 5 seconds.
10. Check for Temporary DTCs or DTCs with the HDS.

    Is DTC P0463 indicated?

    YES—Replace the fuel gauge sending unit (see page 11-327), then go to step 22.

    NO—Go to step 11.
11. Turn the ignition switch OFF.
12. Remove the gauge control module, refer to the 2003-2006 Accord Service Manual (see page 22-276).
13. Disconnect the gauge control module 30P* (36P)** connector.
14. Check for continuity between fuel tank unit 5P connector terminal No. 2 and body ground.

FUEL TANK UNIT 5P CONNECTOR

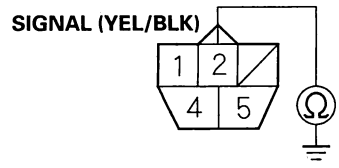

Wire side of female terminals

Is there continuity?

YES—Repair short in the wire between the gauge control module (signal line) and the fuel gauge sending unit, then go to step 23.

NO—Go to step 15.
15. Reconnect the gauge control module 30P* (36P**) connector.
16. Remove the fuel tank unit (see page 11-327).
17. Connect the fuel tank unit 5P connector.
18. Turn the ignition switch ON (II).
19. Clear the DTC with the HDS.

(cont'd)

Protected by AR

DTC Troubleshooting (cont'd)

20. Set the float (A) to the E position.

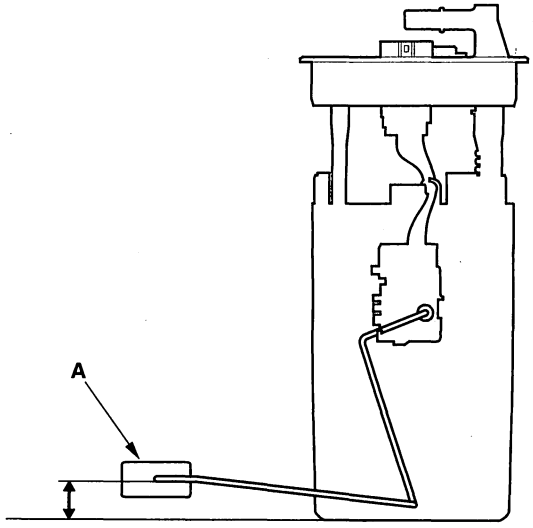

21. Check the fuel gauge.

    Does the gauge move to the empty position?

    YES—Go to step 29.

    NO—Replace the gauge control module, refer to the 2003-2006 Accord Service Manual (see page 22-276), then go to step 22.

22. Turn the ignition switch OFF.

23. Reconnect all connectors.

24. Install the parts in the reverse order of removal.

25. Turn the ignition switch ON (II).

26. Reset the ECM/PCM with the HDS.

27. Do the ECM/PCM idle learn procedure (see page 11-302).

28. Check for Temporary DTCs or DTCs with the HDS.

    Are any Temporary DTCs or DTCs indicated?

    YES—If DTC P0462 is indicated, check for poor connections or loose terminals at the gauge control module and the fuel gauge sending unit, then go to step 1. If any other Temporary DTCs or DTCs are indicated, go to the indicated DTC's troubleshooting.

    NO—Troubleshooting is complete. ■

29. Update the ECM/PCM if it does not have the latest software, or substitute a known-good ECM/PCM (see page 11-6).

30. Check for Temporary DTCs or DTCs with the HDS.

    Are any Temporary DTCs or DTCs indicated?

    YES—If DTC P0462 is indicated, check for poor connections or loose terminals at the gauge control module and the fuel gauge sending unit, then go to step 1. If any other Temporary DTCs or DTCs are indicated, go to the indicated DTC's troubleshooting.

    NO—If the ECM/PCM was updated, troubleshooting is complete. If the ECM/PCM was substituted, replace the original ECM/PCM (see page 11-224). ■

BACK

Protected by AR

DTC P0463: Fuel Level Sensor (Fuel Gauge Sending Unit) Circuit High Voltage (2005-2006 models)

NOTE:
- Before you troubleshoot, record all freeze data and any on-board snapshot, and review the general troubleshooting information (see page 11-3).
- Information marked with an asterisk (*) applies to 2005 model.
- Information marked with double asterisk (**) applies to 2006 model.

1. Turn the ignition switch ON (II).
2. Clear the DTC with the HDS, and wait 5 seconds.
3. Check for Temporary DTCs or DTCs with the HDS.

   Is DTC P0463 indicated?

   YES—Go to step 4.

   NO—Intermittent failure, system is OK at this time. Check for poor connections or loose terminals at the gauge control module and the fuel gauge sending unit. ■
4. Turn the ignition switch OFF.
5. Remove the trunk floor trim panel.
6. Remove the access panel from the floor.
7. Disconnect the fuel tank unit 5P connector.
8. Connect fuel tank unit 5P connector terminal No. 1 to body ground with a jumper wire.

FUEL TANK UNIT 5P CONNECTOR

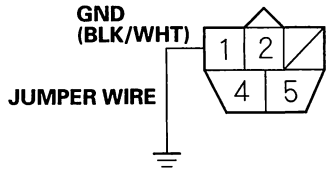

Wire side of female terminals

9. Remove the gauge control module, refer to the 2003-2006 Accord Service Manual (see page 22-276).
10. Disconnect the gauge control module 30P* (36P**) connector.
11. Check for continuity between gauge control module 30P* (36P**) connector terminal No. 3 and body ground.

GAUGE CONTROL MODULE 30P CONNECTOR*

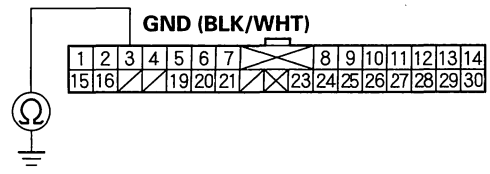

Wire side of female terminals

GAUGE CONTROL MODULE 36P CONNECTOR**

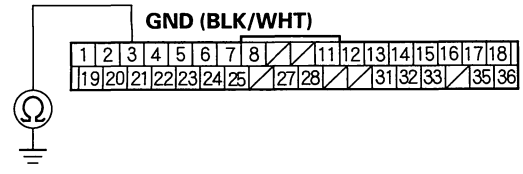

Wire side of female terminals

Is there continuity?

YES—Go to step 12.

NO—Repair open in the wire between the gauge control module (GND line) and the fuel gauge sending unit, then go to step 24.

(cont'd)

Protected by AR

DTC Troubleshooting (cont'd)

12. Connect fuel tank unit 5P connector terminal No. 2 to body ground with a jumper wire.

FUEL TANK UNIT 5P CONNECTOR

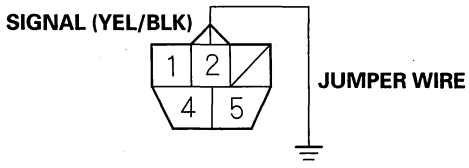

Wire side of female terminals

13. Check for continuity between gauge control module 30P* (36P**) connector terminal No. 4 and body ground.

GAUGE CONTROL MODULE 30P CONNECTOR*

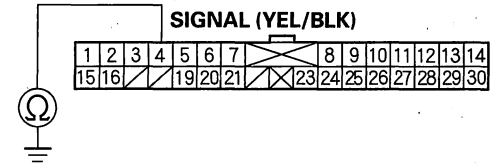

Wire side of female terminals

GAUGE CONTROL MODULE 36P CONNECTOR**

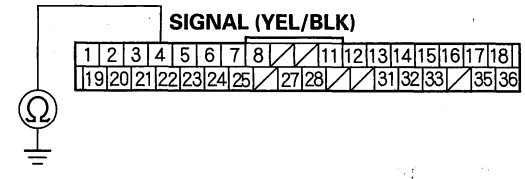

Wire side of female terminals

Is there continuity?

YES—Go to step 14.

NO—Repair open in the wire between the gauge control module (signal line) and the fuel gauge sending unit, then go to step 24.

BACK

Protected by AR

14. Remove the jumper wire from the fuel tank unit 5P connector.

15. Remove the fuel tank unit (see page 11-327).

16. Test the fuel gauge sending unit (see page 11-332).

    Is the fuel gauge sending unit OK?

    YES—Go to step 17.

    NO—Replace the fuel gauge sending unit (see page 11-327), then go to step 23.

17. Connect the fuel tank unit 5P connector.

18. Reconnect the gauge control module 30P* (36P**) connector.

19. Turn the ignition switch ON (II).

20. Clear the DTC with the HDS.

21. Set the float (A) to the F position.

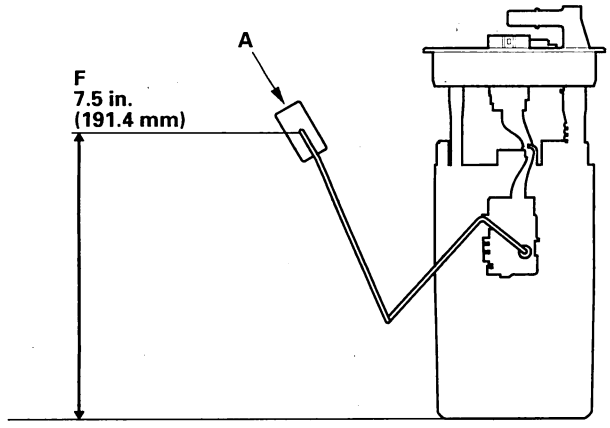

22. Check the fuel gauge.

    Does the gauge move to the full position?

    YES—Go to step 30.

    NO—Replace the gauge control module, refer to the 2003-2006 Accord Service Manual (see page 22-276), then go to step 23.

(cont'd)

Protected by AR

DTC Troubleshooting (cont'd)

23. Turn the ignition switch OFF.
24. Reconnect all connectors.
25. Install the parts in the reverse order of removal.
26. Turn the ignition switch ON (II).
27. Reset the ECM/PCM with the HDS.
28. Do the ECM/PCM idle learn procedure (see page 11-302).
29. Check for Temporary DTCs or DTCs with the HDS.

    Are any Temporary DTCs or DTCs indicated?

    YES—If DTC P0463 is indicated, check for poor connections or loose terminals at the gauge control module and the fuel gauge sending unit, then go to step 1. If any other Temporary DTCs or DTCs are indicated, go to the indicated DTC's troubleshooting.

    NO—Troubleshooting is complete. ■
30. Update the ECM/PCM if it does not have the latest software, or substitute a known-good ECM/PCM (see page 11-6).
31. Check for Temporary DTCs or DTCs with the HDS.

    Are any Temporary DTCs or DTCs indicated?

    YES—If DTC P0463 is indicated, check for poor connections or loose terminals at the gauge control module and the fuel gauge sending unit, then go to step 1. If any other Temporary DTCs or DTCs are indicated, go to the indicated DTC's troubleshooting.

    NO—If the ECM/PCM was updated, troubleshooting is complete. If the ECM/PCM was substituted, replace the original ECM/PCM (see page 11-224). ■

BACK

Protected by AR

Fuel Pump Circuit Troubleshooting

If you suspect a problem with the fuel pump, check that the fuel pump actually runs; when it is on, you will hear some noise if you listen to the fuel fill port with the fuel fill cap removed. The fuel pump should run for 2 seconds when the ignition switch is first turned on. If the fuel pump does not make noise, check as follows:

1. Turn the ignition switch OFF.

2. Remove the left kick panel, refer to the 2003-2006 Accord Service Manual 2-door (see page 20-90); 4-door (see page 20-91), then remove PGM-FI main relay 2 (FUEL PUMP) (A) from the under-dash fuse/relay box.

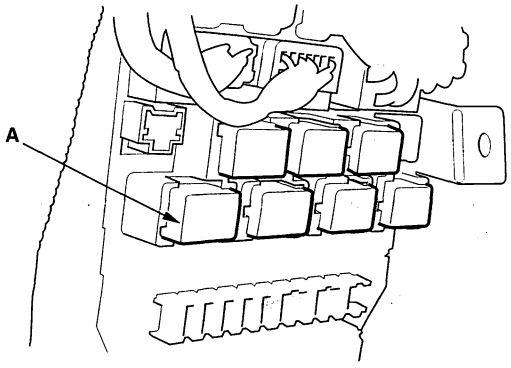

3. Turn the ignition switch ON (II).

4. Measure voltage between PGM-FI main relay 2 (FUEL PUMP) 4P connector terminal No. 3 and body ground.

PGM-FI MAIN RELAY 2 (FUEL PUMP) 4P CONNECTOR

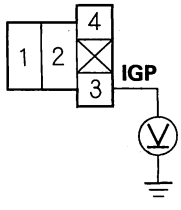

Terminal side of female terminals

Is there battery voltage?

YES—Go to step 5.

NO—
- Replace PGM-FI main relay 1 (FI MAIN).■
- If needed, replace the under-dash fuse/relay box, refer to the 2003-2006 Accord Service Manual (see page 22-77).■

5. Measure voltage between PGM-FI main relay 2 (FUEL PUMP) 4P connector terminal No. 1 and body ground.

PGM-FI MAIN RELAY 2 (FUEL PUMP) 4P CONNECTOR

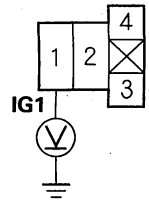

Terminal side of female terminals

Is there battery voltage?

YES—Go to step 6.

NO—
- Check the No. 19 FUEL PUMP (15 A) fuse in the under-dash fuse/relay box.■
- If needed, replace the under-dash fuse/relay box, refer to the 2003-2006 Accord Service Manual (see page 22-77).■

(cont'd)

Protected by AR

Fuel Pump Circuit Troubleshooting (cont'd)

6. Turn the ignition switch OFF.
7. Connect PGM-FI main relay 2 (FUEL PUMP) 4P connector terminal No. 4 to body ground with a jumper wire.

PGM-FI MAIN RELAY 2 (FUEL PUMP) 4P CONNECTOR

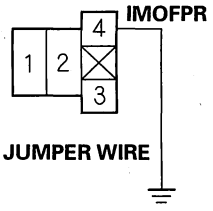

Terminal side of female terminals

8. Turn the ignition switch OFF.
9. Jump the SCS line with the HDS.
10. Disconnect ECM/PCM connector A (31P).
11. Check for continuity between body ground and ECM/PCM connector terminal A2.

ECM/PCM CONNECTOR A (31P)

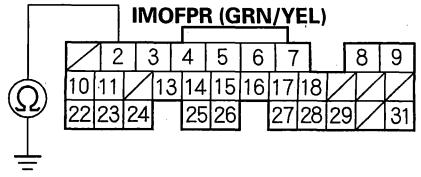

Wire side of female terminals

Is there continuity?

YES—Go to step 12.

NO—Repair open in the wire between PGM-FI main relay 2 (FUEL PUMP) and the ECM/PCM (A2). ■

12. Reinstall PGM-FI main relay 2 (FUEL PUMP).
13. Connect ECM/PCM connector terminal A5 to body ground with jumper wire.

ECM/PCM CONNECTOR A (31P)

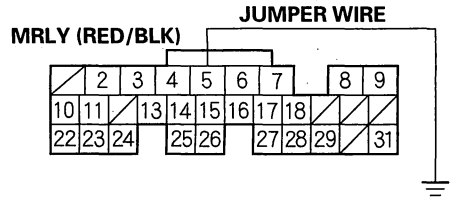

Wire side of female terminals

14. Turn the ignition switch ON (II).
15. Measure voltage between ECM/PCM connector terminal A2 and body ground.

ECM/PCM CONNECTOR A (31P)

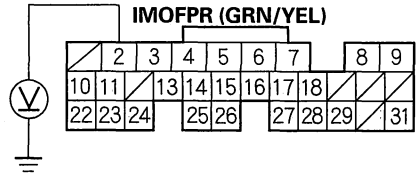

Wire side of female terminals

Is there battery voltage?

YES—Go to step 16.

NO—Replace PGM-FI main relay 2 (FUEL PUMP). ■

BACK

Protected by AR

16. Turn the ignition switch OFF.
17. Reconnect ECM/PCM connector A (31P).
18. Open the SCS line with the HDS.
19. Turn the ignition switch OFF.
20. Turn the ignition switch ON (II), and measure voltage between ECM/PCM connector terminal A2 and body ground within 2 seconds.

ECM/PCM CONNECTOR A (31P)

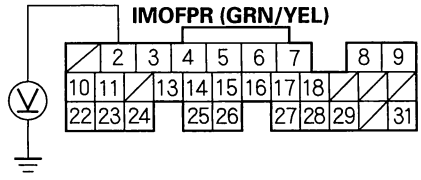

Wire side of female terminals

Is there battery voltage?

YES—Update the ECM/PCM if it does not have the latest software, or substitute a known-good ECM/PCM (see page 11-6), then recheck. If the symptom/indication goes away with a known-good ECM/PCM, replace the original ECM/PCM (see page 11-224), then go to step 21.

NO—If needed, replace the under-dash fuse/relay box, refer to the 2003-2006 Accord Service Manual (see page 22-77), then go to step 21.

21. Turn the ignition switch OFF.
22. Remove the trunk floor trim panel.
23. Remove the access panel from the floor (see page 11-327).
24. Turn the ignition switch ON (II), and measure voltage between fuel pump 5P connector terminal No. 5 and body ground within 2 seconds.

FUEL PUMP 5P CONNECTOR

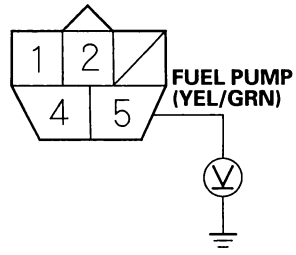

Wire side of female terminals

Is there battery voltage?

YES—Go to step 29.

NO—Go to step 25.

25. Turn the ignition switch OFF.
26. Remove PGM-FI main relay 2 (FUEL PUMP).
27. Connect PGM-FI main relay 2 (FUEL PUMP) 4P connector terminals No. 1 and No. 2 with a jumper wire.

PGM-FI MAIN RELAY 2 (FUEL PUMP) 4P CONNECTOR

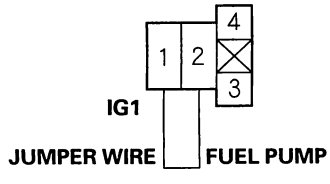

Terminal side of female terminals

(cont'd)

Protected by AR

Fuel Pump Circuit Troubleshooting (cont'd)

28. Turn the ignition switch ON (II), and measure voltage between fuel pump 5P connector terminal No. 5 and body ground within 2 seconds.

FUEL PUMP 5P CONNECTOR

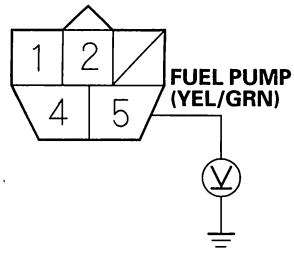

Wire side of female terminals

Is there battery voltage?

YES—Replace PGM-FI main relay 2 (FUEL PUMP). ■

NO—Repair open in the wire between PGM-FI main relay 2 (FUEL PUMP) and the fuel pump 5P connector. ■

29. Turn the ignition switch OFF.

30. Check for continuity between fuel pump 5P connector terminal No. 4 and body ground.

FUEL PUMP 5P CONNECTOR

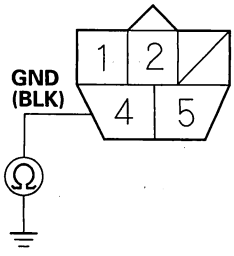

Wire side of female terminals

Is there continuity?

YES—Replace the fuel pump. ■

NO—Repair open in the wire between the fuel pump 5P connector and G603. ■

BACK

Protected by AR

Fuel Pressure Relieving

Before disconnecting fuel lines or hoses, relieve pressure from the system by stopping the fuel pump and disconnecting the fuel tube/quick connect fitting in the engine compartment.

With the HDS

1. Remove the fuel fill cap.
2. Turn the ignition switch ON (II).
3. From the INSPECTION MENU of the HDS, select Fuel Pump OFF, then start the engine, and let it idle until it stalls.
4. Turn the ignition switch OFF.

   NOTE:
   - Do not allow the engine to idle above 1,000 rpm or the ECM/PCM will continue to operate the fuel pump.
   - A DTC or a Temporary DTC may be set during this procedure. Check for DTCs, and clear them as needed (see page 11-3).
5. Turn the ignition switch OFF.
6. Make sure you have the anti-theft code for the radio and the navigation system (if equipped), then write down the frequencies for the radio's preset buttons.
7. Disconnect the negative cable from the battery.
8. Remove the quick-connect fitting cover (A).

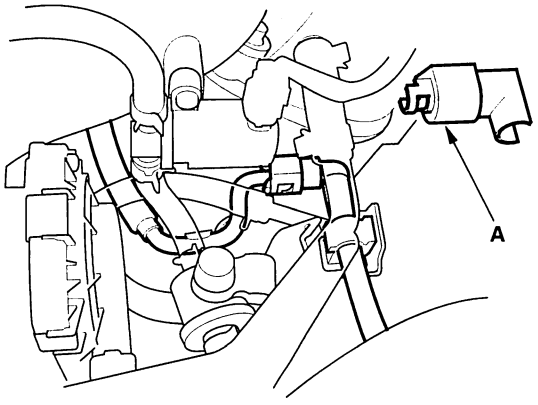

9. Check the fuel quick-connect fitting for dirt, and clean it if needed.
10. Place a rag or shop towel over the quick-connect fitting (A).

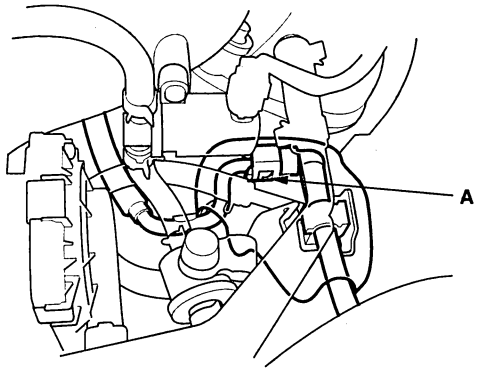

11. Disconnect the quick-connect fitting (A): Hold the connector (B) with one hand, and squeeze the retainer tabs (C) with the other hand to release them from the locking tabs (D). Pull the connector off.

    NOTE:
    - Be careful not to damage the line (E) or other parts.
    - Do not use tools.
    - If the connector does not move, keep the retainer tabs pressed down, and alternately pull and push the connector until it comes off easily.
    - Do not remove the retainer from the line; once removed, the retainer must be replaced with a new one.

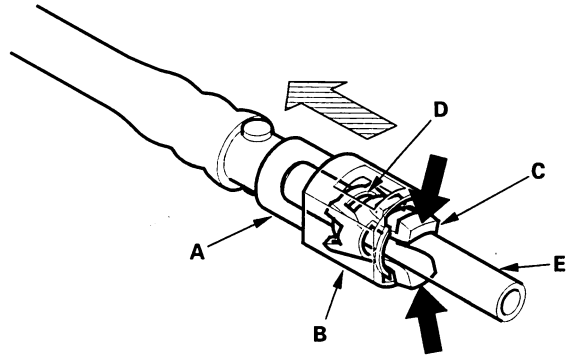

(cont'd)

Protected by AR

Fuel Pressure Relieving (cont'd)

12. After disconnecting the quick-connect fitting, check it for dirt or damage (see step 4 on page 11-322).

13. Reconnect the negative cable to the battery, and do these items:

    - Power window control unit reset procedure, refer to the 2003-2006 Accord Service Manual (see page 22-232).
    - Enter the anti-theft codes for the radio and the navigation system, then enter the customer's radio station presets.
    - Reset the clock.

Without the HDS

1. Make sure you have the anti-theft code for the radio, and the navigation system (if equipped), then write down the frequencies for the radio's preset buttons.

2. Remove the left kick panel, refer to the 2003-2006 Accord Service Manual 2-door (see page 20-90); 4-door (see page 20-91), then remove PGM-FI main relay 2 (FUEL PUMP) (A) from the under-dash fuse/relay box.

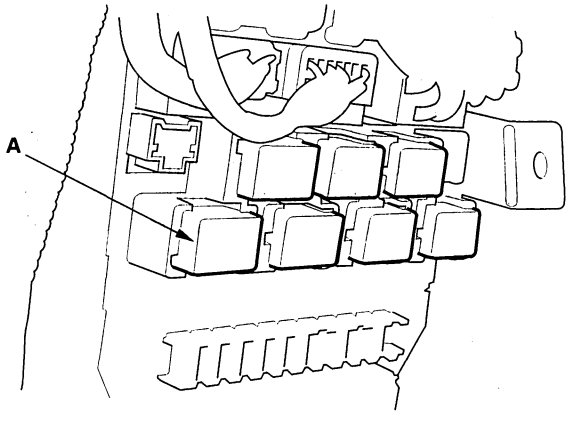

3. Start the engine, and let it idle until it stalls.

   NOTE: If any DTCs are stored, clear and ignore them.

4. Turn the ignition switch OFF.

5. Remove the fuel fill cap.

6. Disconnect the negative cable from the battery.

7. Remove the quick-connect fitting cover (A).

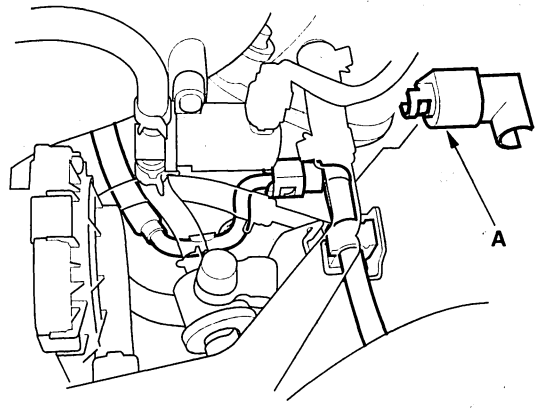

8. Check the fuel quick-connect fitting for dirt, and clean it if needed.

9. Place a rag or shop towel over the quick-connect fitting (A).

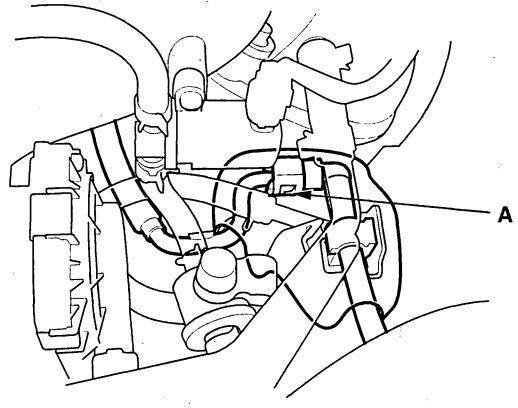

BACK

Protected by AR

10. Disconnect the quick-connect fitting (A): Hold the connector (B) with one hand, and squeeze the retainer tabs (C) with the other hand to release them from the locking tabs (D). Pull the connector off.

    NOTE:
    - Be careful not to damage the line (E) or other parts.
    - Do not use tools.
    - If the connector does not move, keep the retainer tabs pressed down, and alternately pull and push the connector until it comes off easily.
    - Do not remove the retainer from the line; once removed, the retainer must be replaced with a new one.

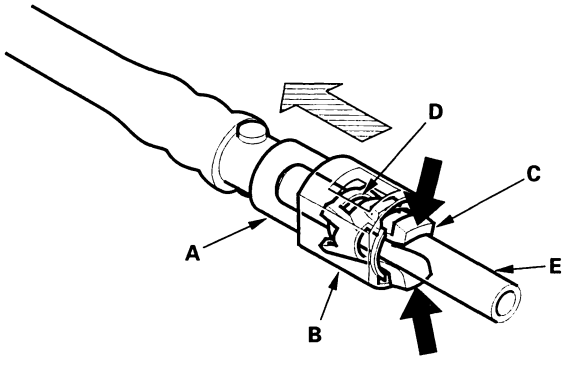

11. After disconnecting the quick-connect fitting, check it for dirt or damage (see step 4 on page 11-322).

12. Reconnect the negative cable to the battery, and do these items:

    - Power window control unit reset procedure, refer to the 2003-2006 Accord Service Manual (see page 22-232).
    - Enter the anti-theft codes for the radio and the navigation system, then enter the customer's radio station presets.
    - Reset the clock.

Fuel Pressure Test

Special Tools Required
- Fuel pressure gauge 07406-004000A
- Fuel pressure gauge attachment set 07AAJ-S6MA150

1. Relieve the fuel pressure (see page 11-315).

2. Disconnect the quick-connect fitting. Attach the fuel pressure gauge set and the fuel pressure gauge.

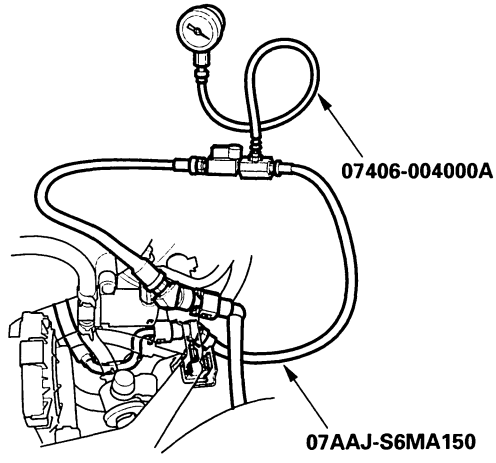

3. Start the engine, and let it idle.

    - If the engine starts, go to step 5.
    - If the engine does not start, go to step 4.

4. Check to see if the fuel pump is running: listen to the fuel filler port with the fuel fill cap removed. The fuel pump should run for 2 seconds when the ignition switch is first turned on.

    - If the pump runs, go to step 5.
    - If the pump does not run, do the fuel pump circuit troubleshooting (see page 11-311).

5. Read the fuel pressure gauge. The pressure should be 380—430 kPa (3.9—4.4 kgf/cm^2, 55—63 psi).

    - If the pressure is OK, the test is complete.
    - If the pressure is out of specification, replace the fuel pressure regulator (see page 11-326) and the fuel filter (see page 11-326), then recheck the fuel pressure.

Protected by AR

Fuel Tank Draining

1. Remove the fuel tank unit (see page 11-327).
2. Using a hand pump, a hose, and a container suitable for fuel, draw the fuel from the fuel tank.
3. Install the fuel tank unit (see page 11-327).

BACK

Protected by AR

Fuel Line Inspection

Check the fuel system lines, hoses, and fuel filter for damage, leaks, or deterioration. Replace any damaged parts.

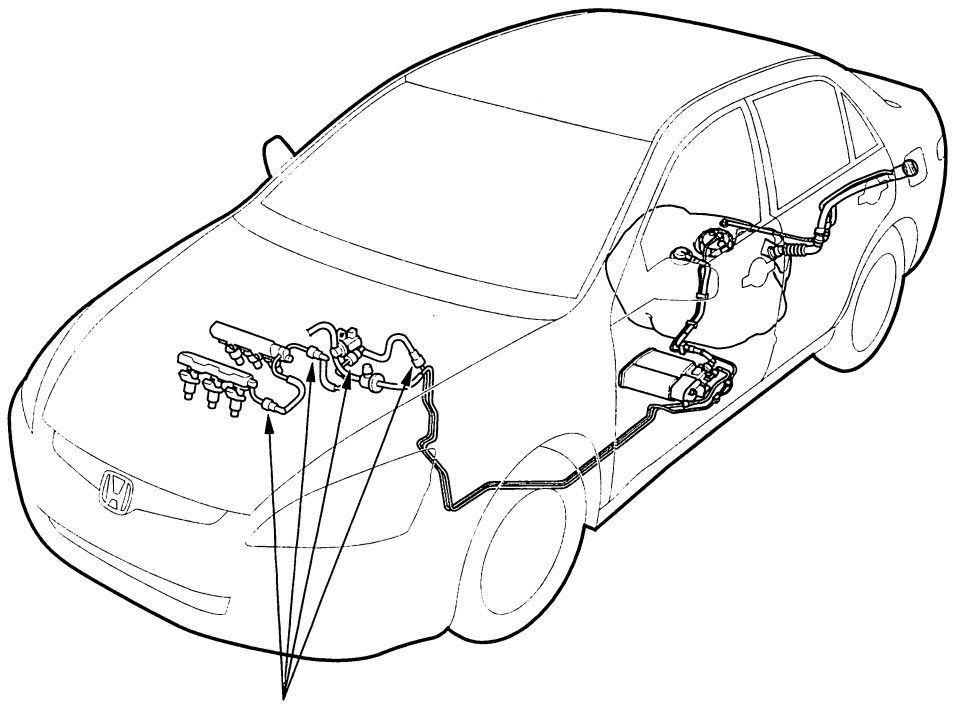

Make sure the connections are secure and the quick-connect fitting covers are firmly locked in place.

(cont'd)

Protected by AR

Fuel Line Inspection (cont'd)

Check all clamps and retighten any if necessary.

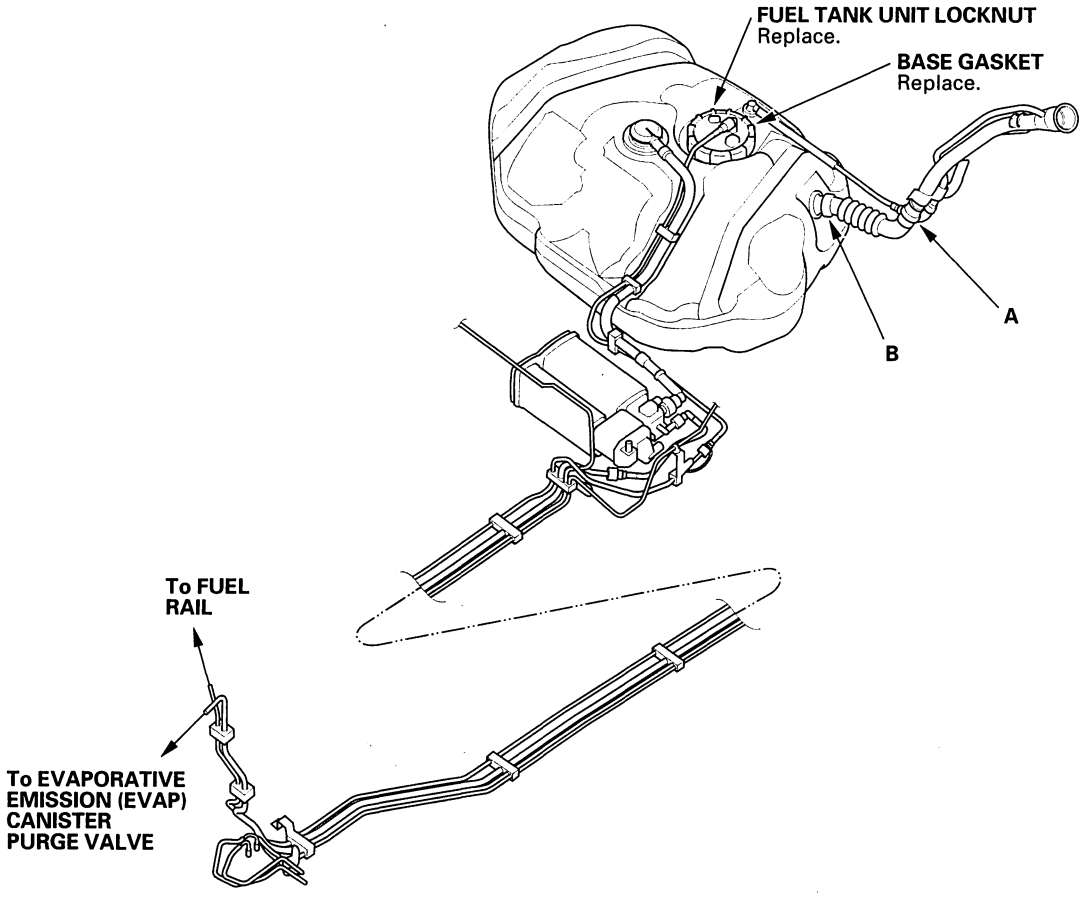

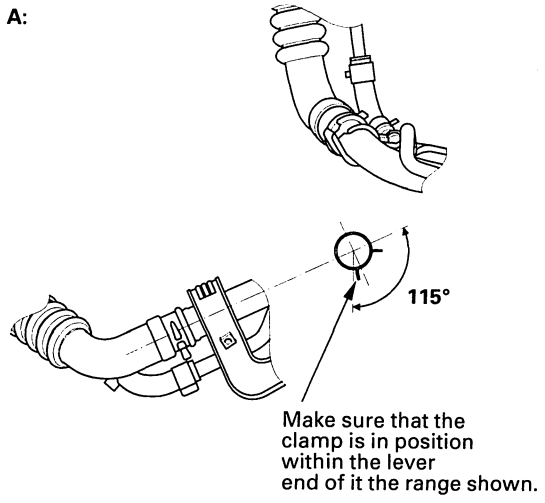

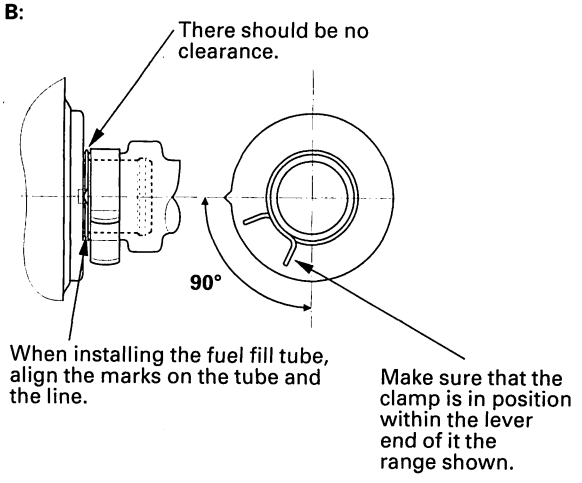

BACK

Protected by AR

Fuel Line/Quick-Connect Fitting Precautions

The fuel line/quick-connect fittings (A), (B), (C), (D) connect the fuel rail (E) to the fuel feed hose (F), the fuel feed hose to the fuel feed hose (G), the fuel feed hose to the fuel line (H), and the fuel line (I) to the fuel tank unit (J) and the fuel vapor line (K) to the EVAP canister (L). When removing or installing the fuel feed hose, fuel tank unit or fuel tank, it is necessary to disconnect or connect the quick-connect fittings.
Pay attention to the following:

- The fuel feed hoses, fuel line, and quick-connect fittings are not heat-resistant; be careful not to damage them during welding or other heat-generating procedures.
- The fuel feed hoses, fuel line, and quick-connect fittings are not acid-proof; do not touch them with a shop towel that was used for wiping battery electrolyte. Replace them if they came into contact with electrolyte or something similar.
- When connecting or disconnecting the fuel feed hoses, fuel line, and quick-connect fittings, be careful not to bend or twist them excessively. Replace them if they are damaged.

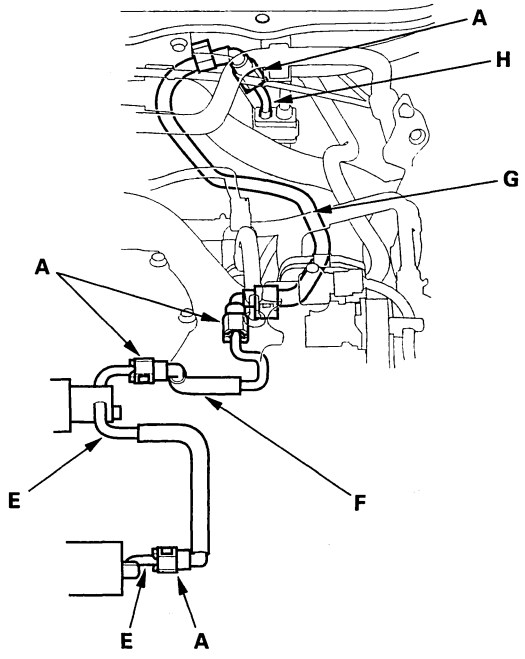

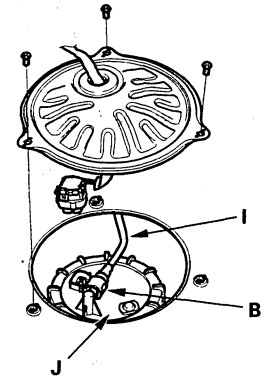

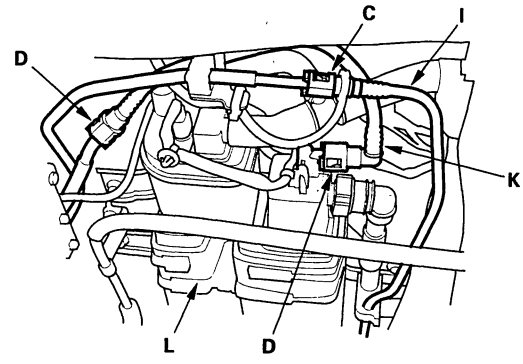

A disconnected quick-connect fitting can be reconnected, but the retainer on the mating line cannot be reused once it has been removed from the line. Replace the retainer when:

- replacing the fuel rail.
- replacing the fuel line.
- replacing the fuel pump.
- replacing the fuel filter.
- replacing the fuel gauge sending unit.
- replacing EVAP purge line.
- replacing EVAP canister.
- it has been removed from the line.
- it is damaged.

Place	Manufacturer	Retainer color	Piping diameter
A	Tokai	Blue green	0.3 in. (8 mm)
B	Tokai	Orange	0.4 in. (9.5 mm)
C	Tokai	Green	0.2 in. (6.3 mm)
D	Tokai	Orange	0.4 in. (9.5 mm)

Protected by AR

Fuel Line/Quick-Connect Fitting Removal

NOTE: Before you work on the fuel lines and fittings, read the "Fuel Line/Quick-Connect Fitting Precautions" (see page 11-321).

1. Relieve the fuel pressure (see page 11-315).

2. Check the fuel quick-connect fitting (A) for dirt, and clean it if needed.

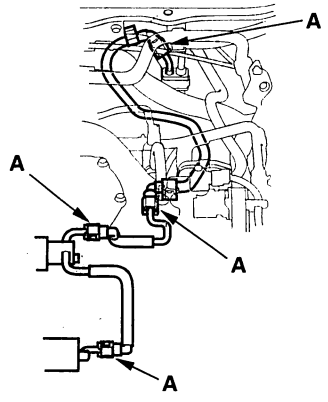

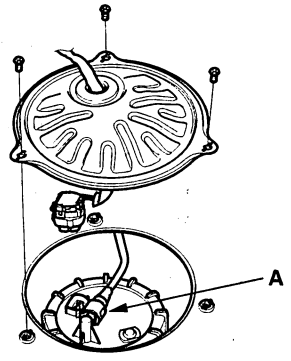

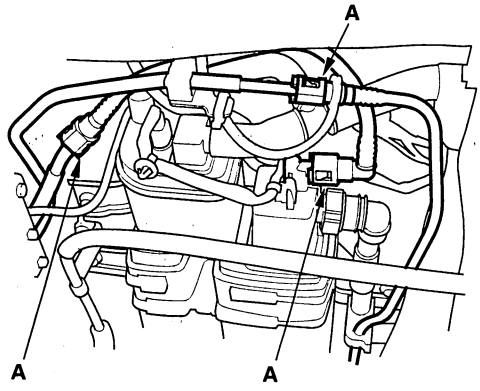

3. Place a rag or shop towel over the quick-connect fitting.
   Hold the connector (A) with one hand, and squeeze the retainer tabs (B) with the other hand to release them from the locking tabs (C). Pull the connector off.

   NOTE:
   - Be careful not to damage the line (D) or other parts. Do not use tools.
   - If the connector does not move, keep the retainer tabs pressed down, and alternately pull and push the connector until it comes off easily.
   - Do not remove the retainer from the line; once removed, the retainer must be replaced with a new one.

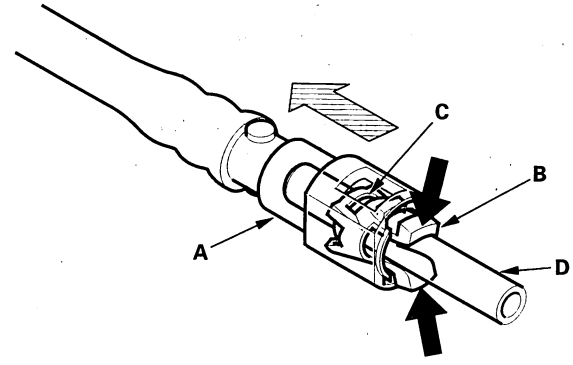

4. Check the contact area (A) of the line (B) for dirt or damage.

   - If it is dirty, clean it.
   - If it is rusty or damaged, replace the fuel pump, fuel filter, or fuel feed line.

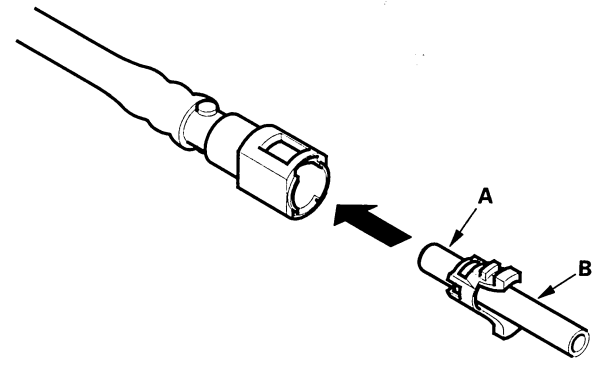

BACK

Protected by AR

5. To prevent damage and keep foreign matter out, cover the disconnected connector and line ends with plastic bags (A).

   NOTE: The retainer cannot be reused once it has been removed from the line.
   Replace the retainer when:
   - replacing the fuel rail.
   - replacing the fuel feed line.
   - replacing the fuel pump.
   - replacing the fuel filter.
   - replacing the fuel gauge sending unit.
   - it has been removed from the line.
   - replacing EVAP purge line.
   - replacing EVAP canister.
   - It is damaged.

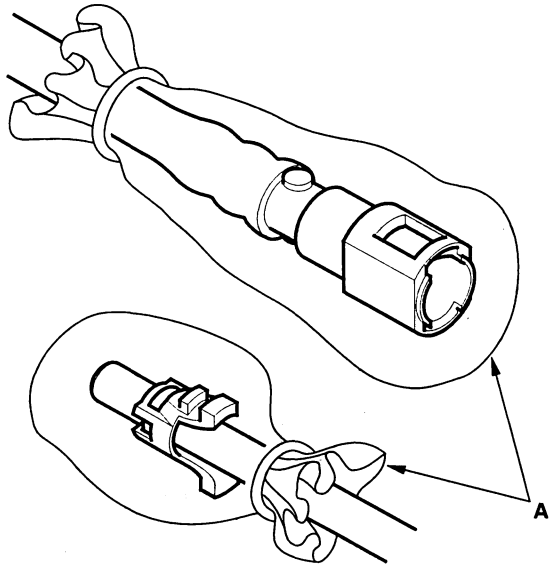

Fuel Line/Quick-Connect Fitting Installation

NOTE: Before you work on the fuel lines and fittings, read the "Fuel Line/Quick-Connect Fitting Precautions" (see page 11-321).

1. Check the contact area (A) of the line (B) for dirt or damage, and clean it if needed.

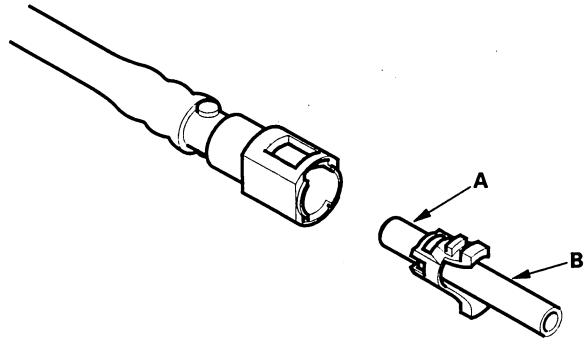

2. Insert a new retainer (A) into the connector (B) if the retainer is damaged, or after:

   - replacing the fuel rail.
   - replacing the fuel feed line.
   - replacing the fuel pump.
   - replacing the fuel filter.
   - replacing the fuel gauge sending unit.
   - replacing EVAP purge line.
   - replacing EVAP canister.
   - removing the retainer from the line.

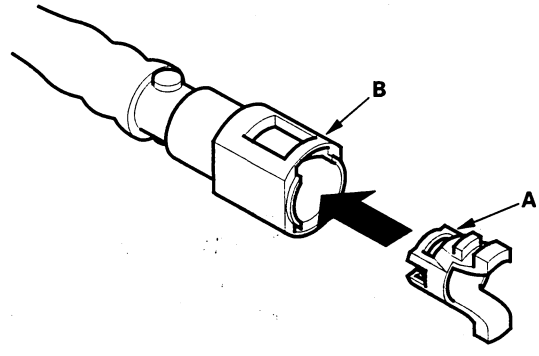

(cont'd)

Protected by AR

Fuel Line/Quick-Connect Fitting Installation (cont'd)

3. Before connecting a new fuel tube/quick-connect fitting assembly (A), remove the old retainer from the mating line.

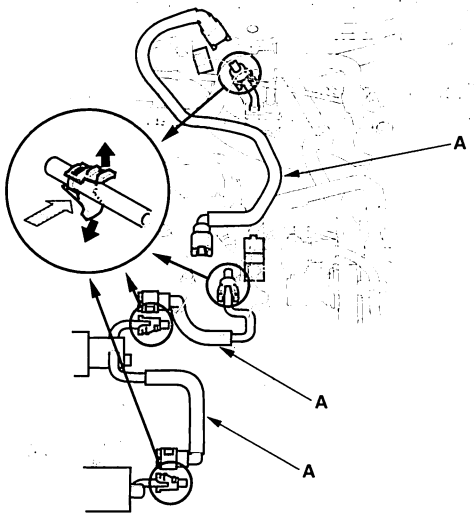

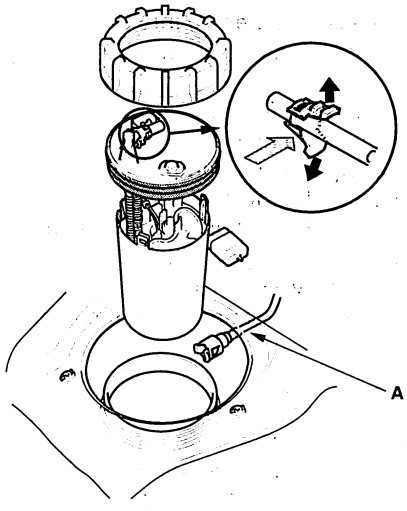

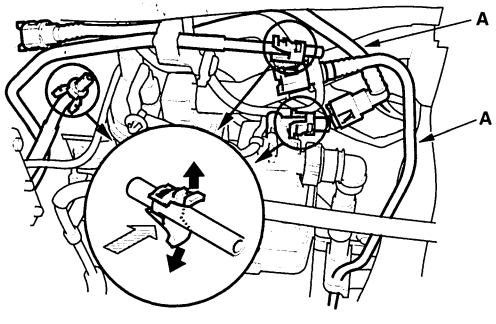

4. Align the quick-connect fittings with the line (A), and align the retainer locking tabs (B) with the connector tabs (C). Then press the quick-connect fittings onto the line until both retainer pawls lock with a clicking sound.

NOTE: If it is hard to connect, put a small amount of new engine oil on the line end.

Connection with new retainer

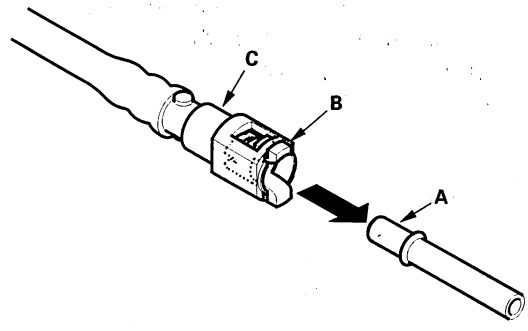

Reconnection to existing retainer

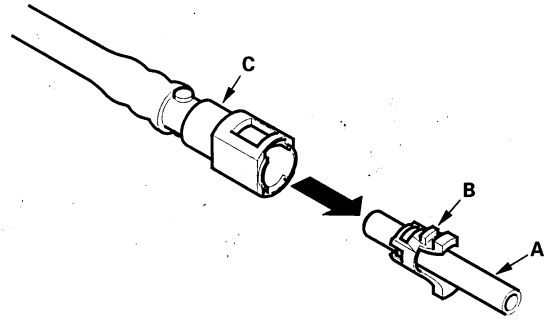

Connection to new fuel line

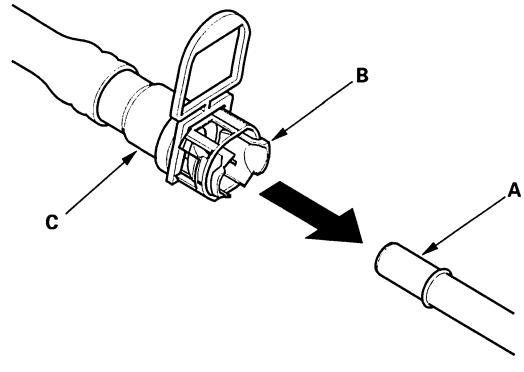

BACK

Protected by AR

5. When you are reconnecting the connector with the old retainer, make sure the connection is secure and the tabs (A) are firmly locked into place; check visually and also by pulling the connector (B). When you are replacing the fuel line with a new one, make sure you remove the ring pull (C) upwards after you confirm the connection is secure.

   NOTE: Before you remove the ring pull, make sure the fuel line connection is secure. If the connection is not secure, the ring pull could break when you try to remove it.

   Reconnection to existing retainer

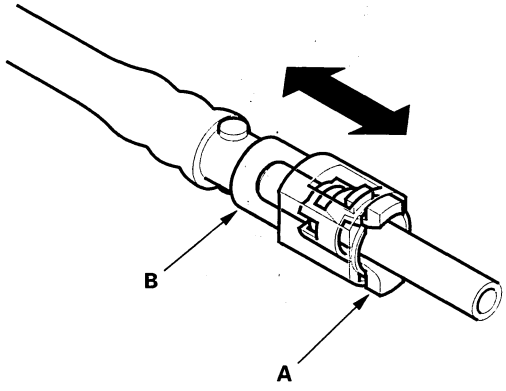

   Connection to new fuel line

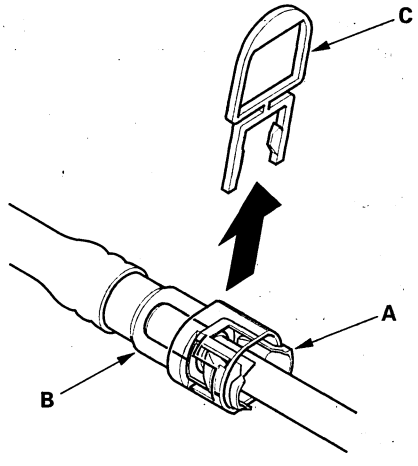

6. Turn the ignition switch ON (II). The fuel pump will run for about 2 seconds, and fuel pressure will rise. Repeat two or three times, and check that there is no leakage in the fuel supply system.

Protected by AR

Fuel Pressure Regulator Replacement

1. Remove the fuel tank unit (see page 11-327).
2. Remove the holder (A).

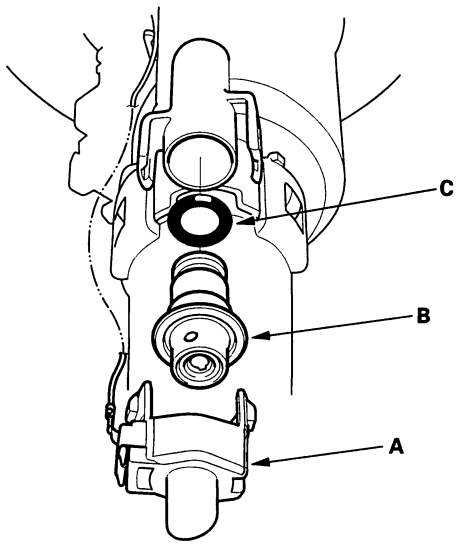

3. Remove the fuel pressure regulator (B).
4. Install the regulator in the reverse order of removal with a new O-ring (C).

   NOTE: Coat the O-ring with clean engine oil.

Fuel Filter Replacement

The fuel filter should be replaced whenever the fuel pressure drops below the specified value (see page 11-317), after making sure that the fuel pump and the fuel pressure regulator are OK.

1. Remove the fuel tank unit (see page 11-327).
2. Remove the fuel filter set (A).

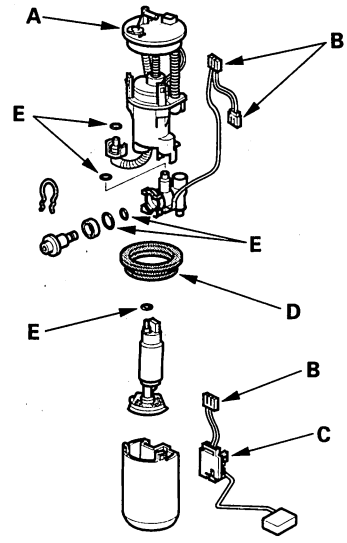

3. Check these items before installing the fuel tank unit:

   - When connecting the wire harness, make sure the connection is secure and the connectors (B) are firmly locked into place.
   - When installing the fuel gauge sending unit (C), make sure the connection is secure and the connector is firmly locked into place. Be careful not to bend or twist it excessively.

4. Install the parts in the reverse order of removal with a new base gasket (D) and new O-rings (E). When installing the fuel tank unit, align the marks on the unit and the fuel tank (see page 11-327).

   NOTE: Replace the fuel tank unit locknut (A), and base gasket as a set.

BACK

Protected by AR

Fuel Pump/Fuel Gauge Sending Unit Replacement

Special Tools Required
Fuel sender wrench 07AAA-S0XA100

1. Relieve the fuel pressure (see page 11-315).
2. Remove the fuel fill cap.
3. Remove the trunk floor.
4. Remove the access panel (A) from the floor.

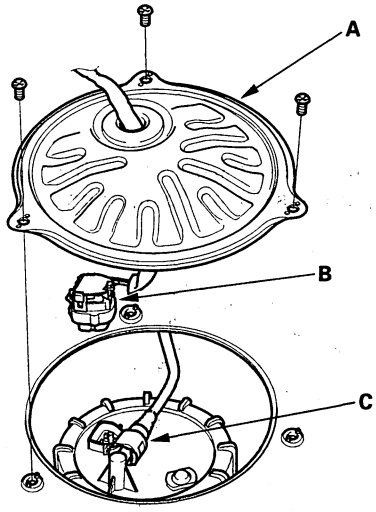

5. Disconnect the fuel pump 5P connector (B).
6. Disconnect the quick-connect fitting (C) from the fuel tank unit.
7. Using the special tool, loosen the fuel tank unit locknut (A).

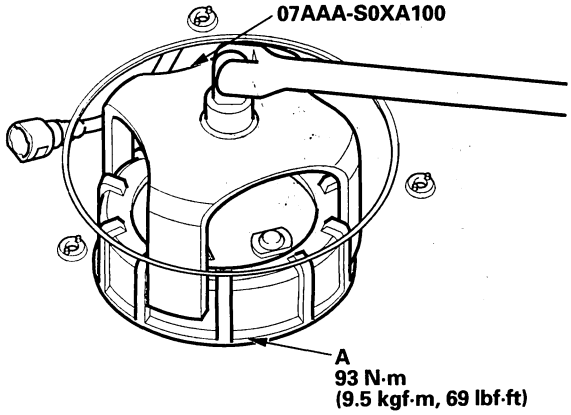

8. Remove the locknut (A) and the fuel tank unit.

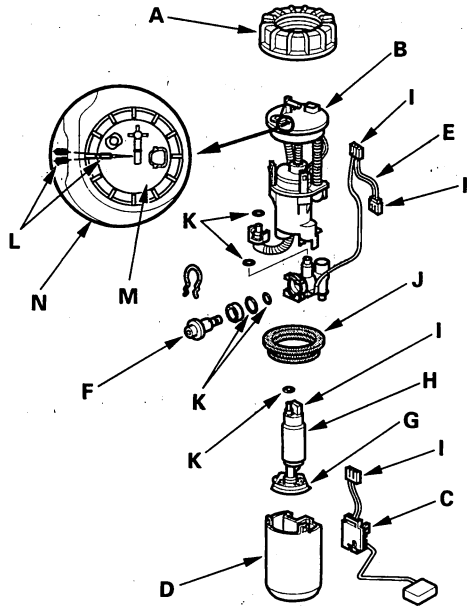

9. Remove the fuel filter (B), the fuel gauge sending unit (C), the case (D), the wire harness (E), and the fuel pressure regulator (F).
10. Check these items before installing the fuel tank unit:
    - Make sure the connection is secure and the suction filter (G) is firmly connected to the fuel pump (H).
    - When connecting the wire harness, make sure the connection is secure and the connectors (I) are firmly locked into place.
    - When installing the fuel gauge sending unit, make sure the connection is secure and the connector is firmly locked into place. Be careful not to bend or twist it excessively.
11. Install the parts in the reverse order of removal with a new base gasket (J), new locknut, and new O-rings (K). When installing the fuel tank unit, align the marks (L) on the unit (M) and the fuel tank (N).

BACK

Protected by AR

Fuel Tank Replacement

Removal

1. Relieve the fuel pressure (see page 11-315).
2. Drain the fuel tank (see page 11-318).
3. Loosen the rear wheel nuts slightly, then raise the vehicle, and make sure it is securely supported. Remove the rear wheels.
4. Release the parking brake.
5. Remove the mufflers and exhaust pipe B (see page 9-6).
6. Disconnect the fuel fill neck tube (A) and breather hose (B).

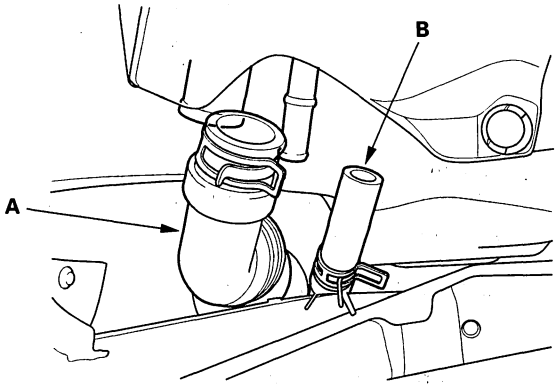

7. Disconnect the vapor line (A) from the EVAP canister (B). then disconnect the fuel line (C).

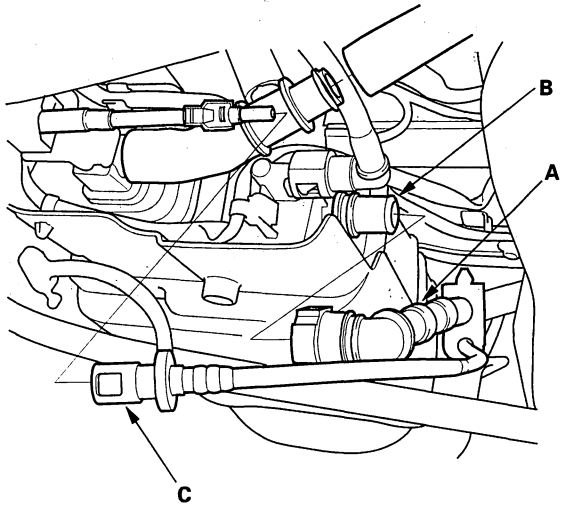

8. Disconnect the wheel sensor 2P connector (A).

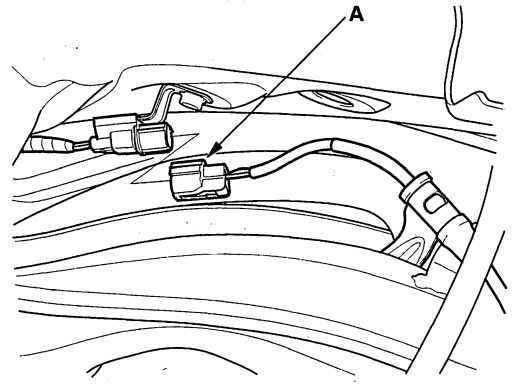

9. Remove the clip (A), parking brake cable (B), two caliper bolts (C), and caliper body (D).

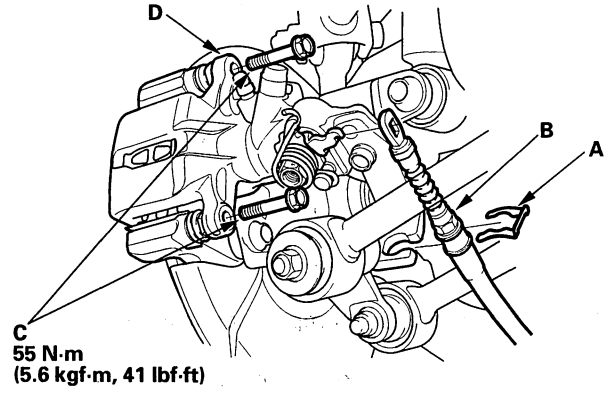

10. Remove the brake hose bracket (A).

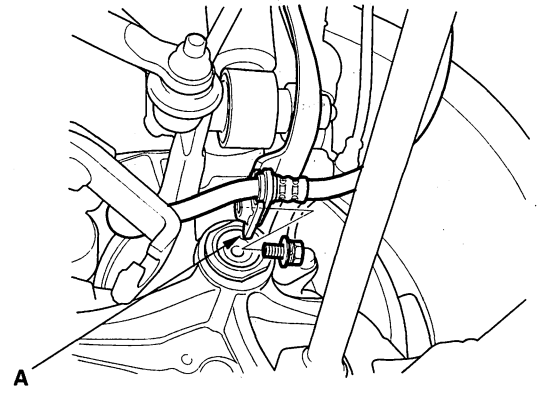

BACK

Protected by AR

11. Hook the caliper body (A) onto the damper spring (B).

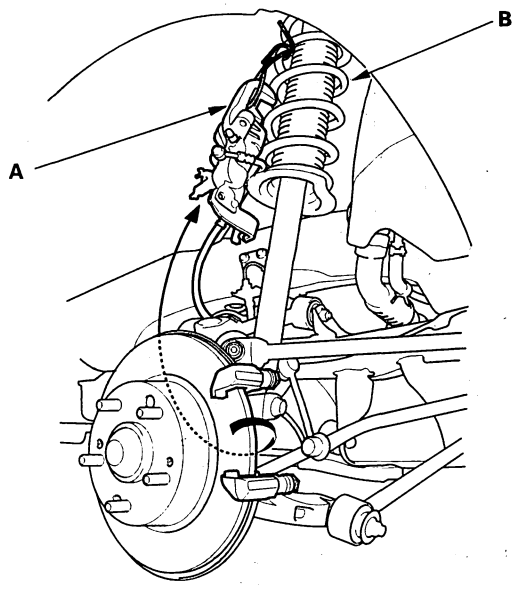

12. Remove the flange bolt (A).

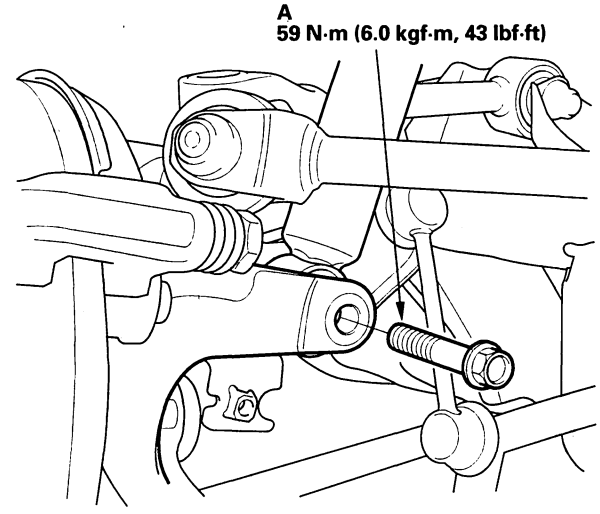

13. Remove the parking brake cable bracket bolt (A).

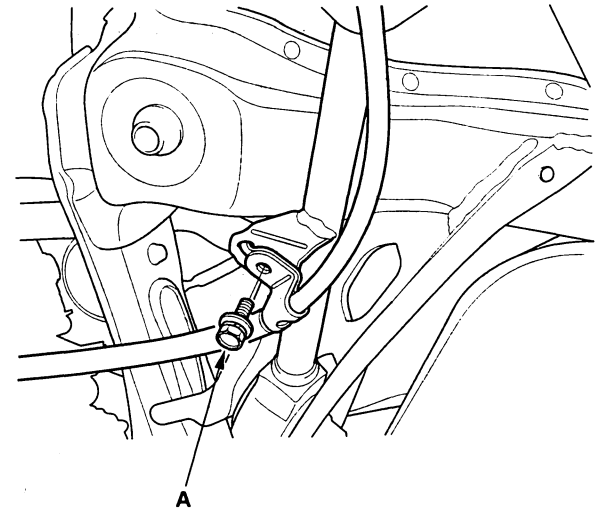

(cont'd)

Protected by AR

Fuel Tank Replacement (cont'd)

14. Remove the heat shield (A). Place a jack or support under the rear suspension subframe. Remove the mounting bolts (B). Remove the rear suspension subframe.

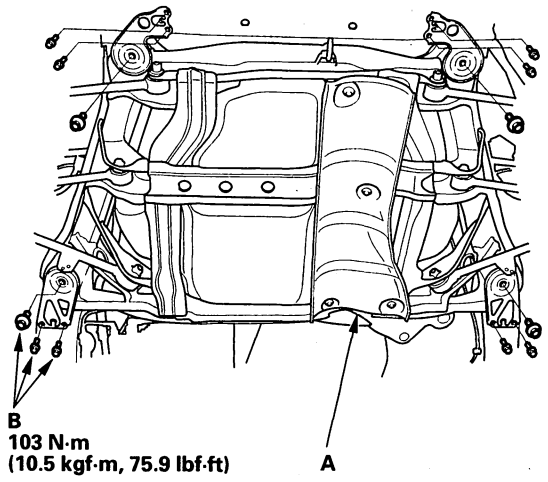

15. Remove the bolts (A) and the fuel tank straps (B).

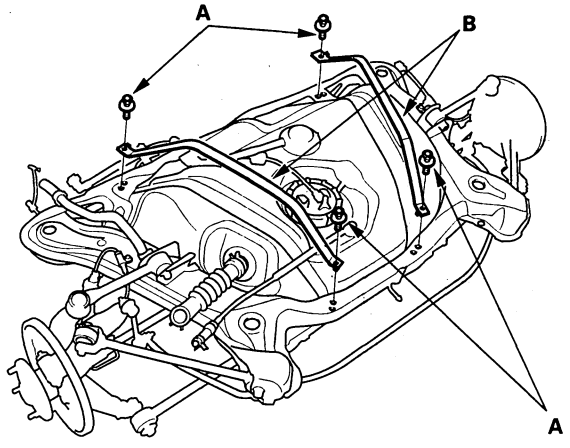

16. Lift the fuel tank out of the subframe.

Installation

1. Install the fuel tank straps (A), and tighten the bolts (B).

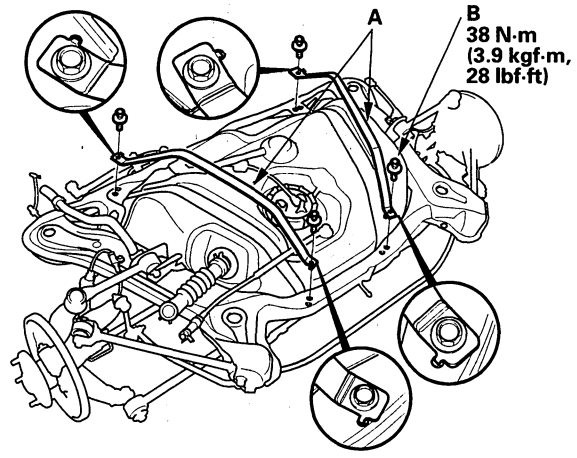

2. Place a jack or support under the rear suspension subframe. Install the subframe, aligning the pins (A) with the holes in the subframe.

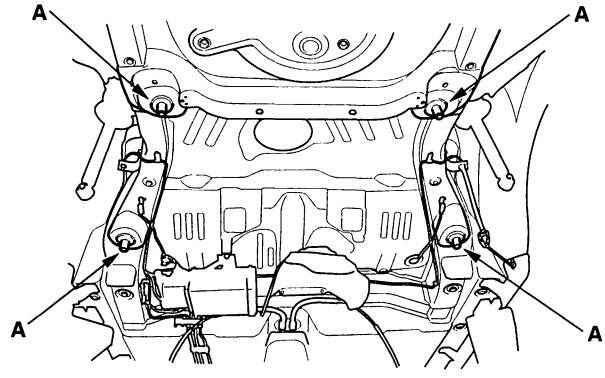

3. Install the remaining parts in the reverse order of removal.

4. If equipped with drum brakes, bleed the brake system after installing the brake hose, refer to the 2003-2006 Accord Service Manual (see page 19-9). If not, go to step 5.

5. After installation, do a wheel alignment, refer to the 2003-2006 Accord Service Manual (see page 18-6).

BACK

Protected by AR

Fuel Gauge Sending Unit Test

2003-2004 models

NOTE: For the fuel gauge system circuit diagram, refer to the Gauges Circuit Diagram (see page 22-72).

1. Do multiplex integrated control system troubleshooting test mode A, refer to the 2003-2006 Accord Service Manual (see page 22-91).

   - If no problem is found, go to step 2.
   - If DTC B1175 is indicated, go to the DTC B1175 troubleshooting, refer to the 2003-2006 Accord Service Manual (see page 22-283).

2. Check the No. 21 METER (7.5 A) fuse in the under-dash fuse/relay box.

3. Do the gauge drive circuit check, refer to the 2003-2006 Accord Service Manual (see page 22-259).

   - If the fuel gauge needle sweeps from the minimum to maximum position and then returns to minimum, the gauge is OK. Go to step 4.
   - If the fuel gauge needle does not sweep correctly, replace the gauge assembly and retest.

4. Turn the ignition switch OFF.

5. Remove the trunk floor.

6. Remove the access panel (A) from the floor.

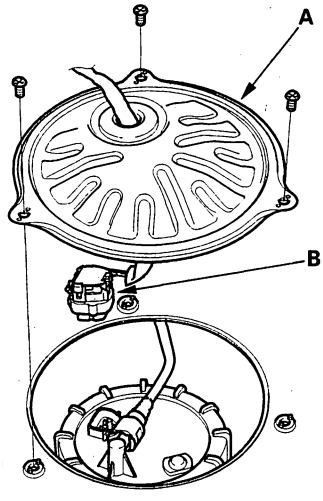

7. Disconnect the fuel pump 5P connector (B).

8. Remove the fuel tank unit from the fuel tank (see page 11-327).

9. Measure resistance between the No. 1 and No. 2 terminals of the fuel pump 5P connector with the float at E (EMPTY), 1/2 (HALF FULL), and F (FULL) positions.
   If you do not get the following readings, replace the fuel gauge sending unit (see page 11-327).

Float Position	F 7.6 in. (191.4 mm)	1/2 4.4 in. (113.1 mm)	LOW 2.0 in. (52.4 mm)	E 0.8 in. (25.6 mm)
Resistance (Ω)	19 to 21	205.5 to 215.5	487.9 to 617.1	770 to 790

NOTE: Remove the No. 15 BACK UP (40 A) fuse from the under-hood fuse/relay box for at least 10 seconds after completing troubleshooting, otherwise it may take up to 20 minutes for the fuel gauge to indicate the correct fuel level.

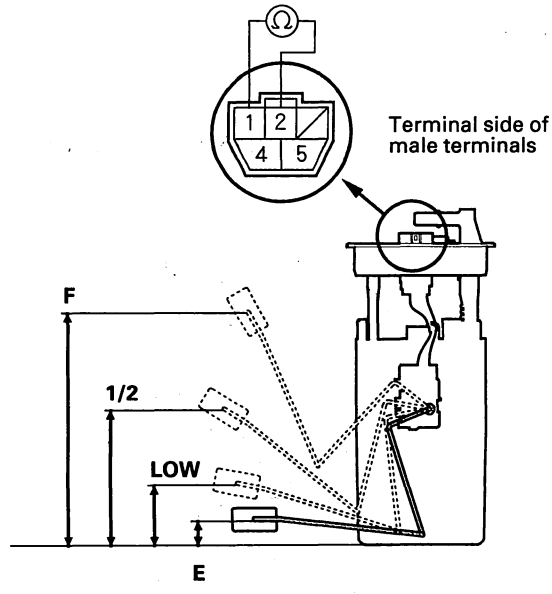

BACK

Protected by AR

Fuel Gauge Sending Unit Test (cont'd)

2005-2006 models

NOTE: For the fuel gauge system circuit diagram, refer to the Gauges Circuit Diagram; 2005 model (see page 22-72), 2006 model (see page 22-80).

1. Check the No. 21 METER (7.5 A) fuse in the under-dash fuse/relay box before testing.

2. 2005 model:
   Do multiplex integrated control system troubleshooting test mode A, refer to the 2003-2006 Accord Service Manual (see page 22-91).
   2006 model:
   Do the B-CAN system diagnosis Test Mode A troubleshooting, refer to the 2003-2006 Accord Service Manual (see page 22-91).

   - If no problem is found, go to step 3.
   - If DTC B1175 or B1176 is indicated, go to the indicated DTC's troubleshooting.

3. Turn the ignition switch OFF.

4. Remove the trunk floor.

5. Remove the access panel (A) from the floor.

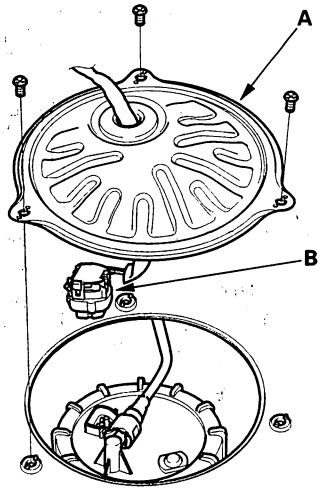

6. Disconnect the fuel tank unit 5P connector (B).

7. Measure voltage between fuel tank unit 5P connector terminals No. 1 and No. 2 with the ignition switch ON (II). There should be battery voltage.

   - If the voltage is OK, go to step 8.
   - If the voltage is not as specified, check for:
     – a short in the YEL/BLK wire to ground.
     – an open in the YEL/BLK or BLK/WHT wire.

FUEL TANK UNIT 5P CONNECTOR

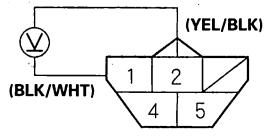

Wire side of female terminals

8. Turn the ignition switch OFF.

9. Remove the fuel tank unit from the fuel tank (see page 11-327).

10. Measure resistance between fuel tank unit 5P connector terminals No. 1 and No. 2 with the float at E (EMPTY), LOW (LOW FUEL INDICATOR), 1/2 (HALF FULL), and F (FULL) positions.
    If you do not get the following readings, replace the fuel gauge sending unit (see page 11-327).

Float Position	F 7.6 in. (191.4 mm)	1/2 4.4 in. (113.1 mm)	LOW 2.0 in. (52.4 mm)	E 0.8 in. (25.6 mm)
Resistance (Ω)	19 to 21	205.5 to 215.5	487.9 to 617.1	770 to 790

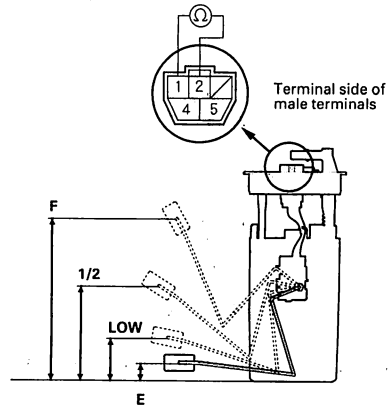

BACK

Protected by AR



Low Fuel Indicator Test

11. Reconnect the fuel tank unit 5P connector.

12. Remove the No. 15 BACK UP (40 A) fuse from the under-hood fuse/relay box for at least 10 seconds, then reinstall it.

13. Turn the ignition switch ON (II).

14. Check that the pointer of the fuel gauge indicates "F" with the float at F.

    - If the pointer of the fuel gauge does not indicate "F" replace the gauge assembly.
    - If the gauge is OK, the test is complete.

    NOTE:
    - The pointer of the fuel gauge returns to the bottom of the gauge dial when the ignition switch is OFF, regardless of the fuel level.
    - Remove the No. 15 BACK UP (40 A) fuse from the under-hood fuse/relay box for at least 10 seconds after completing troubleshooting, otherwise it may take up to 20 minutes for the fuel gauge to indicate the correct fuel level.

1. Do the gauge drive circuit check, refer to the 2003-2006 Accord Service Manual (see page 22-259).

    - If the low fuel indicator flashes, go to step 2.
    - If the low fuel indicator does not flash, replace the gauge control module assembly.

2. 2003-2005 models:
   Do multiplex integrated control system troubleshooting test mode A, refer to the 2003-2006 Accord Service Manual (see page 22-91).
   2006 model:
   Do the B-CAN system diagnosis Test Mode A troubleshooting, refer to the 2003-2006 Accord Service Manual (see page 22-91).

    - If any DTCs are indicated, go to the indicated DTC's troubleshooting.
    - If no DTCs are indicated, go to step 3.

3. Do the fuel gauge sending unit test (see page 11-331).

Protected by AR

Intake Air System

Component Location Index

A/T

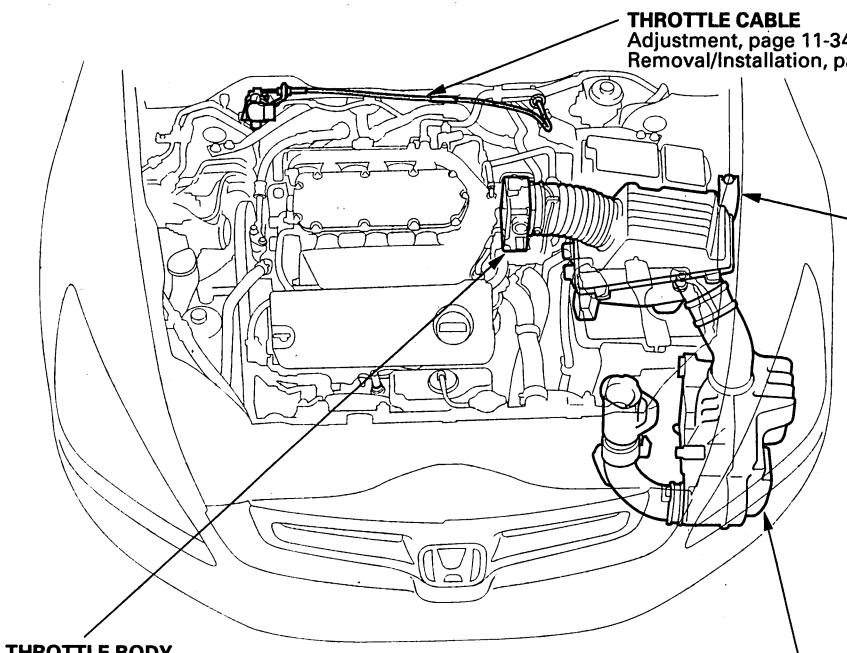

M/T

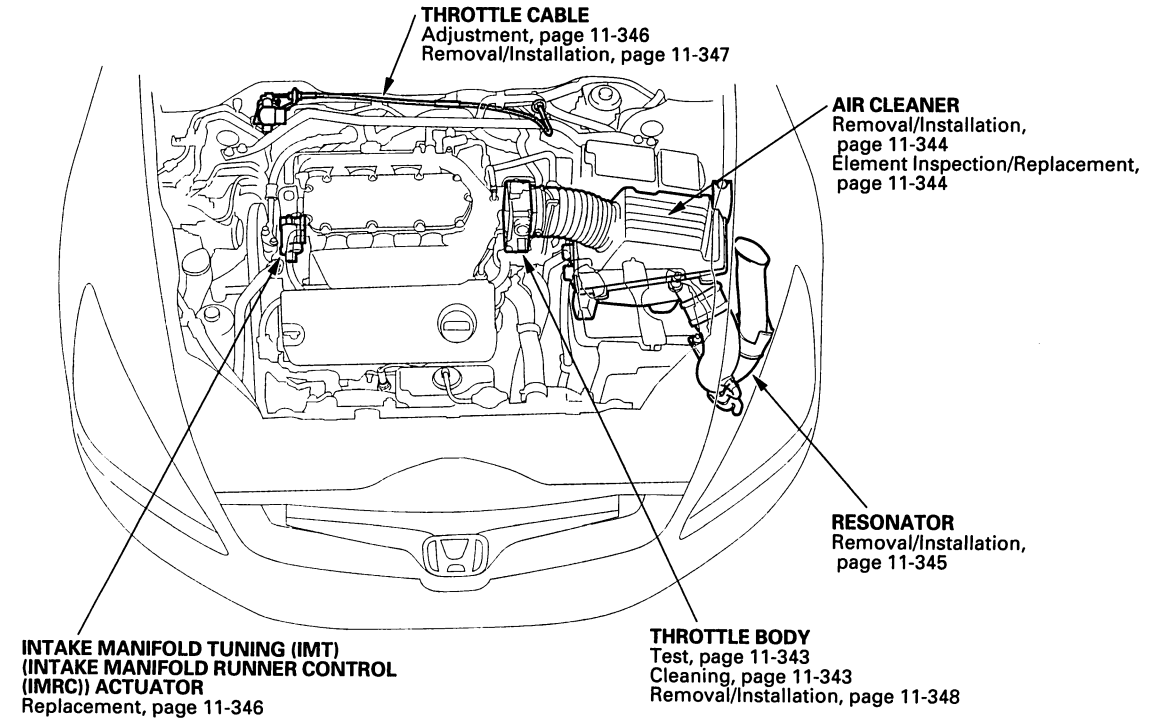

BACK

Protected by AR

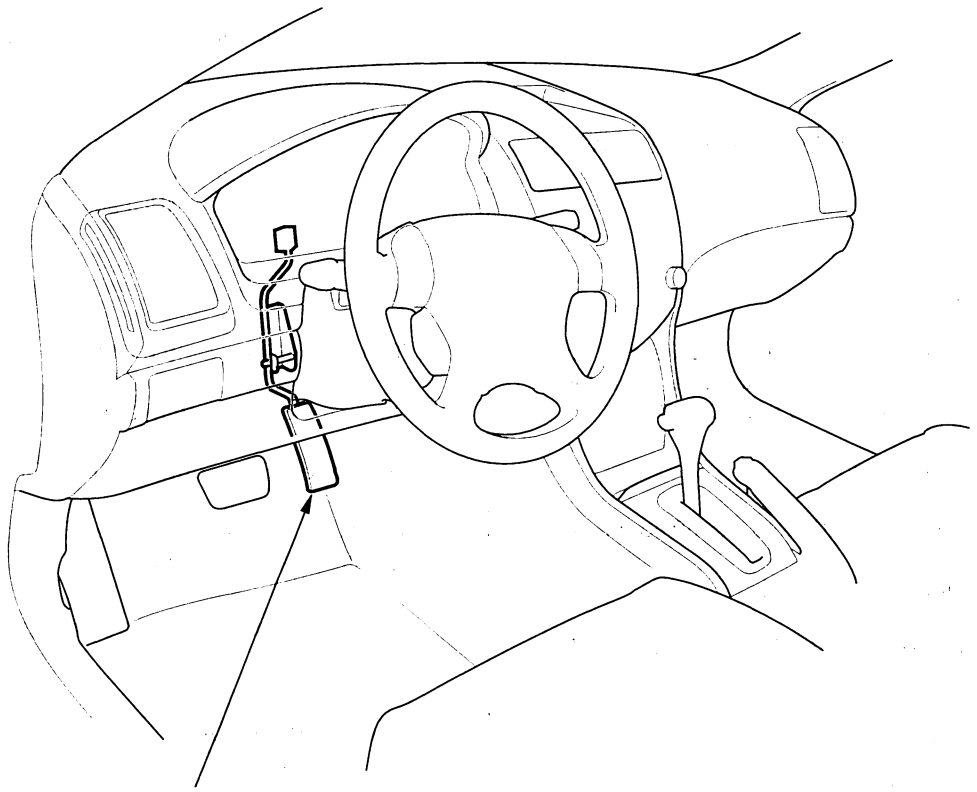

ACCELERATOR PEDAL
Replacement, page 11-349

Protected by AR

DTC Troubleshooting

DTC P1077: IMT (IMRC) Valve Stuck Short

NOTE: Before you troubleshoot, record all freeze data and any on-board snapshot, and review the general troubleshooting information (see page 11-3).

1. Start the engine, and let it idle.
2. Check the IMT (IMRC) VALVE CMD in the DATA LIST with the HDS.

   Is CLOSE indicated?

   YES—Go to step 3.

   NO—Go to step 29.
3. Check the IMT (IMRC) VALVE SW in the DATA LIST with the HDS.

   Is OPEN indicated?

   YES—Go to step 4.

   NO—Intermittent failure, system is OK at this time. Check for poor connections or loose terminals at the IMT (IMRC) actuator and the ECM. ■
4. Turn the ignition switch OFF.
5. Disconnect the IMT (IMRC) actuator 5P connector.
6. Turn the ignition switch ON (II).
7. Check the IMT (IMRC) VLV SW in the DATA LIST with the HDS.

   Is CLOSE indicated?

   YES—Go to step 12.

   NO—Go to step 8.
8. Turn the ignition switch OFF.
9. Jump the SCS line with the HDS.
10. Disconnect ECM connector B (24P).
11. Check for continuity between ECM connector terminal B11 and body ground.

ECM CONNECTOR B (24P)

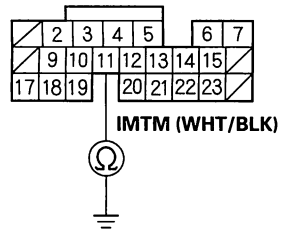

Wire side of female terminals

Is there continuity?

YES—Repair short in the wire between the ECM (B11) and the IMT (IMRC) actuator, then go to step 23.

NO—Go to step 29.

12. Turn the ignition switch OFF.
13. Jump the SCS line with the HDS.
14. Disconnect ECM connector B (24P).
15. Check for continuity between ECM connector terminal B4 and body ground.

ECM CONNECTOR B (24P)

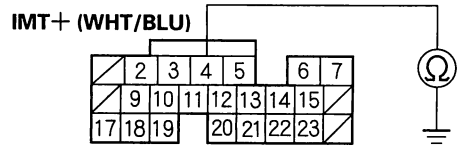

Wire side of female terminals

Is there continuity?

YES—Repair short in the wire between the ECM (B4) and the IMT (IMRC) actuator, then go to step 23.

NO—Go to step 16.

BACK

Protected by AR

16. Connect IMT (IMRC) actuator 5P connector terminal No. 5 to body ground with a jumper wire.

IMT (IMRC) ACTUATOR 5P CONNECTOR

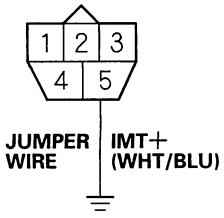

Wire side of female terminals

17. Check for continuity between ECM connector terminal B4 and body ground.

ECM CONNECTOR B (24P)

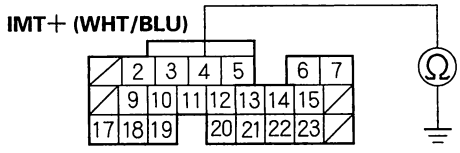

Wire side of female terminals

Is there continuity?

YES—Go to step 18.

NO—Repair open in the wire between the ECM (B4) and the IMT (IMRC) actuator, then go to step 23.

18. Check for continuity between ECM connector terminal B3 and body ground.

ECM CONNECTOR B (24P)

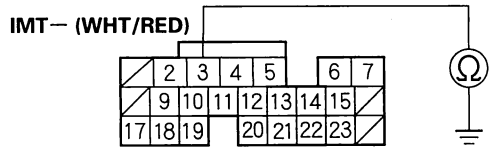

Wire side of female terminals

Is there continuity?

YES—Repair short in the wire between the ECM (B3) and the IMT (IMRC) actuator, then go to step 23.

NO—Go to step 19.

19. Connect IMT (IMRC) actuator 5P connector terminal No. 4 to body ground with a jumper wire.

IMT (IMRC) ACTUATOR 5P CONNECTOR

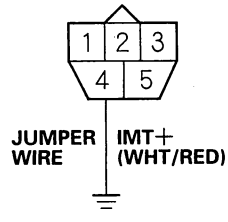

Wire side of female terminals

(cont'd)

Protected by AR

DTC Troubleshooting (cont'd)

20. Check for continuity between ECM connector terminal B3 and body ground.

ECM CONNECTOR B (24P)

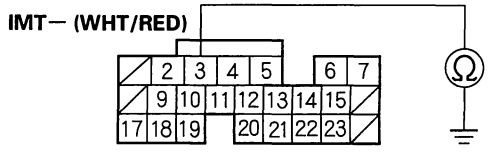

Wire side of female terminals

Is there continuity?

YES—Go to step 21.

NO—Repair open in the wire between the ECM (B3) and the IMT (IMRC) actuator, then go to step 23.

21. Remove the IMT (IMRC) actuator (see page 11-346).

22. Move the IMT (IMRC) valve by hand.

Does it move smoothly?

YES—Substitute a known-good IMT (IMRC) actuator (see page 11-346), then go to step 23 and recheck. If DTC P1077 is not indicated, replace the IMT (IMRC) actuator (see page 11-346), then go to step 23. If DTC P1077 is indicated, go to step 29.

NO—Remove the intake manifold upper cover (see page 9-2), and repair the stuck valve. If necessary, replace the intake manifold (see page 9-2), then go to step 23.

23. Reconnct all connectors.

24. Turn the ignition switch ON (II).

25. Reset the ECM with the HDS.

26. Do the ECM idle learn procedure (see page 11-302).

27. Check for Temporary DTCs or DTCs with the HDS.

Are any Temporary DTCs or DTCs indicated?

YES—If DTC P1077 is indicated, check for poor connections or loose terminals at the IMT (IMRC) actuator and the ECM, then go to step 1. If any other Temporary DTCs or DTCs are indicated, go to the indicated DTC's troubleshooting.

NO—Go to step 28.

28. Monitor the OBD STATUS for DTC P1077 in the DTCs MENU with the HDS.

Does the screen indicate PASSED?

YES—Troubleshooting is complete. ■

NO—If the screen indicates FAILED, check for poor connections or loose terminals at the IMT (IMRC) actuator and the ECM, then go to step 1. If the screen indicates NOT COMPLETED, go to step 26 and recheck.

29. Update the ECM if it does not have the latest software, or substitute a known-good ECM (see page 11-6).

30. Check for Temporary DTCs or DTCs with the HDS.

Are any Temporary DTCs or DTCs indicated?

YES—If DTC P1077 is indicated, check for poor connections or loose terminals at the IMT (IMRC) actuator and the ECM, then go to step 1. If any other Temporary DTCs or DTCs are indicated, go to the indicated DTC's troubleshooting.

NO—If the ECM was updated, troubleshooting is complete. If the ECM was substituted, replace the original ECM (see page 11-224). ■

BACK

Protected by AR

DTC P1078: IMT (IMRC) Valve Stuck Long

NOTE: Before you troubleshoot, record all freeze data and any on-board snapshot, and review the general troubleshooting information (see page 11-3).

1. Start the engine, and hold the engine speed above 4,000 rpm.
2. Check the IMT (IMRC) VALVE CMD in the DATA LIST with the HDS.

   Is OPEN indicated?

   YES—Go to step 3.

   NO—Go to step 32.
3. Check the IMT (IMRC) VALVE SW in the DATA LIST with the HDS.

   Is CLOSE indicated?

   YES—Go to step 4.

   NO—Intermittent failure, system is OK at this time. Check for poor connections or loose terminals at the IMT (IMRC) actuator and the ECM. ■
4. Turn the ignition switch OFF.
5. Disconnect the IMT (IMRC) actuator 5P connector.
6. Turn the ignition switch ON (II).
7. Measure voltage between IMT (IMRC) actuator 5P connector terminal No. 1 and body ground.

IMT (IMRC) ACTUATOR 5P CONNECTOR

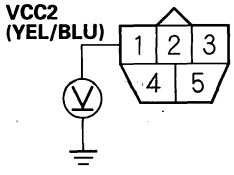

Wire side of female terminals

Is there about 5 V?

YES—Go to step 8.

NO—Repair open in the wire between the ECM (D12) and the IMT (IMRC) actuator, then go to step 25.

8. Measure voltage between IMT (IMRC) actuator 5P connector terminal No. 3 and body ground.

IMT (IMRC) ACTUATOR 5P CONNECTOR

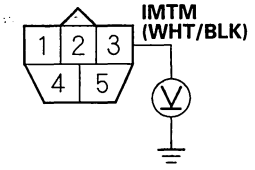

Wire side of female terminals

Is there about 5 V?

YES—Go to step 9.

NO—Go to step 14.

9. Turn the ignition switch OFF.
10. Jump the SCS line with the HDS.
11. Disconnect ECM connector D (17P).
12. Connect IMT (IMRC) actuator 5P connector terminal No. 2 to body ground with a jumper wire.

IMT (IMRC) ACTUATOR 5P CONNECTOR

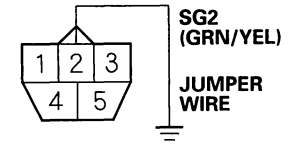

Wire side of female terminals

(cont'd)

Protected by AR

DTC Troubleshooting (cont'd)

13. Check for continuity between ECM connector terminal D10 and body ground.

ECM CONNECTOR D (17P)

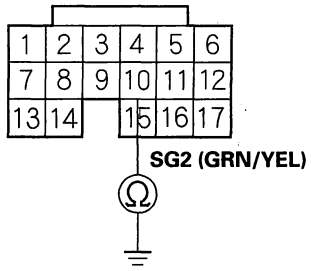

Wire side of female terminals

Is there continuity?

YES—Go to step 17.

NO—Repair open in the wire between the ECM (D10) and the IMT (IMRC) actuator, then go to step 25.

14. Disconnect ECM connector B (24P).

15. Connect IMT (IMRC) actuator 5P connector terminal No. 3 to body ground with a jumper wire.

IMT (IMRC) ACTUATOR 5P CONNECTOR

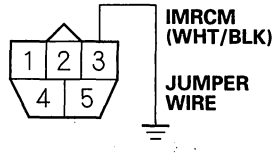

Wire side of female terminals

16. Check for continuity between ECM connector terminal B11 and body ground.

ECM CONNECTOR B (24P)

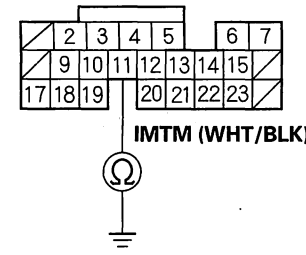

Wire side of female terminals

Is there continuity?

YES—Go to step 31.

NO—Repair open in the wire between the ECM (B11) and the IMT (IMRC) actuator, then go to step 25.

17. Check for continuity between ECM connector terminal B4 and body ground.

ECM CONNECTOR B (24P)

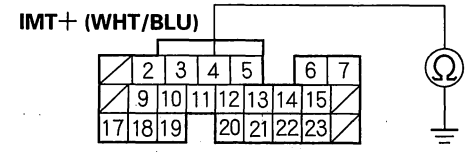

Wire side of female terminals

Is there continuity?

YES—Repair short in the wire between the ECM (B4) and the IMT (IMRC) actuator, then go to step 25.

NO—Go to step 18.

BACK

Protected by AR

18. Connect IMT (IMRC) actuator 5P connector terminal No. 5 to body ground with a jumper wire.

IMT (IMRC) ACTUATOR 5P CONNECTOR

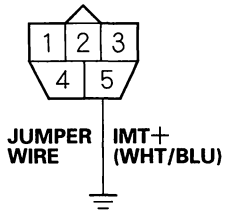

Wire side of female terminals

19. Check for continuity between ECM connector terminal B4 and body ground.

ECM CONNECTOR B (24P)

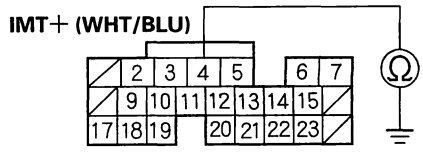

Wire side of female terminals

Is there continuity?

YES—Go to step 20.

NO—Repair open in the wire between the ECM (B4) and the IMT (IMRC) actuator, then go to step 25.

20. Check for continuity between ECM connector terminal B3 and body ground.

ECM CONNECTOR B (24P)

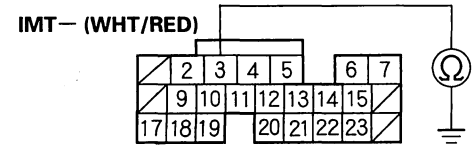

Wire side of female terminals

Is there continuity?

YES—Repair short in the wire between the ECM (B3) and the IMT (IMRC) actuator, then go to step 25.

NO—Go to step 21.

21. Connect IMT (IMRC) actuator 5P connector terminal No. 4 to body ground with a jumper wire.

IMT (IMRC) ACTUATOR 5P CONNECTOR

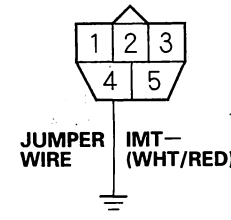

Wire side of female terminals

(cont'd)

Protected by AR

DTC Troubleshooting (cont'd)

22. Check for continuity between ECM connector terminal B3 and body ground.

ECM CONNECTOR B (24P)

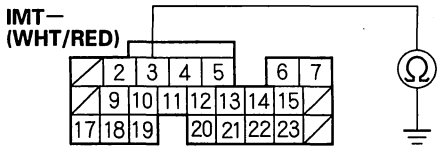

Wire side of female terminals

Is there continuity?

YES—Go to step 23.

NO—Repair open in the wire between the ECM (B3) and the IMT (IMRC) actuator, go to step 25.

23. Remove the IMT (IMRC) actuator (see page 11-346).

24. Move the IMT (IMRC) valve by hand.

Does it move smoothly?

YES—Substitute a known-good IMT (IMRC) actuator (see page 11-346), then go to step 25 and recheck. If DTC P1078 is not indicated, replace the IMT (IMRC) actuator (see page 11-346), then go to step 25. If DTC P1078 is indicated, then go to step 31.

NO—Remove the intake manifold upper cover (see page 9-2), and repair the stuck valve. If necessasy, replace the intake manifold (see page 9-2), then go to step 25.

25. Reconnect all connectors.

26. Turn the ignition switch ON (II).

27. Reset the ECM with the HDS.

28. Do the ECM idle learn procedure (see page 11-302).

29. Start the engine, hold the engine speed at 4,000 rpm for 10 seconds, then let it idle.

30. Check for Temporary DTCs or DTCs with the HDS.

Are any Temporary DTCs or DTCs indicated?

YES—If DTC P1078 is indicated, check for poor connections or loose terminals at the IMT (IMRC) actuator and the ECM, then go to step 1. If any other Temporary DTCs or DTCs are indicated, go to the indicated DTC's troubleshooting.

NO—Go to step 30.

31. Monitor the OBD STATUS for DTC P1078 in the DTCs MENU with the HDS.

Does the screen indicate PASSED?

YES—Troubleshooting is complete. ■

NO—If the screen indicates FAILED, check for poor connections or loose terminals at the IMT (IMRC) actuator and the ECM, then go to step 1. If the screen indicates NOT COMPLETED, go to step 28 and recheck.

32. Update the ECM if it does not have the latest software, or substitute a known-good ECM (see page 11-6).

33. Start the engine, hold the engine speed at 4,000 rpm for 10 seconds, then let it idle.

34. Check for Temporary DTCs or DTCs with the HDS.

Are any Temporary DTCs or DTCs indicated?

YES—If DTC P1078 is indicated, check for poor connections or loose terminals at the IMT (IMRC) actuator and the ECM, then go to step 1. If any other Temporary DTCs or DTCs are indicated, go to the indicated DTC's troubleshooting.

NO—If the ECM was updated, troubleshooting is complete. If the ECM was substituted, replace the original ECM (see page 11-224). ■

BACK

Protected by AR

Throttle Body Test

Carbon Accumulation Check

NOTE: If the malfunction indicator lamp (MIL) has been reported on, check for diagnostic trouble code (DTCs).

1. Connect the HDS to the data link connector (DLC) (A) located under the driver's side of the dashboard.

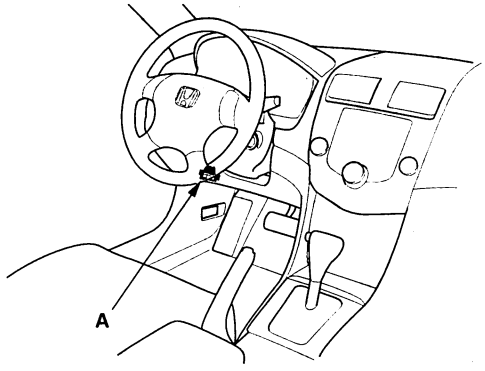

2. Start the engine. Hold the engine speed at 3,000 rpm without load (in Park or neutral) until the radiator fan comes on, then let it idle.

3. Check the REL TP SENSOR in the DATA LIST with the HDS. The reading should be below 2.73 %. If it is not, clean the throttle body (see page 11-343).

Throttle Position Learning Check

NOTE: If the malfunction indicator lamp (MIL) has been reported on, check for diagnostic trouble code (DTCs).

1. Connect the HDS to the data link connector (DLC) (A) located under the driver's side of the dashboard.

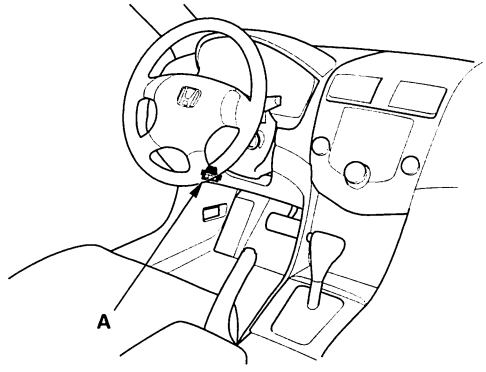

2. Select the INSPECTION MENU with the HDS.

3. Do the TP POSITION CHECK in the ETCS TEST. If needed, clean the throttle body (see page 11-343).

Throttle Body Cleaning

⚠CAUTION

Do not insert your fingers into the installed throttle body when you turn the ignition switch ON (II) or while the ignition switch is ON (II). If you do, you will seriously injure your fingers if the throttle valve is activated.

1. Check for damage to the air cleaner. If the air cleaner is damaged, replace it (see page 11-344).

2. Remove the throttle body (see page 11-348).

3. Clean off the carbon from the throttle valve and inside the throttle body with a paper towel soaked in throttle plate and induction cleaner.

   NOTE:
   - Remove the throttle body to clean it.
   - Be careful not to pinch your fingers.
   - To avoid removing the molybdenum coating, do not clean the bearing area of the throttle shaft (A).
   - Do not spray throttle plate and induction cleaner directly on the throttle body.
   - Use Honda genuine throttle plate and induction cleaner.

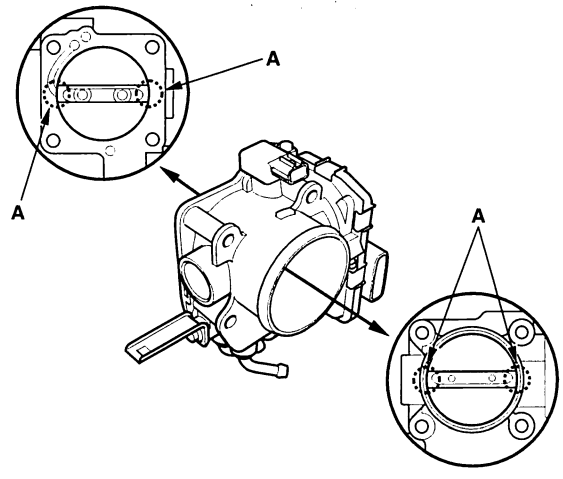

4. Install the throttle body (see page 11-348).

5. Reset the ECM/PCM with the HDS.

6. Turn the ignition switch ON (II), and wait for 2 seconds.

7. Do the ECM/PCM idle learn procedure (see page 11-302).

Protected by AR

Intake Air System

Air Cleaner Removal/Installation

1. Remove the bolts (A) and clamps (B).

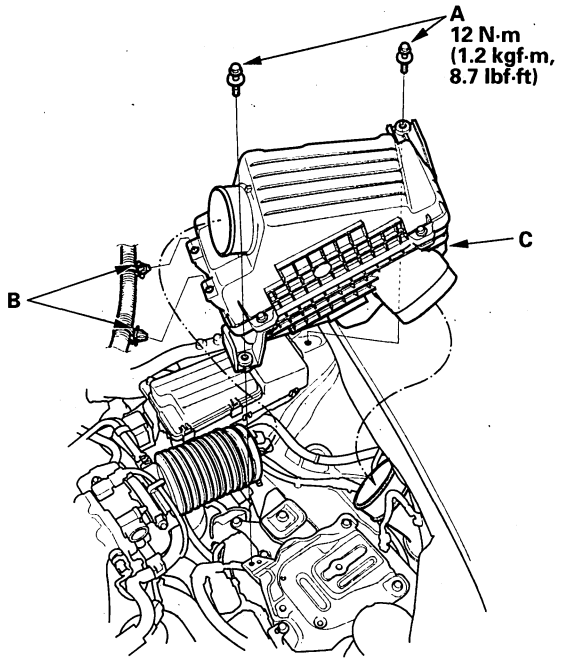

2. Remove the air cleaner (C).
3. Install the parts in the reverse order of removal.

Air Cleaner Element Inspection/ Replacement

1. Open the air cleaner housing cover (A).

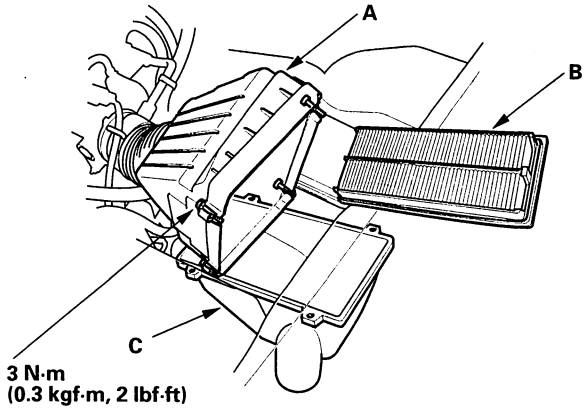

2. Remove the air cleaner (B) from the air cleaner housing (C).
3. Check the air cleaner element for damage or clogging. If needed, replace the air cleaner element.

   NOTE: Do not use compressed air to clean the air cleaner element.

4. Install the parts in the reverse order of removal.

BACK

Protected by AR

Resonator Removal/Installation

A/T

1. Remove the front bumper; 2-door, refer to the 2003-2006 Accord Service Manual (see page 20-184), 4-door, refer to the 2003-2006 Accord Service Manual (see page 20-185).
2. Remove the bolts (A) and the intake air duct (B).

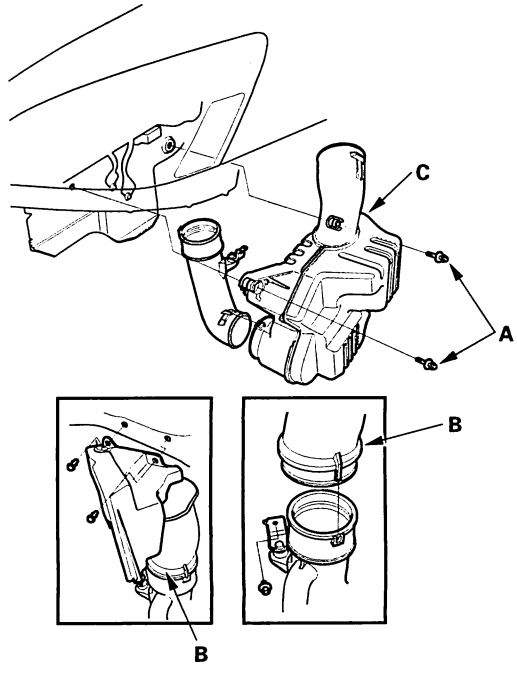

3. Remove the resonator (C).
4. Install the parts in the reverse order of removal.

M/T

1. Remove the front bumper; 2-door, refer to the 2003-2006 Accord Service Manual (see page 20-184), 4-door, refer to the 2003-2006 Accord Service Manual (see page 20-185).
2. Remove the bolts (A).

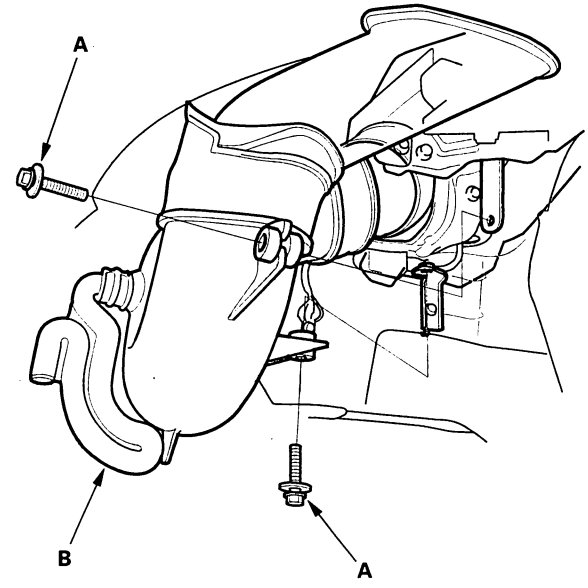

3. Remove the resonator (B).
4. Install the parts in the reverse order of removal.

Protected by AR

IMT (IMRC) Actuator Replacement

1. Remove the intake manifold cover (see page 9-2).
2. Disconnect the IMT (IMRC) actuator 5P connector (A).

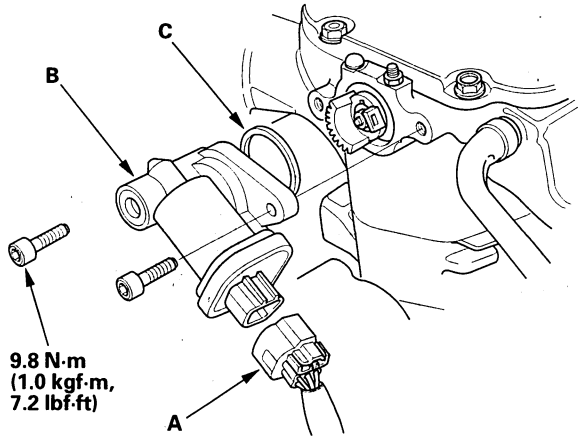

3. Remove the bolts and the IMT (IMRC) actuator (B).
4. Install the actuator in the reverse order of removal with a new O-ring (C).

Throttle Cable Adjustment

1. Remove the throttle cable cover (A).

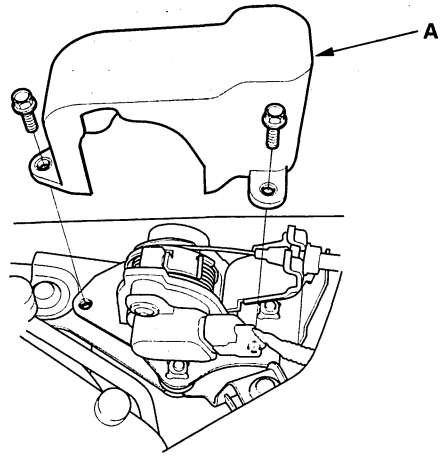

2. Check cable free play at the throttle linkage. Cable free play (A) should be 10—12 mm (3/8—1/2 in.).

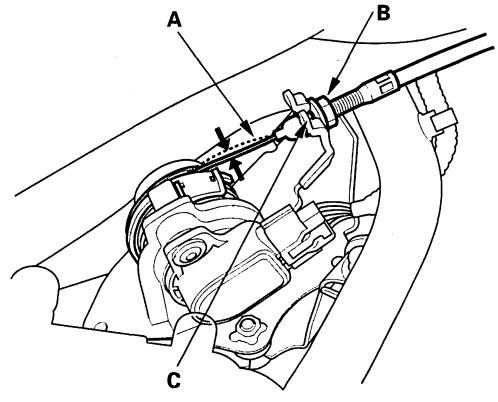

3. If the free play (A) is not within spec (10—12 mm, 3/8—1/2 in.), loosen the locknut (B), turn the adjusting nut (C) until the free play (A) is as specified, then retighten the locknut.
4. With the cable properly adjusted, check the throttle link to be sure it opens fully when you push the accelerator pedal to the floor. Also check the throttle link to be sure it returns to the idle position whenever you release the accelerator pedal.

BACK

Protected by AR

Throttle Cable Removal/Installation

1. Remove the throttle cable cover (see page 11-346).
2. Fully open the throttle link, then remove the throttle cable (A) from the throttle link (B).

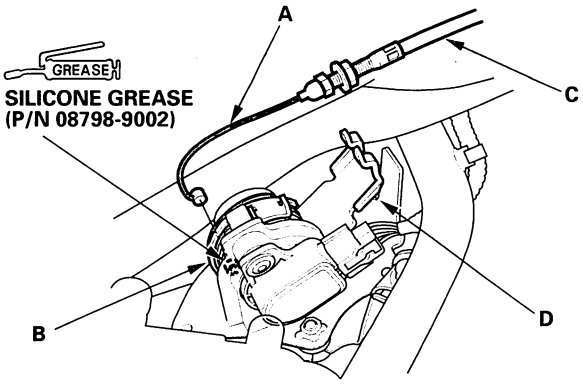

3. Remove the cable housing (C) from the cable bracket (D).
4. Remove the throttle cable (A) from the accelerator pedal (B).

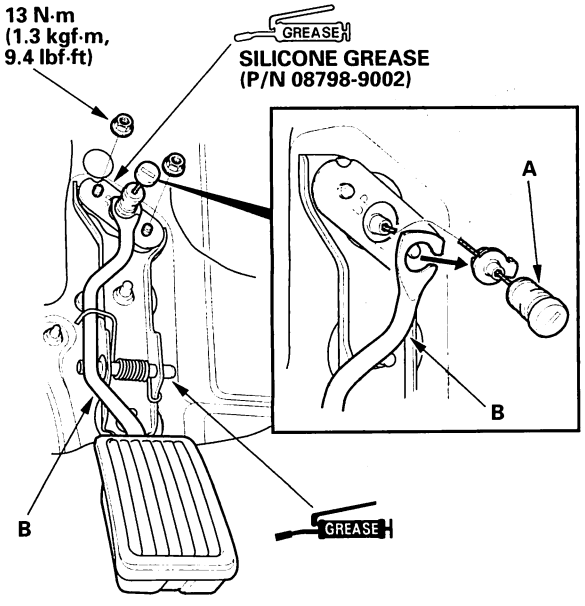

5. Install the cable in the reverse order of removal.
6. Start the engine. Hold the engine speed at 3,000 rpm without load (in Park or neutral) until the radiator fan comes on, then let it idle.
7. Hold the cable, removing all slack from it.
8. Set the cable on the bracket (A).
   Adjust the adjusting nut (B) so that its free play is 0 mm.

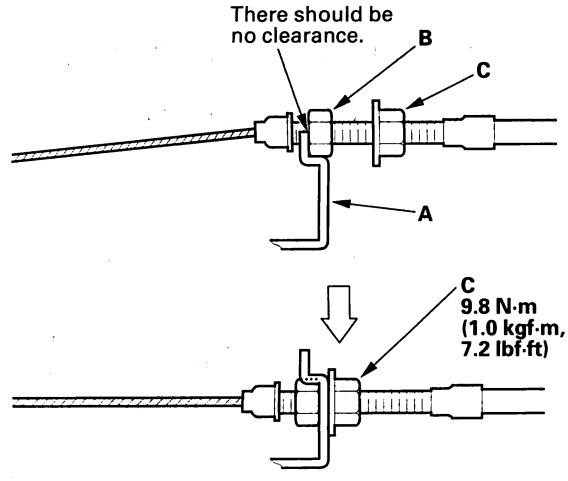

9. Position the adjusting nut on the other side of the bracket, then tighten the locknut (C).
10. Check the throttle cable free play (see step 2 on page 11-346).
11. With the cable properly adjusted, check the throttle link to be sure it opens fully when you push the accelerator pedal to the floor. Also check the throttle link to be sure it returns whenever you release the accelerator pedal.

BACK

Protected by AR

Throttle Body Removal/Installation

⚠CAUTION

Do not insert your fingers into the installed throttle body when you turn the ignition switch ON (II) or while the ignition switch is ON (II). If you do, you will seriously injure your fingers if the throttle valve is activated.

NOTE: If you are replacing or cleaning the throttle body, begin from step 1. If you are removing the throttle body temporarily, begin from step 4.

1. Connect the HDS while the engine is stopped.
2. Select the INSPECTION MENU with the HDS.
3. Do the TP POSITION CHECK in the ETCS TEST.
4. Disconnect the MAP sensor connector (A).

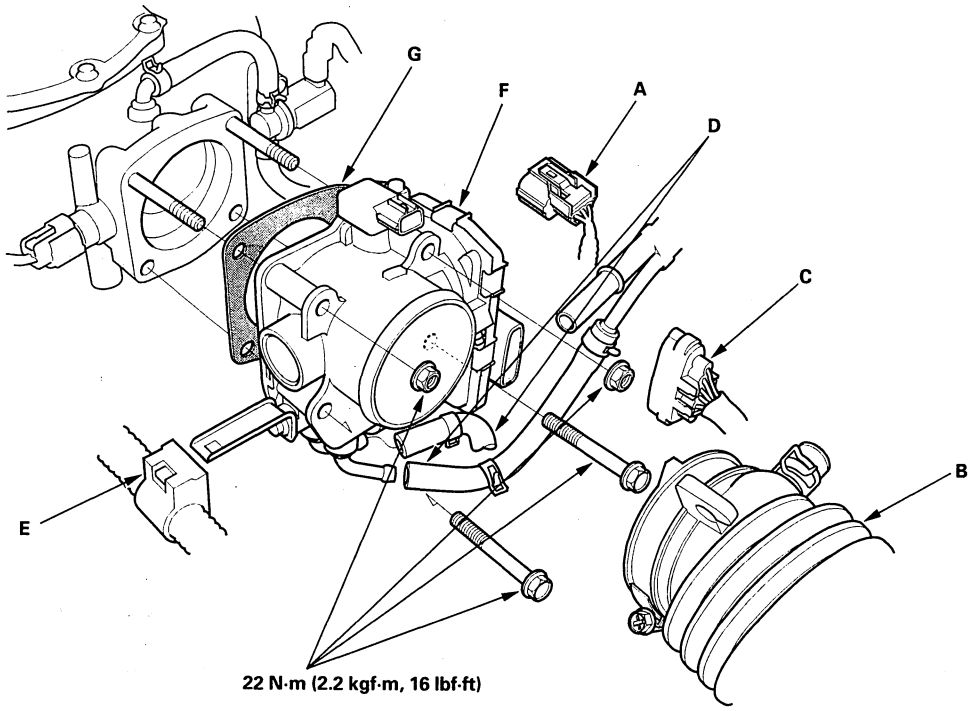

5. Remove the intake air duct (B).
6. Disconnect the throttle body connector (C).
7. Disconnect and plug the water bypass hoses (D).
8. Remove the harness clip (E) and the throttle body (F).
9. Install the parts in the reverse order of removal with a new gasket (G).

NOTE:
- Do the ECM/PCM idle learn procedure after the throttle body has been replaced (see page 11-302).
- Refill the radiator with engine coolant (see page 10-6).

BACK

Protected by AR

Accelerator Pedal Replacement

1. Remove the throttle cable (A) from the accelerator pedal (B).

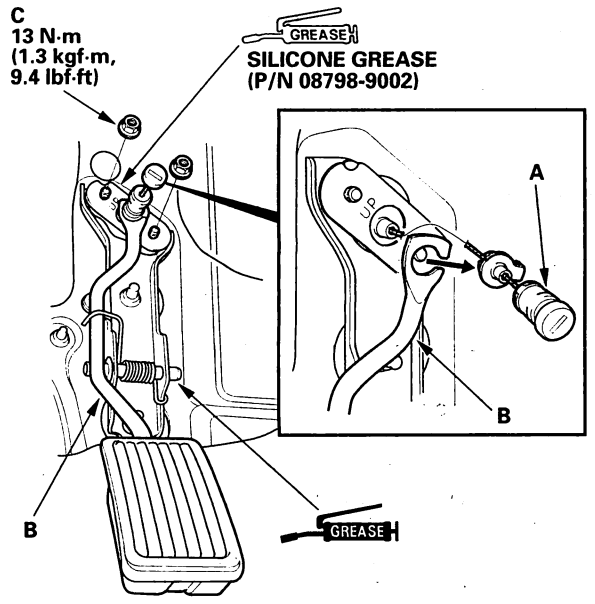

2. Remove the nuts (C) and the accelerator pedal.

3. Install in the reverse order of removal.

Protected by AR

DTC Troubleshooting

DTC P0420: Rear Bank Catalyst System Efficiency Below Threshold (Bank 1) (2003-2004 models)

DTC P0430: Front Bank Catalyst System Efficiency Below Threshold (Bank 2) (2003-2004 models)

NOTE:
- Before you troubleshoot, record all freeze data and any on-board snapshot, and review the general troubleshooting information (see page 11-3).
- If some of the DTCs listed below are stored at the same time as DTC P0420 and/or P0430*, troubleshoot those DTCs first, then recheck for DTC P0420 and/or P0430*.
  P0137, P0138, P0157, P0158: Secondary HO2S (Sensor 2)
  P0141, P0161: Secondary HO2S (Sensor 2) heater
- Poor quality fuel can cause these DTCs.
- Information marked with an asterisk (*) applies to the front bank (Bank 2).

1. Turn the ignition switch ON (II).
2. Clear the DTC with the HDS.
3. Start the engine. Hold the engine speed at 3,000 rpm without load (in Park or neutral) until the radiator fan comes on, then let it idle.
4. Test-drive under these conditions:
   - Engine coolant temperature above 158 °F (70 °C)
   - Transmission in 5th gear (A/T in D position)
   - Vehicle speed between 50—55 mph (80—88 km/h) with cruise control set
   - Drive about 2 minutes, decelerate for at least 4 seconds with the throttle completely closed, then maintain 55 mph (88 km/h) for 20 minutes with cruise control set
5. Monitor the OBD STATUS for DTC P0420 and/or P0430* in the DTCs MENU with the HDS.

   Does the screen indicate EXECUTING?

   YES—Go to step 6.

   NO—Go to step 4 and recheck.
6. Continue test driving until a result comes on.
7. Monitor the OBD STATUS for DTC P0420 and/or P0430* in the DTCs MENU with the HDS.

   Does the screen indicate FAILED?

   YES—Go to step 8.

   NO—If the screen indicates PASSED, intermittent failure, system is OK at this time. If the screen indicates EXECUTING, keep driving until a result comes on. If the screen indicates OUT OF CONDITION, go to step 4 and recheck.
8. Turn the ignition switch OFF.
9. Replace the WU-TWC (see page 11-354).
10. Turn the ignition switch ON (II).
11. Reset the ECM/PCM with the HDS.
12. Do the ECM/PCM idle learn procedure (see page 11-302).

BACK

Protected by AR

13. Start the engine. Hold the engine speed at 3,000 rpm without load (in Park or neutral) until the radiator fan comes on, then let it idle.

14. Test-drive for about 10 minutes, continually changing the vehicle speed.

15. Check the CATA MON TEMP in the DATA LIST with the HDS.

    Is the temperature OK?

    YES—Go to step 16.

    NO—Go to step 13 and recheck.

16. Test-drive under these conditions:

    - Engine coolant temperature above 158 °F (70 °C)
    - Transmission in 5th gear (A/T in D position)
    - Vehicle speed between 50—55 mph (80—88 km/h) with cruise control set
    - Drive about 2 minutes, decelerate for at least 4 seconds with the throttle completely closed, then maintain 55 mph (88 km/h) for 20 minutes with cruise control set

17. Monitor the OBD STATUS for DTC P0420 and/or P0430 in the DTCs MENU with the HDS.

    Does the screen indicate EXECUTING?

    YES—Go to step 18.

    NO—Go to step 16 and recheck.

18. Continue test driving until a result comes on.

19. Check for Temporary DTCs or DTCs with the HDS.

    Are any Temporary DTCs or DTCs indicated?

    YES—Go to the indicated DTC's troubleshooting. ■

    NO—Go to step 20.

20. Monitor the OBD STATUS for DTC P0420 and/or P0430 in the DTCs MENU with the HDS.

    Does the screen indicate PASSED?

    YES—Troubleshooting is complete. ■

    NO—If the screen indicates FAILED, check the fuel quality. If the screen indicates EXECUTING, keep driving until a result comes on. If the screen indicates OUT OF CONDITION, go to step 13 and recheck.

Protected by AR

DTC Troubleshooting (cont'd)

DTC P0420: Rear Bank Catalyst System Efficiency Below Threshold (Bank 1) (2005-2006 models)

DTC P0430: Front Bank Catalyst System Efficiency Below Threshold (Bank 2) (2005-2006 models)

NOTE:
- Before you troubleshoot, record all freeze data and any on-board snapshot, and review the general troubleshooting information (see page 11-3).
- If some of the DTCs listed below are stored at the same time as DTC P0420 and/or P0430*, troubleshoot those DTCs first, then recheck for DTC P0420 and/or P0430*.
  P0137, P0138, P0157, P0158, P2270, P2271, P2272*, P2273*: Secondary HO2S (Sensor 2)
  P0141, P0161: Secondary HO2S (Sensor 2) heater
- Poor quality fuel can cause these DTCs.
- Information marked with an asterisk (*) applies to the front bank (Bank 2).

1. Turn the ignition switch ON (II).
2. Clear the DTC with the HDS.
3. Start the engine. Hold the engine speed at 3,000 rpm without load (in Park or neutral) until the radiator fan comes on, then let it idle.
4. Test-drive under these conditions:
   - Engine coolant temperature above 158 °F (70 °C)
   - Transmission in 5th gear (A/T in D position)
   - Vehicle speed between 45—75 mph (72—120 km/h) for 5 minutes or more with cruise control set
   - Maintain the vehicle speed at 55 mph (88 km/h) for 5 minutes or more with cruise control set
5. Monitor the OBD STATUS for DTC P0420 and/or P0430* in the DTCs MENU with the HDS.

   Does the screen indicate EXECUTING?

   YES—Go to step 6.

   NO—Go to step 4 and recheck.
6. Continue test driving until a result comes on.
7. Monitor the OBD STATUS for DTC P0420 and/or P0430* in the DTCs MENU with the HDS.

   Does the screen indicate FAILED?

   YES—Go to step 8.

   NO—If the screen indicates PASSED, intermittent failure, system is OK at this time. If the screen indicates EXECUTING, keep driving until a result comes on. If the screen indicates OUT OF CONDITION, go to step 4 and recheck.
8. Turn the ignition switch OFF.
9. Replace the WU-TWC (see page 11-354).
10. Turn the ignition switch ON (II).
11. Reset the ECM/PCM with the HDS.
12. Do the ECM/PCM idle learn procedure (see page 11-302).

BACK

Protected by AR

13. Start the engine. Hold the engine speed at 3,000 rpm without load (in Park or neutral) until the radiator fan comes on, then let it idle.

14. Test-drive for about 10 minutes, continually changing the vehicle speed.

15. Check the CATA MON TEMP in the DATA LIST with the HDS.

    Is the temperature OK?

    YES—Go to step 16.

    NO—Go to step 13 and recheck.

16. Test-drive under these conditions:

    - Engine coolant temperature above 158 °F (70 °C)
    - Transmission in 5th gear (A/T in D position)
    - Vehicle speed at 55 mph (88 km/h) for 5 minutes or more with cruise control set

17. Monitor the OBD STATUS for DTC P0420 and/or P0430' in the DTCs MENU with the HDS.

    Does the screen indicate EXECUTING?

    YES—Go to step 18.

    NO—Go to step 16 and recheck.

18. Continue test driving until a result comes on.

19. Check for Temporary DTCs or DTCs with the HDS.

    Are any Temporary DTCs or DTCs indicated?

    YES—Go to the indicated DTC's troubleshooting.■

    NO—Go to step 20.

20. Monitor the OBD STATUS for DTC P0420 and/or P0430' in the DTCs MENU with the HDS.

    Does the screen indicate PASSED?

    YES—Troubleshooting is complete.■

    NO—If the screen indicates FAILED, check the fuel quality. If the screen indicates EXECUTING, keep driving until a result comes on. If the screen indicates OUT OF CONDITION, go to step 13 and recheck.

Protected by AR

Catalytic Converter System

Warm Up Three Way Catalytic Converter Removal/Installation

FRONT

1. Remove the condenser fan shroud (see page 10-10).
2. Disconnect the front air fuel ratio (A/F) sensor connector and front secondary heated oxygen sensor (secondary HO2S) connector.
3. Remove the front WU-TWC.

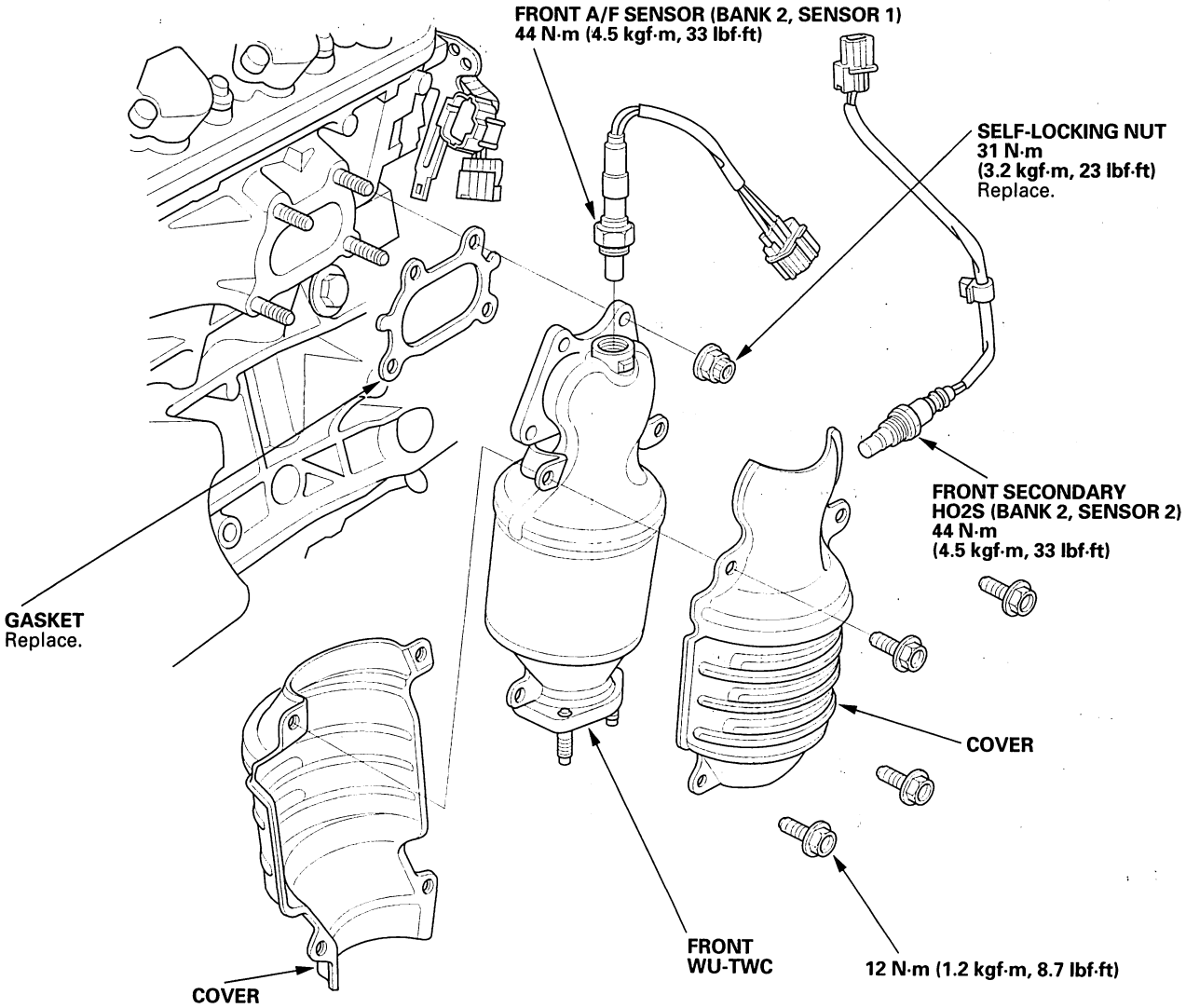

4. Install the front WU-TWC, and tighten the nuts in a crisscross pattern in two or three steps.
5. Install the other parts in the reverse order of removal.

BACK

Protected by AR

REAR

1. Remove the intermediate shaft (see page 16-22).
2. Disconnect the rear air fuel ratio (A/F) sensor connector and rear secondary heated oxygen sensor (secondary HO2S) connector.
3. Remove the rear WU-TWC bracket, then remove the rear WU-TWC.

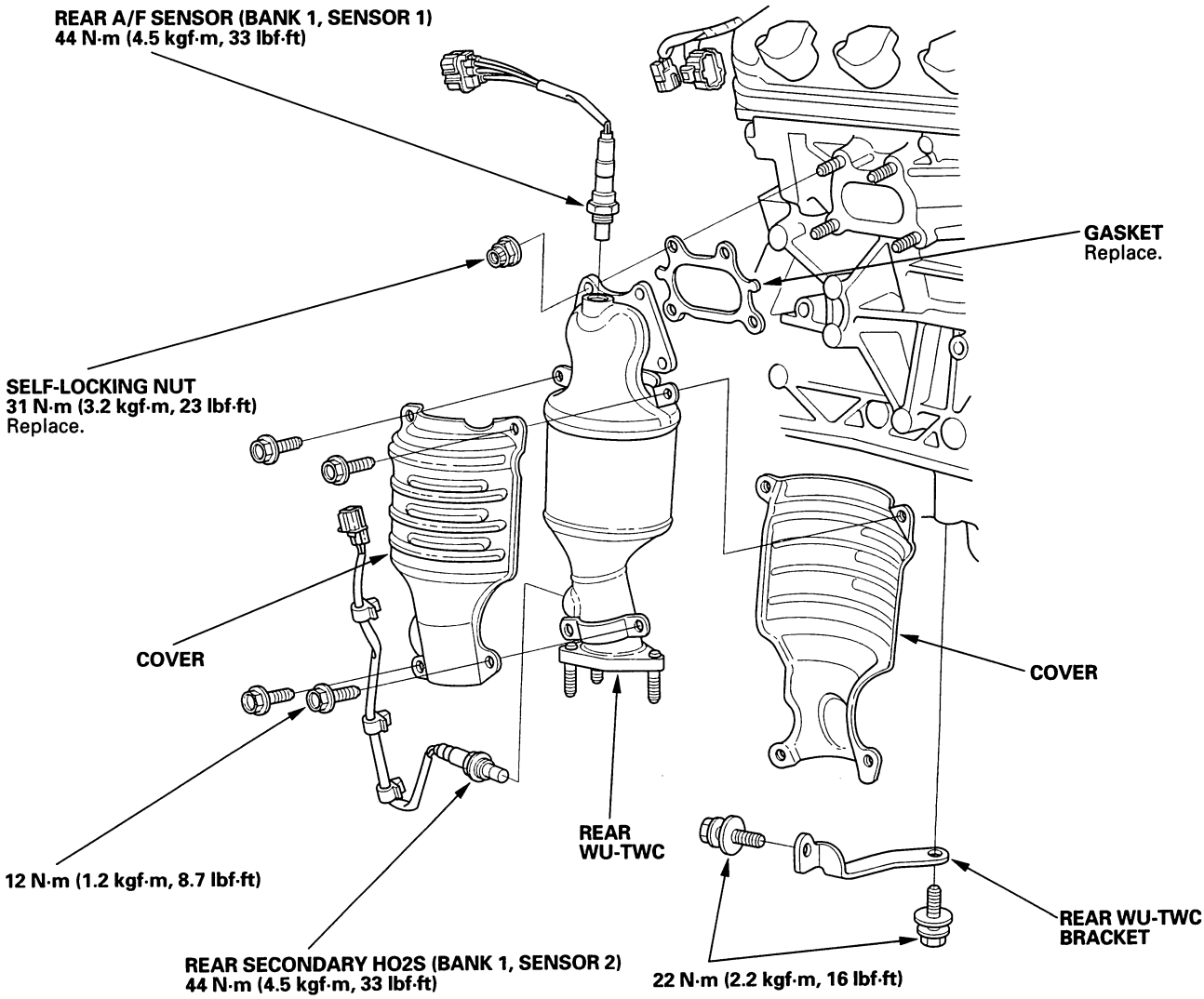

4. Install the rear WU-TWC, and tighten the nuts in a crisscross pattern in two or three steps.
5. Install the other parts in the reverse order of removal.

Protected by AR

EGR System

Component Location Index

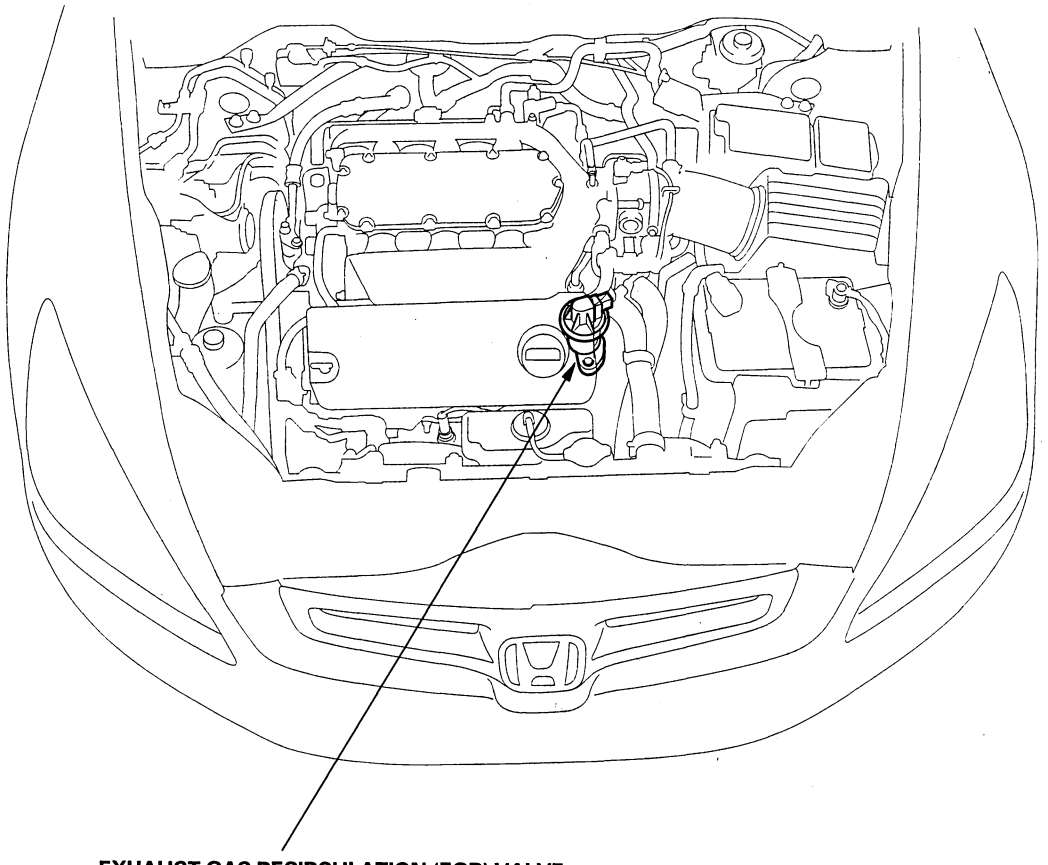

EXHAUST GAS RECIRCULATION (EGR) VALVE
Replacement, page 11-368

BACK

Protected by AR

DTC Troubleshooting

DTC P0401: EGR Insufficient Flow

NOTE: Before you troubleshoot, record all freeze data and any on-board snapshot, and review the general troubleshooting information (see page 11-3).

1. Turn the ignition switch ON (II).
2. Clear the DTC with the HDS.
3. Start the engine. Hold the engine speed at 3,000 rpm without load (in Park or neutral) until the radiator fan comes on, then let it idle.
4. Do the EGR TEST in the INSPECTION MENU with the HDS.

   Is the result OK?

   YES—Go to step 5.

   NO—Go to step 7.
5. Test-drive under these conditions:

   - Engine coolant temperature above 158 °F (70 °C)
   - Transmission in 4th gear (A/T in D position)
   - Vehicle speed at 25 mph (40 km/h) or more, and engine speed between 1,100 rpm and 3,000 rpm
   - During the drive, decelerate (with the throttle fully closed) for 5 seconds
6. Monitor the OBD STATUS for DTC P0401 in the DTCs MENU with the HDS.

   Does the screen indicate FAILED?

   YES—Remove the intake manifold cover (see page 9-2), and clean the intake manifold, and EGR ports with throttle plate and induction cleaner, then go to step 9.

   NO—If the screen indicates PASSED, intermittent failure, system is OK at this time. If the screen indicates EXECUTING, keep driving until a result comes on. If the screen indicates OUT OF CONDITION, go to step 5 and recheck.
7. Turn the ignition switch OFF.
8. Replace the EGR valve (see page 11-368).
9. Turn the ignition switch ON (II).
10. Reset the ECM/PCM with the HDS.
11. Do the ECM/PCM idle learn procedure (see page 11-302).
12. Test-drive under these conditions:

    - Engine coolant temperature above 158 °F (70 °C)
    - Transmission in 4th gear (A/T in D position)
    - Vehicle speed at 25 mph (40 km/h) or more, and engine speed between 1,100 rpm and 3,000 rpm
    - During the drive, decelerate (with the throttle fully closed) for 5 seconds
13. Check for Temporary DTCs or DTCs with the HDS.

    Are any Temporary DTCs or DTCs indicated OK?

    YES—If DTC P0401 is indicated, check for poor connections or loose terminals at the EGR valve and the ECM/PCM. If the connections are OK, go to step 15. If any other Temporary DTCs or DTCs are indicated, go to the indicated DTC's troubleshooting.

    NO—Go to step 14.
14. Monitor the OBD STATUS for DTC P0401 in the DTCs MENU with the HDS.

    Does the screen indicate PASSED?

    YES—Troubleshooting is complete. ■

    NO—If the screen indicates FAILED, go to step 1 and recheck. If the screen indicates EXECUTING, keep driving until a result comes on. If the screen indicates OUT OF CONDITION, go to step 12 and recheck.

(cont'd)

Protected by AR

DTC Troubleshooting (cont'd)

15. Update the ECM/PCM if it does not have the latest software, or substitute a known-good ECM/PCM (see page 11-6).

16. Test-drive under these conditions:

    - Engine coolant temperature above 158 °F (70 °C)
    - Transmission in 4th gear (A/T in D position)
    - Vehicle speed at 25 mph (40 km/h) or more, and engine speed between 1,100 rpm and 3,000 rpm
    - During the drive, decelerate (with the throttle fully closed) for 5 seconds

17. Check for Temporary DTCs or DTCs with the HDS.

    Are any Temporary DTCs or DTCs indicated?

    YES—If DTC P0401 is indicated, check for poor connections or loose terminals at the EGR valve and the ECM/PCM, then go to step 1. If any other Temporary DTCs or DTCs are indicated, go to the indicated DTC's troubleshooting.

    NO—If the ECM/PCM was updated, troubleshooting is complete. If the ECM/PCM was substituted, replace the original ECM/PCM (see page 11-224).■

DTC P0404: EGR Control Circuit Range/ Performance Problem

NOTE: Before you troubleshoot, record all freeze data and any on-board snapshot, and review the general troubleshooting information (see page 11-3).

1. Turn the ignition switch ON (II).

2. Clear the DTC with the HDS.

3. Start the engine. Hold the engine speed at 3,000 rpm without load (in Park or neutral) until the radiator fan comes on, then let it idle.

4. Do the EGR TEST in the INSPECTION MENU with the HDS.

   Is the result OK?

   YES—Intermittent failure, system is OK at this time. Clean any carbon build-up on the EGR valve with throttle plate and induction cleaner.■

   NO—Go to step 5.

5. Turn the ignition switch OFF.

6. Disconnect the EGR valve 6P connector.

7. At the sensor side, measure resistance between EGR valve 6P connector terminals No. 1 and No. 2.

EGR VALVE 6P CONNECTOR

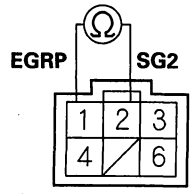

Terminal side of male terminals

Is there 100 kΩ or more?

YES—Go to step 26.

NO—Go to step 8.

BACK

Protected by AR

8. Measure resistance between EGR valve 6P connector terminals No. 1 and No. 3.

EGR VALVE 6P CONNECTOR

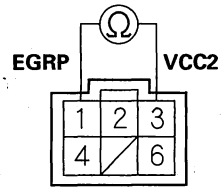

Terminal side of male terminals

Is there 100 kΩ or more?

YES—Go to step 26.

NO—Go to step 9.

9. Check for continuity between EGR valve 6P connector terminal No. 6 and body ground.

EGR VALVE 6P CONNECTOR

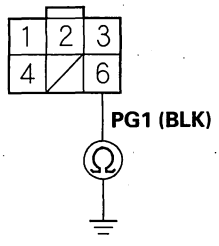

Wire side of female terminals

Is there continuity?

YES—Go to step 10.

NO—Repair open in the wire between the EGR valve and G101, then go to step 27.

10. Jump the SCS line with the HDS.

11. Disconnect ECM/PCM connector B (24P).

12. Check for continuity between ECM/PCM connector terminal B5 and body ground.

ECM/PCM CONNECTOR B (24P)

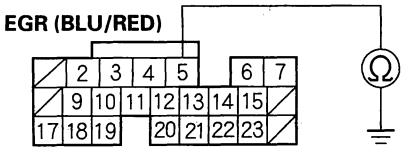

Wire side of female terminals

Is there continuity?

YES—Repair short in the wire between the ECM/PCM (B5) and the EGR valve, then go to step 27.

NO—Go to step 13.

13. Connect EGR valve 6P connector terminal No. 4 to body ground with a jumper wire.

EGR VALVE 6P CONNECTOR

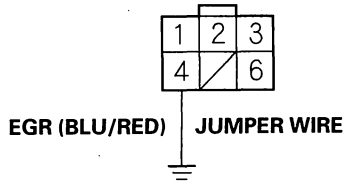

Wire side of female terminals

(cont'd)

Protected by AR

DTC Troubleshooting (cont'd)

14. Check for continuity between ECM/PCM connector terminal B5 and body ground.

ECM/PCM CONNECTOR B (24P)

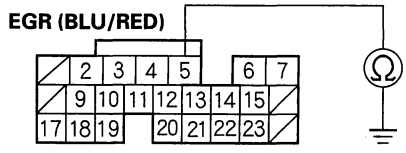

Wire side of female terminals

Is there continuity?

YES—Go to step 15.

NO—Repair open in the wire between the ECM/PCM (B5) and the EGR valve, then go to step 27.

15. Remove the EGR valve (see page 11-368).
16. Clean the intake manifold EGR port with throttle plate and induction cleaner. Also, clean the passage inside the EGR valve with throttle plate and induction cleaner.
17. Install the EGR valve (see page 11-368).
18. Reconnect the EGR valve 6P connector.
19. Reconnect ECM/PCM connector B (24P).
20. Turn the ignition switch ON (II).
21. Reset the ECM/PCM with the HDS.
22. Do the ECM/PCM idle learn procedure (see page 11-302).
23. Start the engine. Hold the engine speed at 3,000 rpm without load (in Park or neutral) until the radiator fan comes on, then let it idle.
24. Do the EGR TEST in the INSPECTION MENU with the HDS.

Is the result OK?

YES—Go to step 33.

NO—Go to step 25.

25. Turn the ignition switch OFF.
26. Replace the EGR valve (see page 11-368).
27. Reconnect all connectors.
28. Turn the ignition switch ON (II).
29. Reset the ECM/PCM with the HDS.
30. Do the ECM/PCM idle learn procedure (see page 11-302).
31. Start the engine. Hold the engine speed at 3,000 rpm without load (in Park or neutral) until the radiator fan comes on, then let it idle.
32. Do the EGR TEST in the INSPECTION MENU with the HDS.
33. Check for Temporary DTCs or DTCs with the HDS.

Are any Temporary DTCs or DTCs indicated?

YES—If DTC P0404 is indicated, check for poor connections or loose terminals at the EGR valve and the ECM/PCM. If the connections and terminals are OK, go to step 35. If any other Temporary DTCs or DTCs are indicated, go to the indicated DTC's troubleshooting.

NO—Go to step 34.

BACK

Protected by AR

34. Monitor the OBD STATUS for DTC P0404 in the DTCs MENU with the HDS.

    Does the screen indicate PASSED?

    YES—Troubleshooting is complete. ■

    NO—If the screen indicates FAILED, go to step 1 and recheck. If the screen indicates EXECUTING, keep driving until a result comes on. If the screen indicates OUT OF CONDITION, go to step 31 and recheck.

35. Update the ECM/PCM if it does not have the latest software, or substitute a know-good ECM/PCM (see page 11-6).

36. Do the EGR TEST in the INSPECTION MENU with the HDS.

37. Check for Temporary DTCs or DTCs with the HDS.

    Are any Temporary DTCs or DTCs indicated?

    YES—If DTC P0404 is indicated, check for poor connections or loose terminals at the EGR valve and the ECM/PCM, then go to step 1. If any other Temporary DTCs or DTCs are indicated, go to the indicated DTC's troubleshooting.

    NO—If the ECM/PCM was updated, troubleshooting is complete. If the ECM/PCM was substituted, replace the original ECM/PCM (see page 11-224). ■

DTC P0406: EGR Valve Position Sensor Circuit High Voltage

NOTE: Before you troubleshoot, record all freeze data and any on-board snapshot, and review the general troubleshooting information (see page 11-3).

1. Turn the ignition switch ON (II).

2. Check the EGR VLS in the DATA LIST with the HDS.

   Is 4.88 V or higher indicated?

   YES—Go to step 3.

   NO—Intermittent failure, system is OK at this time. Check for poor connections or loose terminals at the EGR valve and the ECM/PCM. ■

3. Turn the ignition switch OFF.

4. Disconnect the EGR valve 6P connector.

5. Turn the ignition switch ON (II).

6. Measure voltage between EGR valve 6P connector terminals No. 2 and No. 3.

EGR VALVE 6P CONNECTOR

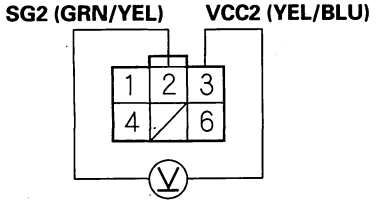

Wire side of female terminals

Is there about 5 V?

YES—Go to step 8.

NO—Go to step 7.

(cont'd)

Protected by AR

DTC Troubleshooting (cont'd)

7. Measure voltage between ECM/PCM connector terminals D12 and D10.

ECM/PCM CONNECTOR D (17P)

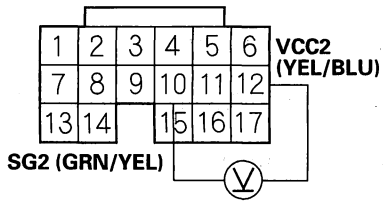

Wire side of female terminals

Is there about 5 V?

YES—Repair open in the wire between the EGR valve and the ECM/PCM (D10) , then go to step 10.

NO—Go to step 14.

8. Turn the ignition switch OFF.
9. Replace the EGR valve (see page 11-368).
10. Turn the ignition switch ON (II).
11. Reset the ECM/PCM with the HDS.
12. Do the ECM/PCM idle learn procedure (see page 11-302).
13. Check for Temporary DTCs or DTCs with the HDS.

Are any Temporary DTCs or DTCs indicated?

YES—If DTC P0406 is indicated, check for poor connections or loose terminals at the EGR valve and the ECM/PCM, then go to step 1. If any other Temporary DTCs or DTCs are indicated, go to the indicated DTC's troubleshooting.

NO—Troubleshooting is complete. ■

14. Update the ECM/PCM if it does not have the latest software, or substitute a known-good ECM/PCM (see page 11-6).
15. Check for Temporary DTCs or DTCs with the HDS.

Are any Temporary DTCs or DTCs indicated?

YES—If DTC P0406 is indicated, check for poor connections or loose terminals at the EGR valve and the ECM/PCM, then go to step 1. If any other Temporary DTCs or DTCs are indicated, go to the indicated DTC's troubleshooting.

NO—If the ECM/PCM was updated, troubleshooting is complete. If the ECM/PCM was substituted, replace the original ECM/PCM (see page 11-224). ■

BACK

Protected by AR

DTC P2413: EGR System Malfunction

NOTE: Before you troubleshoot, record all freeze data and any on-board snapshot, and review the general troubleshooting information (see page 11-3).

1. Turn the ignition switch ON (II).
2. Clear the DTC with the HDS.
3. Start the engine. Hold the engine speed at 3,000 rpm without load (in Park or neutral) until the radiator fan comes on, then let it idle.
4. Do the EGR TEST in the INSPECTION MENU with the HDS.

   Is the result OK?

   YES—Intermittent failure, system is OK at this time. Check for poor connections or loose terminals at the EGR valve and the ECM/PCM. ■

   NO—Go to step 5.
5. Turn the ignition switch OFF.
6. Turn the ignition switch ON (II).
7. Check the EGR VLS in the DATA LIST with the HDS.

   Is about 0 V indicated?

   YES—Go to step 8.

   NO—Go to step 19.
8. Turn the ignition switch OFF.
9. Disconnect the EGR valve 6P connector.
10. Turn the ignition switch ON (II).
11. Measure voltage between EGR valve 6P connector terminal No. 3 and body ground.

EGR VALVE 6P CONNECTOR

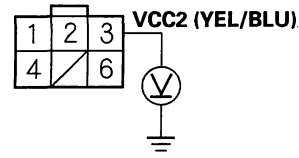

Wire side of female terminals

Is there about 5 V?

YES—Go to step 13.

NO—Go to step 12.

12. Measure voltage between ECM/PCM connector terminal D12 and body ground.

ECM/PCM CONNECTOR D (17P)

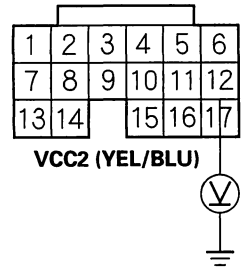

Wire side of female terminals

Is there about 5 V?

YES—Repair open in the wire between the EGR valve and the ECM/PCM (D12), then go to step 44.

NO—Go to step 51.

(cont'd)

Protected by AR

DTC Troubleshooting (cont'd)

13. Turn the ignition switch OFF.
14. Jump the SCS line with the HDS.
15. Disconnect ECM/PCM connector D (17P).
16. Check for continuity between ECM/PCM connector terminal D11 and body ground.

ECM/PCM CONNECTOR D (17P)

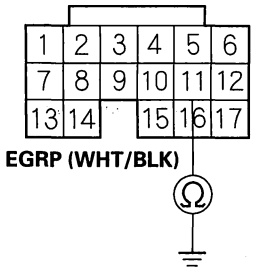

Wire side of female terminals

Is there continuity?

YES—Repair short in the wire between the ECM/PCM (D11) and the EGR valve, then go to step 44.

NO—Go to step 17.

17. Connect EGR valve 6P connector terminal No. 1 to body ground with a jumper wire.

EGR VALVE 6P CONNECTOR

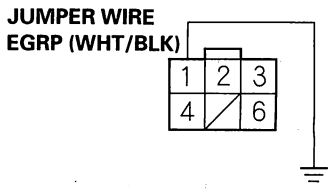

Wire side of female terminals

18. Check for continuity between ECM/PCM connector terminal D11 and body ground.

ECM/PCM CONNECTOR D (17P)

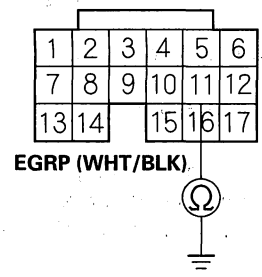

Wire side of female terminals

Is there continuity?

YES—Go to step 19.

NO—Repair open in the wire between the ECM/PCM (D11) and the EGR valve, then go to step 44.

19. Turn the ignition switch OFF.
20. If not already done, disconnect the EGR valve 6P connector.
21. At the sensor side, measure resistance between EGR valve 6P connector terminals No. 1 and No. 2.

EGR VALVE 6P CONNECTOR

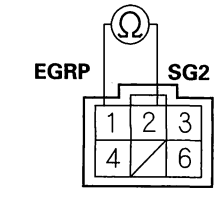

Terminal side of male terminals

Is there continuity or resistance of 100 kΩ or more?

YES—Go to step 43.

NO—Go to step 22.

BACK

Protected by AR

22. Measure resistance between EGR valve 6P connector terminals No. 1 and No. 3.

EGR VALVE 6P CONNECTOR

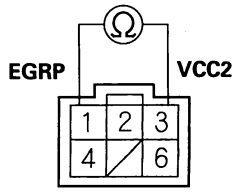

Terminal side of male terminals

Is there 100 kΩ or more?

YES—Go to step 43.

NO—Go to step 23.

23. If not already done, jump the SCS line with the HDS.
24. If not already done, disconnect ECM/PCM connector B (24P).
25. Check for continuity between ECM/PCM connector terminal B5 and body ground.

ECM/PCM CONNECTOR B (24P)

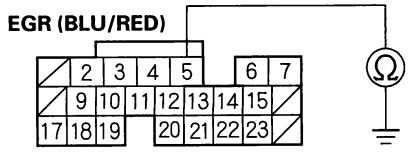

Wire side of female terminals

Is there continuity?

YES—Repair short in the wire between the ECM/PCM (B5) and the EGR valve, then go to step 44.

NO—Go to step 26.

26. Connect EGR valve 6P connector terminal No. 4 to body ground with a jumper wire.

EGR VALVE 6P CONNECTOR

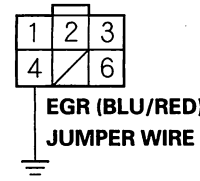

Wire side of female terminals

27. Check for continuity between ECM/PCM connector terminal B5 and body ground.

ECM/PCM CONNECTOR B (24P)

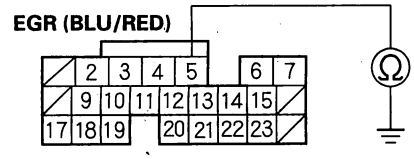

Wire side of female terminals

Is there continuity?

YES—Go to step 28.

NO—Repair open in the wire between the ECM/PCM (B5) and the EGR valve, then go to step 44.

(cont'd)

Protected by AR

DTC Troubleshooting (cont'd)

28. Remove the jumper wire from the EGR valve 6P connector.

29. Check for continuity between EGR valve 6P connector terminal No. 6 and body ground.

EGR VALVE 6P CONNECTOR

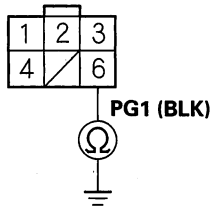

Wire side of female terminals

Is there continuity?

YES—Go to step 30.

NO—Repair open in the wire between the EGR valve and G101, then go to step 44.

30. Reconnect ECM/PCM connector B (24P).

31. Connect the battery positive terminal to EGR valve 6P connector terminal No. 4 with a jumper wire.

EGR VALVE 6P CONNECTOR

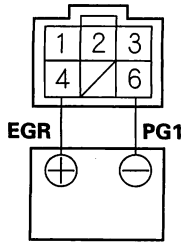

Terminal side of male terminals

32. Start the engine and let it idle, then connect the battery negative terminal to EGR valve 6P connector terminal No. 6 with a jumper wire.

Does the engine stall or run rough?

YES—Go to step 51.

NO—Go to step 33.

33. Turn the ignition switch OFF.

34. Remove the EGR valve (see page 11-368).

35. Clean the intake manifold EGR port with throttle plate and induction cleaner. Also, clean the passage inside the EGR valve with throttle plate and induction cleaner.

36. Install the EGR valve (see page 11-368).

37. Reconnect the EGR valve 6P connector.

38. Turn the ignition switch ON (II).

39. Reset the ECM/PCM with the HDS.

40. Do the ECM/PCM idle learn procedure (see page 11-302).

41. Do the EGR TEST in the INSPECTION MENU with the HDS.

Is the result OK?

YES—Go to step 49.

NO—Go to step 42.

BACK

Protected by AR

42. Turn the ignition switch OFF.

43. Replace the EGR valve (see page 11-368).

44. Reconnect all connectors.

45. Turn the ignition switch ON (II).

46. Reset the ECM/PCM with the HDS.

47. Do the ECM/PCM idle learn procedure (see page 11-302).

48. Do the EGR TEST in the INSPECTION MENU with the HDS.

49. Check for Temporary DTCs or DTCs with the HDS.

    Are any Temporary DTCs or DTCs indicated?

    YES—If DTC P2413 is indicated, check for poor connections or loose terminals at the EGR valve and the ECM/PCM, then go to step 1. If any other Temporary DTCs or DTCs are indicated, go to the indicated DTC's troubleshooting.

    NO—Go to step 50.

50. Monitor the OBD STATUS for DTC P2413 in the DTCs MENU with the HDS.

    Does the screen indicate PASSED?

    YES—Troubleshooting is complete.■

    NO—If the screen indicates FAILED, go to step 1 and recheck. If the screen indicates EXECUTING, keep driving until a result comes on. If the screen indicates OUT OF CONDITION, go to step 48 and recheck.

51. Update the ECM/PCM if it does not have the latest software, or substitute a known-good ECM/PCM (see page 11-6).

52. Do the EGR TEST in the INSPECTION MENU with the HDS.

53. Check for Temporary DTCs or DTCs with the HDS.

    Are any Temporary DTCs or DTCs indicated?

    YES—If DTC P2413 is indicated, check for poor connections or loose terminals at the EGR valve and the ECM/PCM, then go to step 1. If any other Temporary DTCs or DTCs are indicated, go to the indicated DTC's troubleshooting.

    NO—If the ECM/PCM was updated, troubleshooting is complete. If the ECM/PCM was substituted, replace the original ECM/PCM (see page 11-224).■

Protected by AR

EGR Valve Replacement

1. Remove the ignition coil cover (see step 1 on page 4-20).
2. Disconnect the EGR valve 6P connector (A).

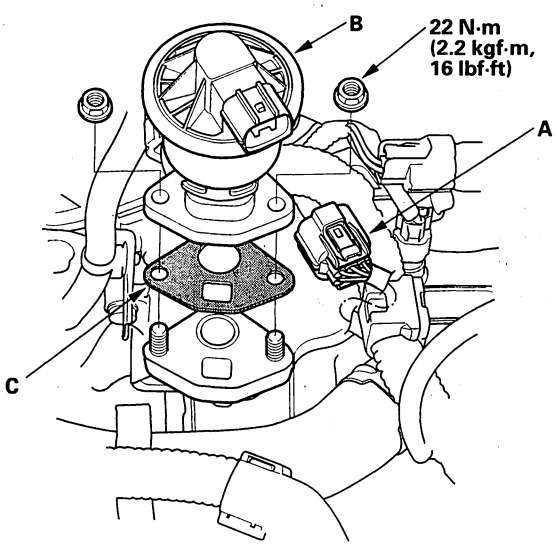

3. Remove the EGR valve (B).
4. Install the valve in the reverse order of removal with a new gasket (C).
5. Install the ignition coil cover.

BACK

Protected by AR

DTC Troubleshooting

DTC P2279: Intake Air System Leak

NOTE:
- Before you troubleshoot, record all freeze data and any on-board snapshot, and review the general troubleshooting information (see page 11-3).
- If DTC P0443 is stored at the same time as DTC P2279, troubleshoot DTC P0443 first, then recheck for DTC P2279.

1. Check for vacuum leaks at these parts:

   - PCV valve
   - PCV hose
   - Purge (PCS) line
   - Throttle body
   - Intake manifold
   - Brake booster hose

   Are the parts OK?

   YES—Go to step 2.

   NO—Repair or replace the damaged parts, then go to step 4.

2. Start the engine. Hold the engine speed at 3,000 rpm without load (in Park or neutral) until the radiator fan comes on, then let it idle for 1 minute.

3. Monitor the OBD STATUS for DTC P2279 in the DTCs MENU with the HDS.

   Does the screen indicate FAILED?

   YES—Check the camshaft timing (see step 1 on page 6-14), then go to step 4.

   NO—If the screen indicates PASSED, intermittent failure, system is OK at this time. If the screen indicates NOT COMPLETED, go to step 2 and recheck.

4. Reset the ECM/PCM with the HDS.

5. Do the ECM/PCM idle learn procedure (see page 11-302).

6. Start the engine. Hold the engine speed at 3,000 rpm without load (in Park or neutral) until the radiator fan comes on, then let it idle for 1 minute.

7. Check for Temporary DTCs or DTCs with the HDS.

   Are any Temporary DTCs or DTCs indicated?

   YES—If DTC P2279 is indicated, check for vacuum leaks at the PCV valve, the PCV hose, the purge (PCS) line, the throttle body, the intake manifold, or the brake booster hose, then go to step 1. If any other Temporary DTCs or DTCs are indicated, go to the indicated DTC's troubleshooting.

   NO—Go to step 8.

8. Monitor the OBD STATUS for DTC P2279 in the DTCs MENU with the HDS.

   Does the screen indicate PASSED?

   YES—Troubleshooting is complete.■

   NO—If the screen indicates FAILED, go to step 1 and recheck. If the screen indicates NOT COMPLETED, go to step 6 and recheck.

Protected by AR

PCV System

PCV Valve Inspection

1. Remove the ignition coil cover (see step 1 on page 4-20).
2. Check the PCV valve (A), hoses (B), and connections for leaks or restrictions.

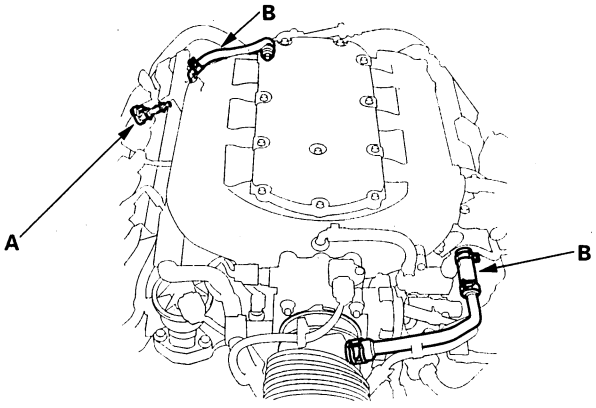

3. At idle, listen to the PCV valve (A) with a stethoscope as you lightly pinch the PCV hose (B) with your fingers or pliers several times. Each time the hose is pinched, the valve should click.

   If there is no clicking sound, check the PCV valve grommet for cracks or damage. If the grommet is OK, replace the PCV valve and recheck.

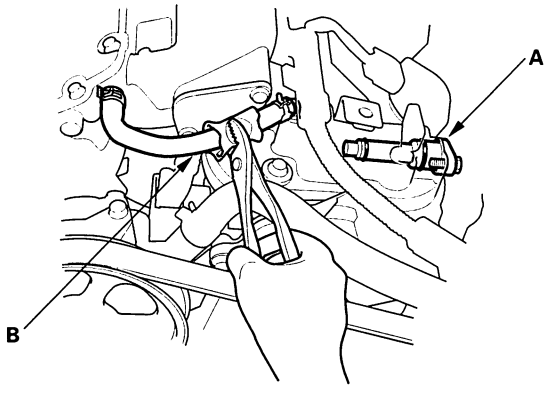

PCV Valve Replacement

1. Remove the ignition cover.
2. Disconnect the bolt (A).

   NOTE: Take care not to spill oil on the hot exhaust manifold.

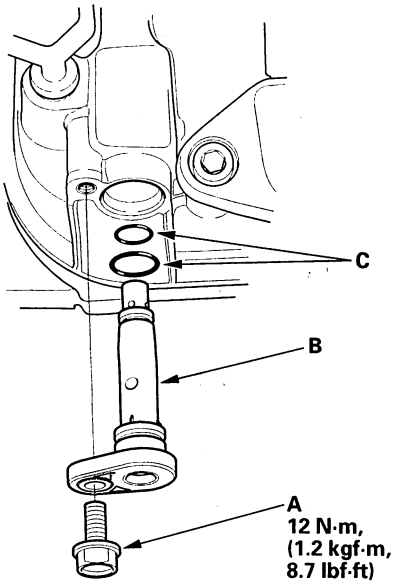

3. Remove the PCV valve (B).
4. Install the valve in the reverse order of removal.

   NOTE:
   - When installing a new PCV valve, make sure the O-rings (C) are in place.
   - When installing a used PCV valve, use new O-rings.

BACK

Protected by AR

Component Location Index

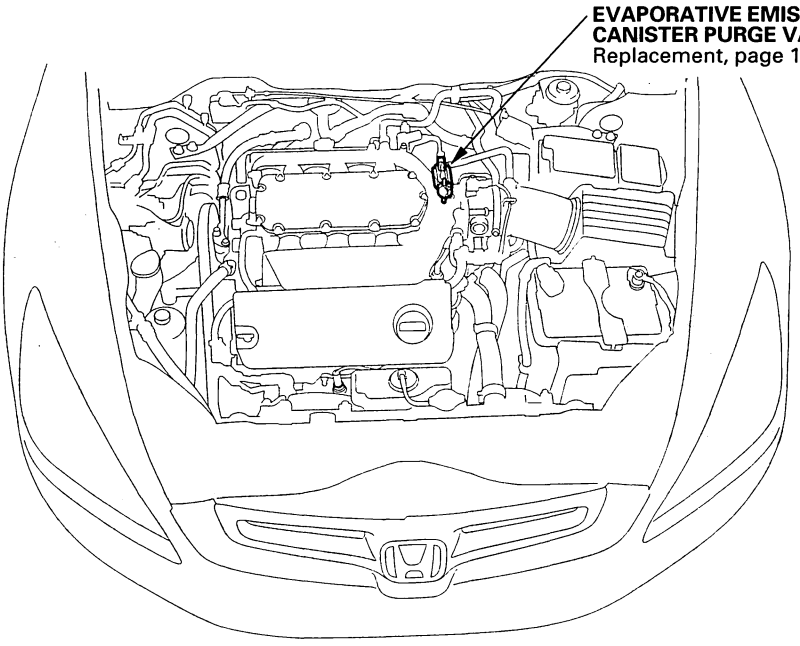

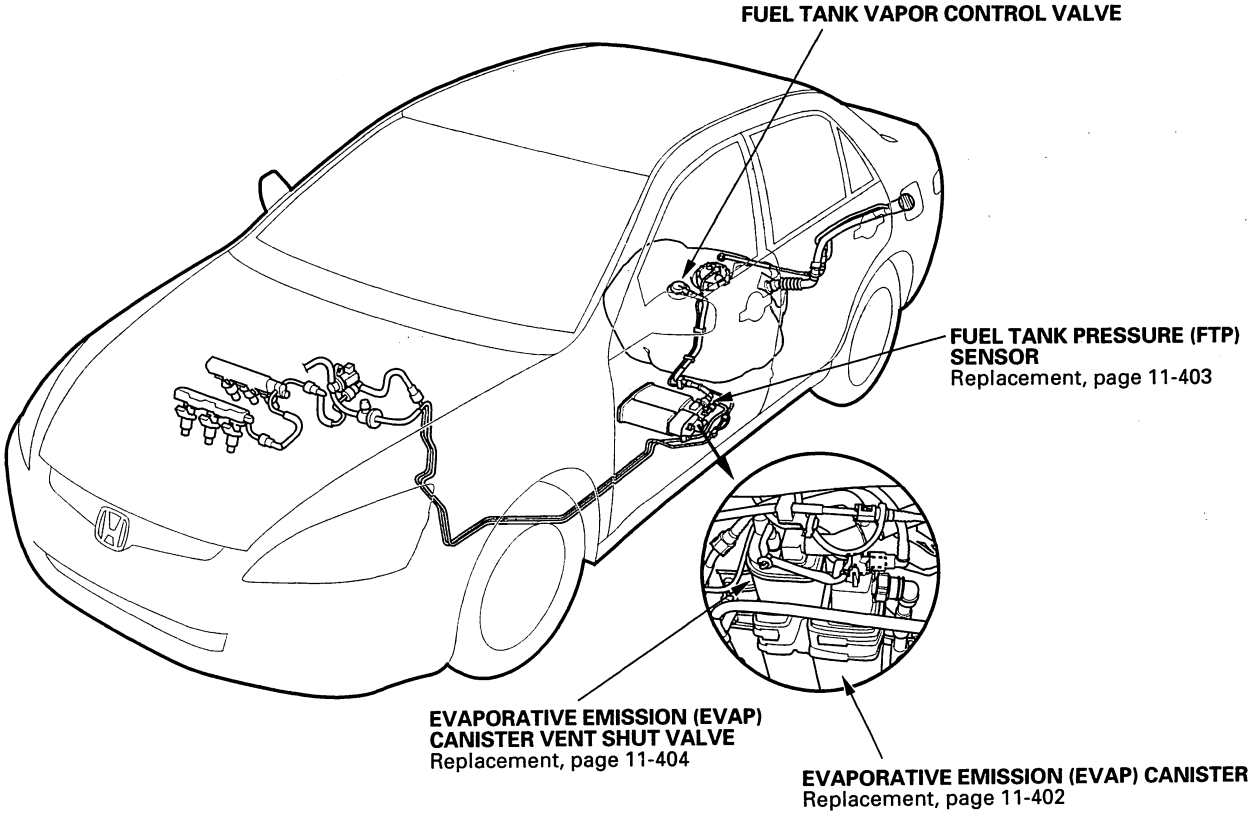

BACK

Protected by AR

DTC Troubleshooting

DTC P0442: EVAP System Small Leak Detected
(2003-2004 models)

DTC P0455: EVAP System Large Leak Detected
(2005-2006 models)

DTC P0456: EVAP System Very Small Leak Detected

NOTICE

The fuel system is designed to allow specified maximum vacuum and pressure conditions. Do not deviate from the vacuum and pressure tests as indicated in these procedures. Excessive pressure/vacuum would damage the EVAP components or cause eventual fuel tank failure.

Special Tools Required

- Vacuum/pressure gauge, 0—4 in.Hg, 07JAZ-001000B
- Vacuum pump/gauge, 0—30 in.Hg, Snap-on YA4000A or equivalent, commercially available

NOTE:

- Before you troubleshoot, record all freeze data and any on-board snapshot, and review the general troubleshooting information (see page 11-3).
- Fresh fuel has a higher volatility that will create greater pressure/vacuum. The optimum condition for testing is less than a full tank of fresh fuel, If possible, to assist in leak detection, add 1 gallon of fresh fuel to the tank (as long as it will not fill the tank), just before starting these procedures.

1. Check the fuel fill cap (the cap must say "Tighten to click"). It should turn 1/4 turn after it's tight, then it clicks.

   Is the correct fuel fill cap installed and properly tightened?

   YES—Go to step 2.

   NO—Replace or tighten the cap, then go to step 22.

2. Check the fuel fill cap seal (A) and the fuel fill pipe mating surface (B). Verify that the fuel fill cap tether cord (C) is not caught under the cap.

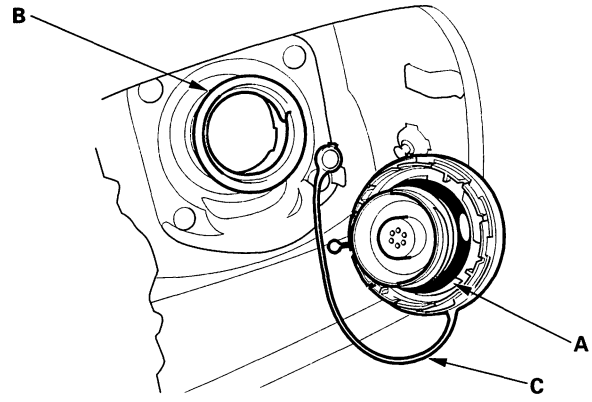

   Is the fuel fill cap seal missing or damaged, is the fuel fill pipe damaged, or is the tether cord caught under the cap?

   YES—Replace the fuel fill cap or the fuel fill pipe, then go to step 22.

   NO—Go to step 3.

3. Turn the ignition switch ON (II).

4. Clear the DTC with the HDS.

5. Do the EVAP FUNCTION TEST in the INSPECTION MENU with the HDS.

   Is the result OK?

   YES—Intermittent failure, system is OK at this time. Check for poor connections or loose terminals at the FTP sensor, the EVAP canister purge valve, or the EVAP canister vent shut valve and the ECM/PCM. ■

   NO—Go to step 6.

BACK

Protected by AR

6. Turn the ignition switch OFF.

7. Turn the ignition switch ON (II).

8. Check for a poor connection or damage at the fuel tank vapor recirculation tube.

   Is the tube OK?

   YES—Go to step 9.

   NO—
   - Replace the fuel tank vapor recirculation tube, then go to step 22.
   - If necessary, replace the fuel tank (see page 11-328), then go to step 22.

9. Disconnect the fuel tank vapor recirculation tube (A) from the EVAP canister (B), and plug the EVAP canister port (C).

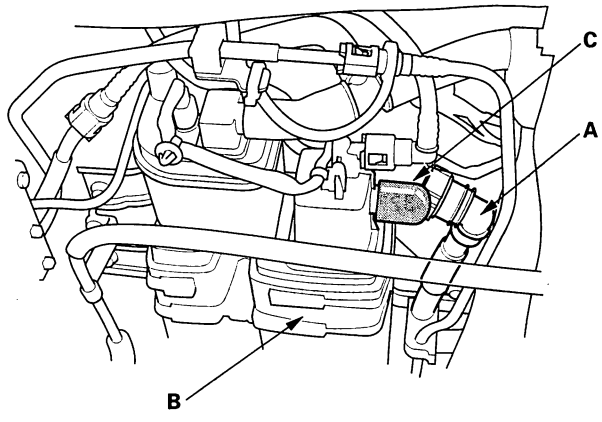

10. Disconnect the vacuum hose (A) from the EVAP canister purge valve (B) in the engine compartment, and connect a vacuum pump/gauge, 0—30 in.Hg, to the hose.

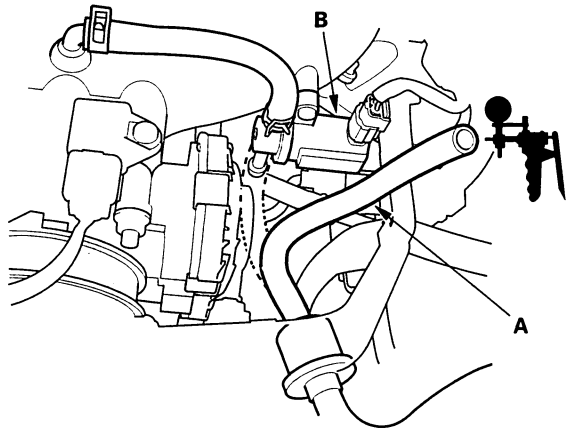

11. Do the EVAP CVS ON in the INSPECTION MENU with the HDS.

12. Apply vacuum to the hose until the FTP reads 1.90 V (0.59 in.Hg, −15.1 mmHg).

    NOTE: Be careful not to exceed the pressure. If you exceed the pressure, the FTP sensor can be damaged.

13. Monitor the FTP SENSOR in the DATA LIST for 1 minute with the HDS.

    Does the voltage increase more than 0.2 V (0.1 in.Hg, 2.5 mmHg)?

    YES—Go to step 14.

    NO—Go to step 19.

(cont'd)

Protected by AR

DTC Troubleshooting (cont'd)

14. Do the EVAP CVS OFF in the INSPECTION MENU with the HDS.

15. Disconnect the fresh air hoses (A) from the EVAP canister vent shut valve (B), and plug the EVAP canister vent shut valve ports (C).

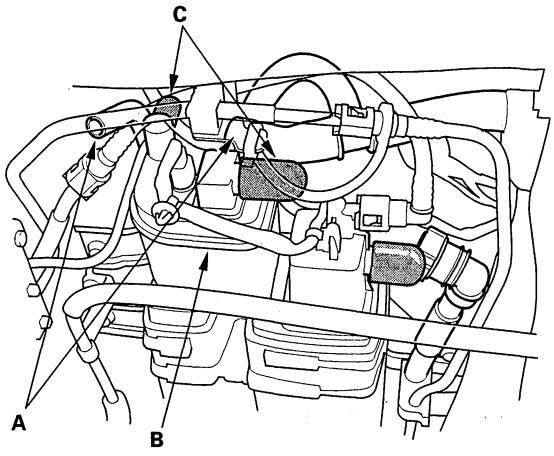

16. Apply vacuum to the hose (disconnected in step 10) until the FTP reads 1.90 V (−0.59 in.Hg, −15.1 mmHg).

    NOTE: Be careful not to exceed the pressure. If you exceed the pressure, the FTP sensor can be damaged.

17. Monitor the FTP SENSOR in the DATA LIST for 1 minute with the the HDS.

    Does the voltage increase more than 0.2 V (0.1 in.Hg, 2.5 mmHg)?

    YES—Go to step 18.

    NO—Replace the EVAP canister vent shut valve (see page 11-404), then go to step 21.

18. Check for a loose or damaged EVAP canister purge line between the EVAP canister and the EVAP canister purge valve.

    Is the line OK?

    YES—Replace the following parts, then go to step 21.

    - FTP sensor O-ring
    - EVAP canister vent shut valve case and O-ring
    - EVAP canister

    NO—Reconnect or repair the EVAP canister purge hose, then go to step 21.

19. Do the EVAP CVS OFF in the INSPECTION MENU with the HDS.

20. Check these parts for looseness or damage.

    - Fuel fill pipe
    - Fuel vapor return pipe

    Are the parts OK?

    YES—Check the fuel tank unit base gasket (see page 11-327), and check the fuel tank, then go to step 21.

    NO—Repair or replace the damaged parts, then go to step 21.

21. Reconnect all hoses and connectors.

22. Turn the ignition switch ON (II).

23. Reset the ECM/PCM with the HDS.

24. Do the ECM/PCM idle learn procedure (see page 11-302).

25. Do the EVAP FUNCTION TEST in the INSPECTION MENU with the HDS.

    Is the result OK?

    YES—Troubleshooting is complete.■

    NO—Check for poor connections or loose terminals at the FTP sensor, the EVAP canister purge valve, or the EVAP canister vent shut valve and the ECM/PCM, then go to step 1.

BACK

Protected by AR

DTC P0443: EVAP Canister Purge Valve Circuit Malfunction

NOTE: Before you troubleshoot, record all freeze data and any on-board snapshot, and review the general troubleshooting information (see page 11-3).

1. Turn the ignition switch ON (II).
2. Clear the DTC with the HDS.
3. Start the engine. Hold the engine speed at 3,000 rpm without load (in Park or neutral) until the radiator fan comes on, then let it idle.
4. Check for Temporary DTCs or DTCs with the HDS.

   Is DTC P0443 indicated?

   YES—Go to step 5.

   NO—Intermittent failure, system is OK at this time. Check for poor connections or loose terminals at the EVAP canister purge valve and the ECM/PCM. ■
5. Turn the ignition switch OFF, and allow the engine to cool below 140 °F (60 °C).
6. Disconnect the vacuum hose (A) from the EVAP canister purge joint (B) in the engine compartment, and connect a vacuum pump/gauge, 0—30 in.Hg, to the hose.

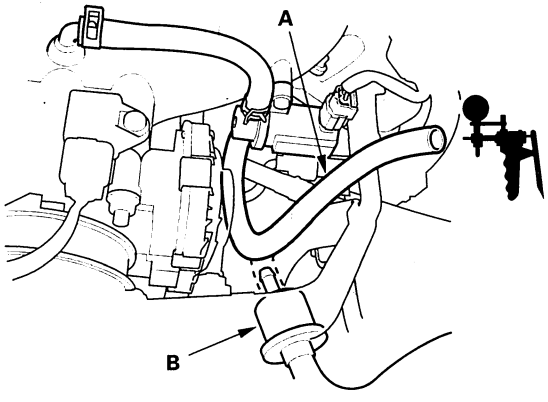

7. Start the engine, and let it idle.

   Is there vacuum?

   YES—Go to step 8.

   NO—Go to step 14.
8. Turn the ignition switch OFF.
9. Disconnect the EVAP canister purge valve 2P connector.
10. Check for continuity between EVAP canister purge valve 2P connector No. 1 and body ground.

EVAP CANISTER PURGE VALVE 2P CONNECTOR

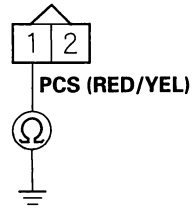

Wire side of female terminals

Is there continuity?

YES—Go to step 11.

NO—Go to step 24.

(cont'd)

Protected by AR

DTC Troubleshooting (cont'd)

11. Jump the SCS line with the HDS.
12. Disconnect ECM/PCM connector B (24P).
13. Check for continuity between EVAP canister purge valve 2P connector terminal No. 1 and body ground.

EVAP CANISTER PURGE VALVE 2P CONNECTOR

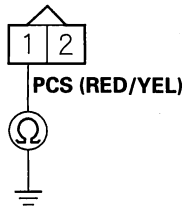

Wire side of female terminals

Is there continuity?

YES—Repair short in the wire between the EVAP canister purge valve and the ECM/PCM (B2), then go to step 25.

NO—Go to step 31.

14. Turn the ignition switch OFF.
15. Disconnect the EVAP canister purge valve 2P connector.
16. Turn the ignition switch ON (II).
17. Measure voltage between EVAP canister purge valve 2P connector terminal No. 2 and body ground.

EVAP CANISTER PURGE VALVE 2P CONNECTOR

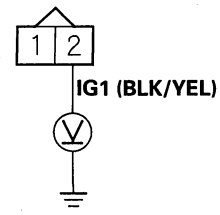

Wire side of female terminals

Is there battery voltage?

YES—Go to step 18.

NO—Repair open in the wire between the EVAP canister purge valve and the No. 18 ACG (15 A) fuse in the under-dash fuse/relay box, then go to step 25.

18. Turn the ignition switch OFF.
19. Jump the SCS line with the HDS.
20. Disconnect ECM/PCM connector B (24P).
21. Connect EVAP canister purge valve 2P connector terminal No. 1 to body ground with a jumper wire.

EVAP CANISTER PURGE VALVE 2P CONNECTOR

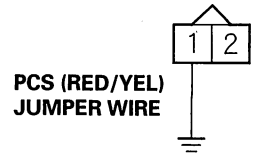

Wire side of female terminals

BACK

Protected by AR

22. Check for continuity between ECM/PCM connector terminal B2 and body ground.

ECM/PCM CONNECTOR B (24P)

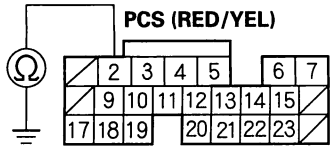

Wire side of female terminals

Is there continuity?

YES—Go to step 23.

NO—Repair open in the wire between the EVAP canister purge valve and the ECM/PCM (B2), then go to step 25.

23. Measure resistance between EVAP canister purge valve 2P connector terminals No. 1 and No. 2.

EVAP CANISTER PURGE VALVE 2P CONNECTOR

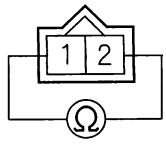

Terminal side of male terminals

Is there about 33 Ω at room temperature?

YES—Go to step 31.

NO—Go to step 24.

24. Replace the EVAP canister purge valve (see page 11-403).

25. Reconnect all connectors.

26. Turn the ignition switch ON (II).

27. Reset the ECM/PCM with the HDS.

28. Do the ECM/PCM idle learn procedure (see page 11-302).

29. Check for Temporary DTCs or DTCs with the HDS.

Are any Temporary DTCs or DTCs indicated?

YES—If DTC P0443 is indicated, check for poor connections or loose terminals at the EVAP canister purge valve and the ECM/PCM, then go to step 1. If any other Temporary DTCs or DTCs are indicated, go to the indicated DTC's troubleshooting.

NO—2003 model: Troubleshooting is complete.■ 2004-2006 models: Go to step 30.

30. Monitor the OBD STATUS for DTC P0443 in the DTCs MENU with the HDS.

Does the screen indicate PASSED?

YES—Troubleshooting is complete.■

NO—If the screen indicates FAILED, check for poor connections or loose terminals at the EVAP canister purge valve and the ECM/PCM, then go to step 1. If the screen indicates EXECUTING, keep idling until a result comes on. If the screen indicates OUT OF CONDITION, go to step 28 and recheck.

(cont'd)

Protected by AR

DTC Troubleshooting (cont'd)

31. Update the ECM/PCM if it does not have the latest software, or substitute a known-good ECM/PCM (see page 11-6).

32. Check for Temporary DTCs or DTCs with the HDS.

    Are any Temporary DTCs or DTCs indicated?

    YES—If DTC P0443 is indicated, check for poor connections or loose terminals at the EVAP canister purge valve and the ECM/PCM, then go to step 1. If any other Temporary DTCs or DTCs are indicated, go to the indicated DTC's troubleshooting.

    NO—If the ECM/PCM was updated, troubleshooting is complete. If the ECM/PCM was substituted, replace the original ECM/PCM (see page 11-224). ■

BACK

Protected by AR

DTC P0451: FTP Sensor Range/Performance Problem

NOTE:
- Before you troubleshoot, record all freeze data and any on-board snapshot, and review the general troubleshooting information (see page 11-3).
- If DTC P2422 is stored at the same time as DTC P0451, troubleshoot DTC P2422 first, then recheck for DTC P0451.

1. Turn the ignition switch ON (II).
2. Clear the DTC with the HDS.
3. Start the engine, and let it idle for 1 minute.
4. Monitor the OBD STATUS for DTC P0451 in the DTCs MENU with the HDS.

   Does the screen indicate FAILED?

   YES—Go to step 5.

   NO—If the screen indicates PASSED, intermittent failure, system is OK at this time. Check for poor connections or loose terminals at the FTP sensor and the ECM/PCM. If the screen indicates NOT COMPLETED, go to step 3 and recheck.
5. Turn the ignition switch OFF.
6. Replace the FTP sensor (see page 11-403).
7. Turn the ignition switch ON (II).
8. Reset the ECM/PCM with the HDS.
9. Do the ECM/PCM idle learn procedure (see page 11-302).
10. Start the engine, and let it idle for 1 minute.
11. Check for Temporary DTCs or DTCs with the HDS.

    Are any Temporary DTCs or DTCs indicated?

    YES—If DTC P0451 is indicated, check for poor connections or loose terminals at the FTP sensor and the ECM/PCM, then go to step 1. If any other Temporary DTCs or DTCs are indicated, go to the indicated DTC's troubleshooting.

    NO—Go to step 12.
12. Monitor the OBD STATUS for DTC P0451 in the DTCs MENU with the HDS.

    Does the screen indicate PASSED?

    YES—Troubleshooting is complete.■

    NO—If the screen indicates FAILED, check for poor connections or loose terminals at the FTP sensor and the ECM/PCM, then go to step 1. If the screen indicates NOT COMPLETED, go to step 10 and recheck.

Protected by AR

DTC Troubleshooting (cont'd)

DTC P0452: FTP Sensor Circuit Low Voltage (2003-2004 models)

NOTE: Before you troubleshoot, record all freeze data and any on-board snapshot, and review the general troubleshooting information (see page 11-3).

1. Turn the ignition switch ON (II).
2. Clear the DTC with the HDS.
3. Turn the ignition switch OFF.
4. Turn the ignition switch ON (II).
5. Check for Temporary DTCs or DTCs with the HDS.

   Are DTC P0107, P0112, P0117, P2122, P2127, P2228, P0452, P2627, and P2630 indicated at the same time?

   YES—Go to step 23.

   NO—Go to step 6.
6. Turn the ignition switch OFF.
7. Remove the fuel fill cap.
8. Turn the ignition switch ON (II).
9. Check the FTP SENSOR in the DATA LIST with the HDS.

   Is about −7.3 kPa (−2.16 in.Hg, −55 mmHg), or 0.3 V or less indicated?

   YES—Go to step 13.

   NO—Go to step 10.
10. Install the fuel fill cap.
11. Start the engine.
12. Monitor the OBD STATUS for DTC P0452 in the DTCs MENU with the HDS.

    Does the screen indicate FAILED?

    YES—Go to step 13.

    NO—If the screen indicates PASSED, intermittent failure, system is OK at this time. Check for poor connections or loose terminals at the FTP sensor and the ECM/PCM. If the screen indicates NOT COMPLETED, go to step 6 and recheck.
13. Turn the ignition switch OFF.
14. Disconnect the FTP sensor 3P connector.
15. Turn the ignition switch ON (II).
16. Check the FTP SENSOR in the DATA LIST with the HDS.

    Is about 7.3 kPa (2.15 in.Hg, 54.7 mmHg), or 4.90 V indicated?

    YES—Go to step 32.

    NO—Go to step 17.
17. Measure voltage between FTP sensor 3P connector terminal No. 1 and body ground.

FTP SENSOR 3P CONNECTOR

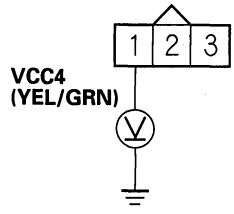

Wire side of female terminals

Is there about 5 V?

YES—Go to step 19.

NO—Go to step 18.

BACK

Protected by AR

18. Measure voltage between ECM/PCM connector terminal A31 and body ground.

ECM/PCM CONECTOR A (31P)

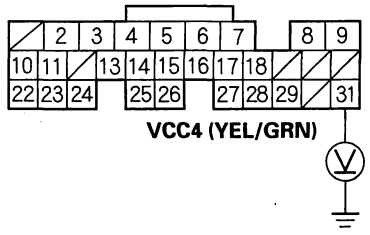

Wire side of female terminals

Is there about 5 V?

YES—Repair open in the wire between the ECM/PCM (A31) and the FTP sensor, then go to step 34.

NO—Go to step 40.

19. Turn the ignition switch OFF.

20. Jump the SCS line with the HDS.

21. Disconnect ECM/PCM connector A (31P).

22. Check for continuity between FTP sensor 3P connector terminal No. 2 and body ground.

FTP SENSOR 3P CONNECTOR

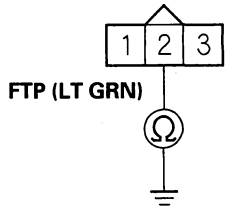

Wire side of female terminals

Is there continuity?

YES—Repair short in the wire between the ECM/PCM (A29) and the FTP sensor, then go to step 34.

NO—Go to step 40.

23. Turn the ignition switch OFF.

24. Jump the SCS line with the HDS.

25. Disconnect ECM/PCM connectors A (31P) and D (17P).

26. Disconnect the connectors from these parts:

- MAP sensor
- APP sensor
- IMT (IMRC) actuator
- EGR valve
- FTP sensor
- Input shaft (mainshaft) speed sensor
- Output shaft (countershaft) speed sensor

27. Check for continuity between body ground and ECM/PCM connector terminals A31, D2, D6, and D12 individually.

ECM/PCM CONNECTORS

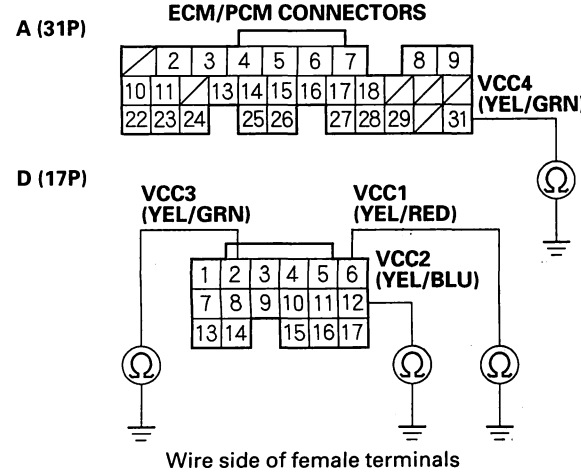

Wire side of female terminals

Is there continuity?

YES—Repair short in the wire between the ECM/PCM (A31, D2, D6, or D12) and each part, then go to step 34.

NO—Go to step 28.

(cont'd)

Protected by AR

DTC Troubleshooting (cont'd)

28. Reconnect ECM/PCM connectors A (31P) and D (17P).

29. Turn the ignition switch ON (II).

30. Measure voltage between ECM/PCM connector terminal D6 and body ground.

ECM/PCM CONNECTOR D (17P)

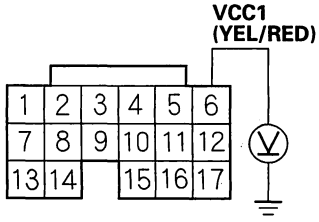

Wire side of female terminals

Is there about 5 V?

YES—Go to step 31.

NO—Go to step 40.

31. Continue to monitor voltage at ECM/PCM connector terminal D6 while reconnecting these parts, one at a time:

- MAP sensor
- APP sensor
- IMT (IMRC) actuator
- EGR valve
- FTP sensor
- Input shaft (mainshaft) speed sensor
- Output shaft (countershaft) speed sensor

Did the voltage drop to about 0 V?

YES—Replace the part that caused the voltage to drop, then go to step 34.

NO—Go to step 40.

32. Turn the ignition OFF.

33. Replace the FTP sensor (see page 11-403).

34. Reconnect all connectors.

35. Turn the ignition switch ON (II).

36. Reset the ECM/PCM with the HDS.

37. Do the ECM/PCM idle learn procedure (see page 11-302).

38. Check for Temporary DTCs or DTCs with the HDS.

Are any Temporary DTCs or DTCs indicated?

YES—If DTC P0452 is indicated, check for poor connections or loose terminals at the FTP sensor and the ECM/PCM, then go to step 1. If any other Temporary DTCs or DTCs are indicated, go to the indicated DTC's troubleshooting.

NO—Go to step 39.

39. Monitor the OBD STATUS for DTC P0452 in the DTCs MENU with the HDS.

Does the screen indicate PASSED?

YES—Troubleshooting is complete.■

NO—If the screen indicates FAILED, check for poor connections or loose terminals at the FTP sensor and the ECM/PCM, then go to step 1. If the screen indicates NOT COMPLETED, go to step 37 and recheck.

40. Update the ECM/PCM if it does not have the latest software, or substitute a known-good ECM/PCM (see page 11-6).

41. Check for Temporary DTCs or DTCs with the HDS.

Are any Temporary DTCs or DTCs indicated?

YES—If DTC P0452 is indicated, check for poor connections or loose terminals at the FTP sensor and the ECM/PCM, then go to step 1. If any other Temporary DTCs or DTCs are indicated, go to the indicated DTC's troubleshooting.

NO—If the ECM/PCM was updated, troubleshooting is complete. If the ECM/PCM was substituted, replace the original ECM/PCM (see page 11-224).■

BACK

Protected by AR

DTC P0452: FTP Sensor Circuit Low Voltage (2005-2006 models)

NOTE: Before you troubleshoot, record all freeze data and any on-board snapshot, and review the general troubleshooting information (see page 11-3).

1. Turn the ignition switch ON (II).
2. Clear the DTC with the HDS.
3. Turn the ignition switch OFF.
4. Remove the fuel fill cap.
5. Turn the ignition switch ON (II).
6. Check the FTP SENSOR in the DATA LIST with the HDS.

   Is about −7.3 kPa (−2.16 in.Hg, −55 mmHg), or 0.3 V or less indicated?

   YES—Go to step 10.

   NO—Go to step 7.
7. Install the fuel fill cap.
8. Start the engine.
9. Monitor the OBD STATUS for DTC P0452 in the DTCs MENU with the HDS.

   Does the screen indicate FAILED?

   YES—Go to step 10.

   NO—If the screen indicates PASSED, intermittent failure, system is OK at this time. Check for poor connections or loose terminals at the FTP sensor and the ECM/PCM. If the screen indicates NOT COMPLETED, go to step 5 and recheck.
10. Turn the ignition switch OFF.
11. Disconnect the FTP sensor 3P connector.
12. Turn the ignition switch ON (II).
13. Check the FTP SENSOR in the DATA LIST with the HDS.

    Is about 7.3 kPa (2.15 in.Hg, 54.7 mmHg), or 4.90 V indicated?

    YES—Go to step 20.

    NO—Go to step 14.
14. Measure voltage between FTP sensor 3P connector terminal No. 1 and body ground.

FTP SENSOR 3P CONNECTOR

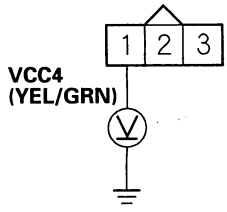

Wire side of female terminals

Is there about 5 V?

YES—Go to step 16.

NO—Go to step 15.

(cont'd)

Protected by AR

DTC Troubleshooting (cont'd)

15. Measure voltage between ECM/PCM connector terminal A31 and body ground.

ECM/PCM CONNECTOR A (31P)

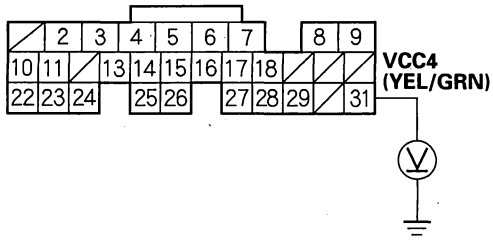

Wire side of female terminals

Is there about 5 V?

YES—Repair open in the wire between the ECM/PCM (A31) and the FTP sensor, then go to step 22.

NO—Go to step 28.

16. Turn the ignition switch OFF.
17. Jump the SCS line with the HDS.
18. Disconnect ECM/PCM connector A (31P).
19. Check for continuity between FTP sensor 3P connector terminal No. 2 and body ground.

FTP SENSOR 3P CONNECTOR

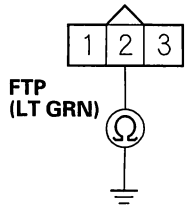

Wire side of female terminals

Is there continuity?

YES—Repair short in the wire between the ECM/PCM (A29) and the FTP sensor, then go to step 22.

NO—Go to step 28.

20. Turn the ignition switch OFF.
21. Replace the FTP sensor (see page 11-403).
22. Reconnect all connectors.
23. Turn the ignition switch ON (II).
24. Reset the ECM/PCM with the HDS.
25. Do the ECM/PCM idle learn procedure (see page 11-302).
26. Check for Temporary DTCs or DTCs with the HDS.

Are any Temporary DTCs or DTCs indicated?

YES—If DTC P0452 is indicated, check for poor connections or loose terminals at the FTP sensor and the ECM/PCM, then go to step 1. If any other Temporary DTCs or DTCs are indicated, go to the indicated DTC's troubleshooting.

NO—Go to step 27.

27. Monitor the OBD STATUS for DTC P0452 in the DTCs MENU with the HDS.

Does the screen indicate PASSED?

YES—Troubleshooting is complete. ■

NO—If the screen indicates FAILED, check for poor connections or loose terminals at the FTP sensor and the ECM/PCM, then go to step 1. If the screen indicates NOT COMPLETED, go to step 25 and recheck.

BACK

Protected by AR

28. Update the ECM/PCM if it does not have the latest software, or substitute a known-good ECM/PCM (see page 11-6).

29. Check for Temporary DTCs or DTCs with the HDS.

    Are any Temporary DTCs or DTCs indicated?

    YES—If DTC P0452 is indicated, check for poor connections or loose terminals at the FTP sensor and the ECM/PCM, then go to step 1. If any other Temporary DTCs or DTCs are indicated, go to the indicated DTC's troubleshooting.

    NO—If the ECM/PCM was updated, troubleshooting is complete. If the ECM/PCM was substituted, replace the original ECM/PCM (see page 11-224). ■

Protected by AR

DTC Troubleshooting (cont'd)

DTC P0453: FTP Sensor Circuit High Voltage

NOTE: Before you troubleshoot, record all freeze data and any on-board snapshot, and review the general troubleshooting information (see page 11-3).

1. Turn the ignition switch ON (II).
2. Clear the DTC with the HDS.
3. Turn the ignition switch OFF.
4. Remove the fuel fill cap.
5. Turn the ignition switch ON (II).
6. Check the FTP SENSOR in the DATA LIST with the HDS.

   Is about 7.3 kPa (2.16 in.Hg, 55 mmHg), or 4.7 V or more indicated?

   YES—Go to step 10.

   NO—Go to step 7.
7. Install the fuel fill cap.
8. Start the engine.
9. Monitor the OBD STATUS for DTC P0453 in the DTCs MENU with the HDS.

   Does the screen indicate FAILED?

   YES—Go to step 10.

   NO—If the screen indicates PASSED, intermittent failure, system is OK at this time. Check for poor connections or loose terminals at the FTP sensor and the ECM/PCM. If the screen indicates NOT COMPLETED, go to step 6 and recheck.
10. Turn the ignition switch OFF.
11. Disconnect the FTP sensor 3P connector.
12. Connect FTP sensor 3P connector terminals No. 2 and No. 3 with a jumper wire.

FTP SENSOR 3P CONNECTOR

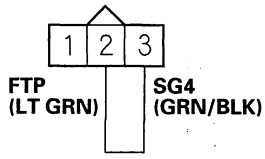

Wire side of female terminals

13. Turn the ignition switch ON (II).
14. Check the FTP SENSOR in the DATA LIST with the HDS.

    Is about 7.3 kPa (2.16 in.Hg, 55 mmHg), or 4.7 V or more indicated?

    YES—Go to step 15.

    NO—Go to step 25.
15. Measure voltage between FTP sensor 3P connector terminals No. 1 and No. 3.

FTP SENSOR 3P CONNECTOR

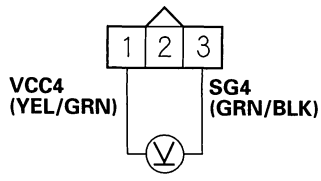

Wire side of female terminals

Is there about 5 V?

YES—Go to step 21.

NO—Go to step 16.

BACK

Protected by AR

16. Turn the ignition switch OFF.
17. Jump the SCS line with the HDS.
18. Disconnect ECM/PCM connector A (31P).
19. Connect FTP sensor 3P connector terminal No. 3 to body ground with a jumper wire.

FTP SENSOR 3P CONNECTOR

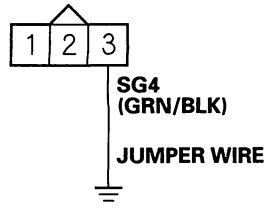

Wire side of female terminals

20. Check for continuity between ECM/PCM connector terminals A28 and body ground.

ECM/PCM CONNECTOR A (31P)

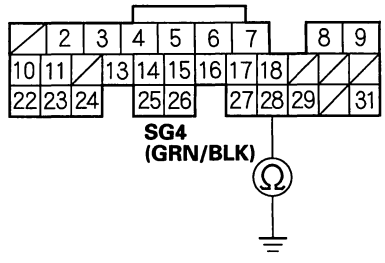

Wire side of female terminals

Is there continuity?

YES—Go to step 33.

NO—Repair open in the wire between the ECM/PCM (A28) and the FTP sensor, then go to step 27.

21. Turn the ignition switch OFF.
22. Connect ECM/PCM connector terminals A28 and A29 with a jumper wire.

ECM/PCM CONNECTOR A (31P)

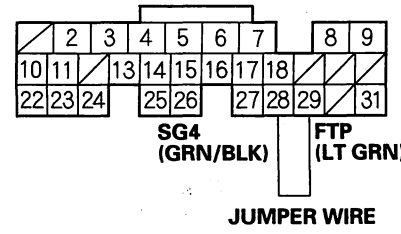

Wire side of female terminals

23. Turn the ignition switch ON (II).
24. Check the FTP SENSOR in the DATA LIST with the HDS.

Is about 7.3 kPa (2.16 in.Hg, 55 mmHg), or 4.7 V or more indicated?

YES—Go to step 33.

NO—Repair open in the wire between the ECM/PCM (A29) and the FTP sensor, then go to step 27.

25. Turn the ignition switch OFF.
26. Replace the FTP sensor (see page 11-403).
27. Reconnect all connectors.

(cont'd)

Protected by AR

DTC Troubleshooting (cont'd)

28. Turn the ignition switch ON (II).

29. Reset the ECM/PCM with the HDS.

30. Do the ECM/PCM idle learn procedure (see page 11-302).

31. Check for Temporary DTCs or DTCs with the HDS.

    Are any Temporary DTCs or DTCs indicated?

    YES—If DTC P0453 is indicated, check for poor connections or loose terminals at the FTP sensor and the ECM/PCM, then go to step 1. If any other Temporary DTCs or DTCs are indicated, go to the indicated DTC's troubleshooting.

    NO—Go to step 32.

32. Monitor the OBD STATUS for DTC P0453 in the DTCs MENU with the HDS.

    Does the screen indicate PASSED?

    YES—Troubleshooting is complete.■

    NO—If the screen indicates FAILED, check for poor connections or loose terminals at the FTP sensor and the ECM/PCM, then go to step 1. If the screen indicates NOT COMPLETED, go to step 30 and recheck.

33. Update the ECM/PCM if it does not have the latest software, or substitute a known-good ECM/PCM (see page 11-6).

34. Check for Temporary DTCs or DTCs with the HDS.

    Are any Temporary DTCs or DTCs indicated?

    YES—If DTC P0453 is indicated, check for poor connections or loose terminals at the FTP sensor and the ECM/PCM, then go to step 1. If any other Temporary DTCs or DTCs are indicated, go to the indicated DTC's troubleshooting.

    NO—If the ECM/PCM was updated, troubleshooting is complete. If the ECM/PCM was substituted, replace the original ECM/PCM (see page 11-224).■

BACK

Protected by AR

DTC P0457: EVAP System Leak Detected Fuel Fill Cap Loose or Missing

NOTE: Before you troubleshoot, record all freeze data and any on-board snapshot, and review the general troubleshooting information (see page 11-3).

1. Check the fuel fill cap (the cap must say "Tighten to click"). If should turn 1/4 turn after it's tight, then it clicks.

   Is the correct fuel fill cap installed and properly tightened?

   YES—Go to step 2.

   NO—Replace or tighten the cap, then go to step 19.

2. Check the fuel fill cap seal (A) and the fuel fill pipe mating surface (B). Verify that the fuel fill cap tether cord (C) is not caught under the cap.

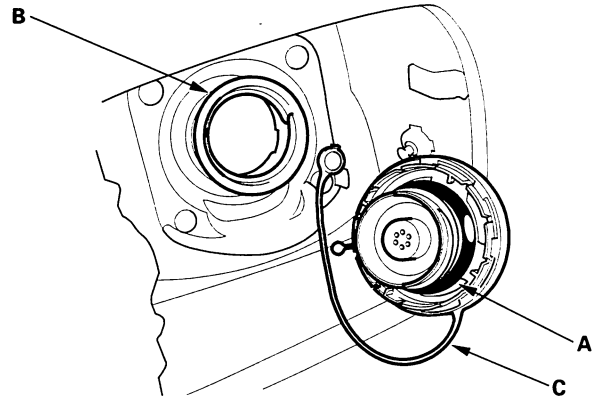

   Is the fuel fill cap seal missing or damaged, is the fuel fill pipe damaged, or is the tether cord caught under the cap?

   YES—Replace the fuel fill cap or the fuel fill pipe, then go to step 19.

   NO—Go to step 3.

3. Turn the ignition switch ON (II).

4. Clear the DTC with the HDS.

5. Do the EVAP FUNCTION TEST in the INSPECTION MENU with the HDS.

   Is the result OK?

   YES—Intermittent failure, system is OK at this time. Check for poor connections or loose terminals at the FTP sensor, or the EVAP canister vent shut valve and the ECM/PCM. ■

   NO—Go to step 6.

6. Turn the ignition switch OFF.

7. Remove the EVAP canister vent shut valve from the EVAP canister (see page 11-404).

8. Connect the 2P connector to the EVAP canister vent shut valve.

9. Turn the ignition switch ON (II).

10. Do the EVAP CVS ON in the INSPECTION MENU with the HDS.

11. Check the EVAP canister vent shut valve (A) operation.

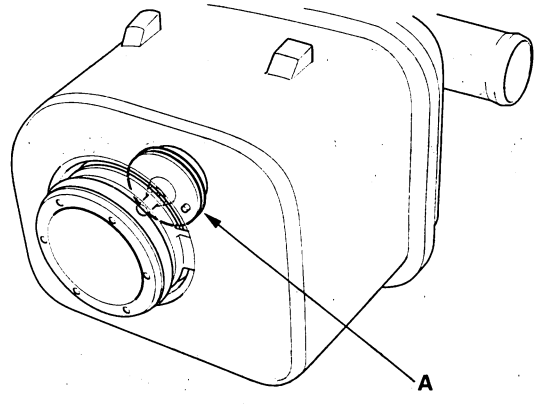

   Does the valve operate?

   YES—Check the routing of the EVAP canister vent tube, then go to step 18.

   NO—Go to step 12.

(cont'd)

Protected by AR

DTC Troubleshooting (cont'd)

12. Turn the ignition switch OFF.
13. Replace the EVAP canister vent shut valve (see page 11-404).
14. Turn the ignition switch ON (II).
15. Reset the ECM/PCM with the HDS.
16. Do the ECM/PCM idle learn procedure (see page 11-302).
17. Do the EVAP FUNCTION TEST in the INSPECTION MENU with the HDS.

    Is the result OK?

    YES—Troubleshooting is complete.■

    NO—Check for poor connections or loose terminals at the FTP sensor, or the EVAP canister vent shut valve and the ECM/PCM, then go to step 1.
18. Reinstall the EVAP canister vent shut valve.
19. Turn the ignition switch ON (II).
20. Reset the ECM/PCM with the HDS.
21. Do the ECM/PCM idle learn procedure (see page 11-302).
22. Do the EVAP FUNCTION TEST in the INSPECTION MENU with the HDS.

    Is the result OK?

    YES—Troubleshooting is complete.■

    NO—Check for poor connections or loose terminals at the FTP sensor, or the EVAP canister vent shut valve and the ECM/PCM, then go to step 1.

BACK

Protected by AR

DTC P0496: EVAP System High Purge Flow

NOTE: Before you troubleshoot, record all freeze data and any on-board snapshot, and review the general troubleshooting information (see page 11-3).

1. Turn the ignition switch ON (II).
2. Clear the DTC with the HDS.
3. Do the EVAP FUNCTION TEST in the INSPECTION MENU with the HDS.

   Is the result OK?

   YES—Intermittent failure, system is OK at this time. Check for poor connections or loose terminals at the FTP sensor, the EVAP canister purge valve, or the EVAP canister vent shut valve and the ECM/PCM. ■

   NO—Go to step 4.
4. Turn the ignition switch OFF.
5. Replace the EVAP canister purge valve (see page 11-403).
6. Turn the ignition switch ON (II).
7. Reset the ECM/PCM with the HDS.
8. Do the ECM/PCM idle learn procedure (see page 11-302).
9. Do the EVAP FUNCTION TEST in the INSPECTION MENU with the HDS.

   Is the result OK?

   YES—Troubleshooting is complete. ■

   NO—Check for poor connections or loose terminals at the FTP sensor, the EVAP canister purge valve, or the EVAP canister vent shut valve and the ECM/PCM, then go to step 1.

Protected by AR

DTC Troubleshooting (cont'd)

DTC P0497: EVAP System Low Purge Flow

Special Tools Required
- Vacuum/pressure gauge, 0—4 in.Hg, 07JAZ-001000B
- Vacuum pump/gauge, 0—30 in.Hg, Snap-on YA4000A or equivalent, commercially available

NOTE: Before you troubleshoot, record all freeze data and any on-board snapshot, and review the general troubleshooting information (see page 11-3).

1. Check the fuel fill cap installation.

   Is the fuel fill cap installed and properly tightened?

   YES—Go to step 2.

   NO—Properly install the fuel fill cap (the cap must say "Tighten to click"). If should turn 1/4 turn after it's tight, then go to step 23.

2. Turn the ignition switch ON (II).

3. Clear the DTC with the HDS.

4. Do the EVAP FUNCTION TEST in the INSPECTION MENU with the HDS.

   Is the result OK?

   YES—Intermittent failure, system is OK at this time. Check for poor connections or loose terminals at the FTP sensor, the EVAP canister purge valve, or the EVAP canister vent shut valve and the ECM/PCM. ■

   NO—Go to step 5.

5. Check for a loose or damaged EVAP canister purge line between the intake manifold and the EVAP canister purge valve.

   Is the line OK?

   YES—Go to step 6.

   NO—Reconnect or repair the EVAP canister purge line, then go to step 23.

6. Disconnect the vacuum hose (A) from the EVAP canister purge valve joint (B) in the engine compartment, and connect a T-fitting (C) from the vacuum gauge and the vacuum pump/gauge, 0—30 in.Hg, to the vacuum hose (A) as shown.

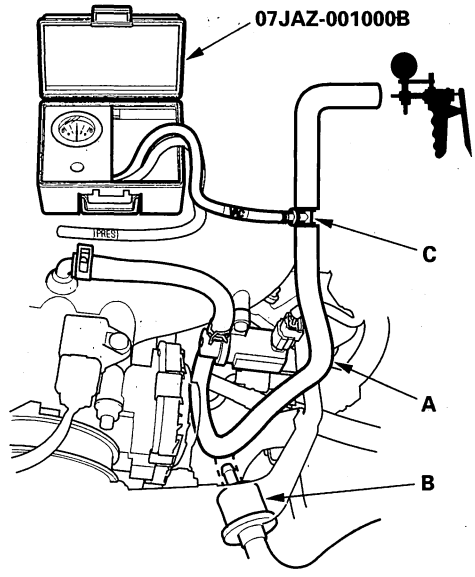

7. Do the EVAP PCS ON in the INSPECTION MENU with the HDS.

8. Slowly apply about 0.6 in.Hg (15 mmHg) of vacuum to the hose.

   Does it hold vacuum?

   YES—Check for blockage in the PCS line between the intake manifold and the EVAP canister purge valve, and the line between the EVAP canister purge valve and the EVAP canister purge joint. If the vacuum hoses are OK, replace the EVAP canister purge valve, then go to step 22.

   NO—Go to step 9.

9. Reconnect the vacuum hose to the EVAP canister purge joint.

BACK

Protected by AR

10. Disconnect the vacuum hose from the EVAP canister purge line (EVAP canister side), and connect a T-fitting (A) from the vacuum gauge and the vacuum pump/gauge, 0—30 in.Hg, to the hose as shown.

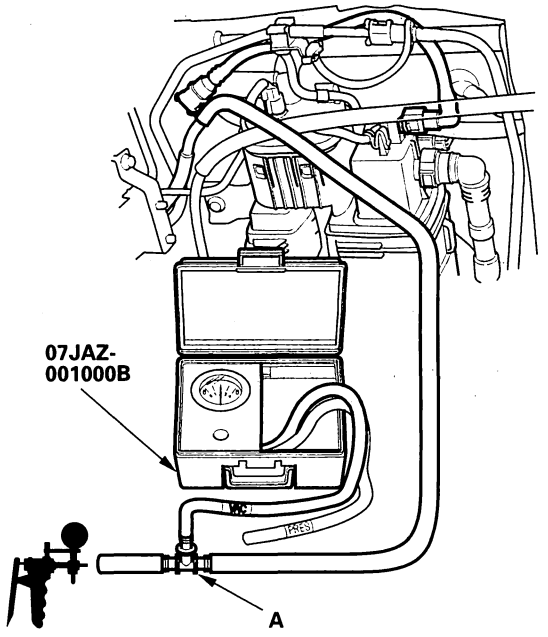

11. Do the EVAP PCS ON in the INSPECTION MENU with the HDS.

12. Slowly apply about 2 kPa (0.6 in.Hg, 15 mmHg) of vacuum to the hose.

    Does it hold vacuum?

    YES—Check for a restricted EVAP canister purge line between the EVAP canister purge valve and the EVAP canister, then go to step 22.

    NO—Go to step 13.

13. Remove the FTP sensor with its connector connected (see page 11-403).

14. Connect a T-fitting (A) from the vacuum gauge and a commercially available vacuum pump/gauge, 0—30 in.Hg, to the FTP sensor (B) as shown.

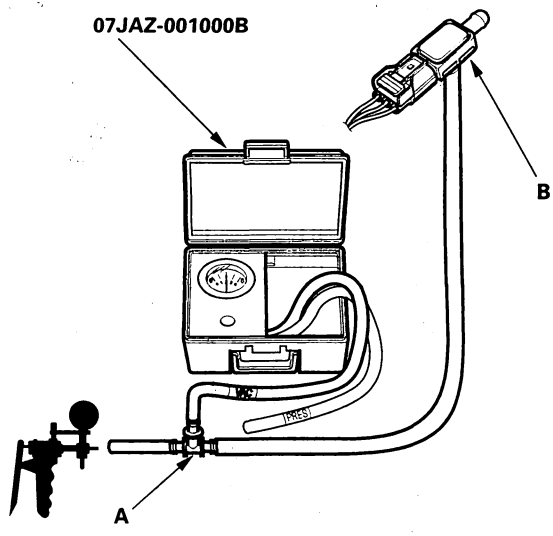

15. Check and record the FTP SENSOR reading in the DATA LIST with the HDS.

16. Slowly apply about 1.3 kPa (0.4 in.Hg, 10 mmHg) of vacuum to the hose.

17. Check the FTP SENSOR in the DATA LIST with the HDS.

    Is the difference more than 1.1 kPa (0.31 in.Hg, 8 mmHg) before and after applying vacuum?

    YES—Go to step 18.

    NO—Replace the FTP sensor (see page 11-403), then go to step 22.

18. Reconnect the vacuum hoses to the EVAP canister purge line (EVAP canister side), and reinstall the FTP sensor.

(cont'd)

Protected by AR

DTC Troubleshooting (cont'd)

19. Disconnect the vacuum hose (purge line) (A) from the EVAP canister purge valve (B), and connect a T-fitting (C) from the vacuum gauge and the vacuum pump/gauge, 0—30 in.Hg, to the hose as shown.

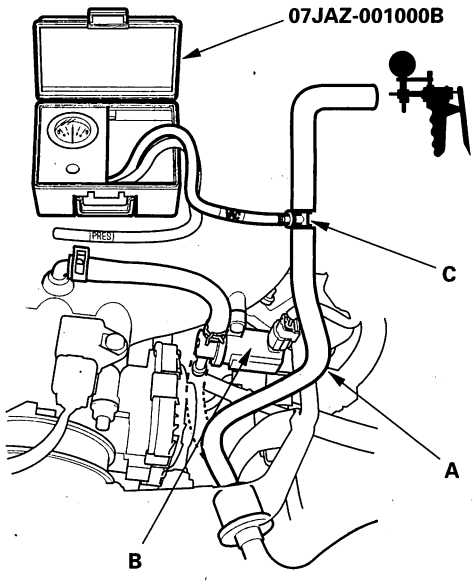

20. Do the EVAP CVS ON in the INSPECTION MENU with the HDS.

21. Slowly apply about 2 kPa (0.6 in.Hg, 15 mmHg) of vacuum to the hose.

    Does the hose hold vacuum?

    YES—Check for blockage on the EVAP canister purge joint, then go to step 22.

    NO—Replace the EVAP canister vent shut valve (see page 11-404), then go to step 22.

22. Reconnect all hoses.

23. Turn the ignition switch ON (II).

24. Reset the ECM/PCM with the HDS.

25. Do the ECM/PCM idle learn procedure (see page 11-302).

26. Do the EVAP FUNCTION TEST in the INSPECTION MENU with the HDS.

    Is the result OK?

    YES—Troubleshooting is complete.■

    NO—Check for poor connections or loose terminals at the FTP sensor, the EVAP canister purge valve, or the EVAP canister vent shut valve and the ECM/PCM, then go to step 1.

BACK

Protected by AR

DTC P0498: EVAP Canister Vent Shut Valve Control Circuit Low Voltage

NOTE: Before you troubleshoot, record all freeze data and any on-board snapshot, and review the general troubleshooting information (see page 11-3).

1. Turn the ignition switch ON (II).
2. Clear the DTC with the HDS.
3. Check for Temporary DTCs or DTCs with the HDS.

   Is DTC P0498 indicated?

   YES—Go to step 6.

   NO—Go to step 4.
4. Do the EVAP CVS ON in the INSPECTION MENU with the HDS.
5. Check for Temporary DTCs or DTCs with the HDS.

   Is DTC P0498 indicated?

   YES—Go to step 6.

   NO—Intermittent failure, system is OK at this time. Check for poor connections or loose terminals at the EVAP canister vent shut valve and the ECM/PCM. ■
6. Turn the ignition switch OFF.
7. Disconnect the EVAP canister vent shut valve 2P connector.
8. Turn the ignition switch ON (II).
9. Measure voltage between EVAP canister vent shut valve 2P connector terminal No. 2 and body ground.

EVAP CANISTER VENT SHUT VALVE 2P CONNECTOR

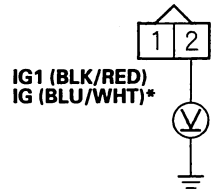

Wire side of female terminals

*: 2005-2006 models

Is there battery voltage?

YES—Go to step 10.

NO—2003-2004 models: Repair open in the wire between the EVAP canister vent shut valve and the No. 18 ACG (15 A) fuse in the under-dash fuse/relay box, then go to step 19.
2005-2006 models: Repair open in the wire between the EVAP canister vent shut valve and the A/F sensor relay, then go to step 19.

10. Turn the ignition switch OFF.
11. Measure resistance between EVAP canister vent shut valve 2P connector terminals No. 1 and No. 2.

EVAP CANISTER VENT SHUT VALVE 2P CONNECTOR

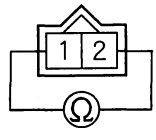

Terminal side of male terminals

Is there about 25—30 Ω at room temperature?

YES—Go to step 12.

NO—Go to step 18.

(cont'd)

Protected by AR

DTC Troubleshooting (cont'd)

12. Turn the ignition switch OFF.
13. Jump the SCS line with the HDS.
14. Disconnect ECM/PCM connector A (31P).
15. Check for continuity between ECM/PCM connector terminal A10 and body ground.

ECM/PCM CONECTOR A (31P)

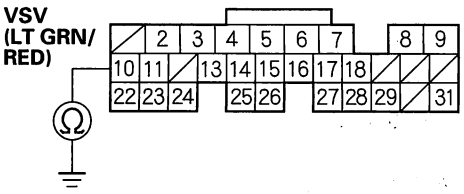

Wire side of female terminals

Is there continuity?

YES—Repair short in the wire between the EVAP canister vent shut valve and the ECM/PCM (A10), then go to step 19.

NO—Go to step 16.

16. Connect EVAP canister vent shut valve 2P connector terminal No. 1 to body ground with a jumper wire.

EVAP CANISTER VENT SHUT VALVE 2P CONNECTOR

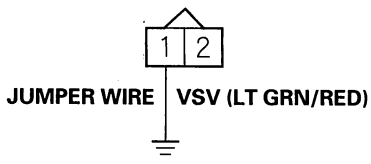

Wire side of female terminals

17. Check for continuity between ECM/PCM connector terminal A10 and body ground.

ECM/PCM CONECTOR A (31P)

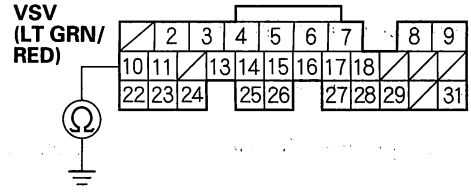

Wire side of female terminals

Is there continuity?

YES—Go to step 25.

NO—Repair open in the wire between the EVAP canister vent shut valve and the ECM/PCM (A10), then go to step 19.

18. Replace the EVAP canister vent shut valve (see page 11-404).
19. Reconnect all connectors.

BACK

Protected by AR

20. Turn the ignition switch ON (II).

21. Reset the ECM/PCM with the HDS.

22. Do the ECM/PCM idle learn procedure (see page 11-302).

23. Do the EVAP CVS ON in the INSPECTION MENU with the HDS.

24. Check for Temporary DTCs or DTCs with the HDS.

    Are any Temporary DTCs or DTCs indicated?

    YES—If DTC P0498 is indicated, check for poor connections or loose terminals at the EVAP canister vent shut valve and the ECM/PCM, then go to step 1. If any other Temporary DTCs or DTCs are indicated, go to the indicated DTC's troubleshooting.

    NO—Troubleshooting is complete. ■

25. Update the ECM/PCM if it does not have the latest software, or substitute a known-good ECM/PCM (see page 11-6).

26. Do the EVAP CVS ON in the INSPECTION MENU with the HDS.

27. Check for Temporary DTCs or DTCs with the HDS.

    Are any Temporary DTCs or DTCs indicated?

    YES—If DTC P0498 is indicated, check for poor connections or loose terminals at the EVAP canister vent shut valve and the ECM/PCM, then go to step 1. If any other Temporary DTCs or DTCs are indicated, go to the indicated DTC's troubleshooting.

    NO—If the ECM/PCM was updated, troubleshooting is complete. If the ECM/PCM was substituted, replace the original ECM/PCM (see page 11-224). ■

Protected by AR

DTC Troubleshooting (cont'd)

DTC P0499: EVAP Canister Vent Shut Valve Control Circuit High Voltage

NOTE: Before you troubleshoot, record all freeze data and any on-board snapshot, and review the general troubleshooting information (see page 11-3).

1. Turn the ignition switch ON (II).
2. Clear the DTC with the HDS.
3. Do the EVAP CVS ON in the INSPECTION MENU with the HDS.
4. Check for Temporary DTCs or DTCs with the HDS.

   Is DTC P0499 indicated?

   YES—Update the ECM/PCM if it does not have the latest software, or substitute a known-good ECM/PCM (see page 11-6), then recheck. If the symptom/indication goes away with a known-good ECM/PCM, replace the original ECM/PCM (see page 11-224). ■

   NO—Intermittent failure, system is OK at this time. Check for poor connections or loose terminals at the EVAP canister vent shut valve and the ECM/PCM. ■

BACK

Protected by AR

DTC P1454: FTP Sensor Range/Performance Problem

DTC P2422: EVAP Canister Vent Shut Valve Close Malfunction

NOTE: Before you troubleshoot, record all freeze data and any on-board snapshot, and review the general troubleshooting information (see page 11-3).

1. Turn the ignition switch ON (II).
2. Clear the DTC with the HDS.
3. Turn the ignition switch OFF.
4. Remove the fuel fill cap, and wait 1 minute.
5. Check the FTP SENSOR in the DATA LIST with the HDS.

   Is it between −0.67 kPa and 0.67 kPa (−0.2 and 0.2 in.Hg, −5 and 5 mmHg), or 2.4−2.6 V?

   YES—Go to step 6.

   NO—Go to step 17.
6. Install the fuel fill cap.
7. Clear the DTC with the HDS.
8. Start the engine. Hold the engine speed at 3,000 rpm without load (in Park on neutral) until the radiator fan comes on, then let it idle.
9. Monitor the OBD STATUS for DTC P1454 in the DTCs MENU with the HDS.

   Does the screen indicate FAILED?

   YES—Go to step 10.

   NO—If the screen indicates PASSED, intermittent failure, system is OK at this time, check for a poor connections or loose terminals at the FTP sensor, or the EVAP canister vent shut valve and the ECM/PCM. If the screen indicates NOT COMPLETED, go to step 8 and recheck.
10. Clear the DTC with the HDS.
11. Turn the ignition switch OFF.
12. Remove the EVAP canister vent shut valve from the EVAP canister (see page 11-404).
13. Connect the 2P connector to the EVAP canister vent shut valve.
14. Turn the ignition switch ON (II).
15. Do the EVAP CVS ON in the INSPECTION MENU with the HDS.
16. Check the EVAP canister vent shut valve (A) operation.

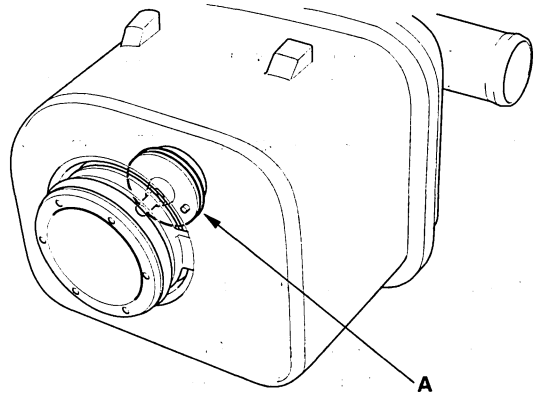

Does the valve operate?

YES—Check for a blockage in the EVAP canister, canister filter, vent hoses, and drain joint, then install the EVAP canister vent shut valve, and go to step 23.

NO—Replace the EVAP canister vent shut valve (see page 11-404), then go to step 23.

(cont'd)

Protected by AR

DTC Troubleshooting (cont'd)

17. Disconnect the air tube (A) from the FTP sensor (B).

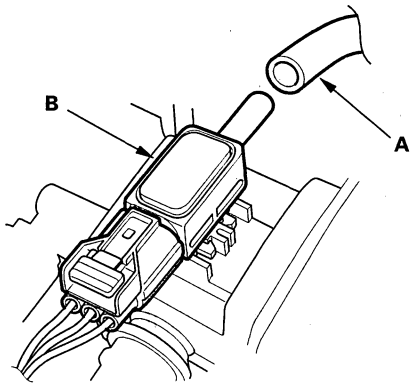

18. Check the FTP SENSOR in the DATA LIST with the HDS.

    Is it between −0.67 kPa and 0.67 kPa (−0.2 and 0.2 in.Hg, −5 and 5 mmHg), or 2.4−2.6 V?

    YES—Check for a blockage in the FTP sensor air tube, then go to step 23.

    NO—Go to step 19.

19. Turn the ignition switch OFF.

20. Remove the FTP sensor (A) from the EVAP canister with its connector connected (see page 11-403).

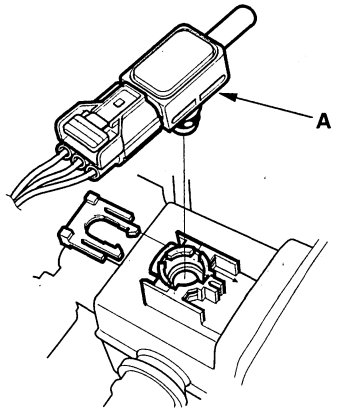

21. Turn the ignition switch ON (II).

22. Check the FTP SENSOR in the DATA LIST with the HDS.

    Is it between −0.67 kPa and 0.67 kPa (−0.2 and 0.2 in.Hg, −5 and 5 mmHg), or 2.4−2.6 V?

    YES—Check for debris or clogging at the EVAP canister and the FTP sensor port, then go to step 23.

    NO—Replace the FTP sensor (see page 11-403), then go to step 23.

23. Turn the ignition switch ON (II).

24. Reset the ECM/PCM with the HDS.

25. Do the ECM/PCM idle learn procedure (see page 11-302).

26. Start the engine. Hold the engine speed at 3,000 rpm without load (in Park or neutral) until the radiator fan comes on, then let it idle.

27. Check for Temporary DTCs or DTCs with the HDS.

    Are any Temporary DTCs or DTCs indicated?

    YES—If DTC P1454 and/or P2422 is indicated, check for poor connections or loose terminals at the FTP sensor, or the EVAP canister vent shut valve and the ECM/PCM, then go to step 1. If any other Temporary DTCs or DTCs are indicated, go to the indicated DTC's troubleshooting.

    NO—Go to step 28.

BACK

Protected by AR

28. Monitor the OBD STATUS for DTC P1454 in the DTCs MENU with the HDS.

    Does the screen indicate PASSED?

    YES—Troubleshooting is complete. ■

    NO—If the screen indicates FAILED, check for poor connections or loose terminals at the FTP sensor, or the EVAP canister vent shut valve and the ECM/PCM, then go to step 1. If the screen indicates NOT COMPLETED, go to step 26 and recheck.

Protected by AR

EVAP Canister Replacement

1. Remove the EVAP canister cover (A).

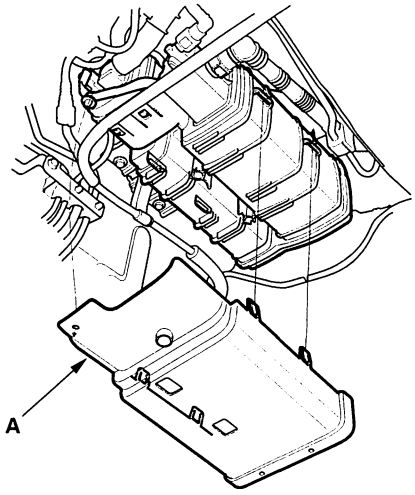

2. Remove the hoses (A), the FTP sensor 3P connector (B), and the EVAP canister vent shut valve 2P connector (C).

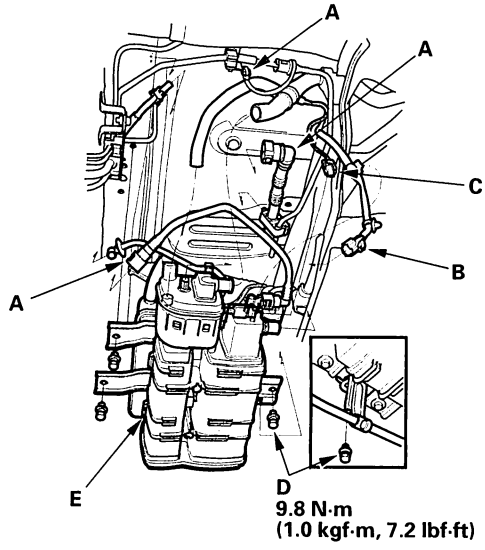

3. Remove the bolts (D).

4. Remove the EVAP canister assembly (E).

5. Remove the EVAP canister bracket (A).

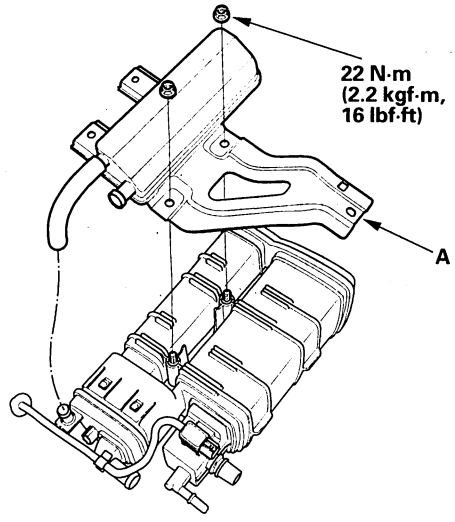

6. Install the canister in the reverse order of removal.

BACK

Protected by AR

FTP Sensor Replacement

1. Remove the EVAP canister (see page 11-402).
2. Remove the FTP sensor (A).

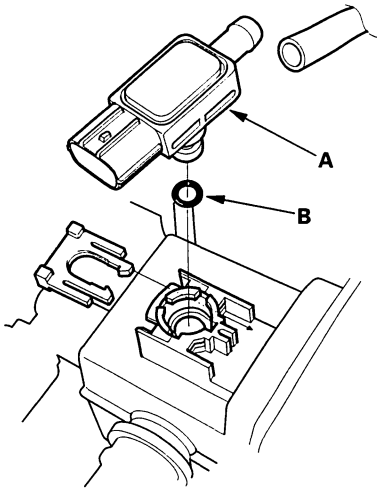

3. Install the sensor in the reverse order of removal with a new O-ring (B).

EVAP Canister Purge Valve Replacement

1. Disconnect the hoses (A) and the EVAP canister purge valve 2P connector (B).

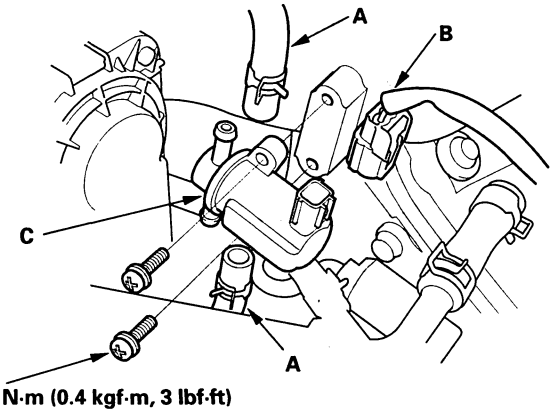

4 N·m (0.4 kgf·m, 3 lbf·ft)

2. Remove the EVAP canister purge valve (C).
3. Install the valve in the reverse order of removal.

Protected by AR

EVAP Canister Vent Shut Valve Replacement

1. Remove the EVAP canister (see page 11-402).
2. Pry the lock tabs outward (A) then remove the EVAP canister vent shut valve (B).

   NOTE: Be careful not to damage the lock tabs.

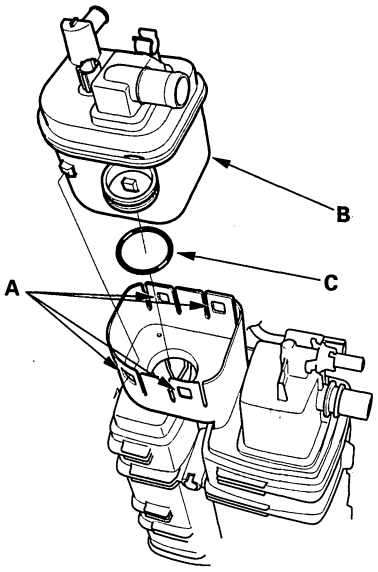

3. Install the valve in the reverse order of removal with a new O-ring (C).

   NOTE: Do not coat the O-ring with oil.

BACK

Protected by AR

Transaxle

Clutch **12-1**

Manual Transmission **13-1**

Automatic Transmission **14-1**

Driveline/Axle **16-1**

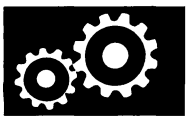

Protected by AR

BACK

Protected by AR

Clutch

Special Tools 12-2
Component Location Index 12-3
System Description 12-4
Clutch Pedal, Clutch Pedal Position Switch, and Clutch Interlock Switch Adjustment 12-6
Clutch Pedal Replacement 12-7
Clutch Master Cylinder Replacement 12-8
Slave Cylinder Replacement 12-10
Clutch Replacement 12-11

NOTE: Refer to the 2003-2006 Accord Service Manual, P/N 61SDA08 for items not shown in this section.

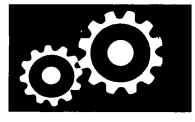

BACK

Outline of Model Change

The 6-speed manual transmission has been added.

Protected by AR

Clutch

Special Tools

Ref. No.	Tool Number	Description	Qty
①	07AAE-P8EA000	Pressure Plate Compressor	1
②	07AAF-P8EA000	Clutch Alignment Shaft	1
③	07AAK-P8EA000	Pressure Plate Compressor Adapter	1
④	07LAB-PV00100 or 07924-PD20003	Ring Gear Holder	1
⑤	07746-0010200	Attachment, 37 x 40 mm	1
⑥	07749-0010000	Driver	1

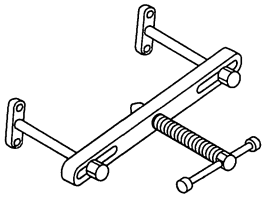

①

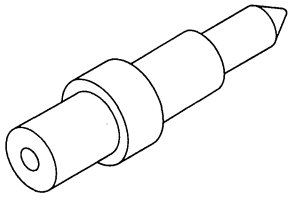

②

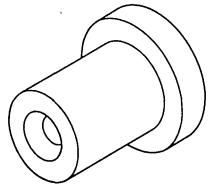

③

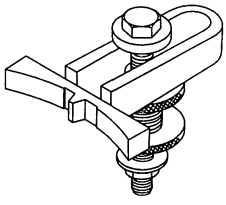

④

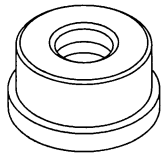

⑤

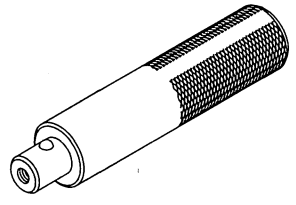

⑥

BACK

Protected by AR

Component Location Index

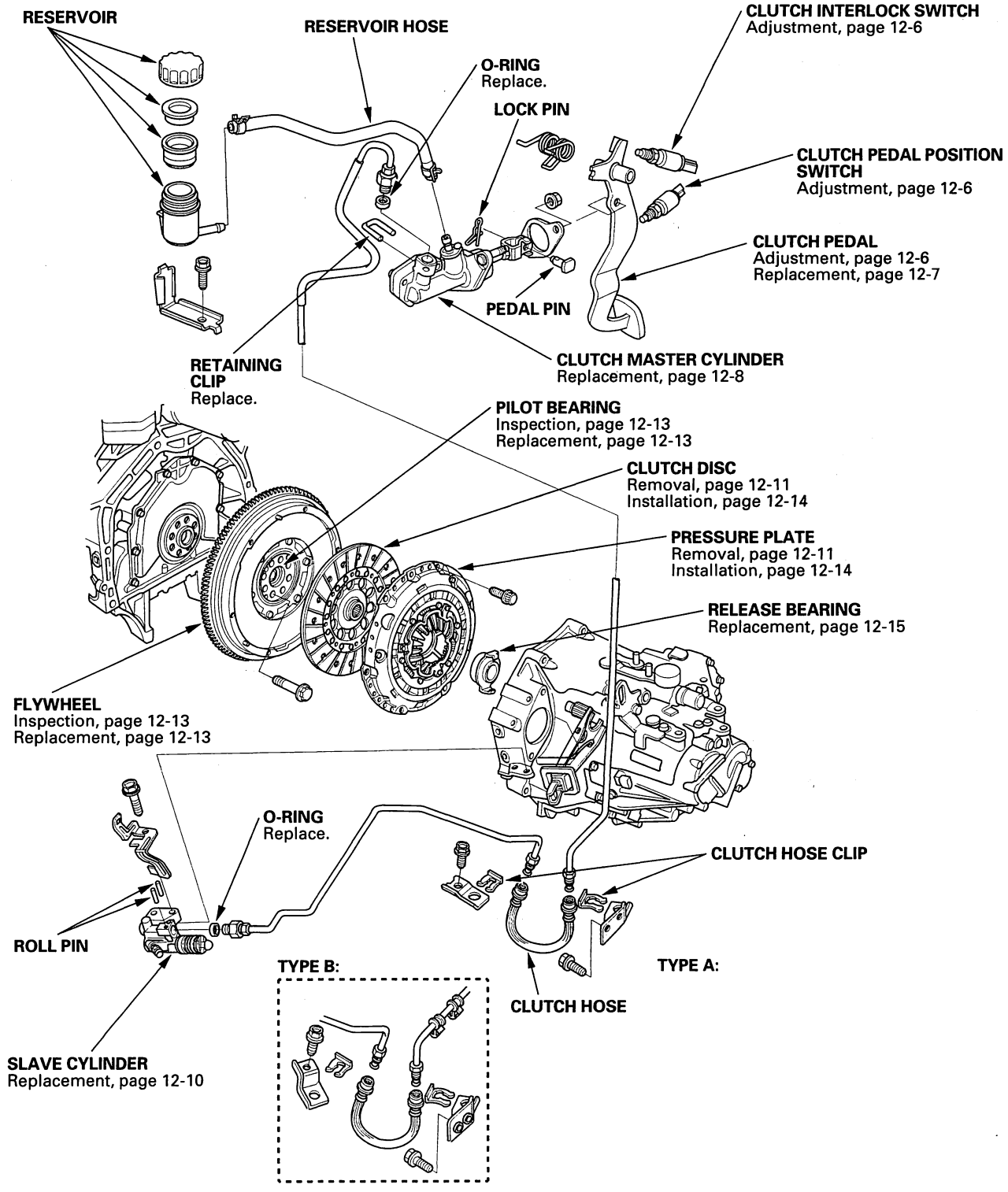

BACK

Protected by AR

Clutch

System Description

Self-Adjusting Clutch (SAC)

Function
On ordinary clutches, the clutch pedal load increases as the clutch disc wears. The self-adjusting clutch is designed so the clutch pedal load will not increase even when the clutch disc wears. This is done by automatically adjusting the fulcrum of the diaphragm spring in accordance with the wear of the clutch disc. The clutch pedal load stays consistant even when the clutch disc is worn.

Construction
The self-adjusting clutch consists of a pressure plate, a sensor spring, a diaphragm spring, an adjusting ring, three coil springs, a pressure plate cover, and a compensation spring. They are riveted together and must not be disassembled. If there is problem with any part of the pressure plate or clutch disc, they must be replaced as a set.

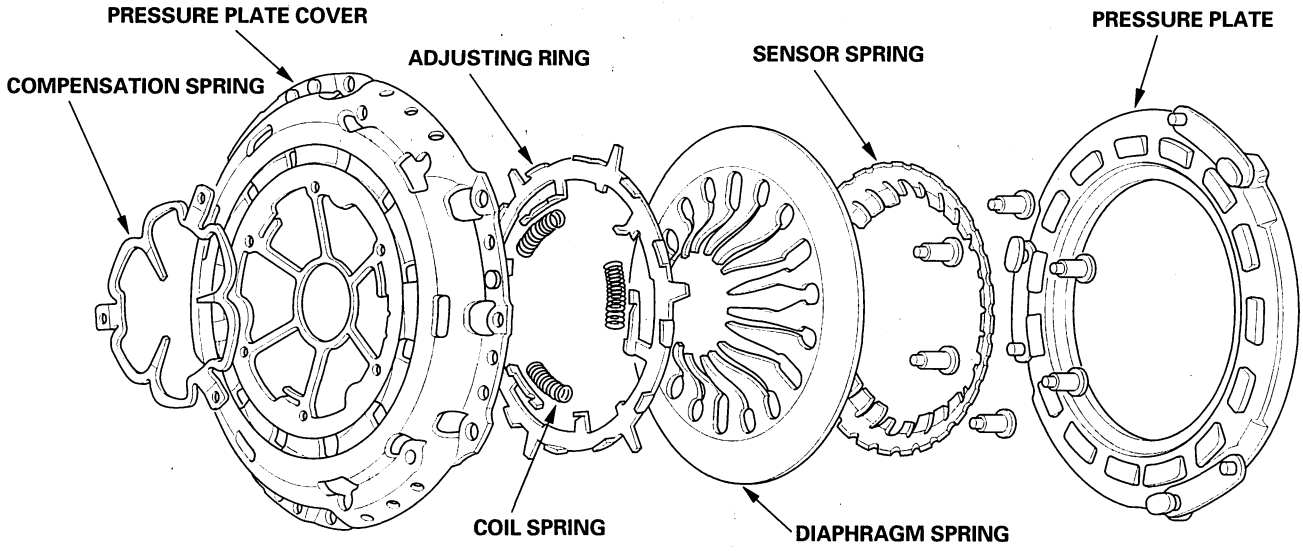

Operation
1. When the clutch disc wears slightly.
   As the clutch begins to wear, the release load increases slightly. However, this does not affect operation of the clutch because the release load does not exceed that of the sensor.

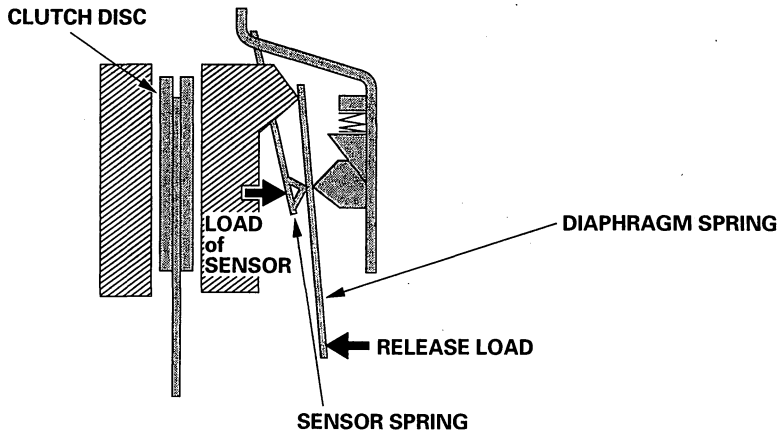

BACK

Protected by AR

2. When the clutch disc wears considerably.
   The sensor spring starts to deflect as the clutch disc is worn further and the release load exceeds that of the sensor.

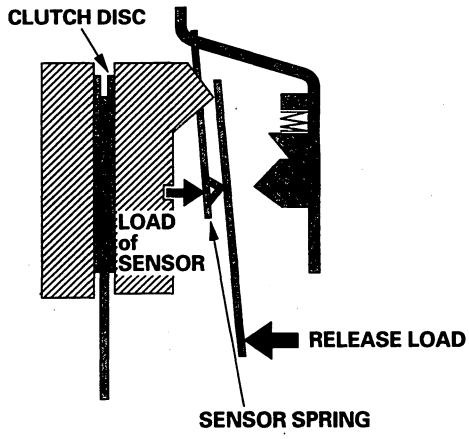

The fulcrum then moves following the amount of sensor spring deflection. As this takes place, the fulcrum of the diaphragm spring is adjusted, keeping the release load consistent.

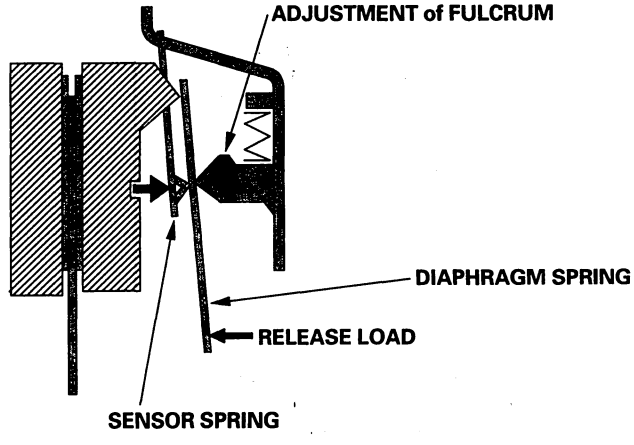

Protected by AR

Clutch Pedal, Clutch Pedal Position Switch, and Clutch Interlock Switch Adjustment

NOTE:
- Check the clutch pedal position switch (see page 4-51).
- Check the clutch interlock switch (see page 4-8).
- Remove the driver's floor mat before adjusting the clutch pedal.
- The clutch is self-adjusting to compensate for wear.
- If there is no clearance between the master cylinder piston and pushrod, the release bearing will be held against the diaphragm spring, which can result in clutch slippage or other clutch problems.

1. Loosen the clutch pedal position switch locknut (A), and back off the clutch pedal position switch (B) until it no longer touches the clutch pedal (C).

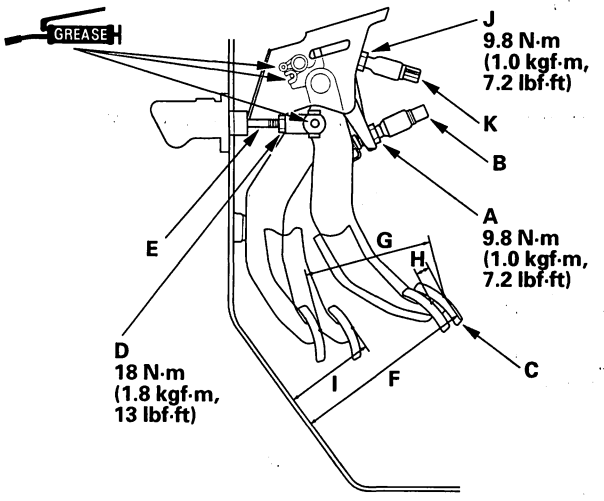

2. Loosen the clutch pushrod locknut (D), and turn the pushrod (E) in or out to get the specified height (F), stroke (G), free play (H), and disengagement height (I) at the clutch pedal.

Clutch Pedal Stroke:	**130—140 mm (5.12—5.51 in.)**
Clutch Pedal Free Play:	**10—18 mm (0.39—0.71 in.)**
Clutch Pedal Height:	**191 mm (7.52 in.)**
Clutch Pedal Disengagement Height:	**90.5 mm (3.56 in.)**

3. Tighten the clutch pushrod locknut.
4. With the clutch pedal released, turn in the clutch pedal position switch until it contacts the clutch pedal.
5. Turn in the clutch pedal position switch an additional 3/4 to 1 turn.
6. Tighten the clutch pedal position switch locknut.
7. Press the clutch pedal to the floor.
8. Release the clutch pedal 9—12 mm (0.35—0.47 in.) from the fully pressed position, and hold it there. Adjust the position of the clutch interlock switch (K) so the engine will start with the clutch pedal in this position.
9. Tighten the clutch interlock switch locknut (J).

BACK

Protected by AR

Clutch Pedal Replacement

1. Disconnect the clutch pedal position switch connector (A) and clutch interlock switch connector (B).

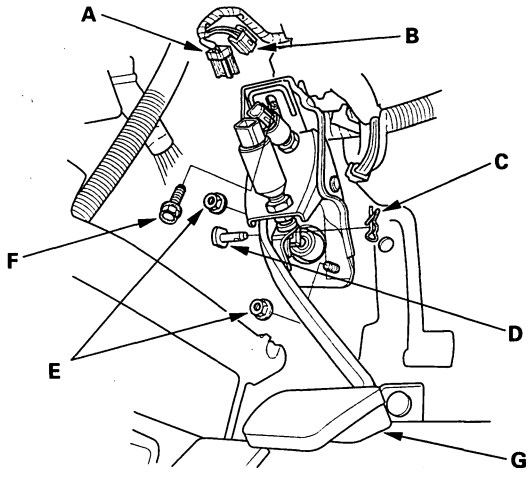

2. Pry out the lock pin (C), and pull the pedal pin (D) out of the yoke.
3. Remove the master cylinder mounting nuts (E) and clutch pedal mounting bolt (F).
4. Remove the clutch pedal (G).
5. Install the clutch pedal (A).

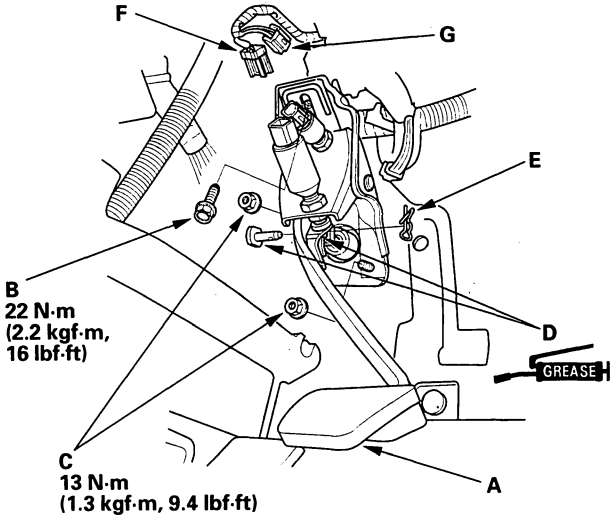

6. Install the clutch pedal mounting bolt (B) and master cylinder mounting nuts (C).
7. Apply grease to the pedal pin (D), and slide it into the yoke, then install a new lock pin (E).
8. Connect the clutch pedal position switch connector (F) and clutch interlock switch connector (G).
9. Adjust the clutch pedal, clutch pedal position switch, and clutch interlock switch (see page 12-6).

Protected by AR

Clutch Master Cylinder Replacement

NOTE: Do not spill brake fluid on the vehicle; it may damage the paint; if brake fluid does contact the paint, wash it off immediately with water.

1. Remove the brake fluid from the clutch master cylinder reservoir with a syringe.
2. Make sure you have the anti-theft codes for the radio and the navigation system, then write down the customer's radio station and XM radio channel presets.
3. Disconnect the negative cable from the battery first, then disconnect the positive cable. Remove the battery.
4. Remove the air cleaner housing (see page 11-344).
5. Remove the battery base (see step 6 on page 13-12).
6. Pry out the lock pin (A), and pull the pedal pin (B) out of the yoke. Remove the master cylinder mounting nuts (C).

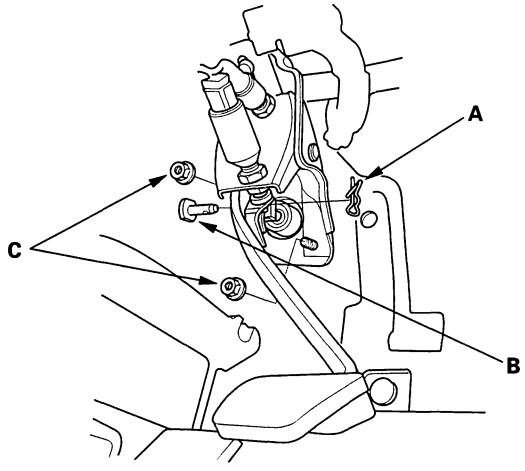

7. Remove the reservoir mounting bolt (A).

Type A:

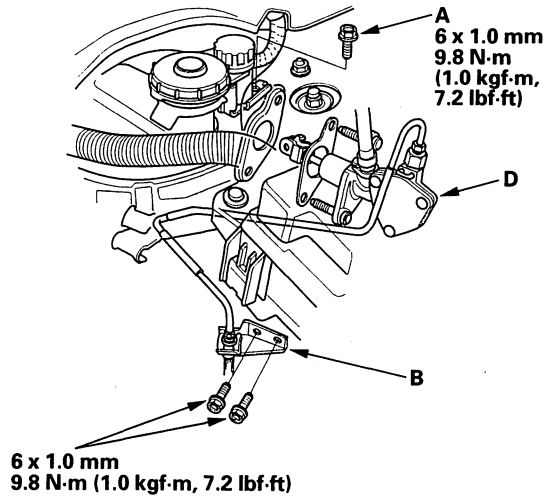

Type B:

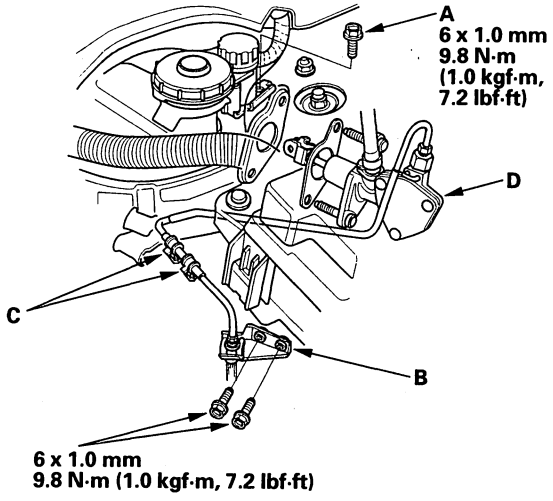

8. Remove the clutch line bracket (B).
9. Remove the clutch line clips (C).
10. Remove the clutch master cylinder (D).

BACK

Protected by AR

11. Disconnect the reservoir hose (A), then remove the retaining clip (B), and remove clutch line (C) from the clutch master cylinder (D). Plug the end of the reservoir hose and clutch line with a shop towel to prevent brake fluid from coming out.

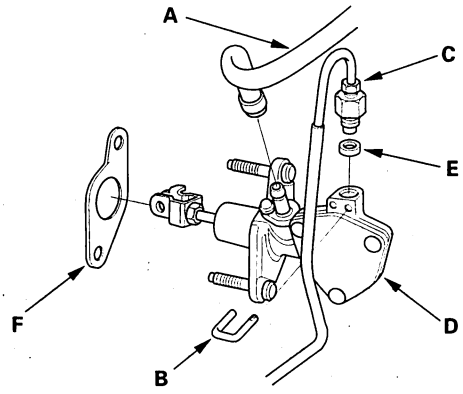

12. Remove the O-ring (E) and clutch master cylinder seal (F) from the clutch master cylinder.

13. Install the clutch master cylinder in the reverse order of removal, and note these items.

- Apply brake assembly lube to the clutch line, and install a new O-ring.
- Tighten the master cylinder mounting nuts to 13 N·m (1.3 kgf·m, 9.4 lbf·ft).
- Install the battery base (see step 45 on page 13-26).
- Install the air cleaner housing (see page 11-344).
- Install the battery. Connect the positive cable to the battery first, then connect the negative cable.
- Enter the anti-theft codes for the radio and the navigation system, then enter the customer's radio station and XM radio channel presets.
- Do the power window control unit reset procedure, refer to the 2003-2006 Accord Service Manual (see page 22-232).

14. Make sure the hose clamps (A) are positioned on the master cylinder (B) and reservoir (C) as shown.

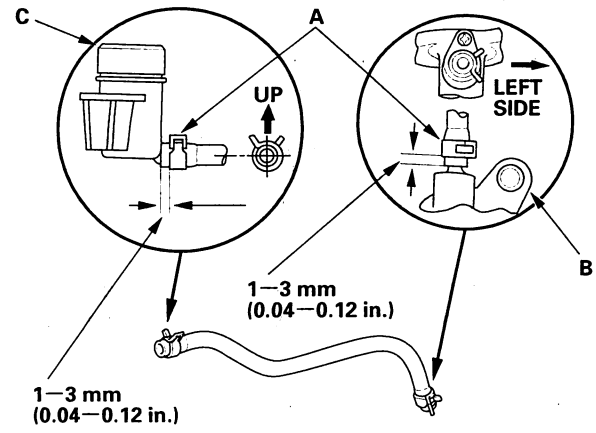

15. To prevent the retaining clip (A) from coming off, pry apart the tip of the retaining clip (B) with a screwdriver.

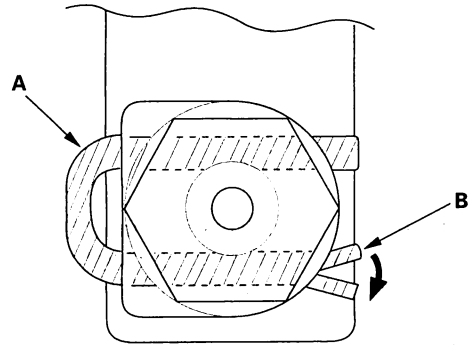

16. Bleed the clutch master hydraulic system (see step 8 on page 12-10).

NOTE: Reservoir filling is covered in the bleeding procedure.

Protected by AR

Slave Cylinder Replacement

NOTE:
- Use fender covers to avoid damaging painted surfaces.
- Do not spill brake fluid on the vehicle; it may damage the paint; if brake fluid does contact the paint, wash it off immediately with water.

1. Make sure you have the anti-theft codes for the radio and navigation system, then write down the customer's radio station and XM radio channel presets.

2. Disconnect the negative cable from the battery first, then disconnect the positive cable. Remove the battery.

3. Remove the mounting bolts (A), harness bracket (B), and slave cylinder (C).

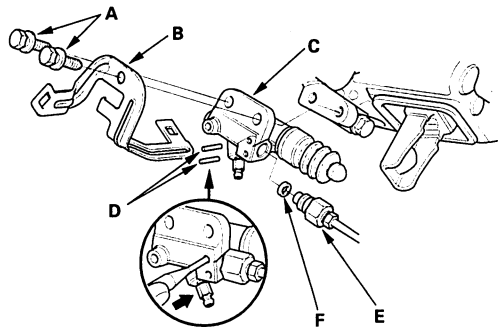

4. Remove the roll pins (D). Disconnect the clutch line (E), and remove the O-ring (F). Plug the end of the clutch line to prevent brake fluid from coming out.

5. Install the slave cylinder in the reverse order of removal. Install a new O-ring (A).

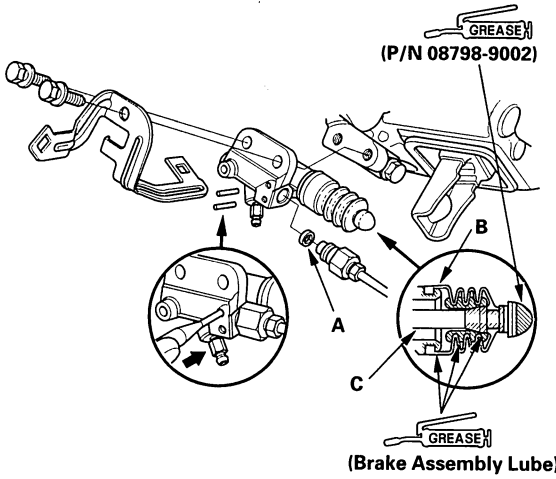

6. Pull back the boot (B), and apply brake assembly lube to the boot and slave cylinder rod (C). Reinstall the boot.

7. Apply super high temp urea grease (P/N 08798-9002) to the pushrod of the slave cylinder. Tighten the slave cylinder mounting bolts to 22 N·m (2.2 kgf·m, 16 lbf·ft).

8. Bleed the clutch hydraulic system.

   - Attach a hose to the bleeder screw (A), and suspend the hose in a container of brake fluid.
   - Make sure there is an adequate supply of fluid in the reservoir, then slowly pump the clutch pedal until no more bubbles appear at the bleeder hose.
   - It may be necessary to limit the movement of the release fork (B) with a block of wood to remove all the air from the system.
   - Tighten the bleeder screw to 8 N·m (0.8 kgf·m, 5.8 lbf·ft); do not overtighten it.
   - After bleeding, refill the reservoir to the MAX mark with fluid.
   - Use only Honda DOT 3 brake fluid from an unopened container.
   - Confirm clutch operation, and check for leaking fluid.

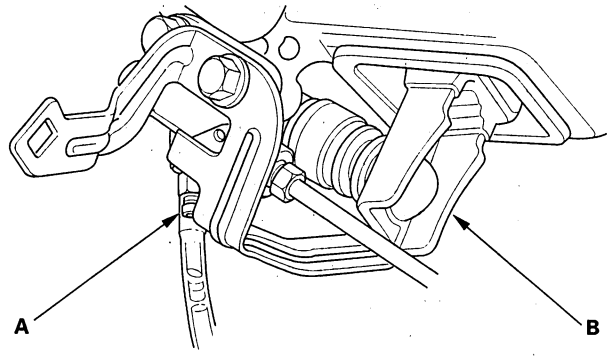

9. Reconnect the positive cable to the battery first, then connect the negative cable.

10. Enter the anti-theft codes for the radio and navigation system, then enter the customer's radio station and XM radio channel presets.

11. Do the power window control unit reset procedure, refer to the 2003-2006 Accord Service Manual (see page 22-232).

BACK

Protected by AR

Clutch Replacement

Special Tools Required
- Pressure plate compressor 07AAE-P8EA000
- Clutch alignment shaft 07AAF-P8EA000
- Pressure plate compressor adapter 07AAK-P8EA000
- Ring gear holder 07LAB-PV00100 or 07924-PD20003
- Attachment, 37 x 40 mm 07746-0010200
- Driver 07749-0010000

NOTICE

You must use the special tools required to remove and install the clutch pressure plate or you will irreversibly damage it.

Pressure Plate and Clutch Disc Removal

1. Check the diaphragm spring fingers for height using the special tool and a feeler gauge. If the height is more than the service limit, replace the pressure plate and clutch disc as a set.

   Standard (New): 0.6 mm (0.02 in.) max.
   Service Limit: 0.8 mm (0.03 in.)

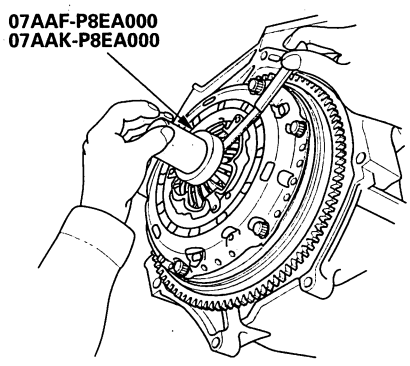

2. Install the special tools.

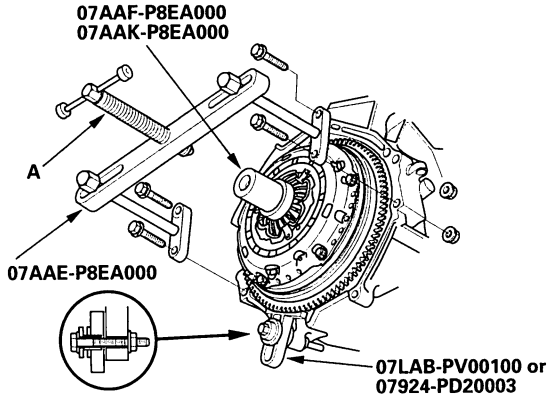

3. Turn the center screw (A) clockwise by hand to apply pressure on the diaphragm spring. Continue turning the center screw until it stops.

4. Loosen the pressure plate mounting bolts (A) in the pattern shown in several steps, then remove the bolts.

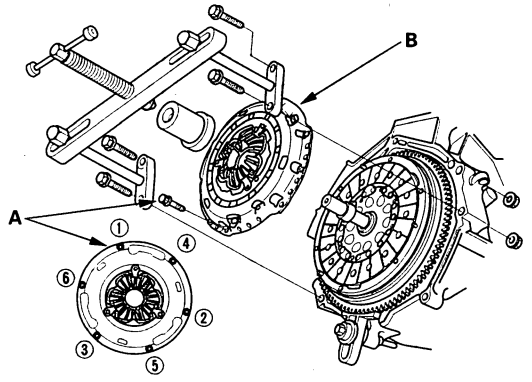

5. Turn the center screw on the pressure plate compressor counterclockwise by hand to release the pressure, then install two pressure plate mounting bolts, hand-tight, to hold the pressure plate (B). Remove the special tools and the pressure plate.

6. Inspect the fingers of the diaphragm spring (A) for wear at the release bearing contact area.

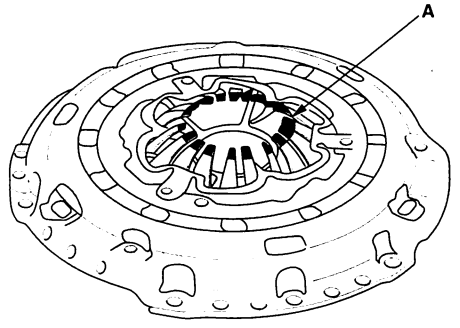

7. Inspect the pressure plate surface (A) for wear, cracks, and burning.

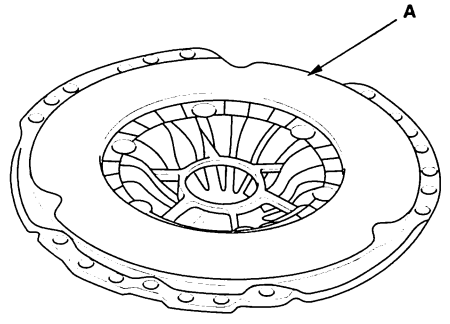

(cont'd)

Protected by AR

Clutch Replacement (cont'd)

8. Inspect for warpage using a straight edge (A) and a feeler gauge (B). Measure across the pressure plate (C). If the warpage is more than the service limit, replace the pressure plate and clutch disc as a set.

   Standard (New): 0.03 mm (0.001 in.) max.
   Service Limit: 0.15 mm (0.006 in.)

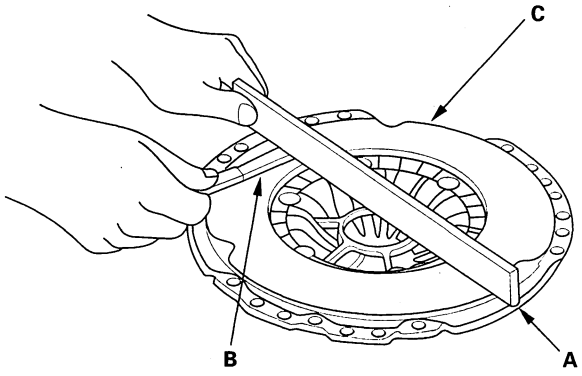

9. Remove the clutch disc and special tools.

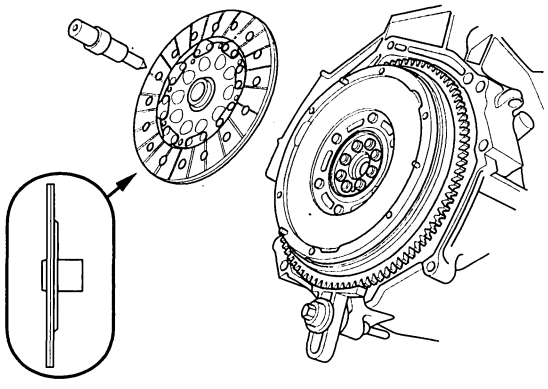

10. Inspect the lining of the clutch disc for signs of slippage or oil. If the clutch looks burnt or is oil soaked, replace it and the pressure plate as a set. Find and repair the source of the oil leak if the clutch disc is soaked.

11. Measure the clutch disc thickness. If the thickness is less than the service limit, replace the clutch disc and pressure plate as a set.

    Standard (New): 8.68—9.53 mm (0.342—0.375 in.)
    Service Limit: 7.2 mm (0.283 in.)

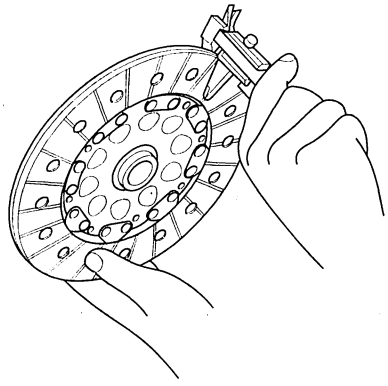

12. Measure the rivet depth from the clutch disc lining surface (A) to the rivets (B) on both sides. If the rivet depth is less than the service limit, replace the clutch disc and the pressure plate as a set.

    Standard (New): 1.0 mm (0.039 in.)
    Service Limit: 0.2 mm (0.008 in.)

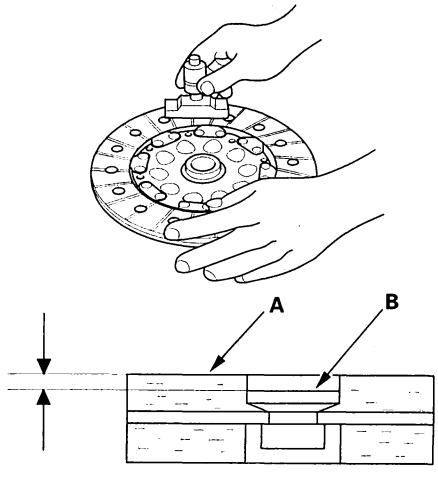

BACK

Protected by AR

Flywheel and Pilot Bearing Inspection

1. Inspect the ring gear teeth for wear and damage.
2. Inspect the clutch disc mating surface on the flywheel for wear, cracks, and burning.
3. Measure the flywheel runout with the flywheel (A) installed on the engine. Set the dial indicator (B). Turn the flywheel at least two turns while pressing the flywheel. If the runout is not within the standard, replace the flywheel, and recheck the runout. Resurfacing the flywheel is not recommended.

   Standard (New): 0.05—0.45 mm (0.002—0.018 in.)

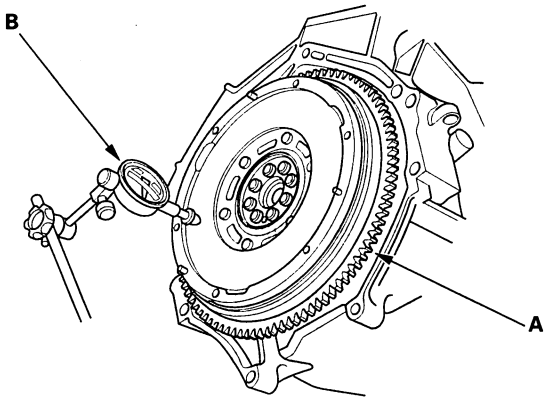

4. Turn the inner race of the pilot bearing with your finger. The pilot bearing should turn smoothly and quietly. Check that the pilot bearing outer race fits tightly in the flywheel. If the race does not turn smoothly, quietly, or fit tight in the flywheel, replace the pilot bearing.

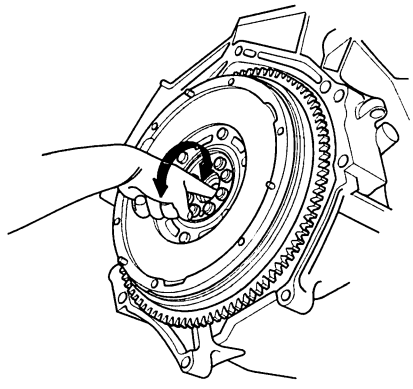

Flywheel and Pilot Bearing Replacement

1. Install the special tool.

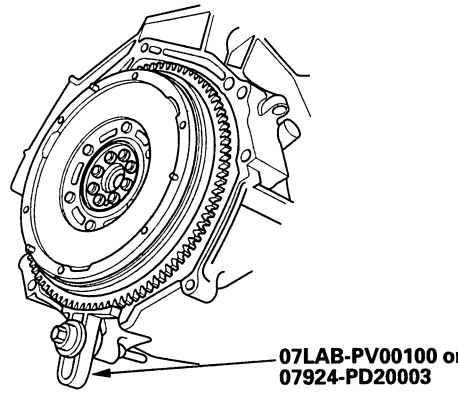

2. Loosen the flywheel mounting bolts in a crisscross pattern in several steps. Remove the bolts, then remove the flywheel.
3. Remove the pilot bearing (A) from the flywheel (B).

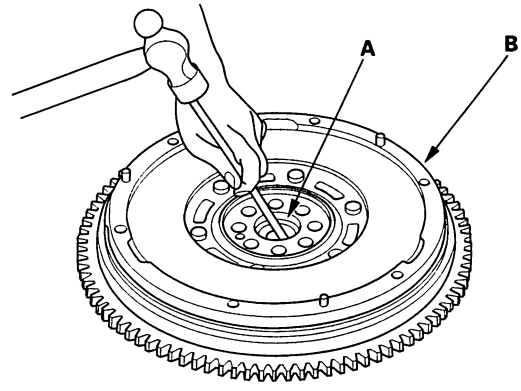

(cont'd)

Protected by AR

Clutch Replacement (cont'd)

4. Install the new pilot bearing (A) into the flywheel using the special tools. Apply a light coat of oil to the bearing surface.

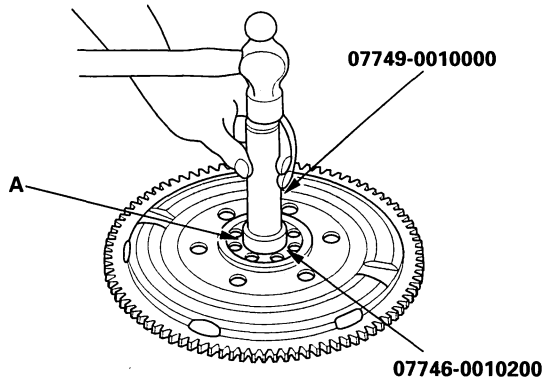

5. Install the flywheel and mounting bolts, finger-tight.

6. Install the special tool, then torque the flywheel mounting bolts in a crisscross pattern in several steps.

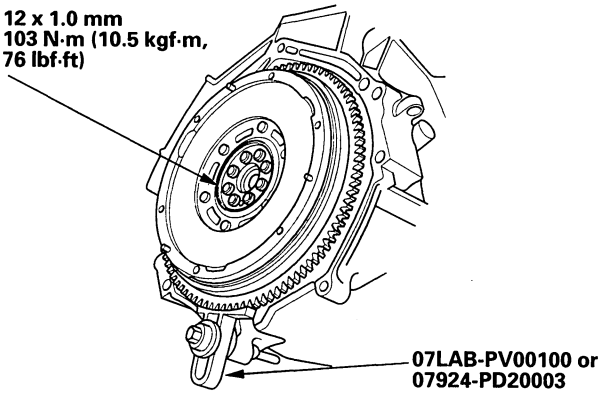

Clutch Disc and Pressure Plate Installation

1. Temporarily install the clutch disc onto the splines of the transmission mainshaft. Make sure the clutch disc slides freely on the mainshaft.

2. Install the ring gear holder.

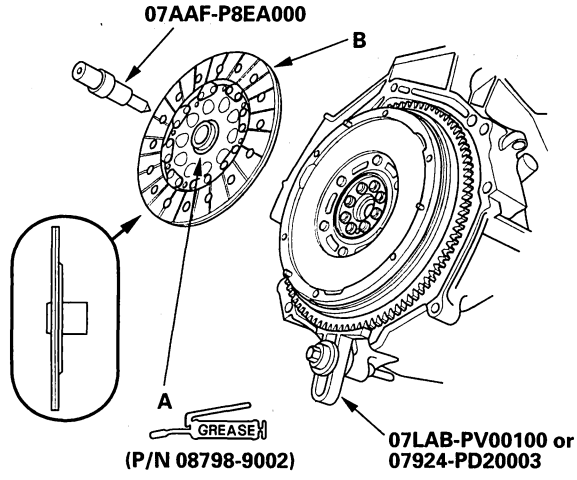

3. Apply super high temp urea grease (P/N 08798-9002) to the splines (A) of the clutch disc (B), then install the clutch disc using the special tools.

4. Align a white mark (A) across the pressure plate (B) and flywheel (C).

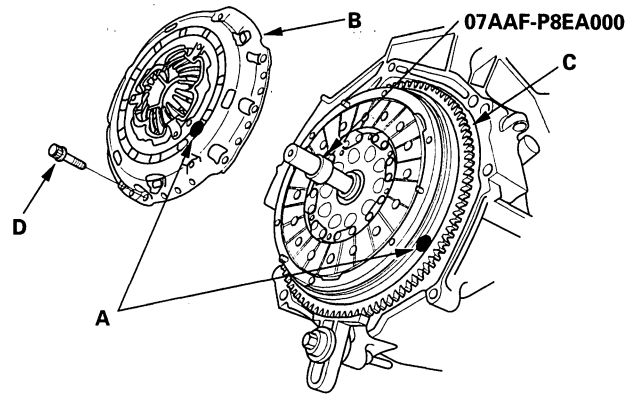

5. Install the pressure plate and the mounting bolts (D), finger-tight.

BACK

Protected by AR

6. Install the special tools.

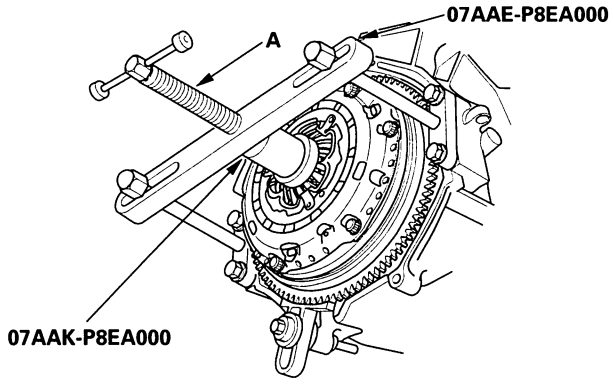

7. Turn the center screw (A) clockwise by hand to apply pressure on the diaphragm spring. Continue turning the center screw unit it stops.

8. Be careful not to damage the pressure plate (A). Tighten (180 degrees apart) the pressure plate mounting bolts (B) in a star pattern in several steps.

   PRESSURE PLATE MOUNTING BOLT TORQUE: 25 N·m (2.6 kgf·m, 19 lbf·ft)

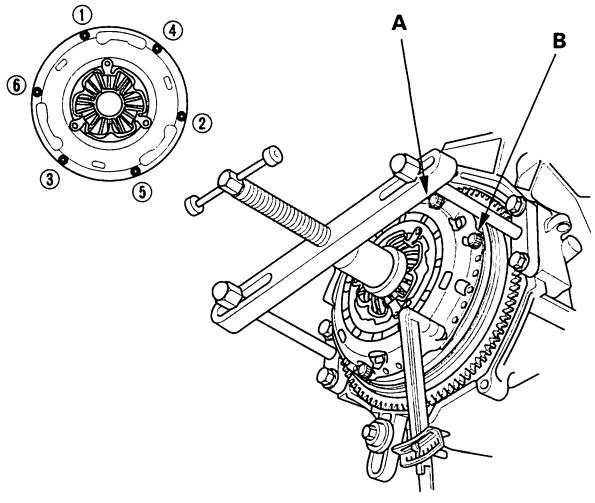

9. Turn the center screw on the pressure plate compressor counterclockwise by hand to release the pressure, then remove the special tools.

10. Make sure the diaphragm spring fingers are all the same height.

Release Bearing Replacement

1. Remove the release fork boot (A) from the clutch housing (B).

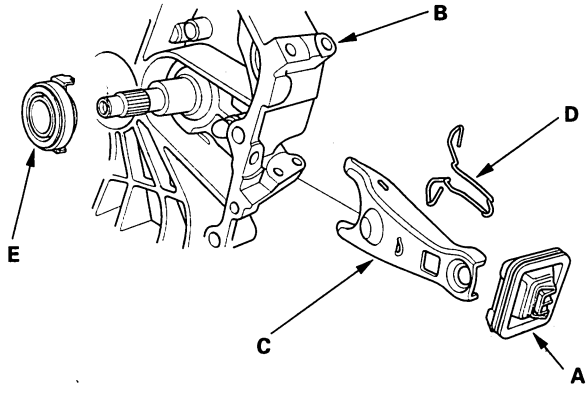

2. Remove the release fork (C) from the clutch housing by squeezing the release fork set spring (D). Remove the release bearing (E).

3. Check the play of the release bearing by spinning it with your hand. If there is excessive play, replace the release bearing.

   NOTE: The release bearing is packed with grease. Do not wash it in solvent.

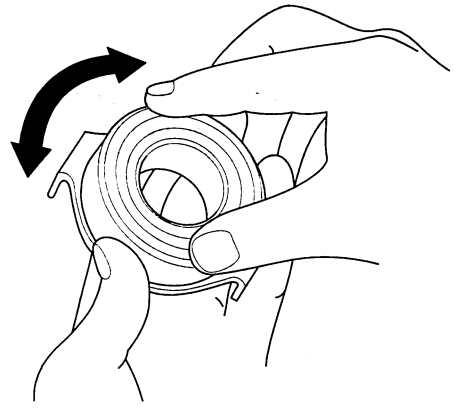

(cont'd)

Protected by AR

Clutch Replacement (cont'd)

4. Apply super high temp urea grease (P/N 08798-9002) to the release fork (A), the release fork bolt (B), the release bearing (C), and the release fork set spring (D) in the shaded areas.

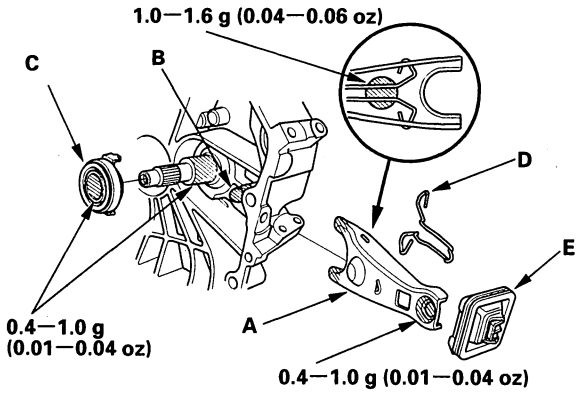

5. With the release fork slid between the release bearing pawls, install the release bearing on the mainshaft while inserting the release fork through the hole in the clutch housing.

6. Align the detent of the release fork with the release fork bolt, then press the release fork over the release fork bolt squarely.

7. Install the release fork boot (E). Make sure the boot seals around the release fork and the clutch housing.

8. Move the release fork (A) right and left to make sure it fits properly against the release bearing (B) and the release bearing slides smoothly. Wipe off the excess grease.

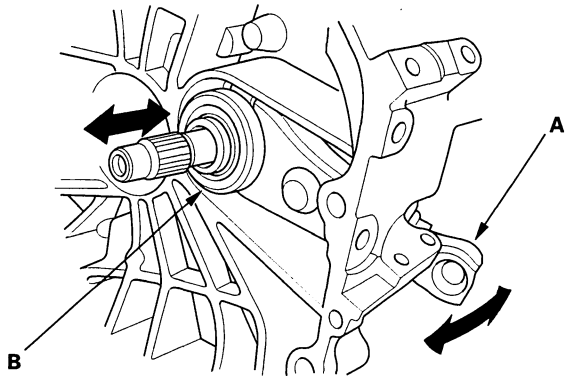

BACK

Protected by AR

Manual Transmission

Special Tools 13-2

Reverse Lockout System

General Troubleshooting Information 13-3
Component Location Index 13-4
System Description 13-5
Circuit Diagram 13-6
Circuit Troubleshooting 13-6
Reverse Lockout Solenoid Test 13-8
Reverse Lockout Solenoid Assembly Disassembly/Reassembly 13-8

Manual Transmission

Transmission Fluid Inspection and Replacement 13-10
Back-Up Light Switch Test 13-11
Transmission Removal 13-11
Transmission Installation 13-19
Transmission Disassembly 13-28
Reverse Shift Lever Clearance Inspection 13-34
Select Arm Clearance Inspection 13-35
Shift Arm Clearance Inspection 13-36
Oil Pump Clearance Inspection 13-36
Shift Fork Clearance Inspection 13-37
Shift Fork Disassembly/Reassembly 13-39
Mainshaft Assembly Clearance Inspection 13-40
Mainshaft Disassembly 13-43
Mainshaft Inspection 13-44
Mainshaft Reassembly 13-45
Countershaft Assembly Clearance Inspection 13-49
Countershaft Disassembly 13-50
Countershaft Inspection 13-51
Countershaft Reassembly 13-52
Reverse Idler Gear Shaft Assembly Disassembly/Reassembly 13-58
Synchro Sleeve and Hub Inspection and Reassembly 13-59
Synchro Ring and Gear Inspection 13-59
Mainshaft Oil Seal Replacement 13-61
Countershaft Bearing Replacement 13-61
Mainshaft Thrust Clearance Adjustment 13-62
Transmission Reassembly 13-65
Gearshift Mechanism Replacement 13-72

M/T Differential

Component Location Index 13-73
Backlash Inspection 13-74
Carrier Bearing Replacement 13-74
Oil Seal Replacement 13-75
Bearing Outer Race Replacement 13-76
Carrier Bearing Preload Adjustment 13-77

NOTE: Refer to the 2003-2006 Accord Service Manual, P/N 61SDA08 for items not shown in this section.

BACK

Outline of Model Change

The 6-speed manual transmission has been added.

Protected by AR

Special Tools

Ref. No.	Tool Number	Description	Qty
*①	07GAJ-PG20110	Mainshaft Holder	1
*②	07GAJ-PG20130	Mainshaft Base	1
③	07NAD-PX40100	Attachment, 78 x 80 mm	1
④	07NAD-P20A100	Oil Seal Driver Attachment	1
⑤	07PAF-0030100	Installer, 46 mm I.D.	1
⑥	07SAZ-001000A	Backprobe Set	2
⑦	07XAJ-S0KA100	Preload Inspection Tool	1
**⑧	07YAC-0010100	Adjustable Bearing Puller, 45—75 mm	1
⑨	070AD-PYZA100	Driver, 56 x 62 mm	1
⑩	07746-0010300	Attachment, 42 x 47 mm	1
⑪	07746-0010600	Attachment, 72 x 75 mm	1
⑫	07746-0030100	Driver, 40 mm I.D.	1
⑬	07749-0010000	Driver	1
⑭	07946-MB00000	Driver, 30 mm I.D.	1

* Part of Mainshaft Inspection Tool Set, 07GAJ-PG20102.
* * Must be used with commercially available 3/8"—16 Slide Hammer.

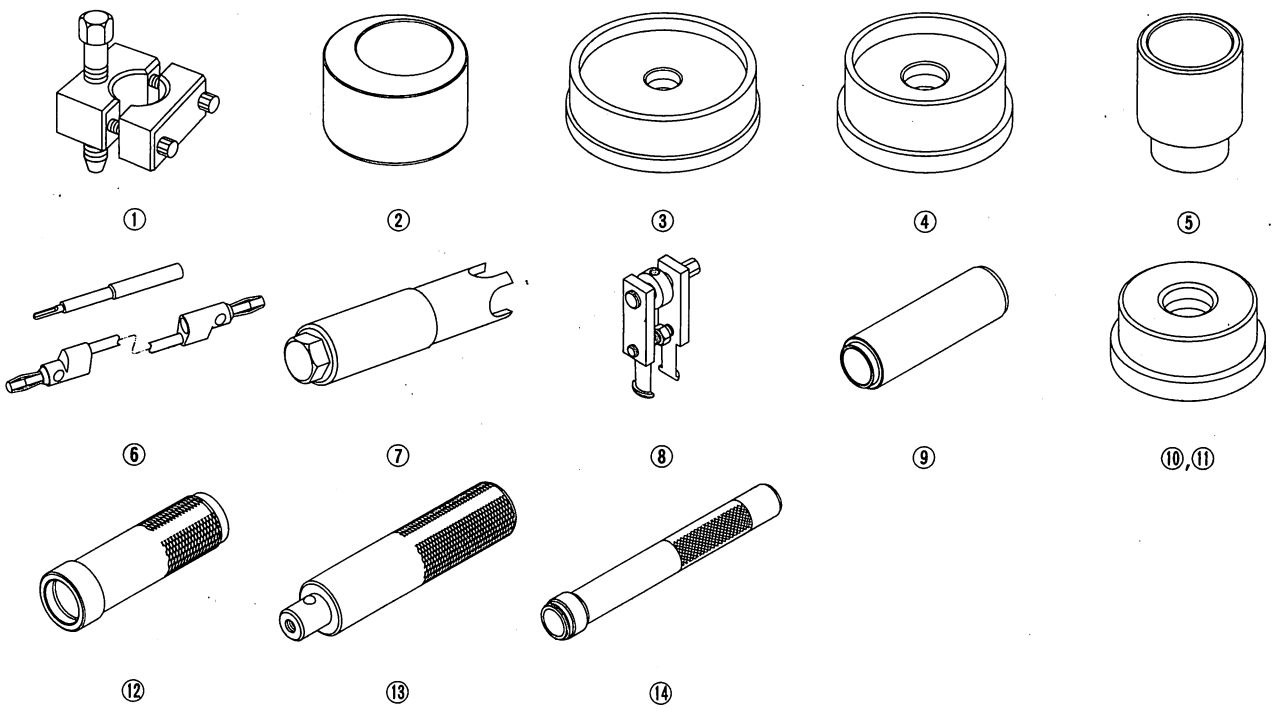

BACK

Protected by AR

General Troubleshooting Information

How to Troubleshoot Circuits at the ECM

Special Tools Required
Backprobe set 07SAZ-001000A (2 required)

1. Connect the backprobe adapters (A) to the stacking patch cords (B), and connect the cords to a digital multimeter (C).

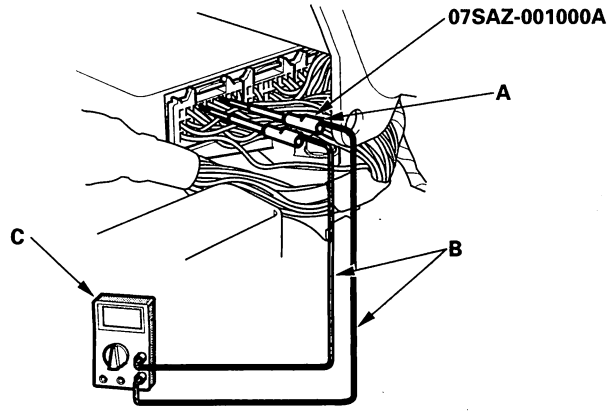

2. Using the wire insulation as a guide for the contoured tip of the backprobe adapter, gently slide the tip into the connector from the wire side until it touches the end of the wire terminal.

Protected by AR

Reverse Lockout System

Component Location Index

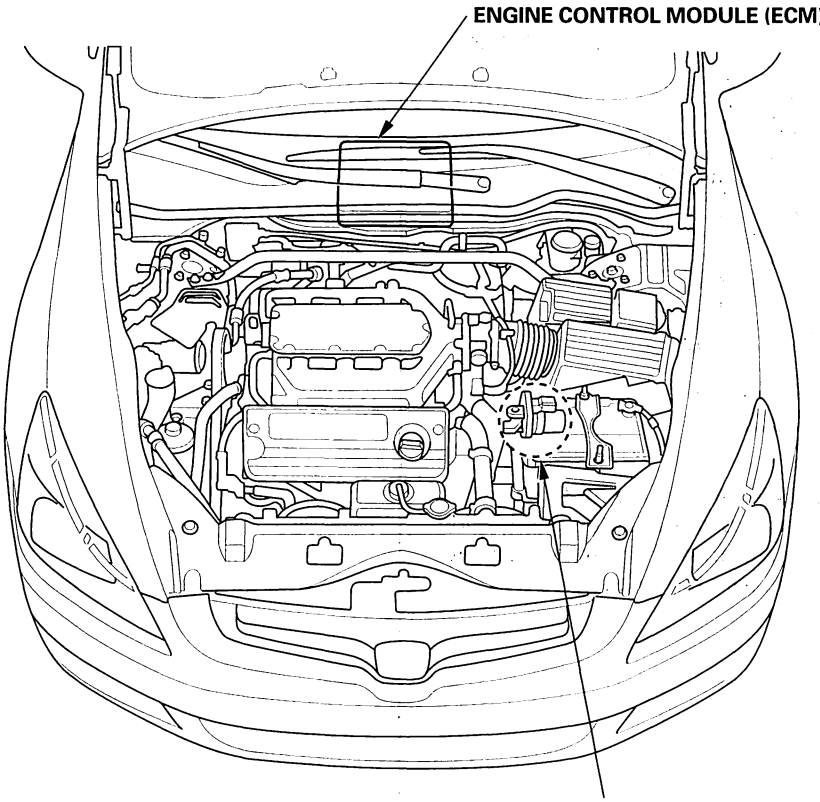

BACK

Protected by AR

System Description

At a vehicle speed of 12 mph (20 km/h) or more, a signal from the ECM activates the reverse lockout solenoid, which pushes the select lock cam and select lock pin into the locked position. As a result, the interlock cannot rotate to the reverse select position, making it impossible to engage reverse gear. At a vehicle speed of 9 mph (15 km/h) or less, the signal from the ECM is interrupted which turns off the reverse lockout solenoid. The return spring pulls back the select lock pin enabling the interlock to move freely so reverse gear can be selected.

Vehicle speed	Inhibitor	Reverse selection
Above 12 mph (20 km/h)	ON	Not allowed
Below 9 mph (15 km/h)	OFF	OK
IG-S/W OFF	OFF	OK

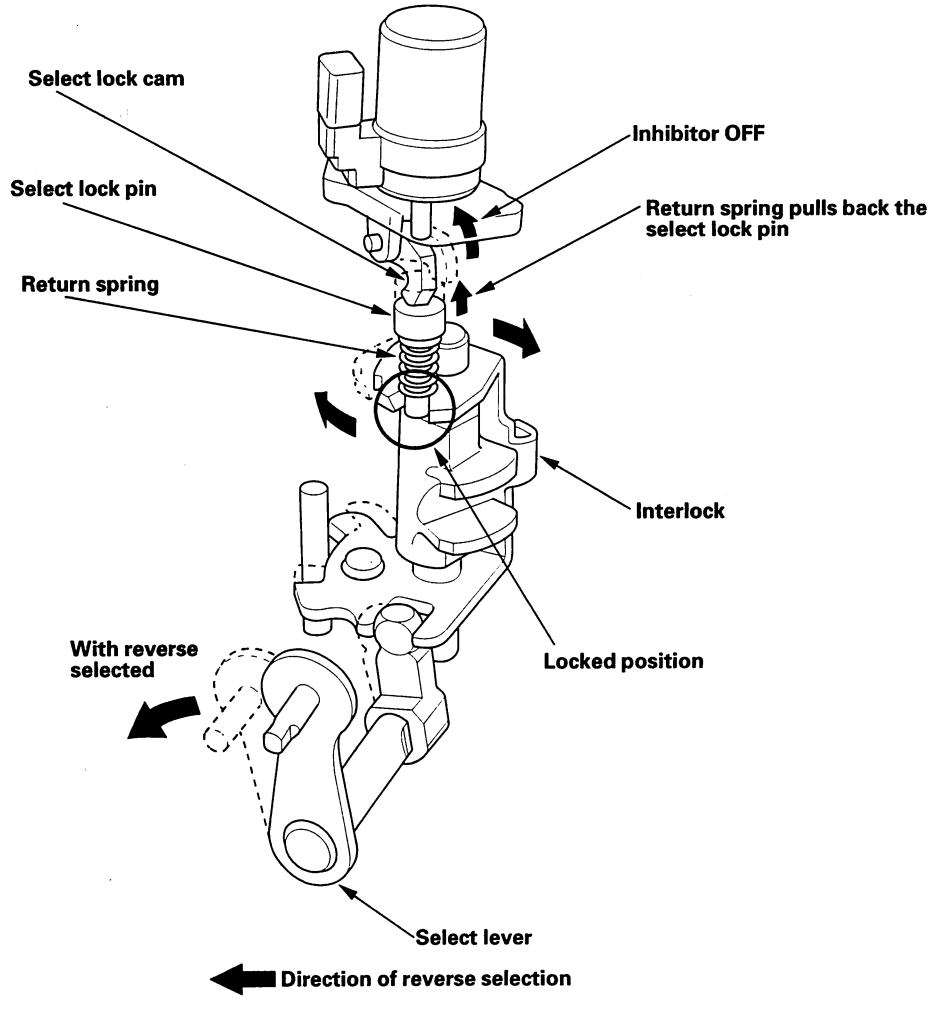

Protected by AR

Reverse Lockout System

Circuit Diagram

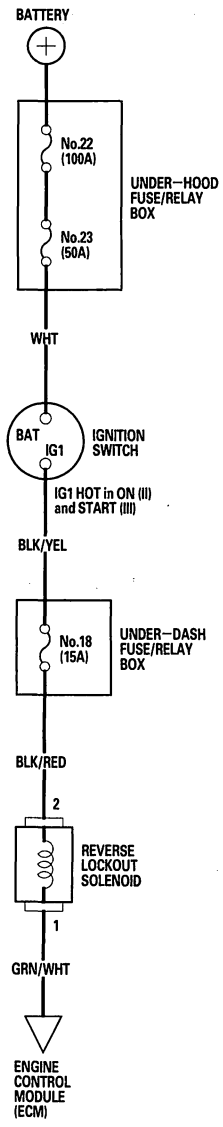

Circuit Troubleshooting

1. Check the No. 18 (15 A) fuse in the under-dash fuse/relay box.

   Is the fuse OK?

   YES—Go to step 2.

   NO—Replace the fuse, and recheck. ■

2. Start the engine, and check the Malfunction Indicator Lamp (MIL).

   Does the MIL come on?

   YES—Troubleshoot the DTC (see page 11-3), and recheck. ■

   NO—Go to step 3.

3. Turn the ignition switch OFF.

4. Shift into reverse gear.

   Can the transmission be shifted into reverse gear?

   YES—Go to step 5.

   NO—Repair the transmission, and recheck. ■

5. Turn the ignition switch ON (II). With the vehicle moving slowly (vehicle speed below 9 mph (15 km/h)), shift the transmission into reverse gear.

   Can the transmission be shifted into reverse gear?

   YES—Go to step 6.

   NO—Go to step 7.

6. Raise the front wheels, and block the rear wheels. Run the engine so the speedometer reads above 12 mph (20 km/h).

   Can the transmission be shifted into reverse gear?

   YES—Go to step 7.

   NO—Intermittent failure, system is OK at this time. ■

BACK

Protected by AR

7. Turn the ignition switch OFF.

8. Disconnect the reverse lockout solenoid 2P connector.

9. Turn the ignition switch ON (II).

10. Measure the voltage between the reverse lockout solenoid 2P connector terminal No. 2 and body ground.

REVERSE LOCKOUT SOLENOID 2P CONNECTOR

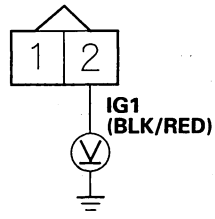

Wire side of female terminals

Is there battery voltage?

YES—Go to step 11.

NO—Check for loose or poor connections at the connector. If the connections are OK, repair open in the wire between the No. 18 (15 A) fuse in the under-dash fuse/relay box and the reverse lockout solenoid. ■

11. Turn the ignition switch OFF.

12. Remove the reverse lockout solenoid (see page 13-8).

13. Connect the No. 2 terminal of the reverse lockout solenoid to the battery positive terminal, and connect the No. 1 terminal to the battery negative terminal. Check that the reverse lockout solenoid operates.

REVERSE LOCKOUT SOLENOID 2P CONNECTOR

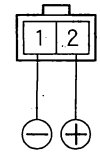

Terminal side of male terminals

Does the reverse lockout solenoid operate properly?

YES—Go to step 14.

NO—Replace the reverse lockout solenoid. ■

14. Reinstall the reverse lockout solenoid, and reconnect the solenoid 2P connector.

15. Turn the ignition switch ON (II).

16. Measure the voltage between ECM connector A22 and body ground.

ECM CONNECTOR A

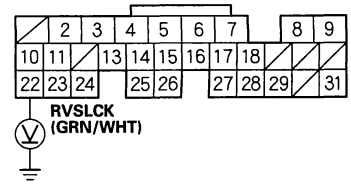

Wire side of female terminals

Is there battery voltage?

YES—Check for loose connectors at ECM connector A (31P). If necessary, update the ECM if it does not have the latest software, or substitute a known-good ECM, then recheck (see page 11-6). If the symptom/indication goes away with a known-good ECM, replace the original ECM. ■

NO—Repair open in the wire between the reverse lockout solenoid and the ECM (A22). ■

BACK

Protected by AR

Reverse Lockout System

Reverse Lockout Solenoid Test

1. Remove the reverse lockout solenoid (see page 13-8).
2. Connect the battery positive terminal to the No. 2 terminal of the reverse lockout solenoid 2P connector, and connect the battery negative terminal to the No. 1 terminal.

REVERSE LOCKOUT SOLENOID 2P CONNECTOR

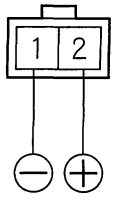

Terminal side of male terminals

3. Check that the reverse lockout solenoid works.
4. If the reverse lockout solenoid does not work, replace it.

Reverse Lockout Solenoid Disassembly/Reassembly

1. Make sure you have the anti-theft codes for the radio and the navigation system, then write down the customer's radio station and XM radio channel presets.
2. Disconnect the negative cable from the battery first, then disconnect the positive cable. Remove the battery.
3. Remove the air cleaner housing (see page 11-344).
4. Remove the battery base (see step 6 on page 13-12).
5. Carefully remove the shift cable, select cable, and cable bracket together to avoid bending the cables (see step 13 on page 13-13).
6. Disconnect the reverse lockout solenoid connector.
7. Remove the bolts (A), transmission harness stay (B), and reverse lockout solenoid assembly (C).

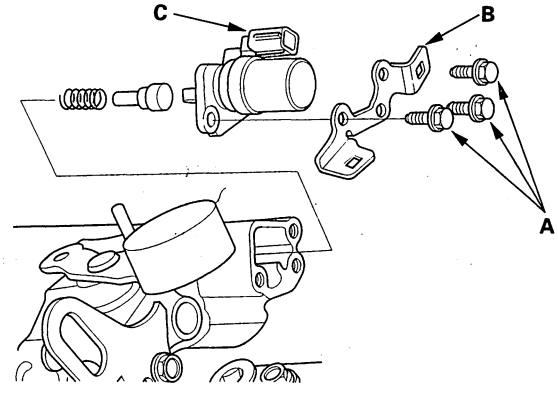

BACK

Protected by AR

8. Remove the roller (A) and select lock cam (B).

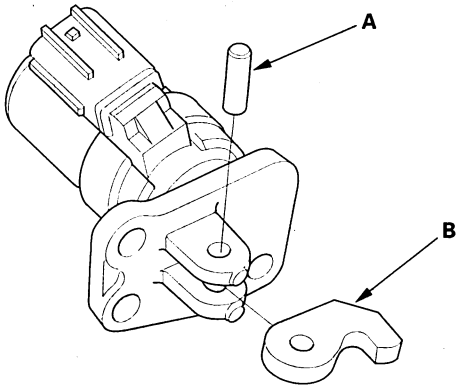

9. Install in the reverse order of removal.

10. Remove the dirt and oil from the sealing surface. Apply liquid gasket (P/N 08718-0002) to the sealing surface.

    NOTE: Do not install components if 4 minutes or more have passed after applying the liquid gasket. Instead, remove the old residue and reapply the liquid gasket.

11. Install the reverse lockout solenoid assembly (A) and transmission harness stay (B).

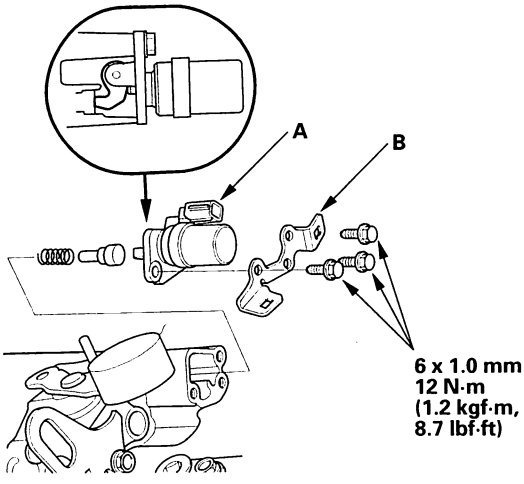

12. Connect the reverse lockout solenoid connector.

13. Install the cable bracket, select cable, and shift cable (see step 37 on page 13-25).

14. Install the battery base (see step 45 on page 13-26).

15. Install the air cleaner housing (see page 11-344).

16. Install the battery. Connect the positive cable to the battery first, then connect the negative cable.

17. Enter the anti-theft codes for the radio and navigation system, then enter the customer's radio station and XM radio channel presets.

18. Do the power window control unit reset procedure, refer to the 2003-2006 Accord Service Manual (see page 22-232).

Protected by AR

Transmission Fluid Inspection and Replacement

1. Park the vehicle on level ground, and turn the ignition switch OFF.
2. Remove the splash shield (see step 28 on page 13-15).
3. Remove the oil check bolt (A) and washer (B). Check the condition of the fluid. If the fluid is dirty, remove the drain plug (C) and washer (D).

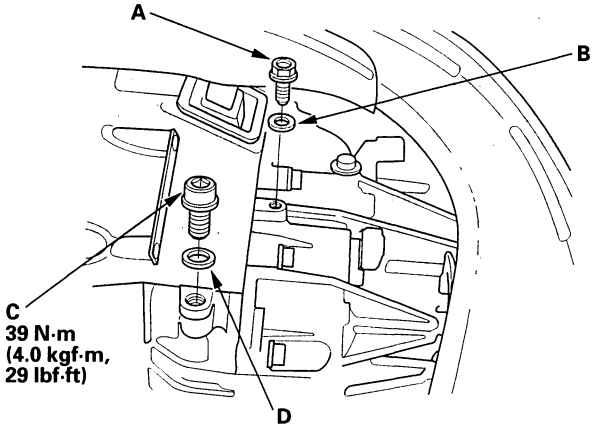

4. Install the drain plug with a new washer.
5. Remove the oil filler plug (A) and washer (B).

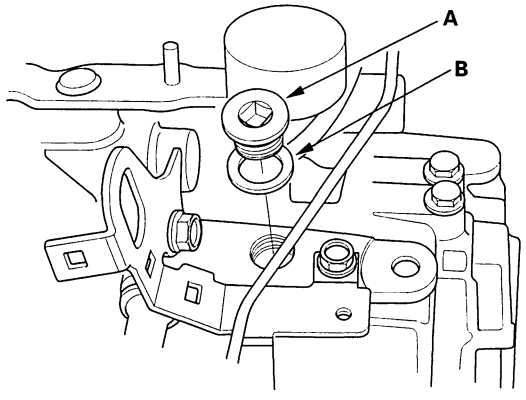

6. Refill the transmission fluid from the oil filler plug hole, and until the transmission fluid overflows from the oil check bolt hole (A).
7. After the fluid stops overflowing, install the oil check bolt (B) with a new washer (C).

Fluid Capacity
2.2 L (2.3 US qt) at fluid change
2.5 L (2.6 US qt) at overhaul

Always use Honda Manual Transmission Fluid (MTF). Using engine oil can cause stiffer shifting because it does not contain the proper additives.

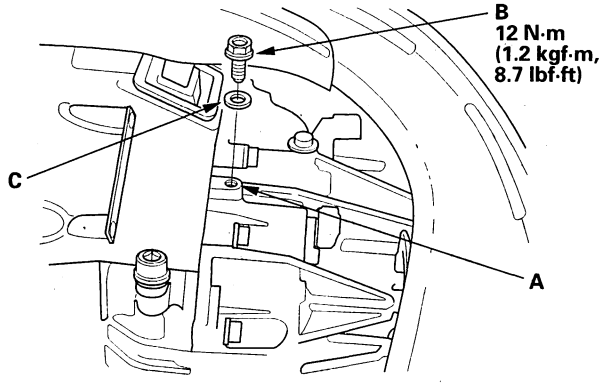

8. Install the oil filler plug (A) with a new washer (B).

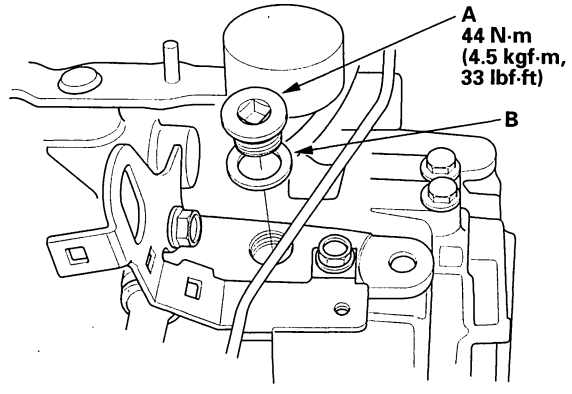

BACK

Protected by AR

Back-up Light Switch Test

1. Disconnect the back-up light switch connector (A).

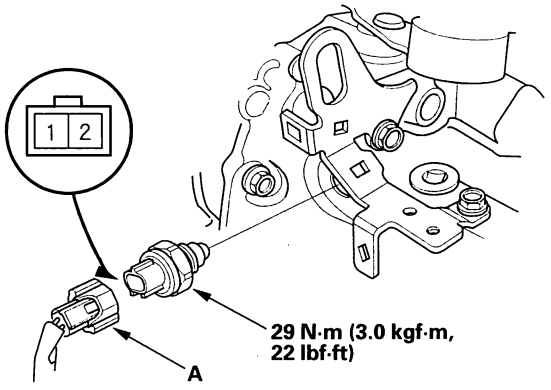

2. Check for continuity between the No. 1 and No. 2 terminals of the back-up light switch. There should be continuity when the shift lever is in Reverse.

3. If necessary, replace the back-up light switch. Apply liquid gasket (P/N 08718-0001), and install it on the transmission housing. Tighten the back-up light switch to the specified torque.

Transmission Removal

Special Tools Required
- Engine support hanger, A and Reds AAR-T-12566 (Available through the Honda Tool and Equipment Program 888-424-6857)
- Engine hanger balance bar VSB02C000019
- Front subframe adapter VSB02C000016

NOTE: Use fender covers to avoid damaging painted surfaces.

1. Make sure you have the anti-theft codes for the radio and the navigation system, then write down the customer's radio station and XM radio channel presets.

2. Set the wheels in the straight ahead position.

3. Lock the steering wheel.

4. Disconnect the negative cable from the battery first, then disconnect the positive cable. Remove the battery.

5. Remove the bolts securing the support strut brackets on both sides of the hood. Secure the hood (A) in a vertical position, then install the right strut bracket (B) by turning it over with its bolt in the lower position.

   NOTE: Do not attempt to close the hood with the support strut in the vertical position; it will damage the support strut and hood.

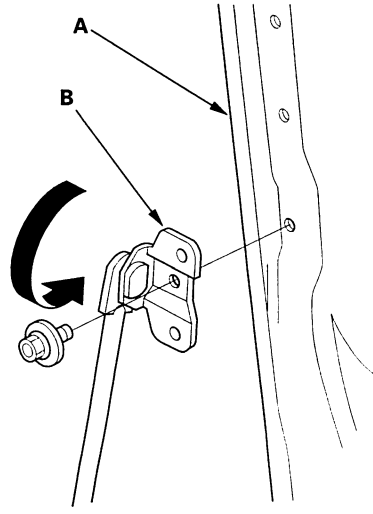

(cont'd)

Protected by AR

Transmission Removal (cont'd)

6. Remove the battery base.

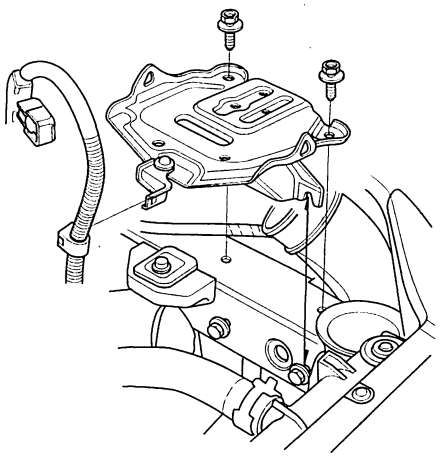

7. Remove the air cleaner housing (see page 11-344).

8. Disconnect the back-up light switch connector (A) and reverse lockout solenoid connector (B).

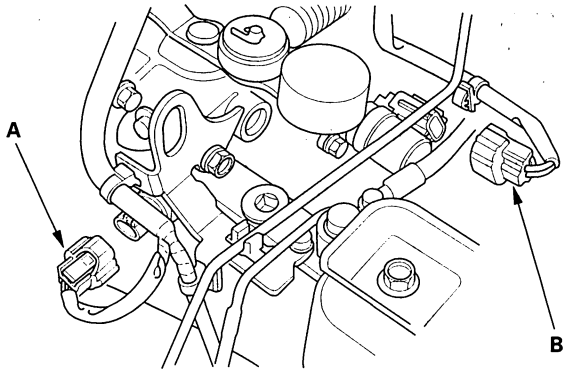

9. Disconnect the output shaft (countershaft) speed sensor connector (A) and input shaft (mainshaft) speed sensor connector (B).

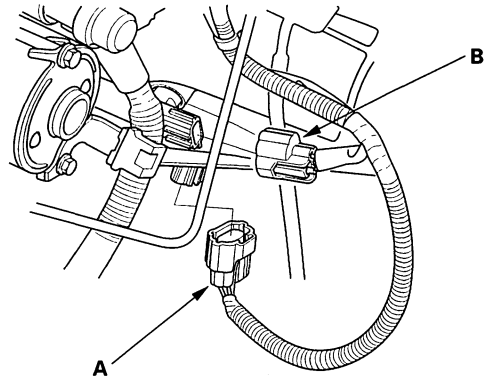

10. Remove the harness clips.

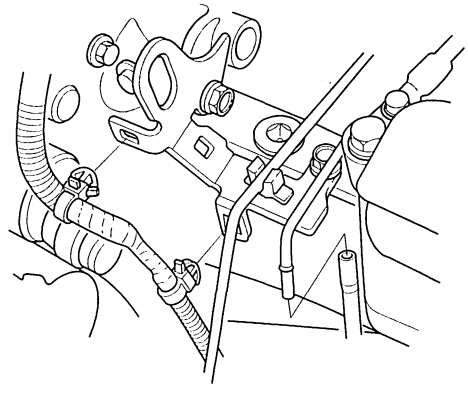

BACK

Protected by AR

11. Disconnect the starter cable (A), then remove the starter motor (B).

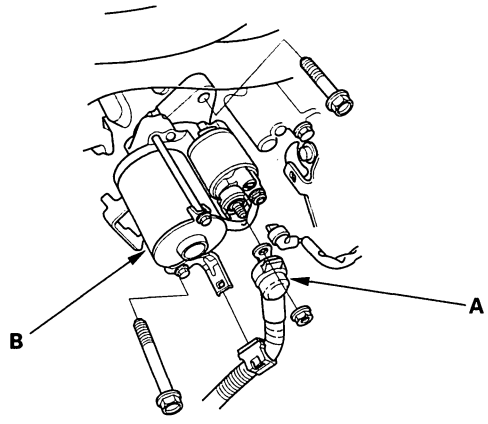

12. Remove the harness bracket.

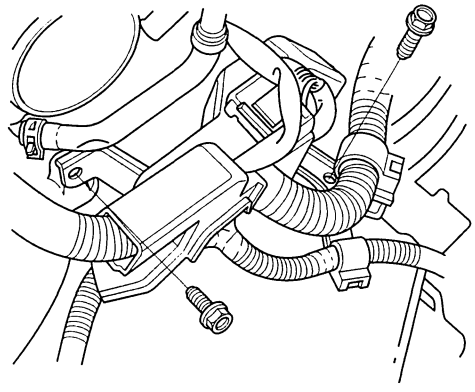

13. Remove the cable bracket (A), then disconnect the cables (B) from the top of the transmission housing. Carefully remove both cables and the bracket together to avoid bending the cables.

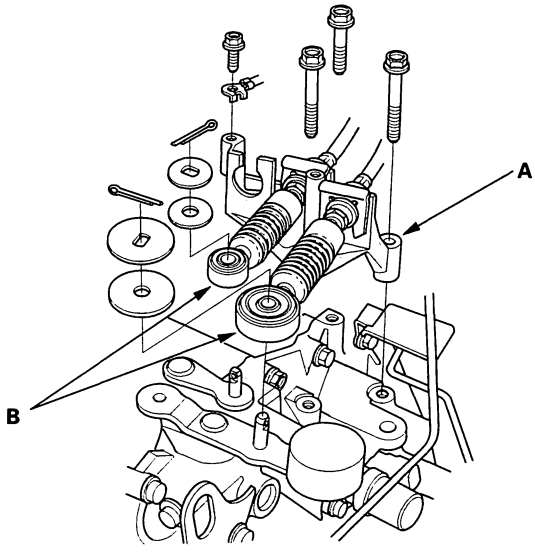

14. Carefully remove the slave cylinder without bending the clutch line. Do not press the clutch pedal once the slave cylinder has been removed.

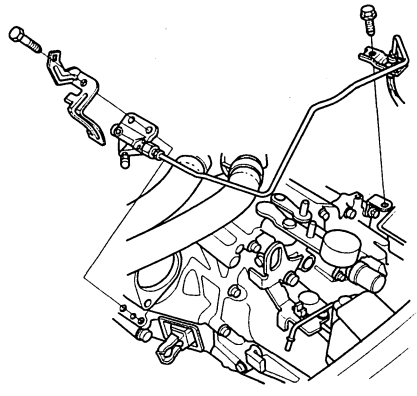

(cont'd)

Protected by AR

Transmission Removal (cont'd)

15. Remove the front mount stop (A), then remove the front mount bolt (B).

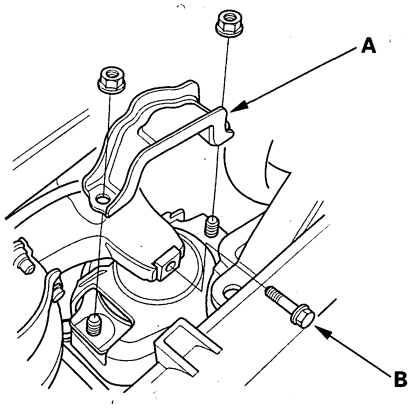

16. Remove the rear mount stop.

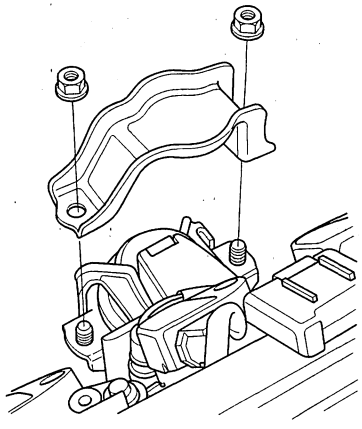

17. Remove the transmission upper mounting bolts.

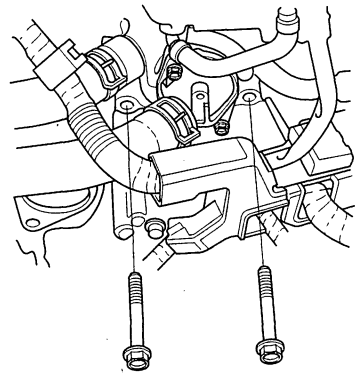

18. Remove and plug the return hose (A) from the power steering fluid reservoir (B). Wipe off any spilled fluid at once.

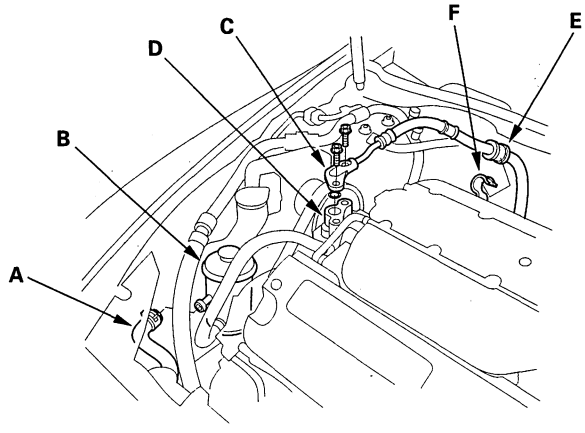

19. Remove the power steering pump outlet line (C) from the power steering pump (D), and remove the hose (E) from its clamp (F).

BACK

Protected by AR

20. Remove the front bulkhead cover, refer to the 2003-2006 Accord Service Manual:

    - 2-door (see page 20-184)
    - 4-door (see page 20-185)

21. Lift and support the engine with the engine support hanger (A) and the engine balance bar (B). Attach the front arm (C) to the front cylinder head with a spacer (D) and the 10 x 1.25 mm bolt (E). Attach the rear arm (F) to the rear cylinder head with the 8 x 1.25 mm bolt (G).

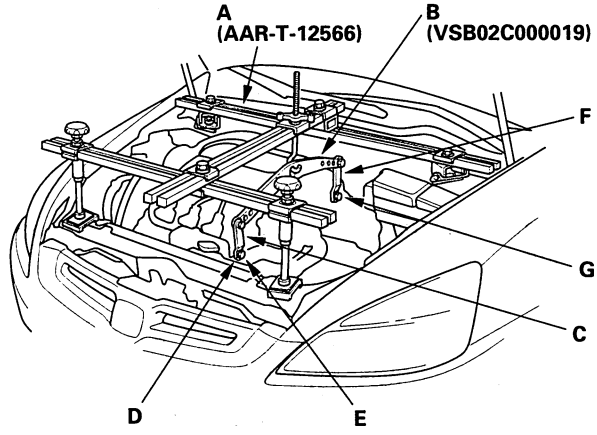

22. Remove the transmission mount bracket (A) and ground cable (B).

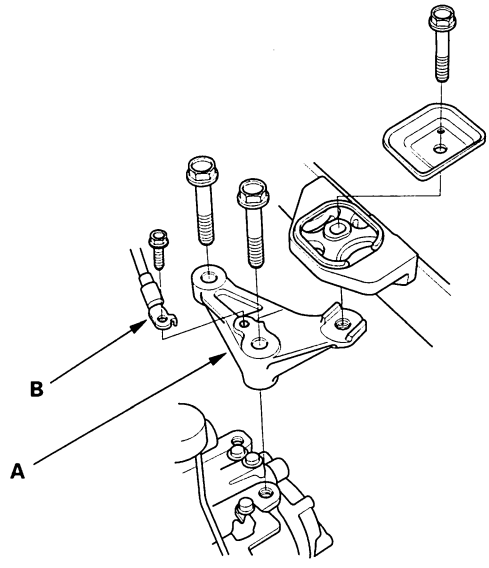

23. Remove the steering joint cover (A).

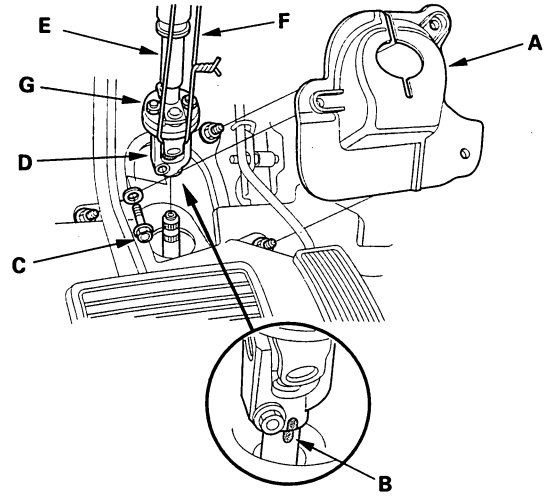

24. Make a reference mark (B) across the steering joint and steering gearbox pinion shaft. Remove the steering joint bolt (C), and disconnect the steering joint (D) by removing the steering joint toward the steering column. Hold the slider shaft (E) on the column with a piece of wire (F) between the joint yoke (G) on the slider shaft and the joint yoke on the upper shaft, refer to the 2003-2006 Accord Service Manual (see page 17-25).

25. Raise the vehicle, and make sure it is securely supported.

26. Remove the front wheels.

27. Drain the transmission fluid. Install the drain bolt with a new washer (see page 13-10).

28. Remove the splash shield.

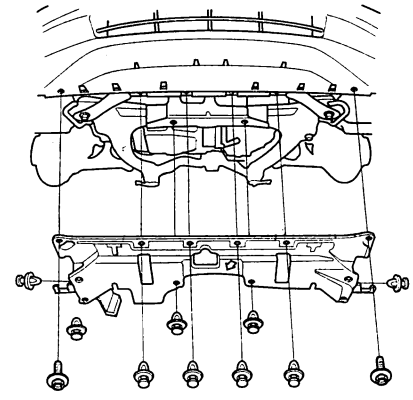

(cont'd)

Protected by AR

Transmission Removal (cont'd)

29. Separate the tie-rod ball joint, refer to the 2003-2006 Accord Service Manual (see step 8 on page 17-31).

30. Remove the damper fork (see step 6 on page 16-4).

31. Separate the knuckle from the lower arm (see step 7 on page 16-4).

32. Disconnect the power steering pressure switch connector.

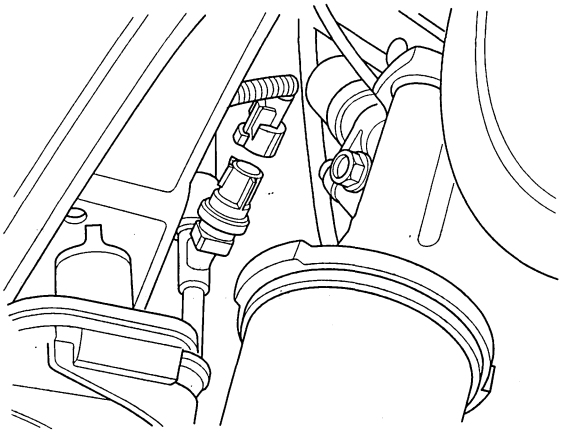

33. Remove exhaust pipe A.

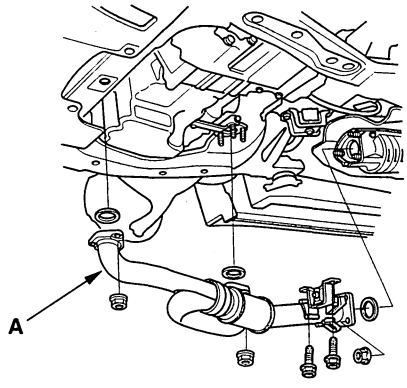

34. Remove the left and right driveshaft inboard joints (see page 16-4).

35. Remove the intermediate shaft (see page 16-22).

36. Remove the engine lower rear mount mounting bolts.

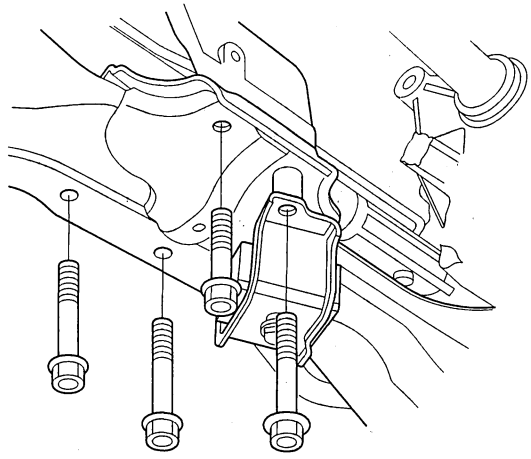

37. Remove the transmission lower mount mounting nuts.

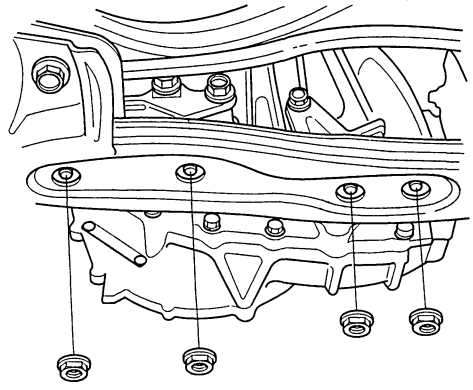

BACK

Protected by AR

38. Remove the subframe mid mounts from both sides.

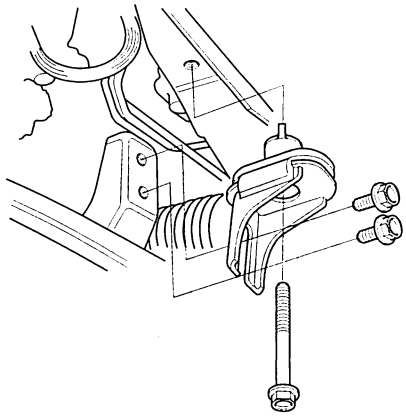

39. Make the appropriate reference lines (A) at both ends of the subframe (B) that line up with the edge (C) of the stiffeners (D).

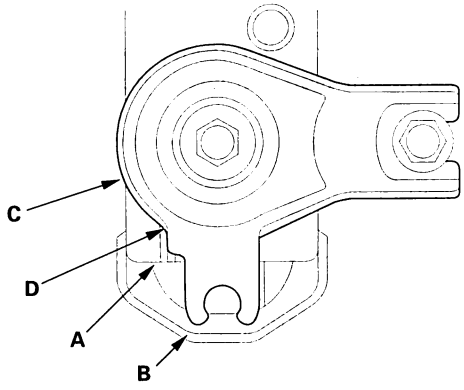

40. Attach the special tool to the subframe by wrapping the band over the subframe and attaching the end of the band to the tool with a pin (A).

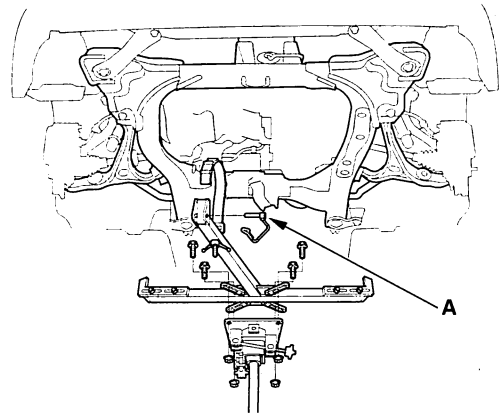

41. Raise the jack, and line up the slots in the arms with the bolt holes on the corner of the jack base, then attach them securely.

42. Remove the front suspension subframe stays (A) and the front suspension subframe (B).

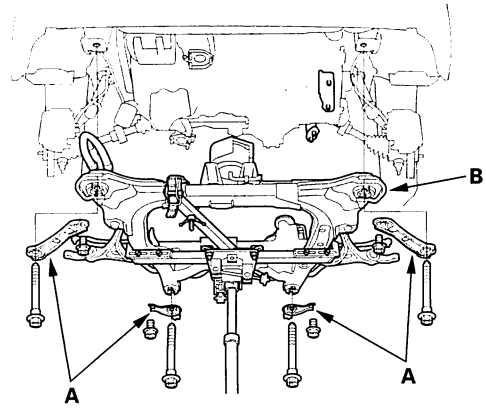

(cont'd)

Protected by AR

Transmission Removal (cont'd)

43. Remove the front engine mount upper bracket.

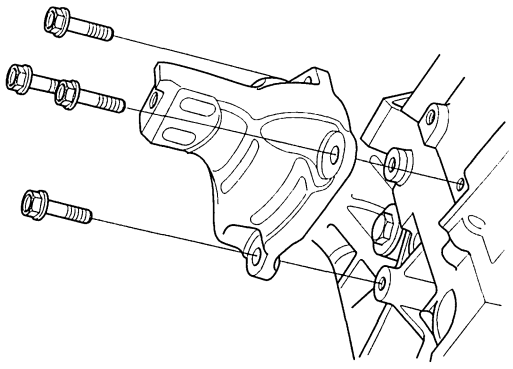

44. Remove the clutch cover.

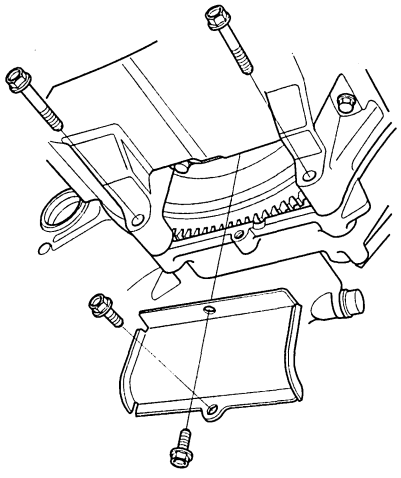

45. Place the transmission jack under the transmission, and remove the transmission lower mounting bolts.

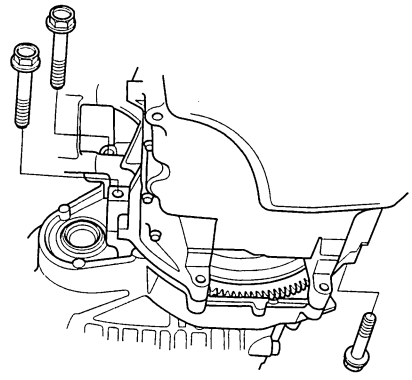

46. Pull the transmission away from the engine until the transmission mainshaft clears the clutch pressure plate, then lower the transmission on the transmission jack.

47. Remove the transmission front lower mount (A) and the transmission rear lower mount (B).

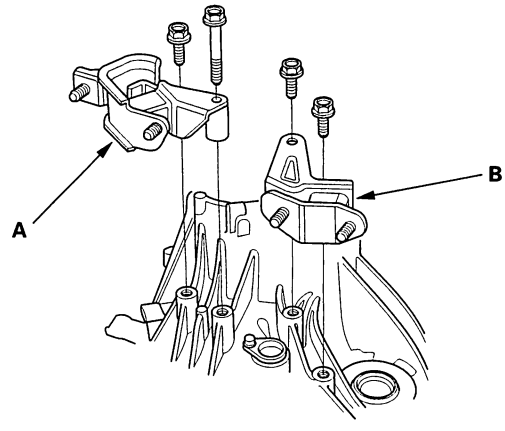

BACK

Protected by AR

48. Remove the boot (A), release fork (B), and release bearing (C) from the transmission.

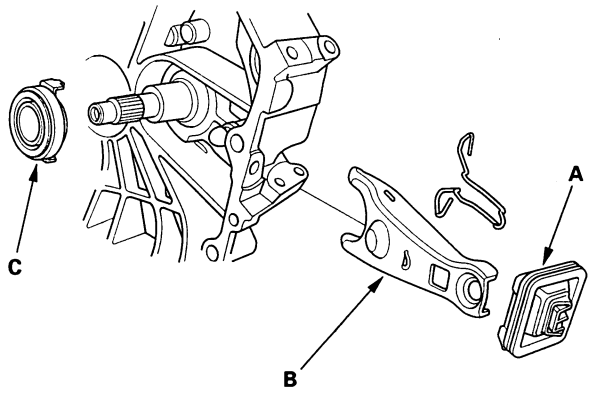

Transmission Installation

Special Tools Required
- Engine support hanger, A and Reds AAR-T-12566 (Available through the Honda Tool and Equipment Program 888-424-6857)
- Engine hanger balance bar VSB02C000019
- Front subframe adapter VSB02C000016

1. Make sure the two dowel pins are installed in the clutch housing.

2. Apply super high temp urea grease (P/N 08798-9002) to the release fork (A), the release bearing (B) and the mainshaft splines. Install the release fork, the release bearing, and the boot (C).

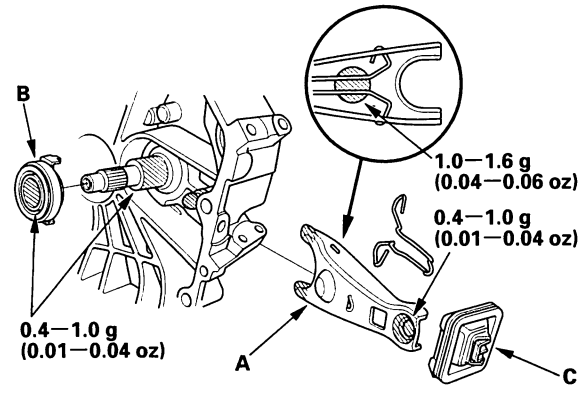

3. Install the transmission front lower mount (A) and the transmission rear lower mount (B).

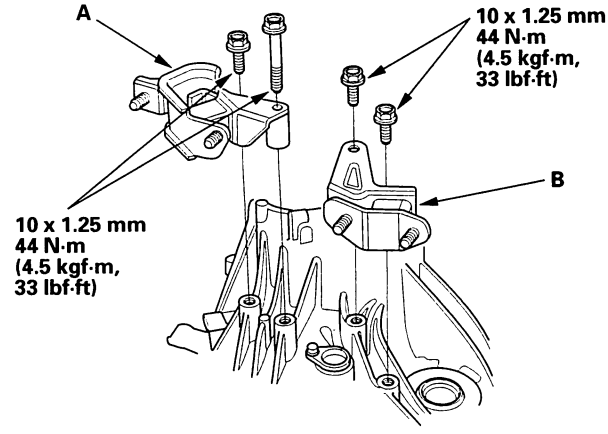

4. Place the transmission on the transmission jack, and raise it to engine level.

(cont'd)

Protected by AR

Transmission Installation (cont'd)

5. Install the transmission lower mounting bolts.

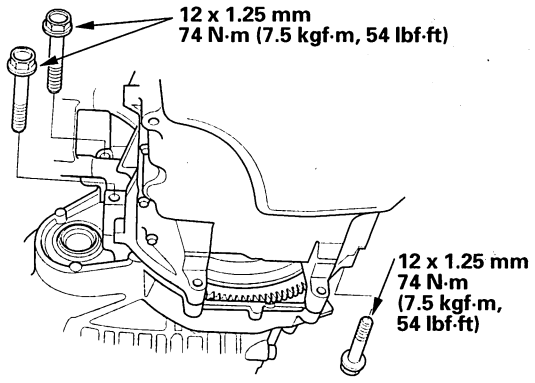

6. Install the clutch cover.

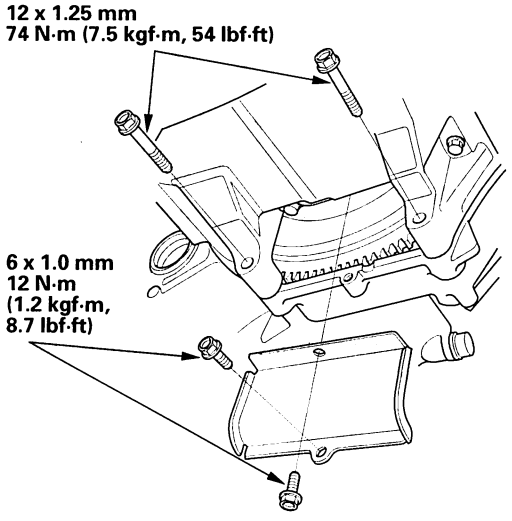

7. Install the front engine mount upper bracket.

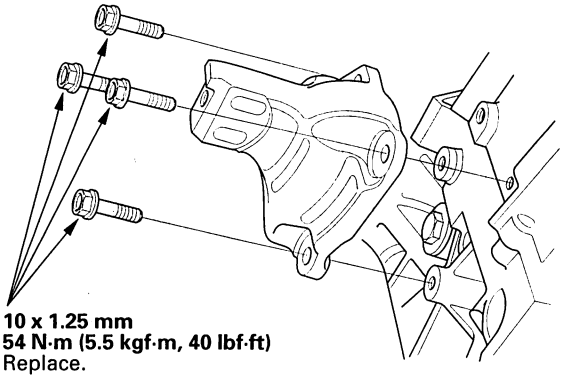

8. Support the subframe with the subframe adapter and a jack.

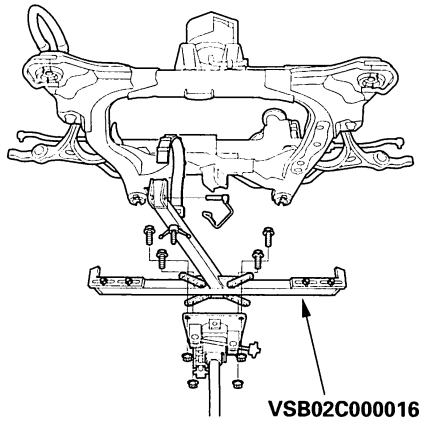

BACK

Protected by AR

9. Install the front suspension subframe (A) and front suspension subframe stays (B).

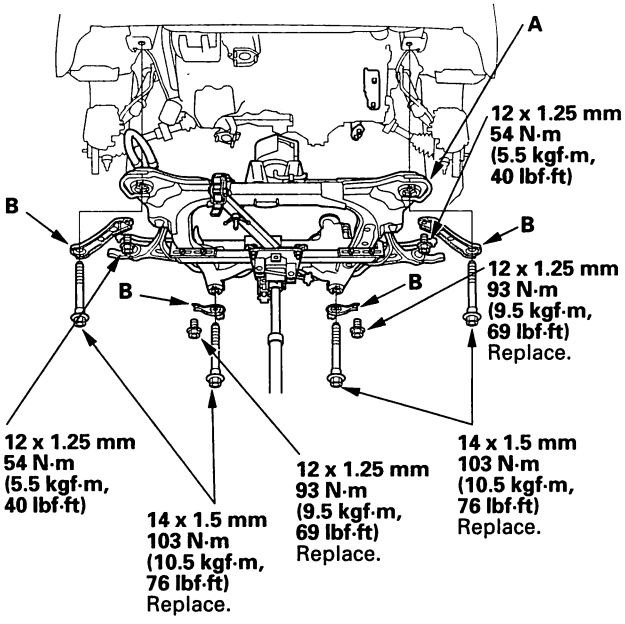

10. Align the reference marks (A) with the edge (B) of both rear stiffeners (C), then tighten the rear subframe mounting bolts, the front bolts, and the stiffener bolts to the specified torque.

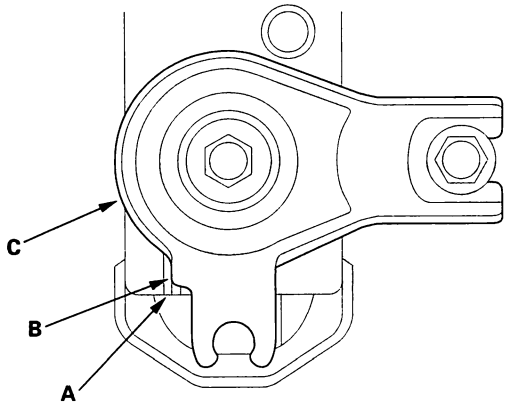

11. Install the subframe mid mounts on both sides.

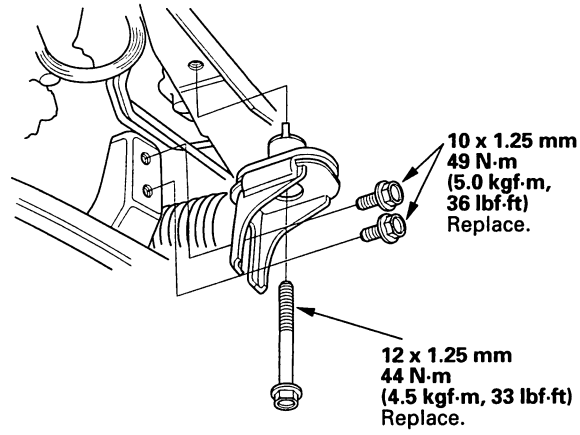

12. Install the transmission lower mount mounting nuts.

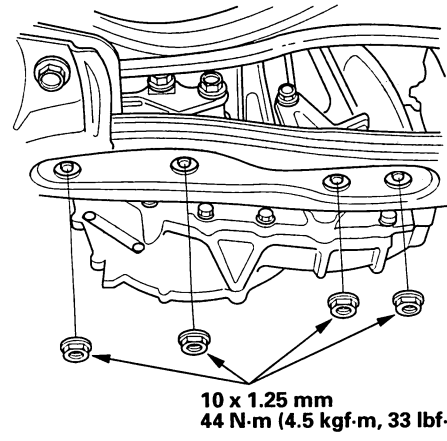

(cont'd)

Protected by AR

Transmission Installation (cont'd)

13. Install the engine lower rear mount mounting bolts.

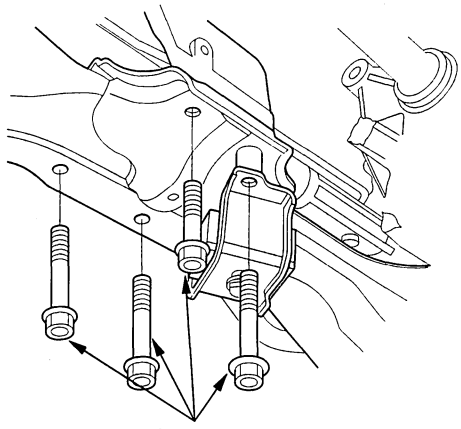

10 x 1.25 mm
49 N·m (5.0 kgf·m, 36 lbf·ft)
Replace.

14. Install the intermediate shaft (see page 16-26).

15. Install the left and right driveshaft inboard joints (see page 16-20).

16. Install the knuckle onto the lower arm (see step 5 on page 16-21).

17. Install the damper fork (see step 7 on page 16-21).

18. Install exhaust pipe A, the mount (B), and new gaskets (C).

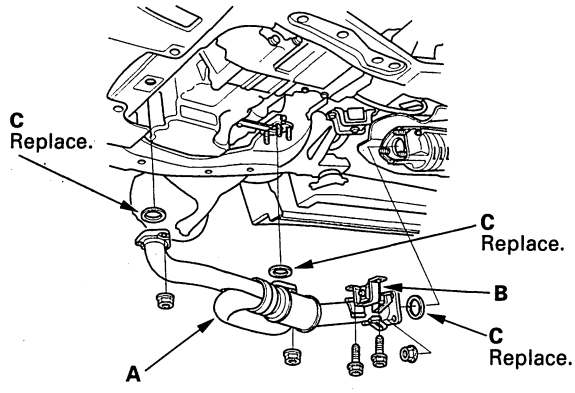

19. Connect the power steering pressure switch connector.

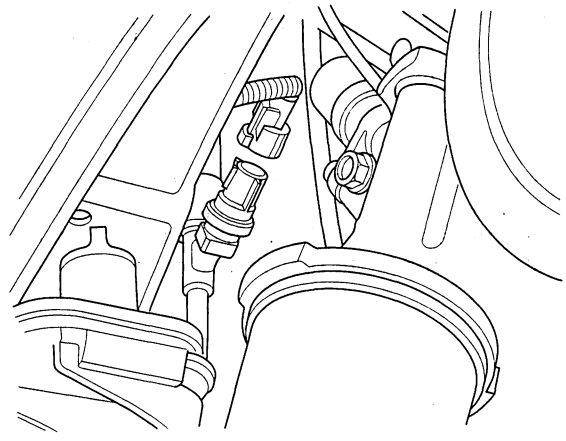

20. Connect the return line to the power steering fluid reservoir.

21. Install the tie-rod ball joint, refer to the 2003-2006 Accord Service Manual (see step 23 on page 17-54).

BACK

Protected by AR

22. Install the splash shield.

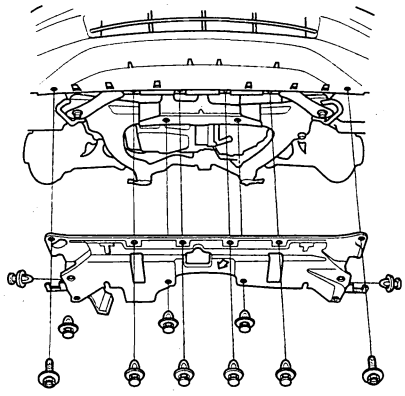

23. Refill the transmission with fluid.

24. Install the front wheels, and set them in the straight ahead position.

25. Lower the vehicle.

26. Unlock the steering wheel.

27. Connect the steering joint to the steering gearbox pinion shaft (A) by aligning the reference mark (B), and remove the wire (C) from the joint yoke (D).

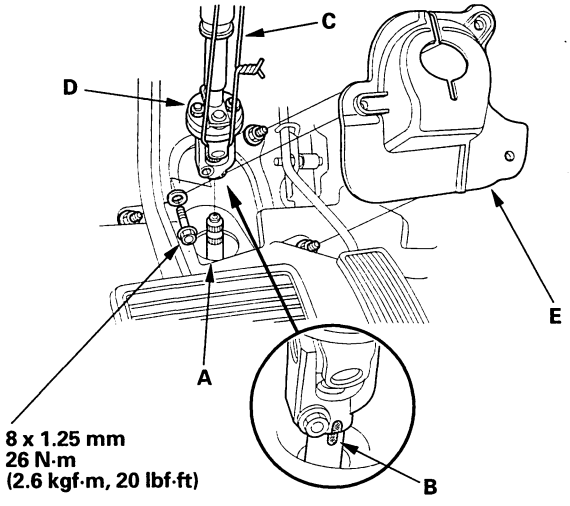

28. Install the steering joint cover (E).

29. Install the transmission mount bracket (A) and ground cable (B).

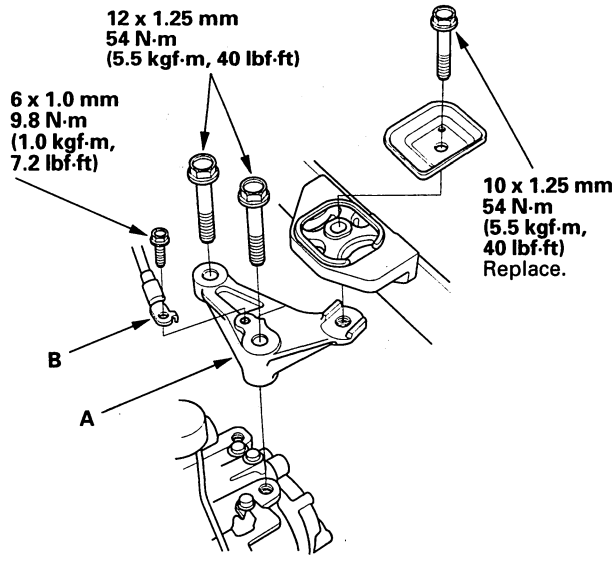

30. Remove the engine hanger and special tool from the engine.

31. Install the power steering pump outlet line (A) with a new O-ring (B) to the pump (C), and install the hose (D) in its clamp (E).

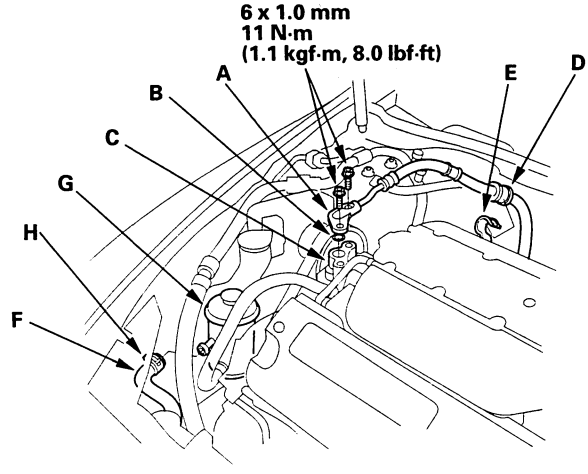

32. Connect the return the hose (F) to the power steering fluid reservoir (G), then secure the hose with its clamp (H).

(cont'd)

Protected by AR

Transmission Installation (cont'd)

33. Install the transmission upper mounting bolts.

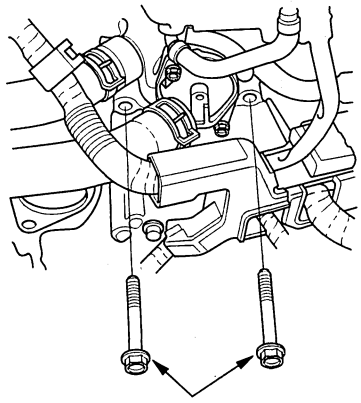

34. Install the rear mount stop.

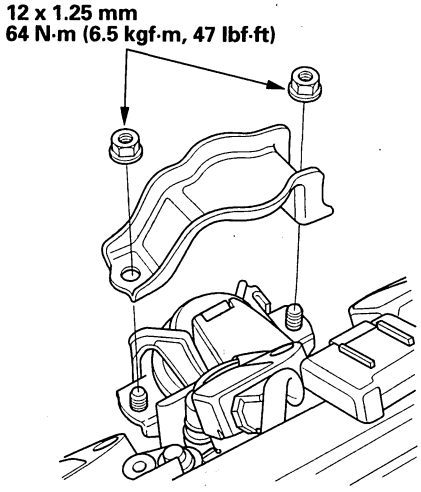

35. Install the engine front mount mounting bolt (A) and the front mount stop (B).

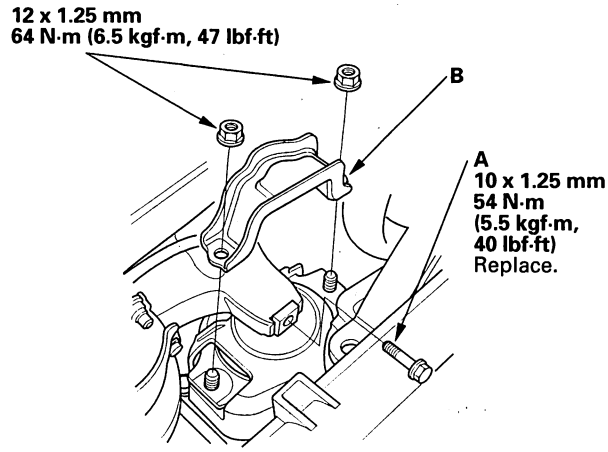

36. Apply super high temp urea grease (P/N 08798-9002) to the end of the cylinder rod. Install the slave cylinder. Be careful not to bend the clutch line.

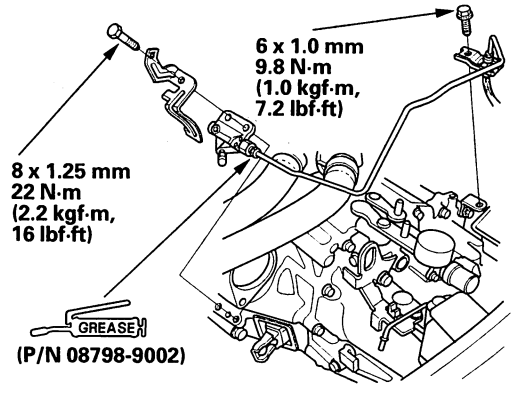

BACK

Protected by AR

37. Install the cable bracket (A) and cables (B).

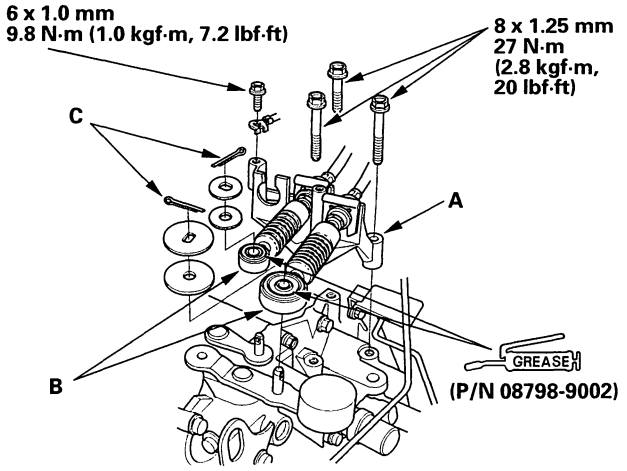

38. Apply a light coat of super high temp urea grease (P/N 08798-9002) to the cable ends, and install new cotter pins (C).

39. Install the harness bracket.

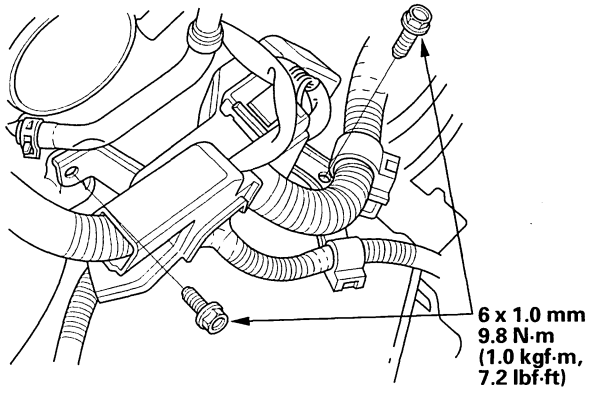

40. Install the starter motor (A), then connect the starter cable (B).

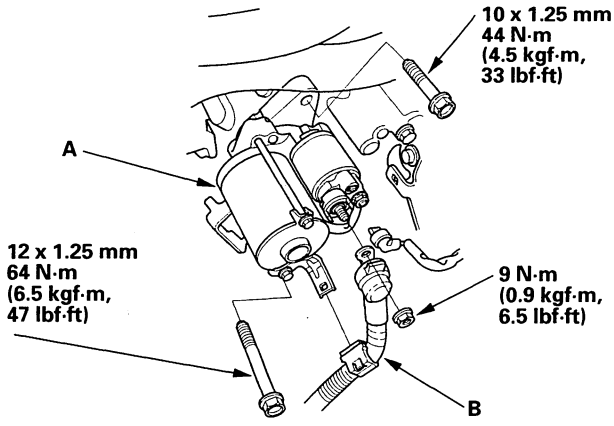

41. Install the harness clips.

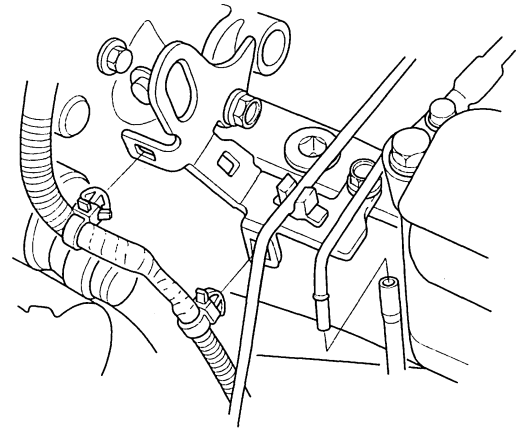

(cont'd)

Protected by AR

Transmission Installation (cont'd)

42. Connect the output shaft (countershaft) speed sensor connector (A) and input shaft (mainshaft) speed sensor connector (B).

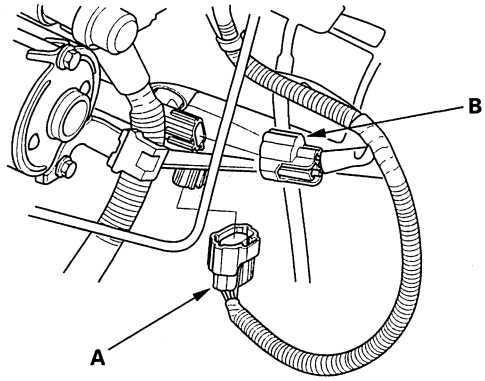

43. Connect the back-up light switch connector (A) and reverse lockout solenoid connector (B).

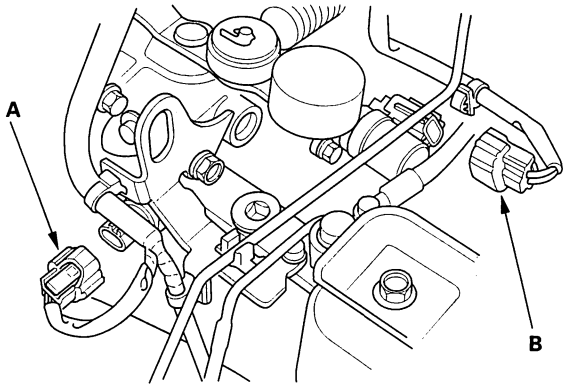

44. Install the air cleaner housing (see page 11-344).

45. Install the battery base.

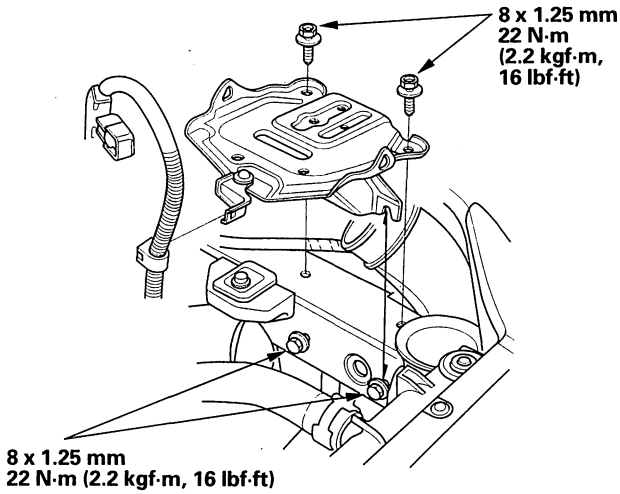

46. Reinstall the support strut bracket with the bolts to the proper locations on both sides of the hood.

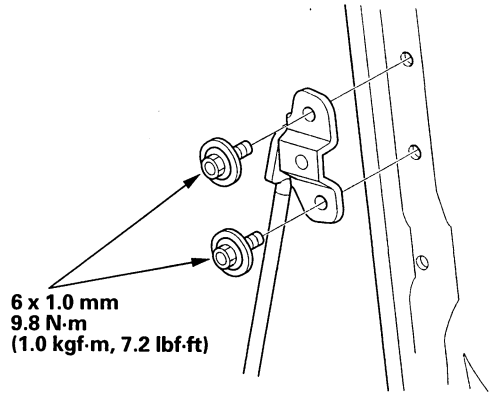

BACK

Protected by AR

47. Remove the steering wheel, refer to the 2003-2006 Accord Service Manual (see page 17-22).

48. Center the cable reel by first rotating it clockwise until it stops. Then rotate it counterclockwise (about three full turns) until the arrow mark on the label points straight up.

49. Reinstall the steering wheel, refer to the 2003-2006 Accord Service Manual (see page 17-24).

50. Fill the power steering fluid reservoir with fluid to the upper level line.

51. Install the battery. Connect the positive cable to the battery first, then connect the negative cable.

52. Start the engine, and run it at fast idle, then turn the steering wheel from lock-to-lock several times to bleed air from the system.

53. Recheck the fluid level, and refill if necessary.

54. Check the front wheel alignment, refer to the 2003-2006 Accord Service Manual (see page 18-6).

55. Check the steering wheel spoke angle. If the steering spoke angles to the right and left are not equal (steering wheel and rack are not centered), correct the engagement of the joint/pinion shaft serrations, then adjust the front toe by turning the tie-rod ends if necessary. If you need to correct the engagement of the joint/pinion shaft, repeat steps 52 thru 54.

56. Test-drive the vehicle.

57. Check the clutch operation.

58. Enter the anti-theft code for the radio and navigation system, then enter the customer's radio station and XM radio channel presets.

59. Do the power window control unit reset procedure, refer to the 2003-2006 Accord Service Manual (see page 22-232).

Protected by AR

Transmission Disassembly

Exploded View-Clutch Housing

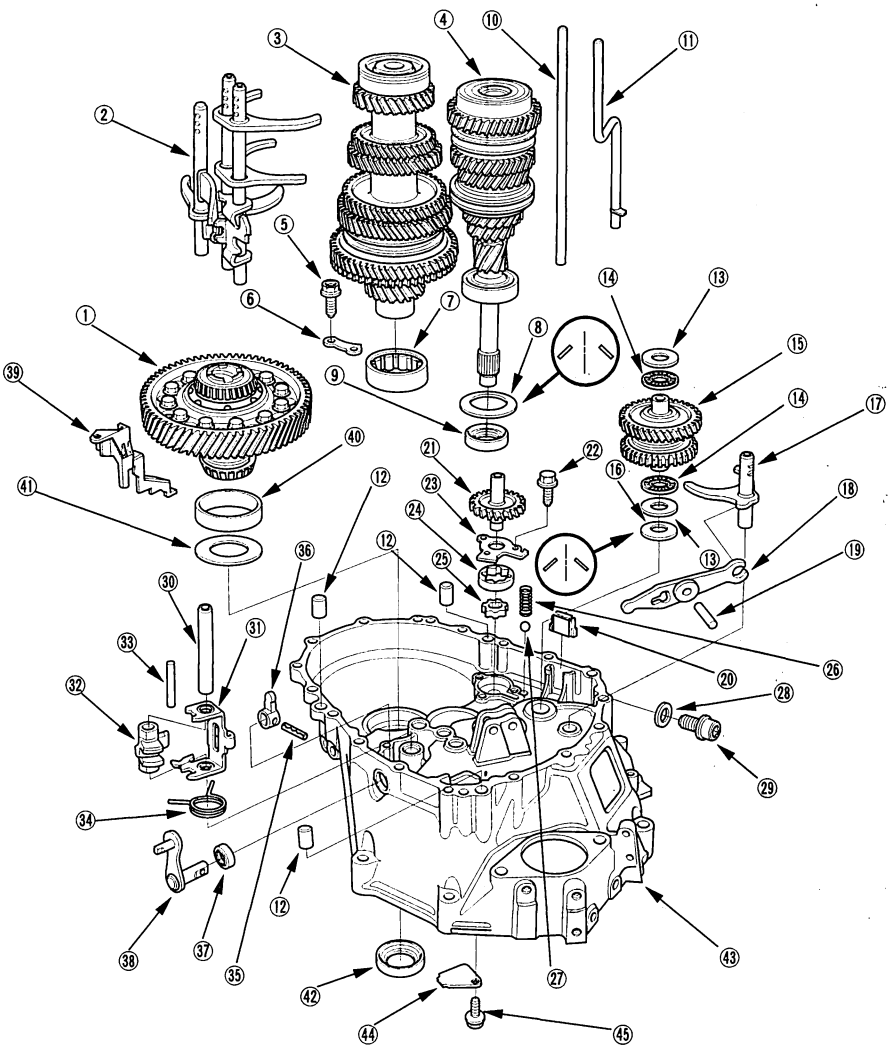

① DIFFERENTIAL ASSEMBLY
② SHIFT FORK ASSEMBLY
③ COUNTERSHAFT ASSEMBLY
④ MAINSHAFT ASSEMBLY
⑤ 6 mm FLANGE BOLT
12 N·m (1.2 kgf·m, 8.7 lbf·ft)
⑥ BEARING SET PLATE
⑦ NEEDLE BEARING
⑧ 64 mm SPRING WASHER
⑨ 28 x 43 x 7 mm OIL SEAL
Replace.
⑩ OIL GUIDE PIPE A
⑪ OIL GUIDE PIPE
⑫ 14 x 20 mm DOWEL PIN
⑬ 20 mm THRUST WASHER
⑭ 20 mm THRUST NEEDLE BEARING
⑮ REVERSE IDLER GEAR SHAFT ASSEMBLY
⑯ 33 mm SPRING WASHER
⑰ REVERSE SHIFT FORK
⑱ REVERSE SHIFT LEVER
⑲ 8 x 50 mm PIN
⑳ MAGNET
㉑ OIL PUMP SHAFT
㉒ 6 mm FLANGE BOLT
12 N·m (1.2 kgf·m, 8.7 lbf·ft)
㉓ OIL PUMP PLATE
㉔ OIL PUMP OUTER ROTOR
㉕ OIL PUMP INNER ROTOR
㉖ RELIEF VALVE SPRING
㉗ STEEL BALL
㉘ 14 mm WASHER
Replace.
㉙ DRAIN PLUG
39 N·m (4.0 kgf·m, 29 lbf·ft)
㉚ SHIFT PIECE SHAFT
㉛ INTERLOCK
㉜ SHIFT PIECE
㉝ 8 x 50 mm PIN
㉞ SELECT RETURN SPRING
㉟ 5 x 22 mm, 3 x 22 mm SPRING PIN
Replace.
㊱ SELECT ARM
㊲ 14 x 20 x 5 mm DUST SEAL
Replace.
㊳ SELECT LEVER
㊴ OIL GUTTER PLATE
㊵ 45 x 80 x 21 mm BEARING OUTER RACE
㊶ 46 x 80 x 1 mm SPACER
㊷ 35 x 54 x 8 mm OIL SEAL
Replace.
㊸ CLUTCH HOUSING
㊹ BREATHER PLATE
㊺ 6 mm FLANGE BOLT
12 N·m (1.2kgf·m, 8.7 lbf·ft)

BACK

Protected by AR

Exploded View-Transmission Housing

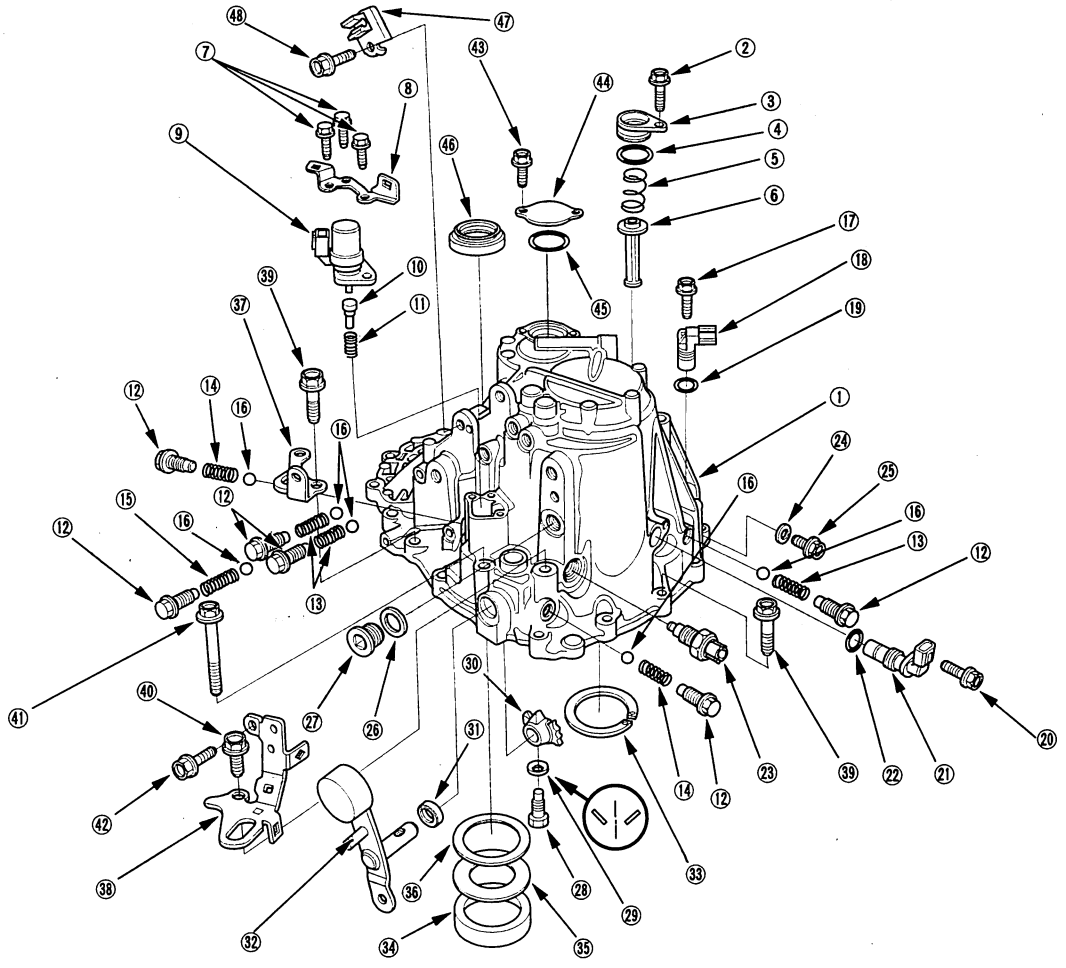

① TRANSMISSION HOUSING
② 6 mm FLANGE BOLT
12 N·m (1.2kgf·m, 8.7 lbf·ft)
③ STRAINER COVER
④ O-RING
Replace.
⑤ STRAINER SET SPRING
⑥ OIL PUMP STRAINER
⑦ 6 mm FLANGE BOLT
12 N·m (1.2 kgf·m, 8.7 lbf·ft)
⑧ TRANSMISSION HARNESS STAY
⑨ REVERSE LOCKOUT SOLENOID
⑩ SELECT LOCK PIN
⑪ SELECT LOCK PIN RETURN SPRING
⑫ SET SCREW
22 N·m (2.2 kgf·m, 16 lbf·ft)
⑬ 27.4 mm SPRING (3)
⑭ 22.0 mm SPRING (2)
⑮ 26.1 mm SPRING (1)
⑯ STEEL BALL
⑰ 6 mm FLANGE BOLT
12 N·m (1.2 kgf·m, 8.7 lbf·ft)
⑱ OUTPUT SHAFT (COUNTERSHAFT) SPEED SENSOR
⑲ O-RING
Replace.
⑳ 6 mm FLANGE BOLT
12 N·m (1.2 kgf·m, 8.7 lbf·ft)
㉑ INPUT SHAFT (MAINSHAFT) SPEED SENSOR
㉒ O-RING
Replace.
㉓ BACK-UP LIGHT SWITCH
29 N·m (3.0 kgf·m, 22 lbf·ft)
㉔ 6 mm WASHER
Replace.
㉕ OIL CHECK BOLT
12 N·m (1.2 kgf·m, 8.7 lbf·ft)
㉖ 20 mm WASHER
Replace.
㉗ FILLER PLUG
44 N·m (4.5 kgf·m, 33 lbf·ft)
㉘ 8 mm SPECIAL BOLT
29 N·m (3.0 kgf·m, 22 lbf·ft)
㉙ 8 mm SPRING WASHER
㉚ SHIFT ARM
㉛ DUST SEAL
Replace.
㉜ CHANGE LEVER
㉝ 82 mm SHIM
㉞ 45 x 81 x 18 mm BEARING OUTER RACE
㉟ 46 x 81 x 1 mm SPACER
㊱ 81 mm SHIM
㊲ TRANSMISSION HANGER B
㊳ TRANSMISSION HANGER A
㊴ 10 x 42 mm FLANGE BOLT
44 N·m (4.5 kgf·m, 33 lbf·ft)
㊵ 10 x 20 mm FLANGE BOLT
44 N·m (4.5 kgf·m, 33 lbf·ft)
㊶ 10 x 90 mm FLANGE BOLT
44 N·m (4.5 kgf·m, 33 lbf·ft)
㊷ 8 mm FLANGE BOLT
27 N·m (2.8 kgf·m, 20 lbf·ft)
㊸ 6 mm FLANGE BOLT
12 N·m (1.2 kgf·m, 8.7 lbf·ft)
㊹ TRANSMISSION CASE CAP
㊺ O-RING
Replace.
㊻ 40 x 56 x 9 mm OIL SEAL
Replace.
㊼ CLUTCH PIPE BRACKET
㊽ 8 mm FLANGE BOLT
27 N·m (2.8 kgf·m, 20 lbf·ft)

(cont'd)

BACK

Protected by AR

Transmission Disassembly (cont'd)

NOTE: Place the clutch housing on two pieces of wood thick enough to keep the mainshaft from hitting the workbench.

1. Remove the strainer cover (A), O-ring (B), strainer set spring (C), and oil pump strainer (D).

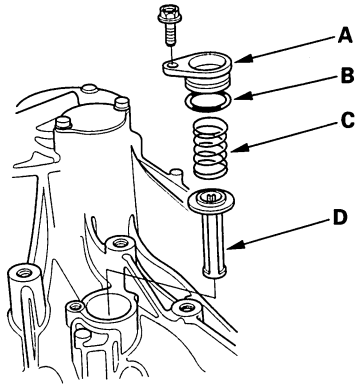

2. Remove the transmission harness stay (A), reverse lockout solenoid (B), and back-up light switch (C).

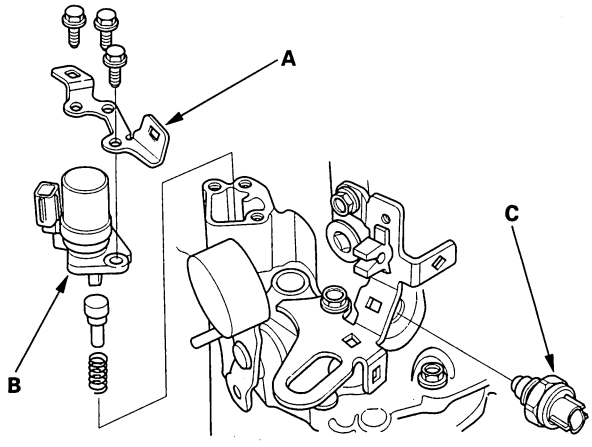

3. Remove the set screws (A), 22.0 mm spring (B), 26.1 mm spring (C), 27.4 mm springs (D), steel balls (E), oil filler plug (F), washer (G), and clutch line bracket (H).

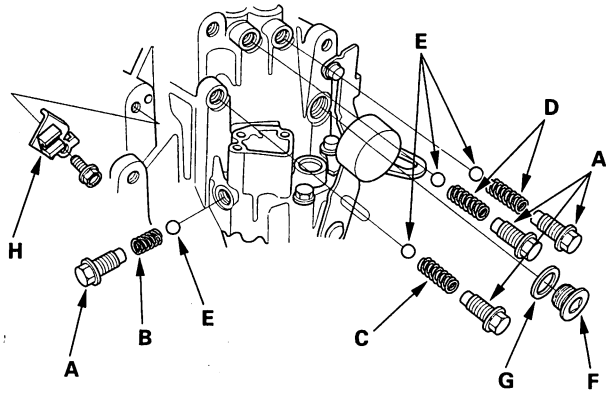

4. Remove the set screws (A), 22.0 mm spring (B), 27.4 mm spring (C), steel balls (D), output shaft (countershaft) speed sensor (E), input shaft (mainshaft) speed sensor (F), and O-rings (G).

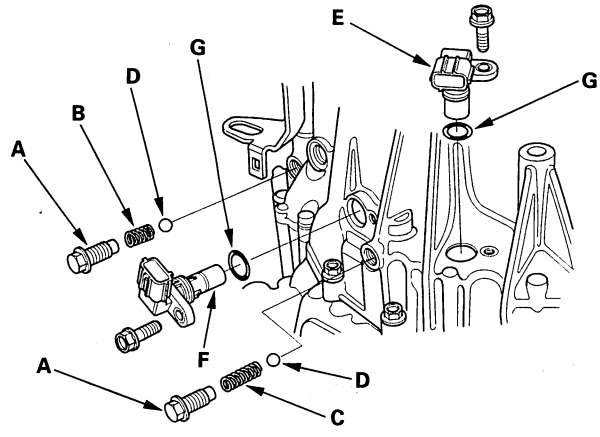

BACK

Protected by AR

5. Remove the oil check bolt (A), 6 mm washer (B), drain plug (C), and 14 mm washer (D).

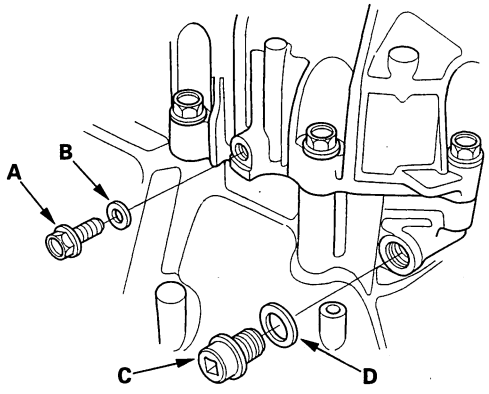

6. Remove the transmission hanger (A), transmission hanger (B), and 8 mm flange bolt (C). Loosen the 10 mm flange bolts in a crisscross pattern in several steps, then remove them.

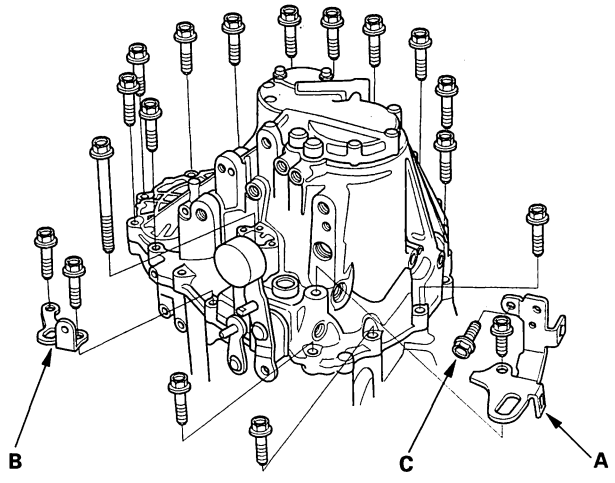

7. Remove the transmission case cap (A) and 37.7 mm O-ring (B).

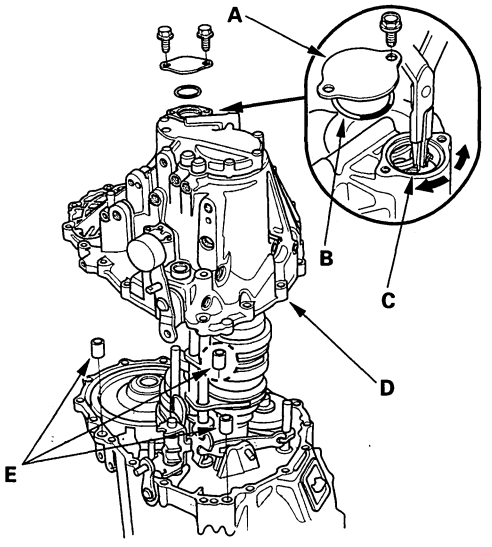

8. While expanding the 75 mm snap ring (C) of the countershaft ball bearing with snap ring pliers, lift the transmission housing (D). Release the snap ring pliers, and remove the transmission housing and 14 x 20 mm dowel pins (E).

9. Remove the oil guide pipe A, oil guide pipe (B), and magnet (C).

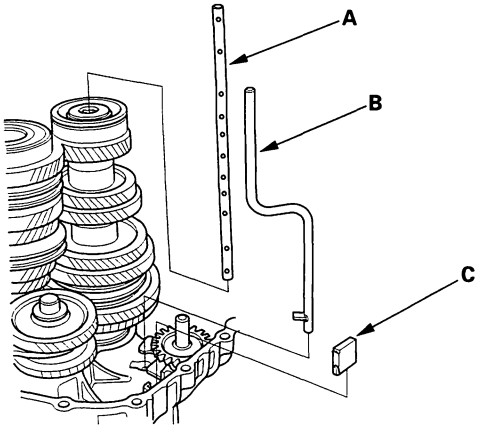

(cont'd)

Protected by AR

Transmission Disassembly (cont'd)

10. Remove the pin (A) and reverse shift lever (B).

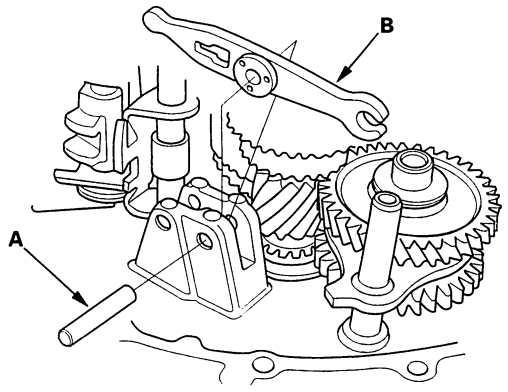

11. Remove the 20 mm thrust washers (A), 20 mm thrust needle bearings (B), reverse idler gear shaft assembly (C), 33 mm spring washer (D), and reverse shift fork (E) as an assembly.

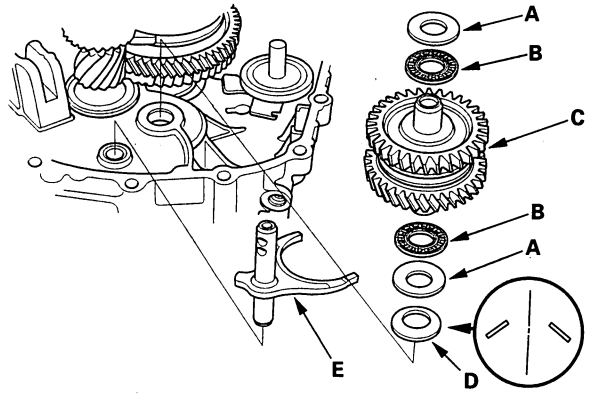

12. Remove the pin (A), select return spring (B), shift piece shaft (C), shift piece (D), and interlock (E).

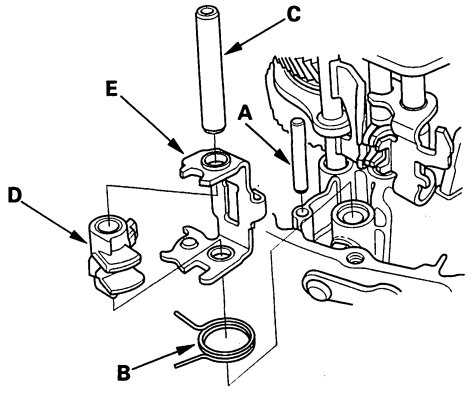

13. Remove the 5 mm spring pin, 3 mm spring pin (A), select arm (B), 14 x 20 x 5 mm dust seal (C), and select lever (D).

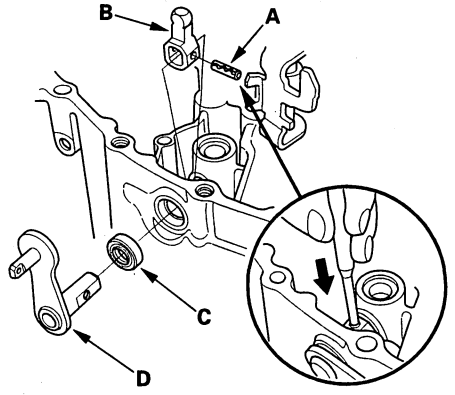

BACK

Protected by AR

14. Apply tape to the mainshaft splines to protect the seal, then remove the mainshaft assembly (A) and countershaft assembly (B) with the shift forks (C) from the clutch housing (D).

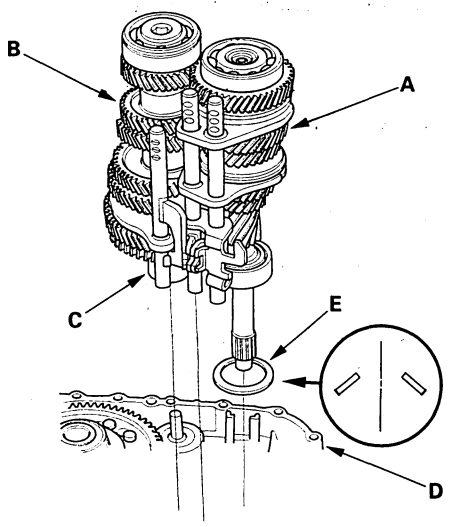

15. Remove the 64 mm spring washer (E).

16. Remove the oil pump shaft (A) and differential assembly (B).

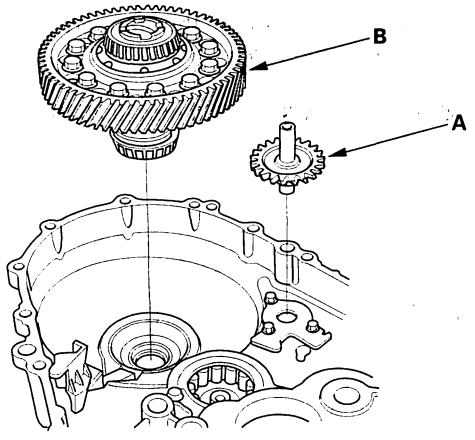

17. Remove the oil pump plate (A), oil pump inner rotor (B), oil pump outer rotor (C), relief valve spring (D), and steel ball (E).

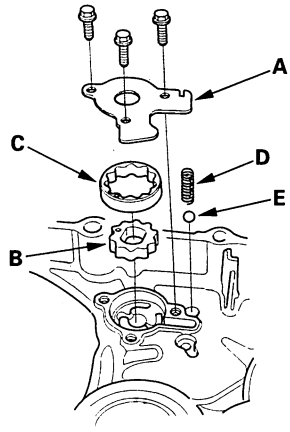

18. Remove the 82 mm shim (A) from the transmission housing (B).

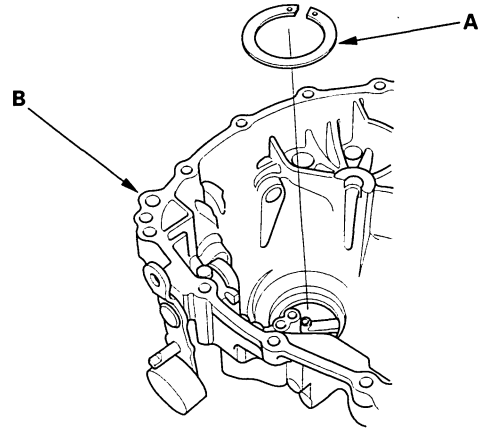

(cont'd)

Protected by AR

Transmission Disassembly (cont'd)

19. Remove the 8 mm special bolt (A), 8 mm spring washer (B), shift arm (C), change lever (D), and 16 x 23 x 5 mm dust seal (E).

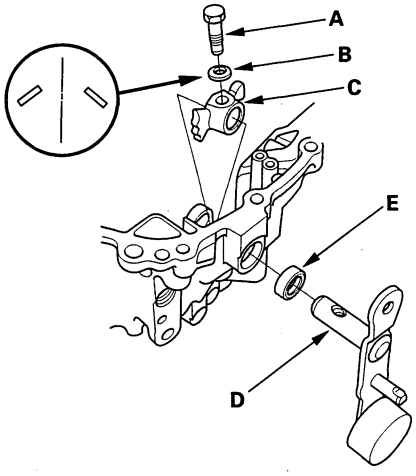

Reverse Shift Lever Clearance Inspection

1. Measure the clearance between the reverse shift lever (A) and reverse shift fork (B) with a feeler gauge (C). If the clearance is more than the service limit, go to step 2.

Standard: **0.05—0.50 mm (0.002—0.020 in.)**
Service Limit: **0.6 mm (0.024 in.)**

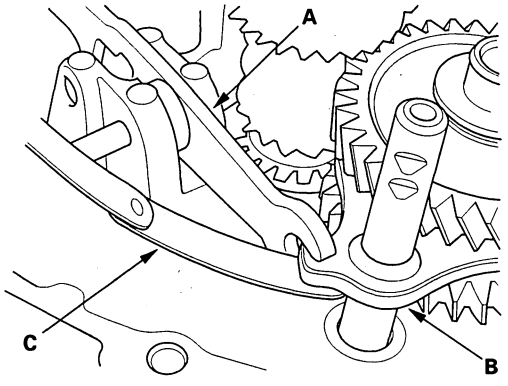

2. Measure the width of the reverse shift lever.

- If the width is not within the standard, replace the reverse shift lever.
- If the width is within the standard, replace the reverse shift fork.

Standard: 6.400—6.650 mm (0.2520—0.2618 in.)

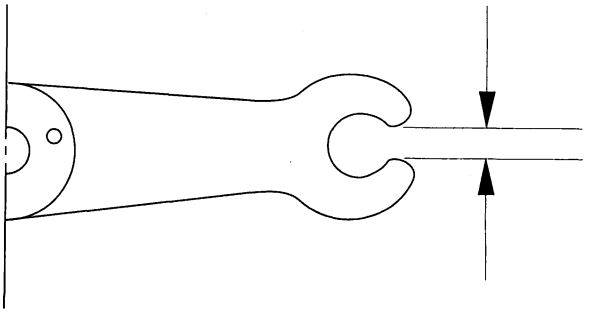

BACK

Protected by AR

3. Measure the clearance between the reverse shift lever (A) and reverse shift piece (B) with a feeler gauge (C). If the clearance is more than the service limit, go to step 4.

Standard: 0—0.4 mm (0—0.015 in.)
Service Limit: 0.5 mm (0.020 in.)

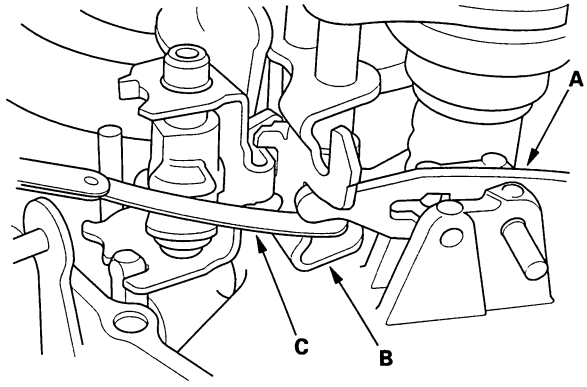

4. Measure the width of the reverse shift lever.

- If the width is not within the standard, replace the reverse shift lever.
- If the width is within the standard, replace the reverse shift piece.

Standard: 13.0—13.2 mm (0.51—0.52 in.)

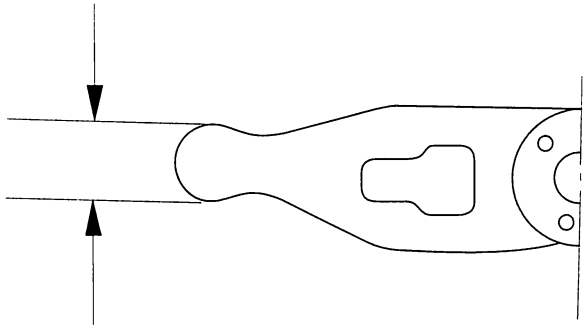

Select Arm Clearance Inspection

1. Measure the clearance between the select arm (A) and interlock (B) with a feeler gauge (C). If the clearance is more than the service limit, go to step 2.

Standard: 0.05—0.25 mm (0.002—0.010 in.)
Service Limit: 0.5 mm (0.020 in.)

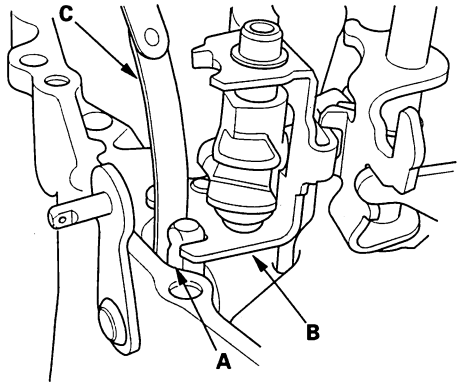

2. Measure the width of the select arm.

- If the width is not within the standard, replace the select arm.
- If the width is within the standard, replace the interlock.

Standard: 12.9—13.0 mm (0.50—0.51 in.)

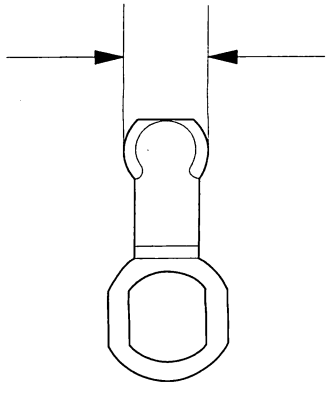

Protected by AR

Shift Arm Clearance Inspection

1. Measure the clearance between the shift arm (A) and shift piece (B) with a feeler gauge (C). If the clearance is more than the service limit, go to step 2.

Standard: 0.05—0.25 mm (0.002—0.010 in.)
Service Limit: 0.5 mm (0.020 in.)

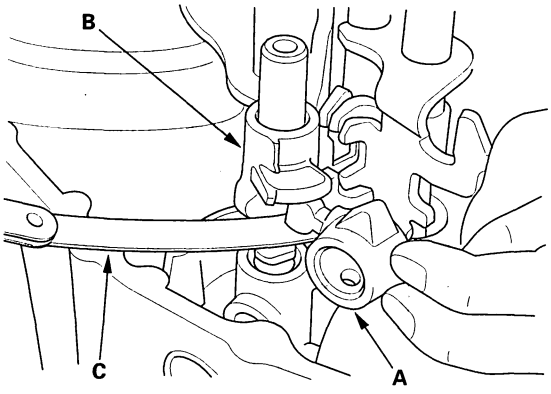

2. Measure the width of the shift arm.

- If the width is not within the standard, replace the shift arm.
- If the width is within the standard, replace the shift piece.

Standard: 13.9—14.0 mm (0.54—0.55 in.)

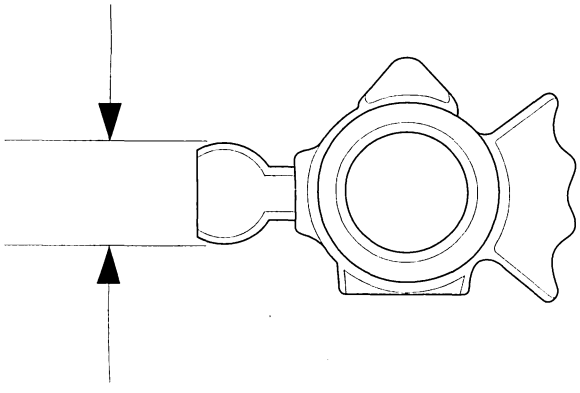

Oil Pump Clearance Inspection

1. Measure the thrust clearance between the oil pump gears (A) and clutch housing (B) with a straight edge (C) and a feeler gauge (D).

Standard (new): 0.03—0.13 mm (0.001—0.005 in.)
Service Limit: 0.15 mm (0.006 in.)

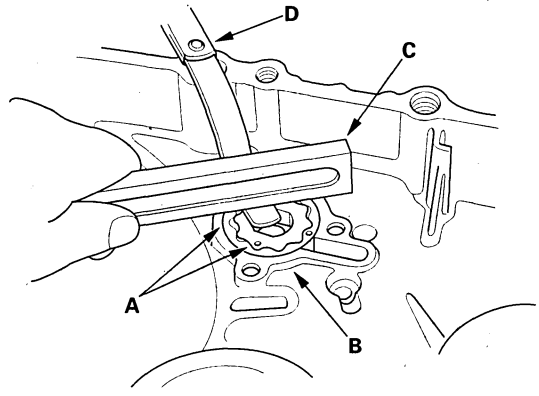

2. Measure the side clearance between the outer rotor (A) and clutch housing (B) with a feeler gauge (C).

Standard (new): 0.1—0.2 mm (0.004—0.008 in.)
Service Limit: 0.22 mm (0.009 in.)

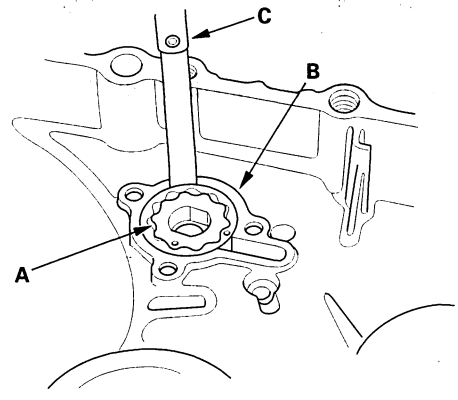

BACK

Protected by AR

3. Measure the side clearance between the outer rotor (A) and inner rotor (B) with a feeler gauge (C).

Standard (new) : 0.14 mm (0.006 in.)
Service Limit: 0.2 mm (0.008 in.)

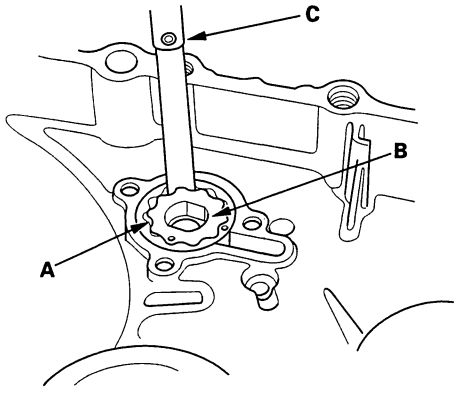

4. If the clearance is not within the standard, replace the oil pump outer and inner rotors.

Shift Fork Clearance Inspection

NOTE: The synchro sleeve and synchro hub should be replaced as a set.

1. Measure the clearance between each shift fork (A) and its matching synchro sleeve (B). If the clearance exceeds the service limit, go to step 2.

Standard: 0.35—0.65 mm (0.014—0.026 in.)
Service Limit: 1.0 mm (0.039 in.)

1ST/2ND, 3RD/4TH, 5TH/6TH:

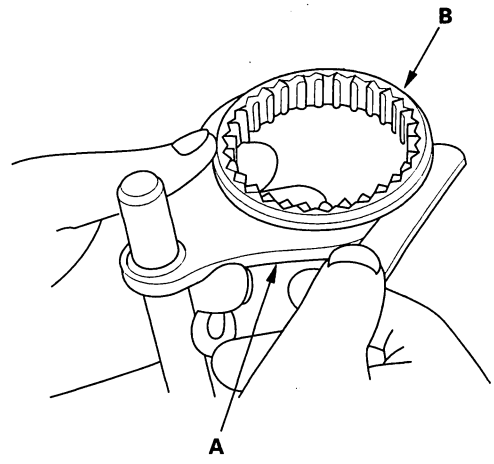

REVERSE:

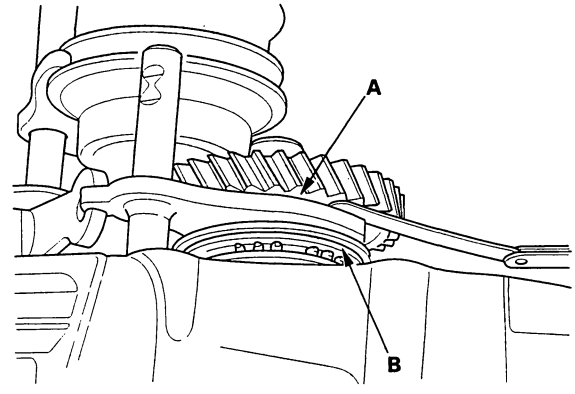

(cont'd)

Protected by AR

Shift Fork Clearance Inspection (cont'd)

2. Measure the thickness of the shift fork fingers.

   - If the thickness is not within the standard, replace the shift fork.
   - If the thickness is within the standard, replace the synchro sleeve.
   - If one arm of the shift fork shows more wear than others, the fork may be bent and needs to be replaced.

   Standard:
   1st/2nd, 3rd/4th, 5th/6th: 7.4—7.6 mm (0.29—0.30 in.)
   Reverse: 6.2—6.4 mm (0.24—0.25 in.)

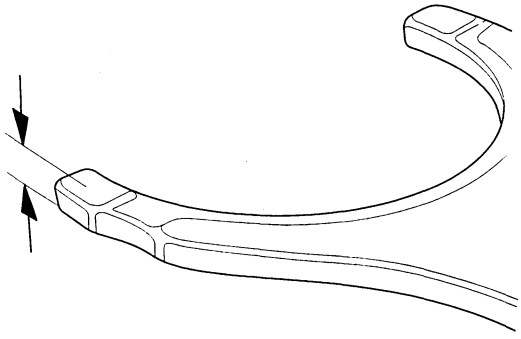

3. Measure the clearance between the shift fork (A) and shift piece (B). If the clearance exceeds the service limit, go to step 4.

   Standard: 0.2—0.6 mm (0.008—0.024 in.)
   Service Limit: 0.7 mm (0.028 in.)

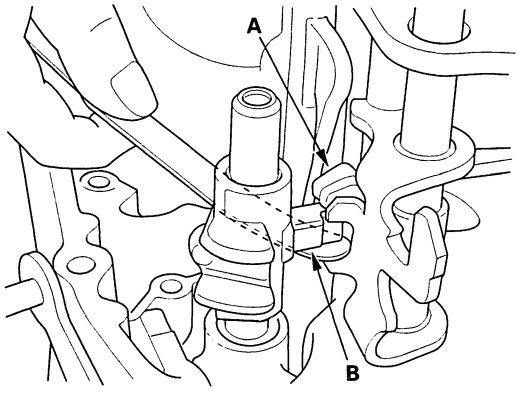

4. Measure the width of the shift piece.

   - If the width is not within the standard, replace the shift piece.
   - If the width is within the standard, replace the shift fork.

   Standard: 12.8—13.0 mm (0.50—0.51 in.)

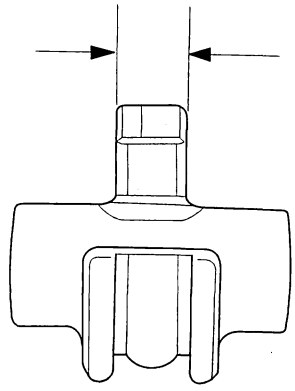

BACK

Protected by AR

Shift Fork Disassembly/Reassembly

Prior to reassembling, clean all parts in solvent, dry them, and apply lubricant to all contact surfaces.

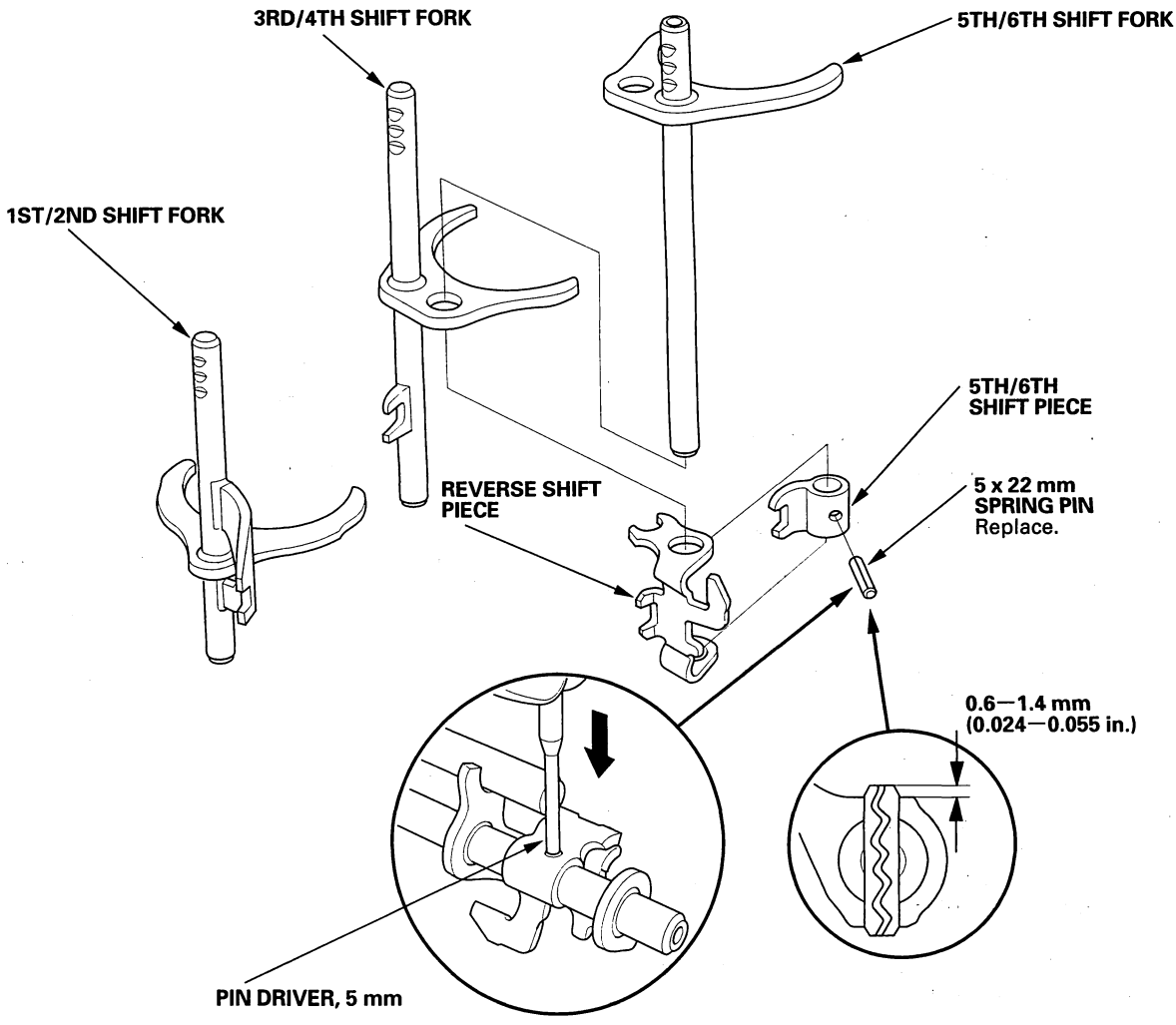

Protected by AR

Mainshaft Assembly Clearance Inspection

NOTE: If replacement is required, always replace the synchro sleeve and hub as a set.

1. Support the bearing inner race with an appropriate sized socket (A), and push down on the mainshaft (B).

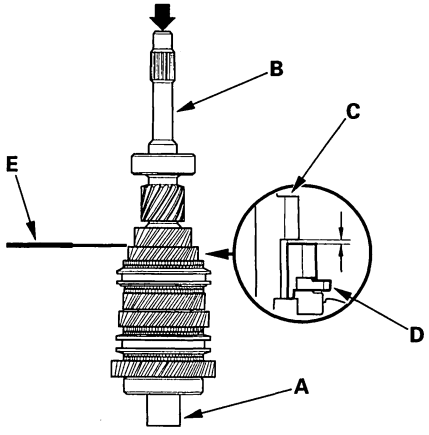

2. Measure the clearance between 2nd gear (C) and 3rd gear (D) with a feeler gauge (E).

   - If the clearance is more than the service limit, go to step 3.
   - If the clearance is within the service limit, go to step 4.

   Standard: 0.06—0.19 mm (0.002—0.007 in.)
   Service Limit: 0.3 mm (0.01 in.)

3. Measure the thickness of 3rd gear.

   - If the thickness is less than the service limit, replace 3rd gear.
   - If the thickness is within the service limit, replace the 3rd/4th synchro hub/sleeve.

   Standard: 23.89—23.97 mm (0.941—0.944 in.)
   Service Limit: 23.8 mm (0.94 in.)

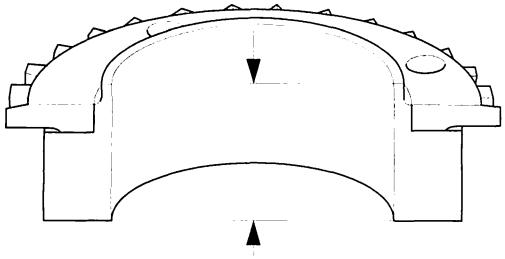

4. Measure the clearance between 4th gear (A) and the distance collar (B) with a dial indicator (C). If the clearance is more than the service limit, go to step 5.

   Standard: 0.06—0.19 mm (0.002—0.007 in.)
   Service Limit: 0.3 mm (0.01 in.)

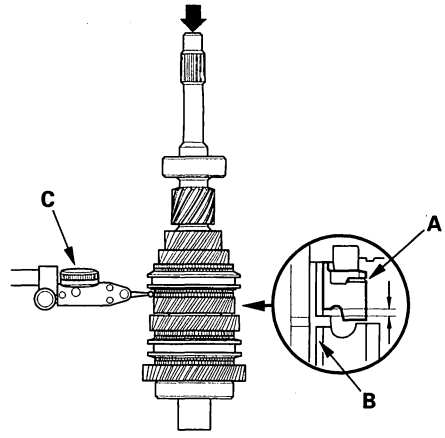

5. Measure distance ① on the 4th gear side distance collar.

   - If distance ① is not within the standard, replace the distance collar.
   - If distance ① is within the standard, go to step 6.

   Standard: 22.53—22.58 mm (0.887—0.889 in.)

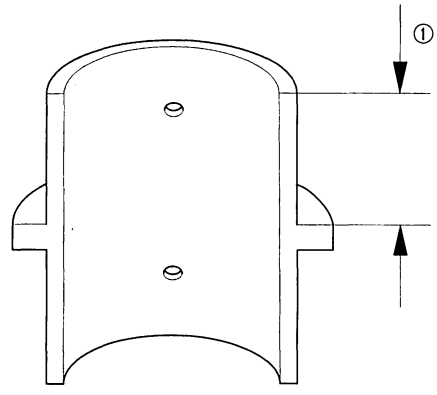

BACK

Protected by AR

6. Measure the thickness of 4th gear.

   - If the thickness is less than the service limit, replace 4th gear.
   - If the thickness is within the service limit, replace the 3rd/4th synchro hub/sleeve.

   Standard: 22.39—22.47 mm (0.881—0.885 in.)
   Service Limit: 22.3 mm (0.88 in.)

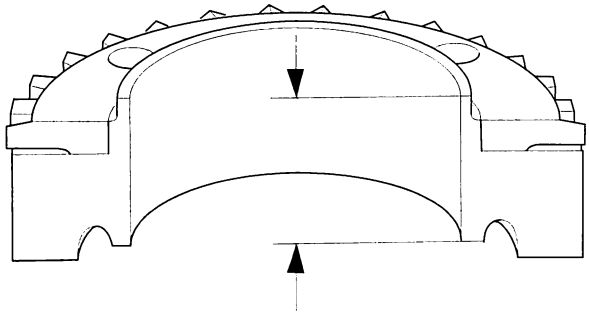

7. Measure the clearance between the distance collar (A) and 5th gear (B) with a dial indicator (C). If the clearance is more than the service limit, go to step 8.

   Standard: 0.06—0.19 mm (0.002—0.007 in.)
   Service Limit: 0.3 mm (0.01 in.)

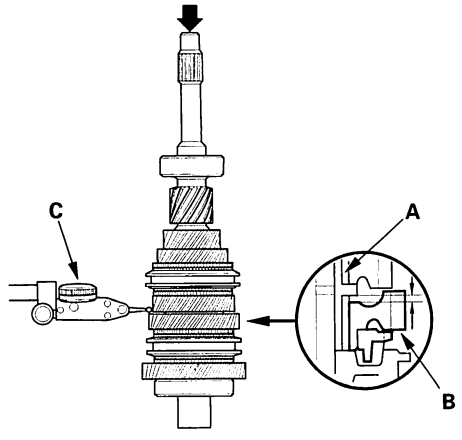

8. Measure distance ② on the 5th gear side distance collar.

   - If distance ② is not within the standard, replace the distance collar.
   - If distance ② is within the standard, go to step 9.

   Standard: 22.53—22.58 mm (0.887—0.889 in.)

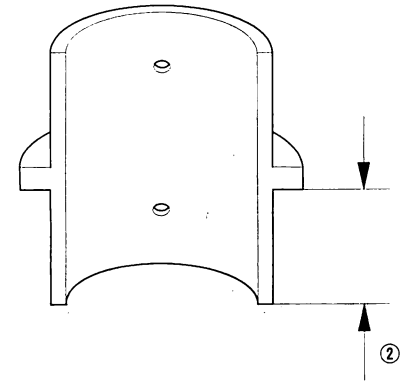

9. Measure the thickness of 5th gear.

   - If the thickness is less than the service limit, replace 5th gear.
   - If the thickness is within the service limit, replace the 5th/6th synchro hub/sleeve.

   Standard: 22.39—22.47 mm (0.881—0.885 in.)
   Service Limit: 22.3 mm (0.88 in.)

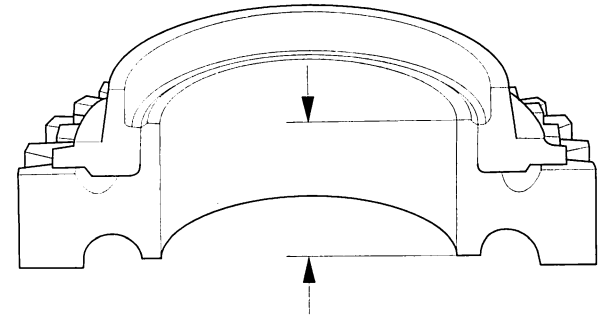

(cont'd)

Protected by AR

Mainshaft Assembly Clearance Inspection (cont'd)

10. Measure the clearance between 6th gear (A) and the angular ball bearing inner race (B) with a dial indicator (C). If the clearance is more than the service limit, go to step 11.

Standard: 0.06—0.19 mm (0.002—0.007 in.)
Service Limit: 0.3 mm (0.01 in.)

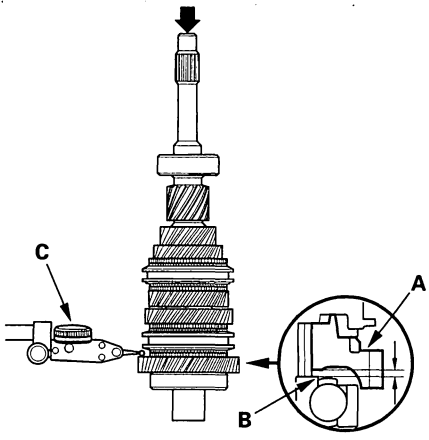

11. Measure the thickness of the distance collar.

- If the thickness is less than the standard, replace the distance collar.
- If the thickness is within the standard, go to step 12.

Standard: 22.03—22.08 mm (0.867—0.869 in.)

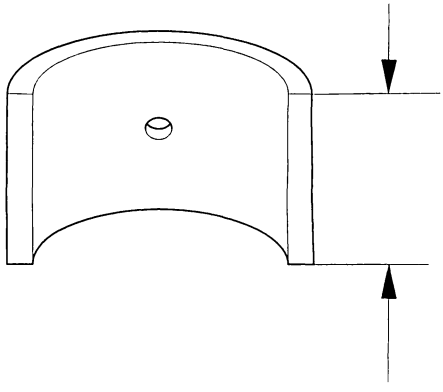

12. Measure the thickness of 6th gear.

- If the thickness is less than the service limit, replace 6th gear.
- If the thickness is within the service limit, replace the 5th/6th synchro hub/sleeve.

Standard: 21.89—21.97 mm (0.862—0.865 in.)
Service Limit: 21.8 mm (0.86 in.)

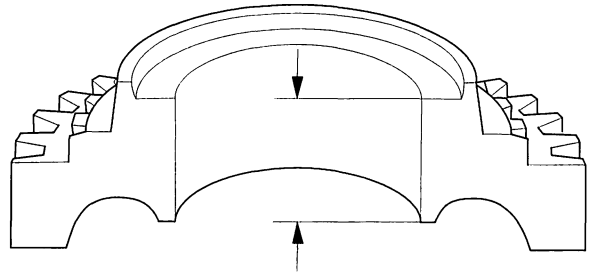

BACK

Protected by AR

Mainshaft Disassembly

1. Support 6th gear (A) on the steel blocks, and press the mainshaft out of the ball bearing (B). Use of a jaw-type puller can damage the gear teeth.

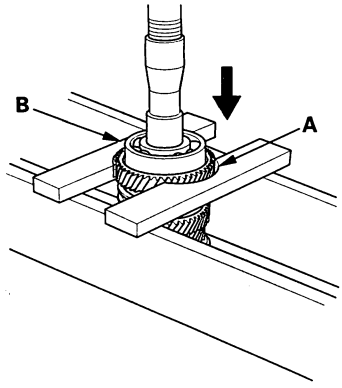

2. Support 5th gear (A) on the steel blocks, and press the mainshaft out of the 5th/6th synchro hub (B). Use of a jaw-type puller can damage the gear teeth.

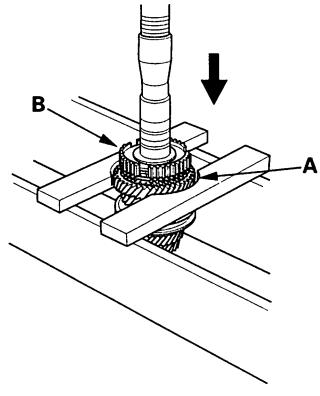

3. Support 3rd gear (A) on the steel blocks, and press the mainshaft out of the 3rd/4th synchro hub (B). Use of a jaw-type puller can damage the gear teeth.

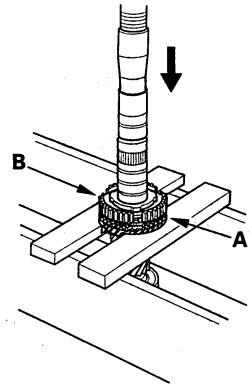

4. Support the angular ball bearing on the steel blocks, and press out the mainshaft.

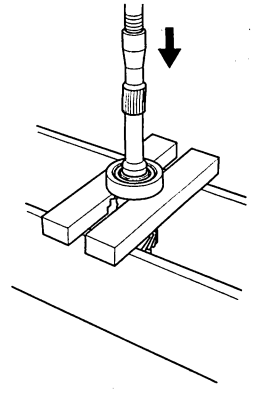

BACK

Protected by AR

Mainshaft Inspection

1. Inspect the oil passage, gear, and bearing surfaces for wear and damage, then measure the mainshaft at points A, B, C, D, E, and F. If any part of the mainshaft is less than the service limit, replace it.

Standard:
A Ball bearing surface (transmission housing side):
30.987—31.000 mm (1.2200—1.2205 in.)
B 6th gear distance collar surface:
32.987—33.000 mm (1.2987—1.2992 in.)
C 4th/5th gear distance collar surface:
35.987—36.000 mm (1.4168—1.4173 in.)
D Needle bearing surface:
41.984—42.000 mm (1.6529—1.6535 in.)
E Ball bearing surface (clutch housing side):
28.002—28.015 mm (1.1024—1.1030 in.)
F Pilot bearing surface:
19.967—19.980 mm (0.7861—0.7866 in.)
Service Limit:
A: 30.93 mm (1.218 in.)
B: 32.93 mm (1.296 in.)
C: 35.93 mm (1.415 in.)
D: 41.93 mm (1.651 in.)
E: 27.95 mm (1.100 in.)
F: 19.91 mm (0.784 in.)

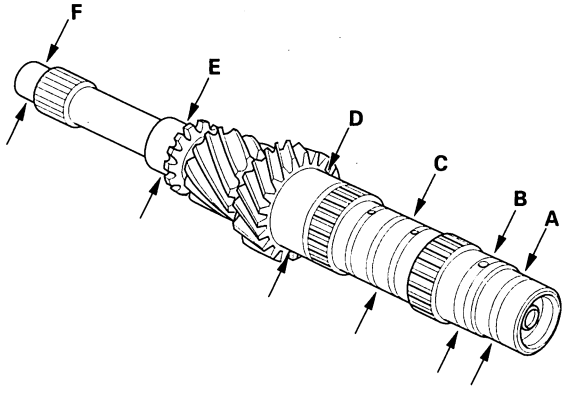

2. Inspect the runout by supporting both ends of the mainshaft. Then rotate the mainshaft two complete turns while measuring with a dial gauge. If the runout is more than the service limit, replace the mainshaft.

Standard: 0.02 mm (0.001 in.)
Service Limit: 0.05 mm (0.002 in.)

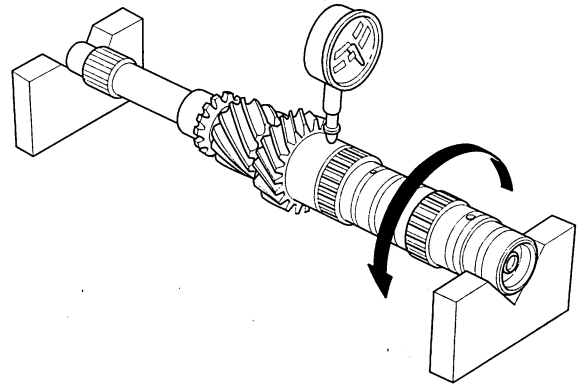

BACK

Protected by AR

Mainshaft Reassembly

Exploded View

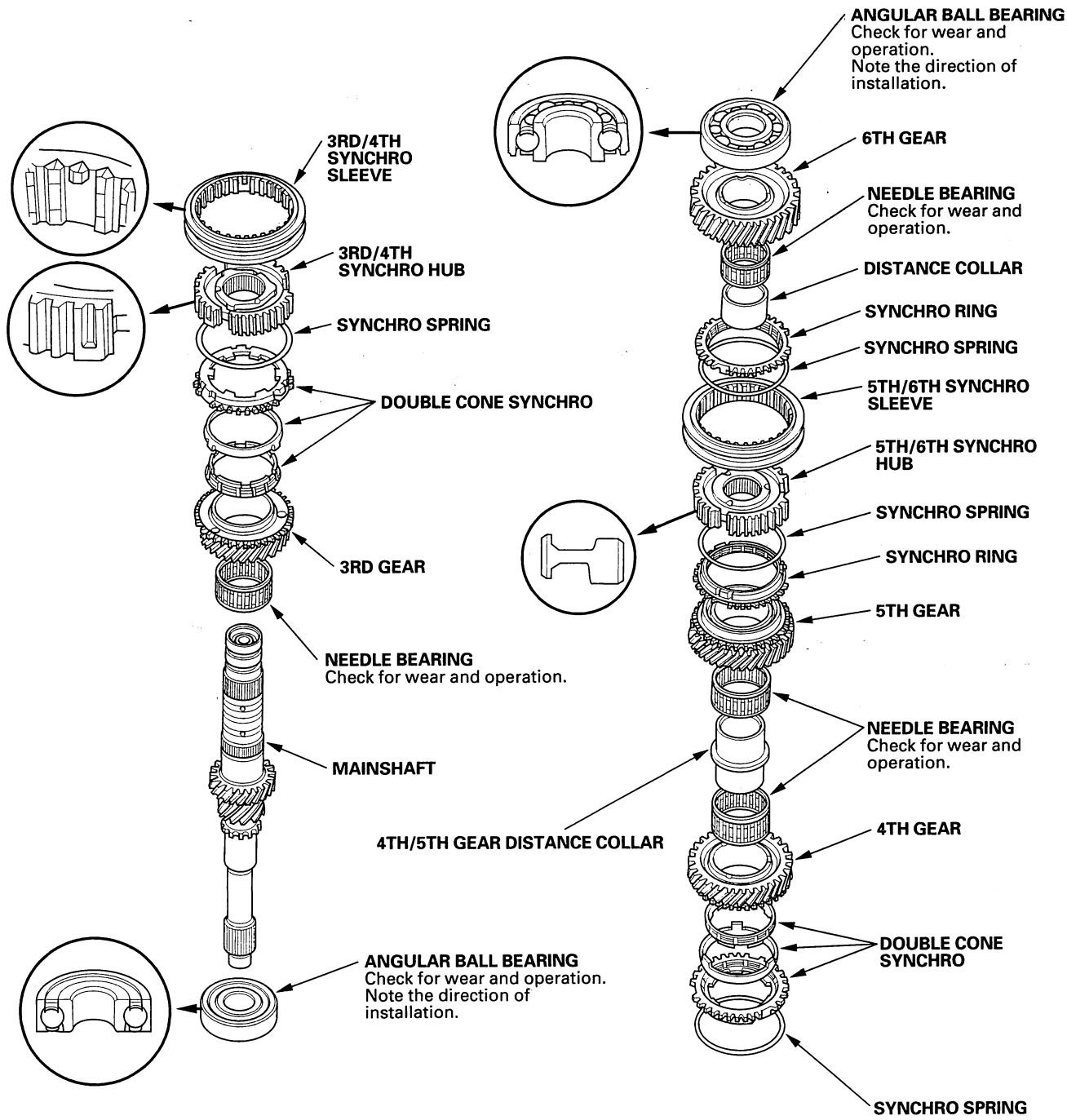

(cont'd)

BACK

Protected by AR

Mainshaft Reassembly (cont'd)

Special Tools Required
- Driver, 40 mm I.D. 07746-0030100
- Driver, 30 mm I.D. 07946-MB00000

NOTE: Refer to the Exploded View as needed during this procedure.

1. Clean all parts in solvent, dry them, and apply lubricant to all contact surfaces except the 3rd/4th and 5th/6th synchro hubs.

2. Install the new angular ball bearing (A) using the special tool and a press. Note the direction of installation.

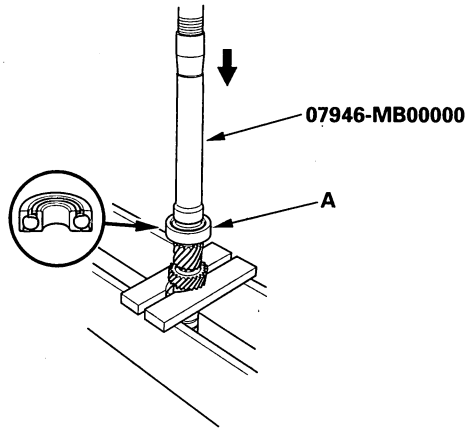

3. Install the needle bearing (A) and 3rd gear (B) on the mainshaft (C).

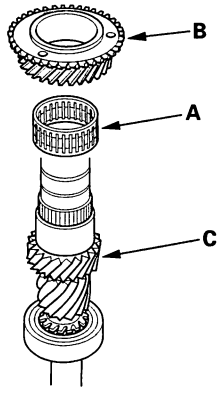

4. Install the double cone synchro assembly (A) by aligning the synchro cone fingers (B) with the holes in 3rd gear (C), then install the synchro spring (D).

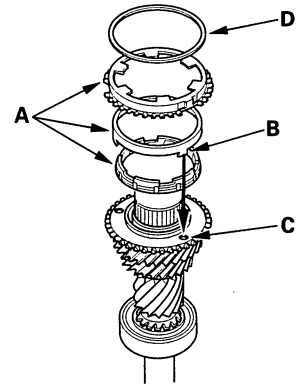

5. Install the 3rd/4th synchro hub (A) by aligning the outer synchro ring fingers (B) with the grooves in the 3rd/4th synchro hub (C).

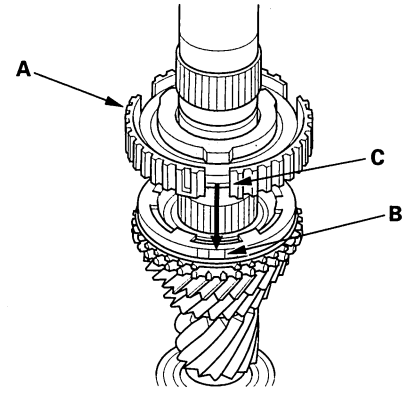

BACK

Protected by AR

6. Install the 3rd/4th synchro hub (A) using the special tool.

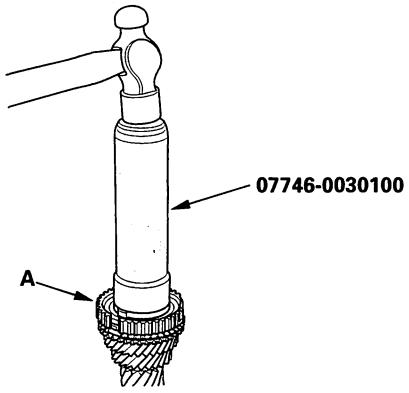

7. Install the 3rd/4th synchro sleeve (A) by aligning the stops (B) with the 3rd/4th synchro sleeve and hub. After installing, check the operation of the 3rd/4th synchro hub set.

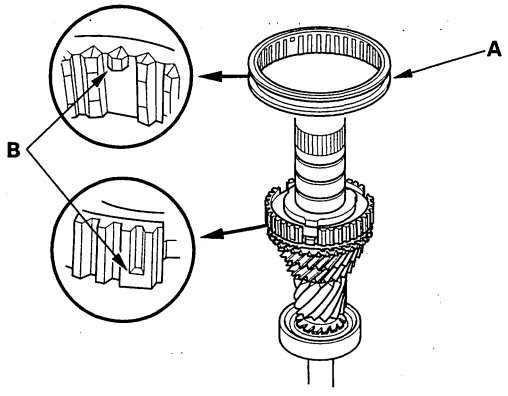

8. Install the synchro spring (A).

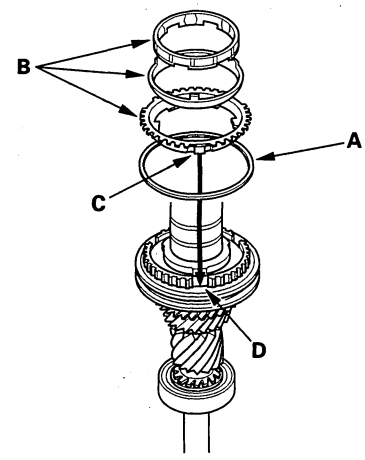

9. Install the double cone synchro assembly (B) by aligning the outer synchro ring fingers (C) with the grooves in the 3rd/4th synchro hub (D).

10. Install 4th gear (A) by aligning the synchro cone fingers (B) with the holes in 4th gear (C).

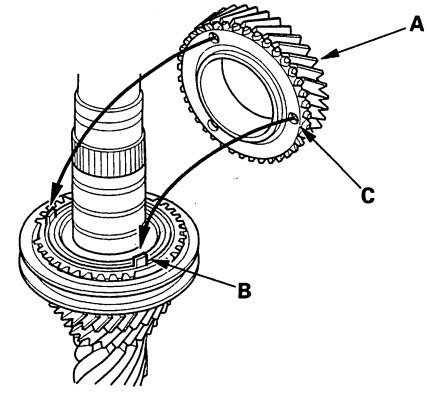

11. Install the needle bearings, distance collar, 5th gear, synchro ring, and synchro spring.

(cont'd)

Protected by AR

Mainshaft Reassembly (cont'd)

12. Install the 5th/6th synchro hub (A) by aligning the outer synchro ring fingers (B) with the grooves in the 5th/6th synchro hub (C).

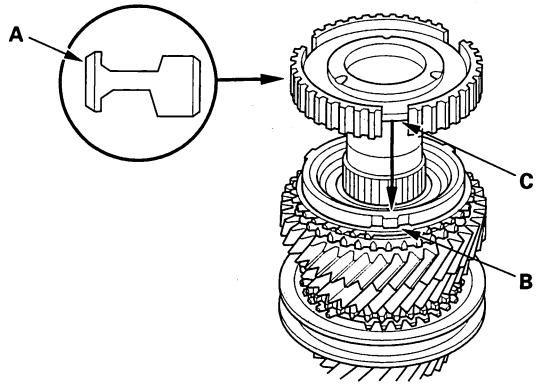

13. Install the 5th/6th synchro hub (A) using the special tool.

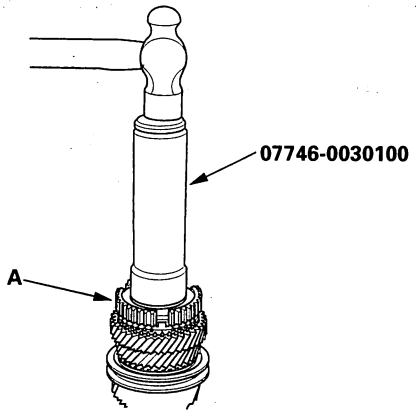

14. Install the 5th/6th synchro sleeve.

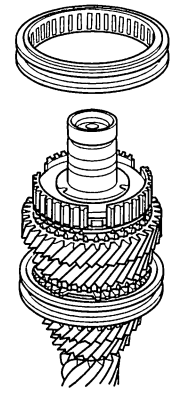

15. Install the synchro spring and synchro ring.

16. Install the distance collar, needle bearing, and 6th gear.

17. Install the new angular ball bearing (A) using the special tool. Note the direction of installation.

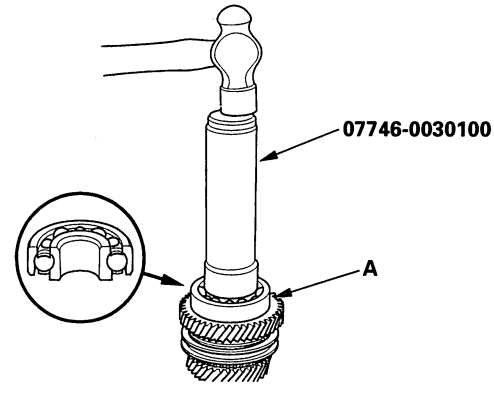

BACK

Protected by AR

Countershaft Assembly Clearance Inspection

NOTE: Before inspection, make sure the 20 mm special bolt is tightened to the specified torque.

1. Measure the clearance between 1st gear (A) and the countershaft reverse gear (B) with a dial indicator (C). If the clearance is more than the service limit, go to step 2.

   Standard: 0.04—0.17 mm (0.002—0.007 in.)
   Service Limit: 0.28 mm (0.011 in.)

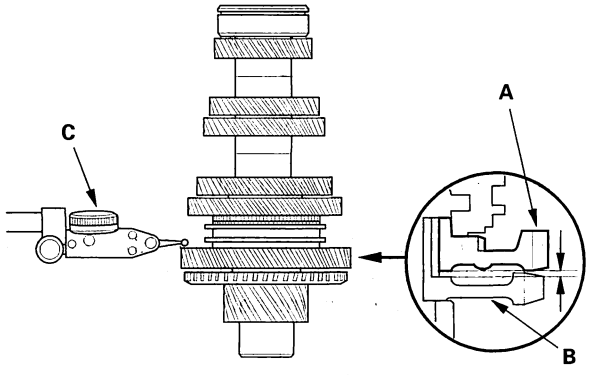

2. Measure the distance of the countershaft reverse gear.

   - If the distance is less than the standard, replace the countershaft reverse gear.
   - If the thickness is within the standard, go to step 3.

   Standard: 23.03—23.08 mm (0.907—0.909 in.)

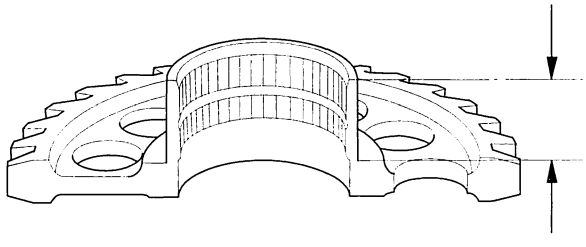

3. Measure the thickness of 1st gear.

   - If the thickness is less than the service limit, replace 1st gear.
   - If the thickness is within the service limit, replace the 1st/2nd synchro hub/sleeve.

   Standard: 22.91—22.99 mm (0.902—0.905 in.)
   Service Limit: 22.86 mm (0.900 in.)

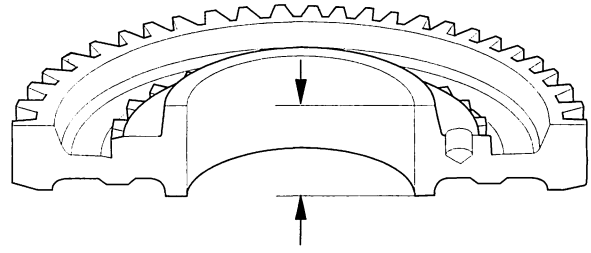

4. Measure the clearance between 2nd gear (A) and 3rd gear (B) with a feeler gauge (C). If the clearance is more than the service limit, go to step 5.

   Standard: 0.04—0.17 mm (0.002—0.007 in.)
   Service Limit: 0.28 mm (0.011 in.)

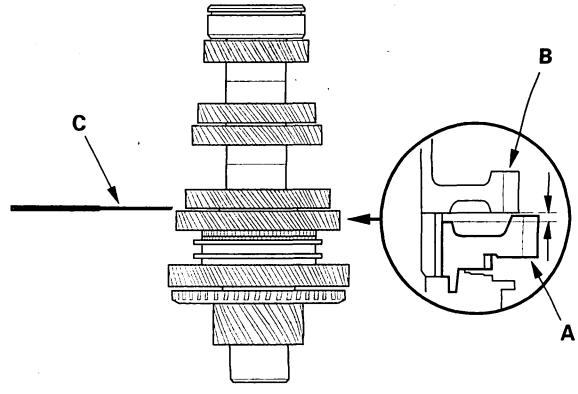

(cont'd)

Protected by AR

Countershaft Assembly Clearance Inspection (cont'd)

5. Measure the thickness of the distance collar.

   - If the thickness is less than the standard, replace the distance collar.
   - If the thickness is within the standard, go to step 6.

   Standard: 23.03—23.08 mm (0.907—0.909 in.)

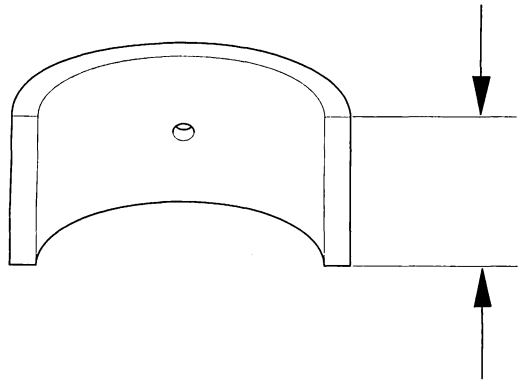

6. Measure the thickness of 2nd gear.

   - If the thickness is less than the service limit, replace 2nd gear.
   - If the thickness is within the service limit, replace the 1st/2nd synchro hub.

   Standard: 22.91—22.99 mm (0.902—0.905 in.)
   Service Limit: 22.86 mm (0.900 in.)

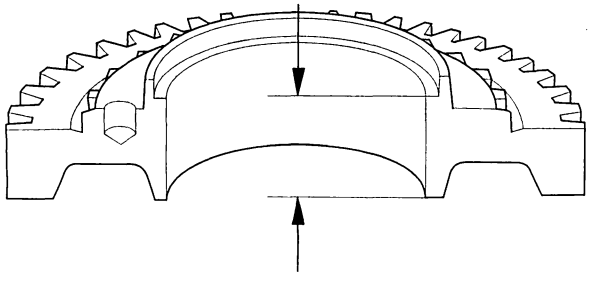

Countershaft Disassembly

1. Securely clamp the countershaft assembly in a vise with wood blocks.

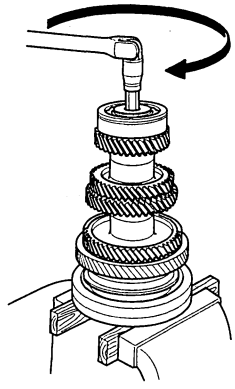

2. Remove the 20 mm special bolt (left-hand threads).

3. Support 6th gear (A) on steel blocks (B), then use a press (C) and an attachment (D) to press the countershaft (E) out of the ball bearing.

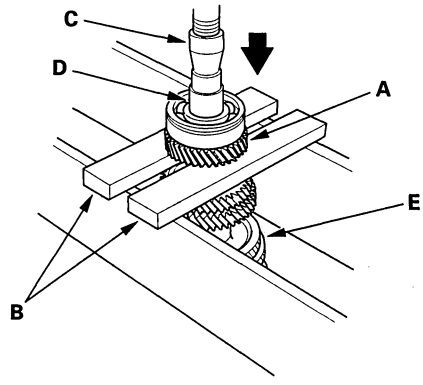

4. Remove the 35 mm shim and 6th gear.

BACK

Protected by AR

5. Support 4th gear (A) on steel blocks (B), then use a press (C) and an attachment (D) to press the countershaft (E) out of 4th and 5th gear.

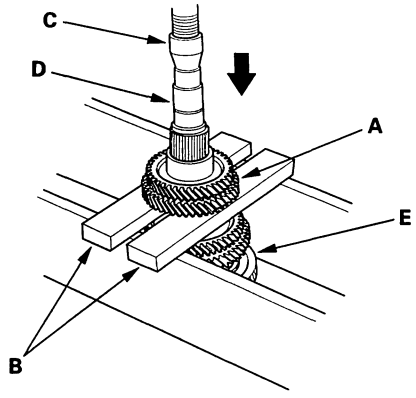

6. Support 2nd gear (A) on steel blocks (B), then use a press (C) and an attachment (D) to press the countershaft (E) out of 2nd and 3rd gear.

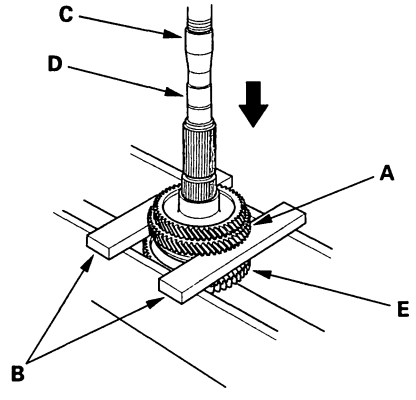

Countershaft Inspection

1. Inspect the oil passage, gear, and bearing surfaces for wear and damage, then measure the countershaft at points A, B, C, and D. If any part of the countershaft is less than the service limit, replace it.

Standard:
A Ball bearing surface (transmission housing side):
30.002—30.015 mm (1.1812—1.1817 in.)
B Distance collar surface:
42.975—42.991 mm (1.6919—1.6926 in.)
C Countershaft reverse gear surface:
45.934—45.950 mm (1.8084—1.8091 in.)
D Needle bearing surface (clutch housing side):
43.974—43.990 mm (1.7313—1.7319 in.)
Service Limit:
A: 29.95 mm (1.179 in.)
B: 42.92 mm (1.690 in.)
C: 45.88 mm (1.806 in.)
D: 43.92 mm (1.729 in.)

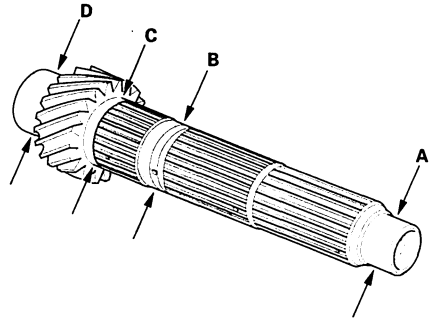

2. Inspect the runout by supporting both ends of the countershaft. Then rotate the countershaft two complete turns while measuring with a dial gauge. If the runout exceeds the service limit, replace the countershaft.

Standard: 0.02 mm (0.001 in.) max.
Service Limit: 0.05 mm (0.002 in.)

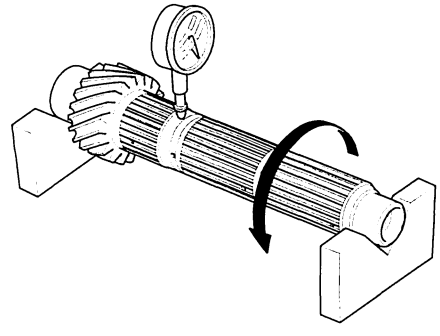

Protected by AR

Countershaft Reassembly

Exploded View

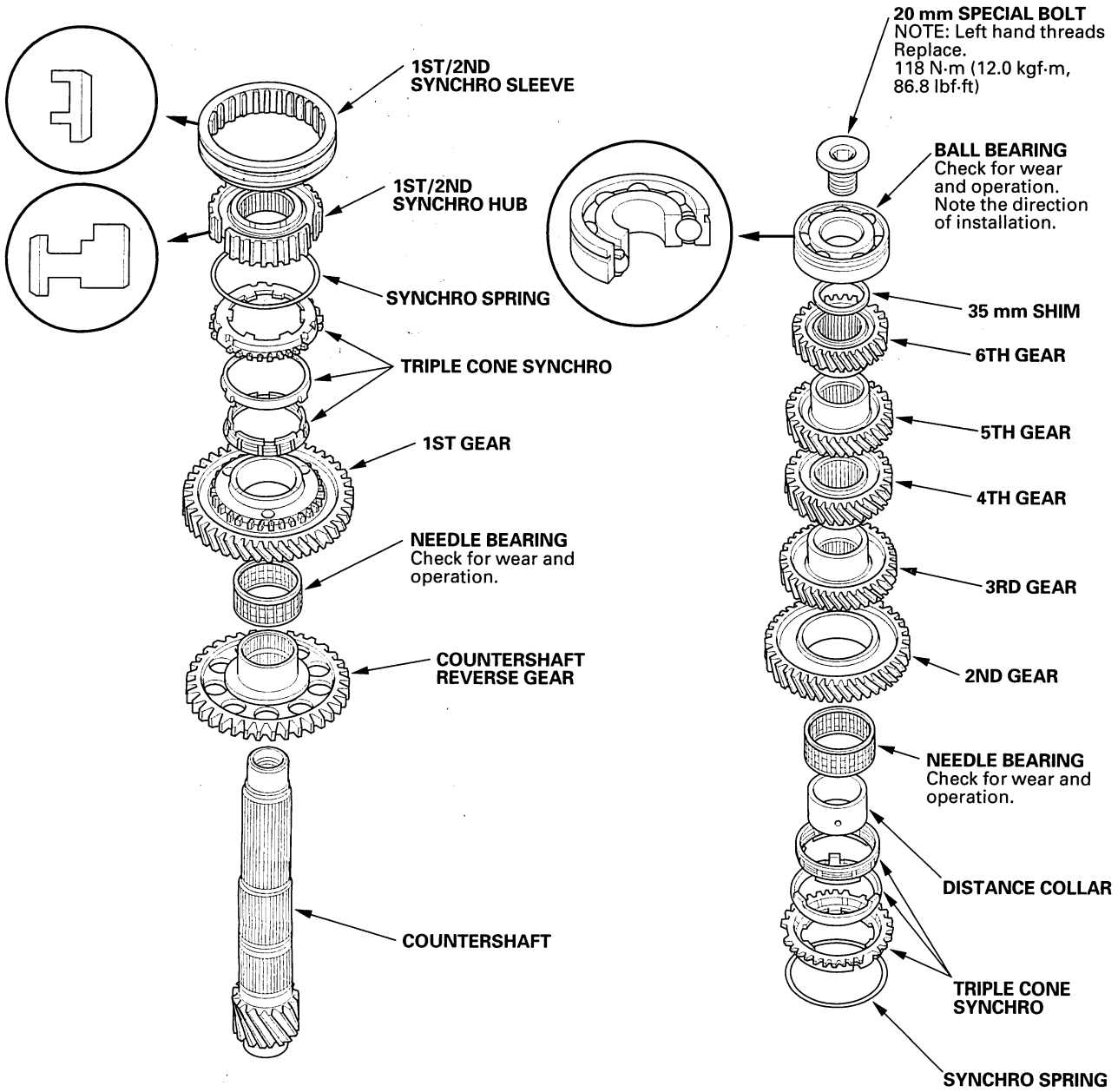

BACK

Protected by AR

Special Tools Required
- Driver, 56 x 62 mm 070AD-PYZA100
- Driver, 40 mm I.D. 07746-0030100

NOTE: Refer to the Exploded View as needed during this procedure.

1. Clean all parts in solvent, dry them, and apply lubricant to all contact surfaces.

2. Install the countershaft reverse gear (A), needle bearing (B), and 1st gear (C) onto the countershaft (D).

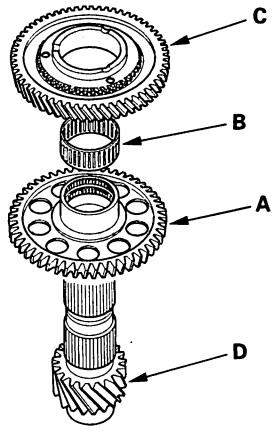

3. Install the triple cone synchro assembly (A) by aligning the synchro cone fingers (B) with the holes in 1st gear (C), then install the synchro spring (D).

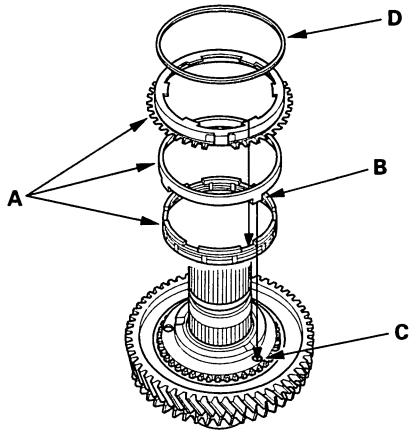

4. Install the 1st/2nd synchro hub (A) by aligning the outer synchro ring fingers (B) with the grooves in the 1st/2nd synchro hub (C).

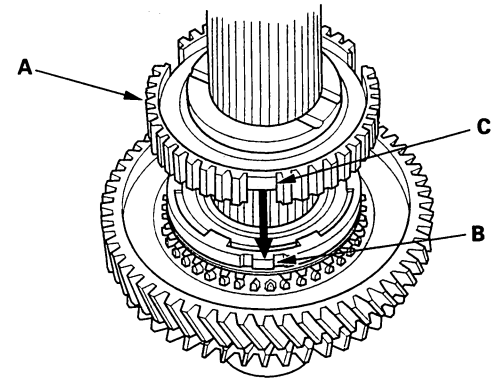

5. Install the 1st/2nd synchro sleeve.

6. Install the synchro spring (A).

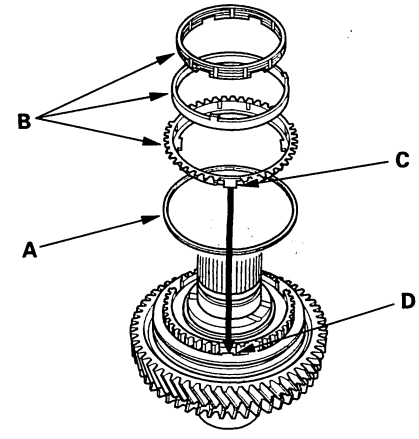

7. Install the triple cone synchro assembly (B) by aligning the outer synchro ring fingers (C) with the grooves in the 1st/2nd synchro hub (D).

8. Install the distance collar and needle bearing.

(cont'd)

Protected by AR

Countershaft Reassembly (cont'd)

9. Install 2nd gear (A) by aligning the synchro cone fingers (B) with the holes in 2nd gear (C).

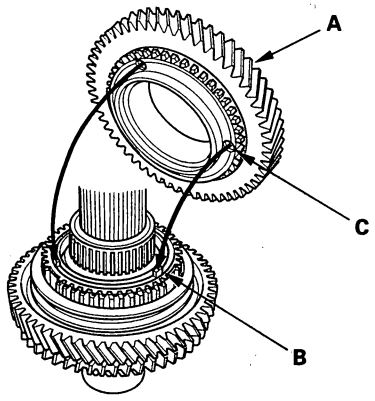

10. Support the countershaft (A) on the steel blocks, then install 3rd gear (B) using the special tool and a press (C).

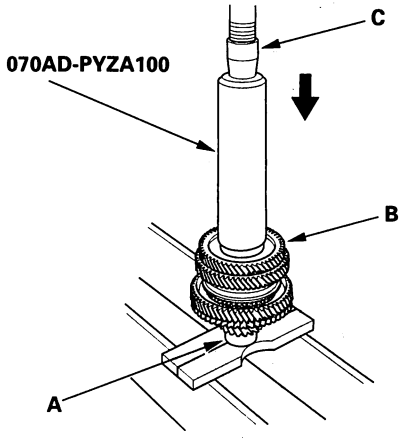

11. Install 4th gear (A) using the special tool and a press (B).

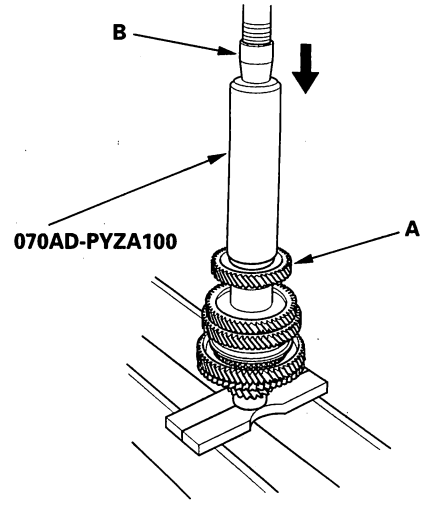

12. Install 5th gear (A) using the special tool and a press (B).

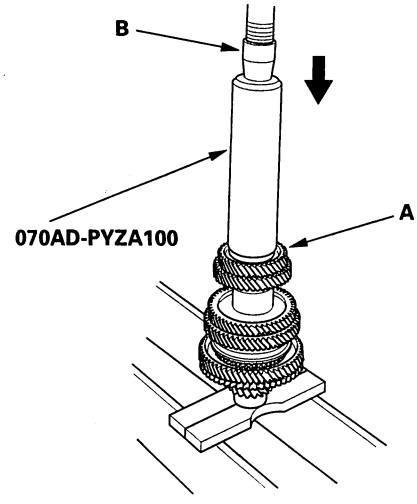

BACK

Protected by AR

13. Install 6th gear (A) using the special tool and a press (B).

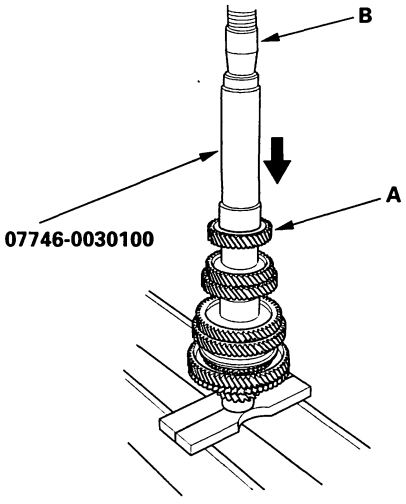

14. Install the 35 mm shim (A) and the old ball bearing (B) using the special tool and a press (C).

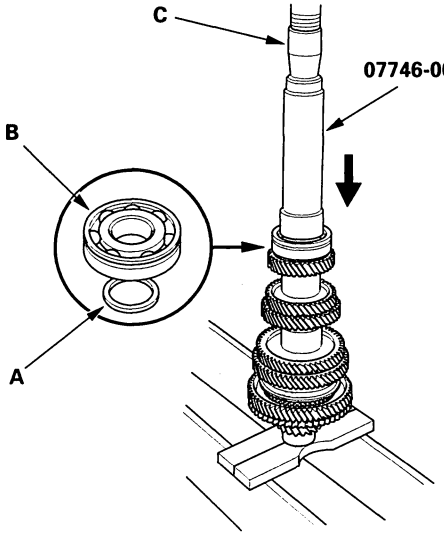

15. Measure the clearance between the old ball bearing (A) and the 35 mm shim (B) with a feeler gauge (C).

Standard: 0.04—0.10 mm (0.0016—0.0039 in.)

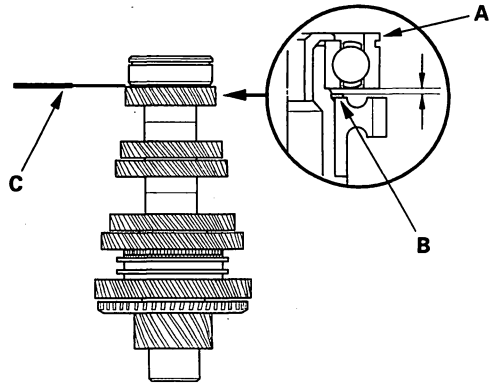

(cont'd)

Protected by AR

Countershaft Reassembly (cont'd)

16. If the clearance is more than the standard, select a new shim from the following table. If the clearance measured in step 15 is within the standard, replace only the ball bearing.

35 mm Shim

	Part Number	Thickness
A	23981-PPP-000	0.87 mm (0.034 in.)
AA	23981-PPP-900	0.91 mm (0.036 in.)
B	23982-PPP-000	0.95 mm (0.037 in.)
AB	23982-PPP-900	0.99 mm (0.039 in.)
C	23983-PPP-000	1.03 mm (0.041 in.)
AC	23983-PPP-900	1.07 mm (0.042 in.)
D	23984-PPP-000	1.11 mm (0.044 in.)
AD	23984-PPP-900	1.15 mm (0.045 in.)
E	23985-PPP-000	1.19 mm (0.047 in.)
AE	23985-PPP-900	1.23 mm (0.048 in.)
F	23986-PPP-000	1.27 mm (0.050 in.)
AF	23986-PPP-900	1.31 mm (0.052 in.)
G	23987-PPP-000	1.35 mm (0.053 in.)
AG	23987-PPP-900	1.39 mm (0.055 in.)
H	23988-PPP-000	1.43 mm (0.056 in.)
AH	23988-PPP-900	1.47 mm (0.058 in.)
J	23989-PPP-000	1.51 mm (0.059 in.)
AJ	23989-PPP-900	1.55 mm (0.061 in.)
K	23990-PPP-000	1.59 mm (0.063 in.)
AK	23990-PPP-900	1.63 mm (0.064 in.)
L	23991-PPP-000	1.67 mm (0.066 in.)
AL	23991-PPP-900	1.71 mm (0.067 in.)
M	23992-PPP-000	1.75 mm (0.069 in.)
AM	23992-PPP-900	1.79 mm (0.070 in.)
N	23993-PPP-000	1.83 mm (0.072 in.)
AN	23993-PPP-900	1.87 mm (0.074 in.)
P	23994-PPP-000	1.91 mm (0.075 in.)
AP	23994-PPP-900	1.95 mm (0.077 in.)
Q	23995-PPP-000	1.99 mm (0.078 in.)

17. Support 6th gear (A) on steel blocks (B), then using a press (C) and an attachment (D), press the countershaft out of the old ball bearing.

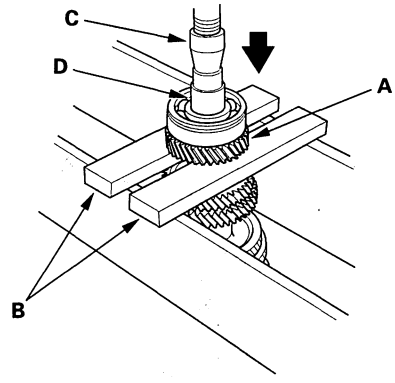

18. If necessary, install the 35 mm shim selected in step 16, then recheck the clearance.

19. Install 6th gear (A) using the special tool and a press (B).

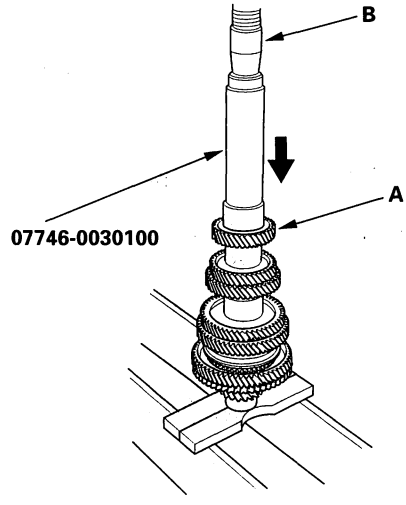

BACK

Protected by AR

20. Install the 35 mm shim (A) and new bearing (B) using the special tool and a press (C).

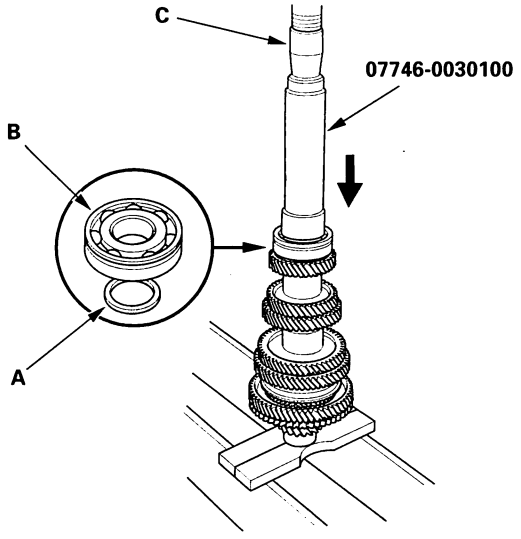

21. Securely clamp the countershaft assembly in a vise with wood blocks (A).

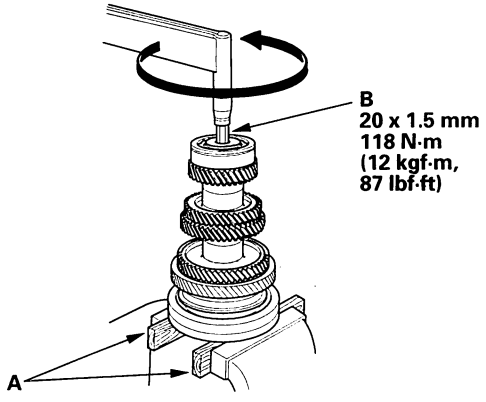

22. Tighten the new 20 mm special bolt (B) (left-hand threads).

Protected by AR

Reverse Idler Gear Shaft Assembly Disassembly/Reassembly

Prior to reassembling, clean all the parts in solvent, dry them, and apply lubricant to any contact surface.

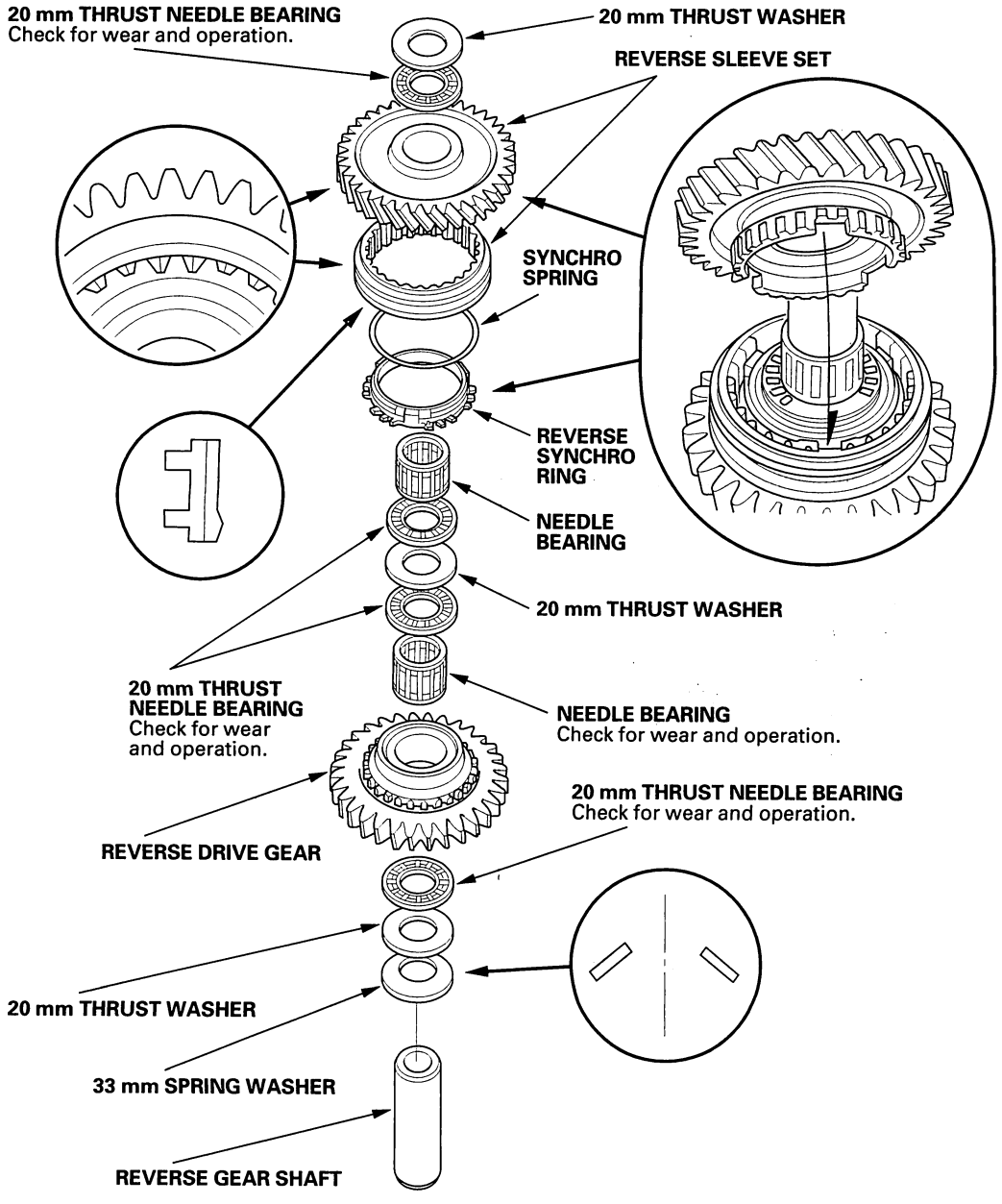

BACK

Protected by AR

Synchro Sleeve and Hub Inspection and Reassembly

1. Inspect gear teeth on all synchro hubs and synchro sleeves for wear (rounded off corners).

2. Install each synchro hub (A) in its mating synchro sleeve (B), and check for freedom of movement. Make sure you match the three sets of longer teeth (C) (120 degrees apart) on the synchro sleeve with the three sets of deeper grooves (D) in the synchro hub. Do not install the synchro sleeve with its longer teeth in the synchro hub slots (E) because it will damage the spring ring.

   NOTE: If replacement is required, always replace the synchro sleeve and synchro hub as a set.

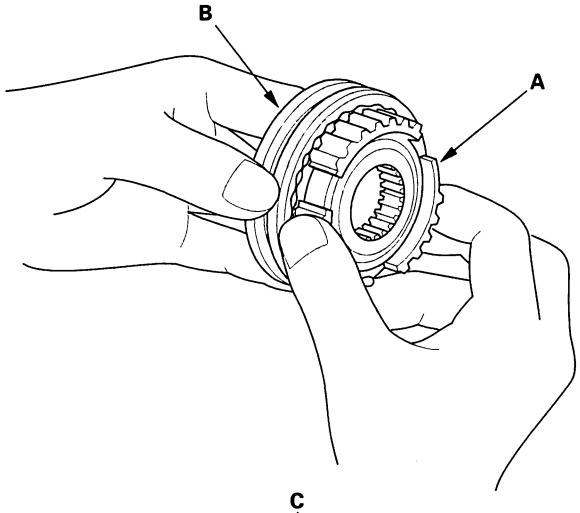

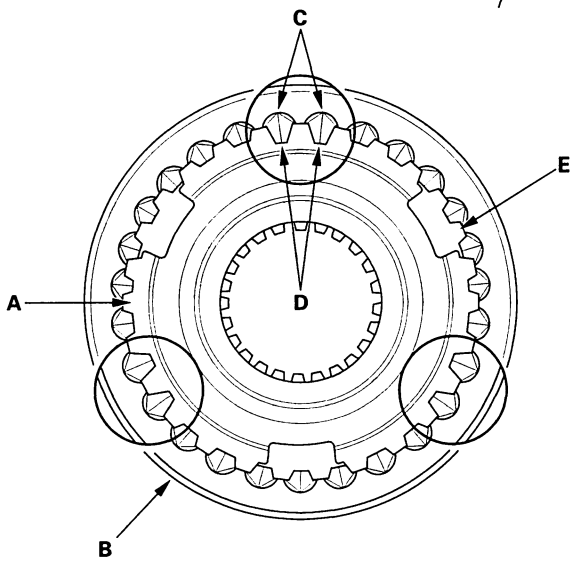

Synchro Ring and Gear Inspection

1. Inspect the inside of each synchro ring (A) for wear. Inspect the teeth (B) on each synchro ring for wear (rounded off).

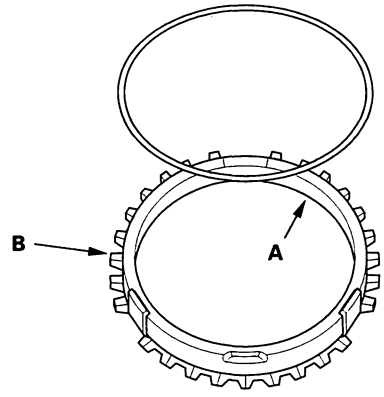

Example of synchro ring teeth

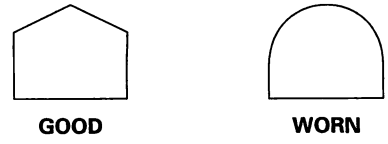

2. Inspect the teeth (C) on each synchro sleeve and matching teeth on each gear for wear (rounded off).

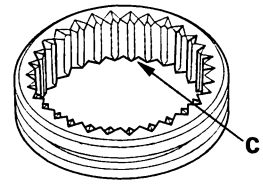

Example of synchro sleeve teeth and gear teeth

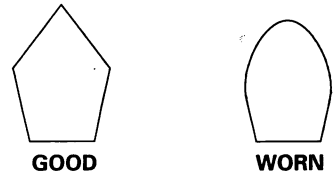

(cont'd)

Protected by AR

Synchro Ring and Gear Inspection (cont'd)

3. Inspect the thrust surface (D) on each gear hub for wear.

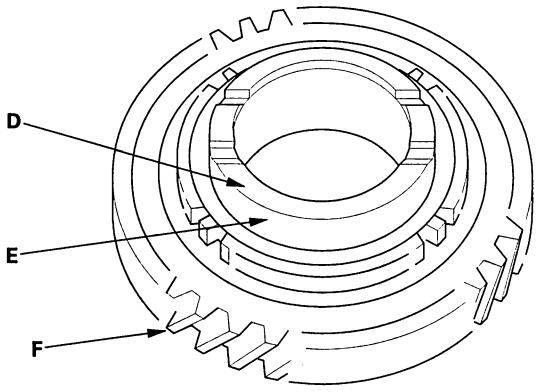

4. Inspect the cone surface (E) on each gear for wear and roughness.

5. Inspect the teeth on all gears (F) for uneven wear, scoring, galling, and cracks.

6. Coat the cone surface of each gear (E) with oil, and place its synchro ring on it. Rotate the synchro ring, making sure that it does not slip.

7. Measure the clearance between each gear (A) and its synchro ring (B) all around the gear. Hold the synchro ring against the gear evenly while measuring the clearance. If the clearance is less than the service limit, replace the synchro ring and gear.

Synchro Ring-to-Gear Clearance
Standard:
5th gear: 0.70—1.49 mm (0.028—0.059 in.)
6th gear: 0.73—1.44 mm (0.029—0.057 in.)
Service Limit: 0.4 mm (0.016 in.)

Double Cone Synchro-to-Gear Clearance
Standard:
①: Outer Synchro Ring (B) to Synchro Cone (C)
0.70—1.19 mm (0.028—0.047 in.)
②: Synchro Cone (C) to Gear (A)
0.50—1.04 mm (0.020—0.041 in.)
③: Outer Synchro Ring (B) to Gear (A)
0.95—1.68 mm (0.037—0.066 in.)
Service Limit:
①: 0.3 mm (0.012 in.)
②: 0.3 mm (0.012 in.)
③: 0.6 mm (0.024 in.)

Triple Cone Synchro-to-Gear Clearance
Standard:
①: Outer Synchro Ring (B) to Synchro Cone (C)
1st gear: 0.70—1.19 mm (0.028—0.047 in.)
2nd gear: 0.70—1.19 mm (0.028—0.047 in.)
②: Synchro Cone (C) to Gear (A)
1st gear: 0.45—1.14 mm (0.018—0.045 in.)
2nd gear: 0.60—1.88 mm (0.024—0.074 in.)
③: Outer Synchro Ring (B) to Gear (A)
1st gear: 1.12—1.68 mm (0.044—0.066 in.)
2nd gear: 0.87—1.82 mm (0.034—0.072 in.)
Service Limit:
①: 0.3 mm (0.012 in.)
②: 0.3 mm (0.012 in.)
③: 0.6 mm (0.024 in.)

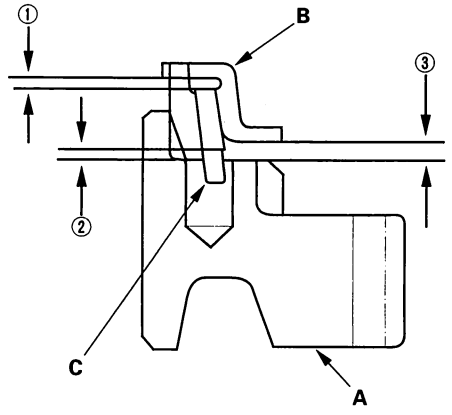

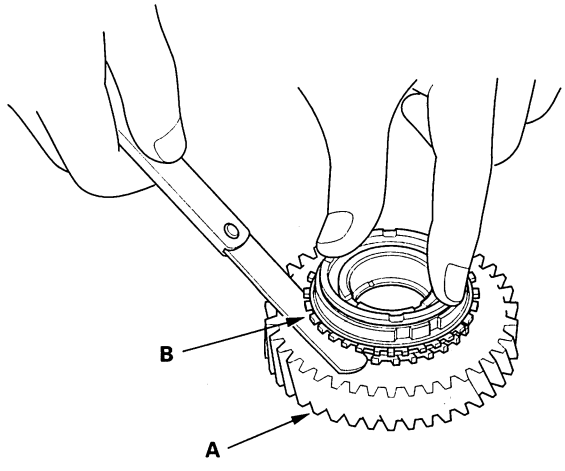

BACK

Protected by AR

Mainshaft Oil Seal Replacement

Special Tools Required
- Attachment, 42 x 47 mm 07746-0010300
- Driver 07749-0010000

1. Remove the mainshaft assembly.
2. Remove the oil seal from the clutch housing. Be careful when removing the seal to avoid damaging the clutch housing.

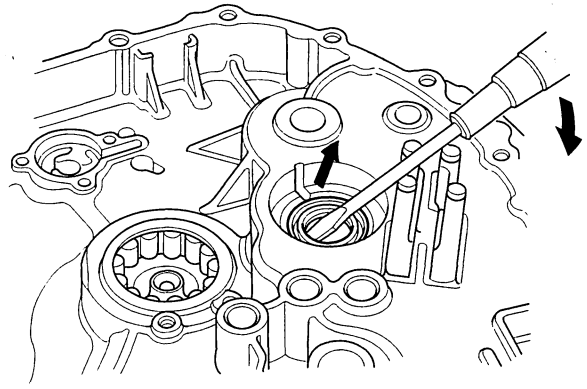

3. Drive in the new oil seal from the transmission side using the special tools.

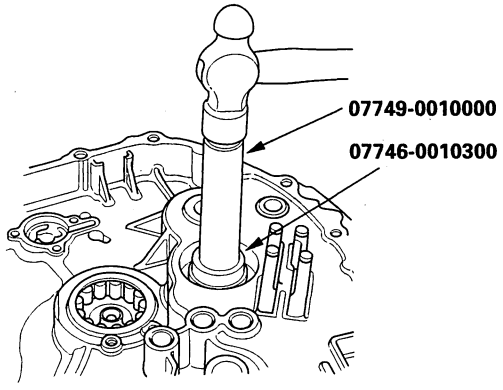

Countershaft Bearing Replacement

Special Tools Required
- Adjustable bearing puller, 45—75 mm 07YAC-0010100
- Attachment, 72 x 75 mm 07746-0010600
- Driver 07749-0010000

1. Remove the bearing set plate (A) from the clutch housing (B).

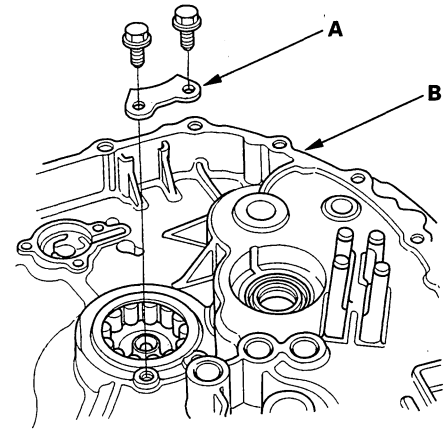

2. Remove the needle bearing (A) from the clutch housing (B) using the special tool and a commercially available 3/8"—16 slide hammer (C).

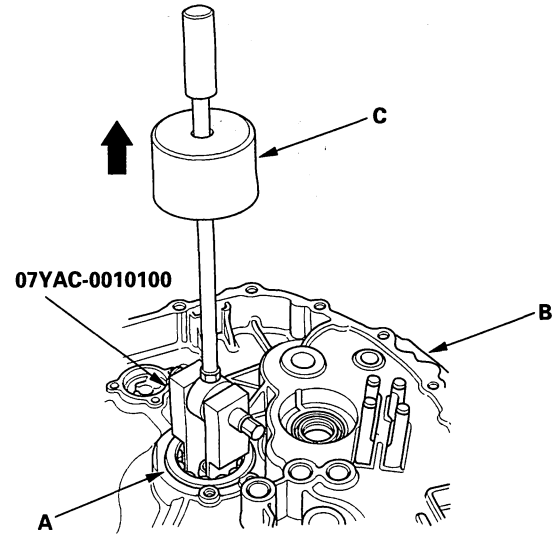

(cont'd)

Protected by AR

Countershaft Bearing Replacement (cont'd)

3. Install the new needle bearing using the special tool.

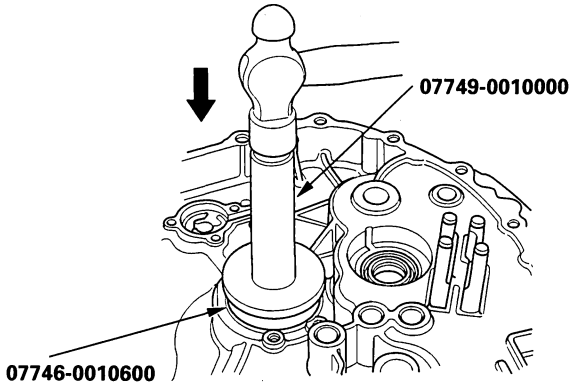

4. Install the bearing set plate (A) with the bolts (B).

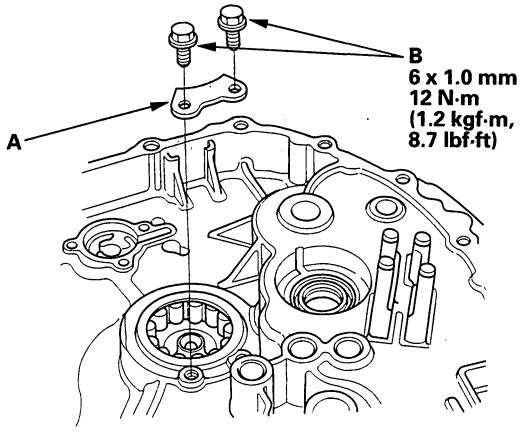

Mainshaft Thrust Clearance Adjustment

Special Tools Required
- Mainshaft holder 07GAJ-PG20110
- Mainshaft base 07GAJ-PG20130

NOTE:
- Carry out the measurement at normal room temperature.
- Clean all the parts thoroughly before installation.

1. Remove the 82 mm shim (A) from the transmission housing (B).

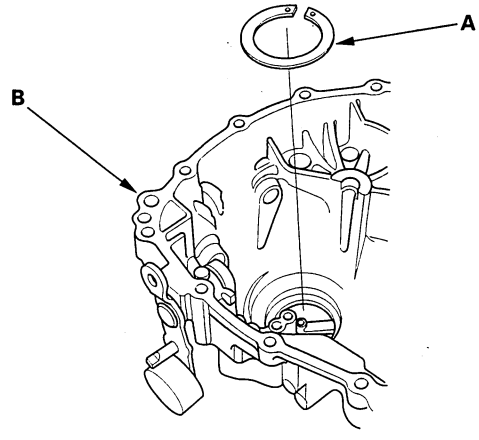

2. Install the ball bearing (A), 3rd/4th synchro hub (B), distance collar (C), 5th/6th synchro hub (D), distance collar (E), and ball bearing (F) on the mainshaft (G), then install the assembled mainshaft in the transmission housing (H).

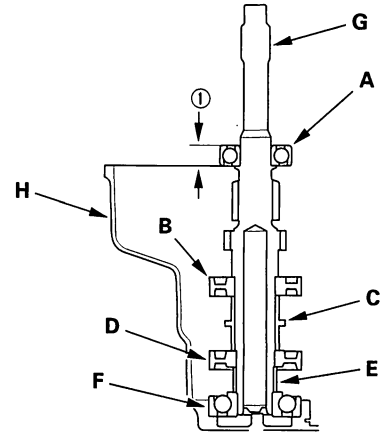

3. Measure distance ① between the end of the transmission housing and ball bearing with a straight edge and a depth gauge. Measure at three locations, and average the reading.

BACK

Protected by AR

4. Measure distance ② (the depth of the clutch housing) with a straight edge and a depth gauge. Measure at three locations, and average the reading.

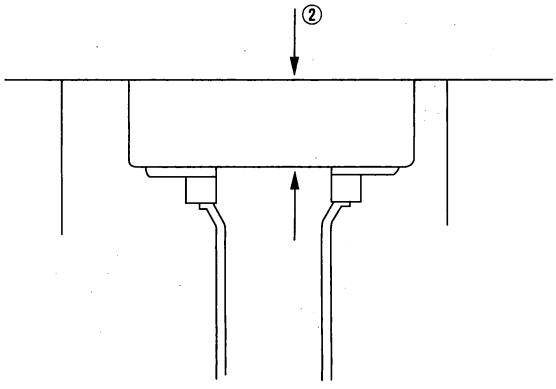

Shim Selection Formula

5. Select the proper 82 mm shim from the chart. Follow the example below, and use the measurements you made in steps 3 and 4.

(Basic Formula)
② − ① − (0.85 + 0.14) = shim thickness (maximum)
② − ① − (0.85 + 0.21) = shim thickness (minimum)

- Subtract distance ② (step 4) from distance ① (step 3).
- 0.85 mm (0.033 in.): Spring washer, a dimension in the installation.
- 0.14 mm (0.006 in.): Minimum thrust clearance.
- 0.21 mm (0.008 in.): Maximum thrust clearance.

(For example)
21.04 − 17.97 − (0.85 + 0.14) = 2.08 mm (0.082 in.)
21.04 − 17.97 − (0.85 + 0.21) = 2.01 mm (0.079 in.)

Take the middle value 2.04 mm (0.080 in.) of the minimum value and the maximum value, and select the 0.93 mm (0.037 in.) and 1.11 mm (0.044 in.) shims.

NOTE: You may need to select two thicknesses of the 82 mm shim from the chart.

82 mm Shim

	Part Number	Thickness
A	23931-PR8-F00	0.60 mm (0.024 in.)
B	23932-PR8-F00	0.63 mm (0.025 in.)
C	23933-PR8-F00	0.66 mm (0.026 in.)
D	23934-PR8-F00	0.69 mm (0.027 in.)
E	23935-PR8-F00	0.72 mm (0.028 in.)
F	23936-PR8-F00	0.75 mm (0.030 in.)
G	23937-PR8-F00	0.78 mm (0.031 in.)
H	23938-PR8-F00	0.81 mm (0.032 in.)
I	23939-PR8-F00	0.84 mm (0.033 in.)
J	23940-PR8-F00	0.87 mm (0.034 in.)
K	23941-PR8-F00	0.90 mm (0.035 in.)
L	23942-PR8-F00	0.93 mm (0.037 in.)
M	23943-PR8-F00	0.96 mm (0.038 in.)
N	23944-PR8-F00	0.99 mm (0.039 in.)
O	23945-PR8-F00	1.02 mm (0.040 in.)
P	23946-PR8-F00	1.05 mm (0.041 in.)
Q	23947-PR8-F00	1.08 mm (0.043 in.)
R	23948-PR8-F00	1.11 mm (0.044 in.)
S	23949-PR8-F00	1.14 mm (0.045 in.)
T	23950-PR8-F00	1.17 mm (0.046 in.)
U	23951-PR8-F00	1.20 mm (0.047 in.)

(cont'd)

Protected by AR

Mainshaft Thrust Clearance Adjustment (cont'd)

6. Install the 82 mm shim (A) selected in the transmission housing (B).

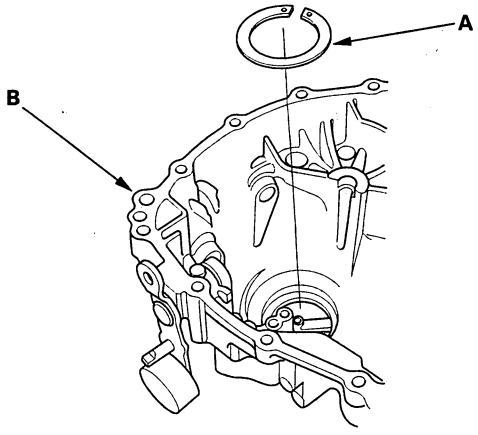

7. Thoroughly clean the spring washer (A) before installing it on the clutch housing (B). Note the installation direction of the spring washer (see page 13-28).

8. Install the mainshaft in the clutch housing.

9. Place the transmission housing over the mainshaft and onto the clutch housing.

10. Tighten the clutch and transmission housings with several 10 mm bolts.

    NOTE: It is not necessary to use sealing agent between the housings.

11. Lightly tap on the mainshaft with a plastic hammer.

12. Attach the special tool to the mainshaft as follows:

    - Back-out the mainshaft holder bolt (A), and loosen the two hex bolts (B).
    - Fit the holder over the mainshaft so its lip is towards the transmission.
    - Align the mainshaft holder lip around the groove at the inside of the mainshaft splines, then tighten the hex bolts.

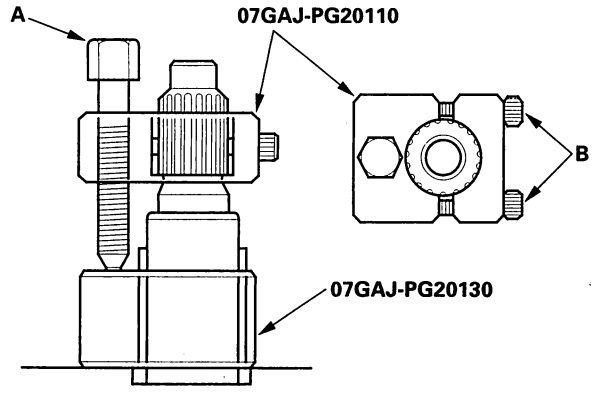

13. Fully seat the mainshaft by tapping on its end with a plastic hammer.

14. Thread in the mainshaft holder bolt until it just contacts the wide surface of the mainshaft base.

BACK

Protected by AR

15. Zero a dial gauge (A) on the end of the mainshaft.

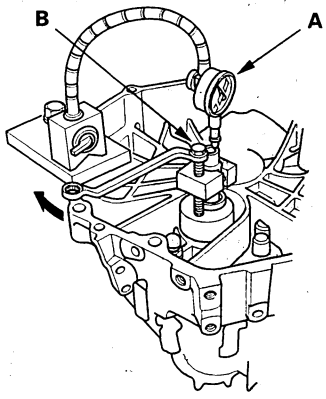

16. Turn the mainshaft holder bolt (B) clockwise; stop turning when the dial gauge has reached its maximum movement. The reading on the dial gauge is the amount of mainshaft end play.

    NOTE: Do not turn the mainshaft holder bolt more than 60 degrees after the needle of the dial gauge stops moving. Applying more pressure with the mainshaft holder bolt may damage the transmission.

17. If the reading is within the standard, the clearance is correct. If the reading is not within the standard, recheck the shim thickness.

    Standard: 0.14—0.21 mm (0.006—0.008 in.)

NOTE: Prior to reassembling, clean all parts in solvent, dry them, and apply lubricant to all contact surfaces.

1. Press the new dust seal (A) into the transmission housing surface, then install the shift lever (B), shift arm (C), 8 mm spring washer (D), and 8 mm special bolt (E).

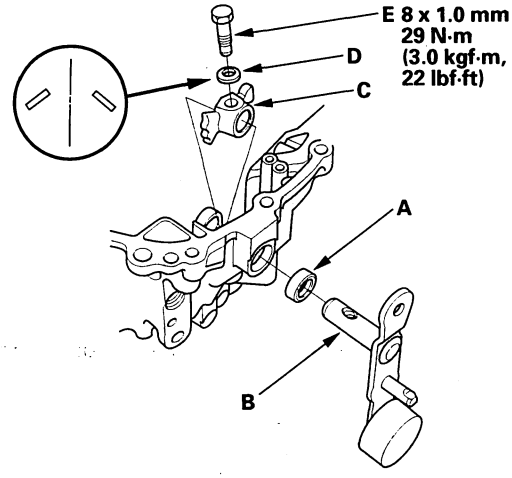

2. Select the proper size 82 mm shim (A) according to the measurements made during the Mainshaft Thrust Clearance Adjustment (see page 13-62). Install it into the transmission housing (B).

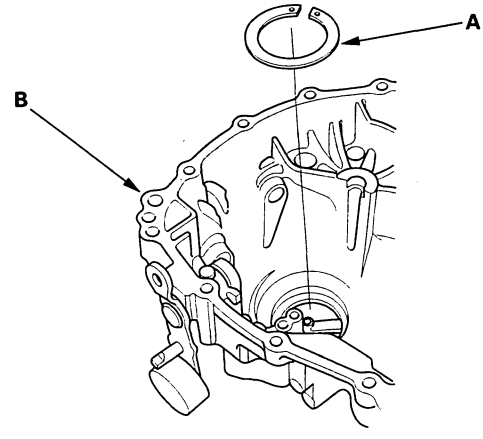

(cont'd)

Protected by AR

Transmission Reassembly (cont'd)

3. Install the steel ball (A), relief valve spring (B), oil pump outer rotor (C), oil pump inner rotor (D), and oil pump plate (E).

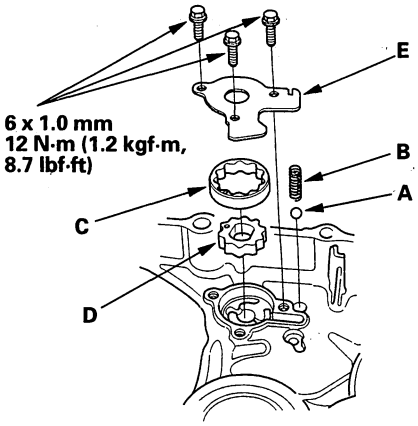

4. Install the differential assembly (A) and oil pump shaft (B).

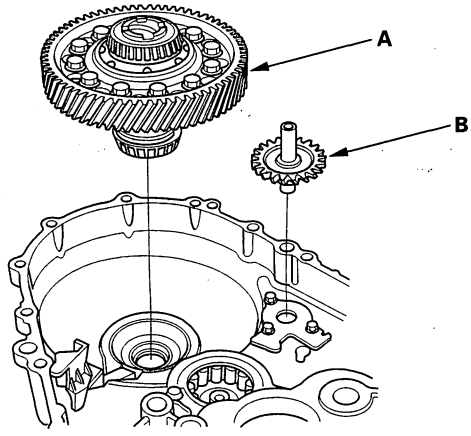

5. Install the 64 mm spring washer (A). Note the installation direction of the 64 mm spring washer.

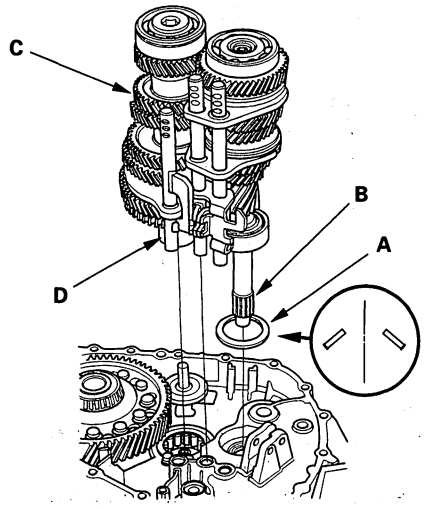

6. Apply tape to the mainshaft splines (B) to protect the seal. Install the mainshaft and countershaft (C) into the shift forks (D) as an assembly.

7. Press the new dust seal (A) into the clutch housing surface, then install the select lever (B), select arm (C), new 5 mm spring pin (D), and new 3 mm spring pin (E).

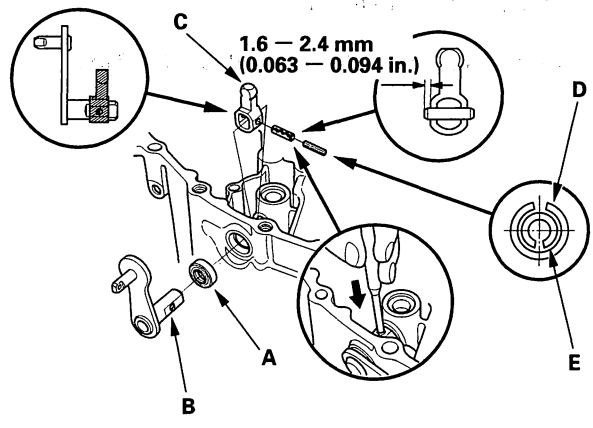

BACK

Protected by AR

8. Set the select return spring (A), pin (B), and interlock (C) as shown.

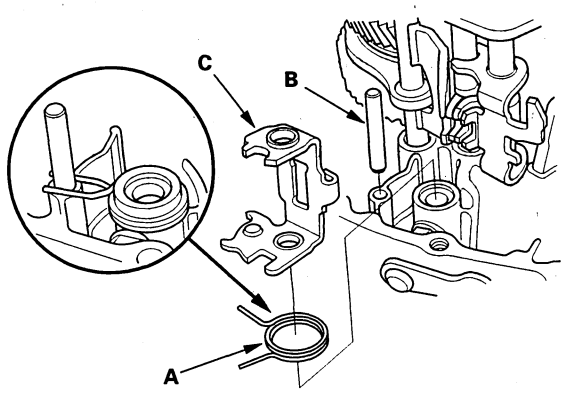

9. Install the shift piece (A) and shift piece shaft (B).

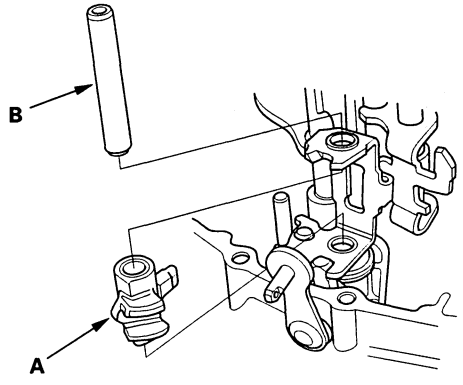

10. Install the 33 mm spring washer (A). Note the installation direction of the spring washer.

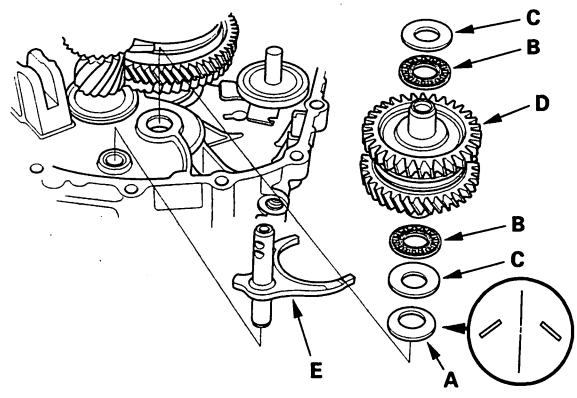

11. Install the 20 mm thrust needle bearing (B), 20 mm thrust washers (C), reverse idler gear shaft assembly (D), and reverse shift fork (E) as an assembly.

12. Slide the reverse idler gear shaft assembly (A) on the rib (B) of the clutch housing, then install it into the hole (C) of the clutch housing.

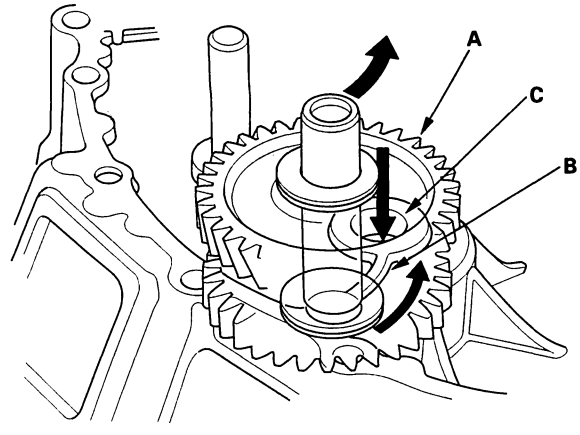

(cont'd)

Protected by AR

Transmission Reassembly (cont'd)

13. Install the reverse shift lever (A), and pin (B).

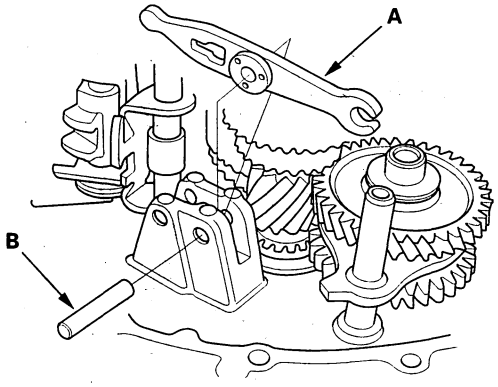

14. Install the oil guide pipe A, oil guide pipe (B), and magnet (C).

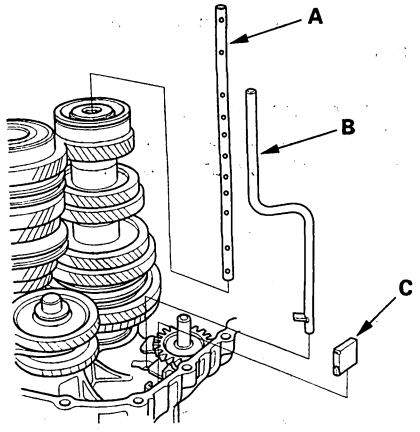

15. Remove any dirt or oil from the transmission housing sealing surface. Apply liquid gasket (P/N 08718-0002) to the sealing surface. Make sure you seal the entire circumference of the bolt holes to prevent oil leakage.

    NOTE: Do not install components if 4 minutes or more have passed after applying the liquid gasket. Instead, remove the old residue and reapply the liquid gasket.

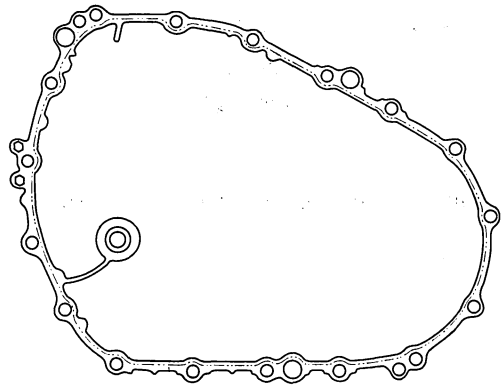

BACK

Protected by AR

16. Install the 14 x 20 mm dowel pins (A).

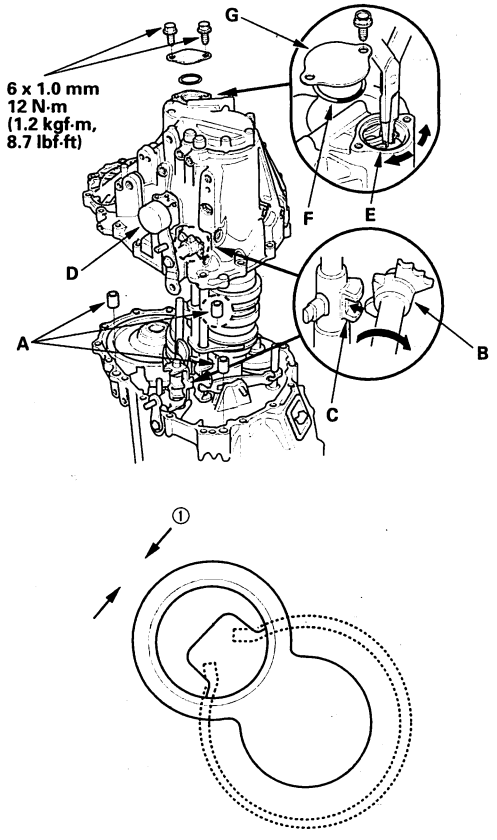

17. Lower the transmission housing, then place the shift arm (B) in the groove of the shift piece (C) by turning the change lever (D).

18. While expanding the 75 mm snap ring (E) of the countershaft ball bearing with snap ring pliers, push the transmission housing down to start the countershaft ball bearing through the snap ring. Then release the pliers, and push down the housing until it bottoms and the snap ring snaps in place in the counter shaft ball bearing snap ring groove.

19. Make sure the 75 mm snap ring is securely seated in the groove of the countershaft bearing.

Dimension ① as installed: 9.91—11.52 mm (0.390—0.454 in.)

20. Install the new 37.7 mm O-ring (F) and transmission case cap (G).

NOTE: Check the operation of the change lever.

21. Install the transmission hanger (A), transmission hanger (B), 8 mm flange bolt (C), and the 10 mm flange bolts, finger-tight.

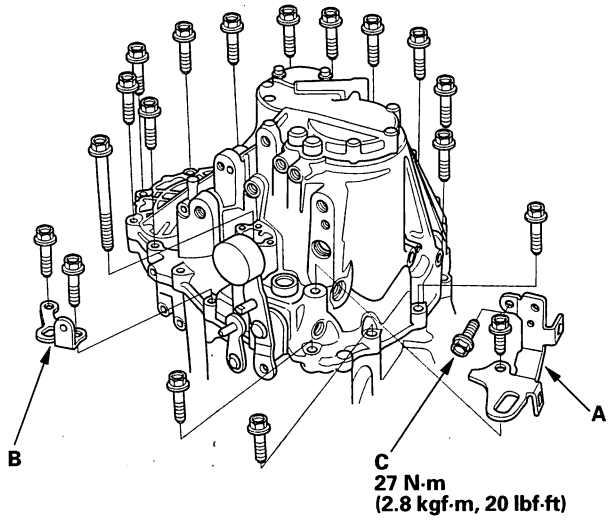

22. Tighten the 10 mm flange bolts in a crisscross pattern in several steps.

10 x 1.25 mm: 44 N·m (4.5 kgf·m, 33 lbf·ft)

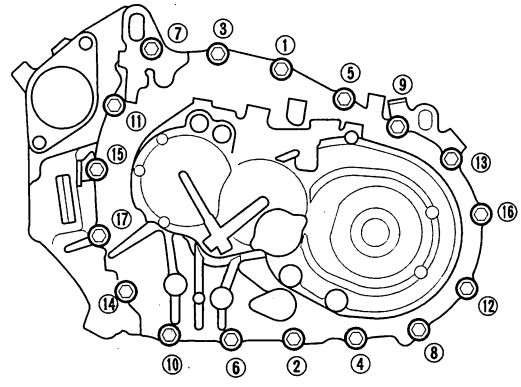

(cont'd)

Protected by AR

Transmission Reassembly (cont'd)

23. Install the oil check bolt (A), new 6 mm washer (B), drain plug (C), and new 14 mm washer (D).

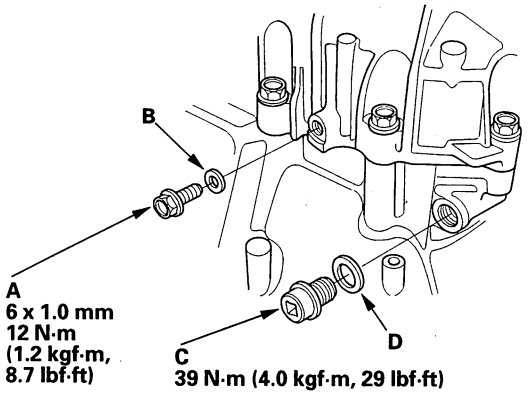

24. Apply liquid gasket (P/N 08718-0002) to the set screws (A), then install the set screws, 22 mm spring (B), 27.4 mm spring (C), steel balls (D), output shaft (countershaft) speed sensor (E), input shaft (mainshaft) speed sensor (F), and new O-rings (G).

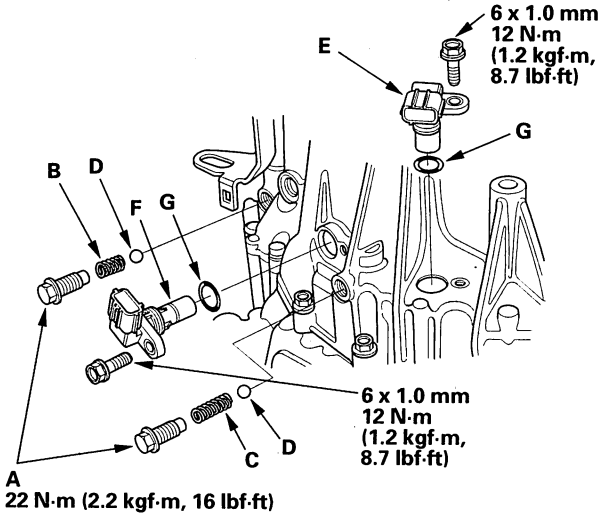

25. Apply liquid gasket (P/N 08718-0002) to the set screws (A), then install the set screws, 22.0 mm spring (B), 26.1 mm spring (C), 27.4 mm springs (D), steel balls (E), oil filler plug (F), washer (G), and clutch line bracket (H).

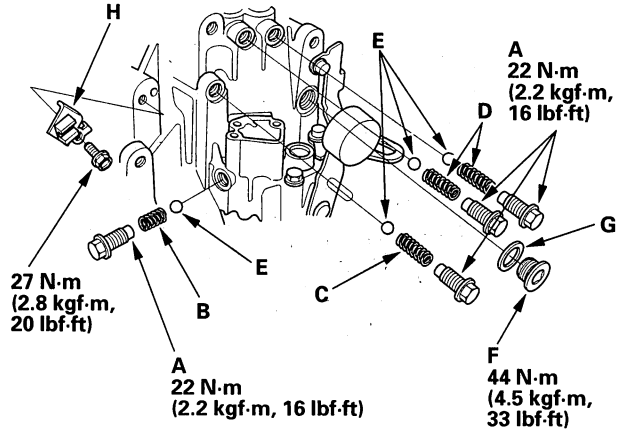

26. Remove any dirt or oil from the reverse lockout solenoid sealing surface. Apply liquid gasket (P/N 08718-0002) to the sealing surface.

NOTE: Do not install components if 4 minutes or more have passed after applying the liquid gasket. Instead, remove the old residue and reapply the liquid gasket.

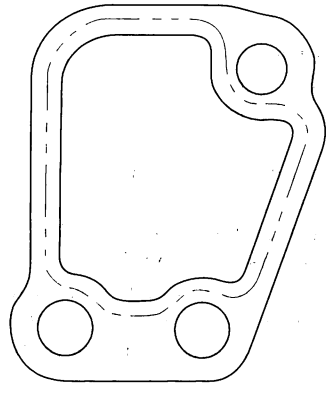

BACK

Protected by AR

27. Install the transmission harness stay (A) and reverse lockout solenoid (B).

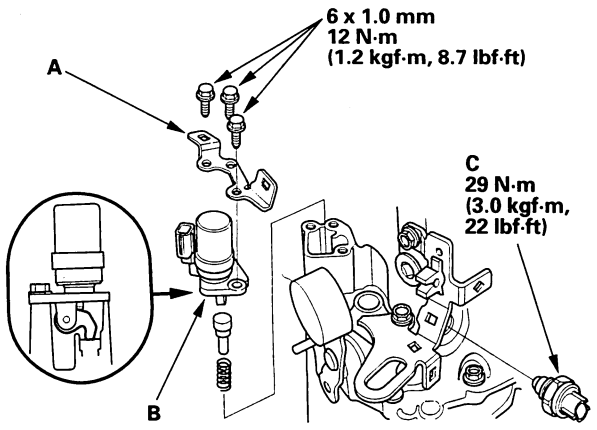

28. Apply liquid gasket (P/N 08718-0002) to the threads of the back-up light switch (C), and install the switch in the transmission housing.

29. Install the strainer cover (A), new O-ring (B), strainer set spring (C), and oil pump strainer (D).

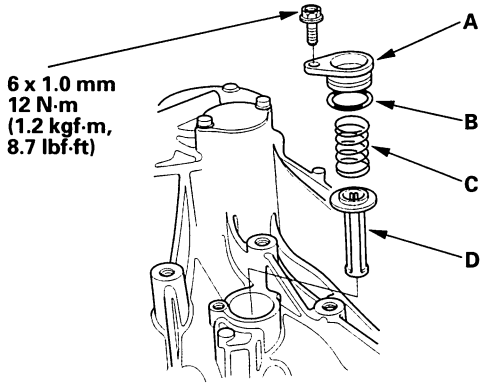

Protected by AR

Gearshift Mechanism Replacement

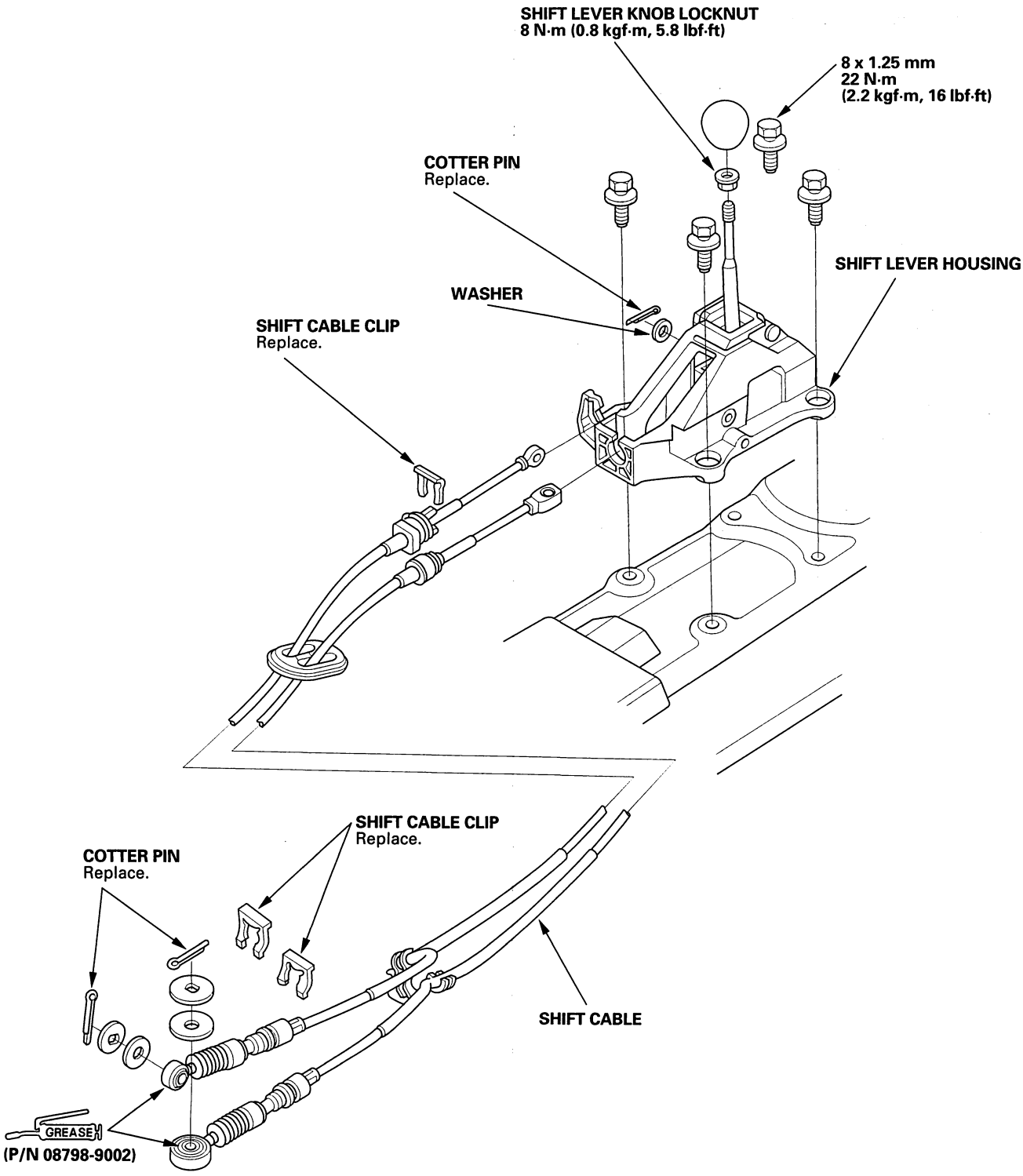

BACK

Protected by AR

Component Location Index

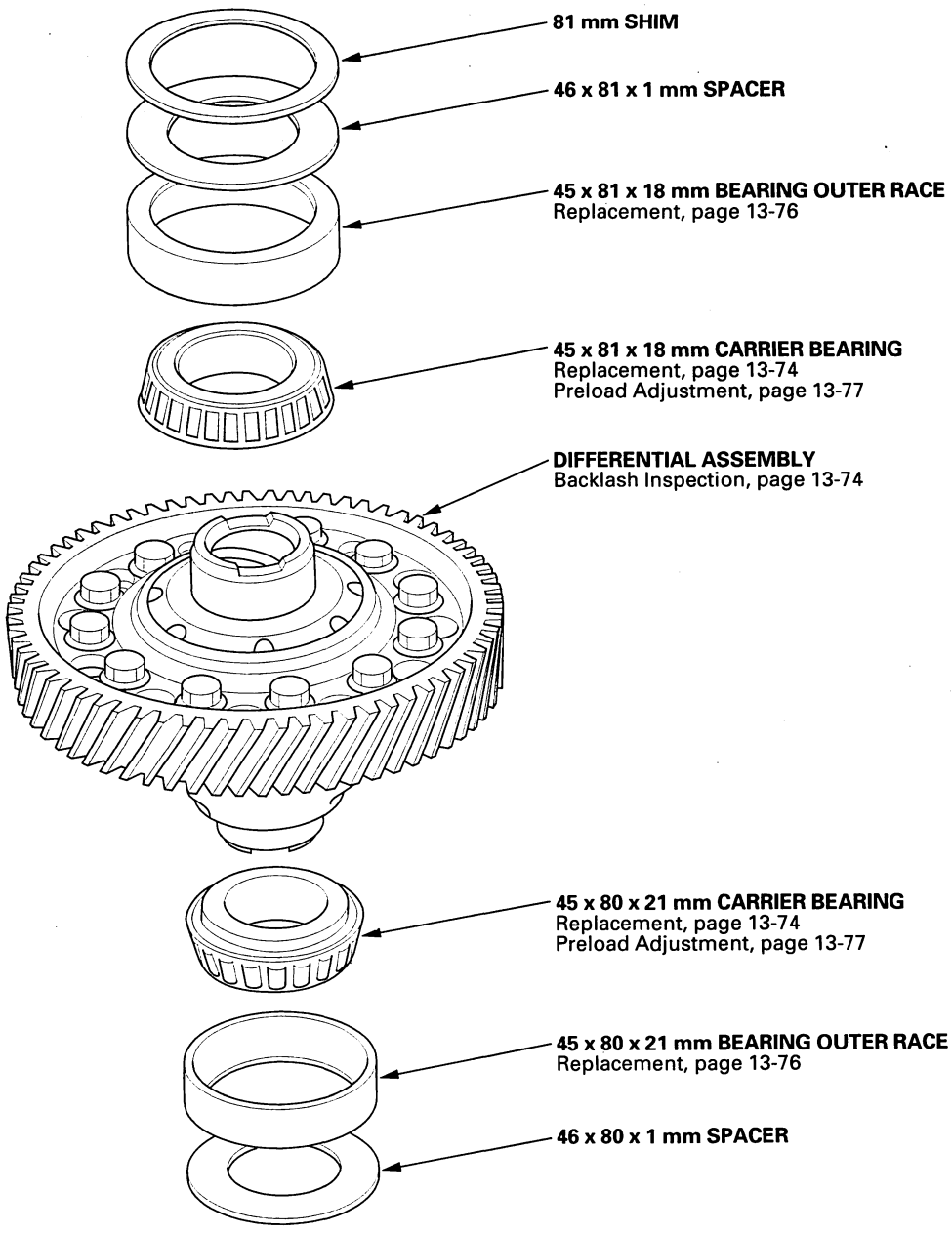

Protected by AR

Backlash Inspection

1. Install the driveshaft and intermediate shaft into the differential assembly.
2. Carefully clamp the driveshaft (A) in a vise (B).

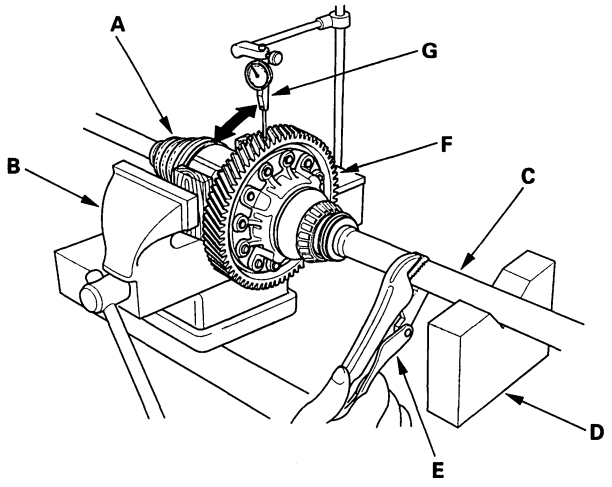

3. Place the intermediate shaft (C) on a V-block (D), then fix the intermediate shaft using a vise or equivalent (E).
4. Measure the backlash of the final driven gear (F) with a dial indicator (G). If the backlash is not within the standard, replace the differential carrier.

Standard (New): 0.4—1.3 mm (0.016—0.051 in.)

Carrier Bearing Replacement

Special Tools Required
Installer, 46 mm I.D. 07PAF-0030100

1. Check the carrier bearings for wear and rough rotation. If they rotate smoothly and their rollers show no signs of wear, the bearings are OK.
2. Remove the carrier bearing (A) with a commercially-available bearing puller (B).

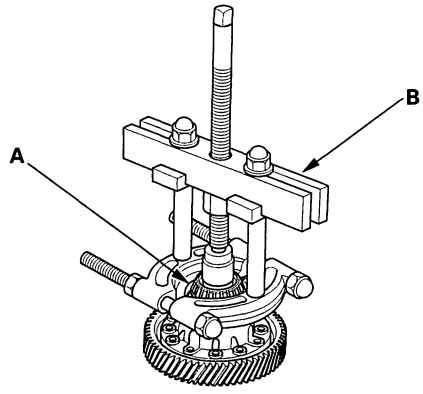

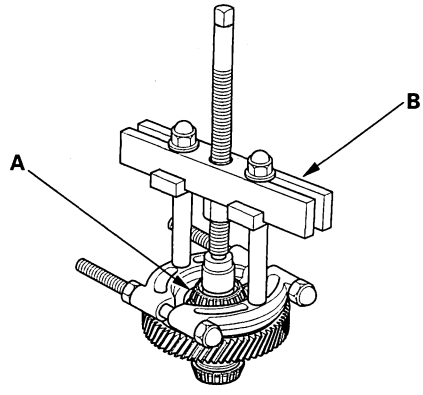

BACK

Protected by AR

3. Install the new bearings with the special tool and a press. Press each bearing on until it bottoms out. There should be no clearance between the bearings and the carrier.

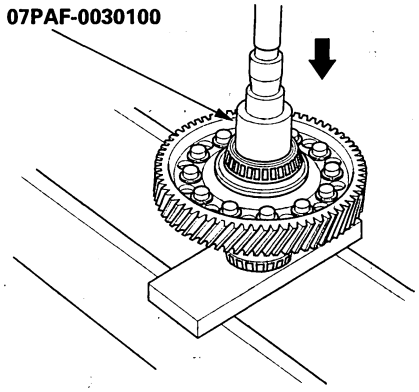

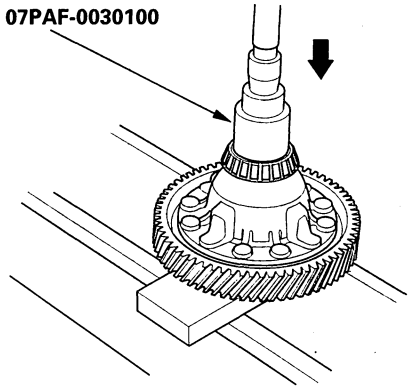

Oil Seal Replacement

Special Tools Required
- Driver 07749-0010000
- Oil seal driver attachment 07NAD-P20A100

1. Remove the differential assembly.

2. Remove the oil seal (A) from the transmission housing (B).

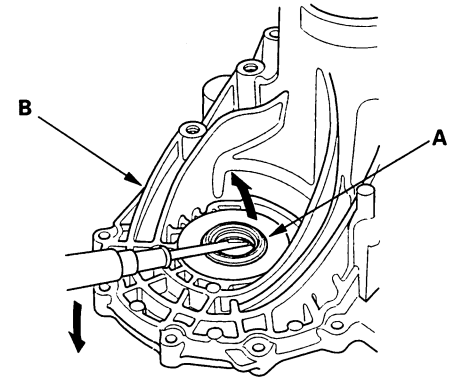

3. Remove the oil seal (A) from the clutch housing (B).

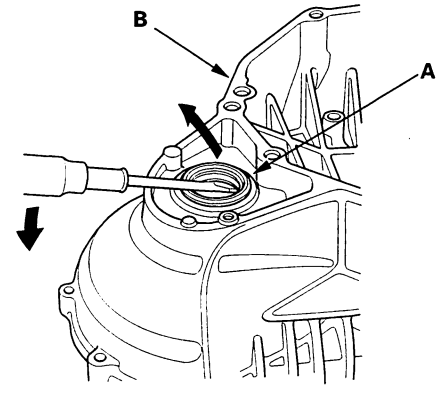

(cont'd)

Protected by AR

Oil Seal Replacement (cont'd)

4. Install the new oil seal in the transmission housing with the special tools.

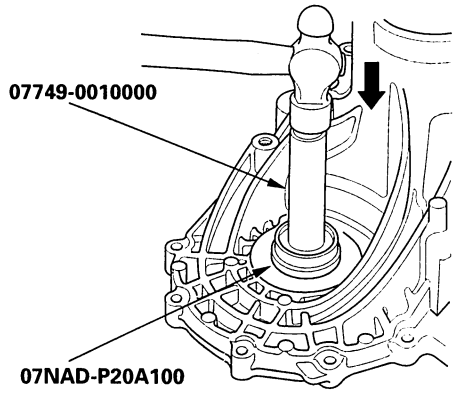

5. Install the new oil seal in the clutch housing with the special tools.

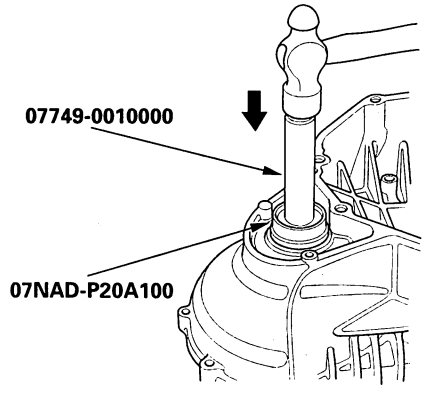

Bearing Outer Race Replacement

Special Tools Required
- Driver 07749-0010000
- Attachment, 78 x 80 mm 07NAD-PX40100

NOTE:
- The bearing outer race and tapered roller bearing should be replaced as a set.
- Inspect and adjust the tapered roller bearing preload whenever the tapered roller bearing is replaced.

1. Remove the oil seals from the transmission housing and clutch housing (see page 13-75).

2. Remove the bearing outer race, spacer, and 81 mm shim from the transmission housing and clutch housing by heating the housing to about 212 °F (100 °C) with a heat gun. Do not reuse the thrust shim if the outer race was driven out.

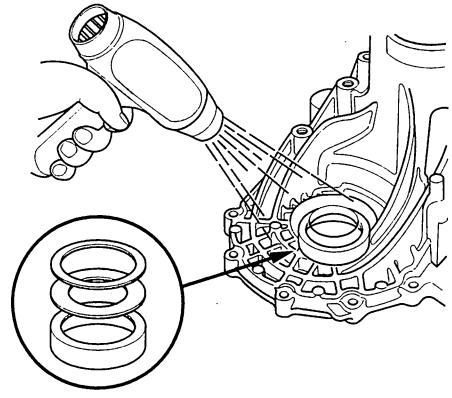

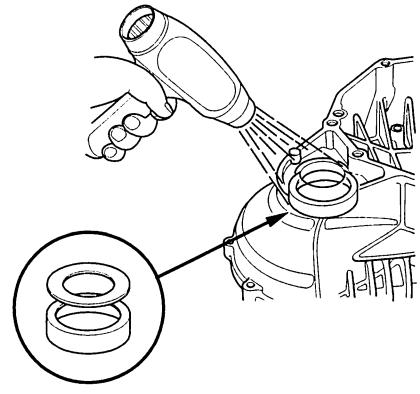

BACK

Protected by AR

3. Install the 81 mm shim (A), spacer (B), and bearing outer race (C) into the transmission housing (D) using the special tools.

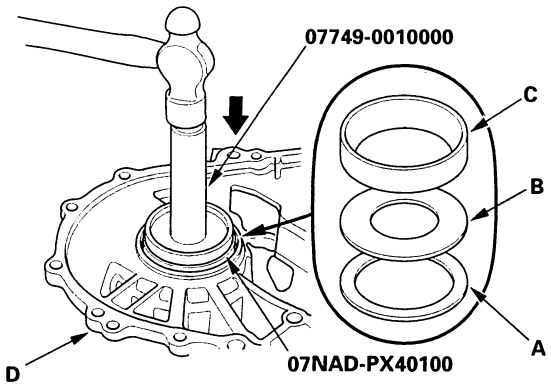

4. Install the spacer (A), and bearing outer race (B) into the clutch housing (C) using the special tools.

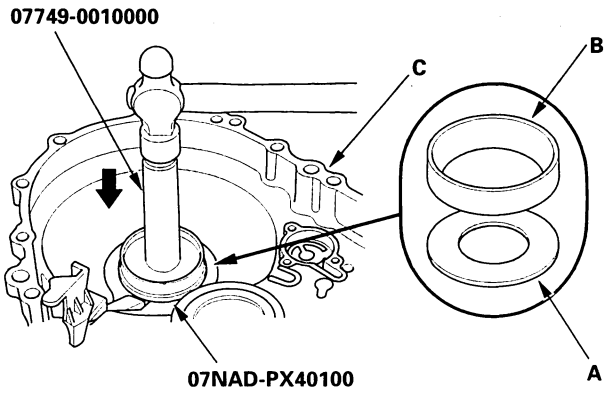

5. Install the oil seals into the transmission housing (see step 4 on page 13-76) and clutch housing (see step 5 on page 13-76).

Special Tools Required
- Driver 07749-0010000
- Attachment, 78 x 80 mm 07NAD-PX40100
- Preload inspection tool 07XAJ-S0KA100

If any of the items listed were replaced, the carrier bearing preload must be adjusted.

- Transmission housing
- Clutch housing
- Differential carrier
- Spacer
- Carrier bearing and outer race

1. Remove the oil seals from the transmission housing and clutch housing (see page 13-75).

2. If you replaced the carrier bearing on the transmission housing side of the carrier, remove and discard the bearing outer race, Heat up the transmission housing to about 212 °F (100 °C) with a heat gun (A), then remove the bearing outer race (B), spacer (C), and 81 mm shim (D). Do not heat the housing in excess of 212 °F (100 °C).

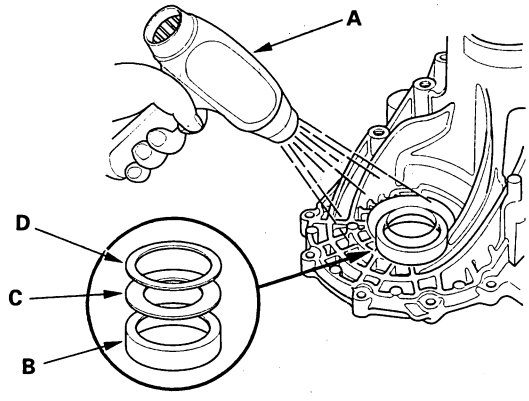

(cont'd)

Protected by AR

Carrier Bearing Preload Adjustment (cont'd)

3. If you replaced the carrier bearing on the clutch housing side of the carrier, remove and discard the bearing outer race, Heat up the clutch housing to about 212 °F (100 °C) with a heat gun (A), then remove the bearing outer race (B) and spacer (C). Do not heat the housing in excess of 212 °F (100 °C).

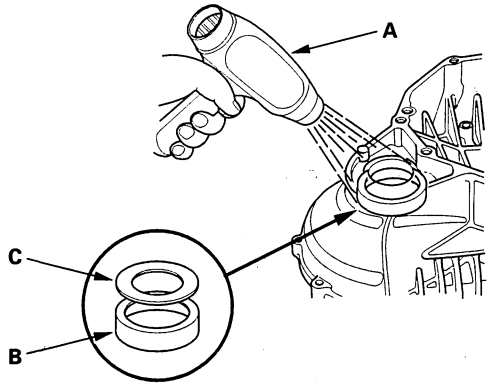

4. Install the 81 mm shim (A), spacer (B), and bearing outer race (C) in the transmission housing by using the special tools. (Use a new race if you replaced the bearing.) There should be no space between the race, spacer, and housing.

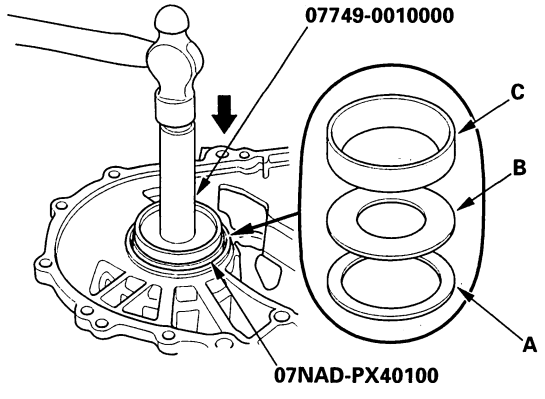

5. If you removed the bearing outer race from the clutch housing, use the special tools to install a new bearing outer race (A) and spacer (B). There should be no space between the race, spacer, and housing.

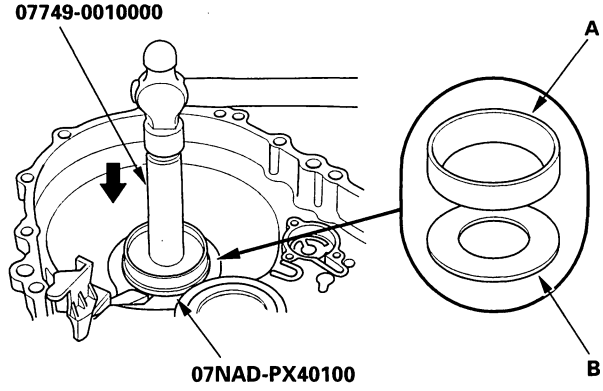

6. With the mainshaft and countershaft removed, install the differential assembly, and bolt the transmission and clutch housing together. Tighten the bolts to 44 N·m (4.5 kgf·m, 33 lbf·ft).

   NOTE: It is not necessary to use sealing agent between the housings for this adjustment.

7. Rotate the differential assembly in both directions to seat the tapered roller bearings.

BACK

Protected by AR

8. At normal room temperature, measure the starting torque of the differential assembly by rotating it in both directions with the special tool and a torque wrench (A).

Standard: 3.43—4.51 N·m (35—46 kgf·cm, 30—40 lbf·in.)

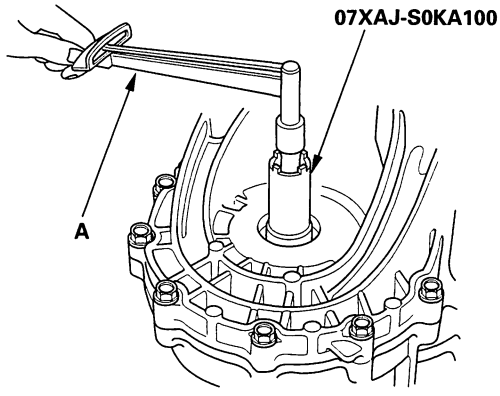

9. If the carrier bearing preload is not within the standard, select a 81 mm thrust shim that will provide the correct preload:

- Compare the bearing preload you got on the first try with the specified preload of 3.43—4.51 N·m (35—46 kgf·cm, 30—40 lbf·in.).
- If the preload you measure was less than specified, subtract it from the specified preload.
- If the preload you measure was more than specified, subtract it from the specified preload.

For example, with a 2.50 mm (0.098 in.) thrust shim:

① specified 4.51 N·m (46 kgf·cm, 40 lbf·in.)
— you got less 2.55 N·m (26 kgf·cm, 23 lbf·in.)
1.96 N·m (20 kgf·cm, 17 lbf·in.) less

② you got more 5.29 N·m (54 kgf·cm, 47 lbf·in.)
— specified 4.51 N·m (46 kgf·cm, 40 lbf·in.)
0.78 N·m (8 kgf·cm, 7 lbf·in.) more

NOTE: Each shim size up or down from the standard makes about 0.3—0.4 N·m (3—4 kgf·cm, 2.6—3.5 lbf·in.) difference in preload.

In example ①, your preload was 1.96 N·m (20 kgf·cm, 17 lbf·in.) less than the standard, so you need a thrust shim five sizes thicker than the standard (try the 2.65 mm (0.104 in.) 81 mm thrust shim, and recheck).

In example ②, your preload was 0.78 N·m (8 kgf·cm, 7 lbf·in.) more than the standard, so you need a thrust shim two sizes thinner (try the 2.44 mm (0.096 in.) 81 mm thrust shim, and recheck).

81 mm Shim

	Part Number	Thickness
A	41438-PYZ-000	2.05 mm (0.081 in.)
B	41439-PYZ-000	2.08 mm (0.082 in.)
C	41440-PYZ-000	2.11 mm (0.083 in.)
D	41441-PYZ-000	2.14 mm (0.084 in.)
E	41442-PYZ-000	2.17 mm (0.085 in.)
F	41443-PYZ-000	2.20 mm (0.087 in.)
G	41444-PYZ-000	2.23 mm (0.088 in.)
H	41445-PYZ-000	2.26 mm (0.089 in.)
J	41446-PYZ-000	2.29 mm (0.090 in.)
K	41447-PYZ-000	2.32 mm (0.091 in.)
L	41448-PYZ-000	2.35 mm (0.093 in.)
M	41449-PYZ-000	2.38 mm (0.094 in.)
N	41450-PYZ-000	2.41 mm (0.095 in.)
P	41451-PYZ-000	2.44 mm (0.096 in.)
Q	41452-PYZ-000	2.47 mm (0.097 in.)
R	41453-PYZ-000	2.50 mm (0.098 in.)
S	41454-PYZ-000	2.53 mm (0.100 in.)
T	41455-PYZ-000	2.56 mm (0.101 in.)
U	41456-PYZ-000	2.59 mm (0.102 in.)
V	41457-PYZ-000	2.62 mm (0.103 in.)
W	41458-PYZ-000	2.65 mm (0.104 in.)
X	41459-PYZ-000	2.68 mm (0.106 in.)
Y	41460-PYZ-000	2.71 mm (0.107 in.)
Z	41461-PYZ-000	2.74 mm (0.108 in.)
AA	41462-PYZ-000	2.77 mm (0.109 in.)
AB	41463-PYZ-000	2.80 mm (0.110 in.)
AC	41464-PYZ-000	2.83 mm (0.111 in.)
AD	41465-PYZ-000	2.86 mm (0.113 in.)
AE	41466-PYZ-000	2.89 mm (0.114 in.)
AF	41467-PYZ-000	2.92 mm (0.115 in.)
AG	41468-PYZ-000	2.95 mm (0.116 in.)
AH	41469-PYZ-000	2.98 mm (0.117 in.)
AJ	41470-PYZ-000	3.01 mm (0.119 in.)
AK	41471-PYZ-000	3.04 mm (0.120 in.)
AL	41472-PYZ-000	3.07 mm (0.121 in.)
AM	41473-PYZ-000	3.10 mm (0.122 in.)
AN	41474-PYZ-000	3.13 mm (0.123 in.)
AP	41475-PYZ-000	3.16 mm (0.124 in.)

(cont'd)

BACK

Protected by AR

Carrier Bearing Preload Adjustment (cont'd)

10. Once the carrier bearing preload is correct, disassemble the transmission housing, and install new oil seals in the differential (see step 4 on page 13-76).
11. Reassemble the transmission (see page 13-65).
12. Reinstall the transmission (see page 13-19).

BACK

Protected by AR

BACK

Protected by AR

Automatic Transmission

Automatic Transmission

- Special Tools 14-2
- DTC Troubleshooting Index 14-3
- Symptom Troubleshooting Index 14-5
- System Description 14-16
- DTC Troubleshooting 14-70
- Road Test 14-159
- Stall Speed Test 14-161
- Pressure Test 14-162
- Shift Solenoid Valve A
  - Test 14-164
  - Replacement 14-165
- Shift Solenoid Valve B
  - Test 14-166
  - Replacement 14-167
- Shift Solenoid Valve C
  - Test 14-168
  - Replacement 14-169
- Torque Converter Clutch Solenoid Valve
  - Test 14-170
  - Replacement 14-171
- A/T Clutch Pressure Control Solenoid Valve
  - Solenoid Valve A Test 14-172
  - Solenoid Valve A Replacement 14-175
  - Solenoid Valve B Test 14-172
  - Solenoid Valve B Replacement 14-175
  - Solenoid Valve C Test 14-176
  - Solenoid Valve C Replacement 14-178
- Input Shaft (Mainshaft) Speed Sensor
  - Replacement 14-179
- Output Shaft (Countershaft) Speed Sensor
  - Replacement 14-180
- 3rd Clutch Transmission Fluid Pressure Switch
  - Replacement 14-181
- 4th Clutch Transmission Fluid Pressure Switch
  - Replacement 14-182
- ATF Temperature Sensor Replacement ... 14-183
- ATF Level Check 14-185
- ATF Replacement 14-186
- Transmission Removal 14-187
- Drive Plate Removal and Installation 14-197
- Transmission Installation 14-198
- ATF Warmer Replacement 14-208
- Shift Cable Replacement 14-209

A/T Gear Position Indicator

- Component Location Index 14-212
- Circuit Diagram 14-213
- A/T Gear Position Indicator Circuit Troubleshooting 14-214
- Transmission Range Switch Test 14-215
- Transmission Range Switch Replacement 14-218

A/T Interlock System

- Component Location Index 14-220
- Circuit Diagram 14-221
- Shift Lock System Circuit Troubleshooting 14-222

BACK

Protected by AR

Transmission End Cover

End Cover, 3rd Gear, Idler Gear, and 3rd Clutch Removal 14-228
Park Lever Stop Inspection and Adjustment 14-230
Selector Control Shaft Oil Seal Replacement 14-231
Selector Control Shaft Bearing Replacement 14-231
ATF Feed Pipe Replacement 14-232
End Cover, 3rd Gear, Idler Gear, and 3rd Clutch Installation 14-287

Transmission Housing

Housing and Shaft Assembly Removal 14-233
Bearing Removal and Installation 14-235
Shaft Assembly and Housing Installation 14-284

Valve Body

Valve Body and ATF Strainer Removal 14-236
Valve Body Repair 14-238
Valve Body Valve Installation 14-239
Main Valve Body Disassembly, Inspection, and Reassembly 14-240
ATF Pump Inspection 14-241
Regulator Valve Body Disassembly, Inspection, and Reassembly 14-242
Servo Body Disassembly, Inspection, and Reassembly 14-243
Top Accumulator Body Disassembly, Inspection, and Reassembly 14-244
Accumulator Body Disassembly, Inspection, and Reassembly 14-245
3rd Accumulator and End Cover Disassembly, Inspection, and Reassembly 14-246
Valve Body and ATF Strainer Installation 14-282

Torque Converter Housing

Mainshaft Bearing and Oil Seal Replacement 14-247
Countershaft Bearing Replacement 14-248
Secondary Shaft Bearing Replacement ... 14-248
Selector Control Shaft Oil Seal Replacement 14-249

Shafts and Clutches

Mainshaft Disassembly, Inspection, and Reassembly 14-250
4th/5th Clutch Clearance Inspection 14-251
Mainshaft Sealing Ring Replacement 14-252
Countershaft Disassembly, Inspection, and Reassembly 14-253
Countershaft Reverse Selector Hub and 4th Gear Removal 14-254
Countershaft 4th Gear and Reverse Selector Hub Installation 14-255
3rd Clutch Ball Bearing Replacement 14-256
Secondary Shaft Disassembly, Inspection, and Reassembly 14-257
Secondary Shaft Clearance Inspection 14-258
Secondary Shaft Idler Gear Bearing Replacement 14-260
1st Gear One-way Clutch Inspection 14-261
1st Clutch Hub Replacement 14-262
Clutch Disassembly 14-263
Clutch Inspection 14-266
Clutch Waved-plate Phase Difference Inspection 14-273
Clutch Clearance Inspection 14-274
Clutch Reassembly 14-277

A/T Differential

Component Location Index 14-295
Backlash Inspection 14-296
Differential Carrier, Final Driven Gear Replacement 14-296
Carrier Bearing Replacement 14-297
Oil Seal Replacement 14-298
Carrier Bearing Outer Race Replacement 14-299
Carrier Bearing Preload Inspection
2003-2005 Models 14-301
2006 Model 14-304

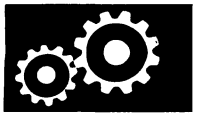

BACK

Protected by AR

Special Tools

Ref. No.	Tool Number	Description	Qty
①	07GAB-PF50101 or 07GAB-PF50100	Mainshaft Holder	1
②	07GAD-PG40101 or 07GAD-PG40100	Seal Driver Attachment	1
③	07GAD-SD40101	Attachment, 78 x 90 mm	1
④	07GAE-PG40200 or 07GAE-PG4020A	Clutch Spring Compressor Bolt Assembly	1
⑤	07HAC-PK40102	Housing Puller	1
⑥	07HAJ-PK40201	Preload Inspection Tool	1
⑦	07JAD-PH80101	Oil Seal Driver Attachment	1
⑧	07LAD-PW50601	Attachment, 40 x 50 mm	1
⑨	07LAE-PX40100	Clutch Spring Compressor Attachment	2
⑩	07MAJ-PY4011A	A/T Pressure Hose, 2,210 mm	3
⑪	07MAJ-PY40120	A/T Pressure Hose Adapter	3
⑫	07NAD-PX40100	Attachment, 78 x 80 mm	1
⑬	07ZAE-PRP0100	Clutch Compressor Attachment	1
⑭	070AJ-0020101	Preload Inspection Tool	1
⑮	07406-0020400 or 07406-0020401	A/T Oil Pressure Gauge Set w/Panel	1
⑯	07736-A01000B or 07736-A01000A	Adjustable Bearing Puller, 25—40 mm	1
⑰	07746-0010500	Attachment, 62 x 68 mm	1
⑱	07746-0010600	Attachment, 72 x 75 mm	1
⑲	07746-0010800	Attachment, 22 x 24 mm	1
⑳	07746-0030100	Driver, 40 mm I.D.	1
㉑	07749-0010000	Driver	1
㉒	07947-6340500	Driver Attachment	1

⑤: If the top arm is too short, replace it with 07SAC-P0Z01001.
⑨: 07HAE-PL50101 may be used to substitute one of these tools.
⑯: Must be used with commercially available 3/8 "-16 slide hammer.

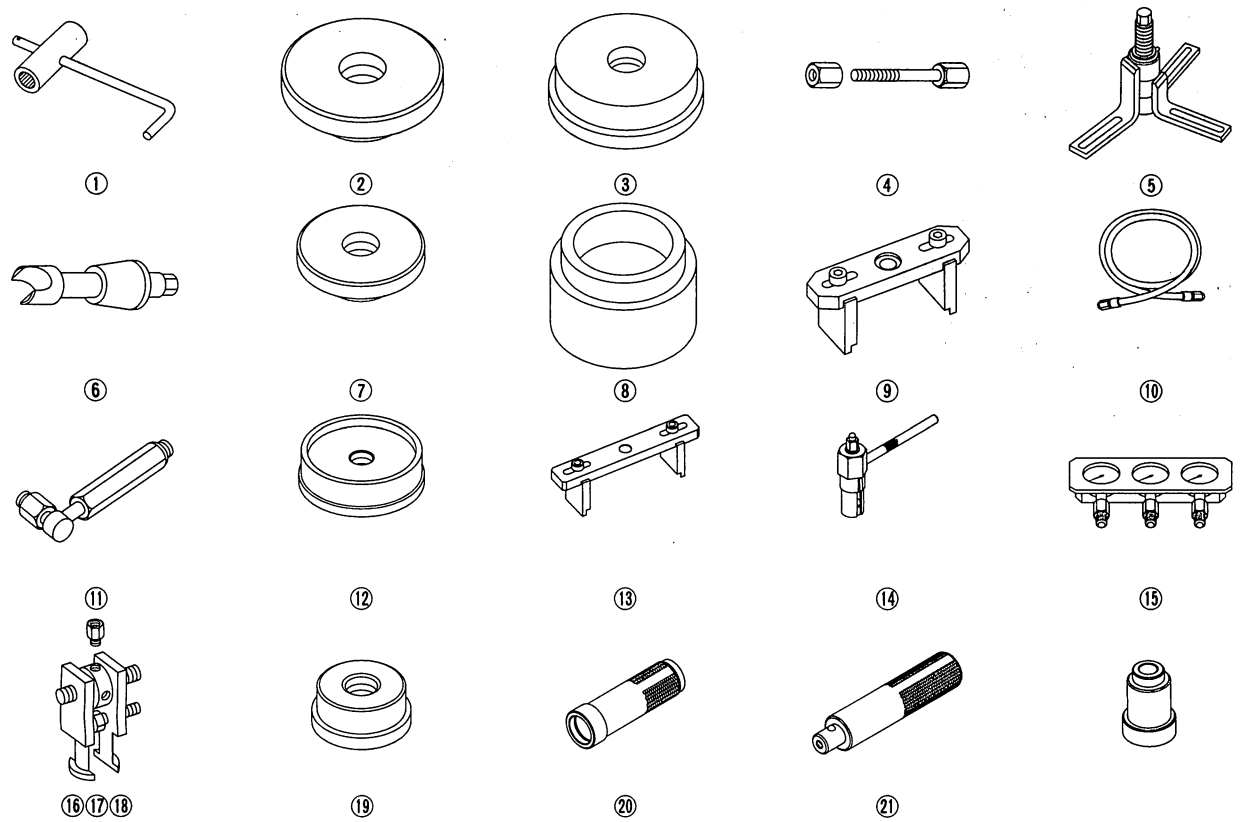

BACK

Protected by AR

DTC Troubleshooting Index

NOTE: Record all freeze data and review General Troubleshooting Information, refer to the 2003-2006 Accord Service Manual (see page 14-3) before you troubleshoot.

DTC * (1)	D Indicator	MIL	Detection Item	Page
P0705 (5-2) * (2)	Blinks	ON	Transmission range switch (multiple shift-position input)	(see page 14-70)
P0706 (6-2) * (2)	OFF	ON	Transmission range switch (open)	(see page 14-79)
P0711 (28-5) * (2)	Blinks	OFF	ATF temperature sensor (range/performance)	(see page 14-82)
P0712 (28-3) * (2)	Blinks	OFF	ATF temperature sensor (short)	(see page 14-83)
P0713 (28-4) * (2)	Blinks	OFF	ATF temperature sensor (open)	(see page 14-84)
P0716 (15-5) * (2)	Blinks	ON	Input shaft (mainshaft) speed sensor (range/performance)	(see page 14-86)
P0717 (15-3) * (2)	Blinks	ON	Input shaft (mainshaft) speed sensor (no signal input)	(see page 14-90)
P0718 (15-6) * (2)	Blinks	ON	Input shaft (mainshaft) speed sensor (intermittent failure)	(see page 14-94)
P0721 (9-5) * (2)	Blinks	ON	Output shaft (countershaft) speed sensor (range/performance)	(see page 14-96)
P0722 (9-3) * (2)	Blinks	ON	Output shaft (countershaft) speed sensor (no signal input)	(see page 14-100)
P0723 (9-6) * (2)	Blinks	ON	Output shaft (countershaft) speed sensor (intermittent failure)	(see page 14-104)
P0731 (64-1)	Blinks	OFF	1st gear incorrect ratio	(see page 14-106)
P0732 (64-2)	Blinks	OFF	2nd gear incorrect ratio	(see page 14-107)
P0733 (64-3)	Blinks	OFF	3rd gear incorrect ratio	(see page 14-108)
P0734 (64-4)	Blinks	OFF	4th gear incorrect ratio	(see page 14-109)
P0735 (64-5)	Blinks	OFF	5th gear incorrect ratio	(see page 14-110)
P0741 (40-3)	OFF	ON	Torque converter clutch circuit performance or stuck OFF	(see page 14-111)
P0746 (76-3)	Blinks	ON	A/T clutch pressure control solenoid valve A stuck OFF	(see page 14-112)
P0747 (76-4)	Blinks	ON	A/T clutch pressure control solenoid valve A stuck ON	(see page 14-113)
P0751 (70-3)	Blinks	ON	Shift solenoid valve A stuck OFF	(see page 14-114)
P0752 (70-4)	Blinks	ON	Shift solenoid valve A stuck ON	(see page 14-115)
P0756 (71-3)	Blinks	ON	Shift solenoid valve B stuck OFF	(see page 14-116)

NOTE:

* (1): The DTC in parentheses is the Honda code that you will see when you use the HDS. The first number(s) before the - (hyphen) is the flash code the D indicator indicates when the data link connector (DLC) is connected to the HDS, and the HDS in SCS mode.
* (2): This code is caused by an electrical circuit problem and cannot be caused by a mechanical problem in the transmission.

(cont'd)

Protected by AR

DTC Troubleshooting Index (cont'd)

NOTE: Record all freeze data and review General Troubleshooting Information, refer to the 2003-2006 Accord Service Manual (see page 14-3) before you troubleshoot.

DTC * (1)	D Indicator	MIL	Detection Item	Page
P0757 (71-4)	Blinks	ON	Shift solenoid valve B stuck ON	(see page 14-117)
P0761 (72-3)	Blinks	ON	Shift solenoid valve C stuck OFF	(see page 14-118)
P0762 (72-4)	Blinks	ON	Shift solenoid valve C stuck ON	(see page 14-119)
P0776 (77-3)	Blinks	ON	A/T clutch pressure control solenoid valve B stuck OFF	(see page 14-120)
P0777 (77-4)	Blinks	ON	A/T clutch pressure control solenoid valve B stuck ON	(see page 14-121)
P0780 (45-1)	Blinks	ON	Shift control system	(see page 14-122)
P0847 (26-3) * (2)	Blinks	OFF	3rd clutch transmission fluid pressure switch (short or stuck ON)	(see page 14-123)
P0848 (26-4) * (2)	Blinks	OFF	3rd clutch transmission fluid pressure switch (open or stuck OFF)	(see page 14-125)
P0872 (27-3) * (2)	Blinks	OFF	4th clutch transmission fluid pressure switch (short or stuck ON)	(see page 14-127)
P0873 (27-4) * (2)	Blinks	OFF	4th clutch transmission fluid pressure switch (open or stuck OFF)	(see page 14-129)
P0962 (16-3) * (2)	Blinks	ON	A/T clutch pressure control solenoid valve A (open/short)	(see page 14-131)
P0963 (16-4) * (2)	Blinks	ON	A/T clutch pressure control solenoid valve A	(see page 14-133)
P0966 (23-3) * (2)	Blinks	ON	A/T clutch pressure control solenoid valve B (open/short)	(see page 14-135)
P0967 (23-4) * (2)	Blinks	ON	A/T clutch pressure control solenoid valve B	(see page 14-137)
P0970 (29-3) * (2)	Blinks	ON	A/T clutch pressure control solenoid valve C (open/short)	(see page 14-139)
P0971 (29-4) * (2)	Blinks	ON	A/T clutch pressure control solenoid valve C	(see page 14-141)
P0973 (7-3) * (2)	Blinks	ON	Shift solenoid valve A (short)	(see page 14-143)
P0974 (7-4) * (2)	Blinks	ON	Shift solenoid valve A (open)	(see page 14-145)
P0976 (8-3) * (2)	Blinks	ON	Shift solenoid valve B (short)	(see page 14-147)
P0977 (8-4) * (2)	Blinks	ON	Shift solenoid valve B (open)	(see page 14-149)
P0979 (22-3) * (2)	Blinks	ON	Shift solenoid valve C (short)	(see page 14-151)
P0980 (22-4) * (2)	Blinks	ON	Shift solenoid valve C (open)	(see page 14-153)
P2769 (1-3) * (2)	Blinks	ON	Torque converter clutch solenoid valve circuit (short)	(see page 14-155)
P2770 (1-4) * (2)	Blinks	ON	Torque converter clutch solenoid valve circuit (open)	(see page 14-157)

NOTE:

* (1): The DTC in parentheses is the Honda code that you will see when you use the HDS. The first number(s) before the - (hyphen) is the flash code the D indicator indicates when the data link connector (DLC) is connected to the HDS, and the HDS in SCS mode.
* (2): This code is caused by an electrical circuit problem and cannot be caused by a mechanical problem in the transmission.

BACK

Protected by AR

Symptom Troubleshooting Index

Symptom	Probable cause(s)	Notes
When you turn the ignition switch ON (II), the D indicator comes on and stays on in all shift lever positions, or it never comes on at all	Communication line between multiplex integrated control unit and gauge control module defective	Check the multiplex integrated control system communication line between the multiplex integrated control unit and gauge control module, refer to the 2003-2006 Accord Service Manual (see page 22-121).
Shift lever cannot be moved from P while you are pressing on the brake pedal	A problem in the shift lock system of the interlock system	Check the interlock system - shift lock system circuit, refer to the 2003-2006 Accord Service Manual (see page 14-254).
Ignition switch cannot be moved from ACC (I) to LOCK (0) (key is pushed in, shift lever in P)	A problem in the key interlock system of the interlock system	Check the interlock system - key interlock system circuit, refer to the 2003-2006 Accord Service Manual (see page 14-259).

(cont'd)

Protected by AR

Symptom Troubleshooting Index (cont'd)

Symptom	Probable cause(s)	Notes
Engine runs, but vehicle does not move in any gear	1. Low ATF level 2. Shift cable broken or out of adjustment 3. Shift cable worn 4. ATF pump worn or binding 5. Regulator valve stuck or spring worn 6. ATF strainer clogged 7. Mainshaft worn or damaged 8. Final gears worn or damaged 9. Transmission-to-engine assembly error 10. Axle disengaged	• Check the ATF level, and check the ATF cooler lines for leakage and loose connections. • Check for a loose shift cable at the shift lever and the transmission control lever. • Improper alignment of ATF pump and torque converter housing may cause ATF pump seizure. The symptoms are mostly an rpm-related ticking noise or a high pitched squeak. • Check the line pressure. • Check the ATF strainer for debris. If the ATF strainer is clogged with particles of steel or aluminum, inspect the ATF pump. If the ATF pump is OK, find the damaged components that caused the debris. If no cause for contamination is found, replace the torque converter. • Inspect the differential pinion gears for wear. If the differential pinion gears are worn, replace the differential assembly, replace the ATF strainer, and thoroughly clean the transmission. • Be careful not to damage the torque converter housing when replacing the main ball bearing. You may also damage the ATF pump when you torque down the main valve body. This will result in ATF pump seizure if not detected. Use the proper tools. • Install the main seal flush with the torque converter housing. If you push it into the torque converter housing until it bottoms out, it will block the fluid return passage and result in damage.
Vehicle moves in R, but not in D, D3, or 1	1. 1st accumulator defective 2. 1st clutch defective	• Check the 1st clutch pressure. • Inspect the secondary shaft and 1st/1st-hold/2nd clutch assembly for wear and damage. • Inspect the clutch piston, clutch piston check valve, and O-rings. Check the spring retainer for wear and damage. Inspect the clutch end-plate-to-top disc clearance. If the clearance is out of tolerance, inspect the clutch discs and plates for wear and damage. If the discs and plates are worn and damaged, replace them as a set. If they are OK, adjust the clutch end plate clearance.
Vehicle moves in 2 and R, but not in D, D3, or 1	1. 1st gear one-way clutch defective 2. 1st gears worn or damaged 3. 1st clutch defective	• Check the 1st clutch pressure. • Inspect the secondary shaft and 1st/1st-hold/2nd clutch assembly for wear and damage. • Inspect the clutch piston, clutch piston check valve, and O-rings. Check the spring retainer for wear and damage. Inspect the clutch end-plate-to-top-disc clearance. If the clearance is out of tolerance, inspect the clutch discs and plates for wear and damage. If the discs and plates are worn or damaged, replace them as a set. If they are OK, adjust the clutch end plate clearance.

BACK

Protected by AR

Symptom	Probable cause(s)	Notes
Vehicle moves in D, D3, 2, and R, but not in 1	1. 1st-hold accumulator defective 2. 1st-hold clutch defective	• Check the 1st-hold clutch pressure. • Inspect the secondary shaft and 1st/1st-hold/2nd clutch assembly for wear and damage. • Inspect the clutch piston, clutch piston check valve, and O-rings. Check the spring retainer for wear and damage. Inspect the clutch end-plate-to-top-disc clearance. If the clearance is out of tolerance, inspect the clutch discs and plates for wear and damage. If the discs and plates are worn or damaged, replace them as a set. If they are OK, adjust the clutch end plate clearance.
Vehicle moves in D, D3, 1, and R, but not in 2	1. 2nd accumulator defective 2. 2nd gears worn or damaged 3. 2nd clutch defective	• Check the 2nd clutch pressure. • Inspect the secondary shaft and 1st/1st-hold/2nd clutch assembly for wear and damage. • Inspect the clutch piston, clutch piston check valve, and O-rings. Check the spring retainer for wear and damage. Inspect the clutch end-plate-to-top-disc clearance. If the clearance is out of tolerance, inspect the clutch discs and plates for wear and damage. If the discs and plates are worn or damaged, replace them as a set. If they are OK, adjust the clutch end plate clearance.
Vehicle moves in D, D3, 2, and 1, but not in R (or moves forward in R)	1. Shift fork shaft stuck 2. Modulator valve defective 3. Reverse CPC valve defective 4. 5th accumulator defective 5. 5th clutch defective 6. Reverse gears worn or damaged	• Check the line pressure and 5th clutch pressure. • Check for a missing shift fork bolt on the shift fork shaft. • Check the ATF strainer for debris. If the ATF strainer is clogged with particles of steel or aluminum, inspect the ATF pump. If the ATF pump is OK, find the damaged components that caused the debris. If no cause for the contamination is found, replace the torque converter. • Inspect the reverse selector gear teeth chamfers, and inspect engagement teeth chamfers of the countershaft 5th gear and reverse gear. Replace the reverse gears and the reverse selector if they are worn or damaged. If the transmission makes clicking, grinding, or whirring noises, also replace the mainshaft 5th gear, reverse idler gear, and countershaft 5th gear. • If the 5th clutch feed pipe guide in the end cover is scored by the mainshaft, inspect the ball bearing for excessive movement in the transmission housing. If the ball bearing is OK, replace the end cover as it is dented. The O-ring under the guide is probably worn. • Replace the mainshaft if the bushing for the 4th and 5th clutch feed pipes are loose or damaged. If the 5th clutch feed pipe is damaged or out of round, replace the end cover. • Inspect the clutch piston, clutch piston check valve, and O-rings. Check the spring retainer for wear and damage. Inspect the clutch end-plate-to-top-disc clearance. If the clearance is out of tolerance, inspect the clutch discs and plates for wear and damage. If the discs and plates are worn or damaged, replace them as a set. If they are OK, adjust the clearance with the clutch end plate.

(cont'd)

Protected by AR

Symptom Troubleshooting Index (cont'd)

Symptom	Probable cause(s)	Notes
Poor acceleration; flares when starting off in D and D3; stall speed high in D, D3, 2, and 1	1. Low ATF level 2. Shift cable broken or out of adjustment 3. ATF pump worn or binding 4. Regulator valve stuck or spring worn 5. ATF strainer clogged 6. Torque converter check valve defective	• Check the ATF level, and check the ATF cooler lines for leakage and loose connections. • Check for a loose shift cable at the shift lever and the transmission control lever. • Check the line pressure. • Improper alignment of ATF pump and torque converter housing may cause ATF pump seizure. The symptom is mostly an rpm-ticking noise or a high pitched squeak. • Be careful not to damage the torque converter housing when replacing the main ball bearing. You may also damage the ATF pump when you torque down the main valve body. This will result in ATF pump seizure if not detected. Use the proper tools.
Poor acceleration; flares when starting off in D and D3; stall speed high in 2	2nd clutch defective	• Check the 2nd clutch pressure. • Inspect the clutch piston, clutch piston check valve, and O-rings. Check the spring retainer for wear and damage. Inspect the clutch end-plate-to-top-disc clearance. If the clearance is out of tolerance, inspect the clutch discs and plates for wear and damage. If the discs and plates are worn or damaged, replace them as a set. If they are OK, adjust the clutch end plate clearance.
Poor acceleration; flares when starting off in R; stall speed high in R	1. Shift cable broken or out of adjustment 2. 5th clutch defective	• Check for a loose shift cable at the shift lever and the transmission control shaft. • Check the 5th clutch pressure. • Inspect the clutch piston, clutch piston check valve, and O-rings. Check the spring retainer for wear and damage. Inspect the clutch end-plate-to-top-disc clearance. If the clearance is out of tolerance, inspect the clutch discs and plates for wear and damage. If the discs and plates are worn or damaged, replace them as a set. If they are OK, adjust the clutch end plate clearance.

BACK

Protected by AR

Symptom	Probable cause(s)	Notes
Poor acceleration; stall speed low	1. Torque converter clutch solenoid valve defective 2. Engine output low 3. Lock-up clutch piston defective 4. Lock-up shift valve defective	Check for a stuck lock-up valve in the valve body.
Engine idle vibration	1. Low ATF level 2. Torque converter clutch solenoid valve defective 3. Drive plate defective or transmission misassembled 4. Engine output low 5. Lock-up clutch piston defective 6. ATF pump worn or binding 7. Lock-up shift valve defective	• Set idle rpm in gear to the specified idle speed. If it is still no good, adjust the engine and transmission mounts. • Check the ATF level, and check the ATF cooler lines for leakage and loose connections.
Vehicle moves in N	1. Excessive ATF 2. Foreign material in separator plate orifice 3. Relief valve defective 4. 1st-hold clutch defective 5. 1st clutch defective 6. 2nd clutch defective 7. 3rd clutch defective 8. 4th clutch defective 9. 5th clutch defective 10. Clutch clearance incorrect 11. Needle bearing seized up, worn, or damaged 12. Thrust washer seized up, worn, or damaged	• Check the ATF level, and drain the ATF if it is over filled. • Inspect the clutch piston, clutch piston check valve, and O-rings. Check the spring retainer for wear and damage. Inspect the clutch end-plate-to-top-disc clearance. If the clearance is out of tolerance, inspect the clutch discs and plates for wear and damage. If the discs and plates are worn or damaged, replace them as a set. If they are OK, adjust the clutch end plate clearance. • Check all clutch pressures.

(cont'd)

Protected by AR

Symptom Troubleshooting Index (cont'd)

Symptom	Probable cause(s)	Notes
Late shift after shifting from N to D, or excessive shock when shifted into D	1. Shift solenoid valve C defective 2. A/T clutch pressure control solenoid valve A defective 3. A/T clutch pressure control solenoid valve B defective 4. A/T clutch pressure control solenoid valve C defective 5. Shift cable broken or out of adjustment 6. Connection between the shift cable and transmission or body is worn 7. Input shaft (mainshaft) speed sensor defective 8. Output shaft (countershaft) speed sensor defective 9. ATF temperature sensor defective 10. CPC valve C stuck 11. Foreign material in separator plate orifice 12. Shift valve C defective 13. Shift valve E defective 14. Servo control valve defective 15. 1st accumulator defective 16. 1st check ball stuck 17. 1st clutch defective	• Check the D indicator, and check for loose connectors. • Inspect the O-ring, and check the shift solenoid valve for seizure. • Inspect the A/T clutch pressure control solenoid valve body gasket and ATF feed pipes for wear and damage. If the A/T clutch pressure control solenoid valve is stuck, inspect the CPC valves. • Check for a loose shift cable at the shift lever and the transmission control lever. • If the ATF strainer is clogged with particles of steel or aluminum, inspect the ATF pump. If the ATF pump is OK, find the damaged components that caused the debris. If no cause for the contamination is found, replace the torque converter. • Check the 1st clutch pressure. • Inspect the clutch piston, clutch piston check valve, and O-rings. Check the spring retainer for wear and damage. Inspect the clutch end-plate-to-top-disc clearance. If the clearance is out of tolerance, inspect the clutch discs and plates for wear and damage. If the discs and plates are worn or damaged, replace them as a set. If they are OK, adjust the clutch end plate clearance.
Late shift after shifting from N to R	1. Shift solenoid valve C defective 2. A/T clutch pressure control solenoid valve A defective 3. A/T clutch pressure control solenoid valve B defective 4. A/T clutch pressure control solenoid valve C defective 5. Shift cable broken or out of adjustment 6. Connection between the shift cable and transmission or body is worn 7. Input shaft (mainshaft) speed sensor defective 8. Output shaft (countershaft) speed sensor defective 9. ATF temperature sensor defective 10. Shift fork shaft stuck 11. CPC valve C stuck 12. Reverse CPC valve defective 13. Foreign material in separator plate orifice 14. Shift valve E defective 15. 5th accumulator defective 16. 5th clutch defective	• Check the D indicator, and check for loose connectors. • Inspect the O-ring, and check the shift solenoid valve for seizure. • Inspect the A/T clutch pressure control solenoid valve body gasket and ATF feed pipes for wear and damage. If the A/T clutch pressure control solenoid valve is stuck, inspect the CPC valves. • Check for a loose shift cable at the shift lever and the transmission control lever. • Check the ATF strainer for debris. If the ATF strainer is clogged with particles of steel or aluminum, inspect the ATF pump. If the ATF pump is OK, find the damaged components that caused the debris. If no cause for the contamination is found, replace the torque converter. • Check the 5th clutch pressure. • Inspect the clutch piston, clutch piston check valve, and O-rings. Check the spring retainer for wear and damage. Inspect the clutch end-plate-to-top-disc clearance. If the clearance is out of tolerance, inspect the clutch discs and plates for wear and damage. If the discs and plates are worn or damaged, replace them as a set. If they are OK, adjust the clutch end plate clearance.

BACK

Protected by AR

Symptom	Probable cause(s)	Notes
The A/T does not shift	1. Input shaft (mainshaft) speed sensor defective 2. Output shaft (countershaft) speed sensor defective 3. Modulator valve defective	• Check the D indicator, and check for loose connectors. • Check the line pressure. • Check the input shaft (mainshaft) and output shaft (countershaft) speed sensor installation.
Erratic shifting: fails to shift in D and D3; starts off in 5th	1. Shift solenoid valve B defective 2. Shift valve B defective	• Check the D indicator, and check for loose connectors. • Inspect the O-ring, and check the shift solenoid valve for seizure.
Erratic shifting: fails to shift in 2; starts off in 4th	1. Shift solenoid valve B defective 2. Shift valve B defective	• Check the D indicator, and check for loose connectors. • Inspect the O-ring, and check the shift solenoid valve for seizure.
Erratic shifting: fails to shift in D, D 3, and 1; starts off in 3rd	1. Shift solenoid valve A defective 2. Shift valve A defective	• Check the D indicator, and check for loose connectors. • Inspect the O-ring, and check the shift solenoid valve for seizure.
Excessive shock or flares on all upshifts and downshifts	1. A/T clutch pressure control solenoid valve A defective 2. A/T clutch pressure control solenoid valve B defective 3. Input shaft (mainshaft) speed sensor defective 4. Output shaft (countershaft) speed sensor defective 5. ATF temperature sensor defective 6. CPC valve A defective 7. Foreign material in separator plate orifice	• Check the D indicator, and check for loose connectors. • Inspect the A/T clutch pressure control solenoid valve body gasket and ATF feed pipes for wear and damage. If the A/T clutch pressure control solenoid valve is stuck, inspect the CPC valves. • Inspect the sensor O-rings.
Excessive shock or flares on 1-2 upshift or 2-1 downshift	1. Foreign material in separator plate orifice 2. 2nd accumulator defective 3. 2nd check ball stuck 4. 2nd clutch defective	• Check the 1st and 2nd clutch pressures. • Inspect the clutch piston, clutch piston check valve, and O-rings. Check the spring retainer for wear and damage. Inspect the clutch end-plate-to-top-disc clearance. If the clearance is out of tolerance, inspect the clutch discs and plates for wear and damage. If the discs and plates are worn or damaged, replace them as a set. If they are OK, adjust the clutch end plate clearance.

(cont'd)

Protected by AR

Symptom Troubleshooting Index (cont'd)

Symptom	Probable cause(s)	Notes
Excessive shock or flares on 2-3 upshift or 3-2 downshift	1. Shift solenoid valve C defective 2. A/T clutch pressure control solenoid valve A defective 3. A/T clutch pressure control solenoid valve B defective 4. 3rd clutch transmission fluid pressure switch defective 5. CPC valve B defective 6. Foreign material in separator plate orifice 7. Shift valve C defective 8. 2nd accumulator defective 9. 3rd accumulator defective 10. 2nd check ball stuck 11. 2nd clutch defective 12. 3rd clutch defective	• Check the D indicator, and check for loose connectors. • Inspect the O-rings, and check the shift solenoid valve for seizure. • Check for clogged orifice in the transmission fluid pressure switch connector. If the orifice is clogged, remove it and clean the connector. • Check the 2nd and 3rd clutch pressures. • Inspect the clutch piston, clutch piston check valve, and O-rings. Check the spring retainer for wear and damage. Inspect the clutch end-plate-to-top-disc clearance. If the clearance is out of tolerance, inspect the clutch discs and plates for wear and damage. If the discs and plates are worn or damaged, replace them as a set. If they are OK, adjust the clutch end plate clearance.
Excessive shock or flares on 3-4 upshift or 4-3 downshift	1. Shift solenoid valve C defective 2. A/T clutch pressure control solenoid valve A defective 3. A/T clutch pressure control solenoid valve B defective 4. 4th clutch transmission fluid pressure switch defective 5. CPC valve B defective 6. Foreign material in separator plate orifice 7. Shift valve C defective 8. 3rd accumulator defective 9. 4th accumulator defective 10. 3rd clutch defective 11. 4th clutch defective	• Check the D indicator, and check for loose connectors. • Inspect the O-rings, and check the shift solenoid valve for seizure. • Check for clogged orifice in the transmission fluid pressure switch connector. If the orifice is clogged, remove it and clean the connector. • Check the 3rd and 4th clutch pressures. • Inspect the clutch piston, clutch piston check valve, and O-rings. Check the spring retainer for wear and damage. Inspect the clutch end-plate-to-top-disc clearance. If the clearance is out of tolerance, inspect the clutch discs and plates for wear and damage. If the discs and plates are worn or damaged, replace them as a set. If they are OK, adjust the clutch end plate clearance.

BACK

Protected by AR

Symptom	Probable cause(s)	Notes
Excessive shock or flares on 4-5 upshift or 5-4 downshift	1. Shift solenoid valve C defective 2. A/T clutch pressure control solenoid valve A defective 3. A/T clutch pressure control solenoid valve B defective 4. A/T clutch pressure control solenoid valve C defective 5. CPC valve B defective 6. CPC valve C defective 7. Foreign material in separator plate orifice 8. Shift valve C defective 9. Shift valve E defective 10. Kick-down valve or kick-down short valve defective 11. 4th accumulator defective 12. 5th accumulator defective 13. 4th clutch defective 14. 5th clutch defective	• Check the D indicator, and check for loose connectors. • Inspect the O-rings, and check the shift solenoid valve for seizure. • Check the 4th and 5th clutch pressures. • Inspect the clutch piston, clutch piston check valve, and O-rings. Check the spring retainer for wear and damage. Inspect the clutch end-plate-to-top-disc clearance. If the clearance is out of tolerance, inspect the clutch discs and plates for wear and damage. If the discs and plates are worn or damaged, replace them as a set. If they are OK, adjust the clutch end plate clearance.

(cont'd)

Protected by AR

Symptom Troubleshooting Index (cont'd)

Symptom	Probable cause(s)	Notes
Noise from transmission in all shift lever positions	1. ATF pump worn or binding 2. Torque converter housing or transmission housing bearing worn or damaged	• Improper alignment of ATF pump and torque converter housing may cause ATF pump seizure. The symptoms are mostly an rpm-related ticking noise or a high pitched squeak. • Inspect the contact of the countershaft and secondary shaft with the bearings. • Check the ATF guide plates for damage and wear. • Inspect the 1st clutch feed pipe for damage and out of round. If the 1st clutch feed pipe is damaged or out of round, replace it. Replace the secondary shaft if the bushing for the 1st clutch feed pipe is damaged or out of round.
Vehicle does not accelerate above 31 mph (50 km/h)	Torque converter one-way clutch defective	Replace the torque converter.
Vibration in all shift lever positions	Drive plate defective or transmission misassembled	• Check for a misinstalled/damaged drive plate. • Set idle rpm in gear to the specified idle speed. If still no good, adjust the engine mounts. • Check the stall speed.
Shift lever does not operate smoothly	1. Transmission range switch defective or out of adjustment 2. Shift cable broken or out of adjustment 3. Joint in shift cable and transmission or body worn	• Check the D indicator, and check for loose connectors. • Inspect the transmission range switch. If the transmission range switch is faulty, replace it. If the transmission range switch is out of adjustment, adjust it and the shift cable. • Check for a loose shift cable at the shift lever and the transmission control lever.
Transmission does not shift into P	1. Shift cable broken or out of adjustment 2. Connection between the shift cable and transmission or body is worn 3. Park mechanism defective	• Check for a loose shift cable at the shift lever and the transmission control lever. • Check the park pawl spring installation and the park lever spring installation. If installation is incorrect, install the spring correctly. Make sure that the park lever stop is not installed upside down. Check the distance between the park pawl shaft and the park lever roller pin. If the distance is out of tolerance, adjust the distance with the park lever stop.
Torque converter clutch does not disengage	1. Torque converter clutch solenoid valve defective 2. A/T clutch pressure control solenoid valve C defective 3. Torque converter clutch piston defective 4. Lock-up shift valve defective 5. Lock-up control valve defective 6. Lock-up timing valve defective	• Check the D indicator, and check for loose connectors. • Inspect the A/T clutch pressure control solenoid valve body gasket for wear and damage. If the A/T clutch pressure control solenoid valve is stuck, inspect the CPC valves.

BACK

Protected by AR

Symptom	Probable cause(s)	Notes
Torque converter clutch does not operate smoothly	1. Torque converter clutch solenoid valve defective 2. A/T clutch pressure control solenoid valve C defective 3. Torque converter clutch piston defective 4. Torque converter check valve defective 5. Lock-up shift valve defective 6. Lock-up control valve defective 7. Lock-up timing valve defective	• Check the D indicator, and check for loose connectors. • Inspect the A/T clutch pressure control solenoid valve body gasket for wear and damage. If the A/T clutch pressure control solenoid valve is stuck, inspect the CPC valves. • Center all engine mounts.
Torque converter clutch does not engage	1. Torque converter clutch solenoid valve defective 2. A/T clutch pressure control solenoid valve C defective 3. Input shaft (mainshaft) speed sensor defective 4. Output shaft (countershaft) speed sensor defective 5. Torque converter clutch piston defective 6. Torque converter check valve defective 7. Lock-up shift valve defective 8. Lock-up control valve defective	• Check the D indicator, and check for loose connectors. • Inspect the A/T clutch pressure control solenoid valve body gasket for wear and damage. If the A/T clutch pressure control solenoid valve is stuck, inspect the CPC valves.
A/T gear position indicator does not indicate shift lever positions	1. Transmission range switch defective or out of adjustment 2. Shift cable broken or out of adjustment 3. Connection between the shift cable and transmission or body is worn	• Check the D indicator, and check for loose connectors. • Inspect the transmission range switch. If the transmission range switch is faulty, replace it. If the transmission range switch is out of adjustment, adjust it and the shift cable. • Check for a loose shift cable at the shift lever and the transmission control shaft.
Speedometer and odometer do not work	Output shaft (countershaft) speed sensor defective	Check the D indicator, and check for loose connectors.
The engine does not rev to high rpm, and the transmission upshifts at low rpm (engine at normal operating temperature)	VTEC rocker arms defective	Check the engine rocker arms.

Protected by AR

System Description

General Operation

The automatic transmission is a combination of a 3-element torque converter and triple-shaft electronically controlled unit which provides 5 speeds forward and 1 reverse. The entire unit is positioned in line with the engine.

Torque Converter, Gears, and Clutches

The torque converter consists of a pump, turbine, and stator assembly in a single unit. The converter housing (pump) is connected to the engine crankshaft and turns as the engine turns. Around the outside of the torque converter is a ring gear which meshes with the starter pinion when the engine is being started. The entire torque converter assembly serves as a flywheel, transmitting power to the transmission mainshaft. The transmission has three parallel shafts: the mainshaft, the countershaft, and the secondary shaft. The mainshaft is in line with the engine crankshaft. The mainshaft includes the 4th and 5th clutches, and gears for 3rd, 4th, 5th, and reverse (reverse gear is integral with the 5th gear). The countershaft includes the 3rd clutch, and gears for the final drive, 1st, 4th, 5th, reverse, 2nd, park, and 3rd (the final drive gear is integral with the countershaft). The secondary shaft includes the 1st, 1st-hold and 2nd clutches, and gears for 1st, 2nd, and idler. The countershaft 5th gear and the countershaft reverse gear can be locked to the countershaft at its center, providing 5th gear or reverse, depending with which way the selector is moved. The gears on the mainshaft and the secondary shaft are in constant mesh with those on the countershaft. When certain combinations of gears in the transmission are engaged by the clutches, power is transmitted through the mainshaft, then to the secondary shaft to the countershaft provide drive.

Electronic Control

The electronic control system consists of the powertrain control module (PCM), sensors, and seven solenoid valves. Shifting and lock-up are electronically controlled for comfortable driving under all conditions. The PCM is located below the dashboard, under the front lower panel behind the center console.

Hydraulic Control

The valve bodies include the main valve body, the regulator valve body, the servo body, and the accumulator body. They are bolted to the torque converter housing. The main valve body contains the manual valve, the modulator valve, the shift valve C, the shift valve D, the kick-down valve, the servo control valve, the torque converter check valve, the reverse CPC valve, the lock-up shift valve, the relief valve, the cooler check valve, and the ATF pump gears. The regulator valve body contains the regulator valve, the lock-up timing valve, and the lock-up control valve. The servo body contains the servo valve, the shift valve A, the shift valve B, the CPC valves A and B. The top accumulator body contains shift valve E, CPC valve C, 1st-hold accumulator piston, 4th accumulator piston, and 5th accumulator piston. The accumulator body contains the 1st and 2nd accumulators and lubrication check valve. Fluid from the regulator passes through the manual valve to the various control valves. The 1st, 3rd, 4th, and 5th clutches receive fluid from their respective feed pipes, and the 1st-hold and 2nd clutches receive fluid from the internal hydraulic circuit.

Shift Control Mechanism

To shift gears, the PCM controls shift solenoid valves A, B, and C, and automatic transaxle (A/T) clutch pressure control solenoid valves A and B, while receiving input signals from various sensors and switches located throughout the vehicle. The shift solenoid valves shift the positions of the shift valves to switch the port leading hydraulic pressure to the clutch. The A/T clutch pressure control solenoid valves A and B control the CPC valves A and B to shift smoothly between lower gear and higher gear. This pressurizes a line to one of the clutches, engaging the clutch and its corresponding gear.

Lock-up Mechanism

The lock-up mechanism operates in the D position (2nd, 3rd, 4th, and 5th), and D3 position (2nd and 3rd). The pressurized fluid is drained from the back of the torque converter through a fluid passage, causing the torque converter clutch piston to be held against the torque converter cover. As this takes place, the mainshaft rotates at the same speed as the engine crankshaft. Together with hydraulic control, the PCM optimizes the timing of the lock-up mechanism. When the torque converter clutch solenoid valve activates, modulator pressure changes to switch lock-up on and off. The lock-up control valve and the lock-up timing valve control the volume of lock-up according to A/T clutch pressure control solenoid valve C. The torque converter clutch solenoid valve is mounted on the torque converter housing, and A/T clutch pressure control solenoid valve C is mounted on the transmission housing. They are all controlled by the PCM.

BACK

Protected by AR

Gear Selection
The shift lever has seven positions; P: PARK, R: REVERSE, N: NEUTRAL, D: 1st through 5th gear ranges, D3: 1st through 3rd gear ranges, 2: 2nd gear, and 1: 1st gear.

Position	Description
P: PARK	Front wheels locked; park pawl engaged with park gear on countershaft. All clutches are released.
R: REVERSE	Reverse; reverse selector engaged with countershaft reverse gear and 5th clutch engaged.
N: NEUTRAL	All clutches are released.
D: DRIVE (1st through 5th)	General driving; starts off in 1st, shifts automatically to 2nd, 3rd, 4th, then 5th, depending on vehicle speed and throttle position. Downshifts through 4th, 3rd, 2nd, and 1st on deceleration to stop. The lock-up mechanism operates in 2nd, 3rd, 4th, and 5th gear.
D3: DRIVE (1st through 3rd)	Used for rapid acceleration at highway speeds and general driving; up-hill and down-hill driving; starts off in 1st, shifts automatically to 2nd, then 3rd, depending on vehicle speed and throttle position. Downshifts through 2nd to 1st on deceleration to stop. The lock-up mechanism operates in 2nd and 3rd gear.
2: SECOND	Used for engine braking or better traction starting off on loose or slippery surfaces; stays in 2nd gear; does not shift up or down.
1: FIRST	Used for engine braking; stays in 1st gear; does not shift up.

Starting is possible only in the P and N positions because of a slide-type neutral-safety switch.

Automatic Transmission (A/T) Gear Position Indicator
The A/T gear position indicator in the instrument panel shows which shift lever position has been selected without having to look down at the shift lever.

Protected by AR

System Description (cont'd)

Clutches

The five-speed automatic transmission uses hydraulically-actuated clutches to engage or disengage the transmission gears. When hydraulic pressure is introduced into the clutch drum, the clutch piston moves. This presses the friction discs and steel plates together, locking them so they don't slip. Power is then transmitted through the engaged clutch pack to its hub-mounted gear. Likewise, when the hydraulic pressure is bled from the clutch pack, the piston releases the friction discs and steel plates, and they are free to slide past each other. This allows the gear to spin independently on its shaft, transmitting no power.

Transmission Cutaway View:

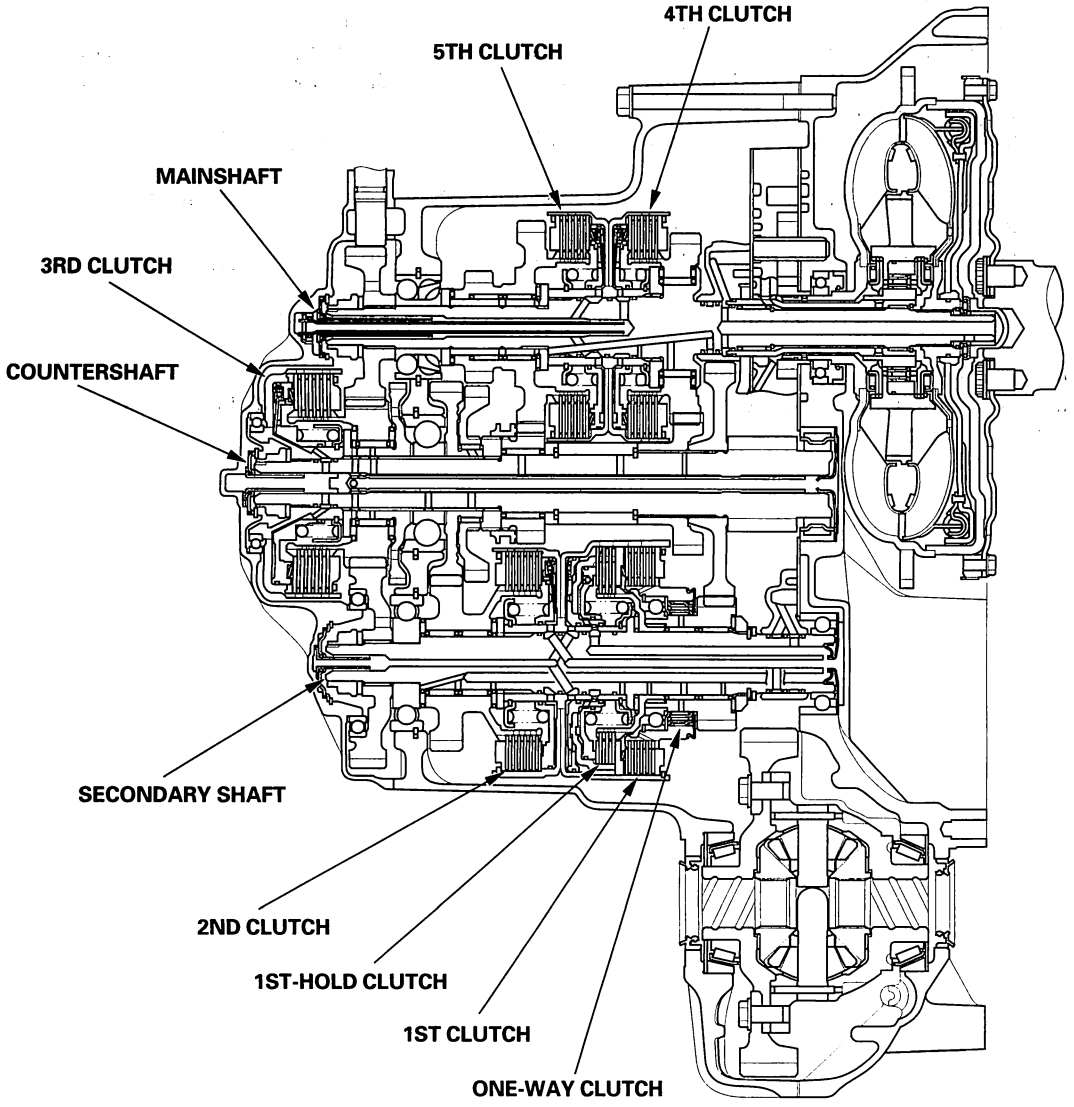

BACK

Protected by AR

1st Clutch
The 1st clutch engages/disengages 1st gear, and is located at the middle of the secondary shaft. The 1st clutch is joined back-to-back to the 2nd clutch. The 1st clutch is supplied hydraulic pressure by its ATF feed pipe within the secondary shaft.

1st-hold Clutch
The 1st-hold clutch engages/disengages 1st-hold in 1 position, and is located in the 1st clutch drum. The 1st-hold clutch is supplied hydraulic pressure through the orifice inside the secondary shaft by a circuit connected to the internal hydraulic circuit.

2nd Clutch
The 2nd clutch engages/disengages 2nd gear, and is located at the middle of the secondary shaft. The 2nd clutch is joined back-to-back to the 1st clutch. The 2nd clutch is supplied hydraulic pressure through the orifice inside the secondary shaft by a circuit connected to the internal hydraulic circuit.

3rd Clutch
The 3rd clutch engages/disengages 3rd gear, and is located at the end of the countershaft, just behind the end cover. The 3rd clutch is supplied hydraulic pressure by its ATF feed pipe in the countershaft.

4th Clutch
The 4th clutch engages/disengages 4th gear, and is located at the middle of the mainshaft. The 4th clutch is joined back-to-back to the 5th clutch. The 4th clutch is supplied hydraulic pressure by its ATF feed pipe within the mainshaft.

5th Clutch
The 5th clutch engages/disengages 5th gear, as well as reverse gear, and is located at the middle of the mainshaft. The 5th clutch is joined back-to-back to the 4th clutch. The 5th clutch is supplied hydraulic pressure by its ATF feed pipe within the mainshaft.

One-way Clutch
The one-way clutch is positioned between the 1st clutch hub and the secondary shaft 1st gear. The secondary shaft 1st gear is splined to the 1st-hold clutch hub, with the 1st-hold clutch hub splined to the secondary shaft. The secondary shaft 1st gear provides the outer race surface, and the 1st clutch hub provides the inner race surface. The one-way clutch locks when power is transmitted from the secondary shaft 1st gear to the countershaft 1st gear. The 1st clutch and gears remain engaged in the 1st, 2nd, 3rd, 4th, and 5th gear ranges in the D, D3, or 2 position.
However, the one-way clutch disengages when the 2nd, 3rd, 4th, or 5th clutches and gears are applied in the D, D3, or 2 position. This is because the increased rotational speed of the gears on the secondary shaft causes the one-way clutch to free-wheels with the 1st clutch still engaged.

Protected by AR

System Description (cont'd)

Power Flow

Gear Operation

Gears on the mainshaft:

- 4th gear is engaged/disengaged with the mainshaft by the 4th clutch.
- 5th gear is engaged/disengaged with the mainshaft by the 5th clutch.
- Reverse gear is engaged/disengaged with the mainshaft by the 5th clutch.
- 3rd gear is splined with the mainshaft and rotates with the mainshaft.

Gears on the countershaft:

- Final gear is integral with the countershaft.
- 1st gear, 4th gear, 2nd gear, and park gear are splined with the countershaft, and rotate with the countershaft.
- 5th gear and reverse gear rotate freely from the countershaft. The reverse selector engages 5th gear and reverse gear with the reverse selector hub. The reverse selector hub is splined to the countershaft so 5th gear and reverse gear engage with the countershaft.
- 3rd gear is engaged/disengaged with the countershaft by the 3rd clutch.

Gears on the secondary shaft:

- 1st gear is engaged/disengaged with the secondary shaft by the 1st clutch. 1st gear is engaged with the secondary shaft by the one-way clutch and the 1st-hold clutch when decelerating for engine braking.
- 2nd gear is engaged/disengaged with the secondary shaft by the 2nd clutch.
- Idler gear is splined with the secondary shaft, and rotates with the secondary shaft.

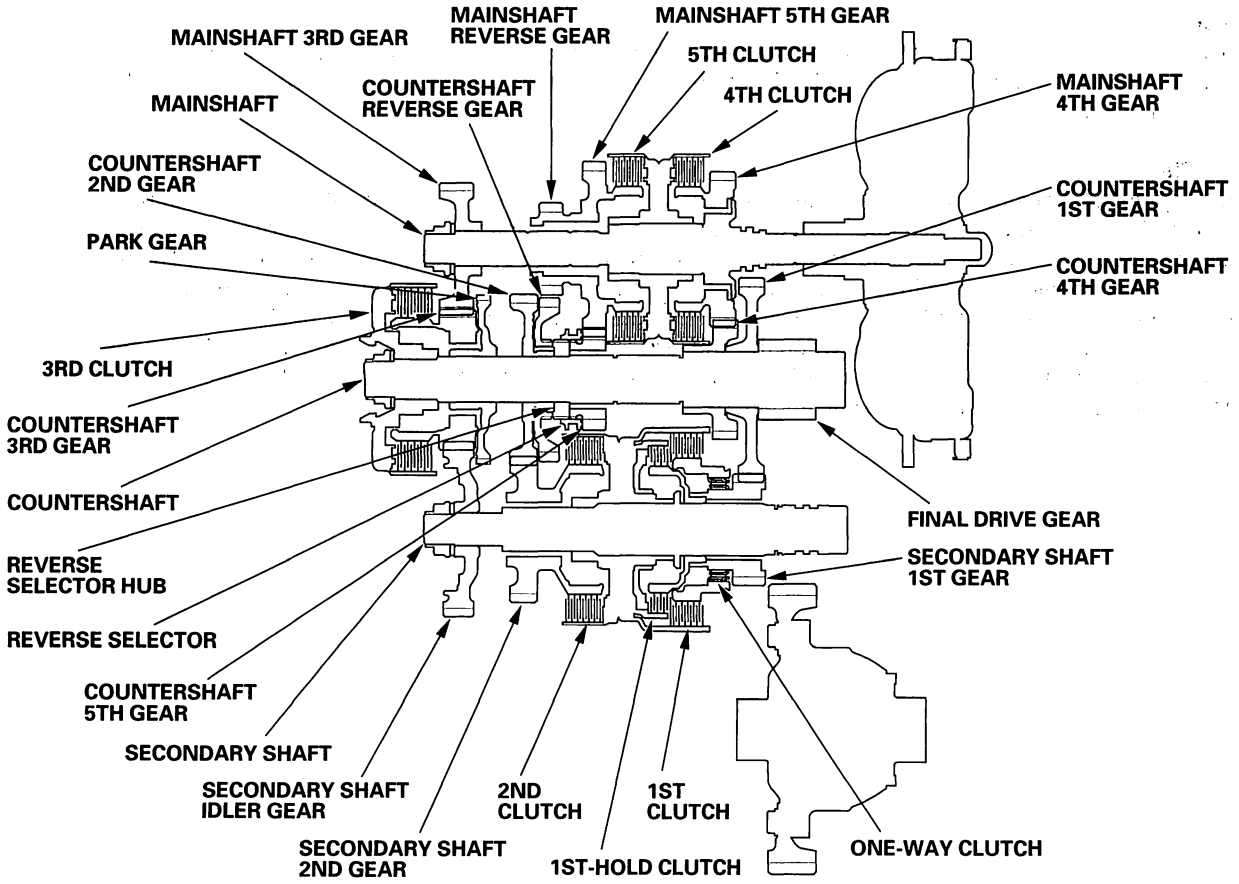

BACK

Protected by AR

P Position

Hydraulic pressure is not applied to the clutches. Power is not transmitted to the countershaft. The countershaft is locked by the park pawl interlocking the park gear.

N Position

Engine power transmitted from the countershaft drives the mainshaft 3rd gear, the countershaft 3rd gear, and the secondary shaft idler gear, but hydraulic pressure is not applied to the clutches. Power is not transmitted to the countershaft. In this position, the position of the reverse selector differs according to whether the shift lever shifted from the D or P position:

- When shifted from the D position, the reverse selector engages with the countershaft 5th gear and the reverse selector hub, and the 5th gear engages with the countershaft.
- When shifted from the R position, the reverse selector engages with the countershaft reverse gear and the reverse selector hub, and the reverse gear engages with the countershaft.

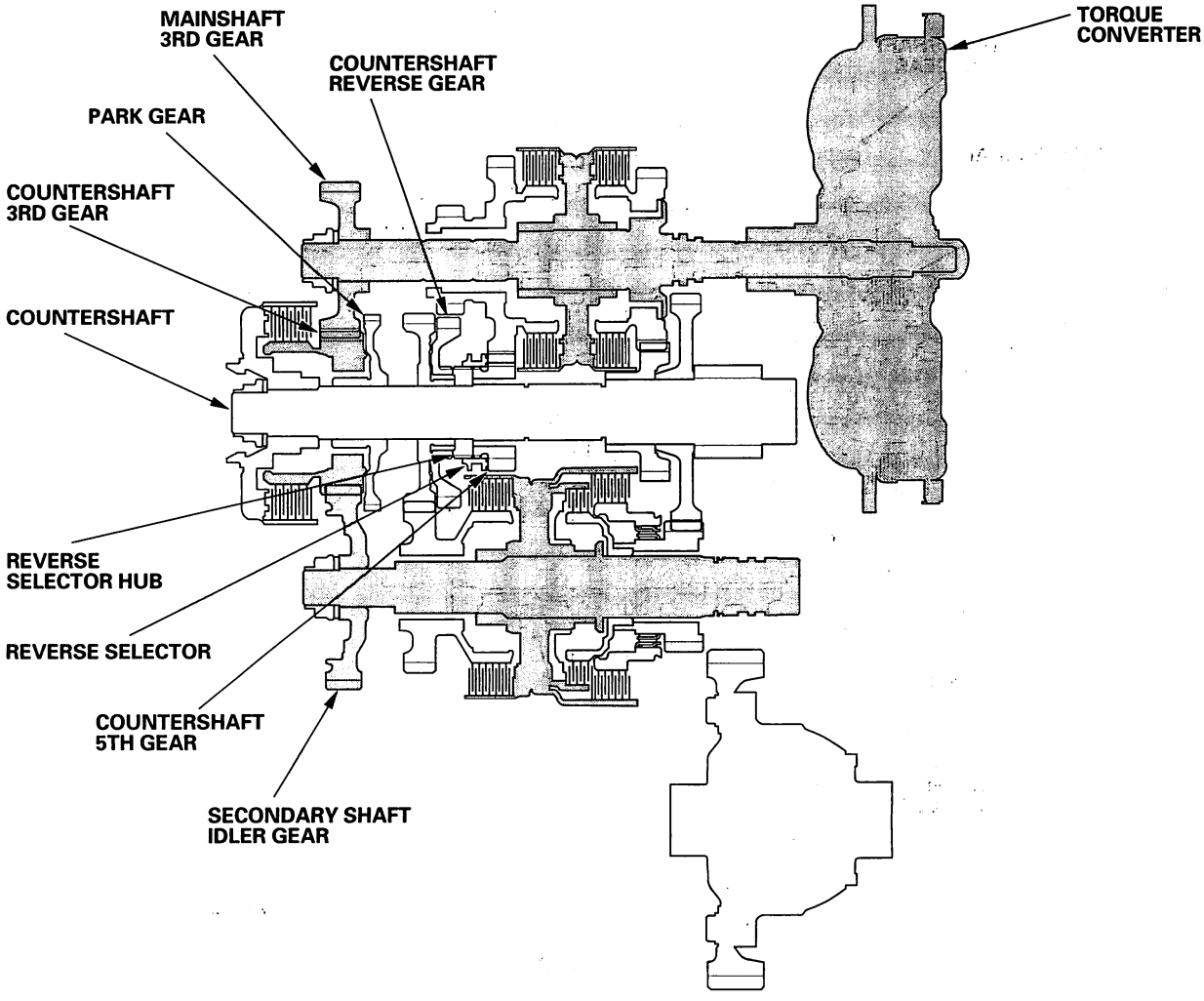

(cont'd)

Protected by AR

System Description (cont'd)

Power Flow (cont'd)

1 Position

In the 1 position, hydraulic pressure is applied to the 1st clutch and the 1st-hold clutch. The power flow when accelerating is as follows:

- Hydraulic pressure is applied to the 1st clutch, then the 1st clutch engages the secondary shaft 1st gear with the secondary shaft by the one-way clutch.
- Hydraulic pressure is also applied to the 1st-hold clutch, and the 1st-hold clutch engages the secondary shaft 1st gear with the secondary shaft.
- The mainshaft 3rd gear drives the secondary shaft via the countershaft 3rd gear and the secondary shaft idler gear.
- The secondary shaft 1st gear drives the countershaft 1st gear and the countershaft.
- Power is transmitted to the final drive gear, which in turn drives the final driven gear.

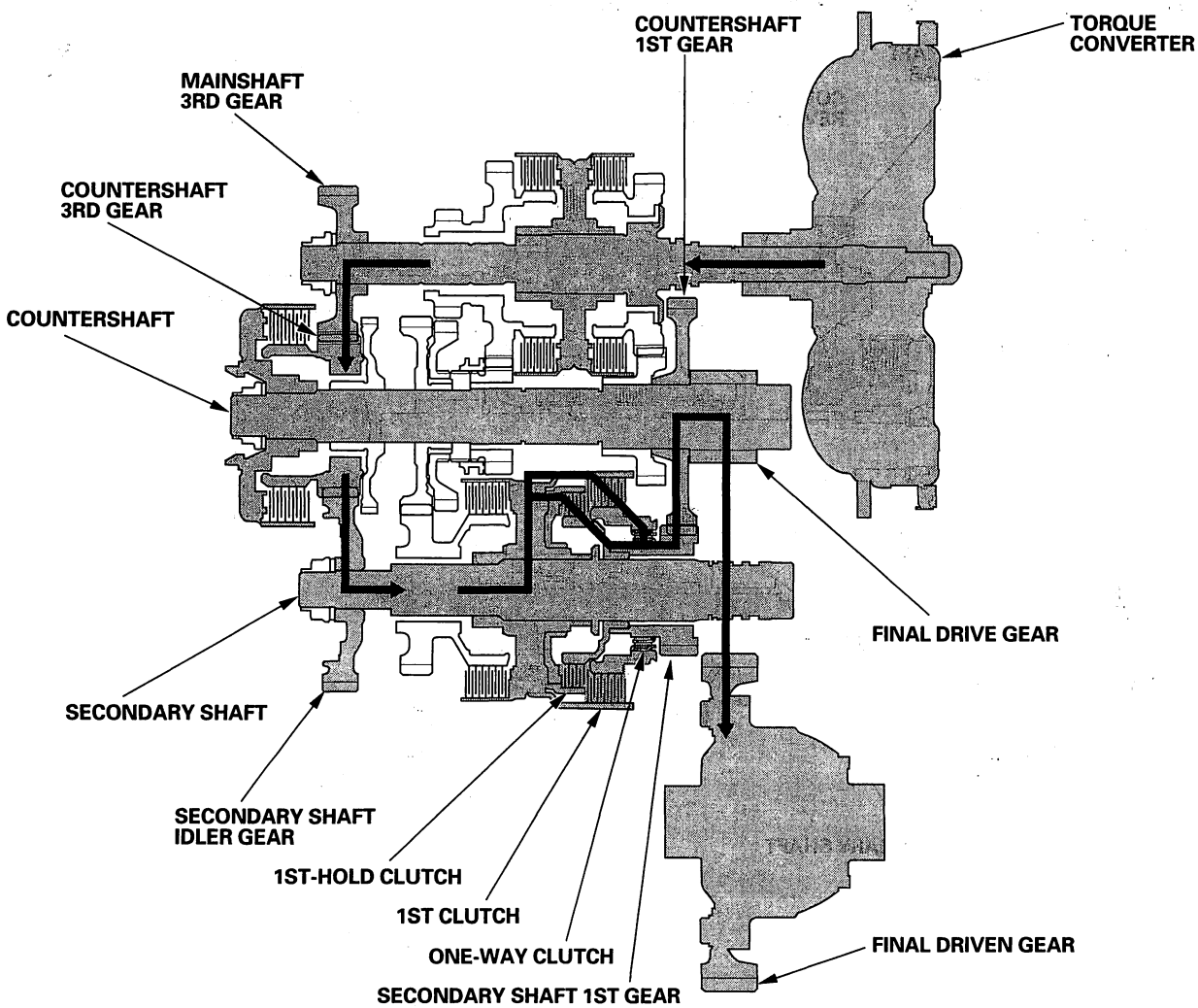

BACK

Protected by AR

1 Position

The power flow when decelerating as follows:

- Hydraulic pressure is applied to the 1st clutch and the 1st-hold clutch. Rolling resistance from the road surface goes through the front wheels to the final drive gear, then to the secondary shaft idler gear.
- The one-way clutch disengages because the application of torque is reversed.
- The counterforce conveyed to the secondary shaft idler gear turns the mainshaft 3rd gear via the countershaft 3rd gear. As a result, engine braking can be obtained with 1st gear.

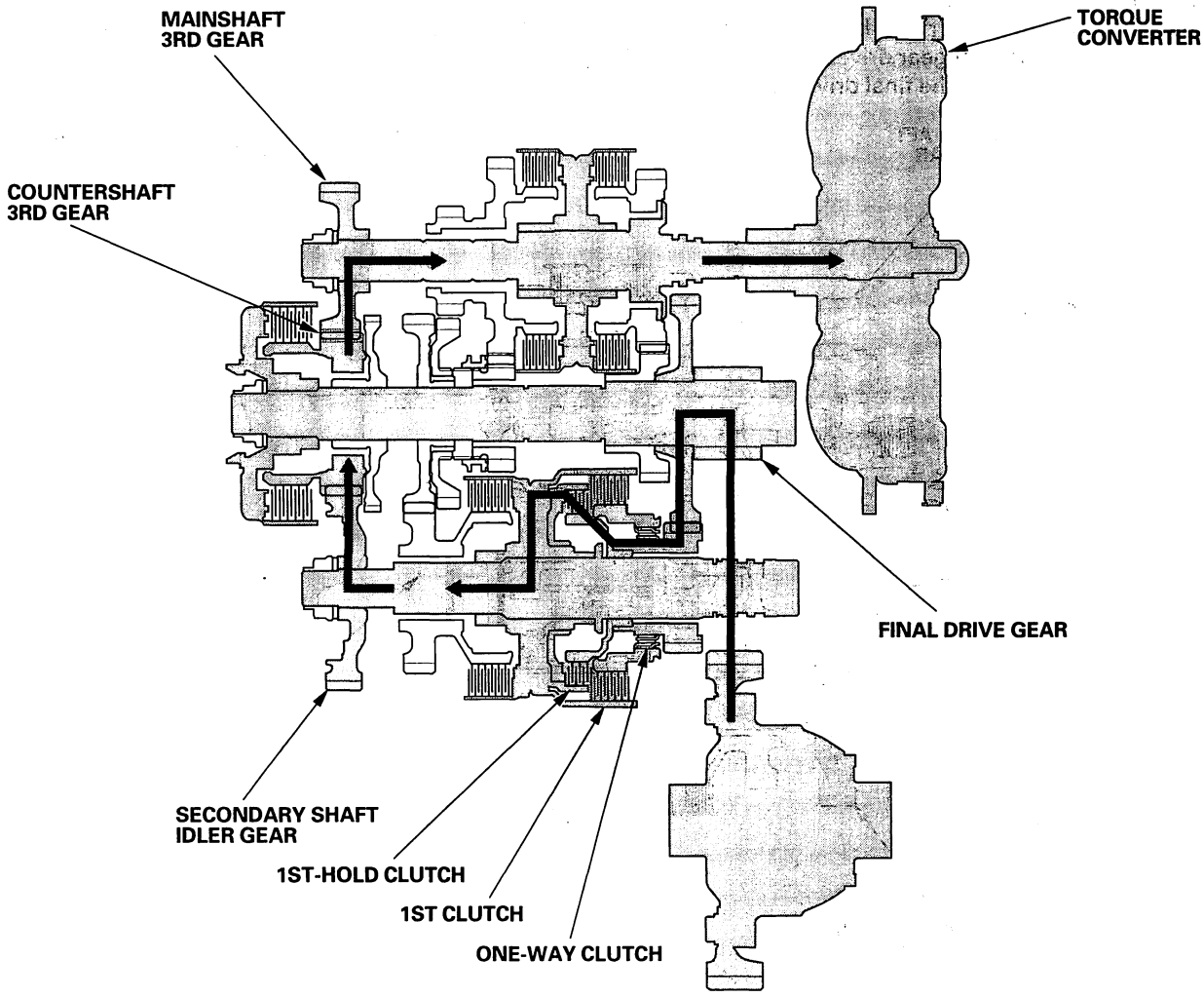

(cont'd)

Protected by AR

System Description (cont'd)

Power Flow (cont'd)

In the D or D3 position, the optimum gear is automatically selected from the 1st, 2nd, 3rd, 4th, and 5th gears according to conditions such as the balance between the throttle opening (engine loading) and vehicle speed.

D or D3 Position in 1st gear

- Hydraulic pressure is applied to the 1st clutch, then the 1st clutch engages the secondary shaft 1st gear with the secondary shaft by the one-way clutch.
- The mainshaft 3rd gear drives the secondary shaft via the countershaft 3rd gear and secondary shaft idler gear.
- The secondary shaft 1st gear drives the countershaft 1st gear and the countershaft.
- Power is transmitted to the final drive gear, which in turn drives the final driven gear.

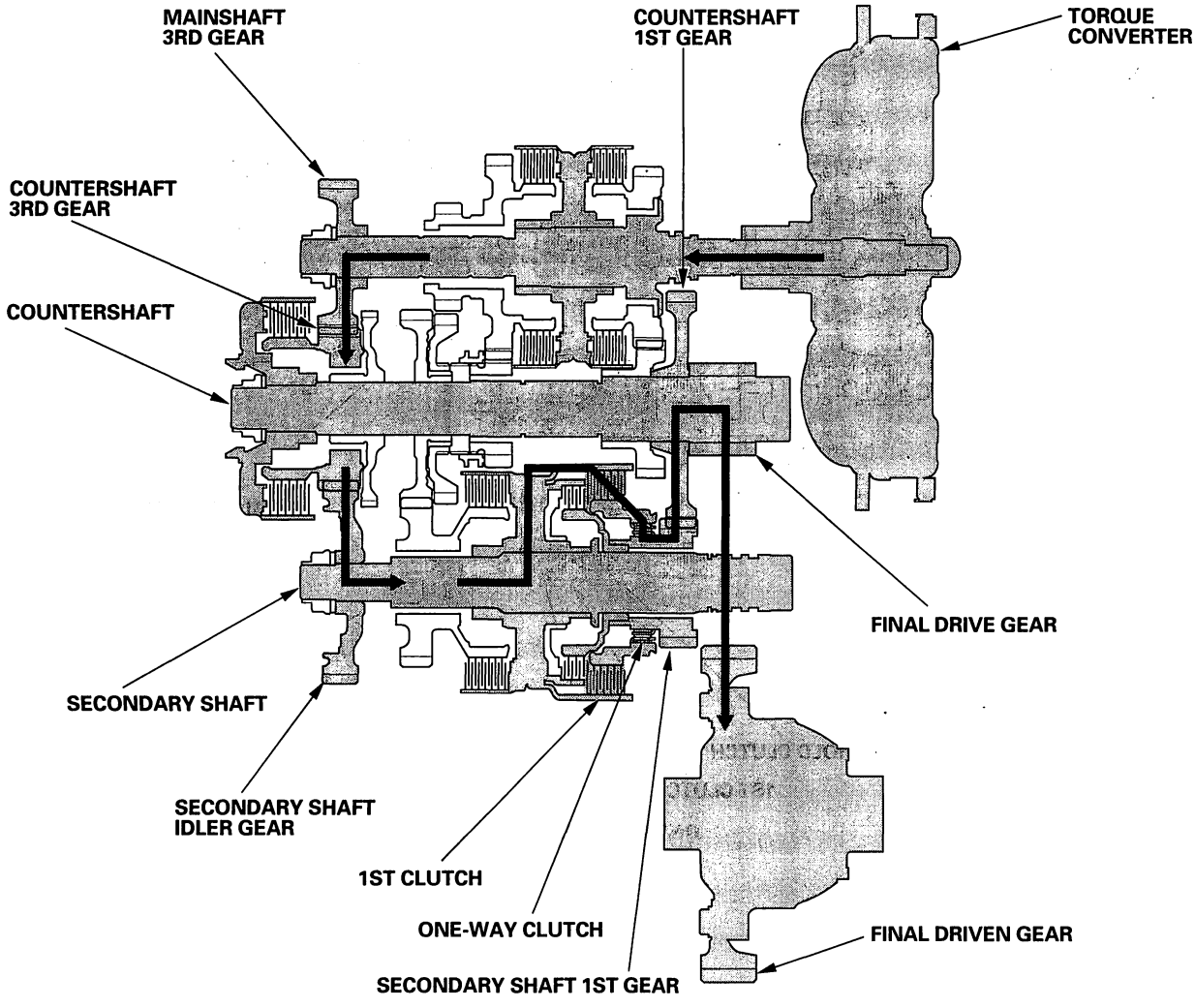

BACK

Protected by AR

D or D3 Position in 2nd gear and 2 Position

- Hydraulic pressure is applied to the 2nd clutch, then the 2nd clutch engages the secondary shaft 2nd gear with the secondary shaft.
- The mainshaft 3rd gear drives the secondary shaft via the countershaft 3rd gear and secondary shaft idler gear.
- The secondary shaft 2nd gear drives the countershaft 2nd gear and the countershaft.
- Power is transmitted to the final drive gear, which in turn drives the final driven gear.
- Hydraulic pressure is also applied to the 1st clutch, but since the rotation speed of 2nd gear exceeds that of 1st gear, power from 1st gear is cut off at the one-way clutch.

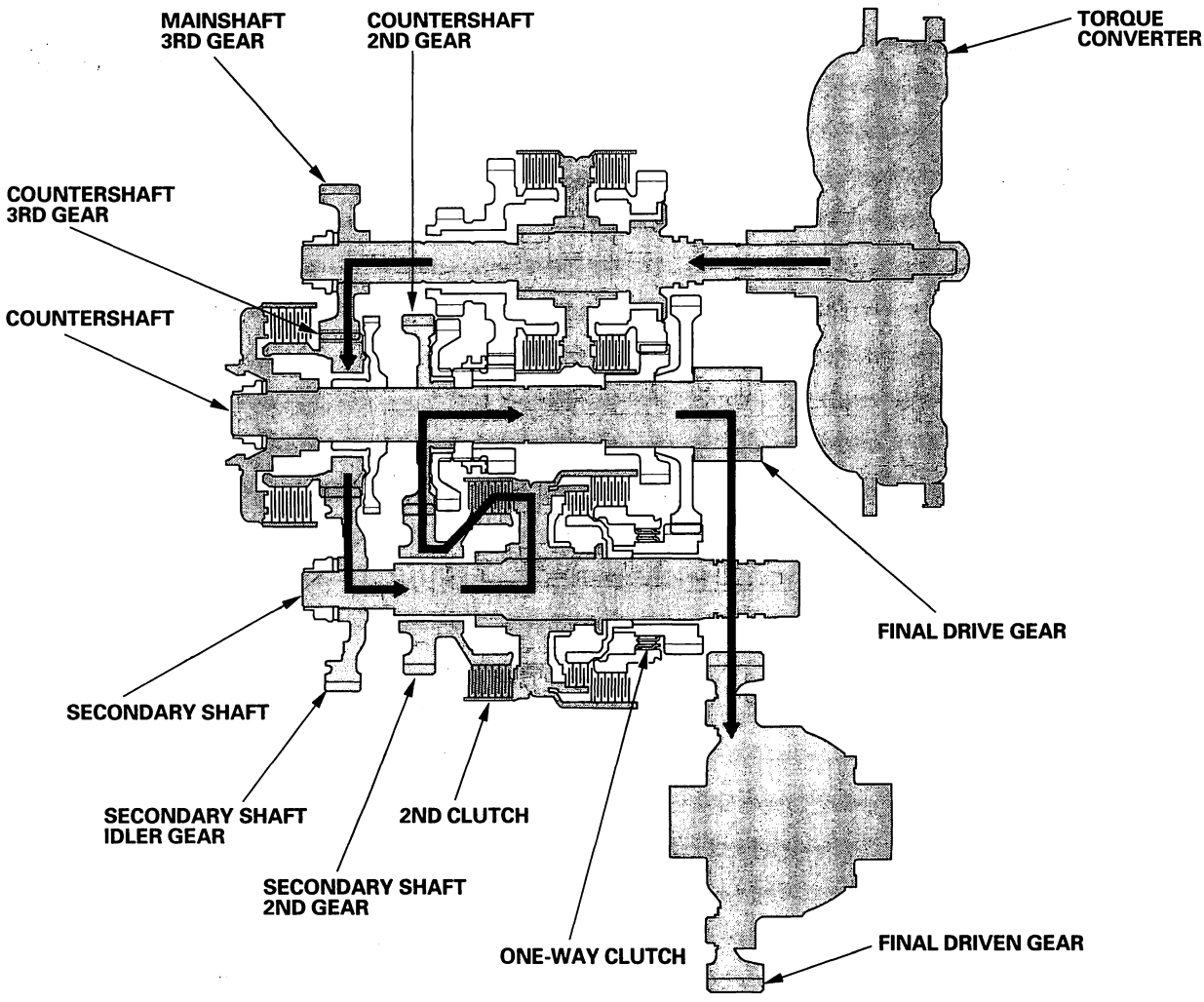

(cont'd)

Protected by AR

System Description (cont'd)

Power Flow (cont'd)

D or D3 Position in 3rd gear

- Hydraulic pressure is applied to the 3rd clutch, then 3rd clutch engages the countershaft 3rd gear with the countershaft.
- The mainshaft 3rd gear drives the countershaft 3rd gear and countershaft.
- Power is transmitted to the final drive gear, which in turn drives the final driven gear.
- Hydraulic pressure is also applied to the 1st clutch, but since the rotation speed of 3rd gear exceeds that of 1st gear, power from 1st gear is cut off at the one-way clutch.

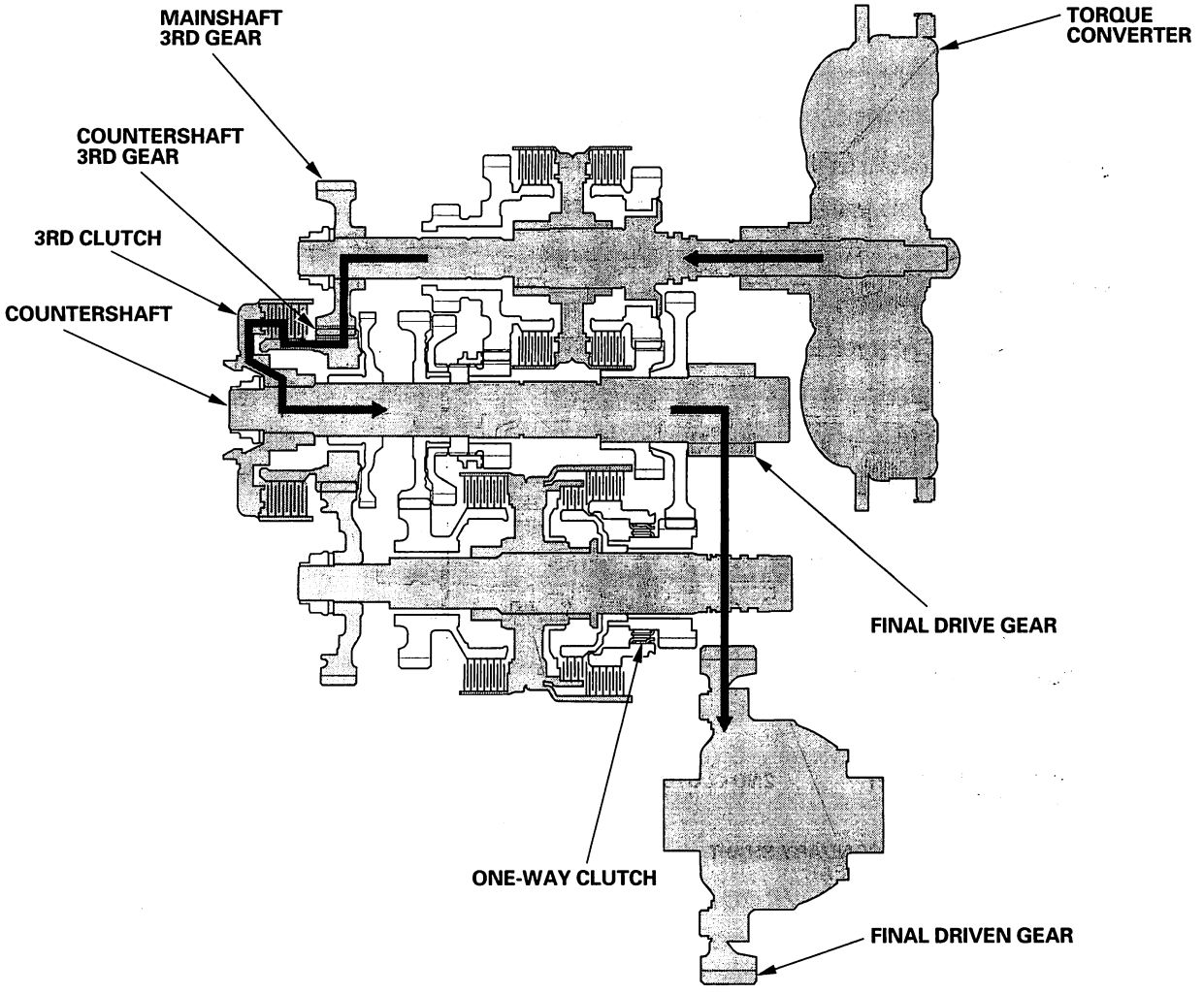

BACK

Protected by AR

D Position in 4th gear

- Hydraulic pressure is applied to the 4th clutch, then the 4th clutch engages the mainshaft 4th gear with the mainshaft.
- The mainshaft 4th gear drives the countershaft 4th gear and the countershaft.
- Power is transmitted to the final drive gear, which in turn drives the final driven gear.
- Hydraulic pressure is also applied to the 1st clutch, but since the rotation speed of 4th gear exceeds that of 1st gear, power from 1st gear is cut off at the one-way clutch.

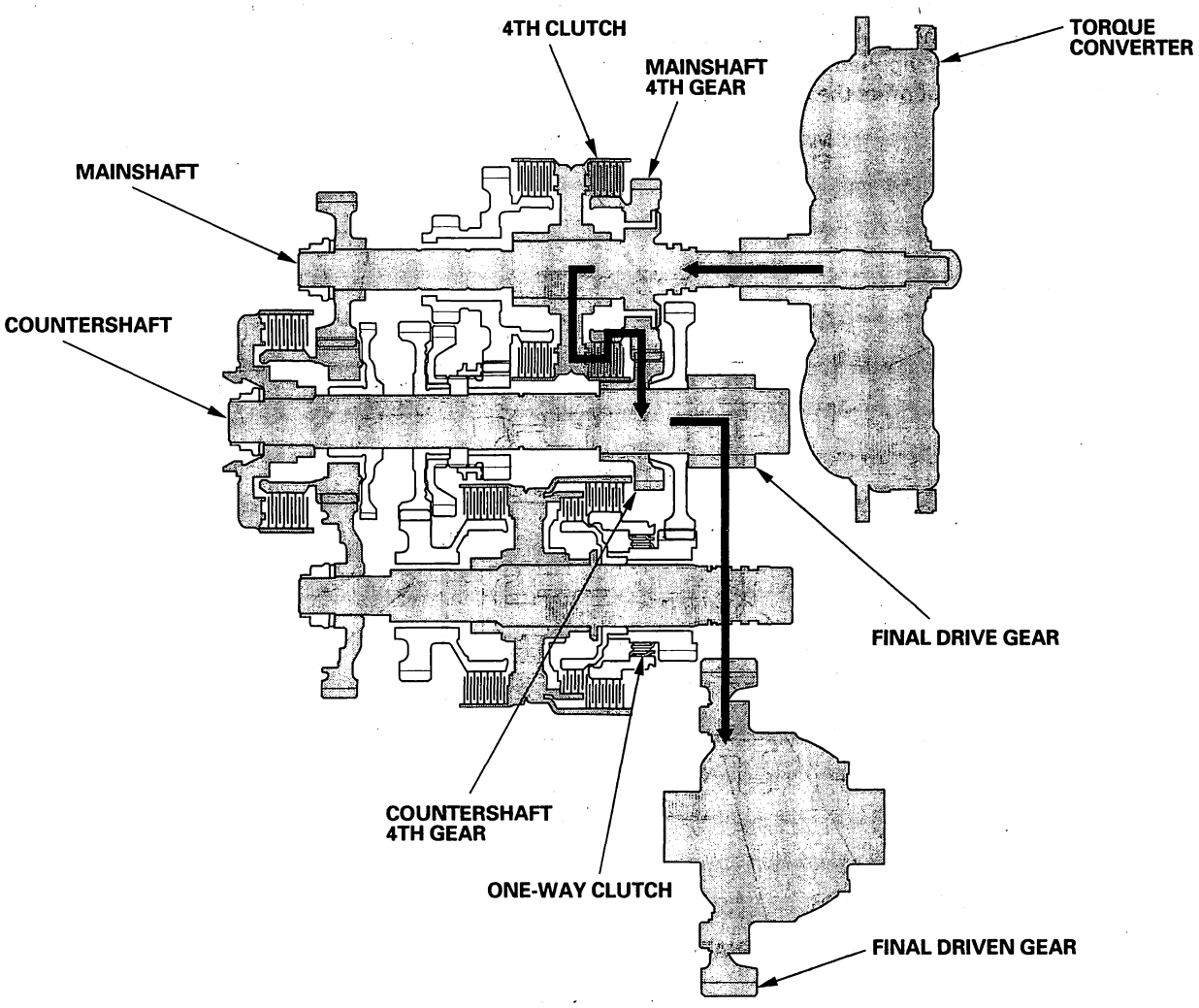

(cont'd)

Protected by AR

System Description (cont'd)

Power Flow (cont'd)

D Position in 5th gear

- Hydraulic pressure is applied to the servo valve to engage the reverse selector with the countershaft 5th gear while the shift lever in the forward range (D, D3, 2, and 1 positions).
- Hydraulic pressure is also applied to the 5th clutch, then the 5th clutch engages the mainshaft 5th gear with the mainshaft.
- The mainshaft 5th gear drives the countershaft 5th gear, which drives the reverse selector hub and the countershaft.
- Power is transmitted to the final drive gear, which in turn drives the final driven gear.
- Hydraulic pressure is also applied to the 1st clutch, but since the rotation speed of 5th gear exceeds that of 1st gear, power from 1st gear is cut off at the one-way clutch.

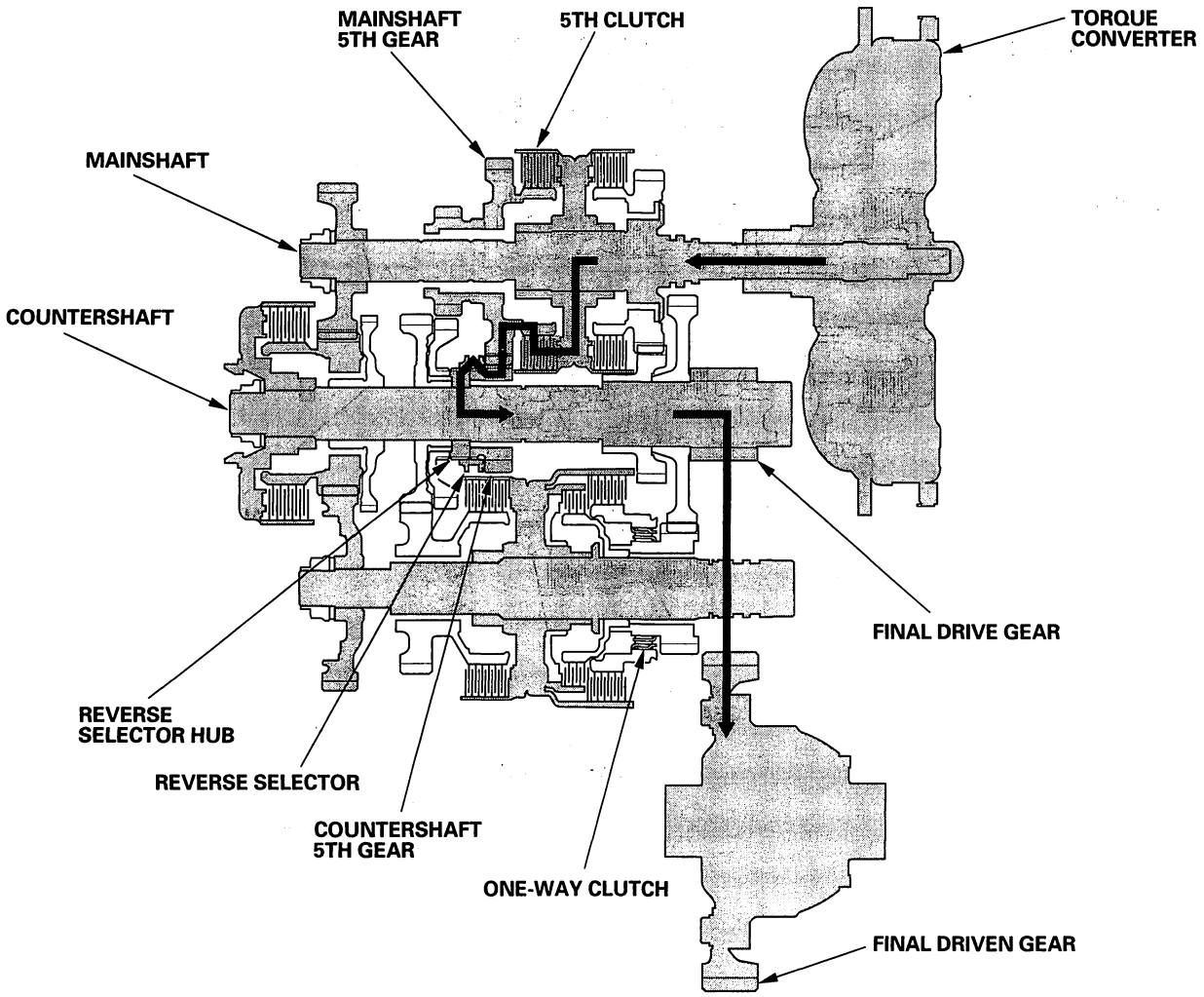

BACK

Protected by AR

R Position

- Hydraulic pressure is applied to the servo valve to engage the reverse selector with the countershaft (reverse gear while the shift lever is in R position).
- Hydraulic pressure is also applied to the 5th clutch, then the 5th clutch engages the mainshaft reverse gear with the mainshaft.
- The mainshaft reverse gear drives the countershaft reverse gear via the reverse idler gear.
- The rotation direction of the countershaft reverse gear is changed via the reverse idler gear.
- The countershaft reverse gear drives the countershaft via the reverse selector which drives the reverse selector hub.
- Power is transmitted to the final drive gear, which in turn drives the final driven gear.

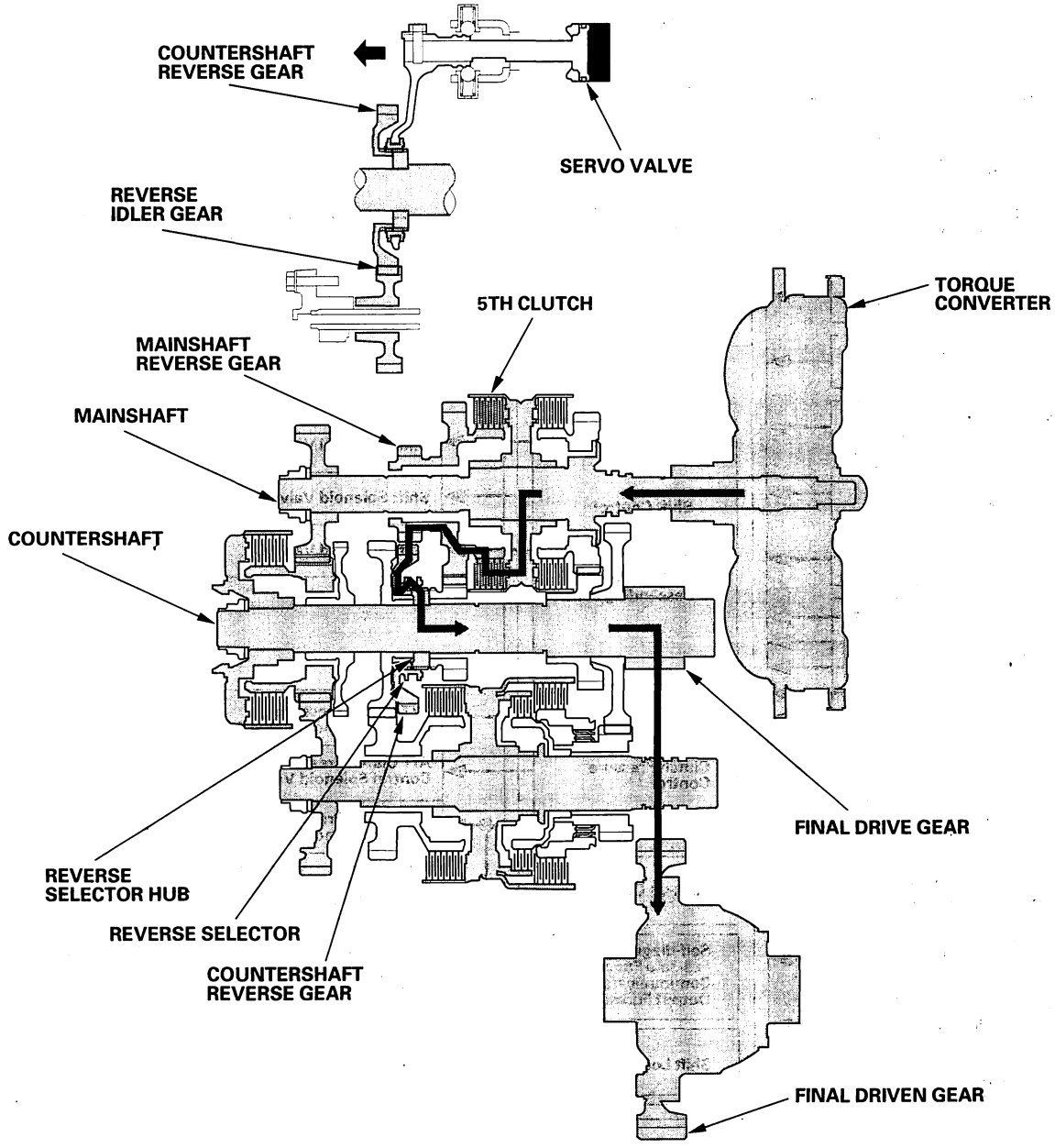

Protected by AR

System Description (cont'd)

Electronic Control System

Functional Diagram

The electronic control system consists of the powertrain control module (PCM), sensors, and solenoid valves. Shifting and lock-up are electronically controlled for comfortable driving under all conditions.

The PCM recieves input signals from the sensors, switches, and other control units, perform processing data, and outputs signals for the engine control system and A/T control system. The A/T control system includes shift control, grade logic control, clutch pressure control, and lock-up control is stored in the PCM.
The PCM switches the shift solenoid valves and the A/T clutch pressure control solenoid valves to control shifting transmission gears and lock-up torque converter clutch.

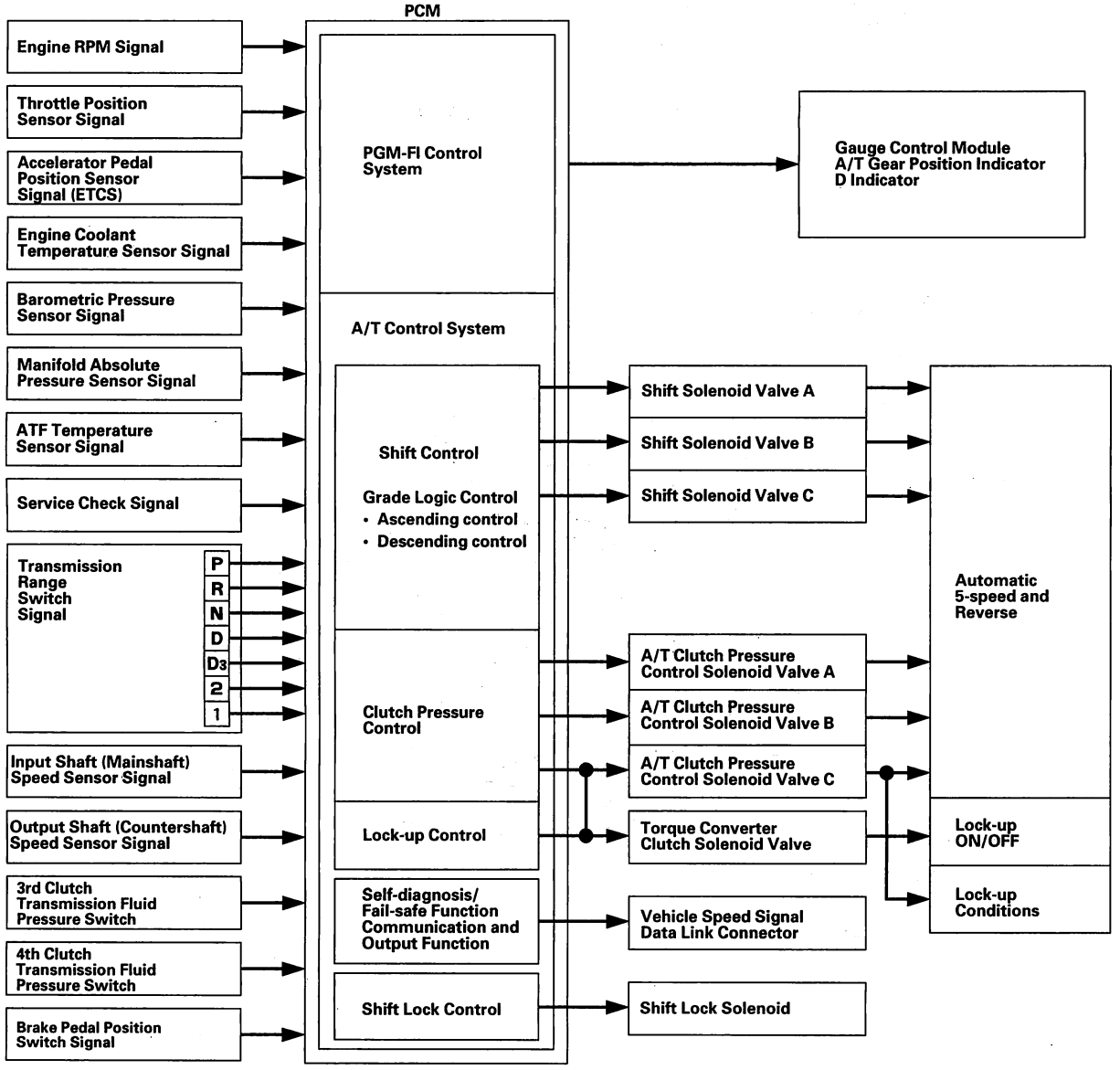

BACK

Protected by AR

Electrical Control Locations

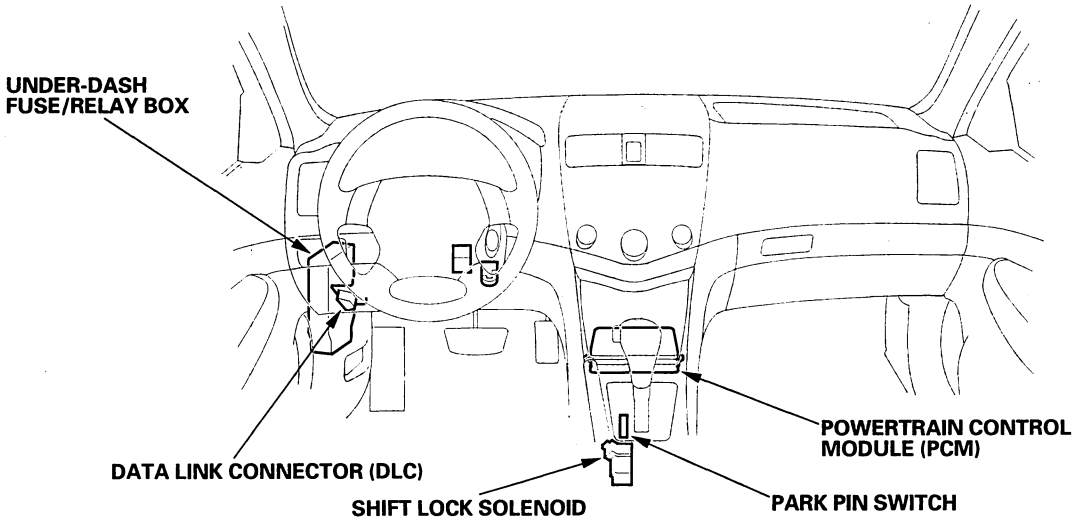

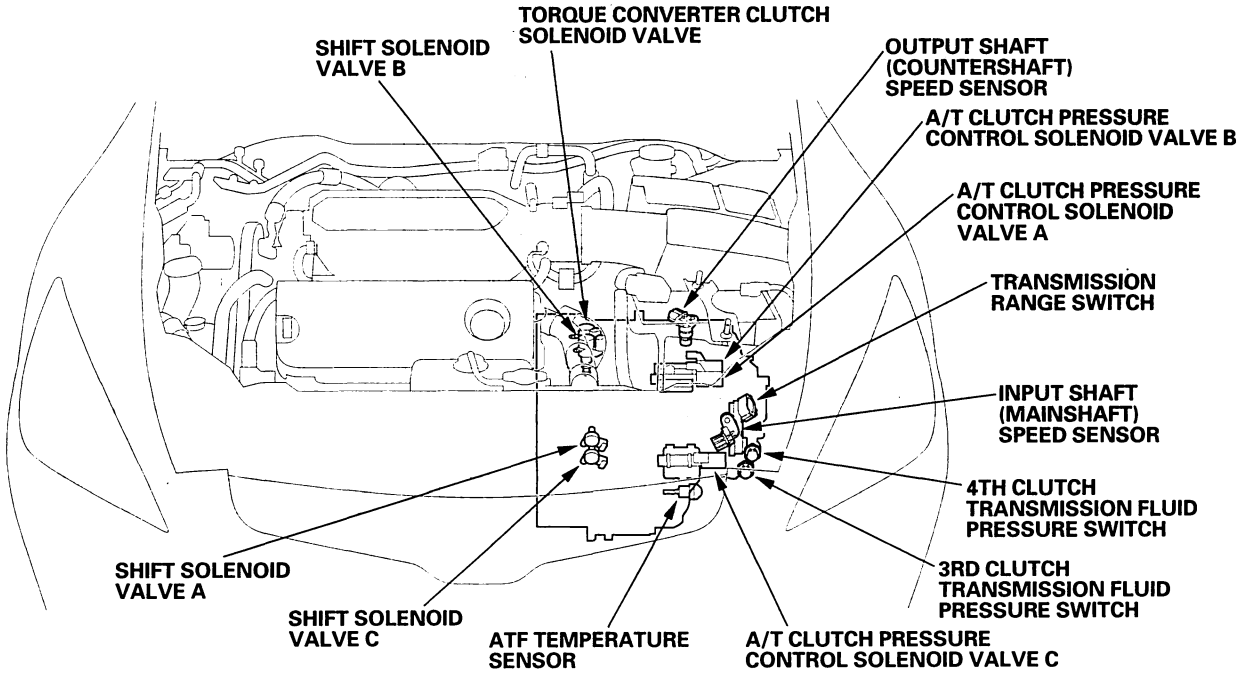

(cont'd)

Protected by AR

System Description (cont'd)

Electronic Control System (cont'd)

Shift Control
The PCM instantly determines which gear should be selected by various signals sent from sensors and switches, and it actuates the shift solenoid valves A, B, and C to control shifting.

Also, as grade logic control system has been adopted to control shifting in the D and D3 positions. The PCM compares actual driving conditions with memorized driving conditions, based on the input from the accelerator pedal position sensor, the engine coolant temperature sensor, the barometric pressure sensor, the brake pedal position switch signal, and the shift lever position signal, to control shifting while the vehicle is ascending or descending a slope.

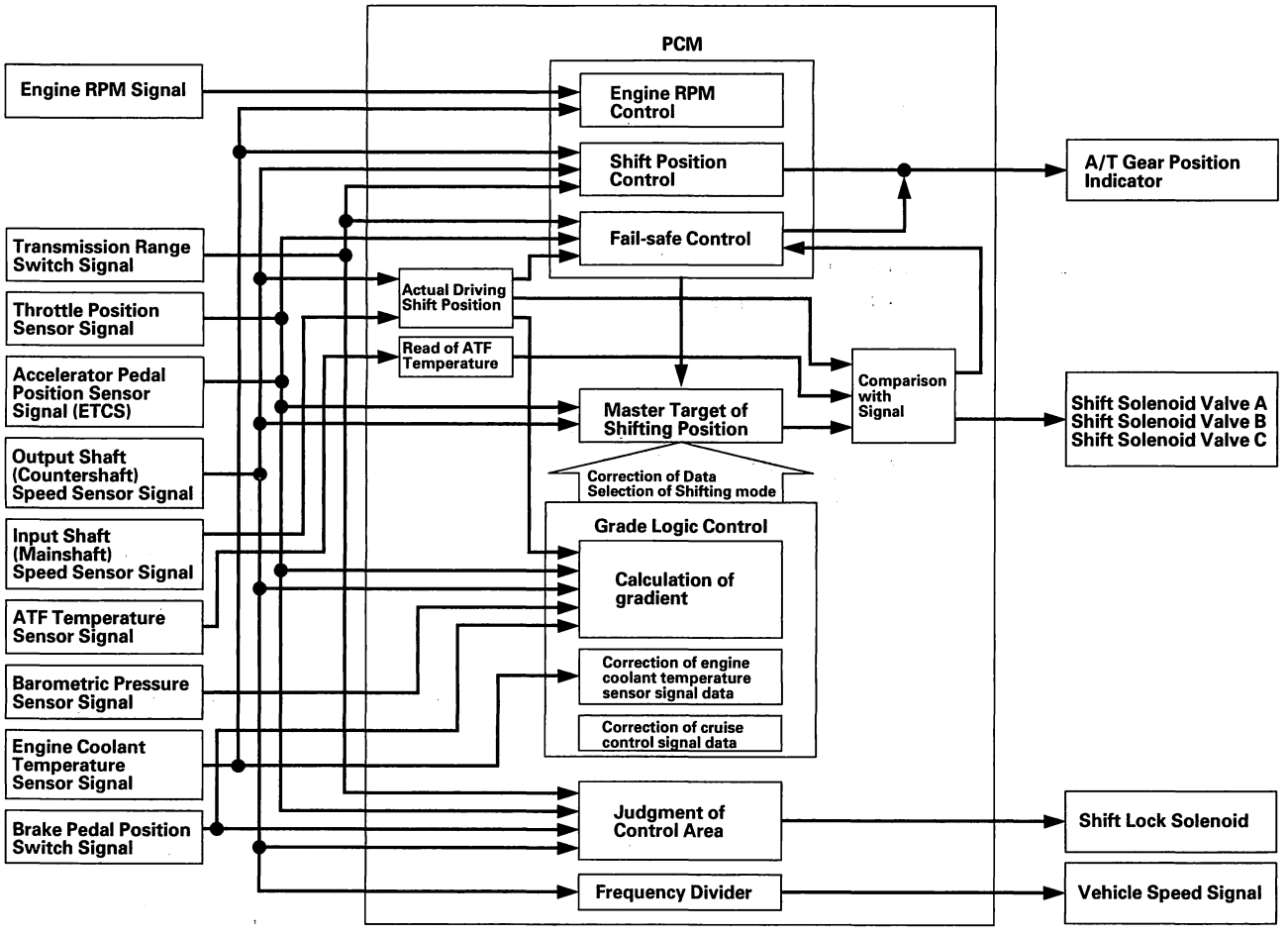

BACK

Protected by AR

The PCM turns on and off the shift solenoid valves A, B, and C to control shifting of the transmission gears. The combination of driving signals to shift solenoid valves A, B, and C are shown in the table.

Position	Gear position	Shift solenoid valves		
		A	B	C
D, D3	Shifting from the N position	OFF	ON	OFF
	Stays in 1st	ON	ON	ON
	Shifting gears between 1st and 2nd	ON	ON	ON
	Stays in 2nd	ON	ON	OFF
	Shifting gears between 2nd and 3rd	OFF	ON	OFF
	Stays in 3rd	OFF	ON	ON
D	Shifting gears between 3rd and 4th	OFF	OFF	ON
	Stays in 4th	OFF	OFF	OFF
	Shifting gears between 4th and 5th	ON	OFF	OFF
	Stays in 5th	ON	OFF	ON
2	2nd	ON	ON	OFF
1	1st	ON	ON	ON
R	Shifting from the P and N position	OFF	ON	ON
	Stays in reverse	OFF	ON	OFF
	Reverse inhibit	ON	ON	ON
P	Park	OFF	ON	OFF
N	Neutral	OFF	ON	OFF

(cont'd)

Protected by AR

System Description (cont'd)

Electronic Control System (cont'd)

Grade Logic Control: Ascending Control
When the PCM determines that the vehicle is climbing a hill in the D and D3 positions, the system extends the engagement area of 2nd gear, 3rd gear, and 4th gear to prevent the transmission from frequently shifting between 2nd and 3rd gears, between 3rd and 4th gears, and between 4th and 5th gears, so the vehicle can run smooth and have more power when needed.

NOTE: Shift schedules stored in the PCM between 2nd and 3rd gears, between 3rd and 4th gears, and between 4th and 5th gears, enable the PCM to automatically select the most suitable gear according to the magnitude of a gradient.

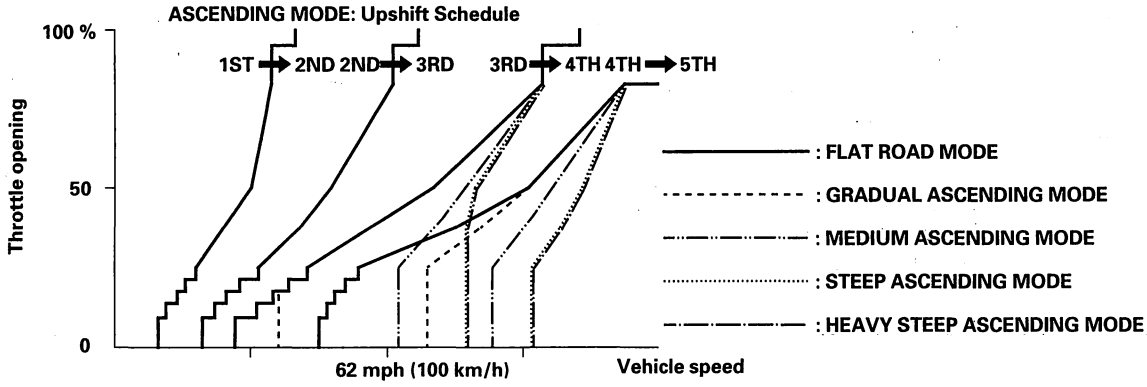

Grade Logic Control: Descending Control
When the PCM determines that the vehicle is going down a hill in the D and D3 positions, the shift-up speed from 4th to 5th gear, 3rd to 4th gear, and from 2nd to 3rd (when the throttle is closed) becomes faster than the set speed for flat road driving to widen the 4th gear, 3rd gear, and 2nd gear driving areas. This, in combination with engine braking from the deceleration lock-up, achieves smooth driving when the vehicle is descending. There are three descending modes with different 4th gear driving areas, 3rd gear driving areas and 2nd gear driving areas according to the magnitude of a gradient stored in the PCM. When the vehicle is in 5th or 4th gear and you are decelerating while applying the brakes on a steep hill, the transmission will downshift to a lower gear. When you accelerate, the transmission will then return to a higher gear.

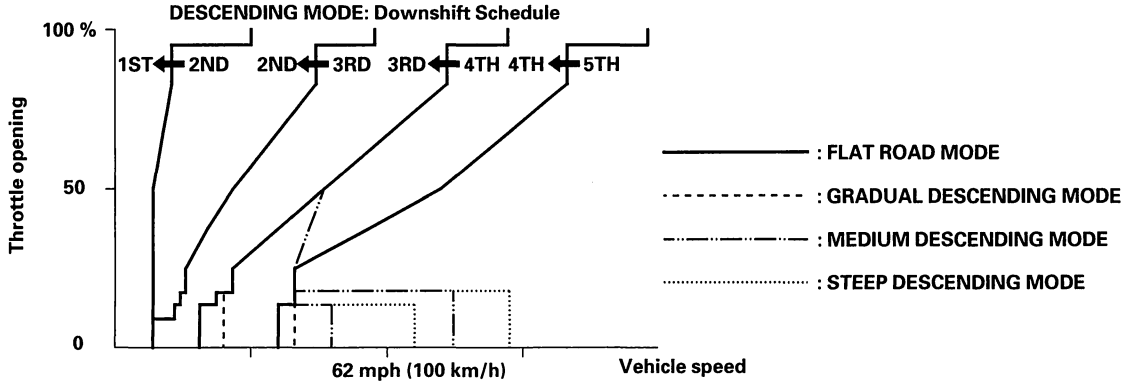

Deceleration Control
When the vehicle goes around a corner and needs to decelerate first and then accelerate, the PCM sets the data for deceleration control to reduce the number of times the transmission shifts. When the vehicle is decelerating from speeds above 27 mph (43 km/h), the PCM shifts the transmission from 5th or 4th to 2nd earlier than normal to cope with upcoming acceleration.

BACK

Protected by AR

Clutch Pressure Control

The PCM actuates the A/T clutch pressure control solenoid valves A, B, and C to control the clutch pressure. When shifting between lower and higher gears, the clutch pressure regulated by the A/T clutch pressure control solenoid valves A, B, and C engages and disengages the clutch smoothly.

The PCM receives input signals from the various sensors and switches, performs processing data, and outputs a current to the A/T clutch pressure control solenoid valves A, B, and C.

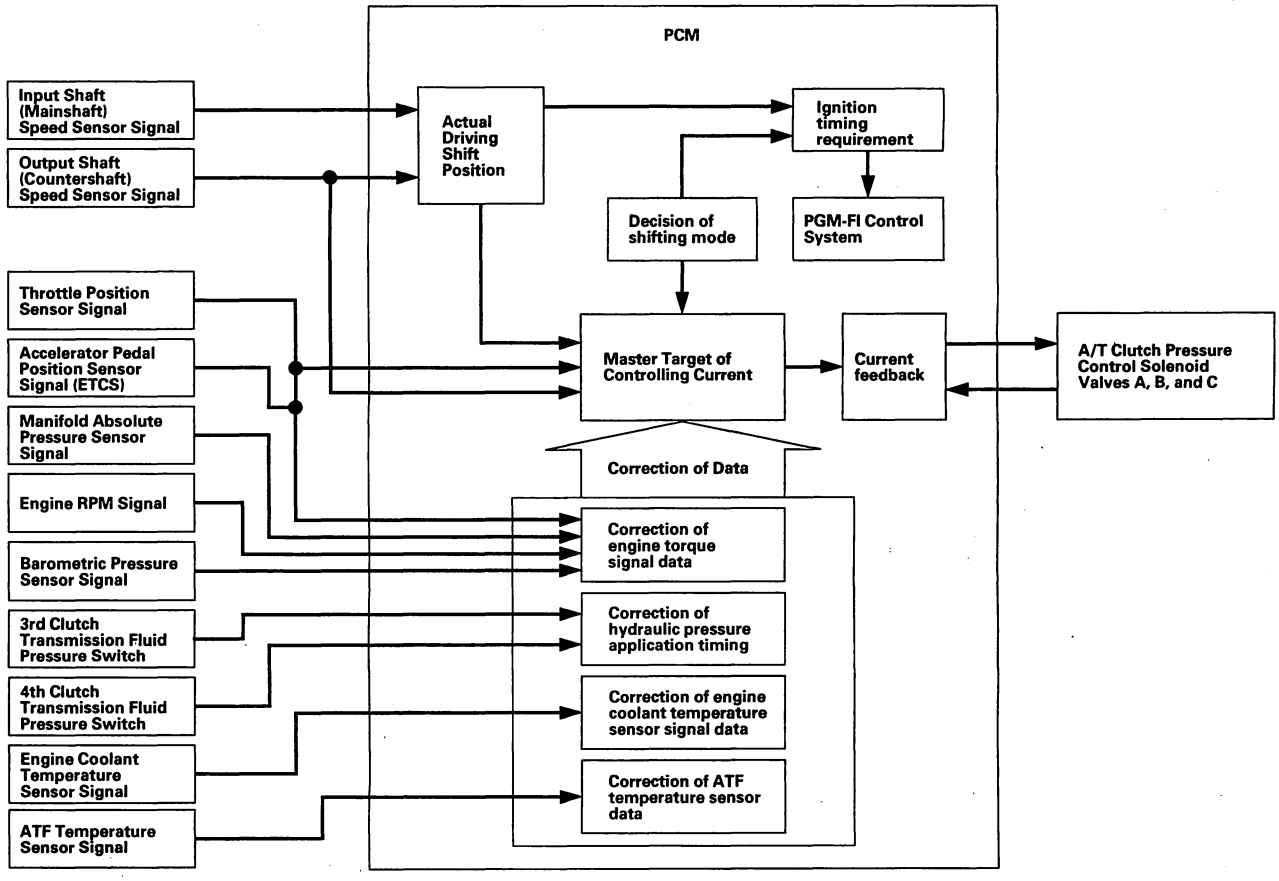

(cont'd)

Protected by AR

System Description (cont'd)

Electronic Control System (cont'd)

Lock-up Control

The torque converter clutch solenoid valve controls the hydraulic pressure to switch the lock-up shift valve and lock-up ON and OFF. The PCM actuates the torque converter clutch solenoid valve and the A/T clutch pressure control solenoid valve ON, the condition of the lock-up starts. The A/T clutch pressure control solenoid valve C regulates and apply the hydraulic pressure to the lock-up control valve to control the amount of the lock-up.
The lock-up mechanism operates in the D position (2nd, 3rd, 4th, and 5th), and in the D3 position (2nd and 3rd).

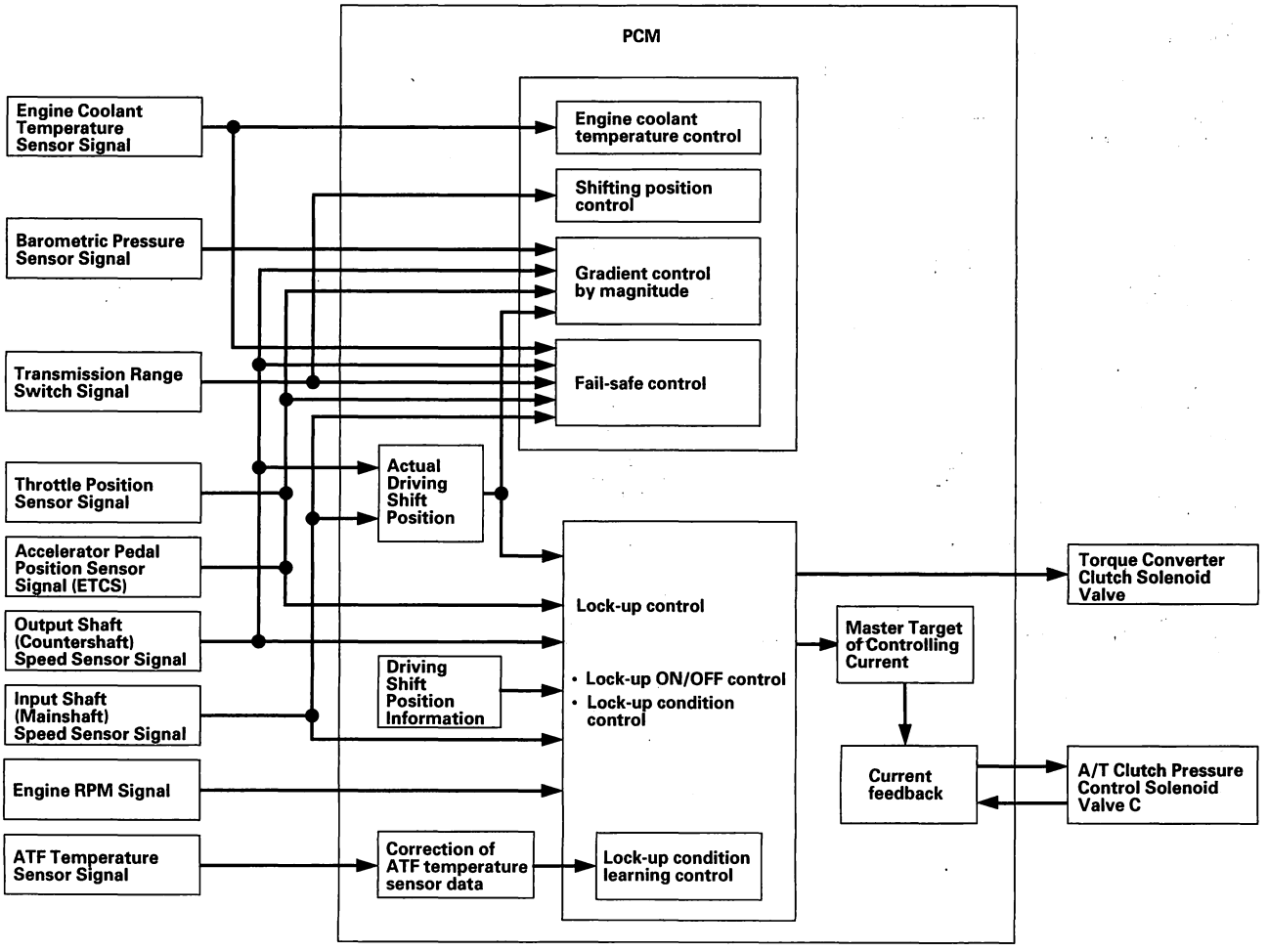

BACK

Protected by AR

PCM Electrical Connections

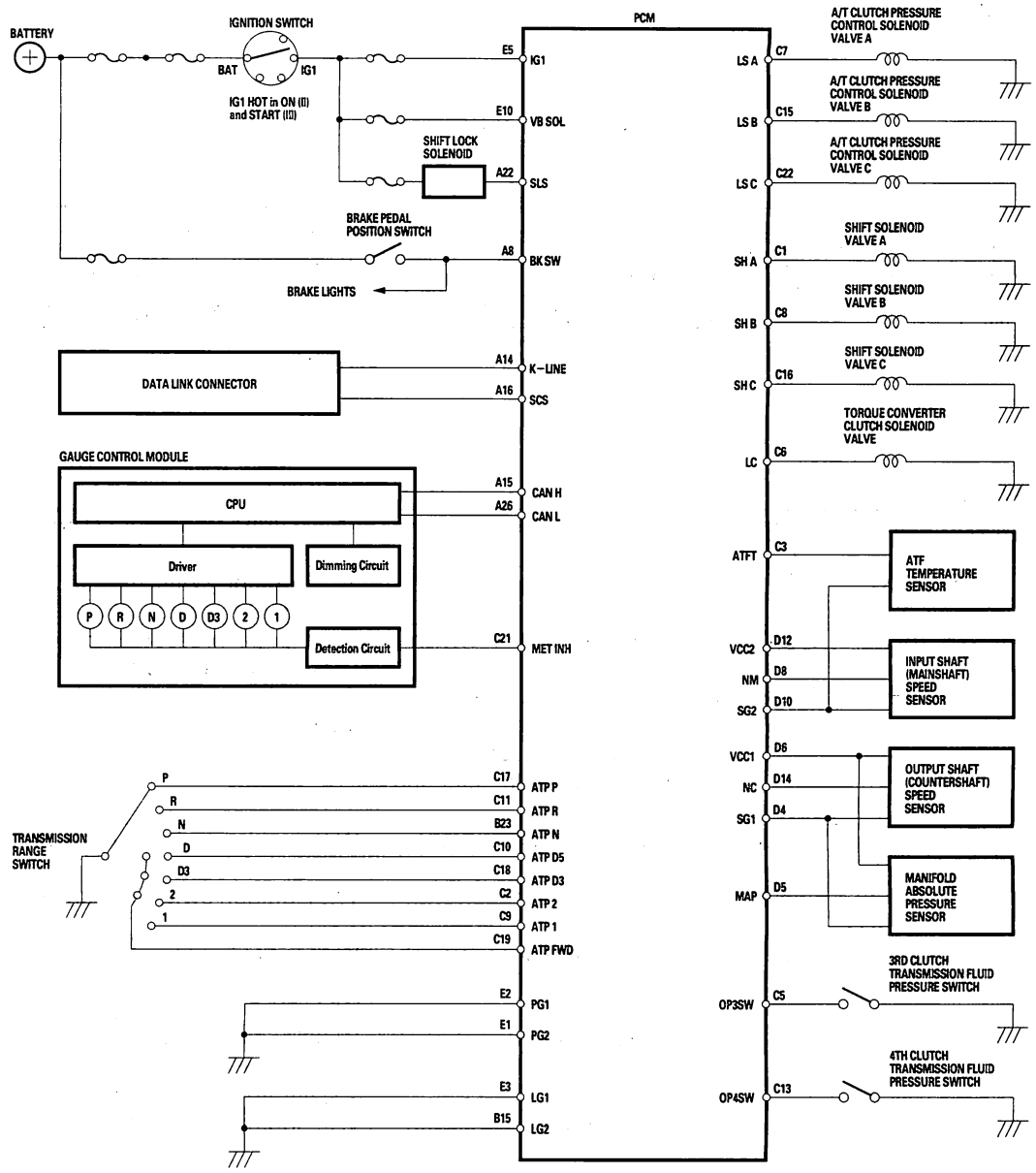

PCM Connector Terminal Locations

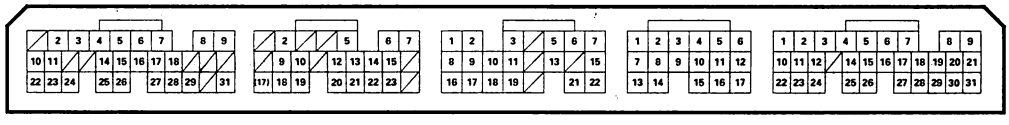

A (31P) B (24P) C (22P) D (17P) E (31P)

(cont'd)

Protected by AR

System Description (cont'd)

Electronic Control System (cont'd)

PCM Inputs and Outputs

PCM Connector Terminal Locations

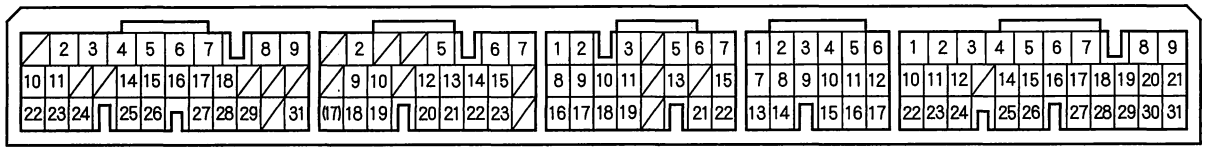

PCM CONNECTOR A (31P)

Terminal Number	Wire Color	Signal	Description	Measuring Conditions/Terminal Voltage
A5	RED/BLK	MRLY	Main relay control	With ignition switch ON (II): 0V With ignition switch OFF: Battery voltage
A8	WHT/BLK	BKSW	Brake pedal position switch signal input	Brake pedal pressed: Battery voltage Brake pedal released: 0V
A11	BLU/WHT	VSSOUT	Vehicle speed signal detected from output shaft (countershaft) speed sensor and sent to speedometer and odometer	Depending on vehicle speed: Pulsing signal
A14	BLU	K-LINE	Communication line PCM-to-DLC	With ignition switch ON (II): Battery voltage
A15	WHT	CAN H	F-CAN Communication with network	With ignition switch ON (II): Pulsing signal
A16	BRN	SCS	Detects service check signal	With the SCS shorted with the HDS: About 0 V With the SCS open: About 5 V
A22	YEL/BLK	SLS	Shift lock solenoid control	With ignition switch ON (II), in the P position, brake pedal pressed, and accelerator released: 0 V
A26	RED	CAN L	F-CAN Communication with network	With ignition switch ON (II): Pulsing signal

PCM CONNECTOR B (24P)

Terminal Number	Wire Color	Signal	Description	Measuring Conditions/Terminal Voltage
B15	BRN/YEL	LG2	Ground	Less than 1.0 V at all times
B23	RED/BLK	ATP N	Transmission range switch N position signal input	In the N position: 0 V In other than the N position: About 5 V

BACK

Protected by AR

PCM CONNECTOR C (22P)

Terminal Number	Wire Color	Signal	Description	Measuring Conditions/Terminal Voltage
C1	BLU/YEL	SH A	Shift solenoid valve A control	Battery voltage in these positions: • 2 and 1 • D and D3 in 1st and 2nd gear • D in 5th gear 0 V in these positions: • D and D3 in 3rd gear • D in 4th gear • P, R, and N
C2	BLU	ATP 2	Transmission range switch 2 position signal input	In the 2 position: 0 V In other than the 2 position: Battery voltage
C3	BLU/YEL	ATFT	ATF temperature sensor signal input	With ignition switch ON (II): 0.2—0.4 V With ignition switch OFF: 0 V
C5	BLU/WHT	OP3SW	3rd clutch transmission fluid pressure switch signal input	With ignition switch ON (II): • Without 3rd clutch pressure: Battery voltage • With 3rd clutch pressure: About 0 V
C6	YEL	LC	Torque converter clutch solenoid valve control	During lock-up condition: Battery voltage During no lock-up condition: 0 V
C7	RED	LS A	A/T clutch pressure control solenoid valve A control	With ignition switch ON (II): Pulsing signal
C8	GRN/WHT	SH B	Shift solenoid valve B control	Battery voltage in these positions: • 2 and 1 • D and D3 in 1st, 2nd, and 3rd gear • P, R, and N 0 V in these positions: • D in 4th and 5th gear
C9	BRN	ATP 1	Transmission range switch 1 position signal input	In the 1 position: 0 V In other than the 1 position: Battery voltage
C10	YEL/GRN	ATP D5	Transmission range switch D position signal input	In the D position: 0 V In other than the D position: Battery voltage
C11	WHT	ATP R	Transmission range switch R position signal input	In the R position: 0 V In other than the R position: Battery voltage
C13	BLU/YEL	OP4SW	4th clutch transmission fluid pressure switch signal input	With ignition switch ON (II): • Without 4th clutch pressure: Battery voltage • With 4th clutch pressure: About 0 V
C15	BRN/WHT	LS B	A/T clutch pressure control solenoid valve B control	With ignition switch ON (II): Pulsing signal

(cont'd)

Protected by AR

System Description (cont'd)

Electronic Control System (cont'd)

PCM Inputs and Outputs (cont'd)

PCM Connector Terminal Locations

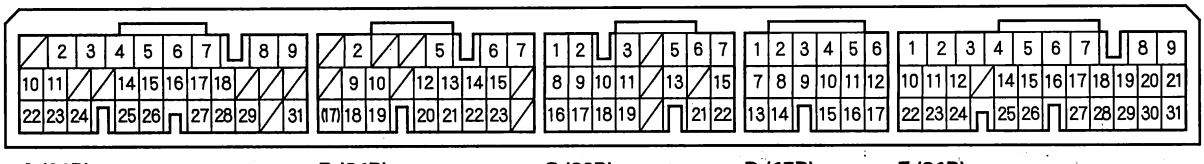

PCM CONNECTOR C (22P)

Terminal Number	Wire Color	Signal	Description	Measuring Conditions/Terminal Voltage
C16	GRN	SH C	Shift solenoid valve C control	Battery voltage in these positions: • 1 • D and D3 in 1st, 3rd, and 5th gear 0 V in these positions: • 2 • D and D3 in 2nd gear • D in 4th gear • P, R, and N
C17	BLU/BLK	ATP P	Transmission range switch P position signal input	In the P position: 0 V In other than the P position: Battery voltage
C18	RED	ATP D3	Transmission range switch D3 position signal input	In the D3 position: 0 V In other than the D3 position: Battery voltage
C19	BLU/YEL	ATP FWD	Transmission range switch D, D3, and 2 positions signal input	In the D, D3, and 2 positions: 0 V In other than the D, D3, and 2 positions: Battery voltage
C21	GRN/WHT	MET INH	Communication line PCM-to-gauge control module	With ignition switch ON (II): Battery voltage
C22	GRN/RED	LS C	A/T clutch pressure control solenoid valve C control	With ignition switch ON (II): Pulsing signal

BACK

Protected by AR

PCM CONNECTOR D (17P)

Terminal Number	Wire Color	Signal	Description	Measuring Conditions/Terminal Voltage
D4	GRN/WHT	SG1	Sensor ground	Less than 1.0 V at all times
D5	GRN/RED	MAP	Detects manifold absolute pressure (MAP) sensor signal	With ignition switch ON (II): About 3 V At engine idle: 1.0 V depending on engine speed
D6	YEL/RED	VCC1	Power supply for sensors	With ignition switch ON (II): 5 V With ignition switch OFF: 0 V
D8	RED	NM	Input shaft (mainshaft) speed sensor signal input	With ignition switch ON (II): 0 V or about 5 V With engine at idling in the N position: Pulsing signal (0—5V)
D10	GRN/YEL	SG2	Sensor ground	Less than 1.0 V at all times
D12	YEL/BLU	VCC2	Power supply for sensors	With ignition switch ON (II): 5 V With ignition switch OFF: 0 V
D14	BLU	NC	Output shaft (countershaft) speed sensor signal input	With ignition switch ON (II): 0 V or about 5 V With driving: Pulsing signal (0—5V)

PCM CONNECTOR E (31P)

Terminal Number	Wire Color	Signal	Description	Measuring Conditions/Terminal Voltage
E1	BLK	PG2	Ground	Less than 1.0 V at all times
E2	BLK	PG1	Ground	Less than 1.0 V at all times
E3	BRN/YEL	LG1	Ground	Less than 1.0 V at all times
E4	YEL/BLK	IGP	Power supply circuit from main relay	With ignition switch ON (II): Battery voltage With ignition switch OFF: 0 V
E5	BLK/YEL	IG1	Power supply circuit	With ignition switch ON (II): Battery voltage With ignition switch OFF: 0 V
E10	BLK/YEL	VBSOL	Power supply circuit for solenoid valves	With ignition switch ON (II): Battery voltage With ignition switch OFF: 0 V

BACK

Protected by AR

System Description (cont'd)

Hydraulic Controls

The valve body includes the main valve body, the regulator valve body, the servo body, the top accumulator body, and the accumulator body. The ATF pump is driven by splines on the left end of the torque converter which is attached to the engine. Fluid flows through the regulator valve to maintain specified pressure through the main valve body to the manual valve, directing pressure to each of the clutches. The shift solenoid valves A and C are mounted on the outside of the torque converter housing. The shift solenoid valve B and the torque converter clutch solenoid valve are mounted on the torque converter housing. The A/T clutch pressure control solenoid valves A and B, and the A/T clutch pressure control solenoid valve C are mounted on the transmission housing.

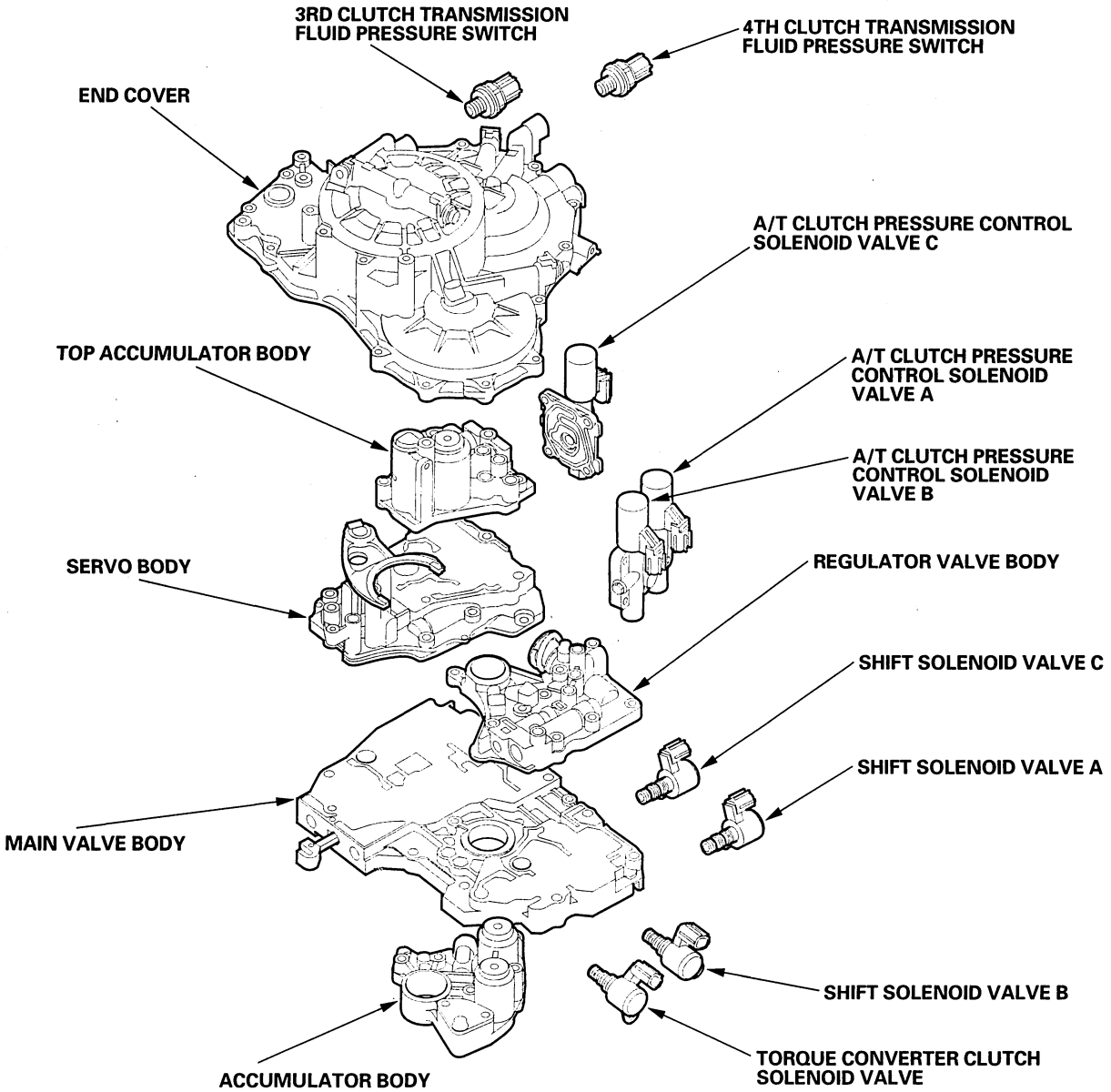

BACK

Protected by AR

Main Valve Body

The main valve body contains the manual valve, the modulator valve, the shift valve C, the shift valve D, the servo control valve, the cooler check valve, the torque converter check valve, the reverse CPC valve, the lock-up shift valve, the relief valve, the kick-down valve, the kick-down short valve, and the ATF pump gears. The primary function of the main valve body is to switch fluid pressure on and off and to control hydraulic pressure going to the hydraulic control system.

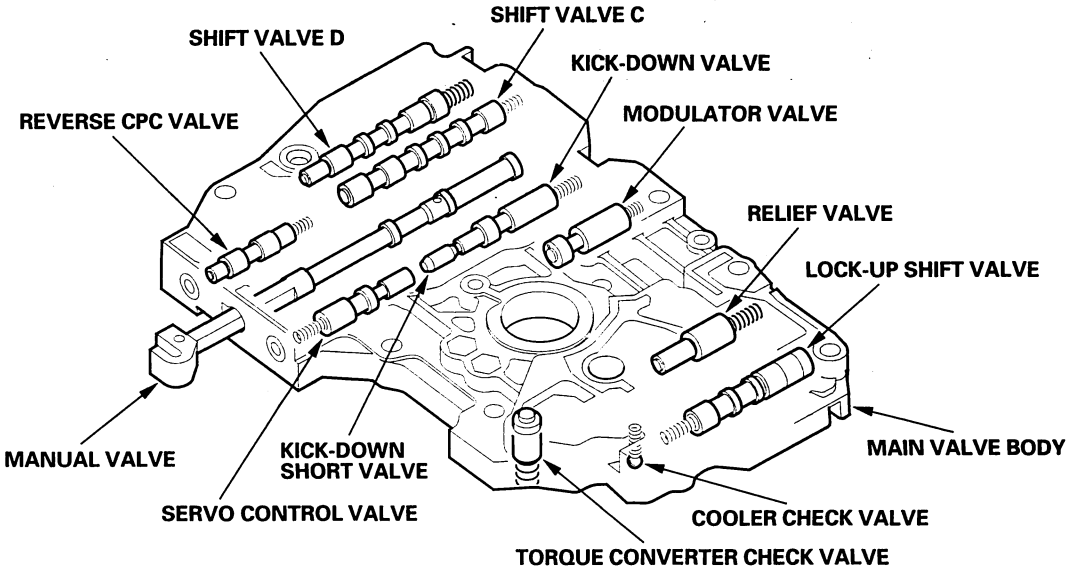

Regulator Valve Body

The regulator valve body is located on the main valve body. The regulator valve body contains the regulator valve, the lock-up timing valve, and the lock-up control valve.

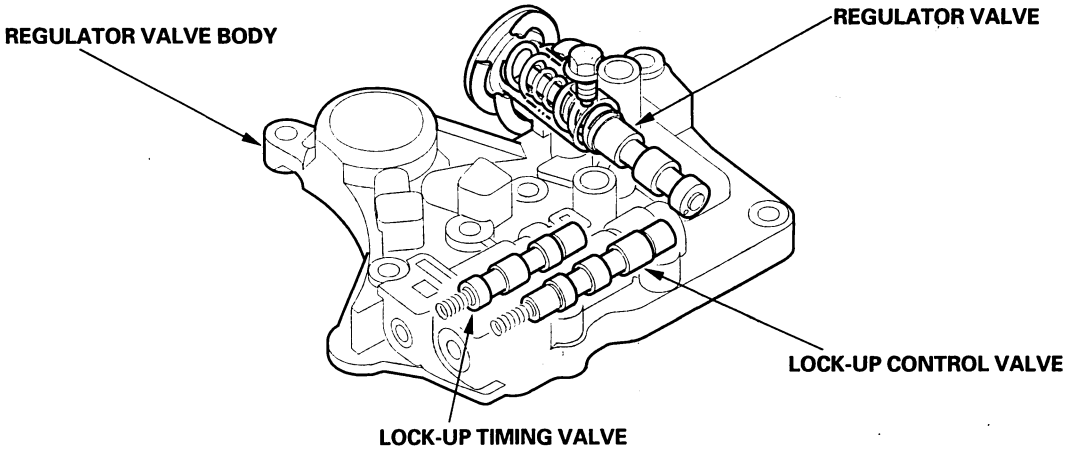

(cont'd)

Protected by AR

System Description (cont'd)

Hydraulic Controls (cont'd)

Regulator Valve

The regulator valve maintains constant hydraulic pressure from the ATF pump to the hydraulic control system, while also furnishing fluid to the lubricating system and torque converter. Fluid from the ATF pump flows through B and B'. Fluid entering from B flows through the valve orifice to the A cavity. This pressure of the A cavity pushes the regulator valve to the spring side, and this movement of the regulator valve uncovers the fluid port to the torque converter and the relief valve. The fluid flows out to the torque converter and the relief valve, and the regulator valve returns under spring force. According to the level of the hydraulic pressure through B, the position of the regulator valve changes, and the amount of fluid from B' through the torque converter changes. This operation is continued, maintaining the line pressure.

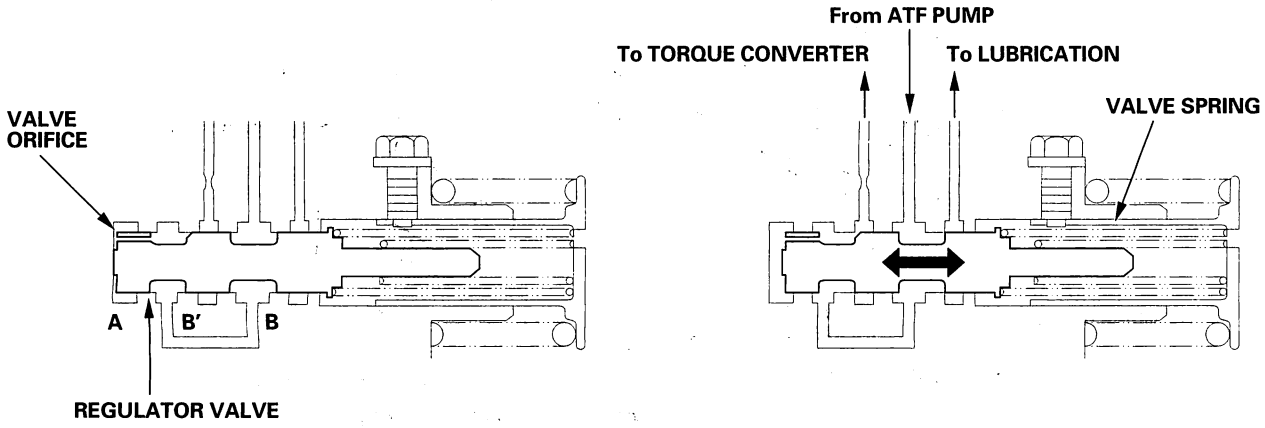

Increases in hydraulic pressure according to torque are performed by the regulator valve using stator torque reaction. The stator shaft is splined to the stator in the torque converter, and its arm end contacts the regulator spring cap. When the vehicle is accelerating or climbing (torque converter range), stator torque reaction acts on the stator shaft, and the stator arm pushes the regulator spring cap in the direction of the arrow in proportion to the reaction. The stator reaction spring compresses, and the regulator valve moves to increase the line pressure which is regulated by the regulator valve. The line pressure reaches its maximum when the stator torque reaction reaches its maximum.

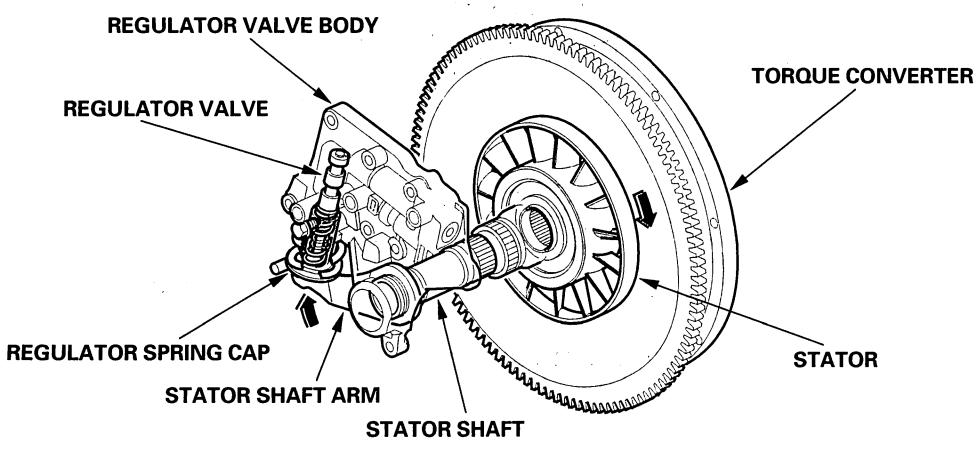

BACK

Protected by AR

Servo Body

The servo body is on the main valve body. It contains the servo valve, shift valve A, shift valve B, and CPC valves A and B.

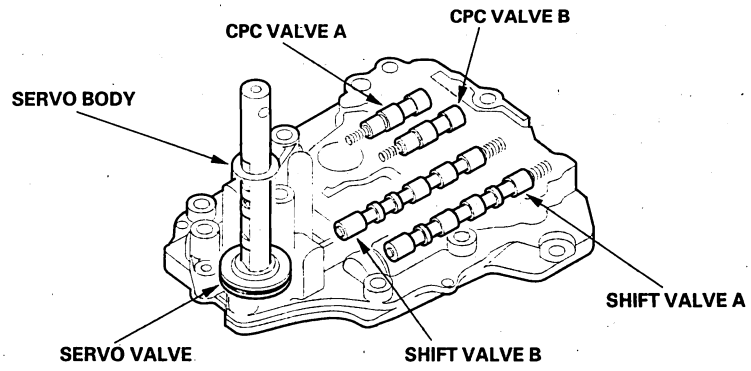

Top Accumulator Body

The top accumulator body contains shift valve E, CPC valve C, 4th/1st-hold accumulator, and 5th accumulator.

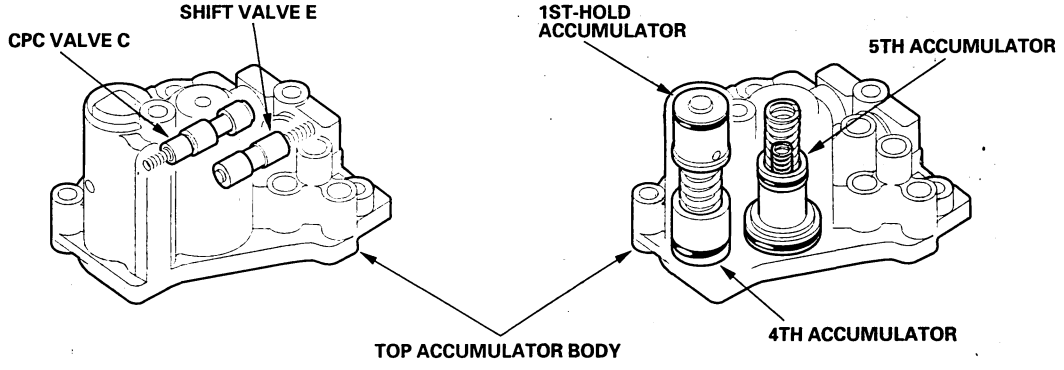

Accumulator Body

The accumulator body is on the torque converter housing, next to the main valve body. It contains the 1st and 2nd accumulators and the lubrication check valve.

3rd Accumulator

The 3rd accumulator is in the end cover.

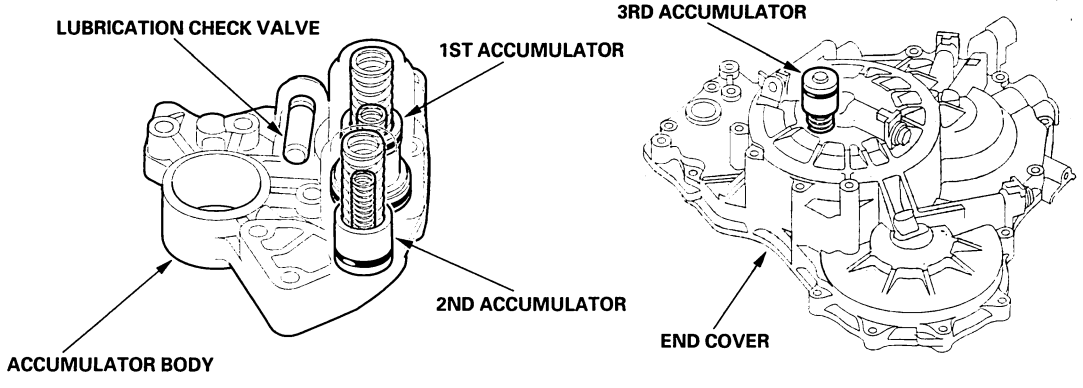

Protected by AR

System Description (cont'd)

Hydraulic Flow

Distribution of Hydraulic Pressure

As the engine runs, the ATF pump starts to operate. Automatic transmission fluid (ATF) is drawn through the ATF strainer (filter) and discharged into the hydraulic circuit. Then, ATF flowing from the ATF pump becomes line pressure that is regulated by the regulator valve. Torque converter pressure from the regulator valve enters the torque converter through the lock-up shift valve and it is discharged from the torque converter. The torque converter check valve prevents torque converter pressure from rising.

The PCM controls the shift solenoid valves ON and OFF, and the shift solenoid valves control shift solenoid pressure to the shift valves. Applying shift solenoid pressure to the shift valves moves the position of the shift valve, and switches the port of hydraulic pressure. The PCM also controls A/T clutch pressure control solenoid valves A and B. The A/T clutch pressure control solenoid valves A and B regulate the A/T clutch pressure control solenoid pressure and apply the A/T clutch pressure control solenoid pressure to CPC valves A and B.

When shifting between upper gear and lower gear, the clutch is engaged by pressure from the CPC pressure mode. The PCM controls one of the shift solenoid valves to move the position of the shift valve. This movement switches the port of the CPC and line pressure. Line pressure is then applied to the clutch, and the CPC pressure is intercepted. Engaging the clutch with line pressure happens after CPC pressure mode has completed.

Hydraulic pressure at the ports is as follows:

PORT No.	DESCRIPTION OF PRESSURE	PORT No.	DESCRIPTION OF PRESSURE	PORT No.	DESCRIPTION OF PRESSURE
1	LINE	5N	CPC A or LINE	56	LS A
2	LINE	5D	CPC B or LINE	57	LS B
3	LINE	5G	CPC B or LINE	58	LS C
3'	REVERSE CPC or LINE	5K	CPC B or LINE	90	TORQUE CONVERTER
3''	REVERSE CPC or LINE	6	MODULATE	90'	TORQUE CONVERTER
4	LINE	SA	SH A	91	TORQUE CONVERTER
4'	LINE	SB	SH B	91'	TORQUE CONVERTER
4''	LINE	SC	SH C	92	TORQUE CONVERTER
4A	CPC A	LA	LC A	93	ATF COOLER
4B	CPC B	9	LINE	94	TORQUE CONVERTER
4C	CPC C	10	1ST CLUTCH	95	LUBRICATION
5B	CPC A	15	1ST-HOLD CLUTCH	95'	LUBRICATION
5C	CPC B	20	2ND CLUTCH	96	TORQUE CONVERTER
5H	CPC B	25	LINE	99	SUCTION
5J	CPC B	30	3RD CLUTCH	X	DRAIN
5A	CPC A or LINE	40	4TH CLUTCH	HX	HIGH POSITION DRAIN
5E	CPC A or LINE	50	5TH CLUTCH	AX	AIR DRAIN
5F	CPC A or LINE	51	5TH CLUTCH		
5M	CPC A or LINE	55	CPC C or LINE		

NOTE:

- CPC: Clutch Pressure Control pressure
- SH: Shift Solenoid pressure
- LS A: A/T Clutch Pressure Control Solenoid A pressure
- LS B: A/T Clutch Pressure Control Solenoid B pressure
- LS C: A/T Clutch Pressure Control Solenoid C pressure
- LC: Torque Converter Clutch Solenoid pressure

BACK

Protected by AR

N Position

The PCM controls the shift solenoid valves. The conditions of the shift solenoid valve and positions of the shift valve are as follows:

- Shift solenoid valve A is turned OFF, and shift valve A moves to the left side.
- Shift solenoid valve B is turned ON, and shift valve B stays on the right side.
- Shift solenoid valve C is turned OFF, and shift valve C stays on the left side.

Line pressure (1) passes through the manual valve and becomes line pressure (25). Line pressure (25) stops at shift valve D. Line pressure (1) also flows to the modulator valve and becomes modulator pressure (6). Modulator pressure (6) flows to the shift solenoid valves and the A/T clutch pressure control solenoid valves. Under this condition, hydraulic pressure is not applied to the clutches.

NOTE: When used, "left" or "right" indicates direction on the hydraulic circuit.

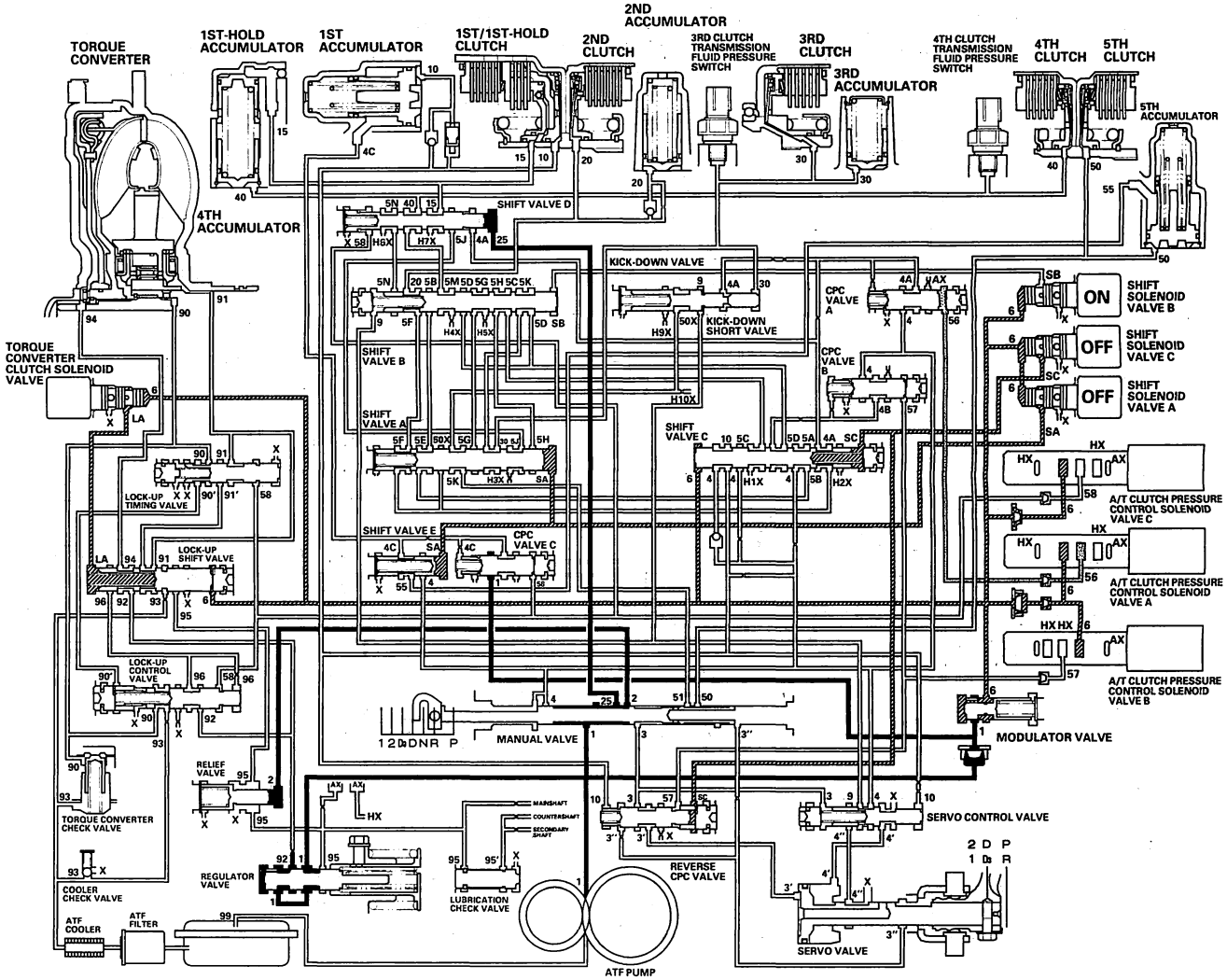

(cont'd)

BACK

Protected by AR

System Description (cont'd)

Hydraulic Flow (cont'd)

D Position: 1st gear shifting from the N position

Shift solenoid valves remain the same as in the N position when shifting to the D position from the N position. The manual valve is moved to the D position, and switches the port of line pressure (4) leading to shift valve C and CPC valve B. Line pressure (4) flows to the 1st clutch via the orifice. Line pressure (1) becomes CPC C pressure (4C) at CPC valve C, then goes to the 1st accumulator back side. Line pressure (4) also becomes the CPC B pressure (4B) at the CPC B valve. CPC B pressure goes to the 3rd clutch, via the shift valves C, B, and A, and the 3rd clutch is engaged. The 1st clutch is engaged gently when shifting to the D position from the N position.

NOTE: When used, "left" or "right" indicates direction on the hydraulic circuit.

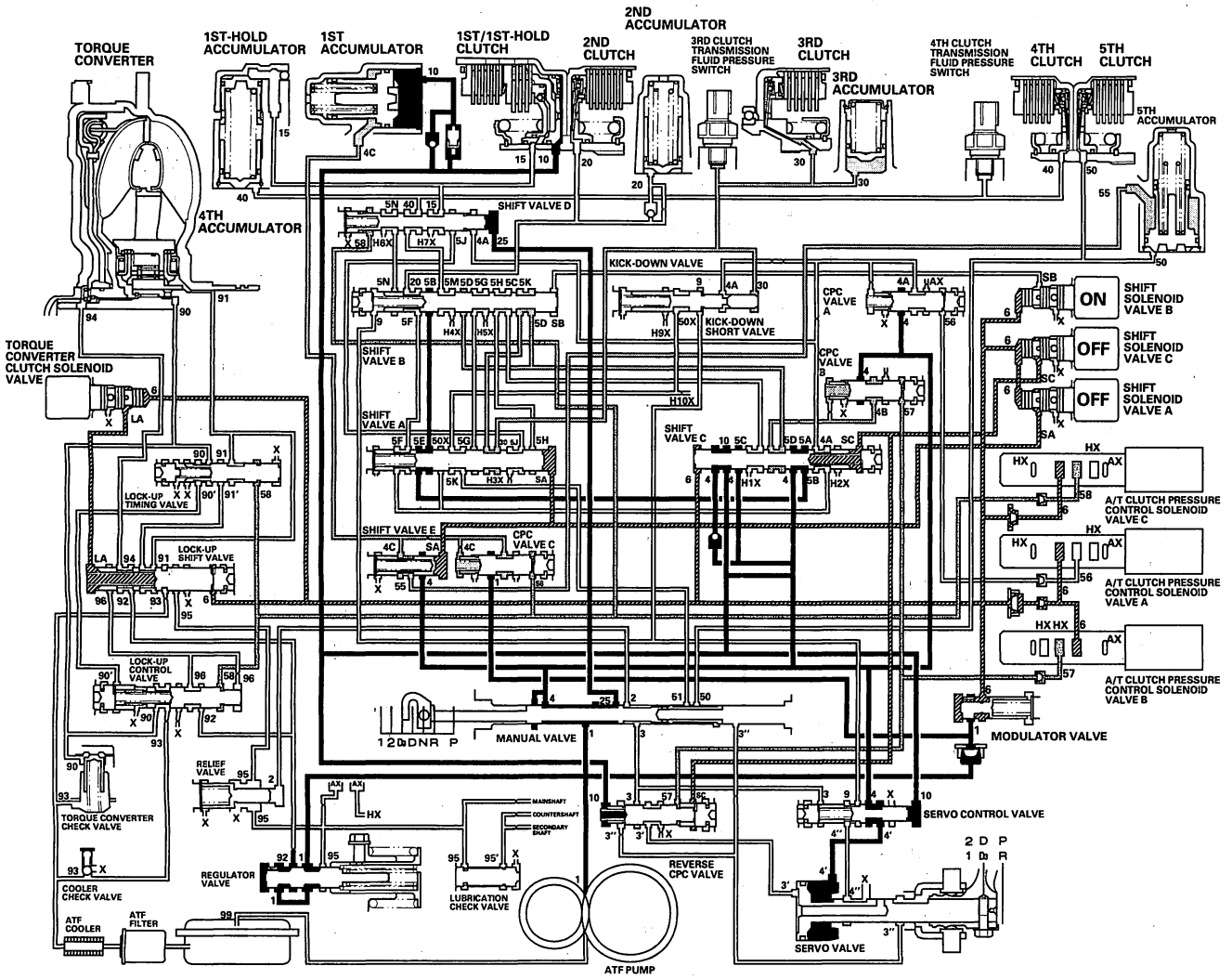

BACK

Protected by AR

D Position: Driving in 1st gear

The PCM turns shift solenoid valves A and C ON, and shift solenoid valve B stays ON. SH A pressure (SA) in the right side of shift valves A and E is released, and shift valves A and E are moved to the right side. SH C pressure (SC) in the right side of shift valve C is released, and modulator pressure (6) is applied to the left side of shift valve C. Shift valve C is moved to the right side. These valve movements release CPC C pressure (4C) from the back of the 1st accumulator and the 3rd clutch, and the 1st clutch is engaged securely.

NOTE: When used, "left" or "right" indicates direction on the hydraulic circuit.

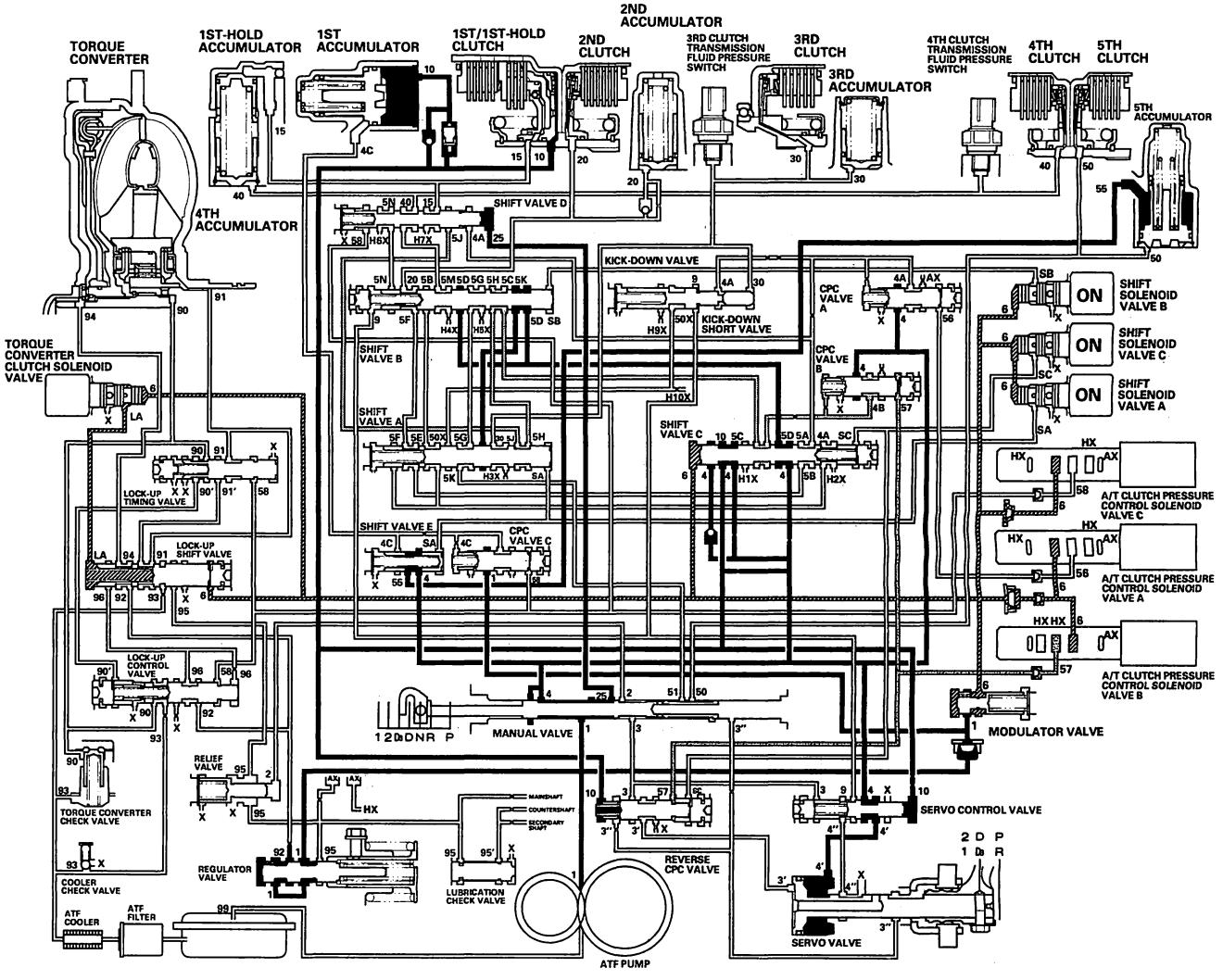

(cont'd)

BACK

Protected by AR

System Description (cont'd)

Hydraulic Flow (cont'd)

D Position: Shifting between 1st gear and 2nd gear

As the speed of the vehicle reaches the programmed value, the PCM controls the A/T clutch pressure control solenoid valves. LS B pressure (57) in the right side of CPC valve B is released, and LS A pressure (56) is applied to the right side of CPC valve A. Line pressure (4) becomes CPC A pressure (4A) at CPC valve A, and CPC A pressure passes through shift valves C, A, and B, to become 2nd clutch pressure. The 2nd clutch is engaged with CPC pressure, and the 1st clutch is also engaged. No power is transmitted because of the one-way clutch.

NOTE: When used, "left" or "right" indicates direction on the hydraulic circuit.

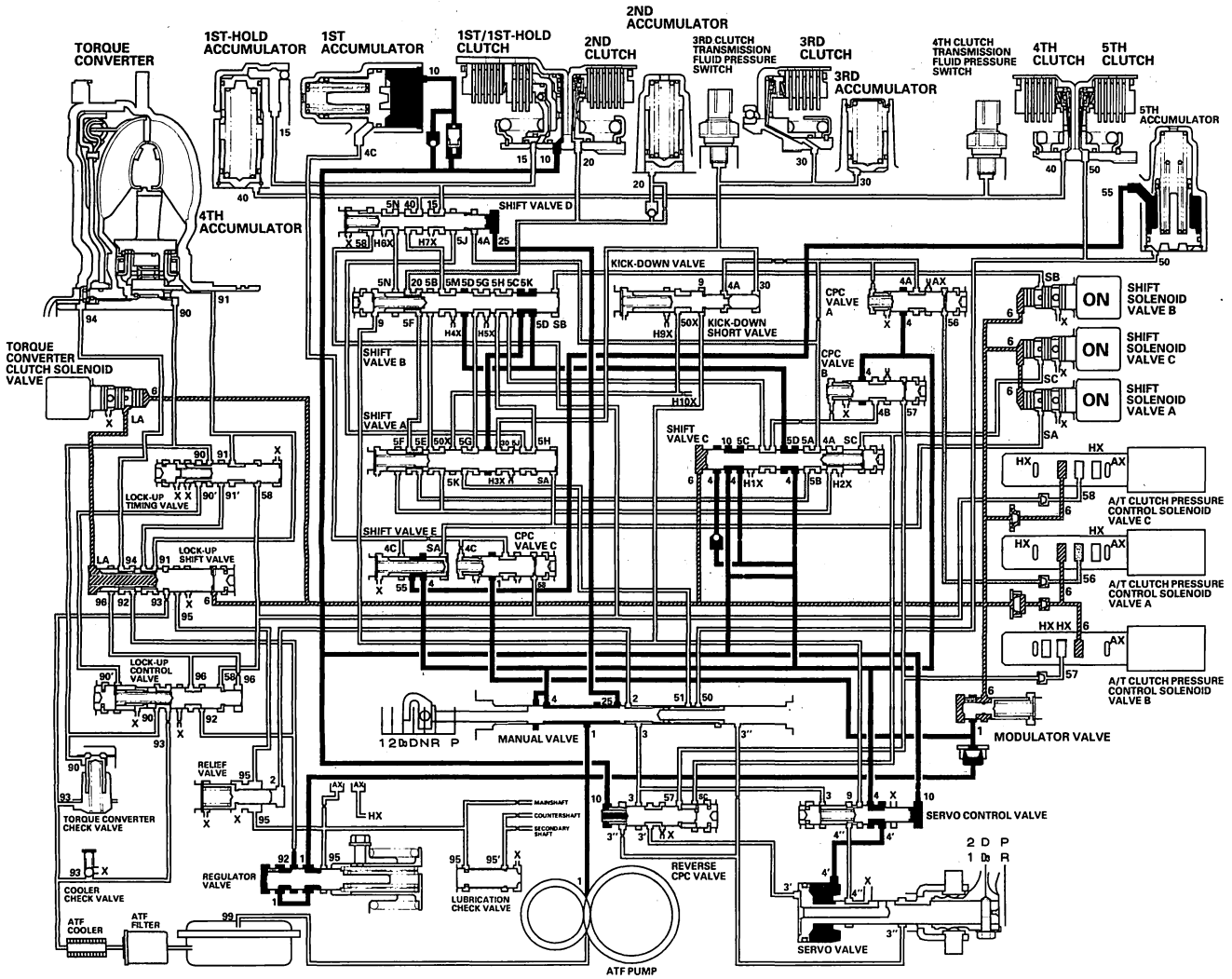

BACK

Protected by AR

D Position: Driving in 2nd gear

The PCM turns shift solenoid valve C OFF, and shift solenoid valves A and B stays ON. Shift solenoid valve C is turned OFF, and SH C pressure (SC) is applied to the right side of shift valve C. Then shift valve C is moved to the left side to switch the line pressure port and CPC pressure port. The 2nd clutch pressure is changed to line pressure mode, and the 2nd clutch is engaged securely. The 1st clutch is also engaged. No power is transmitted because of the one-way clutch.

NOTE: When used, "left" or "right" indicates direction on the hydraulic circuit.

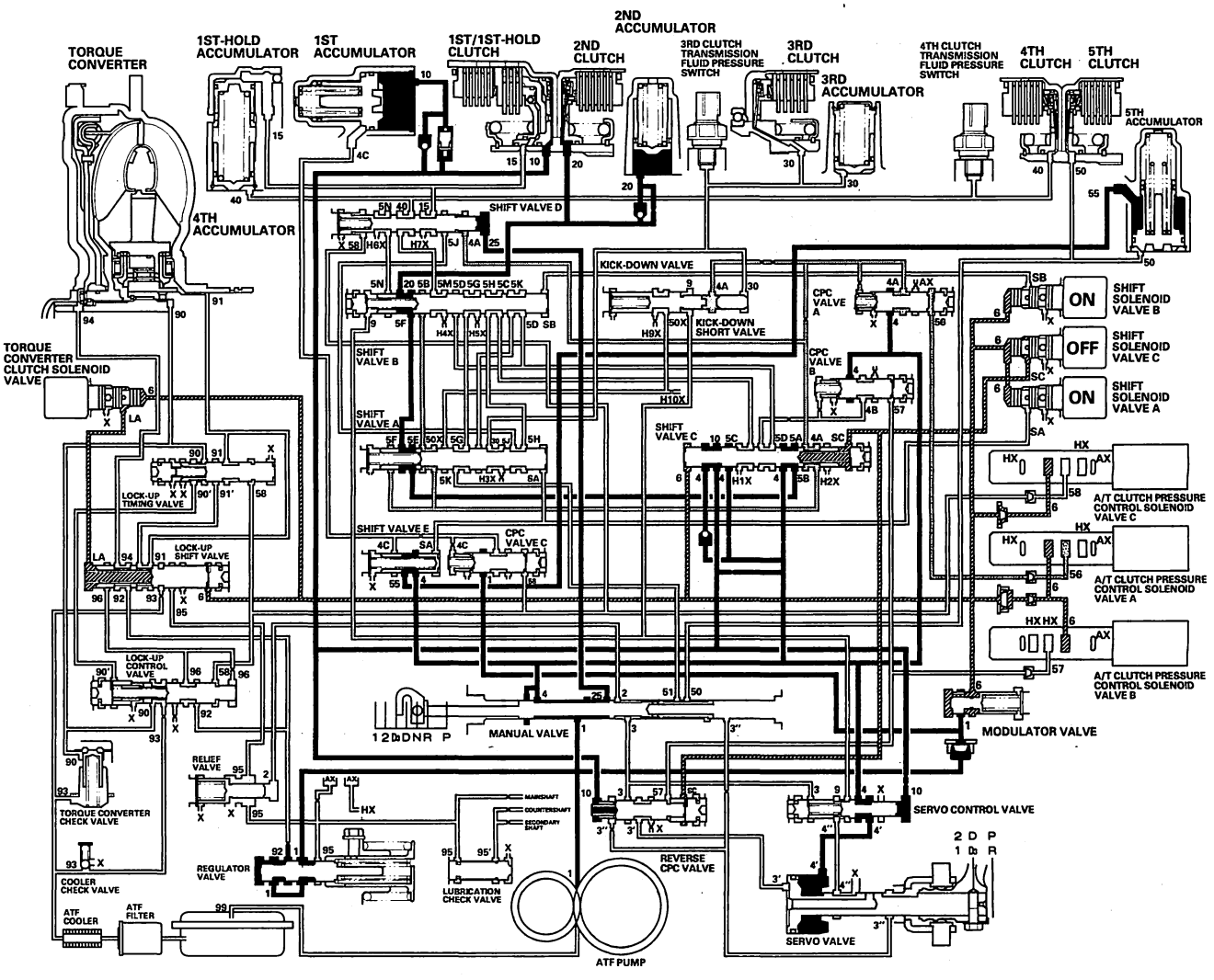

(cont'd)

Protected by AR

System Description (cont'd)

Hydraulic Flow (cont'd)

D Position: Shifting between 2nd gear and 3rd gear

As the speed of the vehicle reaches the programmed value, the PCM turns shift solenoid valve A OFF. The PCM also controls the A/T clutch pressure control solenoid valve B to apply LS B pressure (57) to CPC valve B. Shift solenoid valve B stays ON, and C stays OFF. Shift solenoid valve A is turned OFF, and SH A pressure (SA) is applied to the right side of shift valves A and E. Then shift valves A and E are moved to the left side to switch the line pressure port and CPC pressure port. Line pressure (4) becomes CPC A pressure (4A) at CPC valve A, and becomes CPC B pressure (4B) at CPC valve B. CPC B pressure (4B) becomes 3rd clutch pressure (30) at shift valve A via shift valves C and B, and flows to the 3rd clutch. The 2nd clutch pressure is changed to CPC pressure mode by switching the position of shift valve A. The 1st clutch is also engaged. No power is transmitted because of the one-way clutch.

NOTE: When used, "left" or "right" indicates direction on the hydraulic circuit.

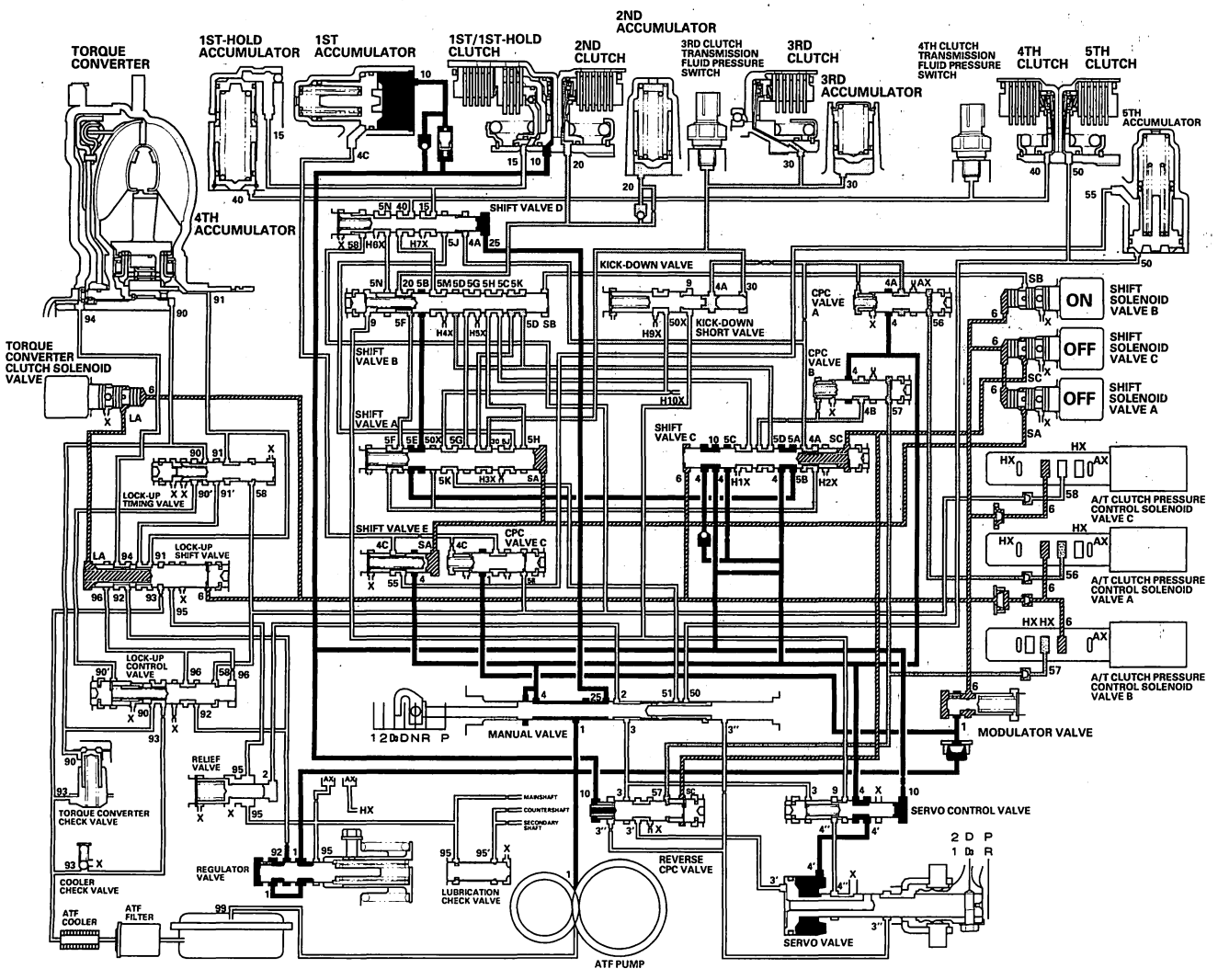

BACK

Protected by AR

D Position: Driving in 3rd gear

The PCM turns shift solenoid valve C ON, and controls A/T clutch pressure control solenoid valve A to release LS A pressure (56) in CPC valve A. Shift solenoid valve A stays OFF, and B stays ON. Releasing LS A pressure (56) in CPC valve A releases CPC A pressure in the 2nd clutch pressure circuit. Shift solenoid valve C is turned ON, and SH C pressure (SC) in the right side of shift valve C is released. Then shift valve C is moved to the right side to switch the line pressure port and CPC pressure port. The 3rd clutch pressure is changed to line pressure mode, and the 3rd clutch is engaged securely. The 1st clutch is also engaged. No power is transmitted because of the one-way clutch.

NOTE: When used, "left" or "right" indicates direction on the hydraulic circuit.

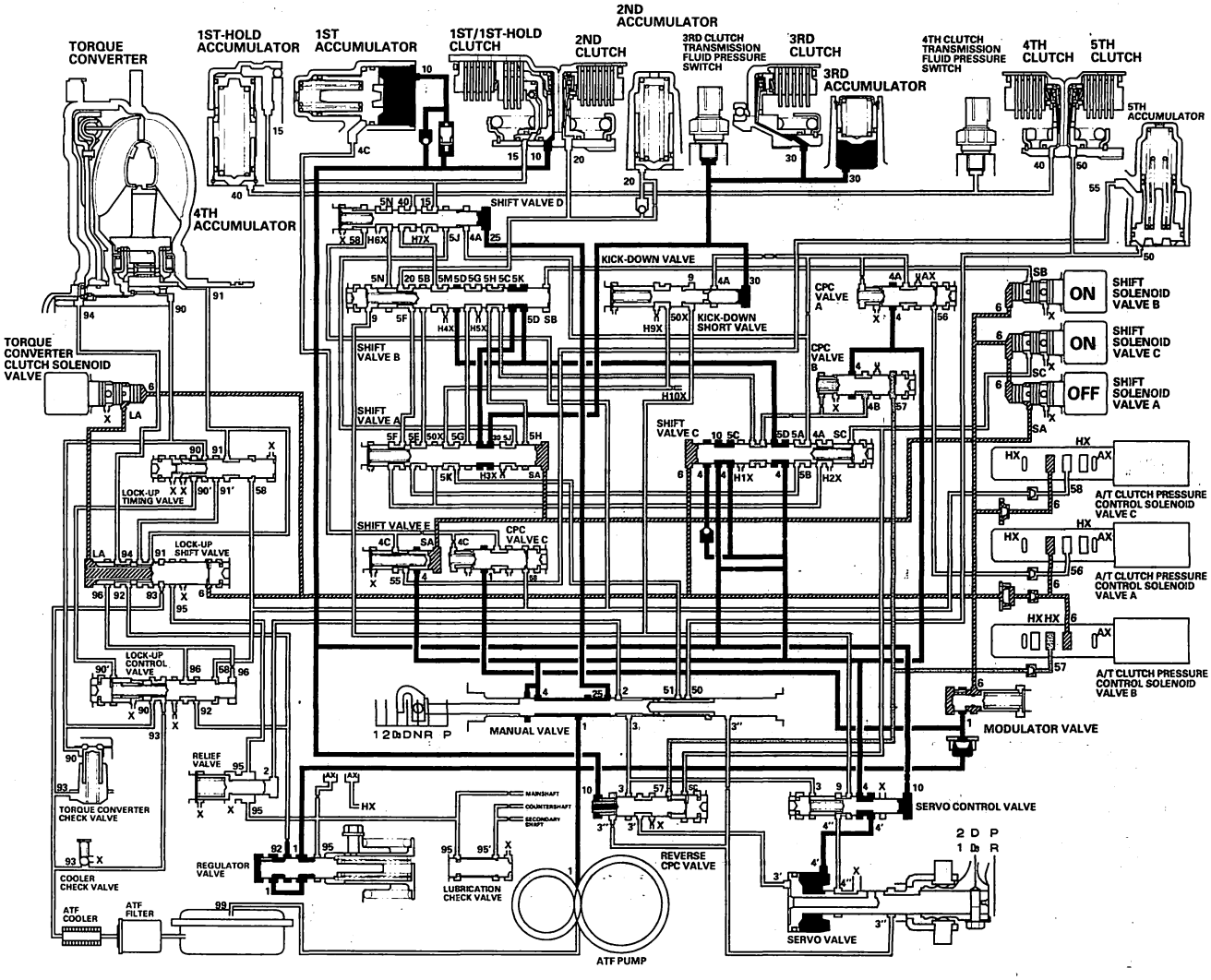

(cont'd)

Protected by AR

System Description (cont'd)

Hydraulic Flow (cont'd)

D Position: Shifting between 3rd gear and 4th gear

As the speed of the vehicle reaches the programmed value, the PCM turns shift solenoid valve B OFF. The PCM also controls the A/T clutch pressure control solenoid valve A to apply LS A pressure (56) to CPC valve A. Shift solenoid valve A stays OFF, and C stays ON. Shift solenoid valve B is turned OFF, and SH B pressure (SB) is applied to the right side of shift valve B. Then shift valve B is moved to the left side to switch the line pressure port and CPC pressure port. Line pressure (4) becomes CPC A pressure (4A) at CPC valve A, and becomes CPC B pressure (4B) at CPC valve B. CPC A pressure (4A) becomes 4th clutch pressure (40) at shift valve D via shift valves C, A, and B, and flows to the 4th clutch. The 3rd clutch pressure is changed to CPC pressure mode by switching the position of shift valve B. The 1st clutch is also engaged. No power is transmitted because of the one-way clutch.

NOTE: When used, "left" or "right" indicates direction on the hydraulic circuit.

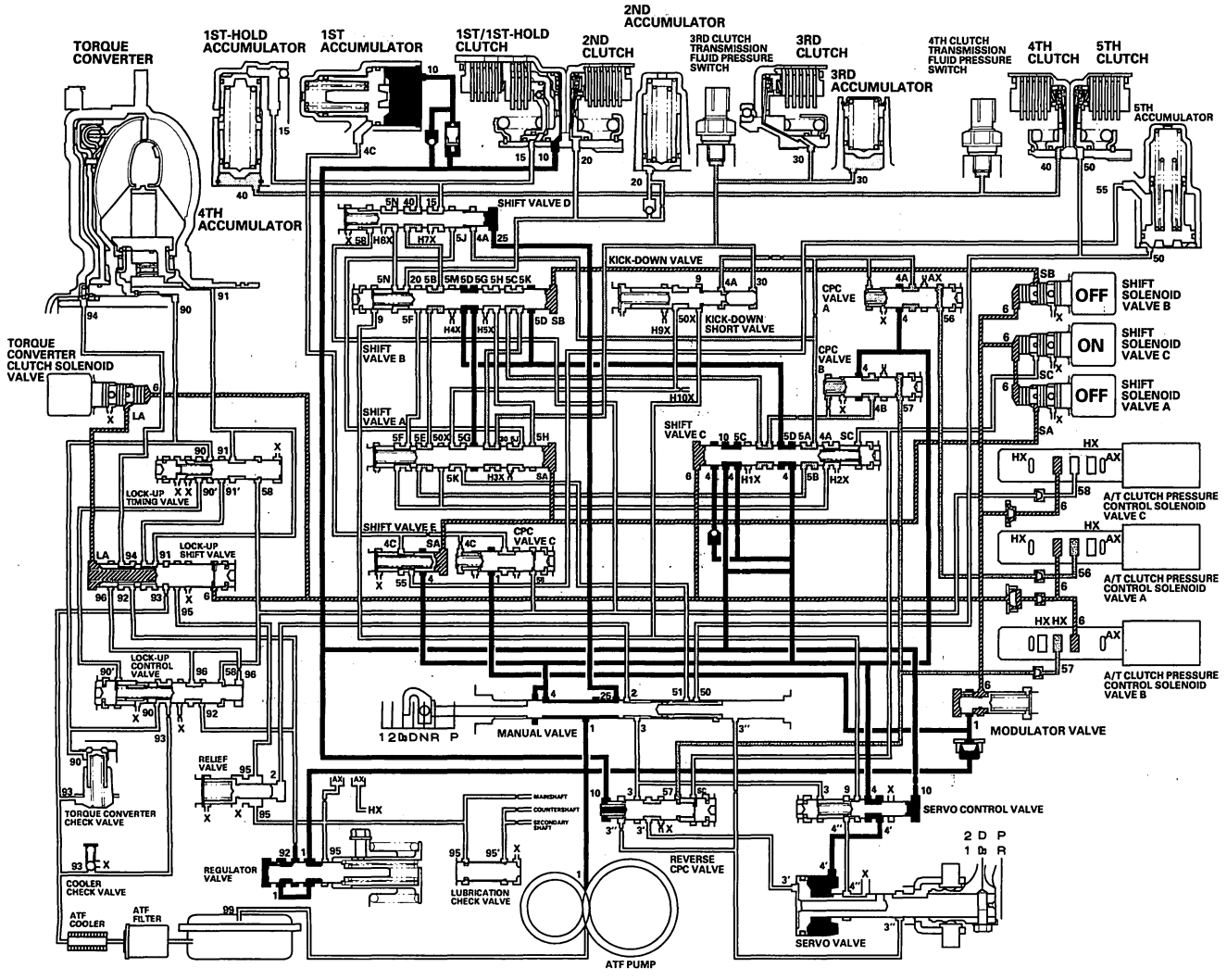

BACK

Protected by AR

D Position: Driving in 4th gear

The PCM turns shift solenoid valve C OFF, and controls A/T clutch pressure control solenoid valve B to release LS B pressure (57) in CPC valve B. Shift solenoid valves A and B stay OFF. Releasing LS B pressure (57) in CPC valve B releases CPC B pressure in the 3rd clutch pressure circuit. Shift solenoid valve C is turned OFF, and SH C pressure (SC) is applied to the right side of shift valve C. Then shift valve C is moved to the left side to switch the line pressure port and CPC pressure port. Line pressure (4) from the manual valve becomes 4th clutch pressure (40) at shift valve D via shift valves C, A, and B, and flows to the 4th clutch. The 4th clutch pressure is changed to line pressure mode by switching the position of shift valve C, and the 4th clutch is engaged securely. The 1st clutch is also engaged. No power is transmitted because of the one-way clutch.

NOTE: When used, "left" or "right" indicates direction on the hydraulic circuit.

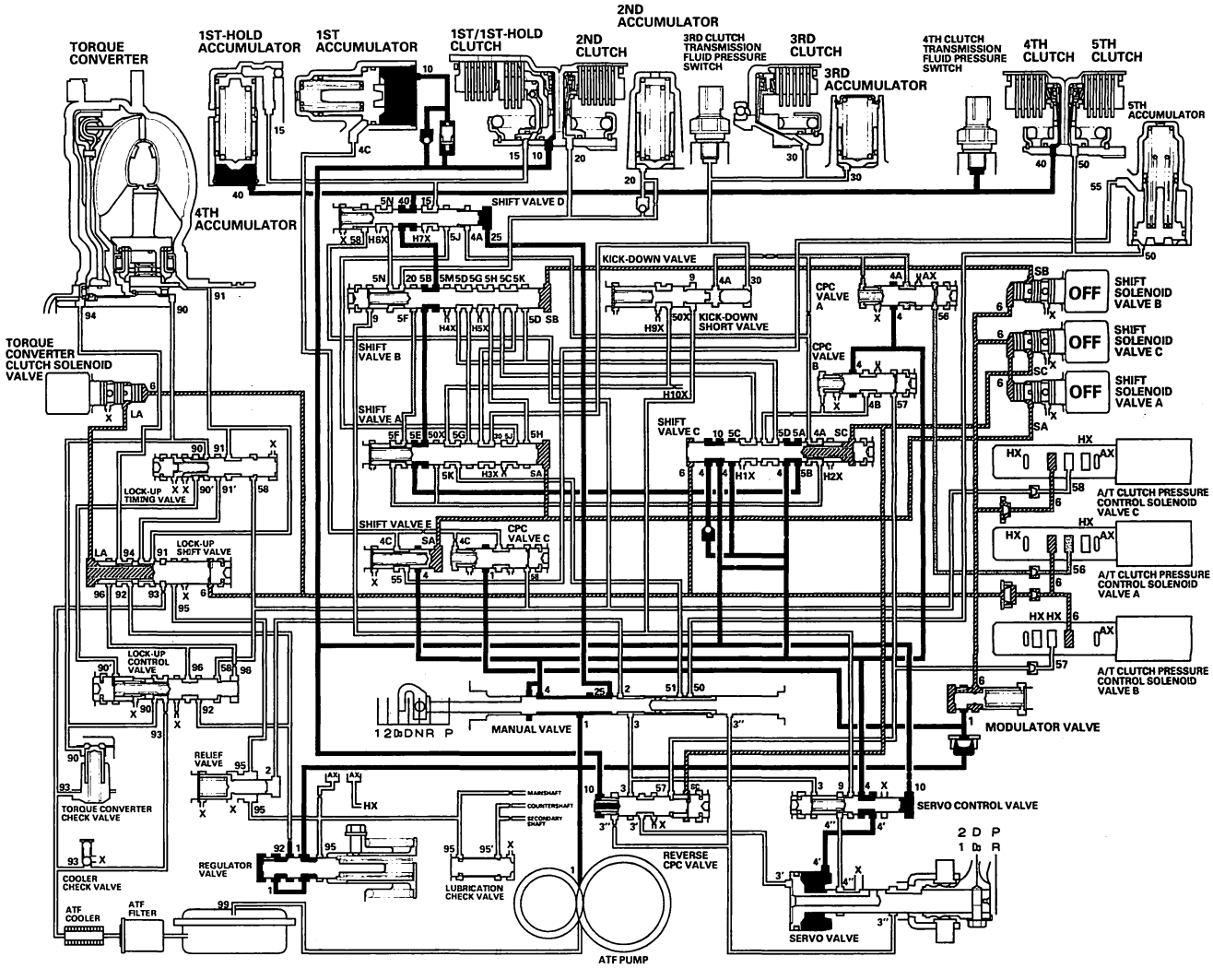

(cont'd)

BACK

Protected by AR

System Description (cont'd)

Hydraulic Flow (cont'd)

D Position: Shifting between 4th gear and 5th gear

As the speed of the vehicle reaches the programmed value, the PCM turns shift solenoid valve A ON. The PCM also controls the A/T clutch pressure control solenoid valve B to apply LS B pressure (57) to CPC valve B.

Shift solenoid valve B and C stay OFF. Shift solenoid valve A is turned ON, and SH A pressure (SA) in the right side of shift valves A and E is released. Then shift valves A and E are moved to the left side to switch the line pressure port and CPC pressure port. Line pressure (4) becomes CPC A pressure (4A) at CPC valve A, and becomes CPC B pressure (4B) at CPC valve B. CPC B pressure (4B) becomes 5th clutch pressure (50) at shift valve C, and flows to the 5th clutch via shift valves B and A and the manual valve. The 4th clutch pressure is changed to CPC pressure mode by switching the position of shift valve A. The 1st clutch is also engaged. No power is transmitted because of the one-way clutch.

NOTE: When used, "left" or "right" indicates direction on the hydraulic circuit.

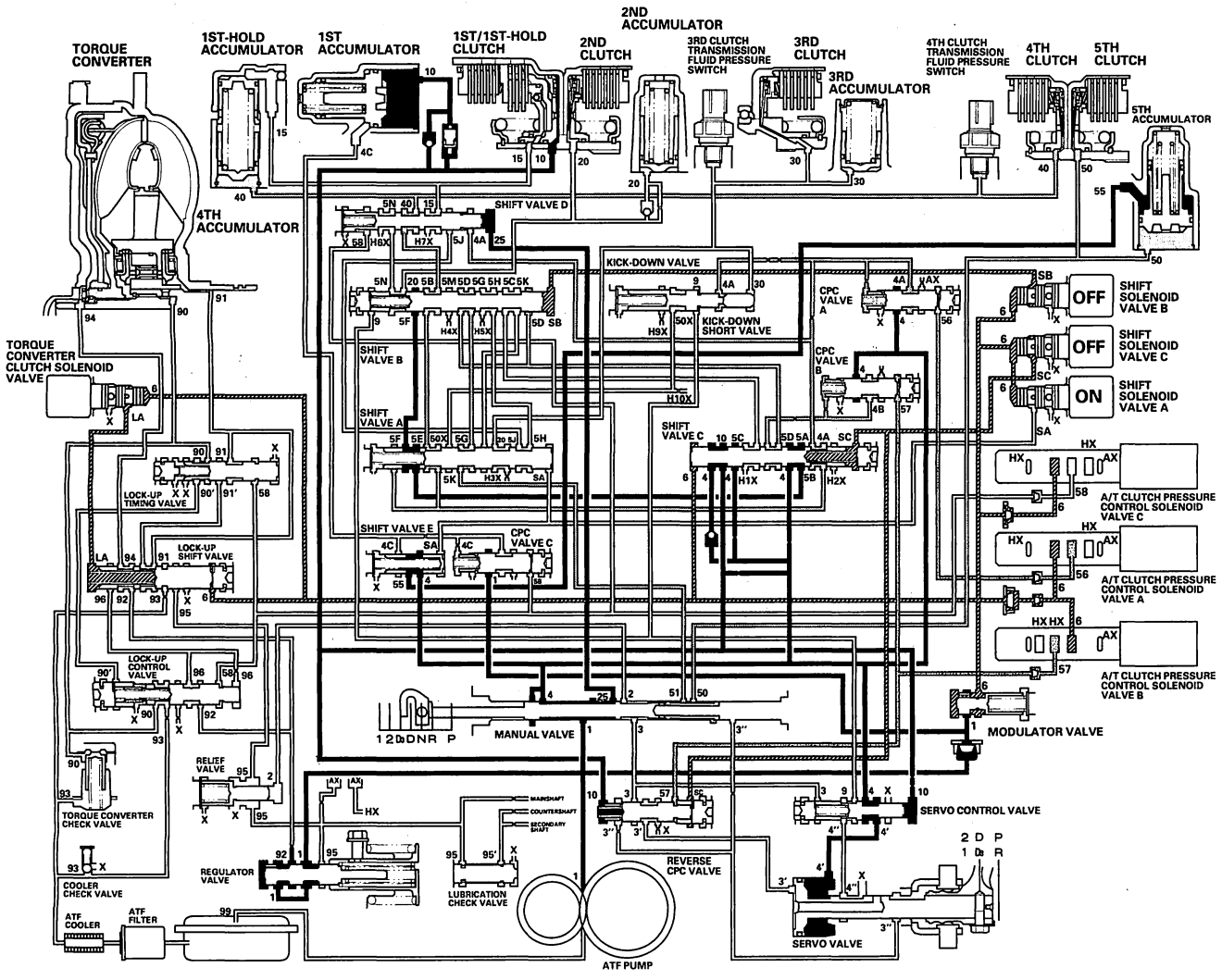

BACK

Protected by AR

D Position: Driving in 5th gear

The PCM turns shift solenoid valve C ON, and controls A/T clutch pressure control solenoid valve A to release LS A pressure (56) in CPC valve A. Shift solenoid valve A stays ON, and B stays OFF. Releasing LS A pressure (56) in CPC valve A releases CPC A pressure in the 4th clutch pressure circuit. Shift solenoid valve C is turned ON, and SH C pressure (SC) in the right side of shift valve C is released. Then shift valve C is moved to the right side to switch the line pressure port and CPC pressure port. Line pressure (4) from the manual valve becomes 5th clutch pressure (50) at the manual valve, via shift valves C, B, and A, and flows to the 5th clutch. The 5th clutch pressure is changed to line pressure mode by switching the position of shift valve C. The 5th clutch is engaged securely, and the 1st clutch is also engaged. No power is transmitted because of the one-way clutch.

NOTE: When used, "left" or "right" indicates direction on the hydraulic circuit.

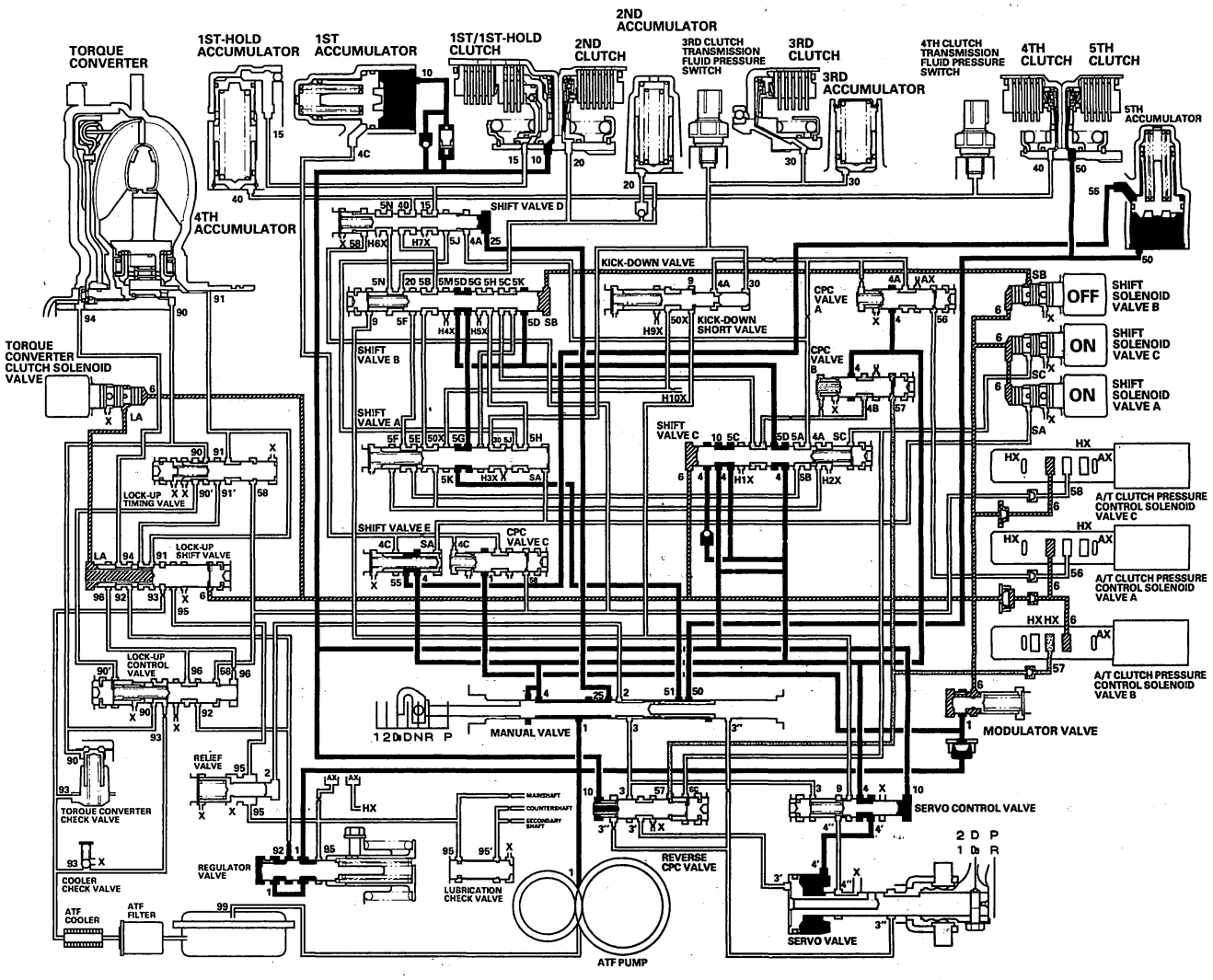

(cont'd)

Protected by AR

System Description (cont'd)

Hydraulic Flow (cont'd)

2 Position

The PCM controls the shift solenoid valves and the A/T clutch pressure control solenoid valves. The conditions of the shift solenoid valves and the positions of shift valves are as follows:

- Shift solenoid valve A is turned ON, and shift valve A stays on the right side.
- Shift solenoid valve B is turned ON, and shift valve B stays on the right side.
- Shift solenoid valve C is turned OFF, and shift valve C stays on the left side.

The PCM also controls A/T clutch pressure control solenoid valve A to apply LS A pressure (56) to CPC valve A. Line pressure (4) from the manual valve becomes 2nd clutch pressure (20) at shift valve B, via shift valves C and A. 2nd clutch pressure (20) is applied to the 2nd clutch, and the 2nd clutch is engaged. The 1st clutch is also engaged. No power is transmitted because of the one-way clutch.

NOTE: When used, "left" or "right" indicates direction on the hydraulic circuit.

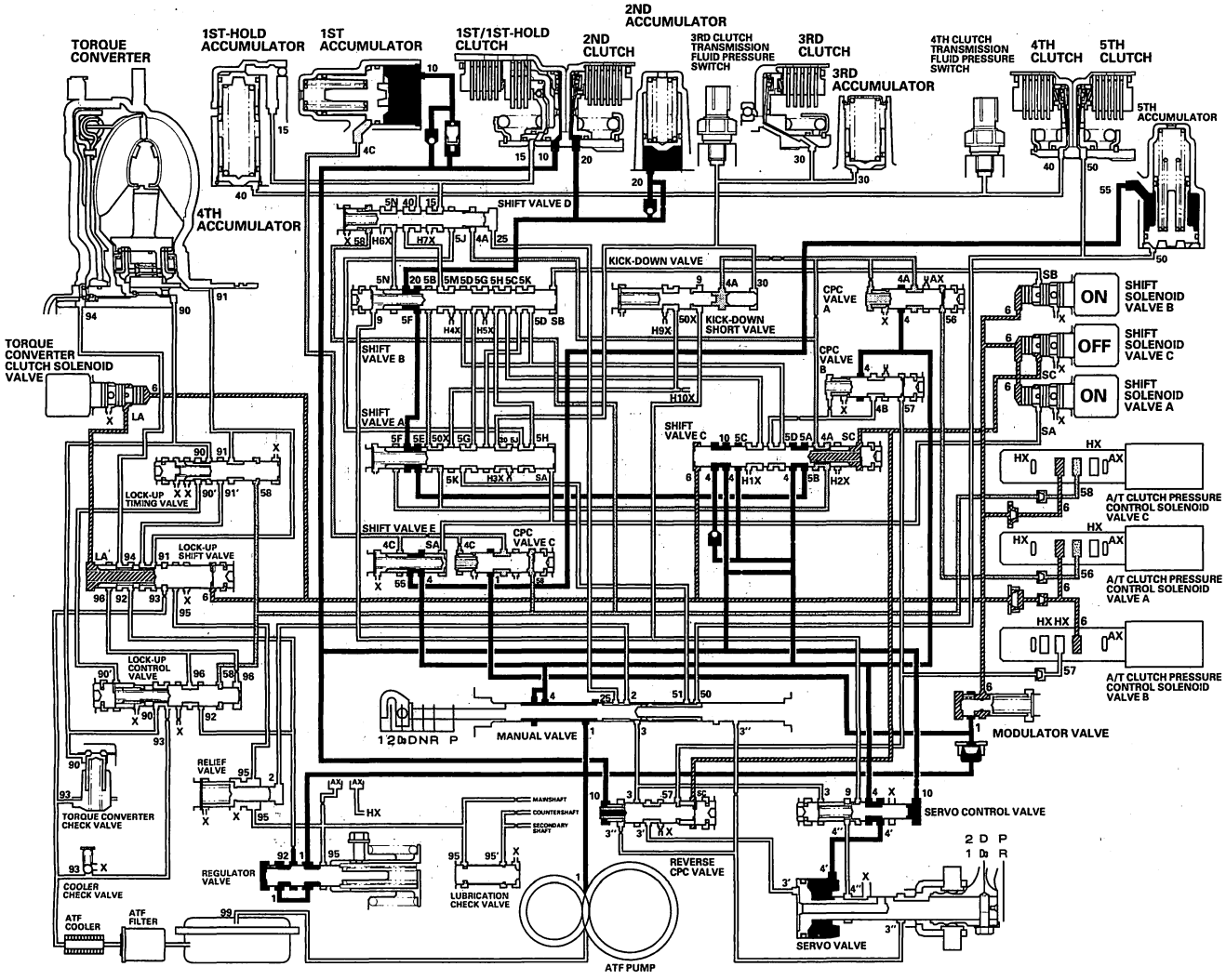

BACK

Protected by AR

1 Position

The PCM controls the shift solenoid valves and the A/T clutch pressure control solenoid valves. The conditions of the shift solenoid valves and the positions of shift valves are as follows:

- Shift solenoid valve A is turned ON, and shift valve A stays on the right side.
- Shift solenoid valve B is turned ON, and shift valve B stays on the right side.
- Shift solenoid valve C is turned ON, and shift valve C moves to the right side by modulator pressure (6).

The PCM also controls A/T clutch pressure control solenoid valve B to apply LS B pressure (57) to CPC valve B. Line pressure (4) from the manual valve becomes 1st clutch pressure (10) at shift valve C. 1st clutch pressure (10) is applied to the 1st clutch, and the 1st clutch is engaged. Line pressure (4) also flows to CPC valve B, and becomes CPC B pressure (4B). CPC B pressure (4B) becomes 1st-hold clutch pressure (15) at shift valve D, via shift valves C, B, and A. 1st-hold clutch pressure (15) is applied to the 1st-hold clutch, and the 1st-hold clutch is engaged.

NOTE: When used, "left" or "right" indicates direction on the hydraulic circuit.

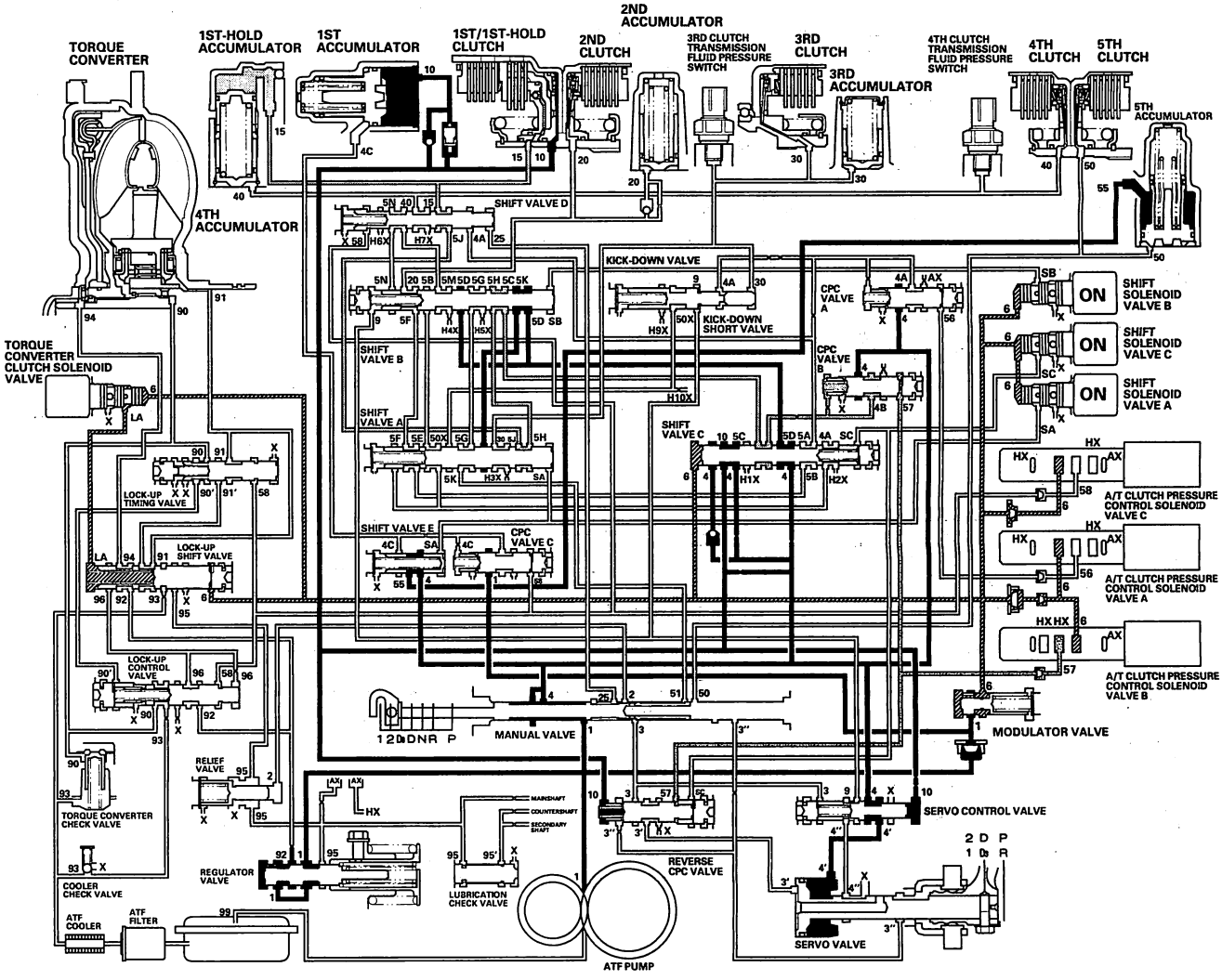

(cont'd)

Protected by AR

System Description (cont'd)

Hydraulic Flow (cont'd)

R Position: Shifting to the R position from the P or N position

Line pressure (1) becomes line pressure (3) at the manual valve, and flows to the reverse CPC valve. Line pressure (3) is regulated by the reverse CPC valve and becomes line pressure (3'). Line pressure (3') pushes the servo valve to the reverse position, passes through the servo valve, and flows to the manual valve. Line pressure (3'') becomes 5th clutch pressure (50). The 5th clutch pressure (50) is applied to the 5th clutch, and 5th clutch is engaged with the reverse CPC pressure mode.

NOTE: When used, "left" or "right" indicates direction on the hydraulic circuit.

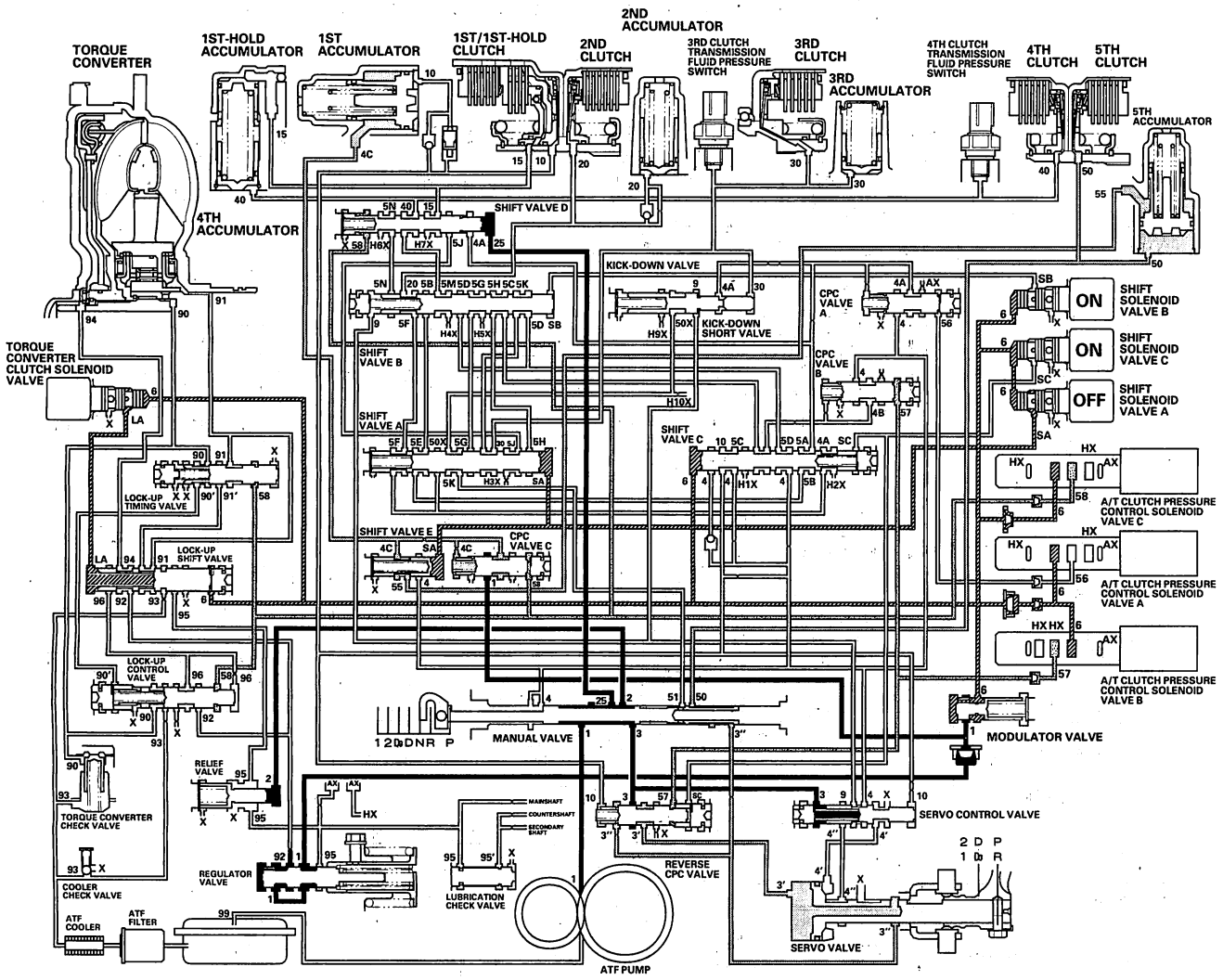

BACK

Protected by AR

R Position: Driving in reverse gear

The PCM turns shift solenoid valve C OFF. Shift solenoid valve A stays OFF and B stays ON. Shift solenoid valve C is turned OFF, and SH C pressure (SC) is applied to the right side of the reverse CPC valve. Then the reverse CPC valve moves to the left side, creating full line pressure. Line pressure to the 5th clutch is the same as when shifting to the R position, and 5th clutch pressure increases. The 5th clutch is engaged with line pressure mode.

Reverse Inhibitor Control

When the R position is selected while the vehicle is moving forward at speeds over 6 mph (10 km/h), the PCM outputs to turn shift solenoid valves A and C ON; and shift solenoid valve B remains ON. The reverse CPC valve is moved to right side and covers the port to stop the line pressure (3') to the servo valve. The line pressure (3') is not applied to the servo valve, and the 5th clutch pressure (50) is not applied to the 5th clutch. As a result, power is not transmitted to the reverse position.

NOTE: When used, "left" or "right" indicates direction on the hydraulic circuit.

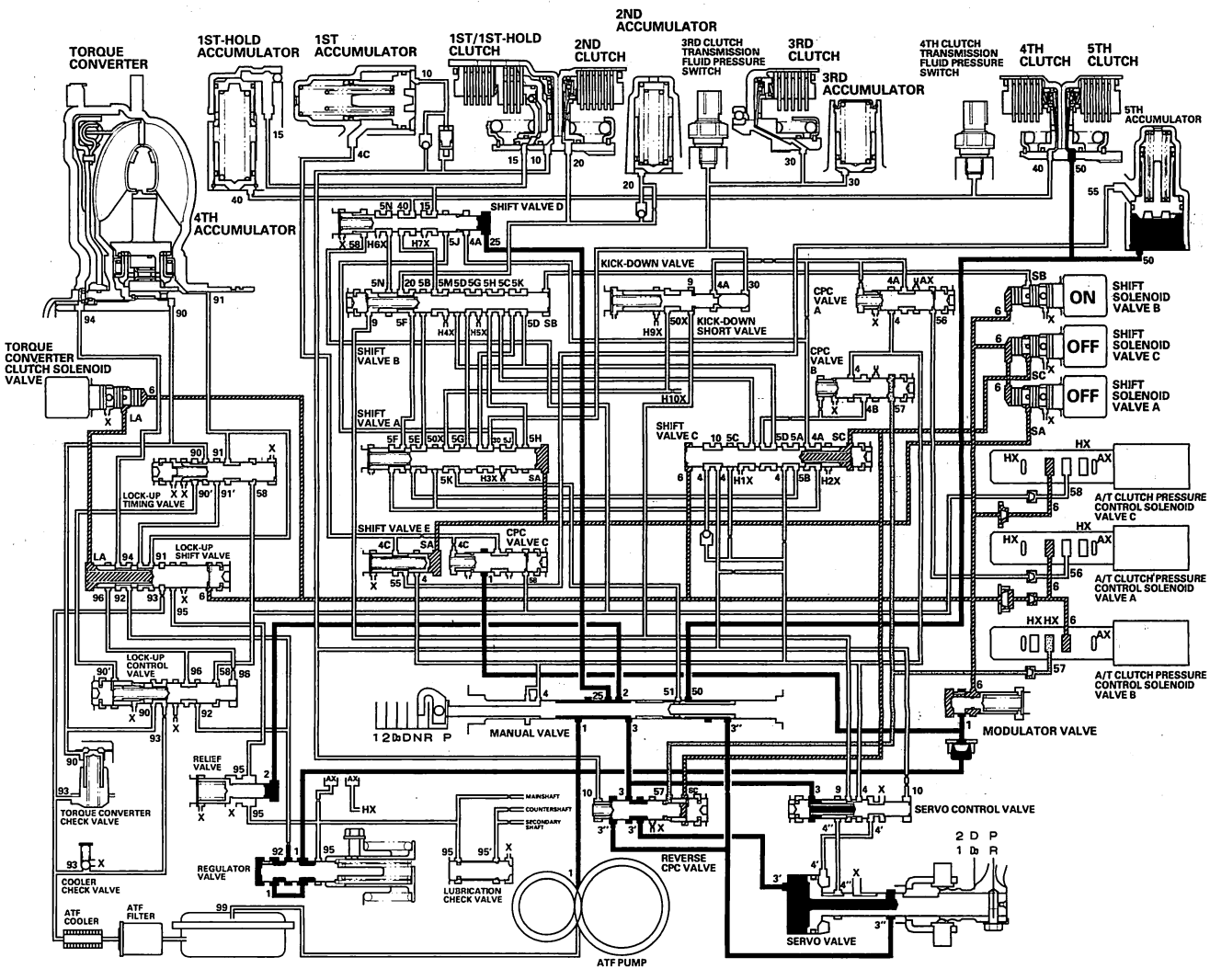

(cont'd)

Protected by AR

System Description (cont'd)

Hydraulic Flow (cont'd)

P Position

Shift solenoid valve C is turned OFF by the PCM, and SH C pressure (SC) is applied to the right side of the reverse CPC valve. Then the reverse CPC valve is moved to the left side to uncover the port leading line pressure (3) to the servo valve. Line pressure (3') passes through the servo valve and flows to the manual valve. Line pressure (3'') is intercepted at the manual valve, and is not applied to the clutches.

NOTE: When used, "left" or "right" indicates direction on the hydraulic circuit.

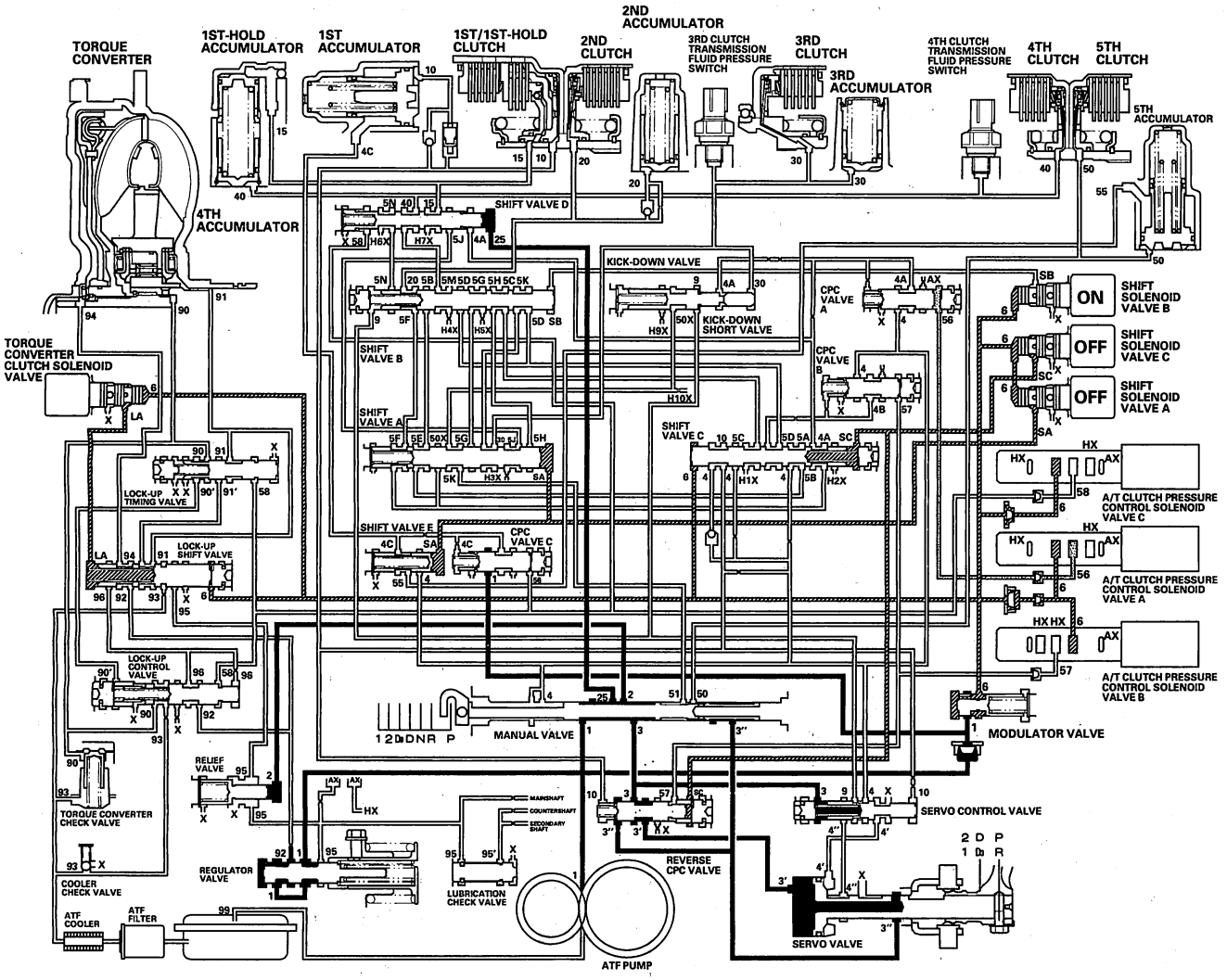

BACK

Protected by AR

Lock-up System

The lock-up mechanism operates in the D position (2nd, 3rd, 4th, and 5th), and D3 position (2nd and 3rd). The pressurized fluid is drained from the back of the torque converter through a fluid passage, causing the torque converter clutch piston to be held against the torque converter cover. As this takes place, the mainshaft rotates at the same speed as the engine crankshaft. Together with hydraulic control, the PCM optimizes the timing of the lock-up mechanism. When the torque converter clutch solenoid valve activates, modulator pressure changes to switch lock-up ON and OFF. The lock-up control valve and the lock-up timing valve control the amount of lock-up according to A/T clutch pressure control solenoid valve C. The torque converter clutch solenoid valve is mounted on the torque converter housing, and A/T clutch pressure control solenoid valve C is mounted on the transmission housing. They are controlled by the PCM.

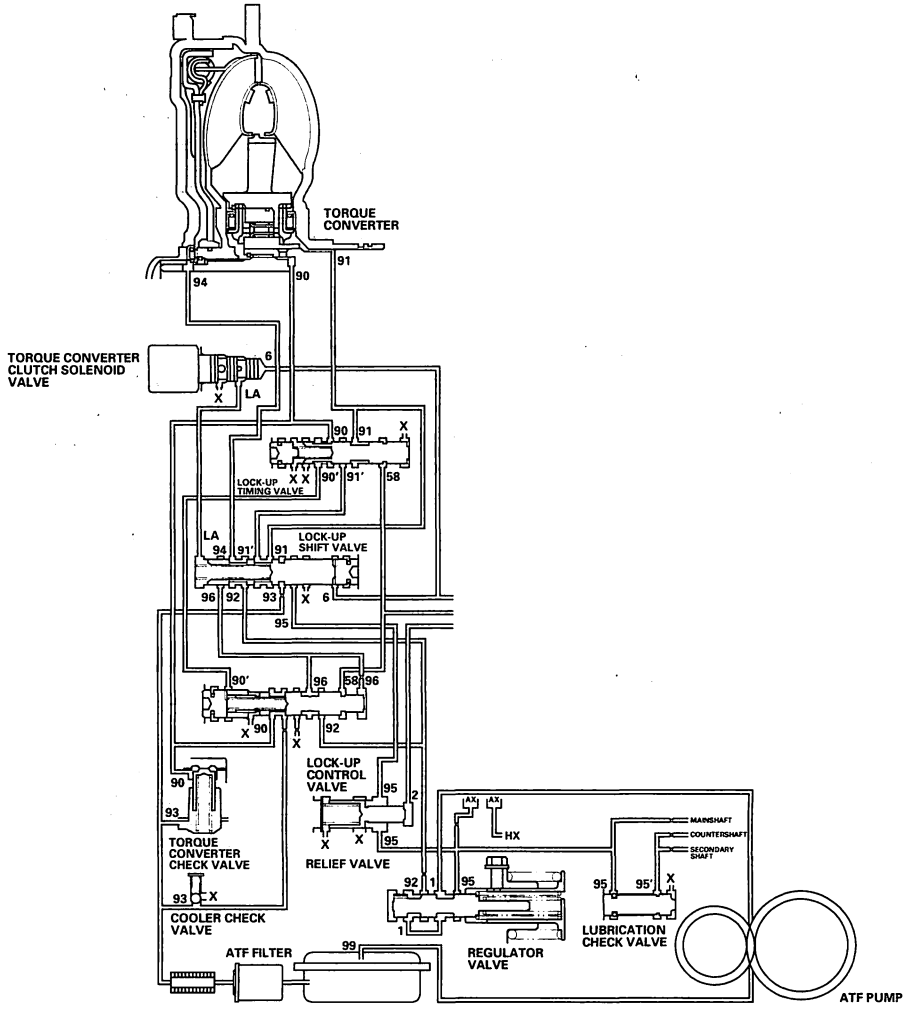

(cont'd)

Protected by AR

System Description (cont'd)

Lock-up System (cont'd)

Torque Converter Clutch Lock-up ON (Engaging Torque Converter Clutch)
Fluid in the chamber between the torque converter cover and the torque converter clutch piston is drained off, and fluid entering from the chamber between the pump and stator exerts pressure through the torque converter clutch piston against the torque converter cover. The torque converter clutch piston engages with the torque converter cover; torque converter clutch lock-up ON, and the mainshaft rotates at the same speed as the engine.

Power flow

The power flows by way of:

Engine
↓
Drive plate
↓
Torque converter cover
↓
Torque converter clutch piston
↓
Damper spring
↓
Turbine
↓
Mainshaft

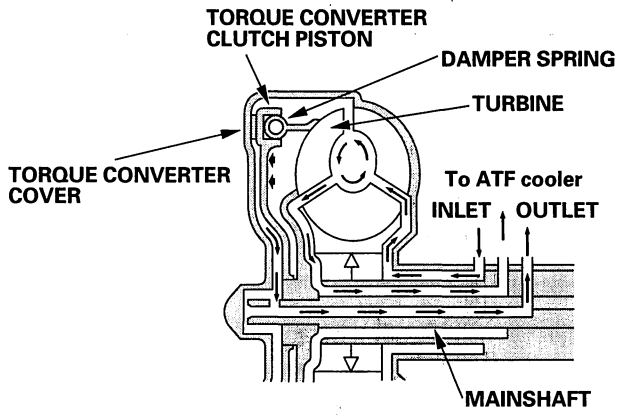

Torque Converter Clutch Lock-up OFF (Disengaging Torque Converter Clutch)
Fluid entered from the chamber between the torque converter cover and the torque converter clutch piston passes through the torque converter and goes out through the chambers between the turbine and the stator, and between the pump and the stator. As a result, the torque converter clutch piston moves away from the torque converter cover, and the torque converter clutch is released; torque converter clutch lock-up OFF.

Power flow

The power flows by way of:

Engine
↓
Drive plate
↓
Torque converter cover
↓
Pump
↓
Turbine
↓
Mainshaft

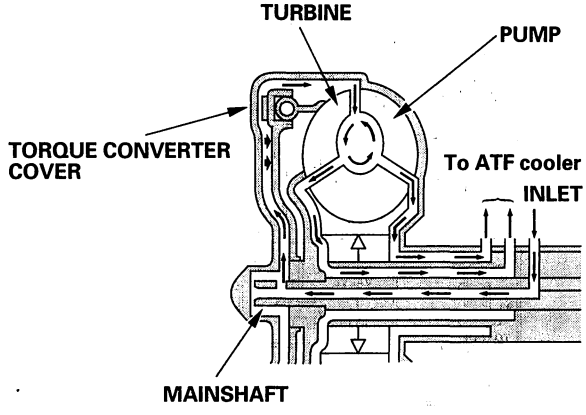

BACK

Protected by AR

No Lock-up

The torque converter clutch solenoid valve is turned OFF by the PCM. The lock-up shift valve receives LC pressure (LA) on the left side, and modulator pressure (6) on the right side. The lock-up shift valve is in the right side to uncover the port leading torque converter pressure (92) to the left side of the torque converter. Torque converter pressure (92) becomes torque converter pressure (94), and enters into the left side of the torque converter to disengage the torque converter clutch. The lock-up is OFF.

NOTE: When used, "left" or "right" indicates direction on the hydraulic circuit.

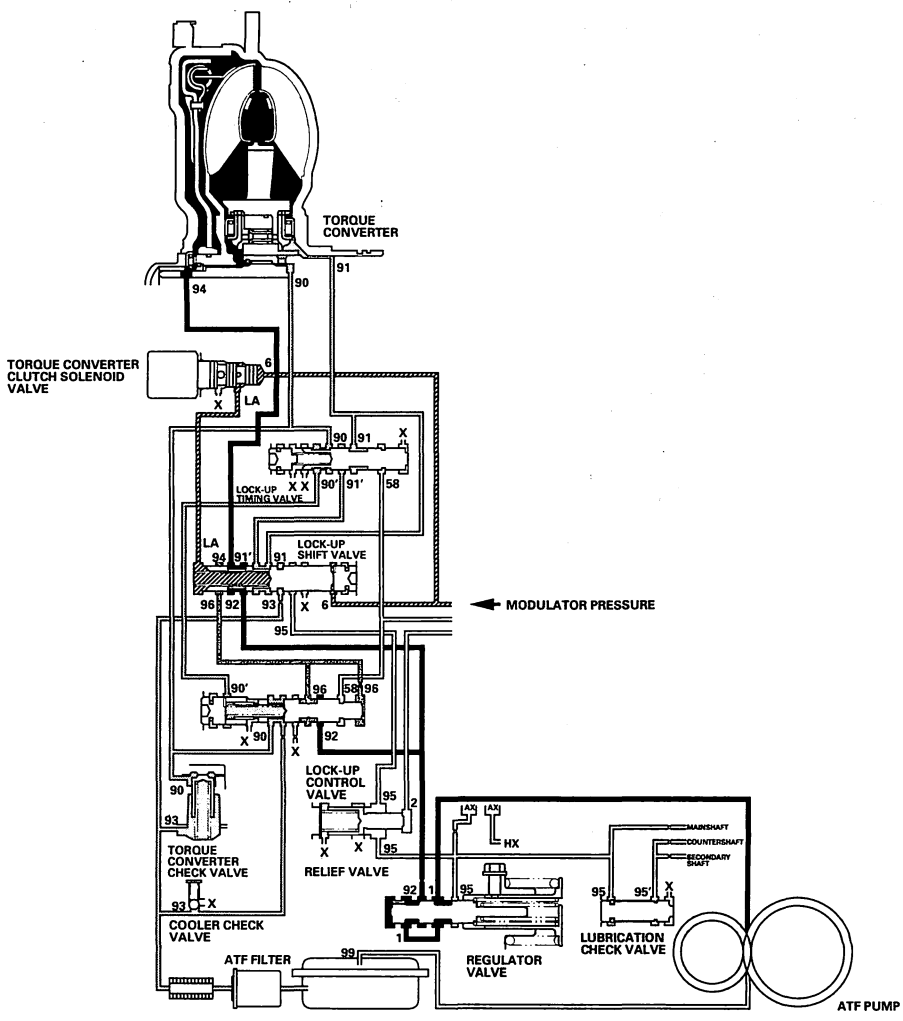

(cont'd)

Protected by AR

System Description (cont'd)

Lock-up System (cont'd)

Partial Lock-up

As the speed of the vehicle reaches the programmed value, the torque converter clutch solenoid valve is turned ON by the PCM to release LC pressure (LA) in the left cavity of the lock-up shift valve. Modulator pressure (6) is applied to the right side of the lock-up shift valve, then the lock-up shift valve is moved in the left side to switch the port leading torque converter pressure to the right side of the torque converter. Torque converter pressure (91) is applied to the right side of the torque converter to engage the torque converter clutch. The PCM also controls A/T clutch pressure control solenoid valve C, and LS C pressure (58) is applied to the lock-up control valve and the lock-up timing valve. When LS C pressure (58) is lower, torque converter pressure (91) from the lock-up timing valve is lower. The torque converter clutch is engaged partially. LS C pressure (58) increases, and the lock-up timing valve is moved to the left side to uncover the port leading torque converter pressure to high. The torque converter clutch is then engaged securely. Under this condition, the torque converter clutch is engaged by pressure from the right side of the torque converter; this lock-up condition is in partial lock-up.

NOTE: When used, "left" or "right" indicates direction on the hydraulic circuit.

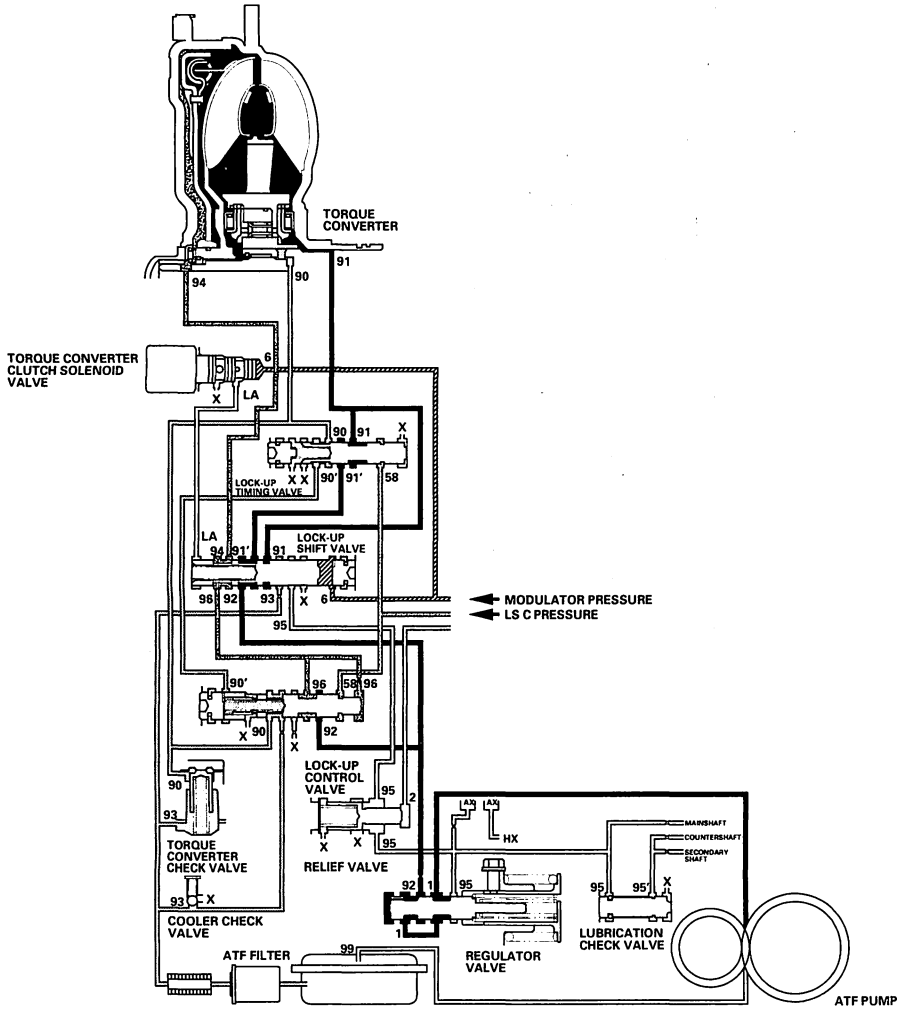

BACK

Protected by AR

Full Lock-up

When the vehicle speed increases, the PCM sends a signal to the A/T clutch pressure control solenoid valve C to increase LS C pressure (58). The LS C pressure (58) is applied to the lock-up control valve and the lock-up timing valve, and moves them to the left side. Under this condition, torque converter back pressure (F2) is released fully, causing the torque converter clutch to be fully engaged.

NOTE: When used, "left" or "right" indicates direction on the hydraulic circuit.

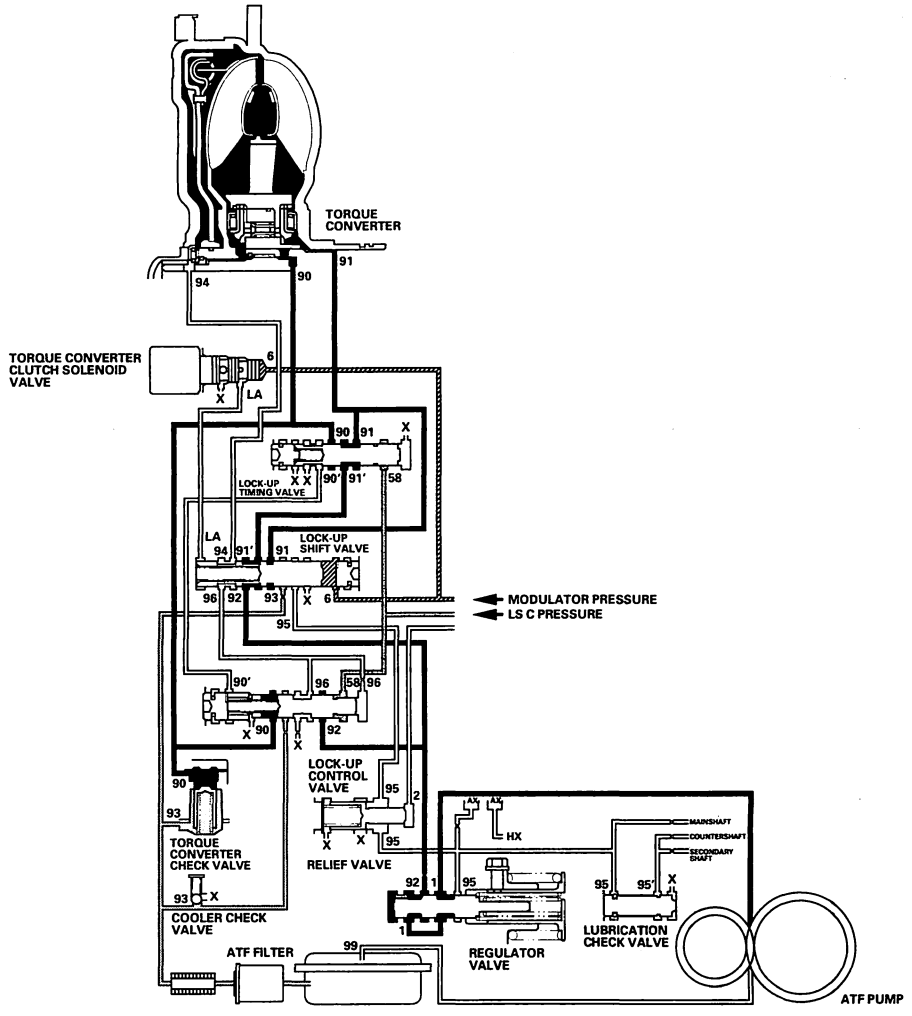

Protected by AR

System Description (cont'd)

Circuit Diagram - PCM A/T Control System

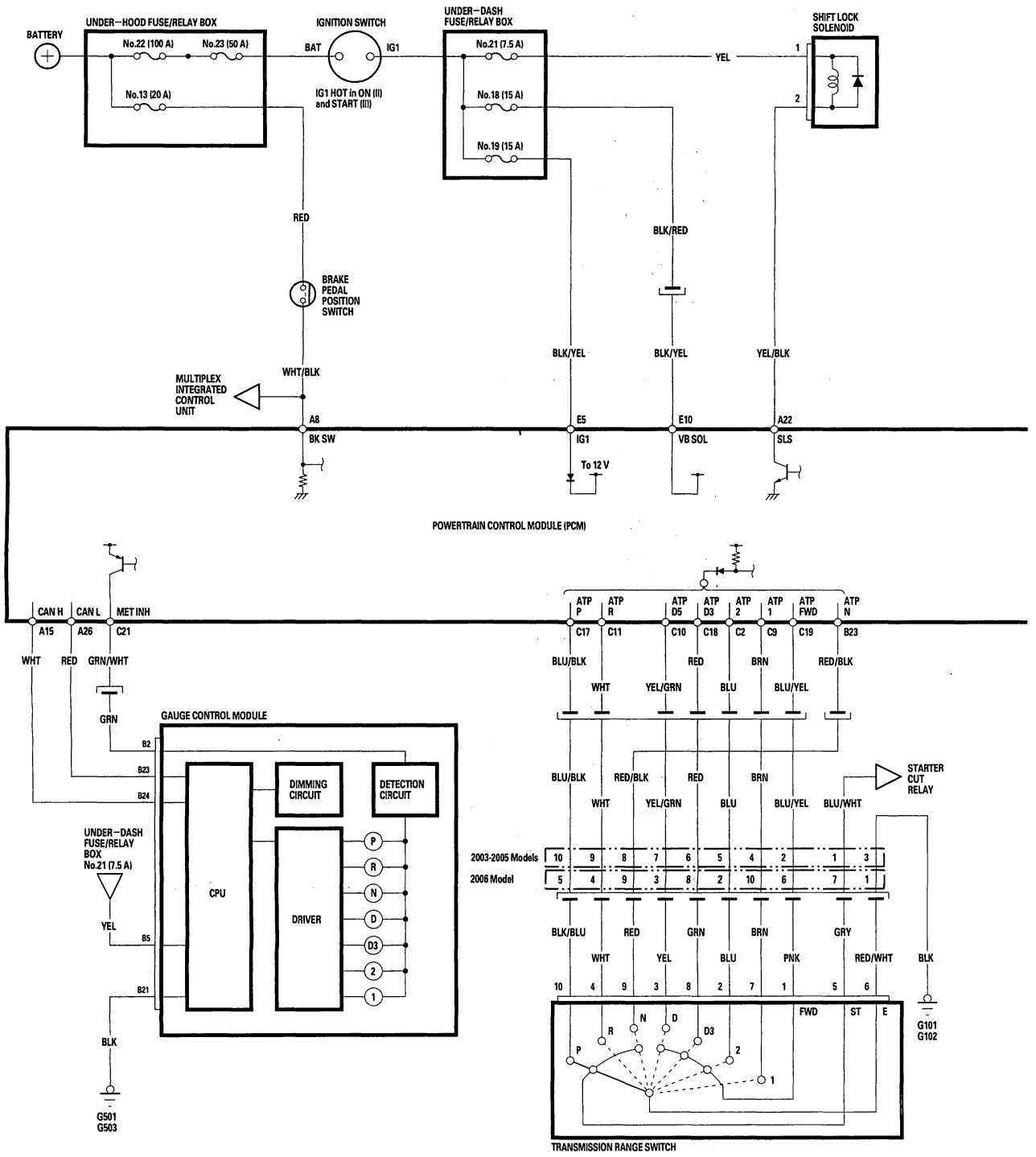

BACK

Protected by AR

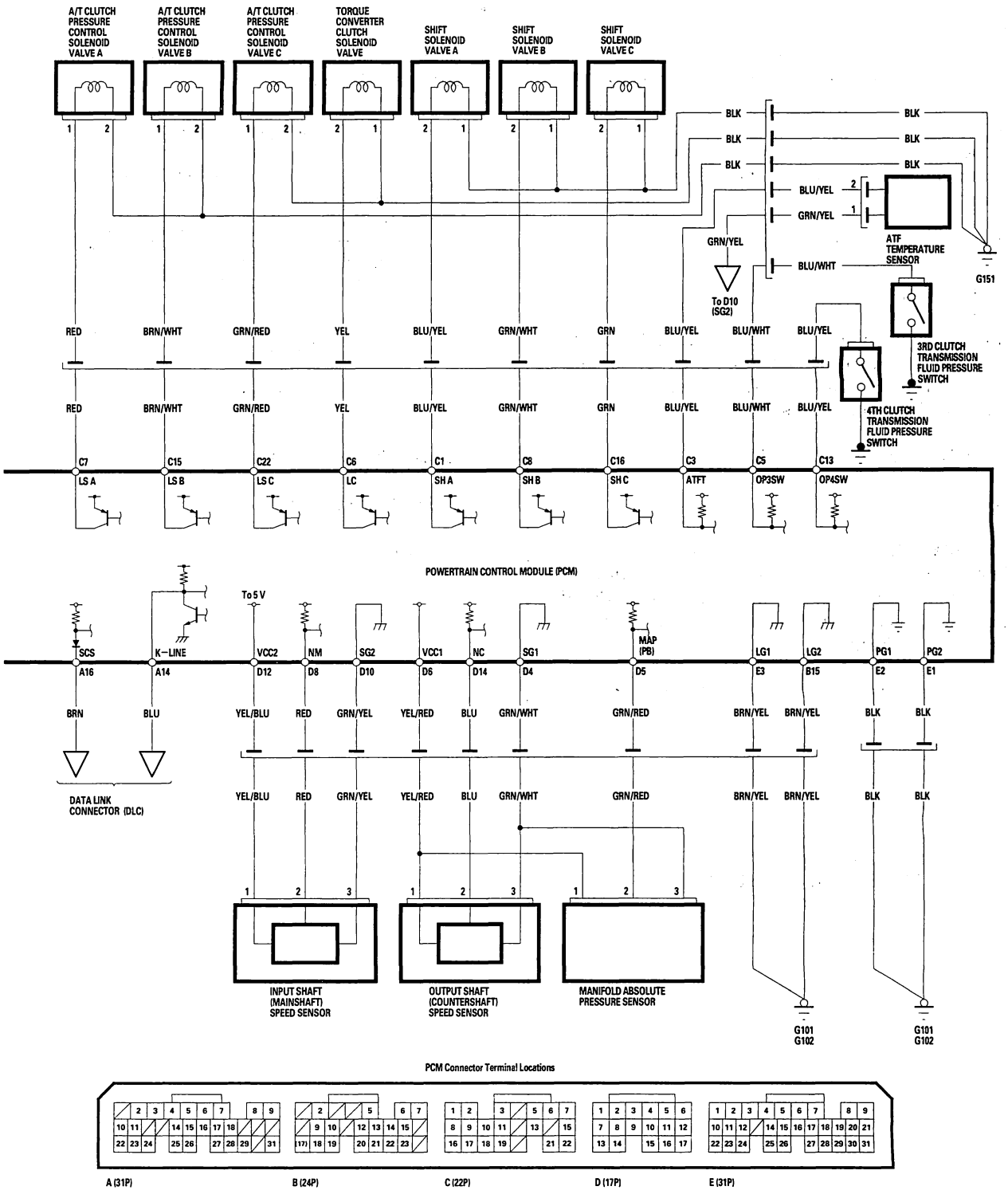

BACK

Protected by AR

DTC Troubleshooting

DTC P0705: Short in Transmission Range Switch Circuit (Multiple Shift-position Input)

NOTE:
- Record all freeze data and review General Troubleshooting Information, refer to the 2003-2006 Accord Service Manual (see page 14-3) before you troubleshoot.
- This code is caused by an electrical circuit problem and cannot be caused by a mechanical problem in the transmission.

1. Clear the DTC with the HDS.
2. Start the engine.
3. Move the shift lever through all positons. Stop for at least 1 second in each position, and monitor the OBD status for P0705 in the DTCs/Freeze Data in A/T Mode Menu for a pass/fail.

   Does the result indicate FAILED?

   YES—Go to step 4.

   NO—Intermittent failure, the system is OK at this time. Check for an intermittent short in the wires between the transmission range switch and PCM. If the tester indicates NOT COMPLETED, return to step 1 and recheck.■
4. Inspect the transmission range switch (see page 14-215).

   Is the switch OK?

   YES—Go to step 5.

   NO—Replace the transmission range switch (see page 14-218), then go to step 56.
5. Turn the ignition switch ON (II).
6. Shift to all positions other than P.
7. Measure the voltage between PCM connector terminals C17 and E3.

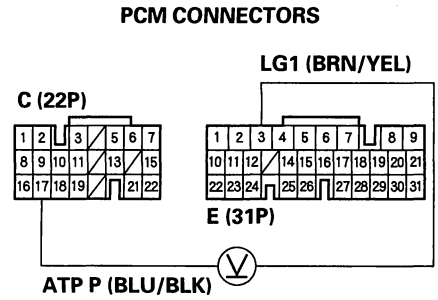

Wire side of female terminals

Is there battery voltage?

YES—Go to step 14.

NO—Go to step 8.

BACK

Protected by AR

8. Turn the ignition switch OFF.
9. Jump the SCS line with the HDS.
10. Disconnect PCM connector C (22P).
11. Check for continuity between PCM connector terminal C17 and body ground.

PCM CONNECTOR C (22P)

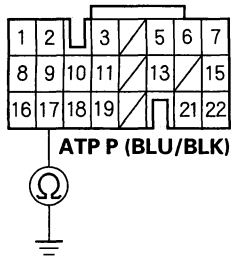

Wire side of female terminals

Is there continuity?

YES—Repair short in the wire between PCM connector terminal C17 and the transmission range switch, then go to step 56.

NO—Go to step 12.

12. Disconnect PCM connectors B (24P) and E (31P).
13. Check for continuity between PCM connector terminals B15 and body ground, and between E3 and body ground.

PCM CONNECTORS

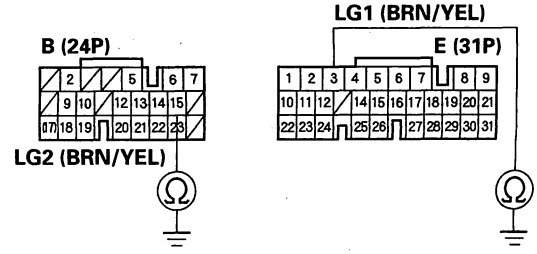

Wire side of female terminals

Is there continuity?

YES—Update the PCM if it does not have the latest software, or substitute a known-good PCM, refer to the 2003-2006 Accord Service Manual (see page 14-6), then recheck. If the symptom/indication goes away with a known-good PCM, replace the original PCM. ■

NO—Repair open in the wire between PCM connector terminals B15, E3, and ground (G101, G102), or repair poor ground (G101, G102), then go to step 56.

(cont'd)

Protected by AR

DTC Troubleshooting (cont'd)

14. Shift to all positions other than R.
15. Measure the voltage between PCM connector terminals C11 and E3.

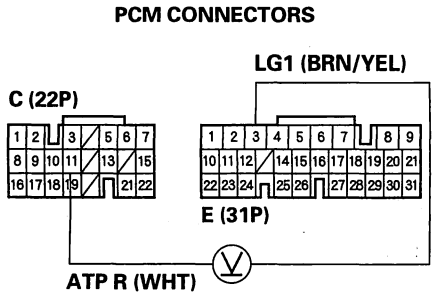

Wire side of female terminals

Is there battery voltage?

YES—Go to step 20.

NO—Go to step 16.

16. Turn the ignition switch OFF.
17. Jump the SCS line with the HDS.
18. Disconnect PCM connector C (22P).
19. Check for continuity between PCM connector terminal C11 and body ground.

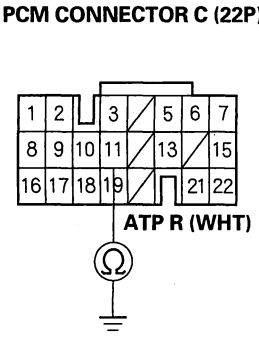

Wire side of female terminals

Is there continuity?

YES—Repair short in the wire between PCM connector terminal C11 and the transmission range switch, then go to step 56.

NO—Update the PCM if it does not have the latest software, or substitute a known-good PCM, refer to the 2003-2006 Accord Service Manual (see page 14-6), then recheck. If the symptom/indication goes away with a known-good PCM, replace the original PCM. ■

BACK

Protected by AR

20. Shift to all positions other than N.

21. Measure the voltage between PCM connector terminals B23 and E3.

PCM CONNECTORS

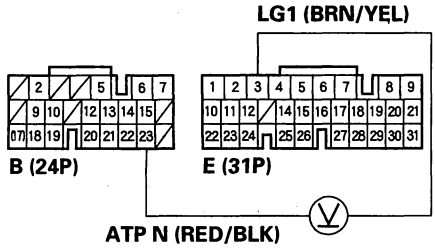

Wire side of female terminals

Is there battery voltage?

YES—Go to step 26.

NO—Go to step 22.

22. Turn the ignition switch OFF.

23. Jump the SCS line with the HDS.

24. Disconnect PCM connector B (24P).

25. Check for continuity between PCM connector terminal B23 and body ground.

PCM CONNECTOR B (24P)

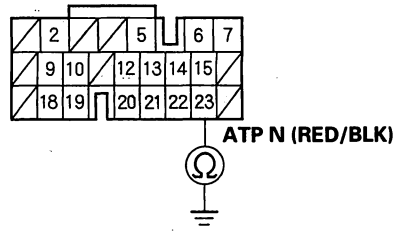

Wire side of female terminals

Is there continuity?

YES—Repair short in the wire between PCM connector terminal B23 and the transmission range switch, then go to step 56.

NO—Update the PCM if it does not have the latest software, or substitute a known-good PCM, refer to the 2003-2006 Accord Service Manual (see page 14-6), then recheck. If the symptom/indication goes away with a known-good PCM, replace the original PCM. ■

(cont'd)

Protected by AR

DTC Troubleshooting (cont'd)

26. Shift to all positions other than D.

27. Measure the voltage between PCM connector terminals C10 and E3.

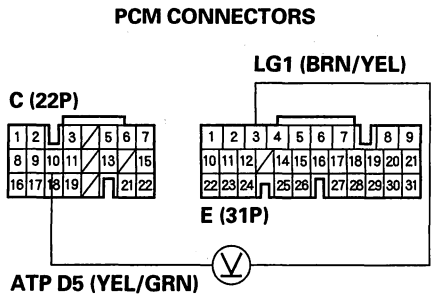

Wire side of female terminals

Is there battery voltage?

YES—Go to step 32.

NO—Go to step 28.

28. Turn the ignition switch OFF.

29. Jump the SCS line with the HDS.

30. Disconnect PCM connector C (22P).

31. Check for continuity between PCM connector terminal C10 and body ground.

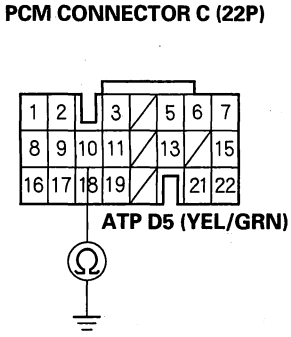

Wire side of female terminals

Is there continuity?

YES—Repair short in the wire between PCM connector terminal C10 and the transmission range switch, then go to step 56.

NO—Update the PCM if it does not have the latest software, or substitute a known-good PCM, refer to the 2003-2006 Accord Service Manual (see page 14-6), then recheck. If the symptom/indication goes away with a known-good PCM, replace the original PCM. ■

BACK

Protected by AR

32. Shift to all positions other than D3.

33. Measure the voltage between PCM connector terminals C18 and E3.

PCM CONNECTORS

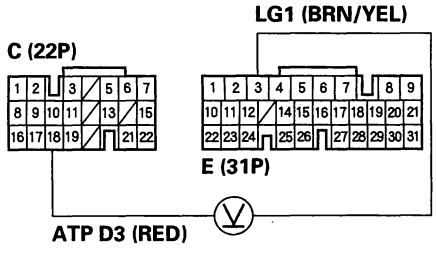

Wire side of female terminals

Is there battery voltage?

YES—Go to step 38.

NO—Go to step 34.

34. Turn the ignition switch OFF.

35. Jump the SCS line with the HDS.

36. Disconnect PCM connector C (22P).

37. Check for continuity between PCM connector terminal C18 and body ground.

PCM CONNECTOR C (22P)

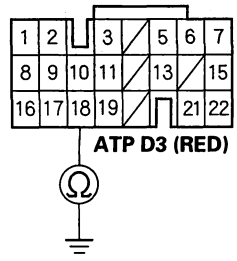

Wire side of female terminals

Is there continuity?

YES—Repair short in the wire between PCM connector terminal C18 and the transmission range switch, then go to step 56.

NO—Update the PCM if it does not have the latest software, or substitute a known-good PCM, refer to the 2003-2006 Accord Service Manual (see page 14-6), then recheck. If the symptom/indication goes away with a known-good PCM, replace the original PCM. ■

(cont'd)

Protected by AR

DTC Troubleshooting (cont'd)

38. Shift to all positions other than 2.

39. Measure the voltage between PCM connector terminals C2 and E3.

PCM CONNECTORS

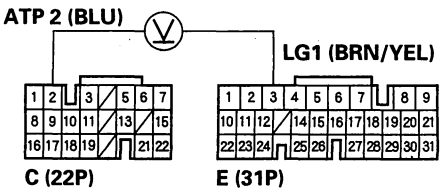

Wire side of female terminals

Is there battery voltage?

YES—Go to step 44.

NO—Go to step 40.

40. Turn the ignition switch OFF.

41. Jump the SCS line with the HDS.

42. Disconnect PCM connector C (22P).

43. Check for continuity between PCM connector terminal C2 and body ground.

PCM CONNECTOR C (22P)

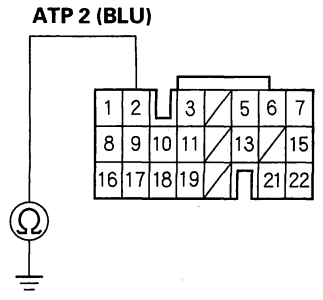

Wire side of female terminals

Is there continuity?

YES—Repair short in the wire between PCM connector terminal C2 and the transmission range switch, then go to step 56.

NO—Update the PCM if it does not have the latest software, or substitute a known-good PCM, refer to the 2003-2006 Accord Service Manual (see page 14-6), then recheck. If the symptom/indication goes away with a known-good PCM, replace the original PCM. ■

BACK

Protected by AR

44. Shift to all positions other than 1.

45. Measure the voltage between PCM connector terminals C9 and E3.

PCM CONNECTORS

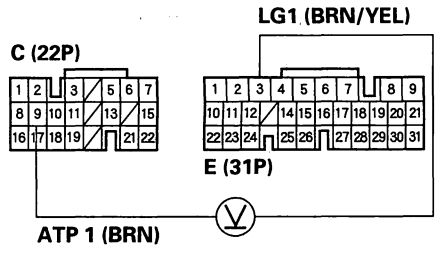

Wire side of female terminals

Is there battery voltage?

YES—Go to step 50.

NO—Go to step 46.

46. Turn the ignition switch OFF.

47. Jump the SCS line with the HDS.

48. Disconnect PCM connector C (22P).

49. Check for continuity between PCM connector terminal C9 and body ground.

PCM CONNECTOR C (22P)

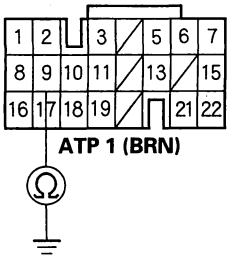

Wire side of female terminals

Is there continuity?

YES—Repair short in the wire between PCM connector terminal C9 and the transmission range switch, then go to step 56.

NO—Update the PCM if it does not have the latest software, or substitute a known-good PCM, refer to the 2003-2006 Accord Service Manual (see page 14-6), then recheck. If the symptom/indication goes away with a known-good PCM, replace the original PCM. ■

(cont'd)

Protected by AR

DTC Troubleshooting (cont'd)

50. Shift to all positions other than D, D3, and 2.

51. Measure the voltage between PCM connector terminals C19 and E3.

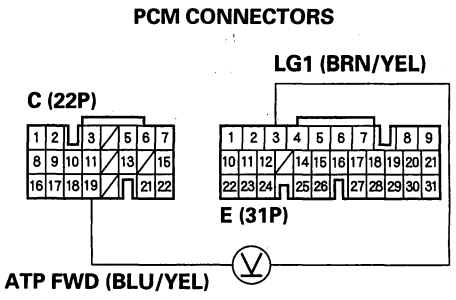

Wire side of female terminals

Is there battery voltage?

YES—Update the PCM if it does not have the latest software, or substitute a known-good PCM, refer to the 2003-2006 Accord Service Manual (see page 14-6), then recheck. If the symptom/indication goes away with a known-good PCM, replace the original PCM. ■

NO—Go to step 52.

52. Turn the ignition switch OFF.

53. Jump the SCS line with the HDS.

54. Disconnect PCM connector C (22P).

55. Check for continuity between PCM connector terminal C19 and body ground.

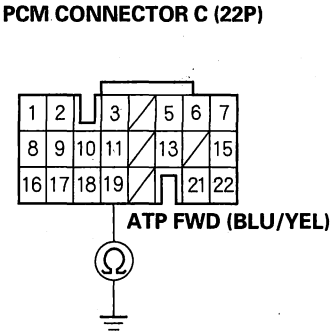

Wire side of female terminals

Is there continuity?

YES—Repair short in the wire between PCM connector terminal C19 and the transmission range switch, then go to step 56.

NO—Update the PCM if it does not have the latest software, or substitute a known-good PCM, refer to the 2003-2006 Accord Service Manual (see page 14-6), then recheck. If the symptom/indication goes away with a known-good PCM, replace the original PCM. ■

56. Clear the DTC with the HDS.

57. Move the shift lever through all positons. Stop for at least 1 second in each position, and monitor the OBD status for P0705 in the DTCs/Freeze Data in A/T Mode Menu for a pass/fail.

Does the result indicate PASSED?

YES—Troubleshooting is complete. ■

NO—Return to step 1 and recheck.

BACK

Protected by AR

DTC P0706: Open in Transmission Range Switch Circuit

NOTE:
- Record all freeze data and review General Troubleshooting Information, refer to the 2003-2006 Accord Service Manual (see page 14-3) before you troubleshoot.
- This code is caused by an electrical circuit problem and cannot be caused by a mechanical problem in the transmission.

1. Clear the DTC with the HDS.
2. Raise the front of the vehicle, make sure it is securely supported, and allow the front wheels to rotate freely.
3. Start the engine, drive the vehicle in the D position until the vehicle speed reaches 35 mph (56 km/h), then slow down and stop the wheels.
4. Monitor the OBD status for P0706 in the DTCs/ Freeze Data in A/T Mode Menu for a pass/fail.

   Does the result indicate FAILED?

   YES—Go to step 5.

   NO—Intermittent failure, the system is OK at this time. Check for poor connections or loose terminals at the transmission range switch and PCM. If the tester indicates NOT COMPLETED, return to step 1 and recheck. ■
5. Inspect the transmission range switch (see page 14-215).

   Is the switch OK?

   YES—Inspect the end of the selector control shaft (see step 6 on page 14-217), then go to step 6.

   NO—Replace the transmission range switch (see page 14-218), then go to step 24.
6. Install the transmission range switch correctly, and adjust the shift cable, refer to the 2003-2006 Accord Service Manual (see page 14-241).
7. Clear the DTC with the HDS.
8. Shift the shift lever into the D position, and verify the ATP FWD and ATP D inputs with the HDS in the A/T data list.

   Is the ATP FWD and ATP D ON?

   YES—Go to step 9.

   NO—Go to step 16.
9. Monitor the OBD status for P0706 in the DTCs/ Freeze Data in A/T Mode Menu for a pass/fail.

   Does the result indicate FAILED?

   YES—Go to step 10.

   NO—Go to step 16.
10. Shift to the 2 position, and verify the ATP FWD and ATP 2 inputs with the HDS in the A/T data list.

    Is the ATP FWD and ATP 2 ON?

    YES—Go to step 11.

    NO—Go to step 16.
11. Shift to the 1 position, and verify the ATP 1 signal with the HDS in the A/T data list.

    Is the ATP 1 ON?

    YES—Go to step 12.

    NO—Go to step 16.
12. Clear the DTC with the HDS, and turn the ignition switch OFF.
13. Raise the front of the vehicle, make sure it is securely supported, and allow the front wheels to rotate freely.
14. Start the engine, drive the vehicle in the D position until the vehicle speed reaches 35 mph (56 km/h), then slow down and stop the wheels.

(cont'd)

Protected by AR

DTC Troubleshooting (cont'd)

15. Monitor the OBD status for P0706 in the DTCs/ Freeze Data in A/T Mode Menu for a pass/fail.

    Does the result indicate FAILED?

    YES—Go to step 16.

    NO—Intermittent failure, the system is OK at this time. Check for poor connections or loose terminals at the transmission range switch and PCM. If the tester indicates NOT COMPLETED, return to step 12 and recheck. ■

16. Turn the ignition switch OFF.

17. Disconnect the transmission range switch connector.

18. Check for continuity between transmission range switch connector terminal No. 6 and body ground.

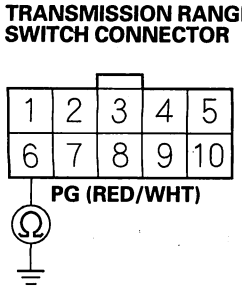

Wire side of female terminals

Is there continuity?

YES—Go to step 19.

NO—Repair open in the wire between transmission range switch connector terminal No. 6 and ground (G101, G102), or repair poor ground (G101, G102), then go to step 24.

19. Turn the ignition switch ON (II).

20. Measure the voltage between transmission range switch connector terminals No. 1 and No. 6.

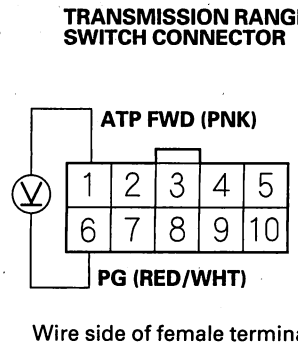

Wire side of female terminals

Is there voltage?

YES—Go to step 21.

NO—Repair open in the wire between the transmission range switch and PCM connector terminal C19, then go to step 24.

21. Measure the voltage between transmission range switch connector terminals No. 3 and No. 6.

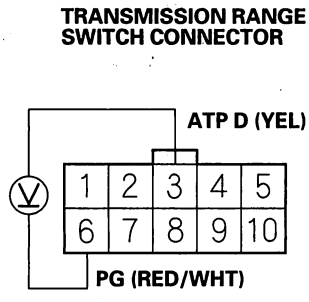

Wire side of female terminals

Is there voltage?

YES—Go to step 22.

NO—Repair open in the wire between the transmission range switch and PCM connector terminal C10, then go to step 24.

BACK

Protected by AR

22. Measure the voltage between transmission range switch connector terminals No. 6 and No. 8.

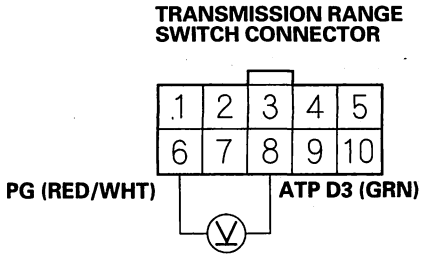

Wire side of female terminals

Is there voltage?

YES—Go to step 23.

NO—Repair open in the wire between the transmission range switch and PCM connector terminal C18, then go to step 24.

23. Measure the voltage between transmission range switch connector terminals No. 2 and No. 6.

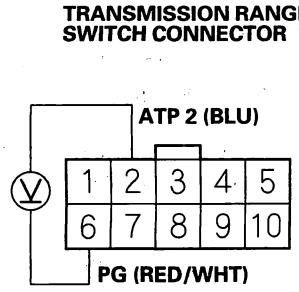

Wire side of female terminals

Is there voltage?

YES—Update the PCM if it does not have the latest software, or substitute a known-good PCM, refer to the 2003-2006 Accord Service Manual (see page 14-6), then recheck. If the symptom/indication goes away with a known-good PCM, replace the original PCM.■

NO—Repair open in the wire between the transmission range switch and PCM connector terminal C2, then go to step 24.

24. Clear the DTC with the HDS.

25. Turn the ignition switch OFF.

26. Raise the front of the vehicle, make sure it is securely supported, and allow the front wheels to rotate freely.

27. Start the engine, drive the vehicle in the D position until the vehicle speed reaches 35 mph (56 km/h), then slow down and stop the wheels.

28. Monitor the OBD status for P0706 in the DTCs/ Freeze Data in A/T Mode Menu for a pass/fail.

Does the result indicate PASSED?

YES—Troubleshooting is complete.■

NO—Return to step 1 and recheck.

Protected by AR

DTC Troubleshooting (cont'd)

DTC P0711: Problem in ATF Temperature Sensor Circuit

NOTE:
- Record all freeze data and review General Troubleshooting Information, refer to the 2003-2006 Accord Service Manual (see page 14-3) before you troubleshoot.
- This code is caused by an electrical circuit problem and cannot be caused by a mechanical problem in the transmission.

1. Check the ATF temperature with the HDS in the A/T data list.

   Does the ATF temperature exceed the ambient-air temperature?

   YES—Record the ATF temperature. Leave the engine off for more than 30 minutes, and go to step 2.

   NO—Record the ATF temperature. Test the stall speed RPM (see page 14-161) three times. Go to step 2 after stall speed testing.

2. Check the ATF temperature with the HDS.

   Did the ATF temperature change?

   YES—Leave the engine off for more than 30 minutes, and go to step 3.

   NO—Replace the ATF temperature sensor (see page 14-183), then go to step 5.

3. Check the ECT SENSOR with the HDS.

   Is the ECT SENSOR equal to the ambient-air temperature?

   YES—Go to step 4.

   NO—Leave the engine off until ECT sensor equals ambient-air temperature, then go to step 4.

4. Check the ATF temperature with the HDS.

   Is the ATF temperature almost equal to ECT SENSOR?

   YES—Intermittent failure, the system is OK at this time. Check for poor connections or loose terminals at the ATF temperature sensor and PCM. ■

   NO—Replace ATF temperature sensor (see page 14-183), then go to step 5.

5. Clear the DTC with the HDS.

6. Test-drive the vehicle for several minutes in the D position through all five gears.

7. Monitor the OBD status for P0711 in the DTCs/ Freeze Data in A/T Mode Menu for a pass/fail.

   Does the result indicate PASSED?

   YES—Troubleshooting is complete. ■

   NO—Return to step 1 and recheck.

BACK

Protected by AR

DTC P0712: Short in ATF Temperature Sensor Circuit

NOTE:
- Record all freeze data and review General Troubleshooting Information, refer to the 2003-2006 Accord Service Manual (see page 14-3) before you troubleshoot.
- This code is caused by an electrical circuit problem and cannot be caused by a mechanical problem in the transmission.

1. Check ATF temperature sensor voltage with the HDS in the A/T data list.

   Is ATF temperature sensor voltage 0.07 V or less?

   YES—Go to step 2.

   NO—Intermittent failure, the system is OK at this time. Check for intermittent short in the wires between the ATF temperature sensor and PCM.■

2. Disconnect the ATF temperature sensor connector at the transmission end cover.

3. Check ATF temperature sensor voltage with the HDS.

   Is ATF temperature sensor voltage 0.07 V or less?

   YES—Go to step 4.

   NO—Replace ATF temperature sensor (see page 14-183), then go to step 8.

4. Turn the ignition switch OFF.

5. Jump the SCS line with the HDS.

6. Disconnect PCM connector C (22P).

7. Check for continuity between ATF temperature sensor connector terminal No. 2 and body ground.

   ATF TEMPERATURE SENSOR CONNECTOR

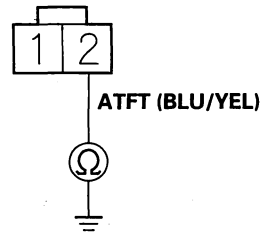

   Wire side of female terminals

   Is there continuity?

   YES—Repair short to ground between PCM connector terminal C3 and the ATF temperature sensor connector terminal No. 2 then, go to step 8.

   NO—Update the PCM if it does not have the latest software, or substitute a known-good PCM, refer to the 2003-2006 Accord Service Manual (see page 14-6), then recheck. If the symptom/indication goes away with a known-good PCM, replace the original PCM.■

8. Clear the DTC with the HDS.

9. Test-drive the vehicle for several minutes in the D position through all five gears.

10. Monitor the OBD status for P0712 in the DTCs/ Freeze Data in A/T Mode Menu for a pass/fail.

    Does the result indicate PASSED?

    YES—Troubleshooting is complete.■

    NO—Return to step 1 and recheck.

Protected by AR

DTC Troubleshooting (cont'd)

DTC P0713: Open in ATF Temperature Sensor Circuit

NOTE:
- Record all freeze data and review General Troubleshooting Information, refer to the 2003-2006 Accord Service Manual (see page 14-3) before you troubleshoot.
- This code is caused by an electrical circuit problem and cannot be caused by a mechanical problem in the transmission.

1. Check ATF temperature sensor voltage with the HDS in the A/T data list.

   Does ATF temperature sensor voltage exceed 4.93 V?

   YES—Go to step 2.

   NO—Intermittent failure, the system is OK at this time. Check for poor connections or loose terminals at the ATF temperature sensor and PCM. ■

2. Turn the ignition switch OFF.

3. Disconnect the ATF temperature sensor connector at the transmission end cover.

4. Turn the ignition switch ON (II).

5. Measure the voltage between ATF temperature sensor connector terminal No. 2 and body ground.

ATF TEMPERATURE SENSOR CONNECTOR

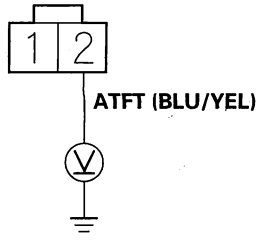

Wire side of female terminals

Is there about 5 V?

YES—Go to step 6.

NO—Go to step 7.

6. Measure the voltage between ATF temperature sensor connector terminals No. 1 and No. 2.

ATF TEMPERATURE SENSOR CONNECTOR

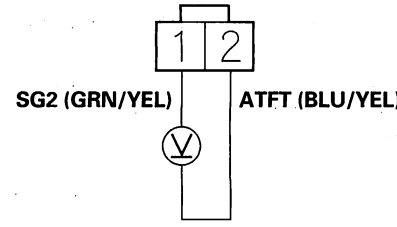

Wire side of female terminals

Is there about 5 V?

YES—Replace the ATF temperature sensor (see page 14-183), then go to step 8.

NO—Repair open in the wire between PCM connector terminal D10 and the ATF temperature sensor connector. ■

BACK

Protected by AR

7. Measure the voltage between PCM connector terminal C3 and body ground.

PCM CONNECTOR C (22P)

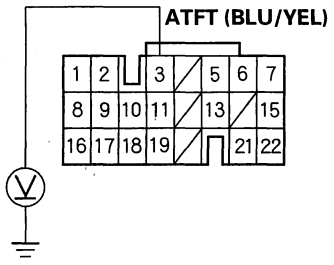

Wire side of female terminals

Is there about 5 V?

YES—Repair open in the wire between PCM connector terminal C3 and the ATF temperature sensor connector, then go to step 8.

NO—Check for loose or poor connections at PCM connector terminal C3. If the connection is OK, update the PCM if it does not have the latest software, or substitute a known-good PCM, refer to the 2003-2006 Accord Service Manual (see page 14-6), then recheck. If the symptom/indication goes away with a known-good PCM, replace the original PCM. ■

8. Clear the DTC with the HDS.

9. Test-drive the vehicle for several minutes in the D position through all five gears.

10. Monitor the OBD status for P0713 in the DTCs/ Freeze Data in A/T Mode Menu for a pass/fail.

Does the result indicate PASSED?

YES—Troubleshooitng is complete. ■

NO—Return to step 1 and recheck.

Protected by AR

DTC Troubleshooting (cont'd)

DTC P0716: Problem in Input Shaft (Mainshaft) Speed Sensor Circuit

NOTE:
- Record all freeze data and review General Troubleshooting Information, refer to the 2003-2006 Accord Service Manual (see page 14-3) before you troubleshoot.
- This code is caused by an electrical circuit problem and cannot be caused by a mechanical problem in the transmission.

1. Clear the DTC with the HDS.
2. Check for proper input shaft (mainshaft) speed sensor installation (see page 14-179).
3. Raise the front of the vehicle, make sure it is securely supported, and allow the front wheels to rotate freely.
4. Start the engine, drive the vehicle in the D position, and hold the vehicle at speeds over 30 mph (48 km/h) for more than 10 seconds.
5. Monitor the OBD status for P0716 in the DTCs/ Freeze Data in A/T Mode Menu for a pass/fail.

   Does the result indicate FAILED?

   YES—Go to step 6.

   NO—Intermittent failure, the system is OK at this time. Check for loose or poor connections at the PCM and input shaft (mainshaft) speed sensor connectors. If the tester indicates NOT COMPLETED, return to step 4 and recheck.■
6. Turn the ignition switch OFF.
7. Jump the SCS line with the HDS.
8. Disconnect PCM connectors B (24P) and E (31P), and input shaft (mainshaft) speed sensor connector.
9. Check for continuity between PCM connector terminals B15 and body ground, and between E3 and body ground.

PCM CONNECTORS

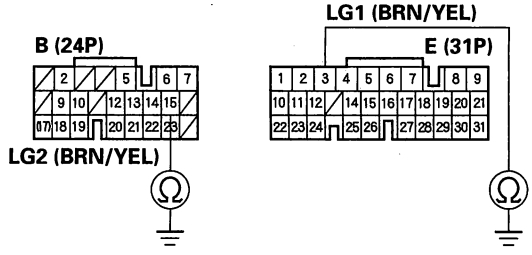

Wire side of female terminals

Is there continuity?

YES—Go to step 10.

NO—Repair open in the wire between PCM connector terminals B15, E3, and ground (G101, G102), or repair poor ground (G101, G102), then go to step 30.

10. Connect PCM connectors B (24P) and E (31P).
11. Turn the ignition switch ON (II).
12. Measure the voltage between input shaft (mainshaft) speed sensor connector terminal No. 1 and body ground.

INPUT SHAFT (MAINSHAFT) SPEED SENSOR CONNECTOR

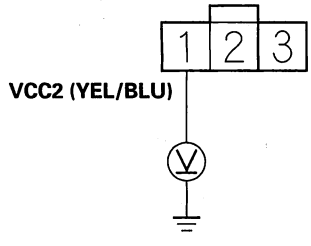

Wire side of female terminals

Is there about 5 V?

YES—Go to step 13.

NO—Go to step 24.

BACK

Protected by AR

13. Turn the ignition switch OFF.
14. Disconnect PCM connector D (17P).
15. Check for continuity between input shaft (mainshaft) speed sensor connector terminal No. 2 and body ground.

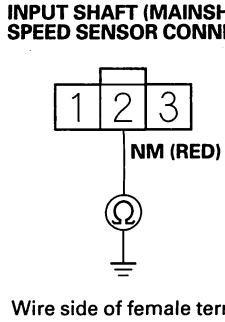

Wire side of female terminals

Is there continuity?

YES—Repair short to ground in the wire between PCM connector terminal D8 and mainshaft speed sensor, then go to step 30.

NO—Go to step 16.

16. Check for continuity between input shaft (mainshaft) speed sensor connector terminal No. 3 and PCM connector terminal D10.

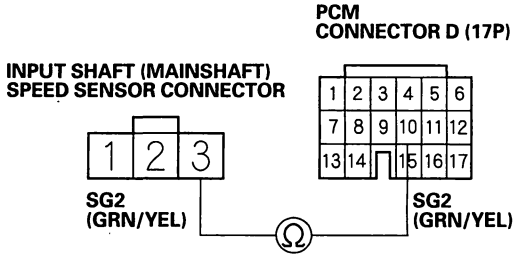

Wire side of female terminals

Is there continuity?

YES—Go to step 17.

NO—Repair open in the wire between the input shaft (mainshaft) speed sensor connector and PCM connector terminal D10, then go to step 30.

17. Reconnect PCM connector D (17P).
18. Turn the ignition switch ON (II).
19. Measure the voltage between input shaft (mainshaft) speed sensor connector terminals No .2 and No. 3.

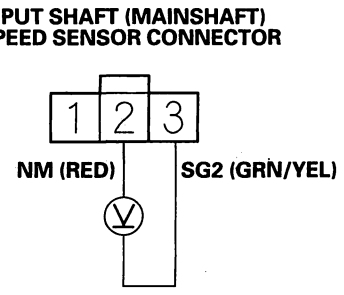

Wire side of female terminals

Is there about 5 V?

YES—Go to step 20.

NO—Go to step 29.

20. Connect the input shaft (mainshaft) speed sensor connector.
21. Measure the voltage between PCM connector terminals D8 and E3.

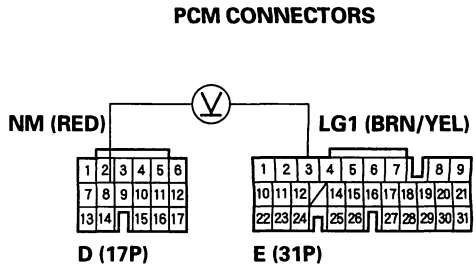

Wire side of female terminals

Is the voltage 0 V or about 5 V?

YES—Go to step 22.

NO—Replace the input shaft (mainshaft) speed sensor (see page 14-179), then go to step 30.

(cont'd)

Protected by AR

DTC Troubleshooting (cont'd)

22. Shift to the P position. Start the engine, and let it idle.

23. With the engine idling, measure the voltage between PCM connector terminals D8 and E3.

PCM CONNECTORS

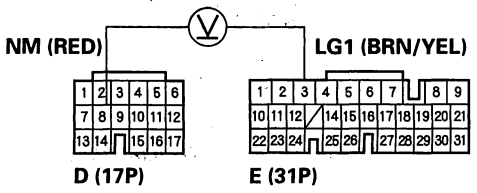

Wire side of female terminals

Is there 1.5—3.5 V?

YES—Update the PCM if it does not have the latest software, or substitute a known-good PCM, refer to the 2003-2006 Accord Service Manual (see page 14-6), then recheck. If the symptom/indication goes away with a known-good PCM, replace the original PCM. ■

NO—Replace the input shaft (mainshaft) speed sensor (see page 14-179), then go to step 30.

24. Measure the voltage between PCM connector terminals D12 and E3.

PCM CONNECTORS

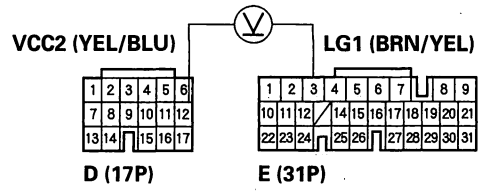

Wire side of female terminals

Is there about 5 V?

YES—Repair open in the wire between PCM connector terminal D12 and the input shaft (mainshaft) speed sensor, then go to step 30.

NO—Go to step 25.

25. Turn the ignition switch OFF.

26. Jump the SCS line with the HDS.

27. Disconnect PCM connector D (17P).

BACK

Protected by AR

28. Check for continuity between PCM connector terminal D12 and body ground.

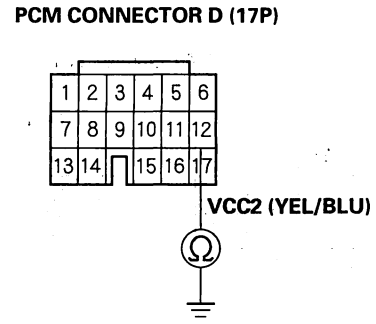

Wire side of female terminals

Is there continuity?

YES—Repair short to ground in the wire between PCM connector terminal D12 and the input shaft (mainshaft) speed sensor, then go to step 30.

NO—Check for loose or poor connections at PCM connector terminal D12. If the connection is OK, update the PCM if it does not have the latest software, or substitute a known-good PCM, refer to the 2003-2006 Accord Service Manual (see page 14-6), then recheck. If the symptom/indication goes away with a known-good PCM, replace the original PCM. ■

29. Measure the voltage between PCM connector terminals D8 and E3.

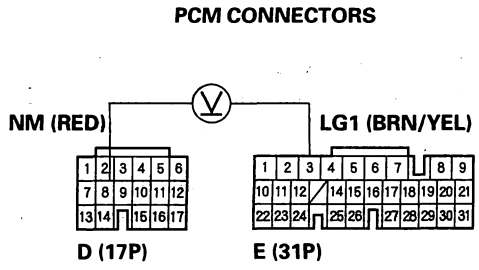

Wire side of female terminals

Is there about 5 V?

YES—Repair open in the wire between PCM connector terminal D8 and the input shaft (mainshaft) speed sensor, then go to step 30.

NO—Check for loose or poor connections at PCM connector terminal D8. If the connection is OK, update the PCM if it does not have the latest software, or substitute a known-good PCM, refer to the 2003-2006 Accord Service Manual (see page 14-6), then recheck. If the symptom/indication goes away with a known-good PCM, replace the original PCM. ■

30. Clear the DTC with the HDS.

31. Start the engine, drive the vehicle in the D position, and hold the vehicle at speeds over 30 mph (48 km/h) for more than 10 seconds.

32. Monitor the OBD status for P0716 in the DTCs/ Freeze Data in A/T Mode Menu for a pass/fail.

Does the result indicate PASSED?

YES—Troubleshooting is complete. ■

NO—Return to step 1 and recheck.

Protected by AR

DTC Troubleshooting (cont'd)

DTC P0717: Problem in Input Shaft (Mainshaft) Speed Sensor Circuit (No Signal Input)

NOTE:
- Record all freeze data and review General Troubleshooting Information, refer to the 2003-2006 Accord Service Manual (see page 14-3) before you troubleshoot.
- This code is caused by an electrical circuit problem and cannot be caused by a mechanical problem in the transmission.

1. Clear the DTC with the HDS.
2. Check for proper input shaft (mainshaft) speed sensor installation (see page 14-179).
3. Raise the front of the vehicle, make sure it is securely supported, and allow the front wheels to rotate freely.
4. Start the engine, drive the vehicle in the D position, and hold the vehicle at speeds over 30 mph (48 km/h) for more than 10 seconds. Slow down and stop the wheels.
5. Monitor the OBD status for P0717 in the DTCs/ Freeze Data in A/T Mode Menu for a pass/fail.

   Does the result indicate FAILED?

   YES—Go to step 6.

   NO—Intermittent failure, the system is OK at this time. Check for loose or poor connections at the PCM and input shaft (mainshaft) speed sensor connectors. If the tester indicates NOT COMPLETED, return to step 4 and recheck. ■
6. Turn the ignition switch OFF.
7. Jump the SCS line with the HDS.
8. Disconnect PCM connectors B (24P) and E (31P), and input shaft (mainshaft) speed sensor connector.
9. Check for continuity between PCM connector terminals B15 and body ground, and between E3 and body ground.

PCM CONNECTORS

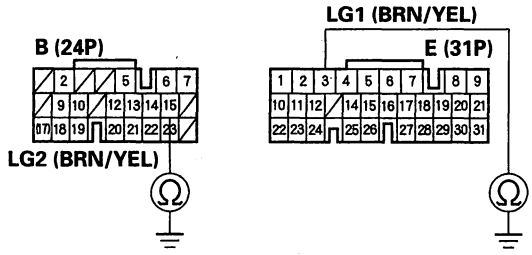

Wire side of female terminals

Is there continuity?

YES—Go to step 10.

NO—Repair open in the wire between PCM connector terminals B15, E3, and ground (G101, G102), or repair poor ground (G101, G102), then go to step 30.

10. Connect PCM connectors B (24P) and E (31P).
11. Turn the ignition switch ON (II).
12. Measure the voltage between input shaft (mainshaft) speed sensor connector terminal No. 1 and body ground.

INPUT SHAFT (MAINSHAFT) SPEED SENSOR CONNECTOR

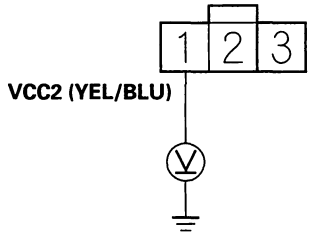

Wire side of female terminals

Is there about 5 V?

YES—Go to step 13.

NO—Go to step 24.

BACK

Protected by AR

13. Turn the ignition switch OFF.

14. Disconnect PCM connector D (17P).

15. Check for continuity between input shaft (mainshaft) speed sensor connector terminal No. 2 and body ground.

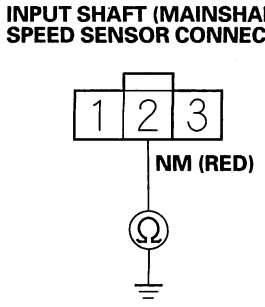

Wire side of female terminals

Is there continuity?

YES—Repair short to ground in the wire between PCM connector terminal D8 and input shaft (mainshaft) speed sensor, then go to step 30.

NO—Go to step 16.

16. Check for continuity between input shaft (mainshaft) speed sensor connector terminal No. 3 and PCM connector terminal D10.

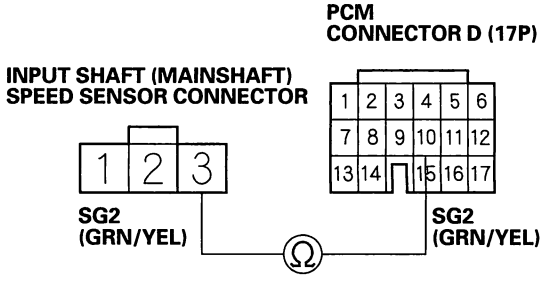

Wire side of female terminals

Is there continuity?

YES—Go to step 17.

NO—Repair open in the wire between the input shaft (mainshaft) speed sensor connector and PCM connector terminal D10, then go to step 30.

17. Connect PCM connector D (17P).

18. Turn the ignition switch ON (II).

19. Measure the voltage between input shaft (mainshaft) speed sensor connector terminals No. 2 and No. 3.

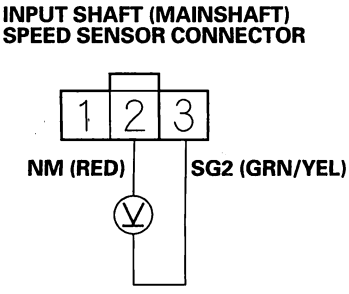

Wire side of female terminals

Is there about 5 V?

YES—Go to step 20.

NO—Go to step 29.

20. Connect the input shaft (mainshaft) speed sensor connector.

21. Measure the voltage between PCM *connector* terminals D8 and E3.

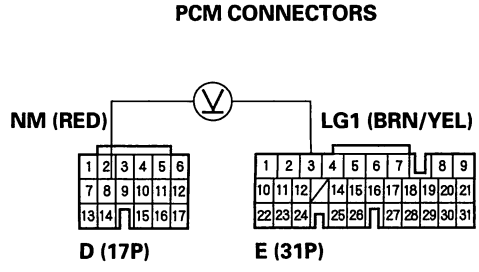

Wire side of female terminals

Is the voltage 0 V or about 5 V?

YES—Go to step 22.

NO—Replace the input shaft (mainshaft) speed sensor (see page 14-179), then go to step 30.

(cont'd)

Protected by AR

DTC Troubleshooting (cont'd)

22. Shift to the P position. Start the engine, and let it idle.

23. With the engine idling, measure the voltage between PCM connector terminals D8 and E3.

PCM CONNECTORS

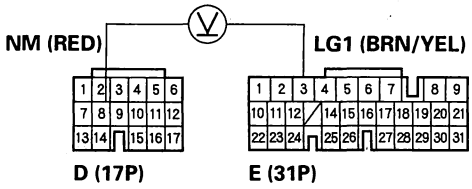

Wire side of female terminals

Is there 1.5–3.5 V?

YES—Update the PCM if it does not have the latest software, or substitute a known-good PCM, refer to the 2003-2006 Accord Service Manual (see page 14-6), then recheck. If the symptom/indication goes away with a known-good PCM, replace the original PCM. ■

NO—Replace the input shaft (mainshaft) speed sensor (see page 14-179), then go to step 30.

24. Measure the voltage between PCM connector terminals D12 and E3.

PCM CONNECTORS

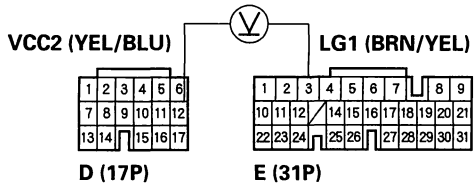

Wire side of female terminals

Is there about 5 V?

YES—Repair open in the wire between PCM connector terminal D12 and the input shaft (mainshaft) speed sensor, then go to step 30.

NO—Go to step 25.

25. Turn the ignition switch OFF.

26. Jump the SCS line with the HDS.

27. Disconnect PCM connector D (17P).

BACK

Protected by AR

28. Check for continuity between PCM connector terminal D12 and body ground.

PCM CONNECTOR D (17P)

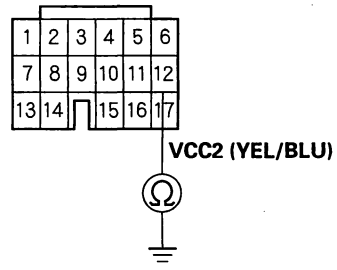

Wire side of female terminals

Is there continuity?

YES—Repair short to ground in the wire between PCM connector terminal D12 and the input shaft (mainshaft) speed sensor, then go to step 30.

NO—Check for loose or poor connections at PCM connector terminal D12. If the connection is OK, update the PCM if it does not have the latest software, or substitute a known-good PCM, refer to the 2003-2006 Accord Service Manual (see page 14-6), then recheck. If the symptom/indication goes away with a known-good PCM, replace the original PCM. ■

29. Measure the voltage between PCM connector terminals D8 and E3.

PCM CONNECTORS

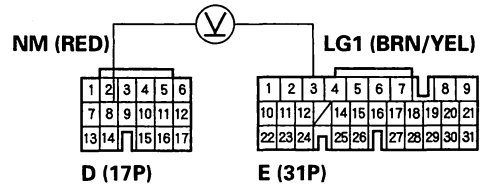

Wire side of female terminals

Is there about 5 V?

YES—Repair open in the wire between PCM connector terminal D8 and the input shaft (mainshaft) speed sensor, then go to step 30.

NO—Check for loose or poor connections at PCM connector terminal D8. If the connection is OK, update the PCM if it does not have the latest software, or substitute a known-good PCM, refer to the 2003-2006 Accord Service Manual (see page 14-6), then recheck. If the symptom/indication goes away with a known-good PCM, replace the original PCM. ■

30. Clear the DTC with the HDS.

31. Start the engine, drive the vehicle in the D position, and hold the vehicle at speeds over 30 mph (48 km/h) for more than 10 seconds.

32. Monitor the OBD status for P0717 in the DTCs/ Freeze Data in A/T Mode Menu for a pass/fail.

Does the result indicate PASSED?

YES—Troubleshooting is complete. ■

NO—Return to step 1 and recheck.

Protected by AR

DTC Troubleshooting (cont'd)

DTC P0718: Input Shaft (Mainshaft) Speed Sensor Intermittent Failure

NOTE:
- Record all freeze data and review General Troubleshooting Information, refer to the 2003-2006 Accord Service Manual (see page 14-3) before you troubleshoot.
- This code is caused by an electrical circuit problem and cannot be caused by a mechanical problem in the transmission.

1. Clear the DTC with the HDS.
2. Test-drive the vehicle for several minutes in the D position through all five gears.
3. Monitor the OBD status for P0718 in the DTCs/ Freeze Data in A/T Mode Menu for a pass/fail.

   Does the result indicate FAILED?

   YES—Go to step 4.

   NO—Intermittent failure, the system is OK at this time. Check for poor connections or loose terminals at the input shaft (mainshaft) speed sensor and PCM. If the tester indicates NOT COMPLETED, return to step 2 and recheck.■
4. Turn the ignition switch OFF.
5. Disconnect the input shaft (mainshaft) speed sensor connector, and inspect the connector and connector terminals to be sure they are making good contact.

   Are the connector terminals OK?

   YES—Go to step 6.

   NO—Repair the connector terminals, then go to step 6.
6. Connect the input shaft (mainshaft) speed sensor connector.
7. Test-drive the vehicle for several minutes, and monitor the OBD status for P0718 in the DTCs/ Freeze Data in A/T Mode Menu for a pass/fail.

   Does the result indicate FAILED?

   YES—Go to step 8.

   NO—The problem has been corrected. If the tester indicates NOT COMPLETED, return to step 7 and recheck.■
8. Turn the ignition switch OFF.
9. Jump the SCS line with the HDS.
10. Disconnect PCM connector D (17P).
11. Disconnect the input shaft (mainshaft) speed sensor connector.
12. Check for continuity between input shaft (mainshaft) speed sensor connector terminal No. 2 and body ground.

INPUT SHAFT (MAINSHAFT) SPEED SENSOR CONNECTOR

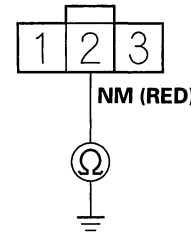

Wire side of female terminals

Is there continuity?

YES—Repair short to ground in the wire between PCM connector terminal D8 and the input shaft (mainshaft) speed sensor, then go to step 19.

NO—Go to step 13.

BACK

Protected by AR

13. Connect PCM connector D (17P).
14. Turn the ignition switch ON (II).
15. Measure the voltage between input shaft (mainshaft) speed sensor connector terminal No. 2 and body ground.

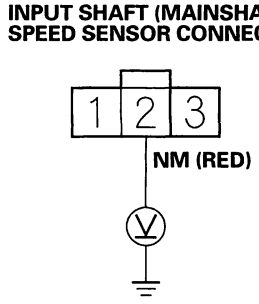

Wire side of female terminals

Is there about 5 V?

YES—Replace the input shaft (mainshaft) speed sensor (see page 14-179), then go to step 19.

NO—Go to step 16.

16. Turn the ignition switch OFF.
17. Disconnect PCM connector D (17P).
18. Check for continuity between PCM connector terminal D8 and input shaft (mainshaft) speed sensor connector terminal No. 2.

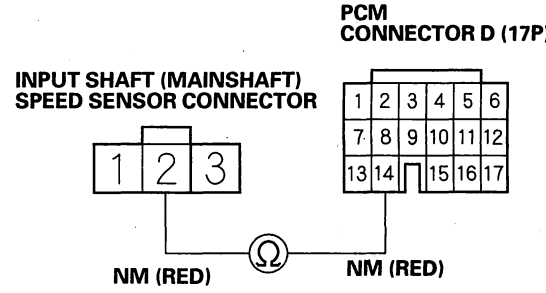

Wire side of female terminals

Is there continuity?

YES—Update the PCM if it does not have the latest software, or substitute a known-good PCM, refer to the 2003-2006 Accord Service Manual (see page 14-6), then recheck. If the symptom/indication goes away with a known-good PCM, replace the original PCM. ■

NO—Repair open in the wire between PCM connector terminal D8 and the input shaft (mainshaft) speed sensor, then go to step 19.

19. Clear the DTC with the HDS.
20. Test-drive the vehicle for several minutes in the D position through all five gears.
21. Monitor the OBD status for P0718 in the DTCs/ Freeze Data in A/T Mode Menu for a pass/fail.

Does the result indicate PASSED?

YES—Troubleshooting is complete. ■

NO—Return to step 1 and recheck.

Protected by AR

DTC Troubleshooting (cont'd)

DTC P0721: Problem in Output Shaft (Countershaft) Speed Sensor Circuit

NOTE:
- Record all freeze data and review General Troubleshooting Information, refer to the 2003-2006 Accord Service Manual (see page 14-3) before you troubleshoot.
- This code is caused by an electrical circuit problem and cannot be caused by a mechanical problem in the transmission.

1. Record all freeze data, and clear the DTC with the HDS.
2. Raise the front of the vehicle, make sure it is securely supported, and allow the front wheels to rotate freely.
3. Start the engine, drive the vehicle in the D position with engine speed 2,000 rpm or higher for more than 10 seconds. Slow down and stop the wheels.
4. Monitor the OBD status for P0721 in the DTCs/ Freeze Data in A/T Mode Menu for a pass/fail.

   Does the result indicate FAILED?

   YES—Go to step 5.

   NO—Intermittent failure, the system is OK at this time. Check for poor connections or loose terminals at the output shaft (countershaft) speed sensor and PCM. If the tester indicates NOT COMPLETED, return to step 3 and recheck.■
5. Turn the ignition switch OFF.
6. Jump the SCS line with the HDS.
7. Disconnect PCM connectors B (24P) and E (31P), and output shaft (countershaft) speed sensor connector.
8. Check for continuity between PCM connector terminals B15 and body ground, and between E3 and body ground.

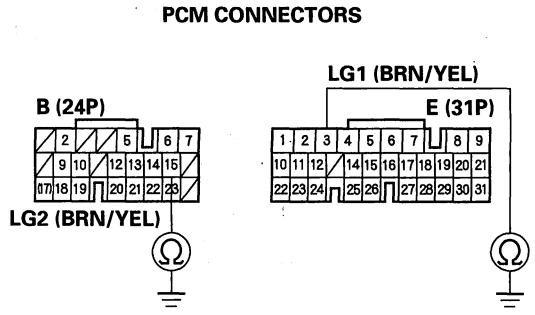

Wire side of female terminals

Is there continuity?

YES—Go to step 9.

NO—Repair open in the wire between PCM connector terminals B15, E3, and ground (G101, G102), or repair poor ground (G101, G102), then go to step 29.

9. Connect PCM connectors B (24P) and E (31P).
10. Turn the ignition switch ON (II).
11. Measure the voltage between output shaft (countershaft) speed sensor connector terminal No. 1 and body ground.

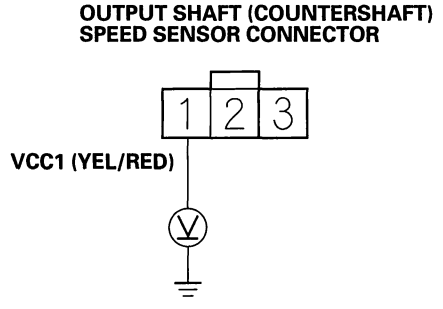

Wire side of female terminals

Is there about 5 V?

YES—Go to step 12.

NO—Go to step 23.

BACK

Protected by AR

12. Turn the ignition switch OFF.

13. Disconnect PCM connector D (17P).

14. Check for continuity between output shaft (countershaft) speed sensor connector terminal No. 2 and body ground.

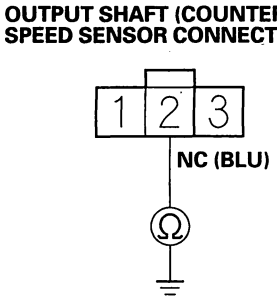

Is there continuity?

YES—Repair short to ground in the wire between PCM connector terminal D14 and output shaft (countershaft) speed sensor, then go to step 29.

NO—Go to step 15.

15. Check for continuity between output shaft (countershaft) speed sensor connector terminal No. 3 and PCM connector terminal D4.

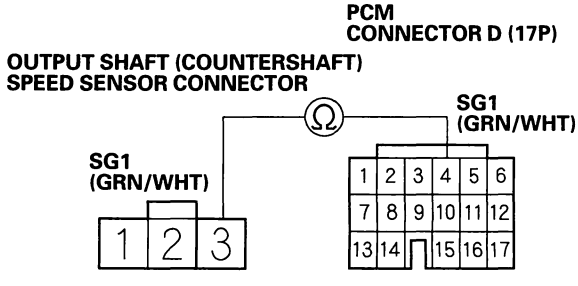

Is there continuity?

YES—Go to step 16.

NO—Repair open in the wire between the output shaft (countershaft) speed sensor connector and PCM connector terminal D4, then go to step 29.

16. Connect PCM connector D (17P).

17. Turn the ignition switch ON (II).

18. Measure the voltage between output shaft (countershaft) speed sensor connector terminals No. 2 and No. 3.

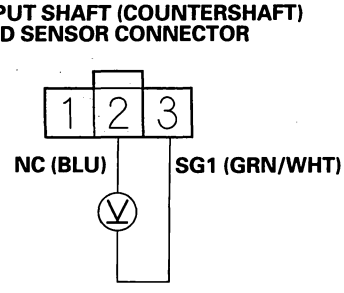

Is there about 5 V?

YES—Go to step 19.

NO—Go to step 28.

19. Connect the output shaft (countershaft) speed sensor connector.

20. Measure the voltage between PCM connector terminals D14 and E3.

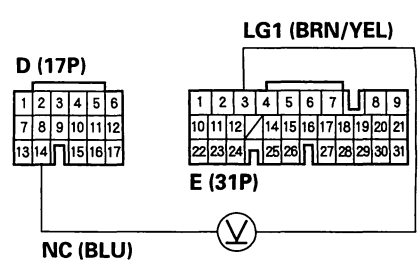

Is the voltage 0 V or about 5 V?

YES—Go to step 21.

NO—Replace the output shaft (countershaft) speed sensor (see page 14-180), then go to step 29.

(cont'd)

Protected by AR

DTC Troubleshooting (cont'd)

21. Shift to the P position. Start the engine, and let it idle.

22. Shift to the D position, and measure the voltage between PCM connector terminals D14 and E3.

PCM CONNECTORS

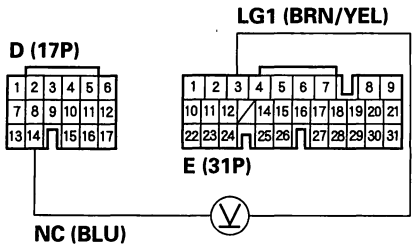

Wire side of female terminals

Is there 1.5—3.5 V?

YES—Update the PCM if it does not have the latest software, or substitute a known-good PCM, refer to the 2003-2006 Accord Service Manual (see page 14-6), then recheck. If the symptom/indication goes away with a known-good PCM, replace the original PCM. ■

NO—Replace the output shaft (countershaft) speed sensor (see page 14-180), then go to step 29.

23. Measure the voltage between PCM connector terminals D6 and E3.

PCM CONNECTORS

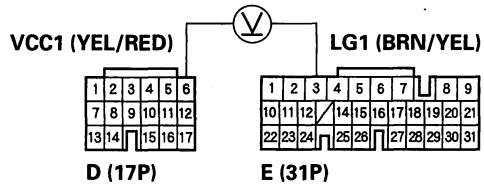

Wire side of female terminals

Is there about 5 V?

YES—Repair open in the wire between PCM connector terminal D6 and the output shaft (countershaft) speed sensor, then go to step 29.

NO—Go to step 24.

BACK

Protected by AR

24. Turn the ignition switch OFF.

25. Jump the SCS line with the HDS.

26. Disconnect PCM connector D (17P).

27. Check for continuity between PCM connector terminal D6 and body ground.

PCM CONNECTOR D (17P)

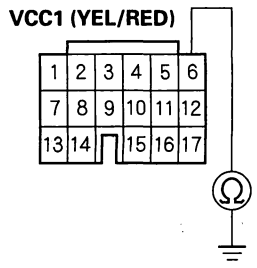

Wire side of female terminals

Is there continuity?

YES—Repair short to ground in the wire between PCM connector terminal D6 and the output shaft (countershaft) speed sensor, then go to step 29.

NO—Check for loose or poor connections at PCM connector terminal D6. If the connection is OK, update the PCM if it does not have the latest software, or substitute a known-good PCM, refer to the 2003-2006 Accord Service Manual (see page 14-6), then recheck. If the symptom/indication goes away with a known-good PCM, replace the original PCM.■

28. Measure the voltage between PCM connector terminals D14 and E3.

PCM CONNECTORS

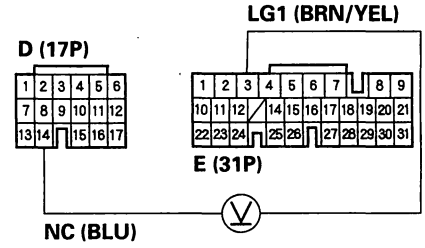

Wire side of female terminals

Is there about 5 V?

YES—Repair open in the wire between PCM connector terminal D14 and the output shaft (countershaft) speed sensor, then go to step 29.

NO—Check for loose or poor connections at PCM connector terminal D14. If the connection is OK, update the PCM if it does not have the latest software, or substitute a known-good PCM, refer to the 2003-2006 Accord Service Manual (see page 14-6), then recheck. If the symptom/indication goes away with a known-good PCM, replace the original PCM.■

29. Clear the DTC with the HDS.

30. Start the engine, drive the vehicle in the D position with engine speed 2,000 rpm or higher for more than 10 seconds. Slow down and stop the wheels.

31. Monitor the OBD status for P0721 in the DTCs/ Freeze Data in A/T Mode Menu for a pass/fail.

Does the result indicate PASSED?

YES—Troubleshooting is complete.■

NO—Return to step 1 and recheck.

Protected by AR

DTC Troubleshooting (cont'd)

DTC P0722: Problem in Output Shaft (Countershaft) Speed Sensor Circuit (No Signal Input)

NOTE:
- Record all freeze data and review General Troubleshooting Information, refer to the 2003-2006 Accord Service Manual (see page 14-3) before you troubleshoot.
- This code is caused by an electrical circuit problem and cannot be caused by a mechanical problem in the transmission.

1. Clear the DTC with the HDS.
2. Raise the front of the vehicle, make sure it is securely supported, and allow the front wheels to rotate freely.
3. Start the engine, drive the vehicle in the D position with engine speed 2,000 rpm or higher for more than 10 seconds. Slow down and stop the wheels.
4. Monitor the OBD status for P0722 in the DTCs/ Freeze Data in A/T Mode Menu for a pass/fail.

   Does the result indicate FAILED?

   YES—Go to step 5.

   NO—Intermittent failure, the system is OK at this time. Check for poor connections or loose terminals at the output shaft (countershaft) speed sensor and PCM. If the tester indicates NOT COMPLETED, return to step 3 and recheck. ■
5. Turn the ignition switch OFF.
6. Jump the SCS line with the HDS.
7. Disconnect PCM connectors B (24P) and E (31P), and output shaft (countershaft) speed sensor connector.
8. Check for continuity between PCM connector terminals B15 and body ground, and between E3 and body ground.

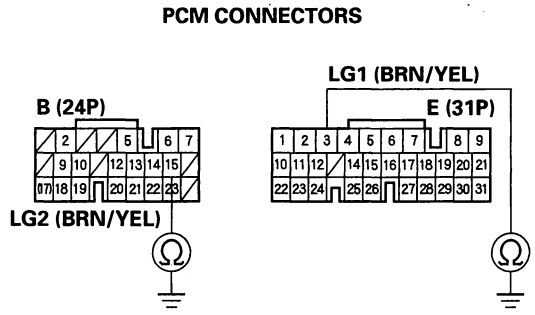

Wire side of female terminals

Is there continuity?

YES—Go to step 9.

NO—Repair open in the wires between PCM connector terminals B15, E3, and ground (G101, G102), or repair poor ground (G101, G102), then go to step 29.

9. Connect PCM connectors B (24P) and E (31P).
10. Turn the ignition switch ON (II).
11. Measure the voltage between output shaft (countershaft) speed sensor connector terminal No. 1 and body ground.

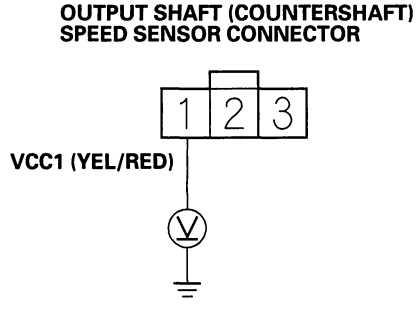

Wire side of female terminals

Is there about 5 V?

YES—Go to step 12.

NO—Go to step 23.

BACK

Protected by AR

12. Turn the ignition switch OFF.

13. Disconnect PCM connector D (17P).

14. Check for continuity between output shaft (countershaft) speed sensor connector terminal No. 2 and body ground.

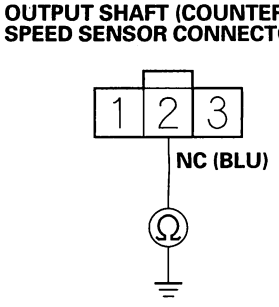

Wire side of female terminals

Is there continuity?

YES—Repair short to ground in the wire between PCM connector terminal D14 and output shaft (countershaft) speed sensor, then go to step 29.

NO—Go to step 15.

15. Check for continuity between output shaft (countershaft) speed sensor connector terminal No. 3 and PCM connector terminal D4.

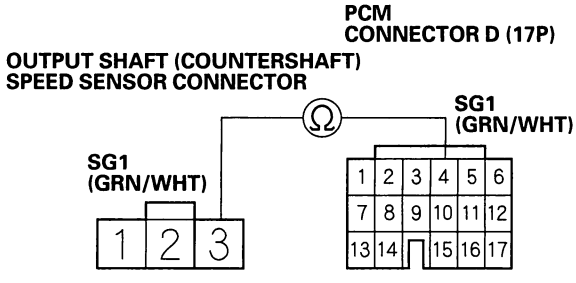

Wire side of female terminals

Is there continuity?

YES—Go to step 16.

NO—Repair open in the wire between the output shaft (countershaft) speed sensor connector and PCM connector terminal D4, then go to step 29.

16. Connect PCM connector D(17P).

17. Turn the ignition switch ON (II).

18. Measure the voltage between output shaft (countershaft) speed sensor connector terminals No. 2 and No. 3.

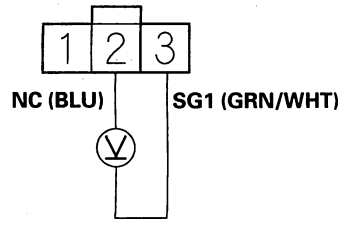

Wire side of female terminals

Is there about 5 V?

YES—Go to step 19.

NO—Go to step 28.

19. Connect the output shaft (countershaft) speed sensor connector.

20. Measure the voltage between PCM connector terminals D14 and E3.

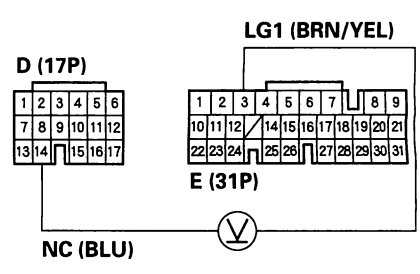

Wire side of female terminals

Is the voltage 0 V or about 5 V?

YES—Go to step 21.

NO—Replace the output shaft (countershaft) speed sensor (see page 14-180), then go to step 29.

(cont'd)

Protected by AR

DTC Troubleshooting (cont'd)

21. Shift to the P position. Start the engine, and let it idle.

22. Shift to the D position, and measure the voltage between PCM connector terminals D14 and E3.

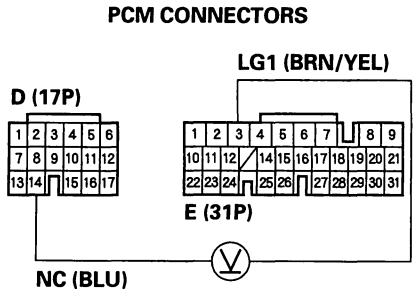

Wire side of female terminals

Is there 1.5—3.5 V?

YES—Update the PCM if it does not have the latest software, or substitute a known-good PCM, refer to the 2003-2006 Accord Service Manual (see page 14-6), then recheck. If the symptom/indication goes away with a known-good PCM, replace the original PCM. ■

NO—Replace the output shaft (countershaft) speed sensor (see page 14-180), then go to step 29.

23. Measure the voltage between PCM connector terminals D6 and E3.

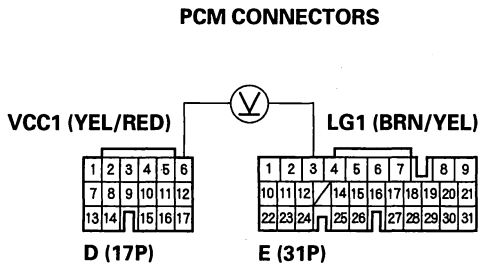

Wire side of female terminals

Is there about 5 V?

YES—Repair open in the wire between PCM connector terminal D6 and the output shaft (countershaft) speed sensor, then go to step 29.

NO—Go to step 24.

BACK

Protected by AR

24. Turn the ignition switch OFF.

25. Jump the SCS line with the HDS.

26. Disconnect PCM connector D (17P).

27. Check for continuity between PCM connector terminal D6 and body ground.

PCM CONNECTOR D (17P)

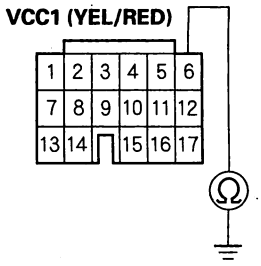

Wire side of female terminals

Is there continuity?

YES—Repair short to ground in the wire between PCM connector terminal D6 and the output shaft (countershaft) speed sensor, then go to step 29.

NO—Check for loose or poor connections at PCM connector terminal D6. If the connection is OK, update the PCM if it does not have the latest software, or substitute a known-good PCM, refer to the 2003-2006 Accord Service Manual (see page 14-6), then recheck. If the symptom/indication goes away with a known-good PCM, replace the original PCM.■

28. Measure the voltage between PCM connector terminals D14 and E3.

PCM CONNECTORS

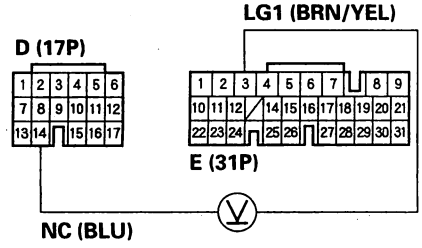

Wire side of female terminals

Is there about 5 V?

YES—Repair open in the wire between PCM connector terminal D14 and the output shaft (countershaft) speed sensor, then go to step 29.

NO—Check for loose or poor connections at PCM connector terminal D14. If the connection is OK, update the PCM if it does not have the latest software, or substitute a known-good PCM, refer to the 2003-2006 Accord Service Manual (see page 14-6), then recheck. If the symptom/indication goes away with a known-good PCM, replace the original PCM.■

29. Clear the DTC with the HDS.

30. Start the engine, drive the vehicle in the D position with engine speed 2,000 rpm or higher for more than 10 seconds. Slow down and stop the wheels.

31. Monitor the OBD status for P0722 in the DTCs/ Freeze Data in A/T Mode Menu for a pass/fail.

Does the result indicate PASSED?

YES—Troubleshooting is complete.■

NO—Return to step 1 and recheck.

Protected by AR

DTC Troubleshooting (cont'd)

DTC P0723: Output Shaft (Countershaft) Speed Sensor Intermittent Failure

NOTE:
- Record all freeze data and review General Troubleshooting Information, refer to the 2003-2006 Accord Service Manual (see page 14-3) before you troubleshoot.
- This code is caused by an electrical circuit problem and cannot be caused by a mechanical problem in the transmission.

1. Clear the DTC with the HDS.
2. Test-drive the vehicle for more than 10 minutes under the same conditions as those indicated by the freeze data, and monitor the OBD status for P0723 in the DTCs/Freeze Data in A/T Mode Menu for a pass/fail.

   Does the result indicate FAILED?

   YES—Go to step 3.

   NO—Intermittent failure, the system is OK at this time. Check for poor connections or loose terminals at the output shaft (countershaft) and PCM. If the tester indicates NOT COMPLETED, return to step 2 and recheck. ■
3. Turn the ignition switch OFF.
4. Disconnect the output shaft (countershaft) speed sensor connector, and inspect the connector and connector terminals to be sure they are making good contact.

   Are the connector terminals OK?

   YES—Go to step 5.

   NO—Repair the connector terminals, then go to step 5.
5. Connect the output shaft (countershaft) speed sensor connector.
6. Test-drive the vehicle for several minutes, and monitor the OBD status for P0723 in the DTCs/Freeze Data in A/T Mode Menu for a pass/fail.

   Does the result indicate FAILED?

   YES—Go to step 7.

   NO—The problem has been corrected. If the tester indicates NOT COMPLETED, return to step 6 and recheck. ■
7. Turn the ignition switch OFF.
8. Jump the SCS line with the HDS.
9. Disconnect PCM connector D (17P).
10. Disconnect the output shaft (countershaft) speed sensor connector.
11. Check for continuity between output shaft (countershaft) speed sensor connector terminal No. 2 and body ground.

OUTPUT SHAFT (COUNTERSHAFT) SPEED SENSOR CONNECTOR

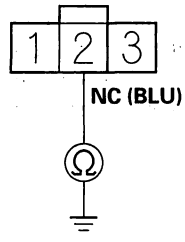

Wire side of female terminals

Is there continuity?

YES—Repair short to ground in the wire between PCM connector terminal D14 and the output shaft (countershaft) speed sensor, then go to step 18.

NO—Go to step 12.

BACK

Protected by AR

12. Connect PCM connector D (17P).
13. Turn the ignition switch ON (II).
14. Measure the voltage between output shaft (countershaft) speed sensor connector terminal No. 2 and body ground.

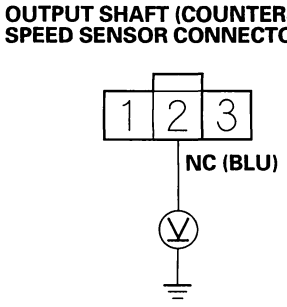

Wire side of female terminals

Is there about 5 V?

YES—Replace the output shaft (countershaft) speed sensor (see page 14-180), then go to step 18.

NO—Go to step 15.

15. Turn the ignition switch OFF.
16. Disconnect PCM connector D (17P).
17. Check for continuity between PCM connector terminal D14 and output shaft (countershaft) speed sensor connector terminal No. 2.

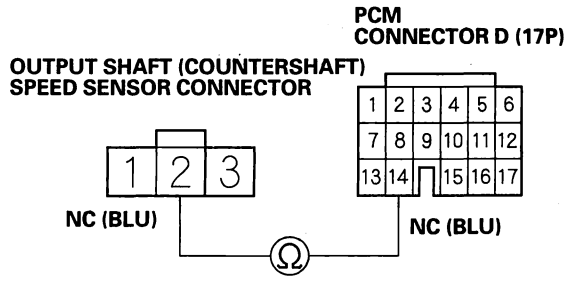

Wire side of female terminals

Is there continuity?

YES—Update the PCM if it does not have the latest software, or substitute a known-good PCM, refer to the 2003-2006 Accord Service Manual (see page 14-6), then recheck. If the symptom/indication goes away with a known-good PCM, replace the original PCM. ■

NO—Repair open in the wire between PCM connector terminal D14 and the output shaft (countershaft) speed sensor, then go to step 18.

18. Clear the DTC with the HDS.
19. Test-drive the vehicle for several minutes in the D position through all five gears.
20. Monitor the OBD status for P0723 in the DTCs/ Freeze Data in A/T Mode Menu for a pass/fail.

Does the result indicate PASSED?

YES—Troubleshooting is complete. ■

NO—Return to step 1 and recheck.

Protected by AR

DTC Troubleshooting (cont'd)

DTC P0731: Problem in 1st Clutch and 1st Clutch Hydraulic Circuit

NOTE: Record all freeze data and review General Troubleshooting Information, refer to the 2003-2006 Accord Service Manual (see page 14-3) before you troubleshoot.

1. Warm up the engine to normal operating temperature (the radiator fan comes on).
2. Make sure that the transmission is filled to the proper level, and check for fluid leaks.
3. Drain the ATF (see step 3 on page 14-186) through a strainer. Inspect the strainer for metal debris or excessive clutch material.

   Does the strainer contain metal debris or excessive clutch material?

   YES—Replace the transmission. ■

   NO—Replace the ATF (see step 5 on page 14-186), then go to step 4.
4. Measure the line pressure (see page 14-162).

   Is the line pressure within service limit?

   YES—Go to step 5.

   NO—Repair the ATF pump and regulator valve, or replace the transmission. ■
5. Clear the DTC with the HDS.
6. Test-drive the vehicle for several minutes under the same conditions as those indicated by the freeze data, or drive in 1st gear in the D position at speeds over 10 mph (16 km/h) for 20 seconds.
7. Turn the ignition switch OFF, then turn it ON (II) again.
8. Monitor the OBD status for P0731 in the DTCs/ Freeze Data in A/T Mode Menu for a pass/fail.

   Does the result indicate FAILED?

   YES—Repair 1st clutch, or replace the transmission. ■

   NO—Intermittent failure, the system is OK at this time. If the tester indicates NOT COMPLETED, return to step 6 and recheck. ■

BACK

Protected by AR

DTC P0732: Problem in 2nd Clutch and 2nd Clutch Hydraulic Circuit

NOTE: Record all freeze data and review General Troubleshooting Information, refer to the 2003-2006 Accord Service Manual (see page 14-3) before you troubleshoot.

1. Warm up the engine to normal operating temperature (the radiator fan comes on).

2. Make sure that the transmission is filled to the proper level, and check for fluid leaks.

3. Drain the ATF (see step 3 on page 14-186) through a strainer. Inspect the strainer for metal debris or excessive clutch material.

   Does the strainer contain metal debris or excessive clutch material?

   YES—Replace the transmission. ■

   NO—Replace the ATF (see step 5 on page 14-186), then go to step 4.

4. Measure the line pressure (see page 14-162).

   Is the line pressure within service limit?

   YES—Go to step 5.

   NO—Repair the ATF pump and regulator valve, or replace the transmission. ■

5. Measure 2nd clutch pressure (see page 14-162).

   Is 2nd clutch pressure within service limit?

   YES—Go to step 6.

   NO—Shift valves A, B, and C are stuck. Repair these shift valves and hydraulic circuit, or replace the transmission. ■

6. Clear the DTC with the HDS.

7. Test-drive the vehicle for several minutes under the same conditions as those indicated by the freeze data, or drive in the 2nd gear in the D position at speeds over 10 mph (16 km/h) for 20 seconds.

8. Turn the ignition switch OFF, then turn it ON (II) again.

9. Monitor the OBD status for P0732 in the DTCs/ Freeze Data in A/T Mode Menu for a pass/fail.

   Does the result indicate FAILED?

   YES—Repair the 2nd clutch, or replace the transmission. ■

   NO—Intermittent failure, the system is OK at this time. If the tester indicates NOT COMPLETED, return to step 7 and recheck. ■

Protected by AR

DTC Troubleshooting (cont'd)

DTC P0733: Problem in 3rd Clutch and 3rd Clutch Hydraulic Circuit

NOTE: Record all freeze data and review General Troubleshooting Information, refer to the 2003-2006 Accord Service Manual (see page 14-3) before you troubleshoot.

1. Warm up the engine to normal operating temperature (the radiator fan comes on).
2. Make sure that the transmission is filled to the proper level, and check for fluid leaks.
3. Drain the ATF (see step 3 on page 14-186) through a strainer. Inspect the strainer for metal debris or excessive clutch material.

   Does the strainer contain metal debris or excessive clutch material?

   YES—Replace the transmission. ■

   NO—Replace the ATF (see step 5 on page 14-186), then go to step 4.
4. Measure the line pressure (see page 14-162).

   Is the line pressure within service limit?

   YES—Go to step 5.

   NO—Repair the ATF pump and regulator valve, or replace the transmission. ■
5. Measure 3rd clutch pressure (see page 14-162).

   Is 3rd clutch pressure within service limit?

   YES—Go to step 6.

   NO—Shift valves A, B, and C are stuck. Repair these shift valves and hydraulic circuit, or replace the transmission. ■
6. Clear the DTC with the HDS.
7. Test-drive the vehicle for several minutes under the same conditions as those indicated by the freeze data, or drive in the 3rd gear in the D position at speeds over 10 mph (16 km/h) for 20 seconds.
8. Turn the ignition switch OFF, then turn it ON (II) again.
9. Monitor the OBD status for P0733 in the DTCs/ Freeze Data in A/T Mode Menu for a pass/fail.

   Does the result indicate FAILED?

   YES—Repair the 3rd clutch, or replace the transmission. ■

   NO—Intermittent failure, the system is OK at this time. If the tester indicates NOT COMPLETED, return to step 7 and recheck. ■

BACK

Protected by AR

DTC P0734: Problem in 4th Clutch and 4th Clutch Hydraulic Circuit

NOTE: Record all freeze data and review General Troubleshooting Information, refer to the 2003-2006 Accord Service Manual (see page 14-3) before you troubleshoot.

1. Warm up the engine to normal operating temperature (the radiator fan comes on).

2. Make sure that the transmission is filled to the proper level, and check for fluid leaks.

3. Drain the ATF (see step 3 on page 14-186) through a strainer. Inspect the strainer for metal debris or excessive clutch material.

   Does the strainer contain metal debris or excessive clutch material?

   YES—Replace the transmission. ■

   NO—Replace the ATF (see step 5 on page 14-186), then go to step 4.

4. Measure the line pressure (see page 14-162).

   Is the line pressure within service limit?

   YES—Go to step 5.

   NO—Repair the ATF pump and regulator valve, or replace the transmission. ■

5. Measure 4th clutch pressure (see page 14-162).

   Is 4th clutch pressure within service limit?

   YES—Go to step 6.

   NO—Shift valves A, B, C, and D are stuck. Repair these valves and hydraulic circuit, or replace the transmission. ■

6. Clear the DTC with the HDS.

7. Test-drive the vehicle for several minutes under the same conditions as those indicated by the freeze data, or drive in the 4th gear in the D position at speeds over 10 mph (16 km/h) for 20 seconds.

8. Turn the ignition switch OFF, then turn it ON (II) again.

9. Monitor the OBD status for P0734 in the DTCs/ Freeze Data in A/T Mode Menu for a pass/fail.

   Does the result indicate FAILED?

   YES—Repair the 4th clutch, or replace the transmission. ■

   NO—Intermittent failure, the system is OK at this time. If the tester indicates NOT COMPLETED, return to step 7 and recheck. ■

Protected by AR

DTC Troubleshooting (cont'd)

DTC P0735: Problem in 5th Clutch and 5th Clutch Hydraulic Circuit

NOTE: Record all freeze data and review General Troubleshooting Information, refer to the 2003-2006 Accord Service Manual (see page 14-3) before you troubleshoot.

1. Warm up the engine to normal operating temperature (the radiator fan comes on).
2. Make sure that the transmission is filled to the proper level, and check for fluid leaks.
3. Drain the ATF (see step 3 on page 14-186) through a strainer. Inspect the strainer for metal debris or excessive clutch material.

   Does the strainer contain metal debris or excessive clutch material?

   YES—Replace the transmission.■

   NO—Replace the ATF (see step 5 on page 14-186), then go to step 4.
4. Measure the line pressure (see page 14-162).

   Is the line pressure within service limit?

   YES—Go to step 5.

   NO—Repair the ATF pump and regulator valve, or replace the transmission.■
5. Measure 5th clutch pressure (see page 14-162).

   Is 5th clutch pressure within service limit?

   YES—Go to step 6.

   NO—Shift valves A, B, and C are stuck. Repair these valves and hydraulic circuit, replace the transmission.■
6. Clear the DTC with the HDS.
7. Test-drive the vehicle for several minutes under the same conditions as those indicated by the freeze data, or drive in the 5th gear in the D position at speeds over 10 mph (16 km/h) for 20 seconds.
8. Turn the ignition switch OFF, then turn it ON (II) again.
9. Monitor the OBD status for P0735 in the DTCs/ Freeze Data in A/T Mode Menu for a pass/fail.

   Does the result indicate FAILED?

   YES—Repair the 5th clutch, or replace the transmission.■

   NO—Intermittent failure, the system is OK at this time. If the tester indicates NOT COMPLETED, return to step 7 and recheck.■

BACK

Protected by AR

DTC P0741: Torque Converter Clutch Circuit Stuck OFF

NOTE: Record all freeze data and review General Troubleshooting Information, refer to the 2003-2006 Accord Service Manual (see page 14-3) before you troubleshoot.

1. Warm up the engine to normal operating temperature (the radiator fan comes on).
2. Make sure that the transmission is filled to the proper level, and check for fluid leaks.
3. Drain the ATF (see step 3 on page 14-186) through a strainer. Inspect the strainer for metal debris or excessive clutch material.

   Does the strainer contain metal debris or excessive clutch material?

   YES—Replace the transmission.■

   NO—Replace the ATF (see step 5 on page 14-186), then go to step 4.
4. Clear the DTC with the HDS.
5. Choose Lockup Solenoid Test in Miscellaneous Test Menu, and check that the torque converter clutch solenoid valve operates with the HDS.

   Is a clicking sound heard?

   YES—Go to step 6.

   NO—Replace the torque converter clutch solenoid valve (see page 14-171), then go to step 10.
6. Choose Clutch Pressure Control (Linear) Solenoid A in Miscellaneous Test Menu, and test the A/T clutch pressure control solenoid valve A with the HDS.

   Is the system OK?

   YES—Go to step 7.

   NO—Follow instructions indicated on the HDS by the tester result. Go to step 10 if any part was replaced.
7. Run the engine until the engine coolant temperature reaches 176 °F (80 °C).
8. Test-drive the vehicle at 55 mph (88 km/h) for 2 minutes while monitoring the vehicle speed with the HDS.
9. Monitor the OBD status for P0741 in the DTCs/ Freeze Data in A/T Mode Menu for a pass/fail.

   Does the result indicate FAILED?

   YES—Repair the faulty torque converter clutch mechanism, torque converter clutch hydraulic circuit, lock-up shift valve, or lock-up control valve, or replace the transmission.■

   NO—Intermittent failure, the system is OK at this time. If the tester indicates NOT COMPLETED, return to step 8 and recheck.■
10. Clear the DTC with the HDS.
11. Test-drive the vehicle for several minutes under the same conditions as those indicated by the freeze data.
12. Monitor the OBD status for P0741 in the DTCs/ Freeze Data in A/T Mode Menu for a pass/fail.

    Does the result indicate PASSED?

    YES—Troubleshooting is complete.■

    NO—Return to step 5 and recheck.

Protected by AR

DTC Troubleshooting (cont'd)

DTC P0746: A/T Clutch Pressure Control Solenoid Valve A Stuck OFF

NOTE: Record all freeze data and review General Troubleshooting Information, refer to the 2003-2006 Accord Service Manual (see page 14-3) before you troubleshoot.

1. Warm up the engine to normal operating temperature (the radiator fan comes on).
2. Make sure that the transmission is filled to the proper level, and check for fluid leaks.
3. Drain the ATF (see step 3 on page 14-186) through a strainer. Inspect the strainer for metal debris or excessive clutch material.

   Does the strainer contain metal debris or excessive clutch material?

   YES—Replace the transmission.■

   NO—Replace the ATF (see step 5 on page 14-186), then go to step 4.
4. Clear the DTC with the HDS.
5. Test-drive the vehicle in the D position through all five gears at speeds over 12 mph (20 km/h) for more than 20 seconds, then slow down to a stop.
6. Retest-drive the vehicle in the D position through all five gears at speeds over 12 mph (20 km/h) for more than 20 seconds, then slow down to a stop.
7. Monitor the OBD status for P0746 in the DTCs/ Freeze Data in A/T Mode Menu for a pass/fail.

   Does the result indicate FAILED?

   YES—Go to step 8.

   NO—Intermittent failure, the system is OK at this time. If the tester indicates NOT COMPLETED, return to step 5 and recheck.■
8. Clear the DTC with the HDS.
9. Choose Clutch Pressure Control (Linear) Solenoid A in Miscellaneous Test Menu, and test the A/T clutch pressure control solenoid valve A with the HDS.

   Is the system OK?

   YES—Intermittent failure, the system is OK at this time.■

   NO—Follow instructions indicated on the HDS by the test result, but the tester has not determined the cause of the failure, go to step 10. If any part was replaced, go to step 11.
10. Inspect A/T clutch pressure control solenoid valve A (see page 14-172).

    Does the A/T clutch pressure control solenoid valve A work properly?

    YES—Repair hydraulic system related with CPC valve A, or replace the transmission, then go to step 11.

    NO—Replace A/T clutch pressure control solenoid valve A (see page 14-175), then go to step 11.
11. Clear the DTC with the HDS.
12. Test-drive the vehicle in the D position through all five gears at speeds over 12 mph (20 km/h) for more than 20 seconds, then slow down to a stop.
13. Retest-drive the vehicle in the D position through all five gears at speeds over 12 mph (20 km/h) for more than 20 seconds, then slow down to a stop.
14. Monitor the OBD status for P0746 in the DTCs/ Freeze Data in A/T Mode Menu for a pass/fail.

    Does the result indicate PASSED?

    YES—Troubleshooting is complete.■

    NO—Return to step 5 and recheck.

BACK

Protected by AR

DTC P0747: A/T Clutch Pressure Control Solenoid Valve A Stuck ON

NOTE: Record all freeze data and review General Troubleshooting Information, refer to the 2003-2006 Accord Service Manual (see page 14-3) before you troubleshoot.

1. Warm up the engine to normal operating temperature (the radiator fan comes on).
2. Make sure that the transmission is filled to the proper level, and check for fluid leaks.
3. Drain the ATF (see step 3 on page 14-186) through a strainer. Inspect the strainer for metal debris or excessive clutch material.

   Does the strainer contain metal debris or excessive clutch material?

   YES—Replace the transmission. ■

   NO—Replace the ATF (see step 5 on page 14-186), then go to step 4.
4. Clear the DTC with the HDS.
5. Test-drive the vehicle in the D position through all five gears at speeds over 12 mph (20 km/h) for more than 20 seconds, then slow down to a stop.
6. Retest-drive the vehicle in the D position through all five gears at speeds over 12 mph (20 km/h) for more than 20 seconds, then slow down to a stop.
7. Monitor the OBD status for P0747 in the DTCs/ Freeze Data in A/T Mode Menu for a pass/fail.

   Does the result indicate FAILED?

   YES—Go to step 8.

   NO—Intermittent failure, the system is OK at this time. If the tester indicates NOT COMPLETED, return to step 5 and recheck. ■
8. Clear the DTC with the HDS.
9. Choose Clutch Pressure Control (Linear) Solenoid A in Miscellaneous Test Menu, and test the A/T clutch pressure control solenoid valve A with the HDS.

   Is the system OK?

   YES—Intermittent failure, the system is OK at this time. ■

   NO—Follow instructions indicated on the HDS by the test result, but the tester has not determined the cause of the failure, go to step 10. If any part was replaced, go to step 11.
10. Inspect A/T clutch pressure control solenoid valve A (see page 14-172).

    Does the A/T clutch pressure control solenoid valve A work properly?

    YES—Repair hydraulic system related with CPC valve A, or replace the transmission, then go to step 11.

    NO—Replace A/T clutch pressure control solenoid valve A (see page 14-175), then go to step 11.
11. Clear the DTC with the HDS.
12. Test-drive the vehicle in the D position through all five gears at speeds over 12 mph (20 km/h) for more than 20 seconds, then slow down to a stop.
13. Retest-drive the vehicle in the D position through all five gears at speeds over 12 mph (20 km/h) for more than 20 seconds, then slow down to a stop.
14. Monitor the OBD status for P0747 in the DTCs/ Freeze Data in A/T Mode Menu for a pass/fail.

    Does the result indicate PASSED?

    YES—Troubleshooting is complete. ■

    NO—Return to step 5 and recheck.

Protected by AR

DTC Troubleshooting (cont'd)

DTC P0751: Shift Solenoid Valve A Stuck OFF

NOTE: Record all freeze data and review General Troubleshooting Information, refer to the 2003-2006 Accord Service Manual (see page 14-3) before you troubleshoot.

1. Warm up the engine to normal operating temperature (the radiator fan comes on).
2. Make sure that the transmission is filled to the proper level, and check for fluid leaks.
3. Drain the ATF (see step 3 on page 14-186) through a strainer. Inspect the strainer for metal debris or excessive clutch material.

   Does the strainer contain metal debris or excessive clutch material?

   YES—Replace the transmission. ■

   NO—Replace the ATF (see step 5 on page 14-186), then go to step 4.
4. Clear the DTC with the HDS.
5. Test-drive the vehicle in the D position through all five gears at speeds over 12 mph (20 km/h) for more than 20 seconds, then slow down to a stop.
6. Retest-drive the vehicle in the D position through all five gears at speeds over 12 mph (20 km/h) for more than 20 seconds, then slow down to a stop.
7. Monitor the OBD status for P0751 in the DTCs/ Freeze Data in A/T Mode Menu for a pass/fail.

   Does the result indicate FAILED?

   YES—Go to step 8.

   NO—Intermittent failure, the system is OK at this time. If the tester indicates NOT COMPLETED, return to step 5 and recheck. ■
8. Clear the DTC with the HDS.
9. Choose Shift Solenoid A in Miscellaneous Test Menu, and check that the shift solenoid valve A operates with the HDS.

   Is a clicking sound heard?

   YES—Go to step 10.

   NO—Replace shift solenoid valve A (see page 14-165), then go to step 13.
10. Test-drive the vehicle in the D position through all five gears at speeds over 12 mph (20 km/h) for more than 20 seconds, then slow down to a stop.
11. Retest-drive the vehicle in the D position through all five gears at speeds over 12 mph (20 km/h) for more than 20 seconds, then slow down to a stop.
12. Monitor the OBD status for P0751 in the DTCs/ Freeze Data in A/T Mode Menu for a pass/fail.

    Does the result indicate FAILED?

    YES—Repair shift valves A and E, or replace the transmission, then go to step 13.

    NO—Intermittent failure, the system is OK at this time. If the tester indicates NOT COMPLETED, return to step 10 and recheck. ■
13. Clear the DTC with the HDS.
14. Test-drive the vehicle in the D position through all five gears at speeds over 12 mph (20 km/h) for more than 20 seconds, then slow down to a stop.
15. Retest-drive the vehicle in the D position through all five gears at speeds over 12 mph (20 km/h) for more than 20 seconds, then slow down to a stop.
16. Monitor the OBD status for P0751 in the DTCs/ Freeze Data in A/T Mode Menu for a pass/fail.

    Does the result indicate PASSED?

    YES—Troubleshooting is complete. ■

    NO—Return to step 5 and recheck.

BACK

Protected by AR

DTC P0752: Shift Solenoid Valve A Stuck ON

NOTE: Record all freeze data and review General Troubleshooting Information, refer to the 2003-2006 Accord Service Manual (see page 14-3) before you troubleshoot.

1. Warm up the engine to normal operating temperature (the radiator fan comes on).
2. Make sure that the transmission is filled to the proper level, and check for fluid leaks.
3. Drain the ATF (see step 3 on page 14-186) through a strainer. Inspect the strainer for metal debris or excessive clutch material.

   Does the strainer contain metal debris or excessive clutch material?

   YES—Replace the transmission. ■

   NO—Replace the ATF (see step 5 on page 14-186), then go to step 4.
4. Clear the DTC with the HDS.
5. Test-drive the vehicle in the D position through all five gears at speeds over 12 mph (20 km/h) for more than 20 seconds, then slow down to a stop.
6. Retest-drive the vehicle in the D position through all five gears at speeds over 12 mph (20 km/h) for more than 20 seconds, then slow down to a stop.
7. Monitor the OBD status for P0752 in the DTCs/ Freeze Data in A/T Mode Menu for a pass/fail.

   Does the result indicate FAILED?

   YES—Go to step 8.

   NO—Intermittent failure, the system is OK at this time. If the tester indicates NOT COMPLETED, return to step 5 and recheck. ■
8. Clear the DTC with the HDS.
9. Choose Shift Solenoid A in Miscellaneous Test Menu, and check that the shift solenoid valve A operates with the HDS.

   Is a clicking sound heard?

   YES—Go to step 10.

   NO—Replace shift solenoid valve A (see page 14-165), then go to step 13.
10. Test-drive the vehicle in the D position through all five gears at speeds over 12 mph (20 km/h) for more than 20 seconds, then slow down to a stop.
11. Retest-drive the vehicle in the D position through all five gears at speeds over 12 mph (20 km/h) for more than 20 seconds, then slow down to a stop.
12. Monitor the OBD status for P0752 in the DTCs/ Freeze Data in A/T Mode Menu for a pass/fail.

    Does the result indicate FAILED?

    YES—Repair shift valves A and E, or replace the transmission, then go to step 13.

    NO—Intermittent failure, the system is OK at this time. If the tester indicates NOT COMPLETED, return to step 10 and recheck. ■
13. Clear the DTC with the HDS.
14. Test-drive the vehicle in the D position through all five gears at speeds over 12 mph (20 km/h) for more than 20 seconds, then slow down to a stop.
15. Retest-drive the vehicle in the D position through all five gears at speeds over 12 mph (20 km/h) for more than 20 seconds, then slow down to a stop.
16. Monitor the OBD status for P0752 in the DTCs/ Freeze Data in A/T Mode Menu for a pass/fail.

    Does the result indicate PASSED?

    YES—Troubleshooting is complete. ■

    NO—Return to step 5 and recheck.

Protected by AR

DTC Troubleshooting (cont'd)

DTC P0756: Shift Solenoid Valve B Stuck OFF

NOTE: Record all freeze data and review General Troubleshooting Information, refer to the 2003-2006 Accord Service Manual (see page 14-3) before you troubleshoot.

1. Warm up the engine to normal operating temperature (the radiator fan comes on).
2. Make sure that the transmission is filled to the proper level, and check for fluid leaks.
3. Drain the ATF (see step 3 on page 14-186) through a strainer. Inspect the strainer for metal debris or excessive clutch material.

   Does the strainer contain metal debris or excessive clutch material?

   YES—Replace the transmission. ■

   NO—Replace the ATF (see step 5 on page 14-186), then go to step 4.
4. Clear the DTC with the HDS.
5. Test-drive the vehicle in the D position through all five gears at speeds over 12 mph (20 km/h) for more than 20 seconds, then slow down to a stop.
6. Retest-drive the vehicle in the D position through all five gears at speeds over 12 mph (20 km/h) for more than 20 seconds, then slow down to a stop.
7. Monitor the OBD status for P0756 in the DTCs/ Freeze Data in A/T Mode Menu for a pass/fail.

   Does the result indicate FAILED?

   YES—Go to step 8.

   NO—Intermittent failure, the system is OK at this time. If the tester indicates NOT COMPLETED, return to step 5 and recheck. ■
8. Clear the DTC with the HDS.
9. Choose Shift Solenoid B in Miscellaneous Test Menu, and check that the shift solenoid valve B operates with the HDS.

   Is a clicking sound heard?

   YES—Go to step 10.

   NO—Replace shift solenoid valve B (see page 14-167), then go to step 13.
10. Test-drive the vehicle in the D position through all five gears at speeds over 12 mph (20 km/h) for more than 20 seconds, then slow down to a stop.
11. Retest-drive the vehicle in the D position through all five gears at speeds over 12 mph (20 km/h) for more than 20 seconds, then slow down to a stop.
12. Monitor the OBD status for P0756 in the DTCs/ Freeze Data in A/T Mode Menu for a pass/fail.

    Does the result indicate FAILED?

    YES—Repair shift valve B, or replace the transmission, then go to step 13.

    NO—Intermittent failure, the system is OK at this time. If the tester indicates NOT COMPLETED, return to step 10 and recheck. ■
13. Clear the DTC with the HDS.
14. Test-drive the vehicle in the D position through all five gears at speeds over 12 mph (20 km/h) for more than 20 seconds, then slow down to a stop.
15. Retest-drive the vehicle in the D position through all five gears at speeds over 12 mph (20 km/h) for more than 20 seconds, then slow down to a stop.
16. Monitor the OBD status for P0756 in the DTCs/ Freeze Data in A/T Mode Menu for a pass/fail.

    Does the result indicate PASSED?

    YES—Troubleshooting is complete. ■

    NO—Return to step 5 and recheck.

BACK

Protected by AR

DTC P0757: Shift Solenoid Valve B Stuck ON

NOTE: Record all freeze data and review General Troubleshooting Information, refer to the 2003-2006 Accord Service Manual (see page 14-3) before you troubleshoot.

1. Warm up the engine to normal operating temperature (the radiator fan comes on).

2. Make sure that the transmission is filled to the proper level, and check for fluid leaks.

3. Drain the ATF (see step 3 on page 14-186) through a strainer. Inspect the strainer for metal debris or excessive clutch material.

   Does the strainer contain metal debris or excessive clutch material?

   YES—Replace the transmission. ■

   NO—Replace the ATF (see step 5 on page 14-186), then go to step 4.

4. Clear the DTC with the HDS.

5. Test-drive the vehicle in the D position through all five gears at speeds over 12 mph (20 km/h) for more than 20 seconds, then slow down to a stop.

6. Retest-drive the vehicle in the D position through all five gears at speeds over 12 mph (20 km/h) for more than 20 seconds, then slow down to a stop.

7. Monitor the OBD status for P0757 in the DTCs/ Freeze Data in A/T Mode Menu for a pass/fail.

   Does the result indicate FAILED?

   YES—Go to step 8.

   NO—Intermittent failure, the system is OK at this time. If the tester indicates NOT COMPLETED, return to step 5 and recheck. ■

8. Clear the DTC with the HDS.

9. Choose Shift Solenoid B in Miscellaneous Test Menu, and check that the shift solenoid valve B operates with the HDS.

   Is a clicking sound heard?

   YES—Go to step 10.

   NO—Replace shift solenoid valve B (see page 14-167), then go to step 13.

10. Test-drive the vehicle in the D position through all five gears at speeds over 12 mph (20 km/h) for more than 20 seconds, then slow down to a stop.

11. Retest-drive the vehicle in the D position through all five gears at speeds over 12 mph (20 km/h) for more than 20 seconds, then slow down to a stop.

12. Monitor the OBD status for P0757 in the DTCs/ Freeze Data in A/T Mode Menu for a pass/fail.

    Does the result indicate FAILED?

    YES—Repair shift valve B, or replace the transmission, then go to step 13.

    NO—Intermittent failure, the system is OK at this time. If the tester indicates NOT COMPLETED, return to step 10 and recheck. ■

13. Clear the DTC with the HDS.

14. Test-drive the vehicle in the D position through all five gears at speeds over 12 mph (20 km/h) for more than 20 seconds, then slow down to a stop.

15. Retest-drive the vehicle in the D position through all five gears at speeds over 12 mph (20 km/h) for more than 20 seconds, then slow down to a stop.

16. Monitor the OBD status for P0757 in the DTCs/ Freeze Data in A/T Mode Menu for a pass/fail.

    Does the result indicate PASSED?

    YES—Troubleshooting is complete. ■

    NO—Return to step 5 and recheck.

Protected by AR

DTC Troubleshooting (cont'd)

DTC P0761: Shift Solenoid Valve C Stuck OFF

NOTE: Record all freeze data and review General Troubleshooting Information, refer to the 2003-2006 Accord Service Manual (see page 14-3) before you troubleshoot.

1. Warm up the engine to normal operating temperature (the radiator fan comes on).
2. Make sure that the transmission is filled to the proper level, and check for fluid leaks.
3. Drain the ATF (see step 3 on page 14-186) through a strainer. Inspect the strainer for metal debris or excessive clutch material.

   Does the strainer contain metal debris or excessive clutch material?

   YES—Replace the transmission. ■

   NO—Replace the ATF (see step 5 on page 14-186), then go to step 4.
4. Clear the DTC with the HDS.
5. Test-drive the vehicle in the D position through all five gears at speeds over 12 mph (20 km/h) for more than 20 seconds, then slow down to a stop.
6. Retest-drive the vehicle in the D position through all five gears at speeds over 12 mph (20 km/h) for more than 20 seconds, then slow down to a stop.
7. Monitor the OBD status for P0761 in the DTCs/ Freeze Data in A/T Mode Menu for a pass/fail.

   Does the result indicate FAILED?

   YES—Go to step 8.

   NO—Intermittent failure, the system is OK at this time. If the tester indicates NOT COMPLETED, return to step 5 and recheck. ■
8. Clear the DTC with the HDS.
9. Choose Shift Solenoid C in Miscellaneous Test Menu, and check that the shift solenoid valve C operates with the HDS.

   Is a clicking sound heard?

   YES—Go to step 10.

   NO—Replace shift solenoid valve C (see page 14-169), then go to step 13.
10. Test-drive the vehicle in the D position through all five gears at speeds over 12 mph (20 km/h) for more than 20 seconds, then slow down to a stop.
11. Retest-drive the vehicle in the D position through all five gears at speeds over 12 mph (20 km/h) for more than 20 seconds, then slow down to a stop.
12. Monitor the OBD status for P0761 in the DTCs/ Freeze Data in A/T Mode Menu for a pass/fail.

    Does the result indicate FAILED?

    YES—Repair shift valves C and E, or replace the transmission, then go to step 13.

    NO—Intermittent failure, the system is OK at this time. If the tester indicates NOT COMPLETED, return to step 10 and recheck. ■
13. Clear the DTC with the HDS.
14. Test-drive the vehicle in the D position through all five gears at speeds over 12 mph (20 km/h) for more than 20 seconds, then slow down to a stop.
15. Retest-drive the vehicle in the D position through all five gears at speeds over 12 mph (20 km/h) for more than 20 seconds, then slow down to a stop.
16. Monitor the OBD status for P0761 in the DTCs/ Freeze Data in A/T Mode Menu for a pass/fail.

    Does the result indicate PASSED?

    YES—Troubleshooting is complete. ■

    NO—Return to step 5 and recheck.

BACK

Protected by AR

DTC P0762: Shift Solenoid Valve C Stuck ON

NOTE: Record all freeze data and review General Troubleshooting Information, refer to the 2003-2006 Accord Service Manual (see page 14-3) before you troubleshoot.

1. Warm up the engine to normal operating temperature (the radiator fan comes on).
2. Make sure that the transmission is filled to the proper level, and check for fluid leaks.
3. Drain the ATF (see step 3 on page 14-186) through a strainer. Inspect the strainer for metal debris or excessive clutch material.

   Does the strainer contain metal debris or excessive clutch material?

   YES—Replace the transmission. ■

   NO—Replace the ATF (see step 5 on page 14-186), then go to step 4.
4. Clear the DTC with the HDS.
5. Test-drive the vehicle in the D position through all five gears at speeds over 12 mph (20 km/h) for more than 20 seconds, then slow down to a stop.
6. Retest-drive the vehicle in the D position through all five gears at speeds over 12 mph (20 km/h) for more than 20 seconds, then slow down to a stop.
7. Monitor the OBD status for P0762 in the DTCs/ Freeze Data in A/T Mode Menu for a pass/fail.

   Does the result indicate FAILED?

   YES—Go to step 8.

   NO—Intermittent failure, the system is OK at this time. If the tester indicates NOT COMPLETED, return to step 5 and recheck. ■
8. Clear the DTC with the HDS.
9. Choose Shift Solenoid C in Miscellaneous Test Menu, and check that the shift solenoid valve C operates with the HDS.

   Is a clicking sound heard?

   YES—Go to step 10.

   NO—Replace shift solenoid valve C (see page 14-169), then go to step 13.
10. Test-drive the vehicle in the D position through all five gears at speeds over 12 mph (20 km/h) for more than 20 seconds, then slow down to a stop.
11. Retest-drive the vehicle in the D position through all five gears at speeds over 12 mph (20 km/h) for more than 20 seconds, then slow down to a stop.
12. Monitor the OBD status for P0762 in the DTCs/ Freeze Data in A/T Mode Menu for a pass/fail.

    Does the result indicate FAILED?

    YES—Repair shift valves C and E, or replace the transmission, then go to step 13.

    NO—Intermittent failure, the system is OK at this time. If the tester indicates NOT COMPLETED, return to step 10 and recheck. ■
13. Clear the DTC with the HDS.
14. Test-drive the vehicle in the D position through all five gears at speeds over 12 mph (20 km/h) for more than 20 seconds, then slow down to a stop.
15. Retest-drive the vehicle in the D position through all five gears at speeds over 12 mph (20 km/h) for more than 20 seconds, then slow down to a stop.
16. Monitor the OBD status for P0762 in the DTCs/ Freeze Data in A/T Mode Menu for a pass/fail.

    Does the result indicate PASSED?

    YES—Troubleshooting is complete. ■

    NO—Return to step 5 and recheck.

Protected by AR

DTC Troubleshooting (cont'd)

DTC P0776: A/T Clutch Pressure Control Solenoid Valve B Stuck OFF

NOTE: Record all freeze data and review General Troubleshooting Information, refer to the 2003-2006 Accord Service Manual (see page 14-3) before you troubleshoot.

1. Warm up the engine to normal operating temperature (the radiator fan comes on).
2. Make sure that the transmission is filled to the proper level, and check for fluid leaks.
3. Drain the ATF (see step 3 on page 14-186) through a strainer. Inspect the strainer for metal debris or excessive clutch material.

   Does the strainer contain metal debris or excessive clutch material?

   YES—Replace the transmission. ■

   NO—Replace the ATF (see step 5 on page 14-186), then go to step 4.
4. Clear the DTC with the HDS.
5. Test-drive the vehicle in the D position through all five gears at speeds over 12 mph (20 km/h) for more than 20 seconds, then slow down to a stop.
6. Retest-drive the vehicle in the D position through all five gears at speeds over 12 mph (20 km/h) for more than 20 seconds, then slow down to a stop.
7. Monitor the OBD status for P0776 in the DTCs/ Freeze Data in A/T Mode Menu for a pass/fail.

   Does the result indicate FAILED?

   YES—Go to step 8.

   NO—Intermittent failure, the system is OK at this time. If the tester indicates NOT COMPLETED, return to step 5 and recheck. ■
8. Clear the DTC with the HDS.
9. Choose Clutch Pressure Control (Linear) Solenoid B in Miscellaneous Test Menu, and test the A/T clutch pressure control solenoid valve B with the HDS.

   Is the system OK?

   YES—Intermittent failure, the system is OK at this time. ■

   NO—Follow instructions indicated on the HDS by the test result, but the tester has not determined the cause of the failure, go to step 10. If any part was replaced, go to step 11.
10. Inspect A/T clutch pressure control solenoid valve B (see page 14-172).

    Does the A/T clutch pressure control solenoid valve B work properly?

    YES—Repair hydraulic system related with CPC valve B, or replace the transmission, then go to step 11.

    NO—Replace A/T clutch pressure control solenoid valve B (see page 14-175), then go to step 11.
11. Clear the DTC with the HDS.
12. Test-drive the vehicle in the D position through all five gears at speeds over 12 mph (20 km/h) for more than 20 seconds, then slow down to a stop.
13. Retest-drive the vehicle in the D position through all five gears at speeds over 12 mph (20 km/h) for more than 20 seconds, then slow down to a stop.
14. Monitor the OBD status for P0776 in the DTCs/ Freeze Data in A/T Mode Menu for a pass/fail.

    Does the result indicate PASSED?

    YES—Troubleshooting is complete. ■

    NO—Return to step 5 and recheck.

BACK

Protected by AR

DTC P0777: A/T Clutch Pressure Control Solenoid Valve B Stuck ON

NOTE: Record all freeze data and review General Troubleshooting Information, refer to the 2003-2006 Accord Service Manual (see page 14-3) before you troubleshoot.

1. Warm up the engine to normal operating temperature (the radiator fan comes on).
2. Make sure that the transmission is filled to the proper level, and check for fluid leaks.
3. Drain the ATF (see step 3 on page 14-186) through a strainer. Inspect the strainer for metal debris or excessive clutch material.

   Does the strainer contain metal debris or excessive clutch material?

   YES—Replace the transmission.■

   NO—Replace the ATF (see step 5 on page 14-186), then go to step 4.
4. Clear the DTC with the HDS.
5. Test-drive the vehicle in the D position through all five gears at speeds over 12 mph (20 km/h) for more than 20 seconds, then slow down to a stop.
6. Retest-drive the vehicle in the D position through all five gears at speeds over 12 mph (20 km/h) for more than 20 seconds, then slow down to a stop.
7. Monitor the OBD status for P0777 in the DTCs/ Freeze Data in A/T Mode Menu for a pass/fail.

   Does the result indicate FAILED?

   YES—Go to step 8.

   NO—Intermittent failure, the system is OK at this time. If the tester indicates NOT COMPLETED, return to step 5 and recheck.■
8. Clear the DTC with the HDS.
9. Choose Clutch Pressure Control (Linear) Solenoid B in Miscellaneous Test Menu, and test the A/T clutch pressure control solenoid valve B with the HDS.

   Is the system OK?

   YES—Intermittent failure, the system is OK at this time.■

   NO—Follow instructions indicated on the HDS by the test result, but the tester has not determined the cause of the failure, go to step 10. If any part was replaced, go to step 11.
10. Inspect A/T clutch pressure control solenoid valve B (see page 14-172).

    Does the A/T clutch pressure control solenoid valve B work properly?

    YES—Repair hydraulic system related with CPC valve B, or replace the transmission, then go to step 11.

    NO—Replace A/T clutch pressure control solenoid valve B (see page 14-175), then go to step 11.
11. Clear the DTC with the HDS.
12. Test-drive the vehicle in the D position through all five gears at speeds over 12 mph (20 km/h) for more than 20 seconds, then slow down to a stop.
13. Retest-drive the vehicle in the D position through all five gears at speeds over 12 mph (20 km/h) for more than 20 seconds, then slow down to a stop.
14. Monitor the OBD status for P0777 in the DTCs/ Freeze Data in A/T Mode Menu for a pass/fail.

    Does the result indicate PASSED?

    YES—Troubleshooting is complete.■

    NO—Return to step 5 and recheck.

Protected by AR

DTC Troubleshooting (cont'd)

DTC P0780: Problem in Shift Control System

NOTE: Record all freeze data and review General Troubleshooting Information, refer to the 2003-2006 Accord Service Manual (see page 14-3) before you troubleshoot.

1. Warm up the engine to normal operating temperature (the radiator fan comes on).
2. Make sure that the transmission is filled to the proper level, and check for fluid leaks.
3. Drain the ATF (see step 3 on page 14-186) through a strainer. Inspect the strainer for metal debris or excessive clutch material.

   Does the strainer contain metal debris or excessive clutch material?

   YES—Replace the transmission. ■

   NO—Replace the ATF (see step 5 on page 14-186), then go to step 4.
4. Clear the DTC with the HDS.
5. Test-drive the vehicle in the D position through all five gears at speeds over 12 mph (20 km/h) for more than 20 seconds, then slow down to a stop.
6. Retest-drive the vehicle in the D position through all five gears at speeds over 12 mph (20 km/h) for more than 20 seconds, then slow down to a stop.
7. Monitor the OBD status for P0780 in the DTCs/ Freeze Data in A/T Mode Menu for a pass/fail.

   Does the result indicate FAILED?

   YES—Go to step 8.

   NO—Intermittent failure, the system is OK at this time. If the tester indicates NOT COMPLETED, return to step 5 and recheck. ■
8. Clear the DTC with the HDS.
9. Run the engine until the engine coolant temperature reaches 176 °F (80 °C).
10. Test-drive the vehicle in the D position through all five gears at speeds over 12 mph (20 km/h) for more than 20 seconds, then slow down to a stop.
11. Retest-drive the vehicle in the D position through all five gears at speeds over 12 mph (20 km/h) for more than 20 seconds, then slow down to a stop.
12. Monitor the OBD status for P0780 in the DTCs/ Freeze Data in A/T Mode Menu for a pass/fail.

    Does the result indicate FAILED?

    YES—Repair shift valve D, or replace the transmission, then go to step 13.

    NO—Intermittent failure, the system is OK at this time. If the tester indicates NOT COMPLETED, return to step 1 and recheck. ■
13. Clear the DTC with the HDS.
14. Test-drive the vehicle in the D position through all five gears at speeds over 12 mph (20 km/h) for more than 20 seconds, then slow down to a stop.
15. Monitor the OBD status for P0780 in the DTCs/ Freeze Data in A/T Mode Menu for a pass/fail.

    Does the result indicate PASSED?

    YES—Troubleshooting is complete. ■

    NO—Return to step 5 and recheck.

BACK

Protected by AR

DTC P0847: Short in 3rd Clutch Transmission Fluid Pressure Switch Circuit, or 3rd Clutch Transmission Fluid Pressure Switch Stuck ON

NOTE:
- Record all freeze data and review General Troubleshooting Information, refer to the 2003-2006 Accord Service Manual (see page 14-3) before you troubleshoot.
- This code is caused by an electrical circuit problem and cannot be caused by a mechanical problem in the transmission.

1. Clear the DTC with the HDS.
2. Check the 3rd PRES SWITCH signal with the HDS in the A/T data list when not in 3rd gear.

   Is the 3rd PRES SWITCH ON?

   YES—Go to step 3.

   NO—Go to step 5.
3. Start the engine, and warm it up to normal operating temperature (the radiator fan comes on). Drive the vehicle in 3rd gear in the D3 position for about 5 seconds, then shift to the D position, and drive in 4th gear for about 5 seconds. Slow down and stop the wheels.
4. Monitor the OBD status for P0847 in the DTCs/ Freeze Data in A/T Mode Menu for a pass/fail.

   Does the result indicate FAILED?

   YES—Go to step 5.

   NO—Intermittent failure, the system is OK at this time. Check the BLU/WHT wire for an intermittent short to ground between the 3rd clutch transmission fluid pressure switch and PCM. If the tester indicates NOT COMPLETED, return to step 3 and recheck. ■
5. Turn the ignition switch OFF.
6. Disconnect the 3rd clutch transmission fluid pressure switch connector.
7. Turn the ignition switch ON (II).
8. Check the 3rd PRES SWITCH signal with the HDS in the A/T data list.

   Is the 3rd PRES SWITCH OFF?

   YES—Replace the 3rd clutch transmission fluid pressure switch (see page 14-181), then go to step 13.

   NO—Go to step 9.
9. Turn the ignition switch OFF.
10. Jump the SCS line with the HDS.
11. Disconnect PCM connector C (22P).
12. Check for continuity between PCM connector terminal C5 and body ground.

PCM CONNECTOR C (22P)

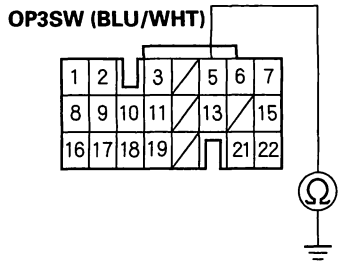

Wire side of female terminals

Is there continuity?

YES—Repair short to ground in the wire between PCM connector terminal C5 and the 3rd clutch transmission fluid pressure switch, then go to step 13.

NO—Update the PCM if it does not have the latest software, or substitute a known-good PCM, refer to the 2003-2006 Accord Service Manual (see page 14-6), then recheck. If the symptom/indication goes away with a known-good PCM, replace the original PCM. ■

(cont'd)

Protected by AR

DTC Troubleshooting (cont'd)

13. Clear the DTC with the HDS.

14. Start the engine, and warm it up to normal operating temperature (the radiator fan comes on). Drive the vehicle in 3rd gear in the D3 position for about 5 seconds, then shift to the D position, and drive in 4th gear for about 5 seconds. Slow down and stop the wheels.

15. Monitor the OBD status for P0847 in the DTCs/ Freeze Data in A/T Mode Menu for a pass/fail.

    Does the result indicate PASSED?

    YES—Troubleshooting is complete. ■

    NO—Return to step 1 and recheck.

BACK

Protected by AR

DTC P0848: Open in 3rd Clutch Transmission Fluid Pressure Switch Circuit, or 3rd Clutch Transmission Fluid Pressure Switch Stuck OFF

NOTE:
- Record all freeze data and review General Troubleshooting Information, refer to the 2003-2006 Accord Service Manual (see page 14-3) before you troubleshoot.
- This code is caused by an electrical circuit problem and cannot be caused by a mechanical problem in the transmission.

1. Clear the DTC with the HDS.

2. Start the engine, and warm it up to normal operating temperature (the radiator fan comes on). Drive the vehicle in the 3rd gear in the D3 position, and verify that the SHIFT MAP NUMBER indicates 3rd with the HDS in the A/T data list.

3. Check the 3rd PRES SWITCH signal with the HDS in the A/T data list.

   Is the 3rd PRES SWITCH ON?

   YES—Go to step 4.

   NO—Go to step 6.

4. Drive the vehicle in 3rd gear in the D3 position for about 5 seconds, then shift to D position, and drive in 4th gear for about 5 seconds. Slow down and stop the wheels.

5. Monitor the OBD status for P0848 in the DTCs/ Freeze Data in A/T Mode Menu for a pass/fail.

   Does the result indicate FAILED?

   YES—Go to step 6.

   NO—Intermittent failure, the system is OK at this time. Check for poor connections or loose terminals at the 3rd clutch transmission fluid pressure switch and PCM. If the tester indicates NOT COMPLETED, return to step 4 and recheck. ■

6. Turn the ignition switch OFF.

7. Disconnect the 3rd clutch transmission fluid pressure switch connector.

8. Turn the ignition switch ON (II).

9. Measure the voltage between the 3rd clutch transmission fluid pressure switch connector terminal and body ground.

3RD CLUTCH TRANSMISSION FLUID PRESSURE SWITCH CONNECTOR

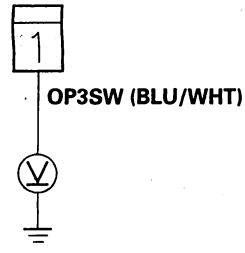

Wire side of female terminals

Is there about 5 V?

YES—Replace the 3rd clutch transmission fluid pressure switch (see page 14-181), then go to step 11.

NO—Go to step 10.

(cont'd)

Protected by AR

DTC Troubleshooting (cont'd)

10. Measure the voltage between PCM connector terminal C5 and body ground.

PCM CONNECTOR C (22P)

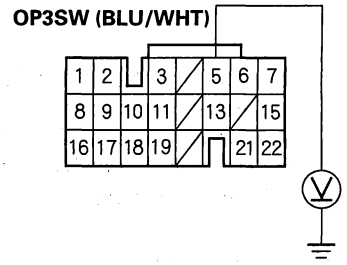

Wire side of female terminals

Is there about 5 V?

YES—Repair open in the wire between PCM connector terminal C5 and the 3rd clutch transmission fluid pressure switch, then go to step 11.

NO—Check for loose or poor connections at PCM connector terminal C5. If the connection is OK, update the PCM if it does not have the latest software, or substitute a known-good PCM, refer to the 2003-2006 Accord Service Manual (see page 14-6), then recheck. If the symptom/indication goes away with a known-good PCM, replace the original PCM. ■

11. Clear the DTC with the HDS.

12. Start the engine, and warm it up to normal operating temperature (the radiator fan comes on). Drive the vehicle in 3rd gear in the D3 position for about 5 seconds, then shift to the D position, and drive in 4th gear for about 5 seconds. Slow down and stop the wheels.

13. Monitor the OBD status for P0848 in the DTCs/ Freeze Data in A/T Mode Menu for a pass/fail.

Does the result indicate PASSED?

YES—Troubleshooting is complete. ■

NO—Return to step 1 and recheck.

BACK

Protected by AR

DTC P0872: Short in 4th Clutch Transmission Fluid Pressure Switch Circuit, or 4th Clutch Transmission Fluid Pressure Switch Stuck ON

NOTE:
- Record all freeze data and review General Troubleshooting Information, refer to the 2003-2006 Accord Service Manual (see page 14-3) before you troubleshoot.
- This code is caused by an electrical circuit problem and cannot be caused by a mechanical problem in the transmission.

1. Clear the DTC with the HDS.
2. Check the 4th PRES SWITCH signal with the HDS in the A/T data list when not in 4th gear.

   Is the 4th PRES SWITCH ON?

   YES—Go to step 3.

   NO—Go to step 5.
3. Start the engine, and warm it up to normal operating temperature (the radiator fan comes on). Drive the vehicle in 4th gear in the D position for about 5 seconds. Slow down and stop the wheels.
4. Monitor the OBD status for P0872 in the DTCs/ Freeze Data in A/T Mode Menu for a pass/fail.

   Does the result indicate FAILED?

   YES—Go to step 5.

   NO—Intermittent failure, the system is OK at this time. Check the BLU/YEL wire for an intermittent short to ground between the 4th clutch transmission fluid pressure switch and PCM. If the tester indicates NOT COMPLETED, return to step 3 and recheck. ■
5. Turn the ignition switch OFF.
6. Disconnect the 4th clutch transmission fluid pressure switch connector.
7. Turn the ignition switch ON (II).
8. Check the 4th PRES SWITCH signal with the HDS in the A/T data list.

   Is the 4th PRES SWITCH OFF?

   YES—Replace the 4th clutch transmission fluid pressure switch (see page 14-182), then go to step 13.

   NO—Go to step 9.
9. Turn the ignition switch OFF.
10. Jump the SCS line with the HDS.
11. Disconnect PCM connector C (22P).
12. Check for continuity between PCM connector terminal C13 and body ground.

PCM CONNECTOR C (22P)

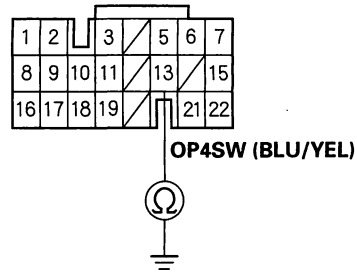

Wire side of female terminals

Is there continuity?

YES—Repair short to ground in the wire between PCM connector terminal C13 and the 4th clutch transmission fluid pressure switch, then go to step 13.

NO—Update the PCM if it does not have the latest software, or substitute a known-good PCM, refer to the 2003-2006 Accord Service Manual (see page 14-6), then recheck. If the symptom/indication goes away with a known-good PCM, replace the original PCM. ■

(cont'd)

Protected by AR

DTC Troubleshooting (cont'd)

13. Clear the DTC with the HDS.

14. Start the engine, and warm it up to normal operating temperature (the radiator fan comes on). Drive the vehicle in 4th gear in the D position for about 5 seconds. Slow down and stop the wheels.

15. Monitor the OBD status for P0872 in the DTCs/ Freeze Data in A/T Mode Menu for a pass/fail.

    Does the result indicate PASSED?

    YES—Troubleshooting is complete. ■

    NO—Return to step 1 and recheck.

BACK

Protected by AR

DTC P0873: Open in 4th Clutch Transmission Fluid Pressure Switch Circuit, or 4th Clutch Transmission Fluid Pressure Switch Stuck OFF

NOTE:
- Record all freeze data and review General Troubleshooting Information, refer to the 2003-2006 Accord Service Manual (see page 14-3) before you troubleshoot.
- This code is caused by an electrical circuit problem and cannot be caused by a mechanical problem in the transmission.

1. Clear the DTC with the HDS.

2. Start the engine, and warm it up to normal operating temperature (the radiator fan comes on). Drive the vehicle in 4th gear in the D position, and verify that the SHIFT MAP NUMBER indicates 4th with the HDS in the A/T data list.

3. Check the 4th PRES SWITCH signal with the HDS in the A/T data list.

   Is the 4th PRES SWITCH ON?

   YES—Go to step 4.

   NO—Go to step 6.

4. Drive the vehicle in 4th gear in the D position for about 5 seconds, then slow down and stop the wheels.

5. Monitor the OBD status for P0873 in the DTCs/ Freeze Data in A/T Mode Menu for a pass/fail.

   Does the result indicate FAILED?

   YES—Go to step 6.

   NO—Intermittent failure, the system is OK at this time. Check for poor connections or loose terminals at the 4th clutch transmission fluid pressure switch and PCM. If the tester indicates NOT COMPLETED, return to step 4 and recheck. ■

6. Turn the ignition switch OFF.

7. Disconnect the 4th clutch transmission fluid pressure switch connector.

8. Turn the ignition switch ON (II).

9. Measure the voltage between the 4th clutch transmission fluid pressure switch connector terminal and body ground.

4TH CLUTCH TRANSMISSION FLUID PRESSURE SWITCH CONNECTOR

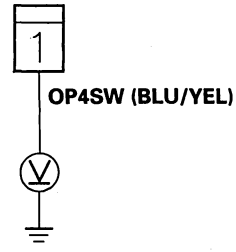

Wire side of female terminals

Is there about 5 V?

YES—Replace the 4th clutch transmission fluid pressure switch (see page 14-182), then go to step 11.

NO—Go to step 10.

(cont'd)

Protected by AR

DTC Troubleshooting (cont'd)

10. Measure the voltage between PCM connector terminal C13 and body ground.

PCM CONNECTOR C (22P)

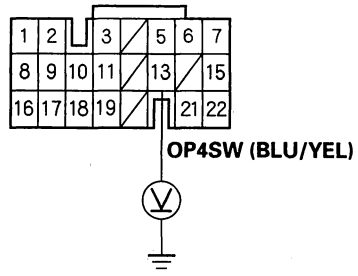

Wire side of female terminals

Is there about 5 V?

YES—Repair open in the wire between PCM connector terminal C13 and the 4th clutch transmission fluid pressure switch, then go to step 11.

NO—Check for loose or poor connections at PCM connector terminal C13. If the connection is OK, update the PCM if it does not have the latest software, or substitute a known-good PCM, refer to the 2003-2006 Accord Service Manual (see page 14-6), then recheck. If the symptom/indication goes away with a known-good PCM, replace the original PCM.■

11. Clear the DTC with the HDS.

12. Start the engine, and warm it up to normal operating temperature (the radiator fan comes on). Drive the vehicle in 4th gear in the D position for about 5 seconds. Slow down and stop the wheels.

13. Monitor the OBD status for P0873 in the DTCs/ Freeze Data in A/T Mode Menu for a pass/fail.

Does the result indicate PASSED?

YES—Troubleshooting is complete.■

NO—Return to step 1 and recheck.

BACK

Protected by AR

DTC P0962: Problem in A/T Clutch Pressure Control Solenoid Valve A Circuit

NOTE:
- Record all freeze data and review General Troubleshooting Information, refer to the 2003-2006 Accord Service Manual (see page 14-3) before you troubleshoot.
- This code is caused by an electrical circuit problem and cannot be caused by a mechanical problem in the transmission.

1. Clear the DTC with the HDS.
2. Check that DTC P0962 recurs.

   Is DTC P0962 indicated?

   YES—Go to step 6.

   NO—Go to step 3.
3. Choose Clutch Pressure Control Solenoid Control in Miscellaneous Test Menu, and test the A/T clutch pressure control solenoid valve A with the HDS.
4. Drive with the A/T clutch pressure control solenoid valve A at 1.0A in Clutch Pressure Control Solenoid Control menu.
5. Monitor the OBD status for P0962 in the DTCs/ Freeze Data in A/T Mode Menu for a pass/fail.

   Does the result indicate FAILED?

   YES—Go to step 6.

   NO—Intermittent failure, the system is OK at this time. Check for poor connections or loose terminals at the A/T clutch pressure control solenoid valve A and PCM. If the tester indicates NOT COMPLETED, return to step 3 and recheck. ■
6. Turn the ignition switch OFF.
7. Disconnect the A/T clutch pressure control solenoid valve A connector.
8. Measure A/T clutch pressure control solenoid valve A resistance at the solenoid connector.

   A/T CLUTCH PRESSURE CONTROL SOLENOID VALVE A CONNECTOR

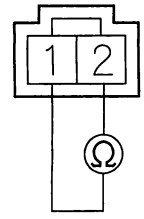

   Terminal side of male terminals

   Is there 3— 10 Ω ?

   YES—Go to step 9.

   NO—Replace A/T clutch pressure control solenoid valve A (see page 14-175), then go to step 13.
9. Check for continuity between A/T clutch pressure control solenoid valve A connector terminal No.2 and body ground.

   A/T CLUTCH PRESSURE CONTROL SOLENOID VALVE A CONNECTOR

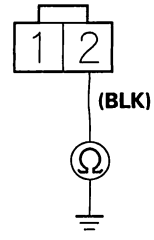

   Wire side of female terminals

   Is there continuity?

   YES—Go to step 10.

   NO—Repair open in the wire between the A/T clutch pressure control solenoid valve A and ground (G151), or repair poor ground (G151), or repair poor ground (G151), then go to step 13.

(cont'd)

Protected by AR

DTC Troubleshooting (cont'd)

10. Turn the ignition switch ON (II).

11. Measure the voltage between A/T clutch pressure control solenoid valve A connector terminals No. 1 and No. 2 as the ignition switch is turned ON.

A/T CLUTCH PRESSURE CONTROL SOLENOID VALVE A CONNECTOR

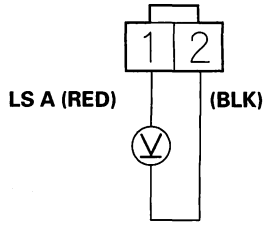

Wire side of female terminals

Is there battery voltage?

YES—Go to step 12.

NO—Repair open or short in the wire between PCM connector terminal C7 and A/T clutch pressure control solenoid valve A, then go to step 13.

12. Measure the voltage between PCM connector terminals E10 and E3.

PCM CONNECTOR E (31P)

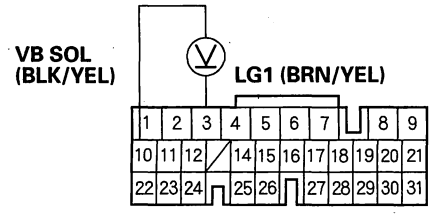

Wire side of female terminals

Is there battery voltage?

YES—Check for loose or poor connections at PCM connector terminal E10. If the connection is OK, update the PCM if it does not have the latest software, or substitute a known-good PCM, refer to the 2003-2006 Accord Service Manual (see page 14-6), then recheck. If the symptom/indication goes away with a known-good PCM, replace the original PCM. ■

NO— Check for blown No. 18 fuse in the under-dash fuse/relay box. If the fuse is OK, repair open in the wire between PCM connector terminal E10 and the under-dash fuse/relay box, then go to step 13.

13. Clear the DTC with the HDS.

14. Test-drive the vehicle for several minutes in the D position through all five gears.

15. Monitor the OBD status for P0962 in the DTCs/ Freeze Data in A/T Mode Menu for a pass/fail.

Does the result indicate PASSED?

YES—Troubleshooting is complete. ■

NO—Return to step 1 and recheck.

BACK

Protected by AR

DTC P0963: Problem in A/T Clutch Pressure Control Solenoid Valve A

NOTE:
- Record all freeze data and review General Troubleshooting Information, refer to the 2003-2006 Accord Service Manual (see page 14-3) before you troubleshoot.
- This code is caused by an electrical circuit problem and cannot be caused by a mechanical problem in the transmission.

1. Clear the DTC with the HDS.
2. Check that DTC P0963 recurs.

   Is DTC P0963 indicated?

   YES—Go to step 6.

   NO—Go to step 3.
3. Choose Clutch Pressure Control Solenoid Control in Miscellaneous Test Menu, and test the A/T clutch pressure control solenoid valve A with the HDS.
4. Drive with the A/T clutch pressure control solenoid valve A at 0.2 A in Clutch Pressure Control Solenoid Control menu.
5. Monitor the OBD status for P0963 in the DTCs/ Freeze Data in A/T Mode Menu for a pass/fail.

   Does the result indicate FAILED?

   YES—Go to step 6.

   NO—Intermittent failure, the system is OK at this time. Check for poor connections or loose terminals at the A/T clutch pressure control solenoid valve A and PCM. If the tester indicates NOT COMPLETED, return to step 3 and recheck. ■
6. Turn the ignition switch OFF.
7. Disconnect the A/T clutch pressure control solenoid valve A connector.
8. Measure A/T clutch pressure control solenoid valve A resistance at the solenoid connector.

A/T CLUTCH PRESSURE CONTROL SOLENOID VALVE A CONNECTOR

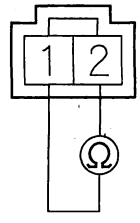

Terminal side of male terminals

Is there 3– 10 Ω ?

YES—Go to step 9.

NO—Replace A/T clutch pressure control solenoid valve A (see page 14-175), then go to step 10.

(cont'd)

Protected by AR

DTC Troubleshooting (cont'd)

9. Check for continuity between A/T clutch pressure control solenoid valve A connector terminal No. 2 and body ground.

A/T CLUTCH PRESSURE CONTROL SOLENOID VALVE A CONNECTOR

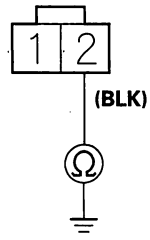

Wire side of female terminals

Is there continuity?

YES—Update the PCM if it does not have the latest software, or substitute a known-good PCM, refer to the 2003-2006 Accord Service Manual (see page 14-6), then recheck. If the symptom/indication goes away with a known-good PCM, replace the original PCM. ■

NO—Repair open in the wire between the A/T clutch pressure control solenoid valve A and ground (G151), or repair poor ground (G151), then go to step 10.

10. Clear the DTC with the HDS.

11. Test-drive the vehicle for several minutes in the D position through all five gears.

12. Monitor the OBD status for P0963 in the DTCs/ Freeze Data in A/T Mode Menu for a pass/fail.

Does the result indicate PASSED?

YES—Troubleshooting is complete. ■

NO—Return to step 1 and recheck.

BACK

Protected by AR

DTC P0966: Problem in A/T Clutch Pressure Control Solenoid Valve B Circuit

NOTE:
- Record all freeze data and review General Troubleshooting Information, refer to the 2003-2006 Accord Service Manual (see page 14-3) before you troubleshoot.
- This code is caused by an electrical circuit problem and cannot be caused by a mechanical problem in the transmission.

1. Clear the DTC with the HDS.
2. Check that DTC P0966 recurs.

   Is DTC P0966 indicated?

   YES—Go to step 6.

   NO—Go to step 3.
3. Choose Clutch Pressure Control Solenoid Control in Miscellaneous Test Menu, and test the A/T clutch pressure control solenoid valve B with the HDS.
4. Drive with the A/T clutch pressure control solenoid valve B at 1.0 A in Clutch Pressure Control Solenoid Control menu.
5. Monitor the OBD status for P0966 in the DTCs/ Freeze Data in A/T Mode Menu for a pass/fail.

   Does the result indicate FAILED?

   YES—Go to step 6.

   NO—Intermittent failure, the system is OK at this time. Check for poor connections or loose terminals at the A/T clutch pressure control solenoid valve B and PCM. If the tester indicates NOT COMPLETED, return to step 3 and recheck. ■
6. Turn the ignition switch OFF.
7. Disconnect the A/T clutch pressure control solenoid valve B connector.
8. Measure A/T clutch pressure control solenoid valve B resistance at the solenoid connector.

   A/T CLUTCH PRESSURE CONTROL SOLENOID VALVE B CONNECTOR

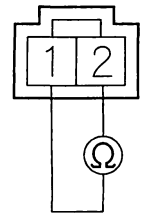

Terminal side of male terminals

   Is there 3— 10 Ω ?

   YES—Go to step 9.

   NO—Replace A/T clutch pressure control solenoid valve B (see page 14-175), then go to step 13.
9. Check for continuity between A/T clutch pressure control solenoid valve B connector terminal No. 2 and body ground.

   A/T CLUTCH PRESSURE CONTROL SOLENOID VALVE B CONNECTOR

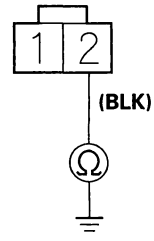

Wire side of female terminals

   Is there continuity?

   YES—Go to step 10.

   NO—Repair open in the wire between the A/T clutch pressure control solenoid valve B and ground (G151), or repair poor ground (G151), then go to step 13.

(cont'd)

Protected by AR

DTC Troubleshooting (cont'd)

10. Turn the ignition switch ON (II).

11. Measure the voltage between A/T clutch pressure control solenoid valve B connector terminals No. 1 and No. 2 as the ignition switch is turned ON.

A/T CLUTCH PRESSURE CONTROL SOLENOID VALVE B CONNECTOR

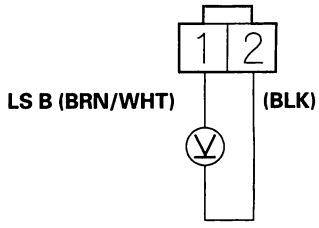

Wire side of female terminals

Is there battery voltage?

YES—Go to step 12.

NO—Repair open or short in the wire between PCM connector terminal C15 and A/T clutch pressure control solenoid valve B, then go to step 13.

12. Measure the voltage between PCM connector terminals E10 and E3.

PCM CONNECTOR E (31P)

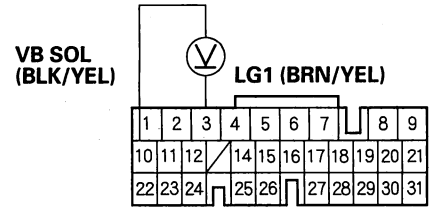

Wire side of female terminals

Is there battery voltage?

YES—Check for loose or poor connections at PCM connector terminal E10. If the connection is OK, update the PCM if it does not have the latest software, or substitute a known-good PCM, refer to the 2003-2006 Accord Service Manual, (see page 14-6), then recheck. If the symptom/indication goes away with a known-good PCM, replace the original PCM. ■

NO—Check for blown No. 18 fuse in the under-dash fuse/relay box. If the fuse is OK, repair open in the wire between PCM connector terminal E10 and the under-dash fuse/relay box, then go to step 13.

13. Clear the DTC with the HDS.

14. Test-drive the vehicle for several minutes in the D position through all five gears.

15. Monitor the OBD status for P0966 in the DTCs/ Freeze Data in A/T Mode Menu for a pass/fail.

Does the result indicate PASSED?

YES—Troubleshooting is complete. ■

NO—Return to step 1 and recheck.

BACK

Protected by AR

DTC P0967: Problem in A/T Clutch Pressure Control Solenoid Valve B

NOTE:
- Record all freeze data and review General Troubleshooting Information, refer to the 2003-2006 Accord Service Manual (see page 14-3) before you troubleshoot.
- This code is caused by an electrical circuit problem and cannot be caused by a mechanical problem in the transmission.

1. Clear the DTC with the HDS.
2. Check that DTC P0967 recurs.

   Is DTC P0967 indicated?

   YES—Go to step 6.

   NO—Go to step 3.
3. Choose Clutch Pressure Control Solenoid Control in Miscellaneous Test Menu, and test the A/T clutch pressure control solenoid valve B with the HDS.
4. Drive with the A/T clutch pressure control solenoid valve B at 0.2 A in Clutch Pressure Control Solenoid Control menu.
5. Monitor the OBD status for P0967 in the DTCs/ Freeze Data in A/T Mode Menu for a pass/fail.

   Does the result indicate FAILED?

   YES—Go to step 6.

   NO—Intermittent failure, the system is OK at this time. Check for poor connections or loose terminals at the A/T clutch pressure control solenoid valve B and PCM. If the tester indicates NOT COMPLETED, return to step 3 and recheck.■
6. Turn the ignition switch OFF.
7. Disconnect the A/T clutch pressure control solenoid valve B connector.
8. Measure A/T clutch pressure control solenoid valve B resistance at the solenoid connector.

A/T CLUTCH PRESSURE CONTROL SOLENOID VALVE B CONNECTOR

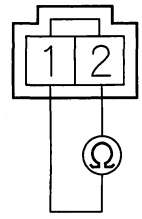

Terminal side of male terminals

Is there 3– 10 Ω ?

YES—Go to step 9.

NO—Replace A/T clutch pressure control solenoid valve B (see page 14-175), then go to step 10.

(cont'd)

Protected by AR

DTC Troubleshooting (cont'd)

9. Check for continuity between A/T clutch pressure control solenoid valve A connector terminal No. 2 and body ground.

A/T CLUTCH PRESSURE CONTROL SOLENOID VALVE B CONNECTOR

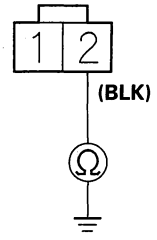

Wire side of female terminals

Is there continuity?

YES—Update the PCM if it does not have the latest software, or substitute a known-good PCM, refer to the 2003-2006 Accord Service Manual (see page 14-6), then recheck. If the symptom/indication goes away with a known-good PCM, replace the original PCM.■

NO—Repair open in the wire between the A/T clutch pressure control solenoid valve B and ground (G151), or repair poor ground (G151), then go to step 10.

10. Clear the DTC with the HDS.

11. Test-drive the vehicle for several minutes in the D position through all five gears.

12. Monitor the OBD status for P0967 in the DTCs/ Freeze Data in A/T Mode Menu for a pass/fail.

Does the result indicate PASSED?

YES—Troubleshooting is complete.■

NO—Return to step 1 and recheck.

BACK

Protected by AR

DTC P0970: Problem in A/T Clutch Pressure Control Solenoid Valve C Circuit

NOTE:
- Record all freeze data and review General Troubleshooting Information, refer to the 2003-2006 Accord Service Manual (see page 14-3) before you troubleshoot.
- This code is caused by an electrical circuit problem and cannot be caused by a mechanical problem in the transmission.

1. Clear the DTC with the HDS.
2. Check that DTC P0970 recurs.

   Is DTC P0970 indicated?

   YES—Go to step 6.

   NO—Go to step 3.
3. Choose Clutch Pressure Control Solenoid Control in Miscellaneous Test Menu, and test the A/T clutch pressure control solenoid valve C with the HDS.
4. Drive with the A/T clutch pressure control solenoid valve C at 1.0 A in Clutch Pressure Control Solenoid Control menu.
5. Monitor the OBD status for P0970 in the DTCs/ Freeze Data in A/T Mode Menu for a pass/fail.

   Does the result indicate FAILED?

   YES—Go to step 6.

   NO—Intermittent failure, the system is OK at this time. Check for poor connections or loose terminals at the A/T clutch pressure control solenoid valve C and PCM. If the tester indicates NOT COMPLETED, return to step 3 and recheck. ■
6. Turn the ignition switch OFF.
7. Disconnect the A/T clutch pressure control solenoid valve C connector.
8. Measure A/T clutch pressure control solenoid valve C resistance at the solenoid connector.

   A/T CLUTCH PRESSURE CONTROL SOLENOID VALVE C CONNECTOR

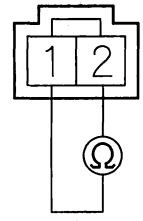

   Terminal side of male terminals

   Is there 3— 10 Ω ?

   YES—Go to step 9.

   NO—Replace A/T clutch pressure control solenoid valve C (see page 14-178), then go to step 13.
9. Check for continuity between A/T clutch pressure control solenoid valve C connector terminal No. 2 and body ground.

   A/T CLUTCH PRESSURE CONTROL SOLENOID VALVE C CONNECTOR

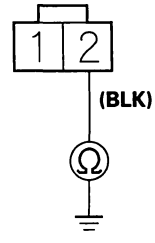

   Wire side of female terminals

   Is there continuity?

   YES—Go to step 10.

   NO—Repair open in the wire between the A/T clutch pressure control solenoid valve C and ground (G101), or repair poor ground (G101), then go to step 13.

(cont'd)

Protected by AR

DTC Troubleshooting (cont'd)

10. Turn the ignition switch ON (II).

11. Measure the voltage between A/T clutch pressure control solenoid valve C connector terminals No. 1 and No. 2 as the ignition switch is turned ON.

A/T CLUTCH PRESSURE CONTROL SOLENOID VALVE C CONNECTOR

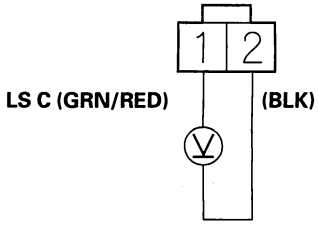

Wire side of female terminals

Is there battery voltage?

YES—Go to step 12.

NO—Repair open or short in the wire between PCM connector terminal C22 and A/T clutch pressure control solenoid valve C, then go to step 13.

12. Measure the voltage between PCM connector terminals E10 and E3.

PCM CONNECTOR E (31P)

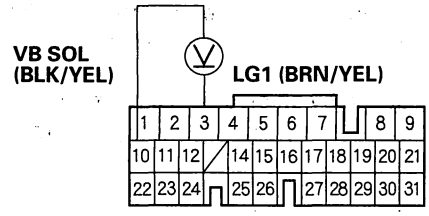

Wire side of female terminals

Is there battery voltage?

YES—Check for loose or poor connections at PCM connector terminal E10. If the connection is OK, update the PCM if it does not have the latest software, or substitute a known-good PCM, refer to the 2003-2006 Accord Service Manual (see page 14-6), then recheck. If the symptom/indication goes away with a known-good PCM, replace the original PCM.■

NO—Check for blown No. 18 fuse in the under-dash fuse/relay box. If the fuse is OK, repair open in the wire between PCM connector terminal E10 and the under-dash fuse/relay box, then go to step 13.

13. Clear the DTC with the HDS.

14. Test-drive the vehicle for several minutes in the D position through all five gears.

15. Monitor the OBD status for P0970 in the DTCs/ Freeze Data in A/T Mode Menu for a pass/fail.

Does the result indicate PASSED?

YES—Troubleshooting is complete.■

NO—Return to step 1 and recheck.

BACK

Protected by AR

DTC P0971: Problem in A/T Clutch Pressure Control Solenoid Valve C

NOTE:
- Record all freeze data and review General Troubleshooting Information, refer to the 2003-2006 Accord Service Manual (see page 14-3) before you troubleshoot.
- This code is caused by an electrical circuit problem and cannot be caused by a mechanical problem in the transmission.

1. Clear the DTC with the HDS.
2. Check that DTC P0971 recurs.

   Is DTC P0971 indicated?

   YES—Go to step 6.

   NO—Go to step 3.
3. Choose Clutch Pressure Control Solenoid Control in Miscellaneous Test Menu, and test the A/T clutch pressure control solenoid valve C with the HDS.
4. Drive with the A/T clutch pressure control solenoid valve C at 0.2 A in Clutch Pressure Control Solenoid Control menu.
5. Monitor the OBD status for P0971 in the DTCs/ Freeze Data in A/T Mode Menu for a pass/fail.

   Does the result indicate FAILED?

   YES—Go to step 6.

   NO—Intermittent failure, the system is OK at this time. Check for poor connections or loose terminals at the A/T clutch pressure control solenoid valve C and PCM. If the tester indicates NOT COMPLETED, return to step 3 and recheck. ■
6. Turn the ignition switch OFF.
7. Disconnect the A/T clutch pressure control solenoid valve C connector.
8. Measure A/T clutch pressure control solenoid valve C resistance at the solenoid connector.

A/T CLUTCH PRESSURE CONTROL SOLENOID VALVE C CONNECTOR

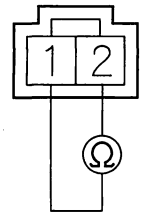

Terminal side of male terminals

Is there 3— 10 Ω ?

YES—Go to step 9.

NO—Replace A/T clutch pressure control solenoid valve C (see page 14-178), then go to step 10.

(cont'd)

Protected by AR

DTC Troubleshooting (cont'd)

9. Check for continuity between A/T clutch pressure control solenoid valve A connector terminal No.2 and body ground.

A/T CLUTCH PRESSURE CONTROL SOLENOID VALVE C CONNECTOR

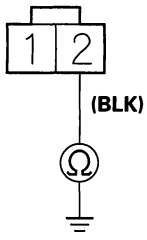

Wire side of female terminals

Is there continuity?

YES—Update the PCM if it does not have the latest software, or substitute a known-good PCM, refer to the 2003-2006 Accord Service Manual (see page 14-6), then recheck. If the symptom/indication goes away with a known-good PCM, replace the original PCM.■

NO—Repair open in the wire between the A/T clutch pressure control solenoid valve C and ground (G151), or repair poor ground (G151), then go to step 10.

10. Clear the DTC with the HDS.

11. Test-drive the vehicle for several minutes in the D position through all five gears.

12. Monitor the OBD status for P0971 in the DTCs/ Freeze Data in A/T Mode Menu for a pass/fail.

Does the result indicate PASSED?

YES—Troubleshooting is complete.■

NO—Return to step 1 and recheck.

BACK

Protected by AR

DTC P0973: Short in Shift Solenoid Valve A Circuit

NOTE:
- Record all freeze data and review General Troubleshooting Information, refer to the 2003-2006 Accord Service Manual (see page 14-3) before you troubleshoot.
- This code is caused by an electrical circuit problem and cannot be caused by a mechanical problem in the transmission.

1. Clear the DTC with the HDS.
2. Test-drive the vehicle for several minutes in the D position through all five gears.
3. Check that DTC P0973 recurs.

   Is DTC P0973 indicated?

   YES—Go to step 7.

   NO—Go to step 4.
4. Choose Shift Solenoid A in Miscellaneous Test Menu, and test the shift solenoid valve A with the HDS.
5. Test drive the vehicle for several minutes in the D position through all five gears.
6. Monitor the OBD status for P0973 in the DTCs/ Freeze Data in A/T Mode Menu for a pass/fail.

   Does the result indicate FAILED?

   YES—Go to step 7.

   NO—Intermittent failure, the system is OK at this time. Check the BLU/YEL wire for an intermittent short to ground between shift solenoid valve A and PCM. If the tester indicates NOT COMPLETED, return to step 4 and recheck.■
7. Turn the ignition switch OFF.
8. Jump the SCS line with the HDS.
9. Disconnect PCM connectors B (24P), C (22P), and E (31P).
10. Measure the resistance between PCM connector terminals C1 and E3.

PCM CONNECTORS

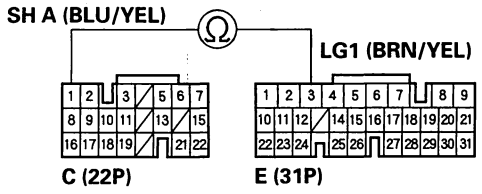

Wire side of female terminals

Is there less than 12 Ω ?

YES—Go to step 11.

NO—Update the PCM if it does not have the latest software, or substitute a known-good PCM, refer to the 2003-2006 Accord Service Manual (see page 14-6), then recheck. If the symptom/indication goes away with a known-good PCM, replace the original PCM, replace the original PCM.■

11. Disconnect shift solenoid valve A connector.
12. Check for continuity between PCM connector terminals C1 and E3.

PCM CONNECTORS

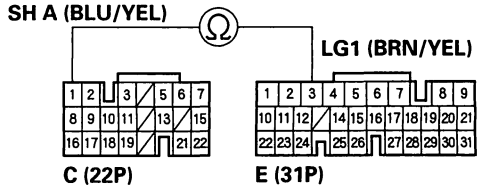

Wire side of female terminals

Is there continuity?

YES—Repair short to ground in the wire between PCM connector terminal C1 and shift solenoid valve A, then go to step 16.

NO—Go to step 13.

(cont'd)

Protected by AR

DTC Troubleshooting (cont'd)

13. Measure shift solenoid valve A resistance at the solenoid valve connector.

SHIFT SOLENOID VALVE A CONNECTOR

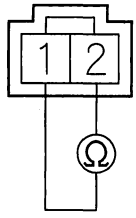

Terminal side of male terminals

Is there 12— 15 Ω ?

YES—Go to step 14.

NO—Replace shift solenoid valve A (see page 14-165), then go to step 16.

14. Turn the ignition switch ON (II).

15. Measure the voltage between PCM connector terminals E10 and E3.

PCM CONNECTOR E (31P)

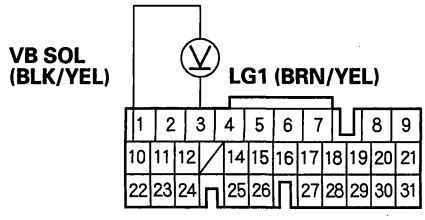

Wire side of female terminals

Is there battery voltage?

YES—Check for loose or poor connections at PCM connector terminal E10. If the connection is OK, update the PCM if it does not have the latest software, or substitute a known-good PCM, refer to the 2003-2006 Accord Service Manual (see page 14-6), then recheck. If the symptom/indication goes away with a known-good PCM, replace the original PCM. ■

NO—Check for blown No. 18 fuse in the under-dash fuse/relay box. If the fuse is OK, repair open in the wire between PCM connector terminal E10 and the under-dash fuse/relay box, then go to step 16.

16. Clear the DTC with the HDS.

17. Test-drive the vehicle for several minutes in the D position through all five gears.

18. Monitor the OBD status for P0973 in the DTCs/ Freeze Data in A/T Mode Menu for a pass/fail.

Does the result indicate PASSED?

YES—Troubleshooting is complete. ■

NO—Return to step 1 and recheck.

BACK

Protected by AR

DTC P0974: Open in Shift Solenoid Valve A Circuit

NOTE:
- Record all freeze data and review General Troubleshooting Information, refer to the 2003-2006 Accord Service Manual (see page 14-3) before you troubleshoot.
- This code is caused by an electrical circuit problem and cannot be caused by a mechanical problem in the transmission.

1. Clear the DTC with the HDS.
2. Test-drive the vehicle for several minutes in the D position through all five gears.
3. Check that DTC P0974 recurs.

   Is DTC P0974 indicated?

   YES—Go to step 7.

   NO—Go to step 4.
4. Choose Shift Solenoid A in Miscellaneous Test Menu, and test the shift solenoid valve A with the HDS.
5. Test-drive the vehicle for several minutes in the D position through all five gears.
6. Monitor the OBD status for P0974 in the DTCs/ Freeze Data in A/T Mode Menu for a pass/fail.

   Does the result indicate FAILED?

   YES—Go to step 7.

   NO—Intermittent failure, the system is OK at this time. Check for poor connections or loose terminals at shift solenoid valve A and PCM. If the tester indicates NOT COMPLETED, return to step 4 and recheck. ■
7. Turn the ignition switch OFF.
8. Jump the SCS line with the HDS.
9. Disconnect PCM connectors B (24P), C (22P), and E (31P).
10. Measure the resistance between PCM connector terminals C1 and E3.

PCM CONNECTORS

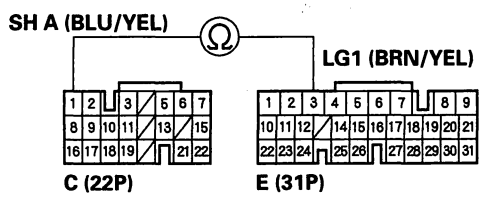

Wire side of female terminals

Is there 12—25 Ω ?

YES—Check for loose or poor connections at PCM connector terminal C1. If the connection is OK, update the PCM if it does not have the latest software, or substitute a known-good PCM, refer to the 2003-2006 Accord Service Manual (see page 14-6), then recheck. If the symptom/indication goes away with a known-good PCM, replace the original PCM. ■

NO—Go to step 11.

(cont'd)

Protected by AR

DTC Troubleshooting (cont'd)

11. Disconnect shift solenoid valve A connector.
12. Measure shift solenoid valve A resistance at the solenoid valve connector.

SHIFT SOLENOID VALVE A CONNECTOR

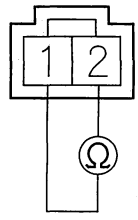

Terminal side of male terminals

Is there 12—25 Ω ?

YES—Go to step 13.

NO—Replace shift solenoid valve A (see page 14-165), then go to step 14.

13. Check for continuity between shift solenoid valve A connector terminal No. 1 and body ground.

SHIFT SOLENOID VALVE A CONNECTOR

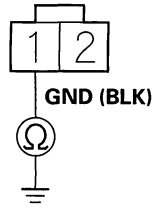

Wire side of female terminals

Is there continuity?

YES—Repair open in the wire between PCM connector terminal C1 and shift solenoid valve A, then go to step 14.

NO—Repair open in the wire between shift solenoid valve A and ground (G151), or repair poor ground(G151) then go to step 14.

14. Clear the DTC with the HDS.
15. Test-drive the vehicle for several minutes in the D position through all five gears.
16. Monitor the OBD status for P0974 in the DTCs/ Freeze Data in A/T Mode Menu for a pass/fail.

Does the result indicate PASSED?

YES—Troubleshooting is complete.■

NO—Return to step 1 and recheck.

BACK

Protected by AR

DTC P0976: Short in Shift Solenoid Valve B Circuit

NOTE:
- Record all freeze data and review General Troubleshooting Information, refer to the 2003-2006 Accord Service Manual (see page 14-3) before you troubleshoot.
- This code is caused by an electrical circuit problem and cannot be caused by a mechanical problem in the transmission.

1. Clear the DTC with the HDS.
2. Test-drive the vehicle for several minutes in the D position through all five gears.
3. Check that DTC P0976 recurs.

   Is DTC P0976 indicated?

   YES—Go to step 7.

   NO—Go to step 4.
4. Choose Shift Solenoid B in Miscellaneous Test Menu, and test the shift solenoid valve B with the HDS.
5. Test-drive the vehicle for several minutes in the D position through all five gears.
6. Monitor the OBD status for P0976 in the DTCs/ Freeze Data in A/T Mode Menu for a pass/fail.

   Does the result indicate FAILED?

   YES—Go to step 7.

   NO—Intermittent failure, the system is OK at this time. Check the GRN/WHT wire for an intermittent short to ground between shift solenoid valve B and PCM. If the tester indicates NOT COMPLETED, return to step 4 and recheck. ■
7. Turn the ignition switch OFF.
8. Jump the SCS line with the HDS.
9. Disconnect PCM connectors B (24P), (22P), and E (31P).
10. Measure the resistance between PCM connector terminals C8 and E3.

PCM CONNECTORS

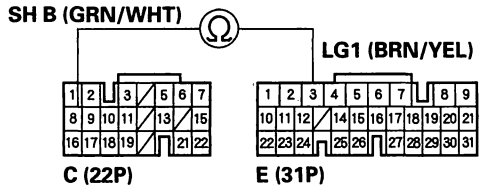

Wire side of female terminals

Is there less than 12 Ω ?

YES—Go to step 11.

NO—Update the PCM if it does not have the latest software, or substitute a known-good PCM, refer to the 2003-2006 Accord Service Manual (see page 14-6), then recheck. If the symptom/indication goes away with a known-good PCM, replace the original PCM. ■

11. Disconnect shift solenoid valve B connector.
12. Check for continuity between PCM connector terminals C8 and E3.

PCM CONNECTORS

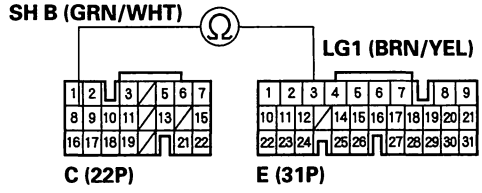

Wire side of female terminals

Is there continuity?

YES—Repair short to ground in the wire between PCM connector terminal C8 and shift solenoid valve B, then go to step 16.

NO—Go to step 13.

(cont'd)

Protected by AR

DTC Troubleshooting (cont'd)

13. Measure shift solenoid valve B resistance at the solenoid valve connector.

SHIFT SOLENOID VALVE B CONNECTOR

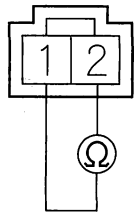

Terminal side of male terminals

Is there 12— 15 Ω ?

YES—Go to step 14.

NO—Replace shift solenoid valve B (see page 14-167), then go to step 16.

14. Turn the ignition switch ON (II).

15. Measure the voltage between PCM connector terminals E10 and E3.

PCM CONNECTOR E (31P)

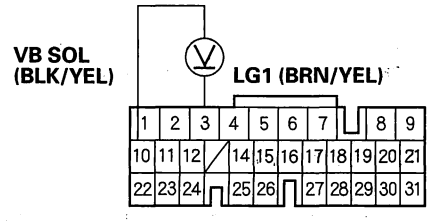

Wire side of female terminals

Is there battery voltage?

YES—Check for loose or poor connections at PCM connector terminal E10. If the connection is OK, update the PCM if it does not have the latest software, or substitute a known-good PCM, refer to the 2003-2006 Accord Service Manual (see page 14-6), then recheck. If the symptom/indication goes away with a known-good PCM, replace the original PCM. ■

NO—Check for blown No. 18 fuse in the under-dash fuse/relay box. If the fuse is OK, repair open in the wire between PCM connector terminal E10 and the under-dash fuse/relay box, then go to step 16.

16. Clear the DTC with the HDS.

17. Test-drive the vehicle for several minutes in the D position through all five gears.

18. Monitor the OBD status for P0976 in the DTCs/ Freeze Data in A/T Mode Menu for a pass/fail.

Does the result indicate PASSED?

YES—Troubleshooting is complete. ■

NO—Return to step 1 and recheck.

BACK

Protected by AR

DTC P0977: Open in Shift Solenoid Valve B Circuit

NOTE:
- Record all freeze data and review General Troubleshooting Information, refer to the 2003-2006 Accord Service Manual (see page 14-3) before you troubleshoot.
- This code is caused by an electrical circuit problem and cannot be caused by a mechanical problem in the transmission.

1. Clear the DTC with the HDS.
2. Test-drive the vehicle for several minutes in the D position through all five gears.
3. Check that DTC P0977 recurs.

   Is DTC P0977 indicated?

   YES—Go to step 7.

   NO—Go to step 4.
4. Choose Shift Solenoid B in Miscellaneous Test Menu, and test the shift solenoid valve B with the HDS.
5. Test-drive the vehicle for several minutes in the D position through all five gears.
6. Monitor the OBD status for P0977 in the DTCs/ Freeze Data in A/T Mode Menu for a pass/fail.

   Does the result indicate FAILED?

   YES—Go to step 7.

   NO—Intermittent failure, the system is OK at this time. Check for poor connections or loose terminals at shift solenoid valve B and PCM. If the tester indicates NOT COMPLETED, return to step 4 and recheck. ■
7. Turn the ignition switch OFF.
8. Jump the SCS line with HDS.
9. Disconnect PCM connectors B (24P), C (22P), and E (31P).
10. Measure the resistance between PCM connector terminals C8 and E3.

PCM CONNECTORS

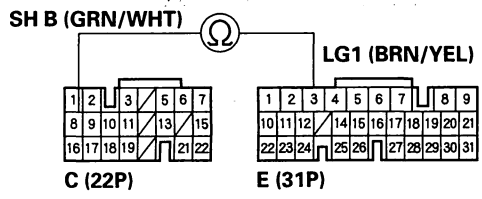

Wire side of female terminals

Is there 12—25 Ω ?

YES—Check for loose or poor connections at PCM connector terminal C8. If the connection is OK, update the PCM if it does not have the latest software, or substitute a known-good PCM, refer to the 2003-2006 Accord Service Manual (see page 14-6), then recheck. If the symptom/indication goes away with a known-good PCM, replace the original PCM. ■

NO—Go to step 11.

(cont'd)

Protected by AR

DTC Troubleshooting (cont'd)

11. Disconnect shift solenoid valve B connector.
12. Measure shift solenoid valve B resistance at the solenoid valve connector.

SHIFT SOLENOID VALVE B CONNECTOR

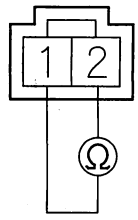

Terminal side of male terminals

Is there 12–25 Ω ?

YES—Go to step 13.

NO—Replace shift solenoid valve B (see page 14-167), then go to step 14.

13. Check for continuity between shift solenoid valve B connector terminal No. 1 and body ground.

SHIFT SOLENOID VALVE B CONNECTOR

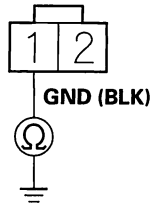

Wire side of female terminals

Is there continuity?

YES—Repair open in the wire between PCM connector terminal C8 and shift solenoid valve B, then go to step 14.

NO—Repair open in the wire between shift solenoid valve B and ground (G151), or repair poor ground (G151), then go to step 14.

14. Clear the DTC with the HDS.
15. Test-drive the vehicle for several minutes in the D position through all five gears.
16. Monitor the OBD status for P0977 in the DTCs/ Freeze Data in A/T Mode Menu for a pass/fail.

Does the result indicate PASSED?

YES—Troubleshooting is complete.■

NO—Return to step 1 and recheck.

BACK

Protected by AR

DTC P0979: Short in Shift Solenoid Valve C Circuit

NOTE:
- Record all freeze data and review General Troubleshooting Information, refer to the 2003-2006 Accord Service Manual (see page 14-3) before you troubleshoot.
- This code is caused by an electrical circuit problem and cannot be caused by a mechanical problem in the transmission.

1. Clear the DTC with the HDS.
2. Test-drive the vehicle for several minutes in the D position through all five gears.
3. Check that DTC P0979 recurs.

   Is DTC P0979 indicated?

   YES—Go to step 7.

   NO—Go to step 4.
4. Choose Shift Solenoid C in Miscellaneous Test Menu, and test the shift solenoid valve C with the HDS.
5. Test-drive the vehicle for several minutes in the D position through all five gears.
6. Monitor the OBD status for P0979 in the DTCs/ Freeze Data in A/T Mode Menu for a pass/fail.

   Does the result indicate FAILED?

   YES—Go to step 7.

   NO—Intermittent failure, the system is OK at this time. Check the GRN wire for an intermittent short to ground between shift solenoid valve C and PCM. If the tester indicates NOT COMPLETED, return to step 4 and recheck.■
7. Turn the ignition switch OFF.
8. Jump the SCS line with the HDS.
9. Disconnect PCM connectors B (24P), C (22P), and E (31P).
10. Measure the resistance between PCM connector terminals C16 and E3.

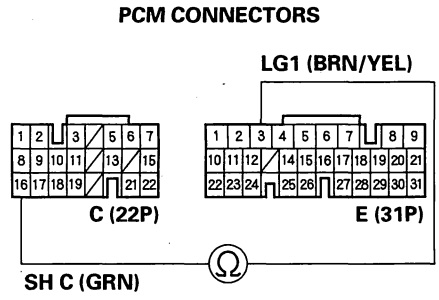

Wire side of female terminals

Is there less than 12 Ω ?

YES—Go to step 11.

NO—Update the PCM if it does not have the latest software, or substitute a known-good PCM, refer to the 2003-2006 Accord Service Manual (see page 14-6), then recheck. If the symptom/indication goes away with a known-good PCM, replace the original PCM.■

11. Disconnect shift solenoid valve C connector.
12. Check for continuity between PCM connector terminals C16 and E3.

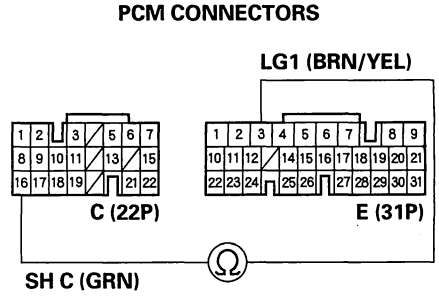

Wire side of female terminals

Is there continuity?

YES—Repair short to ground in the wire between PCM connector terminal C16 and the shift solenoid valve C, then go to step 16.

NO—Go to step 13.

(cont'd)

Protected by AR

DTC Troubleshooting (cont'd)

13. Measure shift solenoid valve C resistance at the solenoid valve connector.

SHIFT SOLENOID VALVE C CONNECTOR

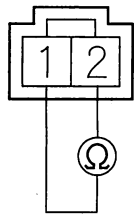

Terminal side of male terminals

Is there 12—25 Ω ?

YES—Go to step 14.

NO—Replace shift solenoid valve C (see page 14-169), then go to step 16.

14. Turn the ignition switch ON (II).

15. Measure the voltage between PCM connector terminals E10 and E3.

PCM CONNECTOR E (31P)

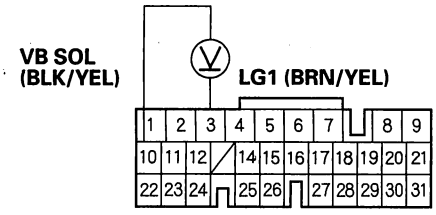

Wire side of female terminals

Is there battery voltage?

YES—Check for loose or poor connections at PCM connector terminal E10. If the connection is OK, update the PCM if it does not have the latest software, or substitute a known-good PCM, refer to the 2003-2006 Accord Service Manual (see page 14-6), then recheck. If the symptom/indication goes away with a known-good PCM, replace the original PCM. ■

NO—Check for blown No. 18 fuse in the under-dash fuse/relay box. If the fuse is OK, repair open in the wire between PCM connector terminal E10 and the under-dash fuse/relay box, then go to step 16.

16. Clear the DTC with the HDS.

17. Test-drive the vehicle for several minutes in the D position through all five gears.

18. Monitor the OBD status for P0979 in the DTCs/ Freeze Data in A/T Mode Menu for a pass/fail.

Does the result indicate PASSED?

YES—Troubleshooting is complete. ■

NO—Return to step 1 and recheck.

BACK

Protected by AR

DTC P0980: Open in Shift Solenoid Valve C Circuit

NOTE:
- Record all freeze data and review General Troubleshooting Information, refer to the 2003-2006 Accord Service Manual (see page 14-3) before you troubleshoot.
- This code is caused by an electrical circuit problem and cannot be caused by a mechanical problem in the transmission.

1. Clear the DTC with the HDS.
2. Test-drive the vehicle for several minutes in the D position through all five gears.
3. Check that DTC P0980 recurs.

   Is DTC P0980 indicated?

   YES—Go to step 7.

   NO—Go to step 4.
4. Choose Shift Solenoid C in Miscellaneous Test Menu, and test the shift solenoid valve C with the HDS.
5. Test-drive the vehicle for several minutes in the D position through all five gears.
6. Monitor the OBD status for P0980 in the DTCs/ Freeze Data in A/T Mode Menu for a pass/fail.

   Does the result indicate FAILED?

   YES—Go to step 7.

   NO—Intermittent failure, the system is OK at this time. Check for poor connections or loose terminals at shift solenoid valve C and PCM. If the tester indicates NOT COMPLETED, return to step 4 and recheck. ■
7. Turn the ignition switch OFF.
8. Jump the SCS line with the HDS.
9. Disconnect PCM connectors B (24P), C (22P), and E (31P).
10. Measure the resistance between PCM connector terminals C16 and E3.

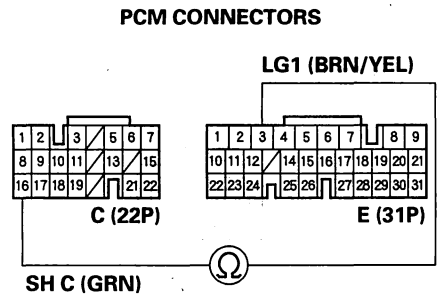

Wire side of female terminals

Is there 12—25 Ω ?

YES—Check for loose or poor connections at PCM connector terminal C16. If the connection is OK, update the PCM if it does not have the latest software, or substitute a known-good PCM, refer to the 2003-2006 Accord Service Manual (see page 14-6), then recheck. If the symptom/indication goes away with a known-good PCM, replace the original PCM. ■

NO—Go to step 11.

(cont'd)

Protected by AR

DTC Troubleshooting (cont'd)

11. Disconnect shift solenoid valve C connector.
12. Measure shift solenoid valve C resistance at the solenoid valve connector.

SHIFT SOLENOID VALVE C CONNECTOR

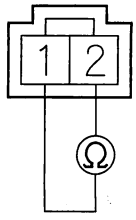

Terminal side of male terminals

Is there 12—25 Ω ?

YES—Go to step 13.

NO—Replace shift solenoid valve C (see page 14-169), then go to step 14.

13. Check for continuity between shift solenoid valve C connector terminal No. 1 and body ground.

SHIFT SOLENOID VALVE C CONNECTOR

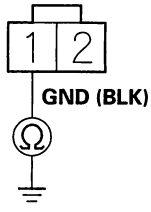

Wire side of female terminals

Is there continuity?

YES—Repair open in the wire between PCM connector terminal C16 and shift solenoid valve C, then go to step 14.

NO—Repair open in the wire between shift solenoid valve C and ground (G151), or repair poor ground (G151), then go to step 14.

14. Clear the DTC with the HDS.
15. Test-drive the vehicle for several minutes in the D position through all five gears.
16. Monitor the OBD status for P0980 in the DTCs/ Freeze Data in A/T Mode Menu for a pass/fail.

Does the result indicate PASSED?

YES—Troubleshooting is complete. ■

NO—Return to step 1 and recheck.

BACK

Protected by AR

DTC P2769: Short in Torque Converter Clutch Solenoid Valve Circuit

NOTE:
- Record all freeze data and review General Troubleshooting Information, refer to the 2003-2006 Accord Service Manual (see page 14-3) before you troubleshoot.
- This code is caused by an electrical circuit problem and cannot be caused by a mechanical problem in the transmission.

1. Clear the DTC with the HDS.
2. Start the engine, and warm it up to normal operating temperature (the radiator fan comes on). Test- drive the vehicle for several minutes in the D position through all five gears.
3. Check that DTC P2769 recurs.

   Is DTC P2769 indicated?

   YES—Go to step 7.

   NO—Go to step 4.
4. Choose Lockup Solenoid Test in Miscellaneous Test Menu, and test the torque converter clutch solenoid valve with the HDS.
5. Start the engine, and warm it up to normal operating temperature (the radiator fan comes on). Test- drive the vehicle for several minutes in the D position through all five gears.
6. Monitor the OBD status for P2769 in the DTCs/ Freeze Data in A/T Mode Menu for a pass/fail.

   Does the result indicate FAILED?

   YES—Go to step 7.

   NO—Intermittent failure, the system is OK at this time. Check the YEL wire for an intermittent short to ground between torque converter clutch solenoid valve and PCM. If the tester indicates NOT COMPLETED, return to step 4 and recheck.■
7. Turn the ignition switch OFF.
8. Jump the SCS line with the HDS.
9. Disconnect PCM connectors B (24P), C (22P), and E (31P).
10. Measure the resistance between PCM connector terminals C6 and E3.

PCM CONNECTORS

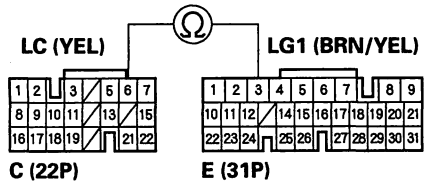

Wire side of female terminals

Is there less than 12 Ω ?

YES—Go to step 11.

NO—Update the PCM if it does not have the latest software, or substitute a known-good PCM, refer to the 2003-2006 Accord Service Manual (see page 14-6), then recheck. If the symptom/indication goes away with a known-good PCM, replace the original PCM.■
11. Disconnect torque converter clutch solenoid valve connector.

(cont'd)

Protected by AR

DTC Troubleshooting (cont'd)

12. Check for continuity between PCM connector terminals C6 and E3.

PCM CONNECTORS

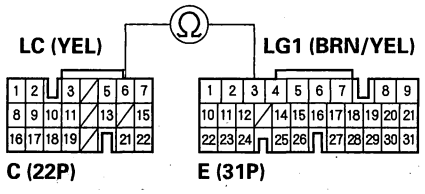

Wire side of female terminals

Is there continuity?

YES—Repair short to ground in the wire between PCM connector terminal C6 and torque converter clutch solenoid valve, then go to step 16.

NO—Go to step 13.

13. Measure torque converter clutch solenoid valve resistance at the solenoid valve connector.

TORQUE CONVERTER CLUTCH SOLENOID VALVE CONNECTOR

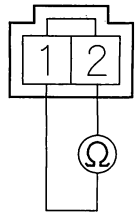

Terminal side of male terminals

Is there 12—25 Ω ?

YES—Go to step 14.

NO—Replace the torque converter clutch solenoid valve (see page 14-171), then go to step 16.

14. Turn the ignition switch ON (II).

15. Measure the voltage between PCM connector terminals E10 and E3.

PCM CONNECTOR E (31P)

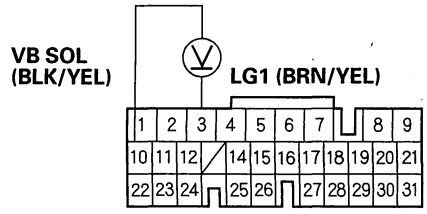

Wire side of female terminals

Is there battery voltage?

YES—Check for loose or poor connections at PCM connector terminal E10. If the connection is OK, update the PCM if it does not have the latest software, or substitute a known-good PCM, refer to the 2003-2006 Accord Service Manual (see page 14-6), then recheck. If the symptom/indication goes away with a known-good PCM, replace the original PCM. ■

NO—Check for blown No. 18 fuse in the under-dash fuse/relay box. If the fuse is OK, repair open in the wire between PCM connector terminal E10 and the under-dash fuse/relay box, then go to step 16.

16. Clear the DTC with the HDS.

17. Start the engine, and warm it to normal operating temperature (the radiator fan comes on). Test-drive the vehicle for several minutes in the D position through all five gears.

18. Monitor the OBD status for P2769 in the DTCs/ Freeze Data in A/T Mode Menu for a pass/fail.

Does the result indicate PASSED?

YES—Troubleshooting is complete. ■

NO—Return to step 1 and recheck.

BACK

Protected by AR

DTC P2770: Open in Torque Converter Clutch Solenoid Valve Circuit

NOTE:
- Record all freeze data and review General Troubleshooting Information, refer to the 2003-2006 Accord Service Manual (see page 14-3) before you troubleshoot.
- This code is caused by an electrical circuit problem and cannot be caused by a mechanical problem in the transmission.

1. Clear the DTC with the HDS.
2. Start the engine, and warm it up to normal operating temperature (the radiator fan comes on). Test- drive the vehicle for several minutes in the D position through all five gears.
3. Check that DTC P2770 recurs.

   Is DTC P2770 indicated?

   YES—Go to step 7.

   NO—Go to step 4.
4. Choose Lockup Solenoid Test in Miscellaneous Test Menu, and test the torque converter clutch solenoid valve with the HDS.
5. Start the engine, and warm it up to normal operating temperature (the radiator fan comes on). Test- drive the vehicle for several minutes in the D position through all five gears.
6. Monitor the OBD status for P2770 in the DTCs/ Freeze Data in A/T Mode Menu for a pass/fail.

   Does the result indicate FAILED?

   YES—Go to step 7.

   NO—Intermittent failure, the system is OK at this time. Check for poor connections or loose terminals at torque converter clutch solenoid valve and PCM. If the tester indicates NOT COMPLETED, return to step 4 and recheck.■
7. Turn the ignition switch OFF.
8. Jump the SCS line with the HDS.
9. Disconnect PCM connectors B (24P), C (22P), and E (31P).
10. easure the resistance between PCM connector terminals C6 and E3.

PCM CONNECTORS

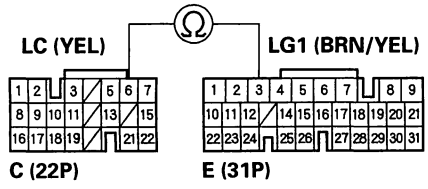

Wire side of female terminals

Is there 12—25 Ω ?

YES—Check for loose or poor connections at PCM connector terminal C6. If the connection is OK, update the PCM if it does not have the latest software, or substitute a known-good PCM, refer to the 2003-2006 Accord Service Manual (see page 14-6), then recheck. If the symptom/indication goes away with a known-good PCM, replace the original PCM.■

NO—Go to step 11.

(cont'd)

Protected by AR

DTC Troubleshooting (cont'd)

11. Disconnect torque converter clutch solenoid valve connector.

12. Measure torque converter clutch solenoid valve resistance at the solenoid valve connector.

TORQUE CONVERTER CLUTCH SOLENOID VALVE CONNECTOR

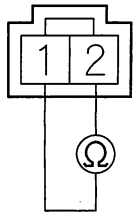

Terminal side of male terminals

Is there 12—25 Ω ?

YES—Go to step 13.

NO—Replace the torque converter clutch solenoid valve (see page 14-171), then go to step 14.

13. Check for continuity between torque converter clutch solenoid valve connector terminal No. 1 and body ground.

TORQUE CONVERTER CLUTCH SOLENOID VALVE CONNECTOR

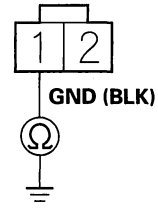

Wire side of female terminals

Is there continuity?

YES—Repair open in the wire between PCM connector terminal C6 and torque converter clutch solenoid valve, then go to step 14.

NO—Repair open in the wire between torque converter clutch solenoid valve and ground (G151), or repair poor ground (G151), then go to step 14.

14. Clear the DTC with the HDS.

15. Start the engine, and warm it to normal operating temperature (the radiator fan comes on). Test-drive the vehicle for several minutes in the D position through all five gears.

16. Monitor the OBD status for P2770 in the DTCs/ Freeze Data in A/T Mode Menu for a pass/fail.

Does the result indicate PASSED?

YES—Troubleshooting is complete. ■

NO—Return to step 1 and recheck.

BACK

Protected by AR

Road Test

1. Warm up the engine to normal operating temperature (the radiator fan comes on).

2. Apply the parking brake, and block both rear wheels. Start the engine, then shift to the D position while pressing the brake pedal. Press the accelerator pedal, and release it suddenly. The engine should not stall.

3. Repeat step 2 in the D3 position.

4. Connect the HDS to the DLC (A), and go to the A/T data list.

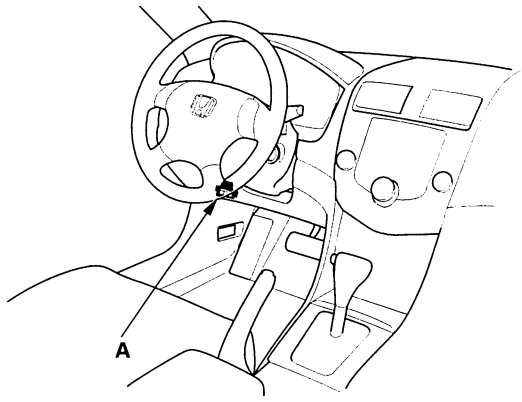

5. Test-drive the vehicle on a flat road in the D position. Check for abnormal noise and clutch slippage. While driving, check that the shift points occur at the proper speeds by monitoring the accelerator pedal position sensor voltage with the HDS and comparing your shift point speeds and voltage to those in the table. (The accelerator pedal position sensor voltage represents the throttle opening.)

Upshift: D position

Accelerator pedal position sensor voltage: 1.02 V	
1st → 2nd	9—12 mph (14—19 km/h)
2nd → 3rd	19—22 mph (30—35 km/h)
3rd → 4th	30—34 mph (48—54 km/h)
4th → 5th	45—50 mph (73—81 km/h)
Lock-up ON	41—48 mph (66—78 km/h)
Accelerator pedal position sensor voltage: 2.58 V	
1st → 2nd	23—27 mph (37—44 km/h)
2nd → 3rd	42—47 mph (67—75 km/h)
3rd → 4th	63—69 mph (101—111 km/h)
4th → 5th	90—100 mph (145—161 km/h)
Lock-up ON	91—101 mph (147—163 km/h)
Fully-opened throttle Accelerator pedal position sensor voltage: 4.65 V	
1st → 2nd	35—40 mph (57—65 km/h)
2nd → 3rd	60—68 mph (96—109 km/h)
3rd → 4th	94—105 mph (151—169 km/h)
4th → 5th	———
Lock-up ON	122—134 mph (196—216 km/h)

(cont'd)

BACK

Protected by AR

Road Test (cont'd)

Downshift: D position

Accelerator pedal position sensor voltage: 1.02 V	
Lock-up OFF	40—47 mph (65—75 km/h)
5th → 4th	29—34 mph (46—54 km/h)
4th → 3rd	17—19 mph (27—31 km/h)
3rd → 1st	6—9 mph (10—15 km/h)
Accelerator pedal position sensor voltage: 2.58 V	
Lock-up OFF	76—86 mph (123—138 km/h)
Fully-opened throttle Accelerator pedal position sensor voltage: 4.65 V	
Lock-up OFF	107—117 mph (172—188 km/h)
5th → 4th	134—146 mph (215—235 km/h)
4th → 3rd	83—93 mph (134—150 km/h)
3rd → 2nd	52—58 mph (84—93 km/h)
2nd → 1st	27—30 mph (43—49 km/h)

6. Accelerate to about 35 mph (57 km/h) so the transmission is in 4th or 5th, then shift from the D position to the 2 position. The vehicle should immediately begin slowing down from engine braking.

7. Check for abnormal noise and clutch slippage in the following positions.

   1 (1st Gear) Position
   Accelerate from a stop at full throttle. Check that there is no abnormal noise or clutch slippage. Upshifts should not occur with the shift lever in this position.

   2 (2nd Gear) Position
   Accelerate from a stop at full throttle. Check that there is no abnormal noise or clutch slippage. Upshifts and downshifts should not occur with the shift lever in this position.

   R (Reverse) Position
   Accelerate from a stop at full throttle, and check for abnormal noise and clutch slippage.

8. Test in P (Park) Position.
   Park the vehicle on a slope (about 16 °), apply the brake, and shift into the P position. Release the brake; the vehicle should not move.

   NOTE: Always use the brake to hold the vehicle, when stopped on an incline in gear. Depending on the grade of the incline, the vehicle could roll backwards if the brake is released.

BACK

Protected by AR

Stall Speed Test

1. Make sure the transmission fluid is filled to the proper level (see page 14-185).
2. Apply the parking brake, and block all four wheels.
3. Connect the HDS to the DLC (A), and go to the A/T data list.

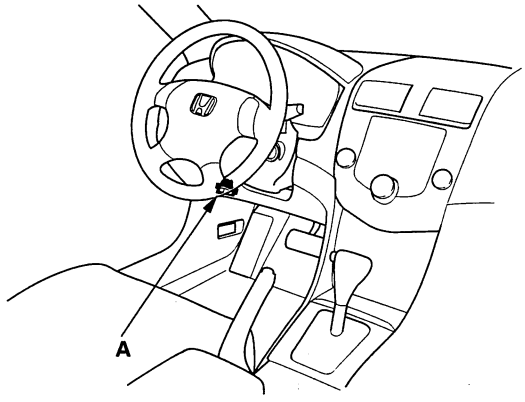

4. Make sure the A/C switch is OFF.
5. After the engine has warmed up to normal operating temperature (the radiator fan comes on), shift to the 2 position.
6. Firmly press the brake pedal and accelerator pedal for 6 to 8 seconds, and note the engine speed. Do not move the shift lever while raising the engine speed.
7. Allow 2 minutes for cooling, then repeat the test in the D, 1, and R positions.

   NOTE:
   - Do not test stall speed for more than 10 seconds at a time.
   - Stall speed tests should be used for diagnostic purposes only.
   - Stall speed should be the same in D, 2, 1, and R positions.
   - Do not test stall speed with the A/T pressure gauges installed.

   Stall Speed rpm:
   Specification: 2,000 rpm
   Service Limit: 1,850—2,150 rpm

8. If the measurements are out of the service limit, problems and probable causes are listed in the table.

Problem	Probable causes
Stall speed rpm high in the D, 2, 1, and R positions	• ATF pump output low • Clogged ATF strainer • Regulator valve stuck • Slipping clutch
Stall speed rpm high in the 1 position	Slippage of 1st clutch or 1st gear one-way clutch defective
Stall speed rpm high in the 2 position	Slippage of 2nd clutch
Stall speed rpm high in the R position	Slippage of 5th clutch
Stall speed low in the D, 2, 1, and R positions	• Engine output low • Engine throttle valve closed • Torque converter one-way clutch slipping

Protected by AR

Pressure Test

Special Tools Required
- A/T clutch pressure gauge set 07406-0020400 or 07406-0020401
- A/T pressure hose, 2,210 mm 07MAJ-PY4011A
- A/T pressure hose adapter 07MAJ-PY40120

1. Make sure the transmission fluid is filled to the proper level (see page 14-185).
2. Lift the vehicle up on a hoist or apply the parking brake, block rear wheels, and raise the front of the vehicle. Make sure it is securely supported.
3. Remove the splash shield.
4. Allow the front wheels to rotate freely.
5. Connect the oil pressure gauges to the line pressure inspection port (A), 2nd clutch pressure inspection port (B), and 1st-hold clutch pressure inspection port (C). Do not allow dust or other foreign particles to enter the holes while connecting the gauges.

A/T OIL PRESSURE GAUGE SET W/PANEL 07406-0020400 or 07406-0020401

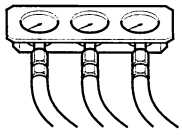

A/T PRESSURE HOSE, 2,210 mm 07MAJ-PY4011A (3 Required)

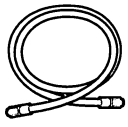

A/T PRESSURE HOSE ADAPTER 07MAJ-PY40120 (3 Required)

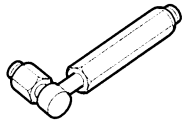

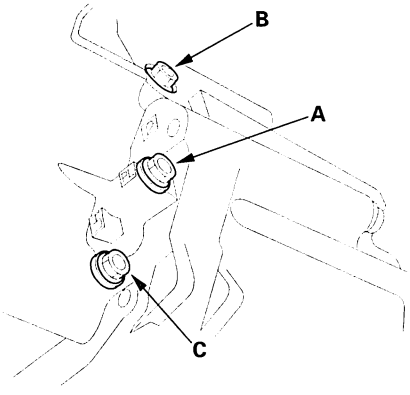

6. Connect the oil pressure gauges to the 3rd clutch pressure inspection port (D), 4th clutch pressure inspection port (E), and 5th clutch pressure inspection port (F).

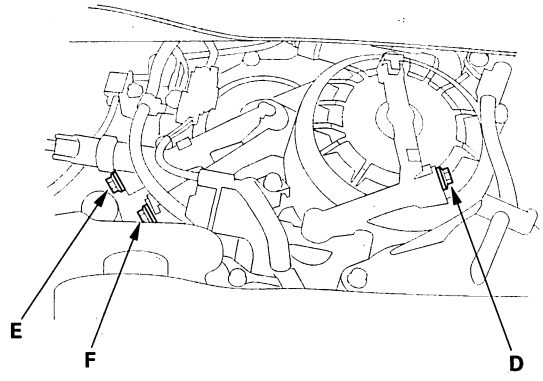

7. Connect the oil pressure gauge to the 1st clutch pressure inspection port (G).

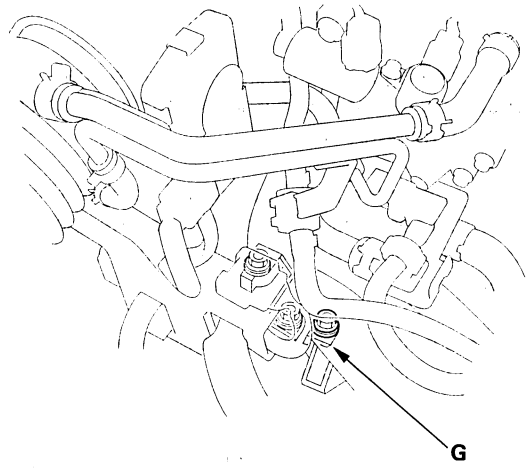

8. Warm up the engine (the radiator fan comes on), then stop it and connect the HDS to the DLC.

BACK

Protected by AR

9. Start the engine, and run it at 2,000 rpm in the P or N position.

10. Measure the line pressure at the line pressure inspection port (A).

    NOTE: Higher pressure may be indicated if measurements are made in shift lever position other than N or P.

Pressure	Fluid Pressure	
	Standard	Service Limit
Line (A)	900—960 kPa (9.2—9.8 kgf/cm², 130—140 psi)	850 kPa (8.7 kgf/cm², 120 psi)

11. Shift to the 1 position, and measure the 1st clutch pressure at the 1st clutch pressure inspection port (G) and 1st-hold clutch pressure at the 1st-hold clutch pressure inspection port (C).

12. Shift to the 2 position, and measure the 2nd clutch pressure at the 2nd clutch pressure inspection port (B).

13. Shift to the P position, then press the brake pedal and hold it.

14. Shift to the D3 position, press the accelerator pedal to increase the engine speed to 2,500 rpm; the transmission shifts into 2nd gear.

15. Release the accelerator pedal; the engine speed decreases to 1,000 rpm with the transmission in 2nd gear.

16. Press the accelerator pedal very slowly so that the engine speed increases to 2,000 rpm on 5 seconds, then hold the accelerator; the transmission shifts into 3rd gear. Measure the 3rd clutch pressure at the 3rd clutch pressure inspection port (D) while holding the engine speed at 2,000 rpm.

17. Shift to the D position, and measure the 4th clutch pressure at the 4th clutch pressure inspection port (E) while holding the engine speed at 2,000 rpm, then in about 15 seconds, the transmission will shift to 5th gear.

18. Measure the 5th clutch pressure at the 5th clutch pressure inspection port (F) while holding the engine speed 2,000 rpm.

19. Bring the engine back to an idle, then apply the brake to stop the wheels from rotating.

20. Shift to the R position. Raise the engine rpm to 2,000 rpm, and measure the reverse clutch pressure at the 5th clutch pressure inspection port (F).

Pressure	Fluid Pressure	
	Standard	Service Limit
1st-hold clutch (C)	760—830 kPa (7.7—8.5 kgf/cm², 110—120 psi)	710 kPa (7.2 kgf/cm², 100 psi)
1st clutch (G)	890—970 kPa (9.1—9.9 kgf/cm², 130—140 psi)	840 kPa (8.6 kgf/cm², 120 psi)
2nd clutch (B)		
3rd clutch (D)		
4th clutch (E)		
5th clutch (F)		

21. If the measurements are out of service limit, problems and probable causes are listed in the table.

Problem	Probable causes
No or low line pressure	• Torque converter • ATF pump • Regulator valve • Torque converter check valve
No or low 1st clutch pressure	• 1st clutch • O-rings
No or low 2nd clutch pressure	• 2nd clutch • O-rings
No or low 3rd clutch pressure	• 3rd clutch • O-rings
No or low 4th clutch pressure	• 4th clutch • O-rings
No or low 5th clutch pressure	• 5th clutch • O-rings
No or low 5th clutch pressure in the R position	• Servo valve • 5th clutch • O-rings

22. Install the sealing bolts with the new sealing washers, and tighten the bolts to the specified torque. Do not reuse old sealing washers.

    Torque: 18 N·m (1.8 kgf·m,13 lbf·ft)

23. Install the splash shield.

Protected by AR

Shift Solenoid Valve A Test

1. Connect the HDS to the DLC (A).

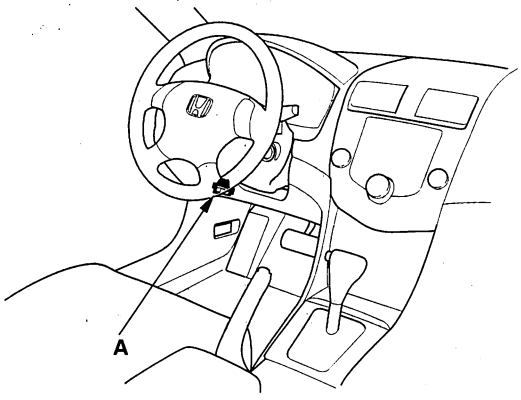

2. Choose Shift Solenoid A in Miscellaneous Test Menu on the HDS.
3. Check that the shift solenoid valve A operates with the HDS. A clicking sound should be heard.
   - If a clicking sound is heard, the valve is OK.
   - If no clicking sound is heard, go to step 4.
4. Get the audio and navigation anti-theft codes, and write down the audio presets.
5. Disconnect the negative cable from the battery, then disconnect the positive cable from the battery.
6. Remove the battery hold-down bracket, then remove the battery cover, battery, and battery tray.
7. Remove the intake air duct and air cleaner housing.
8. Loosen the two bolts securing the battery base from under the vehicle, and remove the two bolts securing the battery base in the engine compartment, then remove the battery base.
9. Remove the starter.
10. Disconnect shift solenoid valve A connector.

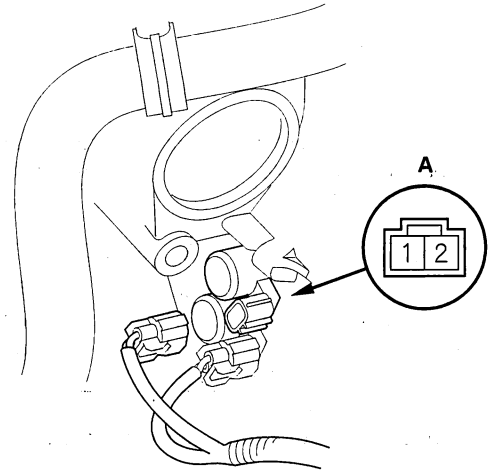

11. Measure shift solenoid valve A resistance at the solenoid valve connector terminals.

    Standard: 12—25 Ω

12. Replace shift solenoid valve A if the resistance is out of standard (see page 14-165).
13. If the resistance is within the standard, connect the battery negative terminal to shift solenoid valve A connector terminal No. 1, and connect the battery positive terminal to the terminal No. 2.
    - If a clicking sound is heard, the valve is OK.
    - If no clicking sound is heard, replace shift solenoid valve A (see page 14-165).
14. Install the starter.
15. Install the battery base, then install the air cleaner housing and intake air duct.
16. Install the battery tray, battery, and battery cover, then secure the battery with its hold-down bracket.
17. Clean the battery posts and cable terminals with sandpaper, then assemble them and apply grease to prevent corrosion.
18. Enter the audio and navigation anti-theft codes, then enter the presets, and set the clock.
19. Do the power window control unit reset procedure, refer to the 2003-2006 Accord Service Manual (see page 22-232).

BACK

Protected by AR

Shift Solenoid Valve A Replacement

1. Get the audio and navigation anti-theft codes, and write down the audio presets.
2. Disconnect the negative cable from the battery, then disconnect the positive cable from the battery.
3. Remove the battery hold-down bracket, then remove the battery cover, battery, and battery tray.
4. Remove the intake air duct and air cleaner housing.
5. Loosen the two bolts securing the battery base from under the vehicle, and remove the two bolts securing the battery base in the engine compartment, then remove the battery base.
6. Remove the starter.
7. Disconnect shift solenoid valve A connector, and remove shift solenoid valve A .

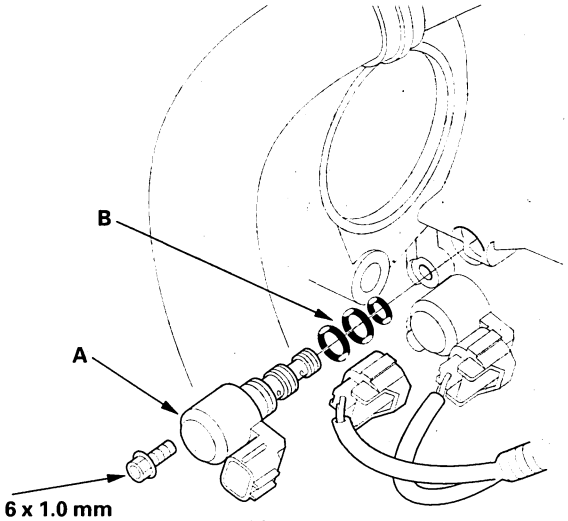

8. Install a new shift solenoid valve A with new O-rings (B). While installing the solenoid valve, do not allow dust or other foreign particles to enter the transmission.
9. Check the connector for rust, dirt, or oil, then connect the connector.
10. Install the starter.
11. Install the battery base, then install the air cleaner housing and intake air duct.
12. Install the battery tray, battery, and battery cover, then secure the battery with its hold-down bracket.
13. Clean the battery posts and cable terminals with sandpaper, then assemble them and apply grease to prevent corrosion.
14. Enter the audio and navigation anti-theft codes, then enter the presets, and set the clock.
15. Do the power window control unit reset procedure, refer to the 2003-2006 Accord Service Manual (see page 22-232).

Protected by AR

Shift Solenoid Valve B Test

1. Connect the HDS to the DLC (A).

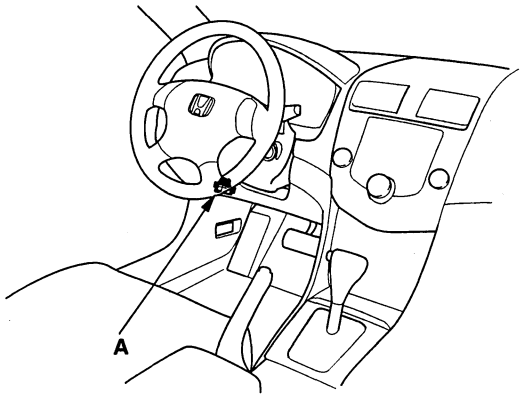

2. Choose Shift Solenoid B in Miscellaneous Test Menu on the HDS.
3. Check that the shift solenoid valve B operates with the HDS. A clicking sound should be heard.
   - If a clicking sound is heard, the valve is OK.
   - If no clicking sound is heard, go to step 4.
4. Remove the intake air duct and air cleaner housing.
5. Disconnect shift solenoid valve B connector.

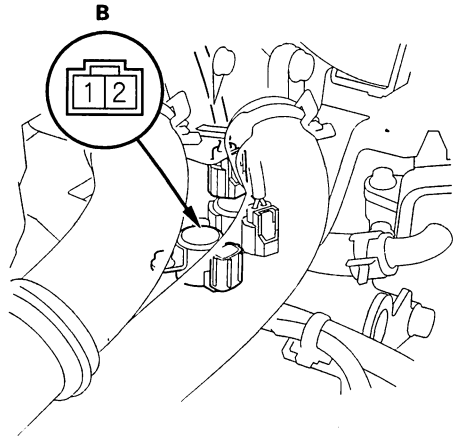

6. Measure shift solenoid valve B resistance at the solenoid valve connector terminals.

   Standard: 12—25 Ω
7. Replace shift solenoid valve B if the resistance is out of standard (see page 14-167).
8. If the resistance is within the standard, connect the battery negative terminal to shift solenoid valve B connector terminal No. 1, and connect the battery positive terminal to the terminal No. 2.
   - If a clicking sound is heard, the valve is OK.
   - If no clicking sound is heard, replace shift solenoid valve B (see page 14-167).
9. Install the air cleaner housing and intake air duct.

BACK

Protected by AR

Shift Solenoid Valve B Replacement

1. Remove the intake air duct and air cleaner housing.
2. Disconnect shift solenoid valve B connector, and remove shift solenoid valve B .

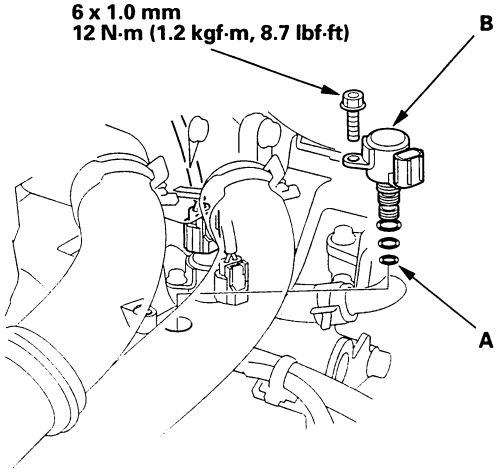

3. Install a new shift solenoid valve B with new O-rings (A). While installing the solenoid valve, do not allow dust or other foreign particles to enter the transmission.
4. Check the connector for rust, dirt, or oil, then connect the connector.
5. Install the air cleaner housing and intake air duct.

Protected by AR

Shift Solenoid Valve C Test

1. Connect the HDS to the DLC (A).

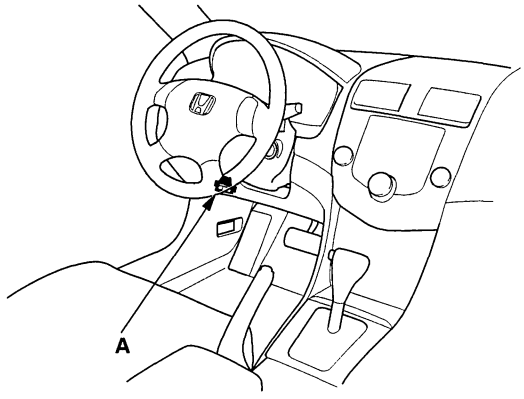

2. Choose Shift Solenoid C in Miscellaneous Test Menu on the HDS.
3. Check that the shift solenoid valve C operates with the HDS. A clicking sound should be heard.
   - If a clicking sound is heard, the valve is OK.
   - If no clicking sound is heard, go to step 4.
4. Get the audio and navigation anti-theft codes, and write down the audio presets.
5. Disconnect the negative cable from the battery, then disconnect the positive cable from the battery.
6. Remove the battery hold-down bracket, then remove the battery cover, battery, and battery tray.
7. Remove the intake air duct and air cleaner housing.
8. Loosen the two bolts securing the battery base from under the vehicle, and remove the two bolts securing the battery base in the engine compartment, then remove the battery base.
9. Disconnect shift solenoid valve C connector.

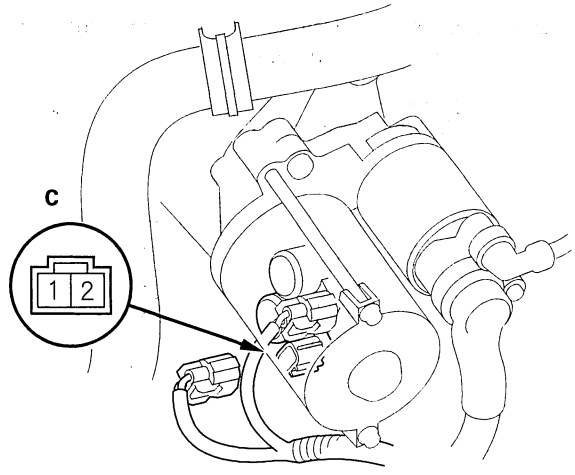

10. Measure shift solenoid valve C resistance at the solenoid valve connector terminals.

    Standard: 12—25 Ω
11. Replace shift solenoid valve C if the resistance is out of standard (see page 14-169).
12. If the resistance is within the standard, connect the battery negative terminal to shift solenoid valve C connector terminal No. 1, and connect the battery positive terminal to the terminal No. 2.
    - If a clicking sound is heard, the valve is OK.
    - If no clicking sound is heard, replace shift solenoid valve C (see page 14-169).
13. Install the battery base, then install the air cleaner housing and intake air duct.
14. Install the battery tray, battery, and battery cover, then secure the battery with its hold-down bracket.
15. Clean the battery posts and cable terminals with sandpaper, then assemble them and apply grease to prevent corrosion.
16. Enter the audio and navigation anti-theft codes, then enter the presets, and set the clock.
17. Do the power window control unit reset procedure, refer to the 2003-2006 Accord Service Manual (see page 22-232).

BACK

Protected by AR

Shift Solenoid Valve C Replacement

1. Get the audio and navigation anti-theft codes, and write down the audio presets.
2. Disconnect the negative cable from the battery, then disconnect the positive cable from the battery.
3. Remove the battery hold-down bracket, then remove the battery cover, battery, and battery tray.
4. Remove the intake air duct and air cleaner housing.
5. Loosen the two bolts securing the battery base from under the vehicle, and remove the two bolts securing the battery base in the engine compartment, then remove the battery base.
6. Disconnect shift solenoid valve C connector, and remove shift solenoid valve C .

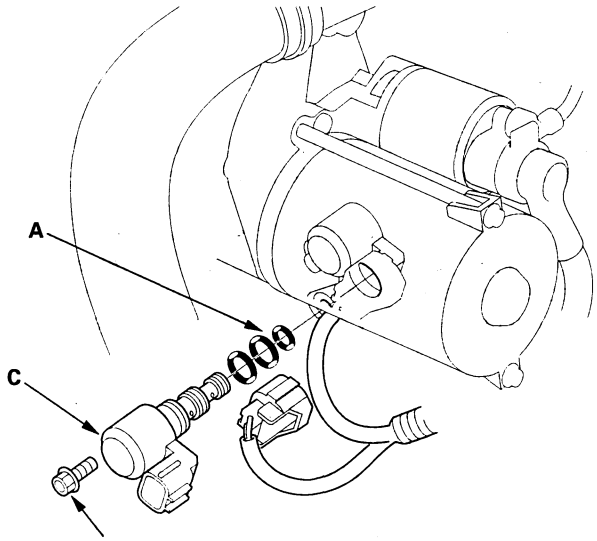

7. Install a new shift solenoid valve C with new O-rings (A). While installing the solenoid valve, do not allow dust or other foreign particles to enter the transmission.
8. Check the connector for rust, dirt, or oil, then connect the connector.
9. Install the battery base, then install the air cleaner housing and intake air duct.
10. Install the battery tray, battery, and battery cover, then secure the battery with its hold-down bracket.
11. Clean the battery posts and cable terminals with sandpaper, then assemble them and apply grease to prevent corrosion.
12. Enter the audio and navigation anti-theft codes, then enter the presets, and set the clock.
13. Do the power window control unit reset procedure, refer to the 2003-2006 Accord Service Manual (see page 22-232).

Protected by AR

Torque Converter Clutch Solenoid Valve Test

1. Connect the HDS to the DLC (A).

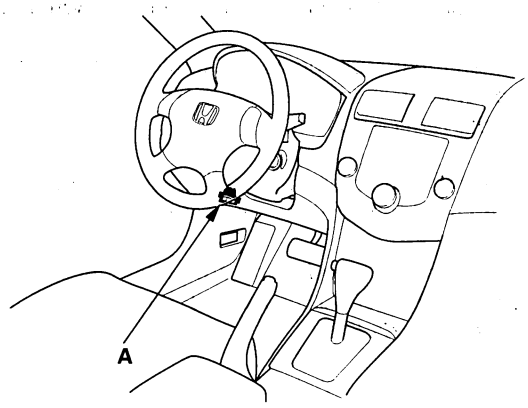

2. Choose Lock up Solenoid Test in Miscellaneous Test Menu on the HDS.

3. Check that the torque converter clutch solenoid valve operates with the HDS. A clicking sound should be heard.

   - If a clicking sound is heard, the valve is OK.
   - If no clicking sound is heard, go to step 4.

4. Remove the intake air duct and air cleaner housing.

5. Disconnect torque converter clutch solenoid valve connector.

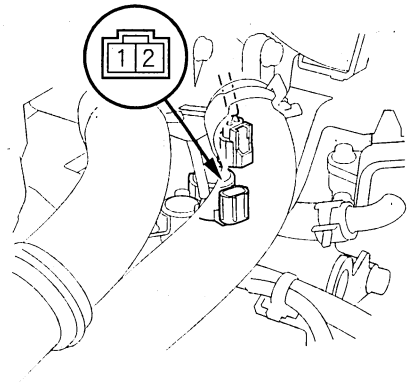

6. Measure torque converter clutch solenoid valve resistance at the solenoid valve connector terminals.

   Standard: 12—25 Ω

7. Replace torque converter clutch solenoid valve if no resistance is out of standard (see page 14-171).

8. If the resistance is within the standard, connect the battery negative terminal to torque converter clutch solenoid valve connector terminal No. 1, and connect the battery positive terminal to the terminal No. 2.

   - If a clicking sound is heard, the valve is OK.
   - If no clicking sound is heard, replace the torque converter clutch solenoid valve (see page 14-171).

9. Install the air cleaner housing and intake air duct.

BACK

Protected by AR

Torque Converter Clutch Solenoid Valve Replacement

1. Remove the intake air duct and air cleaner housing.
2. Disconnect torque converter clutch solenoid valve connector, and remove torque converter clutch solenoid valve (A).

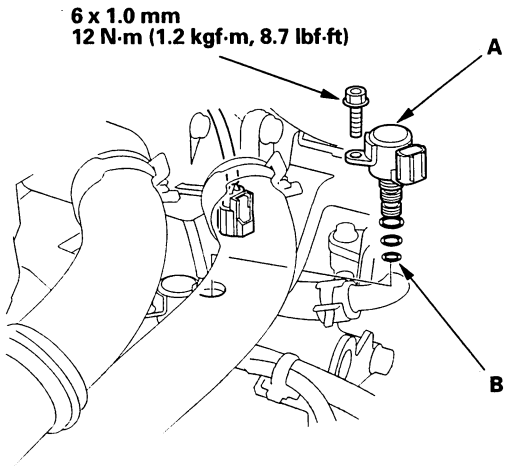

3. Install a new torque converter clutch solenoid valve with new O-rings (B). While installing the solenoid valve, do not allow dust or other foreign particles to enter the transmission.
4. Check connector for rust, dirt, or oil, then connect the connector.
5. Install the air cleaner housing and intake air duct.

Protected by AR

A/T Clutch Pressure Control Solenoid Valve A and B Test

1. Connect the HDS to the DLC (A).

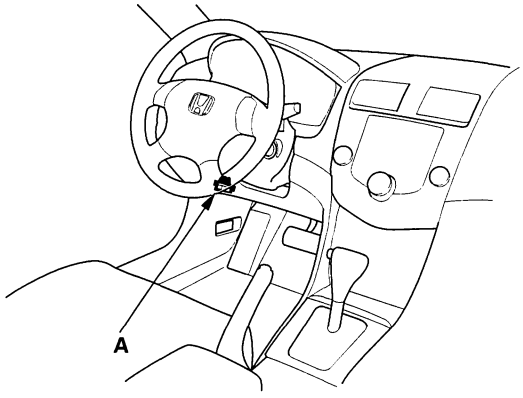

2. Choose Clutch Pressure Control (Linear) Solenoid A and B in *Miscellaneous* Test Menu on the HDS.
3. Test the A/T clutch pressure control solenoid valve A and B with the HDS.
4. Follow instructions on the HDS.
   - If the test results are OK, the valves are OK.
   - If the test results are not OK, go to step 5.
5. Get the audio and navigation anti-theft codes, and write down the audio presets.
6. Disconnect the negative cable from the battery, then disconnect the positive cable from the battery.
7. Remove the battery hold-down bracket, then remove the battery cover, battery, and battery tray.
8. Remove the intake air duct and air cleaner housing.
9. Loosen the two bolts securing the battery base from under the vehicle, and remove the two bolts securing the battery base in the engine compartment, then remove the battery base.
10. Disconnect A/T clutch pressure control solenoid valve A connector and solenoid valve B connector.

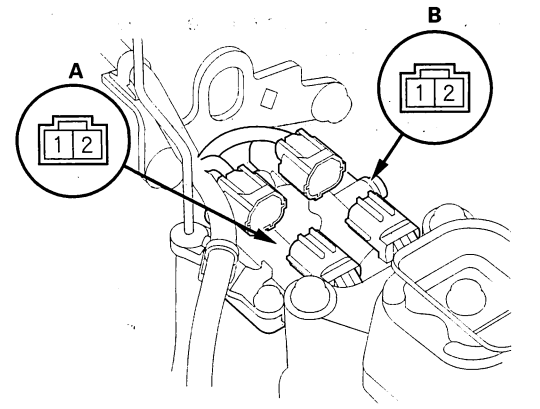

11. Measure A/T clutch pressure control solenoid valve A and B resistances at each solenoid valve connector.

    Standard: 3—10 Ω
12. If the resistance of either solenoid valve is out of standard, replace A/T clutch pressure control solenoid valve A and B (see page 14-175).
13. If the resistance is within the standard, connect the battery negative terminal to A/T clutch pressure control solenoid valve A and B connector terminal No. 2, and connect the battery positive terminal to the terminal No. 1.
    - If a clicking sound is heard, go to step 24.
    - If no clicking sound is heard, go to step 14 and remove A/T clutch pressure control solenoid valve.

BACK

Protected by AR

14. Remove the transmission upper mount bracket (A) and bracket plate (B).

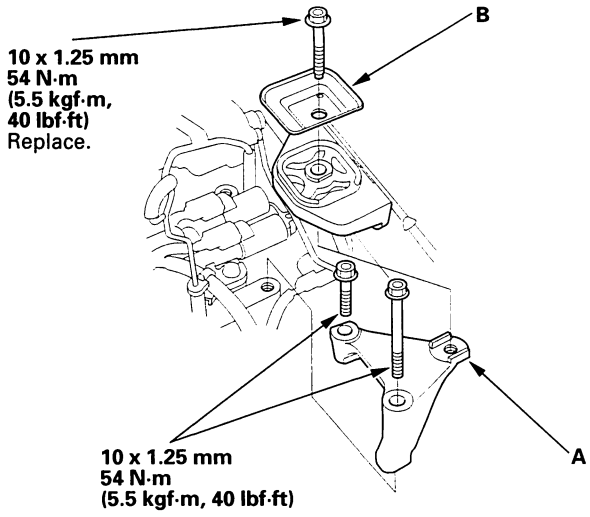

15. Remove the harness clamp (C) from the clamp bracket (D), and remove A/T clutch pressure control solenoid valve A and B.

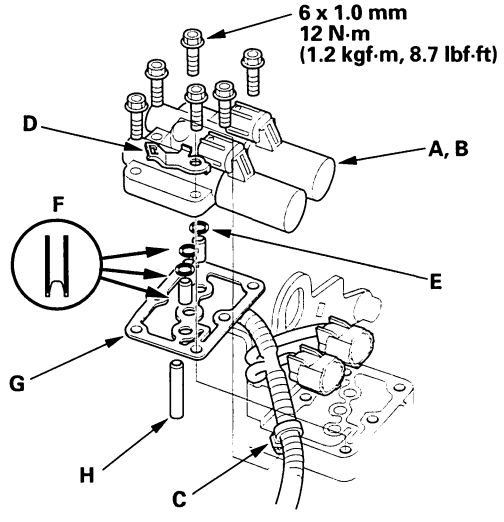

16. Remove the O-rings (E), 8 x 18 mm ATF feed pipes (F), gasket (G), and 8 x 40 mm ATF feed pipe (H).

17. Connect the battery negative terminal to A/T clutch pressure control solenoid valve A and B connector terminal No. 2, and connect the battery positive terminal to the terminal No. 1. Make sure A/T clutch pressure control solenoid valve A and B move.

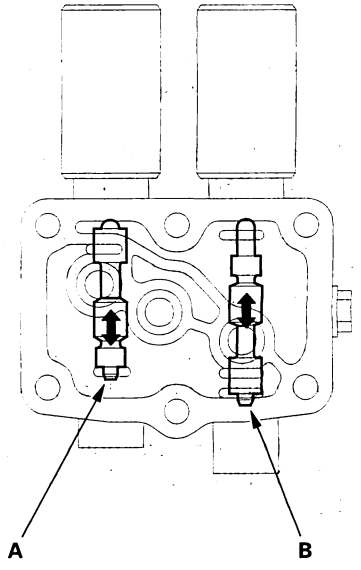

18. Disconnect one of the battery terminals and check valve movement at the fluid passage in valve body mounting surface.

19. If either valve binds or moves sluggishly, or if the solenoid valve does not operate, replace A/T clutch pressure control solenoid valve A and B (see page 14-175).

20. Check the fluid passage of the A/T clutch pressure control solenoid valve for dust and dirt, and clean the passage if necessary.

21. Place a new gasket on the transmission housing, then install the 8 x 18 mm ATF feed pipes with their filter side into the transmission housing.

22. Install new O-rings over the feed pipes, and install the 8 x 40 mm ATF feed pipe.

23. Install the new A/T clutch pressure control solenoid valve A and B, and harness clamp.

(cont'd)

Protected by AR

A/T Clutch Pressure Control Solenoid Valve A and B Test (cont'd)

24. Check the A/T clutch pressure control solenoid valve A and B connectors for rust, dirt, or oil, then connect them securely.
25. Install the transmission upper mount bracket and bracket plate.
26. Install the battery base, then install the air cleaner housing and intake air duct.
27. Install the battery tray, battery, and battery cover, then secure the battery with its hold-down bracket.
28. Clean the battery posts and cable terminals with sandpaper, then assemble them and apply grease to prevent corrosion.
29. Enter the audio and navigation anti-theft codes, then enter the presets, and set the clock.
30. Do the power window control unit reset procedure, refer to the 2003-2006 Accord Service Manual (see page 22-232).

BACK

Protected by AR

A/T Clutch Pressure Control Solenoid Valve A and B Replacement

1. Get the audio and navigation anti-theft codes, and write down the audio presets.
2. Disconnect the negative cable from the battery, then disconnect the positive cable from the battery.
3. Remove the battery hold-down bracket, then remove the battery cover, battery, and battery tray.
4. Remove the intake air duct and air cleaner housing.
5. Loosen the two bolts securing the battery base from under the vehicle, and remove the two bolts securing the battery base in the engine compartment, then remove the battery base.
6. Remove the transmission upper mount bracket (A) and bracket plate (B).

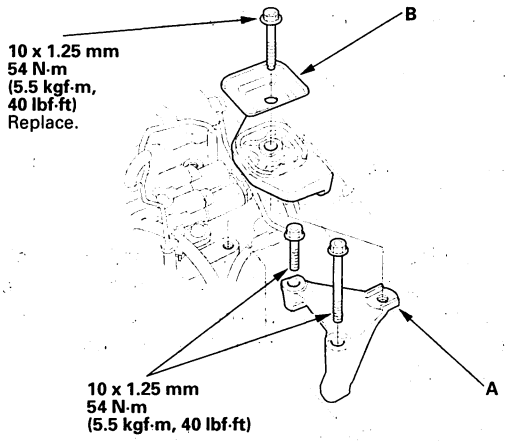

7. Remove the harness clamp (C) from the clamp bracket (D), and disconnect A/T clutch pressure control solenoid valve A and B connectors.

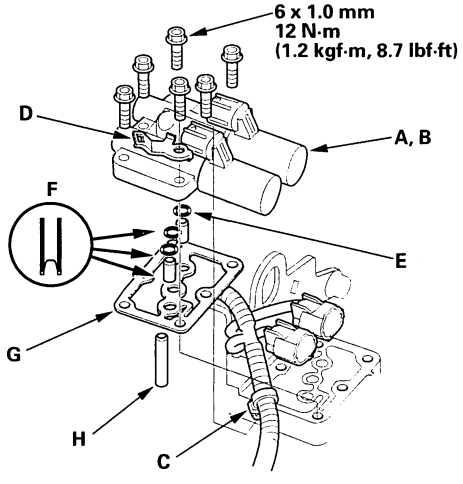

8. Remove A/T clutch pressure control solenoid valve A and B, O-rings (E), 8 x 8 mm ATF feed pipes (F), gasket (G), and 8 x 40 mm ATF feed pipe (H).
9. Place a new gasket on the transmission housing, then install the 8 x 18 mm ATF feed pipes with their filter side into the transmission housing.
10. Install new O-rings over the feed pipes, and install the 8 x 40 mm ATF feed pipe.
11. Install the new A/T clutch pressure control solenoid valve A and B, and harness clamp.
12. Check the A/T clutch pressure control solenoid valve A and B connectors for rust, dirt, or oil, then connect them securely.
13. Install the transmission upper mount bracket and bracket plate.
14. Install the battery base, then install the air cleaner housing and intake air duct.
15. Install the battery tray, battery, and battery cover, then secure the battery with its hold-down bracket.
16. Clean the battery posts and cable terminals with sandpaper, then assemble them and apply grease to prevent corrosion.
17. Enter the audio and navigation anti-theft codes, then enter the presets, and set the clock.
18. Do the power window control unit reset procedure, refer to the 2003-2006 Accord Service Manual (see page 22-232).

Protected by AR

A/T Clutch Pressure Control Solenoid Valve C Test

1. Connect the HDS to the DLC (A).

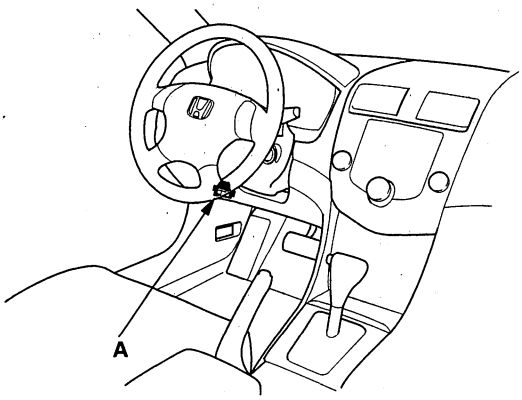

2. Choose Clutch Pressure Control (Linear) Solenoid C in Miscellaneous Test Menu on the HDS.
3. Test the A/T clutch pressure control solenoid C with the HDS.
4. Follow instructions on the HDS.
   - If the test result is OK, the valve is OK.
   - If the test result is not OK, go to step 5.
5. Get the audio and navigation anti-theft codes, and write down the audio presets.
6. Disconnect the negative cable from the battery, then disconnect the positive cable from the battery.
7. Remove the battery hold-down bracket, then remove the battery cover, battery, and battery tray.
8. Remove the intake air duct and air cleaner housing.
9. Loosen the two bolts securing the battery base from under the vehicle, and remove the two bolts securing the battery base in the engine compartment, then remove the battery base.
10. Disconnect A/T clutch pressure control solenoid valve C connector.

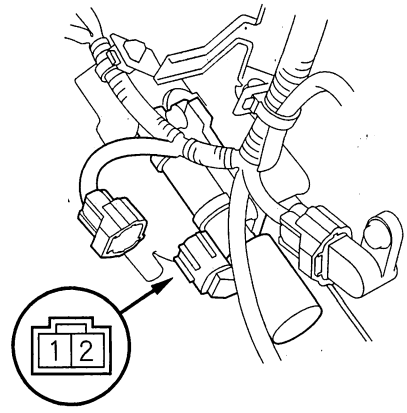

11. Measure A/T clutch pressure control solenoid valve C resistance at the solenoid valve connector.

    Standard: 3—10 Ω

12. If the resistance of the solenoid valve is out of standard, replace A/T clutch pressure control solenoid valve C (see page 14-178).
13. If the resistance is within the standard, connect the battery negative terminal to A/T clutch pressure control solenoid valve C connector terminal No. 2, and connect the battery positive terminal to the terminal No. 1.
    - If a clicking sound is heard, go to step 22.
    - If no clicking sound is heard, go to step 14 and remove A/T clutch pressure control solenoid valve.

BACK

Protected by AR

14. Remove A/T clutch pressure control solenoid valve C.

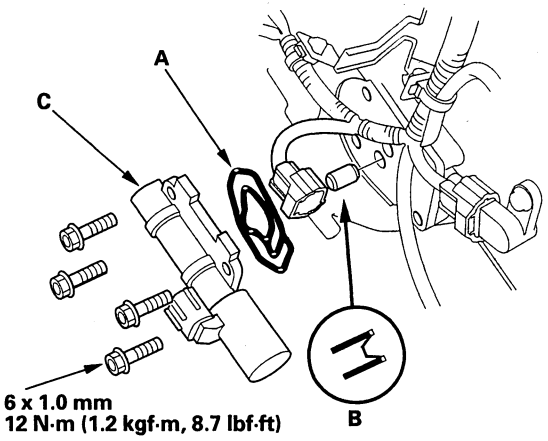

15. Remove the gasket (A) and 8 x 12 mm ATF feed pipe (B).

16. Connect the battery negative terminal to A/T clutch pressure control solenoid valve C connector terminal No. 2, and connect the battery positive terminal to the terminal No. 1. Make sure A/T clutch pressure control solenoid valve C moves.

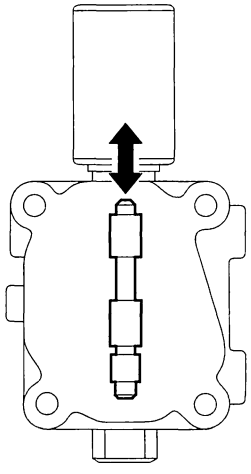

17. Disconnect one of the battery terminals and check valve movement at the fluid passage in valve body mounting surface.

18. If the valve binds or moves sluggishly, or if the solenoid valve does not operate, replace A/T clutch pressure control solenoid valve C (see page 14-178).

19. Check the fluid passage of the A/T clutch pressure control solenoid valve for dust and dirt, and clean the passage if necessary.

20. Install the 8 x 12 mm ATF feed pipe with its filter side into the transmission housing.

21. Install the new gasket in the mounting groove of the A/T clutch pressure control solenoid valve C body properly, then install A/T clutch pressure control solenoid valve C on the transmission housing. Do not pinch the gasket.

22. Check the A/T clutch pressure control solenoid valve C connector for rust, dirt, or oil, then connect it securely.

23. Install the battery base, then install the air cleaner housing and intake air duct.

24. Install the battery tray, battery, and battery cover, then secure the battery with its hold-down bracket.

25. Clean the battery posts and cable terminals with sandpaper, then assemble them and apply grease to prevent corrosion.

26. Enter the audio and navigation anti-theft codes, then enter the presets, and set the clock.

27. Do the power window control unit reset procedure, refer to the 2003-2006 Accord Service Manual (see page 22-232).

Protected by AR

A/T Clutch Pressure Control Solenoid Valve C Replacement

1. Get the audio and navigation anti-theft codes, and write down the audio presets.
2. Disconnect the negative cable from the battery, then disconnect the positive cable from the battery.
3. Remove the battery hold-down bracket, then remove the battery cover, battery, and battery tray.
4. Remove the intake air duct and air cleaner housing.
5. Loosen the two bolts securing the battery base from under the vehicle, and remove the two bolts securing the battery base in the engine compartment, then remove the battery base.
6. Disconnect A/T clutch pressure control solenoid valve C connector.
7. Remove A/T clutch pressure control solenoid valve C.

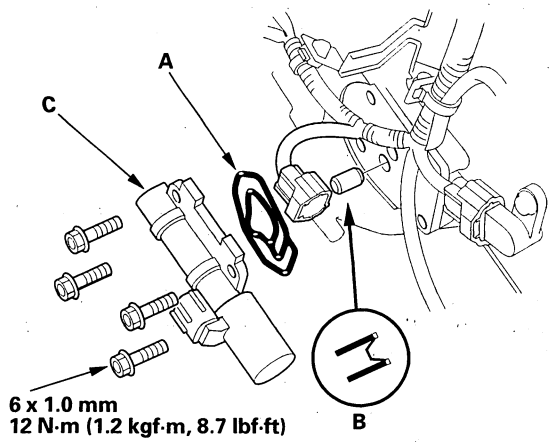

8. Remove the gasket (A) and 8 x 12 mm ATF feed pipe (B).
9. Check the fluid passage of the A/T clutch pressure control solenoid valve for dust and dirt, and clean the passage if necessary.
10. Install the 8 x 12 mm ATF feed pipe with its filter side into the transmission housing.
11. Install the new gasket in the mounting groove of the A/T clutch pressure control solenoid valve C body properly, then install A/T clutch pressure control solenoid valve C on the transmission housing. Do not pinch the gasket.
12. Check the A/T clutch pressure control solenoid valve C connector for rust, dirt, or oil, then connect it securely.
13. Install the battery base, then install the air cleaner housing and intake air duct.
14. Install the battery tray, battery, and battery cover, then secure the battery with its hold-down bracket.
15. Clean the battery posts and cable terminals with sandpaper, then assemble them and apply grease to prevent corrosion.
16. Enter the audio and navigation anti-theft codes, then enter the presets, and set the clock.
17. Do the power window control unit reset procedure, refer to the 2003-2006 Accord Service Manual (see page 22-232).

BACK

Protected by AR

Input Shaft (Mainshaft) Speed Sensor Replacement

1. Get the audio and navigation anti-theft codes, and write down the audio presets.
2. Disconnect the negative cable from the battery, then disconnect the positive cable from the battery.
3. Remove the battery hold-down bracket, then remove the battery cover, battery, and battery tray.
4. Loosen the two bolts securing the battery base from under the vehicle, and remove the two bolts securing the battery base in the engine compartment, then remove the battery base.
5. Disconnect input shaft (mainshaft) speed sensor connector.
6. Remove the bolt securing the input shaft (mainshaft) speed sensor, then remove the input shaft (mainshaft) speed sensor (A) from the end cover.

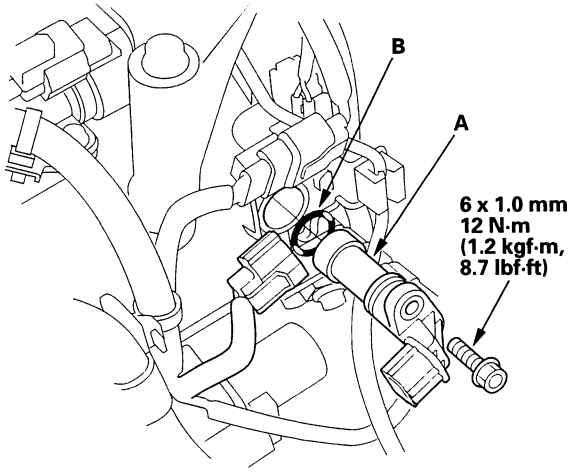

7. Install the new O-ring (B) on the input shaft (mainshaft) speed sensor, then install the input shaft (mainshaft) speed sensor in the end cover. Do not allow dust or foreign particles to enter the transmission.
8. Check the connector for rust, dirt, or oil, then connect the connector securely.
9. Install the battery base and battery, then connect the battery terminals.
10. Clean the battery posts and cable terminals with sandpaper, then assemble them and apply grease to prevent corrosion.
11. Enter the audio and navigation anti-theft codes, then enter the presets, and set the clock.
12. Do the power window control unit reset procedure, refer to the 2003-2006 Accord Service Manual (see page 22-232).

Protected by AR

Output Shaft (Countershaft) Speed Sensor Replacement

1. Get the audio and navigation anti-theft codes, and write down the audio presets.
2. Disconnect the negative cable from the battery, then disconnect the positive cable from the battery.
3. Unbolt the under-hood fuse/relay box.
4. Reposition the under-hood fuse/relay box to gain access to the output shaft (countershaft) speed sensor.
5. Remove the battery hold-down bracket, then remove the battery cover, battery, and battery tray.
6. Loosen the two bolts securing the battery base from under the vehicle, and remove the two bolts securing the battery base in the engine compartment, then remove the battery base.
7. Disconnect output shaft (countershaft) speed sensor connector.
8. Remove the bolt securing the output shaft (countershaft) speed sensor (A) from the transmission housing.

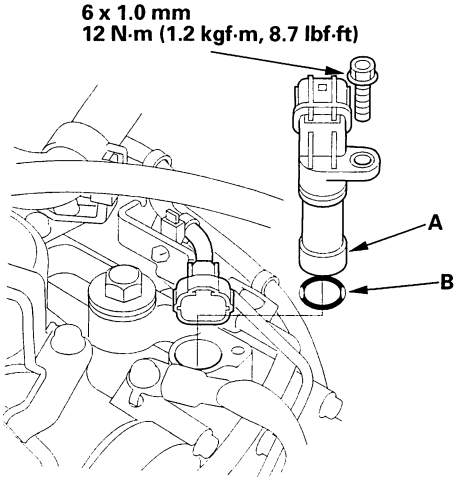

9. Install the new O-ring (B) on the output shaft (countershaft) speed sensor, then install the output shaft (countershaft) speed sensor in the transmission housing. Do not allow dust or foreign particles to enter the transmission.
10. Check for rust, dirt, or oil, then connect the connector securely.
11. Install the battery base and battery, then connect the battery terminals.
12. Clean the battery posts and cable terminals with sandpaper, then assemble them and apply grease to prevent corrosion.
13. Enter the audio and navigation anti-theft codes, then enter the presets, and set the clock.
14. Do the power window control unit reset procedure, refer to the 2003-2006 Accord Service Manual (see page 22-232).

BACK

Protected by AR

3rd Clutch Transmission Fluid Pressure Switch Replacement

1. Lift the vehicle up on a hoist or apply the parking brake, block rear wheels, and raise the front of the vehicle. Make sure it is securely supported.
2. Remove the splash shield.
3. Disconnect the ATF temperature sensor connector (A).

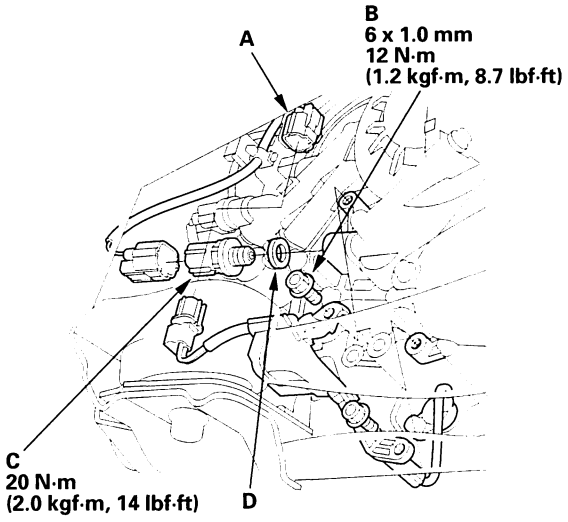

4. Remove ATF temperature sensor harness clamp bolt (B).
5. Disconnect the connector from the 3rd clutch transmission fluid pressure switch (C).
6. Replace the switch, then install a new one with a new sealing washer (D). Tighten the switch on the metal part, not the plastic part.
7. Check the connector for water, oil, dust, or other particles inside it, and connect the connector securely.
8. Install ATF temperature sensor harness clamp bolt, and connect the ATF temperature sensor connector.
9. Install the splash shield.

Protected by AR

4th Clutch Transmission Fluid Pressure Switch Replacement

1. Get the audio and navigation anti-theft codes, and write down the audio presets.
2. Disconnect the negative cable from the battery, then disconnect the positive cable from the battery.
3. Remove the battery hold-down bracket, then remove the battery cover, battery, and battery tray.
4. Loosen the two bolts securing the battery base from under the vehicle, and remove the two bolts securing the battery base in the engine compartment, then remove the battery base.
5. Disconnect the connector from the 4th clutch transmission fluid pressure switch (A).

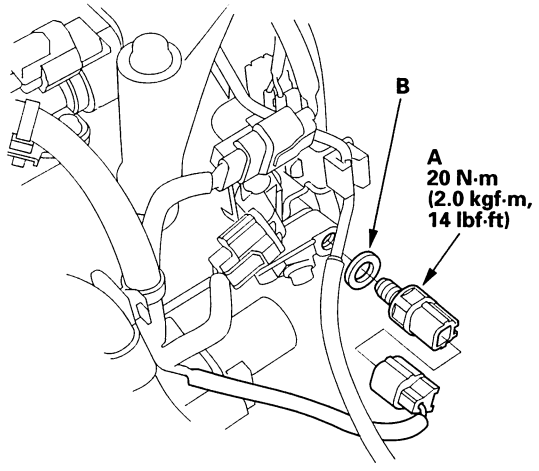

6. Replace the switch, then install a new one with a new sealing washer (B). Tighten the switch on the metal part, not the plastic part.
7. Check the connector for water, oil, dust, or other particles inside it, and connect the connector securely.
8. Install the battery base and battery, then connect the battery terminals.
9. Clean the battery posts and cable terminals with sandpaper, then assemble them and apply grease to prevent corrosion.
10. Enter the audio and navigation anti-theft codes, then enter the presets, and set the clock.
11. Do the power window control unit reset procedure, refer to the 2003-2006 Accord Service Manual (see page 22-232).

BACK

Protected by AR

ATF Temperature Sensor Replacement

1. Get the audio and navigation anti-theft codes, and write down the audio presets.
2. Lift the vehicle up on a hoist or apply the parking brake, block rear wheels, and raise the front of the vehicle. Make sure it is securely supported.
3. Remove the splash shield.
4. Remove the drain plug (A), and drain the automatic transmission fluid (ATF). Then reinstall the drain plug with a new sealing washer (B).

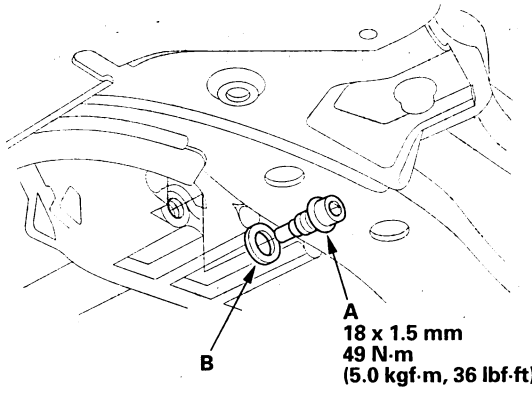

5. Disconnect the negative cable from the battery, then disconnect the positive cable from the battery.
6. Remove the battery hold-down bracket, then remove the battery cover, battery, and battery tray.
7. Remove the intake air duct and air cleaner housing.
8. Loosen the two bolts securing the battery base from under the vehicle, and remove the two bolts securing the battery base in the engine compartment, then remove the battery base.
9. Remove the transmission upper mount bracket (A) and bracket plate (B).

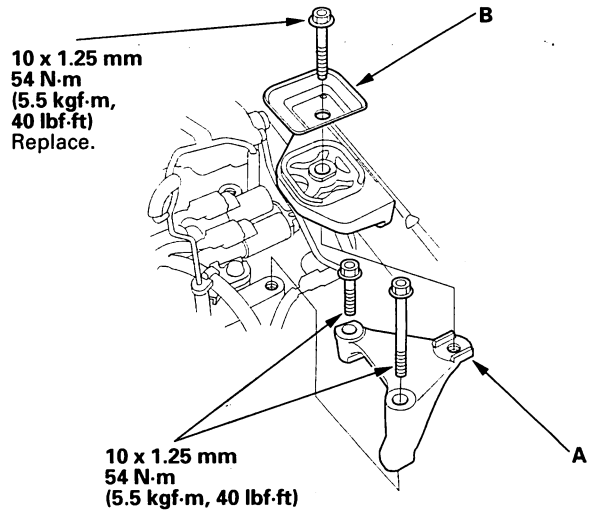

10. Place the transmission jack under the transmission, and remove the transmission lower mount nuts.

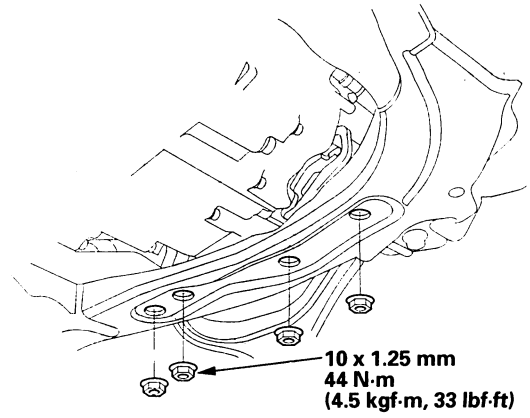

(cont'd)

Protected by AR

ATF Temperature Sensor Replacement (cont'd)

11. Lift the transmission up to create clearance between the transmission and front subframe with the jack.

12. Remove the transmission lower front mount.

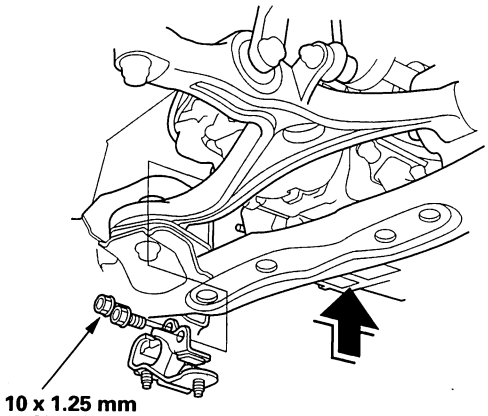

13. Disconnect the ATF temperature sensor connector (A).

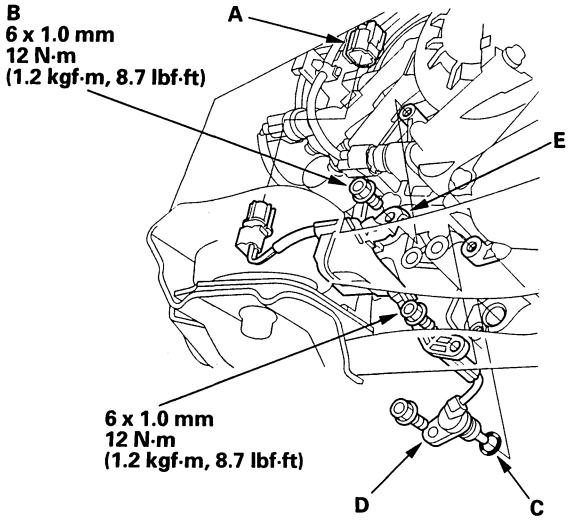

14. Remove ATF temperature sensor harness clamp bolt (B), then remove the sensor.

15. Install the new O-ring (C) on the new ATF temperature sensor (D), then install the sensor.

16. Secure the ATF temperature sensor harness clamp (E) with the bolts.

17. Check the connector for rust, dirt, or oil, then connect the connector securely.

18. Install the transmission lower front mount.

19. Install the transmission lower mount nuts.

20. Install the transmission upper mount bracket, bracket plate, and remove the transmission jack.

21. Refill the transmission with ATF (see step 5 on page 14-186).

22. Install the battery base, then install the air cleaner housing and intake air duct.

23. Install the battery tray, battery, and battery cover, then secure the battery with its hold-down bracket.

24. Clean the battery posts and cable terminals with sandpaper, then assemble them and apply grease to prevent corrosion.

25. Install the splash shield.

26. Enter the audio and navigation anti-theft codes, then enter the presets, and set the clock.

27. Do the power window control unit reset procedure, refer to the 2003-2006 Accord Service Manual (see page 22-232).

BACK

Protected by AR

ATF Level Check

NOTE: Keep all foreign particles out of the transmission.

1. Warm up the engine to normal operating temperature (the radiator fan comes on).
2. Park the vehicle on level ground, and turn the engine off.

   NOTE: Check the fluid level within 60—90 seconds after turning the engine off.

3. Remove the dipstick (yellow loop) from the ATF dipstick guide pipe, and wipe it with a clean cloth.
4. For 2003 model: Insert the dipstick (A) back with pointing the arrow (B) on the cap (C) to the front of the vehicle.

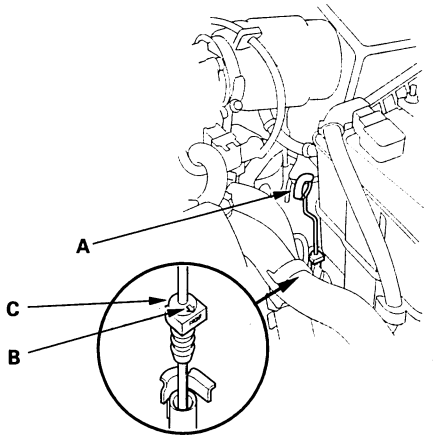

5. For 2004-2006 models: Insert the dipstick (A) back with pointing the arrow (B) on the cap (C) to the front of the vehicle, and aligning the notch on the cap with the guide tab (D).

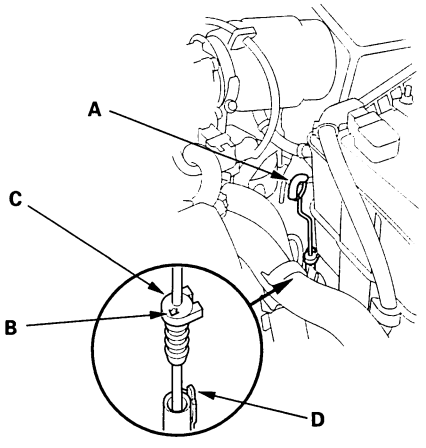

6. Remove the dipstick (A) and check the fluid level. It should be between upper mark (B) and lower mark (C).

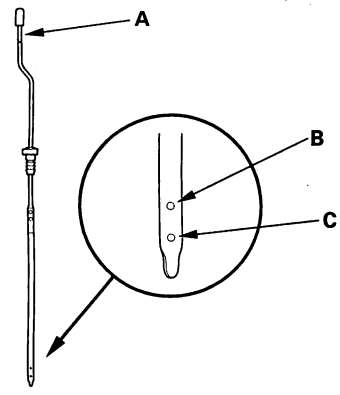

7. If the level is below the lower mark, check for fluid leaks at the transmission, hose and line joints.
   If a problem is found, fix it before filling the transmission.
   If the level is above the upper mark, drain the ATF to proper level (see step 3 on page 14-186).
8. If necessary fill the transmission through the dipstick guide pipe opening (A) to bring the fluid level up to the upper mark. Always use Honda ATF-Z1 Automatic Transmission Fluid (ATF). Using a non-Honda ATF can affect shift quality.

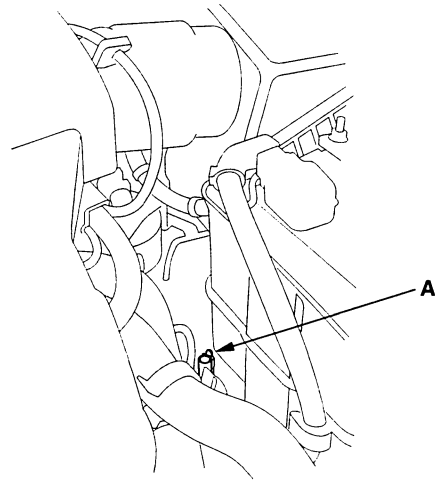

9. Insert the dipstick back into the dipstick guide pipe.

BACK

Protected by AR

ATF Replacement

NOTE: Keep all foreign particles out of the transmission.

1. Bring the transmission up to normal operating temperature (the radiator fan comes on).
2. Park the vehicle on level ground, and turn the engine off.
3. Remove the drain plug (A), and drain the automatic transmission fluid (ATF).

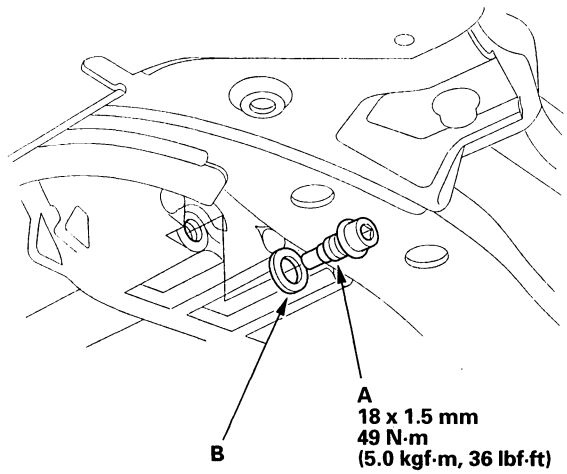

4. Reinstall the drain plug with a new sealing washer (B).
5. Refill transmission with the recommended fluid into the filler hole (A) to the upper mark on the dipstick. Always use Honda ATF-Z1 Automatic Transmission Fluid (ATF). Using a non-Honda ATF can affect shift quality.

Automatic Transmission Fluid Capacity:
3.0 L (3.2 US qt) at change
7.0 L (7.4 US qt) at overhaul

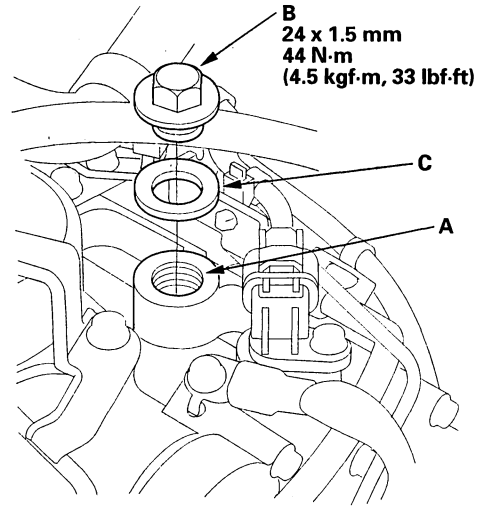

6. Install the ATF filler bolt (B) with a new sealing washer (C).

BACK

Protected by AR

Transmission Removal

Special Tools Required
- Engine support hanger, A and Reds AAR-T-12566
- Engine hanger balancer bar VSB02C000019
- Front subframe adapter VSB02C000016

These special tools are available through the Honda Tool and Equipment Program 1-888-424-6857.

NOTE:
- Use fender covers to avoid damaging painted surfaces.
- Special tool Reds engine support hanger AAR-T-12566 must be used with the side engine mount installed.

1. Get the audio and navigation anti-theft codes, and write down the audio presets.
2. Set the wheels in the straight ahead position.
3. Lock the steering wheel.
4. Drain the power steering system fluid from the reservoir (see page 17-12).
5. Remove the steering joint cover (A).

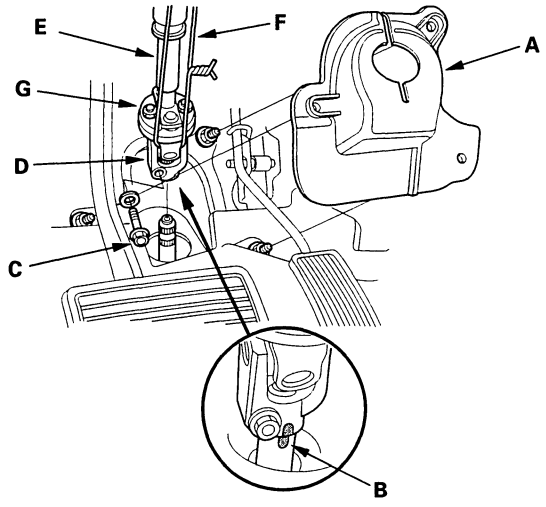

6. Make a reference mark (B) across the steering joint and steering gearbox pinion shaft. Remove the steering joint bolt (C), and disconnect the steering joint (D) by removing the steering joint toward the steering column. Hold the slider shaft (E) on the column with a peace of wire (F) between the joint yoke (G) on the slider shaft to the joint yoke on the upper shaft, refer to the 2003-2006 Accord Service Manual (see step 8 on page 17-25).
7. Remove the bolts securing the support strut brackets on the both side hood. Secure the hood (A) in a vertical position, then install the right strut bracket (B) by turning it over with its bolt in lower position.

   NOTE: Do not attempt to close the hood with the support strut in the vertical position; it will damage the support strut and hood.

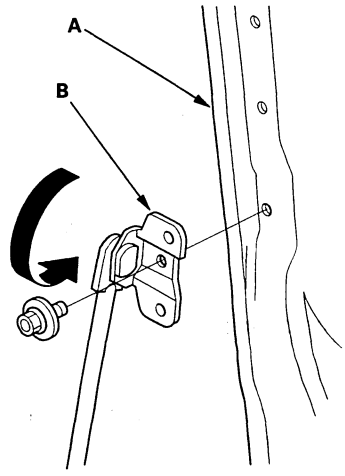

8. Raise the vehicle, and make sure it is supported securely.
9. Remove the splash shield.
10. Remove the power steering pump outlet line (A) from the power steering pump. Wipe off any spilled fluid at once.

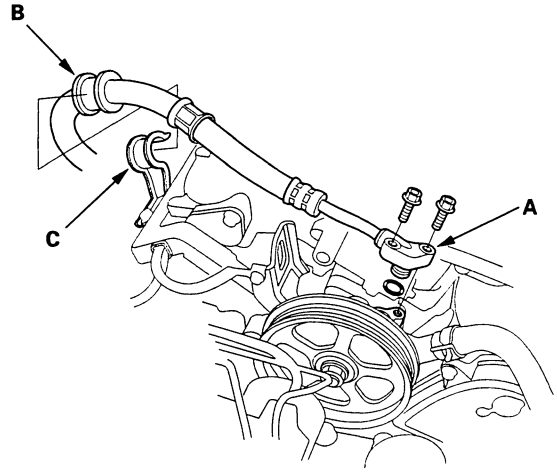

11. Remove the hose (B) from its clamp (C).

(cont'd)

Protected by AR

Transmission Removal (cont'd)

12. Remove the drain plug (A), and drain the automatic transmission fluid (ATF).

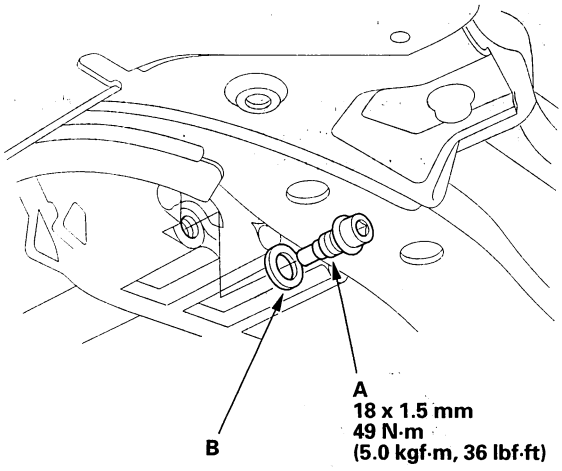

13. Reinstall the drain plug with a new sealing washer (B).

14. Disconnect the negative cable from the battery, then disconnect the positive cable from the battery.

15. Remove the battery hold-down bracket, then remove the battery cover, battery, and battery tray.

16. Remove the intake air duct and air cleaner housing.

17. Loosen the two bolts securing the battery base from under the vehicle, and remove the two bolts securing the battery base in the engine compartment, then remove the battery base.

18. Remove the starter cables (A) from the starter (B), then remove the starter.

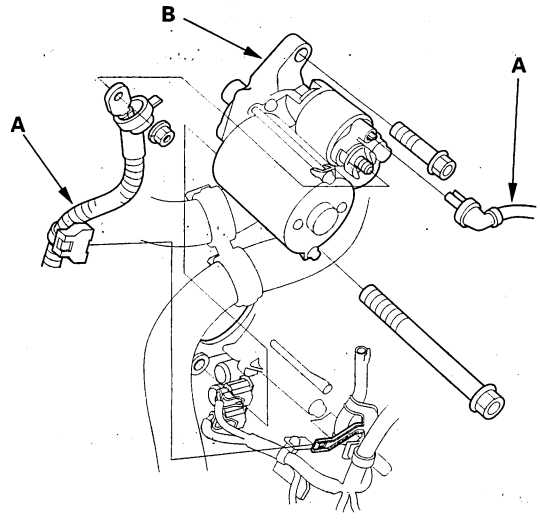

19. Remove the transmission upper mount bracket (A) and bracket plate (B).

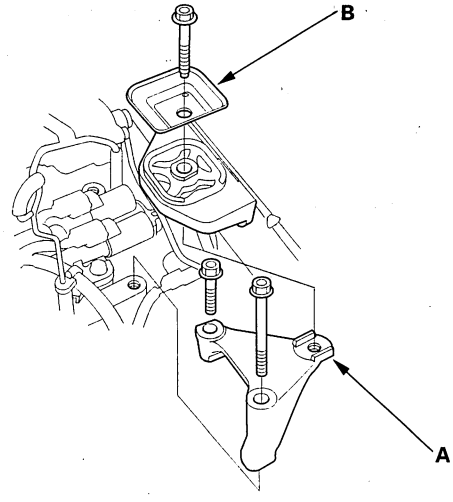

BACK

Protected by AR

20. Remove the transmission sub harness connector (A) from its bracket (B), then disconnect it.

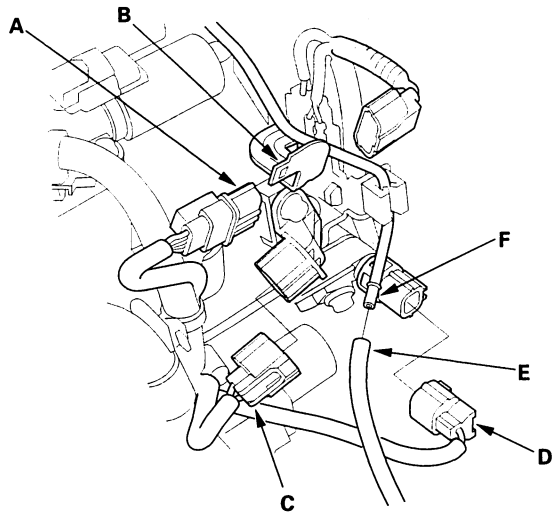

21. Disconnect the input shaft (mainshaft) speed sensor connector (C) and 4th clutch transmission fluid pressure switch connector (D), and disconnect the vacuum hose (E) from the vacuum line (F).

22. Disconnect shift solenoid valve A connector, solenoid valve C connector, and A/T clutch pressure control solenoid valve C connector (B), and remove the harness clamps (D) from the clamp brackets (E).

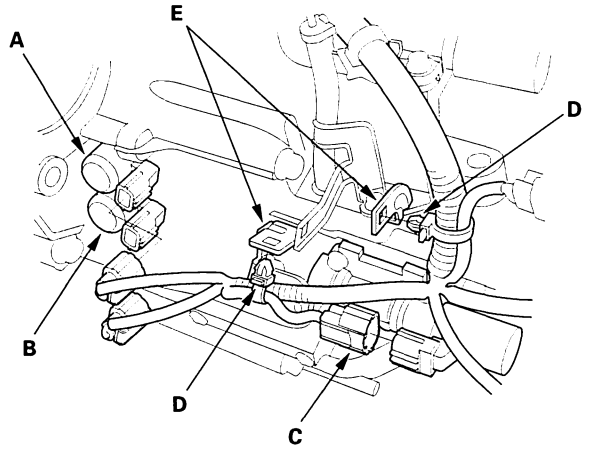

23. Disconnect the A/T clutch pressure control solenoid valve A connector, and solenoid valve B connector, and remove the harness clamp (C) from the clamp bracket (D).

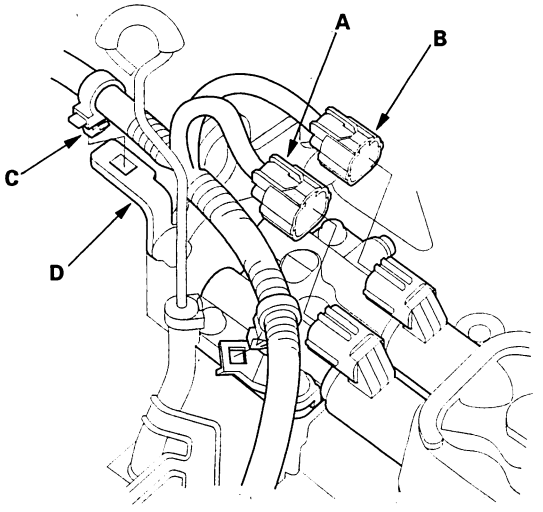

24. Disconnect the connectors from the torque converter clutch solenoid valve (A) and shift solenoid valve B.

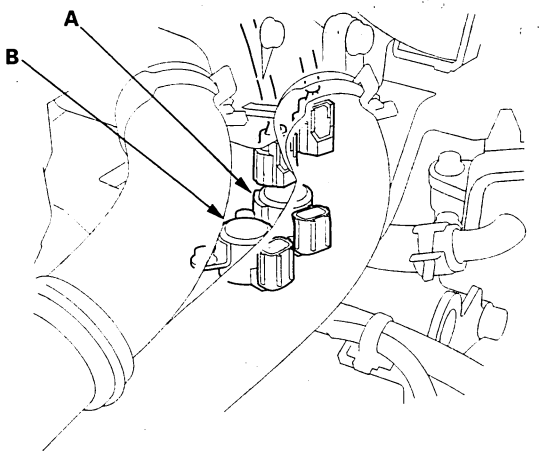

(cont'd)

Protected by AR

Transmission Removal (cont'd)

25. Remove the transmission range switch connector (A) from its bracket (B), and disconnect it.

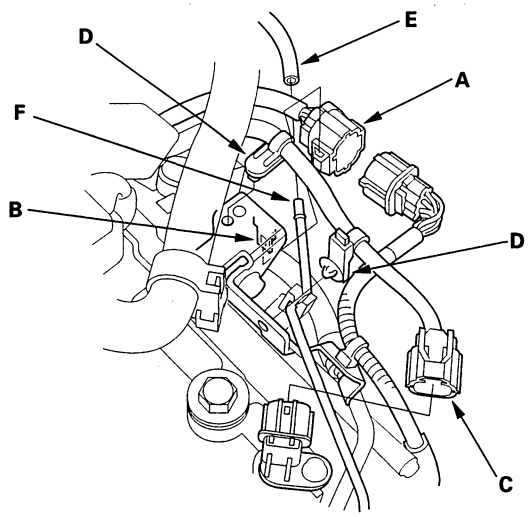

26. Disconnect the output shaft (countershaft) speed sensor connector (C), and remove the harness clamps (D) from the brackets. Disconnect the vacuum hose (E) from the vacuum line (F).

27. Remove the harness clamps (A) from the brackets, and remove the bolt securing the bracket.

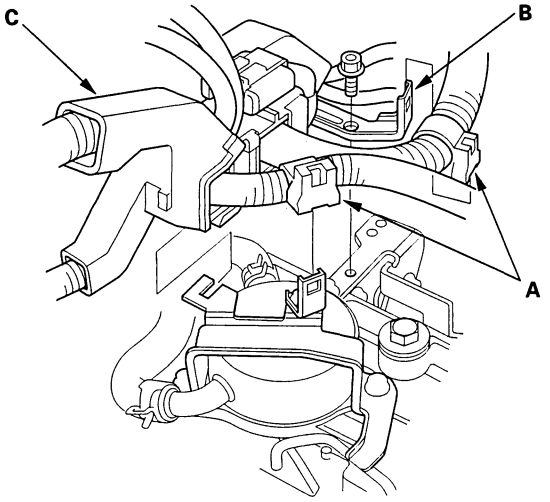

28. Remove the transmission ground cable (A), and disconnect the breather tube (B).

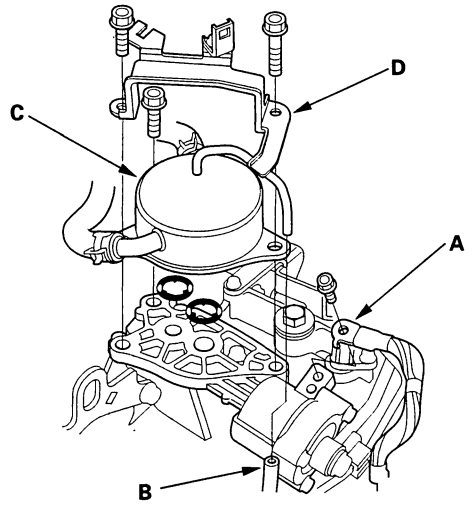

29. Put a shop rags around the ATF warmer (C) to remove the ATF that flows out.

30. Remove the bolts securing the ATF warmer and the bracket (D), then remove the ATF warmer from the transmission housing. Cover the fluid passages on the transmission and ATF warmer with tape. Do not disconnect the hoses.

    NOTE: Replace the ATF warmer with a new one whenever the transmission assembly is replaced.

BACK

Protected by AR

31. Remove the connector bracket from the engine front cylinder head; use the bracket bolt hole to attach engine balancer bar front arm.

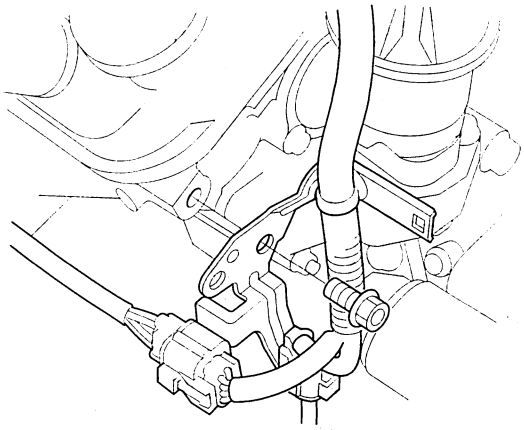

32. Remove the harness clamp bracket from the engine rear cylinder head; use the bracket bolt hole to attach engine balancer bar rear arm.

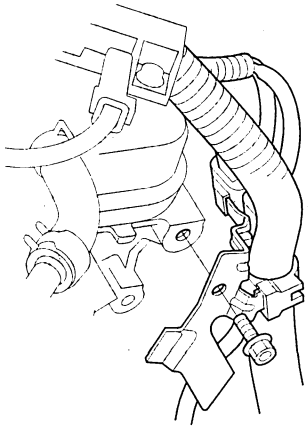

33. Remove the front bulkhead cover, refer to the 2003-2006 Accord Service Manual (see step 1 on page 20-197).

34. Lift and support the engine with engine support hanger (A) and engine balance bar (B).
Attach the front arm (C) to the front cylinder head with a spacer (D) and the 10 x 1.25 mm bolt (E).
Attach the rear arm (F) to the rear cylinder head with the 8 x 1.25 mm bolt (G).

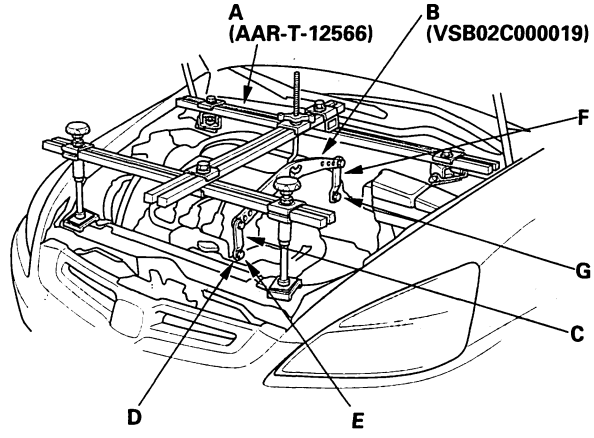

(cont'd)

Protected by AR

Transmission Removal (cont'd)

35. Remove the front mount stop (A), and remove the front mount bolt (B).

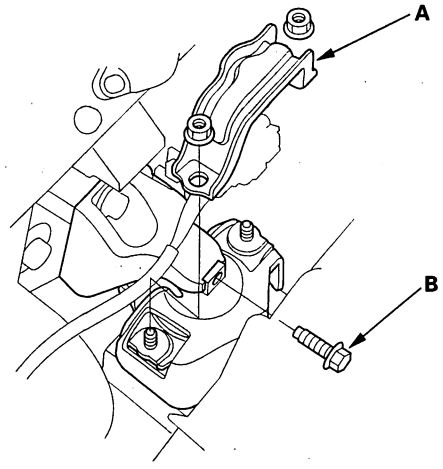

36. Remove the rear mount stop (A), and remove the rear mount bolt (B).

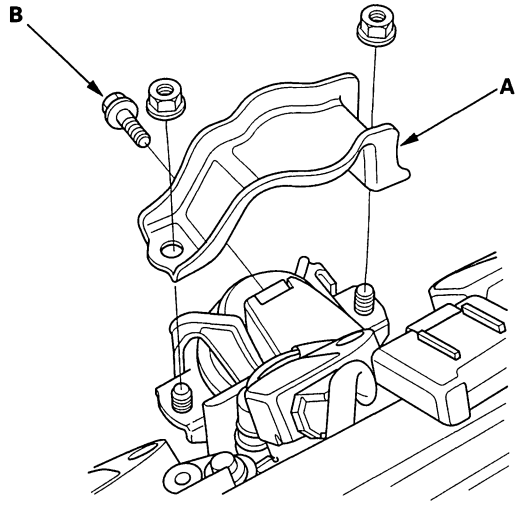

37. Insert a 6 mm Allen wrench (A) in the top of the ball joint pin (B), and remove the nuts (C), then separate the stabilizer link (D) from the lower arms (E).

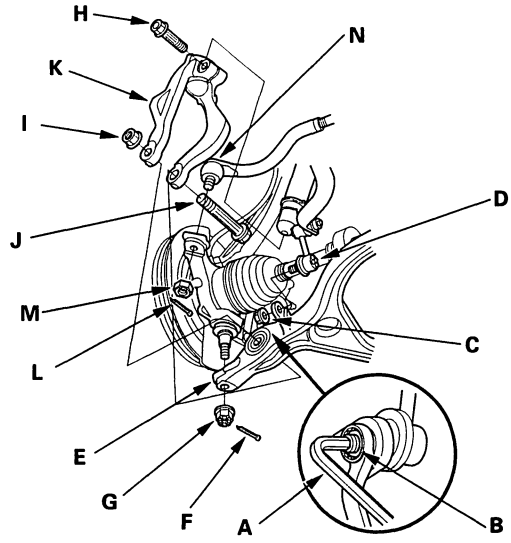

38. Remove the cotter pins (F), castle nuts (G), damper pinch bolt (H), self-locking nut (I), bolt (J), and damper forks (K), then separate the ball joints from the lower arms, refer to the 2003-2006 Accord Service Manual (see page 18-11).

39. Remove the cotter pins (L), and nuts (M), and separate the tie-rod end ball joints (N) from the knuckles, refer to the 2003-2006 Accord Service Manual (see step 10 on page 18-14).

40. Remove the exhaust pipe A and its mount.

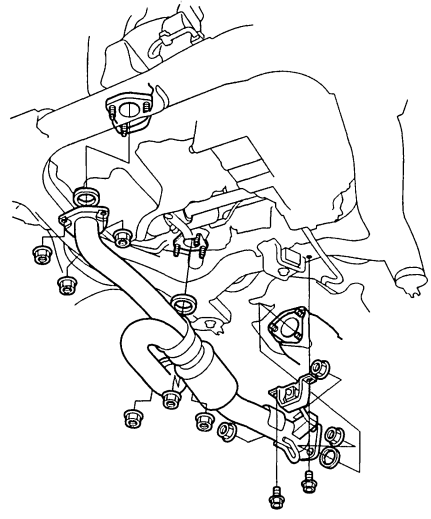

BACK

Protected by AR

41. Remove the power steering fluid hose from its line on the front subframe.

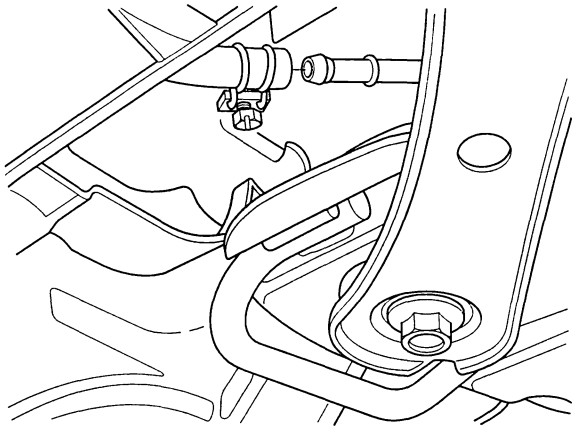

42. Disconnect the power steering pressure switch connector.

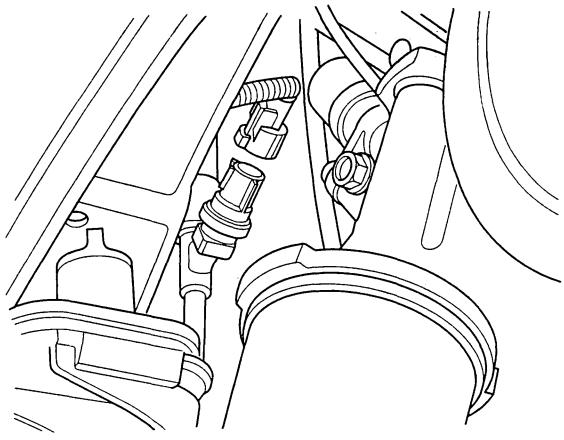

43. Remove the torque converter cover (A), and remove the drive plate bolts (B) while rotating the crankshaft pulley.

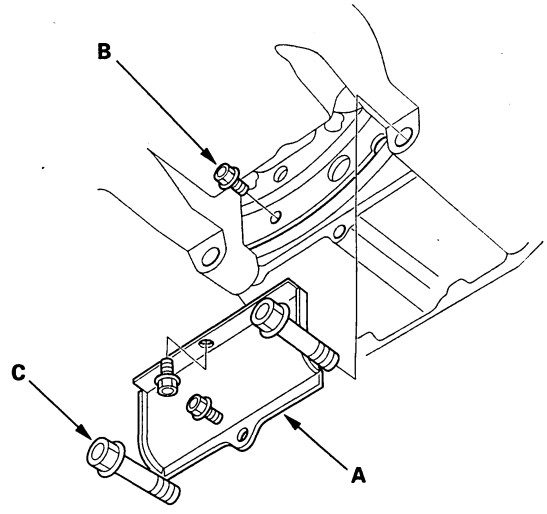

44. Remove the engine-to-torque converter housing mounting bolts (C).

45. Remove the bolts securing shift cable holder (A), then remove shift cable cover (B).

NOTE: To prevent damage to the control lever joint, remove the bolts securing the holder before removing the bolts securing the cover.

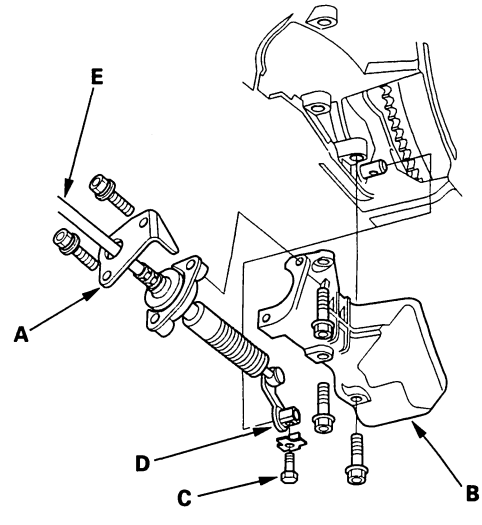

46. Remove the lock bolt (C) securing the control lever (D), then remove the shift cable (E) and the control lever. Do not bend the shift cable excessively.

(cont'd)

Protected by AR

Transmission Removal (cont'd)

47. Install a 6 x 1.0-14 mm bolt (A) and nut (B) on the shift cable cover (C), then reinstall the shift cable cover to the torque converter housing. If you don't do this, the bolt head of the cable cover may prevent you from removing the torque converter during transmission removal.

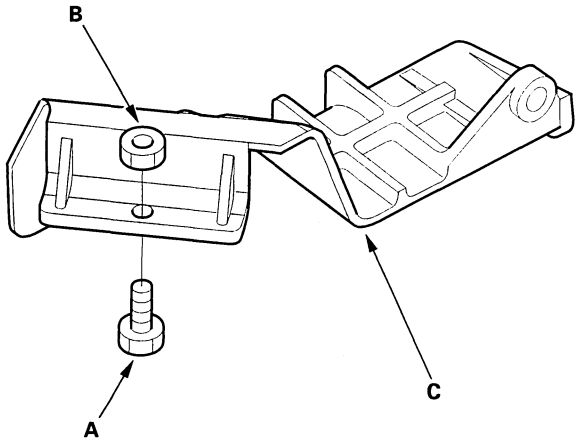

48. Remove the transmission lower mount nuts.

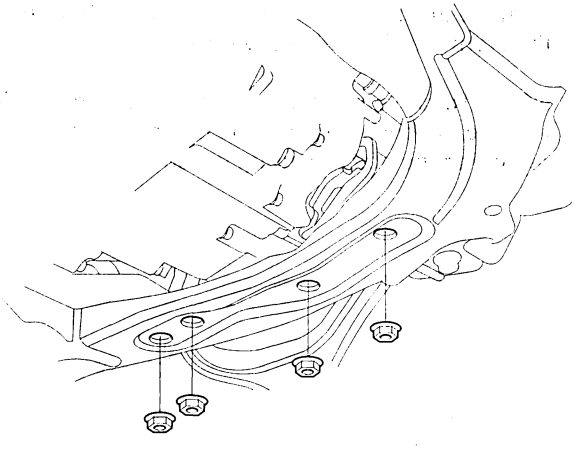

49. Remove both middle-mounts.

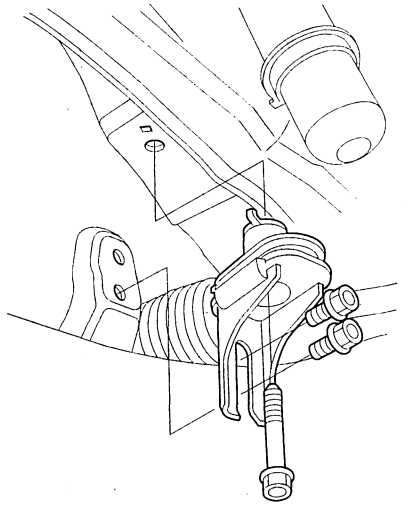

50. Make the appropriate reference lines (A) at both ends of the subframe (B) that line up with the edge (C) of the stiffeners (D).

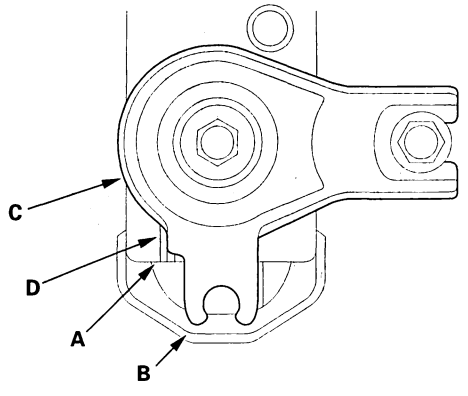

BACK

Protected by AR

51. Attach the special tool to the subframe by hanging the belt of the special tool over the front of the subframe, then secure the belt with its stop.

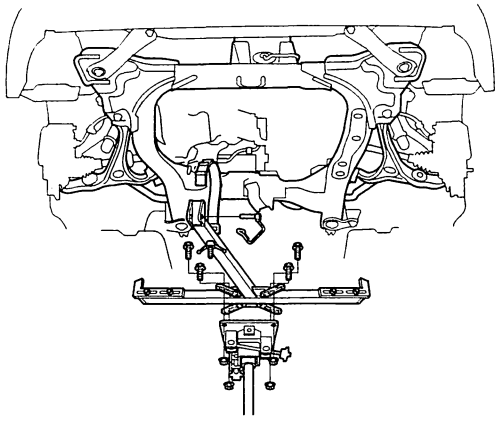

52. Raise the jack and line up the slots in the arms with the bolt holes on the corner of the jack base, then attach them with bolts securely.

53. Remove the four bolts securing the stiffeners (A), and four bolts securing the front subframe (B), and lower the front subframe.

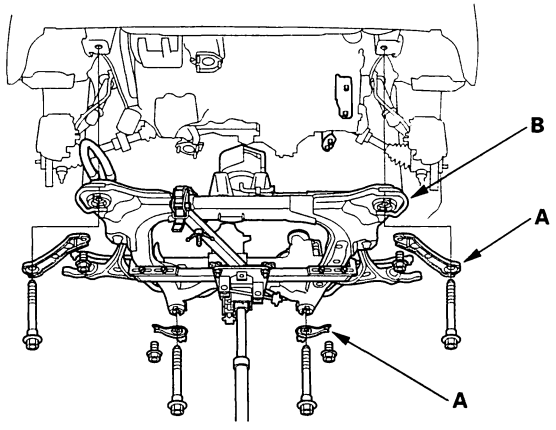

54. Remove the transmission lower mounts.

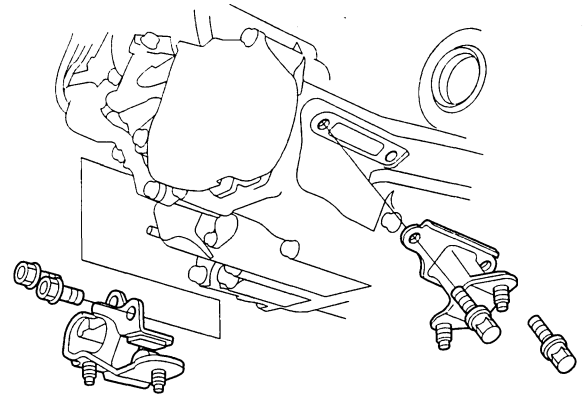

55. Remove the driveshafts from the differential and intermediate shaft (see step 10 on page 16-5).

56. Remove the exhaust manifold bracket (A) and heat shield (B).

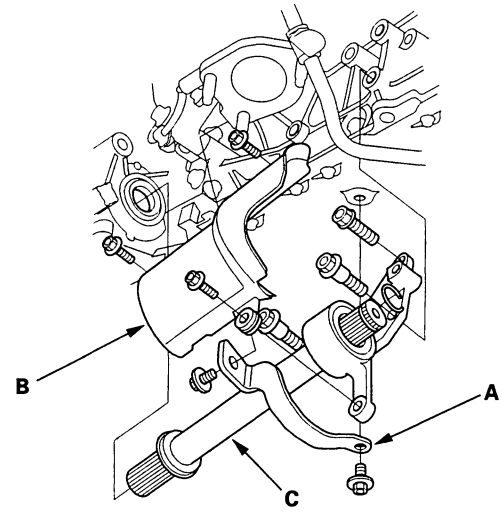

57. Remove the intermediate shaft (C).

58. Coat all precision finished surfaces with clean engine oil, then tie plastic bags over both ends of the driveshaft and the intermediate shaft.

(cont'd)

Protected by AR

Transmission Removal (cont'd)

59. Place a jack under the transmission.

60. Remove the upper and front transmission housing mounting bolts.

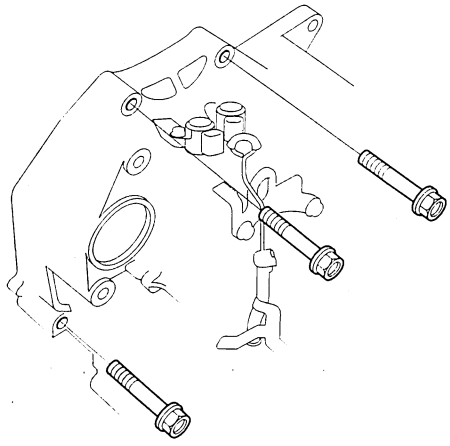

61. Remove the bolt (A) securing the harness clamp bracket, and remove the front mount bracket (B).

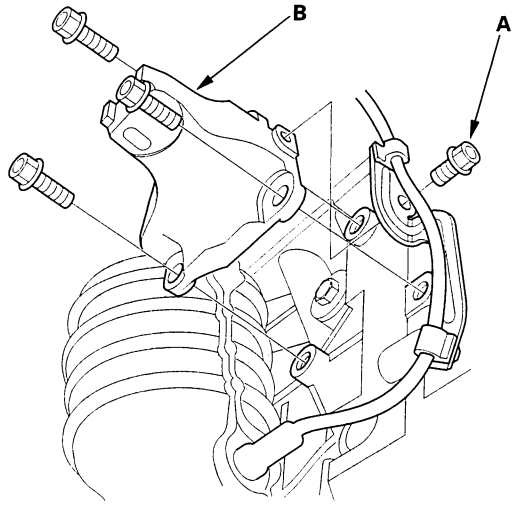

62. Remove the rear transmission housing mounting bolts.

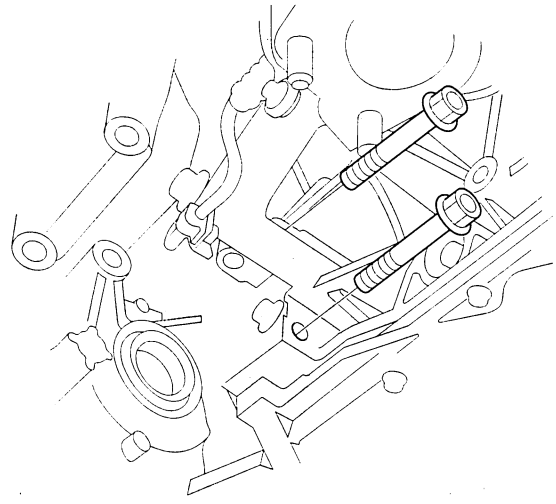

63. Slide the transmission away from the engine to remove it from the vehicle.

64. Remove the shift cable cover, then remove the torque converter.

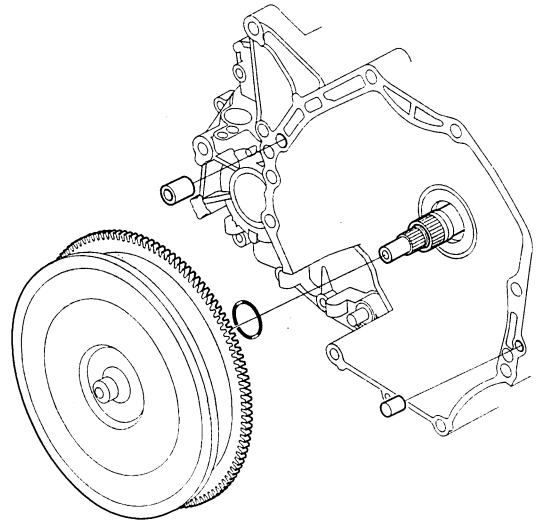

BACK

Protected by AR

65. Remove the vacuum line from the transmission.

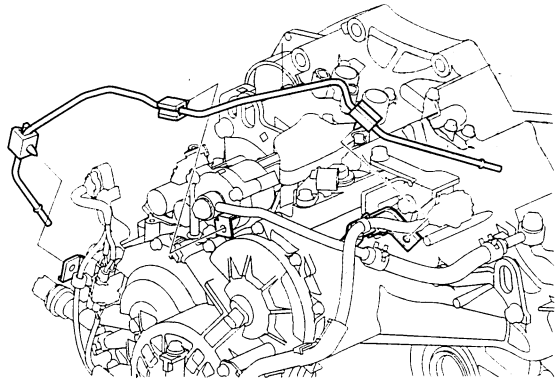

66. Remove the 6 x 1.0-14 mm bolt and nut that you installed on the shift cable cover in step 47.

67. Inspect the drive plate, and replace it if it's damaged.

Drive Plate Removal and Installation

1. Remove the transmission assembly (see page 14-187).
2. Remove the drive plate (A) and washer (B) from the engine crankshaft.

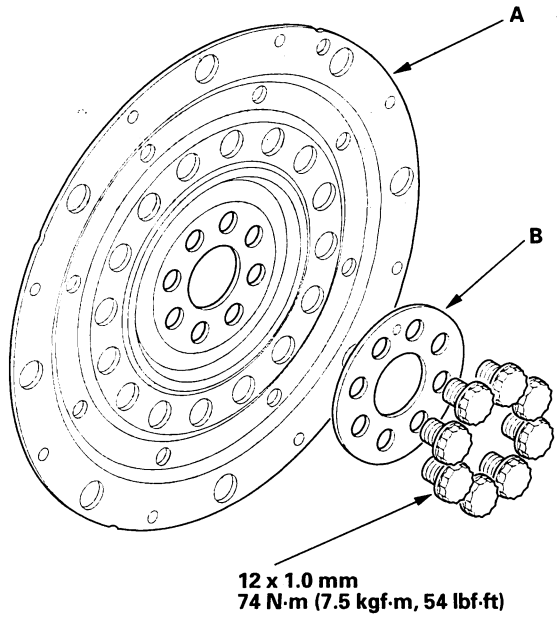

3. Install the drive plate and washer on the engine crankshaft, and tighten the eight bolts in a crisscross pattern in two or more steps.

4. Install the transmission assembly (see page 14-198).

Protected by AR

Transmission Installation

Special Tools Required
- Engine support hanger, A and Reds AAR-T-12566
- Engine hanger balancer bar VSB02C000019
- Front subframe adapter VSB02C000016

These special tools are available through the Honda Tool and Equipment Program 1-888-424-6857.

NOTE:
- Use fender covers to avoid damaging painted surfaces.
- Replace the ATF warmer with a new one whenever the transmission assembly is replaced.

1. Install the vacuum line on the transmission.

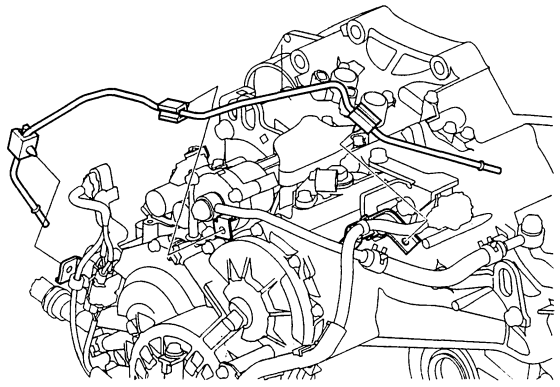

2. Install the torque converter assembly (A) on the mainshaft (B) with the new O-ring (C).

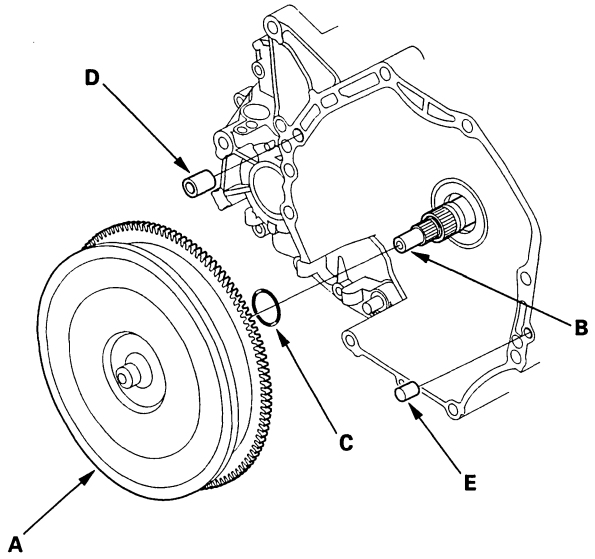

3. Install the 14 x 20 mm dowel pin (D) and 10 x 20 mm dowel pin (E) in the torque converter housing.

4. Place the transmission on the jack, and raise the transmission to the engine level.

5. Attach the transmission to the engine, then install the rear transmission housing mounting bolts.

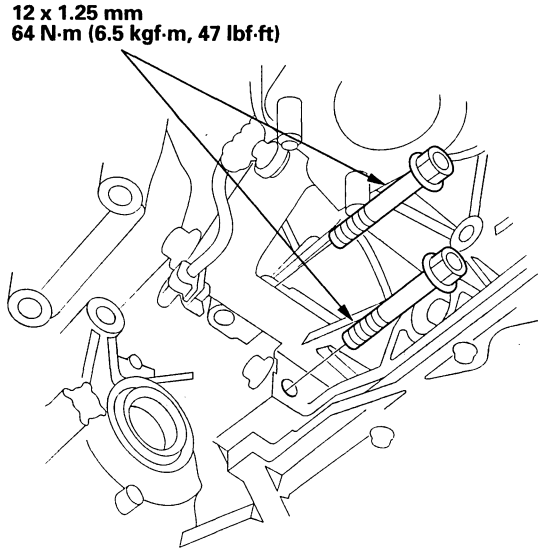

6. Install the upper and front transmission housing mounting bolts.

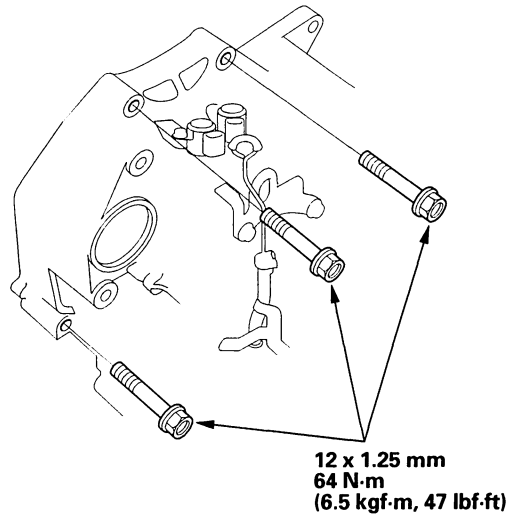

7. Remove the jack from the transmission.

BACK

Protected by AR

8. Install the front mount bracket with the new bolts, and install the harness clamp on the mount bracket.

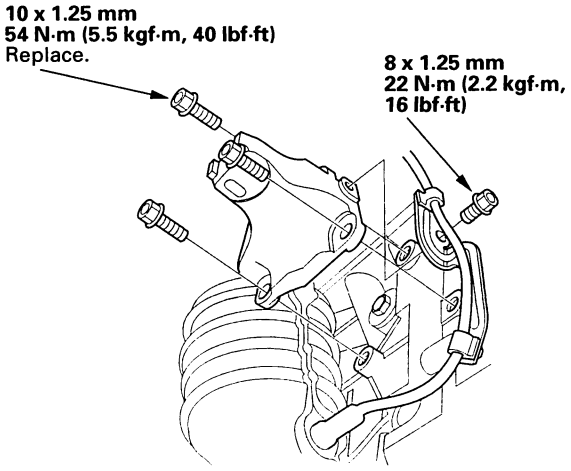

9. Install the engine-to-torque converter housing mounting bolts.

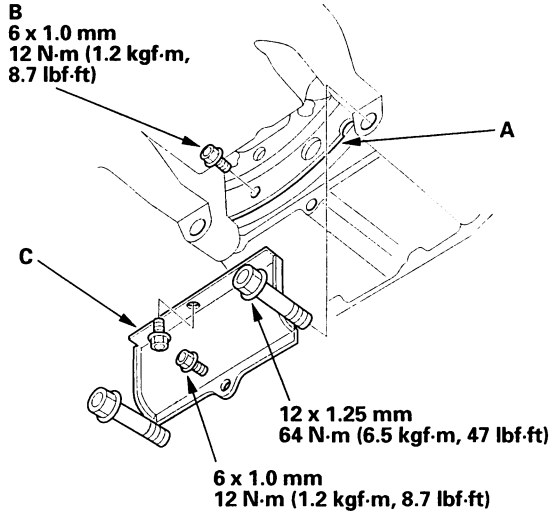

10. Attach the torque converter to the drive plate (A) with eight bolts (B). Rotate the crankshaft pulley as necessary to tighten the bolts to 1/2 of the specified torque, then to the final torque, in a crisscross pattern. After tightening the last bolt, check that the crankshaft rotates freely.

11. Install the torque converter cover (C).

12. Install the new set ring (A) on the intermediate shaft (B).

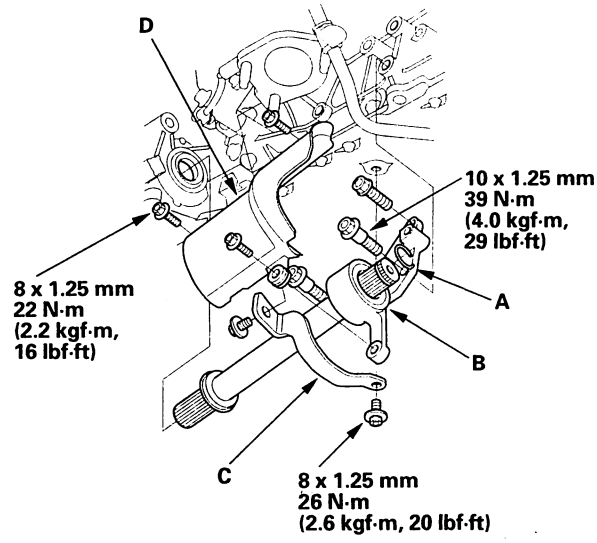

13. Install the exhaust manifold bracket (C) and heat shield (D).

14. Install the new set ring on the left driveshaft, then install the left driveshaft in the differential (see page 16-20). While installing the driveshaft in the differential, be sure not to allow dust or other foreign particles to enter the transmission. Install the left driveshaft over the intermediate shaft.

NOTE:
- Clean the areas where the driveshaft and intermediate shaft contact the transmission (differential) with solvent or carburetor cleaner, and dry with compressed air.
- Turn the right and left steering knuckle fully outward, and slide the driveshaft and intermediate shaft into the differential and intermediate shaft until you feel its set ring engage the side gear.

(cont'd)

Protected by AR

Transmission Installation (cont'd)

15. Install the transmission lower mounts.

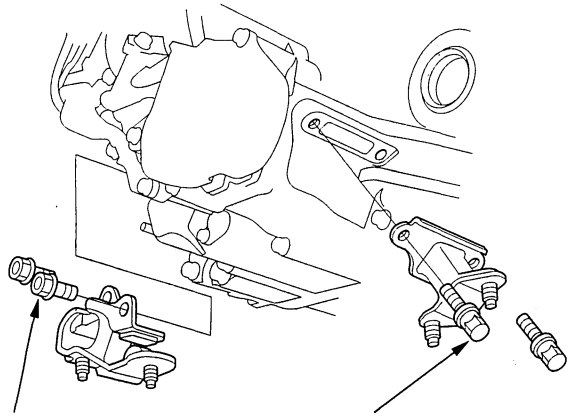

16. Support the front subframe (A) with the special tool and a jack, and lift it up to body.

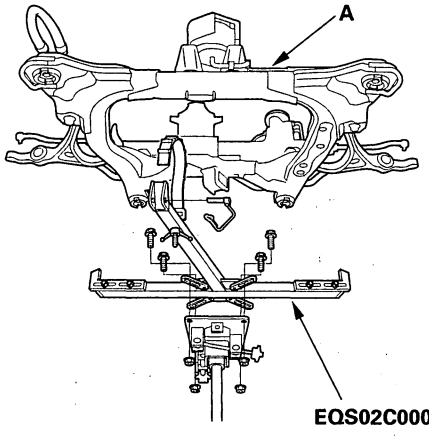

17. Loosely install the new subframe mounting bolts (D), stiffener mounting bolts (E), and new stiffener mounting bolts (F).

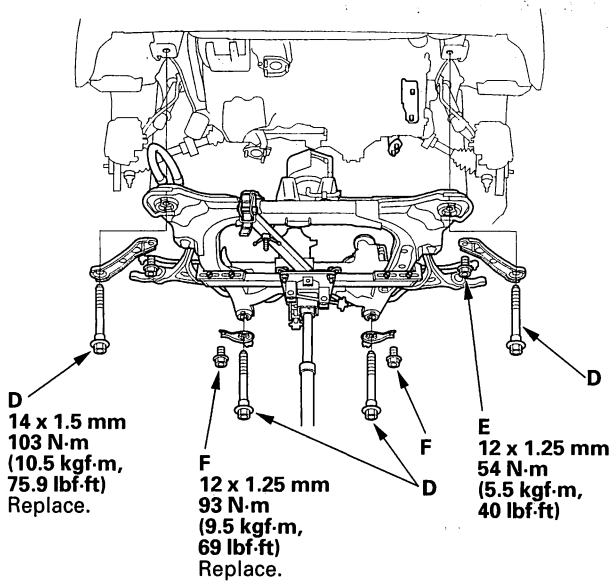

18. Loosely install both of the new middle-mount mounting bolts.

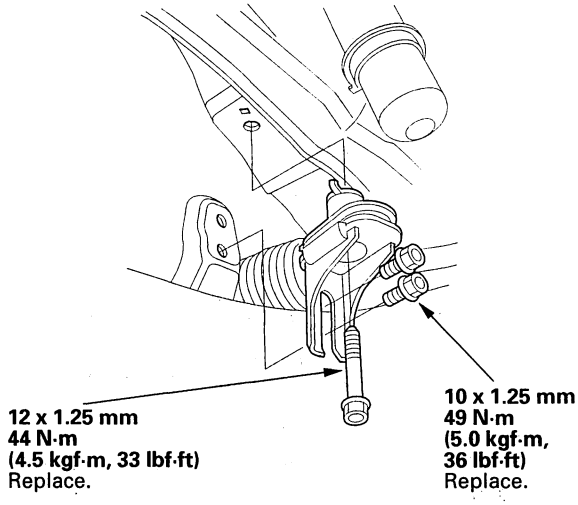

BACK

Protected by AR

19. Align the reference marks (A) with edge (B) of both rear stiffener (C), and tighten the rear subframe mounting bolts, then front bolts, and tighten the stiffener bolts to the specified torque.

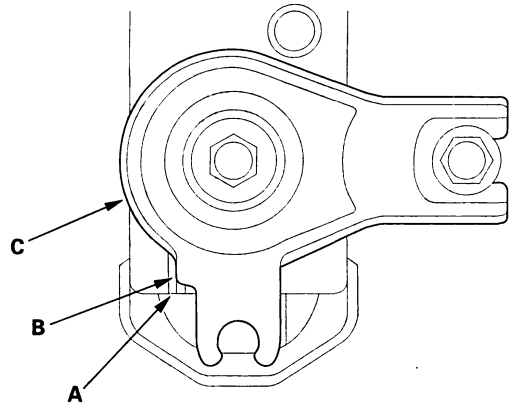

20. Tighten the mid-mount mounting bolts.

21. Install the transmission lower mount nuts.

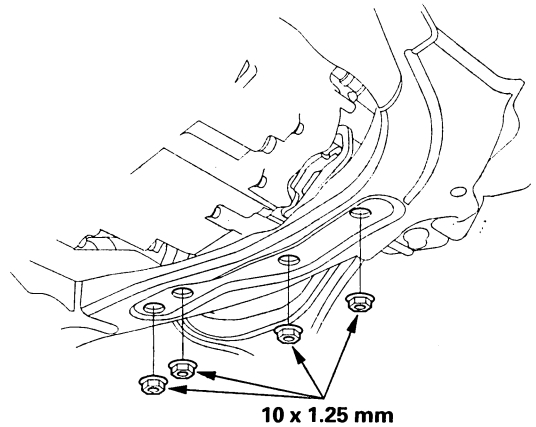

22. Install control lever (A) on the selector control shaft (B). Do not bend the shift cable excessively.

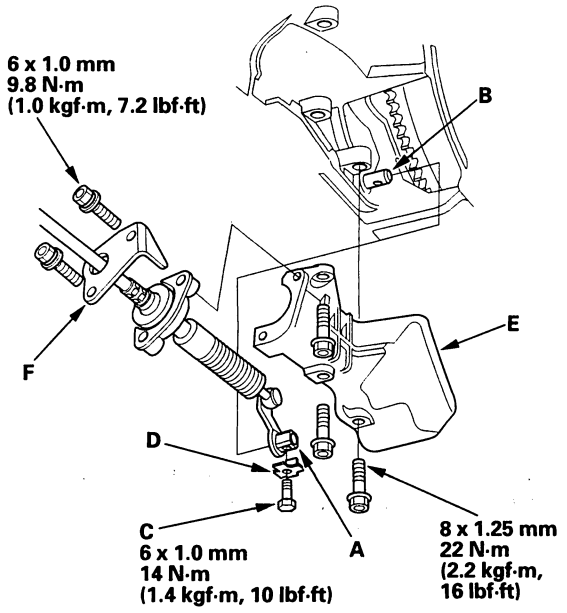

23. Install the lock bolt (C) with a new lock washer (D), then bend the lock washer tab against the bolt head.

24. Install the shift cable cover (E), then secure the shift cable holder (F) on the cover with the bolts.

    NOTE: To prevent damage to the control lever joint, be sure install the shift cable holder after installing the shift cable cover to the torque converter housing.

25. Connect the power steering pressure switch connector.

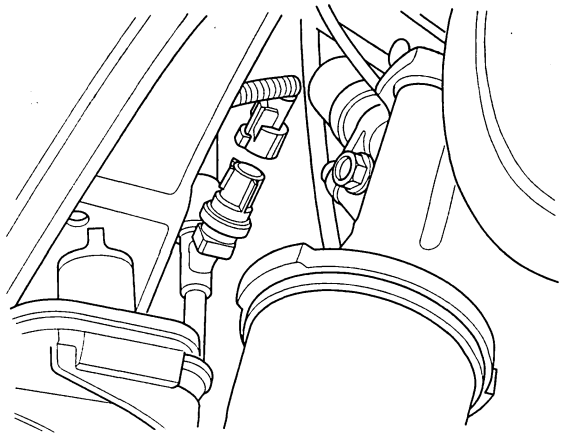

(cont'd)

BACK

Protected by AR

Transmission Installation (cont'd)

26. Connect the power steering fluid hose to the power steering line on the front subframe.

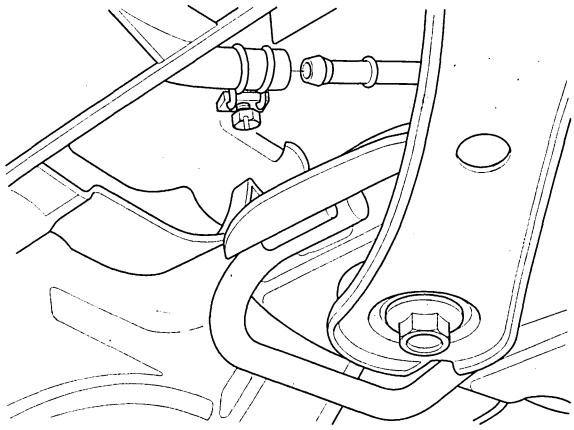

27. Install the exhaust pipe A with the new self-locking nuts, its mount (B), and new gaskets (C) (D).

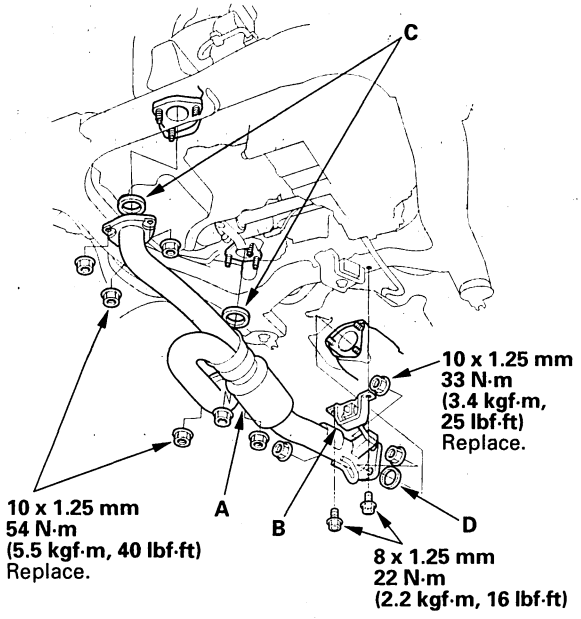

28. Install the damper forks (A) with damper pinch bolts (B) and the new self-locking nuts (C), then install the ball joints on the lower arms (D) with the castle nuts (E) and new cotter pins (F), refer to the 2003-2006 Accord Service Manual (see step 17 on page 18-15).

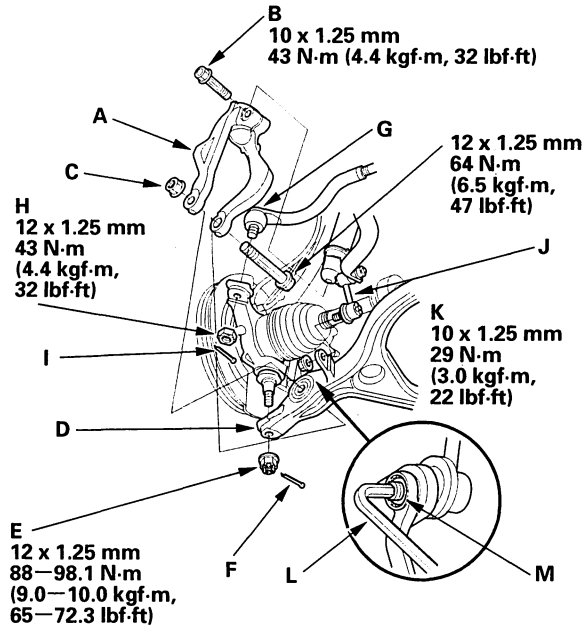

29. Install the tie-rod end ball joints (G) to each knuckle with the nuts (H) and new cotter pins (I), refer to the 2003-2006 Accord Service Manual (see step 17 on page 18-15).

30. Install the stabilizer links (J) to the lower arms, and install the nuts (K). Insert a 6 mm Allen wrench (L) in the ball joint pin (M), and tighten the nuts.

BACK

Protected by AR

31. Install the new front mount bolt (A).

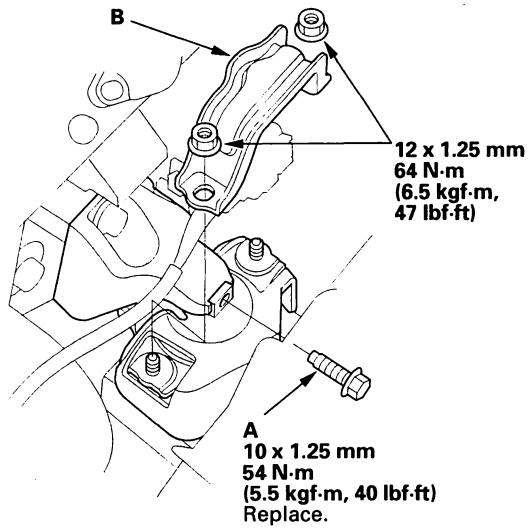

32. Install the front mount stop (B).

33. Install the new rear mount bolt (A).

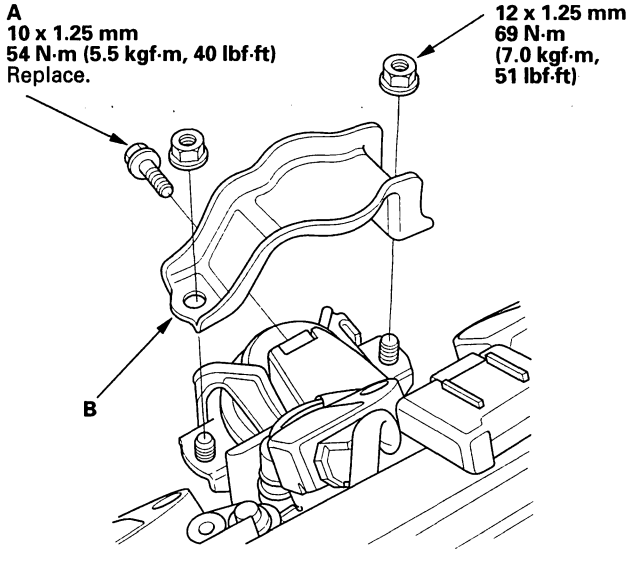

34. Install the rear mount stop (B).

35. Remove the engine hanger and engine balancer bar.

36. Install the harness clamp bracket to the engine rear cylinder head.

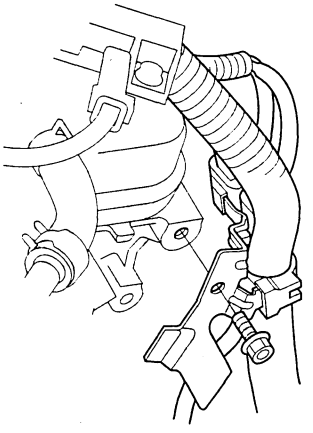

37. Install the connector bracket to the engine front cylinder head.

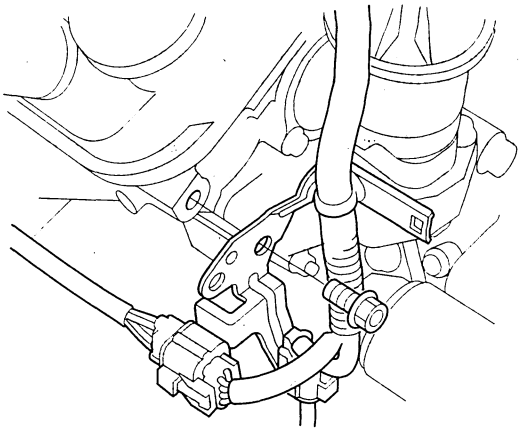

(cont'd)

Protected by AR

Transmission Installation (cont'd)

38. Install the ATF warmer (A) with new O-rings (B) and the bracket (C) on the transmission housing. Do not pinch the O-rings.

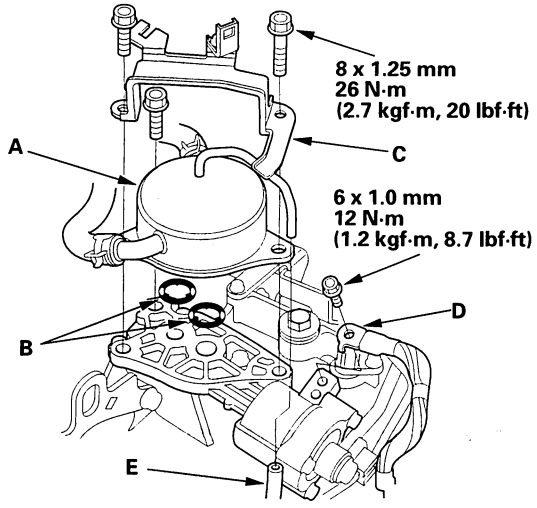

39. Install the transmission ground cable (D), and connect the breather tube (E).

40. Install the harness clamp bracket (A), and install the harness cover (B) on the bracket (C).

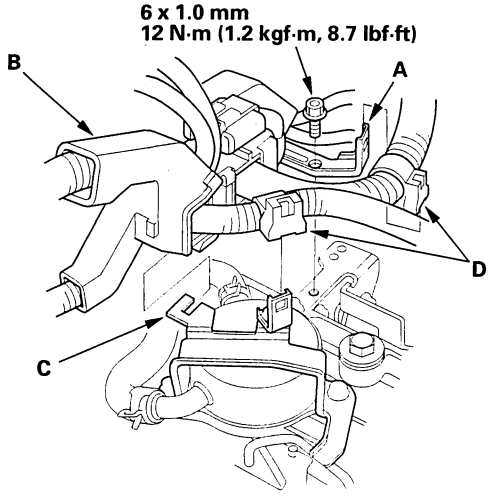

41. Install the harness clamps (D) on the clamp brackets.

42. Connect the output shaft (countershaft) speed sensor connector (A), and install the harness clamps (B) on the brackets. Connect the vacuum hose (C) to the vacuum line (D).

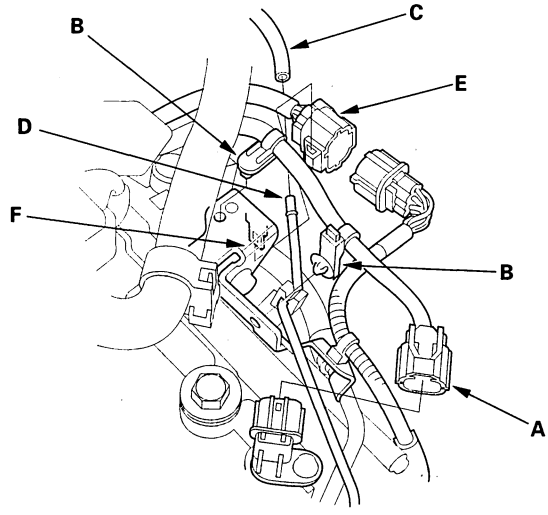

43. Connect the transmission range switch connector (E), then install it on its bracket (F).

44. Connect the connectors to the torque converter clutch solenoid valve (A) and shift solenoid valve B.

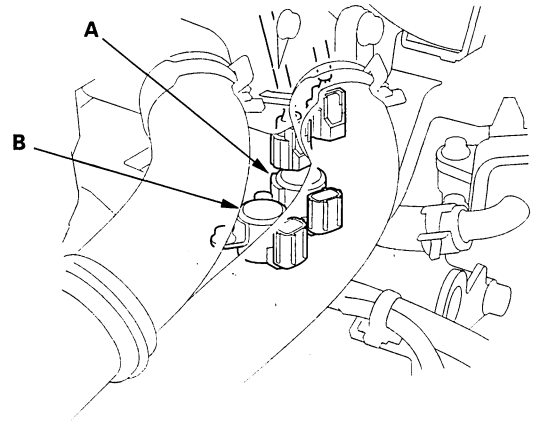

BACK

Protected by AR

45. Connect the A/T clutch pressure control solenoid valve A connector, and solenoid valve B connector, and install the harness clamp (C) on the clamp bracket (D).

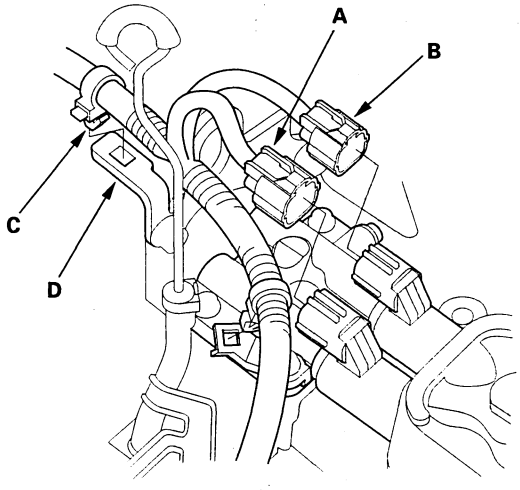

46. Connect shift solenoid valve A connector, solenoid valve C connector, and A/T clutch pressure control solenoid valve C connector (B), and install the harness clamps (D) on the clamp brackets (E).

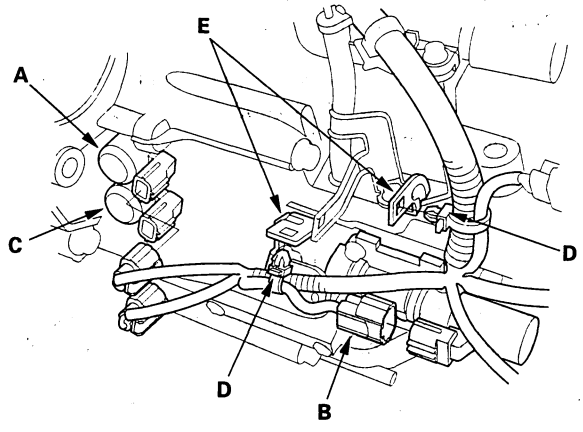

47. Connect the input shaft (mainshaft) speed sensor connector (A) and 4th clutch transmission fluid pressure switch connector (B), and connect the vacuum hose (C) to the vacuum line (D).

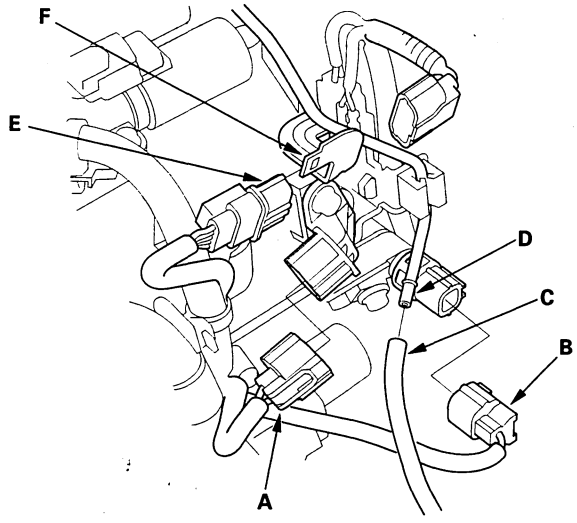

48. Connect the transmission subharness connector (E), then install it on its bracket (F).

49. Install the transmission upper mount bracket (A) on the transmission with two bolts.

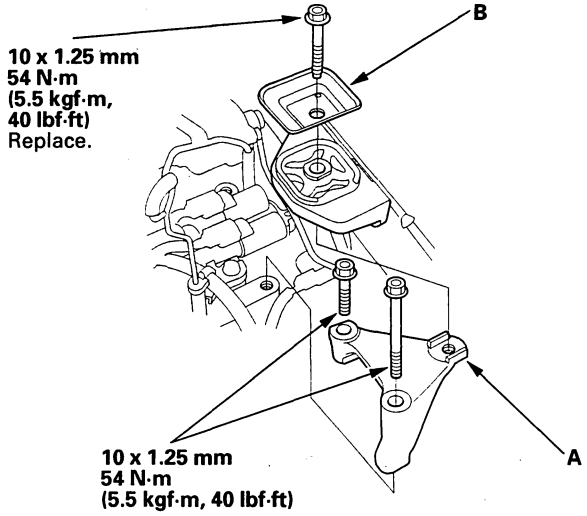

50. Install the new upper mount bolt and bracket plate (B).

(cont'd)

Protected by AR

Transmission Installation (cont'd)

51. Install the starter (A) on the torque converter housing. Connect the starter cables (B) to the starter, and install the harness clamp on the clamp bracket.

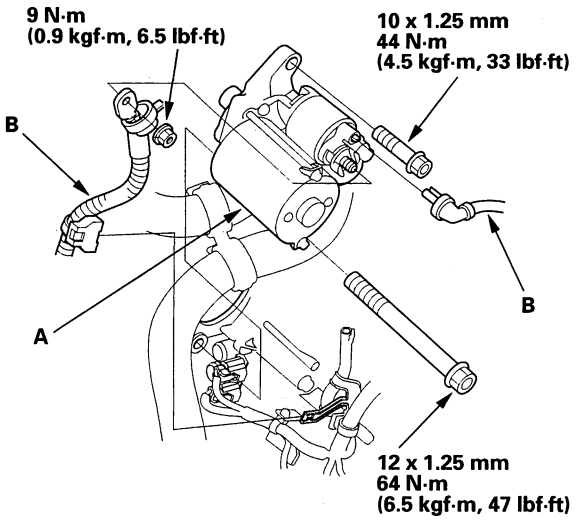

52. Install the power steering pump outlet line (A) with a new O-ring (B) to the pump (C), and install the hose (D) in its clamp (E).

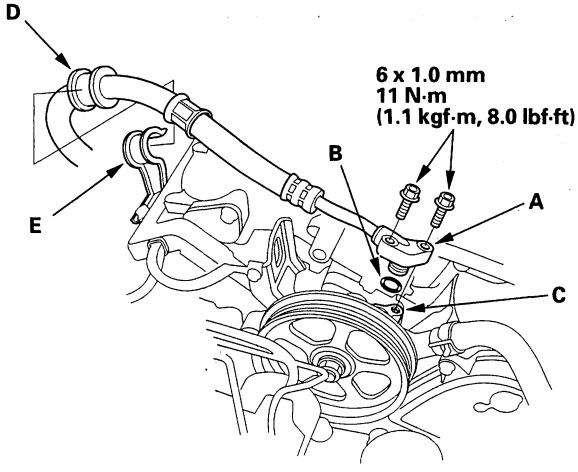

53. Refill the power steering system with fluid (see page 17-10).

54. Refill the transmission with ATF (see step 5 on page 14-186).

55. Connect the steering joint to the steering gearbox pinion shaft (A) by aligning the reference mark (B), and remove the wire (C) from the joint yoke (D).

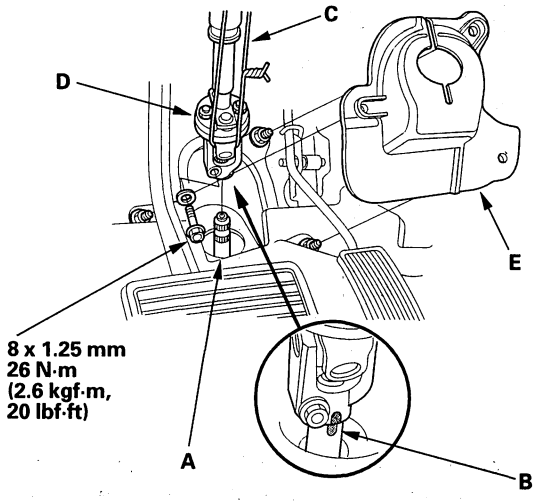

56. Install the steering joint cover (E).

57. Remove the steering wheel, refer to the 2003-2006 Accord Service Manual (see page 17-22).

58. Center the SRS cable reel and install the steering wheel, refer to the 2003-2006 Accord Service Manual (see page 17-24).

59. Install the battery base.

60. Install the air cleaner housing and intake air duct.

61. Install the battery tray, battery, and battery cover, then secure the battery with its hold-down bracket.

62. Clean the battery posts and cable terminals with sandpaper, then assemble them and apply grease to prevent corrosion.

BACK

Protected by AR

63. Reinstall the support strut bracket with the bolts to proper locations on both sides hood.

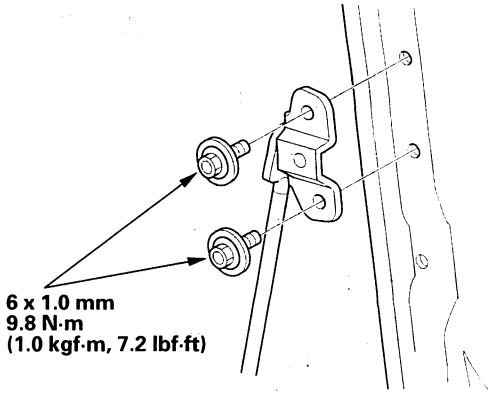

64. Set the parking brake. Start the engine, and shift the transmission through all gears three times.

65. Check the shift lever operation, A/T gear position indicator operation, and shift cable adjustment.

66. Check and adjust the front wheel alignment, refer to the 2003-2006 Accord Service Manual (see page 18-6).

67. Install the splash shield.

68. Start the engine in the P or N position, and warm it up to normal operating temperature (the radiator fan comes on).

69. Turn off the engine, and check the ATF level (see page 14-185).

70. Do the power window control unit reset procedure, refer to the 2003-2006 Accord Service Manual (see page 22-232).

71. Do the road test (see page 14-159).

72. Enter the audio and navigation anti-theft codes, then enter the presets, and set the clock.

Protected by AR

ATF Warmer Replacement

NOTE: Replace the ATF warmer with a new one whenever the transmission assembly is replaced.

1. Lift the vehicle up on a lift or apply the parking brake, block rear wheels, and raise the front of the vehicle. Make sure it is securely supported.
2. Remove the splash shield.
3. Drain the engine coolant (see page 10-6).
4. Remove the intake air duct and air cleaner housing.
5. Remove the harness clamps (A) and harness cover (B) from the harness clamp bracket (C), and remove the bolt securing the bracket.

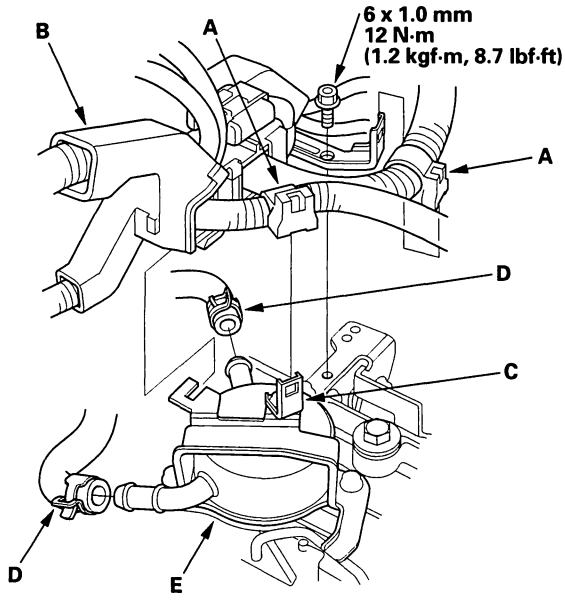

6. Disconnect the water hoses (D) from the ATF warmer (E).
7. Put a shop rugs around the ATF warmer (A) to catch the ATF that flows out.

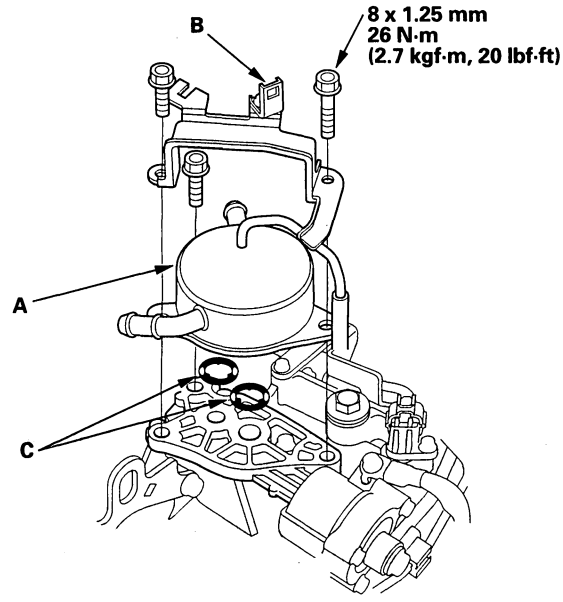

8. Remove the bolts securing the ATF warmer and the bracket (B), then remove the ATF warmer from the transmission
9. Clean the mounting surfaces and fluid passages. Do not allow dust or other foreign particles to enter the transmission
10. Install the new ATF warmer with the new O-rings (C) and the bracket. Do not pinch the O-rings.
11. Connect the water hoses on the ATF warmer, and secure the hoses with the clips.
12. Install the harness clamp bracket bolt, and install the harness clamps and harness cover on the bracket.
13. Install the intake air duct and air cleaner housing.
14. Fill the radiator with the engine coolant, then bleed air from the cooling system (see step 6 on page 10-6).
15. Install the splash shield.

BACK

Protected by AR

Shift Cable Replacement

1. Raise the vehicle, and make sure it is securely supported.
2. Remove the center console, refer to the 2003-2006 Accord Service Manual (see page 20-125).
3. Shift the transmission into the R position.
4. Remove the nut securing the shift cable end.

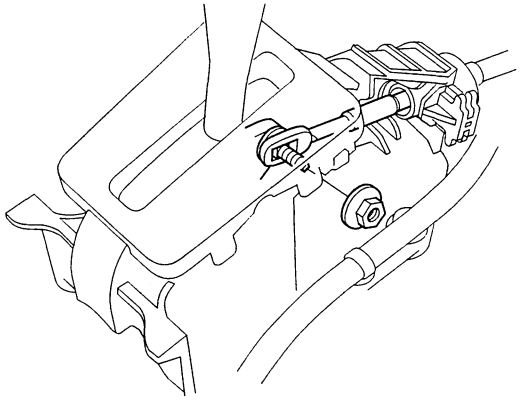

5. Press the holder lock release (A), and pull out the socket holder (B) on the shift cable (C) of the shift lever bracket base (D).

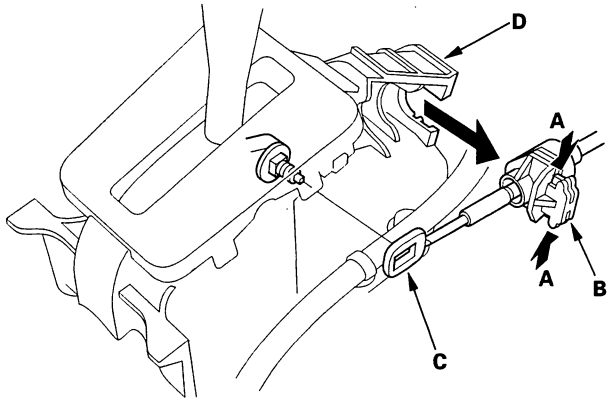

6. Remove the heat shield under the shift cable grommet.
7. Remove the shift cable bracket (A) and grommet (B).

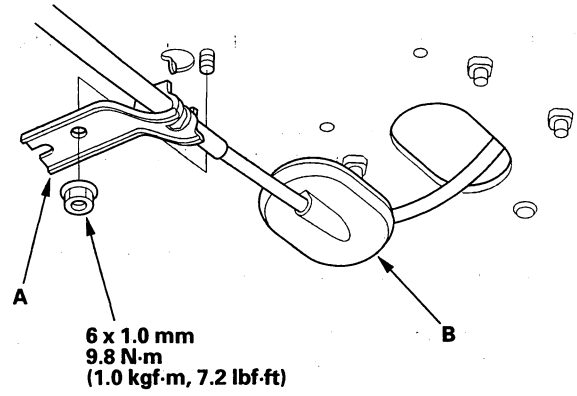

8. Remove the bolts securing shift cable holder (A), then remove the shift cable cover (B).

   NOTE: To prevent damage to the control lever joint, remove the bolts securing the holder before removing the bolts securing the cover.

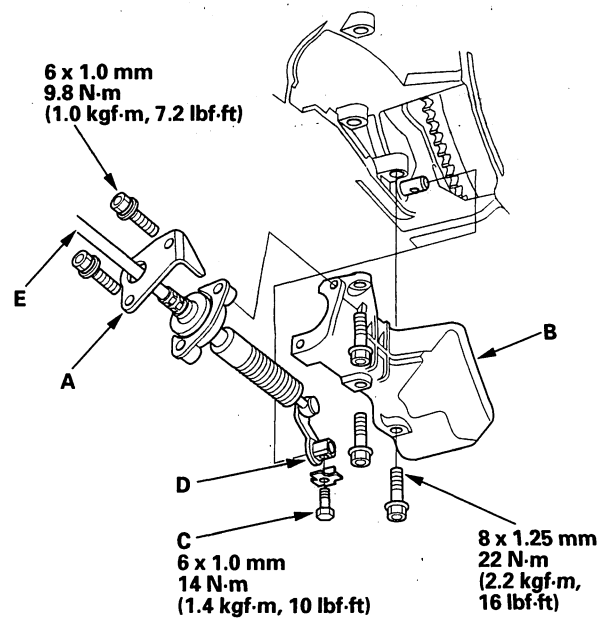

9. Remove the lock bolt (C) securing the control lever (D), then remove the shift cable (E) and the control lever. Do not bend the shift cable excessively.

(cont'd)

Protected by AR

Shift Cable Replacement (cont'd)

10. Insert the new shift cable through the grommet hole. Do not bend the shift cable excessively.
11. Install the shift cable bracket on the body, then install the grommet.
12. Verify that the transmission is in the R position at the control lever.
13. Install the selector control lever on the selector control shaft. Do not bend the shift cable excessively.
14. Install the lock bolt with a new lock washer, then bend the lock washer tab against the bolt head.
15. Install the shift cable cover, then secure the shift cable holder on the cover with the bolts.

    NOTE: To prevent damage to the control lever joint, be sure install the shift cable holder after installing the shift cable cover to the torque converter housing.
16. Install the heat shield.
17. Turn the ignition switch ON (II), and verify that the R position indicator comes on.
18. If necessary, push the shift cable until it stops, then release it. Pull the shift cable back one step so that the shift position is in R. Do not hold the shift cable guide (A) to adjust the shift cable (B).

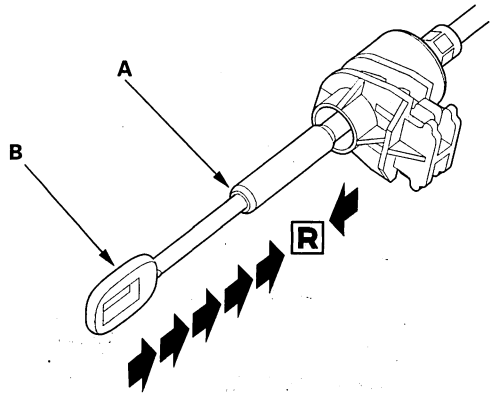

19. Turn the ignition switch OFF.
20. Insert a 6.0 mm (0.24 in.) pin (A) through the positioning hole (B) on the shift lever bracket base and into the positioning hole (C) on the shift lever. The shift lever is secured in the R position.

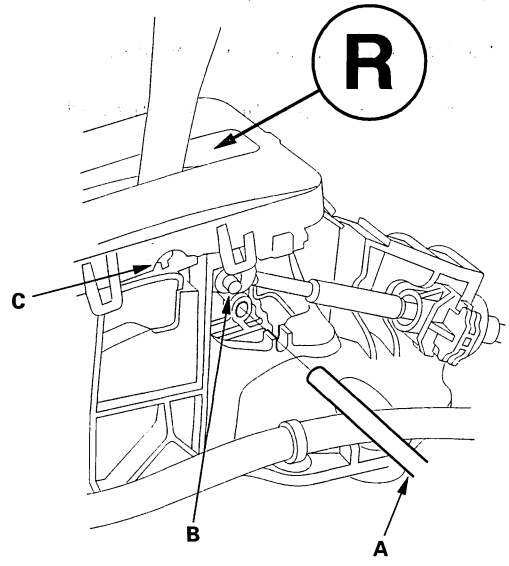

BACK

Protected by AR

21. Align the socket holder (A) on the shift cable (B) with the slot in the bracket base (C), then slide the holder into base. Install the shift cable end (D) over the mounting stud (E) by aligning its square hole (F) with the square fitting (G) at the bottom of the stud. Push the holder until it snaps securely in place. Do not install the shift cable by holding the shift cable guide (H).

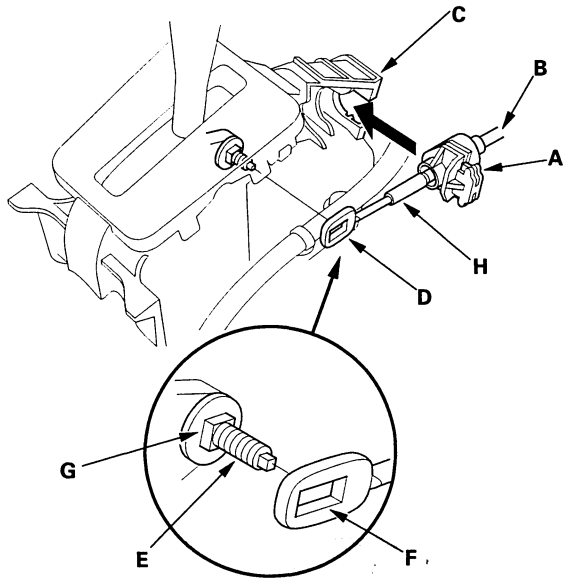

22. Verify that the shift cable end (A) is properly installed on the mounting stud (B).

Properly Installed:

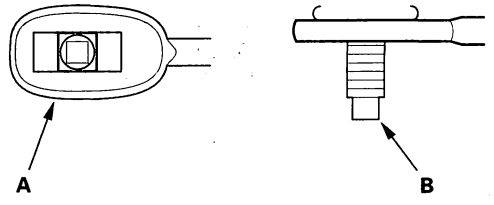

Improperly Installed:

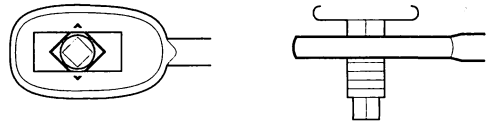

Cable end rides on the bottom of the mounting stud.

23. If improperly installed, remove the shift cable from the bracket base, and reinstall the shift cable. Do not install the shift cable end on the mounting stud while the shift cable is on the bracket base.

24. Install and tighten the nut.

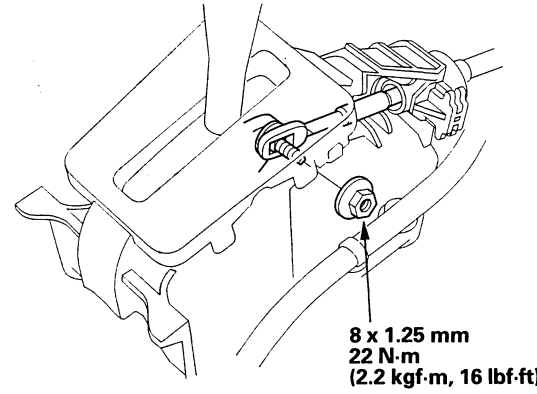

25. Remove the 6.0 mm (0.24 in.) pin that was installed to hold the shift lever.

26. Move the shift lever to each position, and verify that the A/T gear position indicator follows the transmission range switch.

27. Allow the front wheels to rotate freely.

28. Start the engine, and check the shift lever operation in all gears.

29. Push the shift lock release, and verify that the shift lever releases.

30. Reinstall the center console, refer to the 2003-2006 Accord Service Manual (see page 20-125).

Protected by AR

A/T Gear Position Indicator

Component Location Index

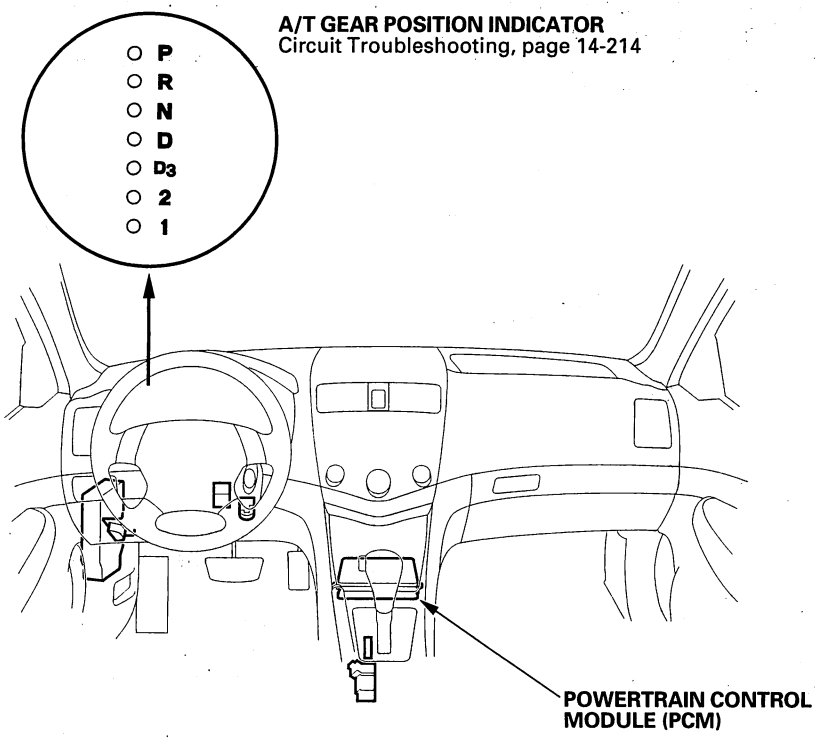



BACK

Protected by AR

Circuit Diagram

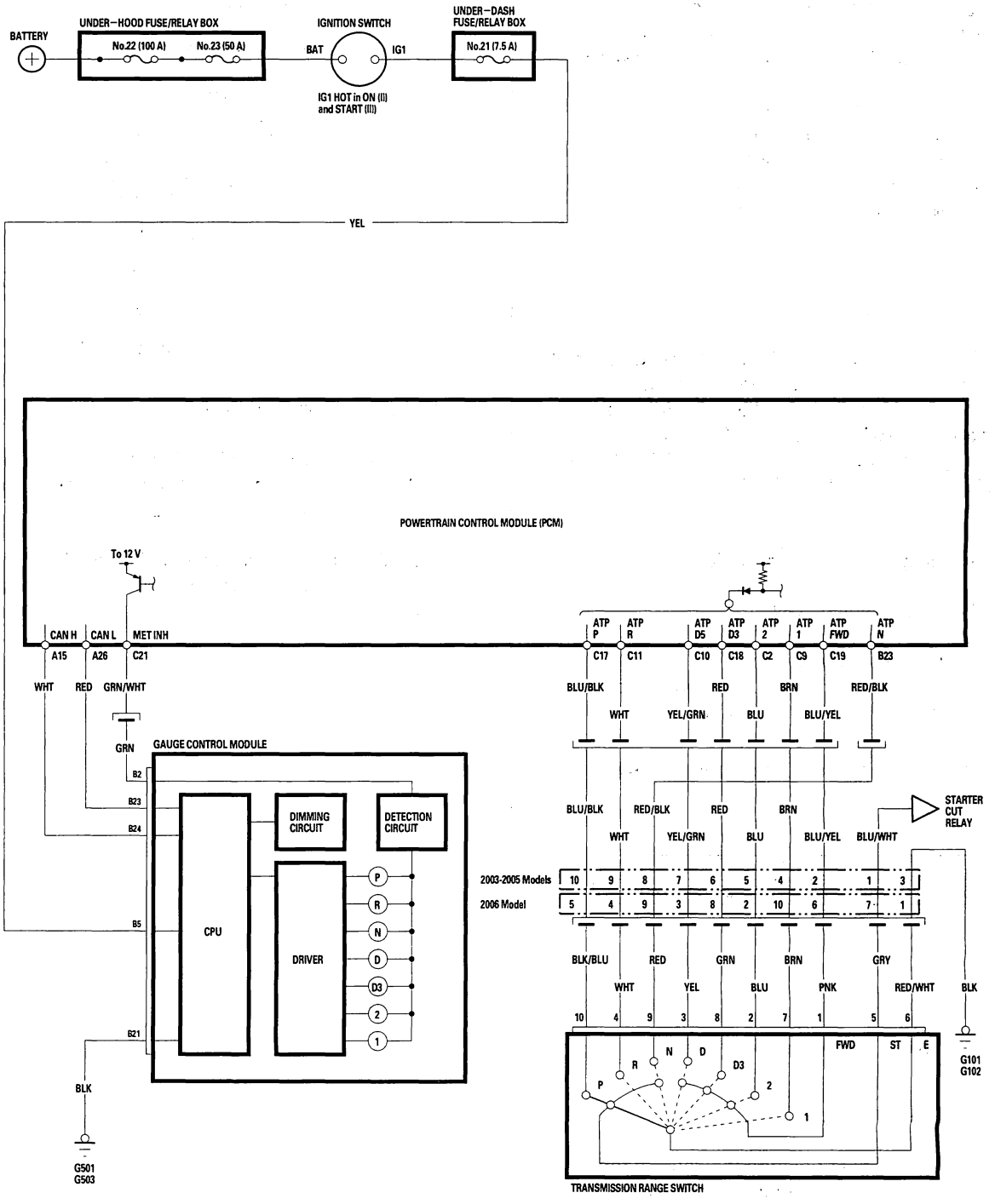

BACK

Protected by AR

A/T Gear Position Indicator

A/T Gear Position Indicator Circuit Troubleshooting

Symptom: A/T gear position indicator does not indicate the shift lever position, the D indicator does not blink, and no transmission range switch, CAN line DTCs are indicated.

1. Check the indicator drive circuit and communication line in the gauge control module with the self-diagnostic procedure of the gauge control module, refer to the 2003-2006 Accord Service Manual (see page 22-259).

   Is the system OK?

   YES—Go to step 2.

   NO—Record the ODO data in the old gauge control module, and replace the gauge control module, refer to the 2003-2006 Accord Service Manual (see page 22-276). Input the old ODO data in the new gauge control module with the HDS, refer to the 2003-2006 Accord Service Manual (see page 22-276). ■

2. Remove the gauge control module.

3. Turn the ignition switch ON (II).

4. Measure the voltage between gauge control module connector terminal B2 and body ground. The shift lever can be in any position.

GAUGE CONTROL MODULE CONNECTOR B (30P)

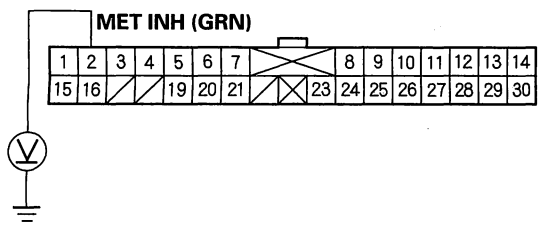

Wire side of female terminals

Is there battery voltage?

YES—Faulty A/T gear position indicator in the gauge control module, replace the gauge control module. ■

NO—Go to step 5.

5. Measure the voltage between PCM connector terminal C21 and body ground.

PCM CONNECTOR C (22P)

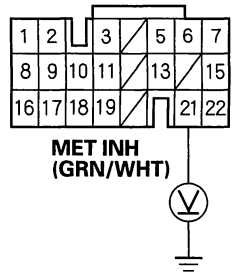

Wire side of female terminals

Is there battery voltage?

YES—Repair open or short in the wire between PCM connector terminal C21 and the gauge control module connector terminal B2. ■

NO—Check for loose terminal fit in the PCM connectors. If necessary, substitute a known-good PCM and recheck. ■

BACK

Protected by AR

Transmission Range Switch Test

1. Remove the transmission range switch harness connector (A) from the connector bracket (B), then disconnect the connector.

2003-2005 Models:

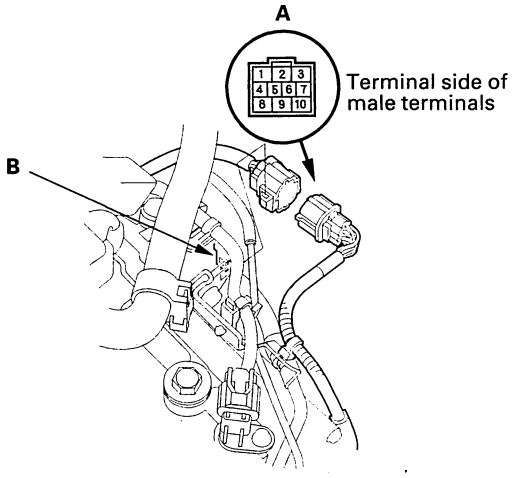

2006 Model:

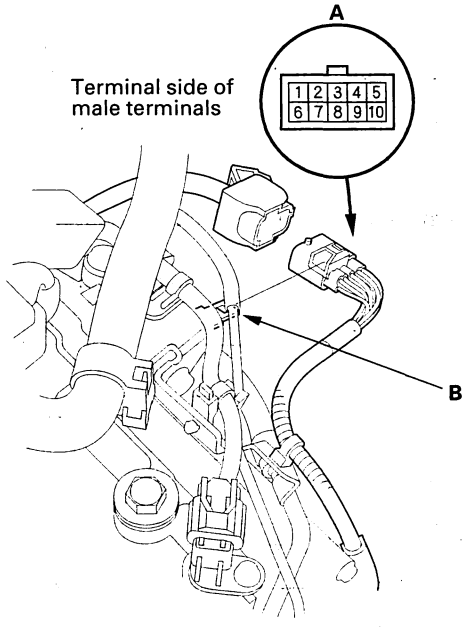

2. Check for continuity between terminals at the harness connector. There should be continuity between the terminals in the following table for each switch position.

- If the continuity test for each position is good, the switch is OK. Reconnect the connector.
- If there is no continuity at one or more switch positions, go to step 3.

Transmission Range Switch Harness Connector 2003-2005 Models:

Position	Connector Terminal/Signal									
	1	2	3	4	5	6	7	8	9	10
	ATP NP	ATP FWD	GND	1	2	D3	D	N	R	P
P	○		○							○
R			○						○	
N	○		○					○		
D		○	○				○			
D3		○	○			○				
2		○	○		○					
1			○	○						

Transmission Range Switch Harness Connector 2006 Model:

Position	Connector Terminal/Signal									
	1	2	3	4	5	6	7	8	9	10
	GND	2	D	R	P	ATP FWD	ATP NP	D3	N	1
P	○				○		○			
R	○			○						
N	○						○		○	
D	○		○			○				
D3	○					○		○		
2	○	○				○				
1	○									○

(cont'd)

Protected by AR

A/T Gear Position Indicator

Transmission Range Switch Test (cont'd)

3. Remove the transmission range switch cover.

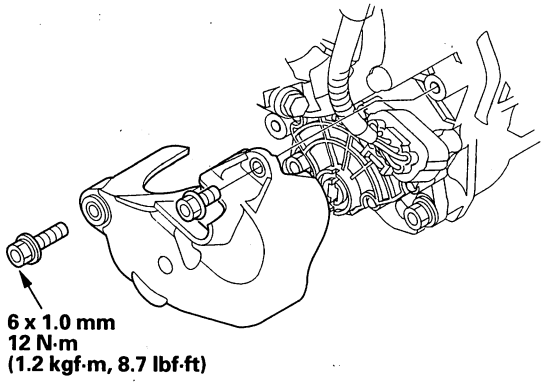

4. Disconnect the transmission range switch connector.

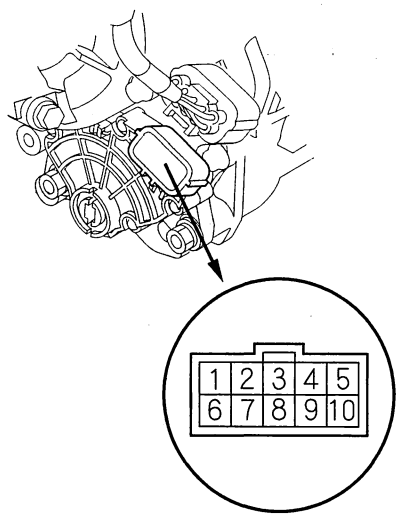

5. Check for continuity between terminals at the switch connector. There should be continuity between the terminals in the following table for each switch position.

   - If the transmission range switch continuity check is OK, replace the faulty transmission range switch harness.
   - If there is no continuity at one or more switch positions, go to step 6.

Transmission Range Switch Connector

Position	Connector Terminal/Signal									
	1	2	3	4	5	6	7	8	9	10
	ATP FWD	2	D	R	ATP NP	GND	1	D3	N	P
P					○	○				○
R				○		○				
N					○	○			○	
D	○		○			○				
D3	○					○		○		
2	○	○				○				
1						○	○			

BACK

Protected by AR

6. Remove the transmission range switch, and check the end of the selector control shaft (A).

Standard:
Selector Control Shaft Width (B):
6.1—6.2 mm (0.240—0.244 in.)
Selector Control Shaft End Gap (C):
1.8—2.0 mm (0.07—0.08 in.)

- If the measurement of the selector control shaft end is within the standard, replace the transmission range switch (see page 14-218).
- If the measurement is out of standard, repair the selector control shaft end, and recheck the transmission range switch continuity.

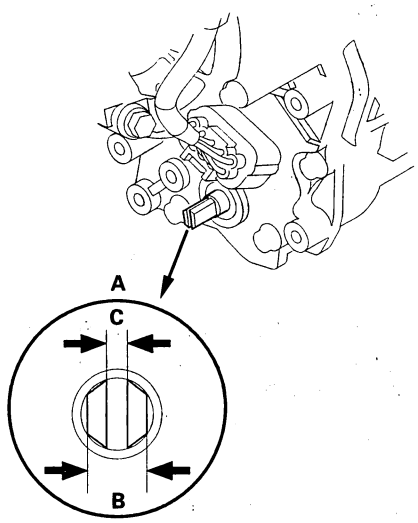

Protected by AR

A/T Gear Position Indicator

Transmission Range Switch Replacement

1. Raise the vehicle, and make sure it is securely supported.
2. Shift to the N position.
3. Remove the transmission range switch cover.

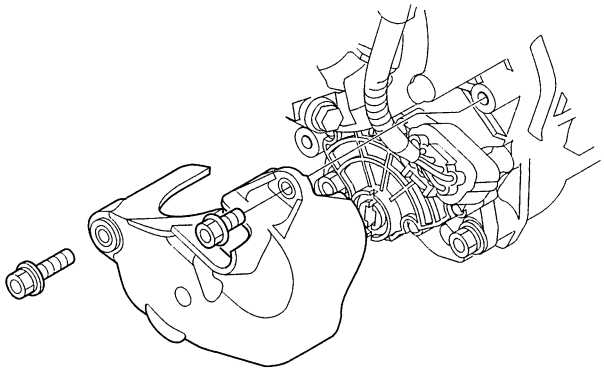

4. Disconnect the transmission range switch connector.

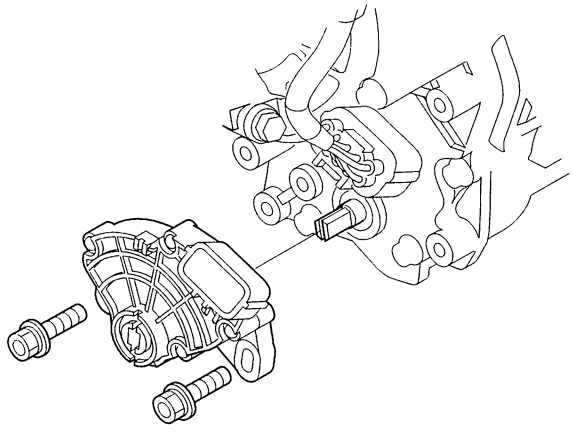

5. Remove the transmission range switch, and replace the new switch.
6. Make sure the selector control shaft is in the N position. If necessary, move the shift lever to the N position.

   NOTE: Do not use the selector control shaft to adjust the shift position. If the selector control shaft tips are squeezed together it will cause a faulty signal or position due to play between the selector control shaft and the switch. The clearance (A) between selector control shaft tips is 2.0 mm (0.08 in.)

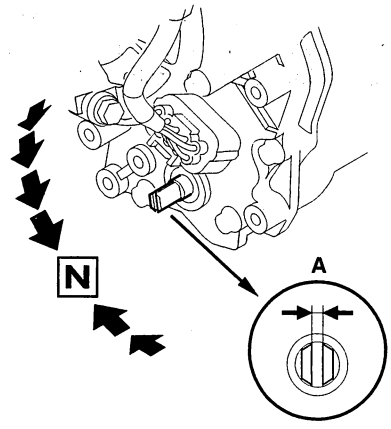

7. Align the cutouts (A) on the rotary-frame with the neutral positioning cutouts (B) on the transmission range switch (C), then put a 2.0 mm (0.08 in.) feeler gauge blade (D) in the cutouts to hold the switch in the N position.

   NOTE: Be sure to use a 2.0 mm (0.08 in.) blade or equivalent to hold the switch in the N position.

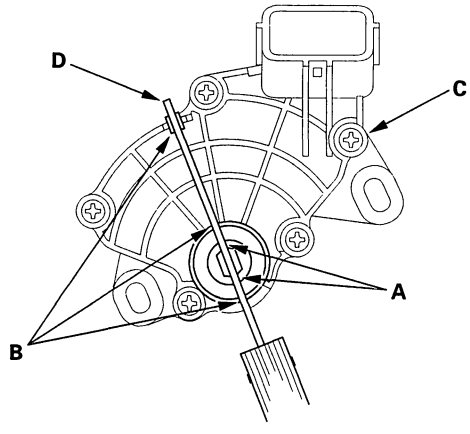

BACK

Protected by AR

8. Install the transmission range switch (A) gently on the selector control shaft (B) while holding it in the N position with the 2.0 mm (0.08 in.) blade (C).

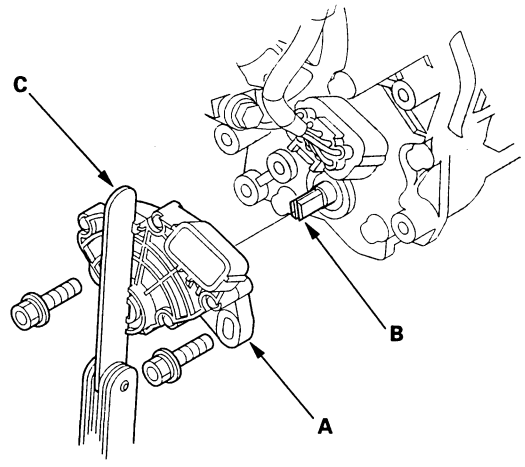

9. Tighten the bolts on the transmission range switch while you continue to hold the N position. Do not move the transmission range switch when tightening the bolts. Remove the feeler gauge.

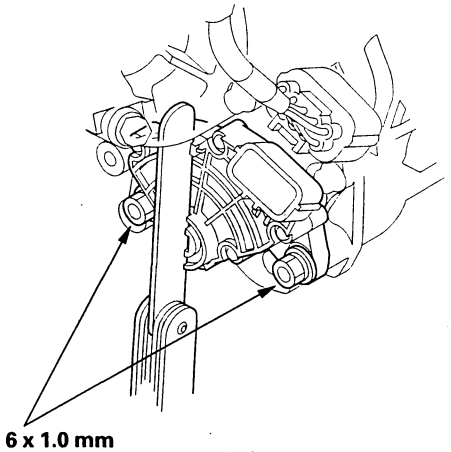

6 x 1.0 mm
12 N·m (1.2 kgf·m, 8.7 lbf·ft)

10. Connect the connector securely, then install the transmission range switch cover (A).

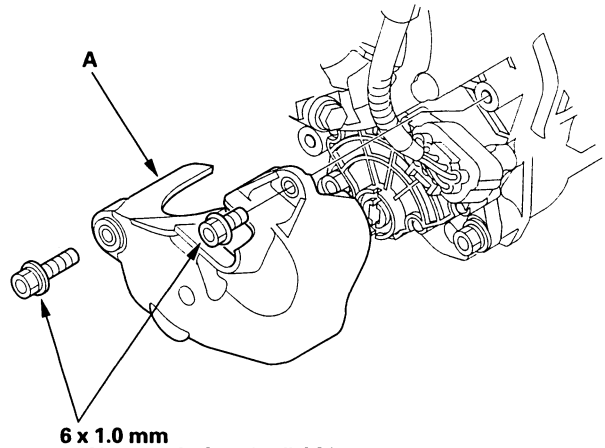

6 x 1.0 mm
12 N·m (1.2 kgf·m, 8.7 lbf·ft)

11. Turn the ignition switch ON (II). Move the shift lever through all positions, and check the transmission range switch synchronization with the A/T gear position indicator.

12. Check that the engine will start in the P and N positions, and will not start in any other shift lever position.

13. Check that the back-up lights come on when the shift lever is in the R position.

14. Allow the front wheels to rotate freely, then start the engine, and check the shift lever operation.

BACK

Protected by AR

A/T Interlock System

Component Location Index

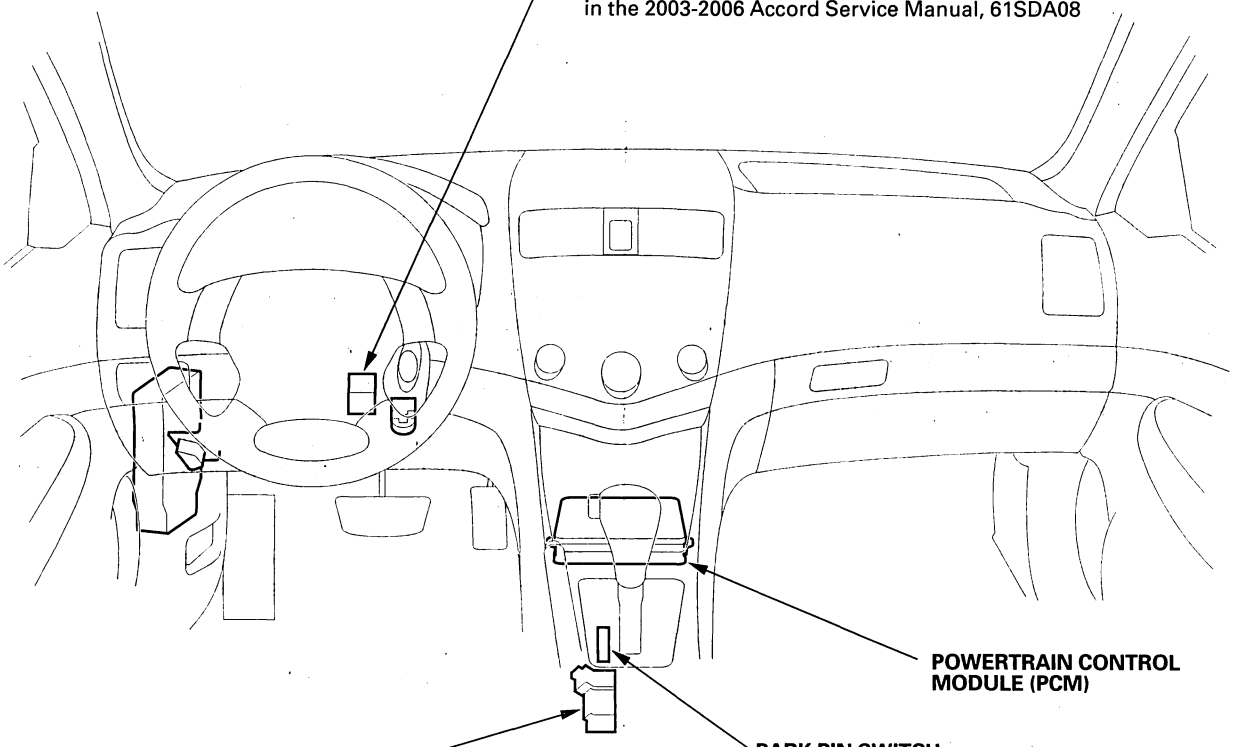

STEERING LOCK ASSEMBLY
KEY INTERLOCK SOLENOID
Interlock System Circuit Troubleshooting, page 14-259
in the 2003-2006 Accord Service Manual, 61SDA08
Test, page 14-260
in the 2003-2006 Accord Service Manual, 61SDA08

POWERTRAIN CONTROL MODULE (PCM)

PARK PIN SWITCH
Interlock System Circuit Troubleshooting,
page 14-259
in the 2003-2006 Accord Service Manual, 61SDA08
Test, page 14-263
in the 2003-2006 Accord Service Manual, 61SDA08
Replacement, page 14-263
in the 2003-2006 Accord Service Manual, 61SDA08

SHIFT LOCK SOLENOID
Shift Lock System Circuit
Troubleshooting, page 14-222
Test, page 14-261
in the 2003-2006 Accord Service Manual, 61SDA08
Replacement, page 14-262
in the 2003-2006 Accord Service Manual, 61SDA08

BACK

Protected by AR

Circuit Diagram

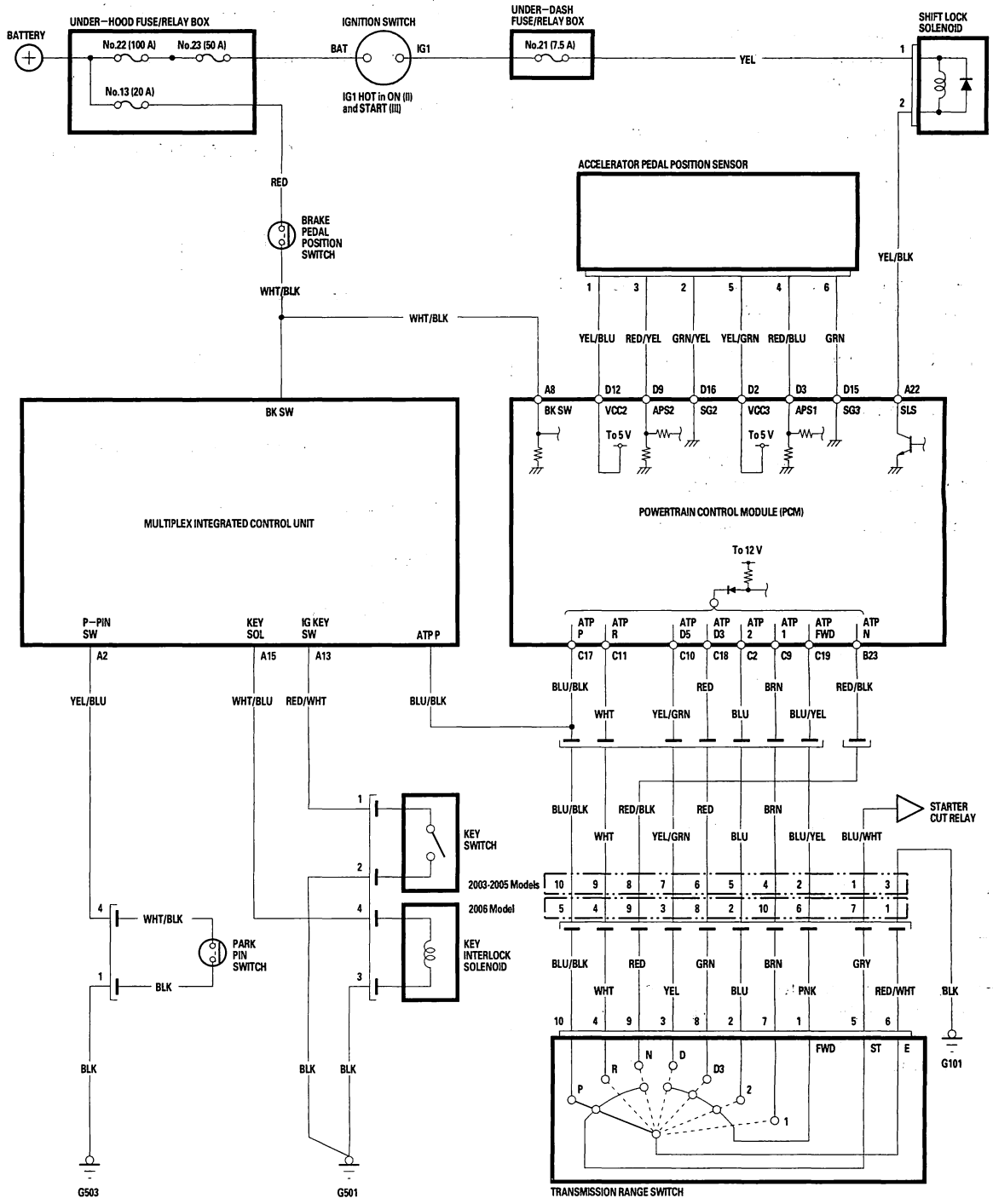

BACK

Protected by AR

Shift Lock System Circuit Troubleshooting

1. Connect the HDS to the DLC.
2. Choose Shift Lock Solenoid Test in Miscellaneous Test Menu, and check that the shift lock solenoid operates with the HDS.

   Does the shift lock solenoid work properly?

   YES—Go to step 14.

   NO—Go to step 3.
3. Remove the center console, refer to the 2003-2006 Accord Service Manual (see page 20-125).
4. Disconnect the shift lock solenoid connector.
5. Turn the ignition switch ON (II).
6. Measure the voltage between shift lock solenoid connector terminal No. 1 and body ground.

   SHIFT LOCK SOLENOID CONNECTOR

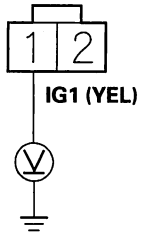

Wire side of female terminals

   Is there battery voltage?

   YES—Go to step 7.

   NO—Check for a blown No. 21 (7.5 A) fuse in the under-dash fuse/relay box. If the fuse is OK, repair open or short in the wire between the shift lock solenoid connector and the under-dash fuse/relay box.■
7. Shift the shift lever into the P position, and press the brake pedal. Do not press the accelerator.
8. Measure the voltage between shift lock solenoid connector terminals No. 1 and No. 2 while pressing the brake pedal.

   SHIFT LOCK SOLENOID CONNECTOR

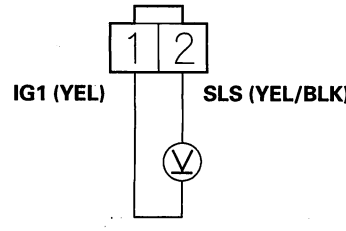

Wire side of female terminals

   Is there battery voltage?

   YES—Go to step 9.

   NO—Go to step 10.

BACK

Protected by AR

9. Release the brake pedal, and measure the voltage between connector terminals No. 1 and No. 2. The shift lever must be in the P position.

SHIFT LOCK SOLENOID CONNECTOR

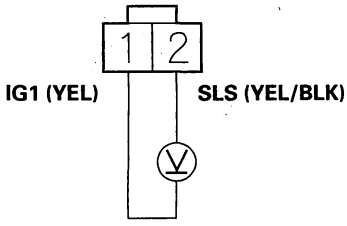

Wire side of female terminals

Is there battery voltage?

YES—Repair a short to ground in the wire between PCM connector terminal A22 and the shift lock solenoid. ■

NO—Check the shift lock mechanism. If the mechanism is OK, replace the shift lock solenoid, refer to the 2003-2006 Accord Service Manual (see page 14-260).

10. Turn the ignition switch OFF.
11. Jump the SCS line with the HDS.
12. Disconnect PCM connector A (31P).
13. Check for continuity between PCM connector terminal A22 and shift lock solenoid connector terminal No. 2.

SHIFT LOCK SOLENOID CONNECTOR **PCM CONNECTOR A (31P)**

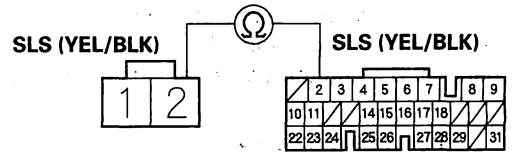

Wire side of female terminals

Is there continuity?

YES—Substitute a known-good PCM and recheck. ■

NO—Repair open in the wire between PCM connector terminal A22 and the shift lock solenoid. ■

(cont'd)

Protected by AR

Shift Lock System Circuit Troubleshooting (cont'd)

14. Press the brake pedal.

    Are the brake lights ON?

    YES—Go to step 15.

    NO—Repair faulty brake light circuit. ■

15. Turn the ignition switch OFF.

16. Jump the SCS line with the HDS.

17. Disconnect PCM connector A (31P).

18. Measure the voltage between PCM connector terminal A8 and body ground while pressing the brake pedal and when the brake pedal is released.

PCM CONNECTOR A (31P)

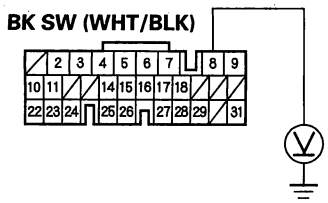

Wire side of female terminals

Is there battery voltage while the brake pedal is pressing, and no voltage when the pedal is released?

YES—Go to step 20.

NO—Go to step 19.

19. Check for continuity between PCM connector terminal A8 and body ground.

PCM CONNECTOR A (31P)

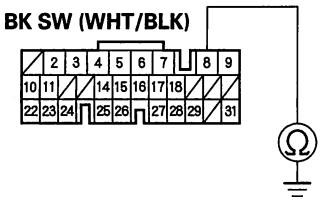

Wire side of female terminals

Is there continuity?

YES—Repair short to ground in the wire between PCM connector terminal A8 and the brake pedal position switch. ■

NO—Repair open in the wire between PCM connector terminal A8 and the brake pedal position switch. ■

BACK

Protected by AR

20. Connect PCM connector A (31P).
21. Disconnect the transmission range switch connector.
22. Turn the ignition switch ON (II).
23. Measure the voltage between transmission range switch connector terminals No. 6 and No. 10.

TRANSMISSION RANGE SWITCH CONNECTOR

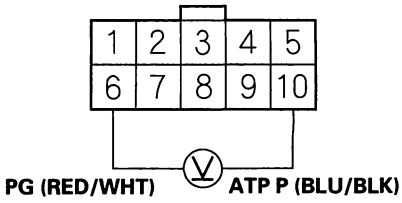

Wire side of female terminals

Is there battery voltage?

YES—Go to step 29.

NO—Go to step 24.

24. Turn the ignition switch OFF.
25. Disconnect PCM connector C (17P).
26. Check for continuity between PCM connector terminal C17 and body ground.

PCM CONNECTOR C (22P)

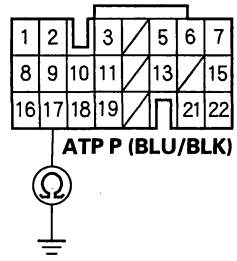

Wire side of female terminals

Is there continuity?

YES—Repair short in the wire between PCM connector terminal C17 and the transmission range switch. ■

NO—Go to step 27.

(cont'd)

Protected by AR

Shift Lock System Circuit Troubleshooting (cont'd)

27. Check for continuity between PCM connector terminal C17 and transmission range switch connector terminal No. 10.

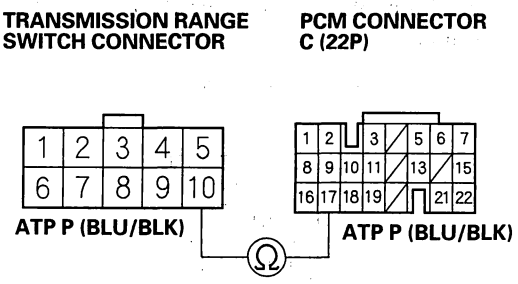

Wire side of female terminals

Is there continuity?

YES—Go to step 28.

NO—Repair open in the wire between PCM connector terminal C17 and the transmission range switch. ■

28. Check for continuity between transmission range switch connector terminal No. 6 and body ground.

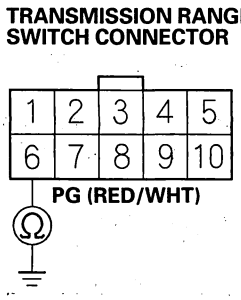

Wire side of female terminals

Is there continuity?

YES—Substitute a known-good PCM and recheck. ■

NO—Repair open in the wire between transmission range switch connector terminal No. 6 and ground (G101), or repair poor ground (G101). ■

BACK

Protected by AR

29. Test the transmission range switch (see page 14-215).

    Is the switch OK?

    YES—Go to step 30.

    NO—Replace the transmission range switch (see page 14-218).

30. Connect the HDS to the DLC.

31. Check the accelerator pedal position sensor in the A/T data list with the HDS. Do not press the accelerator.

    Is the accelerator pedal position sensor opening 11% and above, or the sensor voltage 0.90 V and above?

    YES—Check the throttle body (see page 11-343).

    NO—Check the throttle cable adjustment (see page 11-346). If the throttle cable adjustment is OK, substitute a known-good PCM and recheck. ■

Protected by AR

Transmission End Cover

End Cover, 3rd Gear, Idler Gear, and 3rd Clutch Removal

Special Tools Required
- Mainshaft holder 07GAB-PF50101 or 07GAB-PF50100
- Adjustable bearing puller, 25—40 mm 07736-A01000B or 07736-A01000A

1. Remove the ATF temperature sensor connector (A) from the connector bracket (B), then disconnect the connector, and remove the ATF temperature sensor (C) (three bolts).

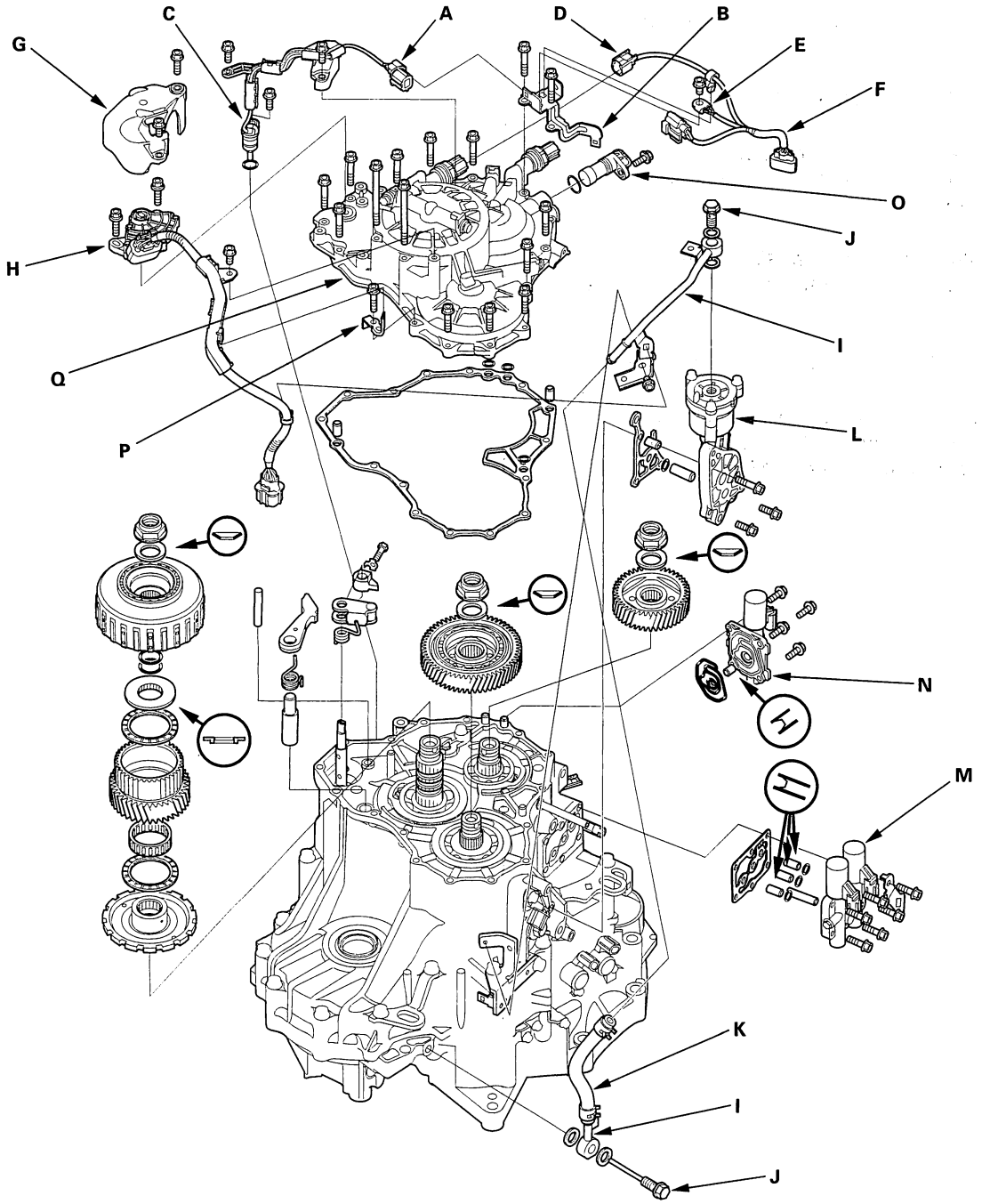

BACK

Protected by AR

2. Disconnect the 3rd clutch transmission fluid pressure switch (D), remove the ground terminal (E), then remove the sensor subharness (F).

3. Remove the transmission range switch cover (G), then remove the transmission range switch (H) (three bolts).

4. Remove the 6 mm bolt securing the harness clamp bracket on the ATF line (I), and remove the line bolts (J), then remove the ATF line and sealing washers. Remove the ATF hose (K) from the ATF line if necessary.

5. Remove the ATF passage body (L), ATF pipe, O-ring, dowel pin, and gasket (three bolts).

6. Remove the A/T clutch pressure control solenoid valves A and B (M), clamp bracket, ATF pipes, O-rings, and gasket (six bolts).

7. Remove the A/T clutch pressure control solenoid valve C (N), ATF pipe, and gasket (four bolts).

8. Remove the input shaft (mainshaft) speed sensor (O).

9. Remove the 16 bolts securing the end cover, connector bracket (B), harness cover bracket (P), then remove the end cover (Q), two dowel pins, O-rings, and gasket.

10. Slip the special tool onto the mainshaft.

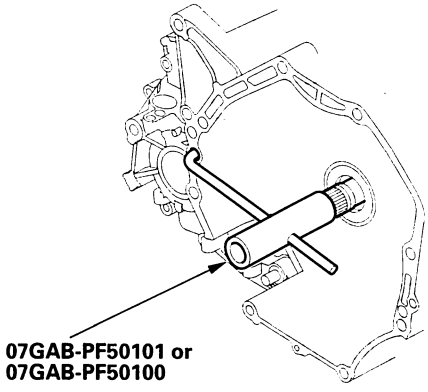

07GAB-PF50101 or 07GAB-PF50100

11. Engage the park pawl with the park gear.

12. Cut the lock tab (A) of each shaft locknut (B) using a chisel (C). Then remove the locknuts and conical spring washers from each shaft.

NOTE:
- Countershaft and secondary shaft locknuts have left-hand threads.
- Keep all of the chiseled particles out of the transmission.
- Clean the old locknuts; they are used to install the press fit mainshaft 3rd gear, secondary shaft idler gear, and 3rd clutch assembly on the countershaft.

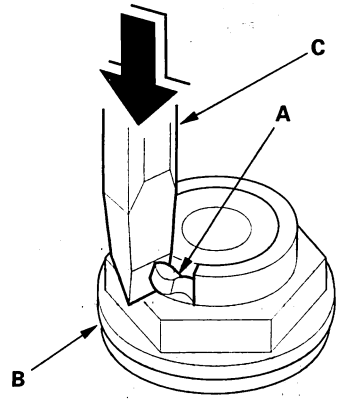

13. Remove the special tool from the mainshaft.

(cont'd)

Protected by AR

End Cover, 3rd Gear, Idler Gear, and 3rd Clutch Removal (cont'd)

14. Remove the 3rd clutch assembly using the special tool and a commercially available 3/8 "-16 slide hammer (A).

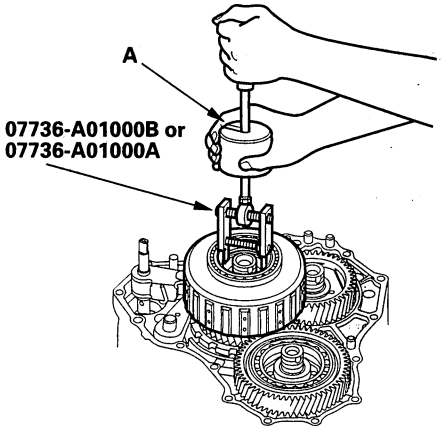

15. Remove the splined washer, thrust needle bearing, countershaft 3rd gear, needle bearing, and thrust needle bearing from the countershaft.

16. Remove the mainshaft 3rd gear (A), secondary shaft idler gear (B), and park gear (C) with a puller (D).

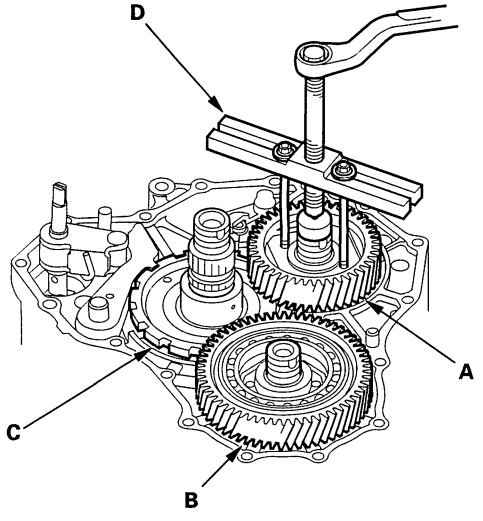

17. Remove the park pawl, park pawl spring, park pawl shaft, and stop shaft.

18. Remove the park lever from the selector control shaft.

Park Lever Stop Inspection and Adjustment

1. Set the park lever (A) in the P position.

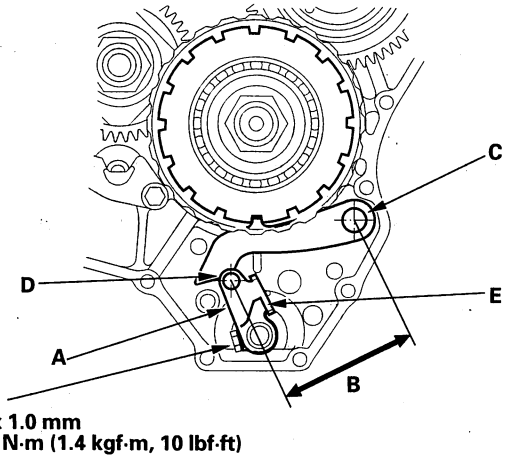

2. Measure the distance (B) between the park pawl shaft (C) and the park lever roller pin (D).

   Standard: 84.6—85.6 mm (3.33—3.37 in.)

3. If the measurement is out of tolerance, select and install the appropriate park lever stop (E) from the table.

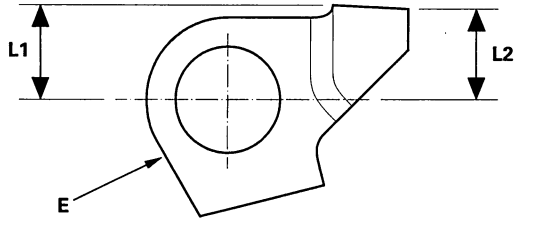

PARK LEVER STOP

Mark	Part Number	L1	L2
1	24537-PA9-003	11.00 mm (0.433 in.)	11.00 mm (0.433 in.)
2	24538-PA9-003	10.80 mm (0.425 in.)	10.65 mm (0.419 in.)
3	24539-PA9-003	10.60 mm (0.417 in.)	10.30 mm (0.406 in.)

4. After replacing the park lever stop, make sure the distance is within tolerance.

BACK

Protected by AR

Selector Control Shaft Oil Seal Replacement

Special Tools Required
- Driver 07749-0010000
- Attachment, 22 x 24 mm 07746-0010800

1. Remove the oil seal (A) from the end cover (B).

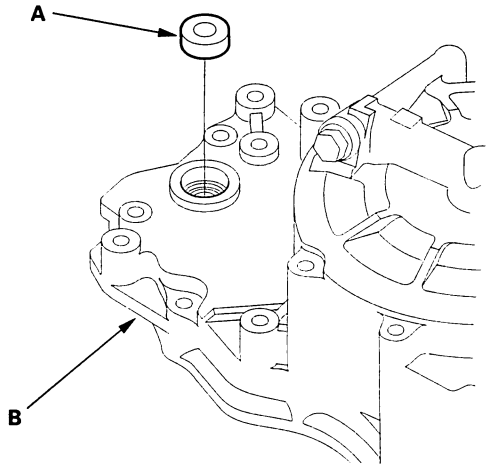

2. Install the new oil seal flush to the end cover with the special tools.

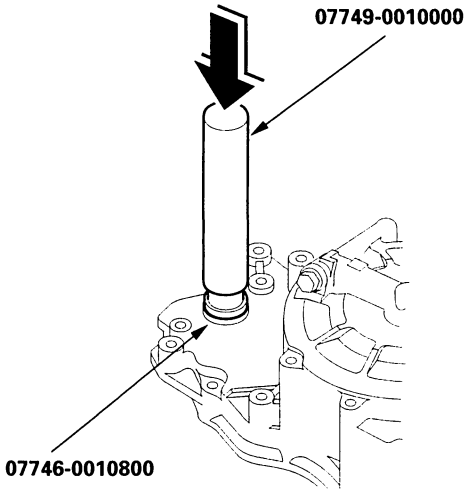

Selector Control Shaft Bearing Replacement

Special Tools Required
- Driver 07749-0010000
- Attachment, 22 x 24 mm 07746-0010800

1. Remove the oil seal from the end cover, then remove the bearing.

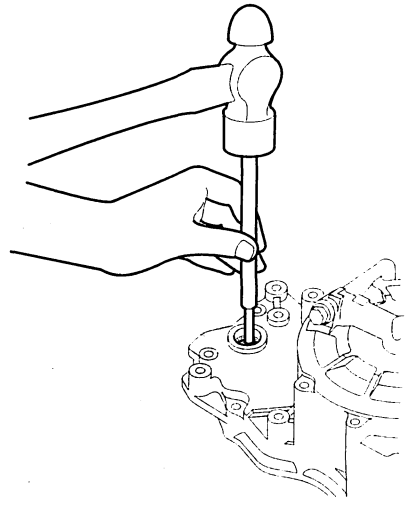

2. Install the new bearing flush to the end cover with the special tools.

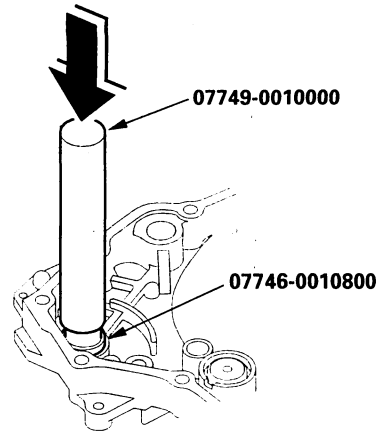

3. Install the new oil seal.

Protected by AR

Transmission End Cover

ATF Feed Pipe Replacement

1. Remove the snap rings (A), ATF feed pipes (B) and feed pipe flanges (C) from the end cover (D).

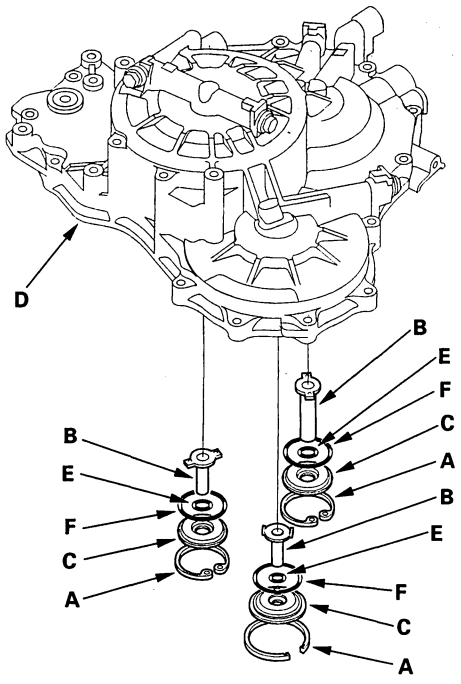

2. Install the new O-ring (E) over the ATF feed pipe.
3. Install the ATF feed pipe in the end cover by aligning the feed pipe tabs with the indentations in the end cover.
4. Install the new O-ring (F) in the end cover, then install the feed pipe flange over the ATF feed pipe and O-rings.
5. Secure the ATF feed pipe and feed pipe flange with the snap ring.

BACK

Protected by AR

Housing and Shaft Assembly Removal

Special Tools Required
Housing puller 07HAC-PK40102

1. Remove the ATF dipstick guide pipe (A).

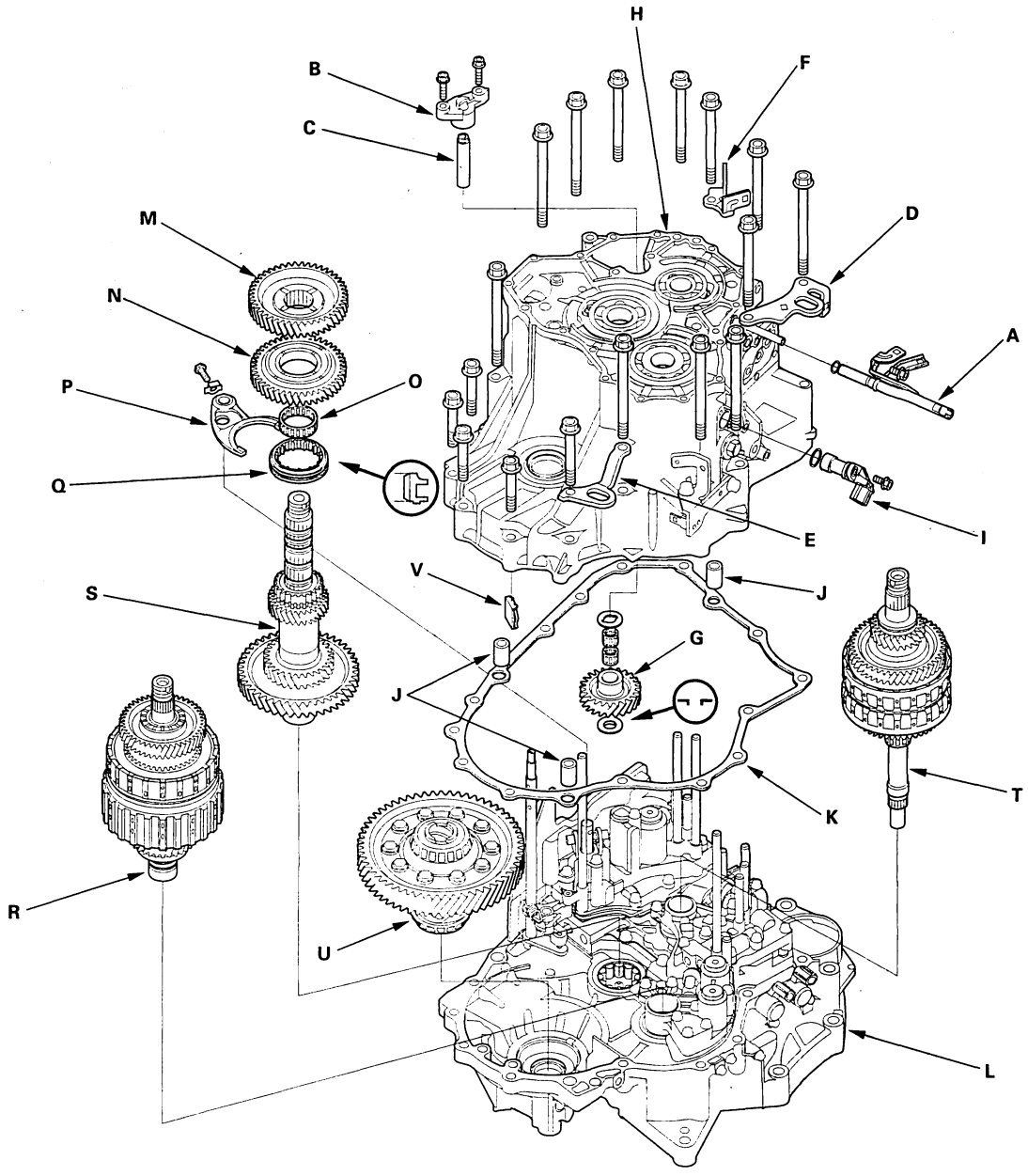

2. Remove the two bolts securing the reverse idler gear shaft holder, then remove the reverse idler gear shaft holder (B) and shaft (C).

3. Remove the transmission housing mounting bolts (17 bolts), transmission hangers (D) (E), and harness clamp bracket (F).

(cont'd)

Protected by AR

Housing and Shaft Assembly Removal (cont'd)

4. Move the reverse idler gear (G) to disengage it from the mainshaft and countershaft idler gear.

   NOTE: The transmission housing will not separate from the torque converter housing if the reverse idler gear is not moved.

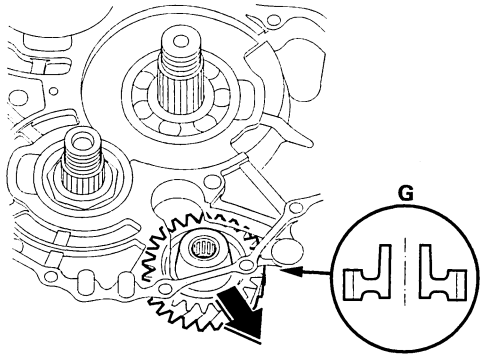

5. Align the spring pin (W) on the selector control shaft (X) with the transmission housing groove (Y) by turning the selector control shaft.

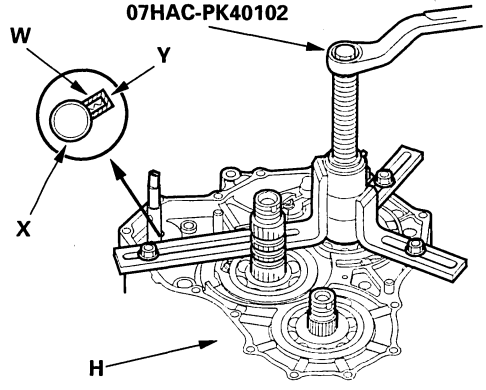

6. Install the special tool over the mainshaft, then remove the transmission housing (H).

   NOTE: If the top arm of your housing puller is too short, replace it with Housing Puller Arm, 205 mm T/N 07SAC-P0Z0101.

7. Remove the reverse idler gear (G), needle bearings, and washers from the transmission housing.

8. Remove the output shaft (countershaft) speed sensor (I).

9. Remove the three dowel pins (J) and gasket (K) from the torque converter housing (L).

10. Remove the countershaft 2nd gear (M), countershaft reverse gear (N), and needle bearing (O).

11. Remove the lock bolt securing the shift fork, then remove the shift fork (P) and reverse selector (Q). If the reverse selector hub is not press-fitted, remove the reverse selector hub, countershaft 5th gear, and needle bearing from the countershaft.

12. Remove the secondary shaft subassembly (R). If the reverse selector hub is press-fitted, remove the secondary shaft subassembly, countershaft subassembly (S) and mainshaft subassembly (T) together.

13. Remove the countershaft subassembly.

14. Remove the mainshaft subassembly.

15. Remove the differential assembly (U).

16. Remove the ATF magnet (V), and clean it. Reinstall the magnet in the transmission housing.

BACK

Protected by AR

Bearing Removal and Installation

Special Tools Required
- Driver 07749-0010000
- Seal driver attachment 07GAD-PG40101 or 07GAD-PG40100
- Attachment, 62 x 68 mm 07746-0010500
- Attachment, 72 x 75 mm 07746-0010600 (for 2003-2005 models countershaft bearing use)
- Attachment, 78 x 80 mm 07NAD-PX40100 (for 2006 model countershaft bearing use)

NOTE: Coat all parts with ATF before assembly.

1. To remove the mainshaft bearing (A), countershaft bearing (B), and secondary shaft bearing (C) from the transmission housing, expand each snap ring with the snap ring pliers, then push the bearing out.

   NOTE: Do not remove the snap rings unless it's necessary to clean the grooves in the housing.

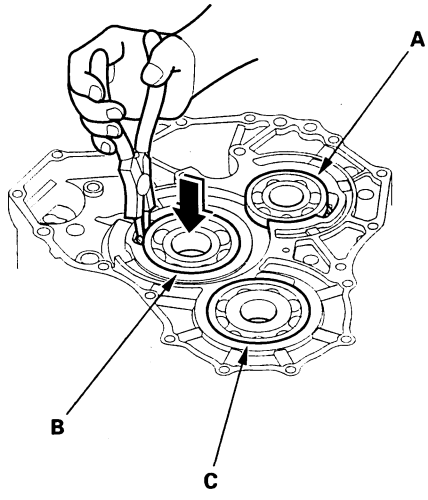

2. Install the bearings in the direction shown.

3. Expand each snap ring with the snap ring pliers, and insert the bearing part-way into the housing.

4. Release the pliers, then push the bearing down into the housing until the snap ring snaps in place around it.

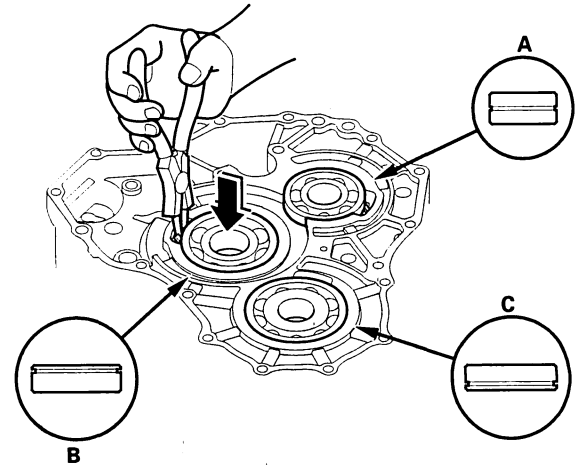

5. After installing the bearings verify the following:

   - The snap rings (A) are seated in the bearing and housing grooves.
   - The ring end gaps (B) are correct.

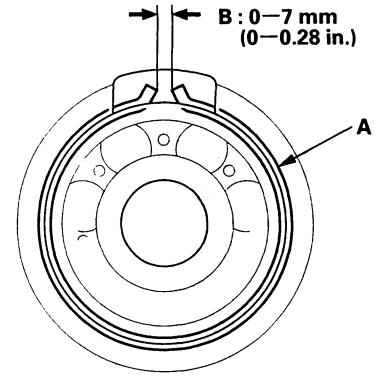

Protected by AR

Valve Body and ATF Strainer Removal

1. Remove the three ATF feed pipes (A) from the regulator valve body (B), four pipes (C) from the top accumulator body (D), one pipe (E) from the servo body (F), and one 10 mm pipe (G) from the accumulator body (H).

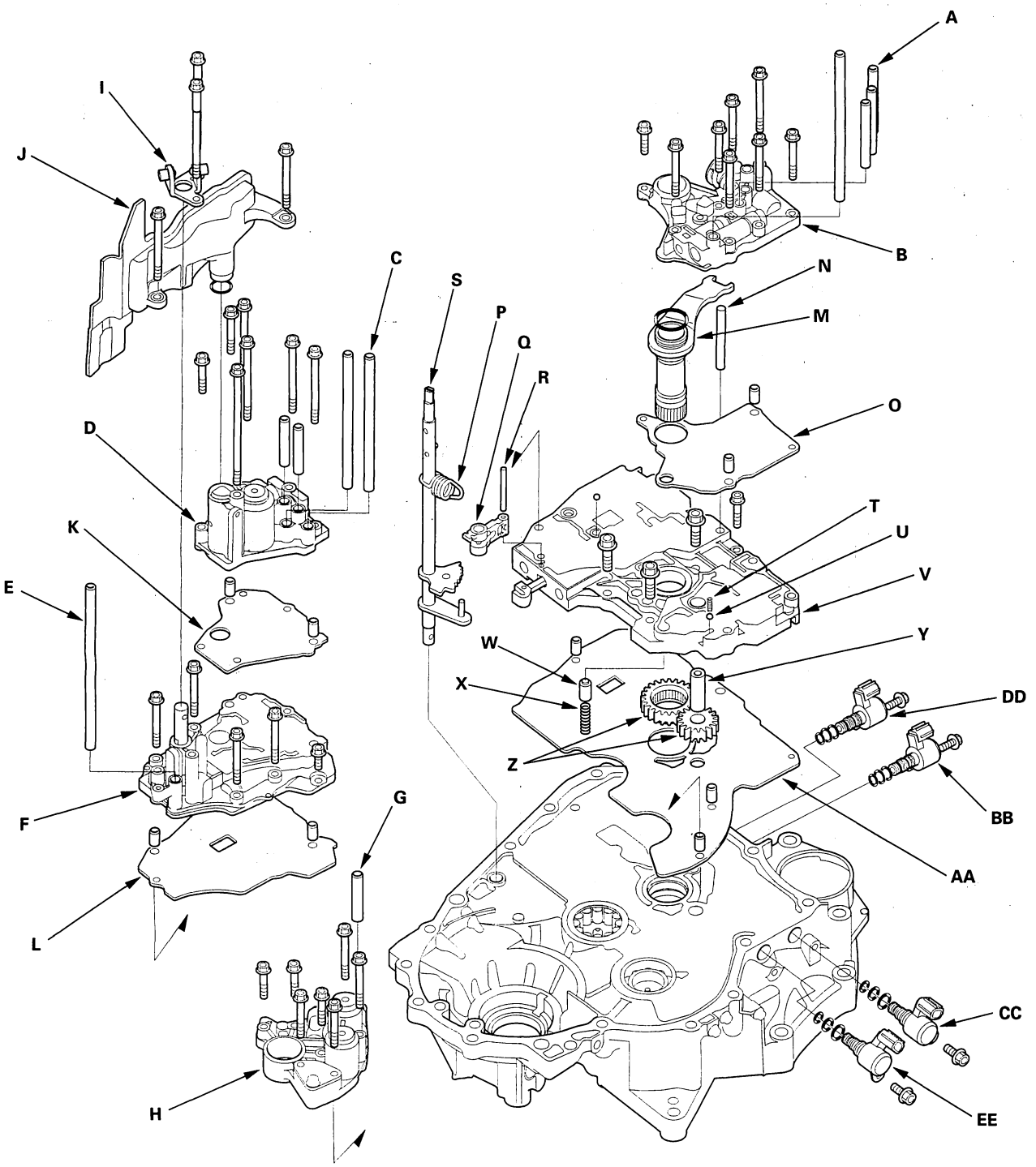

BACK

Protected by AR

2. Remove the servo detent base (I) (two bolts).
3. Remove the ATF strainer (J) (two bolts).
4. Remove the top accumulator body (D) (seven bolts), then remove the top accumulator body separator plate (K) and two dowel pins.
5. Remove the servo body (F) (five bolts), then remove servo separator plate (L) and two dowel pins.
6. Remove the regulator valve body (B) (eight bolts).
7. Remove the stator shaft (M) and stator shaft stop (N).
8. Remove the regulator separator plate (O) and two dowel pins.
9. Remove the accumulator body (H) (seven bolts).
10. Unhook the detent spring (P) from the detent arm (Q), then remove the detent arm shaft (R), detent arm, and selector control shaft (S).
11. Remove the cooler check valve spring (T) and cooler check valve (U).
12. Remove the main valve body (V) (four bolts).
13. Remove the torque converter check valve (W) and valve spring (X).
14. Remove the ATF pump driven gear shaft (Y), then remove the ATF pump gears (Z).
15. Remove the main separator plate (AA) and three dowel pins.
16. Remove shift solenoid valves (BB) (CC) (DD) and torque converter clutch solenoid valve (EE) from the torque converter housing.
17. Clean the inlet opening (A) of the ATF strainer (B) thoroughly with compressed air, then check that it is in good condition and that the inlet opening is not clogged.

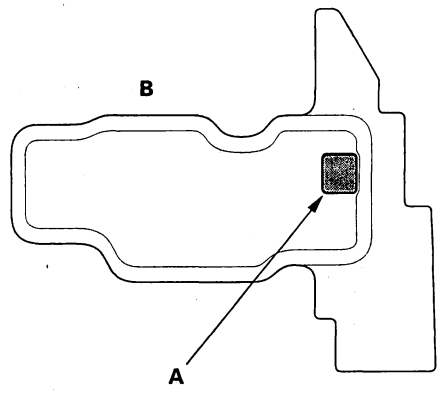

18. Test the ATF strainer by pouring clean ATF through the inlet opening, and replace it if it is clogged or damaged.

Protected by AR

Valve Body

Valve Body Repair

NOTE: This repair is only necessary if one or more of the valves in a valve body do not slide smoothly in their bores. Use this procedure to free the valves.

1. Soak a sheet of #600 abrasive paper in ATF for about 30 minutes.
2. Carefully tap the valve body so the sticking valve drops out of its bore. It may be necessary to use a small screwdriver to pry the valve free. Be careful not to scratch the bore with the screwdriver.
3. Inspect the valve for any scuff marks. Use the ATF-soaked #600 paper to polish off any burrs that are on the valve, then wash the valve in solvent and dry it with compressed air.
4. Roll up half a sheet of ATF-soaked #600 paper and insert it in the valve bore of the sticking valve. Twist the paper slightly, so that it unrolls and fits the bore tightly, then polish the bore by twisting the paper as you push it in and out.

   NOTE: The valve body is aluminum and doesn't require much polishing to remove any burrs.

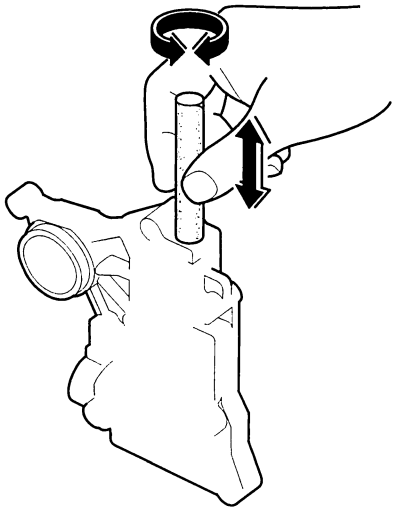

5. Remove the #600 paper. Thoroughly wash the entire valve body in solvent, then dry it with compressed air.
6. Coat the valve with ATF, then drop it into its bore. It should drop to the bottom of the bore under its own weight. If not, repeat steps 4 and 5, then retest. If the valve still sticks, replace the valve body.

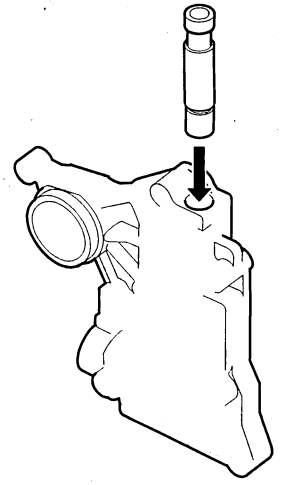

7. Remove the valve, and thoroughly clean it and the valve body with solvent. Dry all parts with compressed air, then reassemble using ATF as a lubricant.

BACK

Protected by AR

Valve Body Valve Installation

1. Coat all parts with ATF before assembly.

2. Install the valves and springs in the sequence shown for the main valve body (see page 14-240), regulator valve body (see page 14-242), servo body (see page 14-243), and top accumulator body (see page 14-244). Refer to the following valve cap illustrations, and install each valve cap so the end shown facing up will be facing the outside of the valve body.

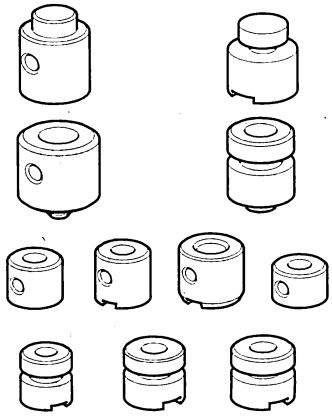

3. Install all the springs and seats. Insert the spring (A) in the valve, then install the valve in the valve body (B). Push the spring in with a screwdriver, then install the spring seat (C).

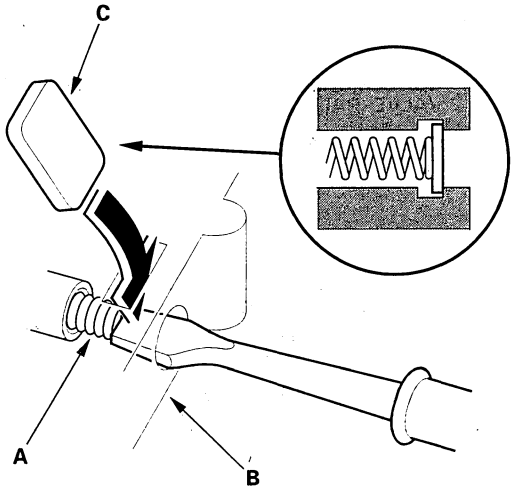

Protected by AR

Valve Body

Main Valve Body Disassembly, Inspection, and Reassembly

1. Clean all parts thoroughly in solvent or carburetor cleaner, and dry them with compressed air. Blow out all passages.
2. Do not use a magnet to remove the check ball, it may magnetize the ball.
3. Inspect the valve body for scoring and damage. Replace the valve body as an assembly if any parts are worn or damaged.
4. Check all valves for free movement. If any fail to slide freely, refer to valve body repair (see page 14-238).
5. Coat all parts with ATF during assembly.
6. Install the new filter in the direction shown.

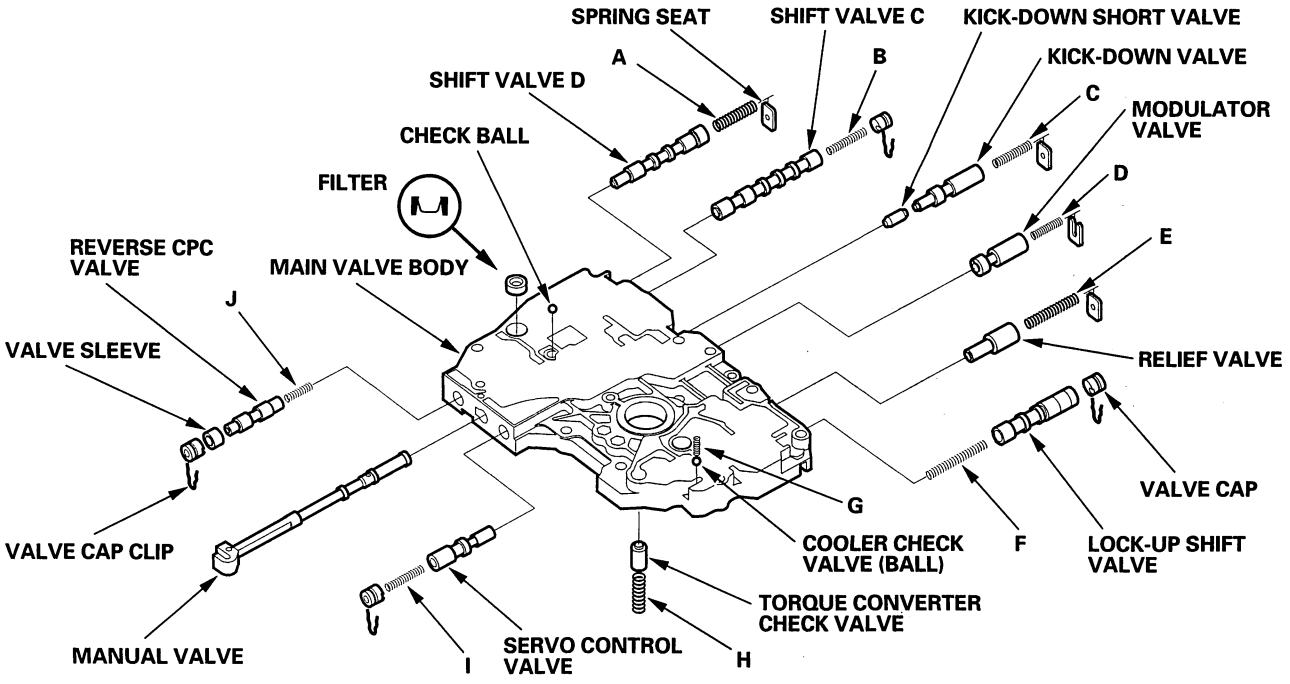

SPRING SPECIFICATIONS

Springs		Standard (New)-Unit: mm (in.)			
		Wire Dia.	O.D.	Free Length	No. of Coils
A	Shift valve D spring	0.7 (0.028)	6.6 (0.260)	33.7 (1.327)	11.6
B	Shift valve C spring	0.8 (0.031)	6.6 (0.260)	49.1 (1.933)	21.7
C	Kick-down valve spring	0.8 (0.031)	6.6 (0.260)	49.1 (1.933)	21.7
D	Modulator valve spring	1.6 (0.063)	10.4 (0.409)	33.5 (1.319)	9.8
E	Relief valve spring	1.2 (0.047)	11.1 (0.437)	39.0 (1.535)	9.9
F	Lock-up shift valve spring	0.9 (0.035)	7.6 (0.299)	63.0 (2.480)	22.4
G	Cooler check valve spring	0.6 (0.024)	5.8 (0.228)	14.5 (0.571)	6.8
H	Torque converter check valve spring	1.2 (0.047)	8.6 (0.339)	34.4 (1.354)	11.7
I	Servo control valve spring	0.9 (0.035)	6.4 (0.252)	32.5 (1.280)	17.5
J	Reverse CPC valve spring	0.7 (0.028)	6.1 (0.240)	17.8 (0.701)	7.9

BACK

Protected by AR

ATF Pump Inspection

1. Install the ATF pump drive gear (A), driven gear (B), and ATF pump driven gear shaft (C) in the main valve body (D). Lubricate all parts with ATF, and install the ATF pump driven gear with its grooved and chamfered side facing up.

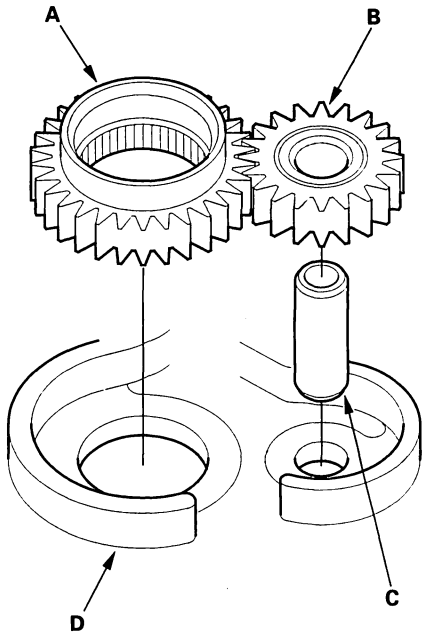

2. Measure the side clearance of the ATF pump drive gear (A) and driven gear (B).

ATF Pump Gears Side (Radial) Clearance:
Standard (New):
ATF Pump Drive Gear
0.210—0.265 mm (0.0083—0.00104 in.)
ATF Pump Driven Gear
0.070—0.125 mm (0.0028—0.0050 in.)

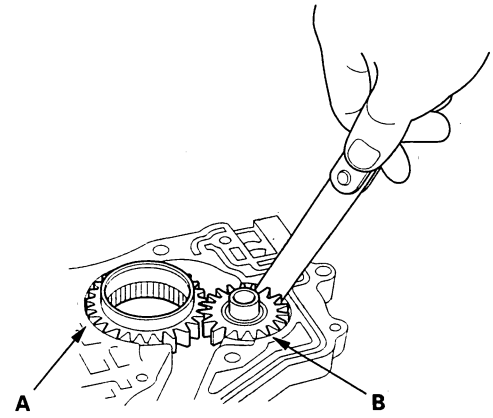

3. Remove the ATF pump driven gear shaft. Measure the thrust clearance between the ATF pump driven gear (A) and the valve body (B) with a straight edge (C) and a feeler gauge (D).

ATF Pump Drive/Driven Gear Thrust (Axial) Clearance:
Standard (New): 0.03—0.06 mm (0.001—0.002 in.)
Service Limit: 0.07 mm (0.003 in.)

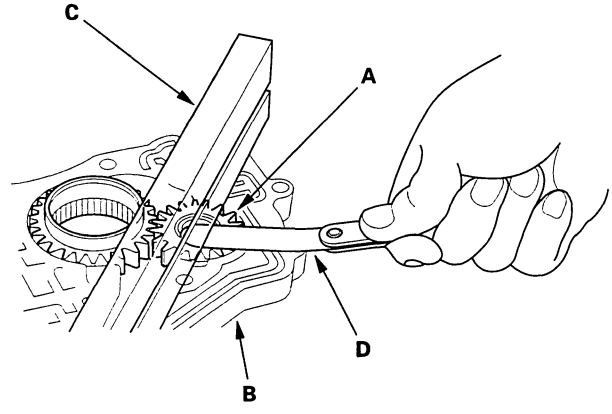

Protected by AR

Valve Body

Regulator Valve Body Disassembly, Inspection, and Reassembly

1. Clean all parts thoroughly in solvent or carburetor cleaner, and dry them with compressed air. Blow out all passages.
2. Inspect the valve body for scoring and damage.
3. Check all valves for free movement. If any fail to slide freely, refer to valve body repair (see page 14-238).
4. Replace the valve body as an assembly if any parts are worn or damaged.
5. Hold the regulator spring cap in place while removing the stop bolt. The regulator spring cap is spring loaded. Once the stop bolt is removed, release the spring cap slowly so it does not pop out.
6. Reassembly is the reverse of disassembly. Install the filter in the direction shown.
7. Coat all parts with ATF during assembly.
8. Align the hole in the regulator spring cap with the hole in the valve body, then press the spring cap into the valve body, and tighten the stop bolt.
9. Install the new filter in the direction shown.

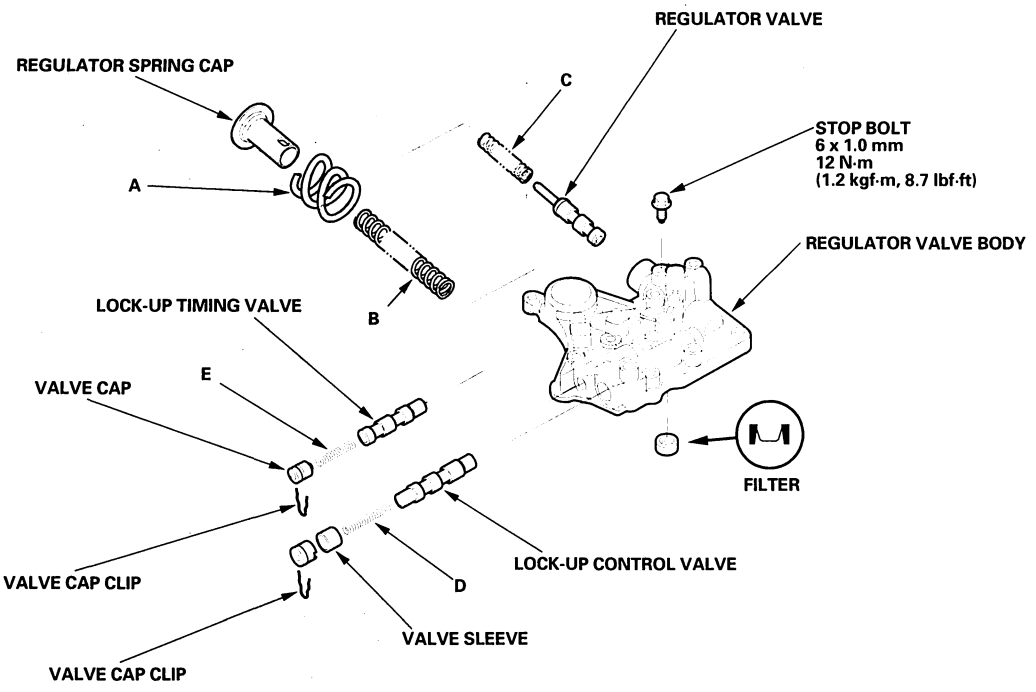

SPRING SPECIFICATIONS

Springs		Standard (New)-Unit: mm (in.)			
		Wire Dia.	O.D.	Free Length	No. of Coils
A	Stator reaction spring 2003 model	5.5 (0.217)	37.4 (1.472)	30.3 (1.193)	2.1
	2004-2006 models	4.5 (0.177)	35.4 (1.394)	30.3 (1.193)	1.92
B	Regulator valve spring A	1.9 (0.075)	14.7 (0.579)	80.6 (3.173)	16.1
C	Regulator valve spring B	1.6 (0.063)	9.2 (0.362)	44.0 (1.732)	12.5
D	Lock-up control valve spring	0.7 (0.028)	6.6 (0.260)	42.9 (1.689)	15.3
E	Lock-up timing valve spring	0.65 (0.026)	6.6 (0.260)	34.8 (1.370)	15.6

BACK

Protected by AR

Servo Body Disassembly, Inspection, and Reassembly

1. Clean all parts thoroughly in solvent or carburetor cleaner, and dry them with compressed air. Blow out all passages.
2. Inspect the servo body for scoring and damage. Replace the valve body as an assembly if any parts are worn or damaged.
3. Check all valves for free movement. If any fail to slide freely, refer to valve body repair (see page 14-238).
4. Coat all parts with ATF during reassembly.

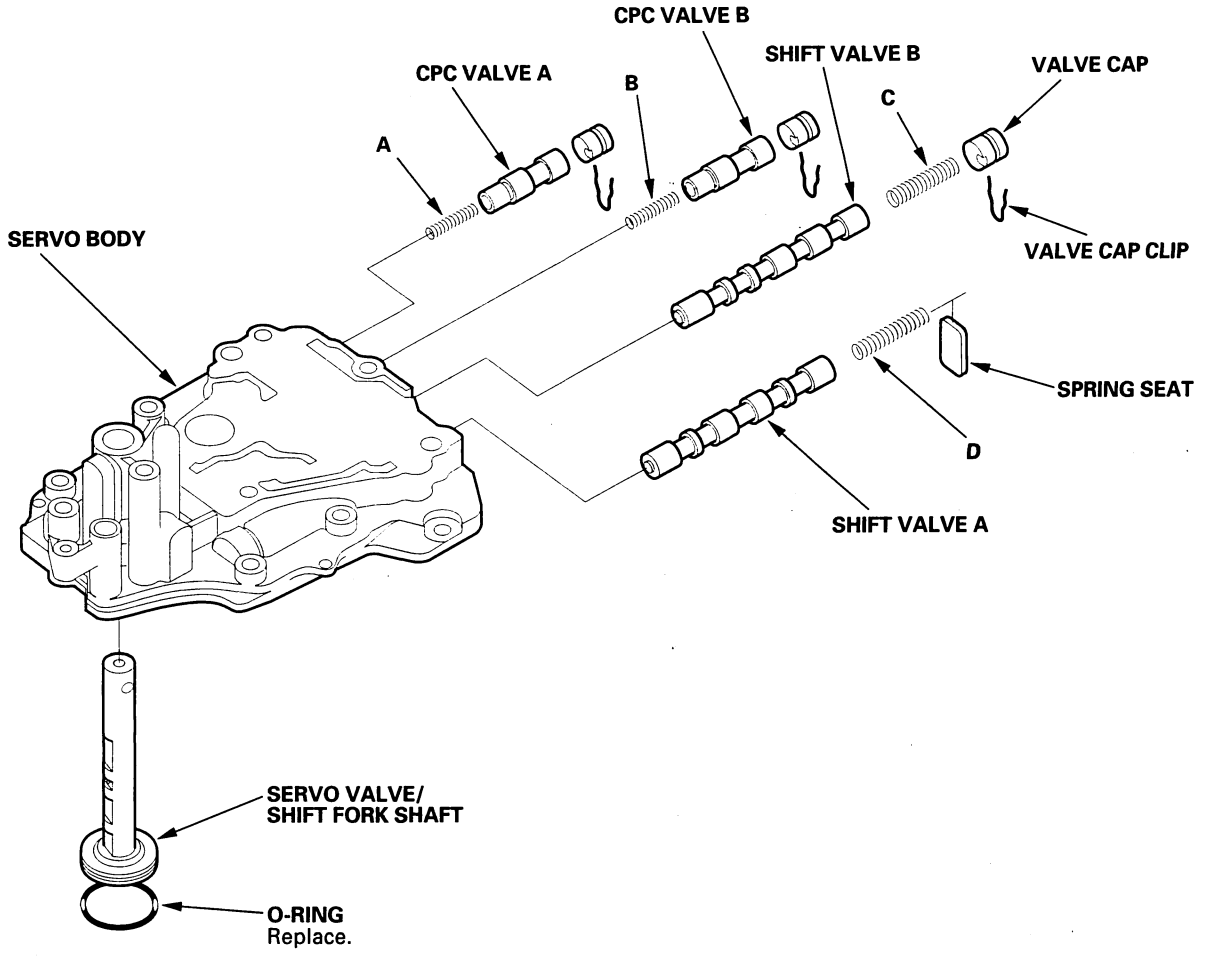

SPRING SPECIFICATIONS

Springs		Standard (New)-Unit: mm (in.)			
		Wire Dia.	O.D.	Free Length	No. of Coils
A	CPC valve A spring	0.7 (0.028)	6.1 (0.240)	17.8 (0.701)	7.9
B	CPC valve B spring	0.7 (0.028)	6.1 (0.240)	17.8 (0.701)	7.9
C	Shift valve B spring	0.8 (0.031)	6.6 (0.260)	49.1 (1.933)	21.7
D	Shift valve A spring	0.8 (0.031)	6.6 (0.260)	49.1 (1.933)	21.7

Protected by AR

Valve Body

Top Accumulator Body Disassembly, Inspection, and Reassembly

1. Clean all parts thoroughly in solvent or carburetor cleaner, and dry them with compressed air. Blow out all passages.
2. Inspect the top accumulator body for scoring and damage. Replace the valve body as an assembly if any parts are worn or damaged.
3. Check all valves for free movement. If any fail to slide freely, refer to valve body repair (see page 14-238).
4. Coat all parts with ATF during assembly.

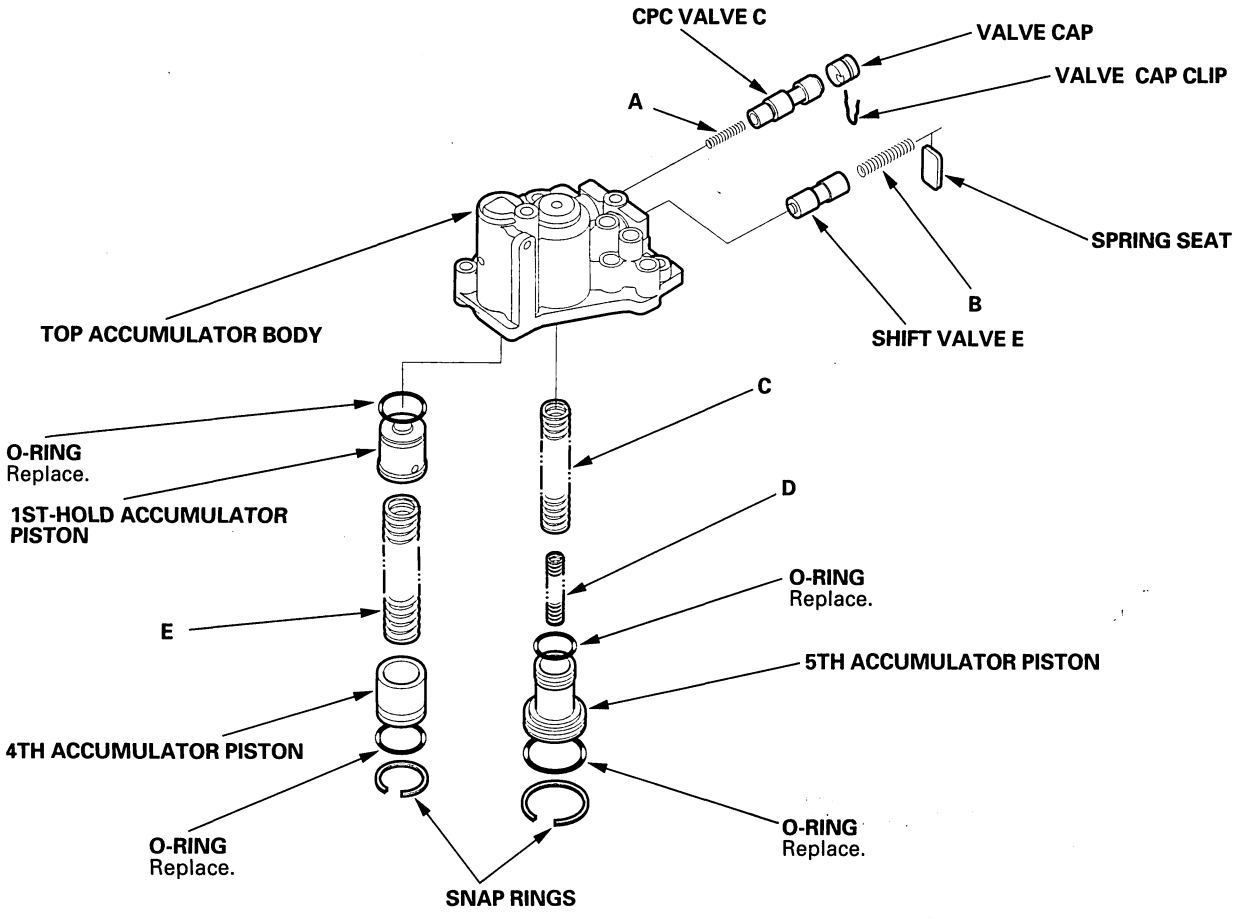

SPRING SPECIFICATIONS

Springs		Standard (New)-Unit: mm (in.)			
		Wire Dia.	O.D.	Free Length	No. of Coils
A	CPC valve C spring	0.7 (0.028)	6.1 (0.240)	17.8 (0.701)	7.9
B	Shift valve E spring	0.8 (0.031)	7.1 (0.280)	49.0 (1.929)	17.2
C	5th accumulator spring A	2.2 (0.087)	16.4 (0.646)	75.7 (2.980)	14.2
D	5th accumulator spring B	2.0 (0.079)	10.0 (0.394)	45.5 (1.791)	11.6
E	4th/1st-hold accumulator spring	3.4 (0.134)	19.6 (0.772)	57.4 (2.260)	8.4

BACK

Protected by AR

Accumulator Body Disassembly, Inspection, and Reassembly

1. Do not use a magnet to remove the check balls; it may magnetize the balls.
2. Inspect the accumulator body for scoring and damage.
3. Clean all parts thoroughly in solvent or carburetor cleaner, and dry them with compressed air. Blow out all passages.
4. Coat all parts with ATF during assembly.

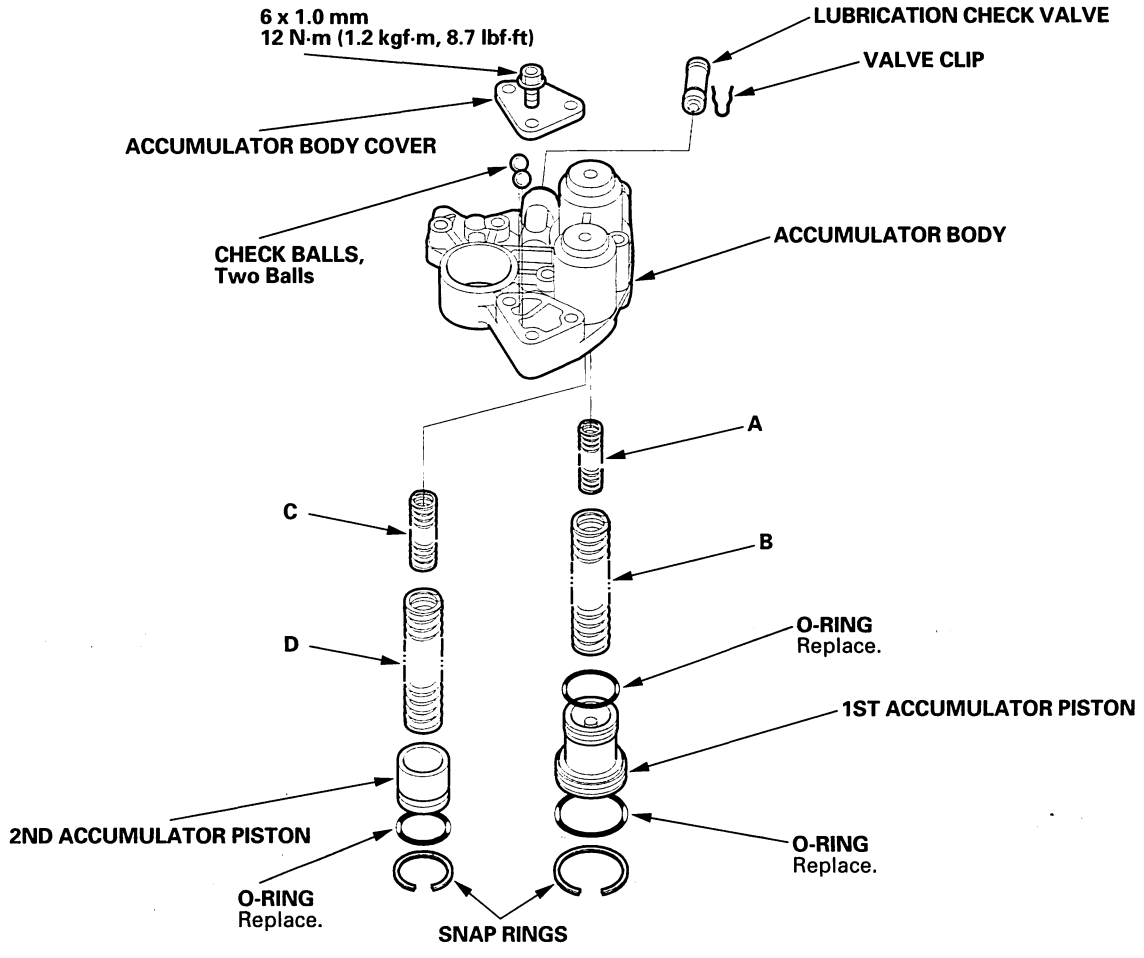

SPRING SPECIFICATIONS

Springs		Standard (New)-Unit: mm (in.)			
		Wire Dia.	O.D.	Free Length	No. of Coils
A	1st accumulator spring B	2.3 (0.091)	12.6 (0.496)	42.0 (1.654)	9.9
B	1st accumulator spring A	2.4 (0.094)	19.5 (0.768)	67.7 (2.665)	10.2
C	2nd accumulator spring B	2.6 (0.102)	13.0 (0.512)	44.0 (1.732)	9.0
D	2nd accumulator spring A	2.5 (0.098)	19.6 (0.772)	57.7 (2.272)	9.5

Protected by AR

3rd Accumulator and End Cover Disassembly, Inspection, and Reassembly

1. Clean all parts thoroughly in solvent or carburetor cleaner, and dry them with compressed air. Blow out all passages.
2. Coat all parts with ATF during assembly.

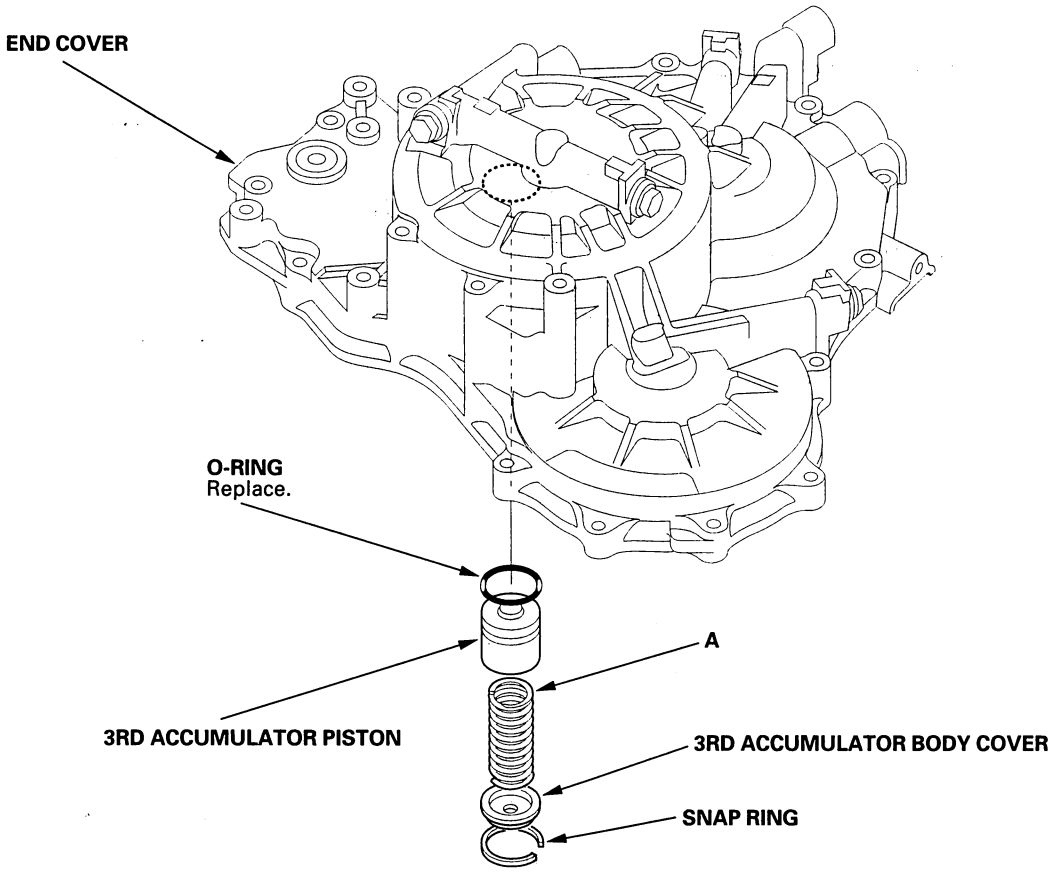

SPRING SPECIFICATIONS

Springs		Standard (New)-Unit: mm (in.)			
		Wire Dia.	O.D.	Free Length	No. of Coils
A	3rd accumulator spring	3.1 (0.122)	19.6 (0.772)	39.4 (1.551)	5.5

BACK

Protected by AR

Mainshaft Bearing and Oil Seal Replacement

Special Tools Required
- Adjustable bearing puller, 25—40 mm 07736-A01000B or 07736-A01000A
- Driver 07749-0010000
- Attachment, 62 x 68 mm 07746-0010500
- Attachment, 72 x 75 mm 07746-0010600

1. Remove the mainshaft bearing and oil seal with the special tool and a commercially available 3/8 "-16 slide hammer (A).

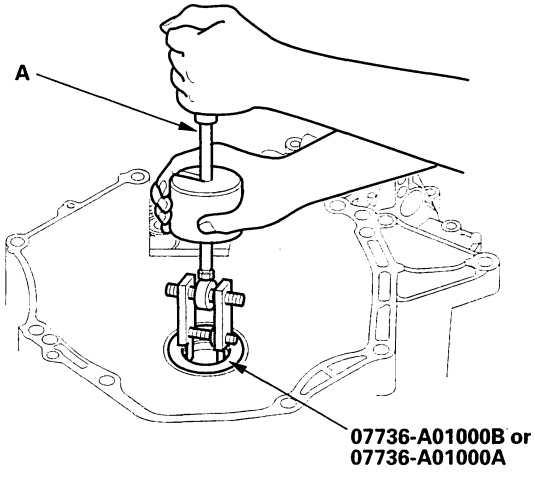

2. Install the new mainshaft bearing until it bottoms in the housing with the special tools.

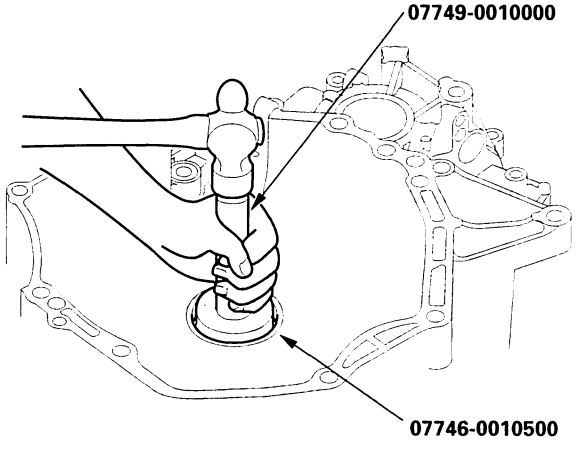

3. Install the new oil seal flush to the housing with the special tools.

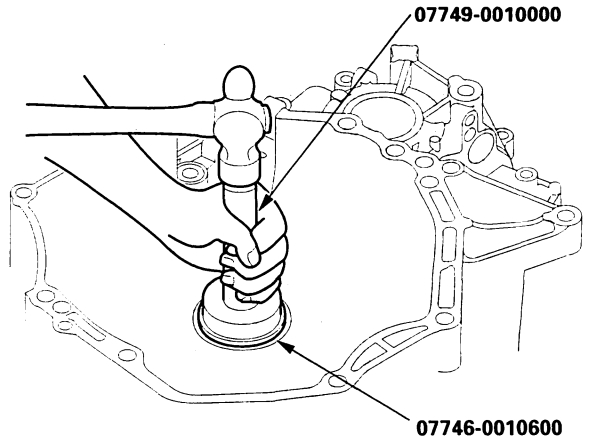

Protected by AR

Countershaft Bearing Replacement

Special Tools Required
- Adjustable bearing puller, 25—40 mm 07736-A01000B or 07736-A01000A
- Driver 07749-0010000
- Attachment, 62 x 68 mm 07746-0010500

1. Remove the countershaft bearing (A) with the special tool and a commercially available 3/8 ″-16 slide hammer (B).

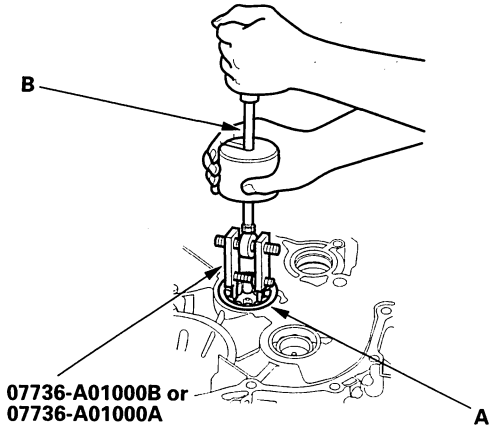

2. Install the ATF guide plate (A).

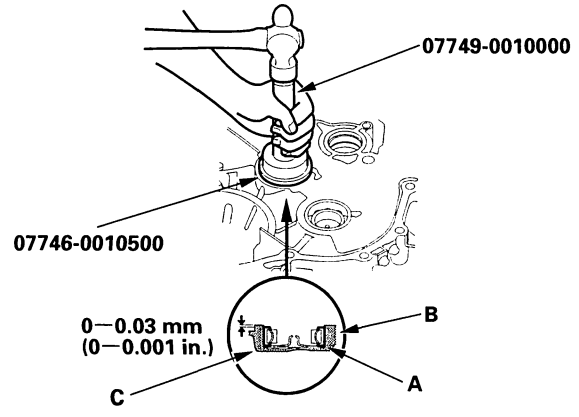

3. Install the new bearing (B) into the housing (C) with the special tools.

Secondary Shaft Bearing Replacement

Special Tools Required
- Adjustable bearing puller, 25—40 mm 07736-A01000B or 07736-A01000A
- Driver 07749-0010000
- Driver attachment 07947-6340500

1. Remove the secondary shaft bearing (A) with the special tool and a commercially available 3/8 ″-16 slide hammer (B).

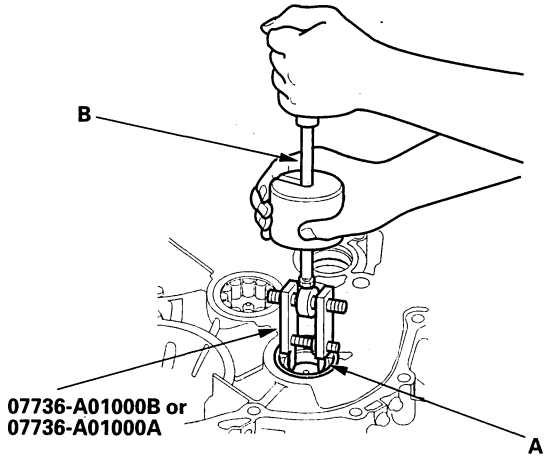

2. Install the ATF guide plate (A).

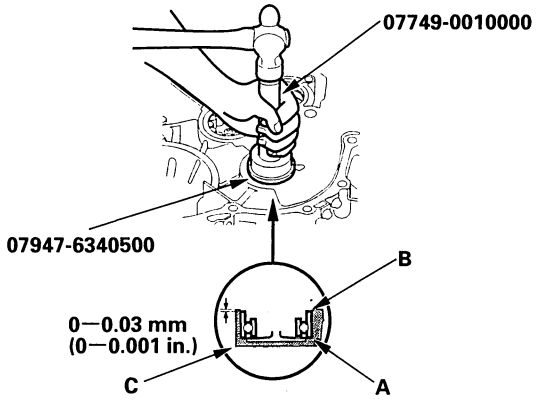

3. Install the new bearing (B) into the housing (C) with the special tools.

BACK

Protected by AR

Selector Control Shaft Oil Seal Replacement

Special Tools Required
- Driver 07749-0010000
- Attachment, 22 x 24 mm 07746-0010800

1. Remove the oil seal (A), from the torque converter housing (B).

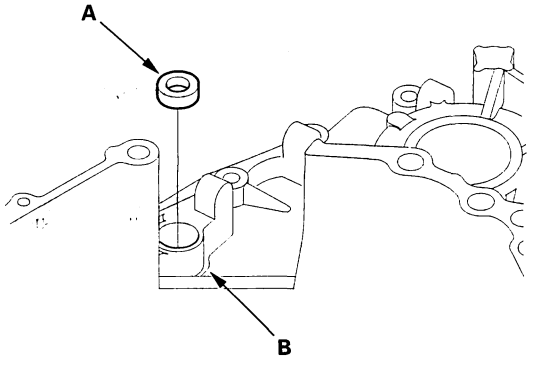

2. Install the new oil seal flush to the torque converter housing with the special tools.

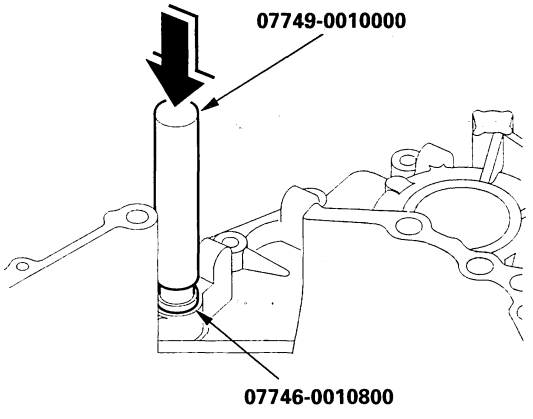

Protected by AR

Mainshaft Disassembly, Inspection, and Reassembly

1. Lubricate all parts with ATF during assembly.

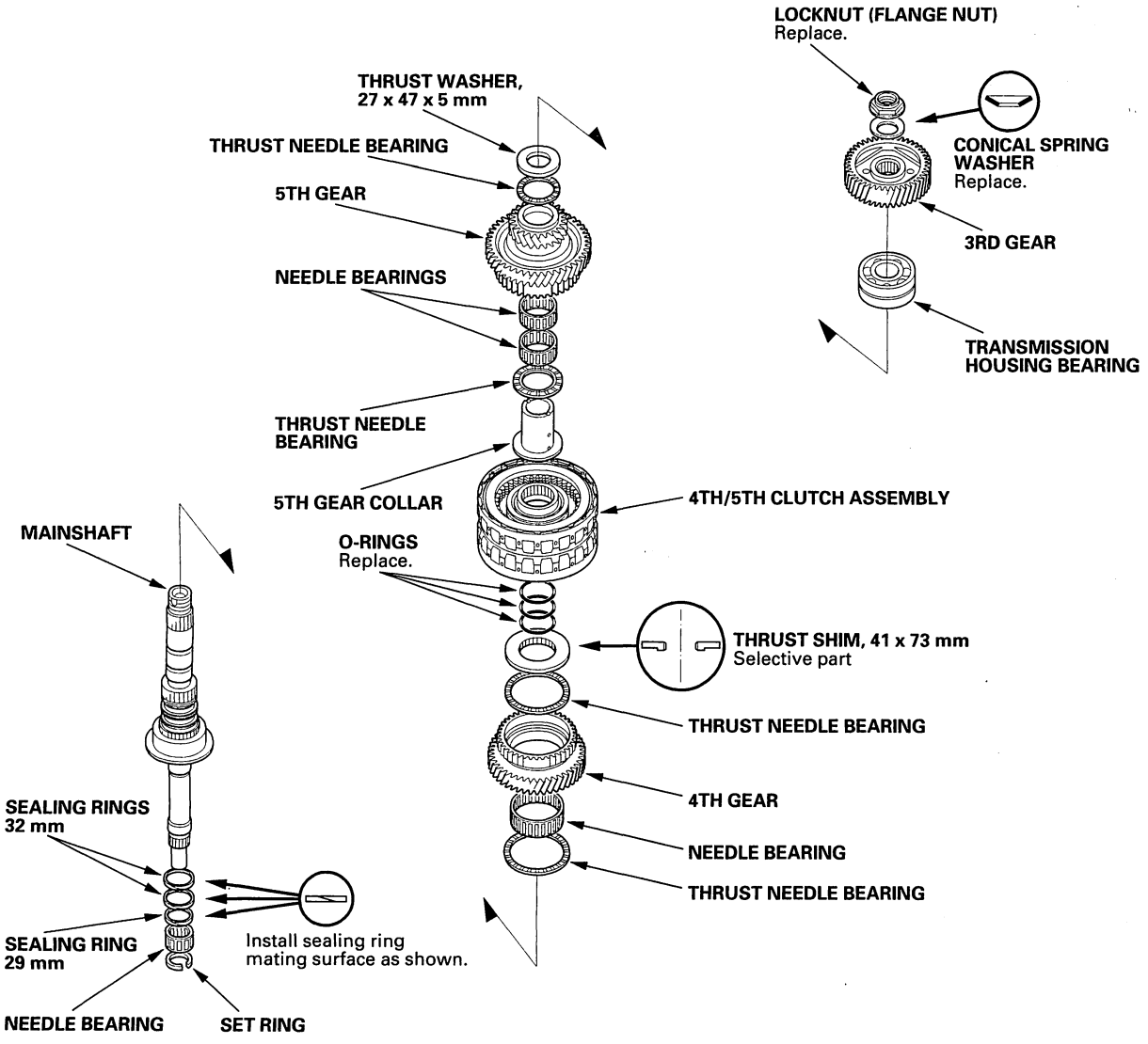

2. Check the clearance of the 4th/5th clutch assembly (see page 14-251).
3. Inspect the thrust needle bearing and the needle bearing for scoring and rough movement.
4. Inspect the splines for excessive wear and damage.
5. Check shaft bearing surfaces for scoring and excessive wear.
6. Before installing the O-rings, wrap the shaft splines with tape to prevent O-ring damage.
7. Install the 41 x 73 mm thrust shim and conical spring washer in the direction shown.
8. Inspect the condition of the sealing rings. If the sealing rings are worn, distorted, or damaged, replace them (see page 14-252).

BACK

Protected by AR

4th/5th Clutch Clearance Inspection

1. Remove the O-rings from the mainshaft.
2. Assemble the 41 x 73 mm thrust shim (A), 4th/5th clutch assembly (B), and 5th gear collar (C) on the mainshaft (D).

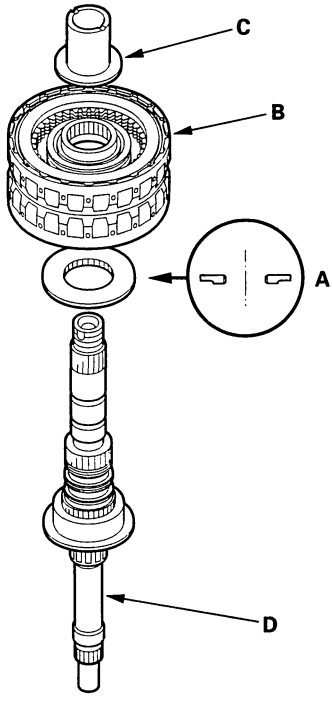

3. Hold the 5th gear collar (C) against the clutch assembly (B), then measure the clearance between the clutch guide (E) and the 5th gear collar with a feeler gauge (F) in at least three places. Use the average as the actual clearance.

Standard: 0.03—0.11 mm (0.001—0.004 in.)

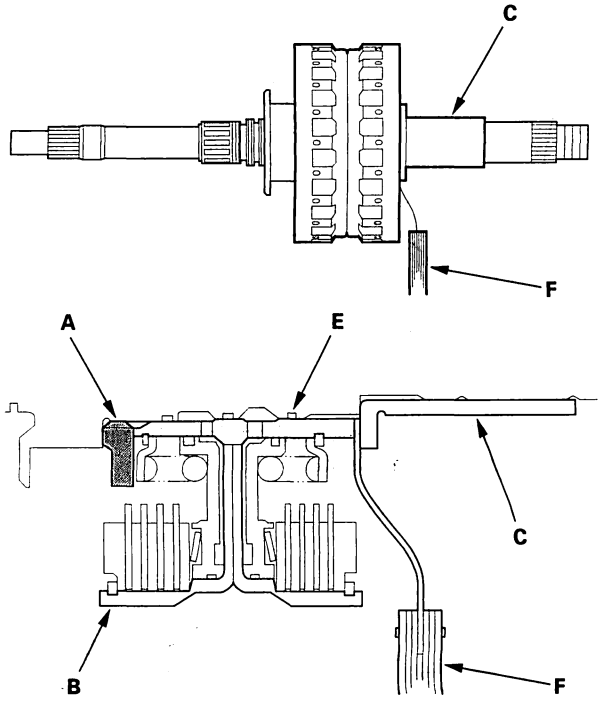

4. If the clearance is out of standard, remove the thrust shim and measure its thickness.
5. Select and install a new shim, then recheck.

THRUST SHIM, 41 x 73 mm

No.	Part Number	Thickness
1	90414-P7W-000	7.85 mm (0.309 in.)
2	90415-P7W-000	7.90 mm (0.311 in.)
3	90416-P7W-000	7.95 mm (0.313 in.)
4	90417-P7W-000	8.00 mm (0.315 in.)
5	90418-P7W-000	8.05 mm (0.317 in.)
6	90419-P7W-000	8.10 mm (0.319 in.)

6. After replacing the thrust shim, make sure the clearance is within standard.

Protected by AR

Mainshaft Sealing Ring Replacement

The sealing rings are synthetic resin with chamfered ends. Check the condition of the sealing rings, and replace them only if they are worn, distorted, or damaged.

1. For a better fit, squeeze sealing rings together slightly before installing them.

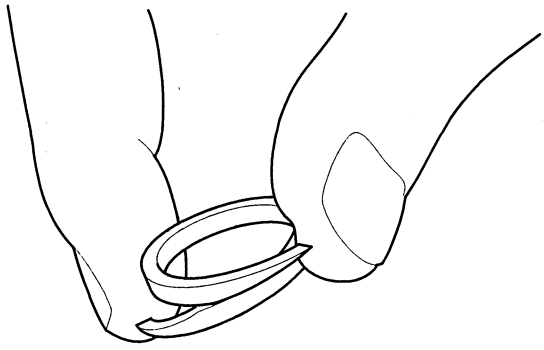

2. Apply ATF to the new sealing rings then install them on the mainshaft.

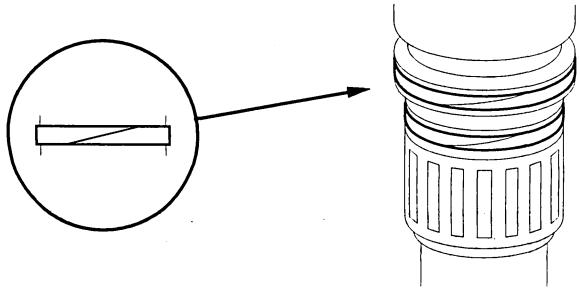

3. After installing the sealing rings, verify the following:

   - The rings are fully seated in the groove.
   - The rings are not twisted.
   - The chamfered ends of the rings are properly joined.

BACK

Protected by AR

Countershaft Disassembly, Inspection, and Reassembly

1. Remove the locknut, and take off components down to the reverse selector hub.

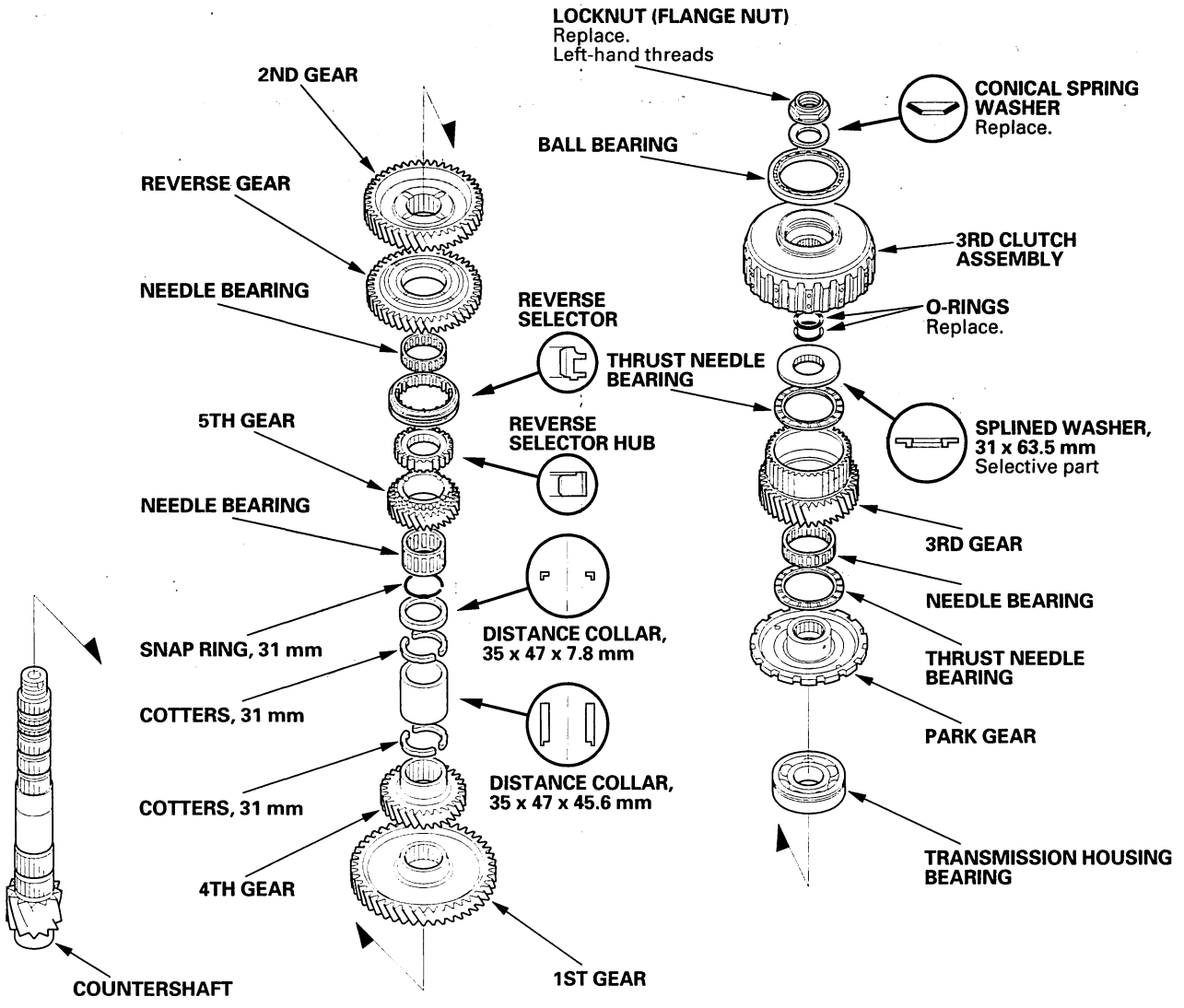

2. Remove the reverse selector hub, 4th gear, and 1st gear (see page 14-254).
3. Check the bearing on the 3rd clutch for wear and rough movement. If the bearing is worn or damaged, replace it (see page 14-256).
4. Inspect the thrust needle bearing and the needle bearing for scoring and rough movement.
5. Check the splines for excessive wear and damage.
6. Check the shaft bearing surfaces for scoring and excessive wear.
7. Lubricate all parts with ATF, and reassemble the shaft and gears.
8. Install the distance collars, reverse selector hub, reverse selector, splined washer, and conical spring washer in the direction shown.

Protected by AR

Countershaft Reverse Selector Hub and 4th Gear Removal

1. Remove the reverse selector hub (A) and the 5th gear (B) from the countershaft with a press. Place a shaft protector (C) between the countershaft and press to prevent damaging the countershaft.

   NOTE: Some reverse selector hubs are not press-fitted, and can be removed without using a press.

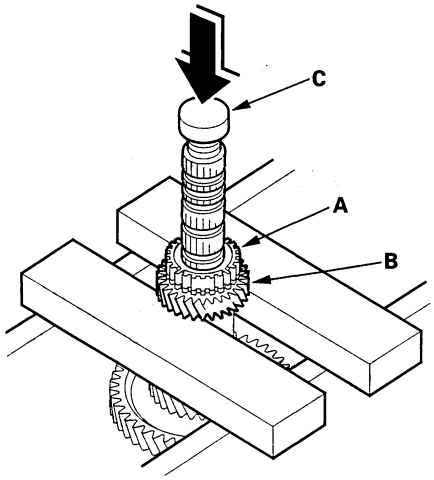

2. Remove the needle bearing, snap ring, 35 x 47 x 7.8 mm distance collar, 31 mm cotters, 35 x 47 x 45.6 mm distance collar, and 31 mm cotters from the countershaft.

3. Remove the 1st gear (A) and 4th gear (B) from the countershaft with a press. Place a shaft protector (C) between the countershaft and press to prevent damaging the countershaft.

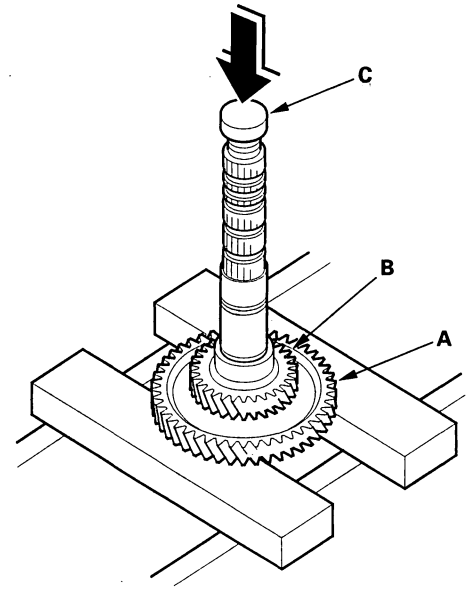

BACK

Protected by AR

Countershaft 4th Gear and Reverse Selector Hub Installation

Special Tools Required
Driver, 40 mm I.D. 07746-0030100

1. Apply ATF to the parts.
2. Install the 1st gear on the countershaft by hand.
3. Align the shaft splines with those on 4th gear, then press the countershaft (A) into the 4th gear with a press. Place a shaft protector (B) between the countershaft and press to prevent damaging the countershaft.

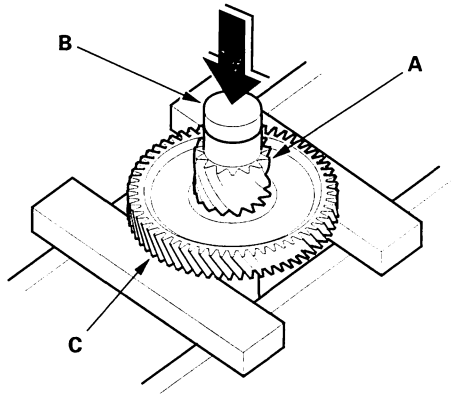

4. Stop pressing the countershaft when the 4th gear contacts the 1st gear (C).
5. Install the 31 mm cotters, 35 x 47 x 45.6 mm distance collar, 31 mm cotters, 35 x 47 x 7.8 mm distance collar, snap ring, needle bearing, and 5th gear (A) on the countershaft.

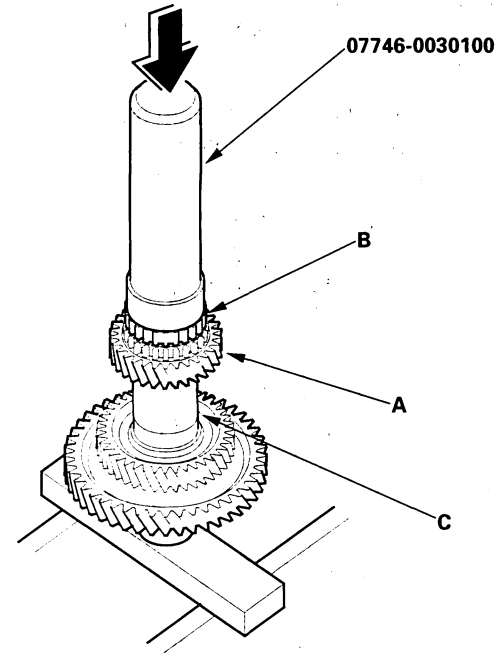

6. Slide the reverse selector hub (B) over the countershaft (C), then press it into place with the special tool and a press.

   NOTE: Some reverse selector hubs are not press fitted, and can be installed without using the special tool and a press.

Protected by AR

3rd Clutch Ball Bearing Replacement

Special Tools Required
- Driver 07749-0010000
- Attachment, 62 x 68 mm 07746-0010500

NOTE: Check the bearing for wear and rough movement. If the bearing is OK, removal is not necessary.

1. Remove the ball bearing (A) from the 3rd clutch with a commercially available bearing puller (B), bearing separator (C), and stepper adapter (D).

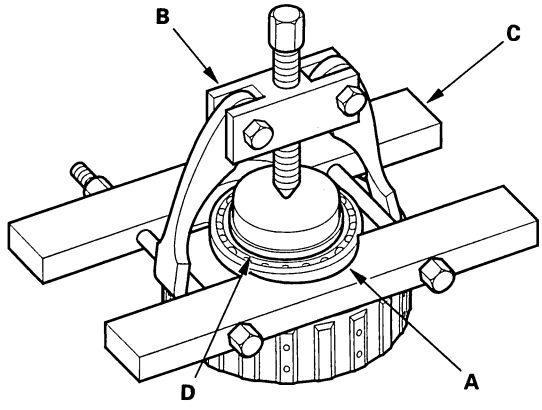

2. Install the new bearing on the 3rd clutch with the special tools and a press.

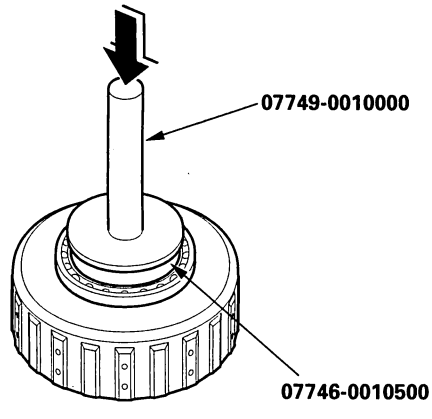

BACK

Protected by AR

Secondary Shaft Disassembly, Inspection, and Reassembly

1. Remove the locknut, and disassemble the shaft and gears.

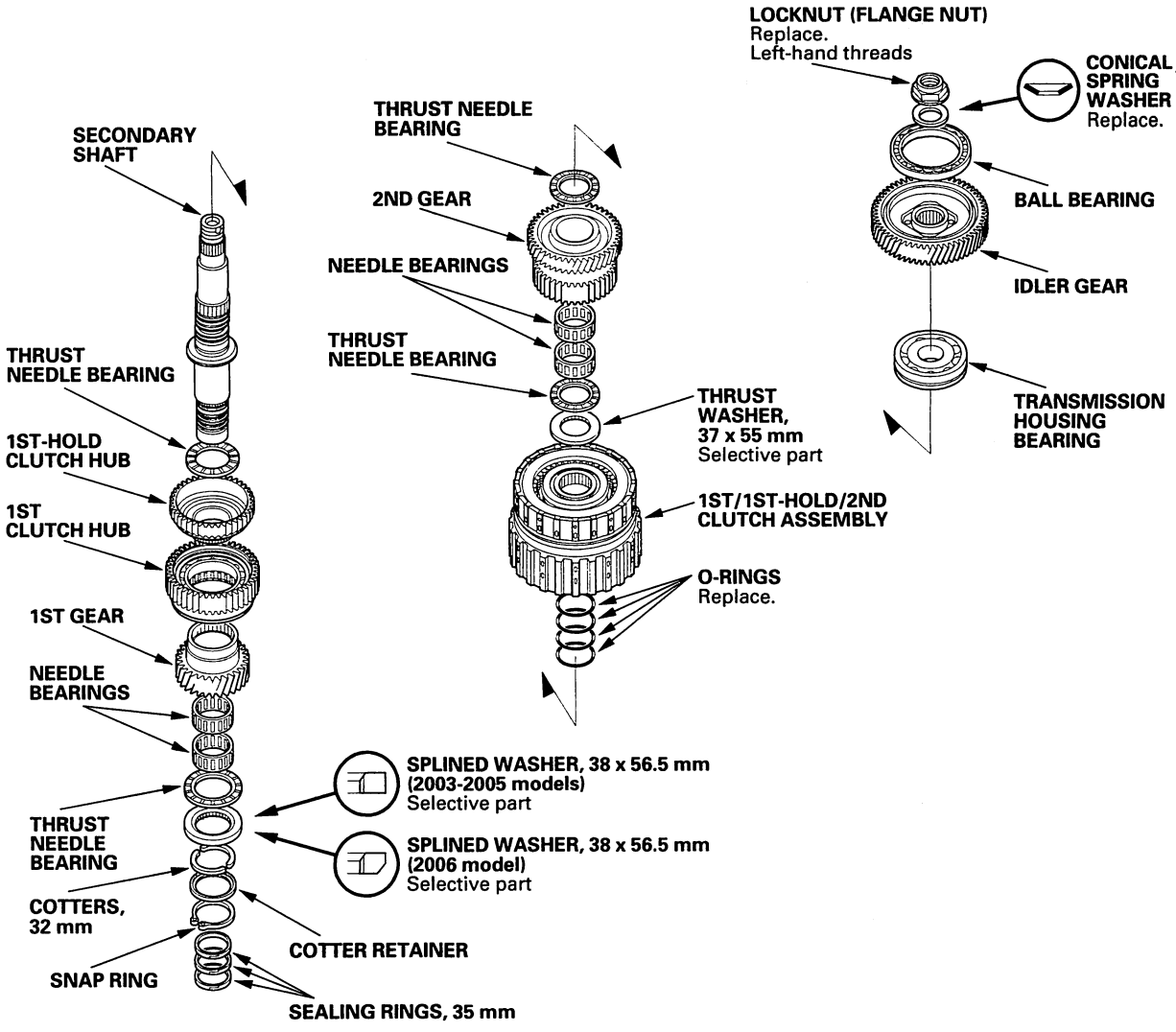

2. Inspect the thrust needle bearing and needle bearing for wear and rough movement.
3. Check the clearance of the secondary shaft assembly.
4. Check the splines for excessive wear and damage.
5. Check the shaft bearing surfaces for scoring and excessive wear.
6. Check the idler gear bearing for wear and rough movement. If the bearing is worn or damaged, replace it (see page 14-260).
7. Before installing the O-rings, wrap the shaft splines with tape to prevent damage to the O-rings.
8. Lubricate all parts with ATF during reassembly.
9. Install the splined washer and conical spring washer in the direction shown.

Protected by AR

Secondary Shaft Clearance Inspection

1. Remove the O-rings from the secondary shaft.
2. Assemble the thrust needle bearing (A), 1st gear assembly (B), needle bearings (C), thrust needle bearing (D), 38 x 56.5 mm splined washer (E), 32 mm cotters (F), cotter retainer (G), and snap ring (H) on the secondary shaft (I).

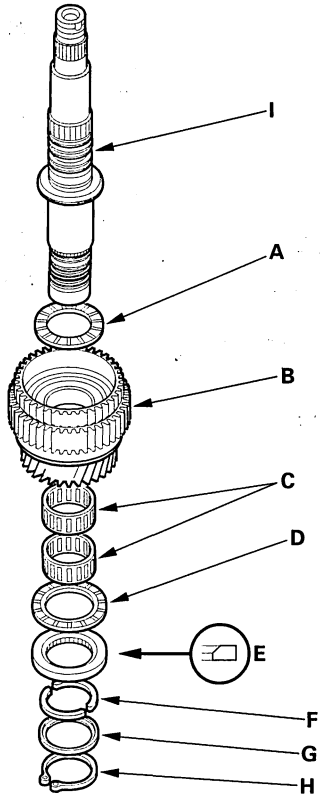

3. Measure the clearance between the 38 x 56.5 mm splined washer (E) and cotters (F) with a feeler gauge (J) in at least three places. Use the average as the actual clearance.

Standard: 0.07—0.15 mm (0.003—0.006 in.)

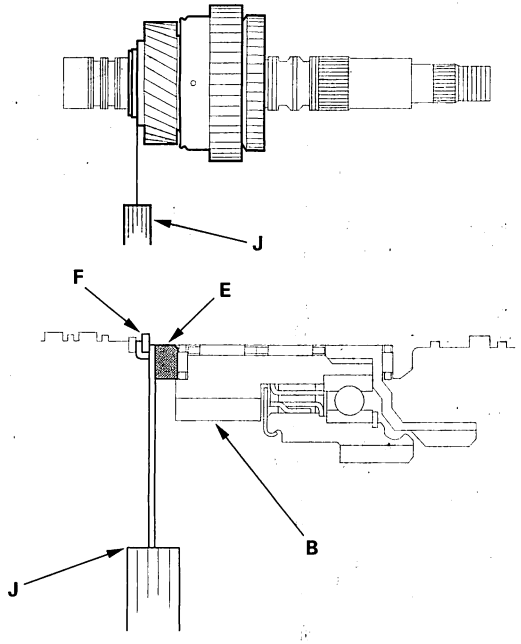

4. If the measurement is out of standard, remove the splined washer, and measure its thickness.
5. Select and install a new splined washer, then recheck the clearance.

SPLINED WASHER, 38 x 56.5 mm:
2003-2005 Models

No.	Part Number	Thickness
1	90502-P0Z-000	6.85 mm (0.270 in.)
2	90503-P0Z-000	6.90 mm (0.272 in.)
3	90504-P0Z-000	6.95 mm (0.274 in.)
4	90505-P0Z-000	7.00 mm (0.276 in.)
5	90506-P0Z-000	7.05 mm (0.278 in.)
6	90507-P0Z-000	7.10 mm (0.280 in.)

SPLINED WASHER, 38 x 56.5 mm:
2006 Model

No.	Part Number	Thickness
1	90502-RAY-A00	6.85 mm (0.270 in.)
2	90503-RAY-A00	6.90 mm (0.272 in.)
3	90504-RAY-A00	6.95 mm (0.274 in.)
4	90505-RAY-A00	7.00 mm (0.276 in.)
5	90506-RAY-A00	7.05 mm (0.278 in.)
6	90507-RAY-A00	7.10 mm (0.280 in.)

BACK

Protected by AR

6. Remove the 27 x 47 x 5 mm thrust washer from the mainshaft.

7. Assemble the 1st/1st-hold/2nd clutch assembly (A), 37 x 55 mm thrust washer (B), thrust needle bearing (C), needle bearings (D), 2nd gear (E), thrust needle bearing (F), and 27 x 47 x 5 mm thrust washer (removed from mainshaft) (G) on the secondary shaft sub-assembly (H).

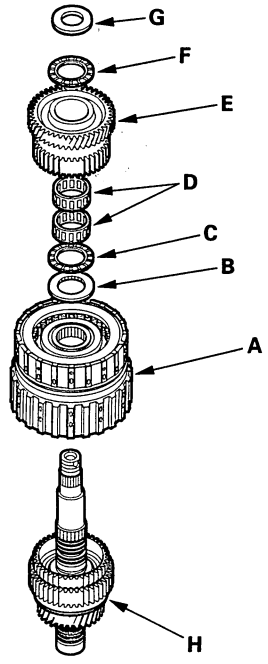

8. Set the dial indicator (I) on the 2nd gear (E).

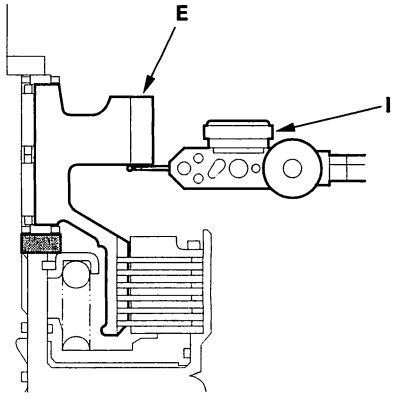

9. Hold the 27 x 47 x 5 mm thrust washer (G) against the clutch assembly (A), and measure the 2nd gear axial clearance in at least three places while moving the 2nd gear (E). Use the average as the actual clearance.

Standard: 0.04—0.12 mm (0.002—0.005 in.)

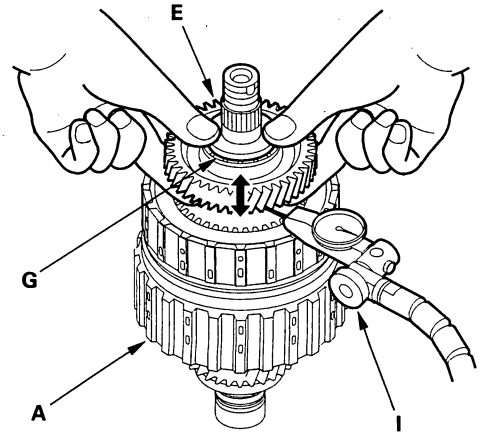

10. If the measurement is out of standard, remove the 37 x 55 mm thrust washer and measure its thickness.

11. Select and install a new thrust washer, then recheck the clearance.

THRUST SHIM, 37 x 55 mm

No.	Part Number	Thickness
1	90406-P0Z-000	4.90 mm (0.193 in.)
2	90407-P0Z-000	4.95 mm (0.195 in.)
3	90408-P0Z-000	5.00 mm (0.197 in.)
4	90409-P0Z-000	5.05 mm (0.199 in.)
5	90410-P0Z-000	5.10 mm (0.201 in.)
6	90411-P0Z-000	5.15 mm (0.203 in.)
7	90412-P0Z-000	5.20 mm (0.205 in.)

12. Disassemble the shaft and gears.

13. Reinstall the 27 x 47 x 5 mm thrust washer on the mainshaft.

Protected by AR

Secondary Shaft Idler Gear Bearing Replacement

Special Tools Required
- Driver 07749-0010000
- Attachment, 78 x 90 mm 07GAD-SD40101

1. Check the bearing for wear, damage, and rough movement. If the bearing is worn or damaged, go to step 2.
2. Place the secondary shaft idler gear in a vise with soft jaws.
3. Remove the bearing (A) from the secondary shaft idler gear (B) with a commercially available bearing puller (C).

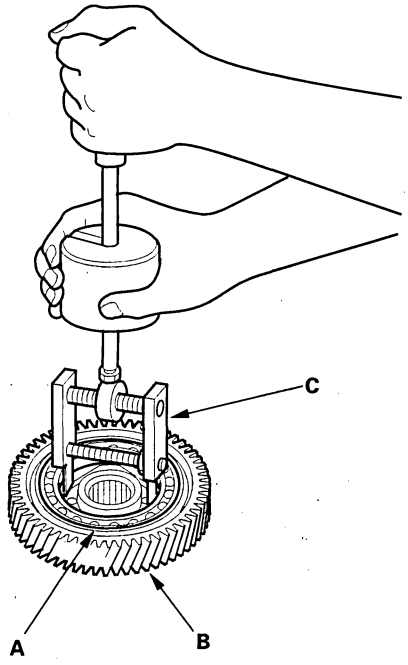

4. Install the bearing on the secondary shaft idler gear with the special tools and a press.

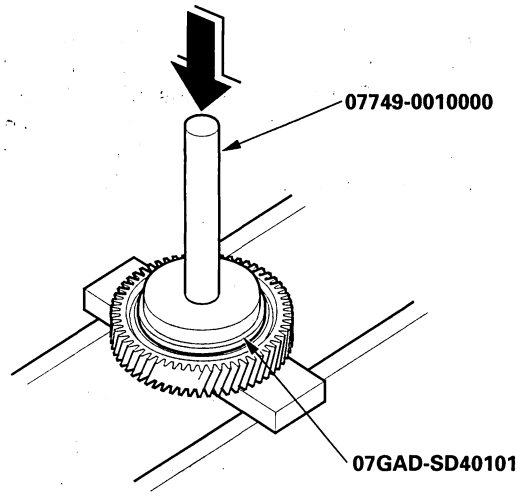

BACK

Protected by AR

1st Gear One-way Clutch Inspection

1. Hold the 1st-hold clutch hub (A), and turn the 1st gear (B) in the direction shown to be sure it turns freely. Also make sure the 1st gear does not turn in the opposite direction.

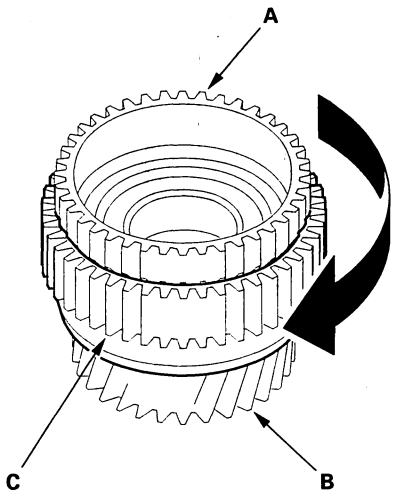

2. If any problem occurs on the 1st gear one-way clutch, replace the 1st clutch hub (C). The 1st gear one-way clutch is not available separately from the 1st clutch hub.

Protected by AR

1st Clutch Hub Replacement

Special Tools Required
- Driver 07749-0010000
- Driver attachment 07947-6340500
- Attachment, 78 x 90 mm 07GAD-SD40101

1. Remove the 1st-hold clutch hub (A) from the 1st gear (B) with the special tools and a press.

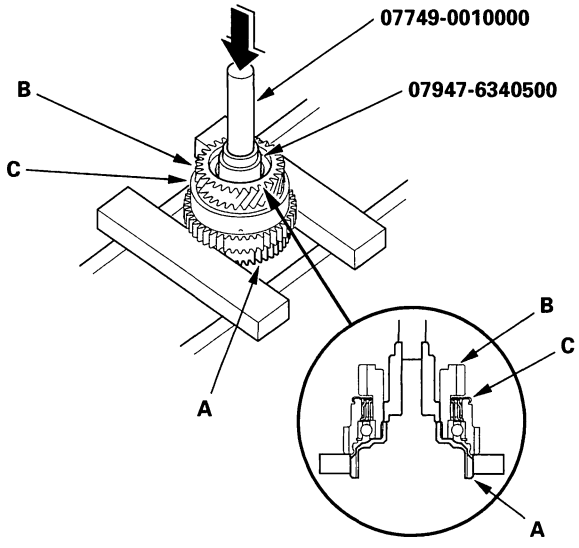

2. Remove the 1st clutch hub (C) from the 1st gear, then install the new 1st clutch hub in the 1st gear.

3. Install the 1st-hold clutch hub (A) in the 1st gear (B) with the special tools and a press.

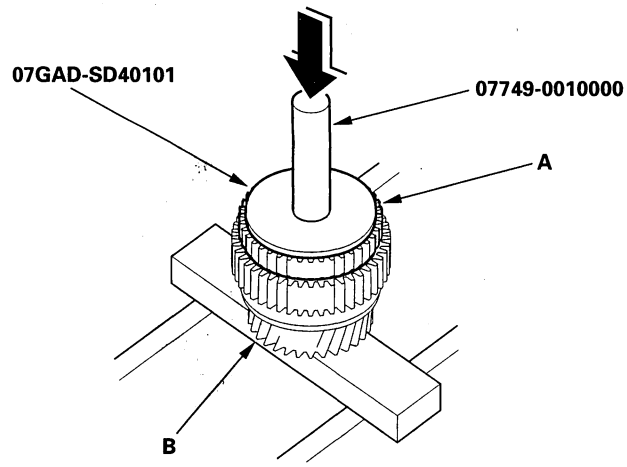

BACK

Protected by AR

Clutch Disassembly

Special Tools Required
- Clutch spring compressor attachment 07LAE-PX40100 or 07HAE-PL50101
- Clutch spring compressor bolt assembly 07GAE-PG40200 or 07GAE-PG4020A

1. Remove the snap ring (A), then remove the clutch end plate, the clutch discs, and the plates with a screwdriver (B).

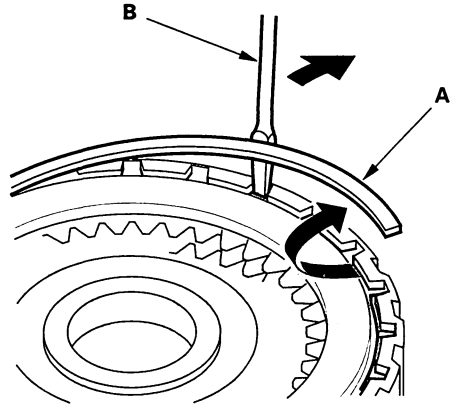

2. Make reference marks on the 2nd clutch waved-plates on the 2006 model.

3. Remove the waved spring from the 3rd clutch (2003 model) and 4th clutch (2003-2004 models).

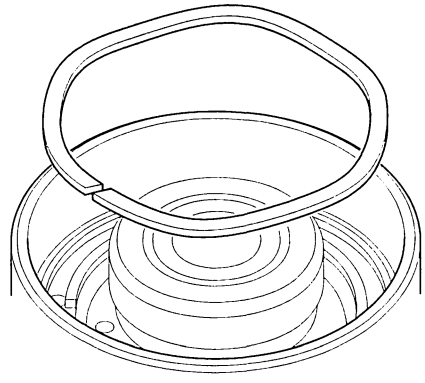

4. Remove the disc spring from the 1st clutch, 5th clutch, 3rd clutch (2004-2006 models), and 4th clutch (2005-2006 models).

- **1ST CLUTCH**
- **3RD CLUTCH (2004-2006 MODELS)**
- **5TH CLUTCH (2003-2004 MODELS)**

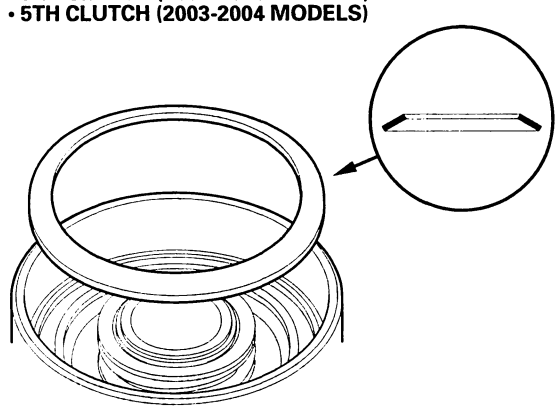

- **4TH CLUTCH (2005-2006 MODELS)**
- **5TH CLUTCH (2005-2006 MODELS)**

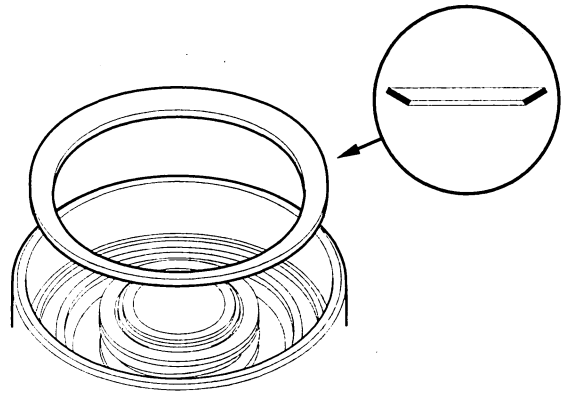

(cont'd)

Protected by AR

Clutch Disassembly (cont'd)

5. Install the special tools on the clutch assembly.

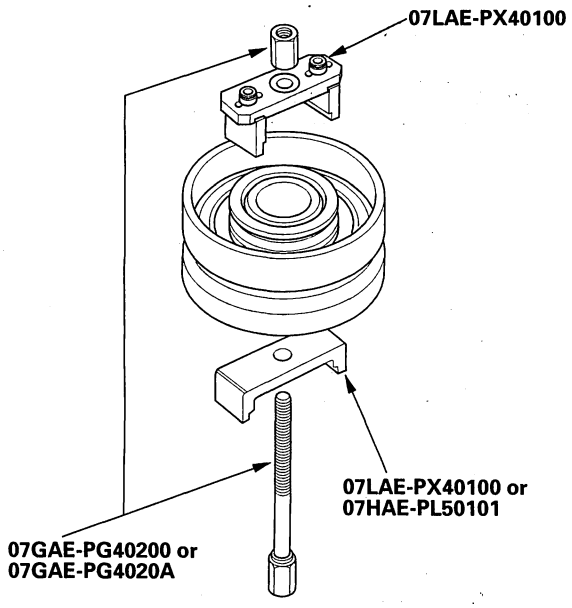

6. Be sure the special tool (A) is adjusted to have full contact with the spring retainer (B) on the 1st, 4th, and 5th clutches.

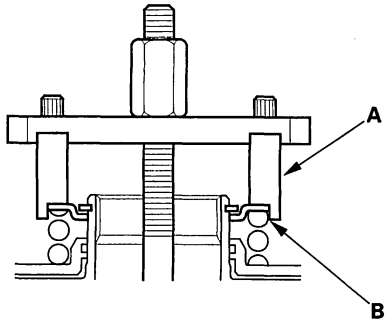

7. Set the special tool (A) on the spring retainer (B) of the 2nd and 3rd clutches so the special tool works on the clutch return spring (C).

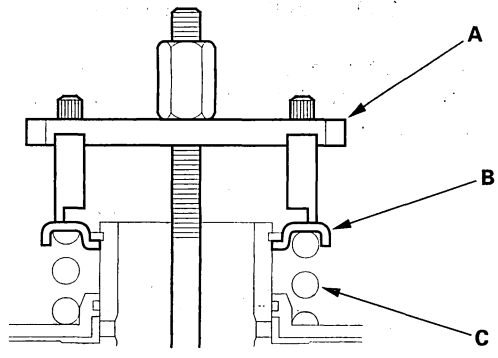

8. If either end of the special tool is set over an area of the spring retainer which is unsupported by the return spring, the retainer may be damaged.

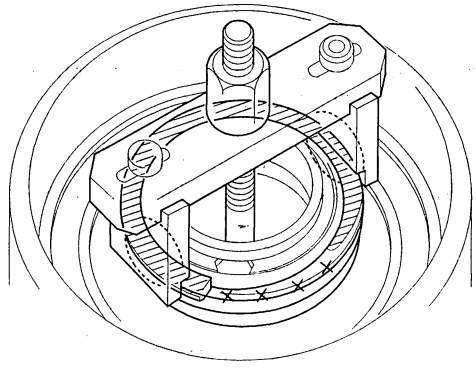

BACK

Protected by AR

9. Compress the spring until the snap ring can be removed.

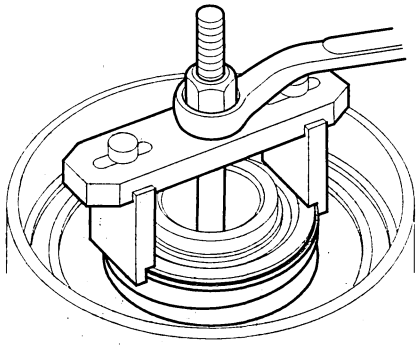

10. Remove the snap ring (A). Then remove the special tools (B), spring retainer (C), and return spring.

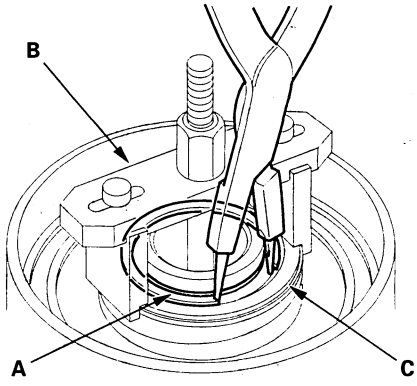

11. Wrap a shop rag around the clutch drum (A), and apply air pressure to the fluid passage to remove the piston (B). Place a finger tip on the other end while applying air pressure.

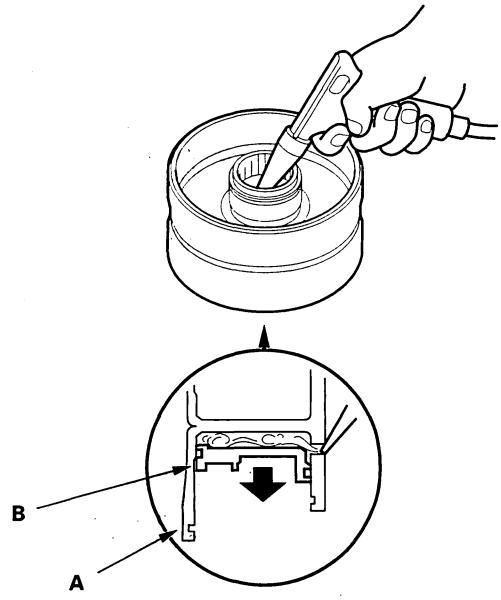

Protected by AR

Clutch Inspection

1st/1st-hold/2nd Clutch (2003-2005 Models)

1. Inspect the clutch piston and clutch piston check valve. If the clutch check valve is loose or stuck damaged, replace the clutch piston.

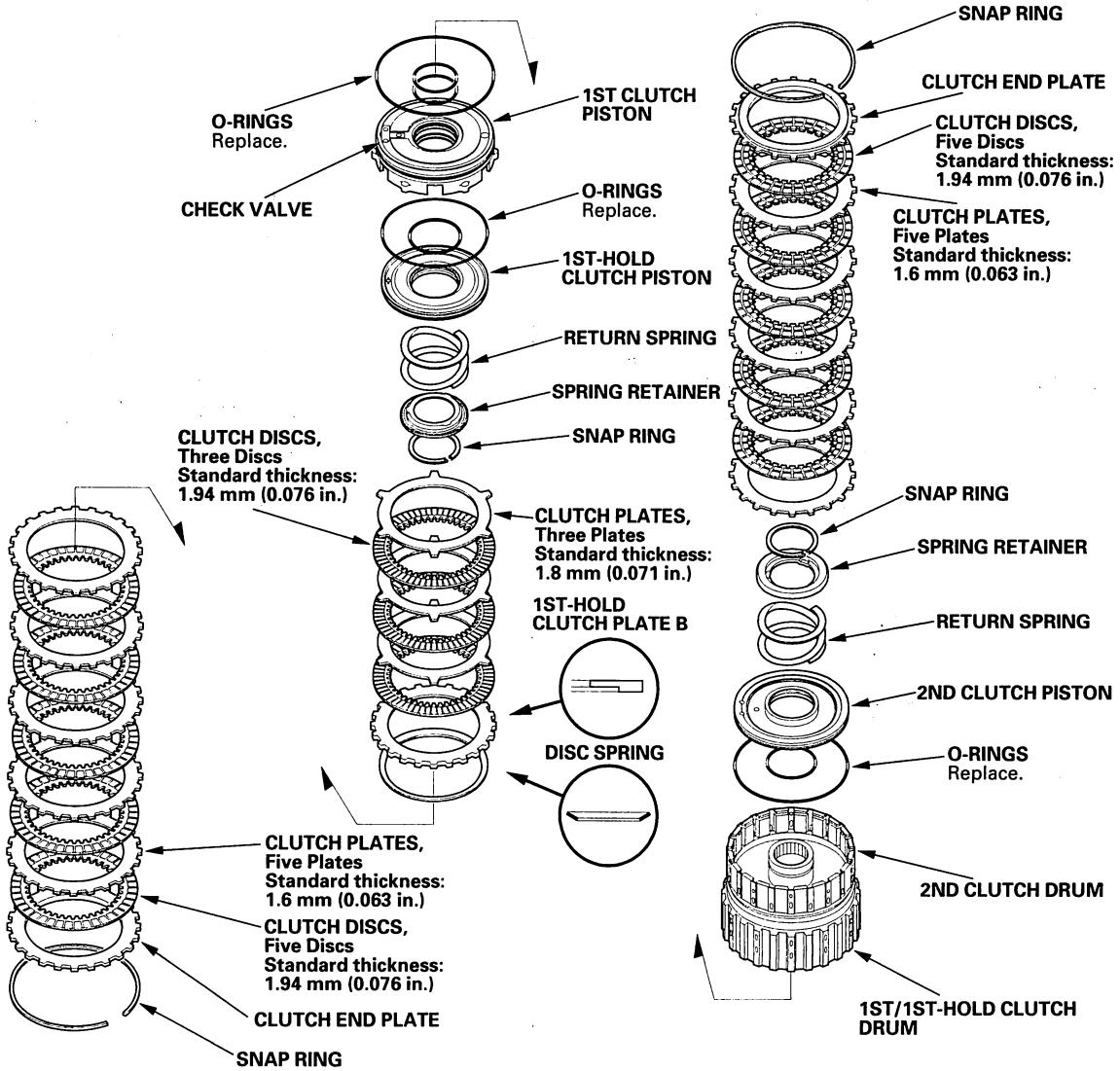

2. Check the spring retainer for wear and damage.

3. Inspect the clutch discs, clutch plates, and clutch end plate for wear, damage, and discoloration.

   - If the clutch discs are worn or damaged, replace the discs as a set.
   - If the clutch plates are worn, damaged, or discolored, replace the plates as a set.
   - If the clutch end plate is worn, damaged, or discolored, inspect the clutch end-plate-to-top-disc clearance, then replace the clutch-end-plate.
   - If the 1st-hold clutch plate B is worn, damaged, or discoloration, inspect the 1st-hold clutch plate B-to-top-disc clearance, then replace plate B.

BACK

Protected by AR

1st/1st-hold/2nd Clutch (2006 Models)

1. Inspect the clutch piston and clutch piston check valve. If the clutch check valve is loose, stuck, or damaged, replace the clutch piston.

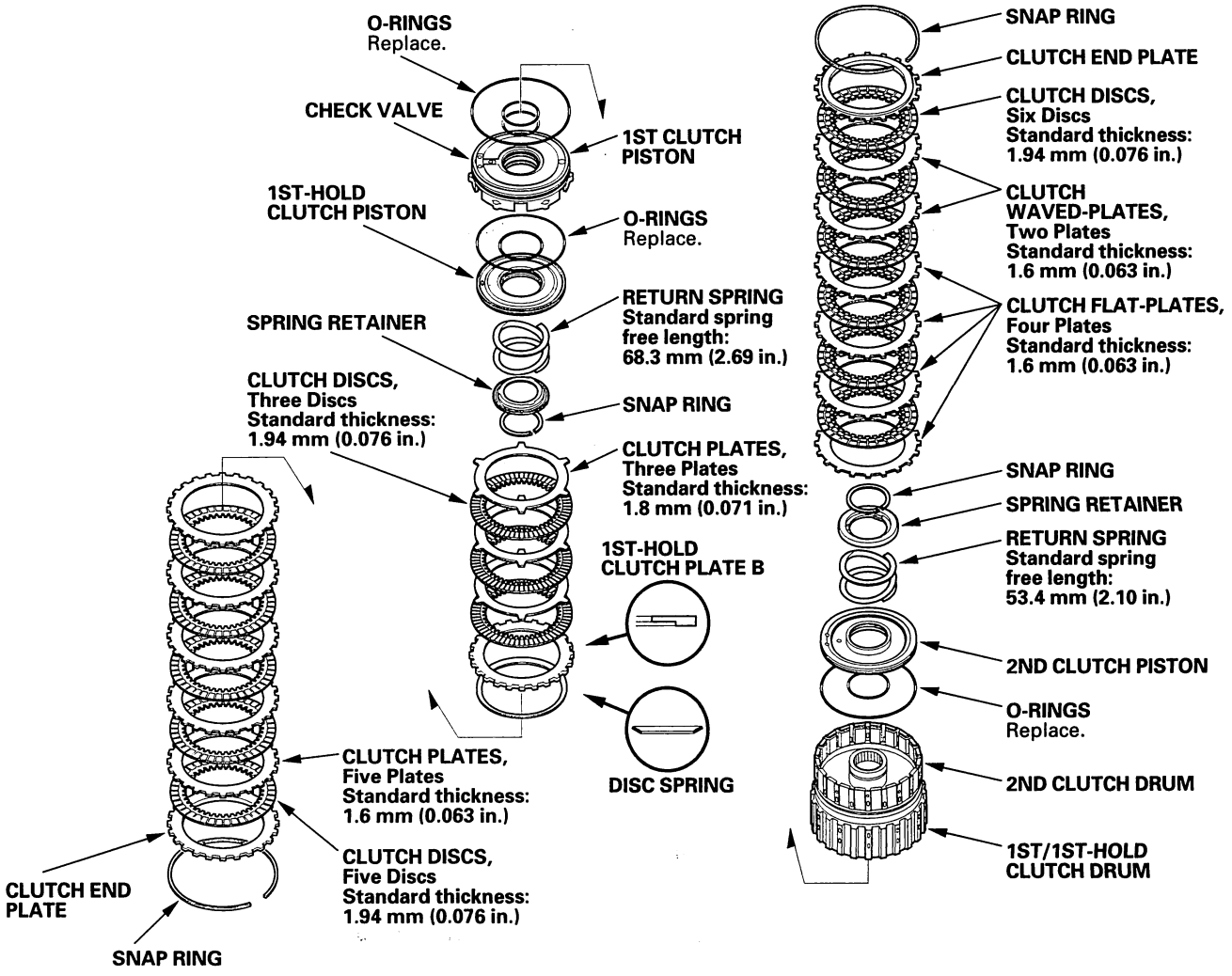

2. Check the spring retainer for wear and damage.

3. Inspect the clutch discs, clutch plates, and clutch end plate for wear, damage, and discoloration. Inspect the 2nd clutch waved-plate phase difference on the 2006 model (see page 14-273).

   - If the clutch discs are worn or damaged, replace the discs as a set.
   - If the clutch plates are worn, damaged, or discolored, replace the plates as a set.
   - If the clutch end plate is worn, damaged, or discolored, inspect the clutch end-plate-to-top-disc clearance, then replace the clutch-end-plate.
   - If the 1st-hold clutch plate B is worn, damaged, or discolored, inspect the 1st-hold clutch plate B-to-top-disc clearance, then replace plate B.

(cont'd)

Protected by AR

Clutch Inspection (cont'd)

3rd Clutch (2003 Model)

1. Inspect the clutch piston and clutch piston check valve. If the clutch check valve is loose or stuck damaged, replace the clutch piston.

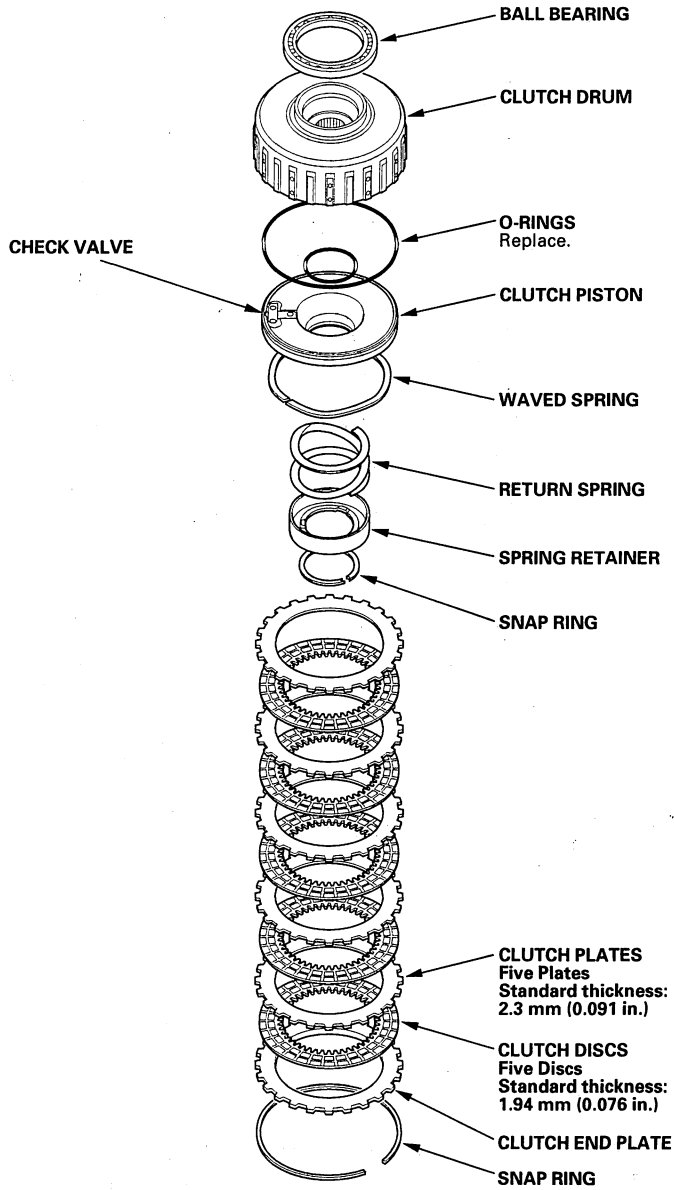

2. Check the spring retainer for wear and damage.

3. Inspect the clutch discs, clutch plates, and clutch end plate for wear, damage, and discoloration.

   - If the clutch discs are worn or damaged, replace the discs as a set.
   - If the clutch plates are worn, damaged, or discolored, replace the plates as a set.
   - If the clutch end plate is worn, damaged, or discolored, inspect the clutch end-plate-to-top-disc clearance, then replace the clutch end-plate.

BACK

Protected by AR

3rd Clutch (2004-2006 Models)

1. Inspect the clutch piston and clutch piston check valve. If the clutch check valve is loose, stuck, or damaged, replace the clutch piston.

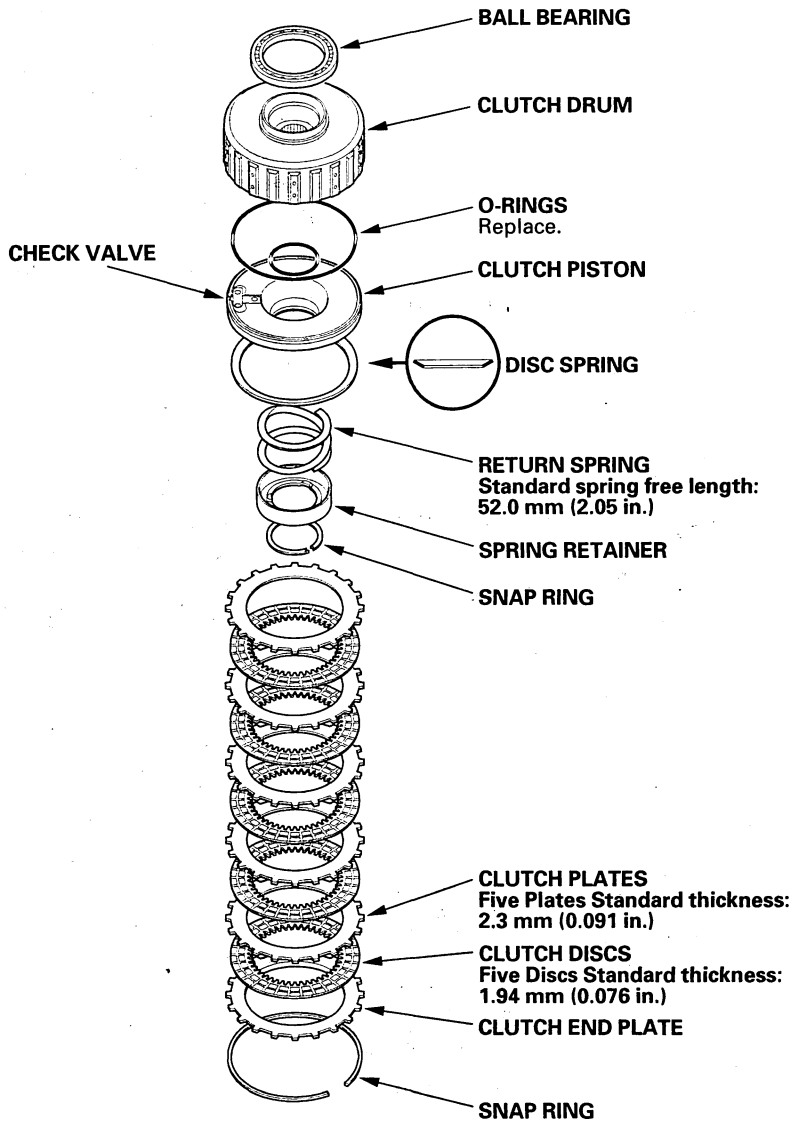

2. Check the spring retainer for wear and damage.

3. Inspect the clutch discs, clutch plates, and clutch end plate for wear, damage, and discoloration.

   - If the clutch discs are worn or damaged, replace the discs as a set.
   - If the clutch plates are worn, damaged, or discolored, replace the plates as a set.
   - If the clutch end plate is worn, damaged, or discolored, inspect the clutch end-plate-to-top-disc clearance, then replace the clutch end-plate.

(cont'd)

Protected by AR

Clutch Inspection (cont'd)

4th/5th Clutch (2003-2004 Models)

1. Inspect the clutch piston and clutch piston check valve. If the clutch check valve is loose or stuck damaged, replace the clutch piston.

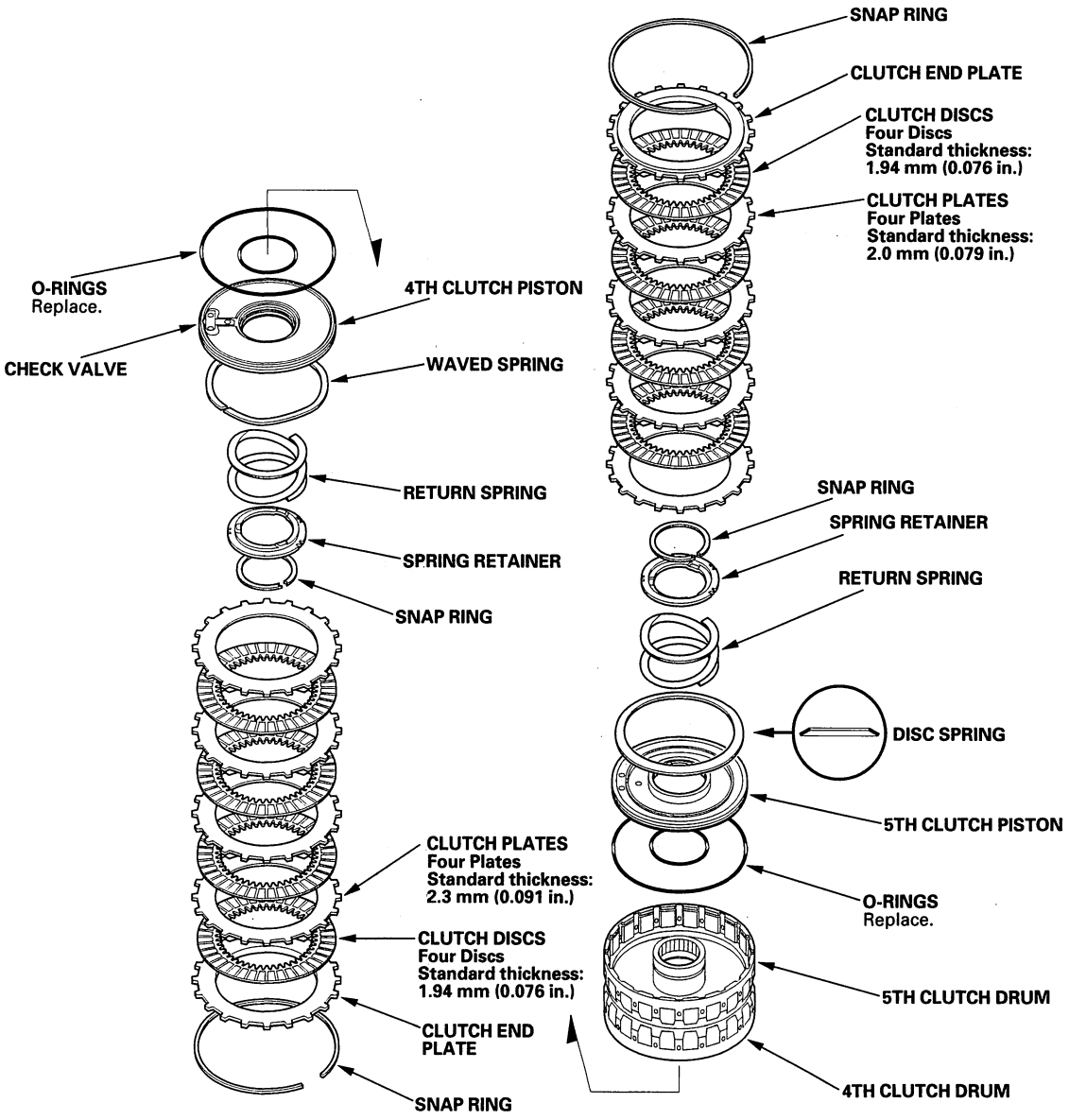

2. Check the spring retainer for wear and damage.

3. Inspect the clutch discs, clutch plates, and clutch end plate for wear, damage, and discoloration.

   - If the clutch discs are worn or damaged, replace the discs as a set.
   - If the clutch plates are worn, damaged, or discolored, replace the plates as a set.
   - If the clutch end plate is worn, damaged, or discolored, inspect the clutch end-plate-to-top-disc clearance, then replace the clutch end-plate.

BACK

Protected by AR

4th/5th Clutch (2005 Model)

1. Inspect the clutch piston and clutch piston check valve. If the clutch check valve is loose or stuck damaged, replace the clutch piston.

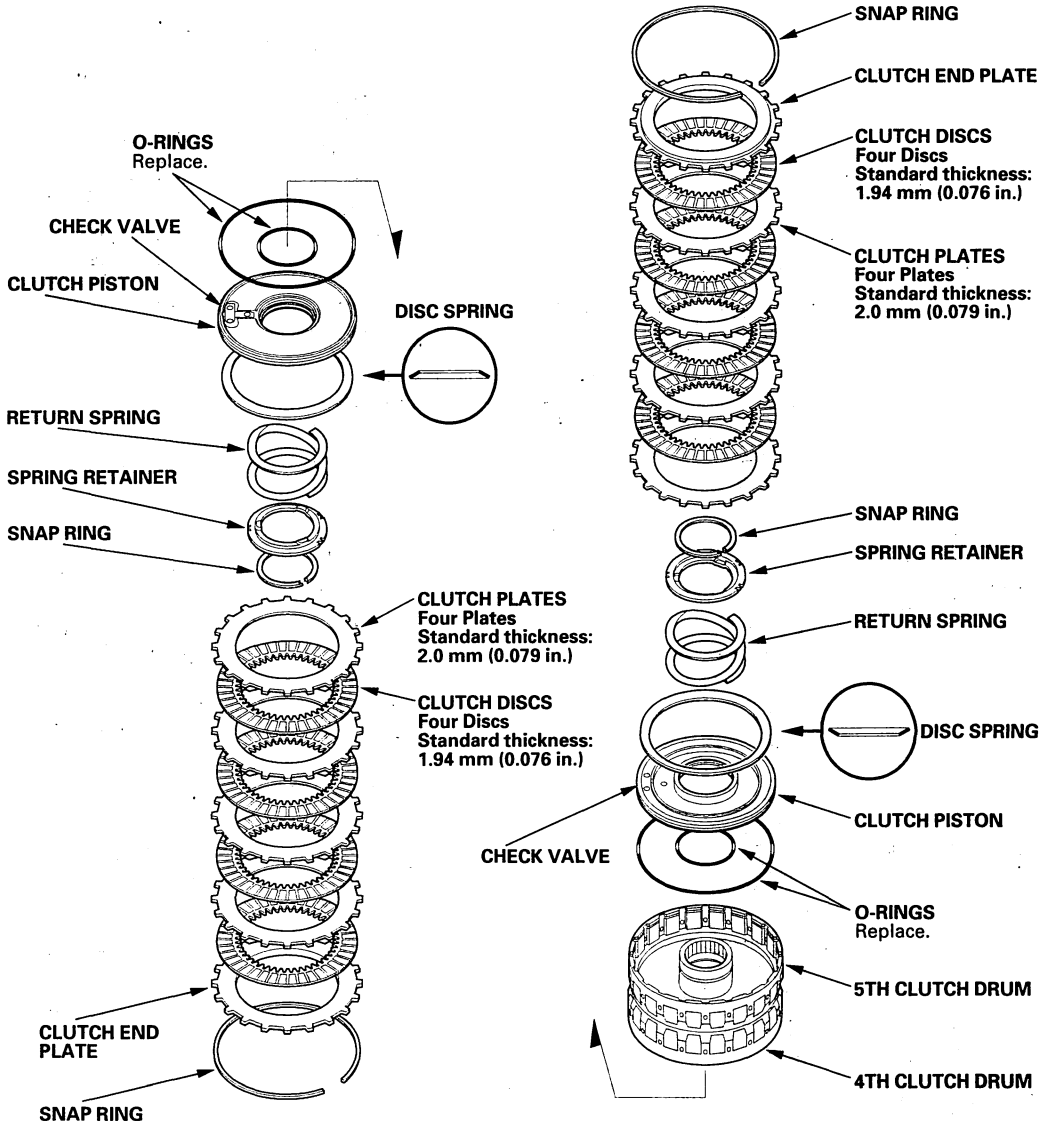

2. Check the spring retainer for wear and damage.

3. Inspect the clutch discs, clutch plates, and clutch end plate for wear, damage, and discoloration.

   - If the clutch discs are worn or damaged, replace the discs as a set.
   - If the clutch plates are worn, damaged, or discolored, replace the plates as a set.
   - If the clutch end plate is worn, damaged, or discolored, inspect the clutch end-plate-to-top-disc clearance, then replace the clutch end-plate.

(cont'd)

Protected by AR

Clutch Inspection (cont'd)

4th/5th Clutch (2006 Model)

1. Inspect the clutch piston and clutch piston check valve. If the clutch check valve is loose, stuck, or damaged, replace the clutch piston.

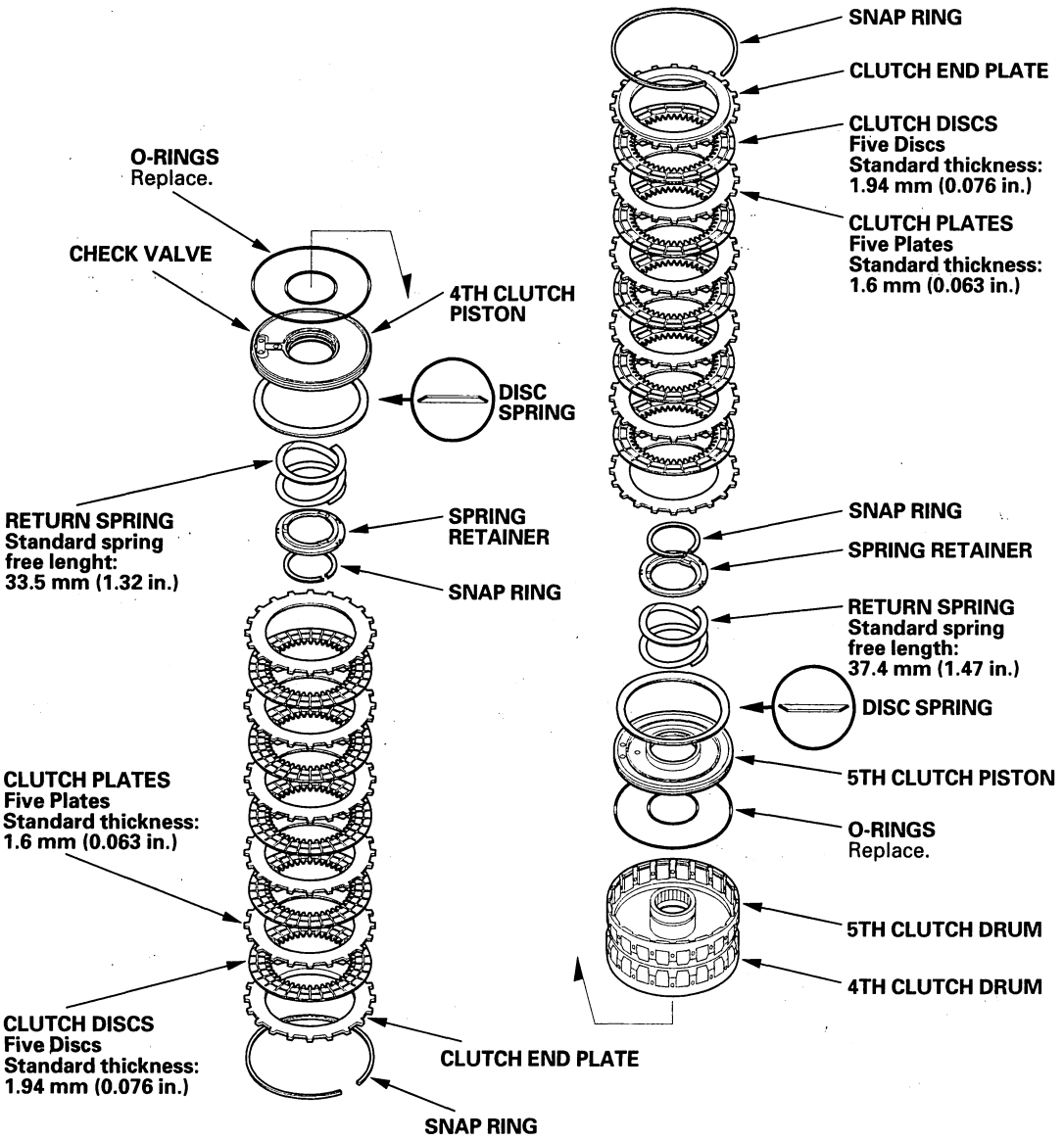

2. Check the spring retainer for wear and damage.

3. Inspect the clutch discs, clutch plates, and clutch end plate for wear, damage, and discoloration.

   - If the clutch discs are worn or damaged, replace the discs as a set.
   - If the clutch plates are worn, damaged, or discolored, replace the plates as a set.
   - If the clutch end plate is worn, damaged, or discolored, inspect the clutch end-plate-to-top-disc clearance, then replace the clutch end-plate.

BACK

Protected by AR

Clutch Waved-plate Phase Difference Inspection

1. Place the clutch waved-plate (A) on a surface plate, and set a dial indicator (B) on the waved-plate.

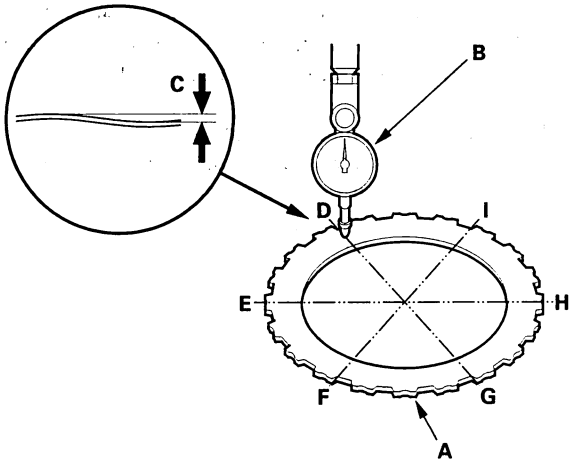

2. Find the bottom (D) of a phase difference of the waved-plate, zero the dial indicator and make a reference mark on the bottom of the waved-plate.

3. Rotate the waved-plate about 72-degrees or 54-degrees apart from the bottom while holding the waved-plate by its circumference. The dial indicator should be at the top (E) of a phase difference. Do not rotate the waved-plate while holding its surface, always rotate it with holding its circumference.

4. Read the dial indicator. The dial indicator reads the phase difference (C) of the waved-plate between bottom and top.

   Standard: 0.08—0.20 mm (0.003—0.008 in.)

5. Rotate the waved-plate about 54-degrees or 72-degrees. The dial indicator should be at the bottom of a phase difference (F and H), and zero the dial indicator.

6. Measure the phase difference at the other two tops (G and I) of the waved-plate by following steps 3 thru 5.

7. If the two values of the three measurements are within the standard, the waved-plate is OK. If the two values of the three measurements are out of the standard, replace the waved-plate.

Protected by AR

Clutch Clearance Inspection

Special Tools Required
Clutch compressor attachment 07ZAE-PRP0100

1. Inspect the clutch piston, discs, plates, and end plate for wear and damage, and inspect the 2nd clutch waved-plate phase difference (on 2006 model) (see page 14-273), if necessary.

2. Install the 1st-hold clutch piston in the 1st clutch piston, and install 1st/1st-hold clutch piston in the 1st/1st-hold clutch drum. Do not install the O-rings on the clutch pistons during inspection.

3. Starting with the 1st-hold clutch plate, alternately install the plates and discs, then install the 1st-hold clutch plate B with the flat side down on the top disc.

4. Measure the 1st-hold clutch plate B-to-top-disc clearance with a feeler gauge (A) while pressing the 1st-hold clutch plate B down. Take measurements in at least three places, and use the average as the actual clearance.

   1st-hold Clutch Plate B-to-Top-Disc Clearance
   Service Limit: 0.5—0.9 mm (0.020—0.035 in.)

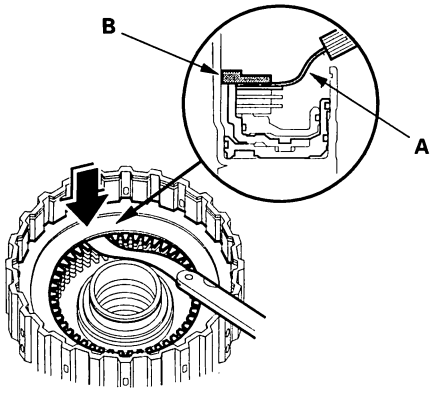

5. If the clearance is out of standard, replace the 1st-hold clutch plates and discs as a set, and recheck.

6. Install the disc spring on the 1st-hold clutch plate B with the large end down. Starting with the clutch plate, alternately install the plates and discs in the 1st clutch drum, then install the clutch-end-plate with the flat side down on the top disc. Install the snap ring to secure the clutch-end-plate.

7. Install the clutch pistons in the 2nd, 3rd, 4th, and 5th clutch drums. Do not install the O-rings on the clutch pistons during inspection.

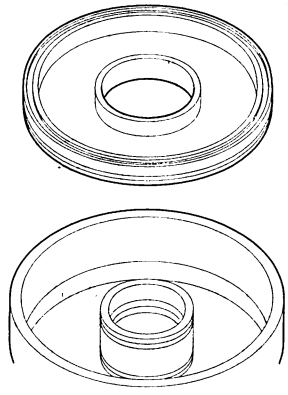

8. Starting with the clutch plate, alternately install the clutch plates and discs in the clutch drums, then install the clutch-end-plate with the flat side down on the top disc. Install the snap ring to secure the clutch-end-plate.

BACK

Protected by AR

9. Set a dial indicator (A) on the clutch-end-plate (B).

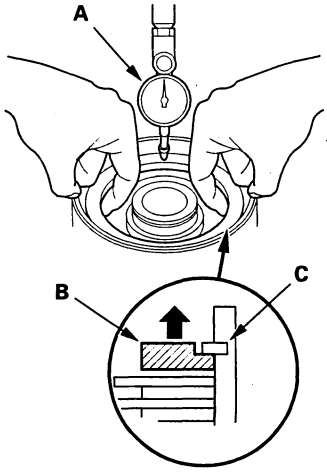

10. Zero the dial indicator with the clutch-end-plate lifted up to the snap ring (C).

11. Release the clutch-end-plate to lower the clutch-end-plate, then put the special tool on the end-plate (A).

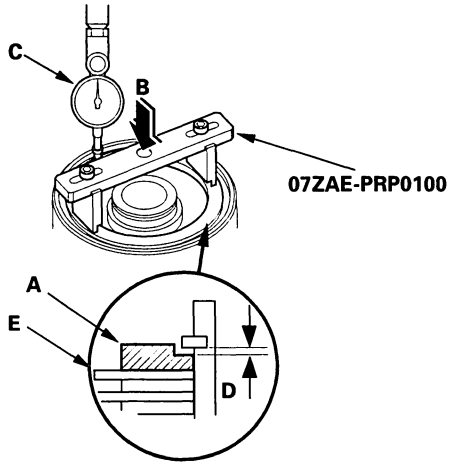

12. Press the special tool down with 39 N (4 kgf, 9 lbf) (B) using a force gauge, and read the dial indicator (C). The dial indicator reads the clearance (D) between the clutch-end-plate and top disc (E). Take measurements in at least three places, and use the average as the actual clearance.

13. Only for the 2nd clutch on the 2006 model: Press the special tool down with 150—160 N (15—16 kgf, 33—35 lbf) (B) using a force gauge, and read the dial indicator (C). The dial indicator reads the clearance (D) between the clutch-end-plate and top disc (E). Take measurements in at least three places, and use the average as the actual clearance.

Clutch-End-Plate-to-Top Disc Clearance
Service Limit:

2003-2005 Models
1st clutch: 1.1—1.3 mm (0.043—0.051 in.)
2nd clutch: 0.7—0.9 mm (0.028—0.035 in.)
3rd clutch: 0.7—0.9 mm (0.028—0.035 in.)
4th clutch: 0.55—0.75 mm (0.022—0.030 in.)
5th clutch: 0.55—0.75 mm (0.022—*0.030 in.*)

2006 Model
1st clutch: 1.1—1.3 mm (0.043—0.051 in.)
2nd clutch: 0.85—1.05 mm (0.033—0.041 in.)
3rd clutch: 0.7—0.9 mm (0.028—0.035 in.)
4th clutch: 0.7—0.9 mm (0.028—0.035 in.)
5th clutch: 0.7—0.9 mm (0.028—0.035 in.)

(cont'd)

Protected by AR

Clutch Clearance Inspection (cont'd)

14. If the clearance is out of the service limit, select a new clutch-end-plate from the following table.



1ST CLUTCH END PLATES

Mark	Part Number	Thickness
1	22551-P7W-003	3.1 mm (0.122 in.)
2	22552-P7W-003	3.2 mm (0.126 in.)
3	22553-P7W-003	3.3 mm (0.130 in.)
4	22554-P7W-003	3.4 mm (0.134 in.)
5	22555-P7W-003	3.5 mm (0.138 in.)
6	22556-P7W-003	3.6 mm (0.142 in.)
7	22557-P7W-003	3.7 mm (0.146 in.)
8	22558-P7W-003	3.8 mm (0.150 in.)
9	22559-P7W-003	3.9 mm (0.154 in.)

2ND CLUTCH END PLATES

Mark	Part Number	Thickness
1	22551-PY4-003	2.1 mm (0.083 in.)
2	22552-PY4-003	2.2 mm (0.087 in.)
3	22553-PY4-003	2.3 mm (0.091 in.)
4	22554-PY4-003	2.4 mm (0.094 in.)
5	22555-PY4-003	2.5 mm (0.098 in.)
6	22556-PY4-003	2.6 mm (0.102 in.)
7	22557-PY4-003	2.7 mm (0.106 in.)
8	22558-PY4-003	2.8 mm (0.110 in.)
9	22559-PY4-003	2.9 mm (0.114 in.)

3RD CLUTCH END PLATES (2003 model)

Mark	Part Number	Thickness
1	22556-P7T-003	3.1 mm (0.122 in.)
2	22557-P7T-003	3.2 mm (0.126 in.)
3	22558-P7T-003	3.3 mm (0.130 in.)
4	22559-P7T-003	3.4 mm (0.134 in.)
6	22551-P7T-003	2.6 mm (0.102 in.)
7	22552-P7T-003	2.7 mm (0.106 in.)
8	22553-P7T-003	2.8 mm (0.110 in.)
9	22554-P7T-003	2.9 mm (0.114 in.)
0	22555-P7T-003	3.0 mm (0.118 in.)

3RD CLUTCH END PLATES (2004-2006 models)

Mark	Part Number	Thickness
1	22551-RAY-A01	2.1 mm (0.083 in.)
2	22552-RAY-A01	2.2 mm (0.087 in.)
3	22553-RAY-A01	2.3 mm (0.091 in.)
4	22554-RAY-A01	2.4 mm (0.094 in.)
5	22555-RAY-A01	2.5 mm (0.098 in.)
6	22556-RAY-A01	2.6 mm (0.102 in.)
7	22557-RAY-A01	2.7 mm (0.106 in.)
8	22558-RAY-A01	2.8 mm (0.110 in.)
9	22559-RAY-A01	2.9 mm (0.114 in.)
10	22560-RAY-A01	3.0 mm (0.118 in.)
11	22561-RAY-A01	3.1 mm (0.122 in.)

4TH and 5TH CLUTCH END PLATES

Mark	Part Number	Thickness
1	22561-P7T-003	2.1 mm (0.083 in.)
2	22562-P7T-003	2.2 mm (0.087 in.)
3	22563-P7T-003	2.3 mm (0.091 in.)
4	22564-P7T-003	2.4 mm (0.094 in.)
5	22565-P7T-003	2.5 mm (0.098 in.)
6	22566-P7T-003	2.6 mm (0.102 in.)
7	22567-P7T-003	2.7 mm (0.106 in.)
8	22568-P7T-003	2.8 mm (0.110 in.)
9	22569-P7T-003	2.9 mm (0.114 in.)

15. Install the new clutch-end-plate, and recheck the clearance. If the thickest clutch-end-plate is installed, but the clearance is still over the service limit, replace the clutch discs and plates.

BACK

Protected by AR

Clutch Reassembly

Special Tools Required
- Clutch spring compressor attachment 07LAE-PX40100 or 07HAE-PL50101
- Clutch spring compressor bolt assembly 07GAE-PG40200 or 07GAE-PG4020A

1. Soak the clutch discs thoroughly in ATF for a minimum of 30 minutes.

2. Install the new O-rings (A) on the clutch piston.

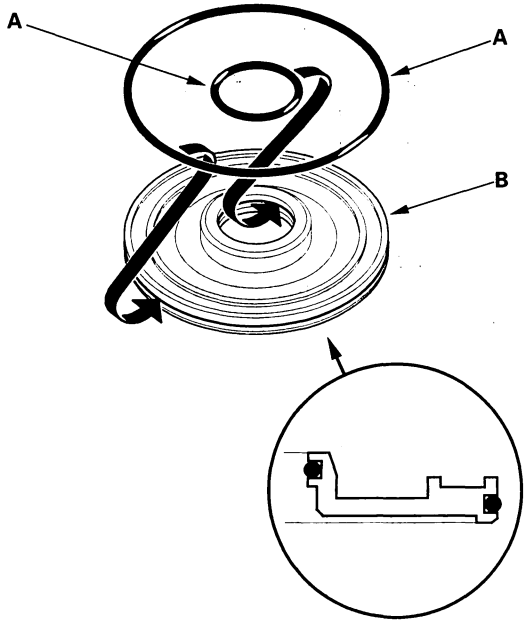

3. Install the clutch pistons in the clutch drums while applying pressure and rotating to ensure proper seating. Do not pinch the O-ring.

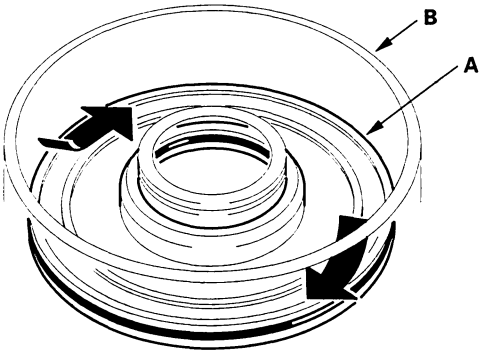

4. Install the return spring (A) and spring retainer (B), and position the snap ring (C) on the spring retainer.

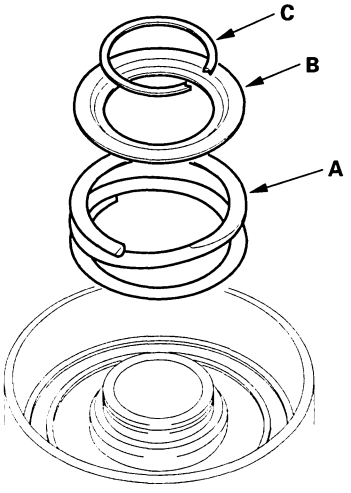

(cont'd)

Protected by AR

Clutch Reassembly (cont'd)

5. Install the special tools.

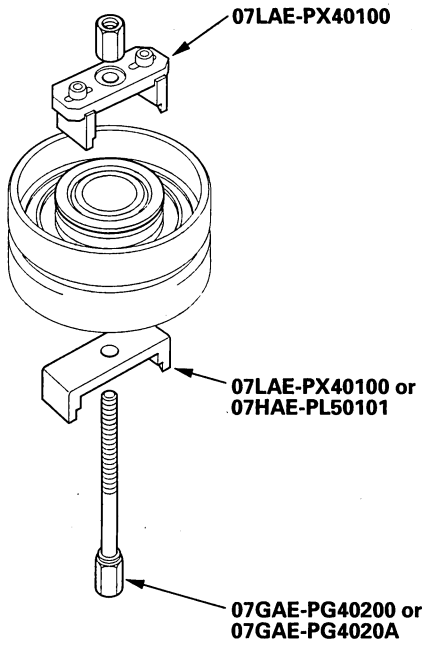

6. Set the special tool (A) over the spring retainer (B), and make sure the special tool is adjusted to have full contact with the spring retainer on the 1st, 4th, and 5th clutches.

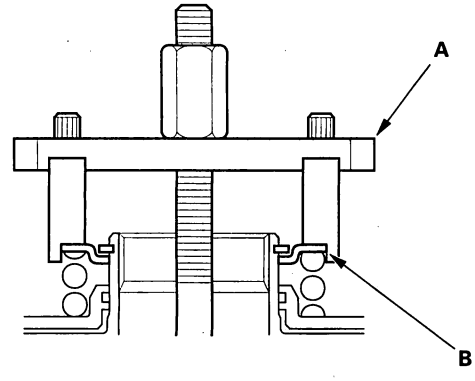

7. Set the special tool (A) on the spring retainer (B) of the 2nd clutch so the tool works on the clutch return spring (C).

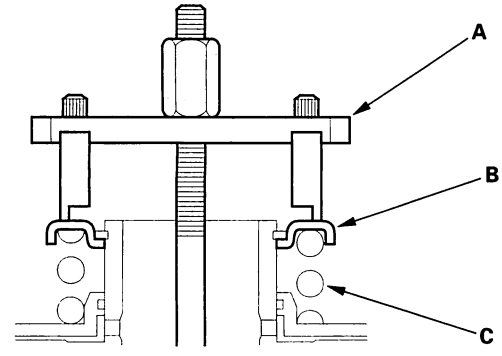

BACK

Protected by AR

8. If either end of the special tool is set over an area of the spring retainer that is unsupported by the return spring, the retainer may be damaged.

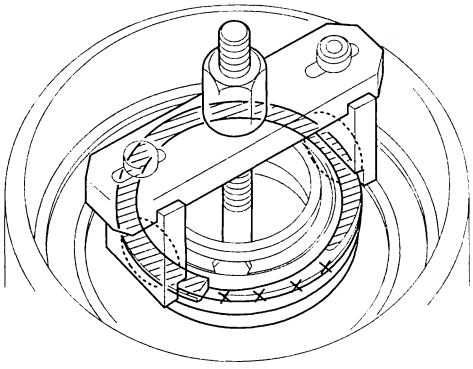

9. Set the special tool (A) on the spring retainer (B) of the 3rd clutch so the special tool works on the clutch return spring (C).

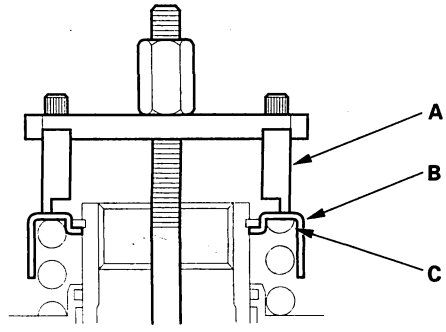

10. If either end of the special tool is not set over the clutch return spring end (A), the retainer may be damaged,

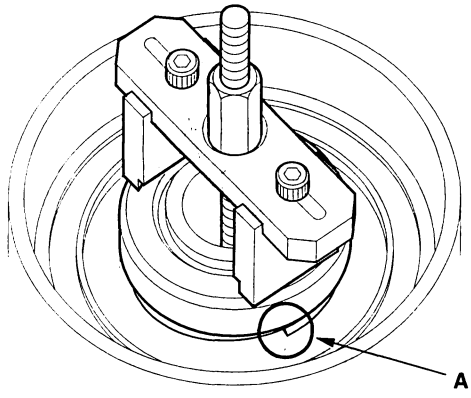

(cont'd)

Protected by AR

Clutch Reassembly (cont'd)

11. Compress the return spring until the snap ring can be installed.

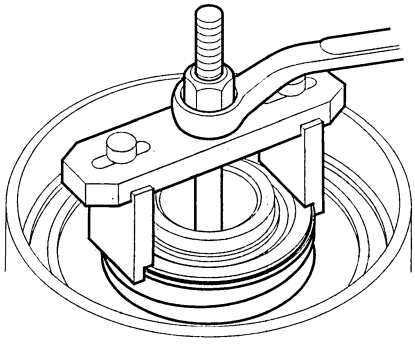

12. Install the snap ring with the snap ring pliers.

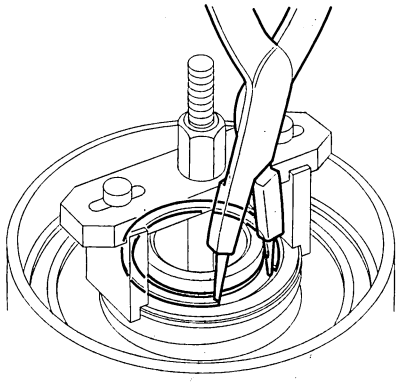

13. Remove the special tools.

14. Install the waved spring in the 3rd clutch (2003 model) and 4th clutch (2003-2004 models).

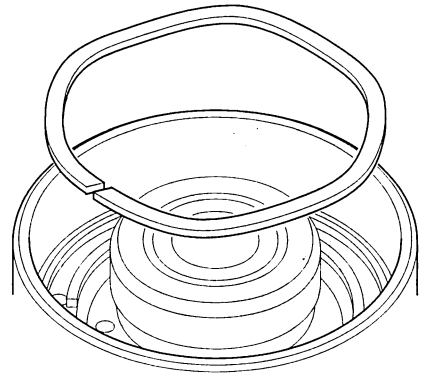

BACK

Protected by AR

15. Install the disc spring in the 1st clutch, 5th clutch, 3rd clutch (2004-2006 models), and 4th clutch (2005-2006 models).

- **1ST CLUTCH**
- **3RD CLUTCH (2004-2006 MODELS)**
- **5TH CLUTCH (2003-2004 MODELS)**

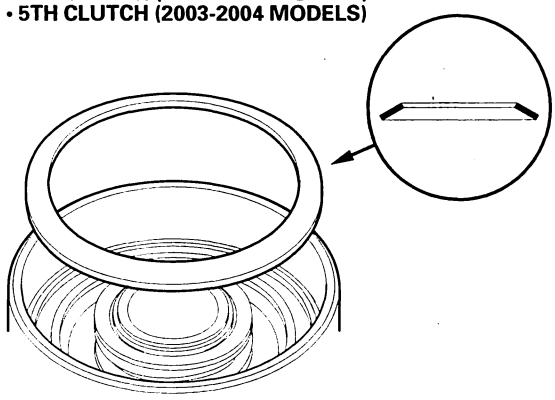

- **4TH CLUTCH (2005-2006 MODELS)**
- **5TH CLUTCH (2005-2006 MODELS)**

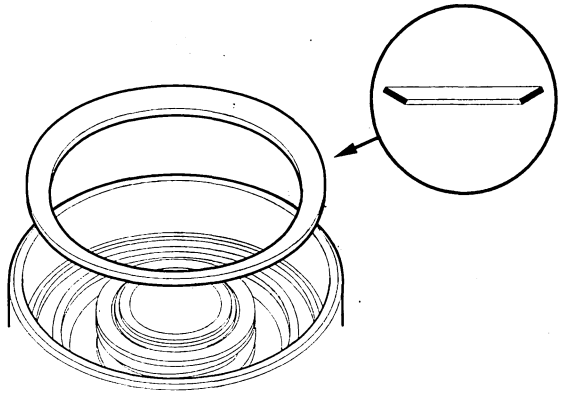

16. Make sure the inside of the clutch drum is free of dirt and other foreign particles.

17. For 1st, 3rd, 4th, and 5th clutches:
Starting with the clutch plate, alternately install the clutch plates and discs in the clutch drums, then install the *clutch-end-plate* with the flat side down on the top disc.

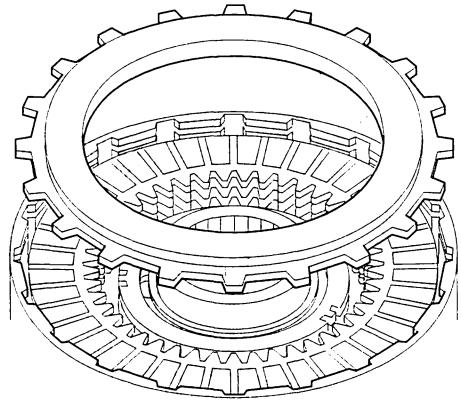

18. For 2nd clutch:
Starting with the 2nd clutch plate, alternately install the clutch flat-plates (4) and discs (4) in the clutch drum, and alternately install the clutch waved-plates (2) and discs (2), then install the clutch-end-plate with the flat side down on the top disc.

19. Install the snap ring with a screwdriver to secure the clutch-end-plate.

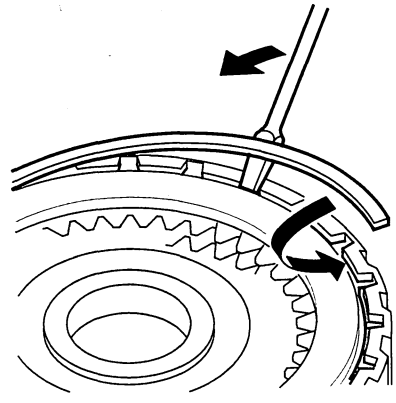

20. Check that the clutch piston moves by applying air pressure into fluid passage.

Protected by AR

Valve Body and ATF Strainer Installation

1. Install the main separator plate (E) and three dowel pins on the torque converter housing (F).

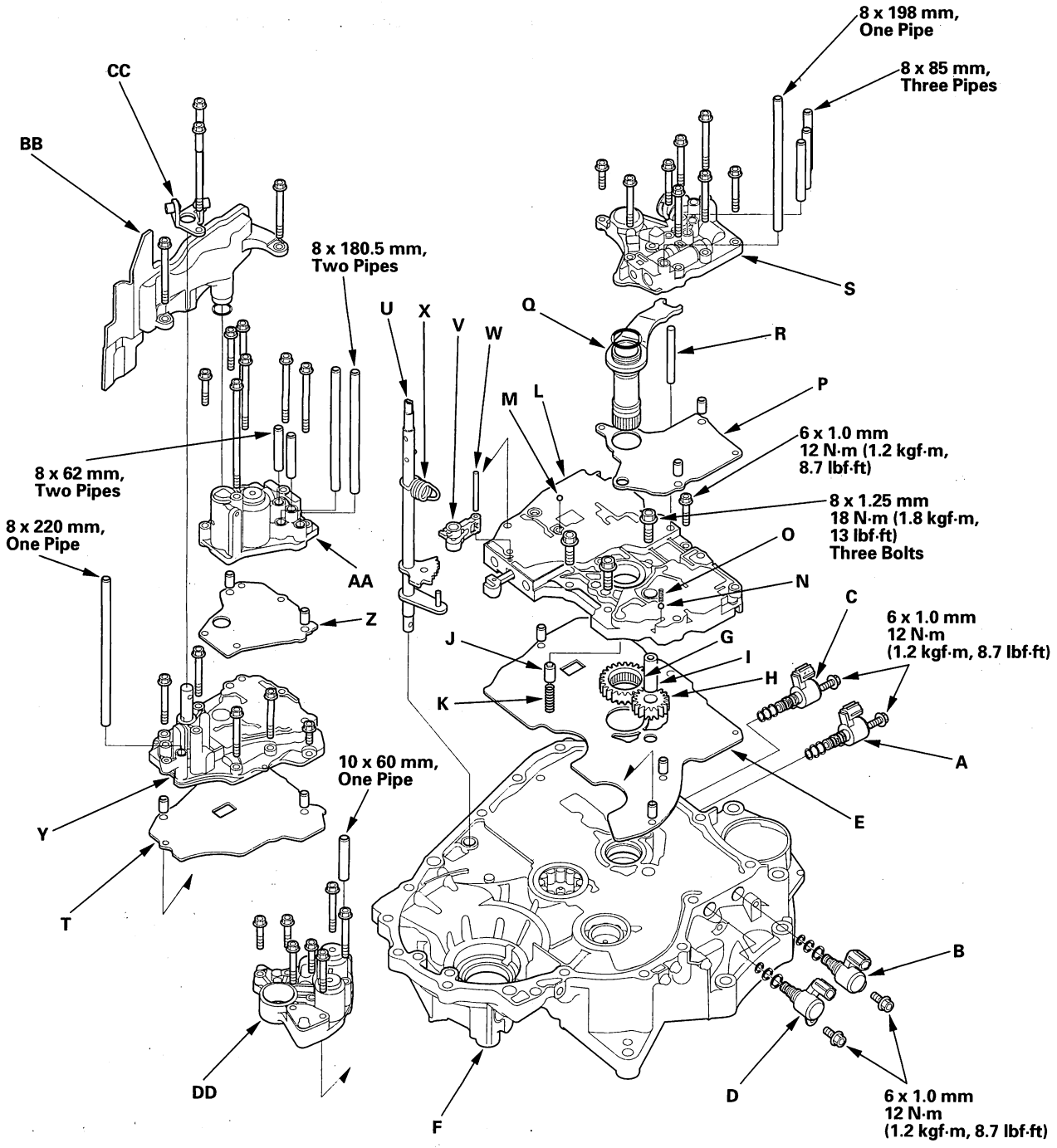

BACK

Protected by AR

2. Install the ATF pump drive gear (G), driven gear (H), and ATF pump driven gear shaft (I). Install the ATF pump driven gear with it grooved and chamfered side facing down.

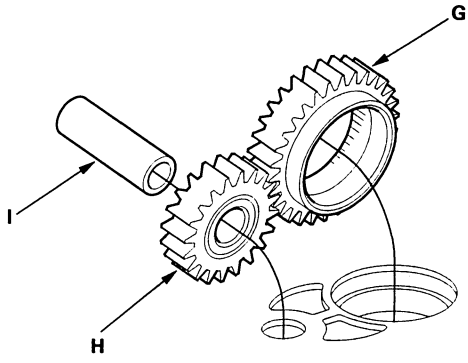

3. Install the torque converter check valve (J) and spring (K) in the main valve body (L), then install the main valve body.

4. Make sure the ATF pump drive gear (G) rotates smoothly in the normal operating direction, and the ATF pump driven gear shaft (I) moves smoothly in the axial and normal operating direction.

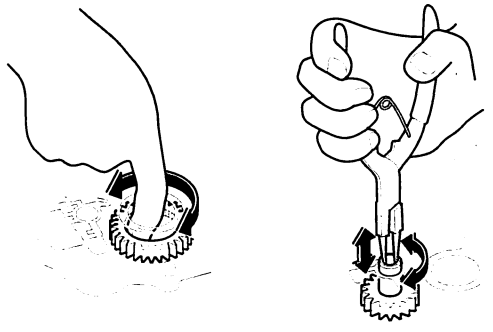

5. If the ATF pump drive gear and ATF pump driven gear shaft do not move smoothly, loosen the main valve body bolts. Realign the ATF pump driven gear shaft, and retighten the bolts to the specified torque, then recheck. Failure to align the ATF pump driven gear shaft correctly will result in a seized ATF pump drive gear or ATF pump driven gear shaft.

6. Make sure that the one check ball (M) and the cooler check valve (N) are in the main valve body, then install the cooler check valve spring (O) on the cooler check valve.

7. Install the regulator separator plate (P) and two dowel pins.

8. Install the new O-ring on the stator shaft (Q), and install it and stator shaft stop (R).

9. Install the regulator valve body (S) (eight bolts).

10. Install the servo separator plate (T) and two dowel pins.

11. Install the selector control shaft (U) in the torque converter housing along with the manual valve.

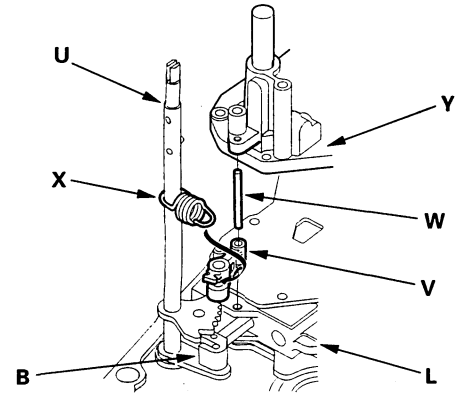

12. Install the detent arm (V) and arm shaft (W) in the main valve body (L), then hook the detent arm spring (X) to the detent arm.

13. Install the servo body (Y) (five bolts).

14. Install the top accumulator separator plate (Z) and two dowel pins, then install the top accumulator body (AA) (seven bolts).

15. Install the new O-ring on the ATF strainer (BB), and install it in the top accumulator body (two bolts).

16. Install the servo detent base (CC) (two bolts).

17. Install the accumulator body (DD) (seven bolts).

18. Install the 8 x 198 mm pipe, and three 8 x 85 mm pipes in the regulator valve body.

19. Install two 8 x 180.5 mm pipes, and two 8 x 62 mm pipes in the top accumulator body.

20. Install the 8 x 220 mm pipe in the servo body.

21. Install the 10 x 60 mm pipe in the accumulator body.

22. Install shift solenoid valves A, B, C, and torque converter clutch solenoid valve (D) with the new O-rings.

Protected by AR

Transmission Housing

Shaft Assembly and Housing Installation

1. Install the differential assembly (A) in the torque converter housing (B).

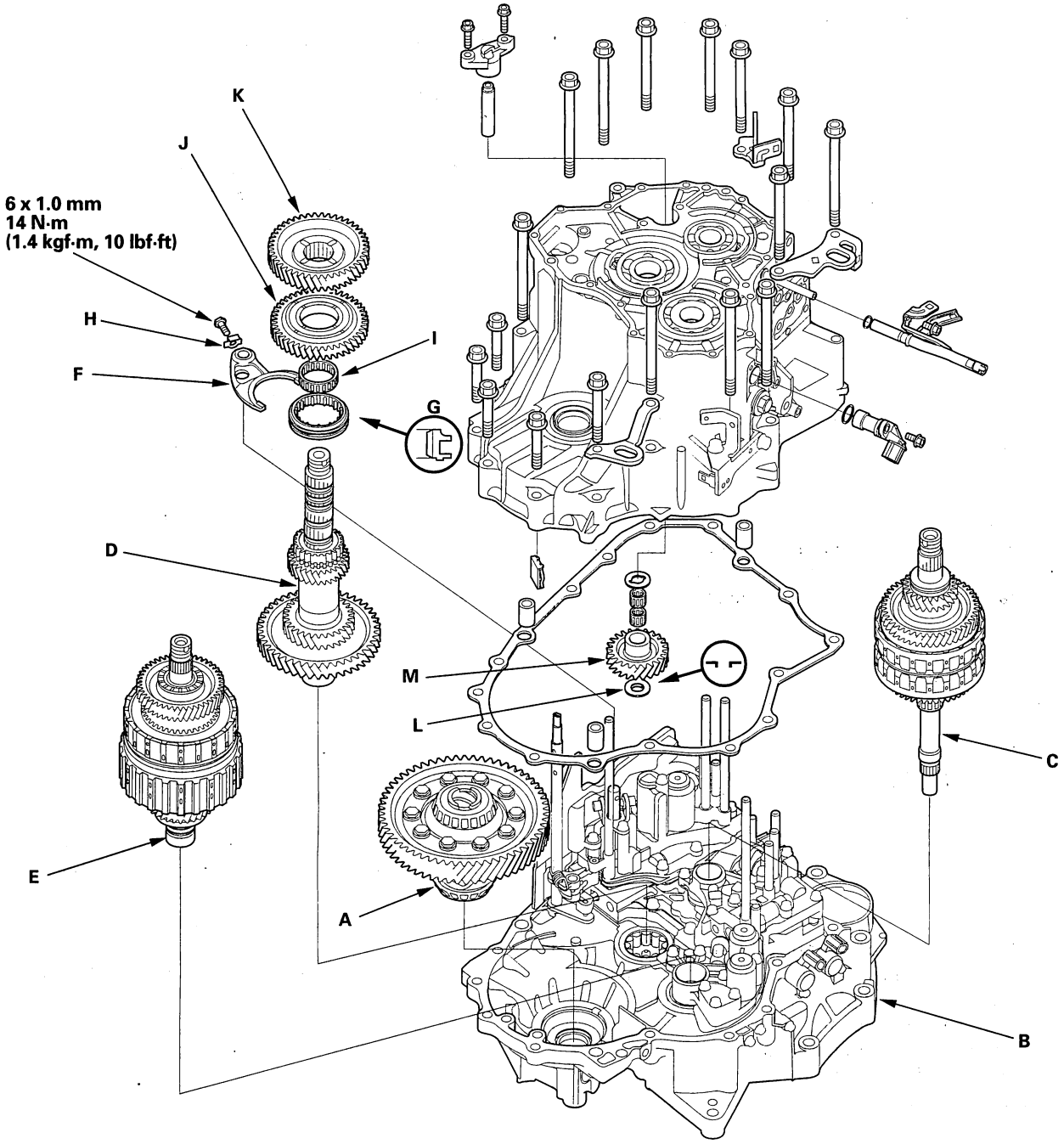

BACK

Protected by AR

2. If the reverse selector hub is press-fitted type, join the mainshaft (C), countershaft (D), and secondary shaft (E) together, then install them in the torque converter housing.

3. If the reverse selector hub in not press-fitted type, install the countershaft, mainshaft, and secondary shaft in the torque converter housing, then install the countershaft 5th gear and reverse selector hub on the countershaft.

4. Turn the shift fork shaft so the large chamfered hole is facing the fork bolt hole.

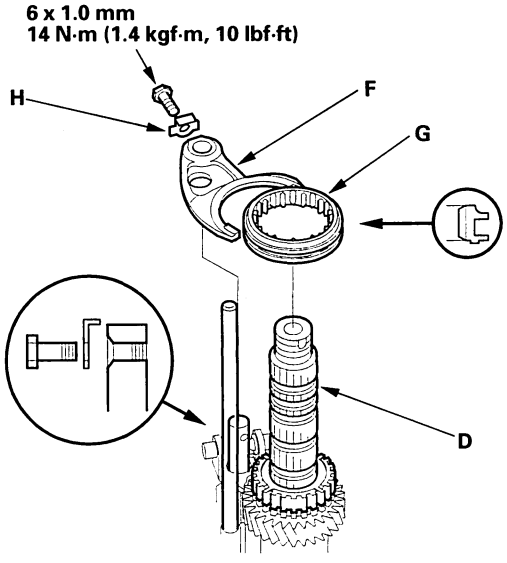

5. Install the shift fork (F) and reverse selector (G) together on the shift fork shaft and countershaft (D). Install the reverse selector in the direction shown.

6. Secure the shift fork to the shift fork shaft with the lock bolt and a new lock washer (H), then bend the lock washer against the lock bolt head.

7. Install the needle bearing (I), countershaft reverse gear (J), and countershaft 2nd gear (K) on the countershaft.

8. Place the thrust washer (L) in the transmission housing.

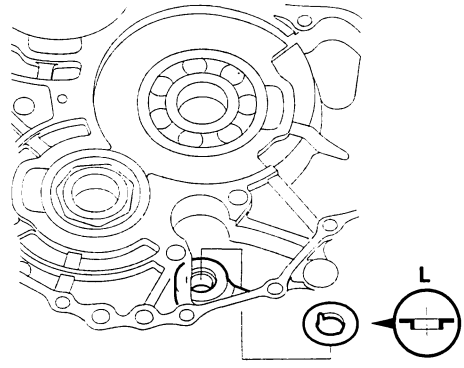

9. Place the reverse idler gear (M) in the transmission housing, and slide it in the direction shown.

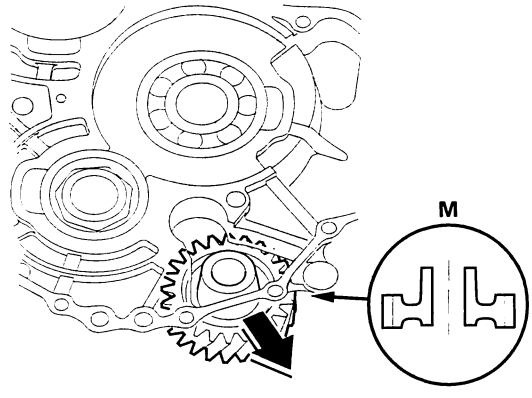

(cont'd)

Protected by AR

Shaft Assembly and Housing Installation (cont'd)

10. Align the spring pin (A) on the selector control shaft (B) with the transmission housing groove (C) by turning the selector control shaft.

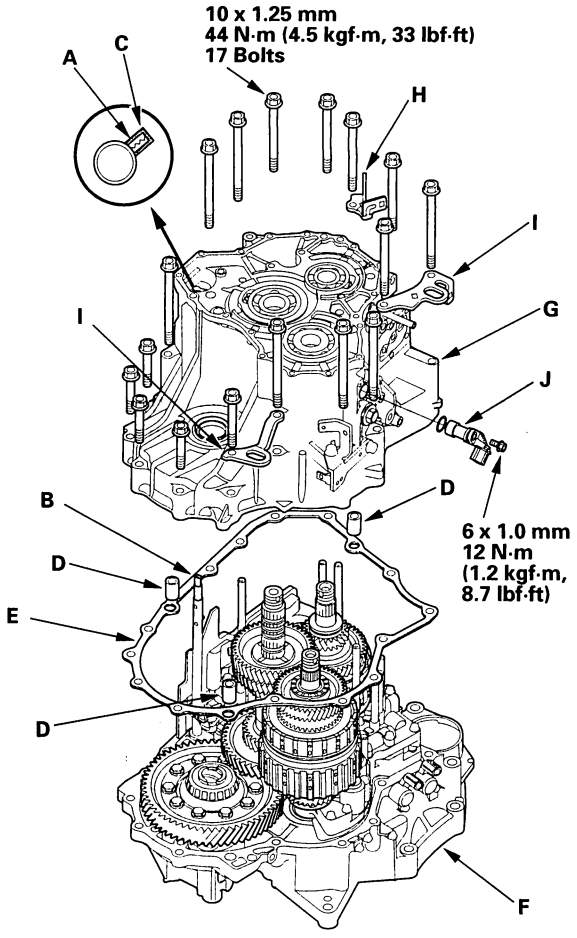

11. Install three dowel pins (D) and a new gasket (E) on the torque converter housing (F).

12. Place the transmission housing (G) on the torque converter housing, then install the transmission housing mounting bolts along with the harness clamp bracket (H) and transmission hangers (I).

13. Tighten the mounting bolts in two or more steps in a crisscross pattern.

14. Install the new O-ring on the output shaft (countershaft) speed sensor (J), then install it in the transmission housing.

15. Engage the reverse idler gear with the countershaft reverse gear and mainshaft reverse gear. Then install the needle bearings (A), reverse idler gear shaft (B), and thrust washer (C) in the reverse idler gear, and install the reverse idler gear shaft holder (D) on the transmission housing.

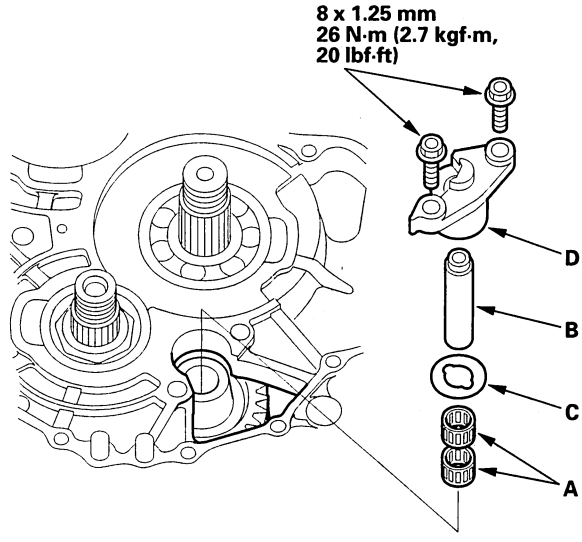

BACK

Protected by AR

End Cover, 3rd Gear, Idler Gear, and 3rd Clutch Installation

Special Tools Required
- Mainshaft holder
  07GAB-PF50101 or 07GAB-PF50100
- Adjustable bearing puller, 25—40 mm
  07736-A01000B or 07736-A01000A

1. Install the park lever (A) and park lever stop (B), on the selector control shaft (C), then install the lock bolt (D) with a new lock washer (E). Do not bend the lock tab of the lock washer until step 28.

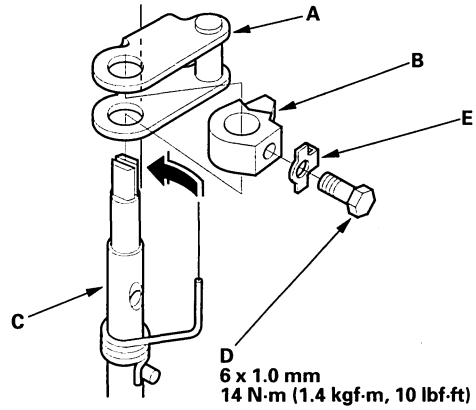

2. Lubricate the following parts with ATF:
   - Splines of the countershaft, the park gear, and the old locknut.
   - Threads of the countershaft and the old locknut.
   - Old conical spring washer.

3. Install the park gear (A) using the old locknut (B) and a collar (C). Hold the park pawl (D) against the park gear, then tighten the old locknut until the shaft splines come out over the park gear splines.

   NOTE:
   - Do not use an impact wrench.
   - Countershaft locknut has left-hand threads.

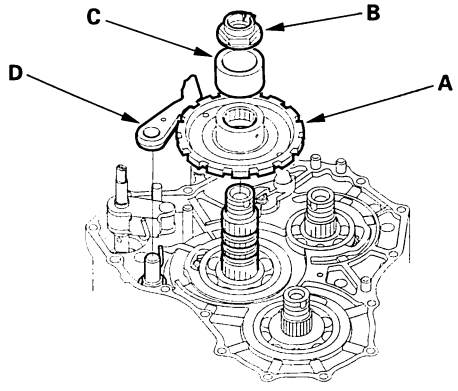

4. Remove the locknut and collar.

5. Install the thrust needle bearing (A), needle bearing (B), 3rd gear (C), thrust needle bearing (D), 31 x 63.5 mm splined washer (E), 3rd clutch assembly (F), and old conical spring washer (G) on the countershaft (H). Tighten the old locknut (I) to 226 N·m (23.0 kgf·m, 166 lbf·ft).

   NOTE: Use a torque wrench to tighten the locknut. Do not use an impact wrench.

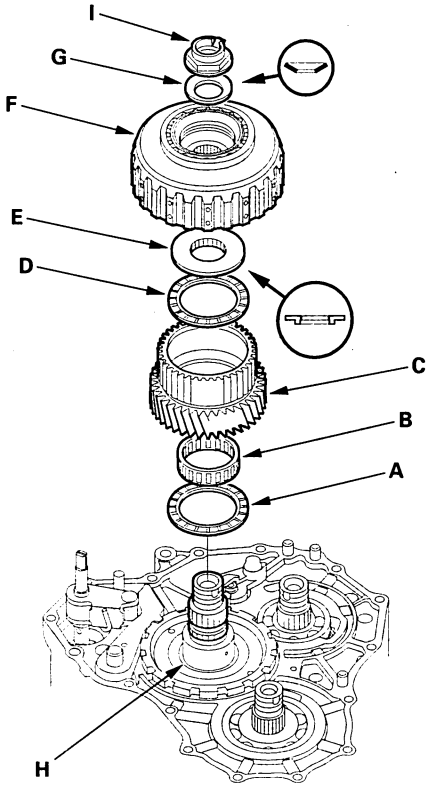

(cont'd)

Protected by AR

End Cover, 3rd Gear, Idler Gear, and 3rd Clutch Installation (cont'd)

6. Set the dial indicator (A) to the countershaft 3rd gear (B).

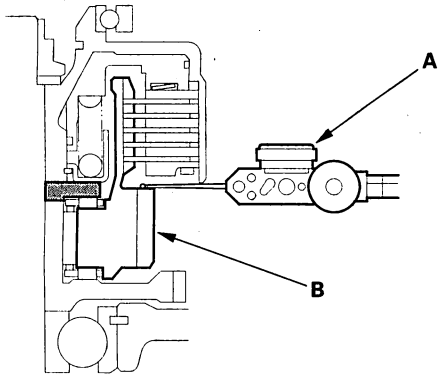

7. Measure the countershaft 3rd gear axial clearance in at least three places, while moving the countershaft 3rd gear (A).
   Use the average as the actual clearance.

   If the clearance is out of standard, select the appropriate 31 x 63.5 mm splined washer in step 16.

   Standard: 0.015—0.045 mm (0.0006—0.0018 in.)

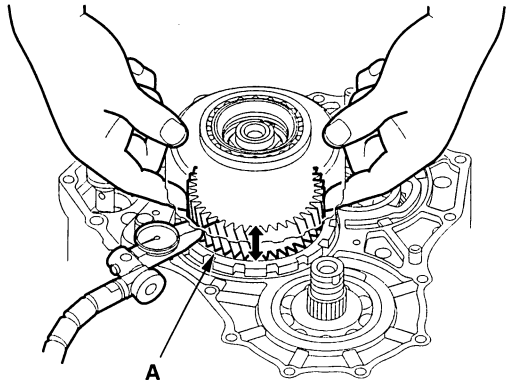

8. Remove the locknut and conical spring washer.

9. Remove the 3rd clutch assembly (A) with the special tool and a commercially available 3/8 "-16 slide hammer (B).

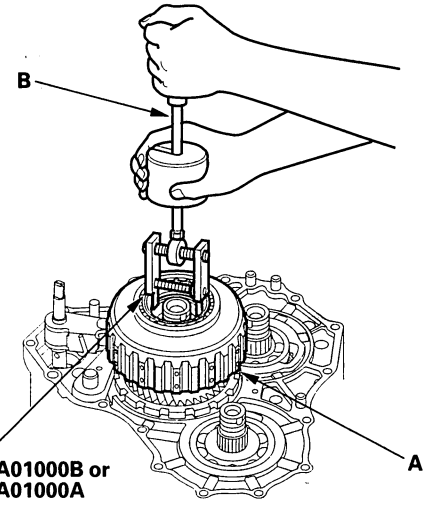

10. Remove the parts that were installed in step 5.

11. Install the special tool onto the mainshaft.

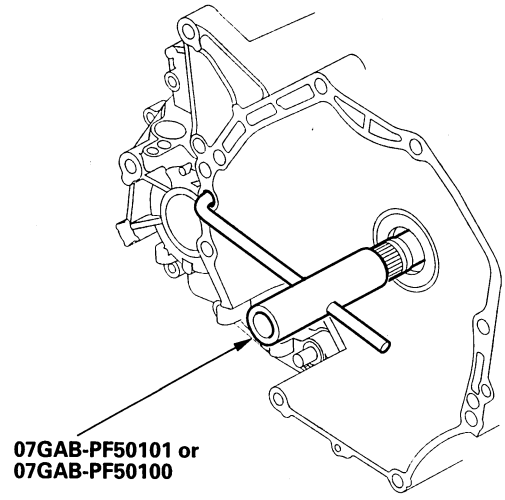

BACK

Protected by AR

12. Lubricate the following parts with ATF:

    - Splines of the mainshaft 3rd gear and secondary shaft idler gear.
    - Threads of the mainshaft and secondary shaft.
    - Threads of the old mainshaft and secondary shaft locknuts.
    - Old conical spring washer.

13. Install the mainshaft 3rd gear (A) and the old conical spring washer (B) on the mainshaft (C). Tighten the old locknut (D) to seat the 3rd gear to 226 N·m (23.0 kgf·m, 166 lbf·ft).

    NOTE: Use a torque wrench to tighten the locknut. Do not use an impact wrench.

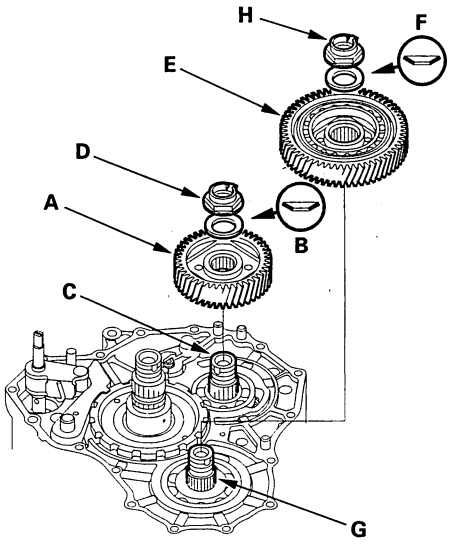

14. Install the secondary shaft idler gear (E) and the old conical spring washer (F) on the secondary shaft (G). Tighten the old locknut (H) to seat the secondary shaft idler gear to 226 N·m (23.0 kgf·m, 166 lbf·ft).

    NOTE:
    - Use a torque wrench to tighten the locknut. Do not use an impact wrench.
    - Secondary shaft locknut has left-hand threads.

15. Remove the old locknuts and old conical spring washers from the mainshaft and secondary shaft.

16. If the 3rd gear axial clearance is out of standard (measured in step 7), measure the difference of the 31 x 63.5 mm splined washer, and select the appropriate splined washer from the table.

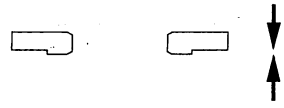

SPLINED WASHER, 31 x 63.5 mm

Mark	Part Number	Difference
A	90520-P7W-000	3.503 mm (0.1379 in.)
B	90521-P7W-000	3.490 mm (0.1374 in.)
C	90522-P7W-000	3.477 mm (0.1369 in.)
D	90523-P7W-000	3.464 mm (0.1364 in.)

17. Install the thrust needle bearing (A), needle bearing (B), 3rd gear (C), thrust needle bearing (D), and 31 x 63.5 mm splined washer (E) on the countershaft (F).

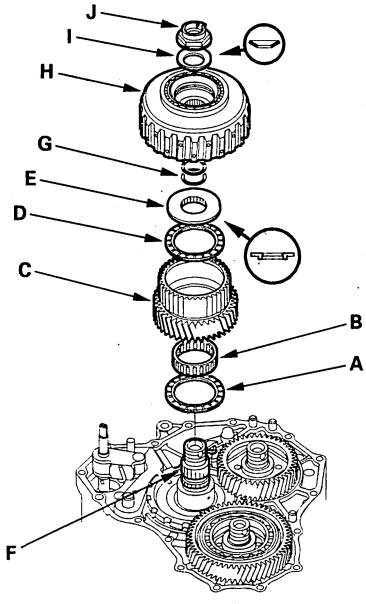

18. Wrap the shaft splines with tape to prevent O-ring damage, then install new O-rings (G).

19. Remove the tape, then install the 3rd clutch assembly (H), and old conical spring washer (I). Tighten the old locknut (J) to 226 N·m (23.0 kgf·m, 166 lbf·ft).

    NOTE: Use a torque wrench to tighten the locknut. Do not use an impact wrench.

(cont'd)

Protected by AR

End Cover, 3rd Gear, Idler Gear, and 3rd Clutch Installation (cont'd)

20. Remove the old locknut and old conical spring washer from the countershaft.

21. Lubricate the threads of each shaft, the new locknuts, and new conical spring washers with ATF.

22. Install the new conical spring washers (A) in the direction shown, and install the new locknuts (B).

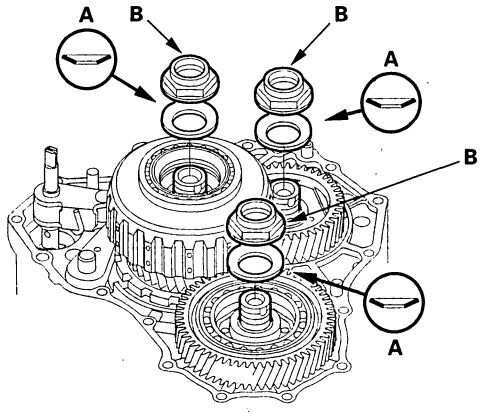

23. Tighten the locknuts to 167 N·m (17.0 kgf·m, 123 lbf·ft).

    NOTE:
    - Use a torque wrench to tighten the locknuts. Do not use an impact wrench.
    - Countershaft and secondary shaft locknuts have left-hand threads.

24. Remove the special tool from the mainshaft.

25. Stake each locknut into its shaft using 3.5 mm punch.

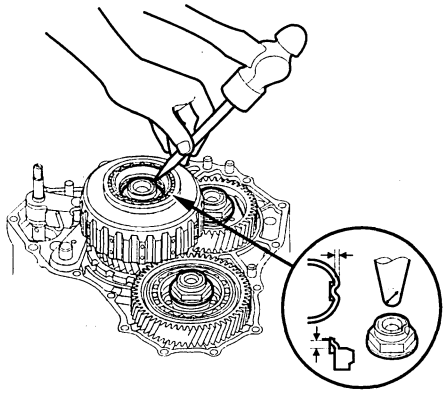

26. Set the park lever in P position, then verify that the park pawl (A) engages the park gear (B).

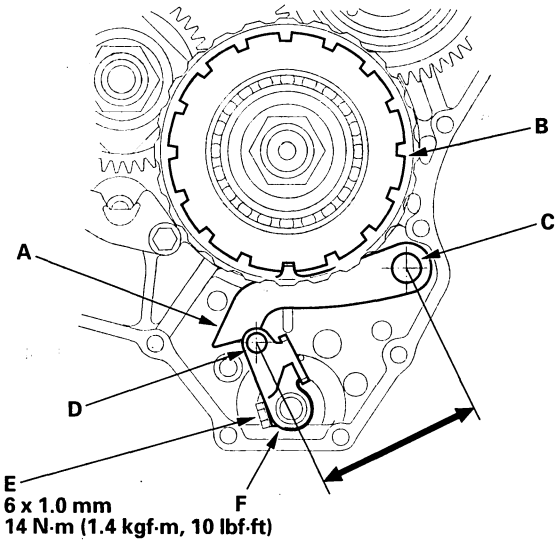

27. If the park pawl does not engage fully, check the distance between the pawl shaft (C) and the park lever roller pin (D) (see page 14-230).

28. Tighten the lock bolt (E), and bend the lock tab of the lock washer (F) against the lock bolt head.

BACK

Protected by AR

29. Install the new gasket (A) on the transmission housing, and install the two dowel pins (B) and new O-rings (C) over the top of the ATF feed pipes.

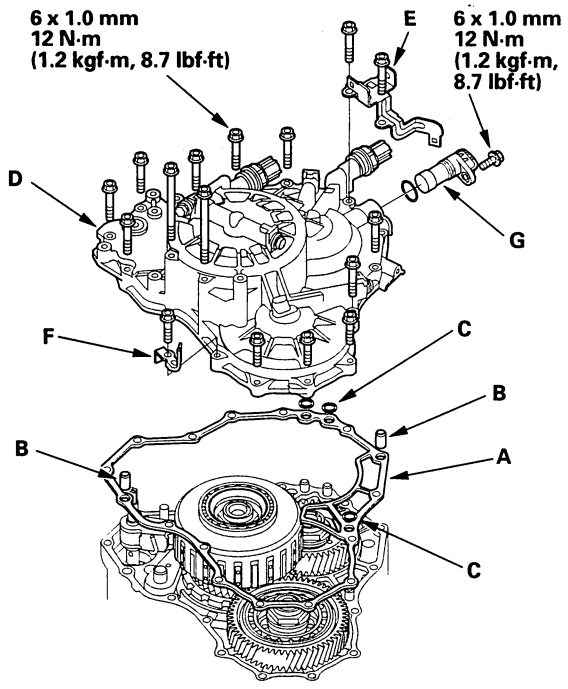

30. Install the end cover (D), and install the 16 bolts, connector bracket (E) and harness holder bracket (F).

31. Tighten the bolts in two or more steps in a crisscross pattern.

32. Install the new O-ring on the input shaft (mainshaft) speed sensor (G), then install it in the end cover.

33. Install the 8 x 12 mm ATF feed pipe (A) with its filter side into the transmission housing.

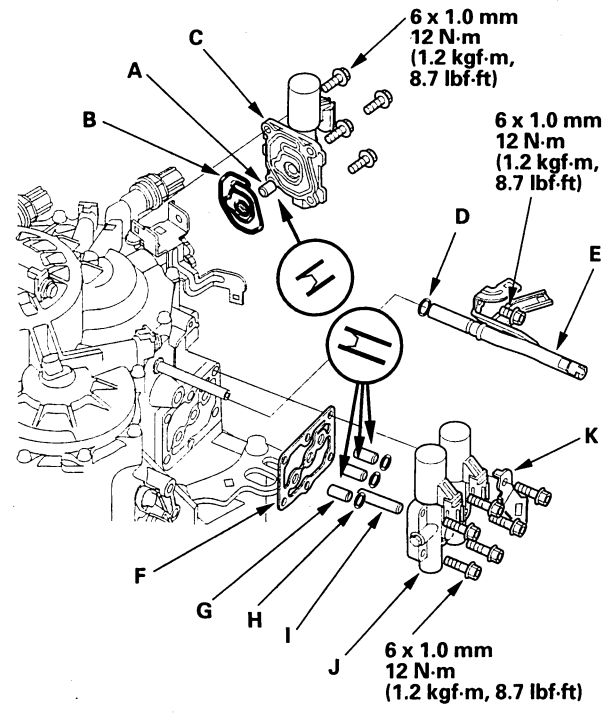

34. Install the new gasket (B) in the mounting groove of the A/T clutch pressure control solenoid valve C body (C) properly, then install them on the transmission housing. Do not pinch the gasket.

35. Install the new O-ring (D) on the ATF dipstick guide pipe (E), then install in the transmission housing.

36. Place the new gasket (F) on the transmission housing, then install the 8 x 18 mm ATF feed pipes (G) with their filter side into the transmission housing.

37. Install the new O-rings (H) over the feed pipes, and install the 8 x 40 mm ATF feed pipe (I).

38. Install the A/T clutch pressure control solenoid valves A and B (J) and the harness clamp bracket (K).

(cont'd)

Protected by AR

Transmission End Cover

End Cover, 3rd Gear, Idler Gear, and 3rd Clutch Installation (cont'd)

39. Install the new gasket (A) on the transmission housing, then install the 8 x 14 mm dowel pin (B), 10 x 25.5 mm ATF feed pipe (C), and new O-ring (D) over the feed pipe. Install the ATF passage body (E).

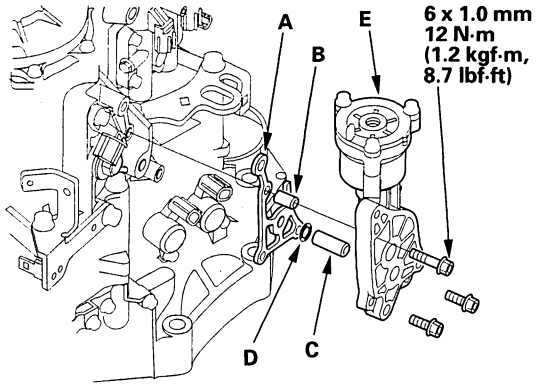

40. Install the ATF line (A) on the ATF passage body (B) with the line bolt and new sealing washers (C). Secure the ATF line with the 6 mm bolt on the harness clamp bracket (D).

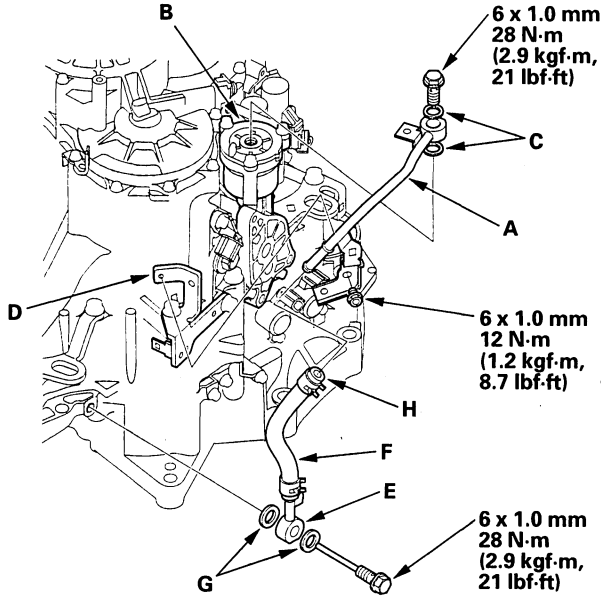

41. Install the ATF line (E) and hose (F) on the torque converter housing with the line bolt and new sealing washers (G).

42. Connect the ATF hose to the line, and secure the hose with hose clamp (H).

43. Set the selector control shaft to the N position by turning the control shaft.

NOTE: Do not squeeze the end of the selector control shaft tips together when turning the shaft. If the tips are squeezed together it will cause a faulty shift position signal or position due to the play between the selector control shaft and the switch. The clearance (A) between selector control shaft tips is 2.0 mm (0.08 in.)

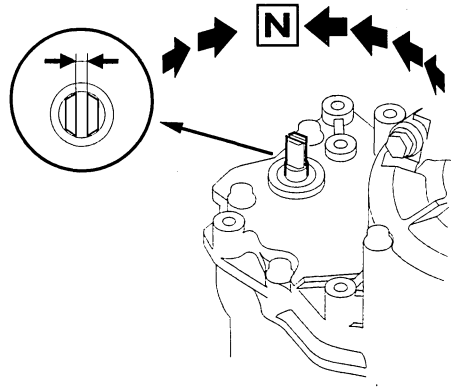

44. Align the cutouts (A) on the rotary-frame with the neutral positioning cutouts (B) on the transmission range switch (C), then put a 2.0 mm (0.08 in.) feeler gauge blade (D) in the cutouts to hold the switch in the N position.

NOTE: Be sure to use a 2.0 mm (0.08 in.) blade or equivalent to hold the switch in the N position.

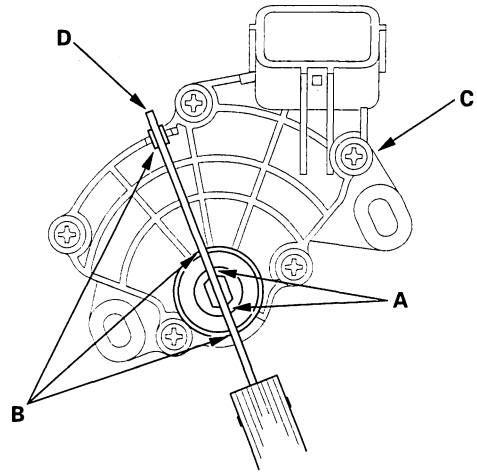

BACK

Protected by AR

45. Install the transmission range switch (A) gently on the selector control shaft (B) while holding it in the N position with the 2.0 mm (0.08 in.) blade (C).

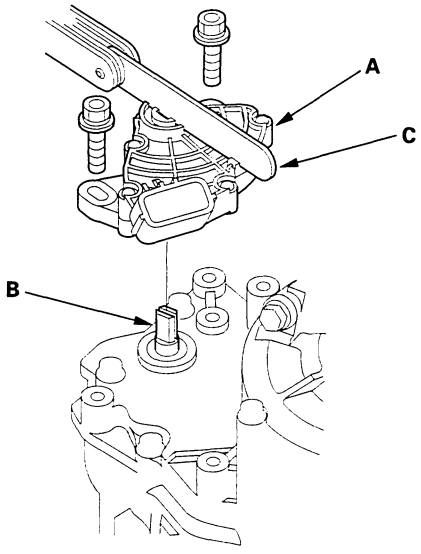

46. Tighten the bolts on the transmission range switch while you continue to hold it in the N position. Do not move the transmission range switch when tightening the bolts. Remove the feeler gauge.

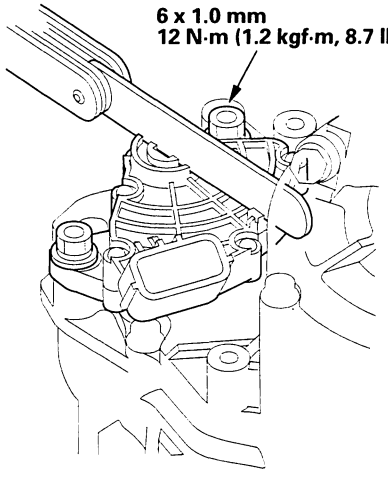

47. Connect the transmission range switch connector (A) securely, then secure the switch harness on the end cover, harness cover bracket (B), and the clamp bracket (C).

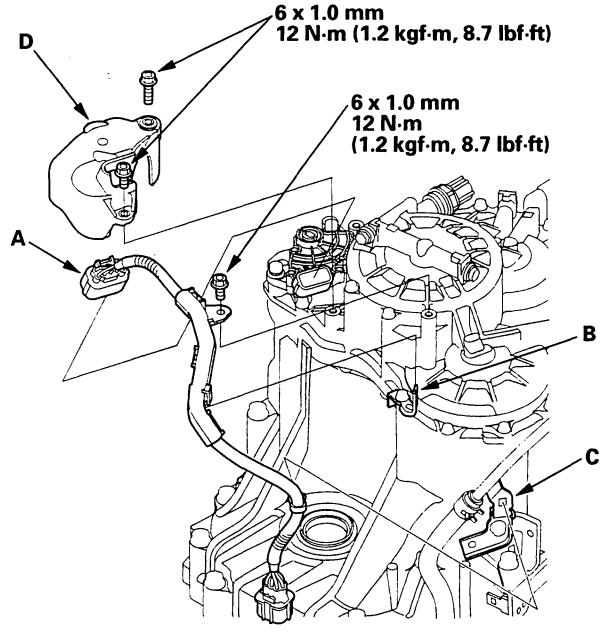

48. Install the transmission range switch cover (D).

(cont'd)

Protected by AR

Transmission End Cover

End Cover, 3rd Gear, Idler Gear, and 3rd Clutch Installation (cont'd)

49. Connect the 3rd clutch transmission fluid pressure switch connector (A), and install the ground terminal (B) and harness clamp (C) on the connector bracket (D).

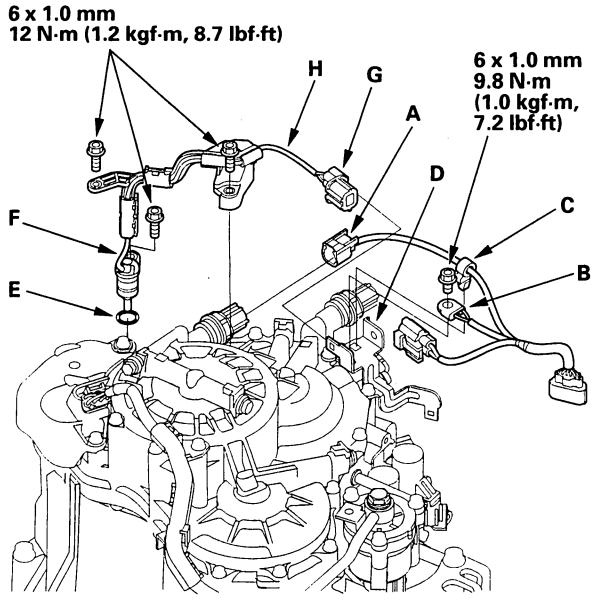

50. Install the new O-ring (E) on the ATF temperature sensor (F), then install the sensor in the end cover.

51. Connect the sensor connector (G), and install it on the connector bracket. Secure the sensor harness (H) on the end cover.

52. Install the dipstick in the dipstick guide pipe.

BACK

Protected by AR

Component Location Index

2003-2005 Models:

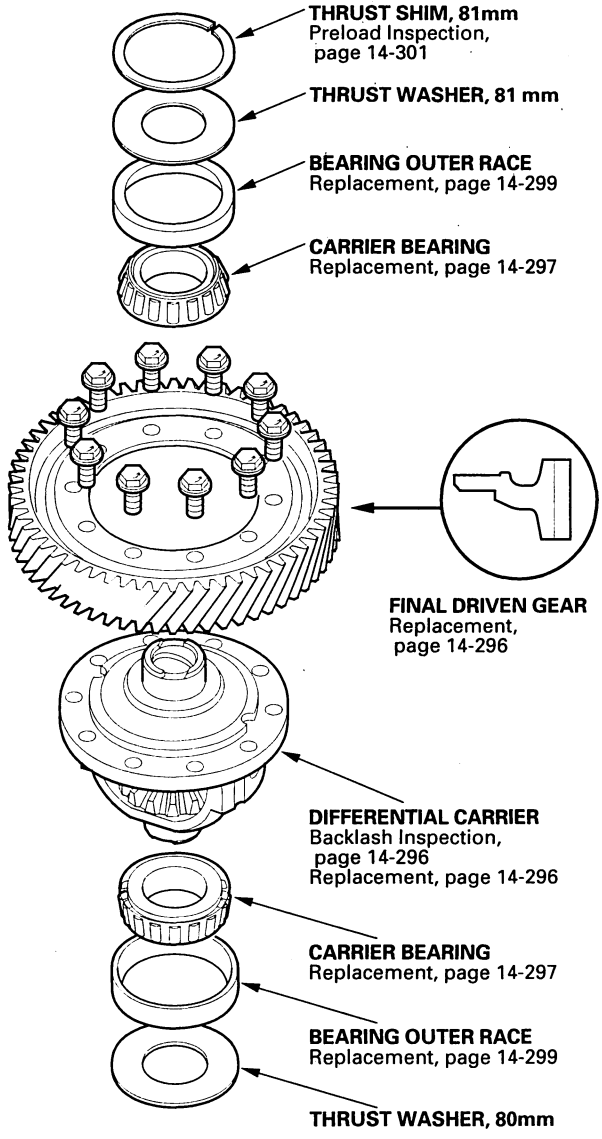

2006 Model:

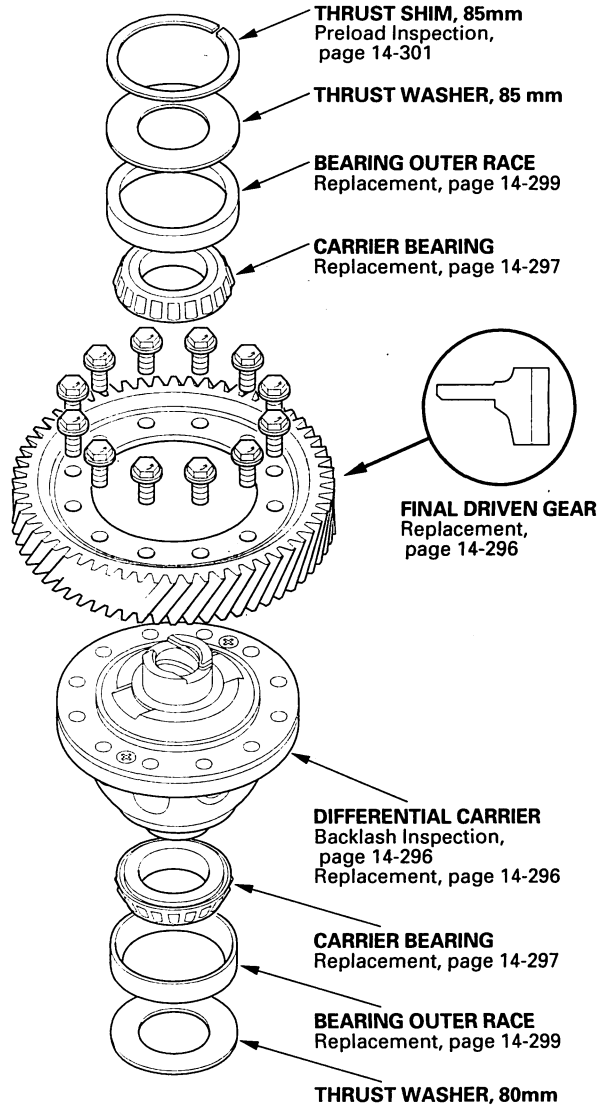

Protected by AR

Backlash Inspection

1. Install both axles into the differential, and place the axles on V-blocks (A).

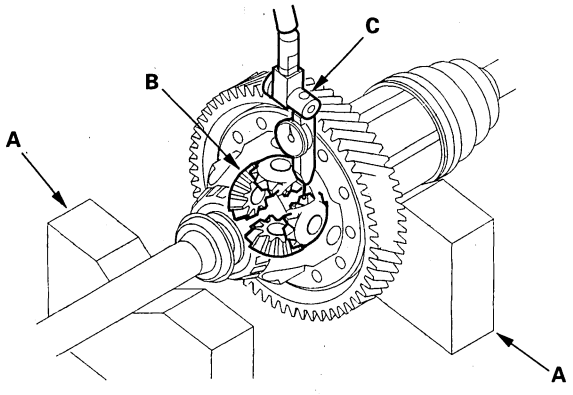

2. Measure the backlash of the pinion gears (B) with a dial indicator (C).

   Standard: 0.05—0.15 mm (0.002—0.006 in.)

3. If the backlash is out of standard, replace the differential carrier.

Differential Carrier, Final Driven Gear Replacement

NOTE: Inspect and adjust the carrier bearing preload whenever the differential carrier is replaced.

1. Remove the final driven gear (A) from the differential carrier (B). The final driven gear bolts have left-hand threads.

   2003-2005 Models:

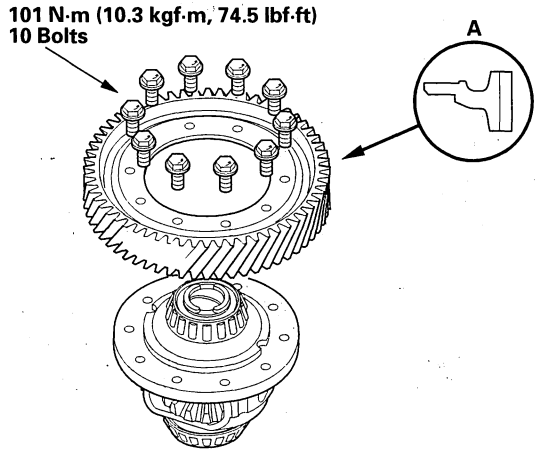

   2006 Model:

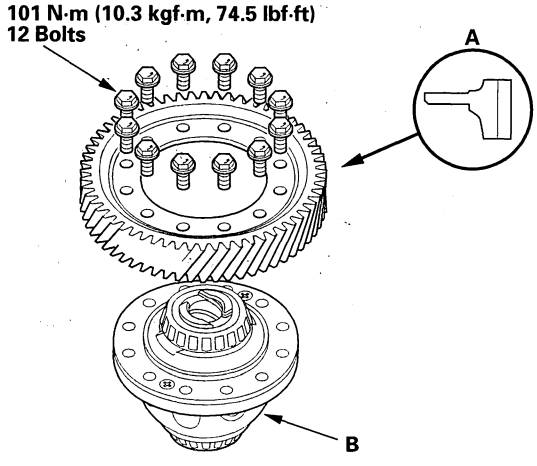

2. Install the final driven gear on the differential carrier in the direction shown. Tighten the bolts to 101 N·m (10.3 kgf·m, 74.5 lbf·ft) in a crisscross pattern in two or more steps.

BACK

Protected by AR

Carrier Bearing Replacement

Special Tools Required
Attachment, 45 x 55 mm 07MAD-PR90100

NOTE:
- The bearing and outer race should be replaced as a set.
- Inspect and adjust the bearing preload whenever bearing is replaced.
- Check the bearing for wear and rough rotation. If the bearing is OK, removal is not necessary.

1. Remove the carrier bearing (A) with a commercially available bearing puller (B), bearing separator (C), and stepper adapter (D).

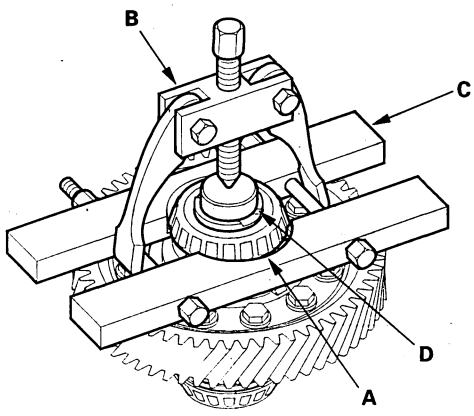

2. Install the carrier bearing with the special tool using the small end and a press until it bottoms. Press the bearing on securely so there is no clearance between the bearing and the differential carrier.

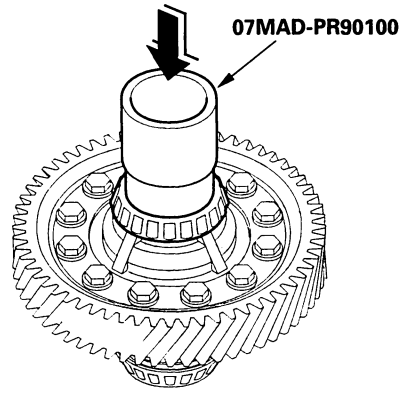

Protected by AR

Oil Seal Replacement

Special Tools Required
- Driver 07749-0010000
- Seal driver attachment 07GAD-PG40101 or 07GAD-PG40100
- Oil seal driver attachment 07JAD-PH80101

1. Remove the oil seal from the transmission housing.

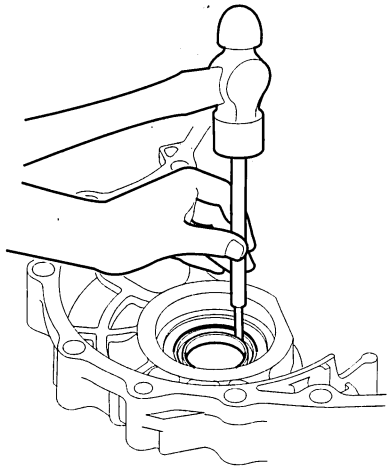

2. Remove the oil seal from the torque converter housing.

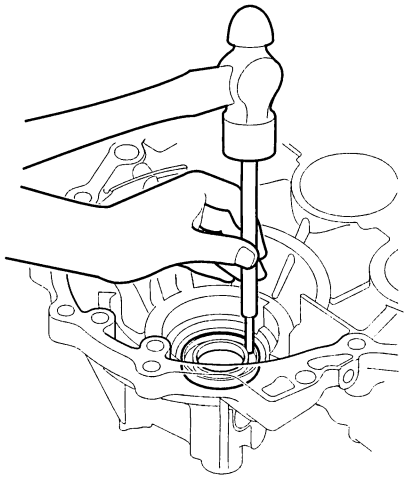

3. Install the new oil seal (A) in the transmission housing with the special tools.

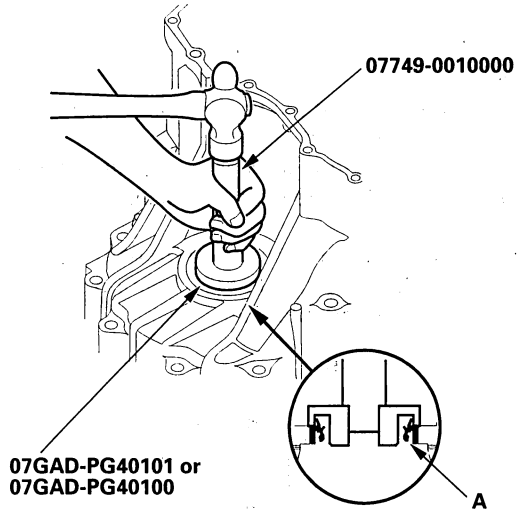

4. Install the oil seal (A) in the torque converter housing with the special tools.

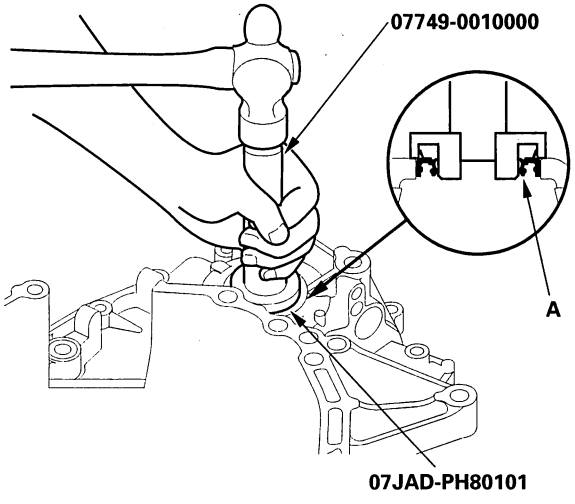

BACK

Protected by AR

Carrier Bearing Outer Race Replacement

Special Tools Required
- Driver 07749-0010000
- Attachment, 78 x 80 mm 07NAD-PX40100
- Attachment, 78 x 90 mm 07GAD-SD40101(2006 model)

NOTE:
- The bearing and bearing outer race should be replaced as a set.
- Replace the bearing with a new one whenever the outer race is replaced.
- Do not use shim(s) on the torque converter housing side.
- Adjust bearing preload after replacing the bearing and outer race.
- Coat all parts with ATF during installation.

1. Remove the bearing outer race (A), thrust washer (B), and thrust shim (C) from the transmission housing (D) by heating the housing to about 212 °F (100 °C) with a heat gun (E). Do not heat the housing to more than 212 °F (100 °C).

   NOTE: Let the transmission housing cool to room temperature before installing the bearing outer race.

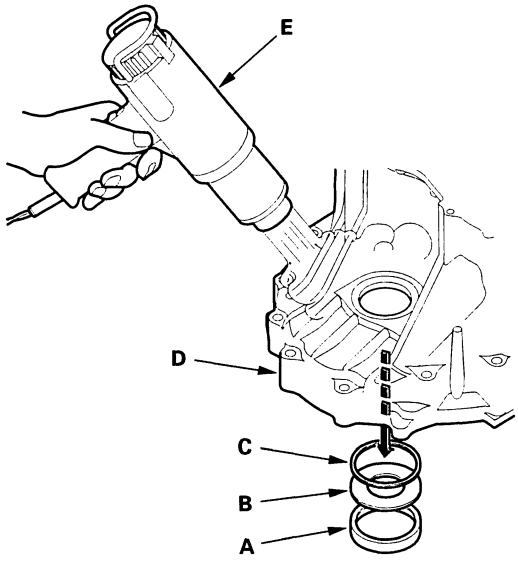

2. Remove the bearing outer race (A) and thrust washer (B) from the torque converter housing (C).

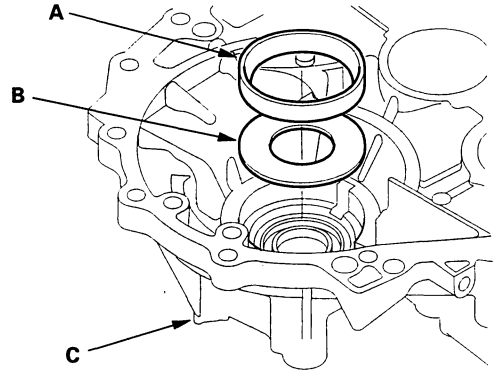

3. Install the thrust washer and the new bearing outer race in the torque converter housing.

4. Drive the bearing outer race into the housing with the special tools.

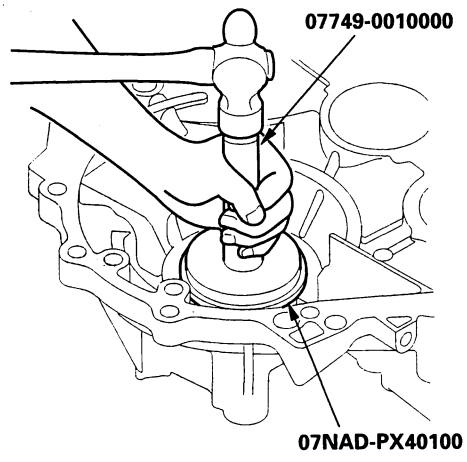

(cont'd)

Protected by AR

Carrier Bearing Outer Race Replacement (cont'd)

5. Install the thrust shim (A), thrust washer (B), and the new bearing outer race (C) in the transmission housing (D).

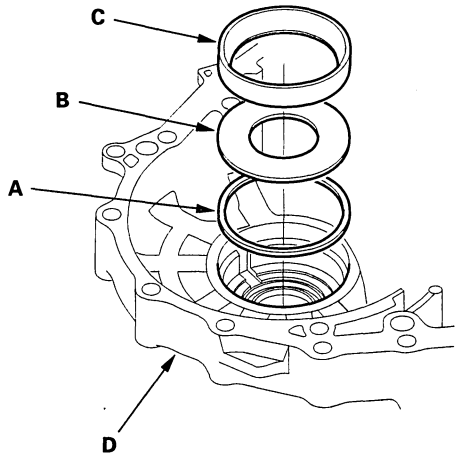

6. Drive the bearing outer race into the housing with the special tools so there is no clearance between the outer race, thrust washer, shim and housing.

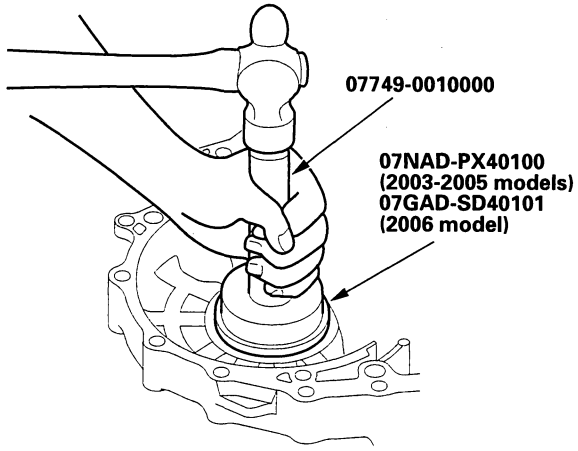

BACK

Protected by AR

Carrier Bearing Preload Inspection

Special Tools Required
- Driver 07749-0010000
- Attachment, 78 x 80 mm 07NAD-PX40100
- Preload inspection tool 07HAJ-PK40201

2003-2005 Models

NOTE: If the transmission housing, torque converter housing, differential carrier, tapered roller bearing, outer race, or thrust shim were replaced, the bearing preload must be adjusted.

1. Remove the bearing outer race (A), thrust washer (B), and thrust shim (C) from the transmission housing (D) by heating the housing to about 212 °F (100 °C) with a heat gun (E). Do not heat the housing to more than of 212 °F (100 °C).

   NOTE: Let the transmission housing cool to room temperature before adjusting the bearing preload.

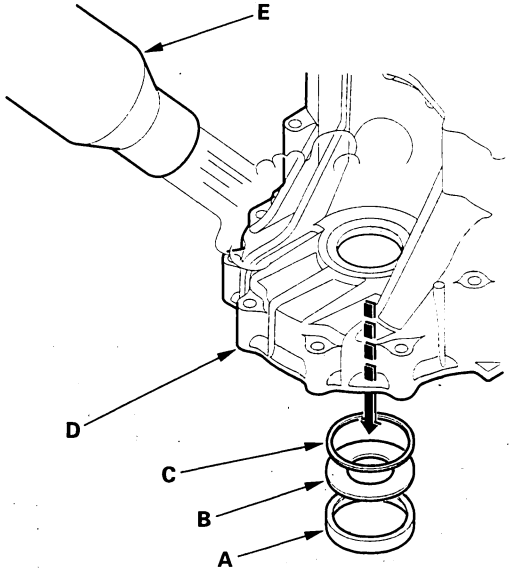

2. Replace the tapered roller bearing when the outer race is to be replaced.

3. Do not use a shim on the torque converter housing side.

4. Install the 81 mm thrust shim (A), thrust washer (B), and bearing outer race (C) in the transmission housing (D).
   If you replace the 81 mm thrust shim with a new one, use the same thickness shim as the old one.

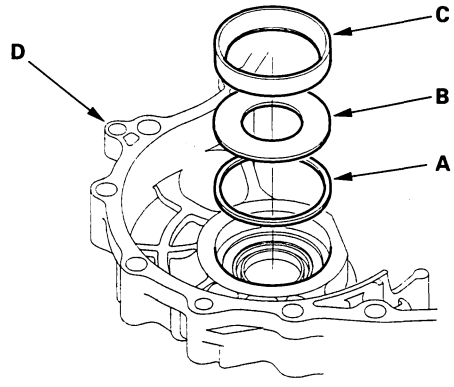

5. Drive in the outer race with the special tools.

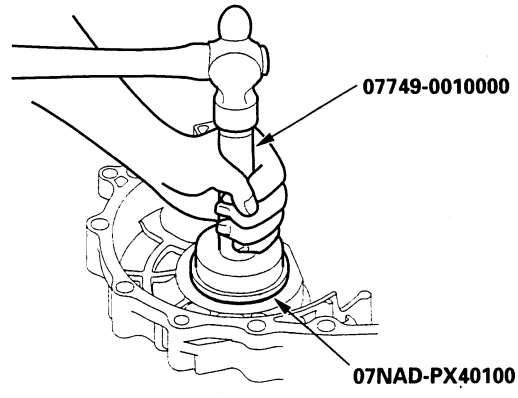

6. Check that there is no clearance between the thrust washer, outer race, shim, and transmission housing.

(cont'd)

Protected by AR

Carrier Bearing Preload Inspection (cont'd)

7. Install the differential assembly (A) in the torque converter housing (B), and install the gasket (C) and dowel pins (D) on the housing.

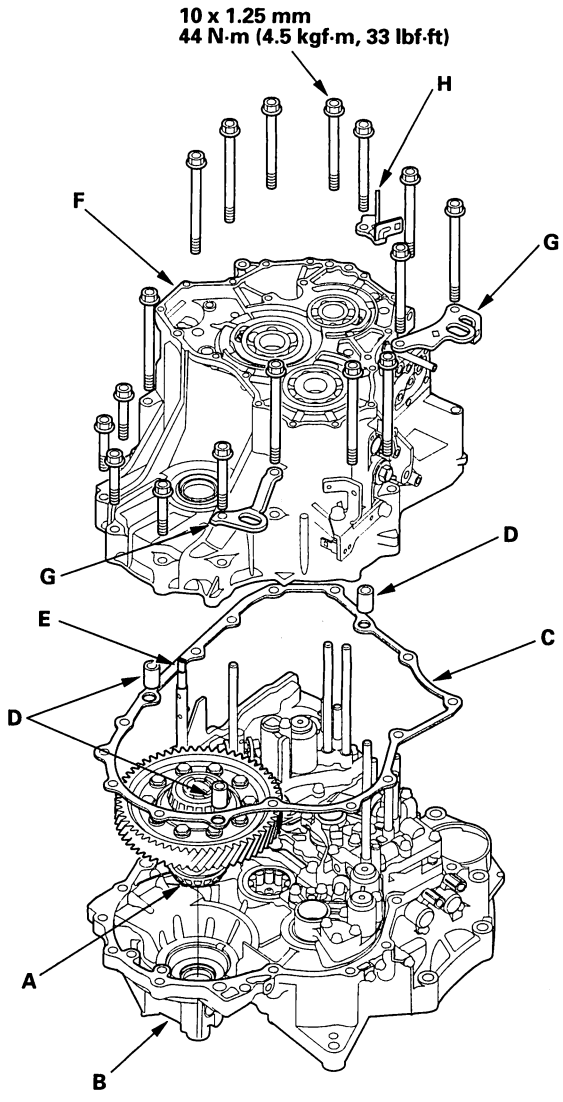

8. Align the spring pin on the selector control shaft (E) with the transmission housing groove.

9. Install the transmission housing (F), transmission hangers (G), and harness clamp bracket (H) then tighten the bolts.

10. Rotate the differential assembly in both directions to seat the bearing.

11. Measure the starting torque of the differential assembly with the special tool, a torque wrench (A) and socket (B) at normal room temperature in both directions.

Standard

New bearing:	**2.7—3.9 N·m (28—40 kgf·cm, 24—35 lbf·in.)**
Reused bearings:	**2.5—3.6 N·m (25—37 kgf·cm, 22—32 lbf·in.)**

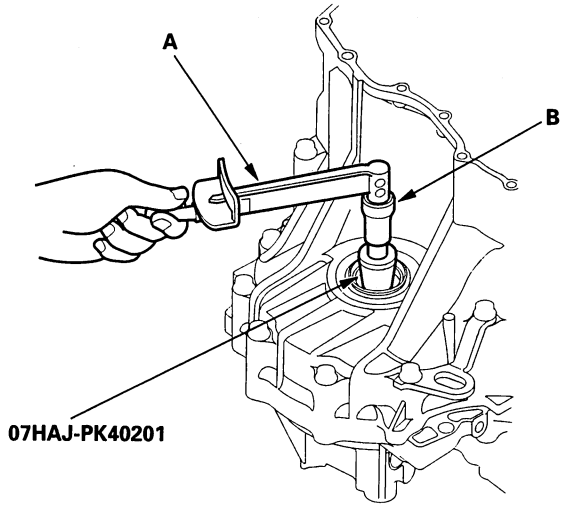

12. If the measurement is out of standard, remove the thrust shim and select the thrust shim from table. Install the new thrust shim and recheck. To increase the starting torque, increase the thickness of the thrust shim. To decrease the starting torque, decrease the thickness of the shim. Changing the shim to the next size will increase or decrease starting torque about 0.3—0.4 N·m (3—4 kgf·cm, 3—3 lbf·in.).

BACK

Protected by AR

THRUST SHIM, 81 mm

No.	Part Number	Thickness
A	41438-P7T-700	2.05 mm (0.081 in.)
AA	41438-PGH-000	2.075 mm (0.082 in.)
B	41439-P7T-700	2.10 mm (0.083 in.)
BB	41439-PGH-000	2.125 mm (0.084 in.)
C	41440-P7T-700	2.15 mm (0.085 in.)
CC	41440-PGH-000	2.175 mm (0.086 in.)
D	41441-P7T-000	2.20 mm (0.087 in.)
DD	41441-PGH-000	2.225 mm (0.088 in.)
E	41442-P7T-000	2.25 mm (0.089 in.)
EE	41442-PGH-000	2.275 mm (0.090 in.)
F	41443-P7T-000	2.30 mm (0.091 in.)
FF	41443-PGH-000	2.325 mm (0.092 in.)
G	41444-P7T-000	2.35 mm (0.093 in.)
GG	41444-PGH-000	2.375 mm (0.094 in.)
H	41445-P7T-000	2.40 mm (0.094 in.)
HH	41445-PGH-000	2.425 mm (0.095 in.)
I	41446-P7T-000	2.45 mm (0.096 in.)
II	41446-PGH-000	2.475 mm (0.097 in.)
J	41447-P7T-000	2.50 mm (0.098 in.)
JJ	41447-PGH-000	2.525 mm (0.099 in.)
K	41448-P7T-000	2.55 mm (0.100 in.)
KK	41448-PGH-000	2.575 mm (0.101 in.)
L	41449-P7T-000	2.60 mm (0.102 in.)
LL	41449-PGH-000	2.625 mm (0.103 in.)
M	41450-P7T-000	2.65 mm (0.104 in.)
MM	41450-PGH-000	2.675 mm (0.105 in.)
N	41451-P7T-000	2.70 mm (0.106 in.)
NN	41451-PGH-000	2.725 mm (0.107 in.)
O	41452-P7T-000	2.75 mm (0.108 in.)
OO	41452-PGH-000	2.775 mm (0.109 in.)
P	41453-P7T-000	2.80 mm (0.110 in.)
PP	41453-PGH-000	2.825 mm (0.111 in.)
Q	41454-P7T-000	2.85 mm (0.112 in.)
QQ	41454-PGH-000	2.875 mm (0.113 in.)
R	41455-P7T-000	2.90 mm (0.114 in.)
RR	41455-PGH-000	2.925 mm (0.115 in.)
S	41456-P7T-000	2.95 mm (0.116 in.)
SS	41456-PGH-000	2.975 mm (0.117 in.)
T	41457-P7T-000	3.00 mm (0.118 in.)
TT	41457-PGH-000	3.025 mm (0.119 in.)
U	41458-P7T-000	3.05 mm (0.120 in.)

BACK

Protected by AR

Carrier Bearing Preload Inspection (cont'd)

Special Tools Required
- Driver 07749-0010000
- Attachment, 78 x 90 mm 07GAD-SD40101
- Preload inspection tool 070AJ-0020101

2006 Models

NOTE: If the transmission housing, torque converter housing, differential carrier, tapered roller bearing, outer race, or thrust shim were replaced, the bearing preload must be adjusted.

1. Remove the bearing outer race (A), thrust washer (B), and thrust shim (C) from the transmission housing (D) by heating the housing to about 212 °F (100 °C) with a heat gun (E). Do not heat the housing to more than of 212 °F (100 °C).

   NOTE: Let the transmission housing cool to room temperature before adjusting the bearing preload.

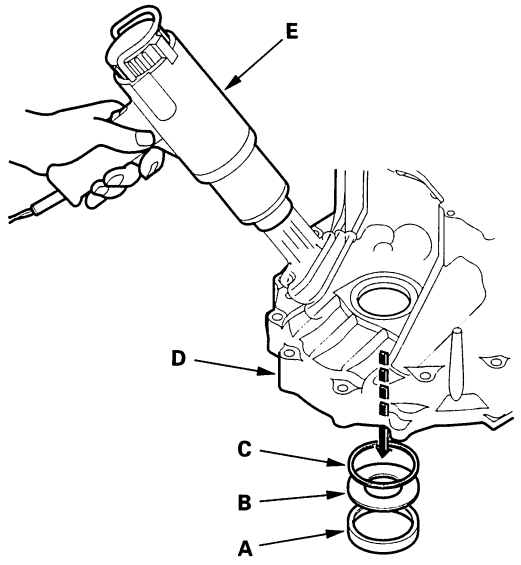

2. Replace the tapered roller bearing when the outer race is to be replaced.

3. Do not use a shim on the torque converter housing side.

4. Install the 85 mm thrust shim (A), thrust washer (B), and bearing outer race (C) in the transmission housing (D). If you replace the 85 mm thrust shim with a new one, use the same thickness shim as the old one.

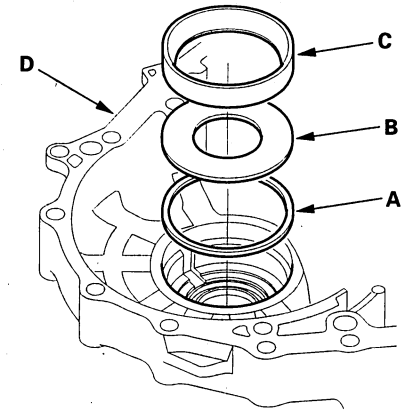

5. Drive in the outer race with the special tools.

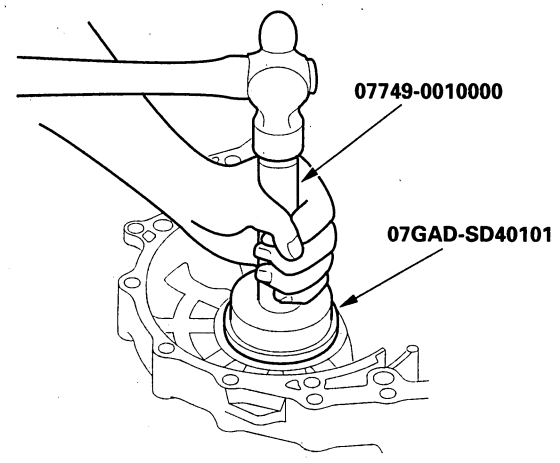

6. Check that there is no clearance between the thrust washer, outer race, shim, and transmission housing.

BACK

Protected by AR

7. Install the differential assembly (A) in the torque converter housing (B), and install the gasket (C) and dowel pins (D) on the housing.

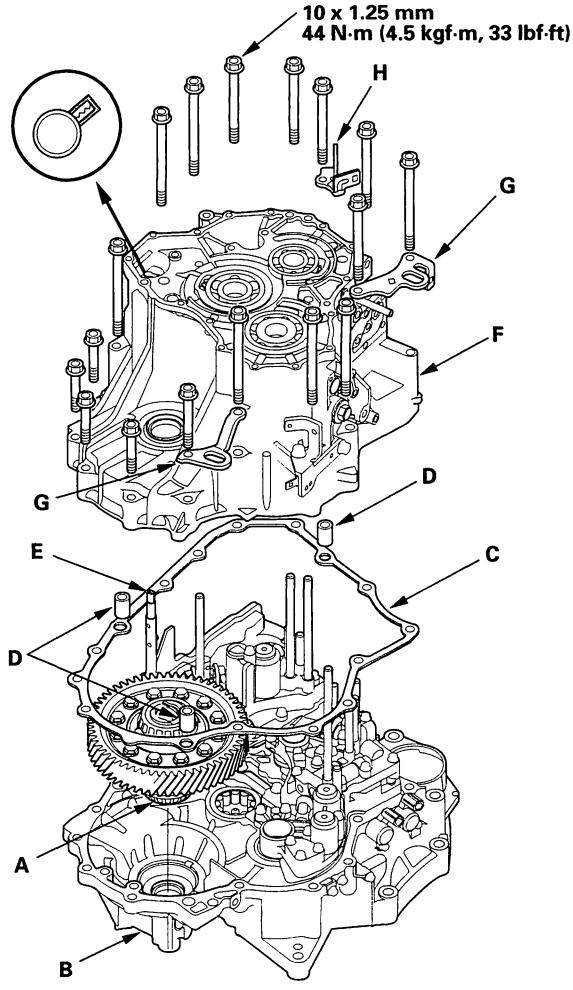

8. Align the spring pin on the selector control shaft (E) with the transmission housing groove.

9. Install the transmission housing (F), transmission hangers (G), and harness clamp bracket (H) then tighten the bolts.

10. Rotate the differential assembly in both directions to seat the bearing.

11. Measure the starting torque of the differential assembly with the special tool, a torque wrench (A) and socket (B) at normal room temperature in both directions.

Standard

New bearing:	**2.9—4.1 N·m (30—42 kgf·cm, 26—37 lbf·in.)**
Reused bearings:	**2.7—3.8 N·m (27—39 kgf·cm, 23—34 lbf·in.)**

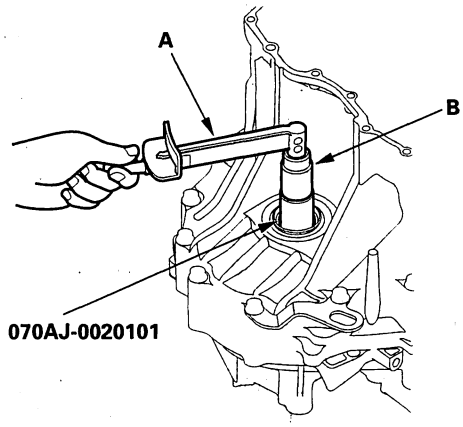

(cont'd)

Protected by AR

Carrier Bearing Preload Inspection (cont'd)

12. If the measurement is out of standard, remove the thrust shim and select the thrust shim from table. Install the new thrust shim and recheck. To increase the starting torque, increase the thickness of the thrust shim. To decrease the starting torque, decrease the thickness of the thrust shim. Changing the shim to the next size will increase or decrease starting torque about 0.3—0.4 N·m (3—4 kgf·cm, 2—3 lbf·in.).

THRUST SHIM, 85 mm

No.	Part Number	Thickness
A	41440-RGR-000	1.350 mm (0.053 in.)
B	41441-RGR-000	1.375 mm (0.054 in.)
C	41442-RGR-000	1.400 mm (0.055 in.)
D	41443-RGR-000	1.425 mm (0.056 in.)
E	41444-RGR-000	1.450 mm (0.057 in.)
F	41445-RGR-000	1.475 mm (0.058 in.)
G	41446-RGR-000	1.500 mm (0.059 in.)
H	41447-RGR-000	1.525 mm (0.060 in.)
I	41448-RGR-000	1.550 mm (0.061 in.)
J	41449-RGR-000	1.575 mm (0.062 in.)
K	41450-RGR-000	1.600 mm (0.063 in.)
L	41451-RGR-000	1.625 mm (0.064 in.)
M	41452-RGR-000	1.650 mm (0.065 in.)
N	41453-RGR-000	1.675 mm (0.066 in.)
O	41454-RGR-000	1.700 mm (0.067 in.)
P	41455-RGR-000	1.725 mm (0.068 in.)
Q	41456-RGR-000	1.750 mm (0.069 in.)
R	41457-RGR-000	1.775 mm (0.070 in.)
S	41458-RGR-000	1.800 mm (0.071 in.)
T	41459-RGR-000	1.825 mm (0.072 in.)
U	41460-RGR-000	1.850 mm (0.073 in.)
V	41461-RGR-000	1.875 mm (0.074 in.)
W	41462-RGR-000	1.900 mm (0.075 in.)
X	41463-RGR-000	1.925 mm (0.076 in.)
Y	41464-RGR-000	1.950 mm (0.077 in.)
Z	41465-RGR-000	1.975 mm (0.078 in.)
AA	41466-RGR-000	2.000 mm (0.079 in.)
AB	41467-RGR-000	2.025 mm (0.080 in.)
AC	41468-PGR-000	2.050 mm (0.081 in.)
AD	41469-RGR-000	2.075 mm (0.082 in.)
AE	41470-RGR-000	2.100 mm (0.083 in.)
AF	41471-RGR-000	2.125 mm (0.084 in.)
AG	41472-RGR-000	2.150 mm (0.085 in.)
AH	41473-RGR-000	2.175 mm (0.086 in.)
AI	41474-RGR-000	2.200 mm (0.087 in.)
AJ	41475-RGR-000	2.225 mm (0.088 in.)
AK	41476-RGR-000	2.250 mm (0.089 in.)
AL	41477-RGR-000	2.275 mm (0.090 in.)
AM	41478-RGR-000	2.300 mm (0.091 in.)
AN	41479-RGR-000	2.325 mm (0.092 in.)
AO	41480-RGR-000	2.350 mm (0.093 in.)

BACK

Protected by AR

Driveline/Axle

Special Tools 16-2
Component Location Index 16-3
Driveshaft Removal 16-4
Driveshaft Disassembly 16-6
Dynamic Damper Replacement 16-9
Driveshaft Reassembly 16-11
Driveshaft Installation 16-20
Intermediate Shaft Removal 16-22
Intermediate Shaft Disassembly 16-23
Intermediate Shaft Reassembly 16-24
Intermediate Shaft Installation 16-26

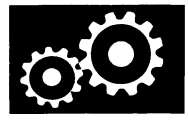

BACK

Protected by AR

Special Tools

Ref. No.	Tool Number	Description	Qty
①	07AAF-SDAA100	Ball Joint Thread Protector, 12 mm	1
②	07GAD-PH70201	Oil Seal Driver	1
③	07KAF-PS30200	Bearing Separator	1
④	07MAC-SL0A202	Ball Joint Remover, 28 mm	1
⑤	07NAF-SR30101	Half Shaft Base	1
⑥	07XAC-001020A	Threaded Adapter, 24 x 1.5 mm	1
⑦	07746-0010400	Attachment, 52 x 55 mm	1
⑧	07746-0030400	Attachment, 35 mm I.D.	1
⑨	07749-0010000	Driver	1
⑩	07947-SB00100	Oil Seal Driver	1

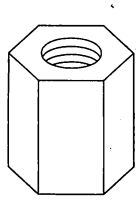

①

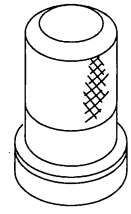

②

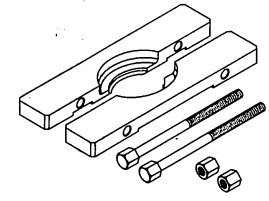

③

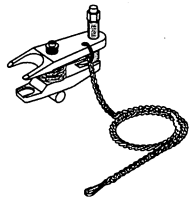

④

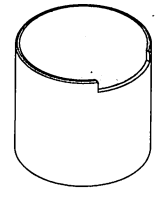

⑤

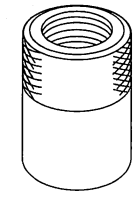

⑥

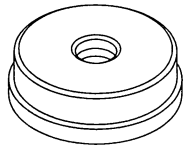

⑦

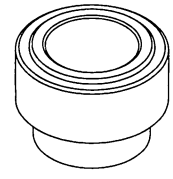

⑧

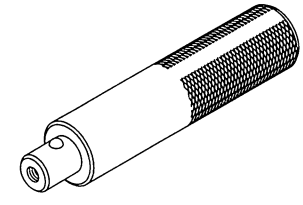

⑨

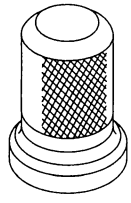

⑩

BACK

Protected by AR

Component Location Index

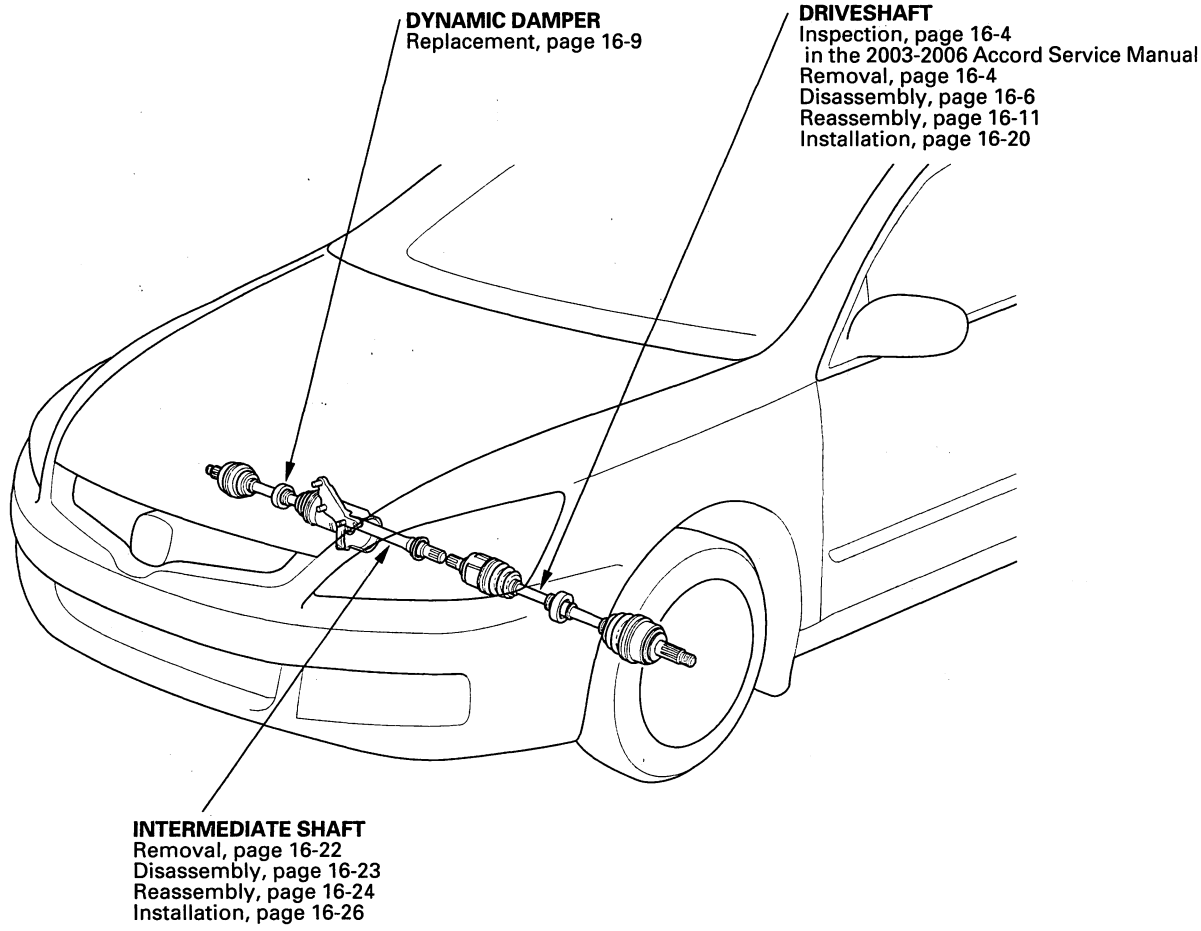

Protected by AR

Driveshaft Removal

Special Tools Required
- Ball joint remover, 28 mm 07MAC-SL0A202
- Ball joint thread protector, 12 mm 07AAF-SDAA100

1. Loosen the wheel nuts slightly.
2. Raise the front of the vehicle, and support it with safety stands in the proper locations, refer to the 2003-2006 Accord Service Manual (see page 1-14).
3. Remove the wheel nuts and front wheels.

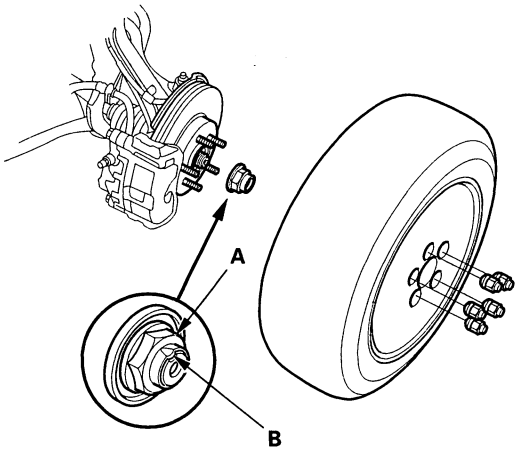

4. Lift up the locking tab (A) on the spindle nut (B), then remove the nut.
5. Drain the transmission fluid. Reinstall the drain plug using a new washer:
   - Manual transmission (see page 13-10)
   - Automatic transmission (see page 14-186)
6. Remove the self-locking nut (A), 12 mm flange bolt (B), and 10 mm flange bolt (C), then remove the damper fork (D).

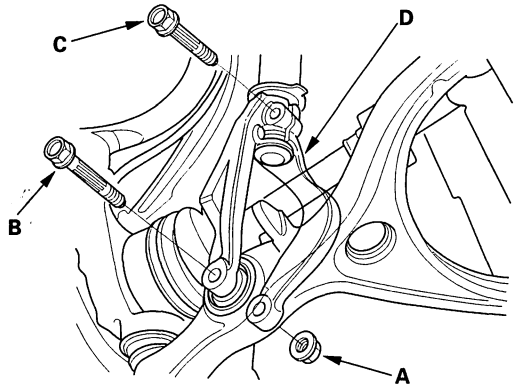

7. Remove the cotter pin (A) from the lower arm ball joint castle nut (B), and remove the nut.

   NOTE:
   - To avoid damaging the ball joint, install the ball joint thread protector onto the threads of the ball joint.
   - Be careful not to damage the ball joint boot when installing the remover.

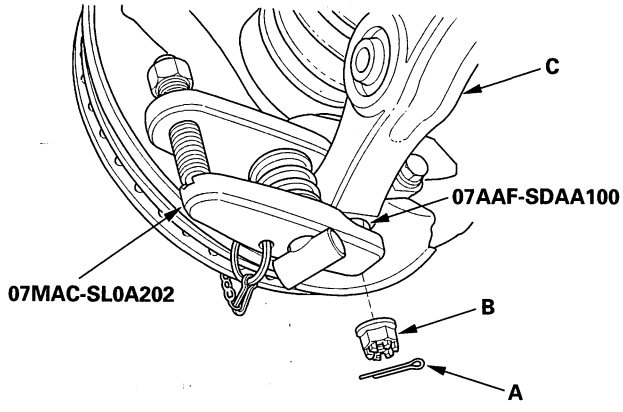

8. Separate the ball joint from the lower arm (C) with the special tool, refer to the 2003-2006 Accord Service Manual (see page 18-11).

BACK

Protected by AR

9. Pull the knuckle outward, and remove the outboard joint from the front wheel hub using a plastic hammer.

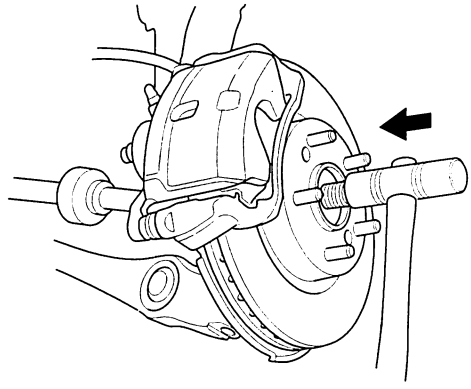

10. Left driveshaft: Pry the inboard joint (A) from the differential case with a prybar. Right driveshaft: Drive the inboard joint off of the intermediate shaft with a drift and hammer. Remove the driveshaft as an assembly. Do not pull on the driveshaft (B), because the inboard joint may come apart. Pull the driveshaft straight out to avoid damaging the oil seal.

Left driveshaft

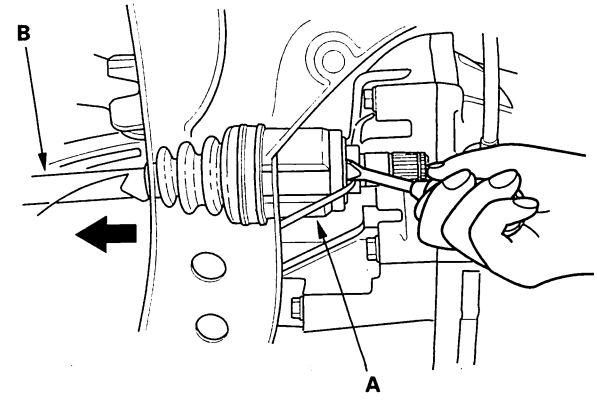

Right driveshaft

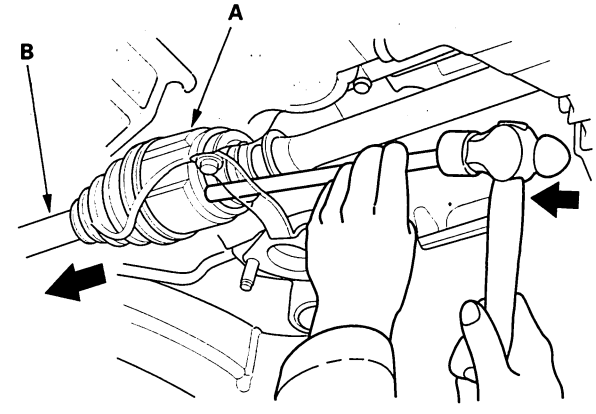

Protected by AR

Driveshaft Disassembly

Special Tools Required
- Threaded adapter, 24 x 1.5 mm 07XAC-001020A
- Boot band pincers, commercially available
- Slide hammer, 5/8"-18 UNF, commercially available

Inboard Joint Side

1. Remove the set ring from the inboard joint.

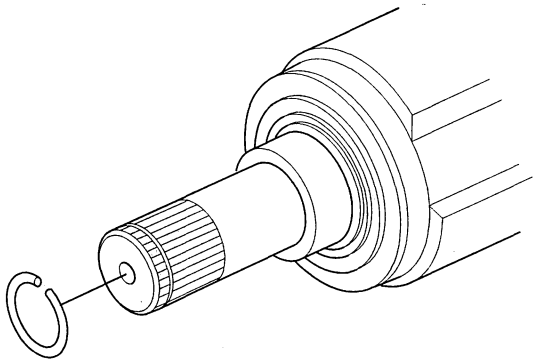

2. Remove the boot bands. Be careful not to damage the boot.

   - If the boot band is a welded type (A), cut the boot band (B).
   - If the boot band is a double loop type (C), lift up the band end (D), and push it into the clip (E).
   - If the boot band is a low profile type (F), pinch the boot band using a commercially available boot band pincers (G).

Welded Type

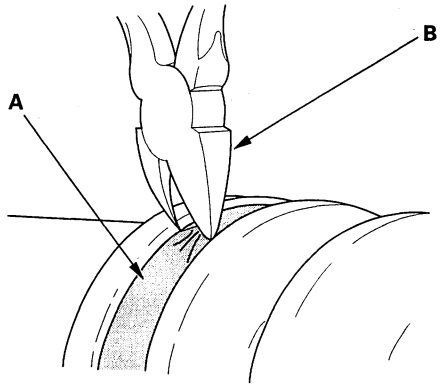

Double Loop Type

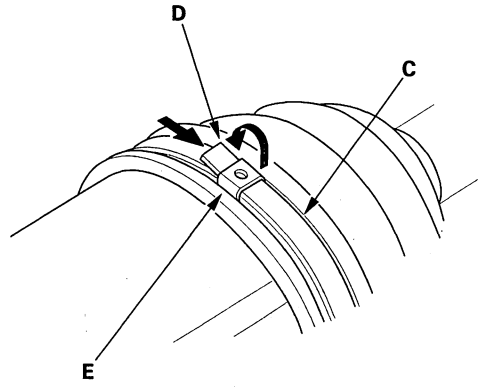

Low Profile Type

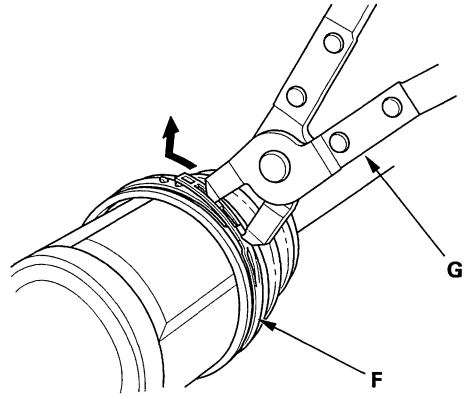

BACK

Protected by AR

3. Make a mark (A) on each roller (B) and inboard joint (C) to identify the locations of rollers and grooves in the inboard joint. Then remove the inboard joint on the shop towel (D). Be careful not to drop the rollers when separating them from the inboard joint.

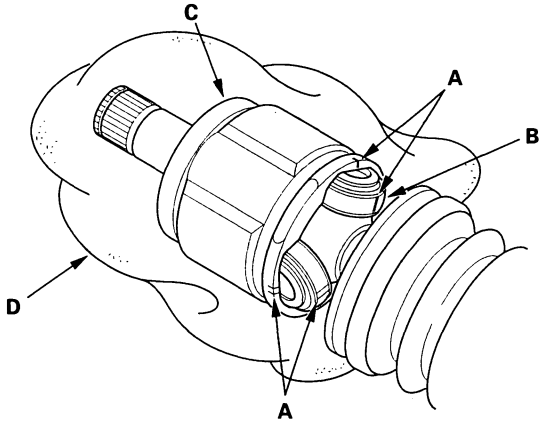

4. Make a mark (A) on the rollers (B) and spider (C) to identify the locations of the rollers on the spider, then remove the rollers.

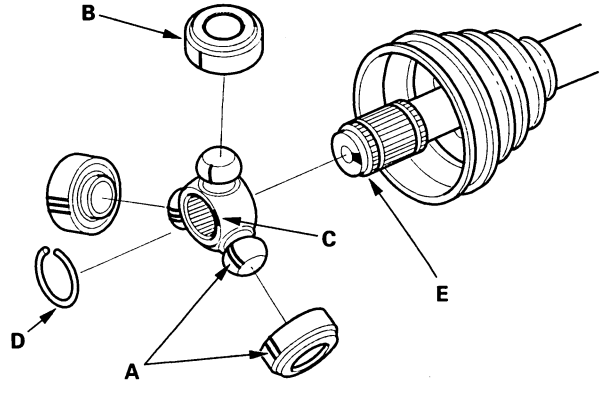

5. Remove the circlip (D).

6. Mark the spider and driveshaft (E) to identify the position of the spider on the shaft.

7. Remove the spider.

8. Wrap the splines on the driveshaft with vinyl tape (A) to prevent damage to the boot.

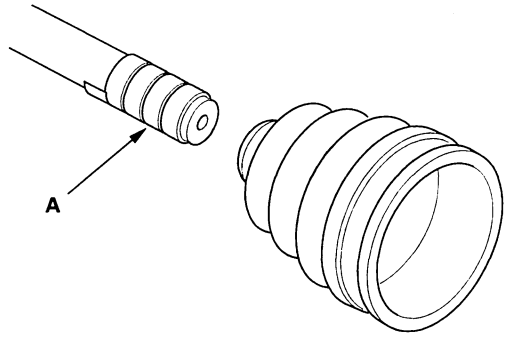

9. Remove the inboard boot. Be careful not to damage the boot.

10. Remove the vinyl tape.

(cont'd)

Protected by AR

Driveshaft Disassembly (cont'd)

Outboard Joint Side

1. Remove the boot bands (A). Lift up the three tabs (B) with a screwdriver. Be careful not to damage the boot and dynamic damper.

Ear Clamp Type

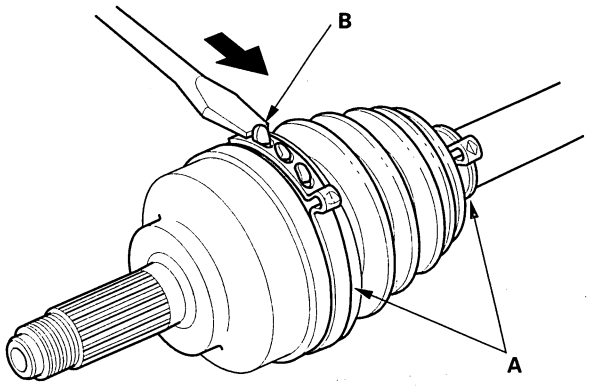

2. Slide the outboard boot (A) partially to the inboard joint side. Be careful not to damage the boot.

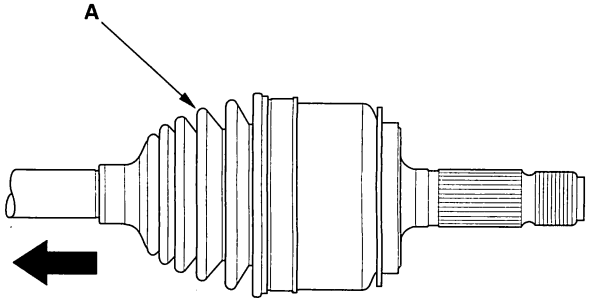

3. Wipe off the grease to expose the driveshaft and the outboard joint inner race.

4. Make a mark (A) on the driveshaft (B) at the same position as the outboard joint end (C).

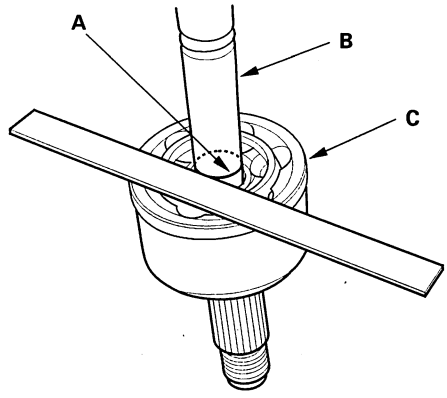

5. Carefully clamp the driveshaft in a vise.

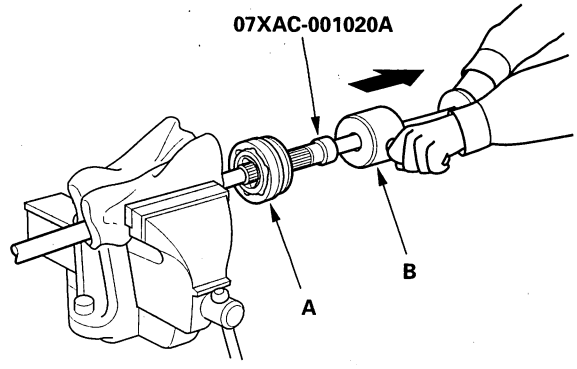

6. Remove the outboard joint (A) using the special tool and a commercially available 5/8''-18 UNF slide hammer (B).

7. Remove the driveshaft from the vise.

BACK

Protected by AR

8. Remove the stop ring from the driveshaft.

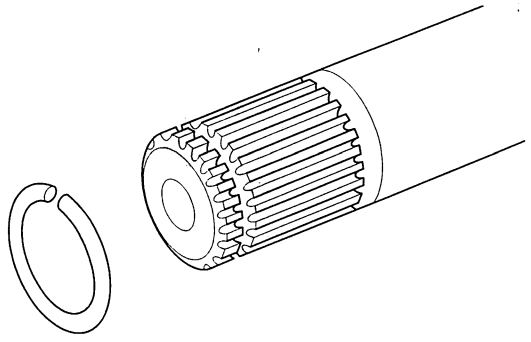

9. Wrap the splines on the driveshaft with vinyl tape (A) to prevent damage to the boot.

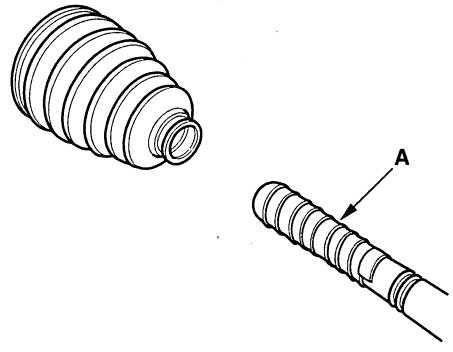

10. Remove the outboard boot. Be careful not to damage the boot.

11. Remove the vinyl tape.

Dynamic Damper Replacement

Special Tools Required
Bearing separator 07KAF-PS30200

Band type

1. Remove the inboard joint (see page 16-6).

2. Remove the dynamic damper bands. Be careful not to damage the dynamic damper (see page 16-6).

   - If the band is a welded type, cut the band.
   - If the band is a double loop type, lift up the band end, and push it into the clip.
   - If the band is a low profile type, pinch the band using a commercially available boot band pincers.

3. Wrap the splines on the driveshaft with vinyl tape (A) to prevent damage to the dynamic damper.

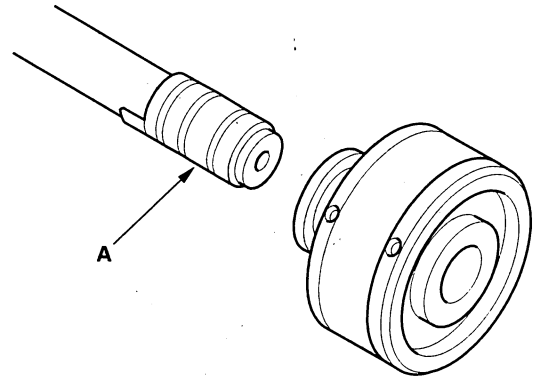

4. Remove the dynamic damper. Be careful not to damage the dynamic damper.

5. Adjust the position of the new dynamic damper to the figure follow.

Left driveshaft: 270—274 mm (10.63—10.79 in.)
Right driveshaft: 283—287 mm (11.14—11.30 in.)

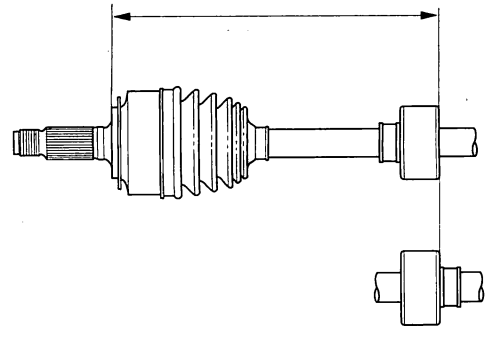

(cont'd)

Protected by AR

Dynamic Damper Replacement (cont'd)

6. Install the dynamic damper band (see step 9 on page 16-14).

7. Install the inboard joint (see step 1 on page 16-13).

Bandless type

1. Remove the inboard joint and outboard joint.

2. Remove the dynamic damper (A) using the special tool and a press as shown.

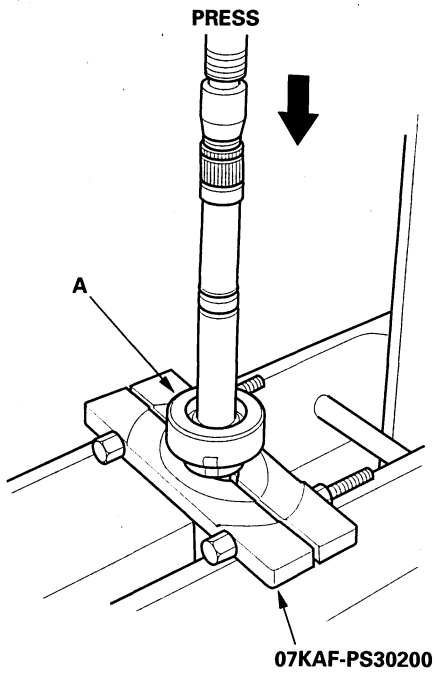

3. Mark the following position on the driveshaft (A).

Left driveshaft: 249.35—253.35 mm (9.82—9.97 in.)
Right driveshaft: 262.35—266.35 mm (10.33—10.49 in.)

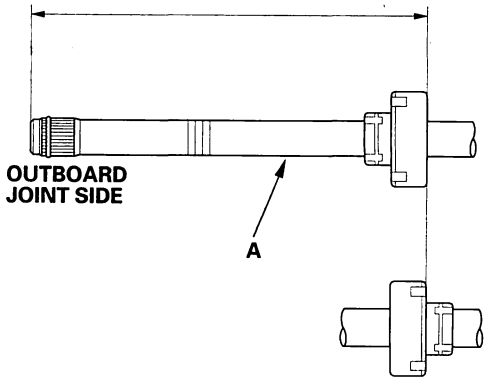

4. Install the dynamic damper (A) to the marked position using the special tool and a press as shown.

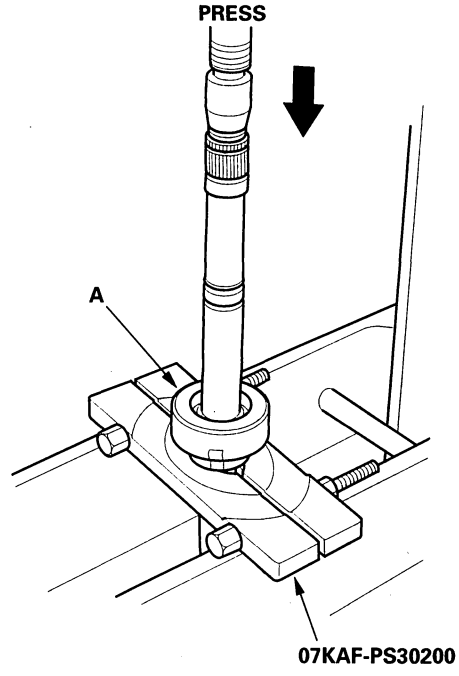

5. Install the inboard joint and outboard joint (see page 16-13).

BACK

Protected by AR

Driveshaft Reassembly

Exploded View

M/T model:

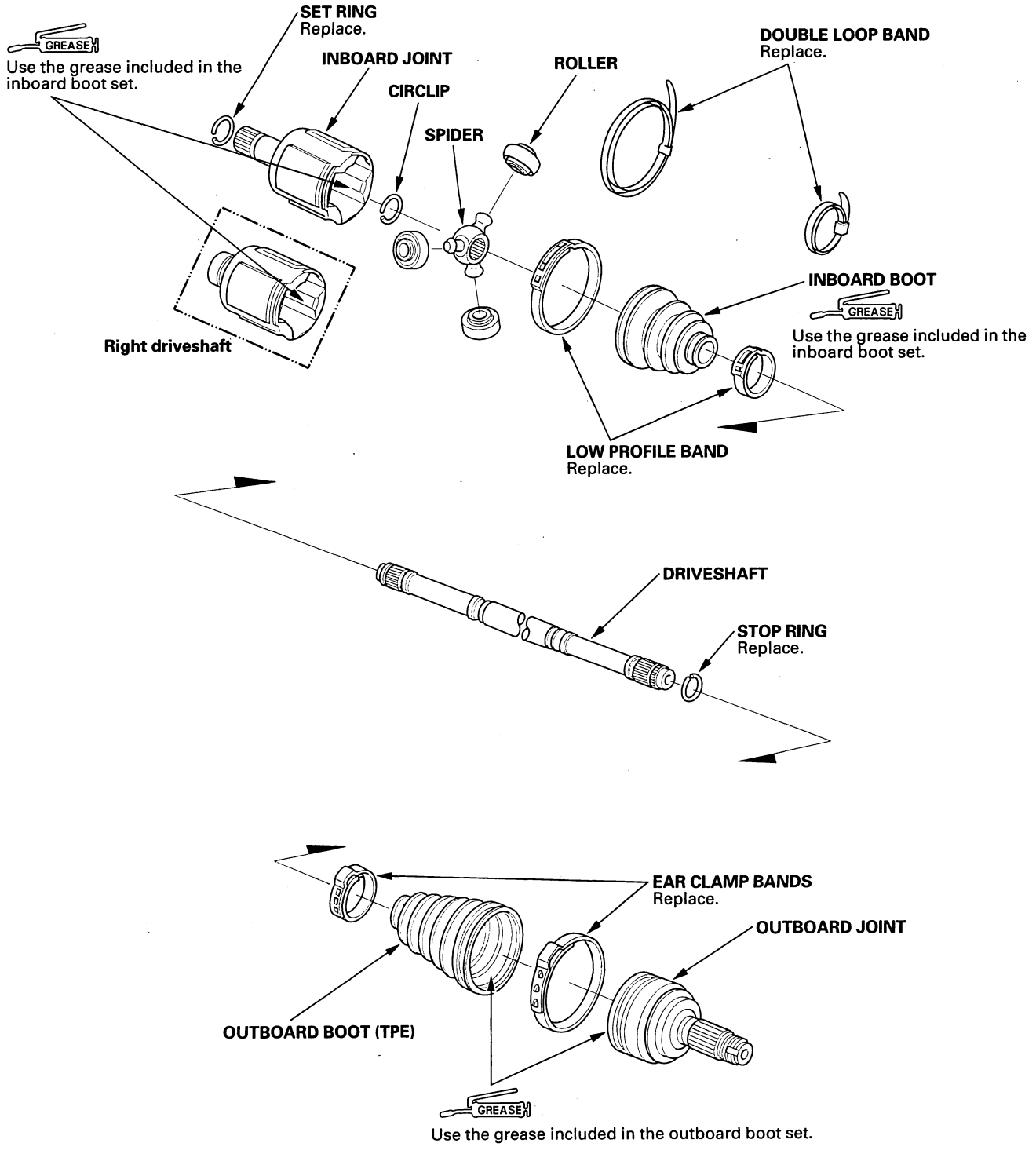

(cont'd)

Protected by AR

Driveshaft Reassembly (cont'd)

A/T model:

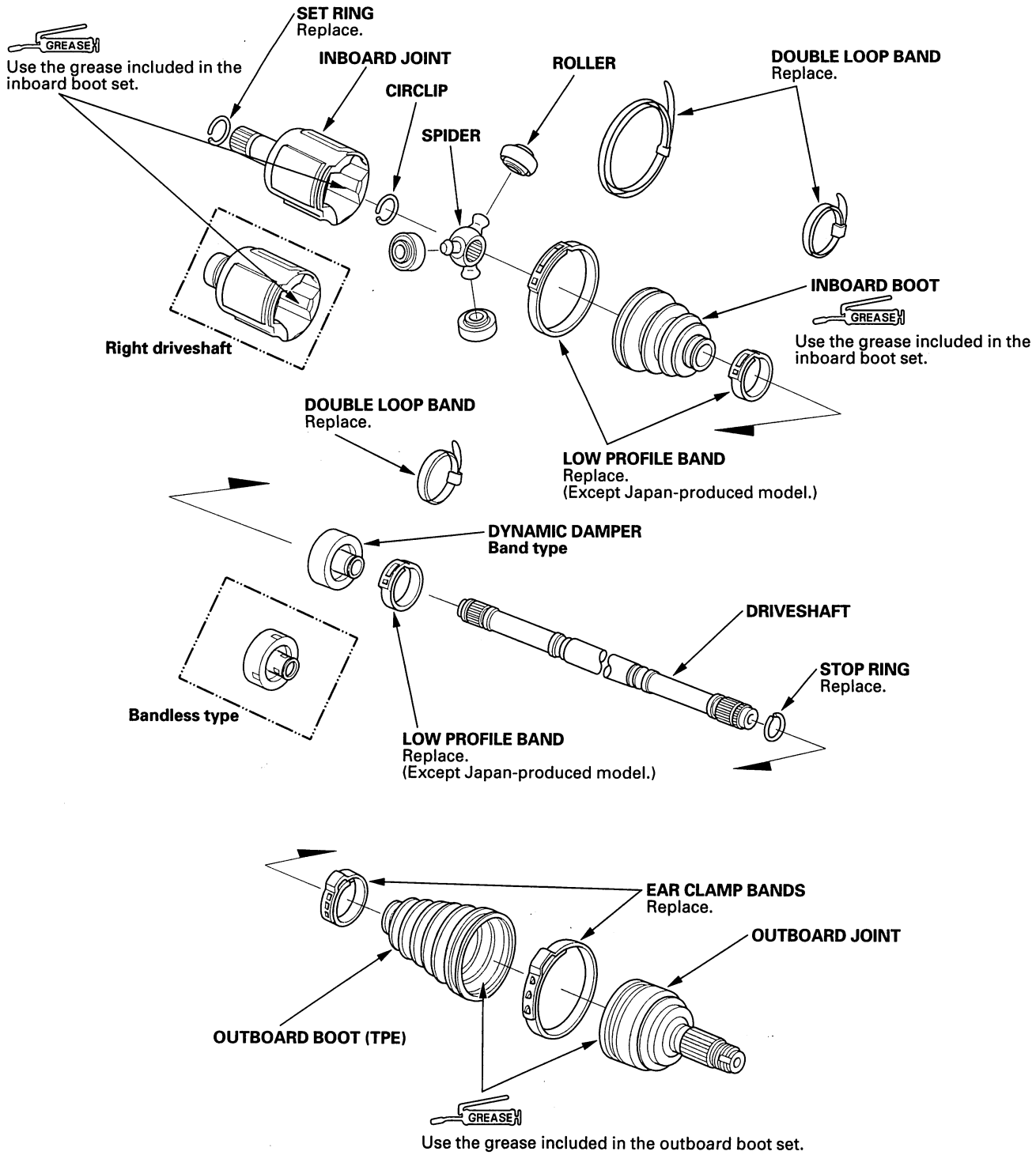

BACK

Protected by AR

Special Tools Required
- Boot band tool, KD-3191 or equivalent, commercially available
- Boot band pincers, Kent-Moore J-35910 or equivalent, commercially available
- Boot band pincers, commercially available

NOTE: Refer to the Exploded View as needed during this procedure.

Inboard Joint Side

1. Wrap the splines with vinyl tape (A) to prevent damage to the inboard boot.

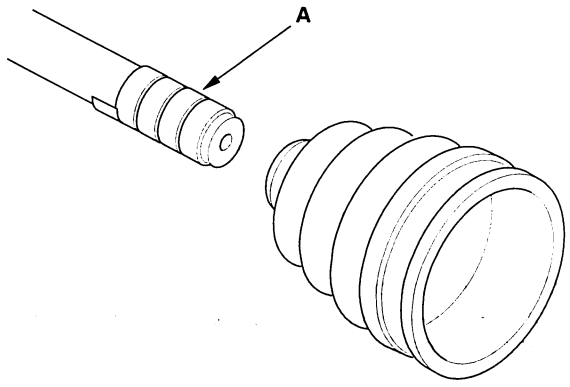

2. Install the inboard boot onto the driveshaft, then remove the vinyl tape. Be careful not to damage the inboard boot.

3. Install the spider (A) onto the driveshaft by aligning the marks (B) on the spider and the end of the driveshaft.

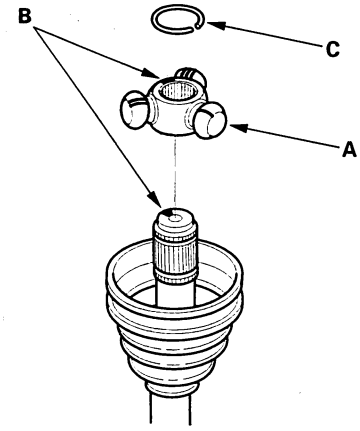

4. Fit the circlip (C) into the driveshaft groove. Rotate the circlip in its groove to make sure it is fully seated.

5. Fit the rollers (A) onto the spider (B) with their high shoulders facing outward, and note these items:
   - Reinstall the rollers in their original positions on the spider by aligning the marks (C).
   - Hold the driveshaft pointed up to prevent the rollers from falling off.

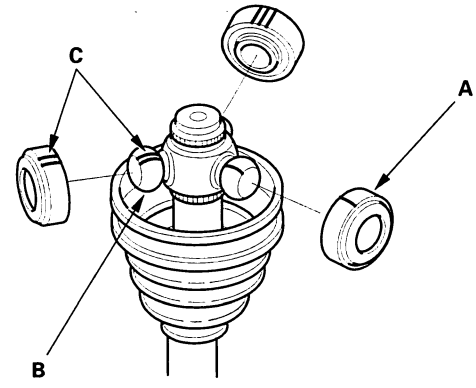

(cont'd)

Protected by AR

Driveshaft Reassembly (cont'd)

6. Pack the inboard joint with the joint grease included in the new driveshaft set.

   Grease quantity
   Inboard joint: 150—160 g (5.3—5.6 oz)



7. Fit the inboard joint onto the driveshaft, and note these items:

   - Reinstall the inboard joint onto the driveshaft by aligning the marks (A) on the inboard joint and the rollers.
   - Hold the driveshaft so the inboard joint is pointing up to prevent it from falling off.

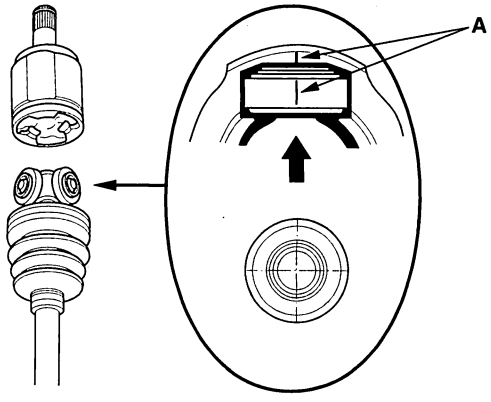

8. Install the boot bands.

   - For the double loop type, go to step 13. (Boot band replacement only)
   - For the low profile type, go to step 9.

9. Install the new low profile band (A) onto the boot (B), then hook the tab (C) of the band.

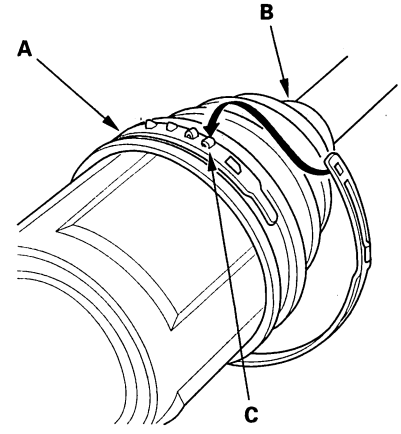

10. Close the hook portion of the band with commercially available boot band pincers (A), then hook the tabs (B) of the band.

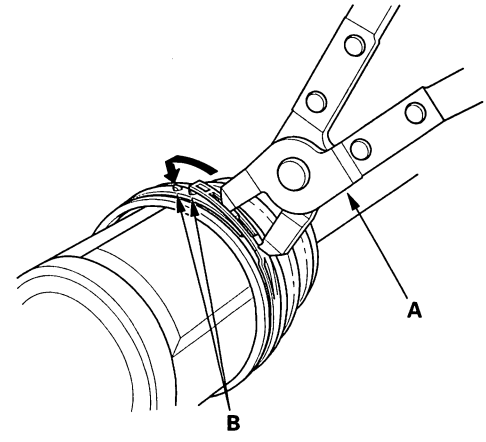

11. Install the boot band on the other end of the boot, and repeat steps 9 through 10.

BACK

Protected by AR

12. Adjust the inboard joint until the rollers are in the middle of the joint.

13. Fit the boot ends onto the driveshaft and the inboard joint, then install the new double loop band (A) onto the boot.

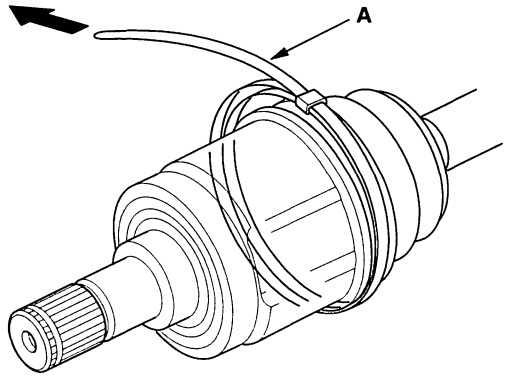

14. Pull up the slack in the band by hand.

15. Mark a position (A) on the band 10—14 mm (0.4—0.6 in.) from the clip (B).

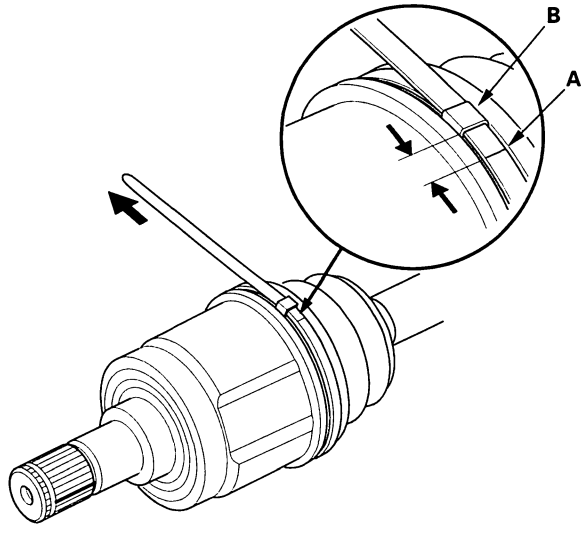

16. Thread the free end of the band through the nose section of the commercially available boot band tool KD-3191 or equivalent (A), and into the slot on the winding mandrel (B).

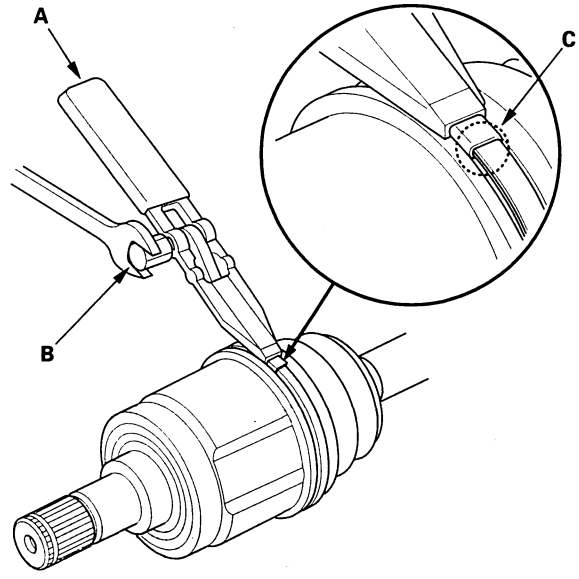

17. Place a wrench on the winding mandrel of the boot band tool, and tighten the band until the marked spot (C) on the band meets the edge of the clip.

18. Lift up the boot band tool to bend the free end of the band 90 degrees to the clip. Center-punch the clip, then fold over the remaining tail onto the clip.

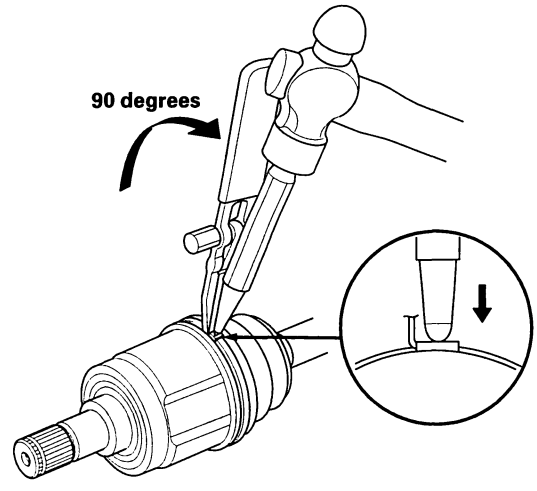

(cont'd)

Protected by AR

Driveshaft Reassembly (cont'd)

19. Unwind the boot band tool, and cut off the excess free end of the band to leave a 5—10 mm (0.2—0.4 in.) tail protruding from the clip.

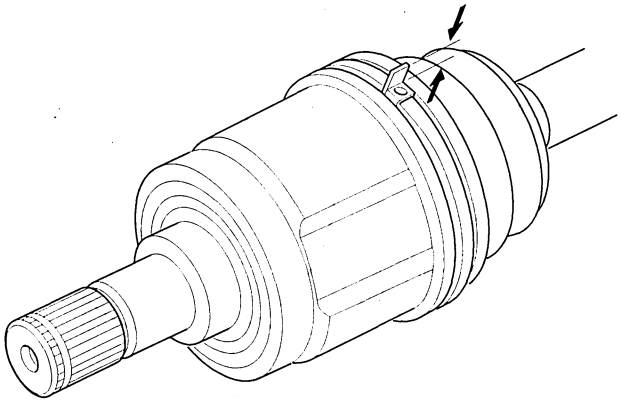

20. Bend the band end (A) by tapping it down with a hammer.

NOTE:
- Make sure the band and clip do not interfere with anything on the vehicle and the band does not move.
- Remove any grease remaining on the surrounding surfaces.

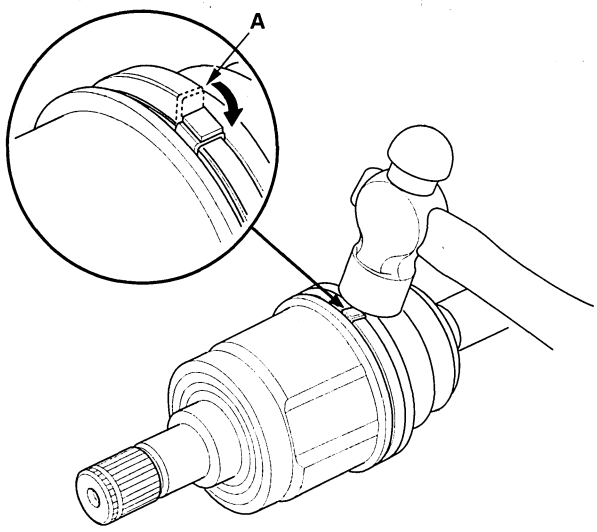

21. Repeat steps 13 through 20 for the band on the other end of the boot.

22. Install the new set ring.

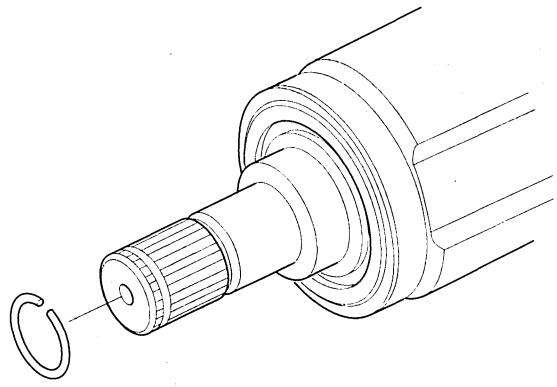

BACK

Protected by AR

Outboard Joint Side

1. Wrap the splines with vinyl tape (A) to prevent damage to the outboard boot.

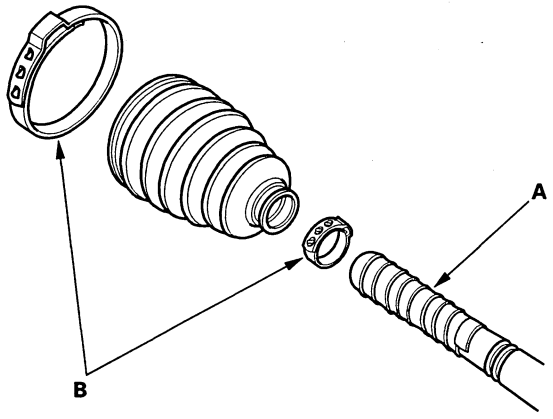

2. Install the new ear clamp bands (B) and outboard boot, then remove the vinyl tape. Be careful not to damage the outboard boot.

3. Install the new stop ring in the driveshaft groove (A).

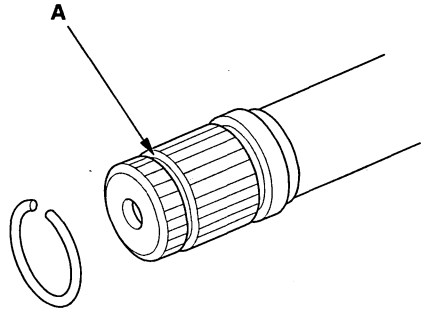

4. Insert the driveshaft (A) into the outboard joint (B) until the stop ring (C) is close to the joint.

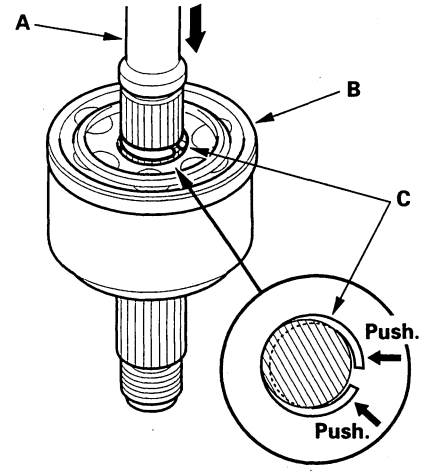

5. To completely seat the outboard joint, pick up the driveshaft and joint, and drop them from about 10 cm (4 in.) onto a hard surface. Do not use a hammer as excessive force may damage the driveshaft. Be careful not to damage the threaded section (A) of the outboard joint.

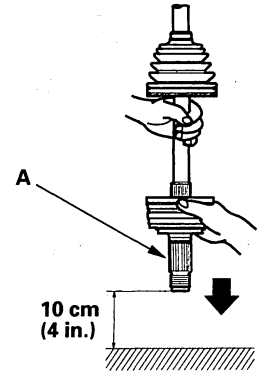

(cont'd)

Protected by AR

Driveshaft Reassembly (cont'd)

6. Check the alignment of the paint mark (A) with the outboard joint end (B).

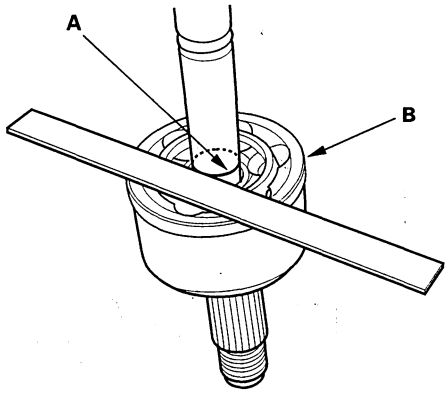

7. Pack the outboard joint (A) with the joint grease included in the new joint boot set.

Grease quantity
Outboard joint: 140—150 g (4.9—5.3 oz)

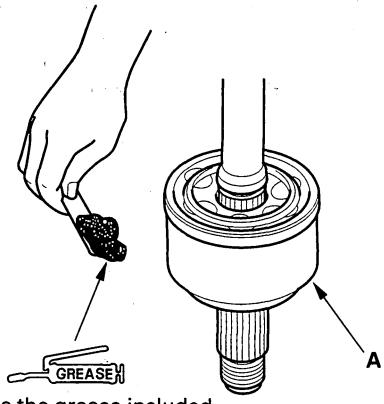

Use the grease included in the outboard boot set.

8. Adjust the length of the driveshafts as shown in the figure, then adjust the boots to halfway between full compression and full extension. Make sure the ends of the boots seat in the groove of the driveshaft and joint.

M/T model Left driveshaft: 554—559 mm (21.81—22.01 in.)

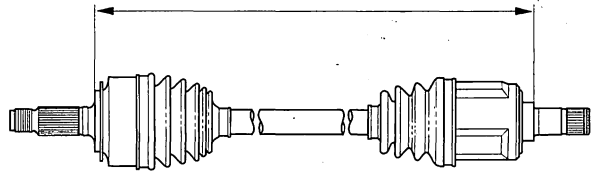

A/T model Left driveshaft: 554—559 mm (21.81—22.01 in.)

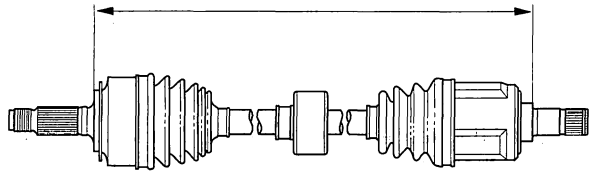

M/T model Right driveshaft: 512—517 mm (20.16—20.35 in.)

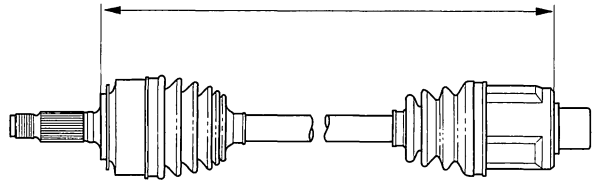

A/T model Right driveshaft: 512—517 mm (20.16—20.35 in.)

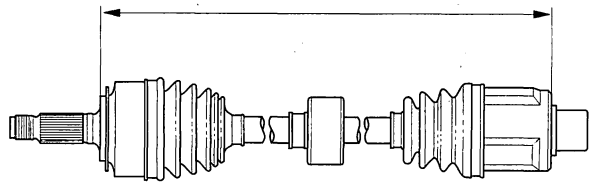

BACK

Protected by AR

9. Fit the boot (A) ends onto the driveshaft (B) and outboard joint (C).

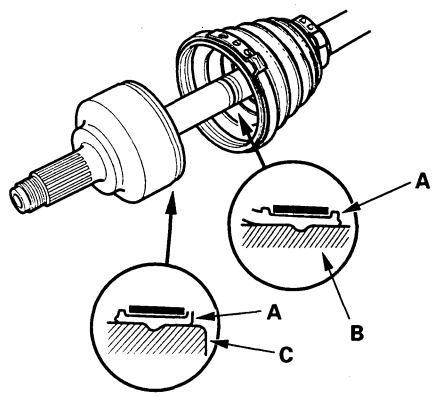

10. Close the ear portion (A) of the band with commercially available boot band pincers Kent-Moore J-35910 or equivalent (B).

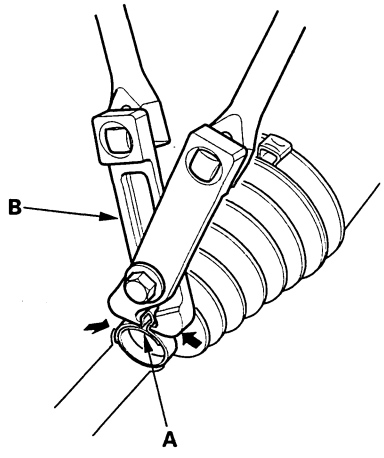

11. Check the clearance between the closed ear portion of the band. If the clearance is not within the standard, close the ear portion of the band farther.

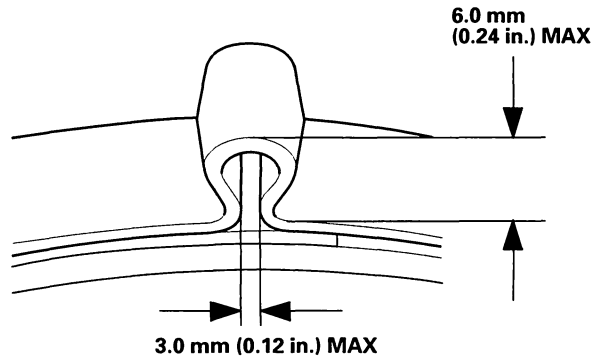

12. Repeat steps 10 and 11 for the band on the other end of the boot.

Protected by AR

Driveshaft Installation

1. Install a new set ring in the set ring groove of the driveshaft (left driveshaft).

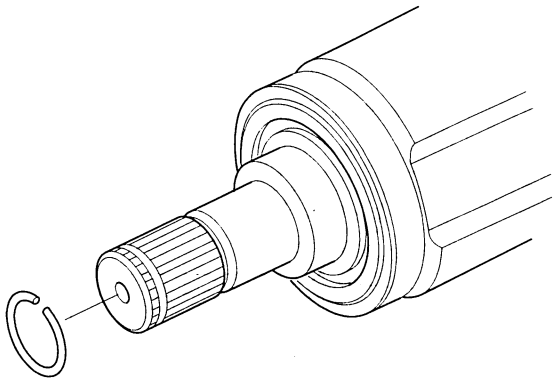

2. Apply 0.5—1.0 g (0.02—0.04 oz) of specified grease to the whole splined surface (A) of the right driveshaft. After applying grease, remove the grease from the splined grooves at intervals of 2—3 splines and from the set ring groove (B) so that air can bleed from the intermediate shaft.

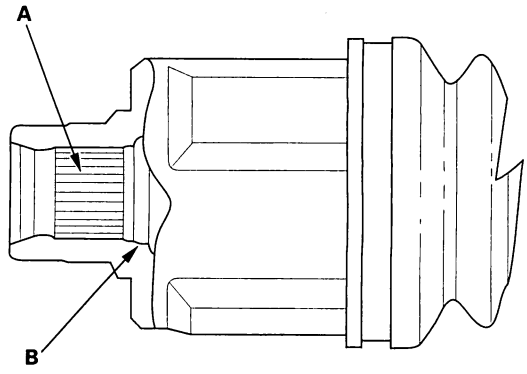

3. Clean the areas where the driveshaft contacts the differential thoroughly with solvent or brake cleaner, and dry with compressed air. Insert the inboard end (A) of the driveshaft into the differential (B) or intermediate shaft (C) until the new set ring (D) locks in the groove (E).

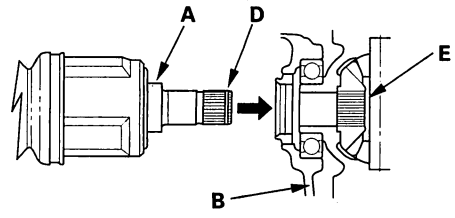

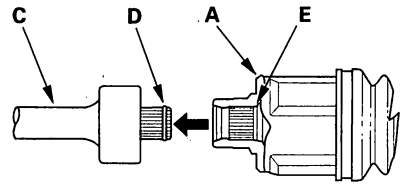

4. Install the outboard joint (A) into the front hub (B).

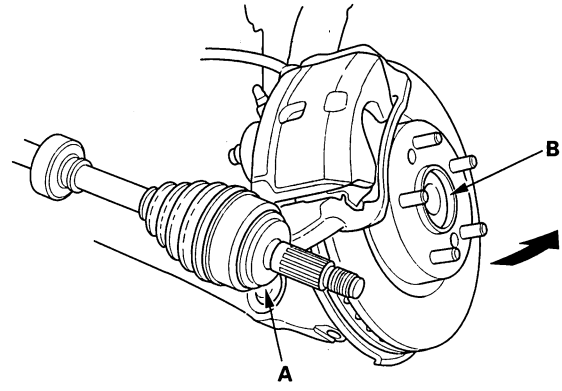

BACK

Protected by AR

5. Install the knuckle (A) onto the lower arm (B). Wipe off the grease before tightening the nut at the ball joint. Torque the new castle nut (C) to the lower torque specification, then tighten it only far enough to align the slot with the pin hole. Do not align the nut by loosening it.

   NOTE: Make sure the ball joint boot is not damaged or cracked.

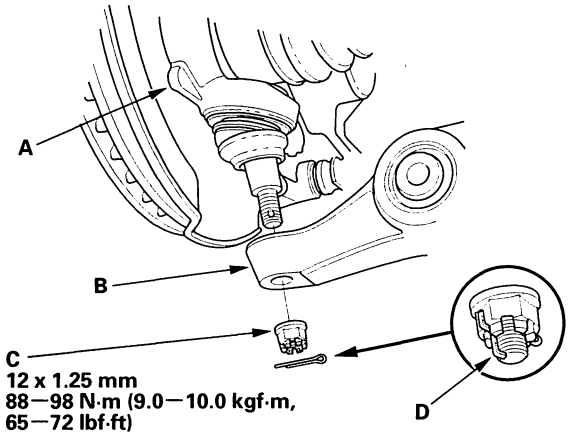

6. Install the new cotter pin (D) into the pin hole, and bend the cotter pin as shown.

7. Install the damper fork (A) over the driveshaft and onto the lower arm. Install the damper in the damper fork so the aligning tab (B) is aligned with the slot in the damper fork. Loosely install the flange bolt (C).

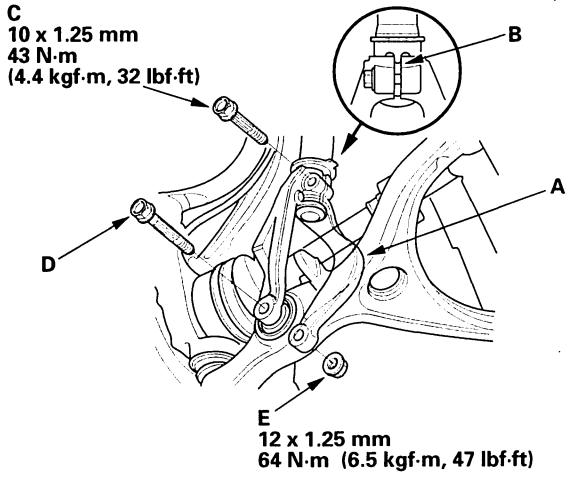

8. Loosely install the flange bolt (D) and a new self-locking nut (E).

9. Install a new spindle nut (A), then tighten the nut. After tightening, use a drift to stake the spindle nut shoulder (B) against the driveshaft.

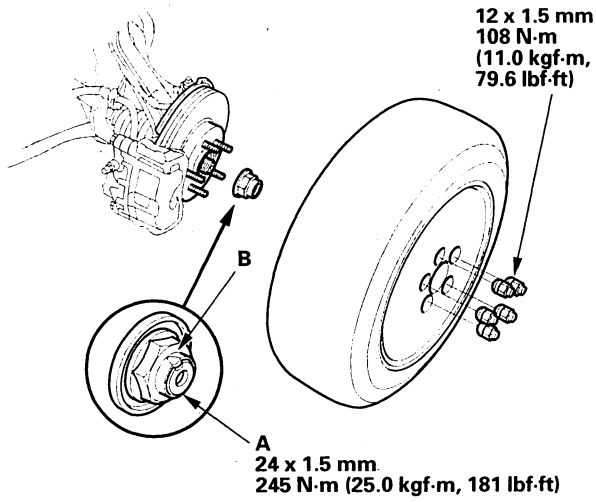

10. Clean the mating surfaces of the brake disc and the front wheel, then install the front wheel with the wheel nuts.

11. Turn the front wheel by hand, and make sure there is no interference between the driveshaft and surrounding parts.

12. Tighten the flange bolts and the self-locking nut with the vehicle's weight on the damper.

13. Refill the transmission with recommended transmission fluid:

    - Manual transmission (see page 13-10)
    - Automatic transmission (see page 14-186)

14. Check the front wheel alignment, and adjust it if necessary, refer to the 2003-2006 Accord Service Manual (see page 18-6).

Protected by AR

Intermediate Shaft Removal

1. Drain the transmission fluid. Reinstall the drain plug, use a new washer:

   - Manual transmission (see page 13-10)
   - Automatic transmission (see page 14-186)

2. Remove the right driveshaft (see page 16-4).

3. Remove the exhaust pipe A (see step 40 on page 5-5).

4. Remove the rear warm up three way catalytic converter (rear WU-TWC) bracket (A) and heat shield (B).

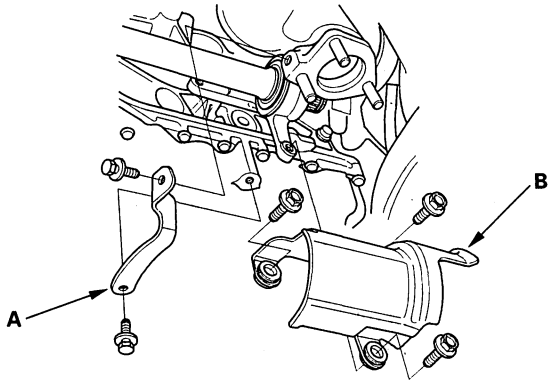

5. Remove the flange bolt (A) and two dowel bolts (B).

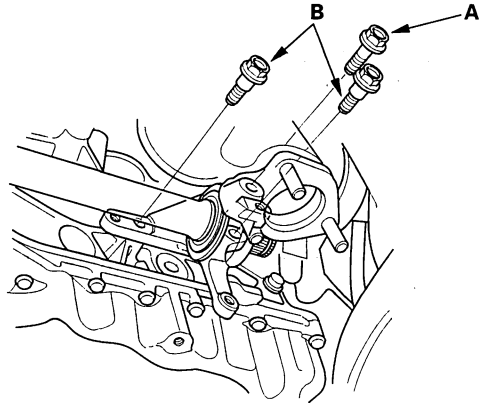

6. Remove the intermediate shaft (A) from the differential. Hold the intermediate shaft horizontally until it is clear of the differential to prevent damage to the differential oil seal (B).

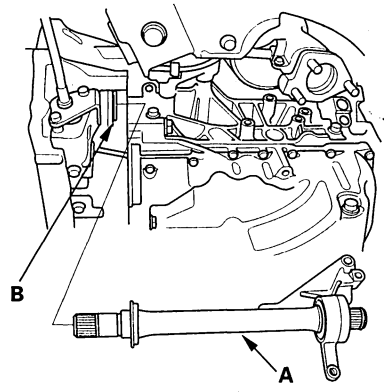

BACK

Protected by AR

Intermediate Shaft Disassembly

Special Tools Required
- Oil seal driver 07947-SB00100
- Half shaft base 07NAF-SR30101

1. Remove the set ring (A), outer seal (B), and external snap ring (C).

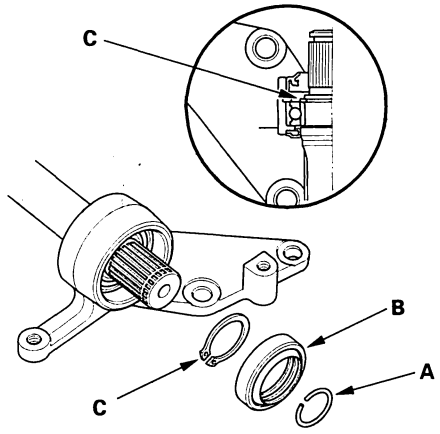

2. Press the intermediate shaft (A) out of the intermediate shaft bearing (B) using a press. Be careful not to damage the metal rings (C) on the intermediate shaft during disassembly.

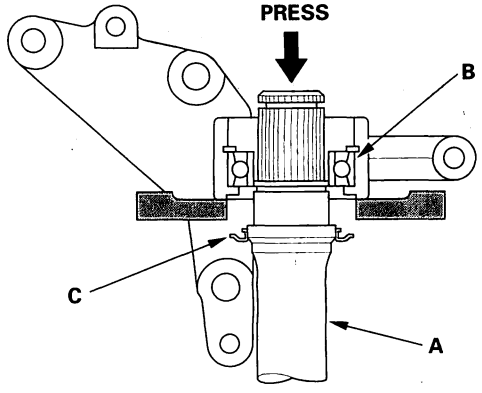

3. Remove the internal snap ring.

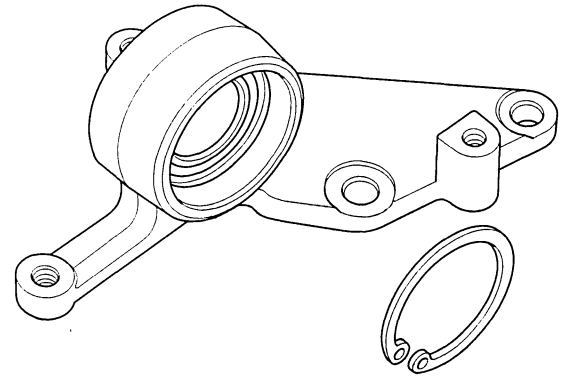

4. Press the intermediate shaft bearing (A) out of the bearing support (B) using the special tools and a press.

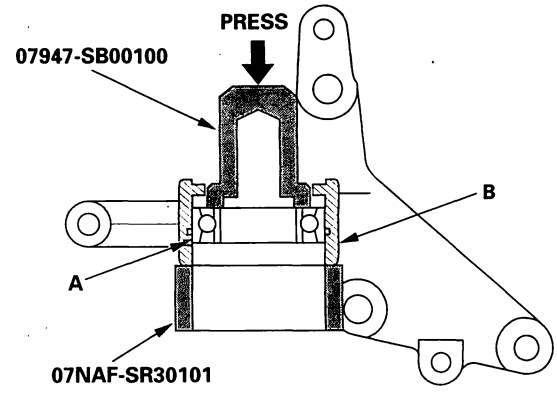

Protected by AR

Intermediate Shaft Reassembly

Exploded View

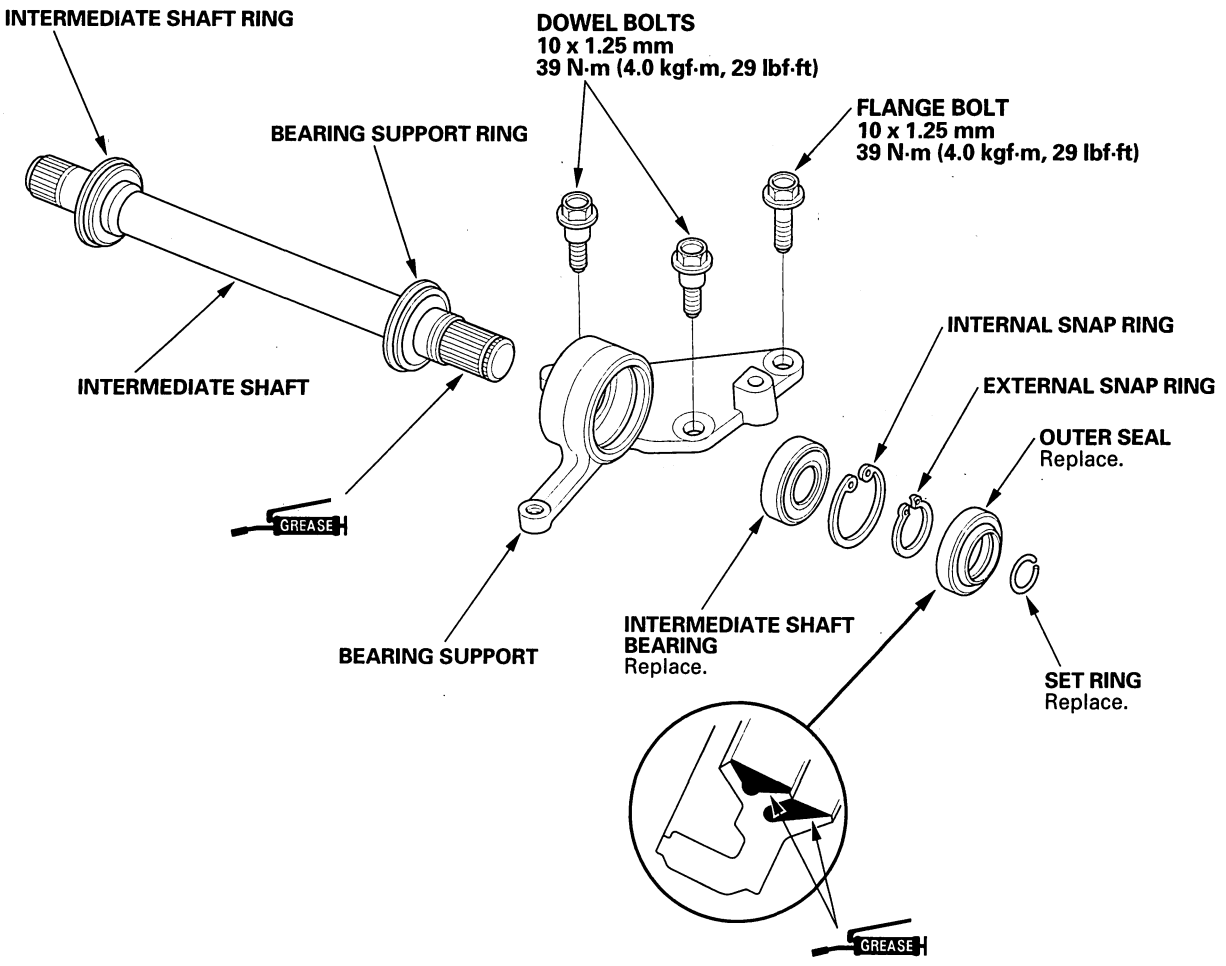

Pack the interior of the outer seal.

BACK

Protected by AR

Special Tools Required
- Driver 07749-0010000
- Attachment, 52 x 55 mm 07746-0010400
- Attachment, 35 mm I.D. 07746-0030400
- Oil seal driver 07GAD-PH70201

NOTE: Refer to the Exploded View as needed during this procedure.

1. Clean the disassembled parts with solvent, and dry them with compressed air. Do not wash the rubber parts with solvent.

2. Press the intermediate shaft bearing (A) into the bearing support (B) using the special tools and a press.

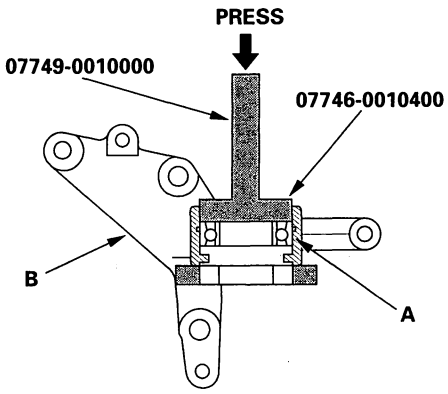

3. Install, then seat the internal snap ring in the groove of the bearing support.

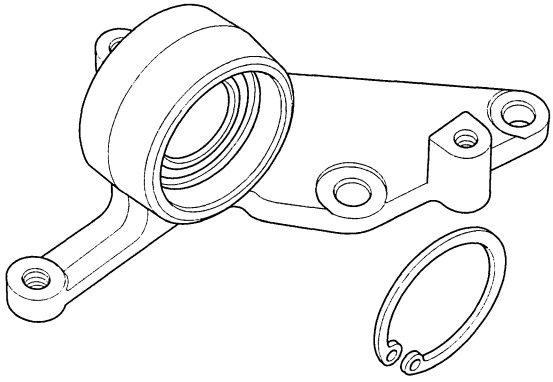

4. Press the intermediate shaft (A) into the shaft bearing (B) using the special tool and a press.

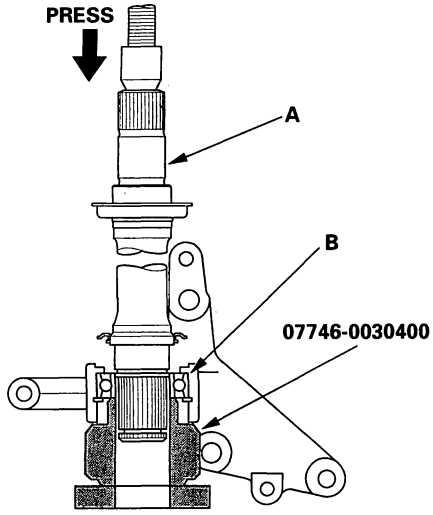

5. Install, then seat the external snap ring (A) in the groove of the intermediate shaft (B).

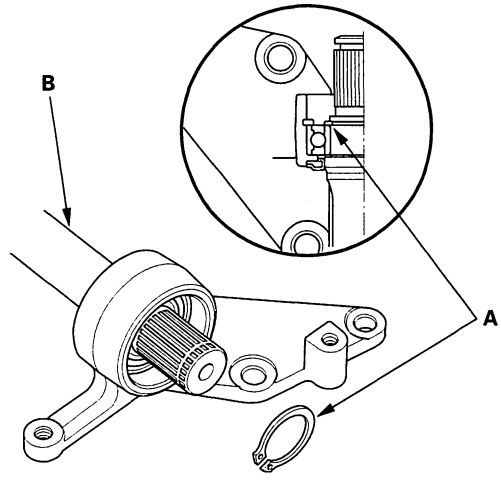

(cont'd)

Protected by AR

Intermediate Shaft Reassembly (cont'd)

6. Install the outer seal (A) into the bearing support (B) using the special tool and a press.

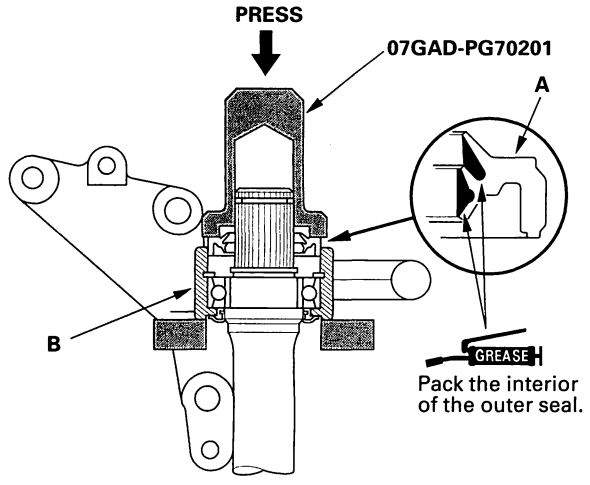

7. Install the set ring.

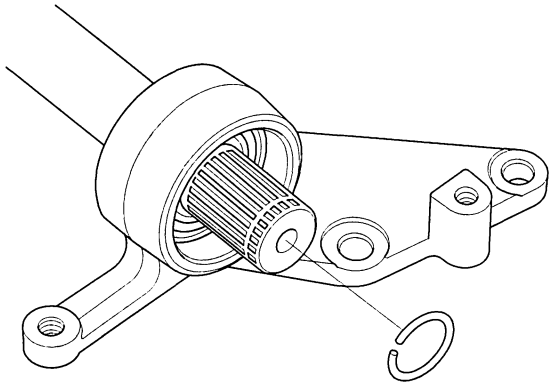

Intermediate Shaft Installation

1. Use solvent or brake cleaner to thoroughly clean the areas where the intermediate shaft (A) contacts the transmission (differential), and dry them with compressed air. Insert the intermediate shaft assembly into the differential. Hold the intermediate shaft horizontally to prevent damage to the differential oil seal (B).

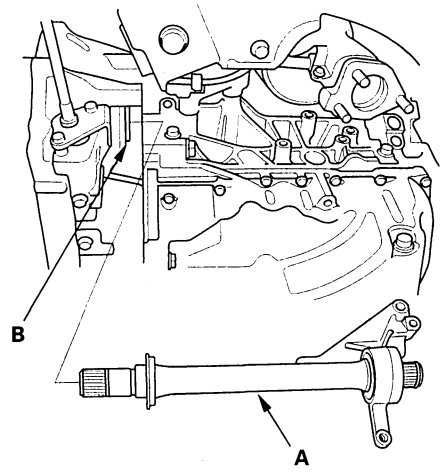

2. Install the flange bolt (A) and two dowel bolts (B).

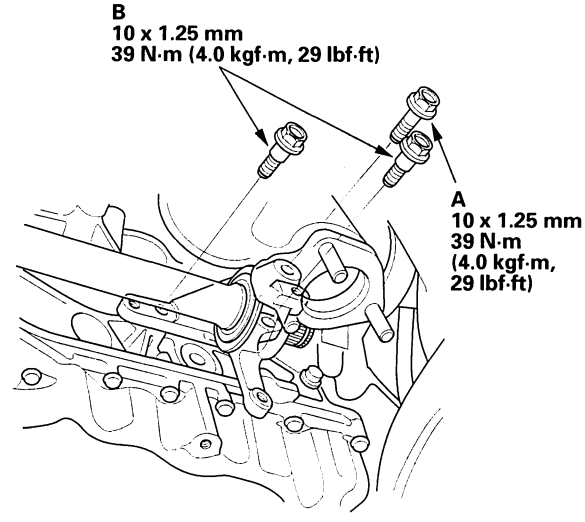

BACK

Protected by AR

3. Install the heat shield (A) and rear warm up three way catalytic converter (rear WU-TWC) bracket (B).

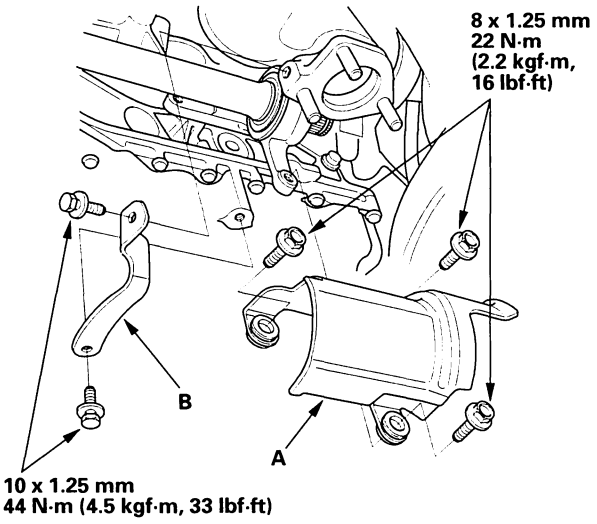

4. Install the exhaust pipe A (see step 28 on page 5-16).

5. Install the right driveshaft (see page 16-20).

6. Refill the transmission fluid.

   - Manual transmission (see page 13-10)
   - Automatic transmission (see page 14-186)

Protected by AR

BACK

Protected by AR

Steering

Power Steering

Special Tools 17-2
Component Location Index 17-3
Symptom Troubleshooting Index 17-4
Symptom Troubleshooting 17-6
Pump Pressure Test with T/N 07406-0010001 17-7
Pump Pressure Test with T/N 07406-001000A 17-8
Fluid Leakage Inspection 17-9
Fluid Replacement 17-10
Power Steering Hose, Line, and Pressure Switch Replacement 17-11
Pump Replacement 17-12
Pump Overhaul 17-13
Rack Guide Adjustment 17-18
Steering Gearbox Removal 17-20
Steering Gearbox Overhaul 17-26
Steering Gearbox Installation 17-37

NOTE: Refer to the 2003-2006 Accord Service Manual, P/N 61SDA08 for items not shown in this section.

Outline of V6 Model Change

The Steering System has been changed to suit the V6 engine model.

Protected by AR

Power Steering

Special Tools

Ref. No.	Tool Number	Description	Qty
①	07MAC-SL0A202	Ball Joint Remover, 28 mm	1
②	07RAK-S040122	P/S Joint Adapter (Hose)	1
③	07VAK-P8A011A	P/S Joint Adapter (Pump)	1
④	07VAK-P8A012B	P/S Joint Adapter Plate (Pump)	1
⑤	07ZAB-S5A0100	Pulley Holder	1
⑥	07ZAG-S7A0100	Piston Seal Ring Guide	1
⑦	07ZAG-S7A0200	Piston Seal Ring Sizing Tool	1
⑧	070GD-0010100	Driver Handle, 480 mm	1
⑨	07406-0010001 or 07406-001000A	P/S Pressure Gauge	1
⑩	07746-0010300	Attachment, 42 x 47 mm	1
⑪	07746-0010700	Attachment, 24 x 26 mm	1
⑫	07746-0041000	Pilot, 22 mm	1
⑬	07749-0010000	Driver	1
⑭	07916-SA50001	Locknut Wrench, 40 mm	1

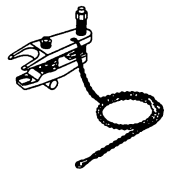
①

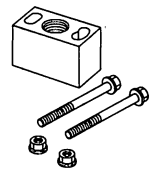
②

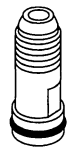
③

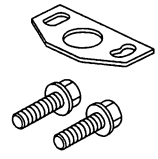
④

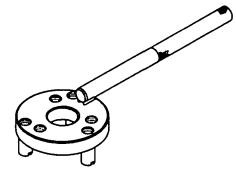
⑤

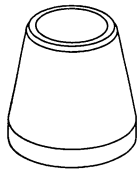
⑥

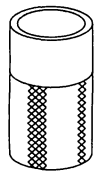
⑦

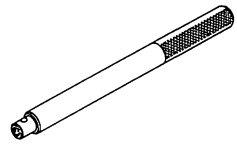
⑧

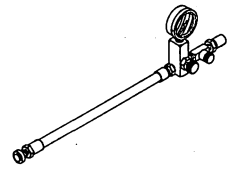
⑨

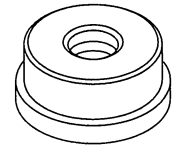
⑩

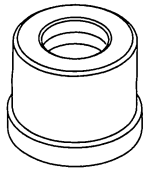
⑪

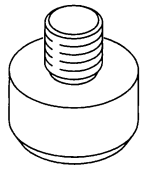
⑫

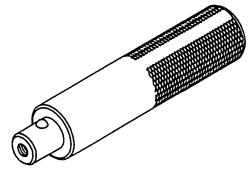
⑬

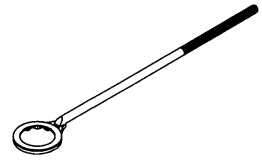
⑭

BACK

Protected by AR

Component Location Index

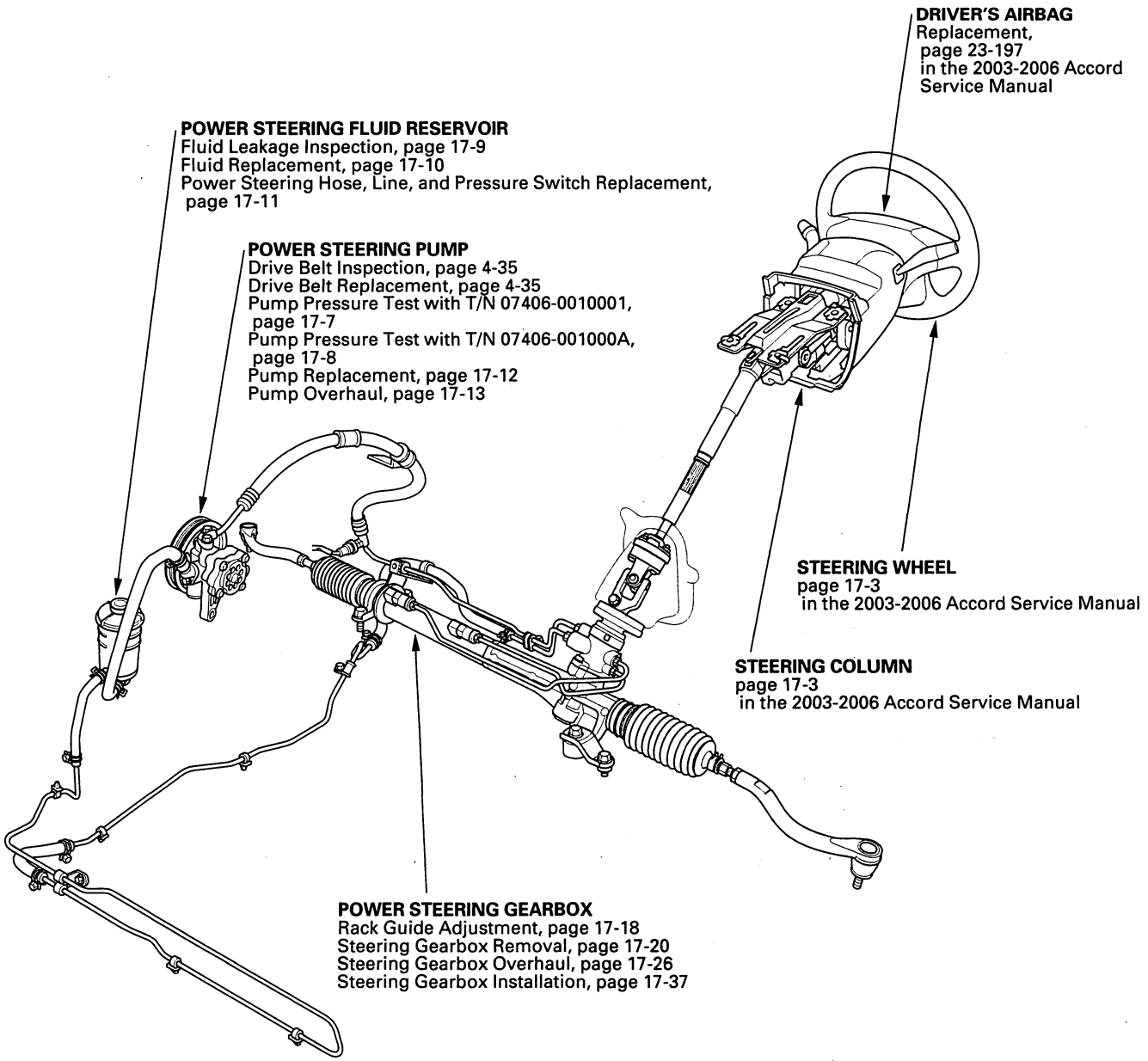

Protected by AR

Symptom Troubleshooting Index

Find the symptom in the chart below, and do the related procedures in the order listed until you find the cause.

Symptom	Procedure(s)	Also check for:
Hard steering	Troubleshoot the system (see page 17-6).	• Modified suspension • Damaged suspension • Tire sizes, tire varieties, and air pressure
Assist (excessively light steering at high speed)	Check the rack guide adjustment (see page 17-18).	Front wheel alignment, refer to the 2003-2006 Accord Service Manual (see page 18-6).
Shock or vibration when the steering wheel is turned to full lock	1. Check the rack guide adjustment (see page 17-18). 2. Check the drive belt for slippage (see page 4-35). 3. Replace the steering gearbox (see page 17-20).	
Steering wheel will not return smoothly	1. Check cylinder lines A and B for deformation. 2. Check wheel alignment, refer to the 2003-2006 Accord Service Manual (see page 18-6). 3. Replace the steering gearbox (see page 17-20).	
Uneven or rough steering	1. Check the rack guide adjustment (see page 17-18). 2. Check the drive belt (see page 4-35). 3. Check for low or erratic engine idle speed (see page 11-301). 4. Check for air in the power steering system due to low fluid level or an air leak at the pump inlet hose. 5. Check for low fluid level in the power steering reservoir due to possible leaks in system. 6. Replace the steering gearbox (see page 17-20).	
Steering wheel kicks back during wide turns	1. Check the drive belt (see page 4-35). 2. Check the power steering pump fluid pressure with T/N 07406-0010001 (see page 17-7) or T/N 07406-001000A (see page 17-8).	
Humming noise from the power steering system	1. Check when the noise occurs: • If the noise is heard 2—3 minutes after starting the engine in cold weather, this is normal. • If the noise is heard when the wheel is turned with the vehicle stopped, this is normal due to the fluid pulsation. 2. Check for the high-pressure hose touching the subframe or body. 3. Check for automatic transmission converter noise. 4. Check for air bubbles in the power steering fluid.	Pump pressure
Power steering rack rattle or chattering	1. Check for loose steering components (tie-rod and ball joints). Tighten or replace as necessary. 2. Check the steering column shaft for wobbling. If the steering column wobbles, replace the steering column assembly, refer to the 2003-2006 Accord Service Manual (see page 17-25). 3. Check the rack guide adjustment (see page 17-18). 4. Check the power steering pump pulley. • If the pulley is loose, tighten it (see step 33 on page 17-17). • If the pump shaft is loose, replace the pump (see page 17-12).	

BACK

Protected by AR

Symptom	Procedure(s)	Also check for:
Hissing noise/ foaming fluid in reservoir	• Check the fluid level. If low, fill the reservoir to the proper level and check for leaks. • Check the reservoir for leaks. • Check for crushed inlet hose or loose hose clamp allowing air into the suction side of the system. • Check the power steering pump shaft oil seal for leaks.	Air in the P/S fluid
Noise from the power steering pump	• Compare the pump noise at normal operating temperature to another alike vehicle (pump noise up to 2—3 minutes after starting the engine in cold weather is normal). • Remove and inspect the pump for wear and damage (see page 17-13).	• P/S pump pressure • Air in the P/S fluid
Squeaking from the power steering pump	Check the drive belt (see page 4-35).	
Fluid leaks from the steering gearbox	• Fluid leaks from the top of the valve body unit: Replace the valve body unit. • Fluid leaks from the left tie-rod boot: Replace the valve body unit. Replace the cylinder end seal on the gearbox side. • Fluid leaks from the right tie-rod boot: Replace the cylinder end seal. • Fluid leaks from pinion shaft near the lower steering joint bolt: Replace the valve body unit. • Fluid leaks from the steering damping valve covers on the valve body unit (SHOWA-steering gearbox): Replace the valve housing. • Fluid leaks from the steering damping valve connector A and B on the cylinder, or the connectors are loosening (TKS-steering gearbox): Replace the cylinder housing.	
Fluid leaks from the power steering line	• Fluid leaks from the cylinder line A or B connections (flare nuts): Tighten the connection and retest. If it still leaks, replace the fitting O-rings. • Fluid leaks from a damaged cylinder line A or B: Replace the cylinder line. • Fluid leaks from the pump outlet hose or return line fitting on the valve body unit (flare nuts): Tighten the fitting and retest. If it still leaks, replace the hose, the line, or valve body unit as necessary.	
Fluid leaks from the power steering pump	• Fluid leaks from the front oil seal: Replace the front oil seal. • Fluid leaks from the power steering pump housing: Replace the leaking O-rings or seals (see page 17-13), and if necessary replace the power steering pump.	
Fluid leaks from the power steering reservoir	• Fluid leaks from around the reservoir cap: Fluid level is too high: drain the reservoir to the proper level. Aerated fluid: Check for on air leak on the inlet side of pump. • Fluid leaks from reservoir: Check the reservoir for cracks and replace as necessary.	
Fluid leaks from the power steering pump outlet hose (high-pressure)	• Check the fitting for loose bolts. If the bolts are tight, replace the fitting O-ring. • Fluid leaks at the swagged joint: Replace the outlet hose.	
Fluid leaks from the power steering pump inlet hose (low-pressure)	Check the hose for damage, deterioration, or improper assembly. Replace or repair as necessary.	

Protected by AR

Symptom Troubleshooting

Hard Steering

1. Check the power assist, refer to the 2003-2006 Accord Service Manual (see page 17-7).

   Is the power assist more than 29 N (3.0 kgf, 6.6 lbf)?

   YES—Go to step 2.
   NO—Power assist is OK. ■

2. Measure steady-state fluid pressure from the pump at idle with T/N 07406-0010001 (see page 17-7) or T/N 07406-001000A (see page 17-8).

   Is the pressure 1,470 kPa (15 kgf/cm², 213 psi) or less?

   YES—Go to step 3.
   NO—Go to step 7.

3. Measure the pump relief pressure at idle with T/N 07406-0010001 (see page 17-7) or T/N 07406-001000A (see page 17-8).

   Is the pressure 7,940—8,630 kPa (81—88 kgf/cm², 1,150—1,250 psi) or less?

   YES—Go to step 4.
   NO—Go to step 8.

4. With a spring scale, measure the power assist in both directions, to the left and to the right.

   Are the two measurements within 5.0 N (0.51 kgf, 1.12 lbf) of each other?

   YES—Go to step 5.
   NO—Go to step 9.

5. Measure the fluid pressure with T/N 07406-0010001 (see step 11 on page 17-7) or T/N 07406-001000A (see step 10 on page 17-8) with both pressure gauge valves open (if so equipped), while turning the steering wheel fully to the left and fully to the right.

   Is the pressure 7,940—8,630 kPa (81—88 kgf/cm², 1,150—1,250 psi) or less?

   YES—Go to step 6.
   NO—Faulty gearbox. ■

6. Adjust the rack guide (see page 17-18), and retest.

   Is the steering OK?

   YES—Repair is completed. ■

   NO—Faulty gearbox. ■

7. Check for feed and return lines between the pump and the gearbox for clogging and deformation.

   Are the lines clogged or deformed?

   YES—Repair or replace the lines. ■

   NO—Faulty valve body unit. ■

8. Check the flow control valve (see step 11 on page 17-14) for smooth movement and leaks.

   Is the flow control valve OK?

   YES—Faulty pump assembly. ■

   NO—Faulty flow control valve. ■

9. Check the cylinder lines A and B for deformation (see page 17-11).

   Are the A or B lines deformed?

   YES—Replace the lines. ■

   NO—Go to step 10.

10. Check for a bent rack shaft or misadjusted rack guide (too tight).

    Is the rack shaft bent or the rack guide adjusted too tight?

    YES—Replace the rack shaft or readjust the rack guide. ■

    NO—Faulty valve body unit. ■

BACK

Protected by AR

Pump Pressure Test with T/N 07406-0010001

Special Tools Required
- P/S joint adapter (pump) 07VAK-P8A011A
- P/S joint adapter plate (pump) 07VAK-P8A012B
- P/S joint adapter (hose) 07RAK-S040122
- P/S pressure gauge 07406-0010001

Check the fluid pressure as follows to determine whether the trouble is in the pump or gearbox.

1. Check the power steering fluid level (see page 17-10).

2. Disconnect the pump outlet hose (A) from the pump outlet with care so as not to spill the power steering fluid on the frame and other parts, then install the P/S joint adapter (pump) on the pump outlet (B) with the P/S joint outlet plate.

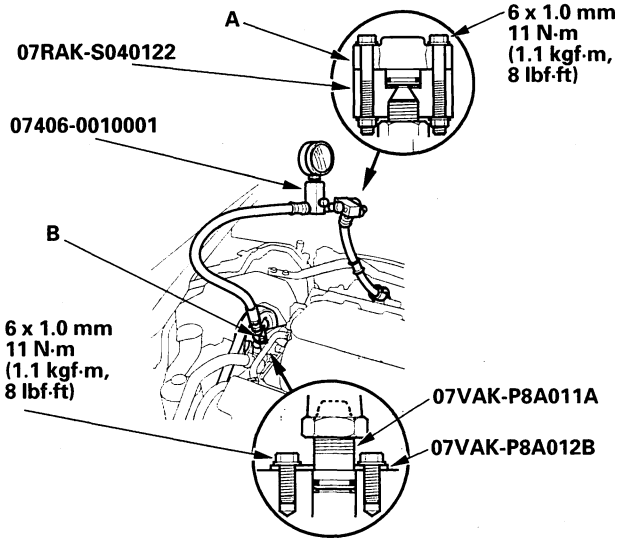

3. Connect the P/S joint adapter (hose) to the P/S pressure gauge, then connect the pump outlet hose to the P/S joint adapter (hose).

4. Install the P/S pressure gauge to the P/S joint adapter (pump).

5. Fully open the shut-off valve (A).

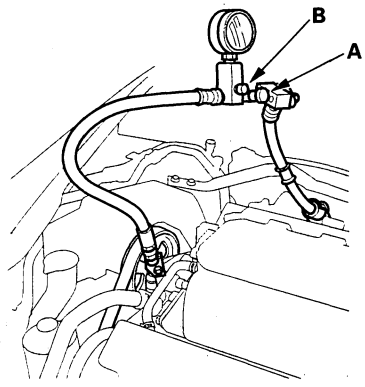

6. Fully open the pressure control valve (B).

7. Start the engine and let it idle.

8. Turn the steering wheel from lock-to-lock several times to warm the fluid to operating temperature.

9. Measure steady-state fluid pressure while the engine is idling. If the pump is in good condition, the gauge should read no more than 1,470 kPa (15 kgf/cm^2, 213 psi).

   If it reads high, check for:
   - Clogged or deformed feed or return line between the pump and gearbox.
   - Clogged valve body unit.

10. Close the shut-off valve, then close the pressure control valve gradually until the pressure gauge needle is stable. Read the pressure.

    NOTICE
    Do not keep the shut-off valve closed more than 5 seconds or the pump could be damaged by over-heating.

11. Immediately open the shut-off valve fully. If the pump is in good condition, the gauge should read at least 7,940—8,630 kPa (81—88 kgf/cm^2, 1,150—1,250 psi). A low reading means pump output is too low for full assist. Repair or replace the pump.

Protected by AR

Pump Pressure Test with T/N 07406-001000A

Special Tools Required
- P/S joint adapter (pump) 07VAK-P8A011A
- P/S joint adapter plate (pump) 07VAK-P8A012B
- P/S joint adapter (hose) 07RAK-S040122
- P/S pressure gauge 07406-001000A

Check the fluid pressure as follows to determine whether the trouble is in the pump or gearbox.

1. Check the power steering fluid level (see page 17-10).

2. Disconnect the pump outlet hose (A) from the pump outlet with care so as not to spill the power steering fluid on the frame and other parts, then install the P/S joint adapter (pump) on the pump outlet (B) with the P/S joint outlet plate.

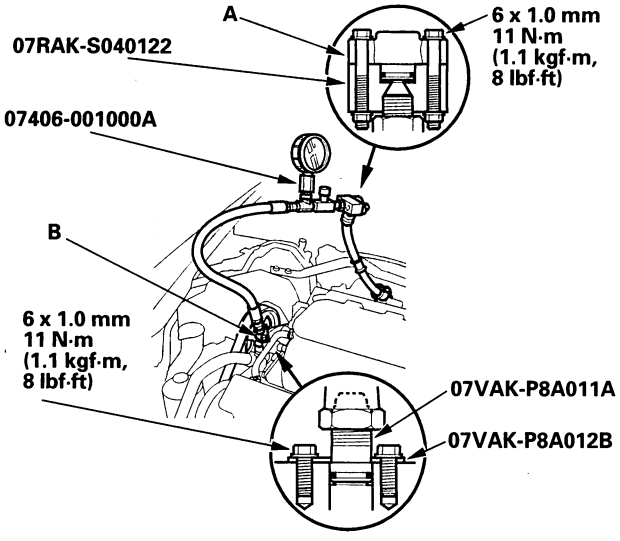

3. Connect the P/S joint adapter (hose) to the P/S pressure gauge, then connect the pump outlet hose to the P/S joint adapter (hose).

4. Install the P/S pressure gauge to the P/S joint adapter (pump).

5. Open the pressure control valve (A) fully.

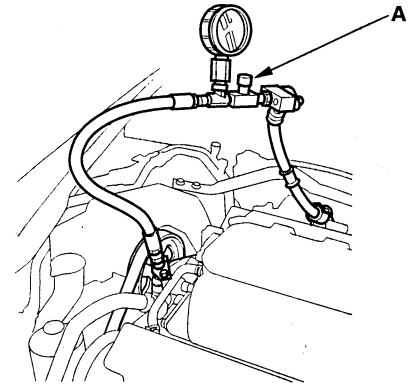

6. Start the engine and let it idle.

7. Turn the steering wheel from lock-to-lock several times to warm the fluid to operating temperature.

8. Measure steady-state fluid pressure while the engine is idling. If the pump is in good condition, the gauge should read no more than 1,470 kPa (15 kgf/cm², 213 psi).

   If it reads high, check for:
   - Clogged or deformed feed or return line between the pump and gearbox.
   - Clogged valve body unit.

9. Lower the engine speed and let it idle. Gradually close the pressure control valve and immediately read the pressure.

   NOTICE
   Do not keep the pressure control valve closed more than 5 seconds or the pump could be damaged by over-heating.

10. Immediately open the pressure control valve fully. If the pump is in good condition, the gauge should read at least 7,940—8,630 kPa (81—88 kgf/cm², 1,150—1,250 psi). A low reading means pump output is too low for full assist. Repair or replace the pump.

BACK

Protected by AR

Fluid Leakage Inspection

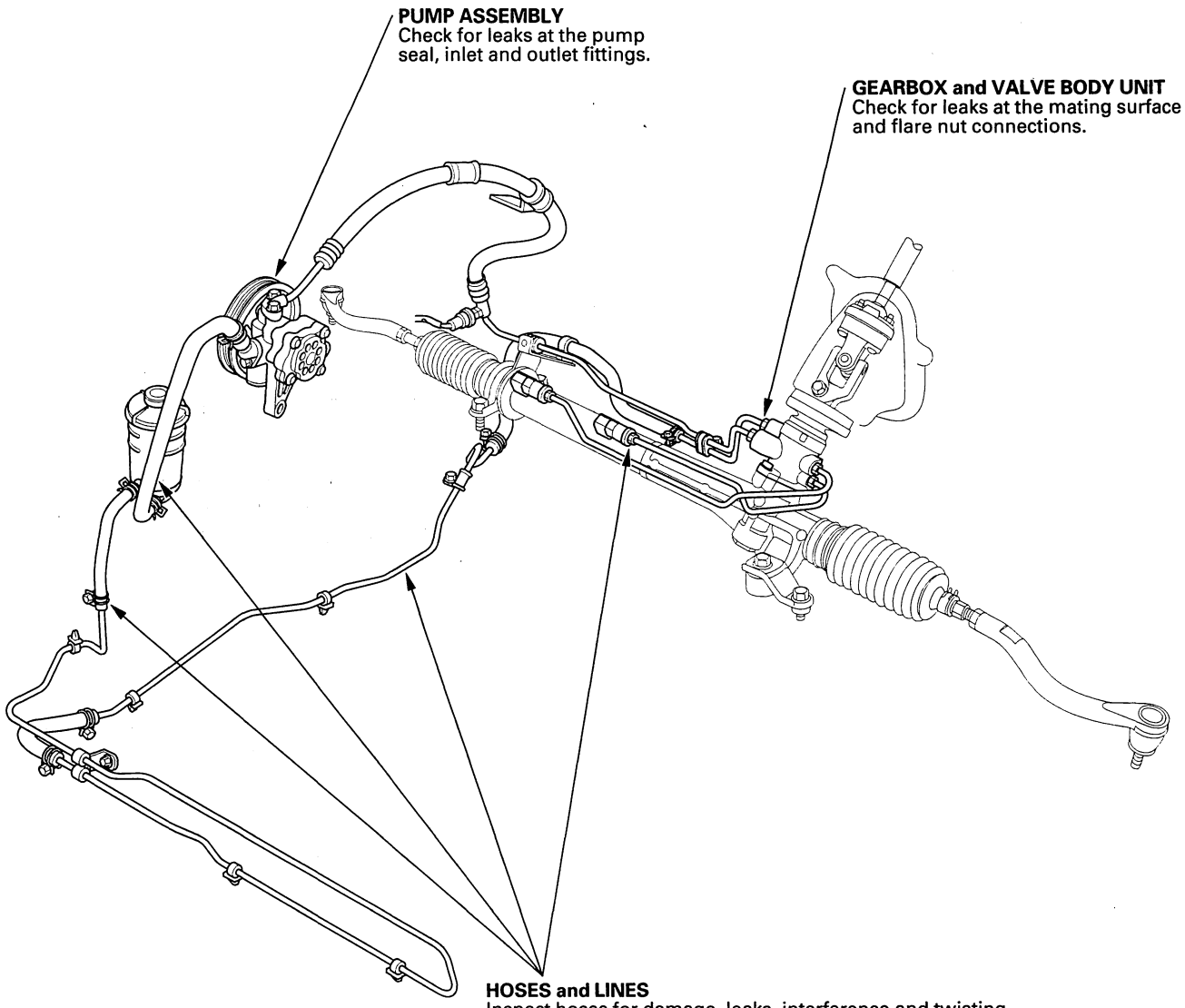

Protected by AR

Fluid Replacement

Check the reservoir (A) at regular intervals, and add the recommended fluid as necessary. Always use Honda Power Steering Fluid. Using any other type of power steering fluid or automatic transmission fluid can cause increased wear and poor steering in cold weather.

System capacity:
1.1 L (1.16 US.qt) at disassembly
Reservoir capacity:
0.4 L (0.42 US.qt)

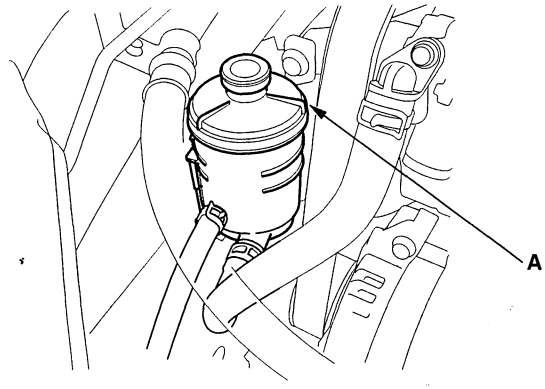

1. Raise the reservoir, then disconnect the return hose (A) to drain the reservoir. Take care not to spill the fluid on the body and parts. Wipe off any spilled fluid at once.

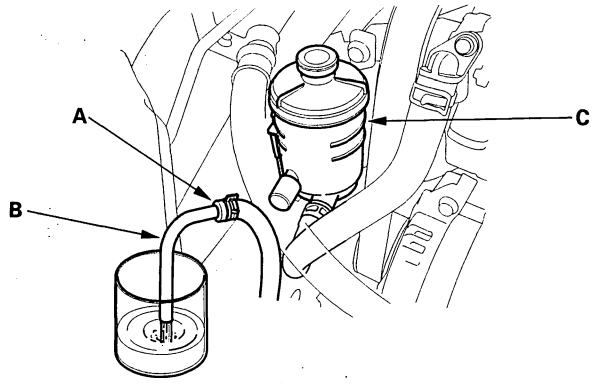

2. Connect a hose (B) of suitable diameter to the disconnected return hose, and put the hose end in a suitable container.
3. Start the engine, let it run at idle, and turn the steering wheel from lock-to-lock several times. When fluid stops running out of the hose, shut off the engine. Discard the fluid.
4. Reinstall the return hose on the reservoir.
5. Fill the reservoir to the upper level line (C).
6. Start the engine and run it at fast idle, then turn the steering wheel from lock-to-lock several times to bleed air from the system.
7. Recheck the fluid level and add some if necessary. Do not fill the reservoir beyond the upper level line.
8. If the fluid is contaminated, dark, or discolored, repeat procedure as necessary.

BACK

Protected by AR

Power Steering Hose, Line, and Pressure Switch Replacement

Note these items during installation:

- Connect each hose to the corresponding line securely until it contacts the stop on the line. Install the clamp or adjustable clamp at the specified distance from the hose end as shown.
- Check all clamps for deterioration or deformation; replace the clamps with new ones if necessary.
- Add the recommended power steering fluid to the specified level on the reservoir and check for leaks.

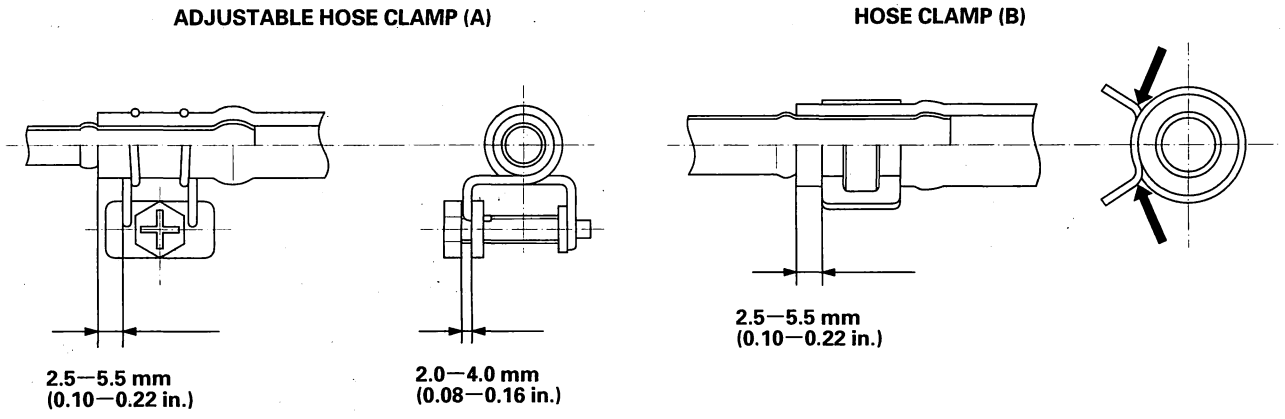

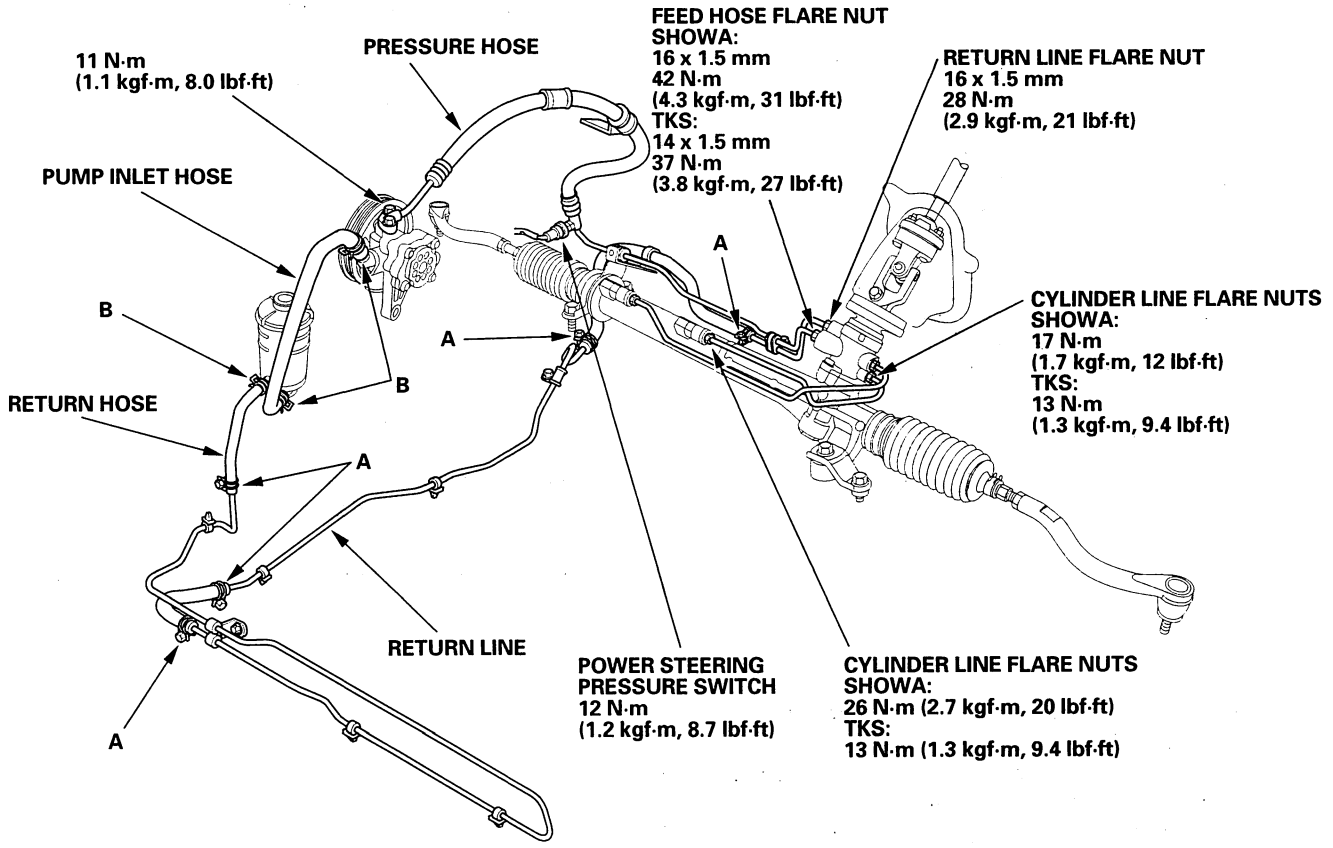

Protected by AR

Pump Replacement

1. Place a suitable container under the vehicle.
2. Drain the power steering fluid from the reservoir.
3. Remove the side engine mount bracket (A).

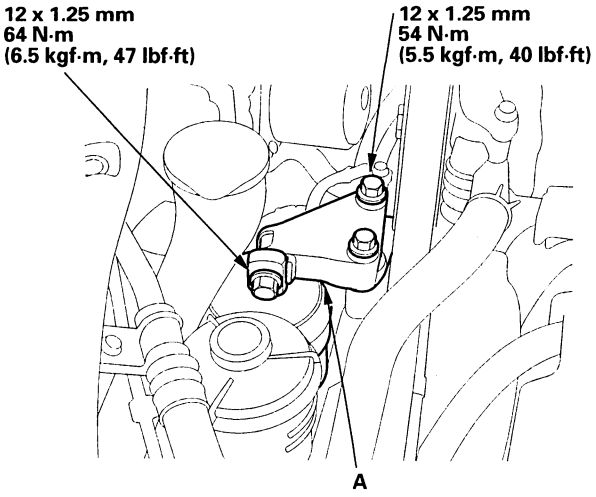

4. Remove the drive belt (A) from the pump pulley (see page 4-35).

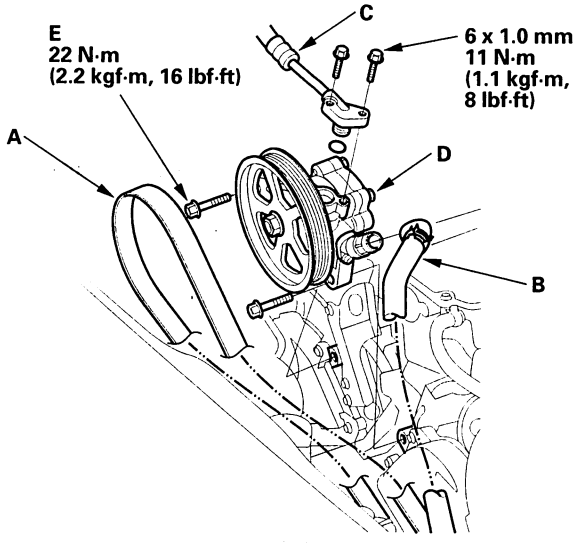

5. Cover the auto-tensioner, alternator, and A/C compressor with several shop towels to protect them from spilled power steering fluid. Disconnect the pump inlet hose (B) and pump outlet hose (C) from the pump (D), and plug them. Take care not to spill the fluid on the body or parts. Wipe off any spilled fluid at once. Do not turn the steering wheel with the pump removed.
6. Remove the pump mounting bolts (E).
7. Cover the opening of the pump with a piece of tape to prevent foreign material from entering the pump.
8. Connect the pump inlet hose and pump outlet hose onto the new pump.
9. Loosely install the pump in the pump bracket with the mounting bolts, then tighten the pump fittings securely.
10. Tighten the pump mounting bolts to the specified torque.
11. Install the drive belt (A).

    Note these items during belt installation:
    - Make sure that the belt is properly positioned on the pulleys (B).
    - Do not get power steering fluid or grease on the auto-tensioner, alternator, A/C compressor, and drive belt or pulley faces. Clean off any fluid or grease before installation.

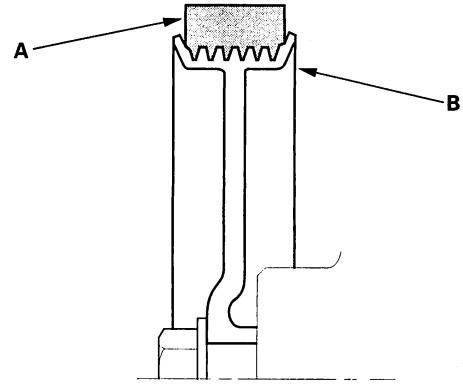

12. Install the side engine mount bracket. Tighten the bolts to the specified torque.
13. Fill the reservoir to the upper level line (see page 17-10).

BACK

Protected by AR

Pump Overhaul

Exploded View

Replace the pump as an assembly if the parts indicated with asterisk (*) are worn or damaged.

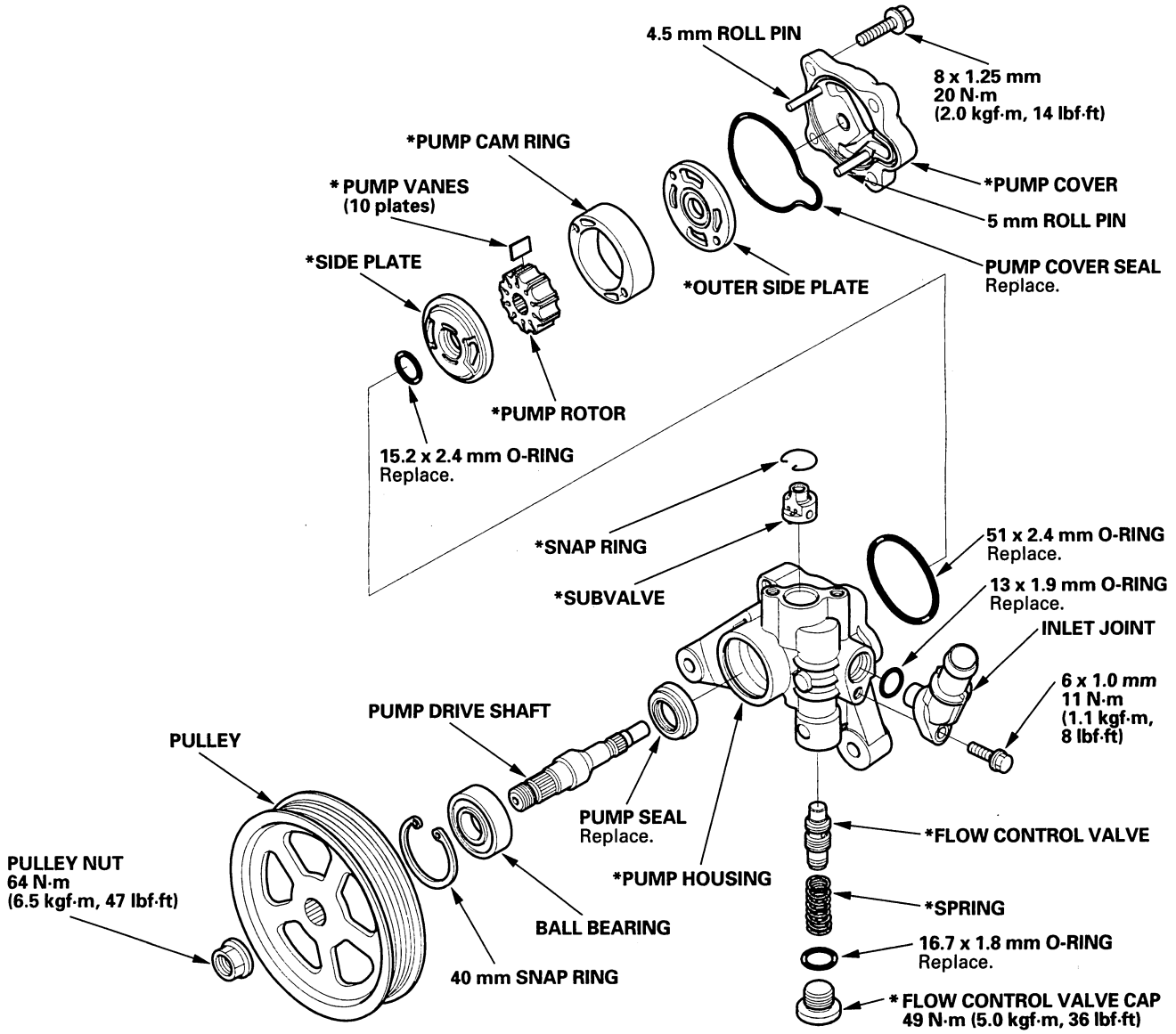

(cont'd)

Protected by AR

Pump Overhaul (cont'd)

Special Tools Required
Pulley holder 07ZAB-S5A0100

Disassembly

NOTE: Refer to the Exploded View as needed during the following procedure.

1. Drain the fluid from the pump (see step 1 on page 17-10).
2. Remove the power steering pump (see page 17-12).
3. Hold the power steering pump (A) in a vise with soft jaws (B), hold the pulley (C) with the special tool (D), and remove the pulley nut (E) and pulley. Be careful not to damage the pump housing with the jaws of the vise.

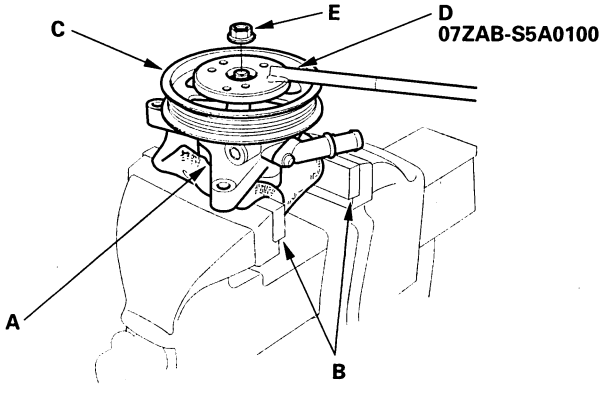

4. Remove the inlet joint and O-ring.
5. Loosen the flow control valve cap with a hex wrench, and remove it and the O-ring, flow control valve and spring.
6. Remove the pump cover and pump cover seal.
7. Remove the outer side plate, cam ring, rotor, vanes, side plate and O-rings.
8. Remove the snap ring, then remove the sub-valve from the pump housing.
9. Remove the snap ring, then remove the pump drive shaft by tapping the shaft end with the plastic hammer.
10. Remove the seal from the pump housing.

Inspection

11. Check the flow control valve for wear, burrs, and other damage to the edges of the grooves in the valve.

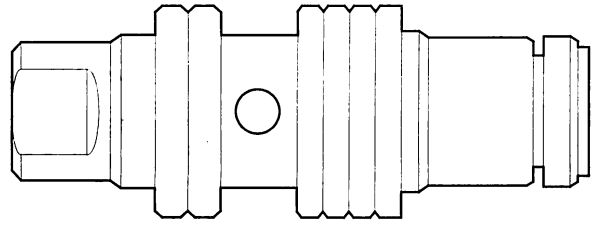

12. Inspect the bore of the flow control valve on the pump housing for scratches and wear.
13. Slip the flow control valve back in the pump housing, and check that it moves in and out smoothly. If OK, go to step 14; if not, replace the pump as an assembly. The flow control valve (A) is not available separately.

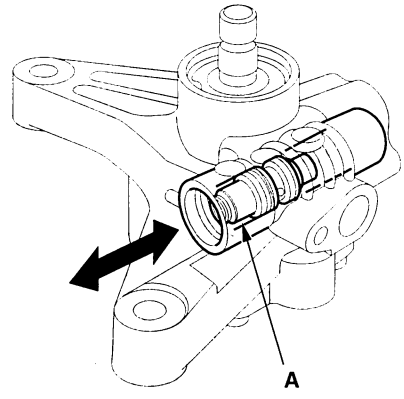

BACK

Protected by AR

14. Attach a hose (A) to the end of the flow control valve (B) as shown. Then submerge the flow control valve in a container of power steering fluid or solvent (C), and blow in the hose.

    - If air bubbles leak through the valve at less than 98 kPa (1.0 kgf/cm², 14.2 psi), replace the pump as an assembly. The flow control valve is not available separately.
    - If the flow control valve OK, set it aside for reassembly later.

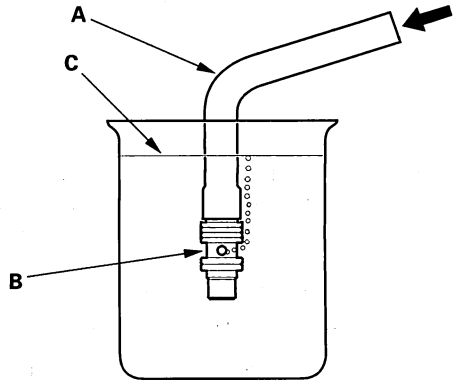

15. Inspect the ball bearing by rotating the outer race slowly. If you feel any play (axial or radial) or roughness remove the faulty ball bearing (A), and install a new one (B).

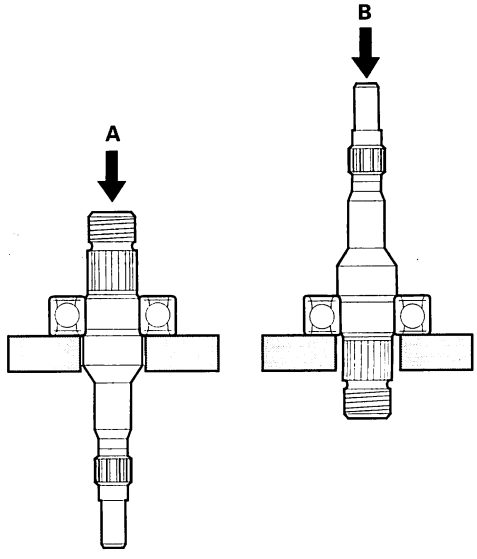

16. Inspect each part shown with an asterisk in the Exploded View; if any of them are worn or damaged, replace the pump as an assembly.

Reassembly

17. Align the pin (A) of the sub-valve (B) with the oil passage (C) in the pump housing, and push the subvalve into place, then install the snap ring (D).

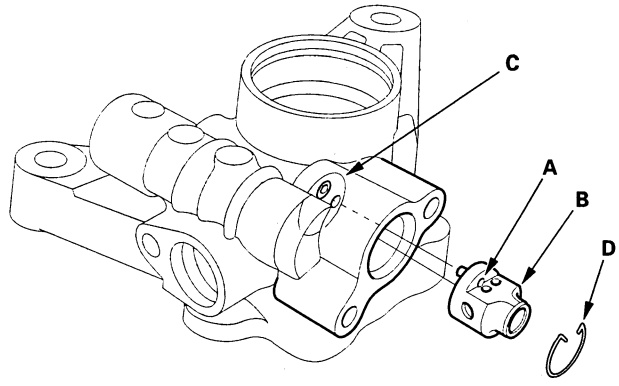

18. Install the new pump seal (A) (with its grooved side facing in) into the pump housing by hand first then position the pump drive shaft (B) in the pump housing. Press the pump drive shaft and pump seal with the appropriate size socket wrench (C) as shown.

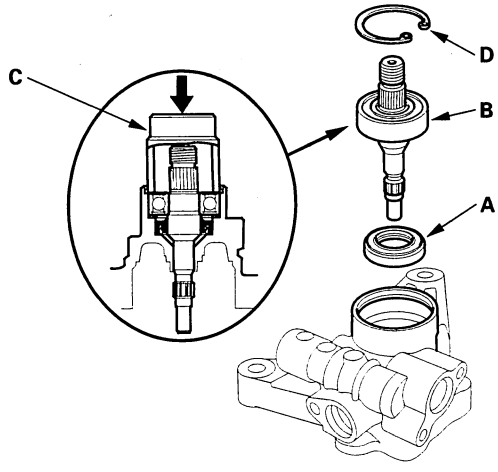

19. Install the 40 mm snap ring (D) with its radiused edge facing out.

(cont'd)

Protected by AR

Pump Overhaul (cont'd)

20. Coat the new pump cover seal (A) with power steering fluid, and install it into the groove in the pump cover (B).

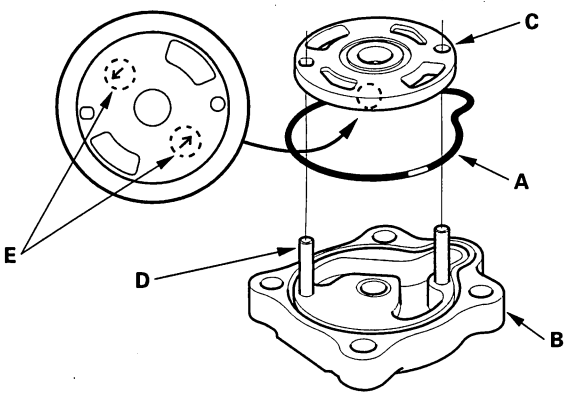

21. Install the outer side plate (C) over the two roll pins (D) with its arrow marks stamped (E) facing down.

22. Set the pump cam ring (A) over the two roll pins with its "•" mark (B) facing down.

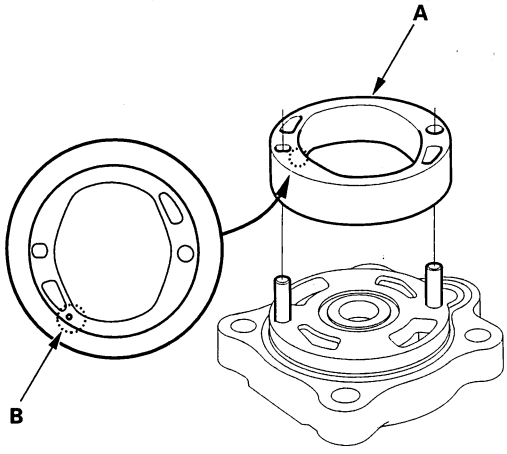

23. Assemble pump rotor (A) to the pump cover (B) with its "•" mark (C) facing up.

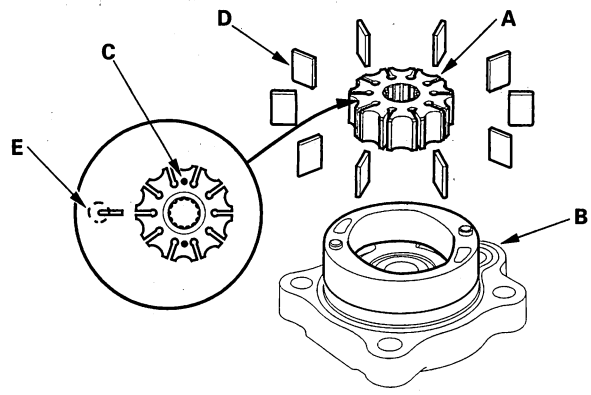

24. Set the 10 vanes (D) in the grooves in the rotor. Make sure that the round ends (E) of the vanes are in contact with the sliding surface of the cam ring.

25. Coat the new O-ring (A) with power steering fluid, and install it into the groove in the side plate (B).

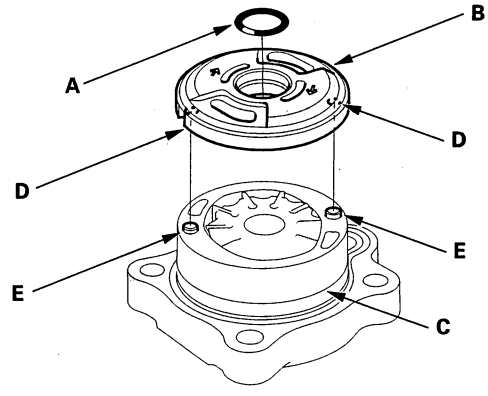

26. Install the side plate on the cam ring (C) by aligning the roll pins set holes (D) in the side plate with the roll pins (E).

BACK

Protected by AR

27. Coat the new O-ring (A) with power steering fluid, and position it in the bottom of the pump housing.

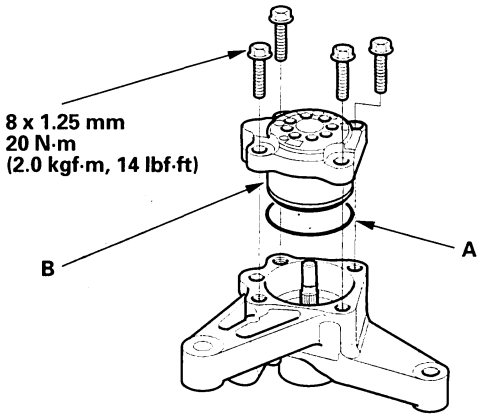

28. Install the pump cover assembly (B) in the pump housing. Tighten the bolts to the specified torque.

29. Coat the flow control valve (A) with power steering fluid, then install it and the spring (B) in the pump housing.

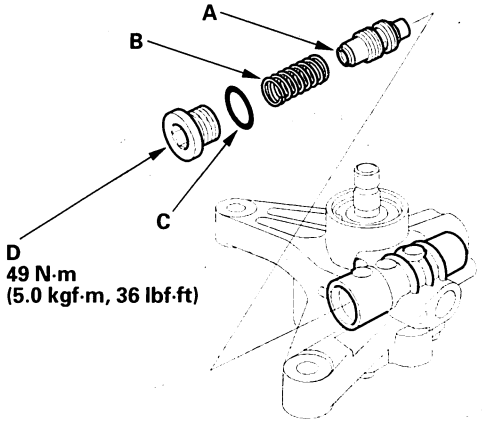

30. Coat the new O-ring (C) with power steering fluid, and install it on the flow control valve cap (D), then install the cap on the pump housing, and tighten it to the specified torque.

31. Coat the new O-ring (A) with power steering fluid, and install it on the inlet joint (B). Install the inlet joint on the pump housing.

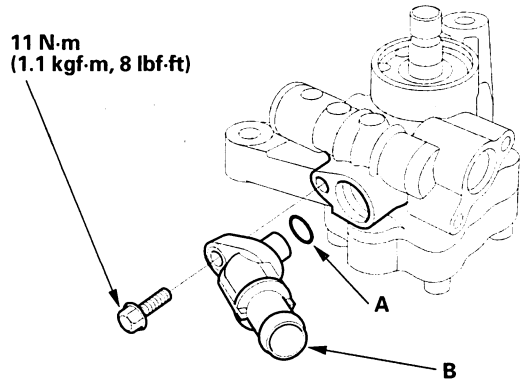

32. Install the pulley (A), then loosely install the pulley nut (B). Hold the steering pump in a vise with soft jaws. Be careful not to damage the pump housing with the jaws of the vise.

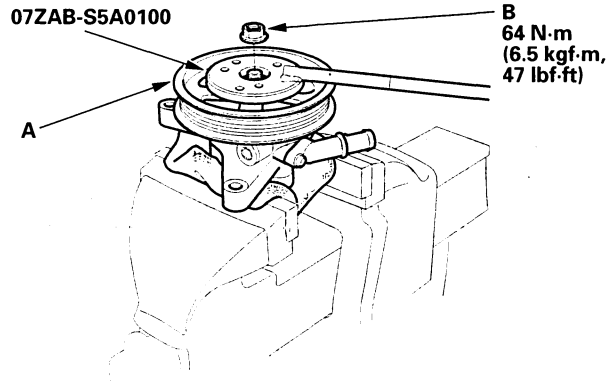

33. Hold the pulley with the special tool, and tighten the pulley nut to the specified torque.

34. Check that the pump turns smoothly by turning the pulley by hand. If it turns hard, loosen the four flange bolts on the cover, then retighten them in same manner as in step 28. Turn the pump again by hand.

Protected by AR

Rack Guide Adjustment

Special Tools Required
Locknut wrench, 40 mm 07916-SA50001

SHOWA-Steering Gearbox

1. Set the wheels in the straight ahead position.
2. Loosen the rack guide screw locknut (A) with the special tool, then remove the rack guide screw (B).

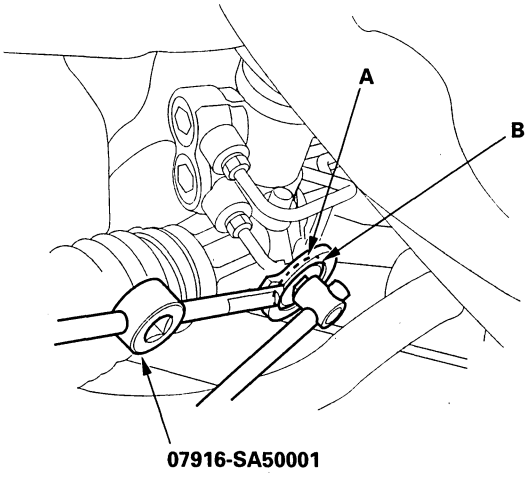

3. Remove the old sealant from the rack guide screw (A), and apply new sealant (Three Bond 1215 or Loctite 5699) all around the threads (B). Loosely install the rack guide screw on the steering gearbox.

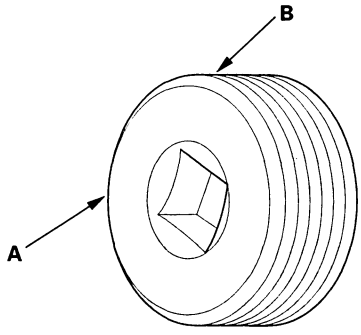

4. Tighten the rack guide screw (A) to 25 N·m (2.5 kgf·m, 18 lbf·ft), then loosen it.

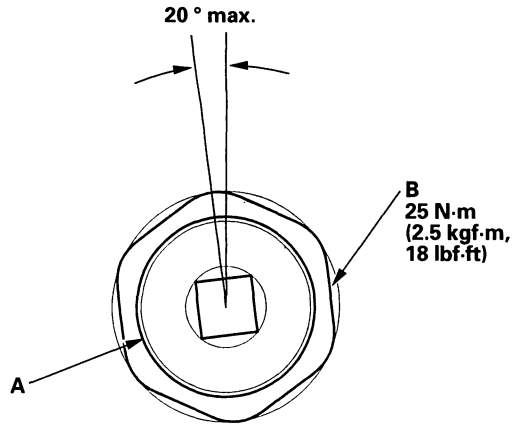

5. Retighten the rack guide screw to 3.9 N·m (0.4 kgf·m, 3 lbf·ft), then back it off to the specified angle.

   Specified return angle: 20 ° max.

6. Hold the rack guide screw stationary with a wrench, and tighten the locknut by hand until it's fully seated.
7. Install the special tool on the locknut (B), and hold the rack guide screw stationary with a wrench. Tighten the locknut to the specified torque with the special tool.
8. Check for unusual steering effort through the complete turning travel.
9. Check the steering wheel rotation play and the power assist, refer to the 2003-2006 Accord Service Manual (see page 17-7).

BACK

Protected by AR

TKS-Steering Gearbox

1. Set the wheels in the straight ahead position.
2. Loosen the rack guide screw locknut (A) with the special tool, then remove the rack guide screw (B).

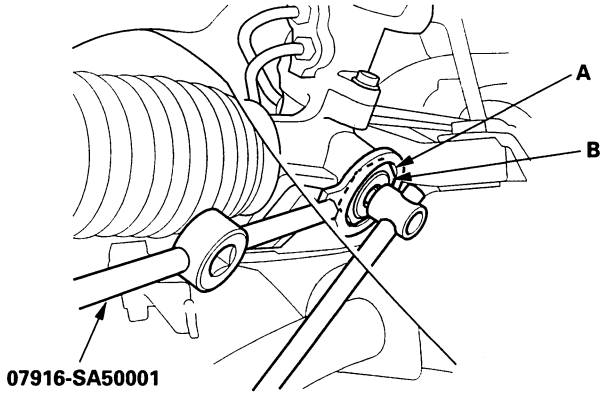

3. Remove the old sealant from rack guide screw (A) threaded section, and apply new sealant (Loctite 565) all around the first three threads (B). Loosely install the rack guide screw on the steering gearbox.

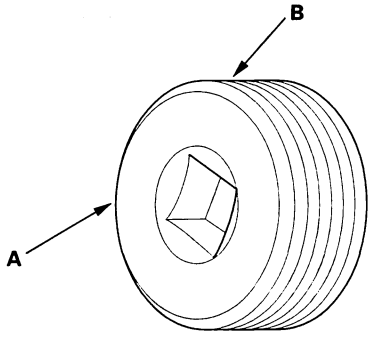

4. Tighten the rack guide screw (A) to 22 N·m (2.2 kgf·m, 16 lbf·ft), then loosen it.

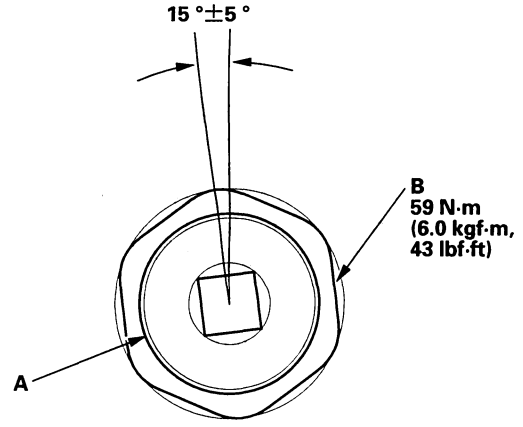

5. Retighten the rack guide screw to 3.9 N·m (0.4 kgf·m, 3 lbf·ft), then back it off to the specified angle.

   Specified return angle: 15 °±5 °

6. Hold the rack guide screw stationary with a wrench, and tighten the locknut by hand until it's fully seated.
7. Install the special tool on the locknut (B), and hold the rack guide screw stationary with a wrench. Tighten the locknut to the specified torque with the special tool.
8. Check for unusual steering effort through the complete turning travel.
9. Check the steering wheel rotation play and the power assist, refer to the 2003-2006 Accord Service Manual (see page 17-7).

Protected by AR

Steering Gearbox Removal

Special Tools Required
- Ball joint remover, 28 mm 07MAC-SL0A202
- Subframe adaptor EQS02C000016
  (Available through the Honda Tool and Equipment program 888-424-6857)

Note these items during removal:
- Using solvent and a brush, wash any oil and dirt off the valve body unit, its lines, and the end of the gearbox. Blow dry with compressed air.
- Make sure to remove the steering wheel before disconnecting the steering joint. Damage to the cable reel can occur.

1. Drain the power steering fluid (see step 1 on page 17-10).
2. Raise the front of vehicle, and support it with safety stands in the proper locations, refer to the 2003-2006 Accord Service Manual (see page 1-14).
3. Remove the front wheels.
4. Remove the steering wheel, refer to the 2003-2006 Accord Service Manual (see page 17-22).
5. Remove the steering joint cover A.

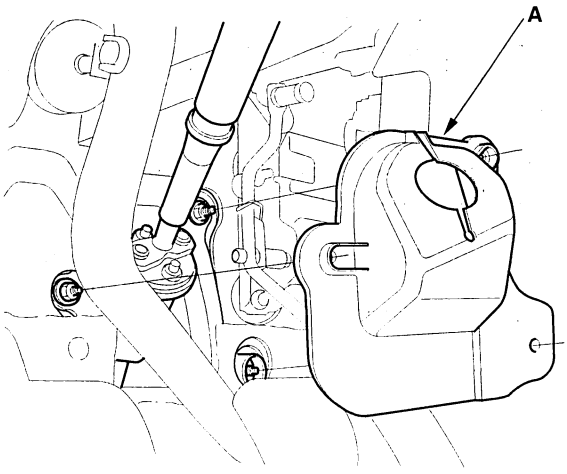

6. Remove the steering joint bolt (A), and disconnect the steering joint by moving the steering joint (B) toward the column. Hold the slider shaft (C) on the column with a piece of wire (D) between the joint yoke (E) on the slider shaft to the joint yoke on the upper shaft, refer to the 2003-2006 Accord Service Manual (see page 17-25).

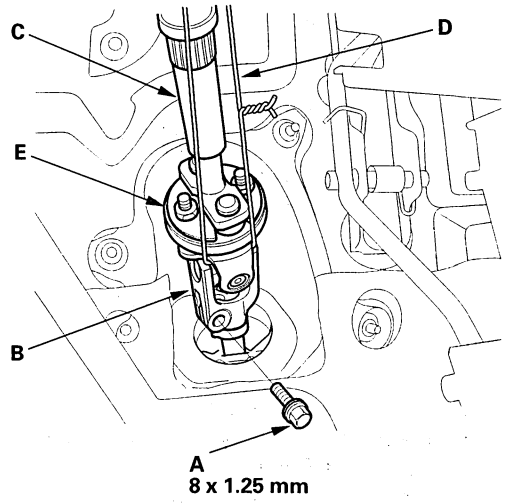

7. Remove the steering joint cover B. Be careful not to damage the mating surface on the joint cover B and pinion shaft grommet. Replace the cover seal (A) if necessary.

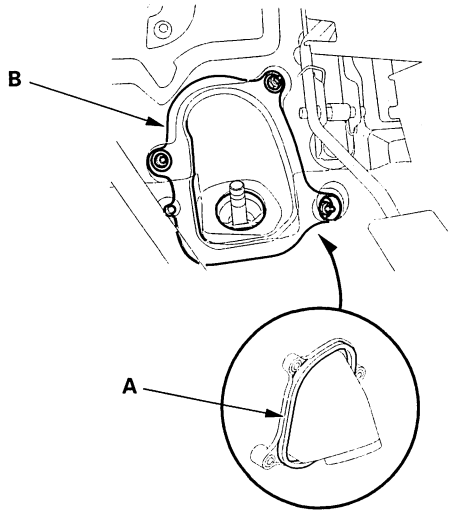

BACK

Protected by AR

8. Remove and discard the cotter pin (A) from the tie-rod ball joint nut (B), then loosen the nut.

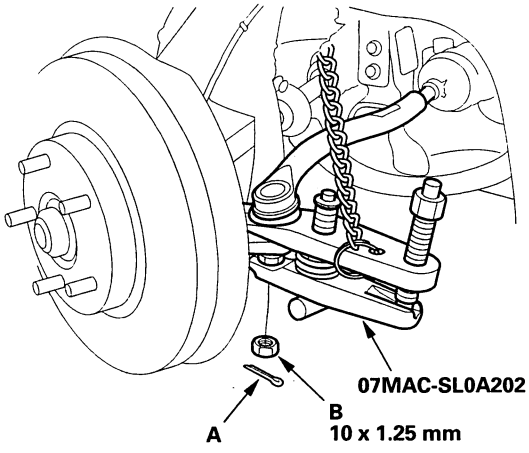

9. Separate the tie-rod ball joint and knuckle using the special tool, refer to the 2003-2006 Accord Service Manual (see page 18-11).

10. Remove the P/S heat baffle plate (A).

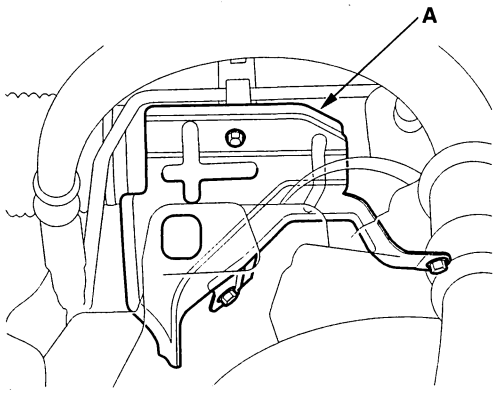

11. Remove the feed line holder mounting bolt (A) on the front suspension subframe.

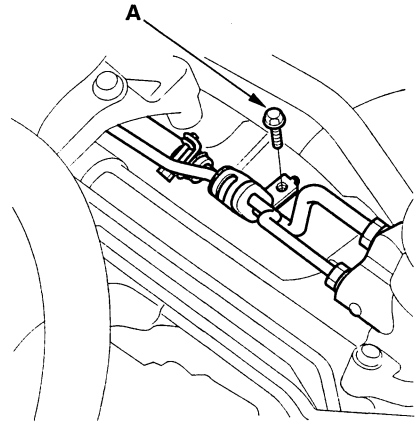

12. Remove the feed line holder mounting bolt (A) and return hose (B) from the gearbox mounting bracket (C).

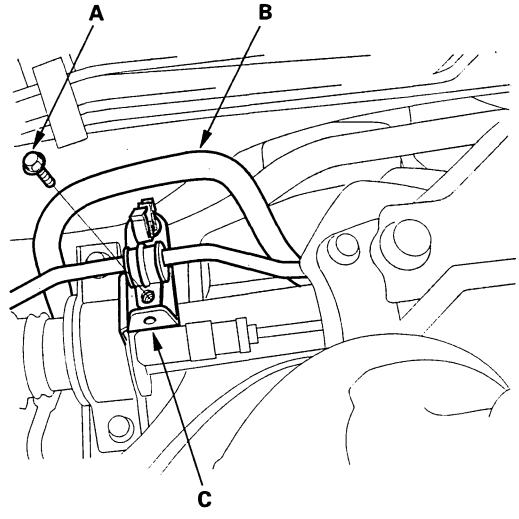

(cont'd)

Protected by AR

Steering Gearbox Removal (cont'd)

13. Place several shop towels under the line connections, and cover the gearbox mounting part to protect it from the power steering fluid. Loosen the flare nut (A), and disconnect the feed line (B).

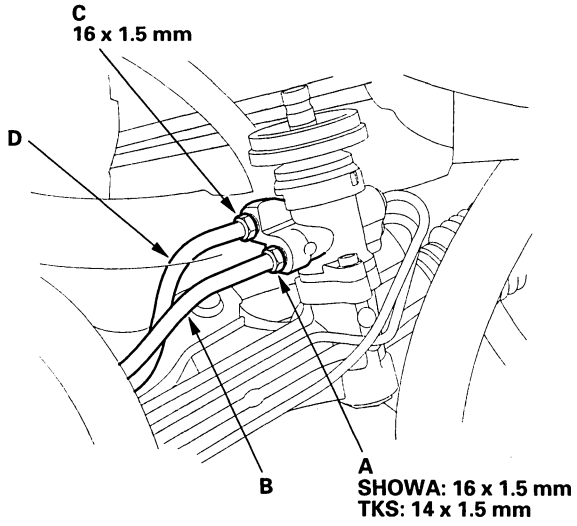

14. Loosen the flare nut (C), and disconnect the return line (D).

15. After disconnecting the lines, plug or seal them with a piece of tape or equivalent to prevent foreign materials from entering.

    NOTE: Do not loosen the cylinder line A and B between the valve body unit and the cylinder.

16. Attach the special tool to the front suspension subframe (A) with hanging the hook of the special tool over the front of the subframe, then tighten the special tool screw.

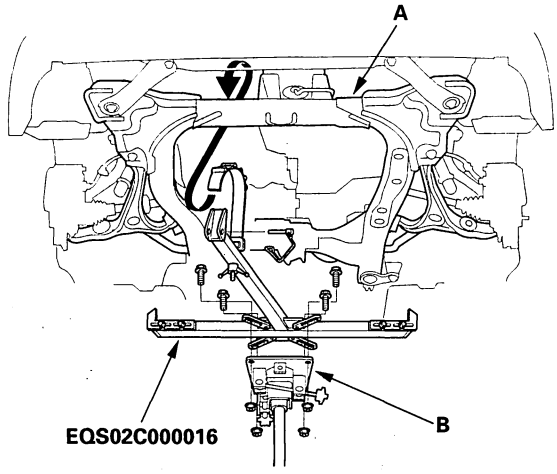

17. Raise the jack (B) and line up the slots in the arms with the bolt holes on the corner of the jack base, then attach them with bolts securely.

BACK

Protected by AR

18. Remove the front suspension subframe right middle mount bolts (A).

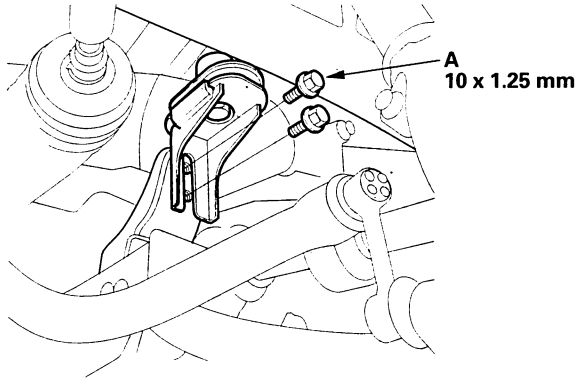

19. Remove the front suspension subframe left middle mount (A).

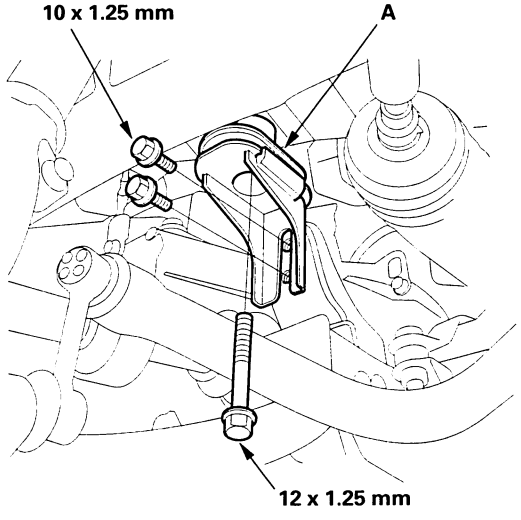

20. Remove the steering gearbox mounting bolts on the left gearbox mount, and remove the steering stiffener plate (A).

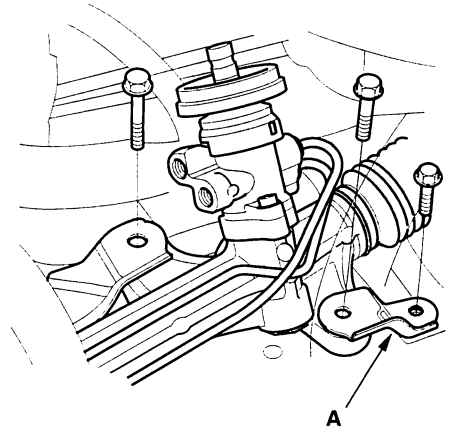

21. Remove the front suspension subframe rear bracket (A) mounting bolt (B).

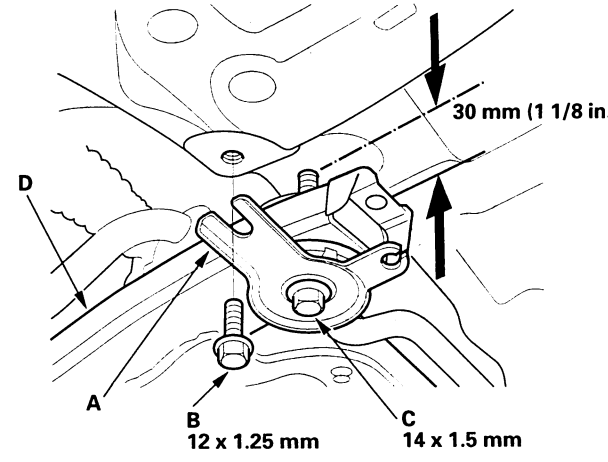

22. Loosen the two front suspension subframe mounting bolts (C) on right and left, and slowly lower the jack supporting subframe (D) with special tool until the subframe has dropped 30 mm (1 1/8 in.) total.

(cont'd)

Protected by AR

Steering Gearbox Removal (cont'd)

23. Remove the two flange bolts from the right side of the gearbox, then remove the gearbox mounting bracket (A) and cushion (B).

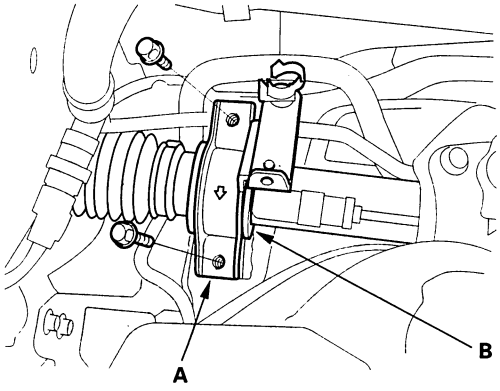

24. Move the steering gearbox toward the front, and remove the pinion shaft grommet (A) from the top of the valve body unit.

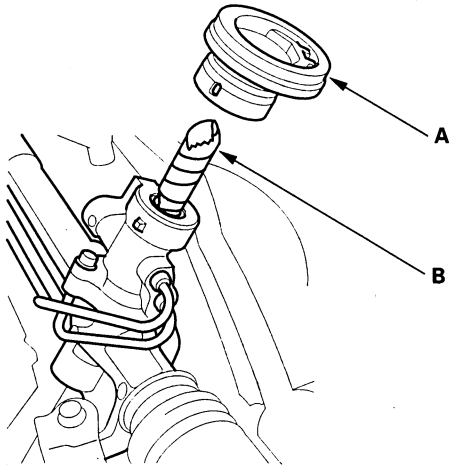

25. Apply vinyl tape (B) to the splines on the pinion shaft.

26. Apply vinyl tape or equivalent material (A) to brake lines (B) to protect it from the pinion shaft.

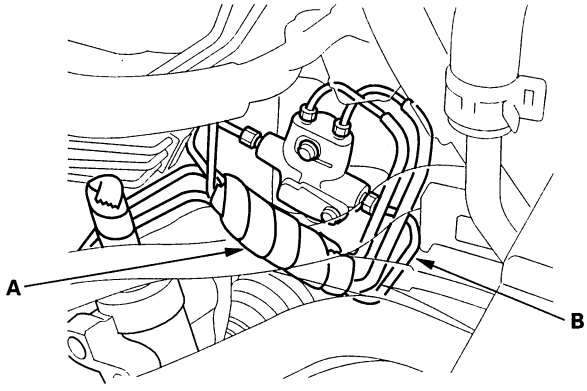

BACK

Protected by AR

27. Move the steering gearbox to the driver's side, and rotate it so the pinion shaft points toward the front of the vehicle.

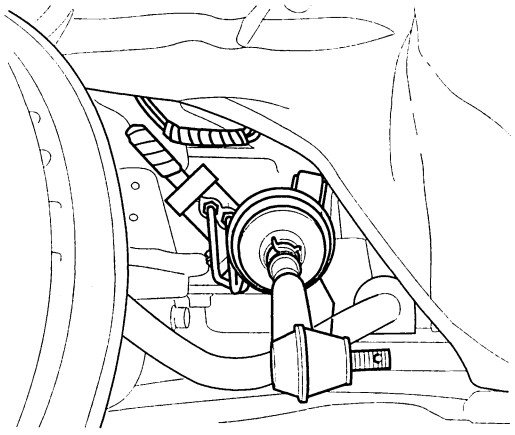

28. Carefully move the steering gearbox as an assembly toward the driver's side of the vehicle until the pinion shaft clears the wheelwell opening. Be careful not to damage the brake lines with the pinion shaft.

29. Remove the steering gearbox through the wheelwell opening on the driver's side.

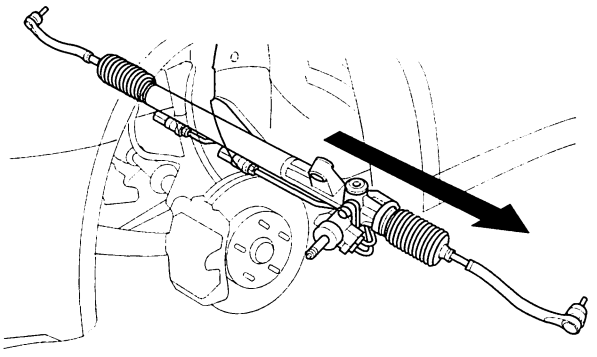

30. After removing the steering gearbox, make sure that no power steering fluid gets on the gearbox mount cushions, gearbox housing, surface of the subframe and stiffener. Wipe off any spilled fluid at once.

Protected by AR

Steering Gearbox Overhaul

Exploded View: TKS-Steering Gearbox (Manufactured in U.S.A. and Mexico plants only)

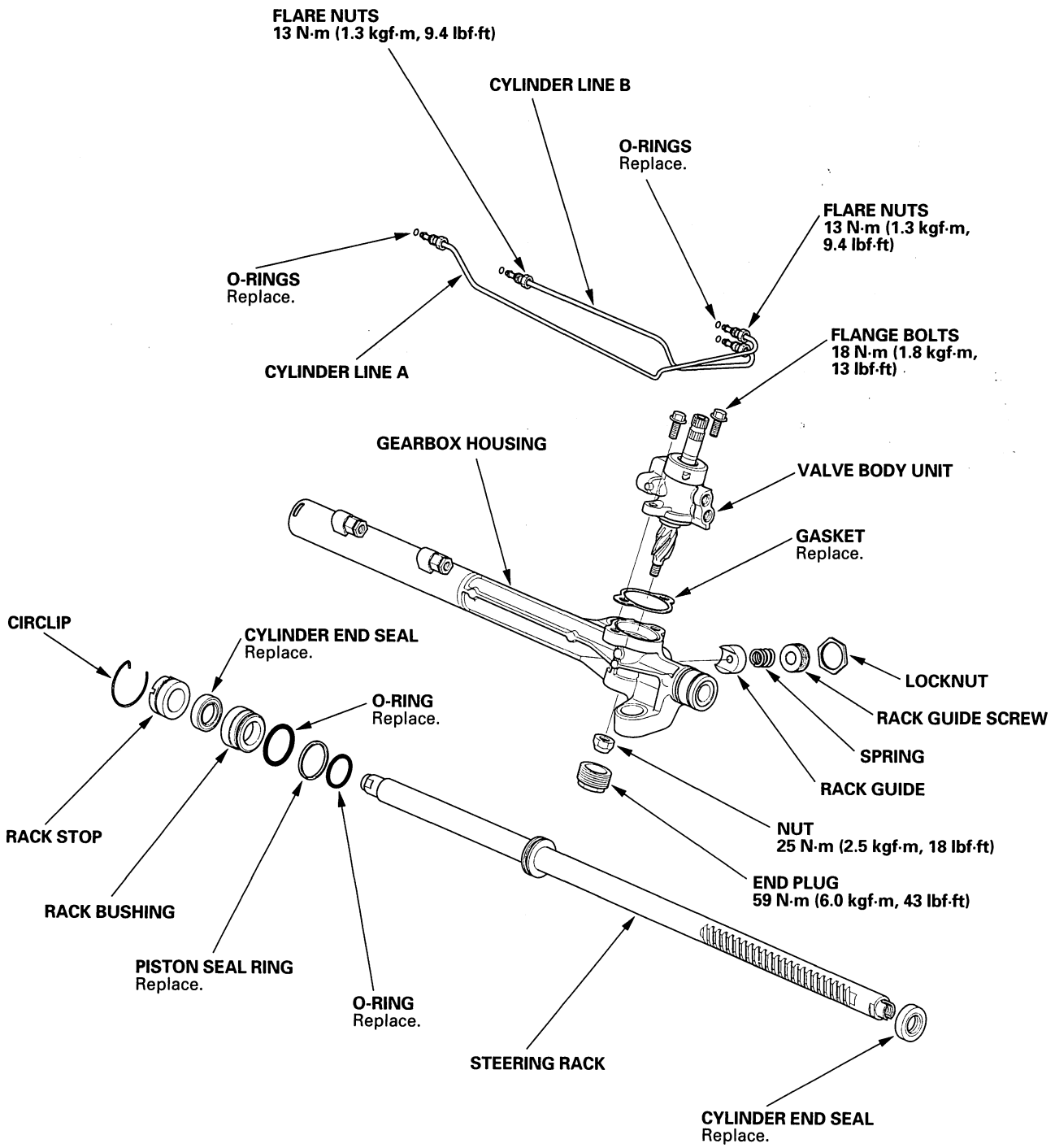

BACK

Protected by AR

Special Tools Required
- Driver handle, 480 mm 070GD-0010100
- Attachment, 24 x 26 mm 07746-0010700
- Pilot, 22 mm 07746-0041000
- Driver 07749-0010000
- Attachment, 42 x 47 mm 07746-0010300
- Piston seal ring guide 07ZAG-S7A0100
- Piston seal ring sizing tool 07ZAG-S7A0200
- Pincer Oetiker 1098, or equivalent, commercially available

NOTE:
- Refer to the Exploded View as needed during the following procedure.
- For the Showa-made steering gearbox overhaul procedures, refer to the 2003-2006 Accord Service Manual (see page 17-37).

Removal

1. Remove the steering gearbox (see page 17-20).

Disassembly: TKS-Made Steering Gearbox

2. Remove the boot bands (A) and tie-rod clips (B). Pull the boots away from the ends of the steering gearbox.

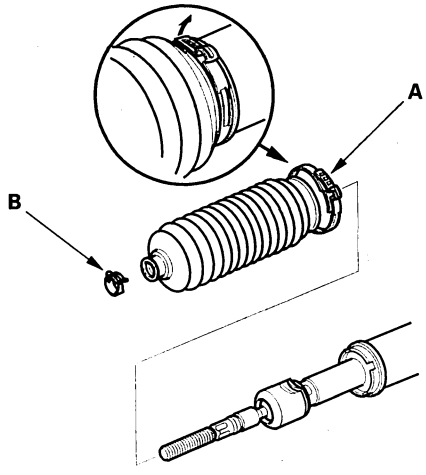

3. Unbend the lock washer (A).

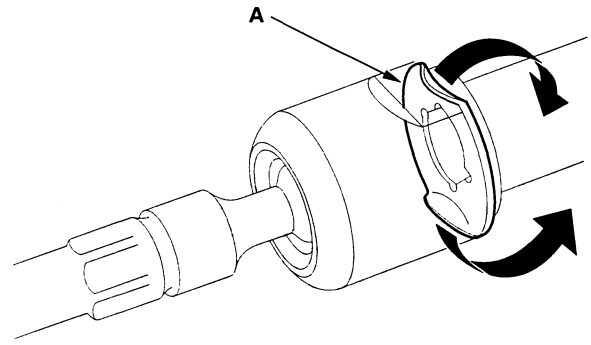

4. Hold the flat surface sections (A) of the steering rack (B) with a wrench, and unscrew both rack ends (C) with a wrench. Be careful not to damage the rack surface with the wrench.

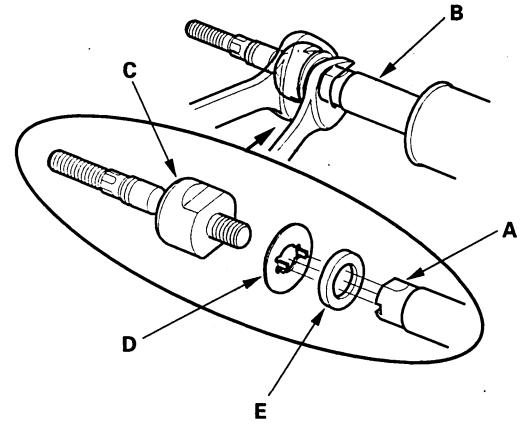

5. Remove the lock washer (D) and stop washer (E).

(cont'd)

Protected by AR

Steering Gearbox Overhaul (cont'd)

6. Loosen the locknut (A), then remove the rack guide screw (B).

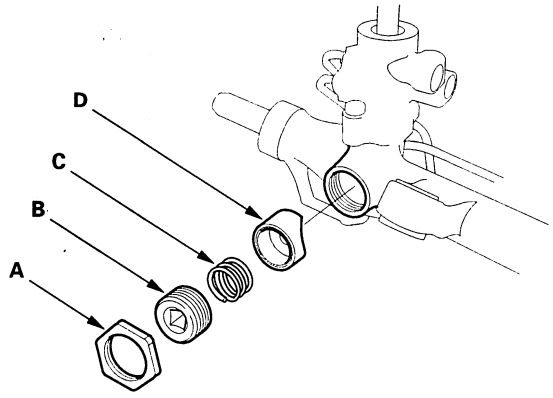

7. Remove the spring (C) and the rack guide (D) from the gearbox housing.

8. Remove the cylinder lines from the gearbox.

   NOTE: Use a second wrench when loosening the cylinder lines to avoid damage to the fittings on the steering gearbox. Do not loosen the A and B connectors.

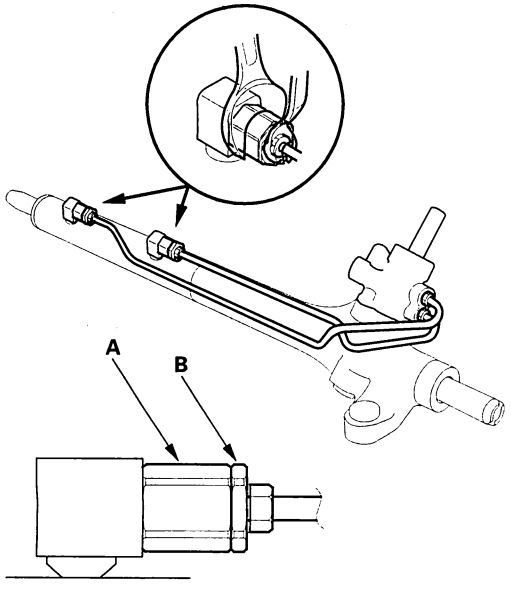

9. Drain the fluid from the cylinder fittings by slowly moving the steering rack back and forth.

10. Remove the end plug (A) from the gearbox housing, then remove the nut (B) from the pinion shaft end.

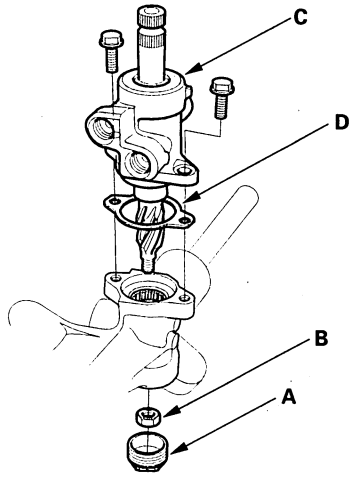

11. Remove the two flange bolts, the valve body unit (C), and gasket (D) from the gearbox. Check that the valve turns smoothly by turning the pinion shaft. If any play or roughness is felt, replace the valve body unit with a new part. Do not try to disassemble the valve body unit.

12. Slide the steering rack all the way to the left.

13. Turn the rack stop (A) counterclockwise until the end (B) of the circlip (C) sticks out from the hole (D) in the cylinder housing. Then turn it clockwise to remove the circlip.

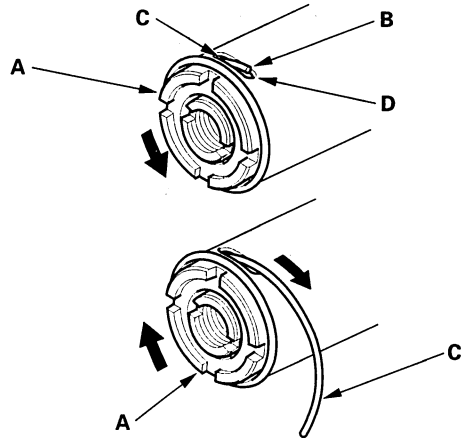

BACK

Protected by AR

14. Remove the rack stop (A), rack bushing (B), and steering rack (C) from the steering gearbox.

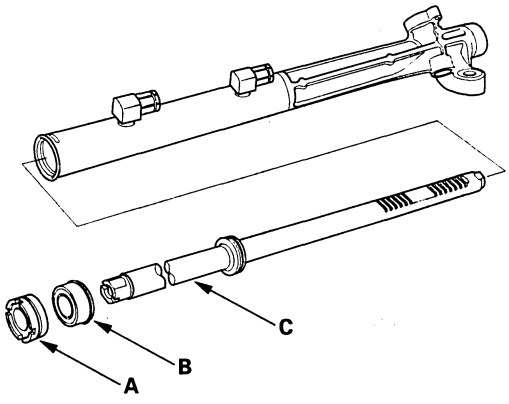

15. Remove the O-ring (A) and cylinder end seal (B) from the rack bushing (C).

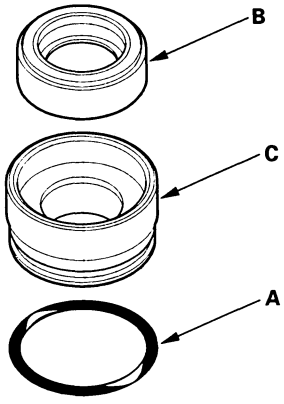

16. Carefully pry the piston seal ring (A) and O-ring (B) off the rack piston. Be careful not to damage the inside of seal ring groove and piston edges when removing the seal ring.

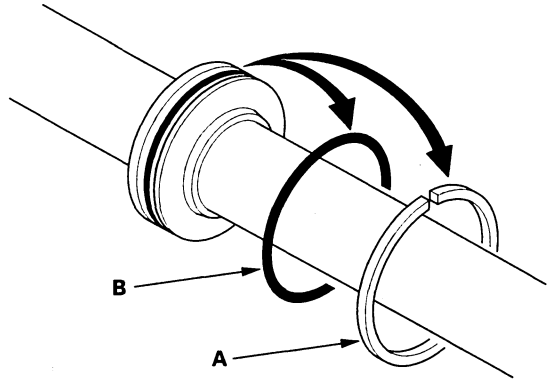

(cont'd)

Protected by AR

Steering Gearbox Overhaul (cont'd)

17. Insert the special tools, and carefully place it on the cylinder end seal (A) as shown. Make sure that the special tool is securely positioned on the cylinder end seal.

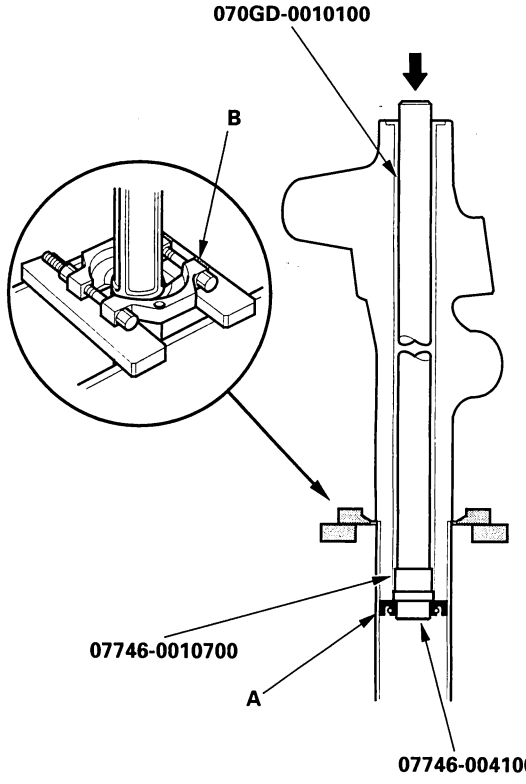

18. Install the bearing separetor (B) on the gearbox housing. Set the steering gearbox in a press so the gearbox housing points upward, then push out the cylinder end seal by pressing on the end of the special tool.

19. Remove the steering gearbox from the press, and set a driver extension (A) on the special tool (driver handle). Place the steering gearbox in a press, then remove the cylinder end seal (B) from the gearbox by pressing on the end of the extension.

    Note these items when pressing the cylinder end seal:
    - Keep the tool straight to avoid damaging the cylinder wall. Check the tool angle, and correct it if necessary, when removing the cylinder end seal.
    - Use a press to remove the cylinder end seal. Do not try to remove the seal by striking the tool; striking the tool would break the cylinder end seal, and the seal would remain in the gearbox.

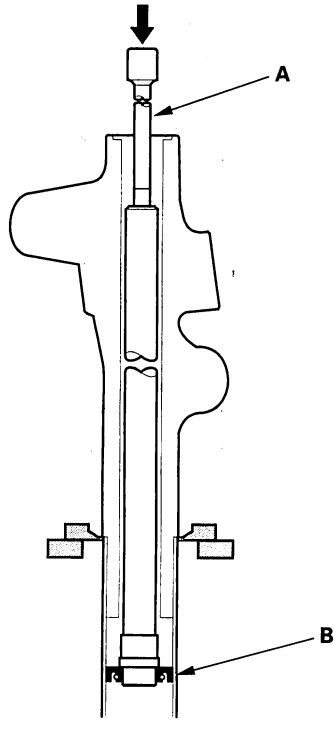

BACK

Protected by AR

Reassembly

20. Coat the special tool with power steering fluid, then slide it onto the rack, big end first.

21. Position the new O-ring (A) and new piston seal ring (B) on the special tool, then slide them down toward the big end of the tool.

    Note these items during reassembly:
    - Do not over expand the resin seal rings. Install the resin seal rings with care so as not to damage them. After installation, make sure you contract the seal ring using the special tool (sizing tool).
    - Replace the piston's O-ring and seal ring as a set.

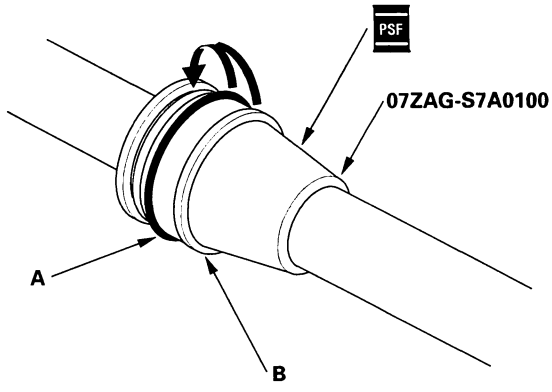

22. Pull the O-ring off into the piston groove, then pull the piston seal ring off into the piston groove on top of the O-ring.

23. Coat the piston seal ring (A) and the inside of the special tool with power steering fluid, then carefully slide the tool onto the rack and over the piston seal ring.

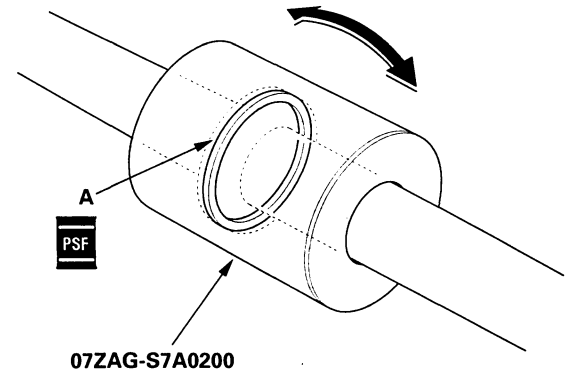

24. Move the special tool back and forth several times to make sure the piston seal ring fits snugly in the piston.

(cont'd)

Protected by AR

Steering Gearbox Overhaul (cont'd)

25. Wrap vinyl tape around the rack teeth and rack end edges, then coat the surface of the tape with power steering fluid. Make sure that the vinyl tape is wrapped carefully so that there is no stepped portion.

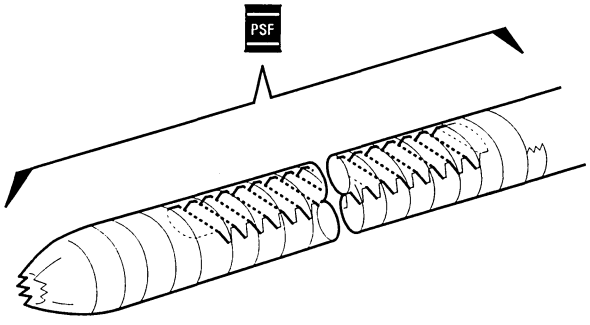

26. Coat the inside surface of the new cylinder end seal (A) with power steering fluid, then install it onto the steering rack with its grooved side toward the piston. When installing the cylinder end seal, be careful not to damage the lip of the seal with the edges or teeth of the steering rack.

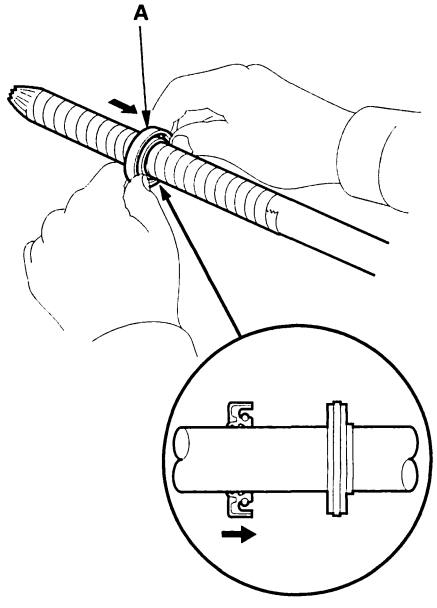

27. Remove the vinyl tape from the steering rack, then remove any adhesive residue.

28. Apply multipurpose grease to the steering rack teeth, then insert the steering rack into the gearbox housing. Be careful not to damage to inner surface of the cylinder wall with the rack edges.

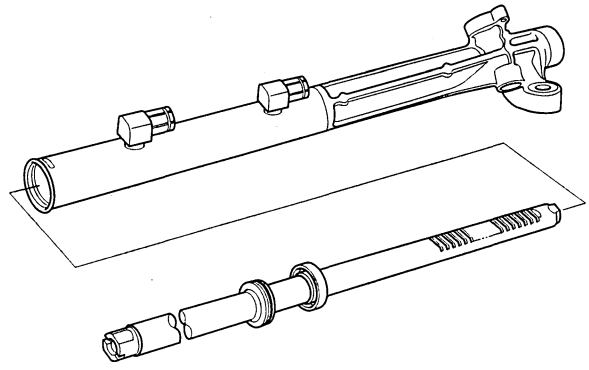

29. Insert a deep socket (A) onto the steering rack as shown.

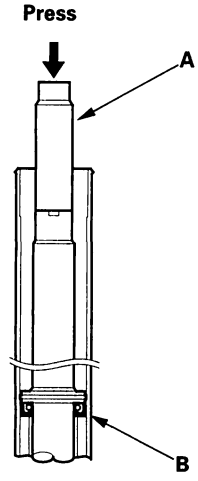

30. Install the cylinder and seal (B) into the bottom of the cylinder by pressing on the tool with a press. Do not push on the tool with excessive force as it may damage the cylinder end seal.

31. Remove the tool, and center the steering rack.

BACK

Protected by AR

32. Wrap vinyl tape around the rack end edges, and coat the surface of the tape with power steering fluid. Make sure that the vinyl tape is wrapped carefully so there is no stepped portion.

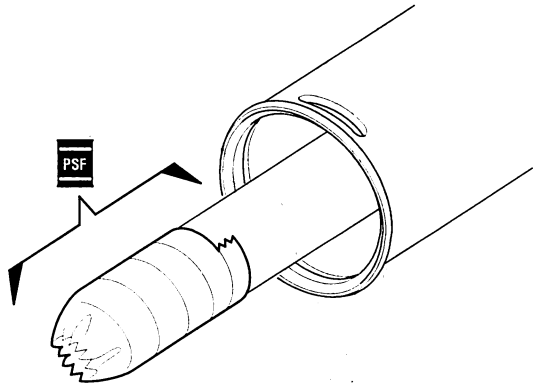

33. Coat the inside surface of the new cylinder end seal (A) with power steering fluid, then press it into the rack bushing (B) using the special tools.

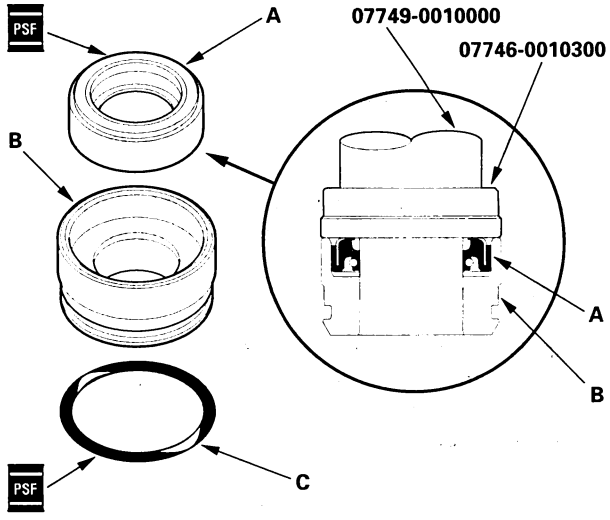

34. Coat the new O-ring (C) with power steering fluid, and carefully fit it in the groove of the rack bushing.

35. Install the rack bushing onto the steering rack with the cylinder end seal grooved side toward the piston. Push in the rack bushing with your finger.

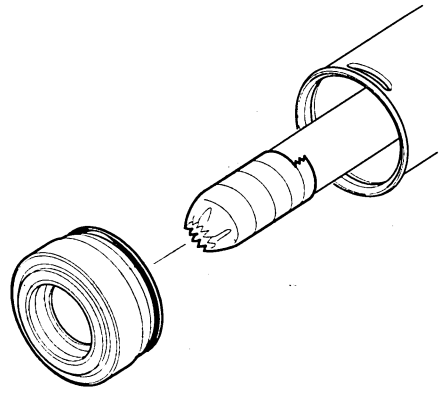

36. Remove the vinyl tape from the steering rack, then remove any adhesive residue.

37. Install the rack stop (A) onto the steering rack so the hole (B) is aligned with the slot (C) on the cylinder housing.

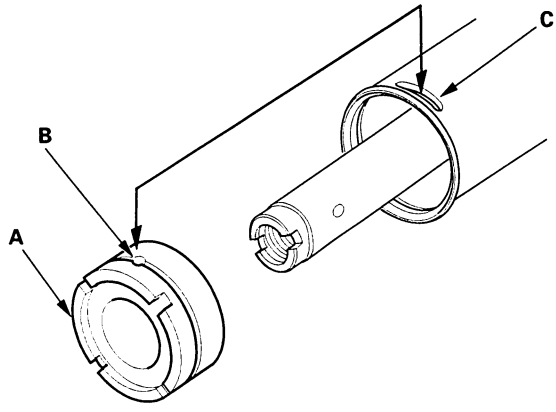

(cont'd)

Protected by AR

Steering Gearbox Overhaul (cont'd)

38. Insert the end of the circlip (A) into the hole (B) of the rack stop (C). Turn the rack stop counterclockwise until the circlip is fully seated in the rack stop.

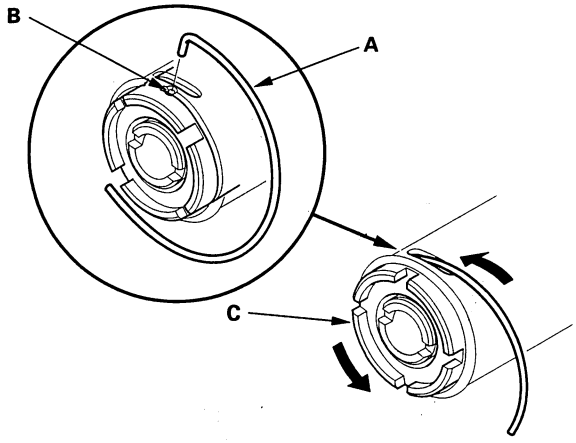

39. Apply multipurpose grease to the bearings (A) in the gearbox housing, and install the valve body unit (B) and new gasket (C) by engaging the gears. Note the valve body unit installation position (direction of line connections). Then loosely install the two flange bolts.

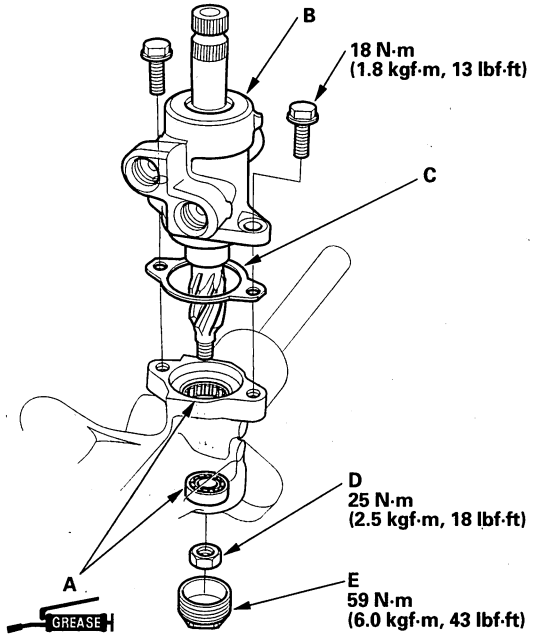

40. Install the new self-locking nut (D) onto the pinion shaft end, and tighten to the specified torque.

41. Tighten the flange bolts to the specified torque.

42. Apply new sealant (Loctite 565) all the way around the threads on the end plug (E), install the end plug onto the gearbox housing, and tighten it to the specified torque.

43. After tightening, use a drift to stake (A) the end plug shoulder against the gearbox housing.

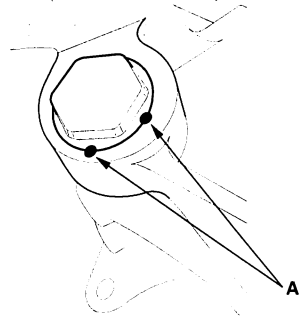

BACK

Protected by AR

44. Before installing the cylinder lines, coat the new O-rings with power steering fluid, then install the lines.

    Note these items during reassembly:
    - Thoroughly clean the joints of the cylinder lines. The joints must be free of foreign material.
    - Install the cylinder lines by tightening the flare nuts by hand first, then tighten the flare nuts to the specified torque.

    NOTE: Use a second wrench when tightening the cylinder lines to avoid damaging the fittings on the steering gearbox.

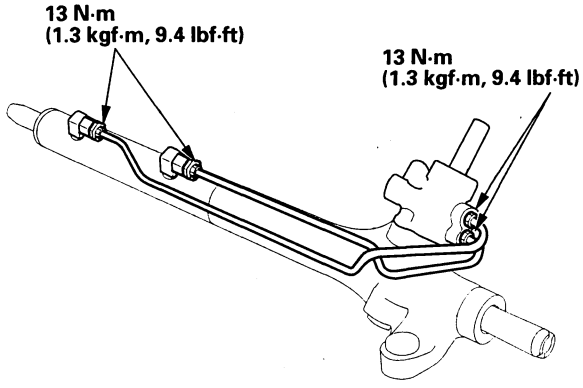

45. Apply multipurpose grease to the sliding surface of the rack guide (A), and install it onto the gearbox housing.

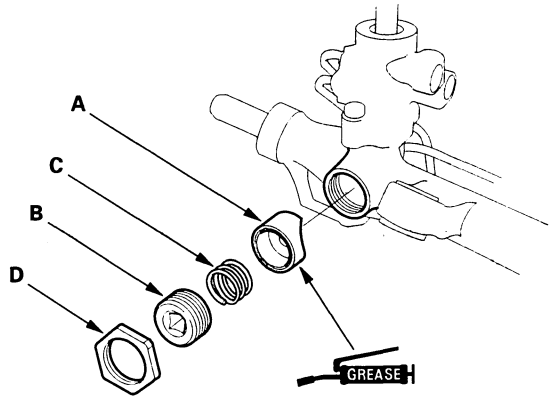

46. Apply new sealant (Loctite 565) all the way around the first three threads of the rack guide screw (B), then install the spring (C), rack guide screw, and locknut (D).

47. Adjust the rack guide screw (see page 17-19). After adjusting, check that the rack moves smoothly by sliding it right and left.

48. Install the new stop washer (A) and lock washer (B). Align the lock washer tabs (C) with the slots (D). Install the rack end (E) while holding the lock washer in place. Repeat this step for the other side of the rack.

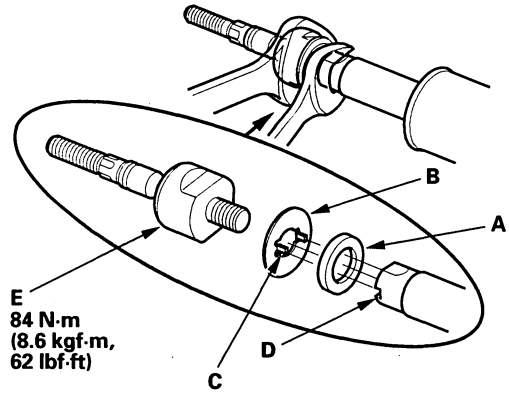

49. Hold the flat surface sections of the steering rack with a wrench, and tighten both rack ends. Be careful not to damage the rack surface with the wrench.

50. Bend the lock washer (A) back against the flat spots on the rack end joint housing.

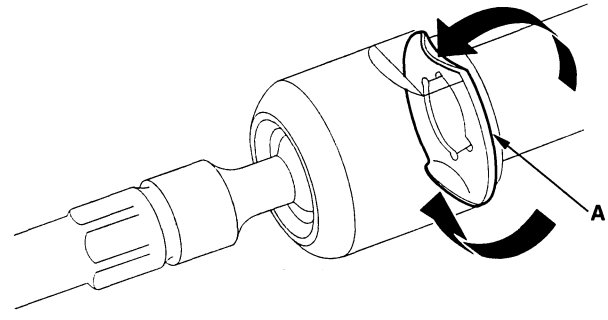

(cont'd)

Protected by AR

Steering Gearbox Overhaul (cont'd)

51. Apply multipurpose grease to the circumference of the rack end joint housing (A).

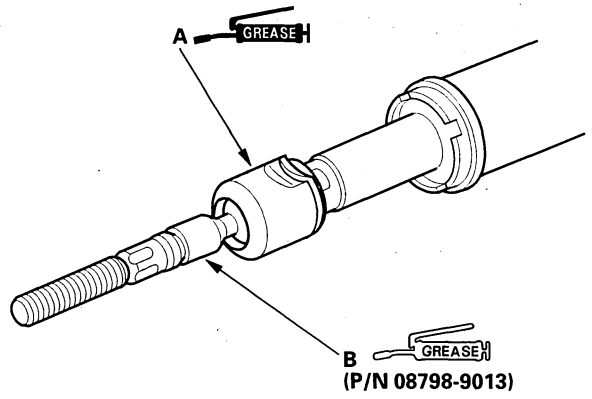

52. Apply a light coat of silicone grease to the boot grooves (B) on the rack ends.

53. Center the steering rack within its stroke.

54. Clean off any grease or contamination from the boot installation surfaces (A) on the gearbox housing. Install the boots (B) on the rack ends with the tie-rod clips (C), and fit the boot end on the housing properly.

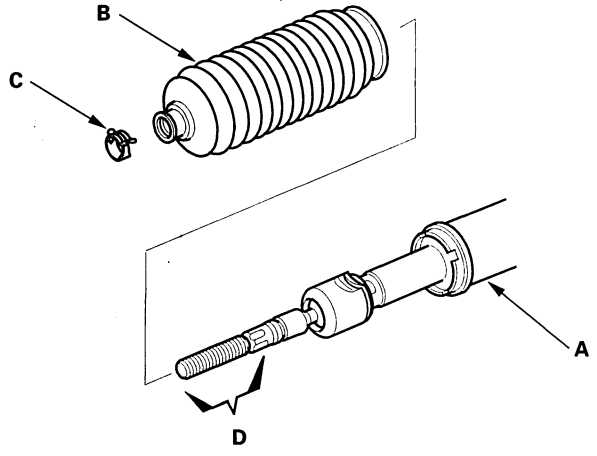

55. After installing the boots, wipe the grease off the threaded section (D) of the rack end.

56. Install the new boot bands by aligning the tabs (A) with the holes (B) of the band.

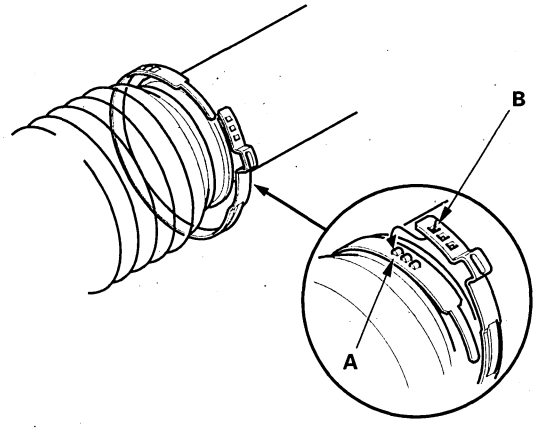

57. Close the ear portion (A) of the band with a commercially available Oetiker 1098 pincer or equivalent (B).

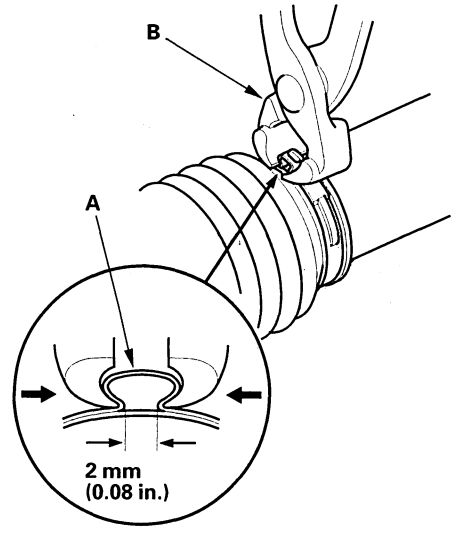

58. Slide the rack right and left to be certain that the boots are not deformed or twisted.

BACK

Protected by AR

Steering Gearbox Installation

Special Tools Required
Subframe adaptor EQS02C000016
(Available through the Honda Tool and Equipment program 888-424-6857)

1. Before installing the steering gearbox, make sure that no power steering fluid is on the mating surface of the gearbox and the front suspension subframe. To prevent the gearbox mounting bolts from loosening after the installation, remove the power steering fluid from the mount cushions and bolt holes.

2. Apply a mild soap and water solution to both sides of the mount cushion mating surfaces (A).

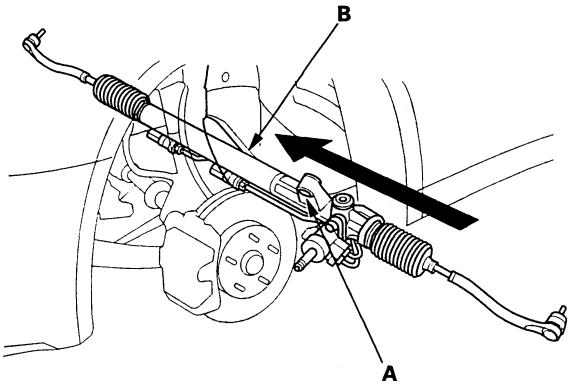

3. Pass the cylinder of the steering gearbox (B) through the wheelwell opening on the driver's side.

4. Carefully move the steering gearbox toward the passenger's side until the pinion shaft clears the wheelwell opening on the body.

5. Rotate the steering gearbox so the pinion shaft (A) points upward.

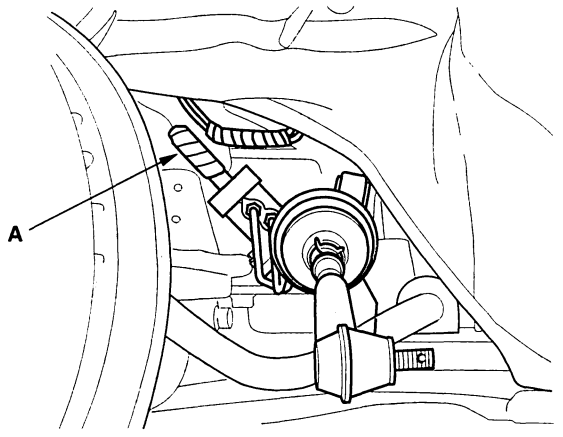

6. Continue moving the gearbox toward the passenger's side until the steering gearbox is in position. Make sure the power steering return line and feed line are routed above the gearbox.

7. Remove the vinyl tape from the pinion shaft, and install the pinion shaft grommet (A). Align the slot in the pinion shaft grommet with the lug portion (B) on the valve housing.

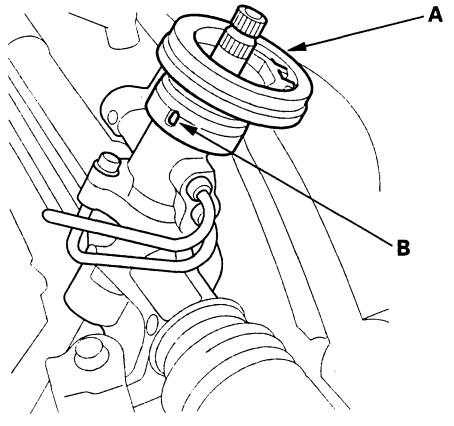

(cont'd)

Protected by AR

Steering Gearbox Installation (cont'd)

8. Position the cutout (A) on the mounting cushion (B) as shown, and install it on the cylinder of the gearbox securely.

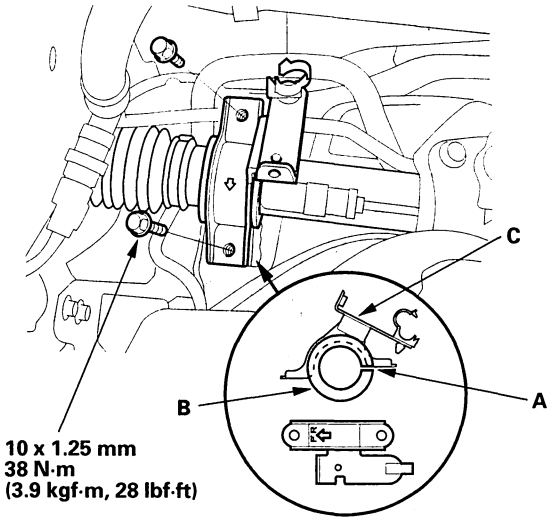

9. Install the gearbox mounting bracket (C) over the mounting cushion, and loosely install the two flange bolts.

10. Install the steering stiffener plate (A) and gearbox mounting bolts on the left side of the gearbox, then tighten them to the specified torque.

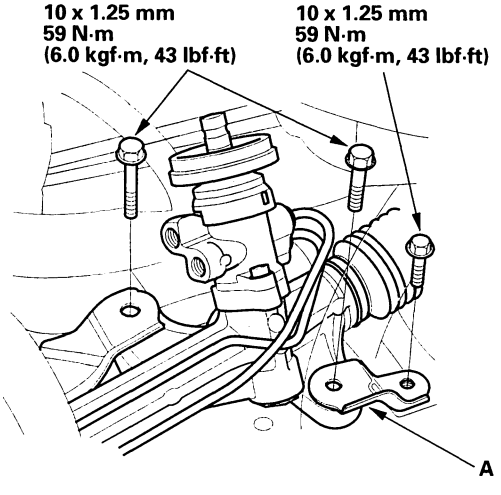

11. Tighten the flange bolts on the right side of the gearbox alternately in two or more steps to the specified torque.

12. Connect the return line (A) securely, and tighten the flare nut to the specified torque.

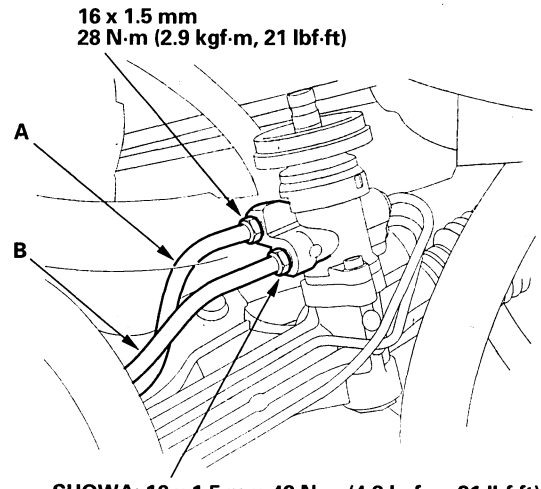

13. Connect the feed line (B) securely, and tighten the flare nut to the specified torque.

14. Install the feed line holder (A) and return hose (B) on the gearbox mounting bracket (C).

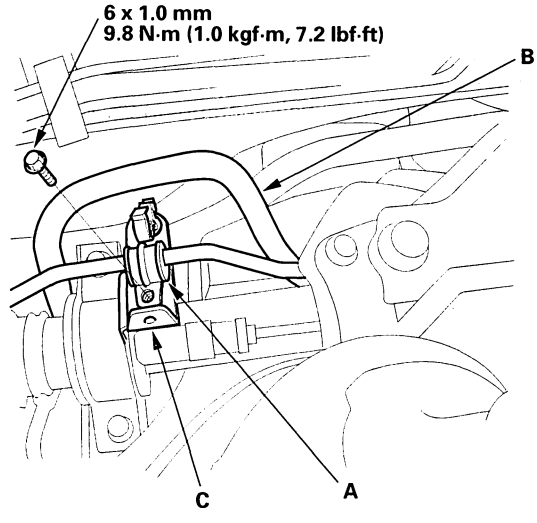

BACK

Protected by AR

15. Install the feed line holder (A) on the subframe. Make sure that there is no interference between the feed and return lines any other parts.

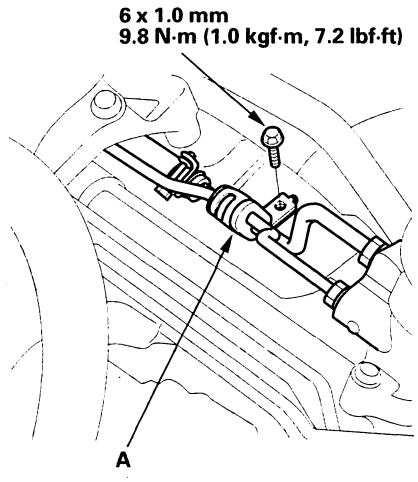

16. Install the P/S heat baffle plate (A).

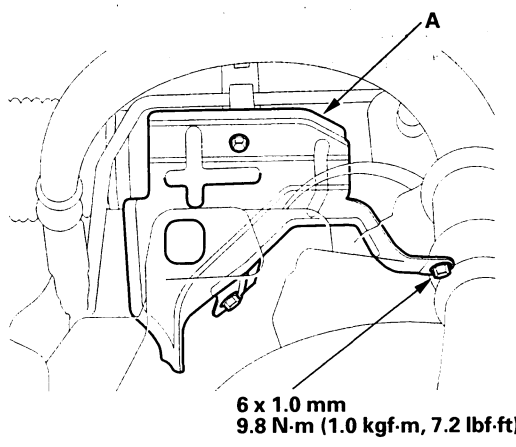

17. Raise the jack supporting front suspension subframe (A) with the special tool until the subframe is in position, refer to the 2003-2006 Accord Service Manual (see page 20-228).

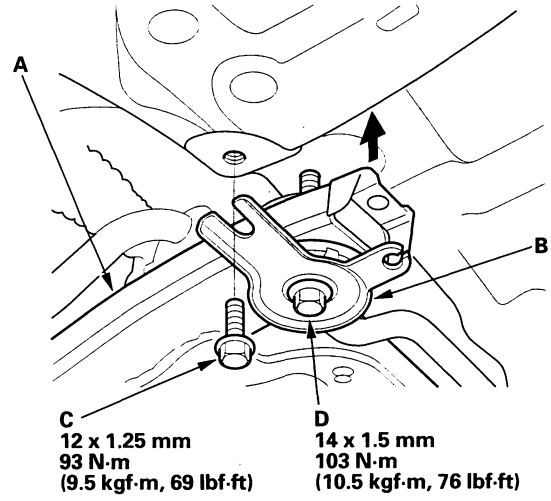

18. Install the front suspension subframe rear bracket (B) mounting bolt (C), then tighten the new subframe mounting bolt (D) to the specified torque.

(cont'd)

Protected by AR

Steering Gearbox Installation (cont'd)

19. Install the front suspension subframe left middle mount (A).

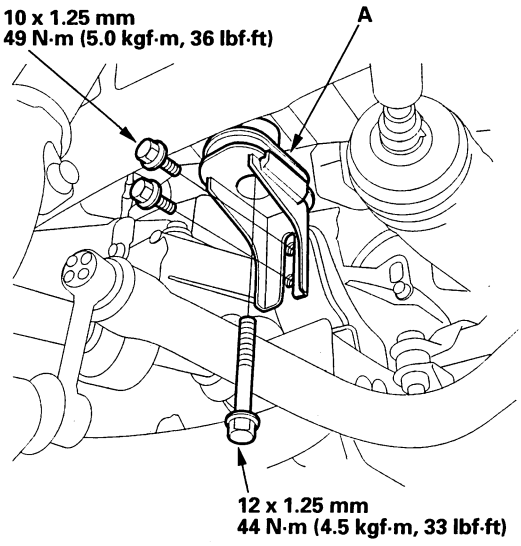

20. Install the front suspension subframe right middle mount bolts (A).

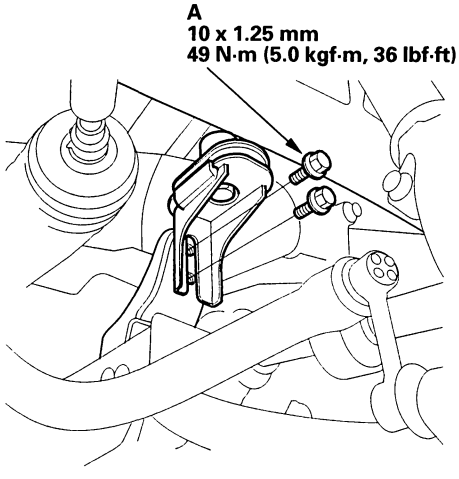

21. Wipe off any grease contamination from the ball joint tapered section and threads. Then reconnect the tie-rod end (A) to the knuckle arms.

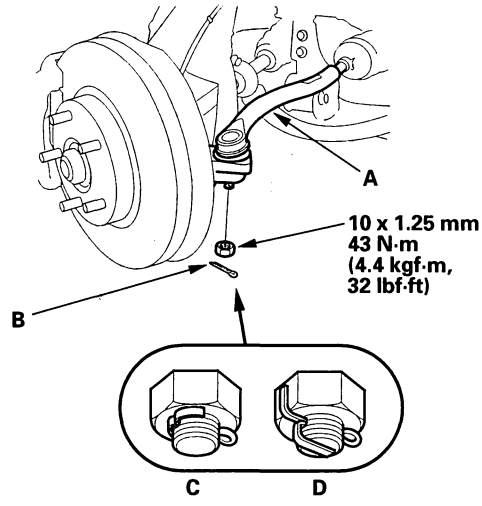

22. Install the tie-rod end ball joint nut, and tighten it to the specified torque. Then install the new cotter pin (B), and bend it as shown (C) or (D).

BACK

Protected by AR

23. Install the new cover seal (A) all the way around in the steering joint cover B. Make sure there are no wrinkles in the seal, then install the steering joint cover B.

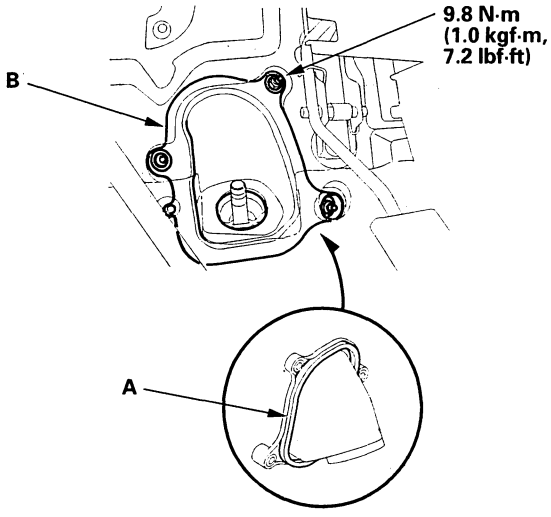

24. Center the steering rack within its stroke.

25. Position the steering column joint (A) so the bolt (B) opposite to the notch (C) is within the range shown.

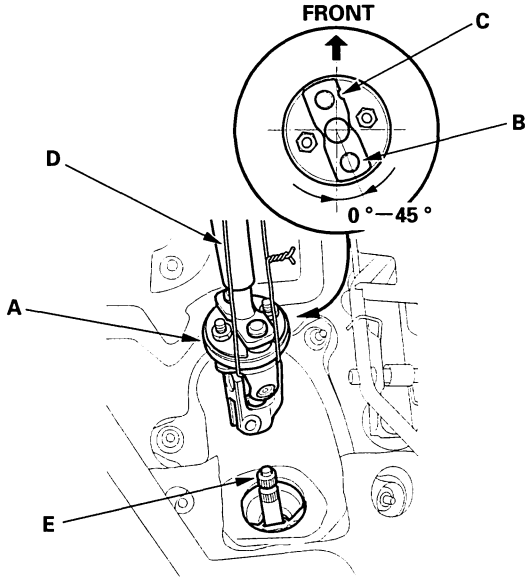

26. With the rack in the straight ahead driving position, cut the wire (D) and slip the lower end of the steering joint on to the pinion shaft (E).

27. Align the bolt hole (A) on the steering joint with the groove (B) around the pinion shaft, and loosely install the joint bolt (C). Make sure that the joint bolt is securely in the groove of the pinion shaft. Pull on the steering joint to make sure that the steering joint is fully seated.

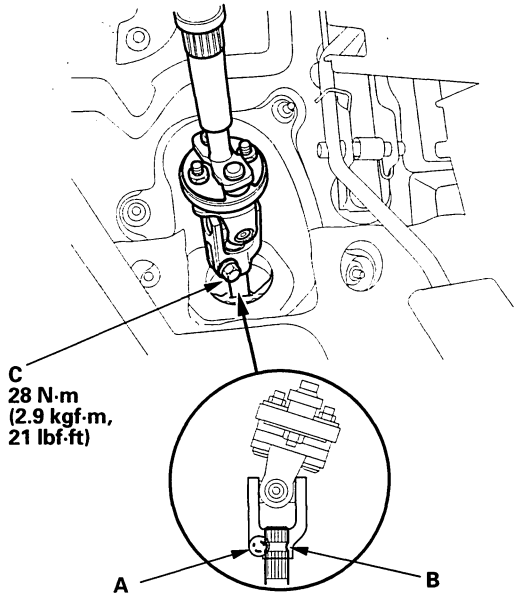

28. Tighten the steering joint bolt to the specified torque.

(cont'd)

Protected by AR

Steering Gearbox Installation (cont'd)

29. Install the steering joint cover A until it contacts the mating surfaces on the cover B evenly around.

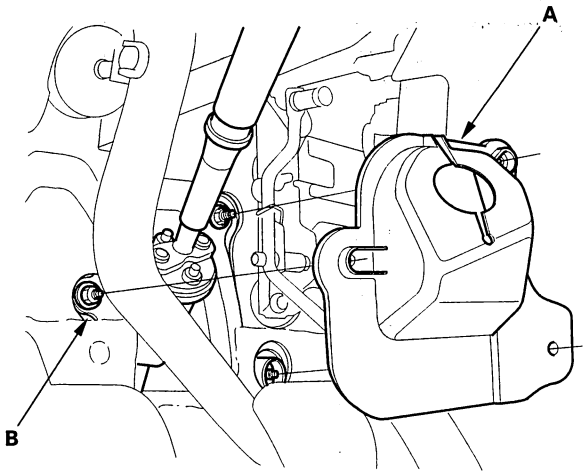

30. Install the front wheel, then set the wheels in the straight ahead position.

31. Center the cable reel by first rotating it clockwise until it stops. Then rotate it counterclockwise (about three full turns) until the arrow mark on the label points straight up. Reinstall the steering wheel, refer to the 2003-2006 Accord Service Manual (see page 17-24).

32. Fill the system with power steering fluid, and bleed air from the system (see page 17-10).

33. After installation, do the following checks.

    - Start the engine, allow it to idle, and turn the steering wheel from lock-to-lock several times to warm up the fluid. Check the gearbox for leaks (see page 17-9).
    - Do the front toe inspection, refer to the 2003-2006 Accord Service Manual (see page 18-6).
    - Check the steering wheel spoke angle. If steering spoke angles to the right and left are not equal (steering wheel and rack are not centered), correct the engagement of the joint/pinion shaft serrations, and repeat step 31. Then adjust the front toe by turning the tie-rod ends, if necessary.

BACK

Protected by AR

Suspension

Front and Rear Suspension

Wheel Alignment 18-2

NOTE: Refer to the 2003-2006 Accord Service Manual, P/N 61SDA08 for items not shown in this section.

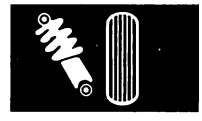

Outline of V6 Model Change

The tire size and tire pressure has been changed to suit the V6 engine model.

Protected by AR

Wheel Alignment

The suspension can be adjusted for front camber, front toe, and rear toe. However, each of these adjustments are related to each other. For example, when you adjust camber, the toe will change. Therefore, you adjust camber or toe.

Pre-Alignment Checks

For proper inspection and adjustment of the wheel alignment, do these checks:

1. Release the parking brake to avoid an incorrect measurement.
2. Make sure the suspension is not modified.
3. Check the tire size and tire pressure.

Tire size:
('03-05 models)
Without 2 door EX, MT models:
P205/60R16 91V M+S
2 door EX, MT model:
P215/50R17 93V M+S
('06 model)
P205/50R17 93V M+S

Tire pressure:
('03-05 models)
Front: 220 kPa (2.2 kgf/cm², 32 psi)
Rear:
4 door LX, EX models:
220 kPa (2.2 kgf/cm², 32 psi)
2 door LX, EX models:
210 kPa (2.1 kgf/cm², 30 psi)
2 door EX, MT model:
200 kPa (2.0 kgf/cm², 29 psi)
('06 model)
Front: 220 kPa (2.2 kgf/cm², 32 psi)
Rear: 200 kPa (2.0 kgf/cm², 29 psi)

4. Check the runout of the wheels and tires.
5. Check the suspension ball joints. (Hold a wheel with your hands, and move it up and down and right and left to check for wobbling.)

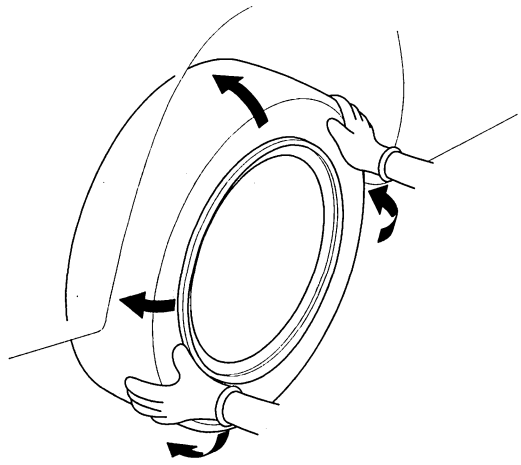

6. Bounce the vehicle up and down several times to stabilize the suspension.

Caster Inspection

Use commercially available computerized four wheel alignment equipment to measure wheel alignment (caster, camber, toe, and turning angle). Follow the equipment manufacturer's instructions.

1. Check the caster angle.

Caster angle: 3 ° 15 ′±45 ′

2. If out of specification, check for bent or damaged suspension components.

BACK

Protected by AR

Camber Inspection

Use commercially available computerized four wheel alignment equipment to measure wheel alignment (caster, camber, toe, and turning angle). Follow the equipment manufacturer's instructions.

1. Check the camber angle.

   Camber angle:
   Front: 0 ° 00 ′±45 ′
   Maximum difference between the right and left side: 0 ° 45 ′
   Rear: −1 ° 00 ′±30 ′

2. If out of specification, check for bent or damaged suspension components.

Front Toe Inspection/Adjustment

Use commercially available computerized four wheel alignment equipment to measure wheel alignment (caster, camber, toe, and turning angle). Follow the equipment manufacturer's instructions.

1. Center the steering wheel spokes, and install a commercially available steering wheel holder tool.

2. Check the toe with the wheels pointed straight ahead.

   Front toe-in: 0±2 mm (0±1/16 in.)

   - If no adjustment is required, remove the alignment equipment.
   - If adjustment is required, go to step 3.

3. Loosen the tie-rod locknuts (A) while holding the flat surface sections (B) of the tie-rod end with a wrench, and turn both rack ends (C) until the front toe is within specifications.

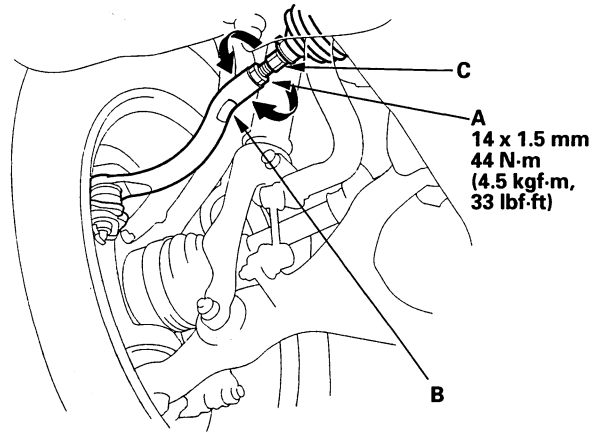

4. After adjusting, tighten the tie-rod locknuts. Reposition the rack-rod boot if it is twisted or displaced.

(cont'd)

Protected by AR

Wheel Alignment (cont'd)

Rear Toe Inspection/Adjustment

Use commercially available computerized four wheel alignment equipment to measure wheel alignment (caster, camber, toe, and turning angle). Follow the equipment manufacturer's instructions.

1. Release the parking brake to avoid an incorrect measurement.
2. Check the toe.

   Rear toe-in: 2±2 mm (1/16±1/16 in.)

   - If no adjustment is required, remove the alignment equipment.
   - If adjustment is required, go to step 3.
3. Hold the adjusting bolt (A) on the rear control arm (B), and loosen the self-locking nut (C).

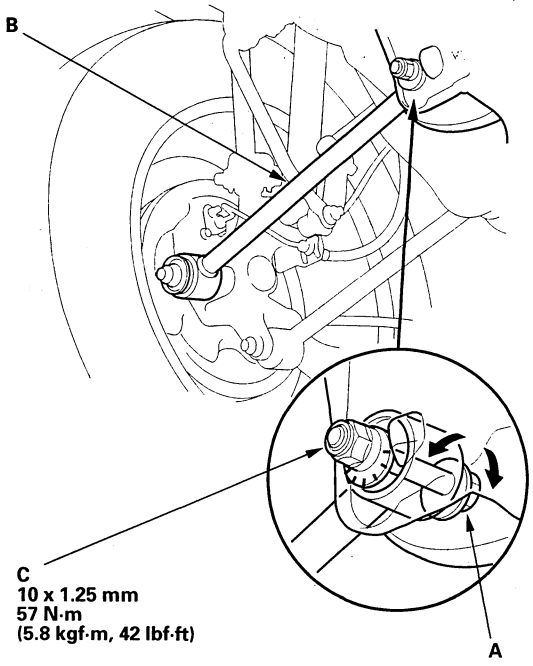

4. Replace the self-locking nut with a new one, and lightly tighten it.

   NOTE: Always use a new self-locking nut whenever it has been loosened.
5. Adjust the rear toe by turning the adjusting bolt until the toe is correct.
6. Tighten the self-locking nut while holding the adjusting bolt.

Turning Angle Inspection

Use commercially available computerized four wheel alignment equipment to measure wheel alignment (caster, camber, toe, and turning angle). Follow the equipment manufacturer's instructions.

1. Turn the wheel right and left while applying the brake, and measure the turning angle of both wheels.

   Turning angle:
   Inward:
   ('03-05 models): 38 ° 50 ′±2 °
   ('06 model): 35 ° 20 ′±2 °
   Outward:
   ('03-05 models): 31 ° 40 ′ (reference)
   ('06 model): 29 ° 40 ′ (reference)

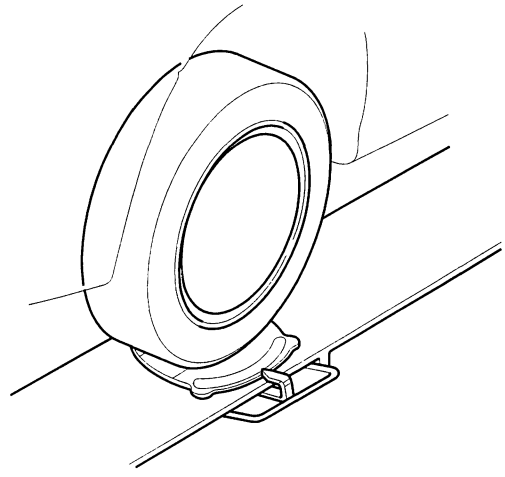

2. If the turning angle is not within the specifications, check for bent or damaged suspension components.

BACK

Protected by AR

Brakes

Conventional Brake Components

Front Brake Pad Inspection and Replacement 19-2
Front Brake Disc Inspection 19-5
Front Brake Caliper Overhaul 19-6
Master Cylinder Replacement 19-7
Brake Booster Replacement 19-8

ABS/TCS (Anti-lock Brake System/ Traction Control System) Components ('03-05 models) 19-11

VSA (Vehicle Stability Assist) System Components ('06 model) 19-61

NOTE: Refer to the 2003-2006 Accord Service Manual, P/N 61SDA08 for items not shown in this section.



Outline of V6 Model Changes

- The front brake has been changed to suit the V6 engine model.
- The specified torque values in the master cylinder has been changed.
- VSA models has been added.

Protected by AR

Conventional Brake Components

Front Brake Pad Inspection and Replacement

⚠CAUTION

Frequent inhalation of brake pad dust, regardless of material composition, could be hazardous to your health.
- Avoid breathing dust particles.
- Never use an air hose or brush to clean brake assemblies. Use an OSHA-approved vacuum cleaner.

Inspection

1. Raise the front of the vehicle, and support it with safety stands in the proper locations. Refer to the 2003-2006 Accord Service Manual (see page 1-14).
2. Remove the front wheels.
3. Check the thickness of the inner pad (A) and outer pad (B). Do not include the thickness of the brake pad backing plate.

   Brake pad thickness:
   Standard: 10.5—11.5 mm (0.41—0.45 in.)
   Service limit: 1.6 mm (0.06 in.)

   Inner pad/Outer pad

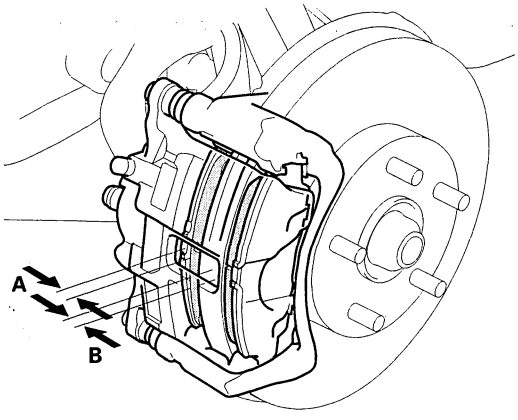

4. If the brake pad thickness is less than the service limit, replace all the brake pads as a set.

Replacement

1. Raise the front of the vehicle, and support it with safety stands in the proper locations. Refer to the 2003-2006 Accord Service Manual (see page 1-14).
2. Remove the front wheels.
3. Remove the brake hose mounting bolt (B).

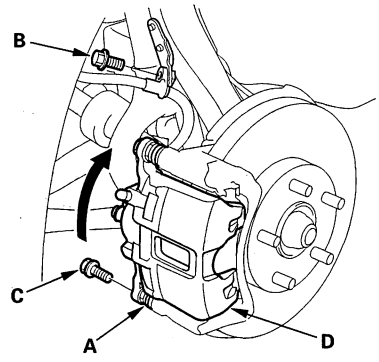

4. Remove the flange bolt (C) while holding the pin A with a wrench being careful not to damage the pin boot, and pivot the caliper (D) up out of the way. Check the brake hose and pin boots for damage and deterioration.
5. Remove the brake pads (A) and pad shims (B).

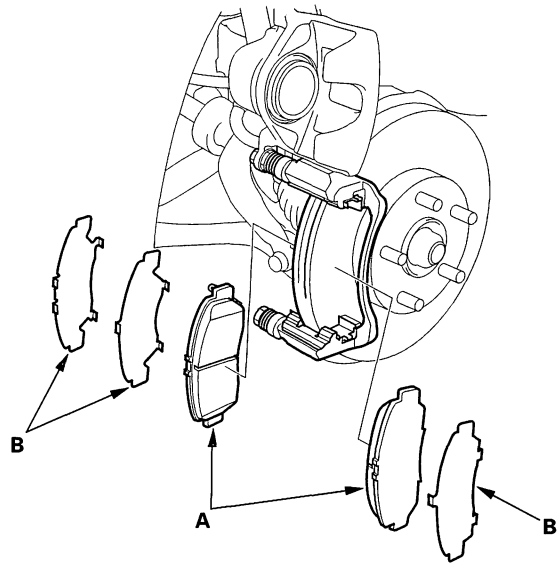

6. Check the hose and pin boots for damage and deterioration.

BACK

Protected by AR

7. Remove the pad retainers (A), and check the caliper pins for free movement.

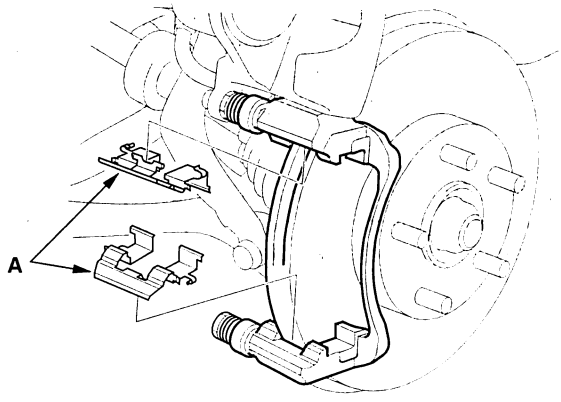

8. Clean the caliper thoroughly; remove any rust, and check for grooves and cracks.

9. Check the brake disc for damage and cracks.

10. Clean and install the pad retainers.

11. Apply a light coat of M-77 assembly paste (P/N 08798-9010) to the pad sides of shims (A), the back of the brake pads (B), and to the other areas indicated by the arrows.
Wipe excess paste off the pad shim and brake pads. Contaminated brake discs and pads reduce stopping ability. Keep assembly paste off the brake discs and pad material.

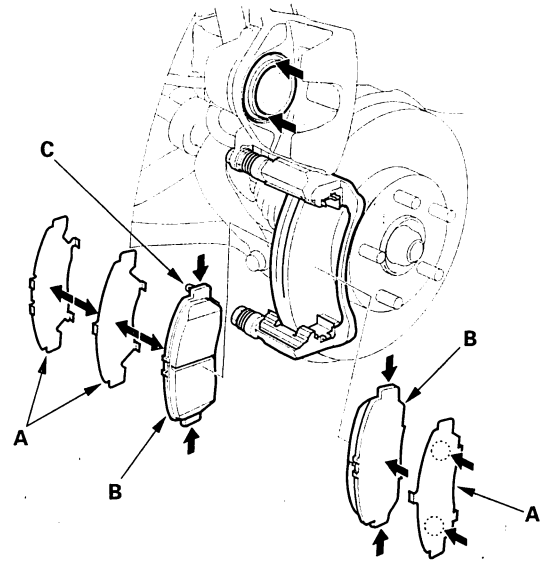

12. Install the brake pads and pad shims correctly.
Install the brake pads with the wear indicator (C) on the inside. The wear indicator should be on the top of the pad.
If you are reusing the pads, always reinstall the brake pads in their original positions to prevent a momentary loss of braking efficiency.

(cont'd)

Protected by AR

Front Brake Pad Inspection and Replacement (cont'd)

13. Push in the piston (B) so the caliper will fit over the brake pads. Check the brake fluid level. The brake fluid may overflow if the reservoir is too full. Make sure the piston boot is in position to prevent damaging it when pivoting the caliper down.

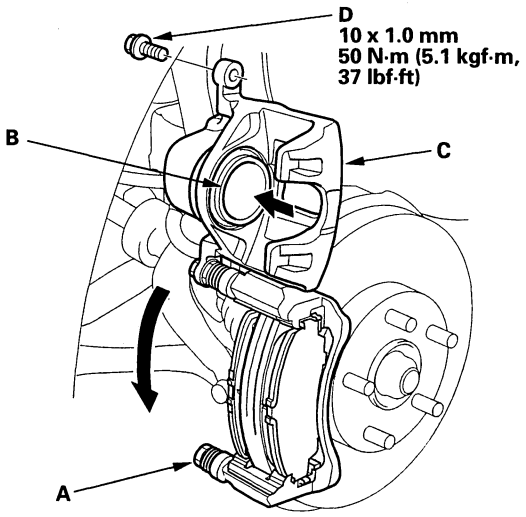

14. Pivot the caliper (C) down into position. Install the flange bolt (D), and tighten it to the specified torque while holding the pin A with a wrench being careful not to damage the pin boot.

15. Install the brake hose mounting bolt (A), and tighten it to the specified torque.

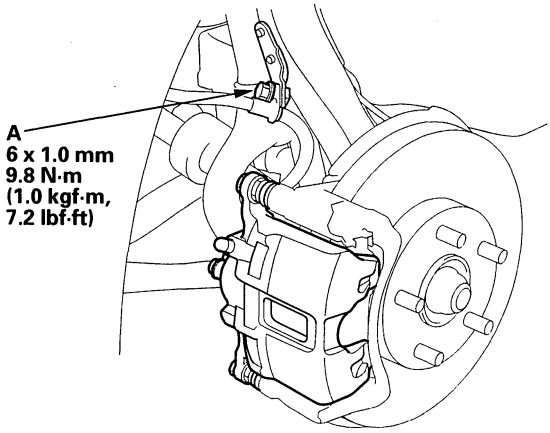

16. Press the brake pedal several times to make sure the brakes work.

    NOTE: Engagement of the brake may require a greater pedal stroke immediately after the brake pads have been replaced as a set. Several applications of the brake pedal will restore the normal pedal stroke.

17. After installation, check for leaks at hose and line joints or connections, and retighten if necessary. Then test-drive the vehicle.

BACK

Protected by AR

Front Brake Disc Inspection

Runout

1. Raise the front of the vehicle, and support it with safety stands in the proper locations. Refer to the 2003-2006 Accord Service Manual (see page 1-14).
2. Remove the front wheels.
3. Remove the brake pads (see page 19-2).
4. Inspect the brake disc surface for damage and cracks. Clean the brake disc thoroughly, and remove all rust.
5. Install suitable flat washers (A) and wheel nuts, and tighten the nuts to the specified torque to hold the brake disc securely against the hub.

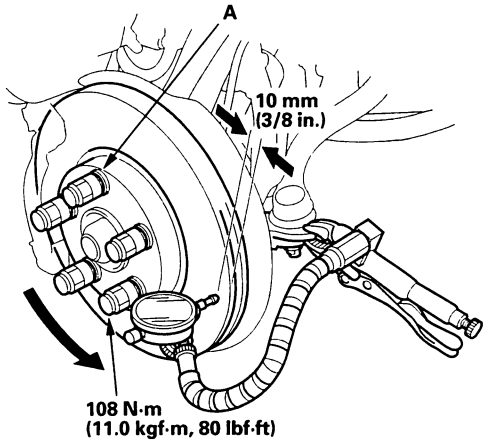

6. Set up the dial gauge against the brake disc as shown, and measure the runout at 10 mm (3/8 in.) from the outer edge of the brake disc.

   Brake disc runout:
   Service limit: 0.10 mm (0.004 in.)

7. If the brake disc is beyond the service limit, refinish the brake disc with an on-car brake lathe. The Kwik-Lathe produced by Kwik-way Manufacturing Co. and the "Front brake Disc Lathe" offered by Snap-on Tools Co. are approved for this operation.

   Max. refinish limit: 21.0 mm (0.83 in.)

   NOTE:
   - If the brake disc is beyond the service limit for refinishing, replace it.
   - A new disc should be refinished if its runout is greater than 0.10 mm (0.004 in.).

Thickness and Parallelism

1. Raise the front of the vehicle, and support it with safety stands in the proper locations. Refer to the 2003-2006 Accord Service Manual (see page 1-14).
2. Remove the front wheels.
3. Remove the brake pads (see page 19-2).
4. Using a micrometer, measure brake disc thickness at eight points, approximately 45 ° apart and 10 mm (3/8 in.) in from the outer edge of the brake disc.
   Replace the brake disc if the smallest measurement is less than the max. refinishing limit.

   A/T model
   Brake disc thickness:
   Standard: 22.9—23.1 mm (0.90—0.91 in.)
   Max. refinishing limit: 21.0 mm (0.83 in.)
   M/T model
   Brake disc thickness:
   Standard: 27.9—28.1 mm (1.10—1.11 in.)
   Max. refinishing limit: 26.0 mm (1.02 in.)
   Brake disc parallelism: 0.015 mm (0.0006 in.) max.

   NOTE: This is the maximum allowable difference between the thickness measurements.

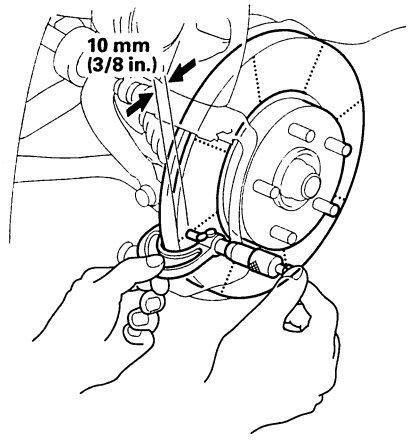

5. If the smallest measurement is less than the max refinishing limit, replace the brake disc.
6. If the brake disc is beyond the service limit for parallelism, refinish the brake disc with an on-car brake lathe. The Kwik-Lathe produced by Kwik-way Manufacturing Co. and the "Front Brake Disc Lathe" offered by Snap-on Tools Co. are approved for this operation.

BACK

Protected by AR

Conventional Brake Components

Front Brake Caliper Overhaul

⚠CAUTION

Frequent inhalation of brake pad dust, regardless of material composition, could be hazardous to your health.
- Avoid breathing dust particles.
- Never use an air hose or brush to clean brake assemblies. Use an OSHA-approved vacuum cleaner.

Remove, disassemble, inspect, reassemble, and install the caliper, and note these items:

NOTE: Make sure that the caliper pins are installed correctly.
The upper and lower caliper pins are different. If the caliper pins are installed in the wrong location, it will cause uneven tire wear, vibration, and or uneven or rapid pad wear.

- Do not spill brake fluid on the vehicle; it may damage the paint; if brake fluid gets on the paint, wash it off immediately with water.
- To prevent dripping brake fluid, cover disconnected hose joints with rags or shop towels.
- Clean all parts in brake fluid and air dry; blow out all passages with compressed air.
- Before reassembling, check that all parts are free of dust and other foreign particles.
- Replace parts with new ones as specified in the illustration.
- Make sure no dirt or other foreign matter get in the brake fluid.
- When reusing brake pads, always reinstall them in their original positions to prevent loss of braking efficiency.
- Do not reuse drained brake fluid. Use only clean Honda DOT 3 Brake Fluid from an unopened container. Using a non-honda brake fluid can cause corrosion and shorten the life of the system.
- Do not mix different brands of brake fluid as they may not be compatible.
- Coat the piston, piston seal groove, and caliper bore with clean brake fluid.
- Make sure no grease or oil gets on the brake discs or pads.
- Replace all rubber parts with new ones whenever disassembled.
- After installing the caliper, check the brake hose and line for leaks, interference, and twisting.

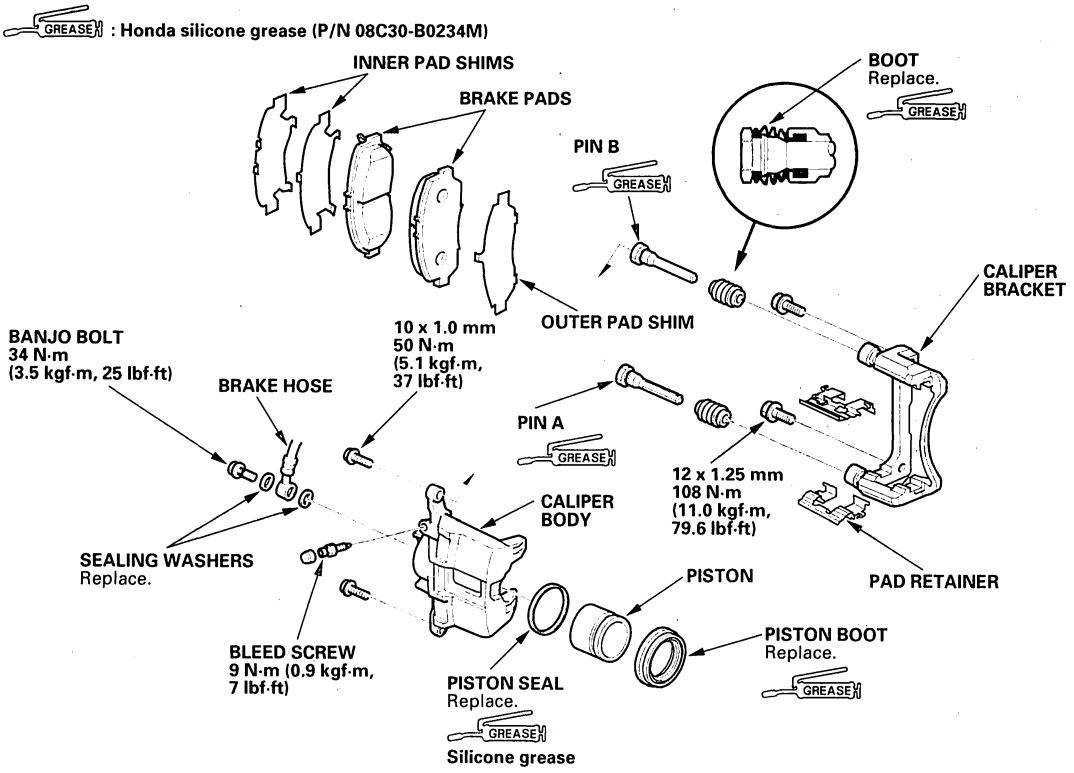

BACK

Protected by AR

Master Cylinder Replacement

NOTE: Do not spill brake fluid on the vehicle; it may damage the paint; if brake fluid does contact the paint, wash it off immediately with water.

1. Remove the cable clamps from the body.

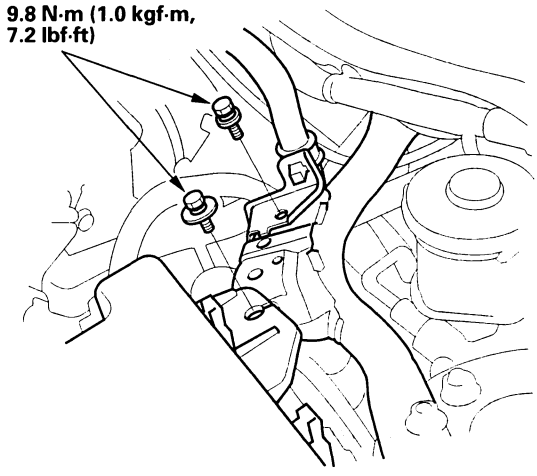

2. Remove the access panel (A), then remove the right strut brace (B).

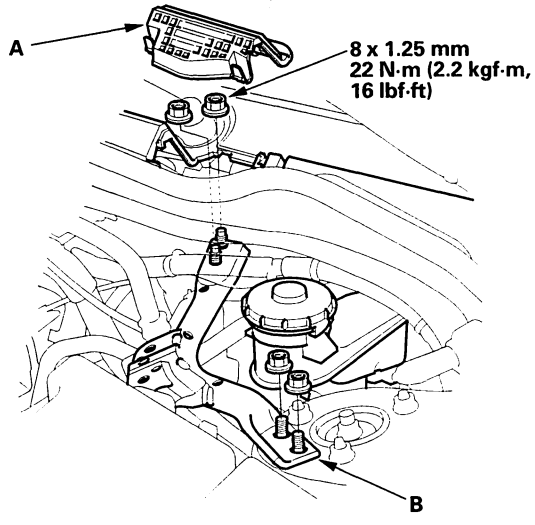

3. Remove the reservoir cap and brake fluid from the master cylinder reservoir.

4. Disconnect the brake fluid level switch connector (A).

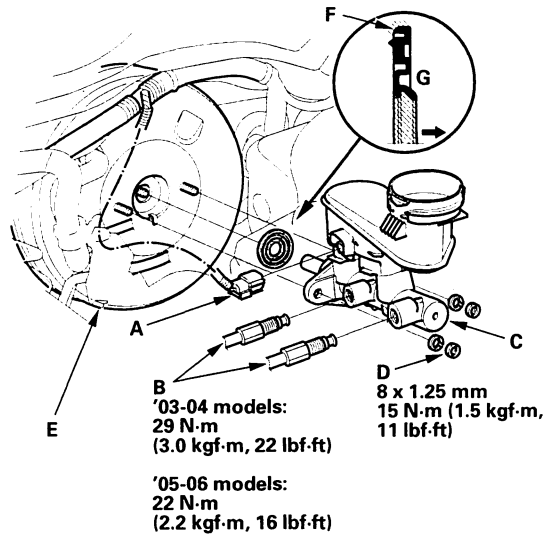

5. Disconnect the brake lines (B) from the master cylinder (C). To prevent spills, cover the hose joints with rags or shop towels.

6. Remove the master cylinder mounting nuts (D) and washers.

7. Remove the master cylinder from the brake booster (E). Be careful not to bend or damage the brake lines when removing the master cylinder.

8. Remove the rod seal (F) from the master cylinder or brake booster.

9. Install the master cylinder in the reverse order of removal, and note these items:

   - Replace all the rubber parts with new ones whenever the master cylinder is removed.
   - Use a new rod seal on reassembly.
   - Coat the inner bore lip and outer circumference of the new rod seal with the recommended seal grease in the master cylinder set.
   - Install the rod seal onto the master cylinder with its grooved side (G) toward the master cylinder.
   - Check the brake pedal height and free play after installing the master cylinder, and adjust it if necessary.

10. Bleed system, refer to the 2003-2006 Accord Service Manual (see page 19-9).

11. Spin the wheels to check for brake drag.

BACK

Protected by AR

Brake Booster Replacement

1. Remove the master cylinder (see page 19-7).
2. Disconnect the vacuum hose (A) from the brake booster (B).

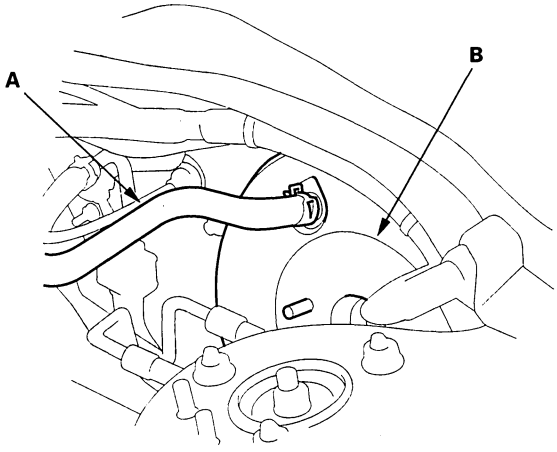

3. Remove the under-hood fuse/relay box cover.
4. Remove the under-hood fuse/relay box mounting bolt (A), then remove the under-hood fuse/relay box (B) from the body.

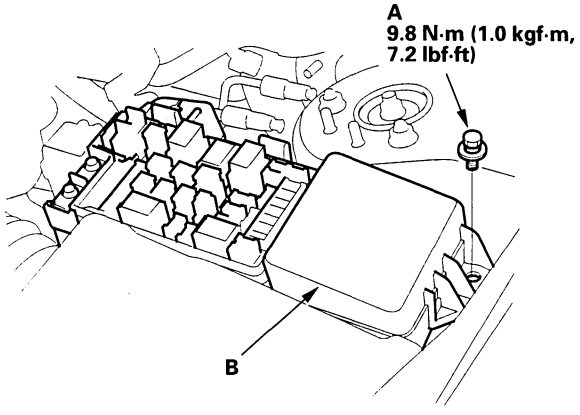

5. Remove the air cleaner assembly (A).

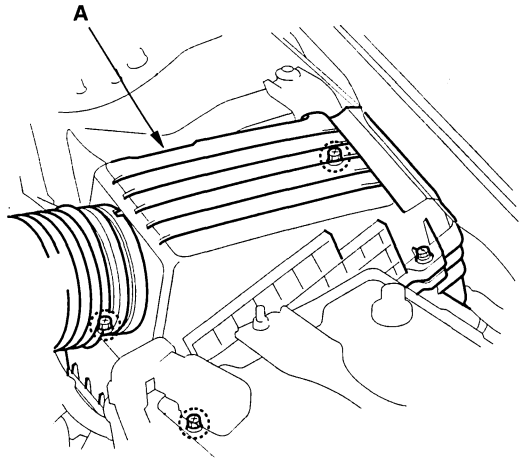

6. Remove the primary and secondary brake lines from the hose clamp (A).

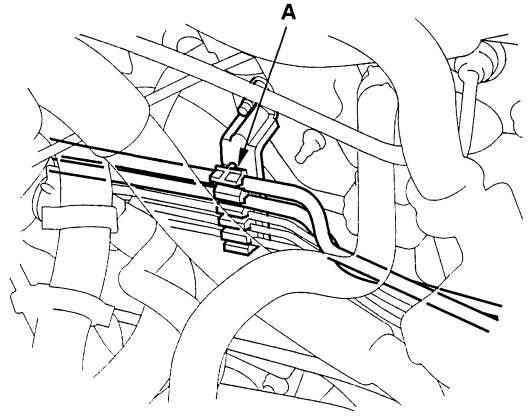

BACK

Protected by AR

7. Remove the lock pin (A) and the joint pin (B), then disconnect the yoke from the brake pedal.

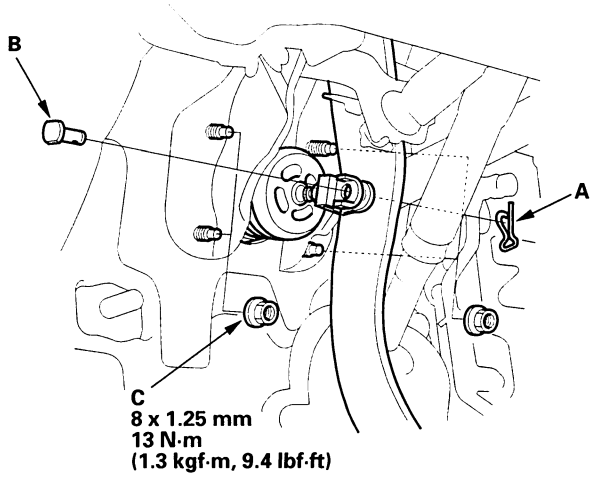

8. Remove the brake booster mounting nuts (C).

9. Remove the brake booster (A) from the engine compartment.

NOTICE

- Be careful not to damage the booster surfaces and threads of the booster stud bolts.
- Be careful not to bend or damage the brake lines.

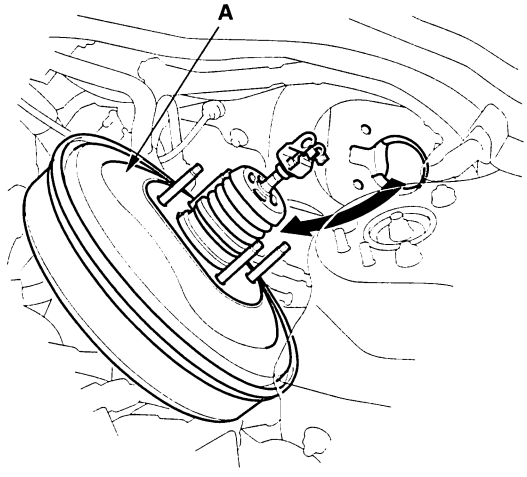

10. Install the brake booster in the reverse order of removal, and note these items:

- Adjust the pushrod length before installing the brake booster.
- Use a new lock pin whenever installing.
- After installing the brake booster and master cylinder, fill the reservoir with new brake fluid, bleed the brake system, and adjust the brake pedal height and free play.

BACK

Protected by AR

BACK

Protected by AR

Brakes

Conventional Brake Components 19-1

ABS/TCS (Anti-lock Brake System/ Traction Control System) Components ('03-05 models)
Component Location Index 19-12
General Troubleshooting Information 19-13
DTC Troubleshooting Index 19-16
Symptom Troubleshooting Index 19-17
System Description 19-18
Circuit Diagram 19-28
DTC Troubleshooting 19-31
Symptom Troubleshooting 19-46
TCS OFF Switch Test 19-54
TCS Pressure Sensor Neutral Position Memorization 19-55
ABS/TCS Modulator-Control Unit Removal and Installation 19-56
Wheel Sensor Inspection 19-58
Wheel Sensor Replacement 19-59

VSA (Vehicle stability Assist) System Components ('06 model) 19-61

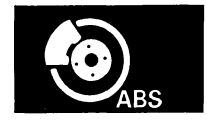

Protected by AR

ABS/TCS Components

Component Location Index

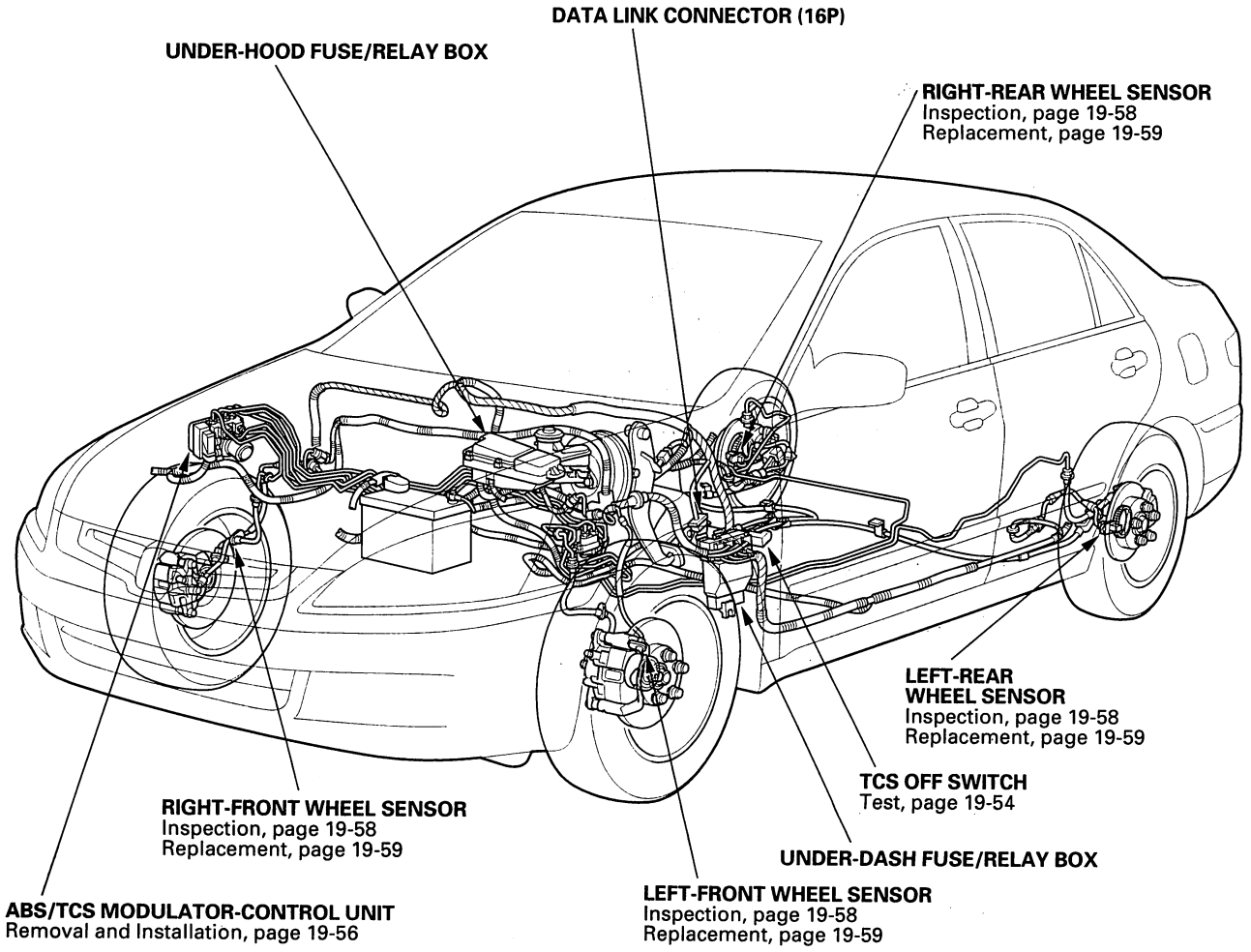

BACK

Protected by AR

General Troubleshooting Information

System Indicator

This system has four indicators; ABS indicator (A), TCS indicator (B), TCS activation indicator (C) and brake system indicator (D). When the system detects a problem, it illuminates the appropriate indicators. Depending on the failure, the ABS/TCS modulator-control unit determines which indicators are turned on.

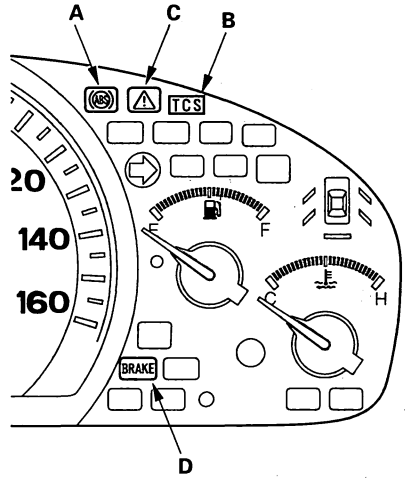

- When ABS function is lost:
  ABS indicator, TCS indicator and TCS activation indicator turn on.
- When TCS function is lost:
  TCS indicator and TCS activation indicator turn on.
- When all functions are lost:
  All four indicators turn on.
- When the gauge control module detects F-CAN circuit problem:
  ABS indicator, TCS indicator and brake system indicator turn on.

ABS/TCS Indicator

- If the system is OK, the ABS and TCS indicators go off 2 seconds after turning the ignition switch ON (II).
- The ABS and TCS indicators come on when the ABS/TCS modulator-control unit detects a problem in the system. However, even though the system is operating properly, the indicator may come on under these conditions.
  - The vehicle goes into a spin
  - The ABS or TCS continues to operate for a long time
  - The vehicle is subject to an electrical signal disturbance

To determine the actual cause of the problem, question the customer about the conditions when the problem occurred, taking the above conditions into consideration.

TCS Activation Indicator

- If the system is OK, the indicator goes off 2 seconds after turning the ignition switch ON (II).
- The indicator comes on if the TCS OFF switch is pressed after the ignition switch is turned ON (II).
- The indicator flashes while the TCS system is active.
- When a problem is detected and the ABS indicator comes on, but not the TCS indicator, there are cases when the indicator stays on until the ignition switch is turned OFF, and cases when the indicator goes off automatically when the system returns to normal.
  - DTC 61 or 62:
    The ABS and TCS indicators go off automatically when the system returns to normal.
  - DTC 11, 13, 15, 17, 31, 32, 33, 34, 35, 36, 37, 38, 53, 54, 71, 81, 112, 121, 122, 123 or 124:
    The ABS and TCS indicators stay on until the ignition switch is turned OFF whether or not the system returns to normal.
  - DTC 12, 14, 16, 18, 21, 22, 23, 24, 41, 42, 43, 44, 51 or 52:
    The ABS indicator stays on until the system returns to normal and the vehicle is driven.
  - DTC 64, 65, 66, 68, 83, 84 or 86:
    The TCS indicator stays on until the ignition switch is turned OFF whether or not the system returns to normal.

(cont'd)

Protected by AR

General Troubleshooting Information (cont'd)

Diagnostic Trouble Code (DTC)

- The memory can hold any number of DTCs. However, when the same DTC is detected more than once, the more recent DTC is written over the earlier one. Therefore, when the same problem is detected repeatedly, it is memorized as a single DTC.
- The DTCs are indicated in ascending number order, not in the order they occur.
- The DTCs are memorized in the EEPROM (non-volatile memory). Therefore, the memorized DTCs cannot be canceled by disconnecting the battery. Do the specified procedures to clear the DTCs.

Self-diagnosis

- Self-diagnosis can be classified into two categories:
  - Initial diagnosis: Done right after the engine starts and until the ABS and TCS indicators go off.
  - Regular diagnosis: Done right after the initial diagnosis until the ignition switch is turned OFF.
- When a problem is detected by self-diagnosis, the ABS/TCS modulator-control unit shifts to fail-safe mode.

Kickback

The pump motor operates when the ABS modulator-control unit is functioning, and the fluid in the reservoir is forced out to the master cylinder, causing kickback at the brake pedal.

Pump Motor

- The pump motor operates when the ABS or TCS modulator-control unit is functioning.
- The ABS/TCS modulator-control unit checks the pump motor operating during initial diagnosis when the vehicle is driven over 12 mph (20 km/h) the first time after the ignition switch is turned ON (II). You may hear the motor operate at this time, but it is normal.

Brake Fluid Replacement/Air Bleeding

Brake fluid replacement and air bleeding procedures are identical to the procedures used on vehicles not equipped with ABS/TCS. To ease bleeding, start with the front wheels.

How to Troubleshoot DTCs

The troubleshooting flowchart procedures assume that the cause of the problem is still present and the ABS and/or TCS indicator is still on. Following the flowchart when the ABS and/or TCS indicator does not come on can result in incorrect diagnosis.
The connector illustrations show the female terminal connectors with a single outline and the male terminal connectors with a double outline.

1. Question the customer about the conditions when the problem occurred, and try to reproduce the same conditions for troubleshooting. Find out when the ABS and/or TCS indicator came on, such as during ABS control, after ABS control, when vehicle speed was at a certain speed, etc.

2. When the ABS or TCS indicator does not come on during the test-drive, but troubleshooting is done based on the DTC, check for loose connectors, poor contact of the terminals, etc. before you start troubleshooting.

3. After troubleshooting, or repairs are done, clear the DTCs, and test-drive the vehicle. Make sure the ABS and TCS indicators do not come on.

BACK

Protected by AR

How to Retrieve DTCs

1. With the ignition switch OFF, connect the Honda Diagnostic System (HDS) to the 16P data link connector (DLC) (A) under the left side of the dashboard.

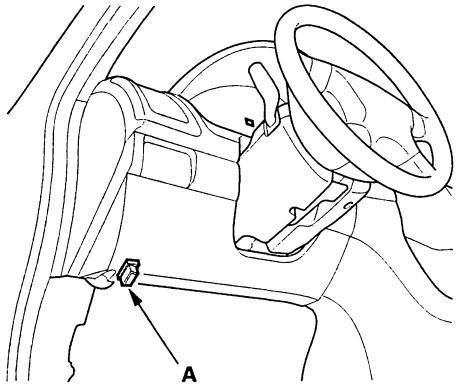

2. Turn the ignition switch ON (II), and follow the prompts on the HDS to display the DTC(s) on the screen. After determining the DTC, refer to the DTC Troubleshooting.

   NOTE: See the HDS Help menu for specific instructions.

How to Clear DTCs

1. With the ignition switch OFF, connect the HDS to the 16P data link connector (DLC) (A) under the left side of the dashboard.

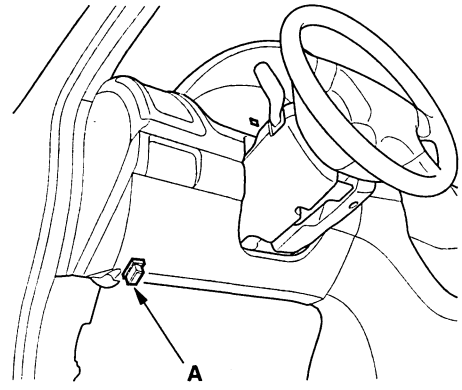

2. Turn the ignition switch ON (II), and clear the DTC(s) by following the screen prompts on the HDS.

   NOTE: See the HDS Help menu for specific instructions.

3. Perform the TCS pressure sensor neutral position memorization (see page 19-55).

Protected by AR

ABS/TCS Components

DTC Troubleshooting Index

DTC	Detection Item	Note
11	Right-front wheel sensor (open/short to body ground/short to power)	(see page 19-31)
12	Right-front wheel sensor (electrical noise/intermittent interruption)	(see page 19-34)
13	Left-front wheel sensor (open/short to body ground/short to power)	(see page 19-31)
14	Left-front wheel sensor (electrical noise/intermittent interruption)	(see page 19-34)
15	Right-rear wheel sensor (open/short to body ground/short to power)	(see page 19-31)
16	Right-rear wheel sensor (electrical noise/intermittent interruption)	(see page 19-34)
17	Left-rear wheel sensor (open/short to body ground/short to power)	(see page 19-31)
18	Left-rear wheel sensor (electrical noise/intermittent interruption)	(see page 19-34)
21	Right-front magnetic encoder	(see page 19-35)
22	Left-front magnetic encoder	(see page 19-35)
23	Right-rear pulsar	(see page 19-35)
24	Left-rear pulsar	(see page 19-35)
31	ABS solenoid	(see page 19-36)
32	ABS solenoid	(see page 19-36)
33	ABS solenoid	(see page 19-36)
34	ABS solenoid	(see page 19-36)
35	ABS solenoid	(see page 19-36)
36	ABS solenoid	(see page 19-36)
37	ABS solenoid	(see page 19-36)
38	ABS solenoid	(see page 19-36)
41	Right-front wheel lock	(see page 19-36)
42	Left-front wheel lock	(see page 19-36)
43	Right-rear wheel lock	(see page 19-36)
44	Left-rear wheel lock	(see page 19-36)
51	Motor lock	(see page 19-37)
52	Motor stuck OFF	(see page 19-38)
53	Motor stuck ON	(see page 19-39)
54	ABS fail-safe relay	(see page 19-39)
61	Low +B-FSR voltage	(see page 19-40)
62	High +B-FSR voltage	(see page 19-40)
64	Sensor power voltage	(see page 19-40)
65	Brake fluid level	(see page 19-41)
66	Pressure sensor (inside of ABS/TCS modulator-control unit)	(see page 19-41)
68	Brake pedal position switch	(see page 19-42)
71	Different diameter tire	(see page 19-42)
81	Central Processing Unit (CPU)	(see page 19-43)
83	ECM/PCM	(see page 19-43)
84	TCS pressure sensor neutral position	(see page 19-44)
86	F-CAN communication	(see page 19-44)
107	TCS operation	(see page 19-45)
112	Internal power source stuck OFF	(see page 19-45)
121	TCS solenoid	(see page 19-46)
122	TCS solenoid	(see page 19-46)
123	TCS solenoid	(see page 19-46)
124	TCS solenoid	(see page 19-46)

BACK

Protected by AR

Symptom Troubleshooting Index

Symptom	Diagnostic procedure	Also check for
ABS indicator does not come on	ABS Indicator Circuit Troubleshooting (see page 19-46)	
ABS indicator does not go off, and no DTCs are stored	ABS Indicator Circuit Troubleshooting (see page 19-47)	
Brake system indicator does not come on at bulb check and/or with parking brake applied	Brake System Indicator Circuit Troubleshooting (see page 19-48)	
Brake system indicator does not go off, and no DTCs are stored	Brake System Indicator Circuit Troubleshooting (see page 19-49)	
TCS indicator does not come on	TCS Indicator Circuit Troubleshooting (see page 19-50)	
TCS indicator does not go off, and no DTCs are stored	TCS Indicator Circuit Troubleshooting (see page 19-50)	
TCS activation indicator does not come on	TCS activation Indicator Circuit Troubleshooting (see page 19-52)	
TCS activation indicator does not go off, and no DTCs are stored.	TCS activation Indicator Circuit Troubleshooting (see page 19-52)	

Protected by AR

ABS/TCS Components

System Description

ABS/TCS Modulator-Control Unit Inputs and Outputs for 47P Connector

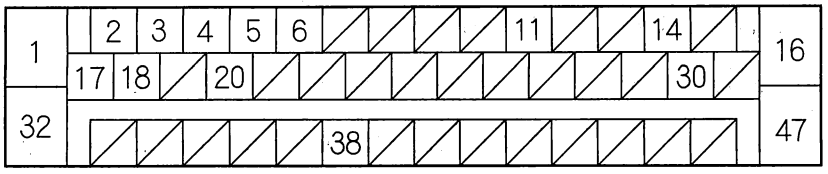

Wire side of female terminals

Terminal number	Wire color	Terminal sign	Description	Measurement (Disconnect the ABS/TCS modulator-control unit 47P connector)		
				Terminals	Conditions	Voltage
1	WHT	+B-FSR	Power source for the fail-safe relay	1—GND	At all times	Battery voltage
2	YEL/RED	RL +B	Detects left-rear wheel sensor signal	———	———	———
3	RED	RL-GND	Detects left-rear wheel sensor signal	———	———	———
4	BLU/WHT	FL +B	Detects left-front wheel sensor signal	———	———	———
5	GRN/YEL	RR +B	Detects right-rear wheel sensor signal	———	———	———
6	BLU/YEL	RR-GND	Detects right-rear wheel sensor signal	———	———	———
11	BLU	K-LINE	Communicates with HDS	———	———	———
14	WHT	CAN-H	CAN communication circuit	———	———	———
16	WHT/RED	+B-MR	Power source for the motor relay	16—GND	At all times	Battery voltage

BACK

Protected by AR

Terminal number	Wire color	Terminal sign	Description	Measurement (Disconnect the ABS/TCS modulator-control unit 47P connector)		
				Terminals	Conditions	Voltage
17	PNK	FR-GND	Detects right-front wheel sensor signal	———	———	———
18	GRN/BLK	FR +B	Detects right-front wheel sensor signal	———	———	———
20	BRN/WHT	FL-GND	Detects left-front wheel sensor signal	———	———	———
30	RED	CAN-L	CAN communication circuit	———	———	———
32	BLK	GND	Ground for the ABS/TCS modulator-control unit	32—GND	At all times	0 V
38	BLK/RED	IG1	Power source for activating the system	38—GND	Ignition switch ON (II)	Battery voltage
47	BLK	MR-GND	Ground for the pump motor	47—GND	At all times	0 V

(cont'd)

Protected by AR

ABS/TCS Components

System Description (cont'd)

ABS Features

When the brake pedal is pressed while driving, the wheels can lock before the vehicle comes to a stop. In such an event, the maneuverability of the vehicle is reduced if the front wheels are locked, and the stability of the vehicle is reduced if the rear wheels are locked, creating an extremely unstable condition. The ABS precisely controls the slip rate of the wheels to ensure maximum grip force from the tires, and it thereby ensures maneuverability and stability of the vehicle.

The ABS calculates the slip rate of the wheels based on the vehicle speed and the wheel speed, then it controls the brake fluid pressure to attain the target slip rate.

Grip Force of Tire and Road Surface

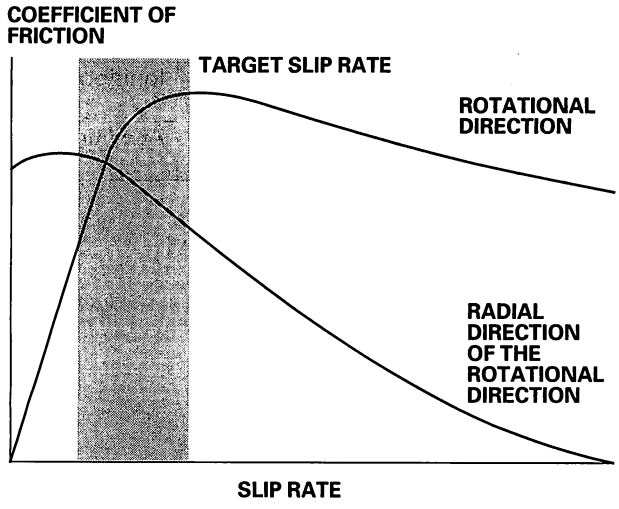

TCS Features

The TCS provides low-speed traction. When a drive wheel loses traction on a slippery road surface and starts to spin, the ABS/TCS modulator-control unit applies brake pressure to slow the spinning wheel. At that time, the ABS/TCS modulator-control unit sends an engine retard signal to the ECM/PCM to prevent damage to the transmission.

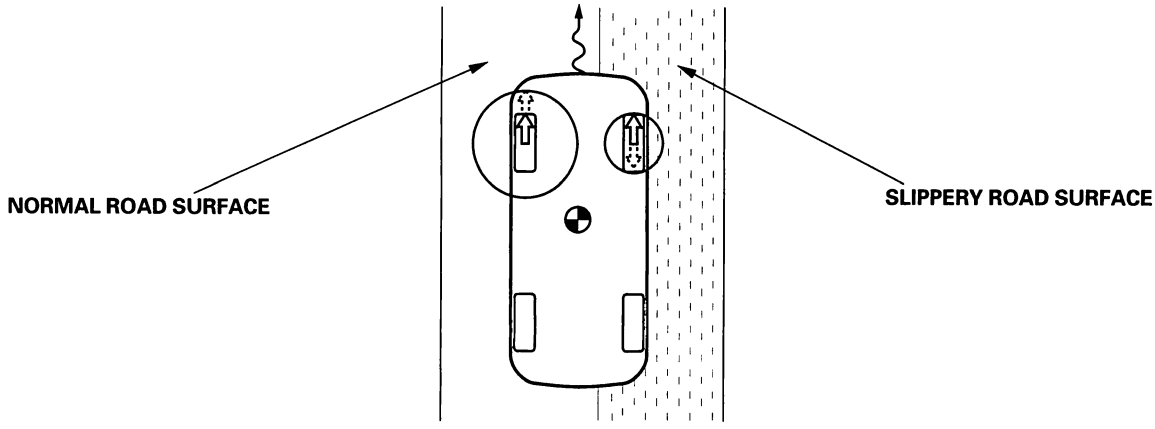

BACK

Protected by AR

ABS Main Control

The ABS/TCS modulator-control unit detects the wheel speed based on the wheel sensor signals it receives, then calculates the vehicle speed based on the detected wheel speed. The control unit detects the vehicle speed during deceleration based on the rate of deceleration.
The ABS/TCS modulator-control unit calculates the slip rate of each wheel, and it transmits the control signal to the modulator unit solenoid valve when the slip rate is high.
The pressure reduction control has three modes: Pressure reducing, pressure retaining, and pressure intensifying.

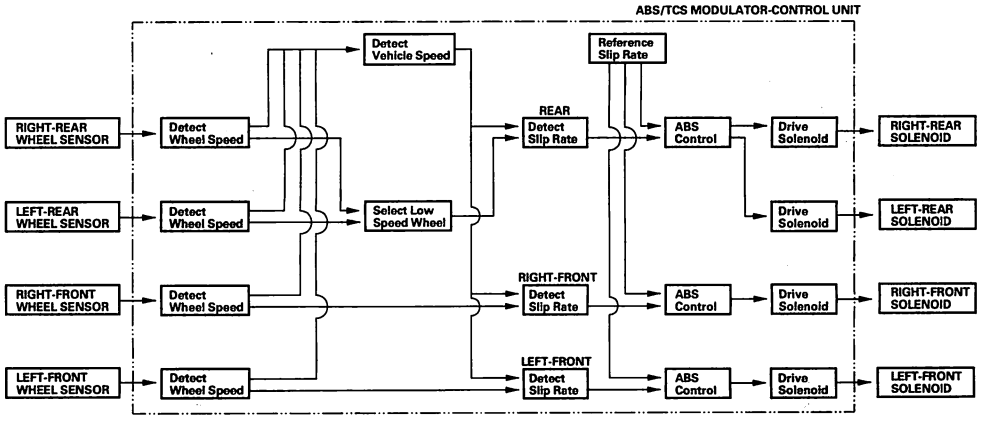

TCS Main Control

The ABS/TCS modulator-control unit controls the TCS based on signal inputs from the accelerator pedal position sensor, engine speed, shifter position, and the wheel sensors. In addition, the ABS/TCS modulator-control unit sends an engine retard request signal to the ECM/PCM if necessary. The pressure intensifying control has three modes: Pressure intensifying, pressure retaining, and pressure reducing.

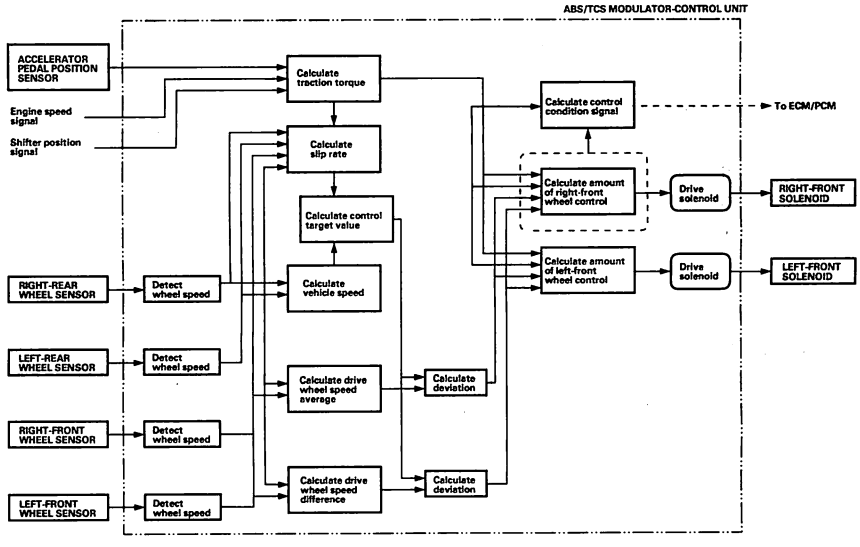

(cont'd)

BACK

Protected by AR

ABS/TCS Components

System Description (cont'd)

Self-Diagnosis

- The ABS/TCS modulator-control unit is equipped with a main CPU and a monitor IC. They check each other for problems.
- The CPUs also check the circuit of the system.
- When a problem is detected by self-diagnosis, the ABS/TCS modulator-control unit turns on the appropriate indicator(s).

DTC	Detection Item	ABS indicator	Brake system indicator	TCS indicator	TCS activation indicator
11, 13, 15, 17	Wheel sensor (open/short to body ground/ short to power)	ON	ON or OFF	ON	ON
12, 14, 16, 18	Wheel sensor (electrical noise/intermittent interruption)	ON	ON or OFF	ON	ON
21, 22	Magnetic encoder	ON	ON or OFF	ON	ON
23, 24	Pulsar	ON	ON or OFF	ON	ON
31, 32, 33, 34, 35, 36, 37, 38	ABS solenoid	ON	ON	ON	ON
41, 42, 43, 44	Wheel lock	ON	ON or OFF	ON	ON
51	Motor lock	ON	OFF	ON	ON
52	Motor stuck OFF	ON	OFF	ON	ON
53	Motor stuck ON	ON	OFF	ON	ON
54	ABS fail-safe relay	ON	ON	ON	ON
61	Low +B-FSR voltage	ON	ON or OFF	ON	ON
62	High +B-FSR voltage	ON	ON	ON	ON
64	Sensor power voltage	OFF	OFF	ON	ON
65	Brake fluid level	OFF	OFF	ON	ON
66	Pressure sensor (inside of ABS/TCS modulator-control unit)	OFF	OFF	ON	ON
68	Brake pedal position switch	OFF	OFF	ON	ON
71	Different diameter tire	ON or OFF	ON or OFF	ON	ON
81	Central Processing Unit (CPU)	ON	ON	ON	ON
83	ECM/PCM	OFF	OFF	ON	ON
84	TCS pressure sensor neutral position	OFF	OFF	ON	ON
86	CAN communication	OFF	OFF	ON	ON
107	TCS operation	OFF	OFF	OFF	ON
112	Internal power source stuck OFF	ON	ON	ON	ON
121, 122, 123, 124	TCS solenoid	ON	ON	ON	ON

On-board Diagnosis Function

The ABS and TCS can be diagnosed with the HDS.

The ALB Checker cannot be used with this system. For air bleeding, and checking wheel sensor signals, use the HDS. See the HDS Help menu for specific operating instructions.

BACK

Protected by AR

Modulator Unit

The modulator unit consists of the inlet solenoid valve, outlet solenoid valve, TCS normally open (NO) solenoid valve, TCS normally closed (NC) solenoid valve, reservoir, pump, pump motor, and the damping chamber.
The modulator controls the caliper fluid pressure directly. It is a circulating-type modulator because the brake fluid circulates through the caliper, the reservoir, and the master cylinder.
The hydraulic control has three modes: Pressure intensifying, pressure retaining, and pressure reducing.
The hydraulic circuit is an independent four channel type, one channel for each wheel.

ABS Control

Pressure intensifying mode
TCS NO valve open, TCS NC valve closed, inlet valve open, outlet valve closed.
Master cylinder fluid is pumped out to the caliper.

Pump motor
When starting the pressure reducing mode, the pump motor is ON. When stopping ABS operation, the pump motor is OFF.
The reservoir fluid is pumped out by the pump, through the damping chamber, to the master cylinder.

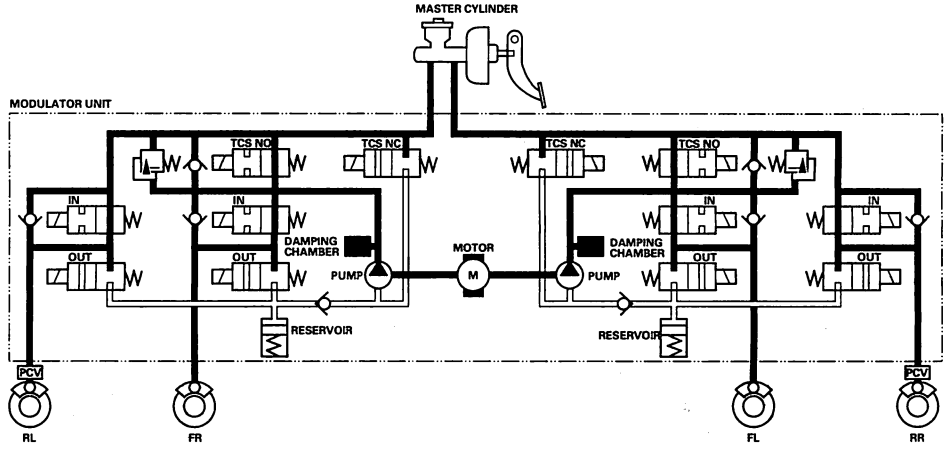

Pressure retaining mode
TCS NO valve open, TCS NC valve closed, inlet valve closed, outlet valve closed.
Caliper fluid is retained by the inlet valve and outlet valve.

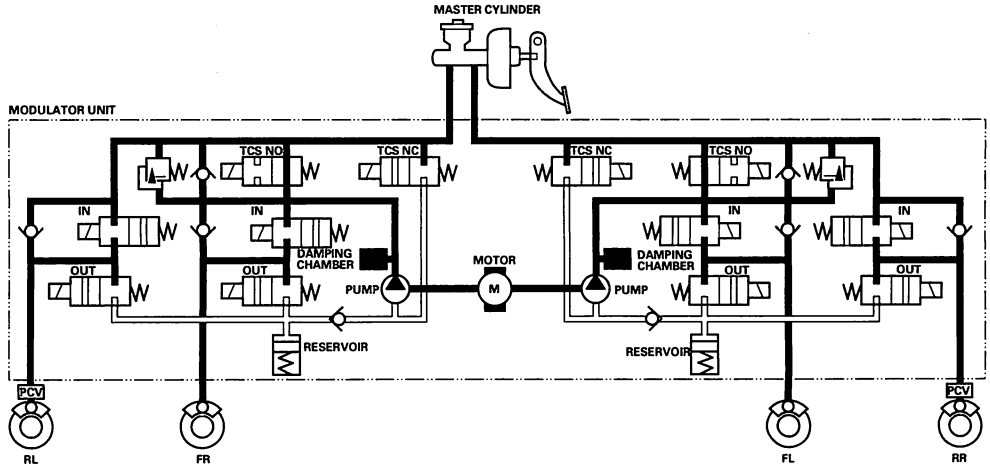

(cont'd)

Protected by AR

ABS/TCS Components

System Description (cont'd)

Pressure reducing mode
TCS NO valve open, TCS NC valve closed, inlet valve closed, outlet valve open.
Caliper fluid flows through the outlet valve to the reservoir.

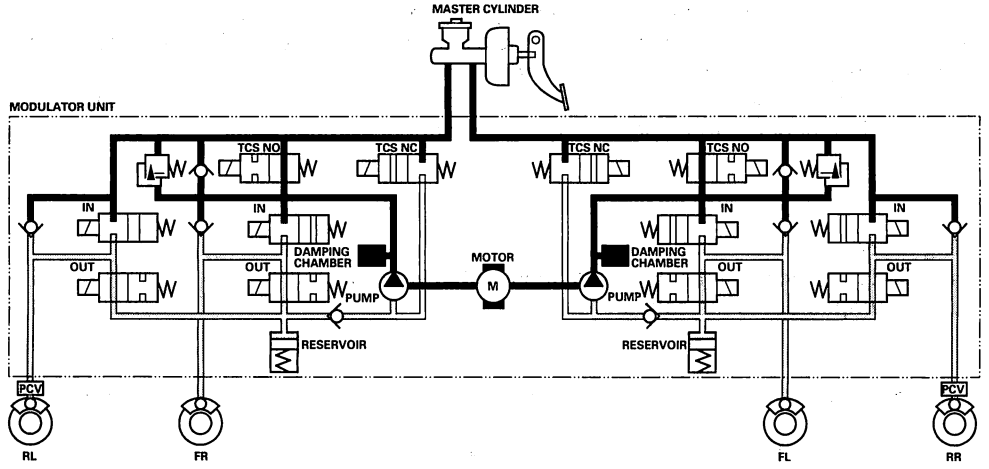

TCS Control

Pressure intensifying mode
TCS NO valve closed, TCS NC valve open, inlet valve open, outlet valve closed, pump motor ON.
The reservoir and master cylinder fluid is pumped out by the pump, through the damping chamber, to the front caliper.

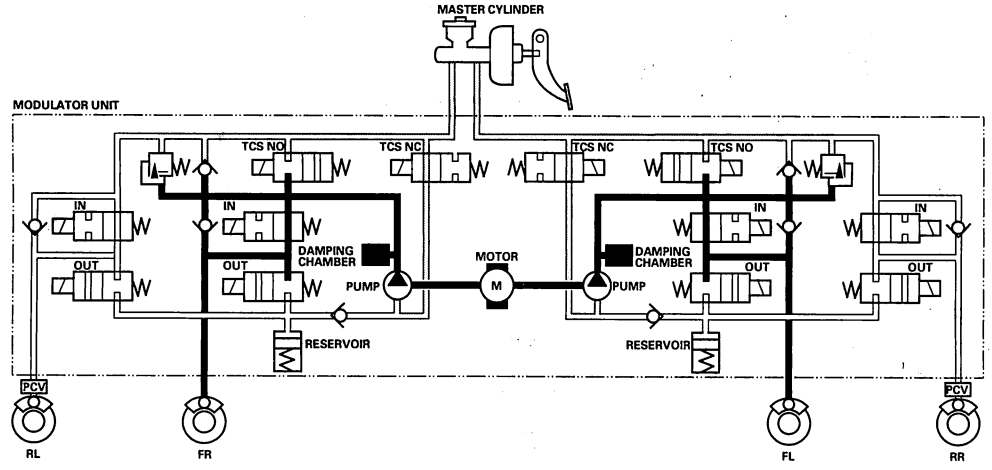

BACK

Protected by AR

Pressure retaining mode

TCS NO valve closed, TCS NC valve open, inlet valve closed, outlet valve closed, pump motor ON.
Front caliper fluid is retained by the inlet valve and outlet valve.

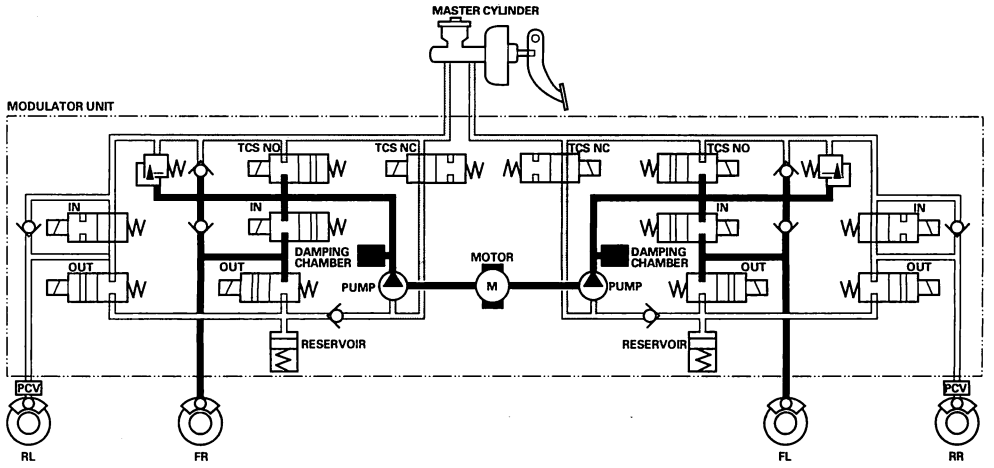

Pressure reducing mode

TCS NO valve closed, TCS NC valve open, inlet valve closed, outlet valve open, pump motor ON.
Caliper fluid flows through the outlet valve to the reservoir.

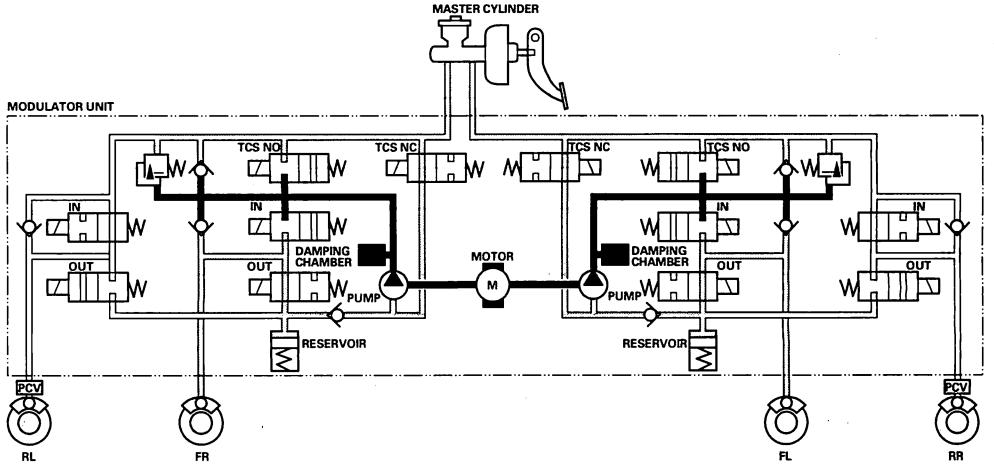

(cont'd)

BACK

Protected by AR

System Description (cont'd)

Wheel Sensor

The wheel sensors are the magnetic contactless type. The wheel sensors detect changing of magnetic polarity on the magnetic encoder. The ABS/TCS modulator-control unit calculates the wheel speed based on signals sent from the wheel sensor.

Wheel Speed and Modulator Control (ABS)

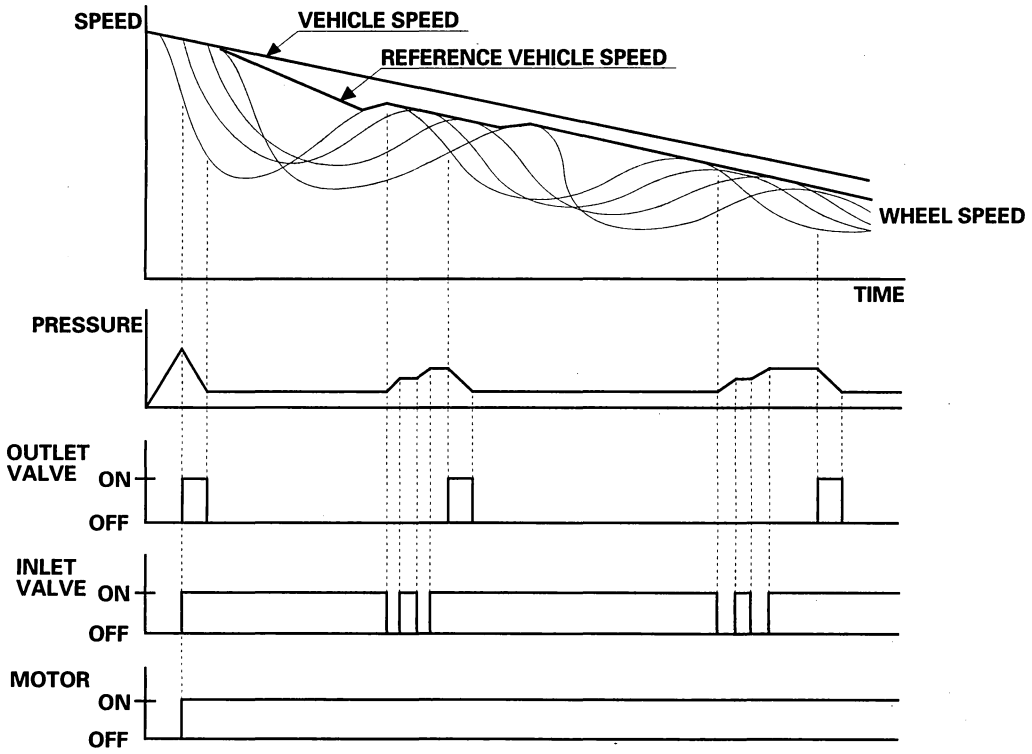

When the wheel speed drops sharply below the vehicle speed, the outlet valve opens momentarily to reduce the caliper fluid pressure. The pump motor starts at this time. As the wheel speed is restored, the inlet valve opens momentarily to increase the caliper fluid pressure.

BACK

Protected by AR

Wheel Speed and Modulator Control (TCS)

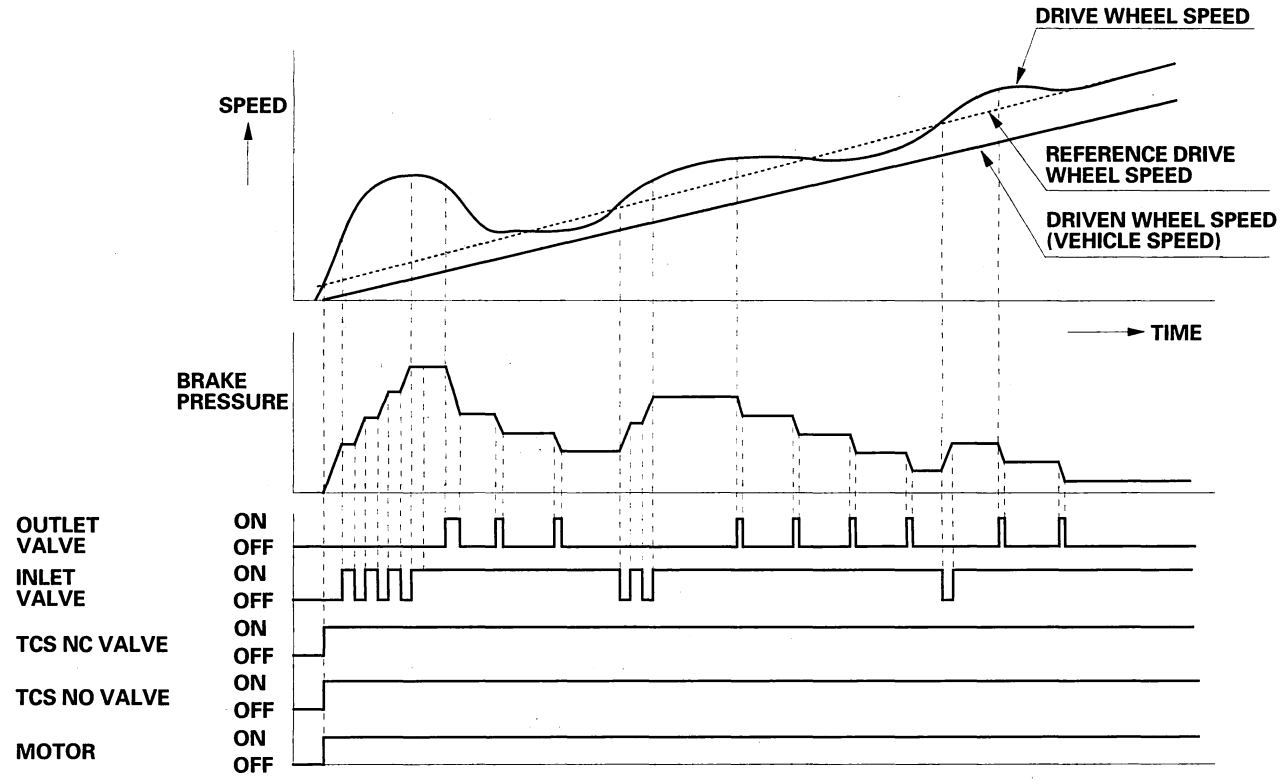

When the front wheel speed rises sharply above the vehicle speed, the TCS NC valve opens, the TCS NO valve closes, and the pump motor starts to intensify the front caliper fluid pressure. When the wheel speed drops, the front inlet valve closes momentarily to retain the front caliper fluid pressure. When the wheel speed drops further, the front outlet valve opens momentarily to reduce the front caliper fluid pressure.

BACK

Protected by AR

ABS/TCS Components

Circuit Diagram

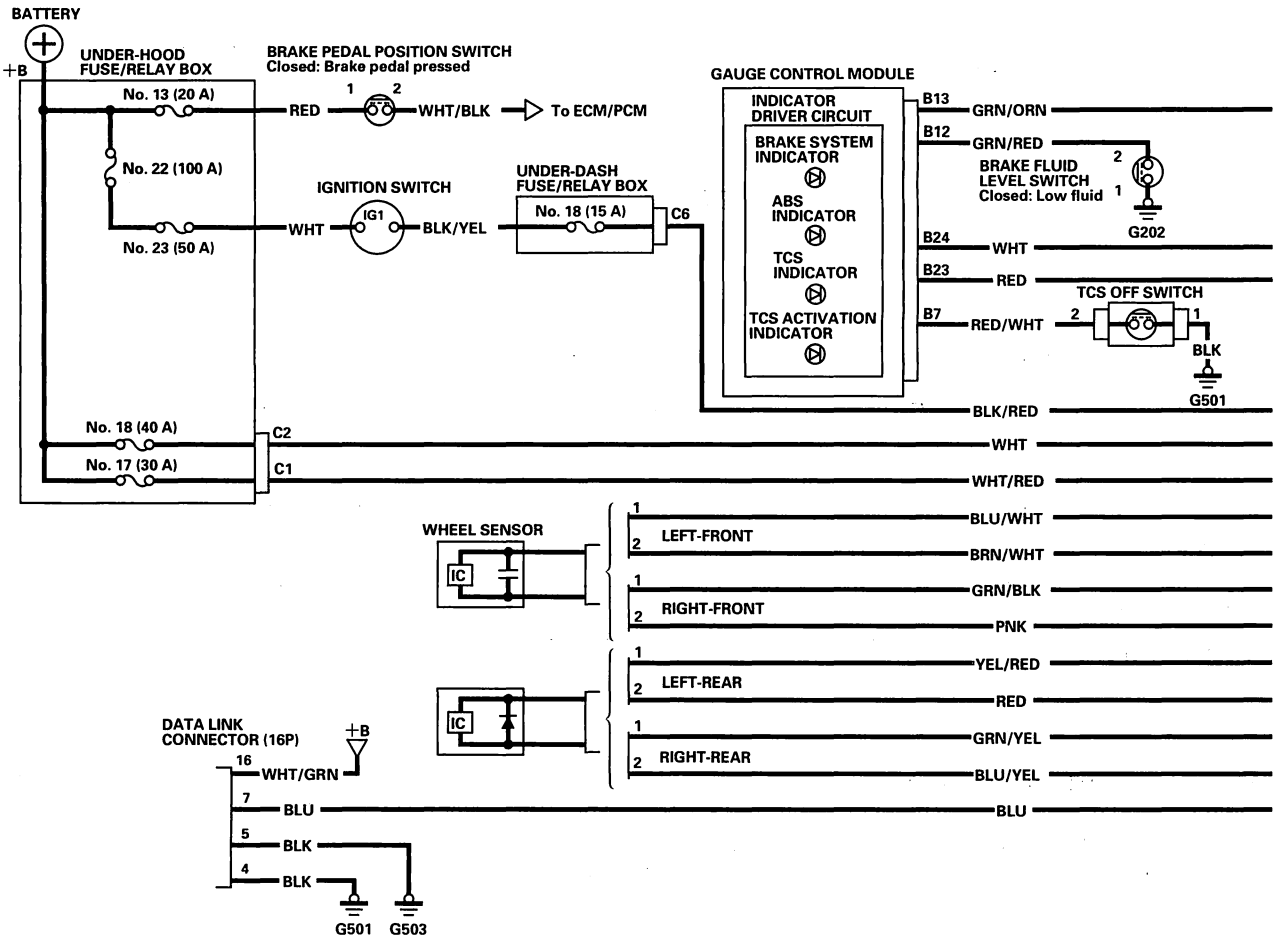

BACK

Protected by AR

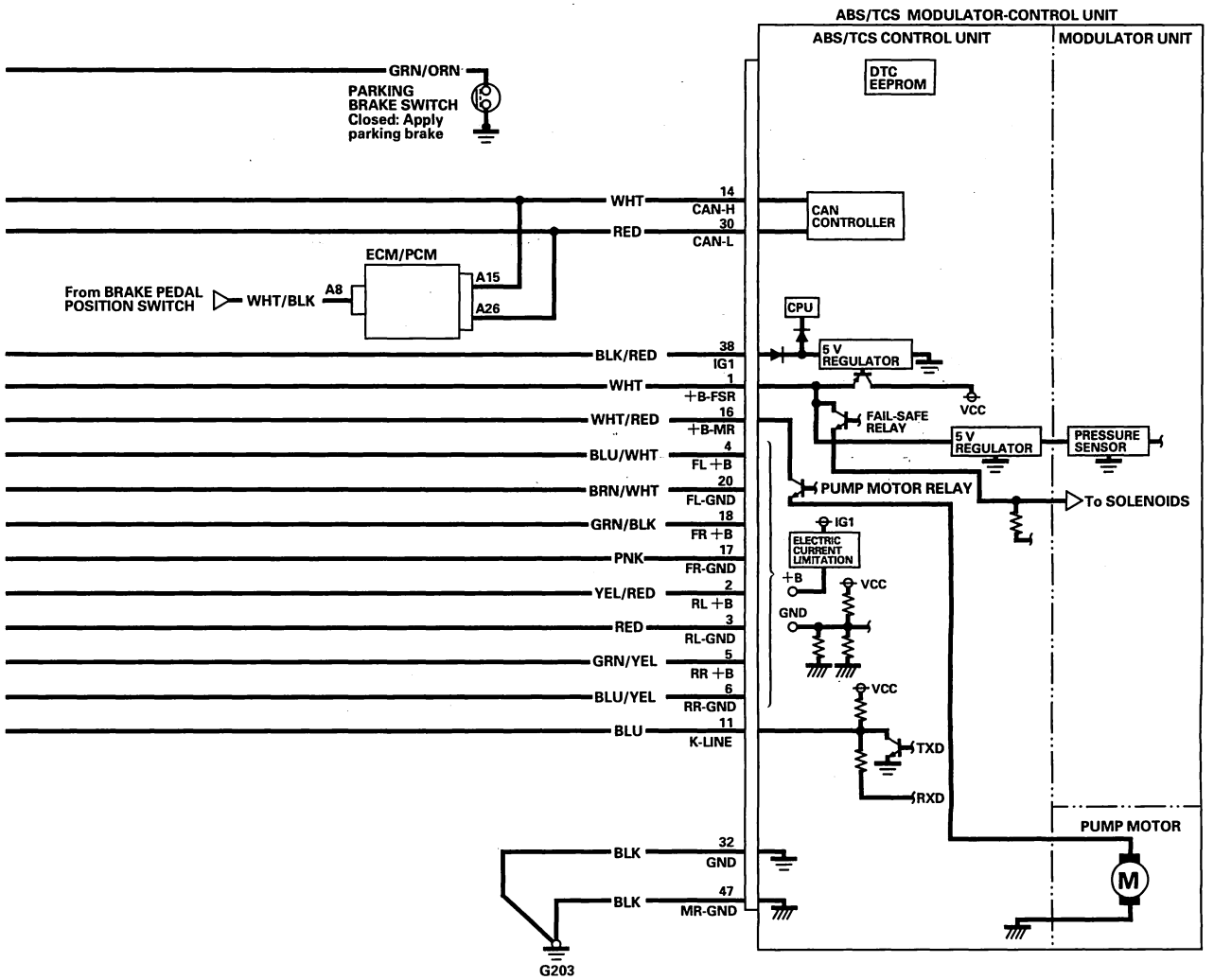

(cont'd)

BACK

Protected by AR

ABS/TCS Components

Circuit Diagram (cont'd)

UNDER-HOOD FUSE/RELAY BOX CONNECTOR C (2P)



BRAKE PEDAL POSITION SWITCH 4P CONNECTOR

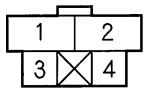

BRAKE FLUID LEVEL SWITCH 2P CONNECTOR



UNDER-DASH FUSE/RELAY BOX CONNECTOR C (12P)

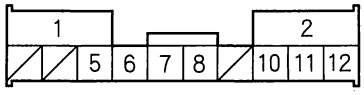

GAUGE CONTROL MODULE CONNECTOR B (30P)

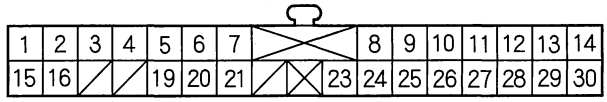

ECM/PCM CONNECTOR A (31P)

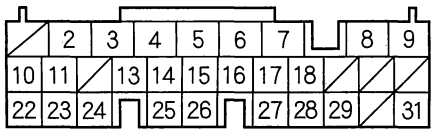

TCS OFF SWITCH 5P CONNECTOR

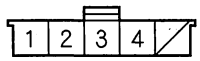

ABS/TCS MODULATOR-CONTROL UNIT 47P CONNECTOR

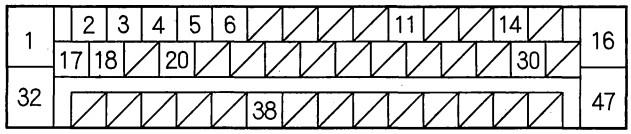

Wire side of female terminals

DATA LINK CONNECTOR (16P)

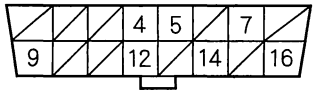

Terminal side of female terminals

WHEEL SENSOR 2P CONNECTOR FRONT/REAR



Terminal side of male terminals

BACK

Protected by AR

DTC Troubleshooting

DTC 11, 13, 15, 17: Wheel Sensor (Open/Short to Body Ground/Short to Power)

1. Disconnect the ABS/TCS modulator-control unit 47P connector.
2. Start the engine.
3. Measure the voltage between body ground and the appropriate wheel sensor +B and GND terminals of the ABS/TCS modulator-control unit 47P connector individually (see table).

DTC	Appropriate Terminal	
	+B	GND
11 (Right-front)	FR +B: No. 18	FR-GND: No. 17
13 (Left-front)	FL +B: No. 4	FL-GND: No. 20
15 (Right-rear)	RR +B: No. 5	RR-GND: No. 6
17 (Left-rear)	RL +B: No. 2	RL-GND: No. 3

ABS/TCS MODULATOR-CONTROL UNIT 47P CONNECTOR

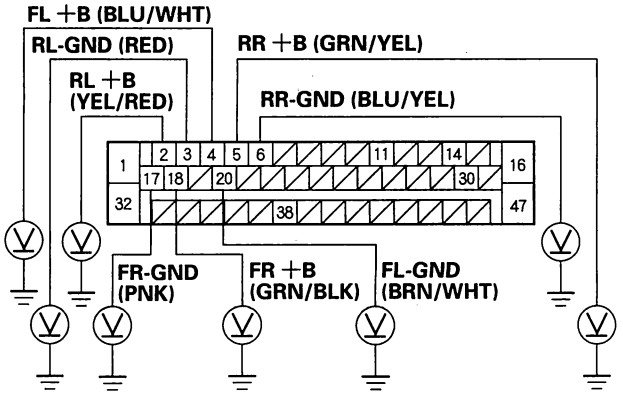

Wire side of female terminals

Is there battery voltage?

YES—Repair short to power in the wire between the ABS/TCS modulator-control unit and the appropriate wheel sensor. ■

NO—Go to step 4.

4. Turn the ignition switch OFF.
5. Check for continuity between body ground and the appropriate wheel sensor +B and GND terminals of the ABS/TCS modulator-control unit 47P connector individually (see table).

DTC	Appropriate Terminal	
	+B	GND
11 (Right-front)	FR +B: No. 18	FR-GND: No. 17
13 (Left-front)	FL +B: No. 4	FL-GND: No. 20
15 (Right-rear)	RR +B: No. 5	RR-GND: No. 6
17 (Left-rear)	RL +B: No. 2	RL-GND: No. 3

ABS/TCS MODULATOR-CONTROL UNIT 47P CONNECTOR

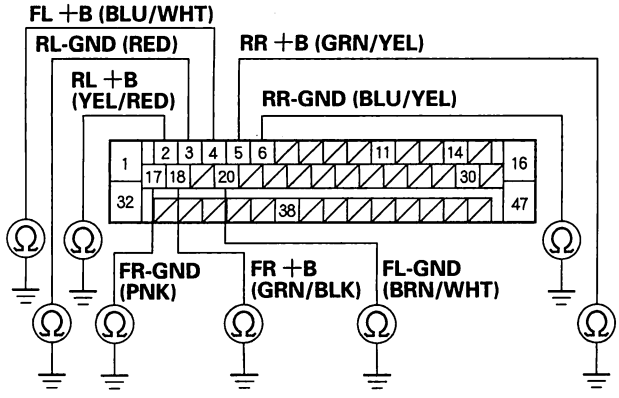

Wire side of female terminals

Is there continuity?

YES—Go to step 6.

NO—Go to step 8.

(cont'd)

BACK

Protected by AR

DTC Troubleshooting (cont'd)

6. Disconnect the appropriate wheel sensor 2P connector.

7. Check for continuity between body ground and the appropriate wheel sensor +B and GND terminals of the ABS/TCS modulator-control unit 47P connector individually (see table).

DTC	Appropriate Terminal	
	+B	GND
11 (Right-front)	FR +B: No. 18	FR-GND: No. 17
13 (Left-front)	FL +B: No. 4	FL-GND: No. 20
15 (Right-rear)	RR +B: No. 5	RR-GND: No. 6
17 (Left-rear)	RL +B: No. 2	RL-GND: No. 3

ABS/TCS MODULATOR-CONTROL UNIT 47P CONNECTOR

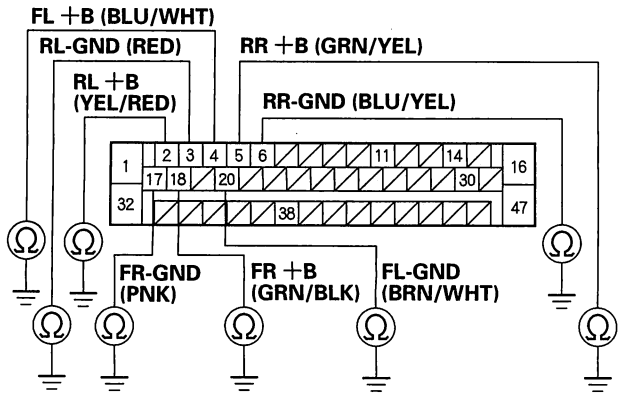

Wire side of female terminals

Is there continuity?

YES—Repair short to body ground in the wire between the ABS/TCS modulator-control unit and the wheel sensor. ■

NO—Replace the wheel sensor (see page 19-59). ■

8. Measure the resistance between the appropriate wheel sensor +B and GND terminals of the ABS/TCS modulator-control unit 47P connector (see table), then measure the resistance between the same terminals after reversing the positive tester probe and negative tester probe.

DTC	Appropriate Terminal	
	+B	GND
11 (Right-front)	FR +B: No. 18	FR-GND: No. 17
13 (Left-front)	FL +B: No. 4	FL-GND: No. 20
15 (Right-rear)	RR +B: No. 5	RR-GND: No. 6
17 (Left-rear)	RL +B: No. 2	RL-GND: No. 3

ABS/TCS MODULATOR-CONTROL UNIT 47P CONNECTOR

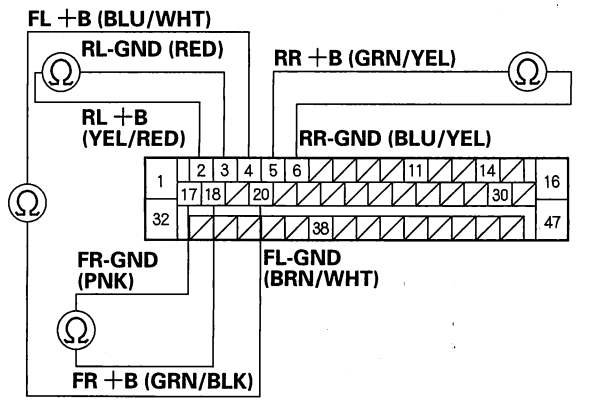

Wire side of female terminals

Is the resistance infinity (open circuit) in both directions?

YES—Go to step 9.

NO—Go to step 11.

BACK

Protected by AR

9. Disconnect the appropriate wheel sensor 2P connector.

10. Measure the resistance between the appropriate wheel sensor 2P connector terminals, then remeasure the resistance between the same terminals after reversing the positive tester probe and negative tester probe. Each wheel sensor has a diode in the circuit.

WHEEL SENSOR 2P CONNECTOR

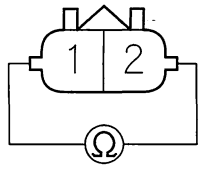

Wire side of female terminals

Is the resistance infinity (open circuit) in both directions?

YES—Replace the wheel sensor (see page 19-59). ■

NO—Repair open in the wire between the ABS/TCS modulator-control unit and the wheel sensor. ■

11. Check for continuity between the appropriate wheel sensor +B and GND terminals of the ABS/TCS modulator-control unit 47P connector (see table), then recheck for continuity between the same terminals after reversing the positive tester probe and negative tester probe.

DTC	Appropriate Terminal	
	+B	GND
11 (Right-front)	FR +B: No. 18	FR-GND: No. 17
13 (Left-front)	FL +B: No. 4	FL-GND: No. 20
15 (Right-rear)	RR +B: No. 5	RR-GND: No. 6
17 (Left-rear)	RL +B: No. 2	RL-GND: No. 3

ABS/TCS MODULATOR-CONTROL UNIT 47P CONNECTOR

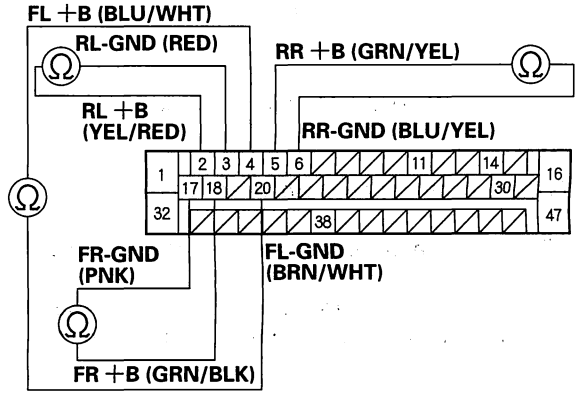

Wire side of female terminals

Is there continuity in both directions?

YES—Go to step 12.

NO—Check for loose terminals in the ABS/TCS modulator-control unit 47P connector. If necessary, substitute a known-good ABS/TCS modulator-control unit, and recheck. ■

(cont'd)

BACK

Protected by AR

DTC Troubleshooting (cont'd)

12. Disconnect the appropriate wheel sensor 2P connector.

13. Check for continuity between the appropriate wheel sensor 2P connector terminals, then recheck for continuity between the same terminals after reversing the positive tester probe and negative tester probe. Each wheel sensor has a diode in the circuit.

WHEEL SENSOR 2P CONNECTOR

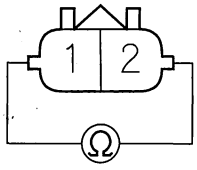

Wire side of female terminals

Is there continuity in both directions?

YES—Replace the wheel sensor (see page 19-59). ■

NO—Repair short in the wire between the ABS/TCS modulator-control unit and the wheel sensor. ■

DTC 12, 14, 16, 18: Wheel Sensor (Electrical Noise/Intermittent Interruption)

NOTE: If the ABS indicator comes on because of electrical noise, the indicator goes off when you test-drive the vehicle at 19 mph (30 km/h).

1. Check the appropriate wheel sensor, magnetic encoder (front) and pulser (rear) (see page 19-58).

DTC	Appropriate Wheel Sensor
12	Right-front
14	Left-front
16	Right-rear
18	Left-rear

Are they OK?

YES—Go to step 2.

NO—Reinstall or replace the appropriate wheel sensor, magnetic encoder (front) or pulser (rear). ■

2. Disconnect the ABS/TCS modulator-control unit 47P connector.

BACK

Protected by AR

3. Check for continuity between the appropriate wheel sensor GND terminal and other wheel sensor GND terminals of the ABS/TCS modulator-control unit (see table).

DTC	Appropriate Terminal	Other Terminals		
12	FR-GND: No. 17	No. 20	No. 6	No. 3
14	FL-GND: No. 20	No. 17	No. 6	No. 3
16	RR-GND: No. 6	No. 17	No. 20	No. 3
18	RL-GND: No. 3	No. 17	No. 20	No. 6

ABS/TCS MODULATOR-CONTROL UNIT 47P CONNECTOR

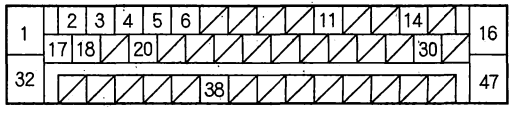

Wire side of female terminals

Is there continuity?

YES—Repair short in the wire between the appropriate wheel sensor and the other wheel sensor. ■

NO—Clear the DTC, and test-drive the vehicle. If the ABS indicator comes on and the same DTC is indicated, replace the appropriate wheel sensor. If after clearing the DTC and test driving the vehicle, the ABS indicator comes on and the same DTC is indicated, replace the ABS/TCS modulator-control unit (see page 19-56). ■

DTC 21, 22: Magnetic Encoder (Front)

DTC 23, 24: Pulser (Rear)

1. Clear the DTC (see page 19-15).
2. Test-drive the vehicle at 19 mph (30 km/h) or more.

   Does the ABS indicator come on, and are DTCs 21, 22, 23, and/or 24 indicated?

   YES—Go to step 3.

   NO—The system is OK at this time. ■
3. Check the appropriate encoder or pulser (see table) (see page 19-58).

DTC	Appropriate Encoder or Pulser
21	Right-front
22	Left-front
23	Right-rear
24	Left-rear

Is the encoder or pulser OK?

YES—Check for loose terminals in the ABS/TCS modultor-control unit 47P connector. If necessary, substitute a known-good ABS/TCS modulator-control unit, and recheck. ■

NO—Replace the magnetic encoder or pulser. ■

Protected by AR

DTC Troubleshooting (cont'd)

DTC 31, 32, 33, 34, 35, 36, 37, 38: ABS Solenoid

1. Clear the DTC (see page 19-15).
2. Turn the ignition switch ON (II).
3. Verify the DTC.

   Does the ABS indicator come on, and are DTCs 31, 32, 33, 34, 35, 36, 37, and/or 38 indicated?

   YES—Check for loose terminals in the ABS/TCS modulator-control unit 47P connector. If necessary, substitute a known-good ABS/TCS modulator-control unit, and recheck. ■

   NO—The system is OK at this time. ■

DTC 41, 42, 43, 44: Wheel Lock

1. Check for brake drag.

   Do the brakes drag?

   YES—Repair the brake drag. ■

   NO—Go to step 2.

2. Check the installation of the appropriate wheel sensor (see table).

DTC	Appropriate Wheel Sensor
41	Right-front
42	Left-front
43	Right-rear
44	Left-rear

   Is it correct?

   YES—Clear the DTC and test-drive the vehicle. If the ABS indicator comes on and the same DTC is indicated, replace the ABS/TCS modulator-control unit (see page 19-56). If the ABS indicator does not come back on, the probable cause was the vehicle spun during cornering. ■

   NO—Reinstall the wheel sensor correctly. ■

BACK

Protected by AR

DTC 51: Motor Lock

1. Check the No. 17 (30 A) fuse in the under-hood fuse/relay box.

   Is the fuse OK?

   YES—Reinstall the fuse, and go to step 2.

   NO—Replace the fuse, and recheck.■

2. Disconnect the ABS/TCS modulator-control unit 47P connector.

3. Measure the voltage between the ABS/TCS modulator-control unit 47P connector terminal No. 16 and body ground.

ABS/TCS MODULATOR-CONTROL UNIT 47P CONNECTOR

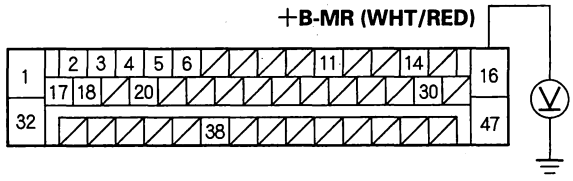

Wire side of female terminals

Is there battery voltage?

YES—Go to step 4.

NO—Repair open in the wire between the No. 17 (30 A) fuse and the ABS/TCS modulator-control unit.■

4. Check for continuity between the ABS/TCS modulator-control unit 47P connector terminal No. 47 and body ground.

ABS/TCS MODULATOR-CONTROL UNIT 47P CONNECTOR

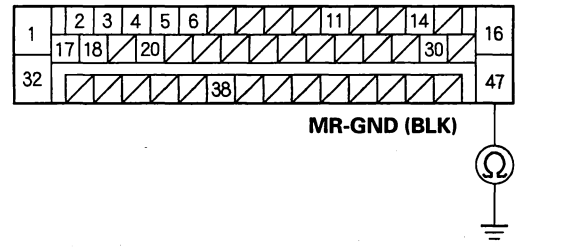

Wire side of female terminals

Is there continuity?

YES—Go to step 5.

NO—Repair open in the wire between the ABS/TCS modulator-control unit and body ground (G203).■

5. Reconnect the ABS/TCS modulator-control unit 47P connector.

6. Clear the DTC (see page 19-15).

7. Test-drive the vehicle at 10 mph (15 km/h) or more.

   Does the ABS indicator come on, and is DTC 51 indicated?

   YES—Replace the ABS/TCS modulator-control unit (see page 19-56).■

   NO—The system is OK at this time.■

Protected by AR

DTC Troubleshooting (cont'd)

DTC 52: Motor Stuck OFF

1. Check the No. 17 (30 A) fuse in the under-hood fuse /relay box.

   Is the fuse OK?

   YES—Reinstall the fuse, and go to step 2.

   NO—Replace the fuse, and recheck.■

2. Disconnect the ABS/TCS modulator-control unit 47P connector.

3. Measure the voltage between the ABS/TCS modulator-control unit 47P connector terminal No. 16 and body ground.

ABS/TCS MODULATOR-CONTROL UNIT 47P CONNECTOR

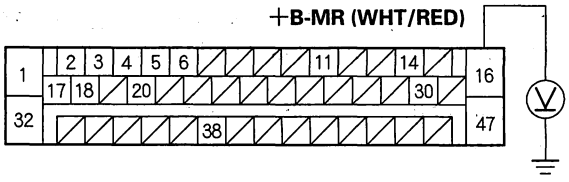

Wire side of female terminals

Is there battery voltage?

YES—Go to step 4.

NO—Repair open in the wire between the No. 17 (30 A) fuse and the ABS/TCS modulator-control unit.■

4. Check for continuity between the ABS/TCS modulator-control unit 47P connector terminal No. 47 and body ground.

ABS/TCS MODULATOR-CONTROL UNIT 47P CONNECTOR

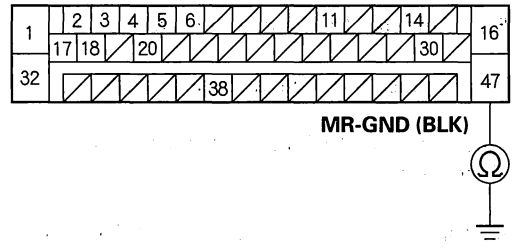

Wire side of female terminals

Is there continuity?

YES—Check for loose terminals in the ABS/TCS modulator-control unit 47P connector. If necessary, substitute a known-good ABS/TCS modulator-control unit, and recheck.■

NO—Repair open in the wire between the ABS/TCS modulator-control unit and body ground (G203).■

BACK

Protected by AR

DTC 53: Motor Stuck ON

1. Clear the DTC (see page 19-15).
2. Test-drive the vehicle.

   Does the ABS indicator come on, and is DTC 53 indicated?

   YES—Go to step 3.

   NO—The system is OK at this time.■
3. Check for continuity between the ABS/TCS modulator-control unit 47P connector terminal No. 47 and body ground.

ABS/TCS MODULATOR-CONTROL UNIT 47P CONNECTOR

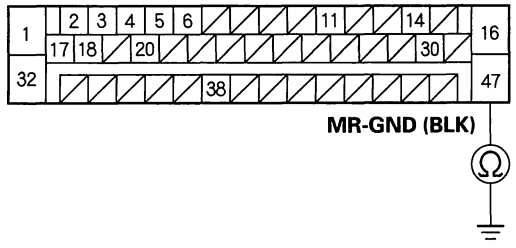

Wire side of female terminals

Is there continuity?

YES—Check for loose terminals in the ABS/TCS modulator-control unit 47P connector. If necessary, substitute a known-good ABS/TCS modulator-control unit, and recheck.■

NO—Repair open in the wire between the ABS/TCS modulator-control unit and body ground (G203).■

DTC 54: ABS Fail-safe Relay

1. Clear the DTC (see page 19-15).
2. Test-drive the vehicle.

   Does the ABS indicator come on, and is DTC 54 indicated?

   YES—Replace the ABS/TCS modulator-control unit (see page 19-56).■

   NO—Intermittent failure; the vehicle is OK at this time.■

Protected by AR

DTC Troubleshooting (cont'd)

DTC 61, 62: High/Low Voltage

1. Clear the DTC (see page 19-15).
2. Turn the ignition switch ON (II).

   Does the ABS indicator come on?

   YES—Go to step 3.

   NO—The system is OK at this time. ■
3. Verify the DTC.

   Is DTC 61 or 62 indicated?

   YES—Check the charging system. ■

   NO—Do the appropriate troubleshooting for the DTC indicated. ■

DTC 64: Sensor Power Voltage

1. Clear the DTC (see page 19-15).
2. Test-drive the vehicle.

   Does the ABS indicator come on, and is DTC 64 indicated?

   YES—Replace the ABS/TCS modulator-control unit (see page 19-56). ■

   NO—The system is OK at this time. ■

BACK

Protected by AR

DTC 65: Brake Fluid Level

1. Check the brake fluid level.

   Is the level correct?

   YES—Go to step 2.

   NO—Refill the brake fluid, and recheck. ■

2. Check the brake fluid level switch, refer to the 2003-2006 Accord Service Manual (see page 19-11).

   Is the switch OK?

   YES—Check for loose terminals in the ABS/TCS modulator-control unit 47P connector. If necessary, substitute a known-good ABS/TCS modulator-control unit, and recheck. ■

   NO—Replace the brake fluid level switch. ■

DTC 66: Pressure Sensor (Inside of ABS/TCS Modulator-control Unit)

1. Clear the DTC (see page 19-15).

2. Test-drive the vehicle.

   Does the ABS indicator come on, and is DTC 66 indicated?

   YES—Replace the ABS/TCS modulator-control unit (see page 19-56). ■

   NO—The system is OK at this time. ■

Protected by AR

DTC Troubleshooting (cont'd)

DTC 68: Brake Pedal Position Switch

1. Check the DTC.

   Is DTC 86 indicated?

   YES—Go to troubleshooting for DTC 86. ■

   NO—Go to step 2.

2. Check the brake pedal position switch, refer to the 2003-2006 Accord Service Manual (see page 22-195).

   Is the switch OK?

   YES—Go to step 3.

   NO—Replace the brake pedal position switch. ■

3. Clear the DTC (see page 19-15).

4. Test-drive the vehicle.

   Does the ABS indicator come on, and is DTC 68 indicated?

   YES—Go to step 5.

   NO—The system is OK at this time. ■

5. Check the BRAKE SWITCH indication in the PGM-FI data list using the HDS.

   Does the BRAKE SWITCH data indicate ON with the brake pedal pressed, and OFF with the brake pedal released?

   YES—Check for loose terminals in the ABS/TCS modulator-control unit 47P connector. If necessary, substitute a known-good ABS/TCS modulator-control unit, and recheck. ■

   NO—Repair open or short in brake pedal position switch circuit. If the circuit is OK, substitute a known-good ECM/PCM, and recheck. ■

DTC 71: Different Diameter Tire

1. Clear the DTC (see page 19-15).

2. Test-drive the vehicle.

   Does the ABS indicator come on, and is DTC 71 indicated?

   YES—Go to step 3.

   NO—Intermittent failure; the vehicle is OK at this time. ■

3. Check that all four tires are the specified size and are inflated to the proper specification.

   Are all four tires the correct size and properly inflated?

   YES—Go to step 4.

   NO—Install the correct tires or set the tires to the correct inflation, and retest. ■

4. With the vehicle on level ground, mark each tire with a small spot of grease. Roll the vehicle until each of the tires makes two grease spots on the floor.

5. Measure and record the distance between the two grease spots.

   Is the difference between the shortest and the longest measurement more than 10 %?

   YES—Replace the tire/tires that is smaller or larger than the others. ■

   NO—Replace the ABS/TCS modulator-control unit (see page 19-56). ■

BACK

Protected by AR

DTC 81: Central Processing Unit (CPU)

1. Check for other DTCs.

   Is another DTC indicated?

   YES—Do the appropriate troubleshooting for the DTC indicated. ■

   NO—Go to step 2.

2. Clear the DTC (see page 19-15).

3. Test-drive the vehicle.

   Does the ABS indicator come on, and is DTC 81 indicated?

   YES—Check for loose terminals in the ABS/TCS modulator-control unit 47P connector. If necessary, substitute a known-good ABS/TCS modulator-control unit, and recheck. ■

   NO—Intermittent failure; the vehicle is OK at this time. ■

DTC 83: ECM/PCM

1. Check the DTC.

   Is DTC 86 indicated?

   YES—Do the troubleshooting for DTC 86. ■
   NO—Go to step 2.

2. Clear the DTC (see page 19-15).

3. Test-drive the vehicle.

   Do the TCS and TCS activation indicators come on, and is DTC 83 indicated?

   YES—Go to step 4.
   NO—The system is OK at this time. ■

4. Check the PGM-FI system.

   Does the MIL indicator come on or are PGM-FI or A/T- related DTCs indicated?

   YES—Do the troubleshooting for the DTC indicated. ■
   NO—Go to step 5.

5. Check the gear position.

   Does the D indicator come on while the neutral position N is selected or is the ECM/PCM's DTC indicated?

   YES—Do the troubleshooting for the DTC indicated. ■
   NO—Check for loose terminals in the ECM/PCM connectors, and go to step 6.

6. Clear the DTC (see page 19-15).

7. Test-drive the vehicle.

   Is DTC 83 indicated with no PGM-FI or A/T-related DTCs?

   YES—Check for loose terminals in the ECM/PCM. If the terminals are OK, check for loose terminals in the ABS/TCS modulator-control unit 47P connector. If necessary, substitute a known-good ABS/TCS modulator-control unit, and recheck. ■
   NO—The system is OK at this time. ■

Protected by AR

DTC Troubleshooting (cont'd)

DTC 84: TCS Pressure Sensor Neutral Position

1. Clear the DTC (see page 19-15).
2. Test-drive the vehicle.

   Does the TCS indicator come on, and is DTC 84 indicated?

   YES—Replace the ABS/TCS modulator-control unit (see page 19-56). ■

   NO—The system is OK at this time. ■

DTC 86: F-CAN Communication

1. Clear the DTC (see page 19-15).
2. Turn the ignition switch OFF then back to the ON (II).
3. Start and run the engine for at least 5 seconds then turn the engine off.
4. Check for DTCs by selecting the DTCs MENU (DTCs) from the HDS.

   Is DTC 86 indicated?

   YES—Go to step 5.

   NO—Intermittent failure, the F-CAN communication line is OK at this time. ■

5. Check for DTCs in the ECM/PCM.

   Are any DTCs indicated?

   YES—Troubleshoot the ECM/PCM DTCs. ■

   NO—Replace the ABS/TCS modulator-control unit (see page 19-56). ■

BACK

Protected by AR

DTC 107: TCS Operation

NOTE: If the ABS/TCS modulator-control unit detected this problem, only the TCS activation indicator comes on.

1. Clear the DTC (see page 19-15).
2. Test-drive the vehicle.

   Does the TCS activation indicator come on, and is DTC 107 indicated?

   YES—Leave the vehicle for about 1 hour. And then, test-drive the vehicle. If the TCS activation indicators are indicated, check for loose terminals of the ABS/TCS modulator-control unit 47P connector. If necessary, substitute a known-good ABS/TCS modulator-control unit, and recheck.■

   NO—Intermittent failure; the system is OK at this time.■

DTC 112: Internal Power Source Stuck OFF

NOTE: If the battery cable is disconnected three times with the ignition switch ON (II), this DTC may be stored.

1. Check for other DTCs.

   Is another DTC indicated?

   YES—Do the appropriate troubleshooting for the DTC.■

   NO—Go to step 2.
2. Clear the DTC (see page 19-15).
3. Test-drive the vehicle.

   Does the ABS indicator come on, and is DTC 112 indicated?

   YES—Go to step 4.

   NO—Intermittent failure; the vehicle is OK at this time.■
4. Check for continuity between the ABS/TCS modulator-control unit 47P connector terminal No. 32 and body ground.

ABS/TCS MODULATOR-CONTROL UNIT 47P CONNECTOR

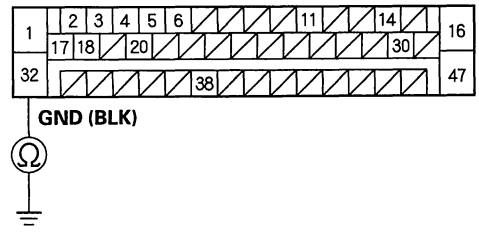

Wire side of female terminals

Is there continuity?

YES—Check for loose terminals in the ABS/TCS modulator-control unit 47P connector. If necessary, substitute a known-good ABS/TCS modulator-control unit, and recheck.■

NO—Repair open in the wire between the ABS/TCS modulator-control unit 47P connector terminal No. 32 and body ground. If the wire is OK, check the ground connector at the body.■

Protected by AR

DTC Troubleshooting (cont'd)

DTC 121, 122, 123, 124: TCS Solenoid

1. Clear the DTC (see page 19-15).
2. Test-drive the vehicle.

   Does the TCS indicator come on, and is DTC 121, 122, 123, or 124 indicated?

   YES—Check for loose terminals in the ABS/TCS modulator-control unit 47P connector. If necessary, substitute a known-good ABS/TCS modulator-control unit, and recheck. ■

   NO—Intermittent failure; the system is OK at this time. ■

Symptom Troubleshooting

ABS indicator does not come on

1. Turn the ignition switch ON (II), and watch the ABS indicator.

   Does the ABS indicator come on for several seconds?

   YES—The system is OK at this time. ■

   NO—Go to step 2.
2. Turn the ignition switch OFF.
3. Substitute a known-good ABS/TCS modulator-control unit.
4. Turn the ignition switch ON (II).

   Does the ABS indicator come on?

   YES—Replace the ABS/TCS modulator-control unit (see page 19-56). ■

   NO—Do the gauges self-diagnostic procedure, refer to the 2003-2006 Accord Service Manual (see page 22-259). ■

BACK

Protected by AR

ABS indicator does not go off, and no DTCs are stored

1. Check the No. 18 (40 A) fuse in the under-hood fuse /relay box.

   Is the fuse OK?

   YES—Reinstall the fuse, and go to step 2.

   NO—Replace the fuse, and recheck. If the fuse is blown, check for a short to body ground in this fuse circuit. If the circuit is OK, replace the ABS/TCS modulator-control unit (see page 19-56).■

2. Check the No. 18 (15 A) fuse in the under-dash fuse/ relay box.

   Is the fuse OK?

   YES—Reinstall the fuse, and go to step 3.

   NO—Replace the fuse, and recheck. If the fuse is blown, check for a short to body ground in this fuse circuit. If the circuit is OK, replace the ABS/TCS modulator-control unit (see page 19-56).■

3. Turn the ignition switch OFF.

4. Disconnect the ABS/TCS modulator-control unit 47P connector.

5. Measure the voltage between the ABS/TCS modulator-control unit 47P connector terminal No. 1 and body ground.

ABS/TCS MODULATOR-CONTROL UNIT 47P CONNECTOR

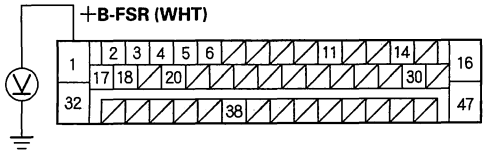

Wire side of female terminals

Is there battery voltage?

YES—Go to step 6.

NO—Repair open in the wire between the No. 18 (40 A) fuse and the ABS/TCS modulator-control unit.■

6. Turn the ignition switch ON (II).

7. Measure the voltage between the ABS/TCS modulator-control unit 47P connector terminal No. 38 and body ground.

ABS/TCS MODULATOR-CONTROL UNIT 47P CONNECTOR

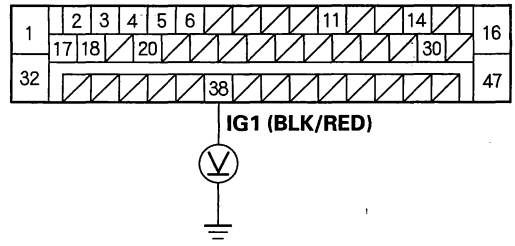

Wire side of female terminals

Is there battery voltage?

YES—Go to step 8.

NO—Repair open in the wire between the No. 18 (15 A) fuse and the ABS/TCS modulator-control unit.■

8. Turn the ignition switch OFF.

(cont'd)

Protected by AR

Symptom Troubleshooting (cont'd)

9. Check for continuity between the ABS/TCS modulator-control unit 47P connector terminal No. 32 and body ground.

ABS/TCS MODULATOR-CONTROL UNIT 47P CONNECTOR

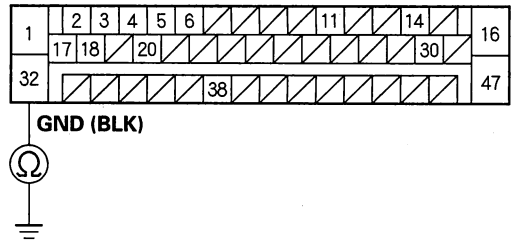

Wire side of female terminals

Is there continuity?

YES—Go to step 10.

NO—Repair open in the wire between the ABS/TCS modulator-control unit and body ground (G203). ■

10. Do the gauges self-diagnostic procedure, refer to the 2003-2006 Accord Service Manual (see page 22-259).

Does the ABS indicator flash on and off?

YES—Check for loose terminals in the ABS/TCS modulator-control unit 47P connector. If necessary, substitute a known-good ABS/TCS modulator-control unit, and recheck. ■

NO—Replace the gauge control module. ■

Brake system indicator does not come on at bulb check and/or with parking brake applied

1. With the parking brake applied, turn the ignition switch ON (II), and watch the brake system indicator.

Does the brake system indicator come on?

YES—Go to step 3.

NO—Go to step 2.

2. Turn the ignition switch OFF then ON (II) again.

Does the ABS indicator come on for several seconds?

YES—Replace the gauge control module. ■

NO—Repair open in the indicator power source circuit. If necessary, substitute a known-good gauge control module, and recheck. ■

3. Turn the ignition switch OFF.

4. Release the parking brake.

5. Turn the ignition switch ON (II).

Does the brake system indicator come on for several seconds?

YES—Go to step 6.

NO—Check for loose terminals in the gauge control module connectors. If necessary, substitute a known-good gauge control module, and recheck. ■

6. Apply the parking brake.

Does the brake system indicator come on?

YES—The system is OK at this time. ■

NO—Go to step 7.

7. Turn the ignition switch OFF.

8. Disconnect the parking brake switch connector.

BACK

Protected by AR

9. Turn the ignition switch ON (II).

10. Measure the voltage between the parking brake switch connector terminal and body ground.

    Is there battery voltage?

    YES—Replace the parking brake switch. ■

    NO—Go to step 11.

11. Turn the ignition switch OFF.

12. Remove the gauge control module, refer to the 2003-2006 Accord Service Manual (see page 22-276).

13. Connect gauge control module connector B (30P) terminal No. 13 and body ground with a jumper wire.

GAUGE CONTROL MODULE CONNECTOR B (30P)

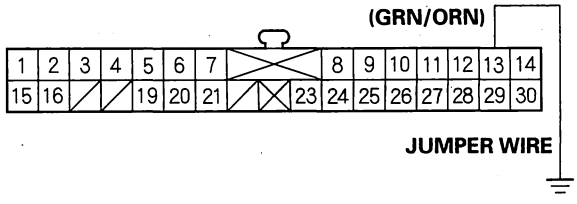

Wire side of female terminals

14. Turn the ignition switch ON (II).

    Does the brake system indicator come on and stay on?

    YES—Repair open in the wire between the gauge control module and the parking brake switch. ■

    NO—Replace the gauge control module. ■

Brake system indicator does not go off, and no DTCs are stored

1. Turn the ignition switch ON (II).

2. Release the parking brake.

    Does the brake system indicator go off after several seconds?

    YES—The system is OK at this time. ■

    NO—Go to step 3.

3. Check the brake fluid level and the brake fluid level switch.

    Is the switch and fluid level OK?

    YES—Go to step 4.

    NO—Refill the brake fluid or replace the switch, and recheck. ■

4. Check the ABS indicator.

    Does the ABS indicator stay on?

    YES—Read the ABS DTC (see page 19-15), and do the applicable troubleshooting for the DTC. ■

    NO—Check the brake system indicator circuit:

- Short to body ground between the gauge control module and the parking brake switch. ■
- Short to body ground between the gauge control module and the brake fluid level switch. ■
- Parking brake switch stuck ON. ■
- Faulty gauge control module. ■
- Faulty ABS/TCS modulator-control unit. ■

Protected by AR

Symptom Troubleshooting (cont'd)

TCS indicator does not come on

1. Turn the ignition switch ON (II), and watch the TCS indicator.

   Does the TCS indicator come on for several seconds?

   YES—The system is OK at this time.■

   NO—Go to step 2.

2. Turn the ignition switch OFF.

3. Substitute a known-good ABS/TCS modulator-control unit.

4. Turn the ignition switch ON (II).

   Does the TCS indicator come on?

   YES—Replace the ABS/TCS modulator-control unit (see page 19-56).■

   NO—Do the gauges self-diagnostic procedure, refer to the 2003 -2006 Accord Service Manual (see page 22-259).■

TCS indicator does not go off, and no DTCs are stored

1. Check the No. 18 (40 A) fuse in the under-hood fuse /relay box.

   Is the fuse OK?

   YES—Reinstall the fuse, and go to step 2.

   NO—Replace the fuse, and recheck. If the fuse is blown, check for a short to body ground in this fuse circuit. If the circuit is OK, replace the ABS/TCS modulator-control unit (see page 19-56).■

2. Check the No. 18 (15 A) fuse in the under-dash fuse/ relay box.

   Is the fuse OK?

   YES—Reinstall the fuse, and go to step 3.

   NO—Replace the fuse, and recheck. If the fuse is blown, check for a short to body ground in this fuse circuit. If the circuit is OK, replace the ABS/TCS modulator-control unit (see page 19-56).■

3. Turn the ignition switch OFF.

4. Disconnect the ABS/TCS modulator-control unit 47P connector.

5. Measure the voltage between the ABS/TCS modulator-control unit 47P connector terminal No. 1 and body ground.

ABS/TCS MODULATOR-CONTROL UNIT 47P CONNECTOR

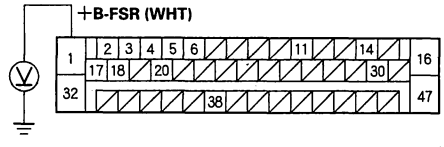

Wire side of female terminals

Is there battery voltage?

YES—Go to step 6.

NO—Repair open in the wire between the No. 18 (40 A) fuse and the ABS/TCS modulator-control unit.■

BACK

Protected by AR

6. Turn the ignition switch ON (II).

7. Measure the voltage between the ABS/TCS modulator-control unit 47P connector terminal No. 38 and body ground.

ABS/TCS MODULATOR-CONTROL UNIT 47P CONNECTOR

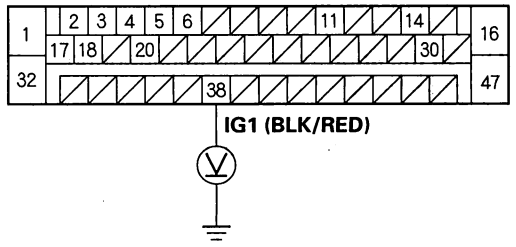

Wire side of female terminals

Is there battery voltage?

YES—Go to step 8.

NO—Repair open in the wire between the No. 18 (15 A) fuse and the ABS/TCS modulator-control unit. ■

8. Turn the ignition switch OFF.

9. Check for continuity between the ABS/TCS modulator-control unit 47P connector terminal No. 32 and body ground.

ABS/TCS MODULATOR-CONTROL UNIT 47P CONNECTOR

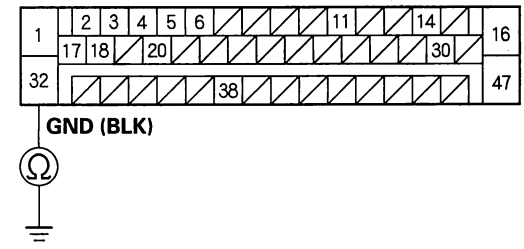

Wire side of female terminals

Is there continuity?

YES—Go to step 10.

NO—Repair open in the wire between the ABS/TCS modulator-control unit and body ground (G203). ■

10. Do the gauges self-diagnostic procedure, refer to the 2003-2006 Accord Service Manual (see page 22-259).

Does the TCS indicator flash on and off?

YES—Check for loose terminals in the ABS/TCS modulator-control unit 47P connector. If necessary, substitute a known-good ABS/TCS modulator-control unit, and recheck. ■

NO—Replace the gauge control module. ■

Protected by AR

Symptom Troubleshooting (cont'd)

TCS activation indicator does not come on

1. Turn the ignition switch ON (II), and watch the TCS activation indicator.

   Does the TCS activation indicator come on for several seconds?

   YES—The system is OK at this time. ■

   NO—Go to step 2.

2. Turn the ignition switch OFF.
3. Substitute a known-good ABS/TCS modulator-control unit.
4. Turn the ignition switch ON (II).

   Does the TCS activation indicator come on?

   YES—Replace the ABS/TCS modulator-control unit (see page 19-56). ■

   NO—Do the gauges self-diagnostic procedure, refer to the 2003-2006 Accord Service Manual (see page 22-259). ■

TCS activation indicator does not go off, and no DTCs are stored

1. Turn the ignition switch ON (II), and watch the TCS indicator.

   Does the TCS indicator go off?

   YES—Go to step 2.

   NO—Do the appropriate troubleshooting for the TCS indicator. ■

2. Clear the DTC (see page 19-15).
3. Turn the ignition switch OFF then back ON (II), and watch the TCS activation indicator.

   Does the TCS activation indicator go off after several seconds?

   YES—The system is OK at this time. ■

   NO—Go to step 4.

4. Turn the ignition switch off.
5. Check the TCS OFF switch (see page 19-54).

   Is the switch OK?

   YES—Go to step 6.

   NO—Replace the TCS OFF switch. ■

BACK

Protected by AR

6. Check for continuity between the TCS OFF switch 5P connector terminal No. 2 and the gauge control module connector B (30P) terminal No. 7.

TCS OFF SWITCH 5P CONNECTOR

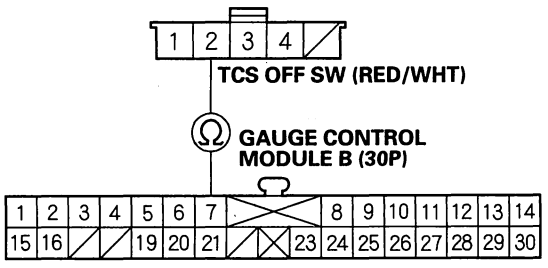

Wire side of female terminals

Is there continuity?

YES—Go to step 7.

NO—Repair open in the wire between the TCS OFF switch and the gauge control module connector B (30P). ■

7. Check for continuity between the TCS OFF switch 5P connector terminal No. 2 and body ground.

TCS OFF SWITCH 5P CONNECTOR

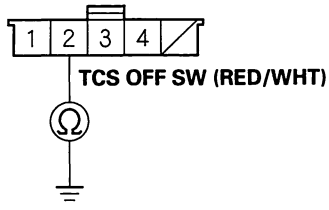

Wire side of female terminals

Is there continuity?

YES—Repair short in the wire between the TCS OFF switch 5P connector terminal No. 2 and the gauge control module. ■

NO—Go to step 8.

8. Check for continuity between the TCS OFF switch 5P connector terminal No. 1 and body ground.

TCS OFF SWITCH 5P CONNECTOR

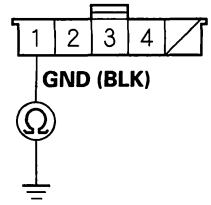

Wire side of female terminals

Is there continuity?

YES—Go to step 9.

NO—Repair open in the wire between the TCS OFF switch and body ground (G501). ■

9. Substitute a known-good ABS/TCS modulator-control unit.

10. Reconnect all of the disconnected connectors.

11. Clear the DTC (see page 19-15).

12. Test-drive the vehicle.

Does the TCS activation indicator go off?

YES—Replace the ABS/TCS modulator-control unit (see page 19-56). ■

NO—Check for loose terminals in the gauge control module connectors. If necessary, substitute a known-good gauge control module, and recheck. ■

Protected by AR

TCS OFF Switch Test

1. Remove the TCS OFF switch from the switch panel.

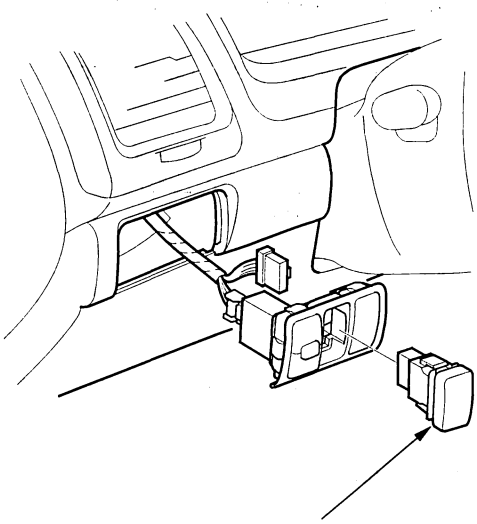

2. Disconnect the TCS OFF switch connector.
3. Check for continuity between the TCS OFF switch connector terminal No. 1 and No. 2. There should be continuity when the switch is pushed.

TCS OFF SWITCH CONNECTOR

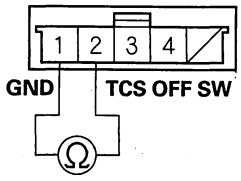

Terminal side of mal terminals

4. Check for continuity between the TCS OFF switch connector terminal No. 3 and No. 4. There should be continuity at all times.

TCS OFF SWITCH CONNECTOR

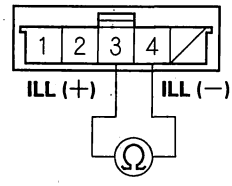

Terminal side of male terminals

BACK

Protected by AR

TCS Pressure Sensor Neutral Position Memorization

1. With the ignition switch OFF, connect the HDS to the 16P Date Link Connector (DLC) (A) under the driver's side of the dashboard.

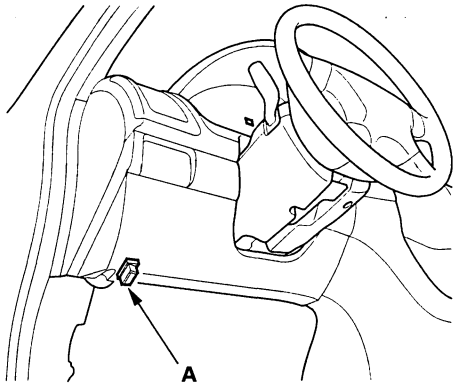

2. Short the SCS circuit to body ground using the HDS.
3. The HDS screen will display the message: "The SCS line has been shorted. Do you want to leave the SCS line shorted?" Choose YES.
4. Turn the ignition switch ON (II).
5. The ABS indicator comes on for 2 seconds.
6. Push the TCS OFF switch once within 2 seconds after the ABS indicator goes off.
7. Push the TCS OFF switch once within 2 seconds after the ABS indicator comes back on.
8. The TCS activation indicator blinks, and the system starts TCS pressure sensor neutral position memorization.
9. When the ABS indicator, TCS indicator and TCS activation indicator go off, the memorizing is done.

   NOTE: On the left bottom side of the HDS screen you will notice "SCS" blinking during steps 4 to 9.
10. Disconnect the HDS from the DLC, or go back into the SCS Menu and remove the short from there.
11. If the indicators do not go off, retry step 10.

Protected by AR

ABS/TCS Components

ABS/TCS Modulator-Control Unit Removal and Installation

NOTE:
- Do not spill brake fluid on the vehicle; it may damage the paint; if brake fluid gets on the paint, wash it off immediately with water.
- Be careful not to damage or deform the brake lines during removal and installation.
- To prevent the brake fluid from flowing, plug and cover the hose ends and joints with a shop towel or equivalent material.

Removal

1. Push in on the lock (A), then pull up the lever (B) of the ABS/TCS modulator-control unit 47P connector (C), and the connector disconnects itself.

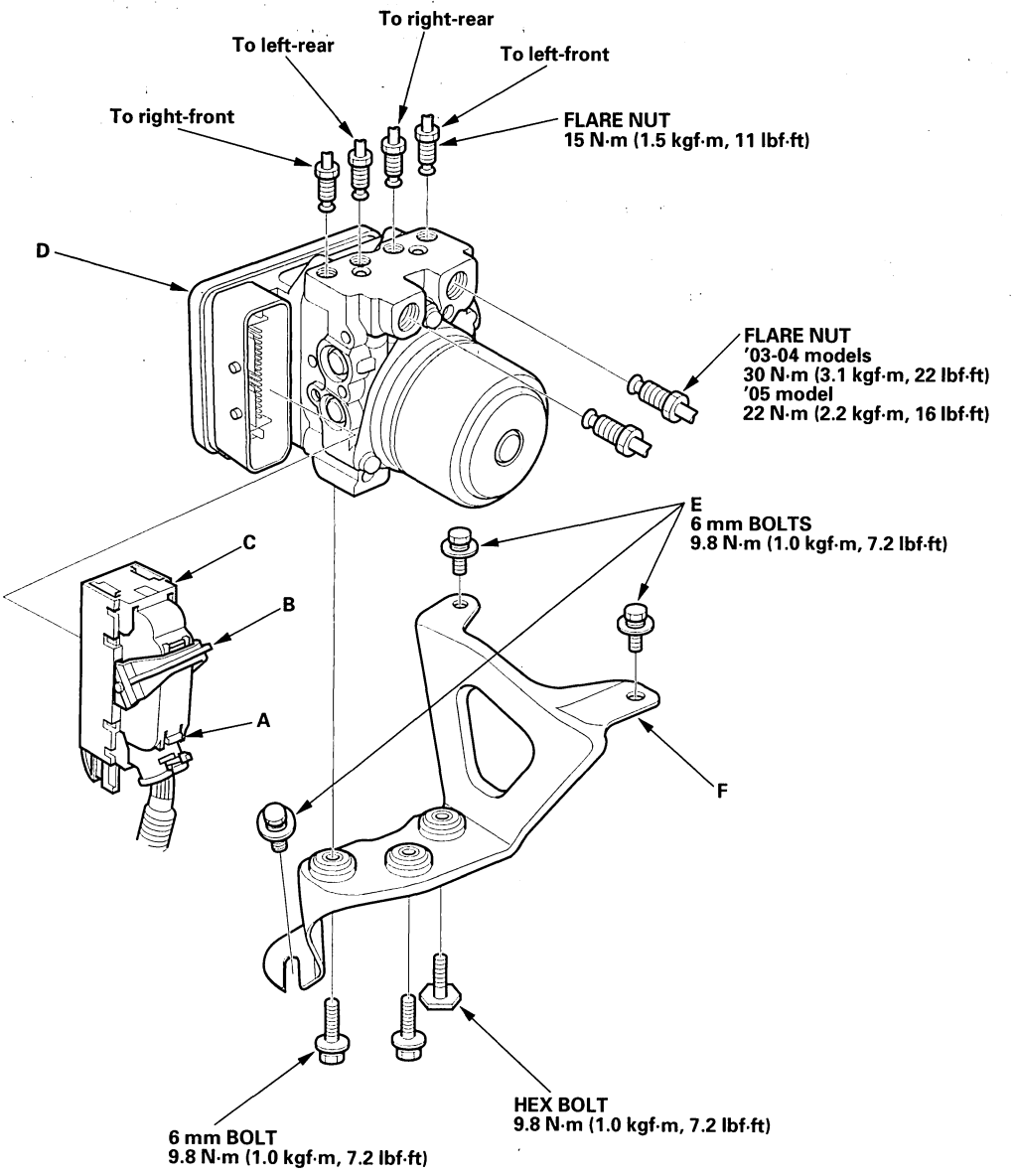

BACK

Protected by AR

2. Disconnect the six brake lines from the ABS/TCS modulator-control unit (D).
3. Remove the three 6 mm bolts (E).
4. Remove the ABS/TCS modulator-control unit and bracket (F).
5. Remove the two 6 mm bolts and hex bolt, then remove the bracket.

Installation

1. Install the ABS/TCS modulator-control unit to the bracket, then tighten the two 6 mm bolts and the hex bolt.
2. Install the ABS/TCS modulator-control unit/bracket, then tighten the three 6 mm bolts.
3. Reconnect the six brake lines, then tighten the flare nuts.
4. Align the connecting surface of the ABS/TCS modulator-control unit 47P connector.
5. Pull down the lever of the ABS/TCS modulator-control unit 47P connector until you hear it click into place, then connect the connector.
6. Bleed the brake system, starting with the front wheels.
7. Perform the TCS pressure sensor neutral position memorization (see page 19-55).
8. Start the engine, and check that the ABS, TCS and TCS activation indicators goes off.
9. Test-drive the vehicle, and check that the ABS, TCS and TCS activation indicators do not come on.

Protected by AR

Wheel Sensor Inspection

1. Check the magnetic encoder (A) or pulser (B) after cleaning it. If necessary, replace the encoder or pulser.

Front

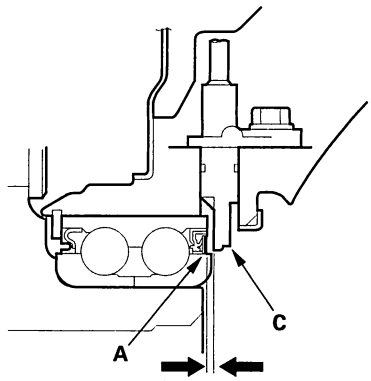

Rear

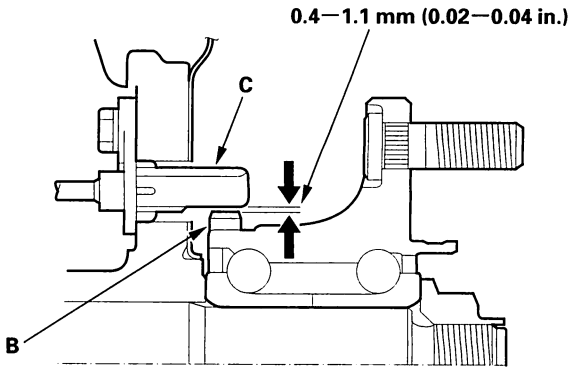

2. Measure the air gap between the wheel sensor (C) and the magnetic encoder or pulsar all the way around while rotating the encoder or pulsar.

Standard:
Front: 0.5—1.2 mm (0.02—0.05 in.)
Rear: 0.4—1.1 mm (0.02—0.04 in.)

BACK

Protected by AR

Wheel Sensor Replacement

NOTE: Install the sensor carefully to avoid twisting the wires.

Front

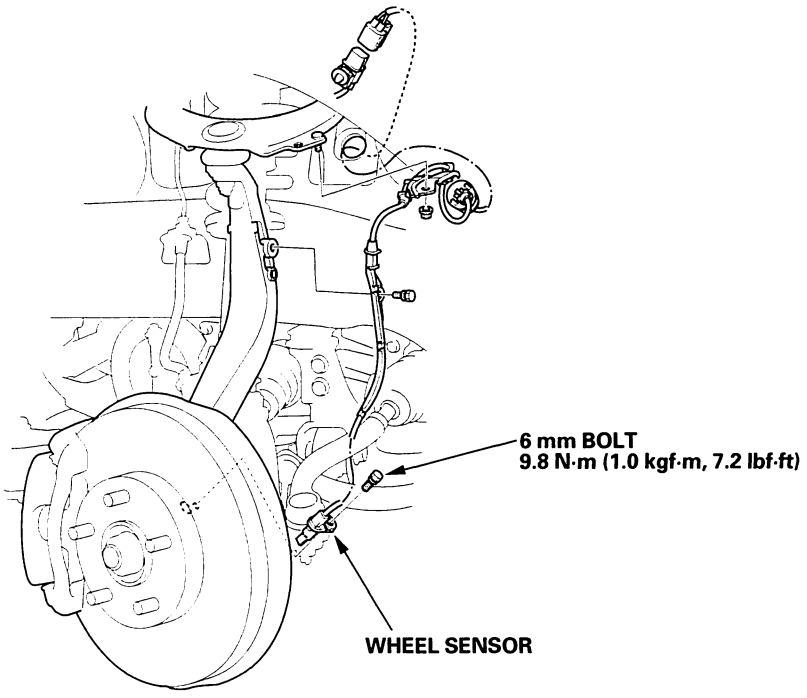

Rear

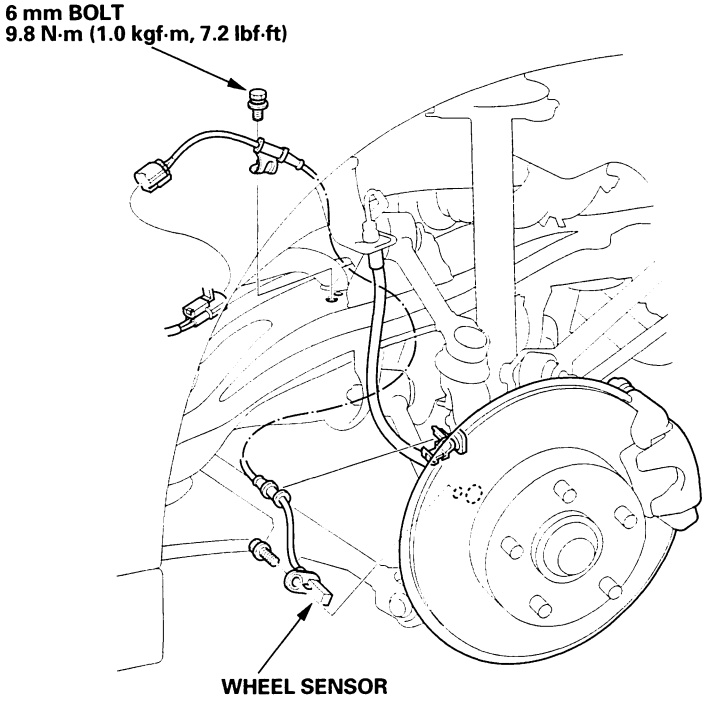

BACK

Protected by AR

BACK

Protected by AR

Brakes

Conventional Brake Components **19-1**

ABS/TCS (Anti-lock Brake System/ Traction Control System) Components ('03-05 models) **19-11**

VSA (Vehicle Stability Assist) System Components ('06 model)

Component Location Index 19-62
General Troubleshooting Information 19-63
DTC Troubleshooting Index 19-66
Symptom Troubleshooting Index 19-70
System Description 19-71
Circuit Diagram 19-80
DTC Troubleshooting 19-83
Symptom Troubleshooting 19-125
Steering Angle Sensor Replacement 19-127
Yaw Rate-Lateral Acceleration Sensor Replacement 19-128
VSA Sensor Neutral Position Memorization 19-130
VSA Off Switch Test 19-131
VSA Modulator-Control Unit Removal and Installation 19-132
Wheel Sensor Inspection 19-134
Wheel Sensor Replacement 19-135



Outline of V6 Model Change

VSA system has been added.

Protected by AR

VSA System Components

Component Location Index

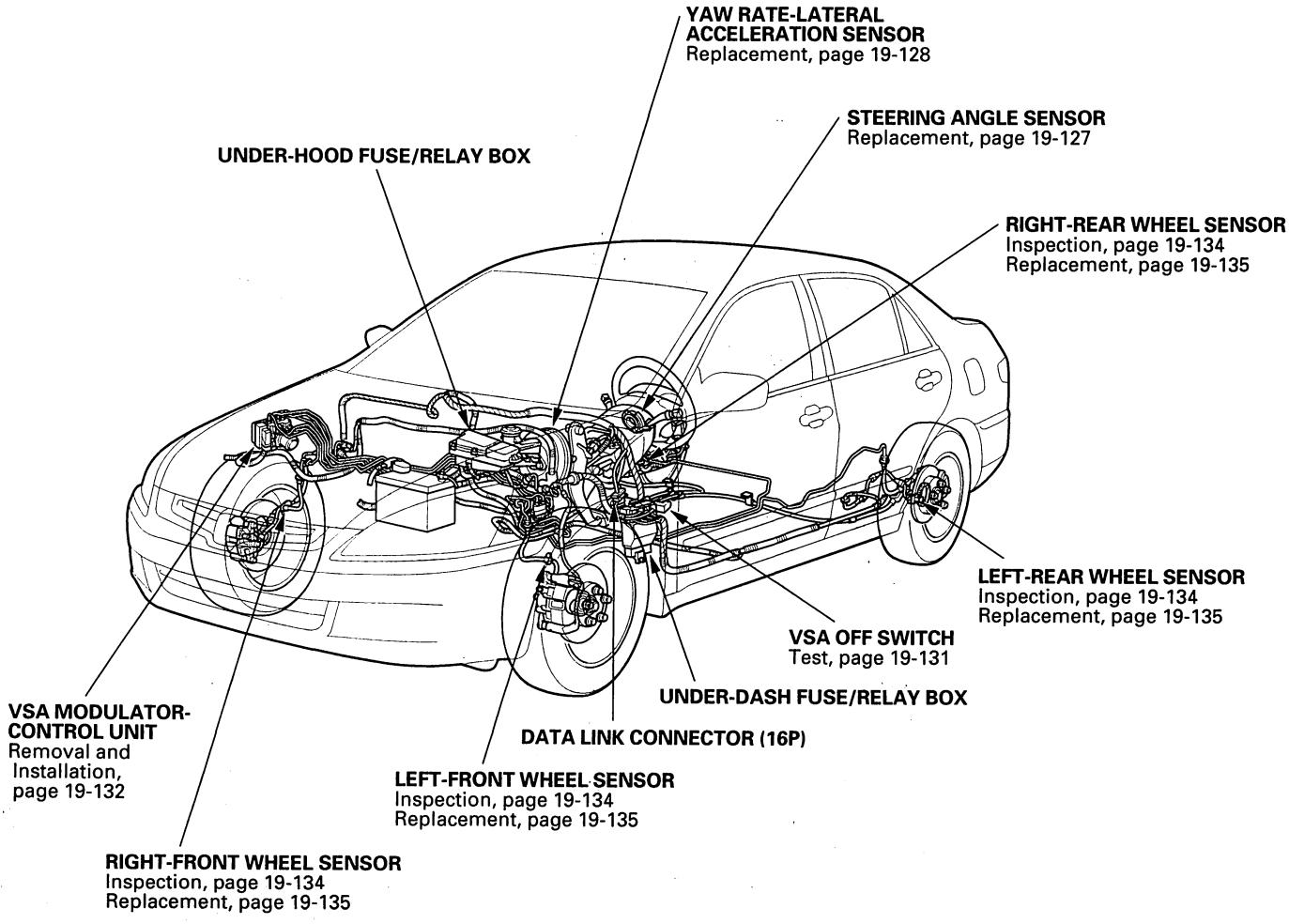

BACK

Protected by AR

General Troubleshooting Information

System Indicator

This system has four indicators:

- ABS indicator (A)
- Brake system indicator (B)
- VSA indicator (C)
- VSA activation indicator (D)

When the system detects a problem, it turn the appropriate indicators on. Depending on the failure, the VSA modulator-control unit determines which indicators are turn on.
When the system is OK, each indicator comes on for about 2 seconds after turning the ignition switch ON (II), then go off.

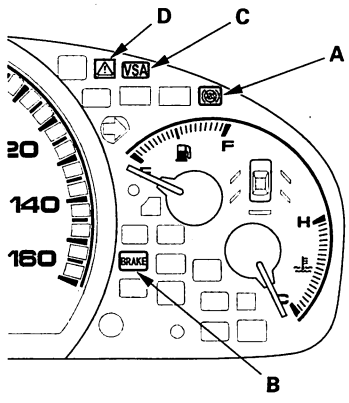

ABS indicator

ABS indicator comes on, when ABS function is lost. The brakes still work like a conventional system.

Brake system indicator

Brake system indicator comes on, when EBD function is lost, the parking brake is applied, and/or the brake fluid level is low.

VSA indicator

VSA indicator comes on, when VSA function is lost.

VSA activation indicator

VSA activation indicator blinks, when VSA function is activating. VSA activation indicator comes on, when VSA is off, or VSA function is lost.

ABS and VSA indicators go off

Each indicator will go off after a problem goes away, but the timing which the VSA modulator-control unit turns off the indicators varies between DTCs.

How to Use the HDS (Honda Diagnostic-System)

1. If the system indicators stays on, connect the HDS to the data link connector (DLC) located under the driver's side of the dashboard.

2. Turn the ignition switch on (II).

3. Check the diagnostic trouble code (DTC) and note it. Also check the download any data found. Then refer to the indicated DTC's troubleshooting, and begin the appropriate troubleshooting procedure.

   NOTE:
   - The HDS communication will be shut out when the vehicle speed at 31 mph (50 km/h) or more.
   - The HDS can read the DTC, and other system data.
   - For specific operations, refer to the user's manual that came with the HDS.

(cont'd)

Protected by AR

General Troubleshooting Information (cont'd)

Diagnostic Trouble Code (DTC)

- The memory can hold 10 DTCs. However, when the same DTC is detected more than once, the more recent DTC is written over the earlier one. Therefore, when the same problem is detected repeatedly, it is memorized as a single DTC.
- The DTCs are indicated in the order they occur.
- The DTCs are memorized in the EEPROM. Therefore, the memorized DTCs cannot be canceled by disconnecting the battery. Do the specified procedures to clear the DTCs.

Self-diagnosis

- Self-diagnosis can be classified into two categories:
  - Initial diagnosis: Done right after the ignition switch is turned ON (II) and until the ABS and VSA indicators go off.
  - Regular diagnosis: Done right after the initial diagnosis until the ignition switch is turned OFF.
- When the system detects a problem, the VSA modulator-control unit shifts to fail-safe mode.

Kickback

The pump motor operates when the VSA modulator-control unit is functioning, and the fluid in the reservoir is forced out to the master cylinder, causing kickback at the brake pedal.

Pump Motor

- The pump motor operates when the VSA modulator-control unit is functioning.
- The VSA modulator-control unit checks the pump motor operating during regular diagnosis when the vehicle is driven over 10 mph (15 km/h) the first time after the ignition switch is turned ON (II). You may hear the motor operate at this time, but it is normal.

Brake Fluid Replacement/Air Bleeding

Brake fluid replacement and air bleeding procedures are identical to the procedures used on vehicles not equipped with VSA system (see page 19-8).

How to Troubleshoot DTCs

The troubleshooting procedures assume that the cause of the problem is still present and the ABS and/or VSA indicator is still on. Following the flowchart when the ABS and/or VSA indicator does not come on can result in incorrect diagnosis.
The connector illustrations show the female terminal connectors with a single outline and the male terminal connectors with a double outline.

1. Question the customer about the conditions when the problem occurred, and try to reproduce the same conditions for troubleshooting. Find out when the ABS and/or VSA indicator came on, such as during control, after control, when vehicle was traveling at a certain speed, etc.

2. When the ABS or VSA indicator does not come on during the test-drive, but troubleshooting is done based on the DTC, check for loose connectors, poor contact of the terminals, etc. before you start troubleshooting.

3. After troubleshooting, or repairs are done, clear the DTCs, and test-drive the vehicle under the same conditions as originally set with the DTCs. Make sure the ABS and VSA indicators do not come on.

4. Check for other unit DTCs which connected via F-CAN, if there are DTCs that are related to F-CAN, the most likely cause was that the ignition switch was turned ON (II) with the VSA modulator-control unit connector disconnected. Clear the DTCs. Check for PGM-FI and ABS codes, and troubleshoot those first.

Intermittent Failures

The team "intermittent failure" means a system may have had a failure, but it checks OK now. If the system indicators in the gauge control module does not come on, check for poor connections or loose pins at all connectors related to the circuit that you are troubleshooting. If the indicators were on but then went out, the original problem may have been intermittent.

BACK

Protected by AR

How to Retrieve DTCs

1. With the ignition switch OFF, connect the HDS to the 16P data link connector (DLC) (A) under the left side of the dashboard.

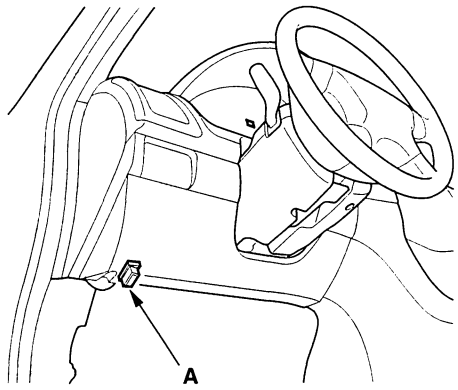

2. Turn the ignition switch ON (II), and follow the prompts on the HDS to display the DTC(s) on the screen. After determining the DTC, refer to the DTC troubleshooting.

   NOTE: See the HDS Help menu for specific instructions.

3. Turn the ignition switch OFF.

How to Clear DTCs

1. With the ignition switch OFF, connect the HDS to the 16P data link connector (DLC) (A) under the left side of the dashboard.

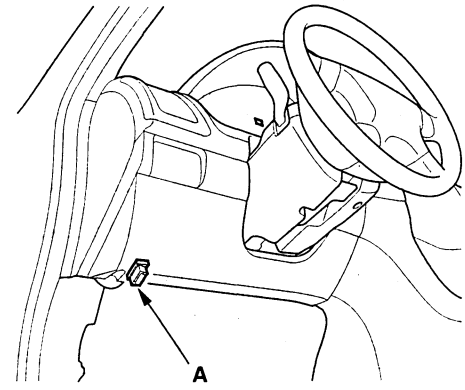

2. Turn the ignition switch ON (II), and clear the DTC(s) by following the screen prompts on the HDS.

   NOTE: See the HDS Help menu for specific instructions.

3. Turn the ignition switch OFF.

Protected by AR

VSA System Components

DTC Troubleshooting Index

DTC		Detection Item	ABS Indicator	Brake System Indicator	VSA Indicator	VSA Activation Indicator	Note
11	13	Right-front wheel sensor circuit malfunction					(see page 19-83)
12	11	Right-front wheel sensor electrical noise or intermittent interruption	ON	ON/OFF*	ON	ON	(see page 19-87)
	12	Right-front wheel sensor short to the other sensor line (13 mph (20 km/h) or more)					(see page 19-88)
	21	Right-front wheel sensor installation error (Start to 15 Seconds)					(see page 19-89)
	22	Right-front wheel sensor installation error (19 mph (30 km/h) or more)					(see page 19-89)
	23	Right-front wheel sensor installation error (0 to 9 mph (0 to 15 km/h))					(see page 19-90)
13	13	Left-front wheel sensor circuit malfunction					(see page 19-83)
14	11	Left-front wheel sensor electrical noise or intermittent interruption	ON	ON/OFF*	ON	ON	(see page 19-87)
	12	Left-front wheel sensor short to the other sensor line (13 mph (20 km/h) or more)					(see page 19-88)
	21	Left-front wheel sensor installation error (Start to 15 Seconds)					(see page 19-89)
	22	Left-front wheel sensor installation error (19 mph (30 km/h) or more)					(see page 19-89)
	23	Left-front wheel sensor installation error (0 to 9 mph (0 to 15 km/h))					(see page 19-90)
15	13	Right-rear wheel sensor circuit malfunction					(see page 19-83)
16	11	Right-rear wheel sensor electrical noise or intermittent interruption	ON	ON/OFF*	ON	ON	(see page 19-87)
	12	Right-rear wheel sensor short to the other sensor line (13 mph (20 km/h) or more)					(see page 19-88)
	21	Right-rear wheel sensor installation error (Start to 15 Seconds)					(see page 19-89)
	22	Right-rear wheel sensor installation error (19 mph (30 km/h)or more)					(see page 19-89)
	23	Right-rear wheel sensor installation error (0 to 9 mph (0 to 15 km/h))					(see page 19-90)
17	13	Left-rear wheel sensor circuit malfunction					(see page 19-83)
18	11	Left-rear wheel sensor electrical noise or intermittent interruption	ON	ON/OFF*	ON	ON	(see page 19-87)
	12	Left-rear wheel sensor short to the other sensor line (13 mph (20 km/h) or more)					(see page 19-88)
	21	Left-rear wheel sensor installation error (Start to 15 Seconds)					(see page 19-89)
	22	Left-rear wheel sensor installation error (19 mph (30 km/h) or more)					(see page 19-89)
	23	Left-rear wheel sensor installation error (0 to 9 mph (0 to 15 km/h))					(see page 19-90)
21	11	Right-front magnetic encoder malfunction (corrugated missing)	OFF	OFF	ON	ON	(see page 19-90)
22	11	Left-front magnetic encoder malfunction (corrugated missing)	OFF	OFF	ON	ON	(see page 19-90)
23	11	Right-rear pulser malfunction (corrugated missing)	OFF	OFF	ON	ON	(see page 19-90)
24	11	Left-rear pulser malfunction (corrugated missing)	OFF	OFF	ON	ON	(see page 19-90)
25	11	Yaw rate sensor internal circuit malfunction (initial)					(see page 19-91)
	12	Yaw rate sensor internal circuit malfunction (open, short)					(see page 19-91)
	21	Yaw rate sensor neutral position malfunction					(see page 19-91)
	22	Yaw rate sensor stuck					(see page 19-92)
	23	Yaw rate sensor circuit intermittent interruption					(see page 19-93)
	24	Yaw rate sensor gain high					(see page 19-93)
	25	Yaw rate sensor gain low					(see page 19-93)

*: Brake system indicator turns ON when 2 or more wheels fail.

BACK

Protected by AR

DTC		Detection Item	ABS Indicator	Brake System Indicator	VSA Indicator	VSA Activation Indicator	Note
26	11	Lateral acceleration sensor internal circuit malfunction (initial)					(see page 19-94)
	12	Lateral acceleration sensor internal circuit malfunction (open, short)					(see page 19-94)
	21	Lateral acceleration sensor stuck					(see page 19-94)
	22	Lateral acceleration sensor neutral position malfunction					(see page 19-94)
	23	Lateral acceleration sensor circuit intermittent interruption					(see page 19-94)
	24	Lateral acceleration sensor gain high					(see page 19-93)
	25	Lateral acceleration sensor gain low					(see page 19-93)
27	11	Steering angle sensor DIAG signal error					(see page 19-95)
	21	Steering angle sensor stuck neutral position					(see page 19-97)
	22	Steering angle sensor stuck offset position					(see page 19-97)
	23	Steering angle sensor exchange malfunction					(see page 19-99)
	24	Steering angle sensor counter malfunction					(see page 19-100)
	26	Steering angle sensor DIAG signal error					(see page 19-95)
31	01	ABS right-front inlet solenoid valve malfunction	ON	ON	ON	ON	(see page 19-100)
	21	ABS right-front inlet solenoid valve malfunction					(see page 19-100)
	22	ABS right-front inlet solenoid valve malfunction					(see page 19-100)
	23	ABS right-front inlet solenoid valve malfunction					(see page 19-100)
32	01	ABS right-front outlet solenoid valve malfunction	ON	ON	ON	ON	(see page 19-100)
	21	ABS right-front outlet solenoid valve malfunction					(see page 19-100)
	22	ABS right-front outlet solenoid valve malfunction					(see page 19-100)
	23	ABS right-front outlet solenoid valve malfunction					(see page 19-100)
33	01	ABS left-front inlet solenoid valve malfunction	ON	ON	ON	ON	(see page 19-100)
	21	ABS left-front inlet solenoid valve malfunction					(see page 19-100)
	22	ABS left-front inlet solenoid valve malfunction					(see page 19-100)
	23	ABS left-front inlet solenoid valve malfunction					(see page 19-100)
34	01	ABS left-front outlet solenoid valve malfunction	ON	ON	ON	ON	(see page 19-100)
	21	ABS left-front outlet solenoid valve malfunction					(see page 19-100)
	22	ABS left-front outlet solenoid valve malfunction					(see page 19-100)
	23	ABS left-front outlet solenoid valve malfunction					(see page 19-100)
35	01	ABS right-rear inlet solenoid valve malfunction	ON	ON	ON	ON	(see page 19-100)
	21	ABS right-rear inlet solenoid valve malfunction					(see page 19-100)
	22	ABS right-rear inlet solenoid valve malfunction					(see page 19-100)
	23	ABS right-rear inlet solenoid valve malfunction					(see page 19-100)
36	01	ABS right-rear outlet solenoid valve malfunction	ON	ON	ON	ON	(see page 19-100)
	21	ABS right-rear outlet solenoid valve malfunction					(see page 19-100)
	22	ABS right-rear outlet solenoid valve malfunction					(see page 19-100)
	23	ABS right-rear outlet solenoid valve malfunction					(see page 19-100)
37	01	ABS left-rear inlet solenoid valve malfunction	ON	ON	ON	ON	(see page 19-100)
	21	ABS left-rear inlet solenoid valve malfunction					(see page 19-100)
	22	ABS left-rear inlet solenoid valve malfunction					(see page 19-100)
	23	ABS left-rear inlet solenoid valve malfunction					(see page 19-100)
38	01	ABS left-rear outlet solenoid valve malfunction	ON	ON	ON	ON	(see page 19-100)
	21	ABS left-rear outlet solenoid valve malfunction					(see page 19-100)
	22	ABS left-rear outlet solenoid valve malfunction					(see page 19-100)
	23	ABS left-rear outlet solenoid valve malfunction					(see page 19-100)
41	21	Right-front wheel lock	ON	ON/OFF*	ON	ON	(see page 19-101)
42	21	Left-front wheel lock	ON	ON/OFF*	ON	ON	(see page 19-101)
43	21	Right-rear wheel lock	ON	ON/OFF*	ON	ON	(see page 19-101)
44	21	Left-rear wheel lock	ON	ON/OFF*	ON	ON	(see page 19-101)
51	11	Motor lock	ON	OFF	ON	ON	(see page 19-102)
	12	Motor lock circuit malfunction					(see page 19-102)
	13	Motor relay OFF malfunction					(see page 19-102)
52	12	Motor lock circuit malfunction					(see page 19-103)
53	01	Motor relay stuck ON					(see page 19-104)
	12	Motor relay stuck ON					(see page 19-104)
54	03	Fail-safe relay 1 stuck ON	ON	ON	ON	ON	(see page 19-105)
	04	Fail-safe relay 1 stuck OFF 1					(see page 19-105)
	21	Fail-safe relay 1 stuck OFF 2					(see page 19-105)
56	01	Initial VIG FET stuck OFF					(see page 19-105)
	02	Initial VIG FET stuck ON					(see page 19-105)
	11	VIG FET stuck OFF					(see page 19-105)

*: Brake system indicator turns ON when 2 or more wheels fail.

(cont'd)

Protected by AR

VSA System Components

DTC Troubleshooting Index (cont'd)

DTC		Detection Item	ABS Indicator	Brake System Indicator	VSA Indicator	VSA Activation Indicator	Note
61	01	VSA modulator-control unit initial IG low voltage	ON	ON/OFF	ON	ON	(see page 19-106)
	21	VSA modulator-control unit power source low voltage					(see page 19-106)
	22	VSA modulator-control unit power source low voltage					(see page 19-106)
	23	VSA modulator-control unit power source low voltage					(see page 19-106)
62	22	VSA modulator-control unit IG high voltage	ON	ON	ON	ON	(see page 19-107)
64	11	Steering angle sensor power circuit short	OFF	OFF	ON	ON	(see page 19-108)
	12	Steering angle sensor power circuit open					(see page 19-109)
65	21	Brake fluid level stuck ON	OFF	OFF	ON	ON	(see page 19-110)
66	11	VSA pressure sensor (inside of VSA modulator-control unit) malfunction	OFF	OFF	ON	ON	(see page 19-111)
	12	VSA pressure sensor (inside of VSA modulator-control unit) malfunction					(see page 19-111)
	13	VSA pressure sensor (inside of VSA modulator-control unit) malfunction					(see page 19-111)
	14	VSA pressure sensor (inside of VSA modulator-control unit) malfunction					(see page 19-111)
	15	VSA pressure sensor (inside of VSA modulator-control unit) malfunction					(see page 19-112)
	16	VSA pressure sensor (inside of VSA modulator-control unit) malfunction					(see page 19-111)
68	21	Brake pedal position switch stuck OFF	OFF	OFF	ON	ON	(see page 19-112)
	22	Brake pedal position switch stuck ON					(see page 19-114)
71	27	Right-front or left-rear different diameter tire malfunction	ON/OFF	ON/OFF	ON	ON	(see page 19-115)
	28	Left-front or right-rear different diameter tire malfunction					(see page 19-115)
	29	Right-front and right-rear different diameter tire malfunction					(see page 19-115)
	2A	Left-front and left-rear different diameter tire malfunction					(see page 19-115)
	2B	Left-front and right-rear different diameter tire malfunction					(see page 19-115)
	2C	Left-rear and right-rear different diameter tire malfunction					(see page 19-115)
81	01	Central processing unit (CPU) internal circuit malfunction	ON	OFF	ON	ON	(see page 19-116)
	02	Central processing unit (CPU) internal circuit malfunction					(see page 19-116)
	03	Central processing unit (CPU) internal circuit malfunction					(see page 19-116)
	05	Central processing unit (CPU) internal circuit malfunction					(see page 19-116)
	06	Central processing unit (CPU) internal circuit malfunction					(see page 19-116)
	07	Central processing unit (CPU) internal circuit malfunction					(see page 19-116)
	08	Central processing unit (CPU) internal circuit malfunction					(see page 19-116)
	11	Central processing unit (CPU) internal circuit malfunction					(see page 19-116)
	12	Central processing unit (CPU) internal circuit malfunction					(see page 19-116)
	13	Central processing unit (CPU) internal circuit malfunction					(see page 19-116)
	14	Central processing unit (CPU) internal circuit malfunction					(see page 19-116)
	21	Central processing unit (CPU) internal circuit malfunction					(see page 19-116)
	22	Central processing unit (CPU) internal circuit malfunction					(see page 19-116)
	23	Central processing unit (CPU) internal circuit malfunction					(see page 19-116)
	31	Central processing unit (CPU) internal circuit malfunction					(see page 19-116)
	32	Central processing unit (CPU) internal circuit malfunction					(see page 19-116)
	33	Central processing unit (CPU) internal circuit malfunction					(see page 19-116)
	35	Central processing unit (CPU) internal circuit malfunction					(see page 19-116)
	36	Central processing unit (CPU) internal circuit malfunction					(see page 19-116)
	37	Central processing unit (CPU) internal circuit malfunction					(see page 19-116)
	38	Central processing unit (CPU) internal circuit malfunction					(see page 19-116)
	39	Central processing unit (CPU) internal circuit malfunction					(see page 19-116)
	40	Central processing unit (CPU) internal circuit malfunction					(see page 19-116)
	41	Central processing unit (CPU) internal circuit malfunction					(see page 19-116)
	42	Central processing unit (CPU) internal circuit malfunction					(see page 19-116)

*: Brake system indicator turns ON when 2 or more wheels fail.

BACK

Protected by AR

DTC		Detection Item	ABS Indicator	Brake System Indicator	VSA Indicator	VSA Activation Indicator	Note
81	51	Central processing unit (CPU) internal circuit malfunction	ON	OFF	ON	ON	(see page 19-117)
	52	Central processing unit (CPU) internal circuit malfunction					(see page 19-116)
	53	Central processing unit (CPU) internal circuit malfunction					(see page 19-117)
	54	Central processing unit (CPU) internal circuit malfunction					(see page 19-116)
	55	Central processing unit (CPU) internal circuit malfunction					(see page 19-117)
	56	Central processing unit (CPU) internal circuit malfunction					(see page 19-116)
	57	Central processing unit (CPU) internal circuit malfunction					(see page 19-117)
	58	Central processing unit (CPU) internal circuit malfunction					(see page 19-116)
	59	Central processing unit (CPU) internal circuit malfunction					(see page 19-118)
	71	Central processing unit (CPU) internal circuit malfunction					(see page 19-116)
	80	Central processing unit (CPU) internal circuit malfunction					(see page 19-116)
	3A	Central processing unit (CPU) internal circuit malfunction					(see page 19-116)
	3C	Central processing unit (CPU) internal circuit malfunction					(see page 19-116)
	3D	Central processing unit (CPU) internal circuit malfunction					(see page 19-118)
	3E	Central processing unit (CPU) internal circuit malfunction					(see page 19-118)
83	13	ECM/PCM relation failure	OFF	OFF	ON	ON	(see page 19-119)
	14	ECM/PCM relation failure					(see page 19-119)
84	21	VSA sensor neutral position not writing	OFF	OFF	ON	ON	(see page 19-119)
86	01	F-CAN BUS-OFF malfunction	OFF	OFF	ON	ON	(see page 19-120)
	11	F-CAN communication with ECM/PCM malfunction					(see page 19-121)
	21	F-CAN communication with engine malfunction					(see page 19-121)
	22	F-CAN communication with engine malfunction					(see page 19-121)
	23	F-CAN communication with engine malfunction					(see page 19-121)
	31	F-CAN communication with gauge control module malfunction					(see page 19-122)
	41	F-CAN communication with EAT malfunction					(see page 19-121)
107	22	Central processing unit (CPU) internal circuit malfunction					(see page 19-123)
108	21	Steering angle sensor malfunction					(see page 19-123)
112	01	Central processing unit (CPU) internal circuit malfunction					(see page 19-124)
121	01	VSA sensor valve module malfunction	ON	ON	ON	ON	(see page 19-124)
	02	VSA solenoid valve malfunction					(see page 19-124)
	11	VSA solenoid valve malfunction					(see page 19-124)
	21	VSA solenoid valve malfunction					(see page 19-124)
	22	VSA solenoid valve malfunction					(see page 19-124)
	23	VSA solenoid valve malfunction					(see page 19-124)
	24	VSA solenoid valve malfunction					(see page 19-124)
122	01	VSA solenoid valve malfunction	ON	ON	ON	ON	(see page 19-124)
	21	VSA solenoid valve malfunction					(see page 19-124)
	22	VSA solenoid valve malfunction					(see page 19-124)
	23	VSA solenoid valve malfunction					(see page 19-124)
123	01	VSA solenoid valve malfunction	ON	ON	ON	ON	(see page 19-124)
	02	VSA solenoid valve malfunction					(see page 19-124)
	11	VSA solenoid valve malfunction					(see page 19-124)
	21	VSA solenoid valve malfunction					(see page 19-124)
	22	VSA solenoid valve malfunction					(see page 19-124)
	23	VSA solenoid valve malfunction					(see page 19-124)
	24	VSA solenoid valve malfunction					(see page 19-124)
124	01	VSA solenoid valve malfunction	ON	ON	ON	ON	(see page 19-124)
	21	VSA solenoid valve malfunction					(see page 19-124)
	22	VSA solenoid valve malfunction					(see page 19-124)
	23	VSA solenoid valve malfunction					(see page 19-124)

*: Brake system indicator turns ON when 2 or more wheels fail.

Protected by AR

VSA System Components

Symptom Troubleshooting Index

When the vehicle has one of these symptoms, check for diagnostic trouble code (DTC) with the HDS. If there is no DTC, do the diagnostic procedure for the symptom, in the sequence listed, until you find the cause.

Symptom	Diagnostic procedure
ABS indicator and VSA indicator do not go off, and no DTCs are stored	Symptom Troubleshooting (see page 19-125).
ABS indicator does not come on	1. Do the gauge control module troubleshooting, refer to the 2003-2006 Accord Service Manual (see page 22-279). 2. Substitute a known-good VSA modulator-control unit, then recheck. If it is OK, replace the original VSA modulator-control unit (see page 19-132).
Brake system indicator does not come on	1. Do the gauge control module troubleshooting, refer to the 2003-2006 Accord Service Manual (see page 22-279). 2. Substitute a known-good VSA modulator-control unit, then recheck. If it is OK, replace the original VSA modulator-control unit (see page 19-132).
Brake system indicator does not go off	Do the gauge control module troubleshooting, refer to the 2003-2006 Accord Service Manual (see page 22-279).
VSA indicator does not come on	1. Do the gauge control module troubleshooting, refer to the 2003-2006 Accord Service Manual (see page 22-279). 2. Substitute a known-good VSA modulator-control unit, then recheck. If it is OK, replace the original VSA modulator-control unit (see page 19-132).
VSA activation indicator does not go off, and no DTCs are stored	1. Do the gauge control module troubleshooting, refer to the 2003-2006 Accord Service Manual (see page 22-279). 2. Substitute a known-good VSA modulator-control unit, then recheck. If it is OK, replace the original VSA modulator-control unit (see page 19-132). 3. Symptom Troubleshooting (see page 19-126).
VSA activation indicator does not come on at start-up (bulb check)	1. Do the gauge control module troubleshooting, refer to the 2003-2006 Accord Service Manual (see page 22-279). 2. Substitute a known-good VSA modulator-control unit, then recheck. If it is OK, replace the original VSA modulator-control unit (see page 19-132).

BACK

Protected by AR

System Description

VSA Modulator-Control Unit Inputs and Outputs for 37P Connector (Connector attached to the VSA modulator-control unit. Back-probe the terminals when testing.)

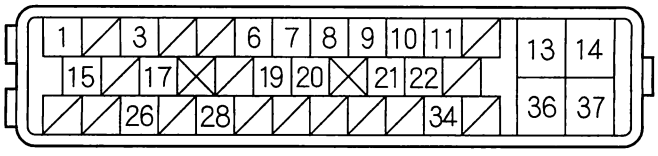

Wire side of female terminals

Terminal number	Wire color	Terminal sign	Description	Measurement (Disconnect the VSA modulator-control unit 37P connector)		
				Terminals	Conditions	Voltage
1	RED	CAN-L	CAN communication circuit	1—GND	———	———
3	BLU/ RED	STR-D	Detects steering angle sensor	3—GND	———	———
6	PNK	FR-GND	Detects right-front wheel sensor signal	6—GND	———	———
7	RED/ WHT	SVCC	Power source for the sensors	7—GND	———	———
8	RED	RL-GND	Detects left-rear wheel sensor signal	8—GND	———	———
9	GRN/ YEL	RR +B	Detects right-rear wheel sensor signal	9—GND	———	———
10	YEL/ BLK	SGND	Ground for the sensors	10—GND	———	———
11	BRN/ WHT	FL-GND	Detects left-front wheel sensor signal	11—GND	———	———
13	WHT	FSR +B	Power source for the fail-safe relay	13—GND	At all times	Battery voltage
14	WHT/ RED	MR +B	Power source for the motor relay	14—GND	———	———
15	WHT	CAN-H	CAN communication circuit	15—GND	———	———
17	GRN/ WHT	STR-B	Detects steering angle sensor signal	16—GND	———	———
19	GRN/ BLK	FR +B	Detects right-front wheel sensor signal	19—GND	———	———
20	YEL/ RED	RL +B	Detects right-rear wheel sensor signal	20—GND	———	———
21	BLU/ YEL	RR-GND	Detects right-rear wheel sensor signal	21—GND	———	———
22	BLU/ WHT	FL +B	Detects left-front wheel sensor signal	22—GND	———	———

(cont'd)

Protected by AR

VSA System Components

System Description (cont'd)

VSA Modulator-Control Unit Inputs and Outputs for 37P Connector (Connector attached to the VSA modulator-control unit. Back-probe the terminals when testing.)

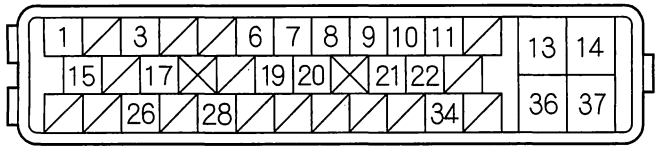

Wire side of female terminals

Terminal number	Wire color	Terminal sign	Description	Measurement (Disconnect the VSA modulator-control unit 37P connector)		
				Terminals	Conditions	Voltage
26	BLU	K-LINE	Communications with HDS	26—GND	———	———
28	BLK/ RED	IG1	Power source for activating the system	28—GND	———	Battery voltage
29	GRN	GLAT	Detects lateral acceleration sensor signal	29—GND	———	———
31	BLU/ BLK	YAW	Detects yaw rate sensor signal	31—GND	———	———
34	GRN/ RED	STR-A	Detects steering angle sensor signal	34—GND	———	———
36	BLK	GND	Ground for the VSA modulator-control unit	36—GND	———	0.1 V or less
37	BLK	MR-GND	Ground for the pump motor	37—GND	———	0.1 V or less

BACK

Protected by AR

System Outline

This system is composed of the VSA modulator-control unit, the wheel sensor, steering angle sensor, and yaw rate-lateral acceleration sensor, and do the ABS, EBD, TCS, VSA, and brake assist control by controlling the brake pressure of each wheel and the engine torque.

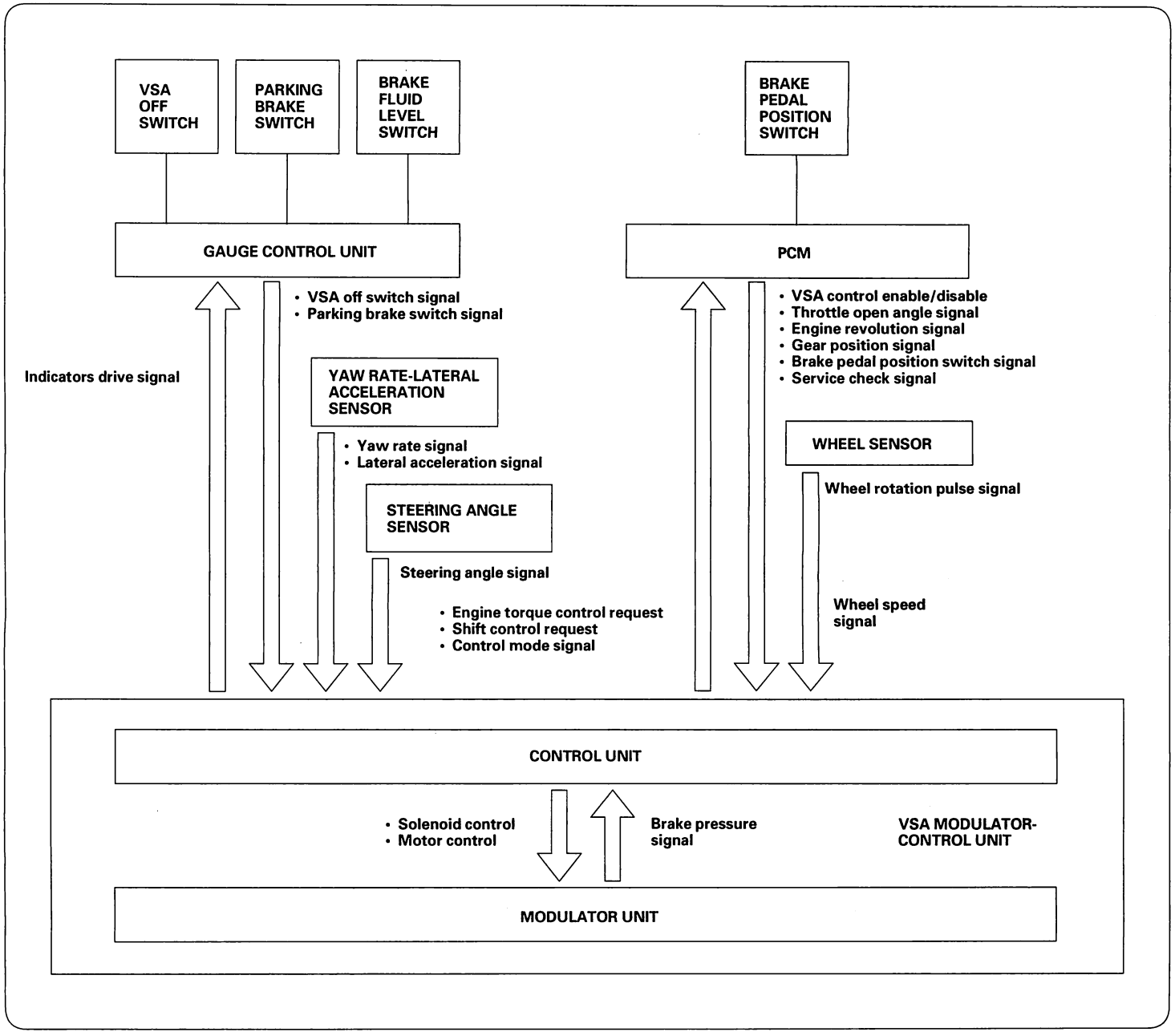

(cont'd)

Protected by AR

VSA System Components

System Description (cont'd)

ABS Features

Anti-lock control
When the brake pedal is pressed while driving, the wheels sometimes lock before the vehicle comes to a stop. In such an event, the maneuverability of the vehicle is reduced if the front wheels are locked, and the stability of the vehicle is reduced if the rear wheels are locked, creating an extremely unstable condition. The ABS precisely controls the slip rate of the wheels to ensure maximum grip force from the tires, and it thereby ensures maneuverability and stability of the vehicle. The ABS calculates the slip rate of the wheels based on the four wheel speed, then it controls the brake fluid pressure to reach the target slip rate.

Grip Force of Tire and Road Surface

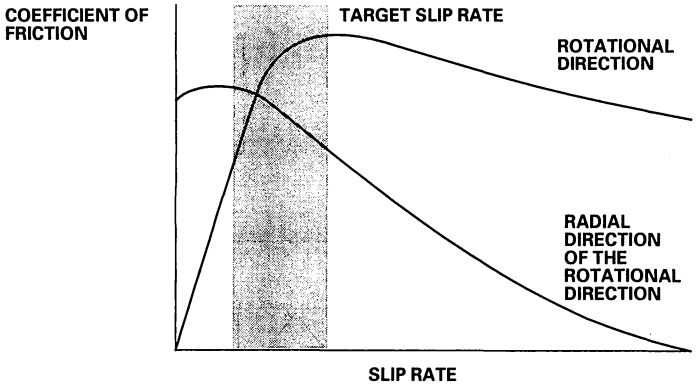

ABS Control Unit

Main Control
The control unit detects the wheel speed based on the wheel sensor signal it received, then it calculates the vehicle speed based on the detected wheel speed. The control unit detects the vehicle speed during deceleration based on the rate of deceleration.

The control unit calculates the slip rate of each wheel, and transmits the control signal to the modulator unit solenoid valve when the slip rate is high.

The hydraulic control has three modes pressure: Pressure reducing pressure, pressure retaining, pressure intensifying.

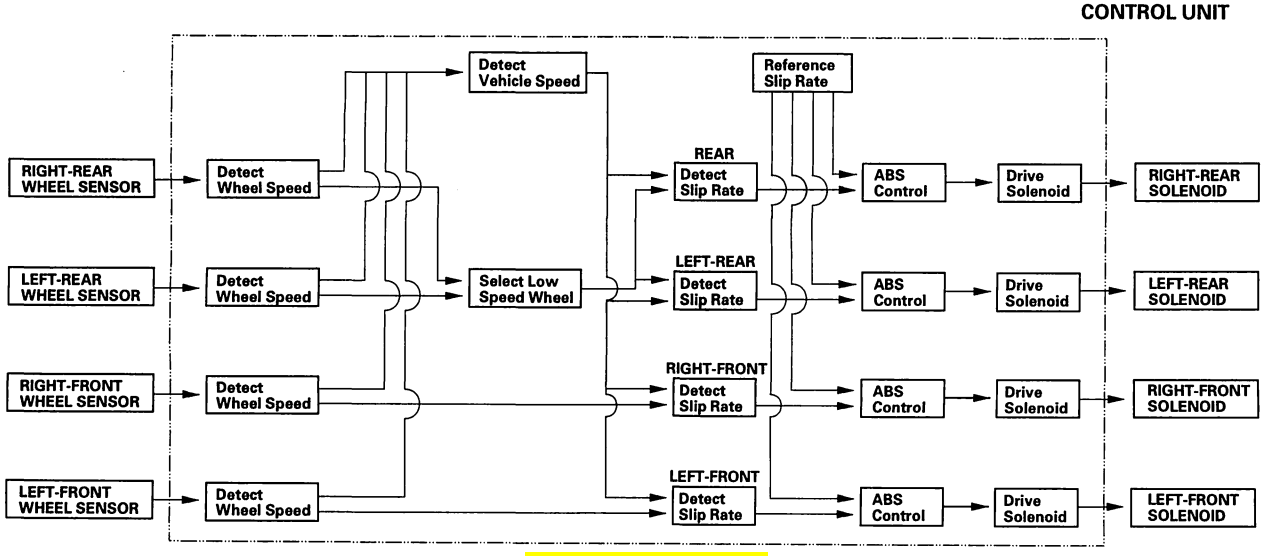

BACK

Protected by AR

EBD Features

The electronic brake distribution (EBD) helps control vehicle braking by adjusting the rear brake force in accordance with rear wheel load before the ABS operates. Based on wheel sensor signals, the ABS control unit uses the modulator to control the rear brakes individually. When the rear wheel speed is less than the front wheel speed, the VSA modulator-control unit retains the current rear brake fluid pressure by closing the inlet valve in the modulator. As the rear wheel speed increases and approaches the front wheel speed, the VSA modulator-control unit increases the rear brake fluid pressure by momentarily opening the inlet valve. This whole process is repeated very rapidly. While this is happening, there is kickback at the brake pedal.

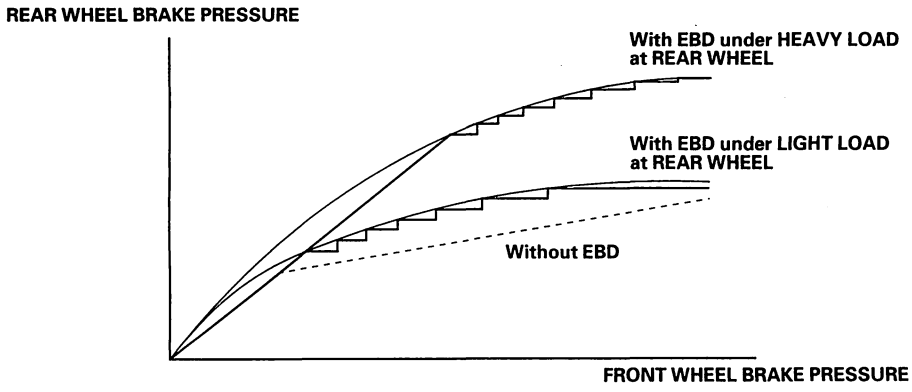

TCS Features

When a drive wheel loses traction on a slippery road surface and starts to spin, the VSA modulator-control unit applies brake pressure to the spinning wheel and sends engine torque control request to the ECM/PCM to slow the spinning wheel and keep traction.

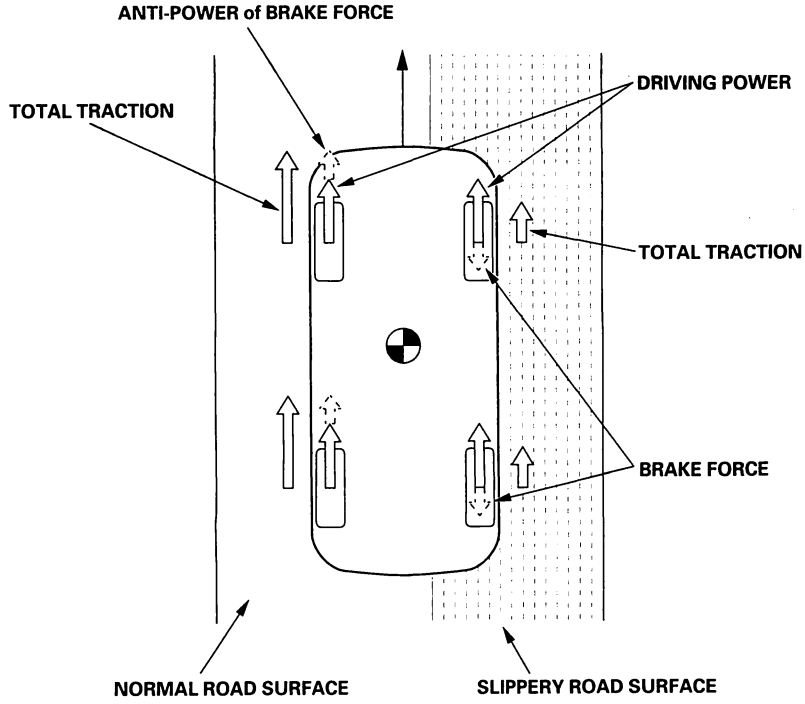

(cont'd)

Protected by AR

VSA System Components

System Description (cont'd)

VSA System Features

Oversteer control
Applies the brake to the front and rear outside wheels

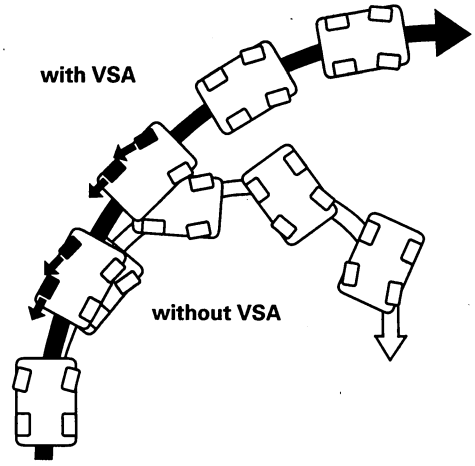

The brake makes the yaw rate opposite to the turning direction

Understeer control
- Applies the brake to the front and rear inside wheels
- Controls the engine torque when accelerating

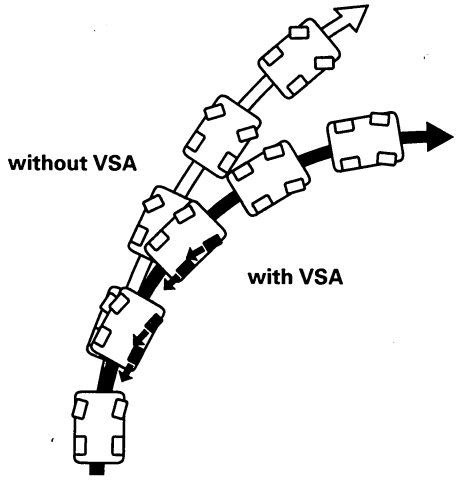

The brake increases the yaw rate toward the turning direction

The throttle control effect;
- **reduces vehicle speed**
- **increases cornering force**

BACK

Protected by AR

Brake Assist Features

Brake assist helps ensure that any driver can achieve the full braking potential of the vehicle by increasing brake system pressure in a panic situation, bringing the vehicle into a full ABS stop.
Each time the ignition switch is turned ON (II), the VSA modulator-control unit learns the current driver's normal braking characteristics by monitoring the brake pressure sensor and the brake pedal position switch at each stop. Using these inputs and their values, the VSA modulator-control unit is able to learn the driver's normal braking habits, and then determine the difference between a normal stop and a panic stop for the individual driver of the vehicle. If during a panic stop the VSA modulator-control unit determines that the brake system pressure increases above a learned threshold in less than a learned amount of time, the VSA modulator-control unit engages brake assist. Because the brake system pressure crossed the threshold before the time threshold had expired, the VSA modulator-control unit goes into brake assist mode.

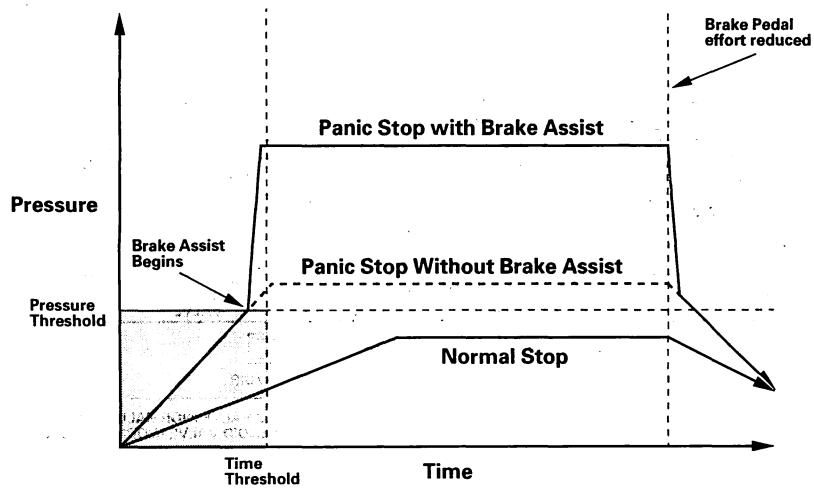

(cont'd)

Protected by AR

VSA System Components

System Description (cont'd)

Modulator Unit

The modulator unit consists of the inlet solenoid valve, outlet solenoid valve, VSA NO (normally open) solenoid valve, VSA NC (normally closed) solenoid valve, reservoir, pump, pump motor, and the damping chamber.
The hydraulic control has three modes at ABS action; pressure intensifying, pressure retaining, and pressure reducing. And pressure adding mode is combined at TCS, VSA, and brake assist action.
The hydraulic circuit is an independent four channel type, one channel for each wheel.

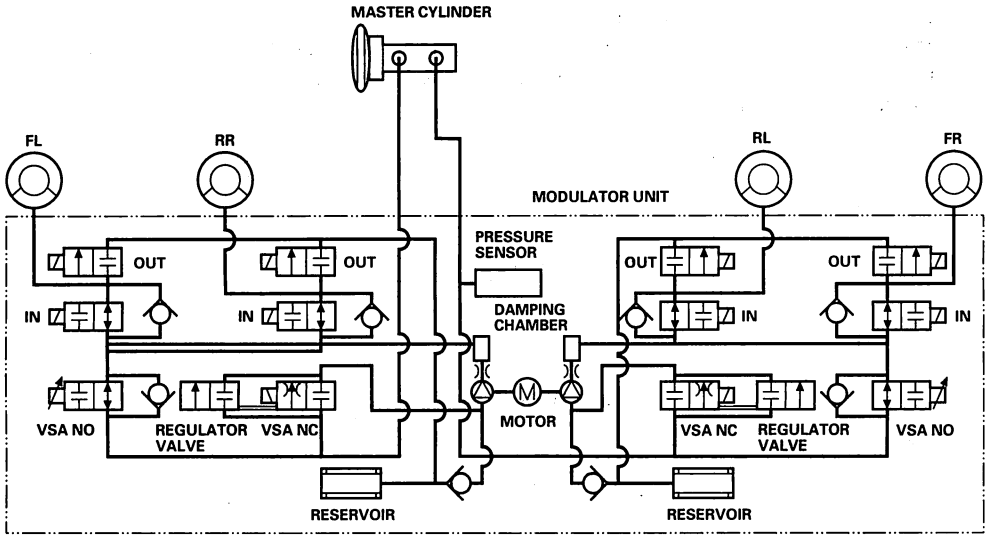

IN : INLET SOLENOID VALVE (NORMALLY OPEN)
OUT : OUTLET SOLENOID VALVE (NORMALLY CLOSED)

Mode	VSA NO Valve	VSA NC Valve	Inlet Solenoid Valve	Outlet Solenoid Valve	Brake Fluid
Pressure intensifying mode	open	closed	open	closed	Master cylinder fluid is pumped out to the caliper.
Pressure retaining mode	open	closed	closed	closed	Caliper fluid is retained by the inlet valve and outlet valve.
Pressure reducing mode	open	closed	closed	open	• Caliper fluid flows through the outlet valve to the reservoir. • The reservoir fluid is pumped out by the pump with motor*, through the damping chamber, to the master cylinder.
Pressure adding mode	closed	open	open	closed	• Master cylinder fluid is pumped out by pump with motor through VSA NC valve to the caliper. • Caliper fluid pressure exceed master cylinder pressure.

*: The motor will be keep the action until operation of the one anti-lock brake control is finished from the first pressure reducing mode.

BACK

Protected by AR

Protected by AR

VSA System Components

Circuit Diagram

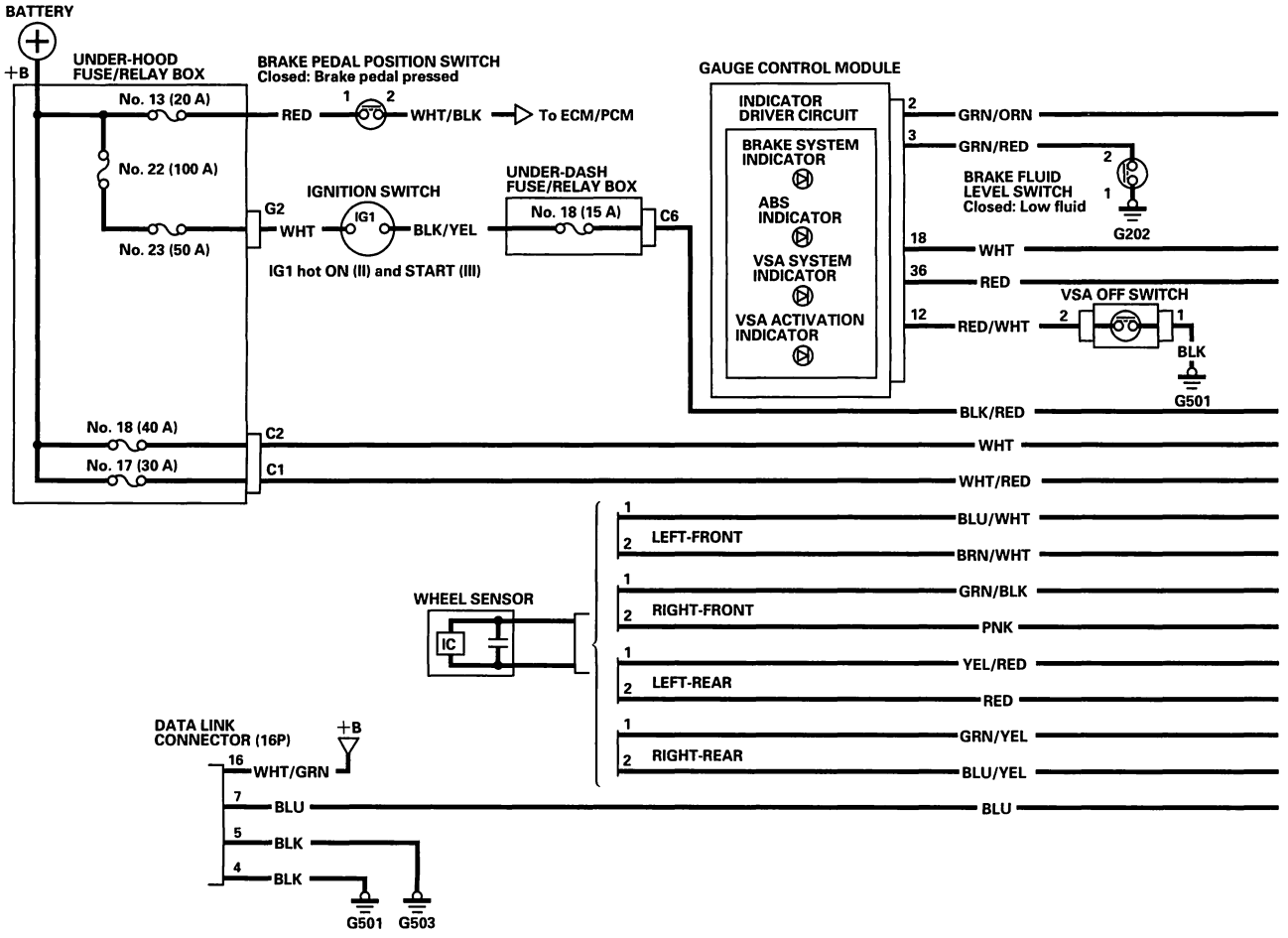

BACK

Protected by AR

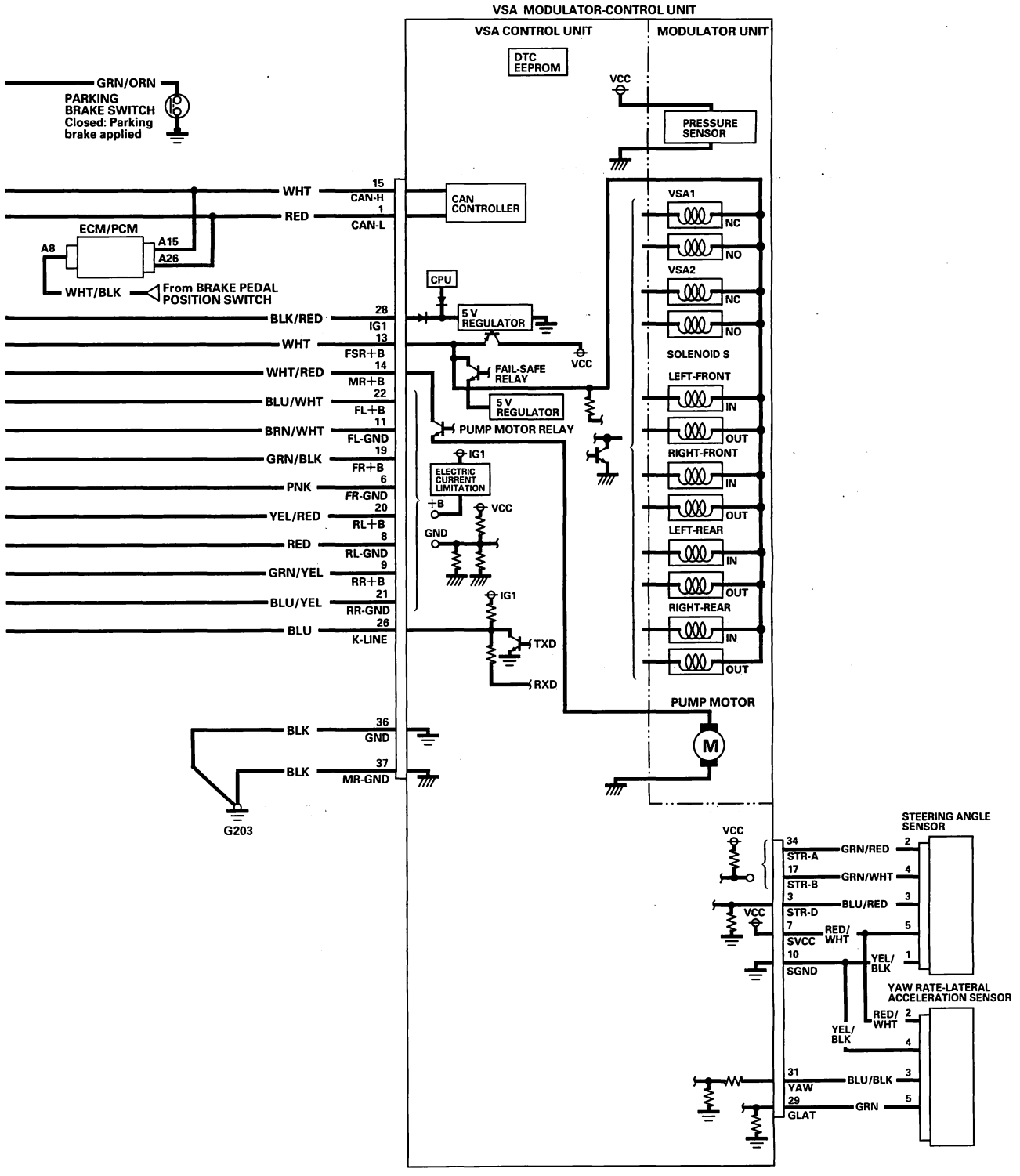

(cont'd)

BACK

Protected by AR

VSA System Components

Circuit Diagram (cont'd)

UNDER-HOOD FUSE/RELAY BOX CONNECTOR C (2P)



BRAKE FLUID LEVEL SWITCH 2P CONNECTOR



BRAKE PEDAL POSITION SWITCH 4P CONNECTOR

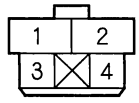

UNDER-DASH FUSE/RELAY BOX CONNECTOR C (12P)

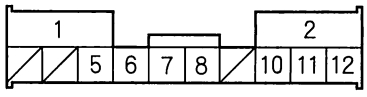

GAUGE CONTROL MODULE CONNECTOR (36P)

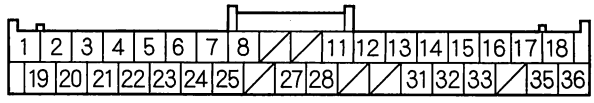

UNDER-HOOD FUSE/RELAY BOX CONNECTOR G (2P)

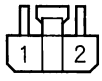

VSA OFF SWITCH 5P CONNECTOR

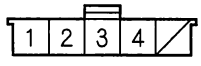

STEERING ANGLE SENSOR 5P CONNECTOR

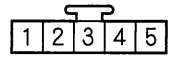

YAW RATE/LATERAL ACCELERATION SENSOR 5P CONNECTOR

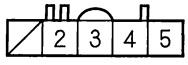

ECM/PCM CONNECTOR A (31P)

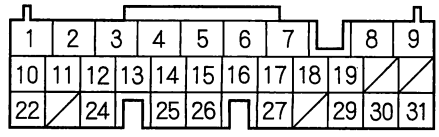

VSA MODULATOR-CONTROL UNIT 37P CONNECTOR

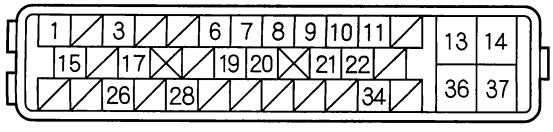

Wire side of female terminals

DATA LINK CONNECTOR (16P)

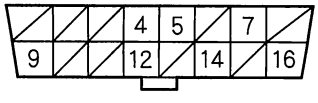

Terminal side of female terminals

WHEEL SENSOR 2P CONNECTOR FRONT/REAR



Terminal side of male terminals

BACK

Protected by AR

DTC Troubleshooting

DTC 11-13: Right-front Wheel Sensor Circuit Malfunction

DTC 13-13: Left-front Wheel Sensor Circuit Malfunction

DTC 15-13: Right-rear Wheel Sensor Circuit Malfunction

DTC 17-13: Left-rear Wheel Sensor Circuit Malfunction

1. Turn the ignition switch ON (II).
2. Clear the DTC with the HDS. Turn the ignition switch OFF, then ON (II) again.
3. Check for DTCs with the HDS.

   Is DTC 11-13, 13-13, 15-13, and/or 17-13 indicated?

   YES—Go to step 4.

   NO—Intermittent failure, system is OK at this time. Check for poor connections or loose terminals at the wheel sensor and the VSA modulator-control unit. ■
4. Turn the ignition switch OFF.
5. Disconnect the VSA modulator-control unit 37P connector.
6. Check for continuity between the appropriate VSA modulator-control unit 37P connector wheel sensor +B and GND terminals (see table), then check for continuity between the same terminals and reverse the positive and negative tester probes.

DTC	VSA Modulator-control Unit 37P Connector Terminal No.	
11-13	No. 19	No. 6
13-13	No. 22	No. 11
15-13	No. 9	No. 21
17-13	No. 20	No. 8

VSA MODULATOR-CONTROL UNIT 37P CONNECTOR

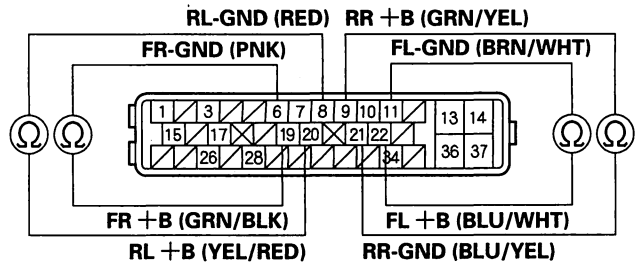

Wire side of female terminals

Are there continuity in both directions?

YES—Go to step 7.

NO—If there are not continuity in both directions, go to step 9. If the are continuity in only one way, go to step 11.

(cont'd)

Protected by AR

DTC Troubleshooting (cont'd)

7. Disconnect the appropriate wheel sensor 2P connector.
8. Check for continuity between appropriate wheel sensor 2P connector terminals No. 1 and No. 2, then check for continuity between the same terminals and reverse the positive and negative tester probes.

WHEEL SENSOR 2P CONNECTOR

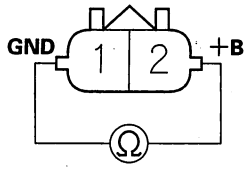

Wire side of female terminals

Are there continuity in both direction?

YES—Replace the appropriate wheel sensor (see page 19-135). ■

NO—Repair short in the wire between the appropriate wheel sensor and the VSA modulator-control unit. ■

9. Disconnect the appropriate wheel sensor 2P connector.
10. Check for continuity between appropriate wheel sensor 2P connector terminals No. 1 and No. 2, then check for continuity between the same terminals and reverse the positive and negative tester probes.

WHEEL SENSOR 2P CONNECTOR

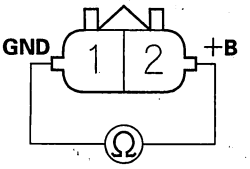

Wire side of female terminals

Is there continuity in only one direction?

YES—Repair open in the wire between the appropriate wheel sensor and the VSA modulator-control unit. ■

NO—Replace the appropriate wheel sensor (see page 19-135). ■

BACK

Protected by AR

11. Check for continuity between body ground and the appropriate VSA modulator-control unit 37P connector terminal (see table).

DTC	VSA Modulator-control Unit 37P Connector Terminal No.	
11-13	No. 19	No. 6
13-13	No. 22	No. 11
15-13	No. 9	No. 21
17-13	No. 20	No. 8

VSA MODULATOR-CONTROL UNIT 37P CONNECTOR

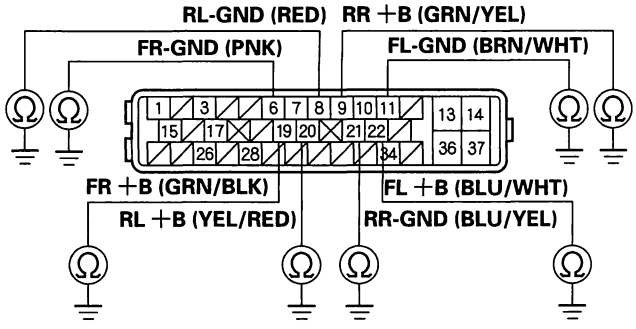

Wire side of female terminals

Is there continuity?

YES—Go to step 12.

NO—Go to step 14.

12. Disconnect the appropriate wheel sensor 2P connector.

13. Check for continuity between body ground and appropriate wheel sensor 2P connector terminal No. 1 and No. 2.

NOTE: Check the wheel sensor with mounted on the vehicle

WHEEL SENSOR 2P CONNECTOR

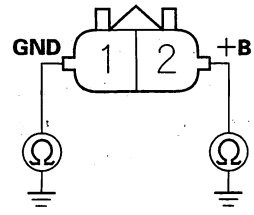

Wire side of female terminals

Is there continuity?

YES—Replace the appropriate wheel sensor (see page 19-135).■

NO—Repair short in the wire between the appropriate wheel sensor and the VSA modulator-control unit.■

14. Turn the ignition switch ON (II).

(cont'd)

BACK

Protected by AR

DTC Troubleshooting (cont'd)

15. Measure voltage between body ground and the appropriate VSA modulator-control unit 37P connector terminal (see table).

DTC	VSA Modulator-control Unit 37P Connector Terminal No.	
11-13	No. 19	No. 6
13-13	No. 22	No. 11
15-13	No. 9	No. 21
17-13	No. 20	No. 8

VSA MODULATOR-CONTROL UNIT 37P CONNECTOR

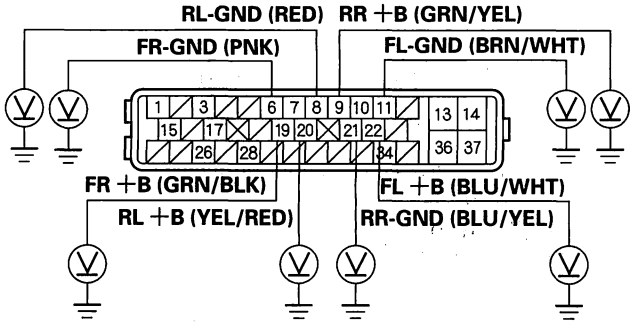

Wire side of female terminals

Is there 0.1 V or more?

YES—Repair short to power in the wire between the appropriate wheel sensor and the VSA modulator-control unit. ■

NO—Check for loose terminals in the VSA modulator-control unit 37P connector. If necessary, substitute a known-good VSA modulator-control unit and retest. If DTCs are not indicated, replace the VSA modulator-control unit (see page 19-132). ■

BACK

Protected by AR

DTC 12-11: Right-front Wheel Sensor Electrical Noise or Intermittent Interruption

DTC 14-11: Left-front Wheel Sensor Electrical Noise or Intermittent Interruption

DTC 16-11: Right-rear Wheel Sensor Electrical Noise or Intermittent Interruption

DTC 18-11: Left-rear Wheel Sensor Electrical Noise or Intermittent Interruption

1. Turn the ignition switch ON (II).
2. Clear the DTC with the HDS. Turn the ignition switch OFF, then ON (II) again.
3. Test-drive the vehicle.
4. Check for DTCs with the HDS.

   Is DTC 12-11, 14-11, 16-11, and/or 18-11 indicated?

   YES—Troubleshooting DTC 12-12, 14-12, 16-12, and/or 18-12. ■

   NO—Go to step 5.
5. Turn the ignition switch OFF.
6. Turn the ignition switch ON (II).
7. Clear the DTC with the HDS.
8. Test-drive the vehicle.
9. Check for DTCs with the HDS.

   Is DTC 12-11, 14-11, 16-11, and/or 18-11 indicated?

   YES—Go to step 10.

   NO—If any DTCs are indicated, go to the indicated DTCs troubleshooting. If DTC is not indicated, intermittent failure, system is OK at this time. Check for poor connections or loose terminals at the wheel sensor. ■
10. Turn the ignition switch OFF.
11. Remove the appropriate wheel sensor.
12. Check the appropriate wheel sensor.

DTC	Appropriate Wheel Sensor
12-11	Right-front
14-11	Left-front
16-11	Right-rear
18-11	Left-rear

Is there o-ring biting, and inclination the wheel sensor?

YES—Reinstall the wheel sensor, and check the mounting position (see page 19-134). ■

NO—Check for loose terminals in the VSA modulator-control unit 37P connector. If necessary, substitute a known-good VSA modulator-control unit and retest. If DTCs are not indicated, replace the VSA modulator-control unit (see page 19-132). ■

BACK

Protected by AR

DTC Troubleshooting (cont'd)

DTC 12-12: Right-front Wheel Sensor Short to the Other Sensor Line (13 mph (20 km/h) or more)

DTC 14-12: Left-front Wheel Sensor Short to the Other Sensor Line (13 mph (20 km/h) or more)

DTC 16-12: Right-rear Wheel Sensor Short to the Other Sensor Line (13 mph (20 km/h) or more)

DTC 18-12: Left-rear Wheel Sensor Short to the Other Sensor Line (13 mph (20 km/h) or more)

1. Turn the ignition switch ON (II).
2. Clear the DTC with the HDS. Turn the ignition switch OFF, then ON (II) again.
3. Test-drive the vehicle. Drive the vehicle speed at 13 mph (20 km/h) or more, and go a distance of 7 miles (100 m) or more.

   NOTE: Drive the vehicle on the road, not on the hoist.
4. Check for DTCs with the HDS.

   Is DTC 12-12, 14-12, 16-12, and/or 18-12 indicated?

   YES—Go to step 5.

   NO—Intermittent failure, system is OK at this time. Check for poor connections or loose terminals at the wheel sensor. Refer to intermittent failure (see page 19-64). ■
5. Turn the ignition switch OFF.
6. Disconnect the VSA modulator-control unit 37P connector.
7. Check for continuity between the appropriate wheel sensor +B terminal and other wheel sensor +B terminals of the VSA modulator-control unit 37P connector (see table).

DTC	VSA Modulator-control Unit 37P Connector Terminal No.			
	Appropriate Terminal	Other Terminals		
12-12	No. 19	No. 22	No. 9	No. 20
14-12	No. 22	No. 19	No. 9	No. 20
16-12	No. 9	No. 19	No. 22	No. 20
18-12	No. 20	No. 19	No. 22	No. 9

VSA MODULATOR-CONTROL UNIT 37P CONNECTOR

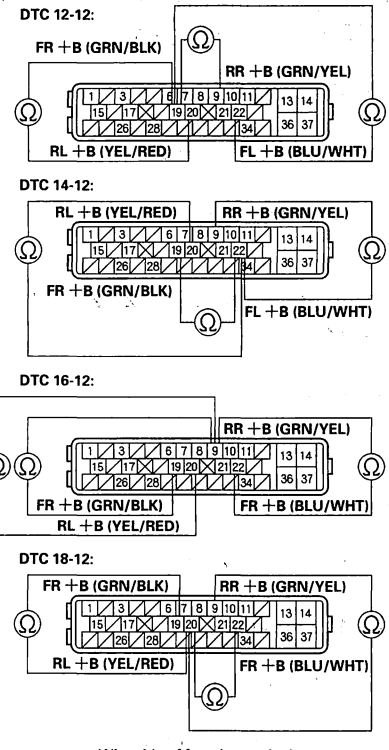

Wire side of female terminals

Is there continuity?

YES—Repair short in the wire between the appropriate wheel sensor and the VSA modulator-control unit. ■

NO—Check for loose terminals in the VSA modulator-control unit 37P connector. If necessary, substitute a known-good VSA modulator-control unit and retest. If DTCs are not indicated, replace the VSA modulator-control unit (see page 19-132). ■

BACK

Protected by AR

DTC 12-21: Right-front Wheel Sensor Installation Error (Start to 15 Seconds)

DTC 14-21: Left-front Wheel Sensor Installation Error (Start to 15 Seconds)

DTC 16-21: Right-rear Wheel Sensor Installation Error (Start to 15 Seconds)

DTC 18-21: Left-rear Wheel Sensor Installation Error (Start to 15 Seconds)

1. Test-drive the vehicle. Drive the vehicle speed at 7 mph (10 km/h).
2. Check the RF, LF, RR, LR WHEEL SPD in the DATA LIST with the HDS.

   Are all the same as the indicated values?

   YES—Intermittent failure, system is OK at this time. Check for poor connections or loose terminals between the wheel sensor and the VSA modulator-control unit. Refer to intermittent failure (see page 19-64). ■

   NO—Go to step 3.
3. Turn the ignition switch OFF.
4. Check the appropriate wheel sensor is properly mounted.

DTC	Appropriate Wheel Sensor
12-21	Right-front
14-21	Left-front
16-21	Right-rear
18-21	Left-rear

   Is the wheel sensor installation OK?

   YES—Replace the appropriate wheel sensor (see page 19-135). ■

   NO—Reinstall the wheel sensor, and check the mounting position (see page 19-134). ■

DTC 12-22: Right-front Wheel Sensor Installation Error (19 mph (30 km/h) or more)

DTC 14-22: Left-front Wheel Sensor Installation Error (19 mph (30 km/h) or more)

DTC 16-22: Right-rear Wheel Sensor Installation Error (19 mph (30 km/h) or more)

DTC 18-22: Left-rear Wheel Sensor Installation Error (19 mph (30 km/h) or more)

1. Test-drive the vehicle. Drive the vehicle speed between 19 mph (30 km/h) and 31 mph (50 km/h) for 70 seconds or more.
2. Check the RF, LF, RR, LR WHEEL SPD of all the wheel sensors in the DATA LIST with the HDS.

   Are all the same as the indicated values?

   YES—Intermittent failure, system is OK at this time. Check for poor connections or loose terminals at the wheel sensor. ■

   NO—Go to step 3.
3. Turn the ignition switch OFF.
4. Check the appropriate wheel sensor is properly mounted.

DTC	Appropriate Wheel Sensor
12-22	Right-front
14-22	Left-front
16-22	Right-rear
18-22	Left-rear

   Is the wheel sensor installation OK?

   YES—Replace the appropriate wheel sensor (see page 19-135). ■

   NO—Reinstall the wheel sensor, and check the mounting position (see page 19-134). ■

Protected by AR

DTC Troubleshooting (cont'd)

DTC 12-23: Right-front Wheel Sensor Installation Error (0 to 9 mph (0 to 15 km/h))

DTC 14-23: Left-front Wheel Sensor Installation Error (0 to 9 mph (0 to 15 km/h))

DTC 16-23: Right-rear Wheel Sensor Installation Error (0 to 9 mph (0 to 15 km/h))

DTC 18-23: Left-rear Wheel Sensor Installation Error (0 to 9 mph (0 to 15 km/h))

1. Test-drive the vehicle. Drive the vehicle speed between 1 mph (1 km/h) and 9 mph (15 km/h).
2. Check the RF, LF, RR, LR WHEEL SPD of all the wheel sensors in the DATA LIST with the HDS.

   Are all the same as the indicated values?

   YES—Intermittent failure, system is OK at this time. Check for poor connections or loose terminals at the wheel sensor. ■

   NO—Go to step 3.
3. Turn the ignition switch OFF.
4. Check the appropriate wheel sensor is properly mounted.

DTC	Appropriate Wheel Sensor
12-23	Right-front
14-23	Left-front
16-23	Right-rear
18-23	Left-rear

   Is the wheel sensor installation OK?

   YES—Replace the appropriate wheel sensor (see page 19-135). ■

   NO—Reinstall the wheel sensor, and check the mounting position (see page 19-134). ■

DTC 21-11: Right-front Magnetic Encoder Malfunction (Corrugated Missing)

DTC 22-11: Left-front Magnetic Encoder Malfunction (Corrugated Missing)

DTC 23-11: Right-rear Pulser Malfunction (Corrugated Missing)

DTC 24-11: Left-rear Pulser Malfunction (Corrugated Missing)

1. Turn the ignition switch ON (II).
2. Clear the DTC with the HDS. Turn the ignition switch OFF, then ON (II) again.
3. Test-drive the vehicle. Drive the vehicle speed at 13 mph (20 km/h) or more, and go a distance of 6.2 miles (100 m) or more.
4. Check for DTCs with the HDS.

   Is DTC 21-11, 22-11, 23-11, and/or 24-11 indicated?

   YES—Go to step 5.

   NO—Intermittent failure, system is OK at this time. Check for poor connections or loose terminals at the wheel sensor. ■
5. Turn the ignition switch OFF.

BACK

Protected by AR

6. Inspect the appropriate magnetic encoder, or pulser (see table).

DTC	Appropriate Magnetic Encoder (Front), Pulser (Rear)	Note
21-11	Right-front	Remove the outboard joint on the driveshaft from the wheel hub (see page 16-3).
22-11	Left-front	
23-11	Right-rear	Remove the wheel bearing unit, refer to the 2003-2006 Accord Service Manual (see page 18-29).
24-11	Left-rear	

Is the magnetic encoder surface, or the pulser gears OK?

YES—Replace the wheel bearing or wheel bearing unit:■

- Front: Replace the front wheel bearing, refer to the 2003-2006 Accord Service Manual (see page 18-12).
- Rear: Replace the rear wheel bearing, refer to the 2003-2006 Accord Service Manual (see page 18-29).

NO—Clean off dust or dirt from the appropriate magnetic encoder surface on the wheel bearing, or the wheel bearing unit, or replace the appropriate pulser gears for a chipped or damaged tooth, then go to step 1 and recheck.■

DTC 25-11: Yaw Rate Sensor Internal Circuit Malfunction (Initial)

DTC 25-12: Yaw Rate Sensor Internal Circuit Malfunction (Open, Short)

DTC 25-21: Yaw Rate Sensor Neutral Position Malfunction

1. Turn the ignition switch ON (II).
2. Clear the DTC with the HDS. Turn the ignition switch OFF, then ON (II) again.
3. Check for DTCs with the HDS.

   Is DTC 25-11, 25-12, or 25-21 indicated?

   YES—Replace the yaw rate-lateral acceleration sensor (see page 19-128).■

   NO—Intermittent failure, system is OK at this time. Check for poor connections or loose terminals between the yaw rate-lateral acceleration sensor and the VSA modulator-control unit. Refer to intermittent failure (see page 19-64).■

Protected by AR

DTC Troubleshooting (cont'd)

DTC 25-22: Yaw Rate Sensor Stuck

1. Turn the ignition switch ON (II).
2. Clear the DTC with the HDS. Turn the ignition switch OFF, then ON (II) again.
3. Test-drive the vehicle around a number of corners.
4. Check for DTCs with the HDS.

   Is DTC 25-22 indicated?

   YES—Go to step 5.

   NO—If any DTCs are indicated, go to the indicated DTCs troubleshooting. If DTC is not indicated, intermittent failure, system is OK at this time. Check for poor connections or loose terminals between the yaw rate-lateral acceleration sensor and the VSA modulator-control unit. Refer to intermittent failure (see page 19-64). ■
5. Check the LATERAL ACCELERATION SENSOR and YAW RATE S in the DATA LIST with the HDS.

   Are there 0 m/s indicated?

   YES—Go to step 6.

   NO—Do the VSA sensor neutral position memorization (see page 19-130), then go to step 1 and recheck. ■
6. Test-drive the vehicle. Check the YAW RATE S in the DATA LIST with the HDS while driving in corners.

   Does the indicated value change?

   YES—Intermittent failure, system is OK at this time. Check for poor connections or loose terminals between the yaw rate-lateral acceleration sensor and the VSA modulator-control unit. Refer to intermittent failure (see page 19-64). ■

   NO—Replace the yaw rate-lateral acceleration sensor (see page 19-128). ■

BACK

Protected by AR

DTC 25-23: Yaw Rate Sensor Circuit Intermittent Interruption

1. Turn the ignition switch ON (II).
2. Clear the DTC with the HDS. Turn the ignition switch OFF, then ON (II) again.
3. Check for DTCs with the HDS.

   Is DTC 25-23 indicated?

   YES—Replace the yaw rate-lateral acceleration sensor (see page 19-128).■

   NO—Intermittent failure, system is OK at this time. Check for poor connections or loose terminals between the yaw rate-lateral acceleration sensor and the VSA modulator-control unit. Refer to intermittent failure (see page 19-64).■

DTC 25-24: Yaw Rate Sensor Gain High

DTC 25-25: Yaw Rate Sensor Gain Low

DTC 26-24: Lateral Acceleration Sensor Gain High

DTC 26-25: Lateral Acceleration Sensor Gain Low

1. Turn the ignition switch ON (II).
2. Clear the DTC with the HDS. Turn the ignition switch OFF, then ON (II) again.
3. Test-drive the vehicle. Drive the vehicle speed at 10 mph (15 km/h) or more.
4. Check for DTCs with the HDS.

   Is DTC 25-24, 25-25, 26-24, or 26-25 indicated?

   YES—Replace the yaw rate-lateral acceleration sensor (see page 19-128).■

   NO—Intermittent failure, system is OK at this time. Check for poor connections or loose terminals between the yaw rate-lateral acceleration sensor and the VSA modulator-control unit. Refer to intermittent failure (see page 19-64).■

Protected by AR

DTC Troubleshooting (cont'd)

DTC 26-11: Lateral Acceleration Sensor Internal Circuit Malfunction (Initial)

DTC 26-12: Lateral Acceleration Sensor Internal Circuit Malfunction (Open, Short)

DTC 26-21: Lateral Acceleration Sensor Stuck

DTC 26-23: Lateral Acceleration Sensor Circuit Intermittent Interruption

NOTE: While Do this troubleshooting, avoid vibration and wobble of the vehicle.

1. Park the vehicle on a flat and level surface.
2. Turn the ignition switch ON (II).
3. Clear the DTC with the HDS. Turn the ignition switch OFF, then ON (II) again.
4. Wait 15 seconds or more.
5. Check for DTCs with the HDS.

   Is DTC 26-11, 26-12, 26-21, or 26-23 indicated?

   YES—Replace the yaw rate-lateral acceleration sensor (see page 19-128). ■

   NO—Intermittent failure, system is OK at this time. Check for poor connections or loose terminals between the yaw rate-lateral acceleration sensor and the VSA modulator-control unit. Refer to intermittent failure (see page 19-64). ■

DTC 26-22: Lateral Acceleration Sensor Neutral Position Malfunction

1. Turn the ignition switch ON (II).
2. Clear the DTC with the HDS. Turn the ignition switch OFF, then ON (II) again.
3. Test-drive the vehicle around a number of corners.
4. Check for DTCs with the HDS.

   Is DTC 26-22 indicated?

   YES—Go to step 5.

   NO—If any DTCs are indicated, go to the indicated DTCs troubleshooting. If DTC is not indicated, intermittent failure, system is OK at this time. Check for poor connections or loose terminals between the yaw rate-lateral acceleration sensor and the VSA modulator-control unit. Refer to intermittent failure (see page 19-64). ■

5. Check the LATERAL ACCELERATION SENSOR and YAW RATE S in the DATA LIST with the HDS.

   Are there 0 m/s indicated?

   YES—Go to step 6.

   NO—Do the VSA sensor neutral position memorization (see page 19-130), then go to step 1 and recheck. ■

BACK

Protected by AR

6. Test-drive the vehicle. Check the YAW RATE S in the DATA LIST with the HDS while driving in corners.

   Does the indicated value change?

   YES—Intermittent failure, system is OK at this time. Check for poor connections or loose terminals between the yaw rate-lateral acceleration sensor and the VSA modulator-control unit. Refer to intermittent failure (see page 19-64). ■

   NO—Replace the yaw rate-lateral acceleration sensor (see page 19-128). ■

DTC 27-11: Steering Angle Sensor DIAG Signal Error

DTC 27-26: Steering Angle Sensor DIAG Signal Error

1. Turn the ignition switch ON (II).
2. Clear the DTC with the HDS. Turn the ignition switch OFF, then ON (II) again.
3. Check for DTCs with the HDS.

   Is DTC 27-11, or 27-26 indicated?

   YES—Go to step 4.

   NO—Intermittent failure, system is OK at this time. Check for poor connections or loose terminals between the steering angle sensor and the VSA modulator-control unit. Refer to intermittent failure (see page 19-64). ■
4. Turn the ignition switch OFF.
5. Disconnect the steering angle sensor 5P connector.
6. Disconnect the VSA modulator-control unit 37P connector.

(cont'd)

Protected by AR

DTC Troubleshooting (cont'd)

7. Check for continuity between steering angle sensor 5P connector terminal No. 3 and body ground.

STEERING ANGLE SENSOR 5P CONNECTOR

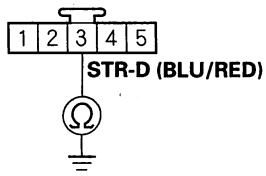

Wire side of female terminals

Is there continuity?

YES—Repair short in the wire between the steering angle sensor and the VSA modulator-control unit. ■

NO—Go to step 8.

8. Check for continuity between VSA modulator-control unit 37P connector terminal No. 3 and steering angle sensor 5P connector terminal No. 3.

STEERING ANGLE SENSOR 5P CONNECTOR

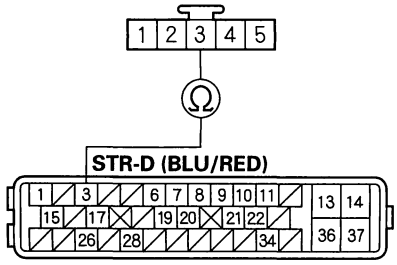

VSA MODULATOR-CONTROL UNIT 37P CONNECTOR

Wire side of female terminals

Is there continuity?

YES—Go to step 9.

NO—Repair open in the wire between the steering angle sensor and the VSA modulator-control unit. ■

9. Turn the ignition switch ON (II).

10. Measure voltage between steering angle sensor 5P connector terminal No. 3 and body ground.

STEERING ANGLE SENSOR 5P CONNECTOR

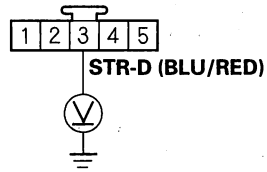

Wire side of female terminals

Is there 0.1 V or more?

YES—Repair short to power in the wire between the steering angle sensor and the VSA modulator-control unit. ■

NO—Replace the steering angle sensor (see page 19-127). ■

BACK

Protected by AR

DTC 27-21: Steering Angle Sensor Stuck Neutral Position

DTC 27-22: Steering Angle Sensor Stuck Offset Position

1. Turn the steering wheel left and right. Check the STEERING ANGLE in the DATA LIST while the HDS while moving the steering wheel.

   Do change the indicated values?

   YES—Go to step 2.

   NO—Go to step 5.

2. Clear the DTC with the HDS.
3. Turn the steering wheel left and right.
4. Check for DTCs with the HDS.

   Is DTC 27-21, or 27-22 indicated?

   YES—Go to step 5.

   NO—Intermittent failure, system is OK at this time. Check for poor connections or loose terminals between the steering angle sensor and the VSA modulator-control unit. Refer to intermittent failure (see page 19-64). ■

5. Turn the ignition switch OFF.
6. Disconnect the steering angle sensor 5P connector.
7. Disconnect the VSA modulator-control unit 37P connector.
8. Check for continuity between body ground and steering angle sensor 5P connector terminals No. 2 and No. 4 individually.

STEERING ANGLE SENSOR 5P CONNECTOR

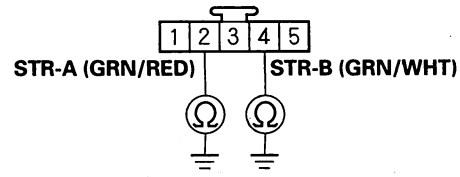

Wire side of female terminals

Is there continuity?

YES—Repair short in the wire between the steering angle sensor and the VSA modulator-control unit. ■

NO—Go to step 9.

(cont'd)

Protected by AR

DTC Troubleshooting (cont'd)

9. Check for continuity between the VSA modulator-control unit 37P connector terminal and the steering angle sensor 5P connector terminal individually.

Sign	Connector Terminal No.	
	VSA Modulator-control unit	Steering Angle Sensor
STR-A	34	2
STR-B	17	4
SVCC	7	5
SGND	10	1

STEERING ANGLE SENSOR 5P CONNECTOR

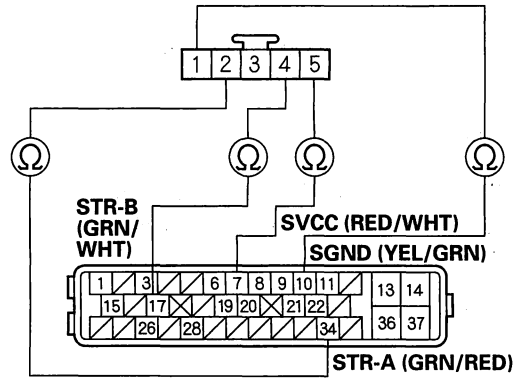

VSA MODULATOR-CONTROL UNIT 37P CONNECTOR

Wire side of female terminals

Is there continuity?

YES—Go to step 10.

NO—Repair open in the wire between the steering angle sensor and the VSA modulator-control unit.■

10. Check for continuity between steering angle sensor 5P connector terminals No. 2 and No. 4.

STEERING ANGLE SENSOR 5P CONNECTOR

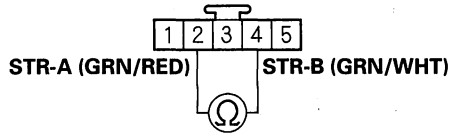

Wire side of female terminals

Is there continuity?

YES—Repair short in the wire between the steering angle sensor and the VSA modulator-control unit.■

NO—Go to step 11.

11. Check for continuity between steering angle sensor 5P connector terminals No. 5 and No. 2, No. 5 and No. 4 individually.

STEERING ANGLE SENSOR 5P CONNECTOR

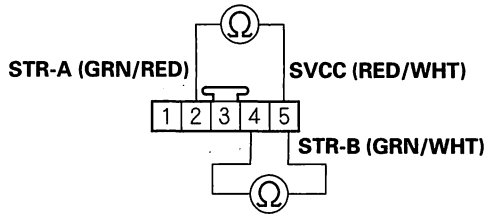

Wire side of female terminals

Is there continuity?

YES—Repair short in the wire between the steering angle sensor and the VSA modulator-control unit.■

NO—Go to step 12.

BACK

Protected by AR

12. Check for continuity between steering angle sensor 5P connector terminals No. 1 and No. 2, No. 1 and No. 4 individually.

STEERING ANGLE SENSOR 5P CONNECTOR

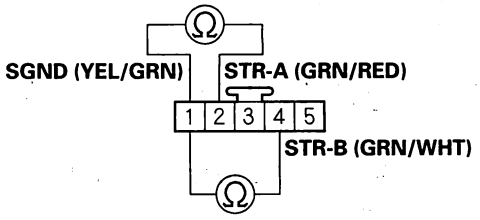

Wire side of female terminals

Is there continuity?

YES—Repair short in the wire between the steering angle sensor and the VSA modulator-control unit. ■

NO—Go to step 13.

13. Turn the ignition switch ON (II).

14. Measure voltage between body ground and steering angle sensor 5P connector terminals No. 2 and No. 4 individually.

STEERING ANGLE SENSOR 5P CONNECTOR

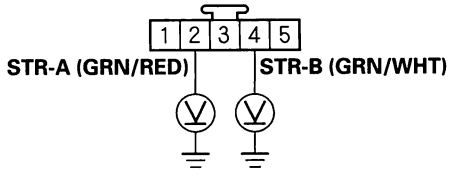

Wire side of female terminals

Is there 0.1 V or more?

YES—Repair short to power in the wire between the steering angle sensor and the VSA modulator-control unit. ■

NO—Replace the steering angle sensor (see page 19-127). ■

DTC 27-23: Steering Angle Sensor Exchange Malfunction

1. Turn the ignition switch ON (II).
2. Clear the DTC with the HDS. Turn the ignition switch OFF, then ON (II) again.
3. Turn the steering wheel from lock to lock.
4. Check for DTCs with the HDS.

   Is DTC 27-23 indicated?

   YES—Check for the steering angle sensor installation. If installation is OK, replace the steering angle sensor.

   NO—Intermittent failure, system is OK at this time. Check for poor connections or loose terminals between the steering angle sensor and the VSA modulator-control unit. Refer to intermittent failure (see page 19-64). ■

Protected by AR

DTC Troubleshooting (cont'd)

DTC 27-24: Steering Angle Sensor Counter Malfunction

1. Turn the ignition switch ON (II).
2. Turn the steering wheel at 1 turn. Check the STEERING ANGLE in the DATA LIST with the HDS.

   Is there about 288— 432 °?

   YES—Intermittent failure, system is OK at this time. Check for poor connections or loose terminals between the steering angle sensor and the VSA modulator-control unit. Refer to intermittent failure (see page 19-64).■

   NO—Replace the steering angle sensor (see page 19-127).■

DTC 31-xx*: ABS Right-front Inlet Solenoid Valve Malfunction

DTC 32-xx*: ABS Right-front Outlet Solenoid Valve Malfunction

DTC 33-xx*: ABS Left-front Inlet Solenoid Valve Malfunction

DTC 34-xx*: ABS Left-front Outlet Solenoid Valve Malfunction

DTC 35-xx*: ABS Right-rear Inlet Solenoid Valve Malfunction

DTC 36-xx*: ABS Right-rear Outlet Solenoid Valve Malfunction

DTC 37-xx*: ABS Left-rear Inlet Solenoid Valve Malfunction

DTC 38-xx*: ABS Left-rear Outlet Solenoid Valve Malfunction

*: -xx means any subcode

1. Turn the ignition switch ON (II).
2. Clear the DTC with the HDS. Turn the ignition switch OFF, then ON (II) again.

BACK

Protected by AR

3. Check for DTCs with the HDS.

DTC	xx-01: Solenoid Initial Puls	xx-21: Solenoid Puls	xx-22: Solenoid Speculative	xx-23: Solenoid Stick ON
31-xx	Right-front inlet valve			
32-xx	Right-front outlet valve			
33-xx	Left-front inlet valve			
34-xx	Left-front outlet valve			
35-xx	Right-rear inlet valve			
36-xx	Right-rear outlet valve			
37-xx	Left-rear inlet valve			
38-xx	Left-rear outlet valve			

Is DTC 31-xx, 32-xx, 33-xx, 34-xx, 35-xx, 36-xx, 37-xx, or 38-xx indicated?

YES—Check for loose terminals in the VSA modulator-control unit 37P connector. If necessary, substitute a known-good VSA modulator-control unit and retest. If DTCs are not indicated, replace the VSA modulator-control unit (see page 19-132). ■

NO—Intermittent failure, system is OK at this time. Check for poor connections or loose terminals at the VSA modulator-control unit. Refer to intermittent failure (see page 19-64). ■

DTC 41-21: Right-front Wheel Lock

DTC 42-21: Left-front Wheel Lock

DTC 43-21: Right-rear Wheel Lock

DTC 44-21: Left-rear Wheel Lock

The DTCs may indicated under these conditions:

- The vehicle goes into a spin.
- The ABS or VSA continues to operate for a long time.

1. Raise the vehicle, and support it with safety stands in the proper locations, refer to the 2003-2006 Accord Service Manual (see page 1-14).

2. Turn the appropriate wheel by hand.

DTC	Appropriate Wheel
41-21	Right-front
42-21	Left-front
43-21	Right-rear
44-21	Left-rear

Is there the brake drag?

YES—Repair the brake drag. ■

NO—Go to step 3.

3. Check the appropriate wheel sensor is properly mounted.

Is the wheel sensor installation OK?

YES—Intermittent failure, system is OK at this time. Check for poor connections or loose terminals between the wheel sensor and the VSA modulator-control unit. Refer to intermittent failure (see page 19-64). ■

NO—Reinstall the wheel sensor, and check the mounting position (see page 19-134). ■

Protected by AR

DTC Troubleshooting (cont'd)

DTC 51-11: Motor Lock

DTC 51-13: Motor Relay OFF Malfunction

1. Turn the ignition switch ON (II).
2. Clear the DTC with the HDS. Turn the ignition switch OFF, then ON (II) again.
3. Wait 5 seconds.
4. Do the MOTOR FUNCTION TEST in the INSPECTION MENU repeat test five times with the HDS.
5. Check for DTCs with the HDS.

   Is DTC 51-11 or 51-13 indicated?

   YES—Check for loose terminals in the VSA modulator-control unit 37P connector. If necessary, substitute a known-good VSA modulator-control unit and retest. If DTCs are not indicated, replace the VSA modulator-control unit (see page 19-132). ■

   NO—Intermittent failure, system is OK at this time. Check for poor connections or loose terminals at the VSA modulator-control unit. Refer to intermittent failure (see page 19-64). ■

DTC 51-12: Motor Lock Circuit Malfunction

1. Turn the ignition switch ON (II).
2. Clear the DTC with the HDS. Turn the ignition switch OFF, then ON (II) again.
3. Check the DTCs with the HDS.

   Is DTC 51-12 indicated?

   YES—Go to step 4.

   NO—Intermittent failure, system is OK at this time. Check for poor connections or loose terminals at the VSA modulator-control unit. Refer to intermittent failure (see page 19-64). ■
4. Check the No. 17 MR +B (30 A) fuse in the under-hood fuse/relay box.

   Is the fuse blown?

   YES—Go to step 5.

   NO—Reinstall the fuse, then go to step 9.
5. Turn the ignition switch OFF.
6. Disconnect the VSA modulator-control unit 37P connector.

BACK

Protected by AR

7. Check for continuity between VSA modulator-control unit 37P connector terminal No. 14 and body ground.

VSA MODULATOR-CONTROL UNIT 37P CONNECTOR

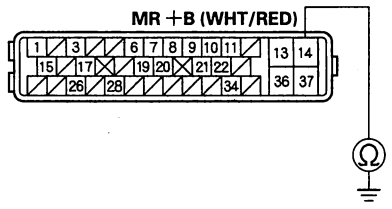

Wire side of female terminals

Is there continuity?

YES—Repair short in the wire between the No. 17 MR +B (30 A) fuse and the VSA modulator-control unit. ■

NO—Install the new No. 17 MR +B (30 A) fuse, then go to step 8.

8. Turn the ignition switch ON (II).

9. Measure voltage between VSA modulator-control unit 37P connector terminal No. 14 and body ground.

VSA MODULATOR-CONTROL UNIT 37P CONNECTOR

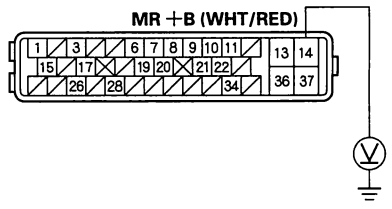

Wire side of female terminals

Is there battery voltage?

YES—Check for loose terminals in the VSA modulator-control unit 37P connector. If necessary, substitute a known-good VSA modulator-control unit and retest. If DTCs are not indicated, replace the VSA modulator-control unit (see page 19-132). ■

NO—Repair open in the wire between the No. 17 MR +B (30 A) fuse and the VSA modulator-control unit. ■

DTC 52-12: Motor Lock Circuit Malfunction

1. Turn the ignition switch ON (II).

2. Clear the DTC with the HDS. Turn the ignition switch OFF, then ON (II) again.

3. Do the each SOLENOID or VSA in the FUNCTION TEST repeat test five times with the HDS.

4. Check for DTCs with the HDS.

Is DTC 51-12 indicated?

YES—Check for loose terminals in the VSA modulator-control unit 37P connector. If necessary, substitute a known-good VSA modulator-control unit and retest. If DTCs are not indicated, replace the VSA modulator-control unit (see page 19-132). ■

NO—Intermittent failure, system is OK at this time. Check for poor connections or loose terminals at the VSA modulator-control unit. Refer to intermittent failure (see page 19-64). ■

Protected by AR

DTC Troubleshooting (cont'd)

DTC 53-01: Motor Relay Stuck ON

DTC 53-12: Motor Relay Stuck ON

1. Turn the ignition switch ON (II).
2. Clear the DTC with the HDS. Turn the ignition switch OFF, then ON (II) again.
3. Check for DTCs with the HDS.

   Is DTC 53-01 or 53-12 indicated?

   YES—Go to step 4.

   NO—Intermittent failure, system is OK at this time. Check for poor connections or loose terminals at and the VSA modulator-control unit. Refer to intermittent failure (see page 19-64). ■
4. Turn the ignition switch OFF.
5. Disconnect the VSA modulator-control unit 37P connector.
6. Check for continuity between VSA modulator-control unit 37P connector terminal No. 37 and body ground.

VSA MODULATOR-CONTROL UNIT 37P CONNECTOR

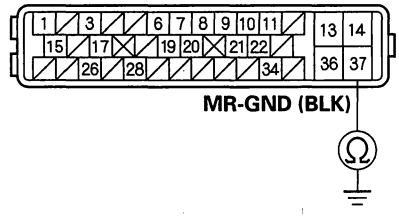

Wire side of female terminals

Is there continuity?

YES—Check for loose terminals in the VSA modulator-control unit 37P connector. If necessary, substitute a known-good VSA modulator-control unit and retest. If DTCs are not indicated, replace the VSA modulator-control unit (see page 19-132). ■

NO—Repair open in the wire between the VSA modulator-control unit and body ground (G203). ■

BACK

Protected by AR

DTC 54-03: Fail-safe Relay 1 Stuck ON

DTC 54-04: Fail-safe Relay 1 Stuck OFF 1

DTC 54-21: Fail-safe Relay 1 Stuck OFF 2

1. Turn the ignition switch ON (II).
2. Clear the DTC with the HDS. Turn the ignition switch OFF, then ON (II) again.
3. Check for DTCs with the HDS.

Is DTC 54-03, 54-04, or 54-21 indicated?

YES—Check for loose terminals in the VSA modulator-control unit 37P connector. If necessary, substitute a known-good VSA modulator-control unit and retest. If DTCs are not indicated, replace the VSA modulator-control unit (see page 19-132). ■

NO—Intermittent failure, system is OK at this time. Check for poor connections or loose terminals at the VSA modulator-control unit. Refer to intermittent failure (see page 19-64). ■

DTC 56-01: Initial VIG FET Stuck OFF

DTC 56-02: Initial VIG FET Stuck ON

DTC 56-11: VIG FET Stuck OFF

1. Turn the ignition switch ON (II).
2. Clear the DTC with the HDS. Turn the ignition switch OFF, then ON (II) again.
3. Check for DTCs with the HDS.

Is DTC 56-01, 56-02, or 56-11 indicated?

YES—Check for loose terminals in the VSA modulator-control unit 37P connector. If necessary, substitute a known-good VSA modulator-control unit and retest. If DTCs are not indicated, replace the VSA modulator-control unit (see page 19-132). ■

NO—Intermittent failure, system is OK at this time. Check for poor connections or loose terminals at the VSA modulator-control unit. Refer to intermittent failure (see page 19-64). ■

Protected by AR

DTC Troubleshooting (cont'd)

DTC 61-01: VSA Modulator-control Unit Initial IG Low Voltage

DTC 61-21: VSA Modulator-control Unit Power Source Low Voltage

DTC 61-22: VSA Modulator-control Unit Power Source Low Voltage

DTC 61-23: VSA Modulator-control Unit Power Source Low Voltage

1. Turn the ignition switch ON (II).
2. Clear the DTC with the HDS. Turn the ignition switch OFF, then ON (II) again.
3. Check for DTCs with the HDS.

   Is DTC 61-01, 61-21, 61-22, or 61-23 indicated?

   YES—Go to step 4.

   NO—Intermittent failure, system is OK at this time. Check for poor connections or loose terminals at the VSA modulator-control unit. Refer to intermittent failure (see page 19-64).■
4. Check the IG1 and BATTERY in the DATA LIST with the HDS.

   Are there 9.5 V or more indicated?

   YES—If the voltage is 9.5 V, go to step 5. If there is the any voltage, check the battery performance, refer to the 2003-2006 Accord Service Manual (see page 22-78), and do the alternator and regulator circuit troubleshooting (see page 4-31).■

   NO—Check for loose terminals in the VSA modulator-control unit 37P connector. If necessary, substitute a known-good VSA modulator-control unit and retest. If DTCs are not indicated, replace the VSA modulator-control unit (see page 19-132). ■
5. Turn the ignition switch OFF.
6. Disconnect the VSA modulator-control unit 37P connector.
7. Measure voltage between VSA modulator-control unit 37P connector terminal No. 13 and body ground.

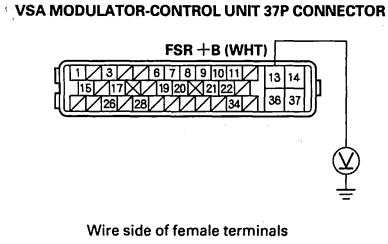

Wire side of female terminals

Is there battery voltage?

YES—Check for loose terminals in the VSA modulator-control unit 37P connector. If necessary, substitute a known-good VSA modulator-control unit and retest. If DTCs are not indicated, replace the VSA modulator-control unit (see page 19-132). ■

NO—Repair open in the wire between the No. 18 FSR +B (40 A) fuse and the VSA modulator-control unit.■

8. Turn the ignition switch ON (II).
9. Measure voltage between the VSA modulator-control unit 37P connector terminal No. 28 and body ground.

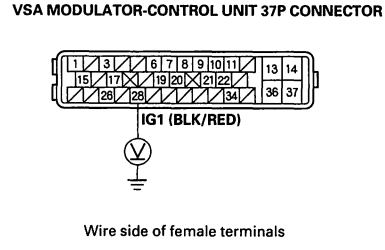

Wire side of female terminals

Is there battery voltage?

YES—Check for loose terminals in the VSA modulator-control unit 37P connector. If necessary, substitute a known-good VSA modulator-control unit and retest. If DTCs are not indicated, replace the VSA modulator-control unit (see page 19-132). ■

NO—Repair open in the wire between the No. 18 IG (15 A) fuse and the VSA modulator-control unit.■

BACK

Protected by AR

DTC 62-22: VSA Modulator-control Unit IG High Voltage

NOTE: If MIL is indicated at the same time as ABS or VSA indicator troubleshooting the PGM-FI system first (see page 11-3), then recheck for VSA DTCs.

1. Turn the ignition switch ON (II).
2. Clear the DTC with the HDS. Turn the ignition switch OFF, then ON (II) again.
3. Check for DTCs with the HDS.

   Is DTC 62-22 indicated?

   YES—Go to step 4.

   NO—Intermittent failure, system is OK at this time. Check for poor connections or loose terminals at the VSA modulator-control unit. ■
4. Check the IG1 and BATTERY in the DATA LIST with the HDS.

   Are there battery voltage indicated?

   YES—Check for loose terminals in the VSA modulator-control unit 37P connector. If necessary, substitute a known-good VSA modulator-control unit and retest. If DTCs are not indicated, replace the VSA modulator-control unit (see page 19-132). ■

   NO—If the voltage is 0 V, go to step 5. If there is the any voltage, check the battery performance, refer to the 2003-2006 Accord Service Manual (see page 22-78), and do the alternator and regulator circuit troubleshooting (see page 4-26). ■
5. Turn the ignition switch OFF.
6. Disconnect the VSA modulator-control unit 37P connector.
7. Turn the ignition switch ON (II).
8. Measure voltage between VSA modulator-control unit 37P connector terminal No. 13 and body ground.

VSA MODULATOR-CONTROL UNIT 37P CONNECTOR

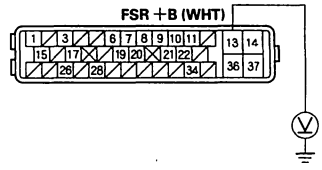

Wire side of female terminals

Is there battery voltage indicated?

YES—Check for loose terminals in the VSA modulator-control unit 37P connector. If necessary, substitute a known-good VSA modulator-control unit and retest. If DTCs are not indicated, replace the VSA modulator-control unit (see page 19-132). ■

NO—Repair open in the wire between the No. 18 FSR +B (40 A) fuse and the VSA modulator-control unit. ■

9. Turn the ignition switch ON (II).
10. Measure voltage between VSA modulator-control unit 37P connector terminal No. 28 and body ground.

VSA MODULATOR-CONTROL UNIT 37P CONNECTOR

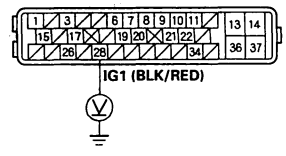

Wire side of female terminals

Is there battery voltage?

YES—Check for loose terminals in the VSA modulator-control unit 37P connector. If necessary, substitute a known-good VSA modulator-control unit and retest. If DTCs are not indicated, replace the VSA modulator-control unit (see page 19-132). ■

NO—Repair open in the wire between the No. 18 IG (15 A) fuse and the VSA modulator-control unit. ■

Protected by AR

DTC Troubleshooting (cont'd)

DTC 64-11: Steering Angle Sensor Power Circuit Short

1. Turn the ignition switch ON (II).
2. Clear the DTC with the HDS. Turn the ignition switch OFF, then ON (II) again.
3. Check for DTCs with the HDS.

   Is DTC 64-11 indicated?

   YES—Go to step 4.

   NO—Intermittent failure, system is OK at this time. Check for poor connections or loose terminals between the steering angle sensor and the VSA modulator-control unit. ■
4. Turn the ignition switch OFF.
5. Disconnect the steering angle sensor 5P connector.
6. Disconnect the VSA modulator-control unit 37P connector.
7. Check for continuity between steering angle sensor 5P connector terminal No. 5 and body ground.

STEERING ANGLE SENSOR 5P CONNECTOR

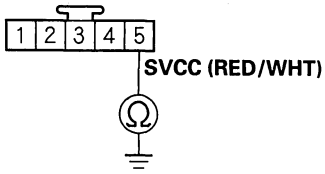

Wire side of female terminals

Is there continuity?

YES—Repair short in the wire between the steering angle sensor and the VSA modulator-control unit. ■

NO—Check for loose terminals in the VSA modulator-control unit 37P connector. If necessary, substitute a known-good VSA modulator-control unit and retest. If DTCs are not indicated, replace the VSA modulator-control unit (see page 19-132). ■

BACK

Protected by AR

DTC 64-12: Steering Angle Sensor Power Circuit Open

1. Turn the ignition switch ON (II).
2. Clear the DTC with the HDS. Turn the ignition switch OFF, then ON (II) again.
3. Check for DTCs with the HDS.

   Is DTC 64-12 indicated?

   YES—Go to step 4.

   NO—Intermittent failure, system is OK at this time. Check for poor connections or loose terminals at the steering angle sensor and the VSA modulator-control unit. ■
4. Turn the ignition switch OFF.
5. Disconnect the steering angle sensor 5P connector.
6. Disconnect the VSA modulator-control unit 37P connector.
7. Check for continuity between VSA modulator-control unit 37P connector terminal No. 7 and steering angle sensor 5P connector terminal No. 5.

STEERING ANGLE SENSOR 5P CONNECTOR

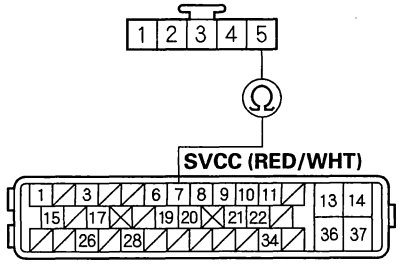

VSA MODULATOR-CONTROL UNIT 37P CONNECTOR

Wire side of female terminals

Is there continuity?

YES—Go to step 8.

NO—Repair open in the wire between steering angle sensor and the VSA modulator-control unit. ■

8. Turn the ignition switch ON (II).
9. Measure voltage between VSA modulator-control unit 37P connector terminal No. 7 and body ground.

VSA MODULATOR-CONTROL UNIT 37P CONNECTOR

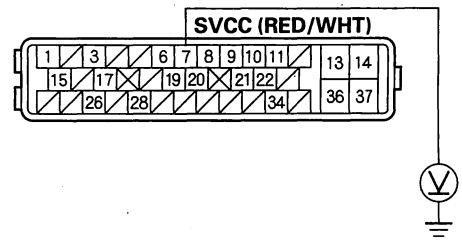

Wire side of female terminals

Is there battery voltage?

YES—Repair open in the wire between steering angle sensor and the VSA modulator-control unit. ■

NO—Check for loose terminals in the VSA modulator-control unit 37P connector. If necessary, substitute a known-good VSA modulator-control unit and retest. If DTCs are not indicated, replace the VSA modulator-control unit (see page 19-132). ■

Protected by AR

DTC Troubleshooting (cont'd)

DTC 65-21: Brake Fluid Level Stuck ON

1. Turn the ignition switch ON (II).
2. Clear the DTC with the HDS. Turn the ignition switch OFF, then ON (II) again.
3. Check for DTCs with the HDS.

   Is DTC 65-21 indicated?

   YES—Go to step 4.

   NO—Intermittent failure, system is OK at this time. Check for poor connections or loose terminals at the brake pedal position switch, the ECM/PCM, and the VSA modulator-control unit. Refer to intermittent failure (see page 19-64). ■
4. Release the parking brake.
5. Turn the ignition switch ON (II).
6. Check the brake system indicator in the gauge control module after several seconds with ignition switch turned ON (II).

   The indicator comes on then goes off?

   YES—Go to step 8.

   NO—Go to step 7.
7. Check the FLUID LEVEL in the DATA LIST with the HDS while moving the brake fluid reservoir tank float.

   Does it indicate ON with float is lowered and OFF with float raised?

   YES—Intermittent failure, system is OK at this time. Check for poor connections or loose terminals between the brake fluid level switch, gauge control module, and VSA modulator-control unit. Refer to intermittent failure (see page 19-64). ■

   NO—Check for loose terminals in the VSA modulator-control unit 37P connector. If necessary, substitute a known-good VSA modulator-control unit and retest. If DTCs are not indicated, replace the VSA modulator-control unit (see page 19-132). ■
8. Check the brake fluid level in the master cylinder reservoir tank.

   Is brake fluid level OK?

   YES—Go to step 9.

   NO—Do the brake pad inspection: Front (see page 19-2), rear with disc brake type, refer to the 2003-2006 Accord Service Manual (see page 19-21), check for brake fluid leaks, repair leaks or replace worn pads, then go to step 1 and recheck. ■
9. Check the FLUID LEVEL in the DATA LIST with the HDS while moving the brake fluid reservoir tank float.

   Does it indicate ON with float is lowered and OFF with float raised?

   YES—Go to step 10.

   NO—Replace the brake fluid reservoir tank (brake fluid level switch is included), refer to the 2003-2006 Accord Service Manual (see page 19-16). ■
10. Turn the ignition switch OFF.
11. Disconnect the gauge control module 36P connector.
12. Disconnect the brake fluid level switch 2P connector.

BACK

Protected by AR

13. Check for continuity between brake fluid level switch 2P connector terminal No. 2 and body ground.

BRAKE FLUID LEVEL SWITCH 2P CONNECTOR

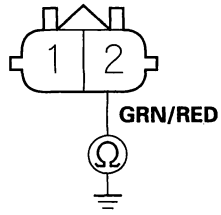

Wire side of female terminals

Is there continuity?

YES—Repair short in the wire between the gauge control module and the brake level position switch. ■

NO—Substitute a known-good gauge control module, then go to step 1 and recheck. If no DTCs are indicated, replace the original gauge control module, refer to the 2003-2006 Accord Service Manual (see page 22-279). ■

DTC 66-11: Pressure Sensor (Inside of VSA Modulator-control Unit) Malfunction

DTC 66-12: Pressure Sensor (Inside of VSA Modulator-control Unit) Malfunction

DTC 66-13: Pressure Sensor (Inside of VSA Modulator-control Unit) Malfunction

DTC 66-14: Pressure Sensor (Inside of VSA Modulator-control Unit) Malfunction

DTC 66-16: Pressure Sensor (Inside of VSA Modulator-control Unit) Malfunction

1. Turn the ignition switch ON (II).
2. Clear the DTC with the HDS. Turn the ignition switch OFF, then ON (II) again.
3. Check for DTCs with the HDS.

   Is DTC 66-11, 66-12, 66-13, 66-14, or 66-16 indicated?

   YES—Check for loose terminals in the VSA modulator-control unit 37P connector. If necessary, substitute a known-good VSA modulator-control unit and retest. If DTCs are not indicated, replace the VSA modulator-control unit (see page 19-132). ■

   NO—Intermittent failure, system is OK at this time. Check for poor connections or loose terminals at the VSA modulator-control unit. Refer to intermittent failure (see page 19-64). ■

Protected by AR

DTC Troubleshooting (cont'd)

DTC 66-15: Pressure Sensor (Inside of VSA Modulator-control Unit) Malfunction

1. Turn the ignition switch ON (II).
2. Clear the DTC with the HDS. Turn the ignition switch OFF, then ON (II) again.
3. Check for DTCs with the HDS.

   Is DTC 66-15 indicated?

   YES—Go to step 4.

   NO—Intermittent failure, system is OK at this time. Check for poor connections or loose terminals between the brake pedal position switch, the ECM/PCM and the VSA modulator-control unit. Refer to intermittent failure (see page 19-64). ■
4. Check the PRESSURE SWITCH in the DATA LIST with the HDS, while moving the brake pedal.

   Do the indicated value change?

   YES—Intermittent failure, system is OK at this time. Check for poor connections or loose terminals between the brake pedal position switch, the ECM/PCM, and the VSA modulator-control unit. Refer to intermittent failure (see page 19-64). ■

   NO—Check for loose terminals in the VSA modulator-control unit 37P connector. If necessary, substitute a known-good VSA modulator-control unit and retest. If DTCs are not indicated, replace the VSA modulator-control unit (see page 19-132). ■

DTC 68-21: Brake Pedal Position Switch Stuck OFF

1. Turn the ignition switch ON (II).
2. Check the BRK PRESS in the DATA LIST with the HDS.

   Is 0.5 V or less?

   YES—Go to step 3.

   NO—Replace the VSA modulator-control unit (see page 19-132). ■
3. Check the BRAKE PEDAL POSITION SWITCH in the DATA LIST with the HDS while moving the brake pedal.

   Does it indicate ON when the pedal is pushed, and OFF when pedal is released?

   YES—Intermittent failure, system is OK at this time. Check for poor connections or loose terminals between the brake pedal position switch, the ECM/PCM, and the VSA modulator-control unit. Refer to intermittent failure (see page 19-64). ■

   NO—Go to step 4.
4. Turn the ignition switch OFF.
5. Disconnect the brake pedal position switch 4P connector.

BACK

Protected by AR

6. Check for voltage between body ground and the the brake pedal position switch 4P connector terminal No. 1.

BRAKE PEDAL POSITION SWITCH 4P CONNECTOR

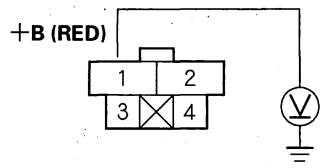

Wire side of female terminals

Is there battery voltage?

YES - Go to step 7.

NO - Go to step 8.

7. Test the brake pedal position switch, refer to the 2003-2006 Accord Service Manual (see page 19-6).

Is the switch OK?

YES—Repair open in the wire between the ECM/PCM and the brake pedal position switch. ■

NO—Replace the brake pedal position switch and retest. ■

Is the fuse OK?

8. Check fuse No. 13 (15A) in the under-hood fuse/relay box.

YES-Repair open in the wire between the under-hood fuse/relay box fuse No. 13 (15A) and the brake pedal position switch. ■

NO- Go to step 9.

9. Reconnect the brake pedal position switch 4P connector, and disconnect ECM/PCM connector A.

10. Replace the blown fuse.

11. Press the brake pedal.

Does fuse No. 13 blow again?

YES-Repair short to body ground on the wire between the under-hood fuse/relay box fuse No. 13A (15A) and the ECM/PCM. ■

NO-Replace the ECM/PCM. ■

BACK

Protected by AR

DTC Troubleshooting (cont'd)

DTC 68-22: Brake Pedal Position Switch Stuck ON

1. Turn the ignition switch ON (II).
2. Check the BRK PRESS in the DATA LIST with the HDS.

   Is 0.5 V or less?

   YES—Go to step 3.

   NO—Replace the VSA modulator-control unit (see page 19-132). ■
3. Check the BRAKE SWITCH in the DATA LIST while the HDS with moving the brake pedal.

   Does it indicate ON when the pedal is pushed, and OFF when pedal is released?

   YES—Intermittent failure, system is OK at this time. Check for poor connections or loose terminals between the brake pedal position switch, the ECM/PCM, and the VSA modulator-control unit. Refer to intermittent failure (see page 19-64). ■

   NO—Go to step 4.
4. Check the BRAKE SWITCH in the DATA LIST with the HDS, and disconnect the brake pedal position switch 4P connector.

   Does indicator change to OFF?

   YES—Substitute a known-good ECM/PCM, then go to step 1 and recheck. If DTCs are not indicated, replace the original ECM/PCM (see page 11-244). ■

   NO—Go to step 5.
5. Check for continuity between brake pedal position switch 4P connector terminal No. 2 and body ground.

BRAKE PEDAL POSITION SWITCH 4P CONNECTOR

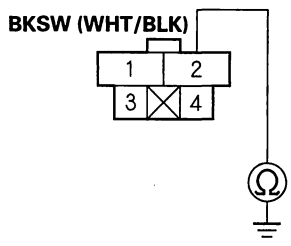

Wire side of female terminals

Is there continuity?

YES—Repair short in the wire between the ECM/PCM and the brake pedal position switch. ■

NO—Replace the brake pedal position switch. ■

BACK

Protected by AR

DTC 71-27: Right-front or Left-rear Different Diameter Tire Malfunction

DTC 71-28: Left-front or Right-rear Different Diameter Tire Malfunction

DTC 71-29: Right-front and Right-rear Different Diameter Tire Malfunction

DTC 71-2A: Left-front and Left-rear Different Diameter Tire Malfunction

DTC 71-2B: Left-front and Right-front Different Diameter Tire Malfunction

DTC 71-2C: Left-rear and Right-rear Different Diameter Tire Malfunction

1. ABS and/or VSA Indicator will indicated when the vehicle has a different diameter tire(s) against other tire(s).

DTC	Sectional	Note
71-27	Right-front or left-rear	
71-28	Left-front or right-rear	
71-29	Right-front and right-rear	
71-2A	Left-front and left-rear	
71-2B	Left-front and right-front	
71-2C	Left-rear and right-rear	

Protected by AR

DTC Troubleshooting (cont'd)

DTC 81-xx*: Central Processing Unit (CPU) Internal Circuit Malfunction

*: Except DTC 81-11, 81-51, 81-52, 81-53, 81-54, 81-55, 81-56, 81-57, 81-58, 81-59, 81-3D, and 81-3E

1. Turn the ignition switch ON (II).
2. Clear the DTC with the HDS. Turn the ignition switch OFF, then ON (II) again.
3. Check for DTCs with the HDS.

   Is DTCs 81-xx indicated?

   YES—Check for loose terminals in the VSA modulator-control unit 37P connector. If necessary, substitute a known-good VSA modulator-control unit and retest. If DTCs are not indicated, replace the VSA modulator-control unit (see page 19-132). ■

   NO—Intermittent failure, system is OK at this time. Check for poor connections or loose terminals at the VSA modulator-control unit. Refer to intermittent failure (see page 19-64). ■

DTC 81-11: Central Processing Unit (CPU) Internal Circuit Malfunction

DTC 81-52: Central Processing Unit (CPU) Internal Circuit Malfunction

DTC 81-54: Central Processing Unit (CPU) Internal Circuit Malfunction

DTC 81-56: Central Processing Unit (CPU) Internal Circuit Malfunction

DTC 81-58: Central Processing Unit (CPU) Internal Circuit Malfunction

1. Turn the ignition switch ON (II).
2. Clear the DTC with the HDS. Turn the ignition switch OFF, then ON (II) again.
3. Test-drive the vehicle.
4. Check for DTCs with the HDS.

   Is DTC 81-11, 81-52, 81-54, 81-56, or 81-58 indicated?

   YES—Check for loose terminals in the VSA modulator-control unit 37P connector. If necessary, substitute a known-good VSA modulator-control unit and retest. If DTCs are not indicated, replace the VSA modulator-control unit (see page 19-132). ■

   NO—Intermittent failure, system is OK at this time. Check for poor connections or loose terminals at the VSA modulator-control unit. Refer to intermittent failure (see page 19-64). ■

BACK

Protected by AR

DTC 81-51: Central Processing Unit (CPU) Internal Circuit Malfunction

DTC 81-53: Central Processing Unit (CPU) Internal Circuit Malfunction

DTC 81-55: Central Processing Unit (CPU) Internal Circuit Malfunction

DTC 81-57: Central Processing Unit (CPU) Internal Circuit Malfunction

1. Turn the ignition switch ON (II).
2. Clear the DTC with the HDS. Turn the ignition switch OFF, then ON (II) again.
3. Test-drive the vehicle.
4. Check for DTCs with the HDS.

   Is DTC 81-51, 81-53, 81-55, or 81-57 indicated?

   YES—Go to step 5.

   NO—Intermittent failure, system is OK at this time. Check for poor connections or loose terminals between the appropriate wheel sensor and the VSA modulator-control unit. Refer to intermittent failure (see page 19-64). ■
5. Turn the ignition switch OFF.
6. Disconnect the VSA modulator-control unit 37P connector.
7. Turn the ignition switch ON (II).
8. Measure voltage between VSA modulator-control unit 37P connector (see table).

DTC	Appropriate Terminal	Appropriate Wheel Sensor
81-51	19	Right-front
81-53	22	Left-front
81-55	9	Right-rear
81-57	20	Left-rear

VSA MODULATOR-CONTROL UNIT 37P CONNECTOR

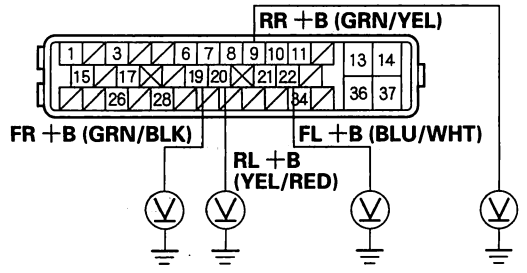

Wire side of female terminals

Is there battery voltage?

YES—Repair short in the wire between the appropriate wheel sensor and the VSA modulator-control unit. ■

NO—Check for loose terminals in the VSA modulator-control unit 37P connector. If necessary, substitute a known-good VSA modulator-control unit and retest. If DTCs are not indicated, replace the VSA modulator-control unit (see page 19-132). ■

Protected by AR

DTC Troubleshooting (cont'd)

DTC 81-59: Central Processing Unit (CPU) Internal Circuit Malfunction

DTC 81-3D: Central Processing Unit (CPU) Internal Circuit Malfunction

DTC 81-3E: Central Processing Unit (CPU) Internal Circuit Malfunction

1. Turn the ignition switch ON (II).
2. Clear the DTC with the HDS. Turn the ignition switch OFF, then ON (II) again.
3. Turn the steering wheel from lock to lock.
4. Check for DTCs with the HDS.

   Is DTCs 81-59, 81-3D or 81-3E indicated?

   YES—Check for loose terminals in the VSA modulator-control unit 37P connector. If necessary, substitute a known-good VSA modulator-control unit and retest. If DTCs are not indicated, replace the VSA modulator-control unit (see page 19-132). ■

   NO—Intermittent failure, system is OK at this time. Check for poor connections or loose terminals at the VSA modulator-control unit. Refer to intermittent failure (see page 19-64). ■

BACK

Protected by AR

DTC 83-13: ECM/PCM Relation Failure

DTC 83-14: ECM/PCM Relation Failure

1. Turn the ignition switch ON (II).
2. Clear the DTC with the HDS. Turn the ignition switch OFF, then ON (II) again.
3. Test-drive the vehicle.
4. Check for DTCs with the HDS.

   Is DTC 83-13, or 83-14 indicated?

   YES—Go to step 5.

   NO—Intermittent failure, system is OK at this time. Check for poor connections or loose terminals at the brake pedal position switch, the ECM/PCM, and the VSA modulator-control unit. Refer to intermittent failure (see page 19-64). ■
5. Check the PGM-FI DTCs with the HDS (see page 11-3).

   Are there PGM-FI DTCs indicated?

   YES—Go to the indicated DTCs troubleshooting. ■

   NO—Check for loose terminals in the VSA modulator-control unit 37P connector. If necessary, substitute a known-good VSA modulator-control unit and retest. If DTCs are not indicated, replace the VSA modulator-control unit (see page 19-132). ■

DTC 84-21: VSA Sensor Neutral Position not Writing

Do the VSA sensor neutral position memorization (see page 19-130).

Protected by AR

DTC Troubleshooting (cont'd)

DTC 86-01: F-CAN Malfunction (BUS-OFF)

1. Check for PGM-FI DTCs (see page 11-3).

   Is DTC U0073 indicated?

   YES—Do the troubleshooting for DTC U0073. ■

   NO—Go to step 2.

2. Turn the ignition switch ON (II).

3. Clear the DTC with the HDS. Turn the ignition switch OFF, then ON (II) again.

4. Check for DTCs with the HDS.

   Is DTC 86-01 indicated?

   YES—Go to step 5.

   NO—Intermittent failure, system is OK at this time. Check for poor connections or loose terminals at the yaw rate-lateral acceleration sensor, the ECM/PCM, the gauge control module, and the VSA modulator-control unit. Refer to intermittent failure (see page 19-64). ■

5. Turn the ignition switch OFF.

6. Disconnect the VSA modulator-control unit 37P connector.

7. Disconnect the ECM/PCM connector A (31P).

8. Check for continuity between VSA modulator-control unit 37P terminal and ECM/PCM connector A (31P) terminal (see table).

Sign	Connector Terminal No.	
	VSA Modulator-control Unit	ECM/PCM
CAN-L	1	26
CAN-H	15	15

ECM/PCM CONNECTOR A (31P)

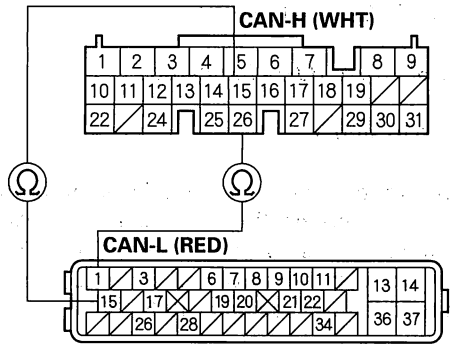

VSA MODULATOR-CONTROL UNIT 37P CONNECTOR

Wire side of female terminals

Is there continuity?

YES—Check for loose terminals in the VSA modulator-control unit 37P connector. If necessary, substitute a known-good VSA modulator-control unit and retest. If DTCs are not indicated, replace the VSA modulator-control unit (see page 19-132). ■

NO—Repair open in the wire between the ECM/PCM and the VSA modulator-control unit. ■

BACK

Protected by AR

DTC 86-11: F-CAN Communication with ECM/PCM Malfunction

DTC 86-21: F-CAN Communication with Engine Malfunction

DTC 86-22: F-CAN Communication with Engine Malfunction

DTC 86-23: F-CAN Communication with Engine Malfunction

DTC 86-41: F-CAN Communication with EAT Malfunction

1. Turn the ignition switch ON (II).
2. Clear the DTC with the HDS. Turn the ignition switch OFF, then ON (II) again.
3. Test-drive the vehicle. Drive the vehicle speed at 7 mph (10 km/h) or more.
4. Check for DTCs with the HDS.

   Is 86-11, 86-21, 86-22, 86-23, and/or 86-41 DTC indicated?

   YES—If the DTC 86-01 is indicated at the same time, do the DTC 86-01 troubleshooting (see page 19-120). If 86-01 is not indicated, go to step 7.

   NO—If any DTCs are indicated, go to the indicated DTCs troubleshooting. If DTC is not indicated, intermittent failure, system is OK at this time. Check for poor connections or loose terminals between the yaw rate-lateral acceleration sensor, the ECM/PCM, the gauge control module, and the VSA modulator-control unit. Refer to intermittent failure (see page 19-64). ■
5. Turn the ignition switch OFF.
6. Disconnect ECM/PCM connector A (31P).
7. Disconnect the VSA modulator-control unit 37P connector.
8. Check for continuity between the VSA modulator-control unit 37P connector terminal and ECM/PCM connector A (31P) terminal (see table).

Sign	Connector Terminal No.	
	VSA Modulator-control Unit	ECM/PCM
CAN-L	1	26
CAN-H	15	15

ECM/PCM CONNECTOR A (31P)

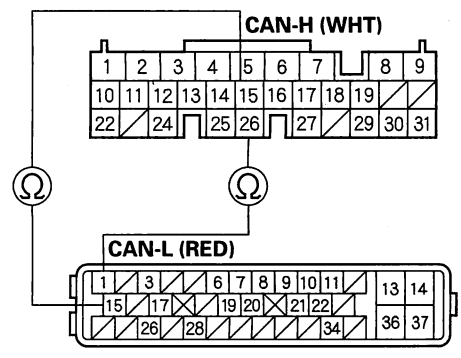

VSA MODULATOR-CONTROL UNIT 37P CONNECTOR

Wire side of female terminals

Is there continuity?

YES—Check terminal pin fit, if OK, substitute a known-good ECM/PCM, then go to step 1 and recheck. If no DTCs are indicated, replace the original ECM/PCM (see page 11-244). ■

NO—Repair open in the wire between the ECM/PCM and the VSA modulator-control unit. ■

BACK

Protected by AR

DTC Troubleshooting (cont'd)

DTC 86-31: F-CAN Communication with Gauge Control Module Malfunction

1. Turn the ignition switch ON (II).
2. Clear the DTC with the HDS. Turn the ignition switch OFF, then ON (II) again.
3. Check for DTCs with the HDS.

   Is 86-31 DTC indicated?

   YES—If the DTC 86-01 is indicated as same time, do the DTC 86-01 troubleshooting (see page 19-120). If 86-01 is not indicated, go to step 4.

   NO—If any DTCs are indicated, go to the indicated DTCs troubleshooting. If DTC is not indicated, intermittent failure, system is OK at this time. Check for poor connections or loose terminals at the yaw rate-lateral acceleration sensor, the ECM/PCM, the gauge control module, and the VSA modulator-control unit. Refer to intermittent failure (see page 19-64).■
4. Turn the ignition switch ON (II).
5. Check the indicators in the gauge control module when turning ignition switch ON (II).

   Do any indicators come on?

   YES—Go to step 6.

   NO—Do the gauge control module troubleshooting, refer to the 2003-2006 Accord Service Manual (see page 22-279).■
6. Turn the ignition switch OFF.
7. Disconnect the gauge control module 28P connector.
8. Disconnect the VSA modulator-control unit 37P connector.
9. Check for continuity between the VSA modulator-control unit 37P connector terminal and gauge control module connector (36P) terminal (see table).

Sign	Connector Terminal No.	
	VSA Modulator-control Unit	Gauge Control Module
CAN-L	1	36
CAN-H	15	18

GAUGE CONTROL MODULE CONNECTOR (36P)

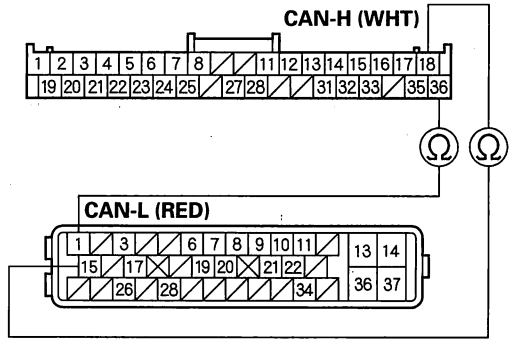

VSA MODULATOR-CONTROL UNIT 37P CONNECTOR

Wire side of female terminals

Is there continuity?

YES—Substitute a known-good gauge control module, then go to step 1 and recheck. If no DTCs are indicated, replace the original gauge control module, refer to the 2003-2006 Accord Service Manual (see page 22-276).■

NO—Repair open in the wire between the gauge control module and the VSA modulator-control unit.■

BACK

Protected by AR

DTC 107-22: Central Processing Unit (CPU) Internal Circuit Malfunction

Turn the ignition switch OFF to cool the VSA modulator-control unit, and wait 1 hour or more, then recheck the DTCs with the HDS.

DTC 108-21: Steering Angle Sensor Malfunction

1. Turn the ignition switch ON (II).
2. Clear the DTC with the HDS.
3. Test-drive the vehicle.
4. Check for DTCs with the HDS.

   Is DTC 81-21 indicated?

   YES—Replace the steering angle sensor (see page 19-127). ■

   NO—Intermittent failure, system is OK at this time. Check for poor connections or loose terminals at the steering angle sensor and the VSA modulator-control unit. Refer to intermittent failure (see page 19-64). ■

Protected by AR

DTC Troubleshooting (cont'd)

DTC 112-01: Central Processing Unit (CPU) Internal Circuit Malfunction

1. Turn the ignition switch ON (II).
2. Clear the DTC with the HDS. Turn the ignition switch OFF, then ON (II) again.
3. Check for DTCs with the HDS.

Is DTC B2-01 indicated?

YES—Check for loose terminals in the VSA modulator-control unit 37P connector. If necessary, substitute a known-good VSA modulator-control unit and retest. If DTCs are not indicated, replace the VSA modulator-control unit (see page 19-132). ■

NO—Intermittent failure, system is OK at this time. Check for poor connections or loose terminals at the VSA modulator-control unit. Refer to intermittent failure (see page 19-64). ■

DTC 121-xx: VSA Solenoid Valve Malfunction

DTC 122-xx: VSA Solenoid Valve Malfunction

DTC 123-xx: VSA Solenoid Valve Malfunction

DTC 124-xx: VSA Solenoid Valve Malfunction

1. Turn the ignition switch ON (II).
2. Clear the DTC with the HDS. Turn the ignition switch OFF, then ON (II) again.
3. Check for DTCs with the HDS.

DTC		Sectional	Valve
121	-01	Right-front and left-rear	master cut
121	-02		regulator
121	-11		
121	-21		master cut
121	-22		
121	-23		
121	-24		regulator
122	-01		suction
122	-21		
122	-22		
122	-23		
123	-01	Left-front and right-rear	master cut
123	-02		regulator
123	-11		
123	-21		master cut
123	-22		
123	-23		
123	-24		regulator
124	-01		suction
124	-21		
124	-22		
124	-23		

Is DTC 121-xx, 122-xx, 123-xx, or 124-xx indicated?

YES—Check for loose terminals in the VSA modulator-control unit 37P connector. If necessary, substitute a known-good VSA modulator-control unit and retest. If DTCs are not indicated, replace the VSA modulator-control unit (see page 19-132). ■

NO—Intermittent failure, system is OK at this time. Check for poor connections or loose terminals at the VSA modulator-control unit. Refer to intermittent failure (see page 19-64). ■

BACK

Protected by AR

Symptom Troubleshooting

ABS indicator and VSA indicator do not go off, and no DTCs are stored

NOTE: If MIL is indicated at the same time as ABS and/or VSA indicator, troubleshoot the PGM-FI system (see page 11-3) first.

1. Check the No. 18 IG1 (15 A) fuse in the under-dash fuse/relay box.

   Is the fuse blown?

   YES—Install the new No. 18 IG1 (15 A) fuse, and recheck. ■

   NO—Reinstall the checked fuse, then go to step 2.

2. Turn the ignition switch OFF.
3. Disconnect the VSA modulator-control unit 37P connector.
4. Turn the ignition switch ON (II).
5. Measure voltage between VSA modulator-control unit 37P connector terminal No. 28 and body ground.

VSA MODULATOR-CONTROL UNIT 37P CONNECTOR

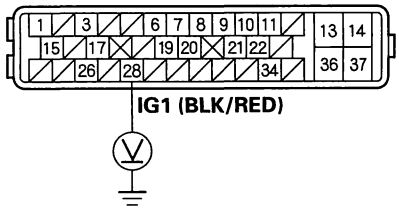

Wire side of female terminals

Is there battery voltage?

YES—Go to step 6.

NO—Repair open in the wire between the No. 18 IG1 (15 A) in the under-dash fuse/relay box and the VSA modulator-control unit. ■

6. Turn the ignition switch OFF.
7. Reconnect the VSA modulator control unit 37P connector.
8. Turn the ignition ON (11).
9. Check for voltage between VSA modulator control unit 37P connector terminal No. 36 and body ground.

VSA MODULATOR-CONTROL UNIT 37P CONNECTOR

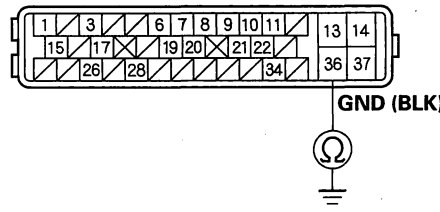

Wire side of female terminals

Is there 0.1 volts or less?

YES—Check for loose terminals in the VSA modulator-control unit 37P connector. If necessary, substitute a known-good VSA modulator-control unit and retest. ■

NO—Repair open in the wire between the VSA modulator-control unit and body ground (G203). ■

Protected by AR

Symptom Troubleshooting (cont'd)

VSA activation indicator does not go off, and no DTCs are stored

1. Turn the ignition switch ON (II).
2. Check the VSA activation indicator in the gauge control module when ignition switch is turned ON (II) after several seconds.

   The indicator comes on then goes off?

   YES—Intermittent failure, system is OK at this time. Check for poor connections or loose terminals at the VSA OFF switch, the gauge control module, and VSA modulator-control unit. ■

   NO—Go to step 3.
3. Turn the ignition switch OFF.
4. Check the VSA OFF switch.

   Is the VSA off switch OK?

   YES—Go to step 5.

   NO—Replace the VSA OFF switch (see page 19-131). ■
5. Disconnect the gauge control module 28P connector.
6. Disconnect the brake fluid level switch 2P connector.
7. Check for continuity between VSA OFF switch 5P connector terminal No. 2 and body ground.

VSA OFF SWITCH 5P CONNECTOR

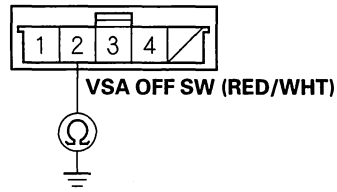

Wire side of female terminals

Is there continuity?

YES—Repair short in the wire between the gauge control module and the VSA OFF position switch. ■

NO—Substitute a known-good gauge control module, then go to step 1 and recheck. If it is OK, replace the original gauge control module, refer to the 2003-2006 Accord Service Manual (see page 22-276). ■

BACK

Protected by AR

Steering Angle Sensor Replacement

NOTE: Do not damage or drop the combination switch as the steering angle sensor is sensitive to shock and vibration.

1. Remove the steering wheel, refer to the 2003-2006 Accord Service Manual (see page 17-22) and steering column cover, refer to the 2003-2006 Accord Service Manual (see step 4 on page 17-25).
2. Remove the combination switch assembly, refer to the 2003-2006 Accord Service Manual (see step 10 on page 17-26).
3. Remove the combination light switch (A) and the wiper/washer switch (B).

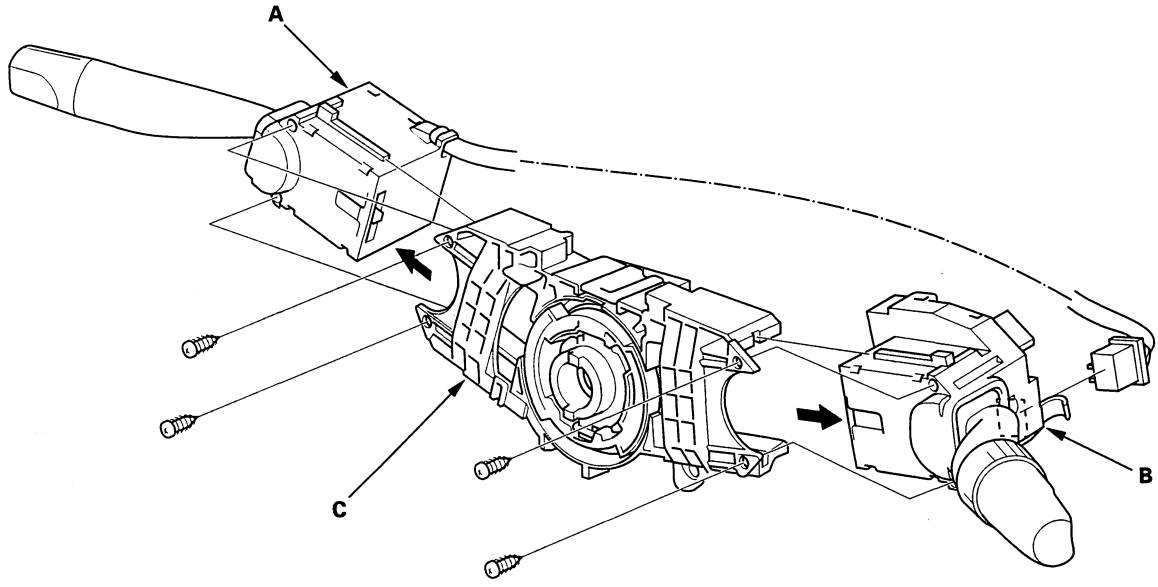

4. Replace the combination switch body complete (C).
5. Install the combination switch in the reverse order of removal.

   NOTE: Do not remove the steering angle sensor from the combination switch body.

6. Do the VSA sensor neutral position memorization (see page 19-130).

Protected by AR

VSA System Components

Yaw Rate-Lateral Acceleration Sensor Replacement

NOTE:
- Do not damage or drop the sensor as it is sensitive.
- Do not use an impact wrench.

1. M/T model: Lower the shift lever boot (A) to release the hooks (B) from the knob, then remove the shift knob (C).

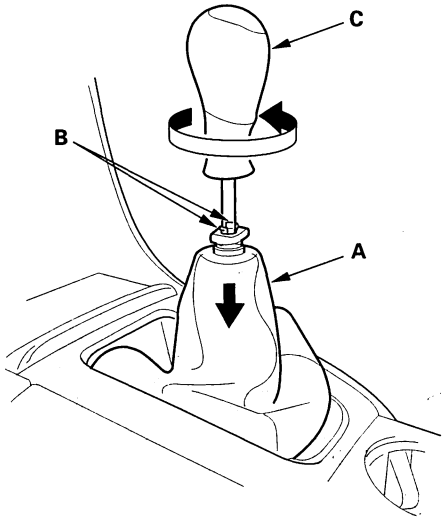

2. Remove the center console front panel (A). If equipped, disconnect the seat heater switch connectors (B).

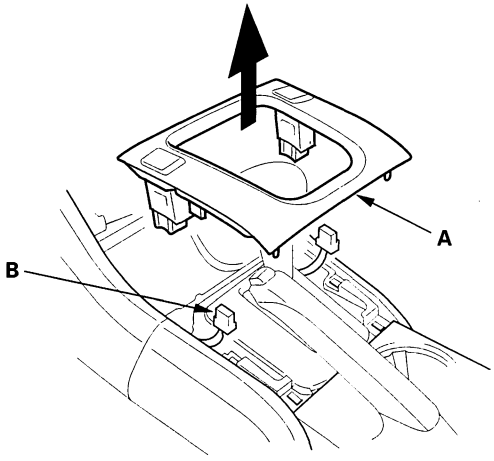

3. Remove the console packet (A).

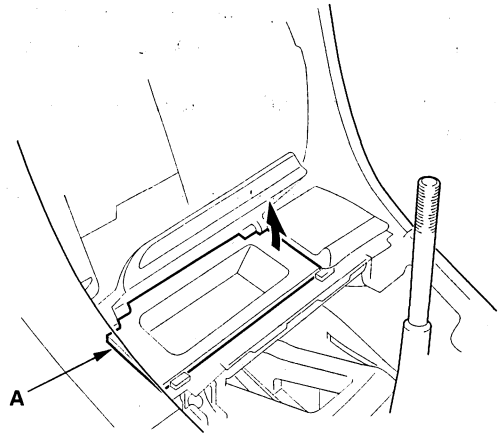

4. Remove the screws (A), then remove the center holder (B) and disconnect the front accessory power socket connector (C).

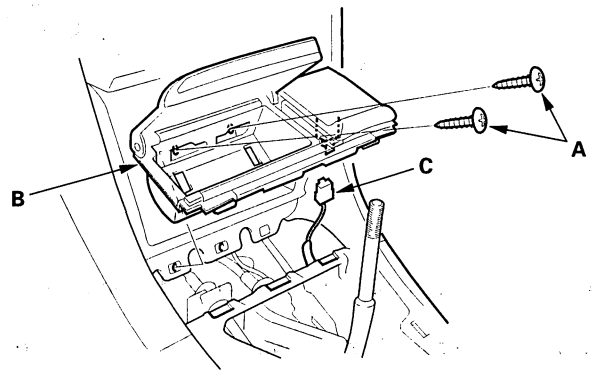

BACK

Protected by AR

5. Remove the screws (A), then remove the center pocket (B).

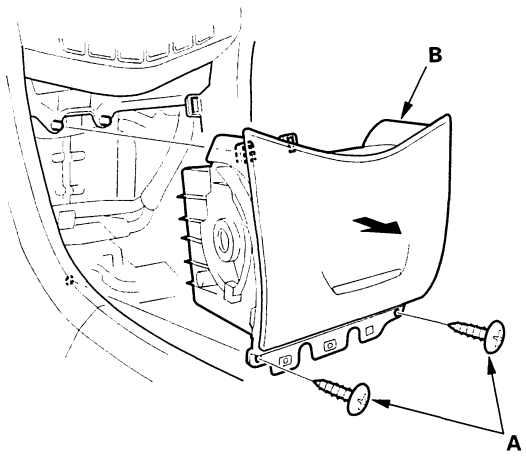

6. Disconnect the connector (A).

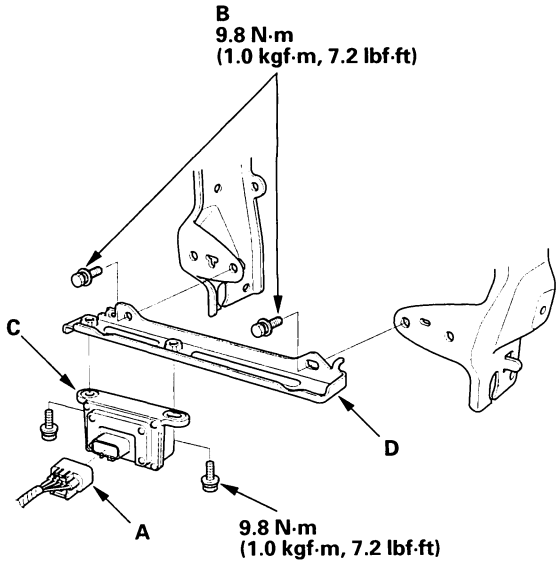

7. Remove the sensor bracket mounting bolts (B).
8. Remove the yaw rate-lateral acceleration sensor (C) with the bracket (D).
9. Remove the sensor from the bracket.
10. Install the sensor in the reverse order of removal.

BACK

Protected by AR

VSA Sensor Neutral Position Memorization

NOTE: Do not press the brake pedal during this procedure.

1. Park the vehicle on a flat and level surface.
2. With the ignition switch OFF, connect the HDS to the 16P data link connector (DLC) (A) under the driver's side of the dashboard.

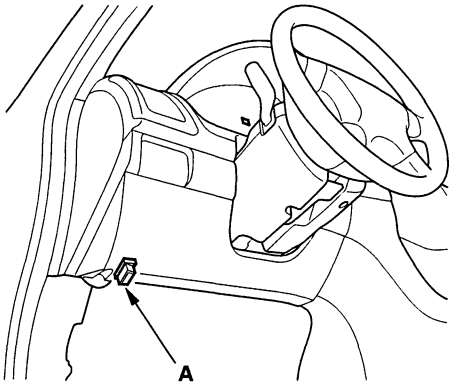

BACK

Protected by AR

VSA Off Switch Test

1. Remove the VSA OFF switch (A) from the switch panel.

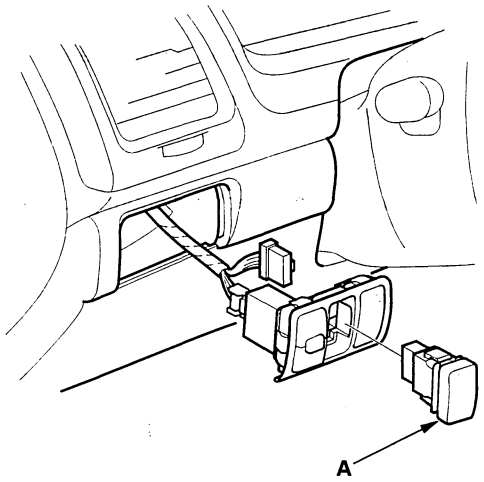

2. Disconnect the VSA OFF switch 5P connector.
3. Check for continuity between VSA OFF switch connector terminal No. 1 and No. 2. There should be continuity when the switch is pushed.

VSA OFF SWITCH 5P CONNECTOR

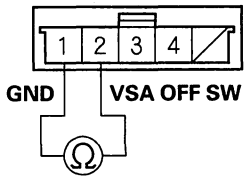

Terminal side of male terminals

4. Check for continuity between VSA OFF switch connector terminal No. 3 and No. 4. There should be continuity at all times.

VSA OFF SWITCH 5P CONNECTOR

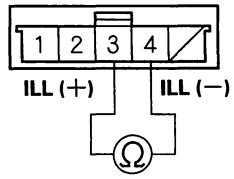

Terminal side of male terminals

BACK

Protected by AR

VSA System Components

VSA Modulator-Control Unit Removal and Installation

NOTE:
- Do not spill brake fluid on the vehicle; it may damage the paint; if brake fluid gets on the paint, wash it off immediately with water.
- Be careful not to damage or deform the brake lines during removal and installation.
- To prevent the brake fluid from flowing, plug and cover the hose ends and joints with a shop towel or equivalent material.

Removal

1. Pull up the lock (A) of the VSA modulator-control unit 37P connector (B), and the connector disconnects itself.

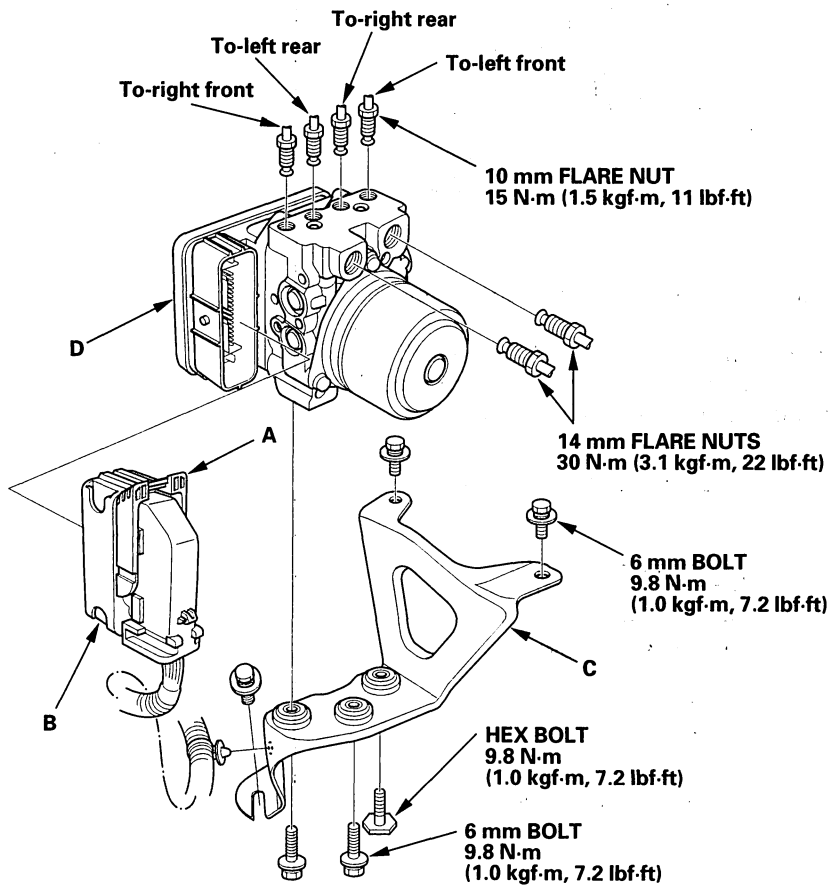

2. Disconnect the six brake lines.
3. Remove the three 6 mm bolts, then remove the bracket (C) with the VSA modulator-control unit (D) from the body.
4. Remove the two 6 mm bolts and the hex bolt, then remove the VSA modulator-control unit from the bracket.

BACK

Protected by AR

Installation

1. Install the VSA modulator-control unit on the bracket, then tighten the two 6 mm bolts and the hex bolt.
2. Install the bracket with the VSA modulator-control unit, then tighten the three 6 mm bolts.
3. Reconnect the six brake lines, then tighten the flare nuts to the specified torque.
4. Align the connecting surface of the VSA modulator-control unit 37P connector to the VSA modulator-control unit.
5. Lower the lock of the VSA modulator-control unit 37P connector, then confirm the connector is fully seated.
6. Bleed the brake system, starting with the front wheels, refer to the 2003-2006 Accord Service Manual (see page 19-9).
7. Perform the VSA sensor neutral position memorization (see page 19-130).
8. Start the engine, and check that the ABS and VSA indicators go off.
9. Test-drive the vehicle, and check that the ABS and VSA indicators do not come on.
10. If the brake pedal is now spongy, there may be air trapped in the modulator and then induced into the normal brake system during modulation. Bleed the brake system again, starting with the front wheels, refer to the 2003-2006 Accord Service Manual (see page 19-9).

Protected by AR

Wheel Sensor Inspection

1. Check the magnetic encoder (A) or pulser (B) after cleaning it. If necessary, replace the encoder or pulser.

Front

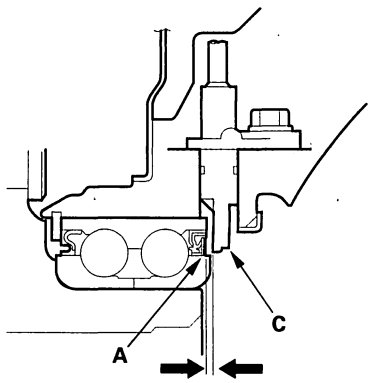

Rear

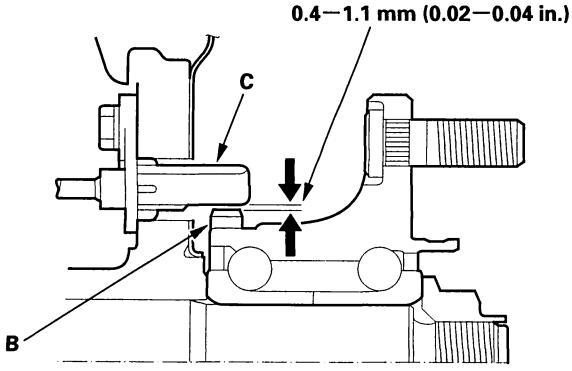

2. Measure the air gap between the wheel sensor (C) and the magnetic encoder or pulser all the way around while rotating the encoder or pulser.

Standard:
Front: 0.5—1.2 mm (0.02—0.05 in.)
Rear: 0.4—1.1 mm (0.02—0.04 in.)

BACK

Protected by AR

Wheel Sensor Replacement

NOTE: Install the sensor carefully to avoid twisting the wires.

Front

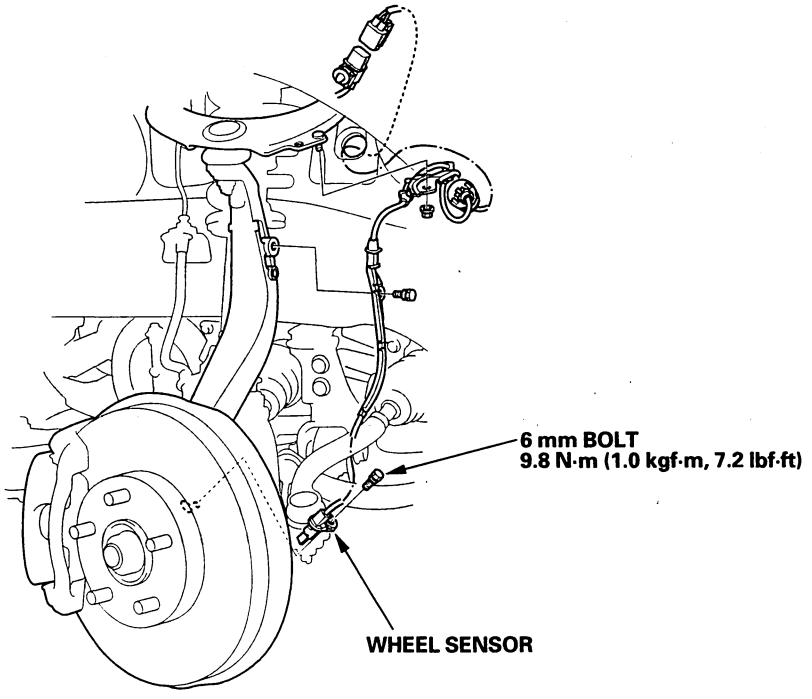

Rear

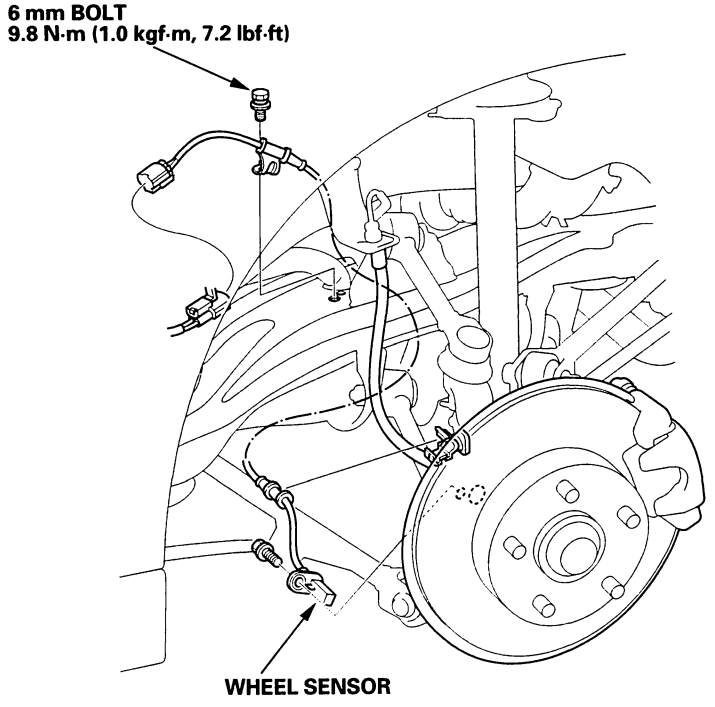

Protected by AR

SUPPLEMENTAL RESTRAINT SYSTEM (SRS) (If body maintenance required)

The Accord SRS includes a driver's airbag in the steering wheel hub, a passenger's airbag in the dashboard above the glove box, seat belt tensioners in the front seat belt retractors, side curtain airbags in the sides of the roof, and side airbags in the front seat-backs. Information necessary to safely service the SRS is included in the 2003-2006 Accord Service Manual, P/N 61SDA08. Items marked with an asterisk (*) on the contents page include or are located near SRS components. Servicing, disassembling, or replacing these items require special precautions and tools, and should be done only by an authorized Honda dealer.

- To avoid rendering the SRS inoperative, which could lead to personal injury or death in the event of a severe frontal or side collision, all SRS service work must be performed by an authorized Honda dealer.
- Improper service procedures, including incorrect removal and installation of the SRS, could lead to personal injury caused by unintentional deployment of the airbags and/or side airbags.
- Do not bump or impact the SRS unit, front impact sensors, or side impact sensors when the ignition switch is ON (II), or for at least 3 minutes after the ignition switch is turned OFF; otherwise, the system may fail in a collision, or the airbags may deploy.
- SRS electrical connectors are identified by yellow color coding. Related components are located in the steering column, front console, dashboard, dashboard lower panel, in the dashboard above the glove box, in the front seats, in the roof side, and around the floor. Do not use electrical test equipment on these circuits.

BACK

Protected by AR

Body

Special Tools 20-2

Seats
* Front Seat Removal/Installation 20-3
* Front Seat Disassembly/Reassembly
  -4-Way Power 20-6
  Front Seat Linkage Disassembly/Reassembly
  -4-Way Power 20-8
* Front Seat Cover Replacement 20-10

Bumpers
Rear Bumper Removal/Installation 20-15

Hood
Hood Support Strut Replacement 20-17

Trunk Lid
Trunk Lid Dynamic Damper Replacement 20-18

Exterior Trim
Side Sill Panel Replacement 20-19
Emblem/Sticker Replacement 20-20

Frame
Subframe Replacement 20-23
Frame Repair Chart 20-26

NOTE: Refer to the 2003-2006 Accord Service Manual, P/N 61SDA08 for items not shown in this section.



Outline of V6 Model Changes

- The Accord 2-door and 4-door V6 models have been added.
- The rear bumper has been changed.
- The front seat removal and installation procedures have been changed.
- The seat weight sensor bracket has been changed.
- The Accord V6 and SE emblem have been added.
- The emblem attachment points are different.

Protected by AR

Body

Special Tools

Ref. No.	Tool Number	Description	Qty
①	SOJATP2014	KTC Trim Tool Set	1

①: Available through the American Honda Tool and Equipment Program; call 888-424-6857.

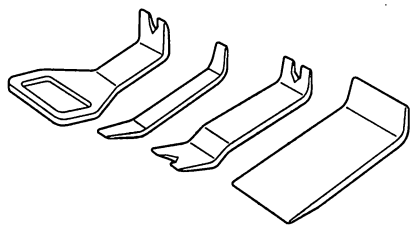

①

BACK

Protected by AR

Front Seat Removal/Installation

SRS components are located in this area. Review the SRS component locations, refer to the 2003-2006 Accord Service Manual (see page 23-17) and the precautions and procedures, refer to the 2003-2006 Accord Service Manual (see page 23-19) before performing repairs or service.

4-Way Power Seat

NOTE:
- Use the appropriate tool from the KTC tool set to avoid damage when prying components.
- Take care not to scratch the body or tear the seat covers.
- Put on gloves to protect your hands.

1. Make sure you have the anti-theft codes for the radio and the navigation system, then write down the frequencies for the preset buttons.

2. '04-06 models passenger's seat: Carefully insert the tip of a small screwdriver (A) through the hole in the back of the front seat belt lower anchor cover (B) and into the hole in the front seat belt lower anchor (C).
   Unlock the lower anchor by pushing in on the screwdriver. Remove the screwdriver, and then detach the front seat belt anchor plate (D) and anchor cover from the lower anchor.

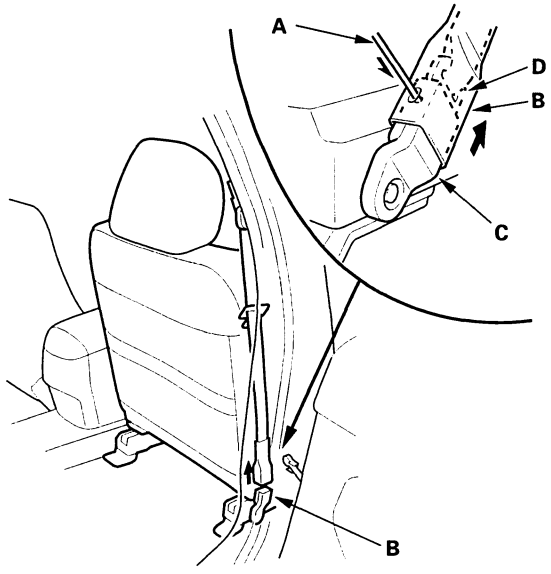

3. Slide the seat all the way forward, then remove the seat track end covers (A) from the back of both seat tracks.

'03 model

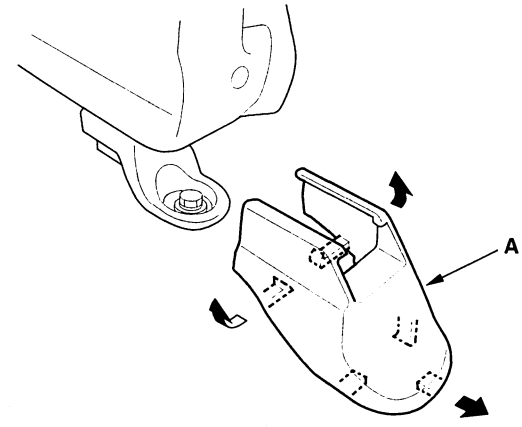

'04-06 models

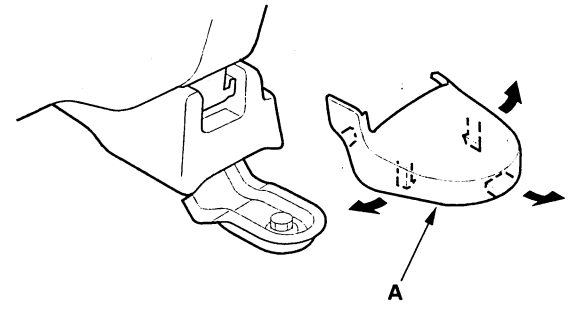

4. Slide the seat about halfway to the rear so you can access the mounting bolts.

5. Disconnect the negative cable from the battery, and wait at least 3 minutes before removing the seat.

(cont'd)

Protected by AR

Front Seat Removal/Installation (cont'd)

6. Remove the bolts securing the front seat.

Fastener Locations

▶ : Bolt, 4

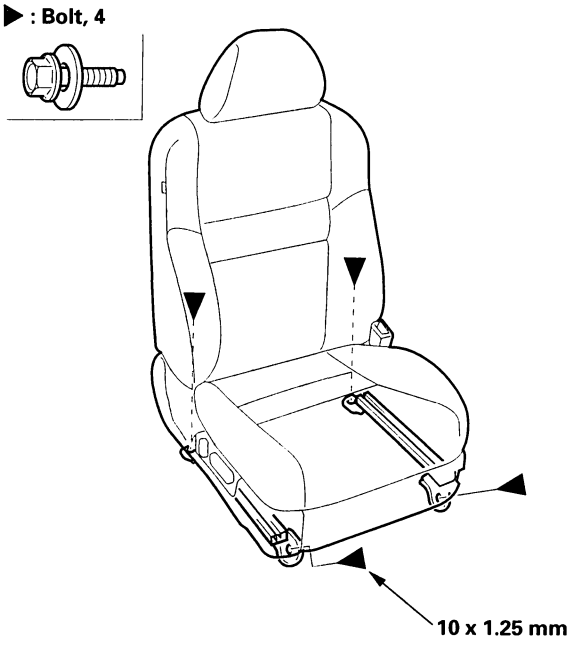

7. Lift up the front seat, then detach the harness clip (A), and disconnect the power seat connector (B), the side airbag connector (C), and the OPDS/ODS unit connector (D). On '04-05 models, disconnect the weight sensor unit connector (E) or '06 model, disconnect the weight sensor connector (F).

'03 model

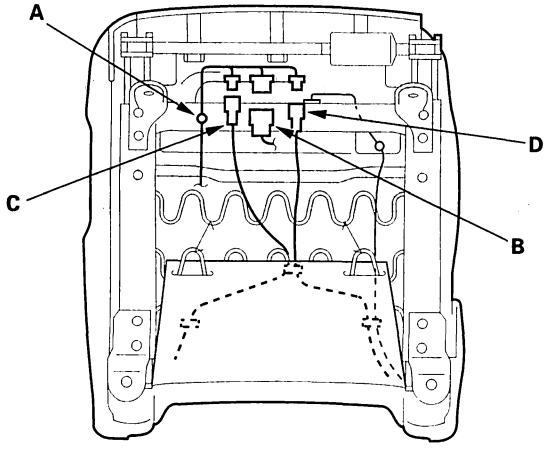

'04-05 models

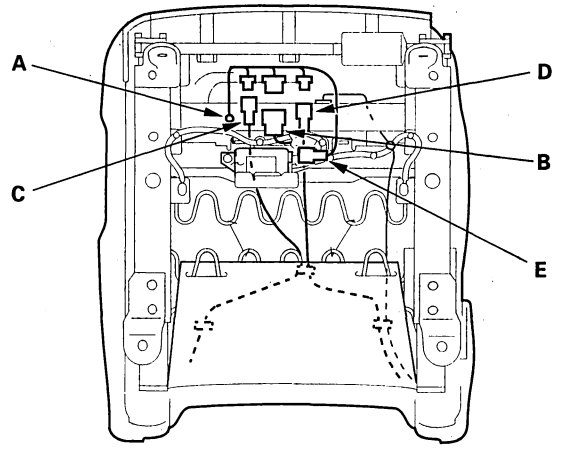

'06 model

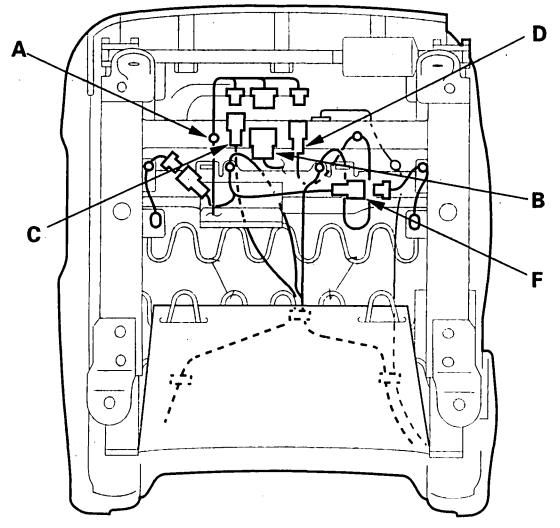

8. With the help of an assistant, carefully remove the front seat through the front door opening.

BACK

Protected by AR

9. Install the seat in the reverse order of removal, and note these items:

- Apply medium strength type liquid thread lock to the front seat mounting bolts before reinstallation.
- Make sure each connector is plugged in properly.
- Tighten the seat mounting bolts to the specified torque in the sequence shown. Slide the seat all the way back and tighten ① and ②, then slide it forward and tighten ③ and ④.
- Before attaching the lower anchor bolts, make sure there are no twists or kinks in the seat belts.
- '04-06 models passenger's seat: The triangle marks (A) on the anchor plate (B) and the lower anchor (C) must face the same side. Insert the anchor plate into the lower anchor, and make sure that it is locked securely.
- Reconnect the negative cable to the battery.
- Enter the anti-theft codes for the audio and the navigation system, then enter the customer's audio station and XM radio channel presets.
- Reset the clock.
- Perform the power window control unit reset procedure, refer to the 2003-2006 Accord Service Manual (see page 22-232).

Seat mounting bolts tightening sequence

Fastener Locations

▶ : Bolt, 4

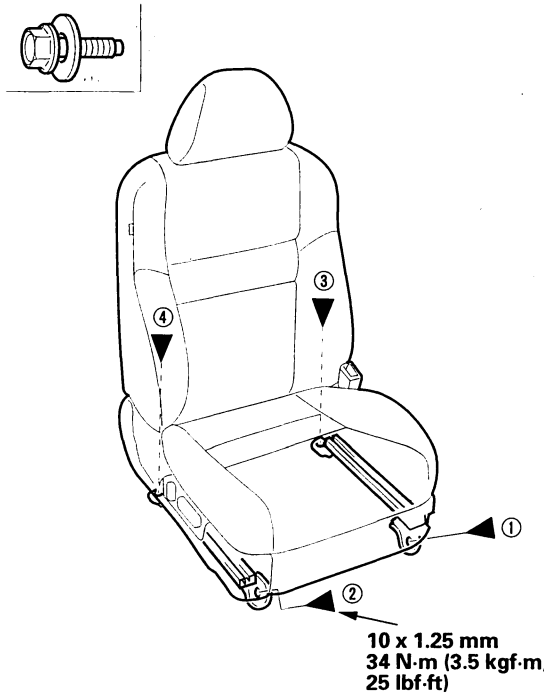

Front seat belt lower anchor installation ('04-06 models passenger's)

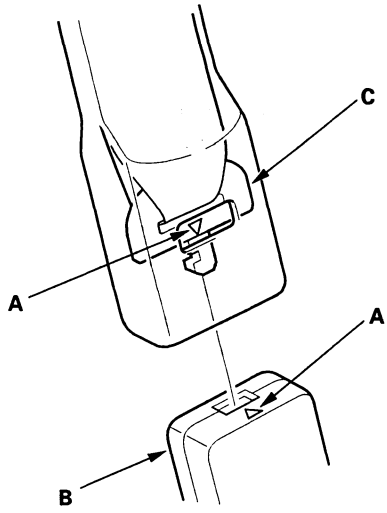

Protected by AR

Front Seat Disassembly/Reassembly - 4-Way Power

Special Tools Required
KTC trim tool set SOJATP2014

'03 Model 4-door

SRS components are located in this area. Review the SRS component locations, refer to the 2003-2006 Accord Service Manual (see page 23-17) and the precautions and procedures, refer to the 2003-2006 Accord Service Manual (see page 23-19) before performing repairs or service.

NOTE:
- Take care not to tear the seams or damage the seat covers.
- Put on gloves to protect your hands.
- Use the appropriate tool from the KTC trim tool set to avoid damage when prying components.
- Apply multipurpose grease to the moving parts of the seat track.
- To prevent wrinkles in the seat cushion cover, stretch the material evenly over the pad.

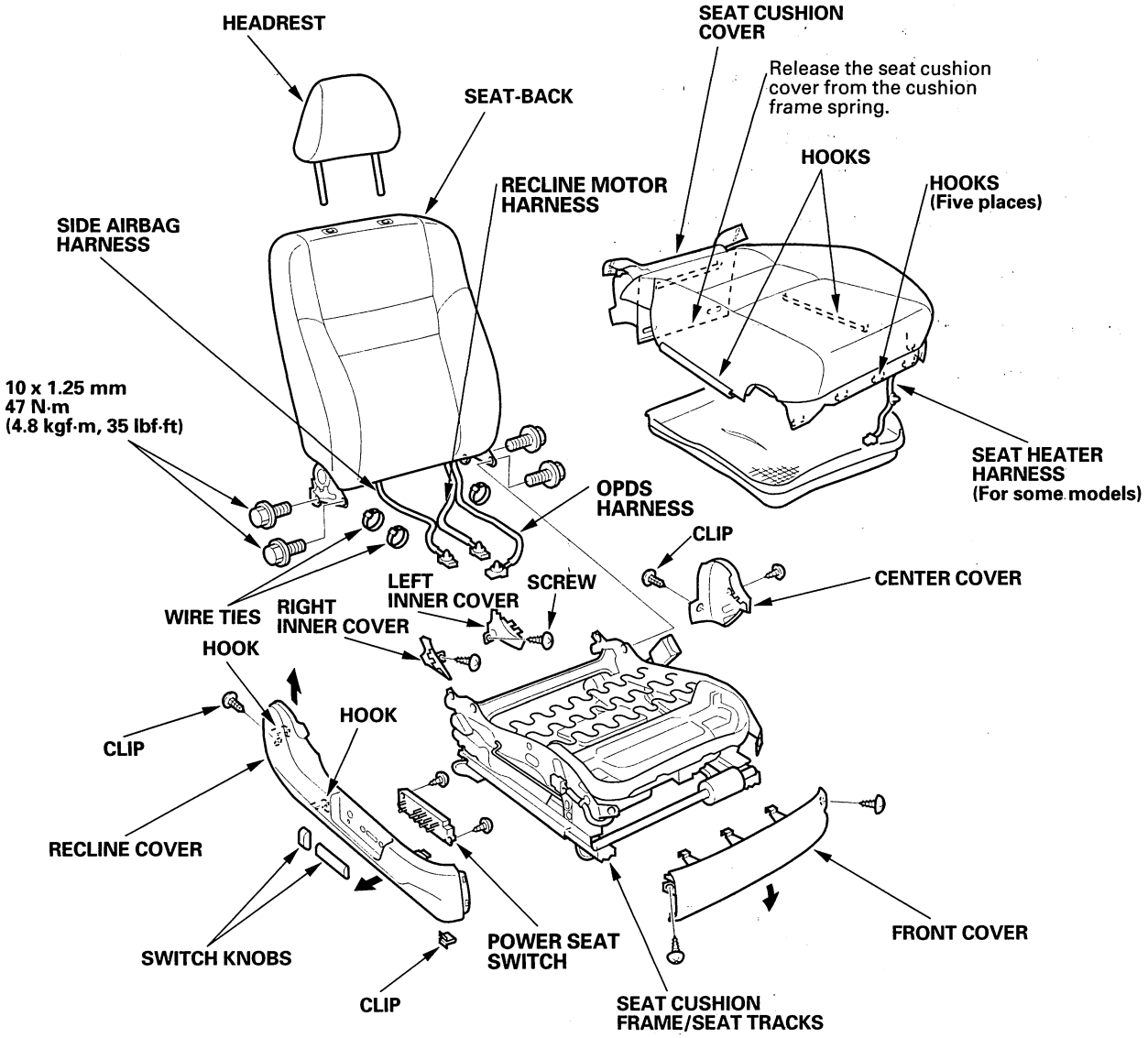

BACK

Protected by AR

Special Tools Required
KTC trim tool set SOJATP2014

'04-06 Models 4-door

- SRS components are located in this area. Review the SRS component locations, refer to the 2003-2006 Accord Service Manual (see page 23-17) and the precautions and procedures, refer to the 2003-2006 Accord Service Manual (see page 23-19) before performing repairs or service.
- '04-05 models: The front passenger's weight sensor (SWS) unit must be calibrated after any of these actions, refer to the 2003-2006 Accord Service Manual (see page 23-33):
  - Front passenger's seat replacement (including any seat components)
  - Replacement of the seat weight sensors
  - Replacement of the seat weight sensor unit
- '06 model: The ODS unit must be calibrated after any for this actions, refer to the 2003-2006 Accord Service Manual (see page 23-33):
  - Front passenger's seat replacement (including any seat components)
  - Replacement of the seat weight sensors

NOTE:
- Take care not to tear the seams or damage the seat covers.
- Put on gloves to protect your hands.
- Use the appropriate tool from the KTC trim tool set to avoid damage when prying components.
- Apply multipurpose grease to the moving parts of the seat track.
- To prevent wrinkles in the seat cushion cover, stretch the material evenly over the pad.

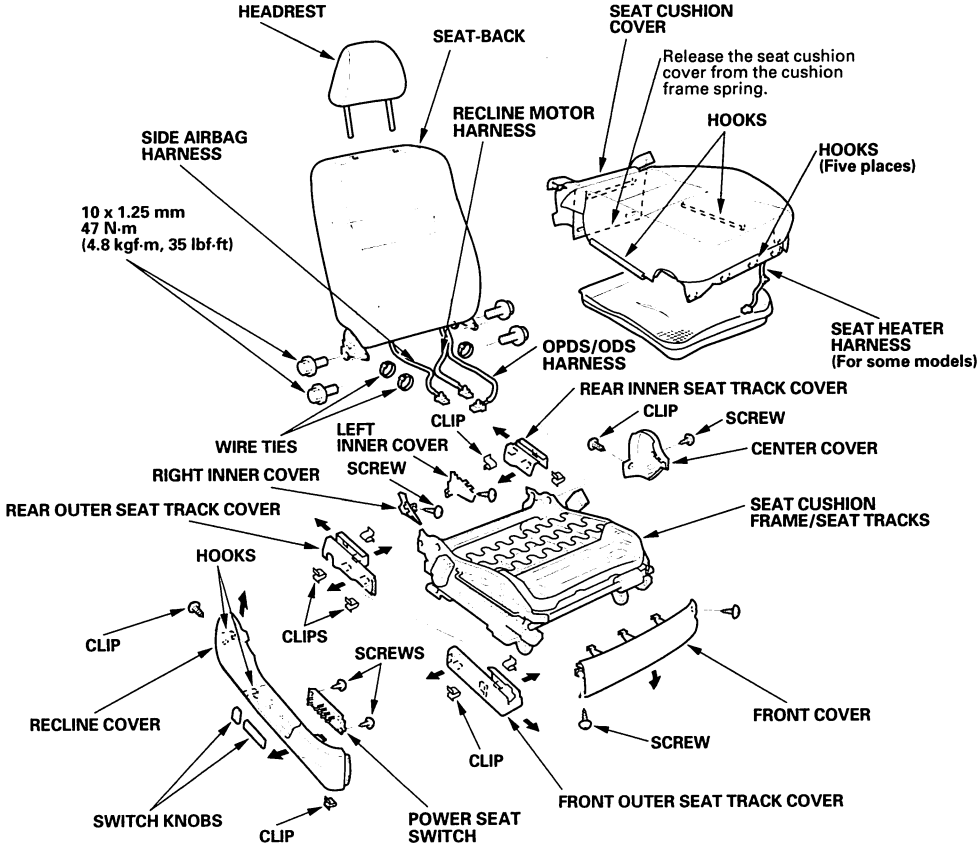

Protected by AR

Front Seat Linkage Disassembly/Reassembly - 4-Way Power

'03 Model

NOTE:
- Put on gloves to protect your hands.
- Apply multipurpose grease to the sliding and pivot portions of the linkage.

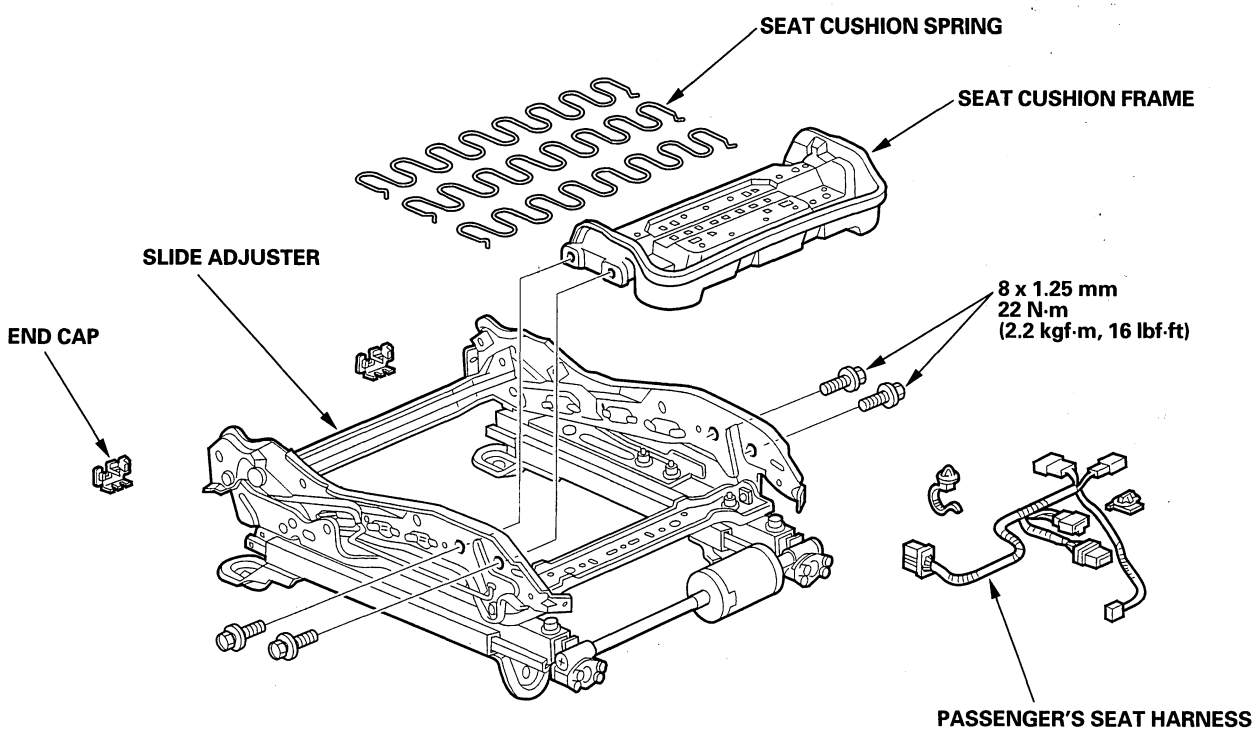

BACK

Protected by AR

'04-06 Models

- '04-05 models: The front passenger's weight sensor (SWS) unit must be calibrated after any of these actions, refer to the 2003-2006 Accord Service Manual (see page 23-33):
  - Front passenger's seat replacement (including any seat components)
  - Replacement of the seat weight sensors
  - Replacement of the seat weight sensor unit
- '06 model: The ODS unit must be calibrated after any for this actions, refer to the 2003-2006 Accord Service Manual (see page 23-33):
  - Front passenger's seat replacement (including any seat components)
  - Replacement of the seat weight sensors

NOTE:
- Put on gloves to protect your hands.
- Apply multipurpose grease to the sliding and pivot portions of the linkage.
- When tightening the weight sensor mounting nuts, tighten the nuts in the sequence shown. Improper tightening could cause the passenger's airbag system to malfunction.
- Make sure the weight sensor unit ('04-05 models) connectors are plugged in properly.
- Make sure the weight sensor wires are routed properly so they are not pinched and do not interfere with other parts.

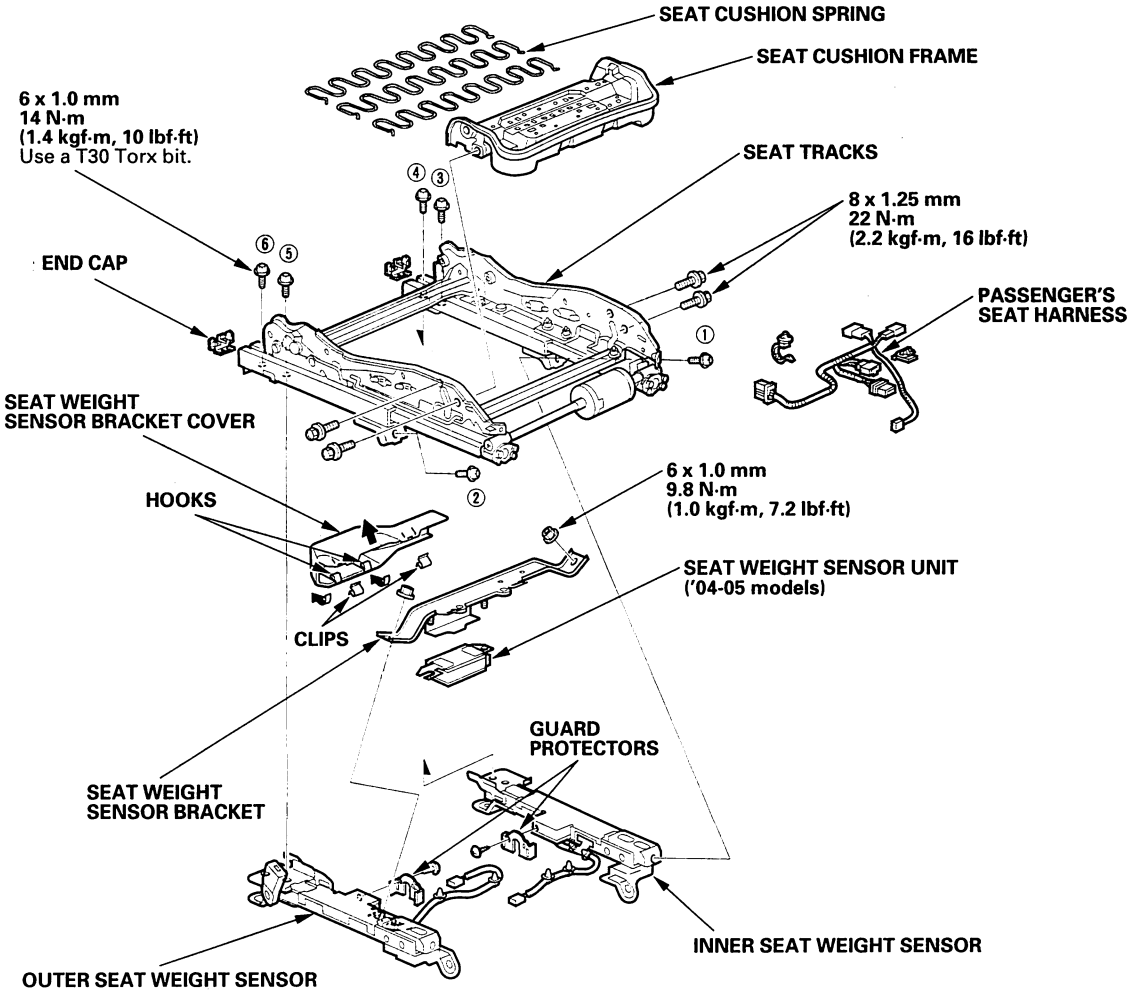

Protected by AR

Front Seat Cover Replacement

- SRS components are located in this area. Review the SRS component locations, refer to the 2003-2006 Accord Service Manual (see page 23-17) and the precautions and procedures, refer to the 2003-2006 Accord Service Manual (see page 23-19) before performing repairs or service.
- '04-05 models: The front passenger's weight sensor (SWS) unit must be calibrated after any of the these actions, refer to the 2003-2006 Accord Service Manual (see page 23-33):
  - Front passenger's seat replacement (including any seat components)
  - Seat weight sensor replacement
  - Seat weight sensor unit replacement
- '06 model: The ODS unit must be calibrated after any for this actions, refer to the 2003-2006 Accord Service Manual (see page 23-33):
  - Front passenger's seat replacement (including any seat components)
  - Replacement of the seat weight sensors

NOTE:
- Seats with a side airbag have a "SIDE AIRBAG" label on the seat-back. Because the component parts (seat-back cover, cushion, etc.) of seats with and without airbags are different, make sure you install only the correct replacement parts.
- Do not repair any tears or frayed spots in the seat-back cover. If necessary, replace the seat-back cover.
- Take care not to tear the seams or damage the seat covers.
- Do not touch the OPDS sensor in the seat-back pad, and keep it away from oil. Oil can corrode the sensor causing it to fail.
- Put on gloves to protect your hands.

Seat-back Cover - 4-Way Power Seat

1. Remove the front seat (see page 20-3).
2. Remove the headrest.
3. From under the seat cushion, disconnect the recline motor connector (A), detach the side airbag connector clip (B), the OPDS/ODS unit connector clip (C), and harness clip (D). Release the seat cushion cover (E) from the seat cushion frame spring (F), then pull the cover back and remove the wire ties (G).

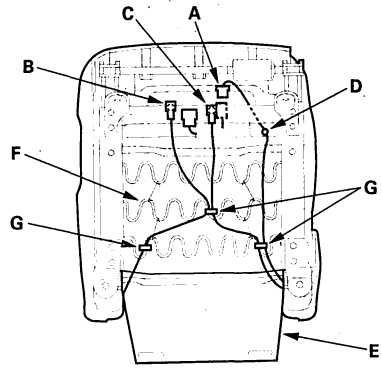

4. Remove these items from the front seat, then remove the seat-back, '03 model (see page 20-6), '04-06 models (see page 20-7):
   - Recline cover
   - Center cover
5. Detach the clips and hooks (A) by carefully pulling the bottom of the back panel (B) back, pull the panel downward to release the hooks (C) from the seat-back frame, then remove the panel.

Fastener Locations

▷ : Clip, 2



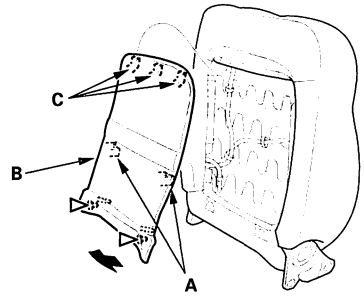

BACK

Protected by AR

6. Release the hook strips (A), then loosen the seat-back cover (B).

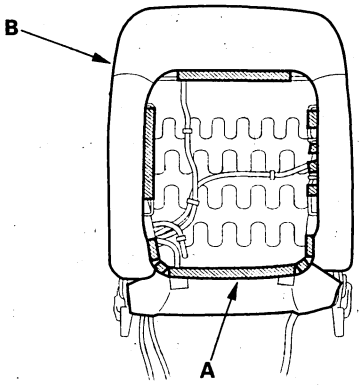

7. Pull the recline motor harness (A), side airbag harness (B) and the OPDS/ODS harness (C) out through the holes (D) in the seat-back cover.

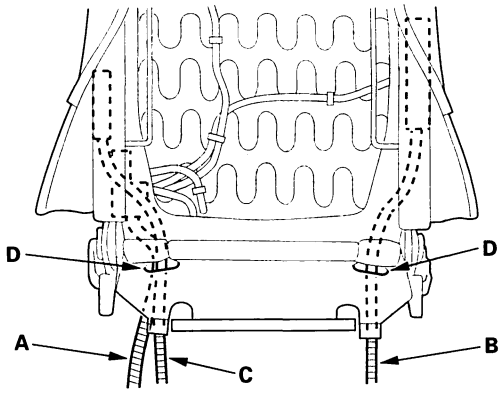

8. Release the front hook (A) and rear hook (B) of the reinforcing cloth (C) from seat-back frame (D).

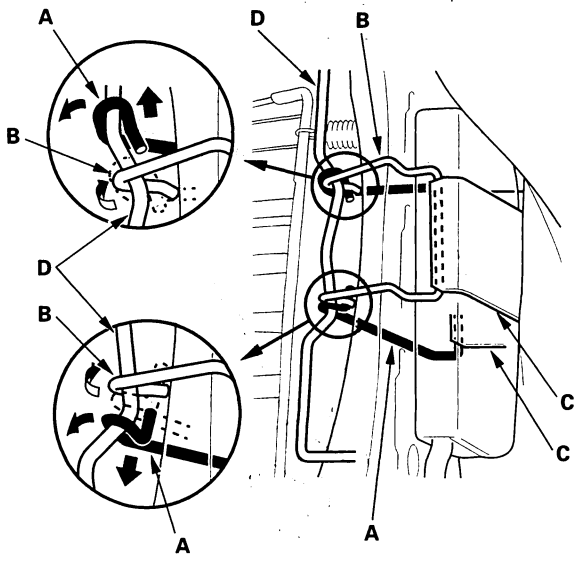

9. Pull out the headrest guides (A) by pinching the tabs on the ends of the guides, and remove them.

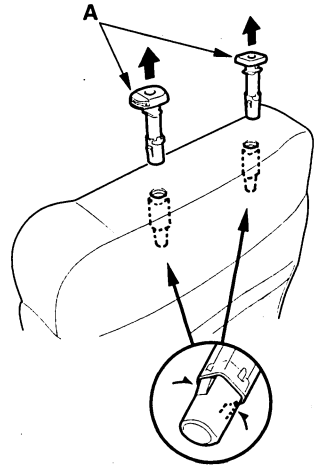

(cont'd)

Protected by AR

Front Seat Cover Replacement (cont'd)

10. From the back of the seat-back, pass both lower retainers (A) through the slots in the seat-back pad, and release all of the clips (B).

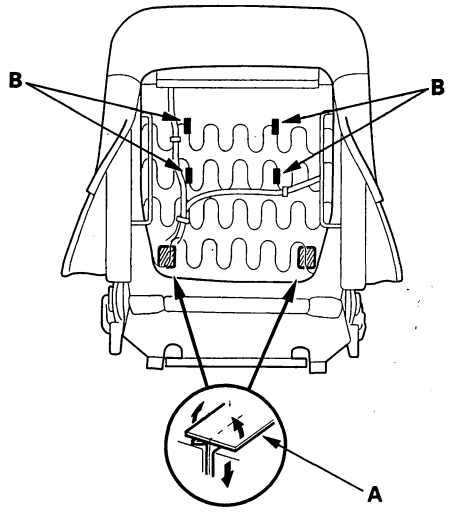

11. Pull back the edge of the seat-back cover all the way around, and release the clips (A), then remove the seat-back cover.

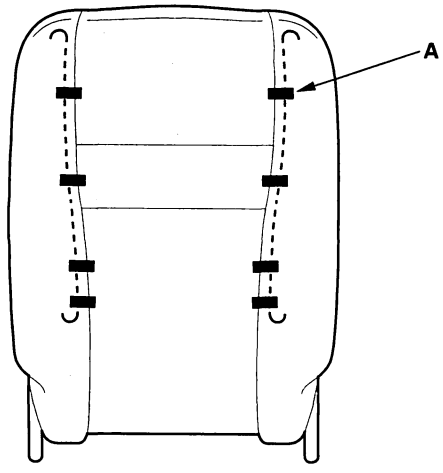

12. Install the cover in the reverse order of removal, and note these items:

- Reinitialize the OPDS/ODS control unit, refer to the 2003-2006 Accord Service Manual (see page 23-32).
- To prevent wrinkles when installing a seat-back cover, make sure the material is stretched evenly over the pad before securing the clips, hooks, and hook strips.
- Replace any clips you removed with new ones (A). Install them with commercially available upholstery ring pliers (B).
- Reinstall the front hook (C) and rear hook (D) of the reinforcing cloth (E) securely.
- Use only original Honda replacement seat-back covers.
- Make sure the Recline motor harness, side airbag harness, and OPDS/ODS harness are routed properly.

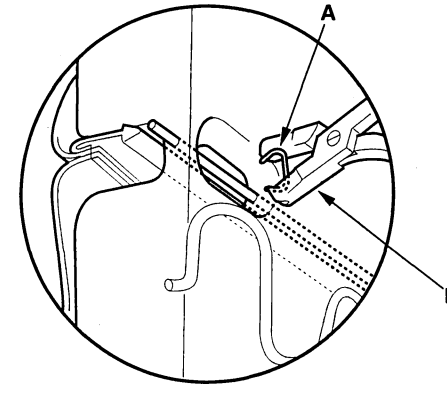

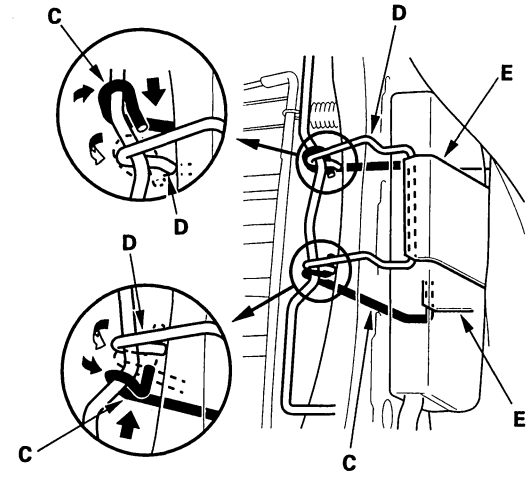

BACK

Protected by AR

Seat Cushion Cover

1. Remove the front seat (see page 20-3).

2. With recline motor and/or side airbag: From under the seat cushion, detach the recline motor connector clip, the side airbag connector clip, and on the passenger's seat, the OPDS/ODS unit connector clip. Release the hook springs (on some driver's seats) and the seat cushion cover from the seat cushion frame spring, then pull the cover back, and remove the wire ties.

3. Remove these items from the front seat, then remove the seat-back, '03 model (see page 20-6), '04-06 models (see page 20-7):

   - Recline cover
   - Center cover

4. Release the hook strips (A) and retainers (B) (manual height adjustable seat) from both sides the seat cushion.

   NOTE: Manual height adjustable seat is shown; other seats are similar, except for the height ratchet unit portion.

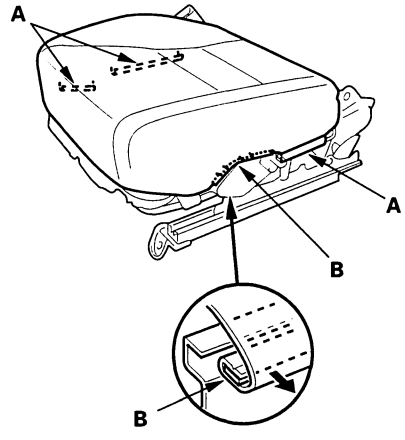

5. Pull back the seat cushion cover (A), and release the hooks (B) from under the seat cushion. On manual height adjustable/2-way power seat, detach the clips from the seat cushion frame (C).

Fastener Locations

▷ : **Clip, 2**

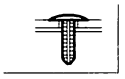

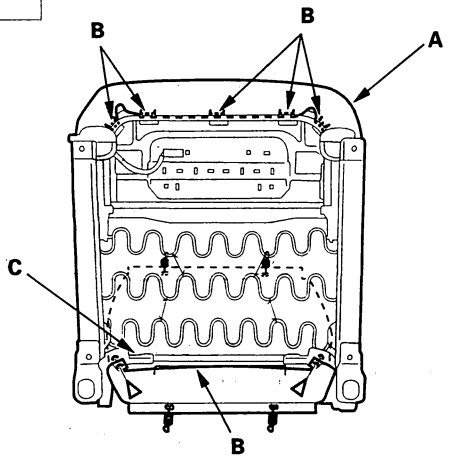

6. Remove the cushion cover/pad from the seat cushion frame.

7. Release the clips (A) from under the seat cushion (B).

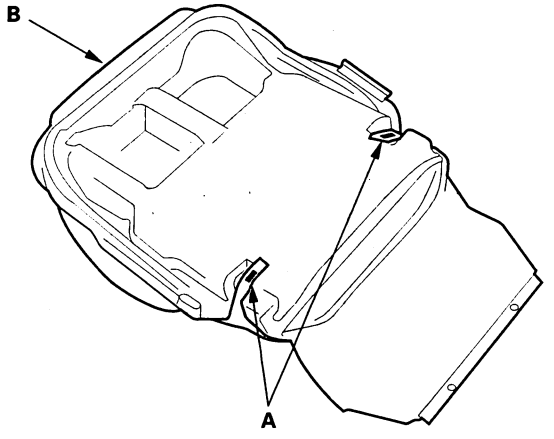

(cont'd)

Protected by AR

Front Seat Cover Replacement (cont'd)

8. Pull back the edge of the seat cushion cover all the way around, and release the clips (A), then remove the seat cushion cover.

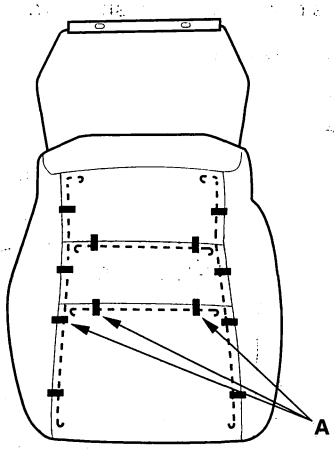

9. Install the cover in the reverse order of removal, and note these items:

   - To prevent wrinkles when installing a seat cushion cover, make sure the material is stretched evenly over the pad before securing the clips and hook strips.
   - Replace any clips you removed with new ones (A). Install them with commercially available upholstery ring pliers (B).

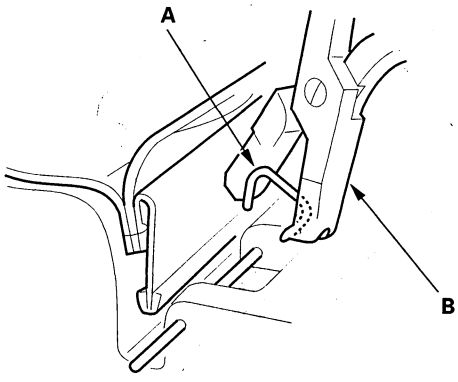

BACK

Protected by AR

Rear Bumper Removal/Installation

Special Tools Required
KTC trim tool set SOJATP2014

'06 Model 2-door

NOTE:
- Have an assistant help you when removing and installing the rear bumper.
- Use the appropriate tool from the KTC trim tool set to avoid damage when prying components.
- Take care not to scratch the rear bumper and body.
- Put on gloves to protect your hands.

1. Remove the rear bumper as shown.

2. Install the bumper in the reverse order of removal, and note these items:

   - Make sure the rear bumper engages the hooks of the side spacers and upper brackets on both sides securely.
   - Check the clips for damage or stress-whitening, and replace tham with new one.

Fastener Locations
A ▶ : Bolt, 2 B ▶ : Screw, 2 C ▶ : Screw, 6 D ▷ : Clip, 2

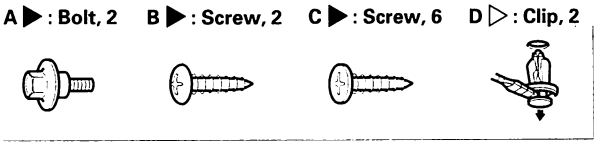

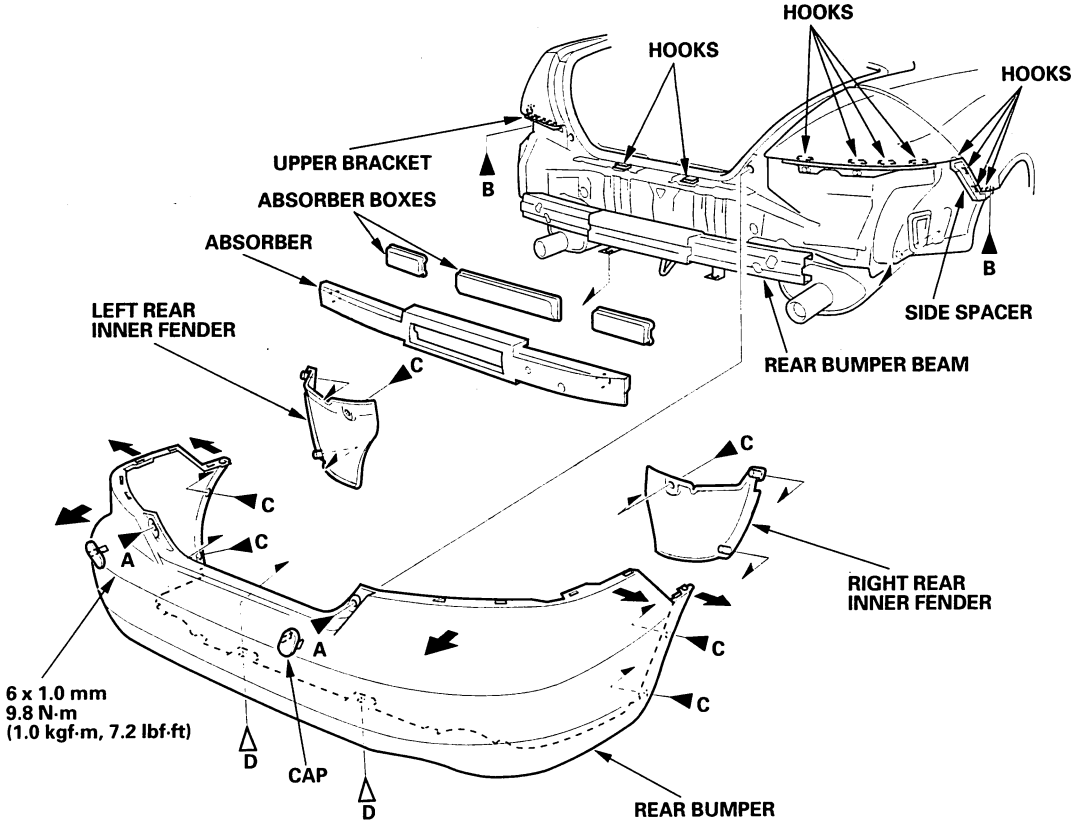

Protected by AR

Rear Bumper Removal/Installation (cont'd)

Special Tools Required
KTC trim tool set SOJATP2014

'06 Model 4-door

NOTE:
- Have an assistant help you when removing and installing the rear bumper.
- Use the appropriate tool from the KTC trim tool set to avoid damage when prying components.
- Take care not to scratch the rear bumper and body.
- Put on gloves to protect your hands.

1. Remove the rear bumper as shown.

2. Install the bumper in the reverse order of removal, and note these items:

   - Make sure the rear bumper engages the hooks of the side spacers and upper brackets on both sides securely.
   - Check the clips for damage or stress-whitening, and replace tham with new one.

Fastener Locations

A ▶: Bolt, 2 B ▶: Screw, 2 C ▶: Screw, 6 D ▷: Clip, 2

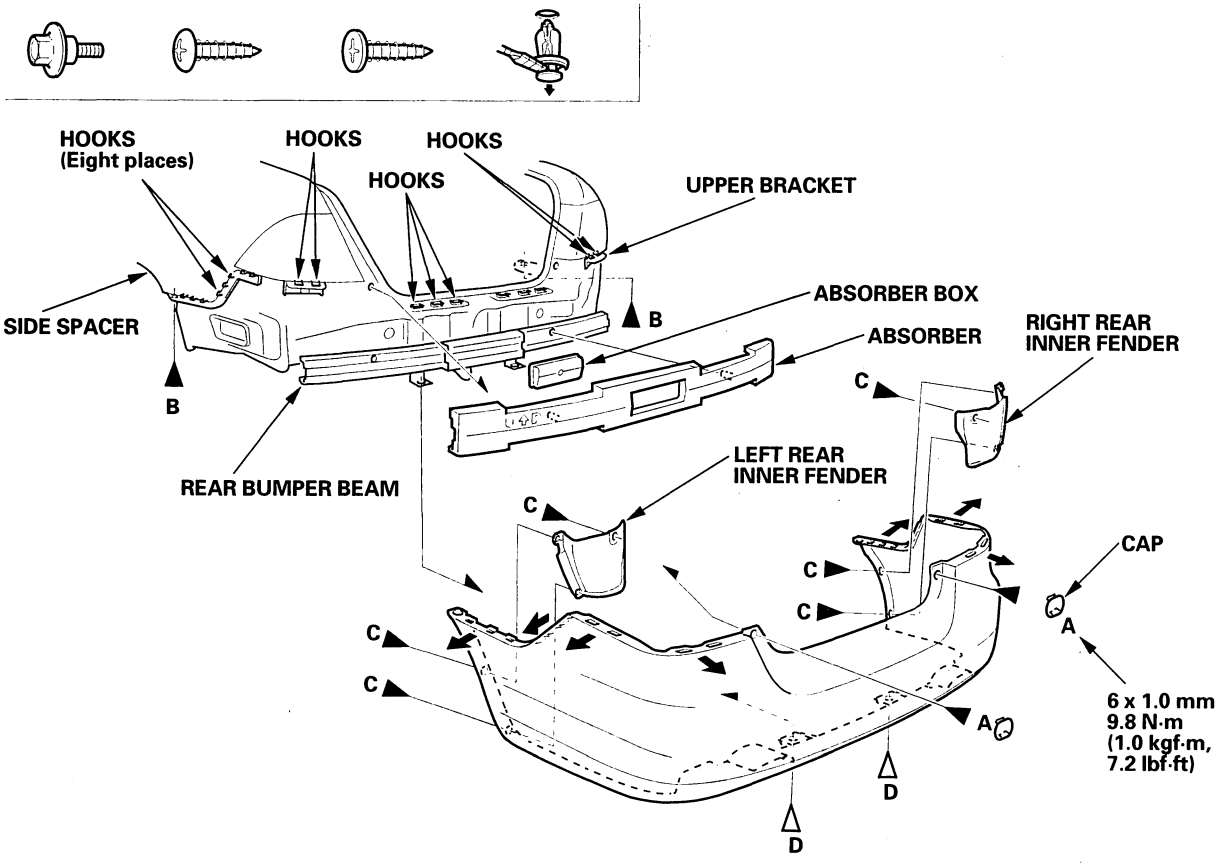

BACK

Protected by AR

Hood Support Strut Replacement

STABILUS Type

1. Remove the bolts securing the hood support strut (A) to the hood.

Fastener Locations

▶: Bolt, 2

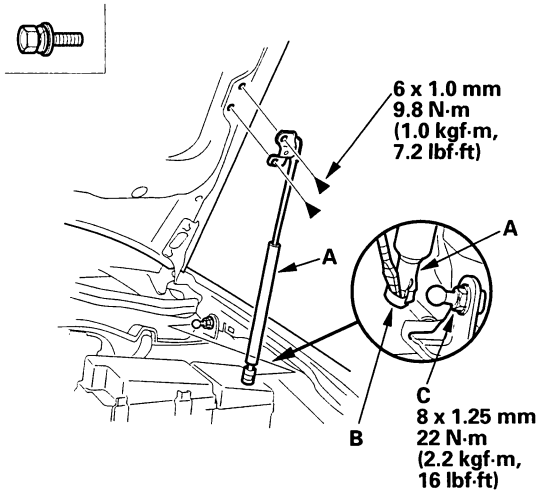

2. Use a flat-tip screwdriver to pry the support strut clip (B) away from the strut, but do not remove the clip completely. While an assistant supports the hood, pull the support strut off the pivot bolt (C). Take care not to scratch the body or hood.

3. Push the clip (A) into its original position, and then push the support strut (B) onto the pivot bolt (C).

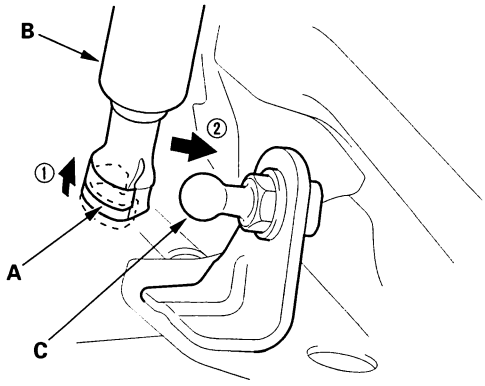

4. Reinstall the bolts.

SHOWA Type ('03-05 models)

1. While an assistant supports the hood, remove the pivot bolt (A) and hood side bolts, then remove the support strut (B). Take care not to scratch the body or hood.

Fastener Locations

▶: Bolt, 2

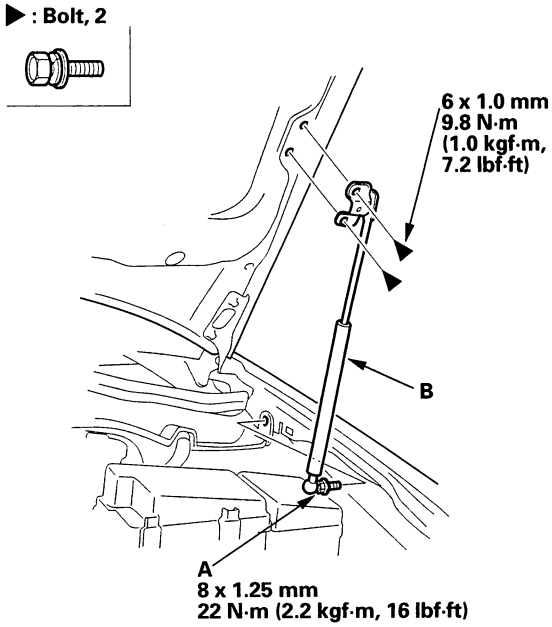

2. Install the pivot bolt first, and then install the hood side bolts.

BACK

Protected by AR

Trunk Lid

Trunk Lid Dynamic Damper Replacement

1. Remove the bolts, then remove the trunk lid dynamic damper (A). Take care not to scratch the trunk lid.

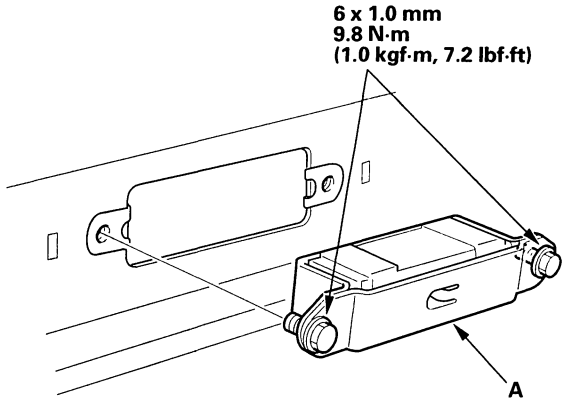

2. Install the damper in the reverse order of removal.

BACK

Protected by AR

Side Sill Panel Replacement

1. Remove the side sill panel.

   –1 Remove the screws (A), and if equipped, remove the splash guard (B).
   –2 Pull the inner fender (C) back as necessary, and remove the clips (D, E), fastening the side sill panel (F) and the middle floor under cover (G).
   –3 Slide the side sill panel forward, and remove it. The side clips (H) will stay in the body.
   –4 Remove the side clips from the body.

Fastener Locations

A ▶: Screw, 3 D ▷: Clip, 2 E ▷: Clip, 1 H ▷: Clip, 9

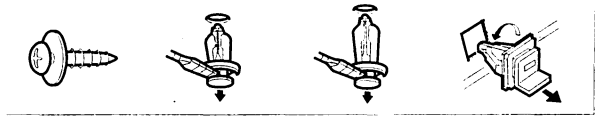

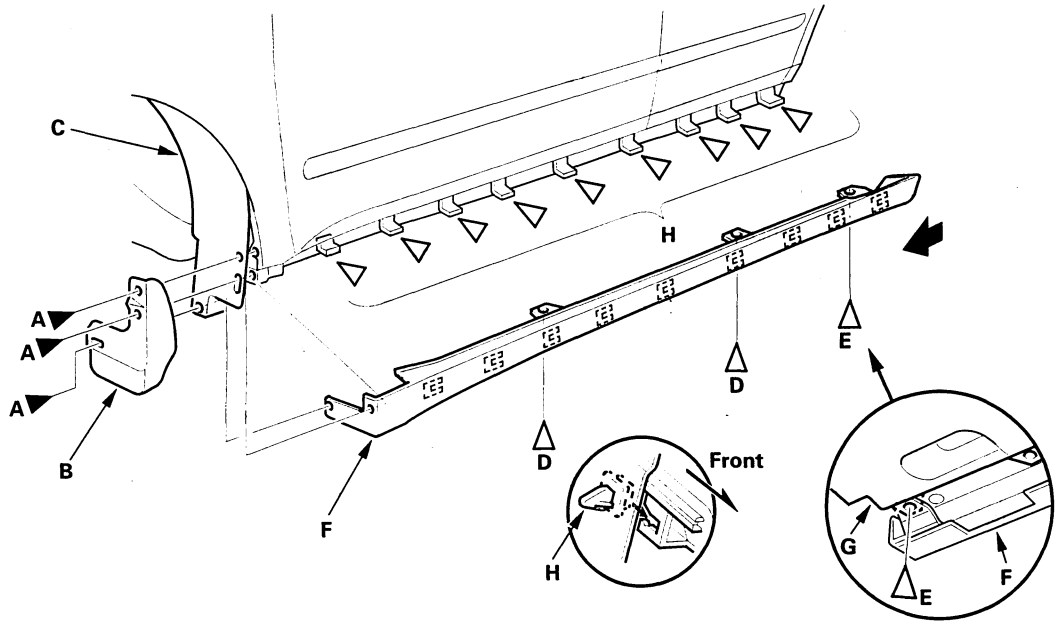

2. Check the clips for damage or stress-whitening, and replace them with new one.

3. Install the side clips on the side sill panel.

4. Hold the panel up, and fit all the side clips into the holes in the body, then push on the panel until the clips snap into place.

5. Install all the clips.

6. Reinstall the inner fender and splash guard.

Protected by AR

Exterior Trim

Emblem/Sticker Replacement

2-door

NOTE: When removing the emblems/sticker, take care not to scratch the body.

1. Clean the body surface with a sponge dampened in alcohol. After cleaning, keep oil, grease, and water from getting on the surface.

2. Apply the emblems/sticker where shown. When installing the LEV/ULEV sticker on the inside surface of the quarter glass, align the sticker application tape with the edge of the black ceramic and alignment mark on the quarter glass, then press the sticker into place, and remove the application tape.

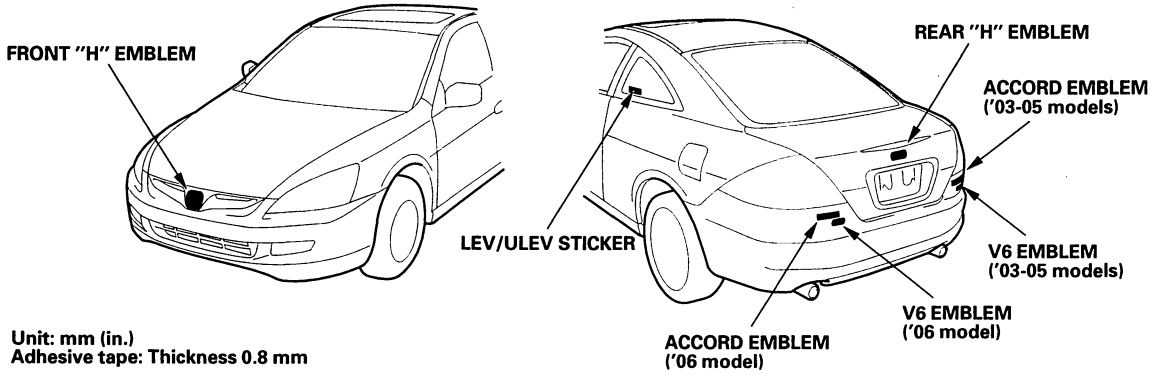

Unit: mm (in.)
Adhesive tape: Thickness 0.8 mm

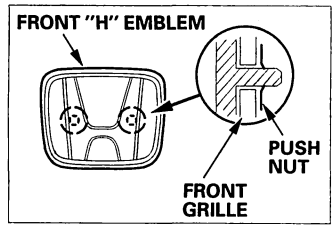

'03-05 models

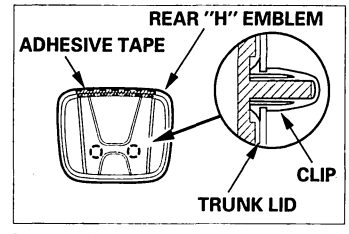

'06 model

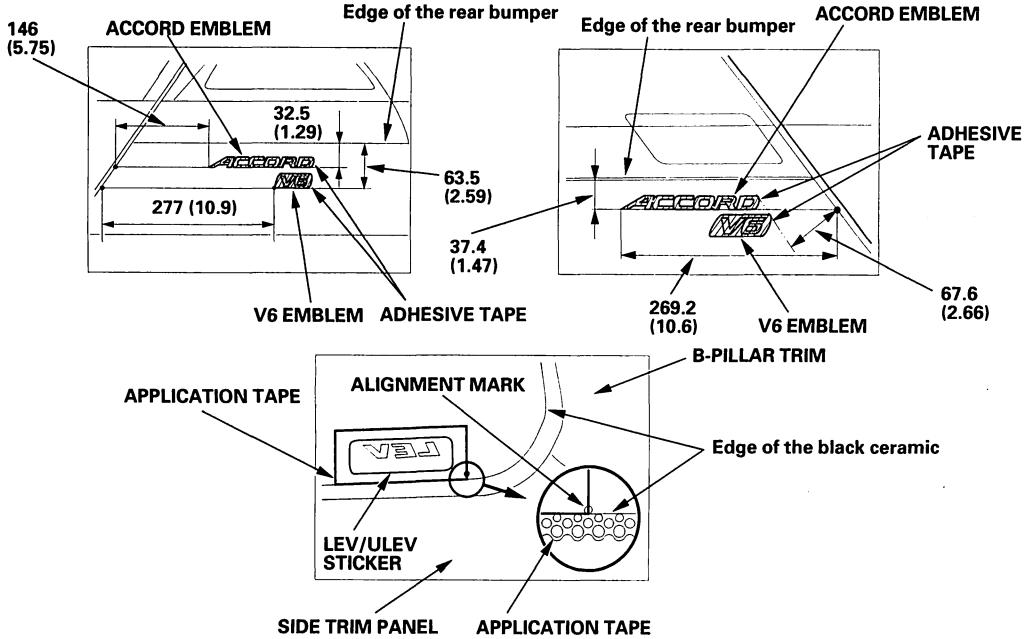

BACK

Protected by AR

'03-05 Models 4-door

NOTE: When removing the emblems/sticker, take care not to scratch the body.

1. Clean the body surface with a sponge dampened in alcohol. After cleaning, keep oil, grease, and water from getting on the surface.

2. Apply the emblems/sticker where shown. When installing the LEV/ULEV sticker ('03-05 models), SULEV sticker ('03-04 models) on the inside surface of the rear door quarter glass, align rear edge of the application tape and bottom of the sticker with the glass mark, then press the sticker into place, and remove the application tape.

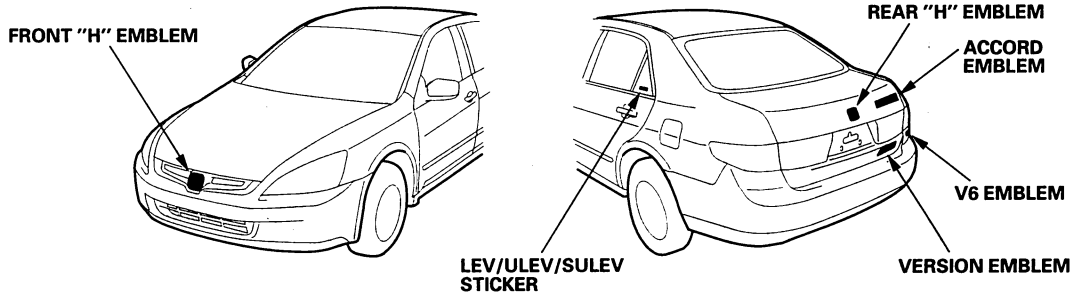

Unit: mm (in.)
Adhesive tape: Thickness 0.8 mm (0.031 in.)

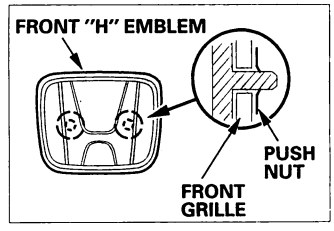

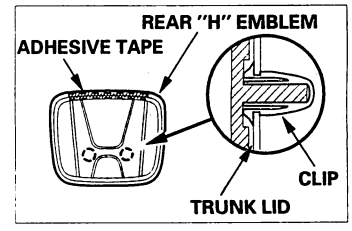

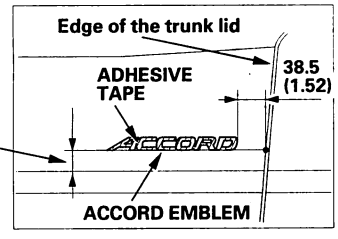

Version: EX, LX

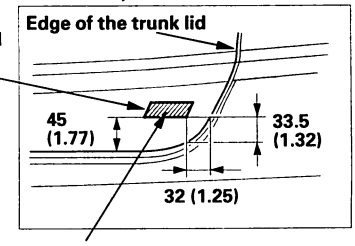

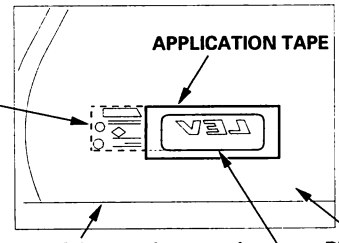

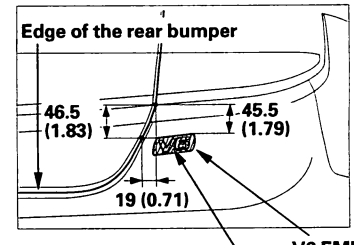

BACK

Protected by AR

Emblem/Sticker Replacement (cont'd)

'06 Model 4-door

NOTE: When removing the emblems/sticker, take care not to scratch the body.

1. Clean the body surface with a sponge dampened in alcohol. After cleaning, keep oil, grease, and water from getting on the surface.
2. Apply the emblems/sticker where shown. When installing the LEV/ULEV sticker on the inside surface of the rear door quarter glass, align rear edge of the application tape and bottom of the sticker with the glass mark, then press the sticker into place, and remove the application tape.

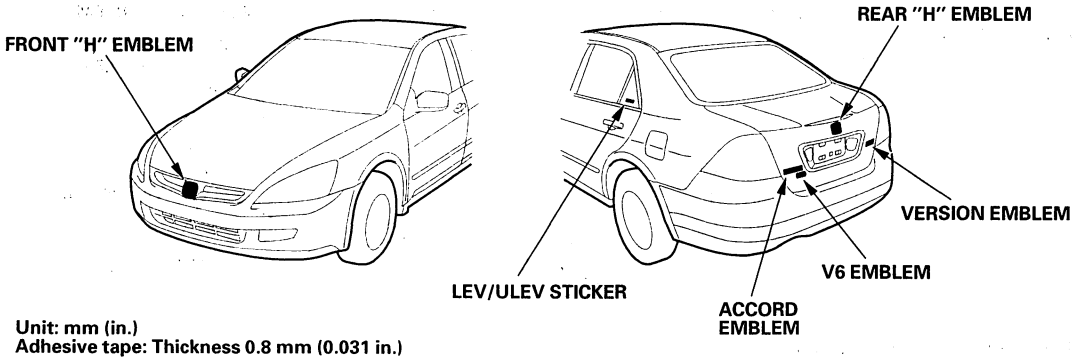

Unit: mm (in.)
Adhesive tape: Thickness 0.8 mm (0.031 in.)

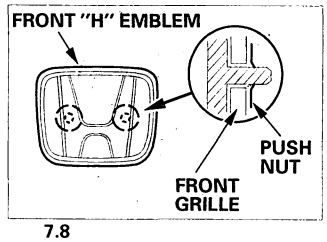

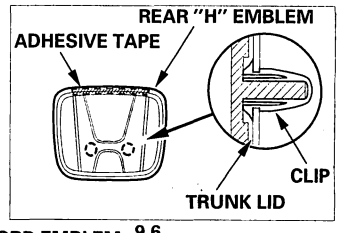

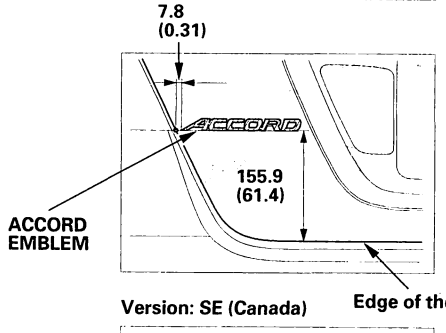

Version: SE (Canada)

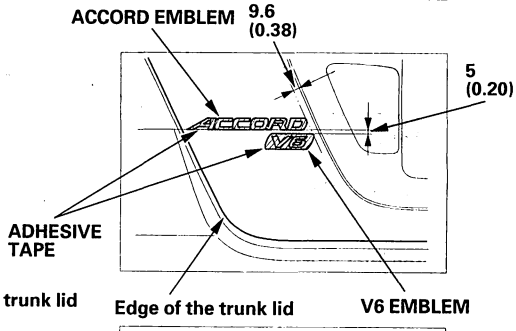

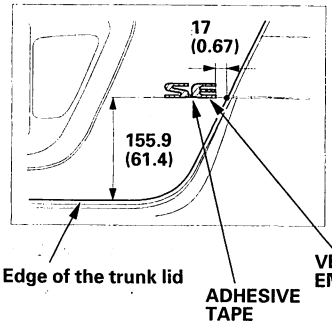

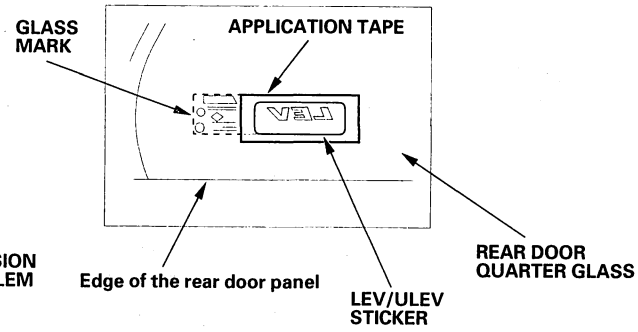

BACK

Protected by AR

Subframe Replacement

Front Subframe Torque

After removing the subframe mounting bolts, front suspension subframe middle mounting rubber mounting bolts, front suspension subframe rear bracket mounting bolts, front suspension subframe rear damper front mounting bolt, and steering gearbox stiffener mounting bolt, be sure to replace them with new ones.

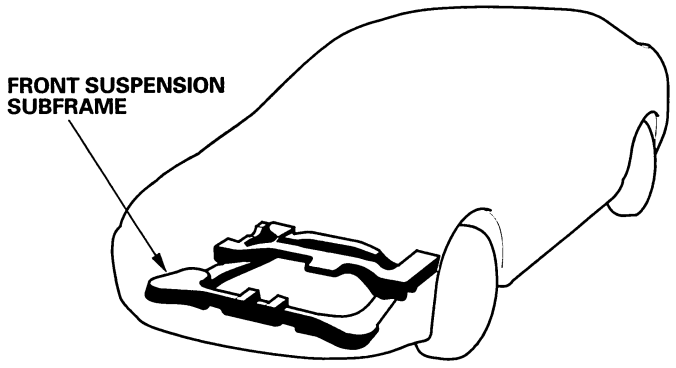

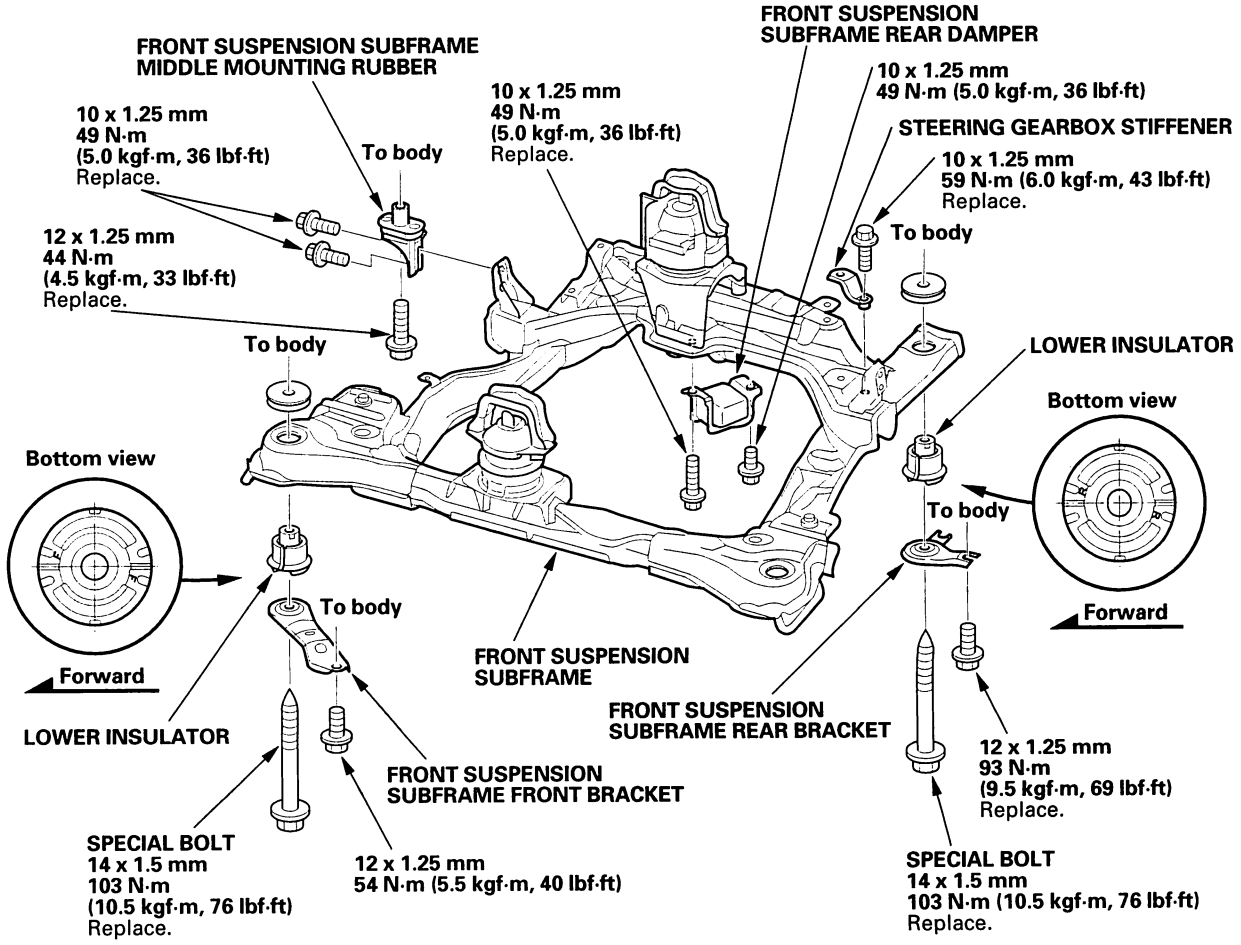

(cont'd)

Protected by AR

Subframe Replacement (cont'd)

Rear Subframe Torque

After removing the subframe mounting bolts, be sure to replace them with new ones.

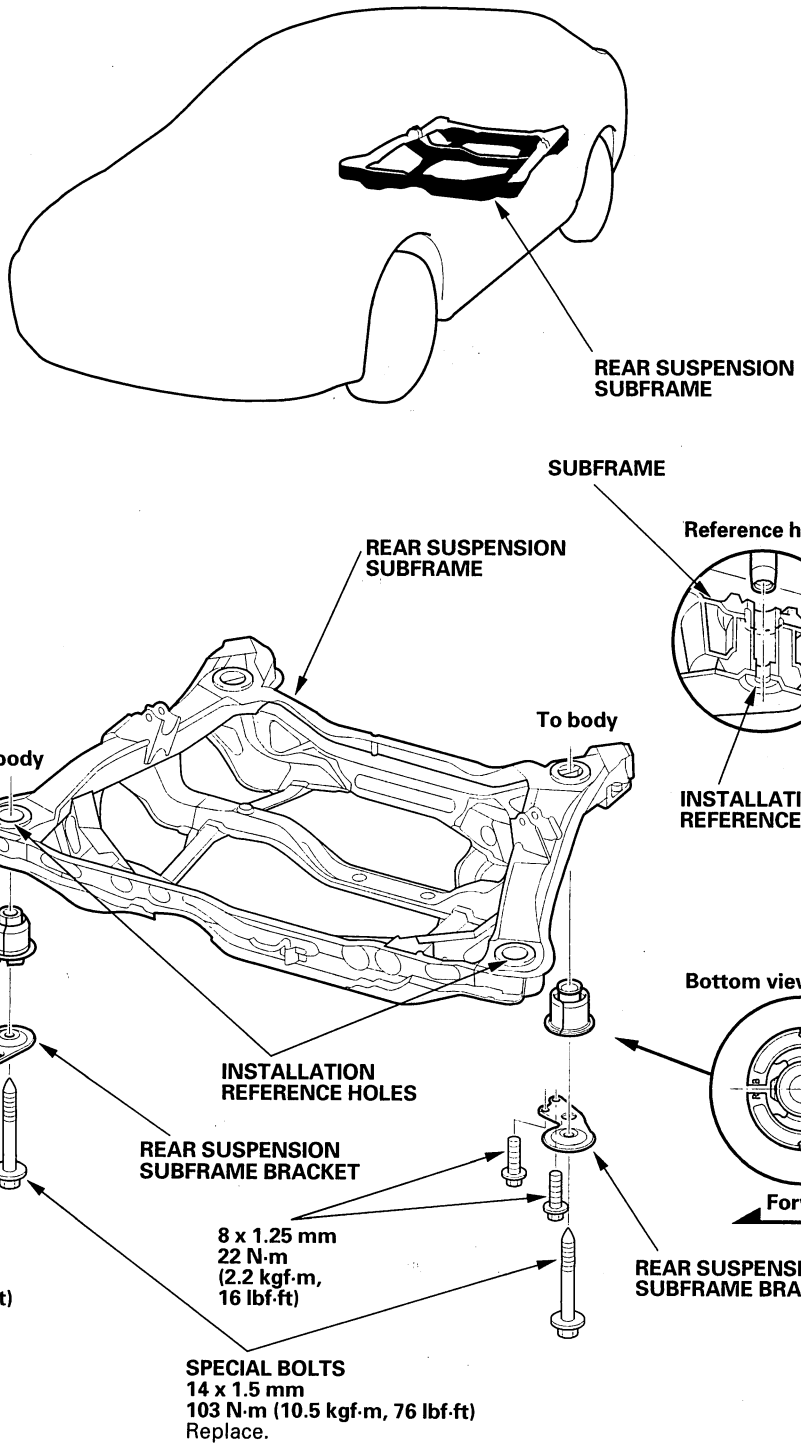

BACK

Protected by AR



Protected by AR

Frame

Frame Repair Chart

2-door Top View

Unit: mm (in.)
ø: Inner diameter

a	For front subframe ø16 (0.63)		e	For front upper arm ø13 (0.51)
b1	For transmission mount ø13 (0.51) Left side		f	For front upper arm ø13 (0.51)
b2	For transmission mount ø15 (0.59) Left side		g	For front subframe ø15 (0.59)
b3	For transmission mount ø13 (0.51) Left side		h	For front subframe ø16 (0.63)
c1	For engine side mount ø15 (0.59) Right side		i	Locating hole ø25 (0.98)
c2	For engine side mount ø15 (0.59) Right side		j	Locating hole ø25 (0.98)
d	Front damper center ø50 (1.97)		k	Locating hole ø15 (0.59)

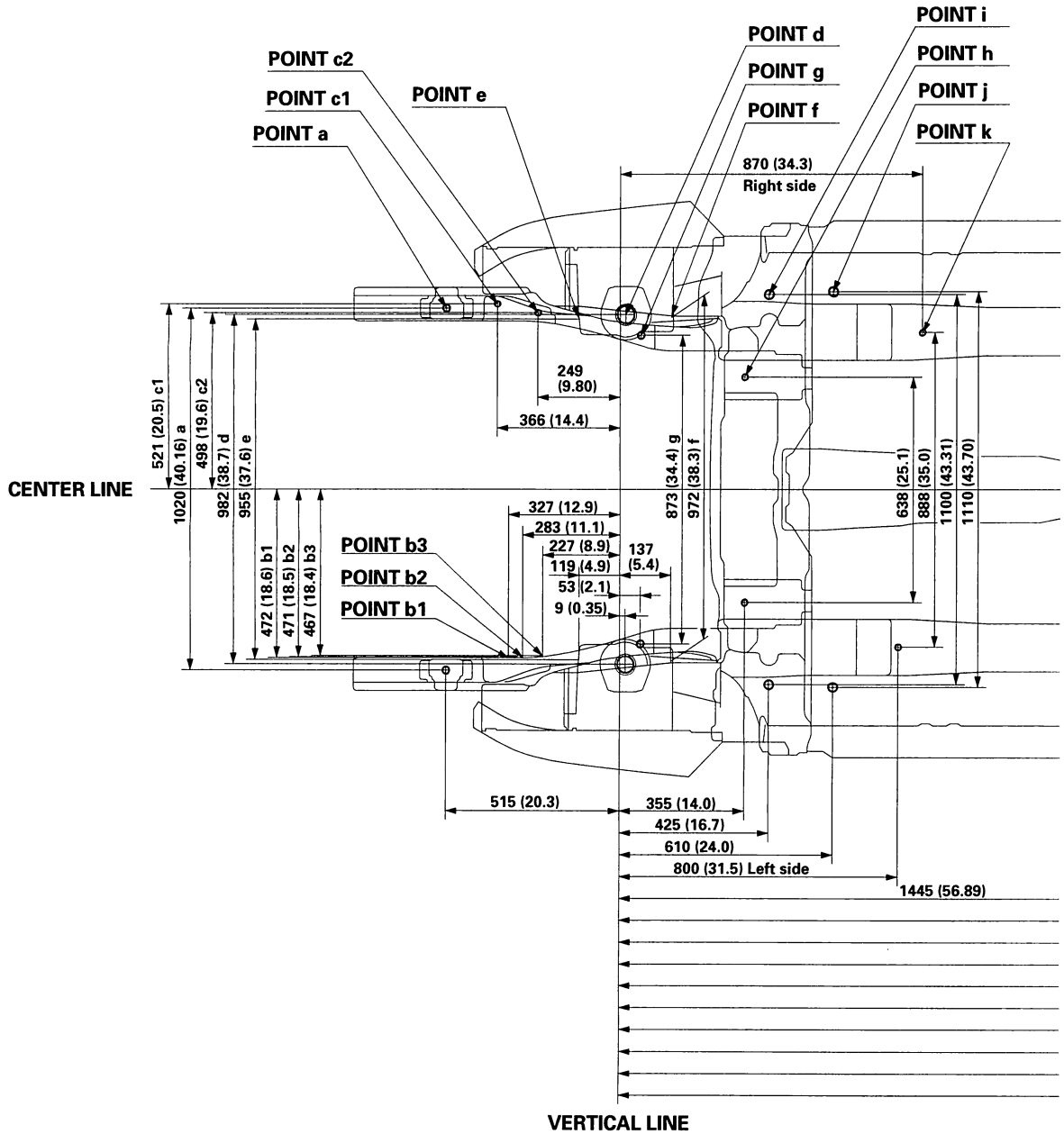

BACK

Protected by AR

l Locating hole ø25 (0.98)
m Locating hole ø20 (0.79)
n For rear subframe ø14.4 (0.57)
o Rear damper center ø52 (2.05)
p For rear subframe ø14.4 (0.57)
q Locating hole ø15 (0.59)
r Locating hole ø25 (0.98)
s Locating hole ø11 (0.43)
t1, t2 For rear subframe stay ø9 (0.35)
v1, v2 For rear subframe stay ø9 (0.35)

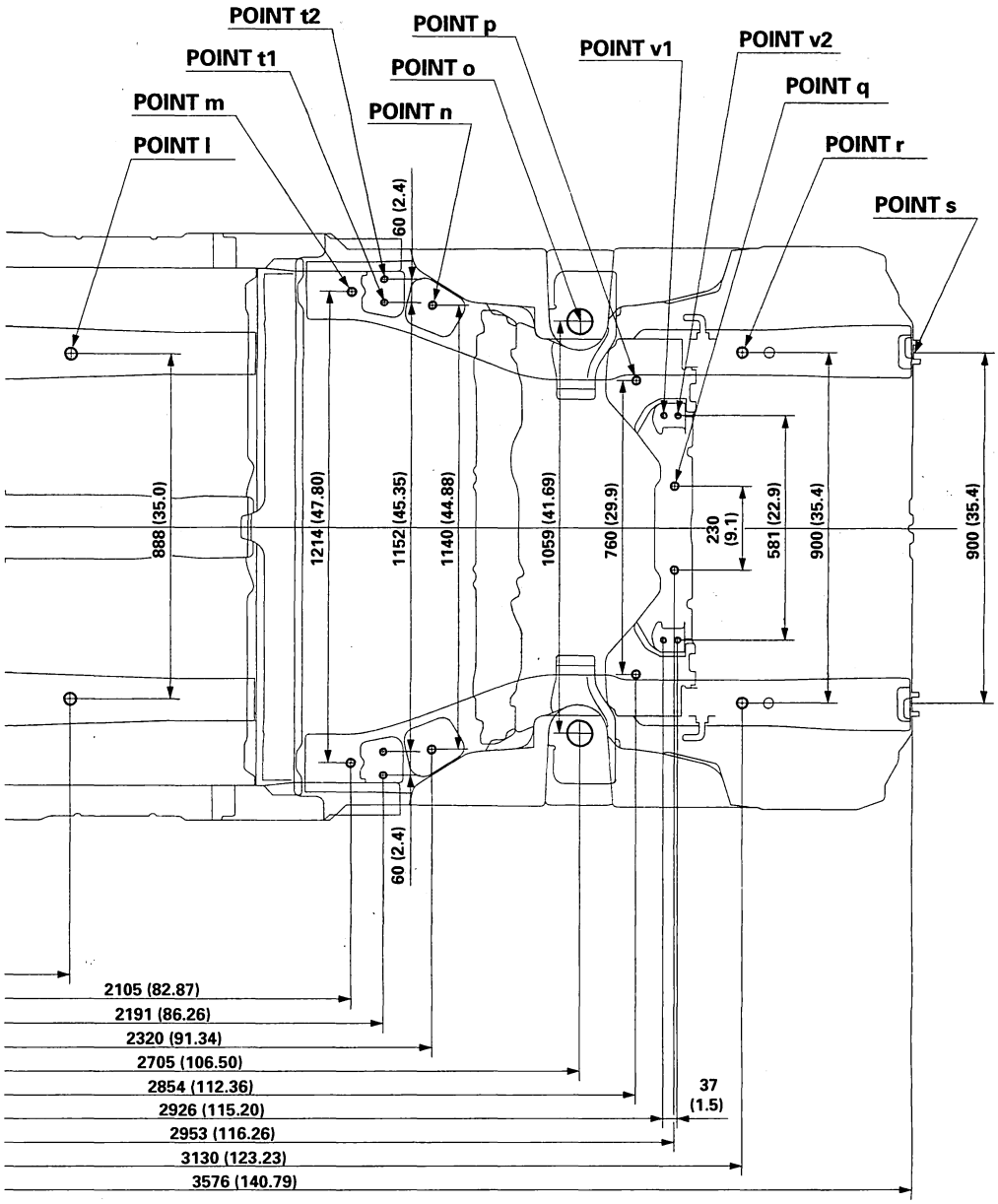

(cont'd)

BACK

Protected by AR

Frame Repair Chart (cont'd)

4-door Top View

Unit: mm (in.)
ø: Inner diameter

a	For front subframe ø16 (0.63)		e	For front upper arm ø13 (0.51)
b1	For transmission mount ø13 (0.51) Left side		f	For front upper arm ø13 (0.51)
b2	For transmission mount ø15 (0.59) Left side		g	For front subframe ø15 (0.59)
b3	For transmission mount ø13 (0.51) Left side		h	For front subframe ø16 (0.63)
c1	For engine side mount ø15 (0.59) Right side		i	Locating hole ø25 (0.98)
c2	For engine side mount ø15 (0.59) Right side		j	Locating hole ø25 (0.98)
d	Front damper center ø50 (1.97)		k	Locating hole ø15 (0.59)

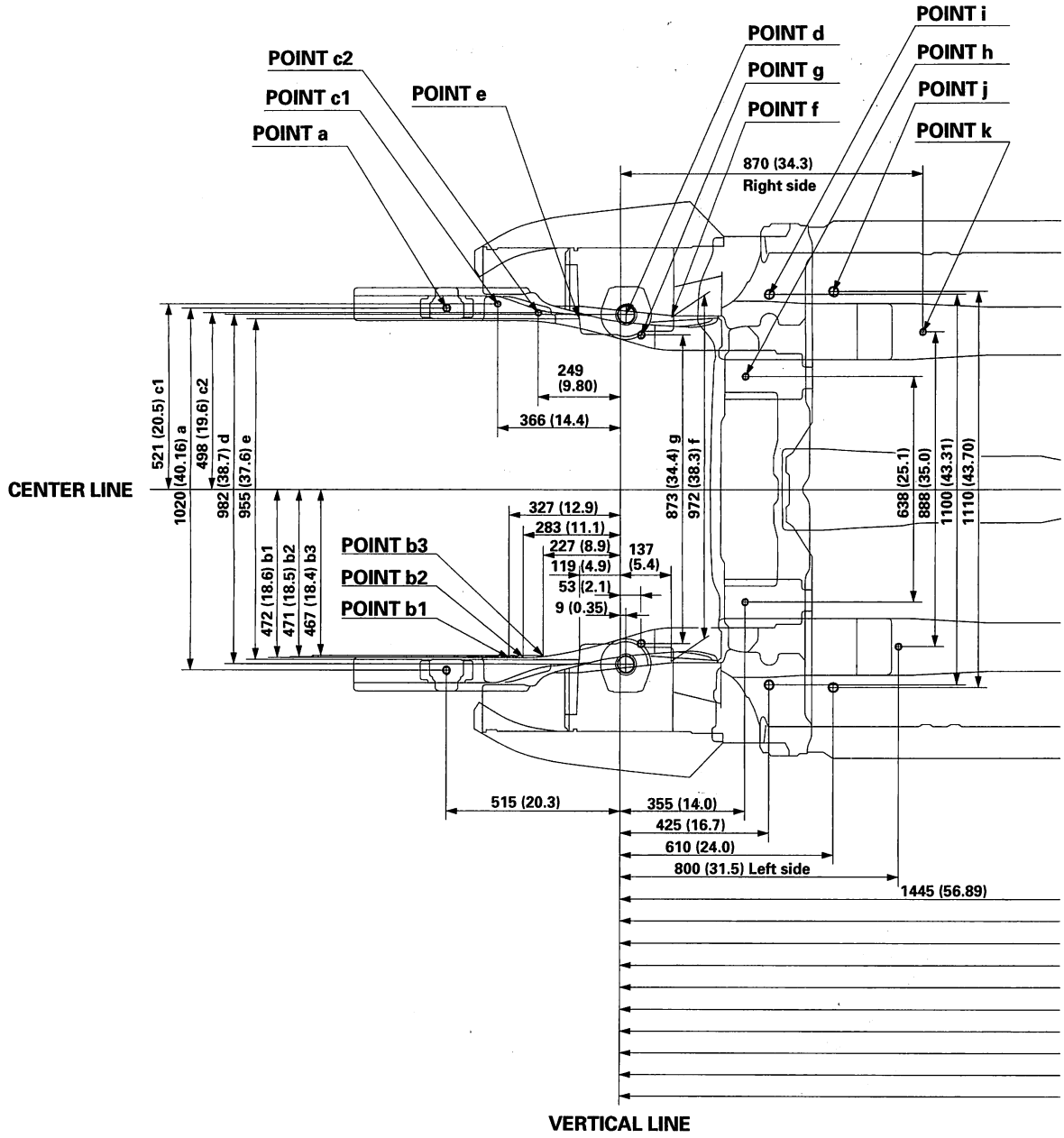

BACK

Protected by AR

l	Locating hole ø25 (0.98)	q	Locating hole ø15 (0.59)
m	Locating hole ø20 (0.79)	r	Locating hole ø25 (0.98)
n	For rear subframe ø14.4 (0.57)	s	Locating hole ø11 (0.43)
o	Rear damper center ø52 (2.05)	t1, t2	For rear subframe stay ø9 (0.35)
p	For rear subframe ø14.4 (0.57)	v1, v2	For rear subframe stay ø9 (0.35)

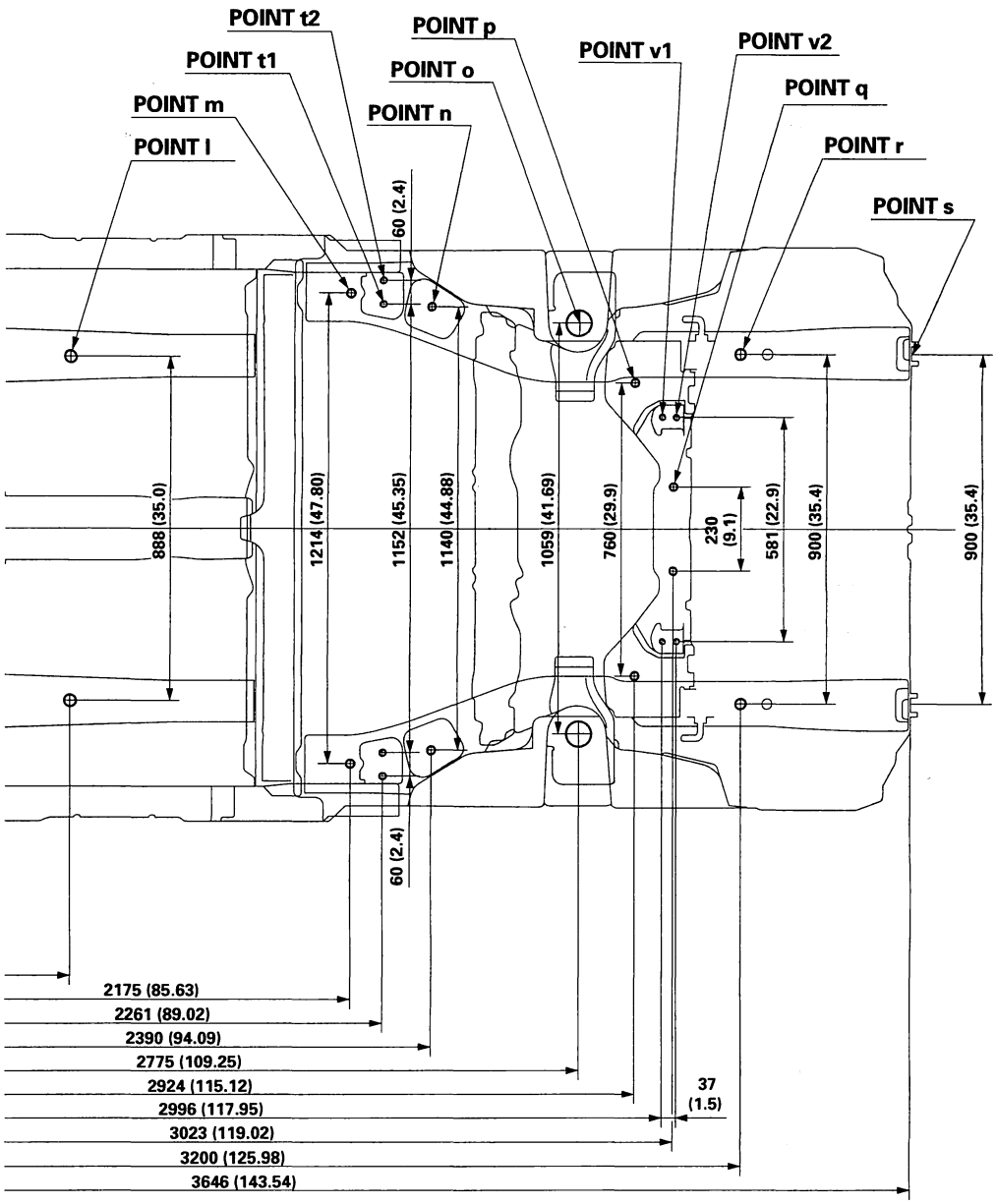

(cont'd)

BACK

Protected by AR

Frame Repair Chart (cont'd)

Side View

Unit: mm (in.)
ø: Inner diameter

a	For front subframe ø16 (0.63)
b1	For transmission mount ø13 (0.51) Left side
b2	For transmission mount ø15 (0.59) Left side
b3	For transmission mount ø13 (0.51) Left side
c1	For engine side mount ø15 (0.59) Right side
c2	For engine side mount ø15 (0.59) Right side
d	Front damper center ø50 (1.97)
e	For front upper arm ø13 (0.51)
f	For front upper arm ø13 (0.51)
g	For front subframe ø15 (0.59)
h	For front subframe ø16 (0.63)
i	Locating hole ø25 (0.98)
j	Locating hole ø25 (0.98)
k	Locating hole ø15 (0.59)

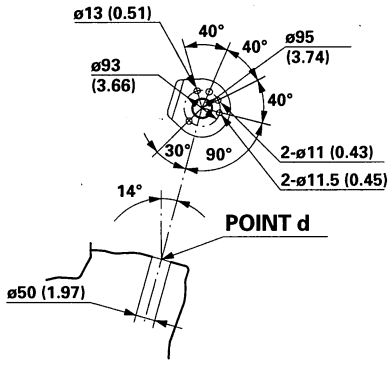

[SECTION: AA]

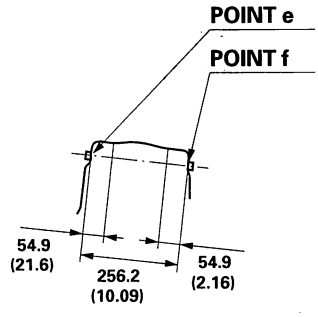

[SECTION: BB]

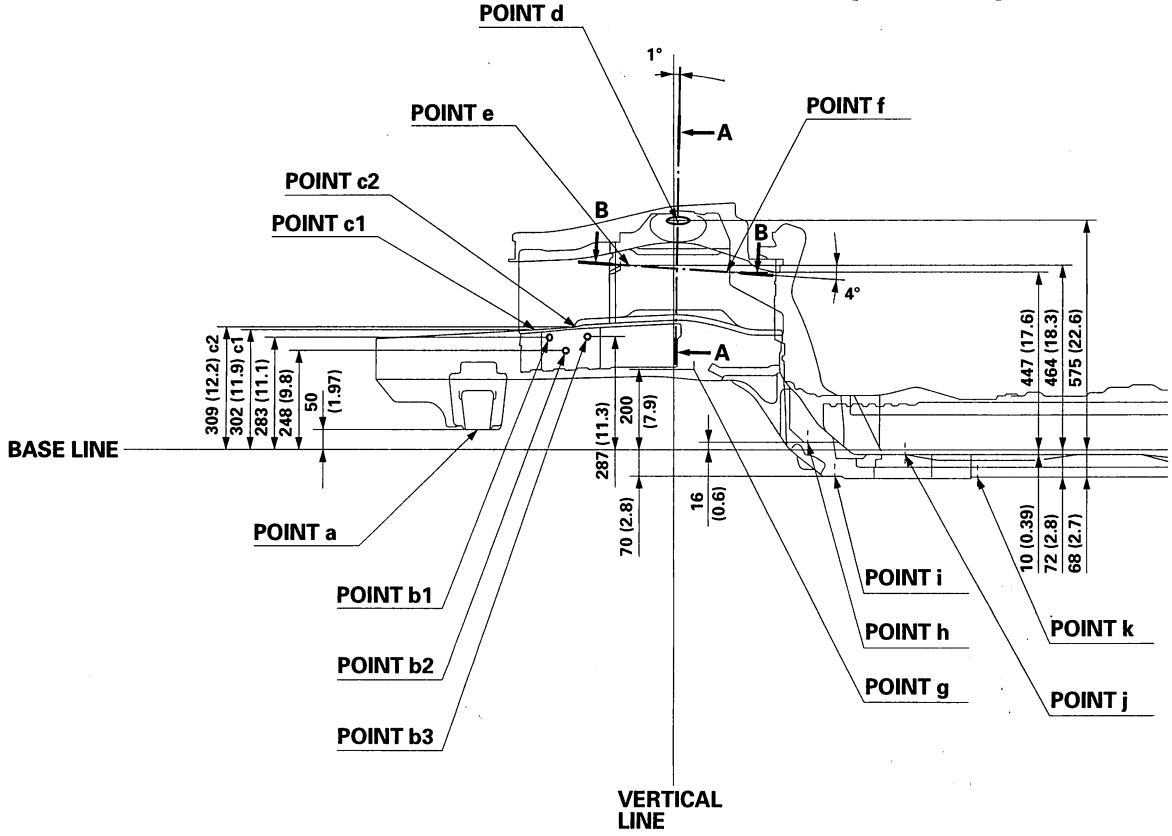

BACK

Protected by AR

l	Locating hole ø25 (0.98)	q	Locating hole ø15 (0.59)
m	Locating hole ø20 (0.79)	r	Locating hole ø25 (0.98)
n	For rear subframe ø14.4 (0.57)	s	Locating hole ø11 (0.43)
o	Rear damper center ø52 (2.05)	t1, t2	For rear subframe stay ø9 (0.35)
p	For rear subframe ø14.4 (0.57)	v1, v2	For rear subframe stay ø9 (0.35)

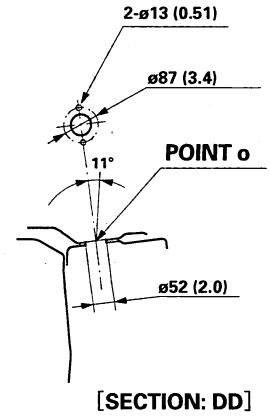

[SECTION: DD]

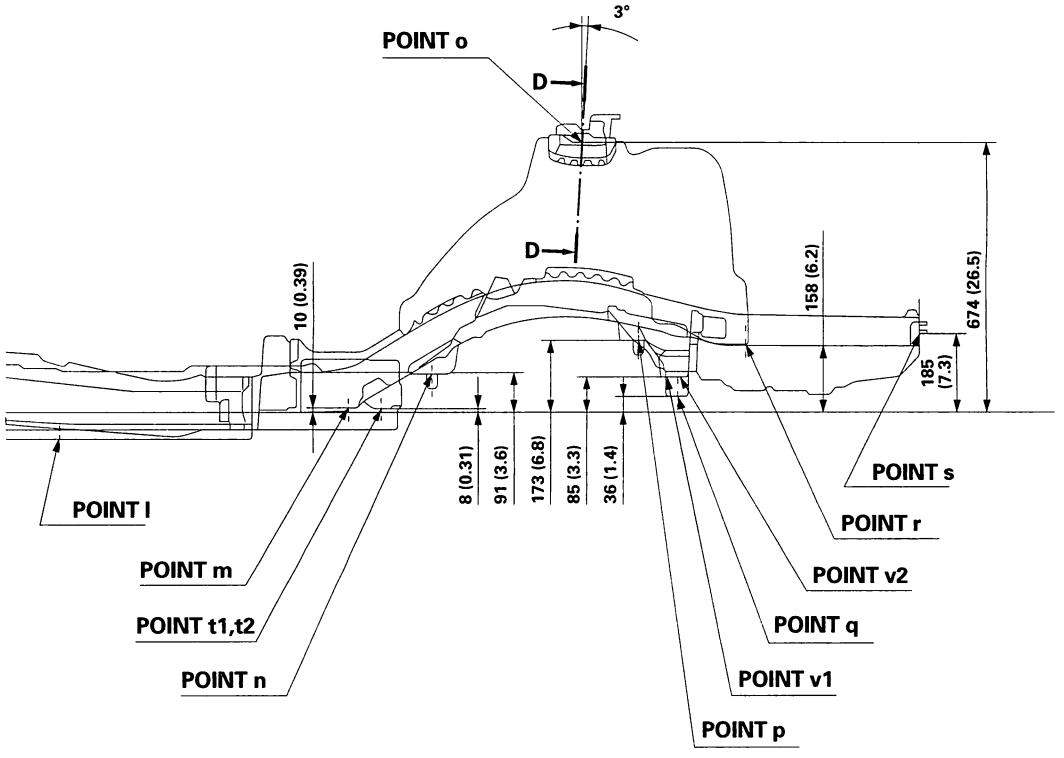

BACK

Protected by AR

SUPPLEMENTAL RESTRAINT SYSTEM (SRS) (If HVAC maintenance is required)

The Accord SRS includes a driver's airbag in the steering wheel hub, a passenger's airbag in the dashboard above the glove box, seat belt tensioners in the front seat belt retractors, side curtain airbags in the sides of the roof, and side airbags in the front seat-backs. Information necessary to safely service the SRS is included in the 2003-2006 Accord Service Manual, P/N 61SDA08. Items marked with an asterisk (*) on the contents page include or are located near SRS components. Servicing, disassembling, or replacing these items require special precautions and tools, and should be done only by an authorized Honda dealer.

- To avoid rendering the SRS inoperative, which could lead to personal injury or death in the event of a severe frontal or side collision, all SRS service work must be performed by an authorized Honda dealer.
- Improper service procedures, including incorrect removal and installation of the SRS, could lead to personal injury caused by unintentional deployment of the airbags and/or side airbags.
- Do not bump or impact the SRS unit, front impact sensors, or side impact sensors when the ignition switch is ON (II), or for at least 3 minutes after the ignition switch is turned OFF; otherwise, the system may fail in a collision, or the airbags may deploy.
- SRS electrical connectors are identified by yellow color coding. Related components are located in the steering column, front console, dashboard, dashboard lower panel, in the dashboard above the glove box, in the front seats, in the roof side, and around the floor. Do not use electrical test equipment on these circuits.

BACK

Protected by AR

HVAC (Heating, Ventilation, and Air Conditioning)

HVAC (Heating, Ventilation, and Air Conditioning)

Special Tools 21-2

Heating/Air Conditioning

Component Location Index 21-3
A/C Refrigerant Oil Replacement 21-8
Symptom Troubleshooting Index 21-11
System Description 21-14
Circuit Diagram 21-20
Radiator and A/C Condenser Fan Low Speed Circuit Troubleshooting 21-22
A/C Condenser Fan High Speed Circuit Troubleshooting 21-25
Radiator and A/C Condenser Fan High Speed Circuit Troubleshooting 21-27
A/C Compressor Clutch Circuit Troubleshooting 21-28
A/C Pressure Switch Circuit Troubleshooting 21-30
Air Mix Control Motor Replacement 21-32
Mode Control Motor Replacement 21-33
Recirculation Control Motor Replacement 21-34
Evaporator Temperature Sensor Replacement 21-35
Blower Unit Removal and Installation 21-36
Evaporator Core Replacement 21-37
* Heater Unit/Core Replacement 21-39
A/C Compressor Replacement 21-41
A/C Compressor Clutch Check 21-43
A/C Compressor Clutch Overhaul 21-44
A/C Compressor Relief Valve Replacement 21-45
A/C Condenser Replacement 21-46
A/C System Test 21-48

Climate Control

Component Location Index 21-51
Symptom Troubleshooting Index 21-56
Circuit Diagram 21-60
A/C Pressure Switch Circuit Troubleshooting 21-62
Passenger's Air Mix Control Motor Replacement 21-64

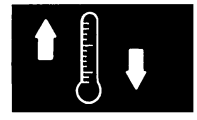

NOTE: Refer to the 2003-2006 Accord Service Manual, P/N 61SDA08 for items not shown in this section.

Outline of Model Change

The circuit diagram for HVAC has been changed; related information is included.

Protected by AR

Special Tools

Ref. No.	Tool Number	Description	Qty
①	07SAZ-001000A	Backprobe Set	2

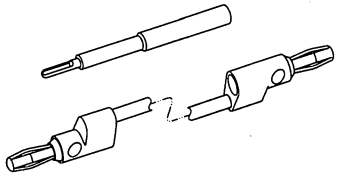

①

BACK

Protected by AR

Component Location Index

4-door

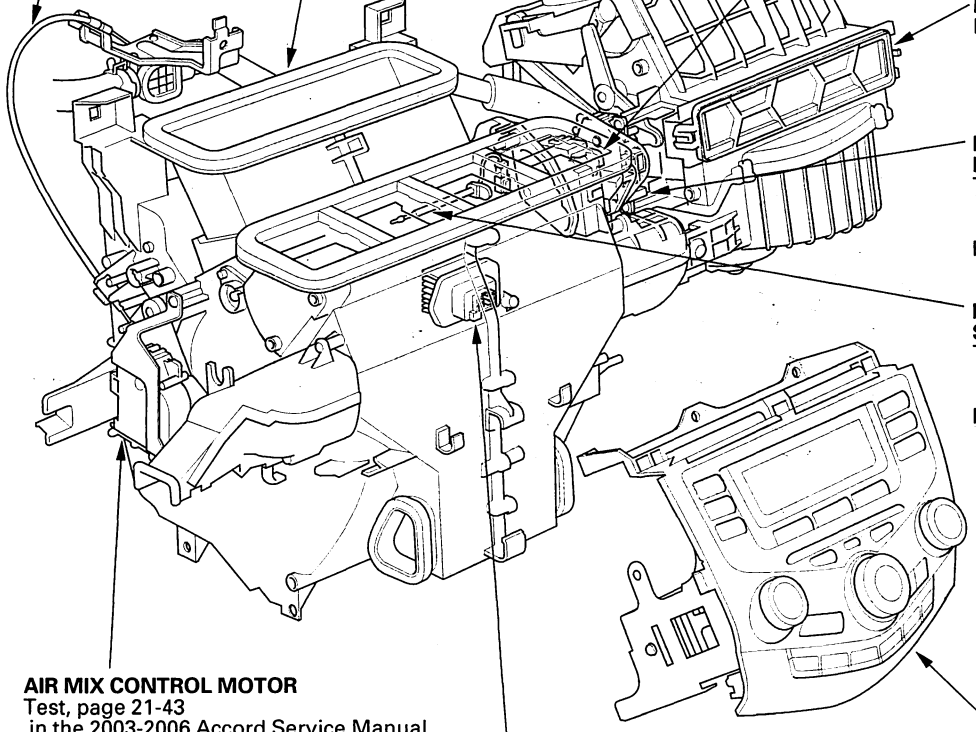

BLOWER UNIT
Removal and Installation,
page 21-36

HEATER VALVE CABLE
Adjustment, page 21-56
in the 2003-2006 Accord Service Manual

BLOWER UNIT COMPONENT
Replacement, page 21-53
in the 2003-2006 Accord Service Manual

HEATER UNIT/CORE
Replacement, page 21-39

MODE CONTROL MOTOR
Test, page 21-45
in the 2003-2006 Accord Service Manual
Replacement, page 21-33

DUST AND POLLEN FILTER
Replacement, page 21-51
in the 2003-2006
Accord Service Manual

RECIRCULATION CONTROL MOTOR
Test, page 21-47
in the 2003-2006
Accord Service Manual
Replacement, page 21-34

EVAPORATOR TEMPERATURE SENSOR
Test, page 21-49
in the 2003-2006
Accord Service Manual
Replacement, page 21-35

AIR MIX CONTROL MOTOR
Test, page 21-43
in the 2003-2006 Accord Service Manual
Replacement, page 21-32

POWER TRANSISTOR
Test, page 21-50
in the 2003-2006 Accord Service Manual

AUDIO-HVAC DISPLAY MODULE
Removal and Installation,
page 22-371
in the 2003-2006 Accord Service Manual

(cont'd)

Protected by AR

Component Location Index (cont'd)

2-door

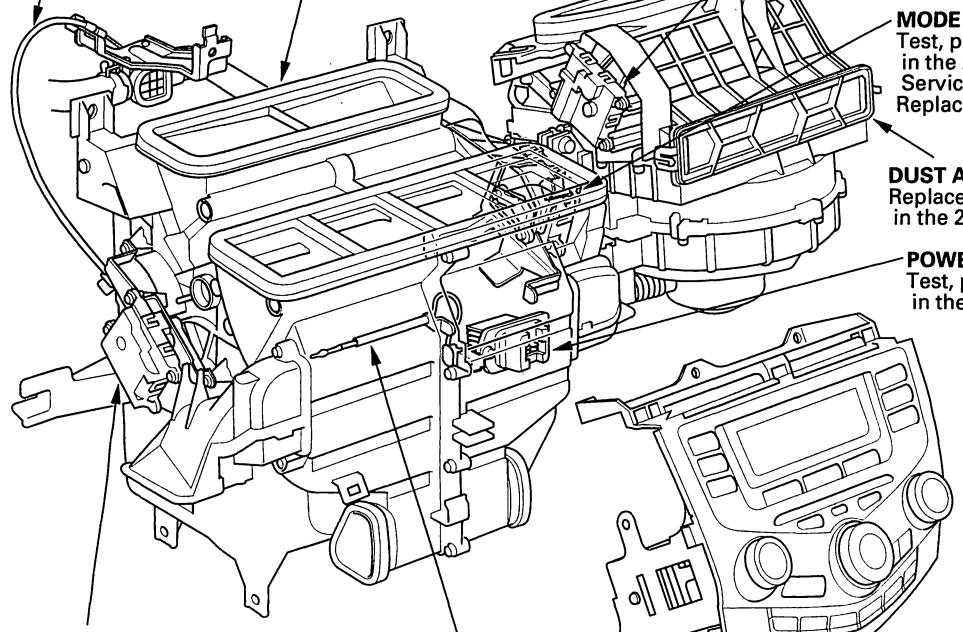

HEATER VALVE CABLE
Adjustment, page 21-56
in the 2003-2006 Accord Service Manual

HEATER UNIT/CORE
Replacement, page 21-39

BLOWER UNIT
Removal and Installation,
page 21-36

BLOWER UNIT COMPONENT
Replacement, page 21-53
in the 2003-2006 Accord Service Manual

RECIRCULATION CONTROL MOTOR
Test, page 21-47
in the 2003-2006 Accord Service Manual
Replacement, page 21-34

MODE CONTROL MOTOR
Test, page 21-45
in the 2003-2006 Accord Service Manual
Replacement, page 21-33

DUST AND POLLEN FILTER
Replacement, page 21-51
in the 2003-2006 Accord Service Manual

POWER TRANSISTOR
Test, page 21-50
in the 2003-2006 Accord Service Manual

AIR MIX CONTROL MOTOR
Test, page 21-43
in the 2003-2006 Accord Service Manual
Replacement, page 21-32

EVAPORATOR TEMPERATURE SENSOR
Test, page 21-49
in the 2003-2006 Accord Service Manual
Replacement, page 21-35

AUDIO-HVAC DISPLAY MODULE
Removal and Installation,
page 22-371
in the 2003-2006 Accord Service Manual

BACK

Protected by AR

4-door

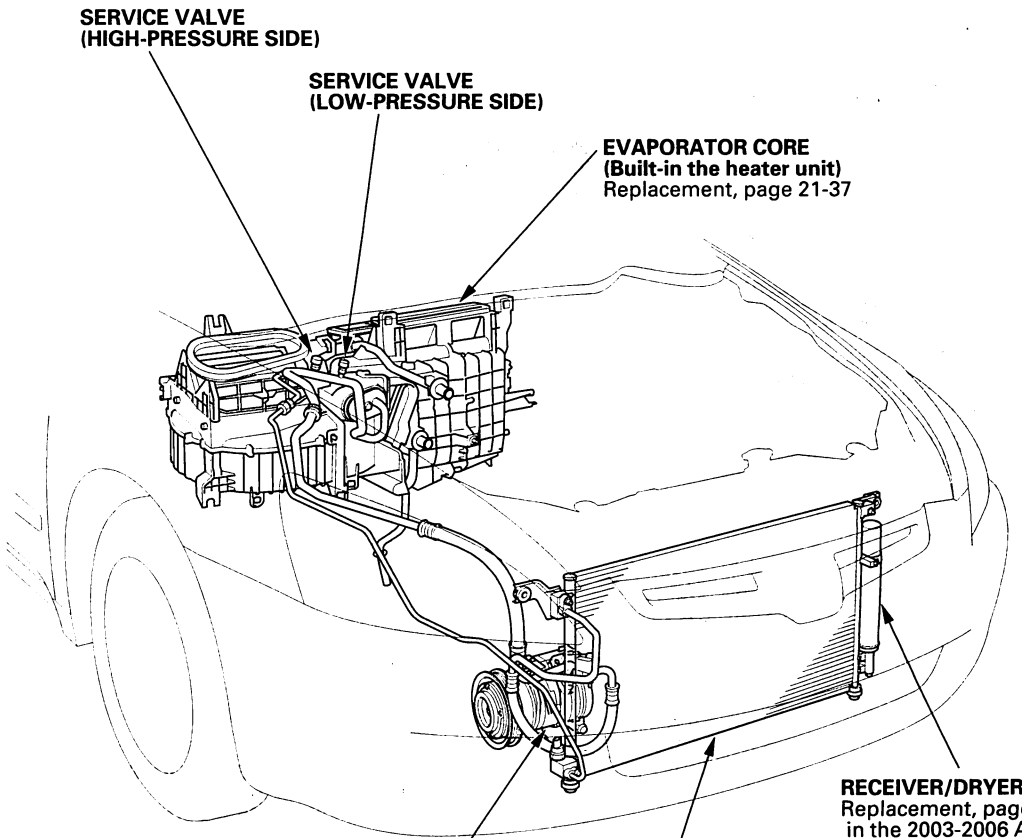

(cont'd)

Protected by AR

Component Location Index (cont'd)

2-door

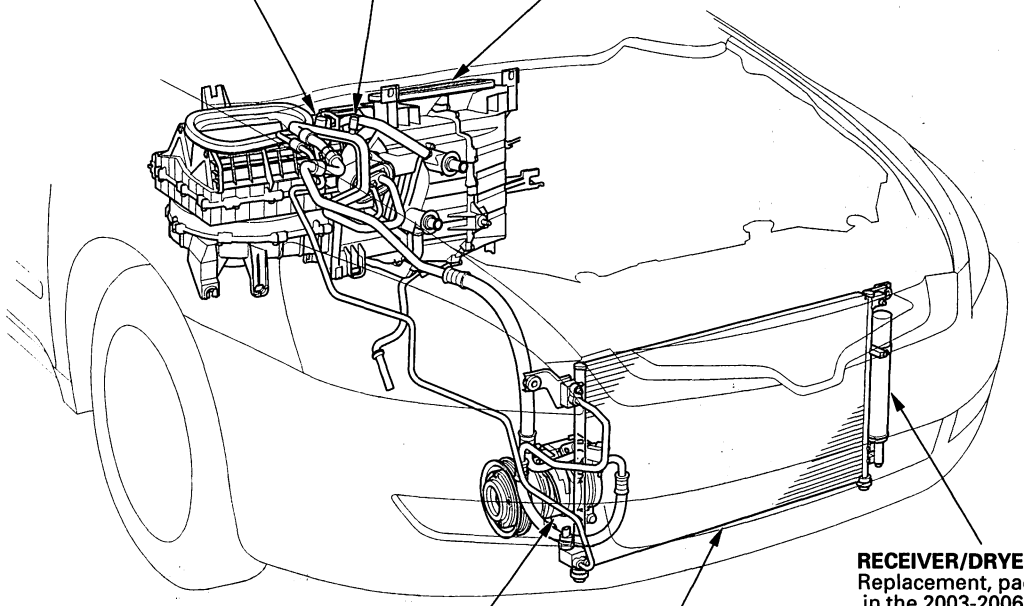

BACK

Protected by AR

4-door/2-door

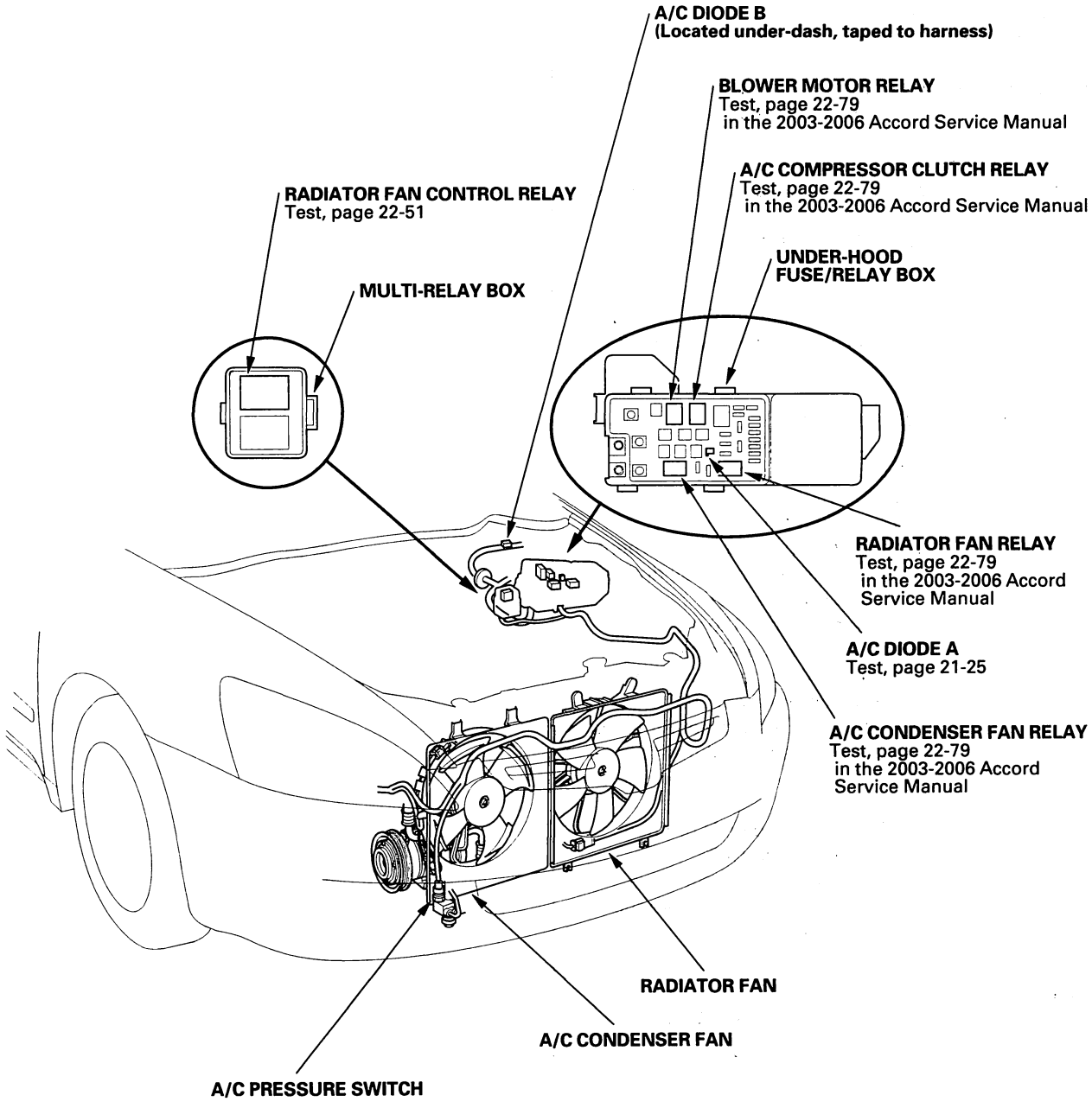

Protected by AR

A/C Refrigerant Oil Replacement

Recommended PAG oil: DENSO ND-OIL 8

- P/N 38897-PR7-A01AH: 120 mL (4 fl·oz)
- P/N 38899-PR7-A01: 40 mL (1 1/3 fl·oz)

Add the recommended refrigerant oil in the amount listed if you replace any of the following parts.

- To avoid contamination, do not return the oil to the container once dispensed, and never mix it with other refrigerant oils.
- Immediately after using the oil, reinstall the cap on the container, and seal it to avoid moisture absorption.
- Do not spill the refrigerant oil on the vehicle; it may damage the paint; if it gets on the paint, wash it off immediately.

A/C condenser .....25 mL (5/6 fl·oz)
Evaporator .....45 mL (1 1/2 fl·oz)
Line or hose .....10 mL (1/3 fl·oz)
Receiver/Dryer .....10 mL (1/3 fl·oz)
Leakage repair .....25 mL (5/6 fl·oz)
A/C compressor .....For A/C compressor replacement, subtract the volume of oil drained from the removed A/C compressor from 160 mL (5 1/3 fl·oz), and drain the calculated volume of oil from the new A/C compressor: 160 mL (5 1/3 fl·oz) — Volume of removed A/C compressor = Volume to drain from new A/C compressor.

NOTE: Even if no oil is drained from the removed A/C compressor, don't drain more than 50 mL (1 2/3 fl·oz) from the new A/C compressor.

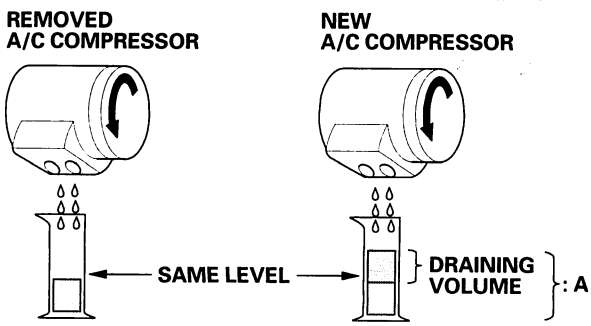

A: 160 mL (5 1/3 fl·oz)

BACK

Protected by AR

4-door

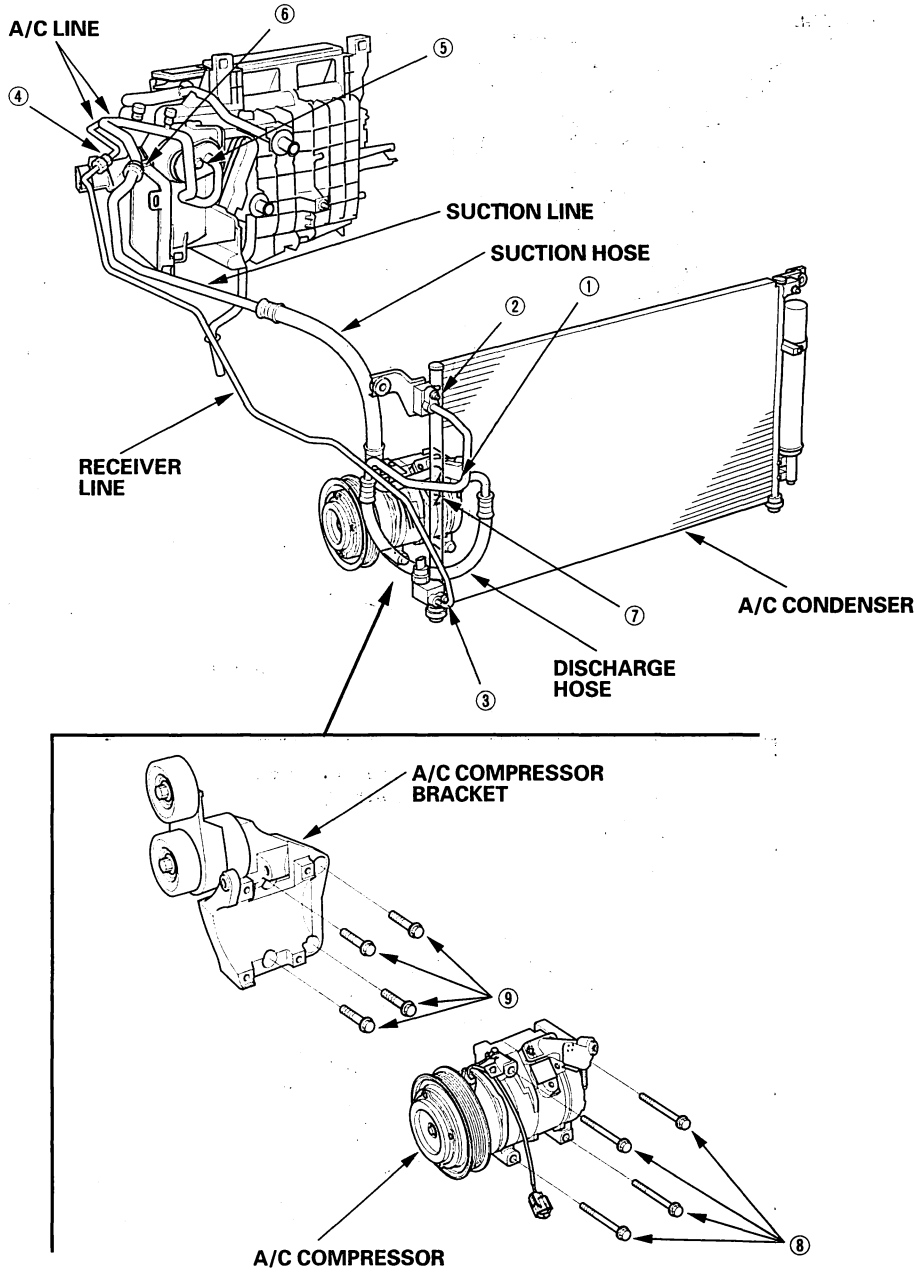

① Discharge hose to the A/C compressor (6 x 1.0 mm): 9.8 N·m (1.0 kgf·m, 7.2 lbf·ft)
② Discharge hose to the A/C condenser (6 x 1.0 mm): 9.8 N·m (1.0 kgf·m, 7.2 lbf·ft)
③ Receiver line to the A/C condenser (6 x 1.0 mm): 9.8 N·m (1.0 kgf·m, 7.2 lbf·ft)
④ Receiver line to the A/C line: 13 N·m (1.3 kgf·m, 9.4 lbf·ft)
⑤ A/C line to the evaporator (6 x 1.0 mm): 9.8 N·m (1.0 kgf·m, 7.2 lbf·ft)
⑥ Suction line to the A/C line: 31 N·m (3.2 kgf·m, 23 lbf·ft)
⑦ Suction hose to the A/C compressor (6 x 1.0 mm): 9.8 N·m (1.0 kgf·m, 7.2 lbf·ft)
⑧ A/C compressor to the A/C compressor bracket (8 x 1.25 mm): 22 N·m (2.2 kgf·m, 16 lbf·ft)
⑨ A/C compressor bracket to the engine block (10 x 1.25 mm): 44 N·m (4.5 kgf·m, 33 lbf·ft)

(cont'd)

Protected by AR

A/C Refrigerant Oil Replacement (cont'd)

2-door

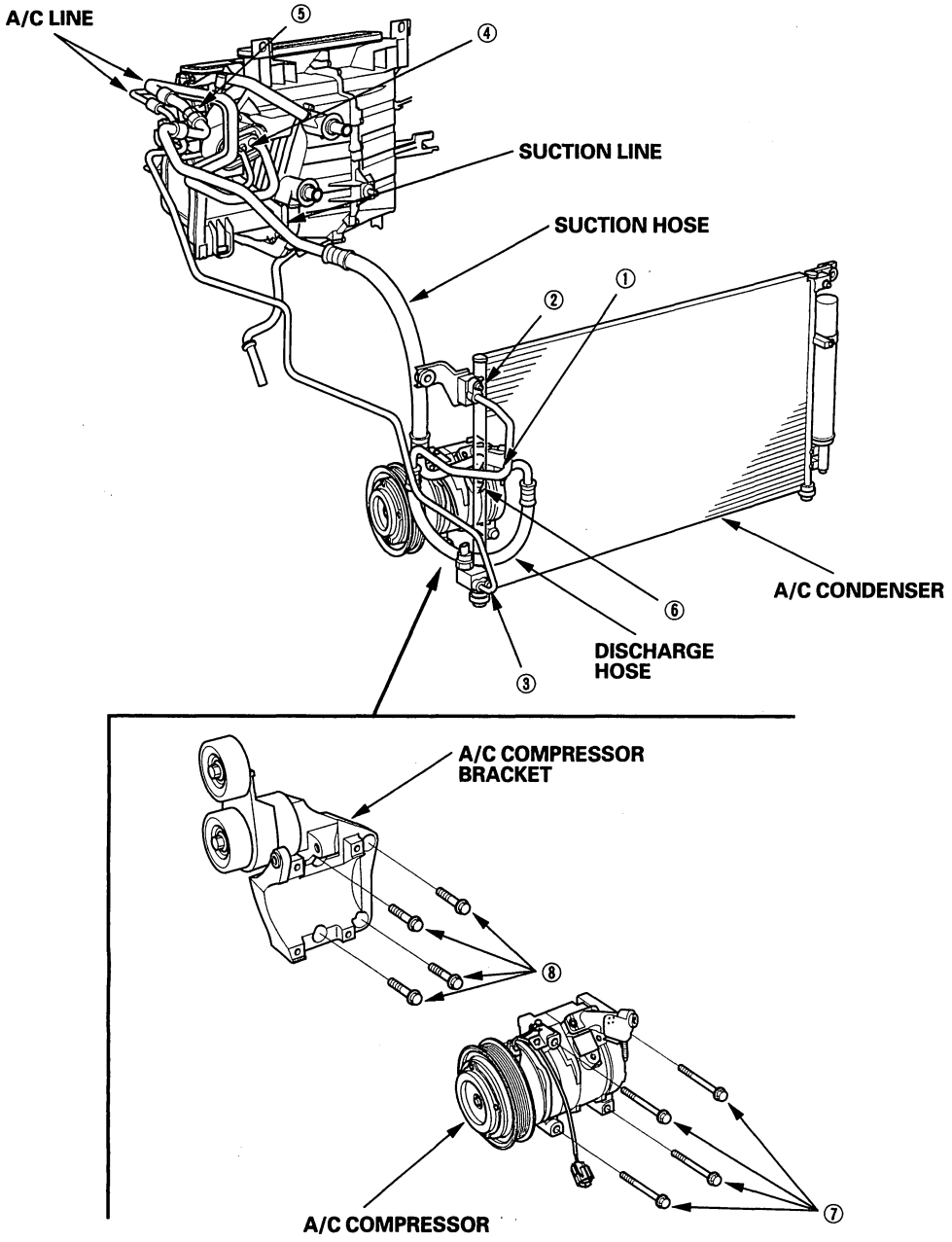

① Discharge hose to the A/C compressor (6 x 1.0 mm): 9.8 N·m (1.0 kgf·m, 7.2 lbf·ft)
② Discharge hose to the A/C condenser (6 x 1.0 mm): 9.8 N·m (1.0 kgf·m, 7.2 lbf·ft)
③ A/C line to the A/C condenser (6 x 1.0 mm): 9.8 N·m (1.0 kgf·m, 7.2 lbf·ft)
④ A/C line to the evaporator (6 x 1.0 mm): 9.8 N·m (1.0 kgf·m, 7.2 lbf·ft)
⑤ Suction line to the A/C line: 31 N·m (3.2 kgf·m, 23 lbf·ft)
⑥ Suction hose to the A/C compressor (6 x 1.0 mm): 9.8 N·m (1.0 kgf·m, 7.2 lbf·ft)
⑦ A/C compressor to the A/C compressor bracket (8 x 1.25 mm): 22 N·m (2.2 kgf·m, 16 lbf·ft)
⑧ A/C compressor bracket to the engine block (10 x 1.25 mm): 44 N·m (4.5 kgf·m, 33 lbf·ft)

BACK

Protected by AR

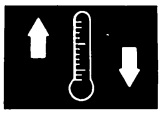

Symptom Troubleshooting Index

Symptom	Diagnostic procedure	Also check for
Recirculation control doors do not change between Fresh and Recirculate	Recirculation control motor circuit troubleshooting, refer to the 2003-2006 Accord Service Manual (see page 21-33)	• HVAC DTCs, refer to the 2003-2006 Accord Service Manual (see page 21-11) • Blown fuse No. 30 (7.5A) in the under-dash fuse/relay box • Cleanliness and tightness of all connectors
Blower, heater controls, and A/C do not work	Audio-HVAC display module power and ground circuits troubleshooting, refer to the 2003-2006 Accord Service Manual (see page 21-35)	• HVAC DTCs, refer to the 2003-2006 Accord Service Manual (see page 21-11) • Blown fuse No. 30 (7.5A) in the under-dash fuse/relay box • Poor ground at G503 • Cleanliness and tightness of all connectors
Both fans do not run at low speed with the A/C on (but the A/C compressor runs with the A/C on)	Radiator and A/C condenser fan low speed circuit troubleshooting (see page 21-22)	• HVAC DTCs, refer to the 2003-2006 Accord Service Manual (see page 21-11) • Blown fuse No. 9 (20A) in the under-hood fuse/relay box, and No. 30 (7.5A) in the under-dash fuse/relay box • Poor ground at G301 • Cleanliness and tightness of all connectors
The A/C condenser fan does not run at high speed (but both fans run at low speed and the A/C compressor operates with the A/C on)	A/C condenser fan high speed circuit troubleshooting (see page 21-25)	• HVAC DTCs, refer to the 2003-2006 Accord Service Manual (see page 21-11) • Blown fuse No. 30 (7.5A) in the under-dash fuse/relay box • Poor ground at G201 • Cleanliness and tightness of all connectors
Both fans do not run at high speed with the A/C on (but both fans run at low speed and the A/C compressor operates with the A/C on)	Radiator and A/C condenser fan high speed circuit troubleshooting (see page 21-27)	• HVAC DTCs, refer to the 2003-2006 Accord Service Manual (see page 21-11) • Cleanliness and tightness of all connectors
The A/C compressor clutch does not engage (but both fans run with the A/C on)	A/C compressor clutch circuit troubleshooting (see page 21-28)	• HVAC DTCs, refer to the 2003-2006 Accord Service Manual (see page 21-11) • Blown fuse No. 12 (7.5A) in the under-hood fuse/relay box, and No. 30 (7.5A) in the under-dash fuse/relay box • Cleanliness and tightness of all connectors
A/C system does not come on (both fans and the A/C compressor do not work); heater is OK	A/C pressure switch circuit troubleshooting (see page 21-30)	• Body DTCs in test mode A of the MICS, refer to the 2003-2006 Accord Service Manual (see page 22-91) • HVAC DTCs, refer to the 2003-2006 Accord Service Manual (see page 21-11) • Cleanliness and tightness of all connectors

(cont'd)

Protected by AR

Symptom Troubleshooting Index (cont'd)

Symptom	Diagnostic procedure	Also check for
Recirculation button does not work	1. Turn the ignition switch ON (II). 2. Press the recirculation button several times and check the button's LED. The LED should toggle on and off as the button is pressed. • If the LED turns on and off, go to recirculation control motor test, refer to the 2003-2006 Accord Service Manual, 2-door (see page 21-47), 4-door (see page 21-47). • If the LED does not turn on or off, replace the audio-HVAC display panel.	
Defroster button does not work	1. Turn the ignition switch ON (II). 2. Press the defroster button several times and check the button's LED. The LED should toggle on and off as the button is pressed. • If the LED turns on and off, go to self-diagnostic, refer to the 2003-2006 Accord Service Manual (see page 21-11). • If the LED does not turn on or off, replace the audio-HVAC display panel.	
Rear window defogger button does not work	1. Turn the ignition switch ON (II). 2. Press the rear window defogger button several times and check the button's LED. The LED should toggle on and off as the button is pressed. • If the LED turns on and off, go to rear window defogger troubleshooting, refer to the 2003-2006 Accord Service Manual (see page 22-299). • If the LED does not turn on or off, replace the audio-HVAC display panel.	
A/C button does not work	1. Turn the ignition switch ON (II). 2. Turn the fan control dial ON. 3. Press the A/C button several times and check the button's LED. The LED should toggle on and off as the button is pressed. • If the LED turns on and off, go to self-diagnostic, refer to the 2003-2006 Accord Service Manual (see page 21-11). • If the LED does not turn on or off, replace the audio-HVAC display panel.	
MAX A/C button does not work	1. Turn the ignition switch ON (II). 2. Turn the fan control dial ON. 3. Press the MAX A/C button several times and check the button's LED. The LED should toggle on and off as the button is pressed. • If the LED turns on and off, go to self-diagnostic, refer to the 2003-2006 Accord Service Manual (see page 21-11). • If the LED does not turn on or off, replace the audio-HVAC display panel.	
Mode button (VENT) does not work	1. Turn the ignition switch ON (II). 2. Press the MODE (VENT) button several times and check the button's LED. The LED should toggle on and off as the button is pressed. • If the LED turns on and off, go to self-diagnostic, refer to the 2003-2006 Accord Service Manual (see page 21-11). • If the LED does not turn on or off, replace the audio-HVAC display panel.	

BACK

Protected by AR

Symptom	Diagnostic procedure	Also check for
Mode button (VENT/FLOOR) does not work	1. Turn the ignition switch ON (II). 2. Press the MODE (VENT/FLOOR) button several times and check the button's LED. The LED should toggle on and off as the button is pressed. • If the LED turns on and off, go to self-diagnostic, refer to the 2003-2006 Accord Service Manual (see page 21-11). • If the LED does not turn on or off, replace the audio-HVAC display panel.	
Mode button (FLOOR) does not work	1. Turn the ignition switch ON (II). 2. Press the MODE (FLOOR) button several times and check the button's LED. The LED should toggle on and off as the button is pressed. • If the LED turns on and off, go to self-diagnostic, refer to the 2003-2006 Accord Service Manual (see page 21-11). • If the LED does not turn on or off, replace the audio-HVAC display panel.	
Mode button (DEFROSTER/FLOOR) does not work	1. Turn the ignition switch ON (II). 2. Press the MODE (DEFROSTER/FLOOR) button several times and check the button's LED. The LED should toggle on and off as the button is pressed. • If the LED turns on and off, go to self-diagnostic, refer to the 2003-2006 Accord Service Manual (see page 21-11). • If the LED does not turn on or off, replace the audio-HVAC display panel.	
Audio-HVAC display panel will not run self-diagnosis	1. Turn the ignition switch ON (II). 2. Press the A/C button, and then OFF button and check the display. • If the display turns on and off as the buttons are pressed, and there are no DTCs stored, troubleshoot the individual symptoms. • If the display does not respond as the buttons are pressed, check for loose or poor connections at the audio-HVAC display panel. If the connections are OK, replace the audio-HVAC display panel.	

Protected by AR

System Description

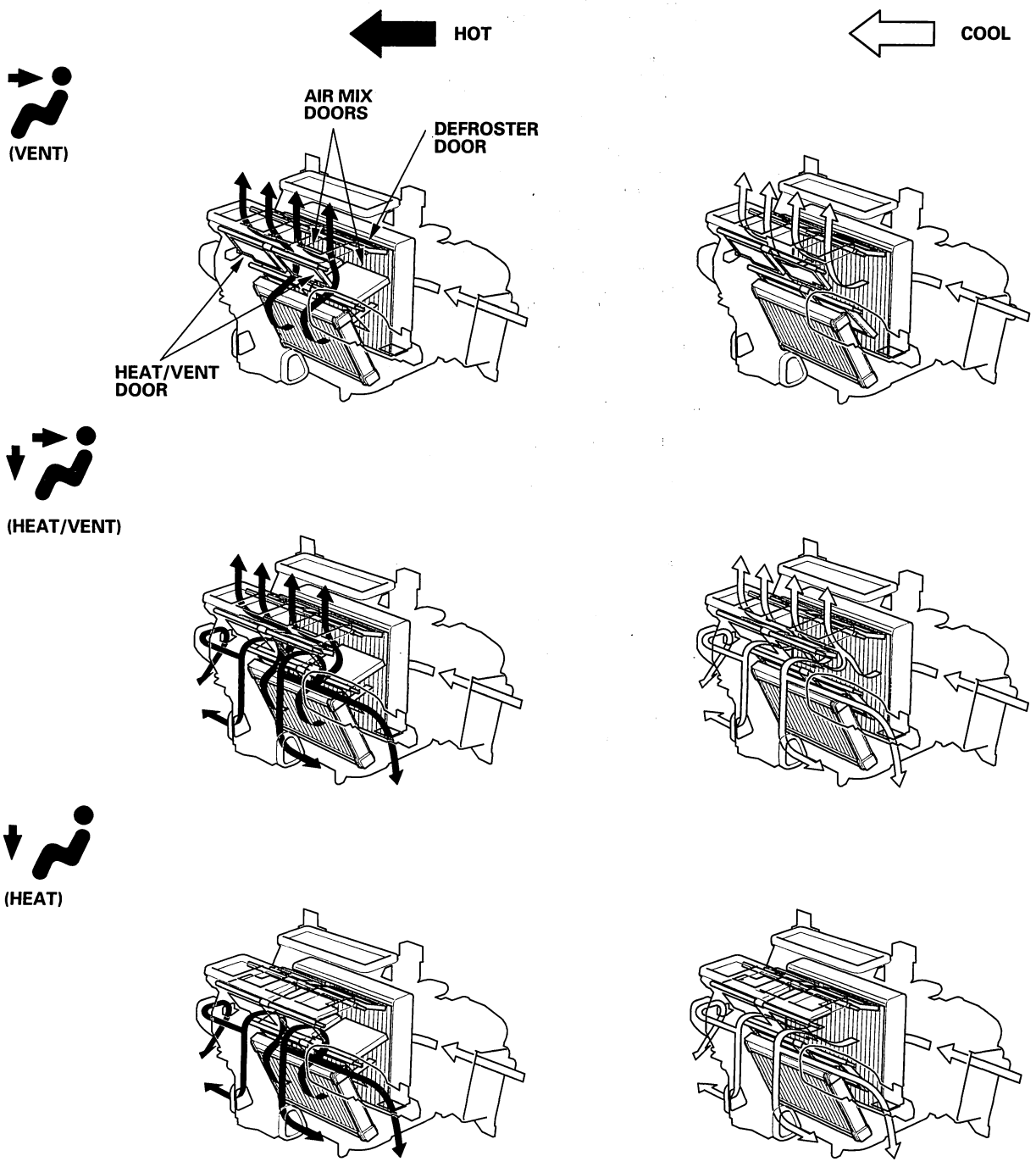

BACK

Protected by AR



(HEAT/DEF)

HOT

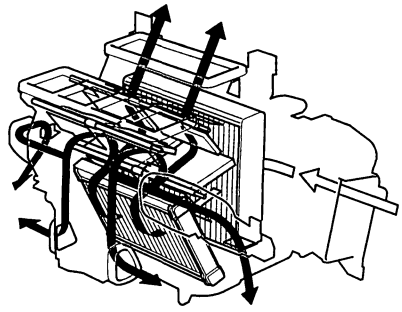

COOL

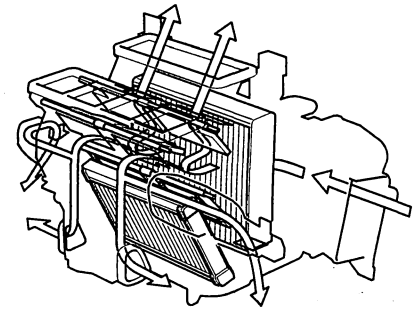



(DEF)

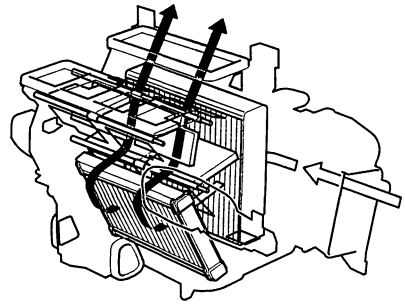

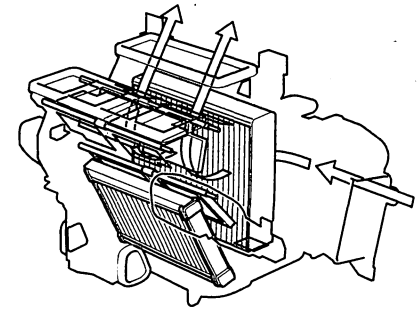

(cont'd)

Protected by AR

System Description (cont'd)

The air conditioning system removes heat from the passenger compartment by circulating refrigerant through the system.

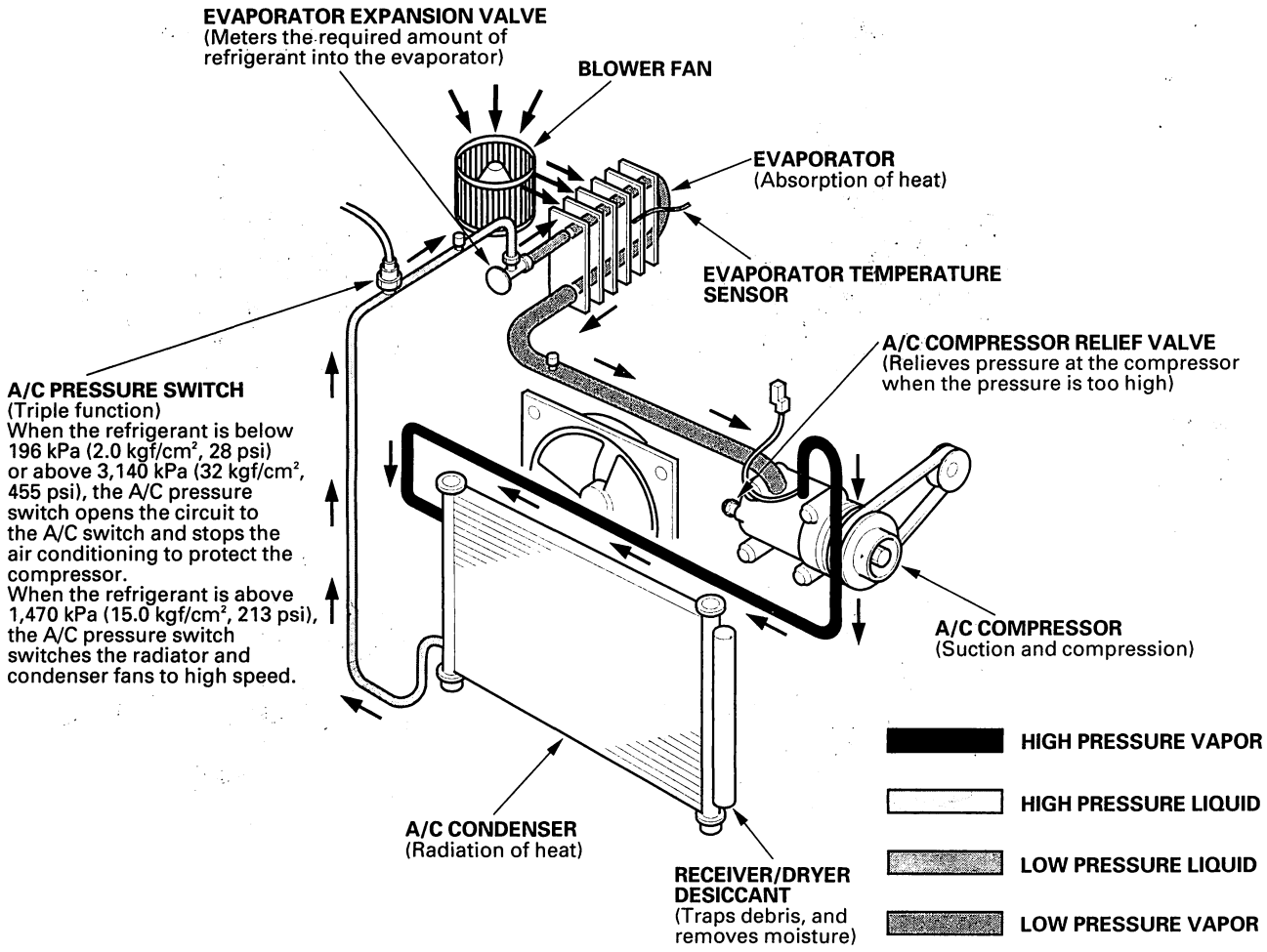

This vehicle uses HFC-134a (R-134a) refrigerant which does not contain chlorofluorocarbons. Pay attention to the following service items:

- Do not mix refrigerants CFC-12 (R-12) and HFC-134a (R-134a). They are not compatible.
- Use only the recommended polyalkyleneglycol (PAG) refrigerant oil (DENSO ND-OIL 8) designed for the R-134a compressor. Intermixing the recommended (PAG) refrigerant oil with any other refrigerant oil will result in compressor failure.
- All A/C system parts (compressor, discharge line, suction line, evaporator, condenser, receiver/dryer, expansion valve, O-rings for joints) are designed for refrigerant R-134a. Do not exchange with R-12 parts.
- Use a halogen gas leak detector designed for refrigerant R-134a.
- R-12 and R-134a refrigerant servicing equipment are not interchangeable. Use only a recovery/recycling/charging station that is U.L.-listed and is certified to meet the requirements of SAE J2210 to service the R-134a air conditioning systems.
- Always recover the refrigerant R-134a with an approved recovery/recycling/charging station before disconnecting any A/C fitting.

BACK

Protected by AR

A/C Pressure Switch

The A/C pressure switch consists of a high-low pressure switch (A/C pressure switch A) and a middle pressure switch (A/C pressure switch B).

- High-low pressure switch
  If the refrigerant pressure becomes too high (due to blockage or lack of airflow at the condenser), or too low (due to leakage), the A/C pressure switch stops the A/C request signal to the PCM and the compressor stops operating.

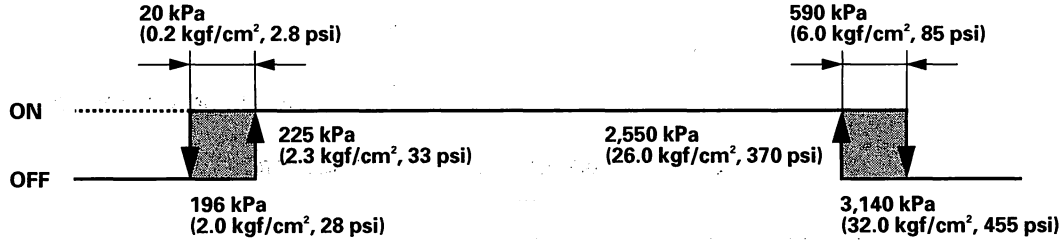

- Middle pressure switch
  If the refrigerant pressure goes above or below 1,470 kPa (15.0 kgf/cm², 213 psi), the A/C pressure switch opens or closes to signal the PCM to change the speed of the condenser fan and radiator fan (high-low).

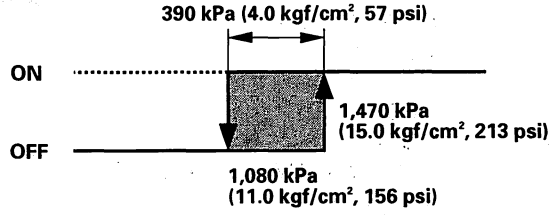

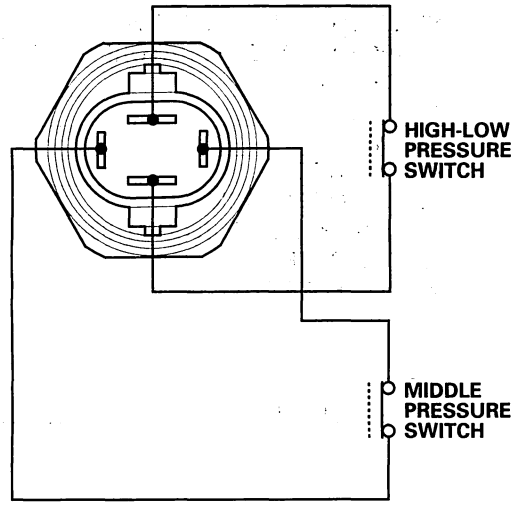

(cont'd)

Protected by AR

System Description (cont'd)

Audio-HVAC Display Panel Inputs and Outputs

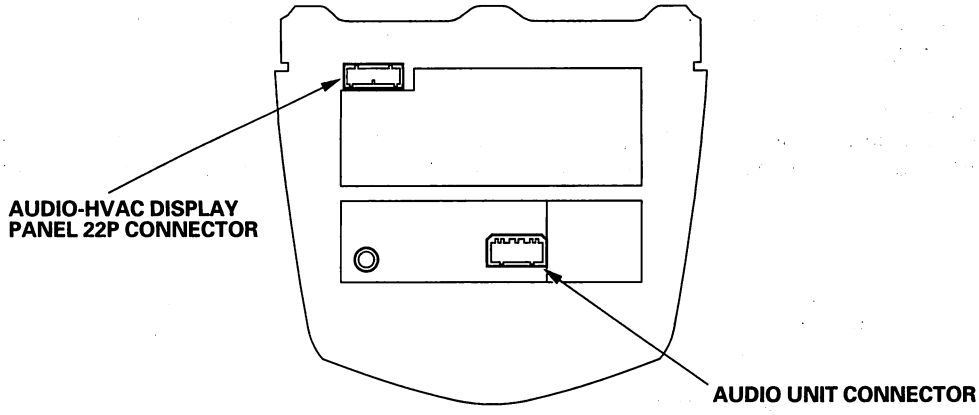

AUDIO-HVAC DISPLAY PANEL 22P CONNECTOR

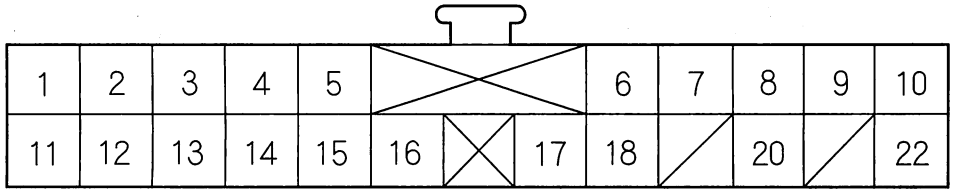

Wire side of female terminals

Cavity	Wire color	Signal	
1	BLU	A/C PRESSURE SWITCH	OUTPUT
2	RED/YEL	MODE 1	INPUT
3	RED/BLU	MODE 2	INPUT
4	WHT/BLU	MODE 3	INPUT
5	YEL/GRN	MODE 4	INPUT
6	YEL/BLK	REAR WINDOW DEFOGGER RELAY	OUTPUT
7	LT GRN/RED	RECIRCULATE	OUTPUT
8	GRN/WHT	FRESH	OUTPUT
9	RED/BLK	SENSOR COMMON GROUND	OUTPUT
10	BRN	EVAPORATOR TEMPERATURE SENSOR	INPUT
11	YEL/RED	MODE VENT	OUTPUT
12	YEL/BLU	MODE DEF	OUTPUT
13	PNK/BLU	AIR MIX HOT	OUTPUT
14	GRN	AIR MIX COOL	OUTPUT
15	BLU/RED	BLOWER FEEDBACK	INPUT
16	BLU/YEL	POWER TRANSISTOR CONTROL	OUTPUT
17	PNK/BLK	AIR MIX POTENTIAL	INPUT
18	GRY	AIR MIX POTENTIAL +5 V	OUTPUT
19	———	———	———
20	BLK/YEL	IG2 (Power)	INPUT
21	———	———	———
22	BLK	GROUND (G503)	INPUT

BACK

Protected by AR

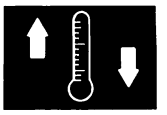

Protected by AR

Circuit Diagram

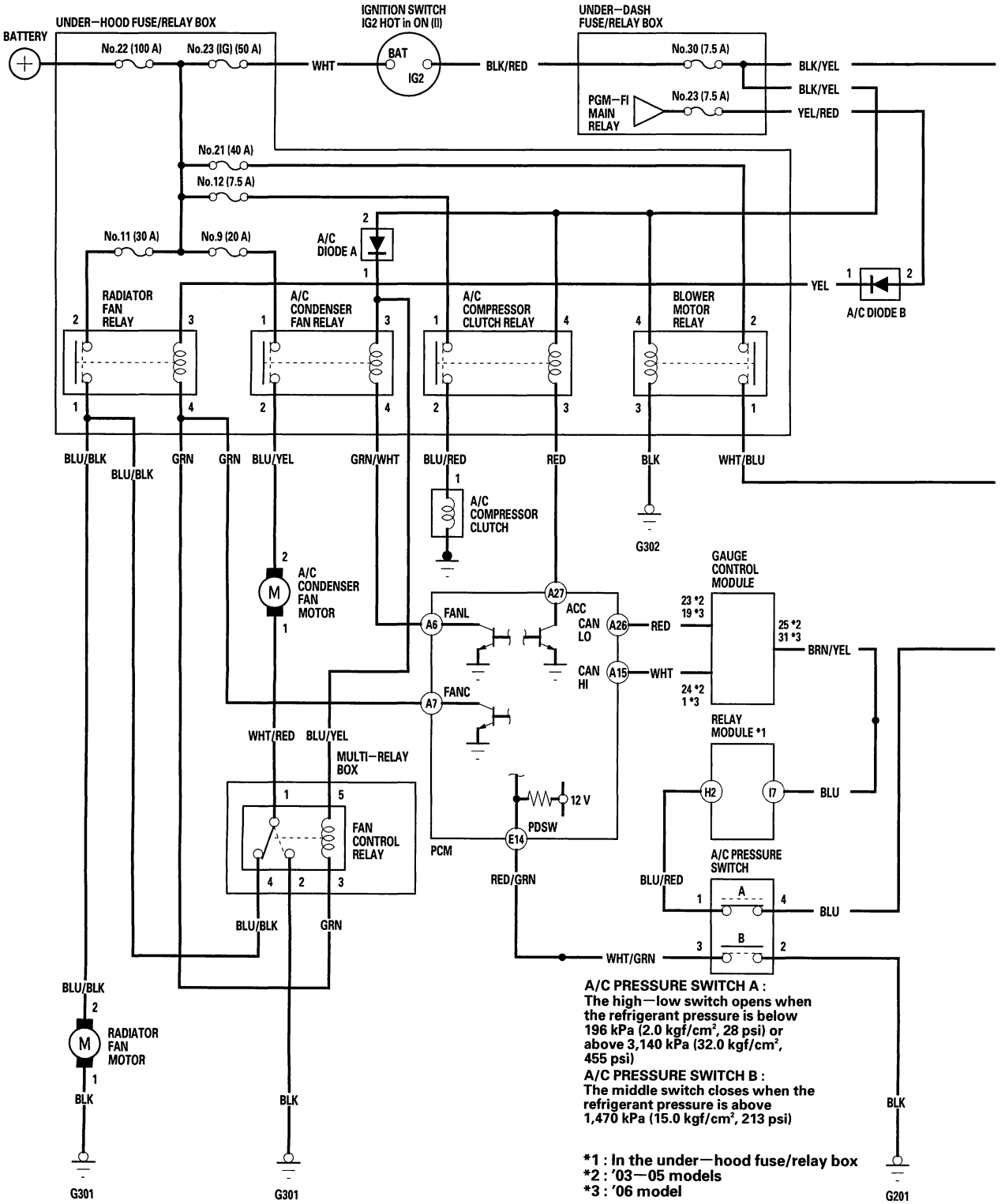

BACK

Protected by AR

[ ] : 2-door

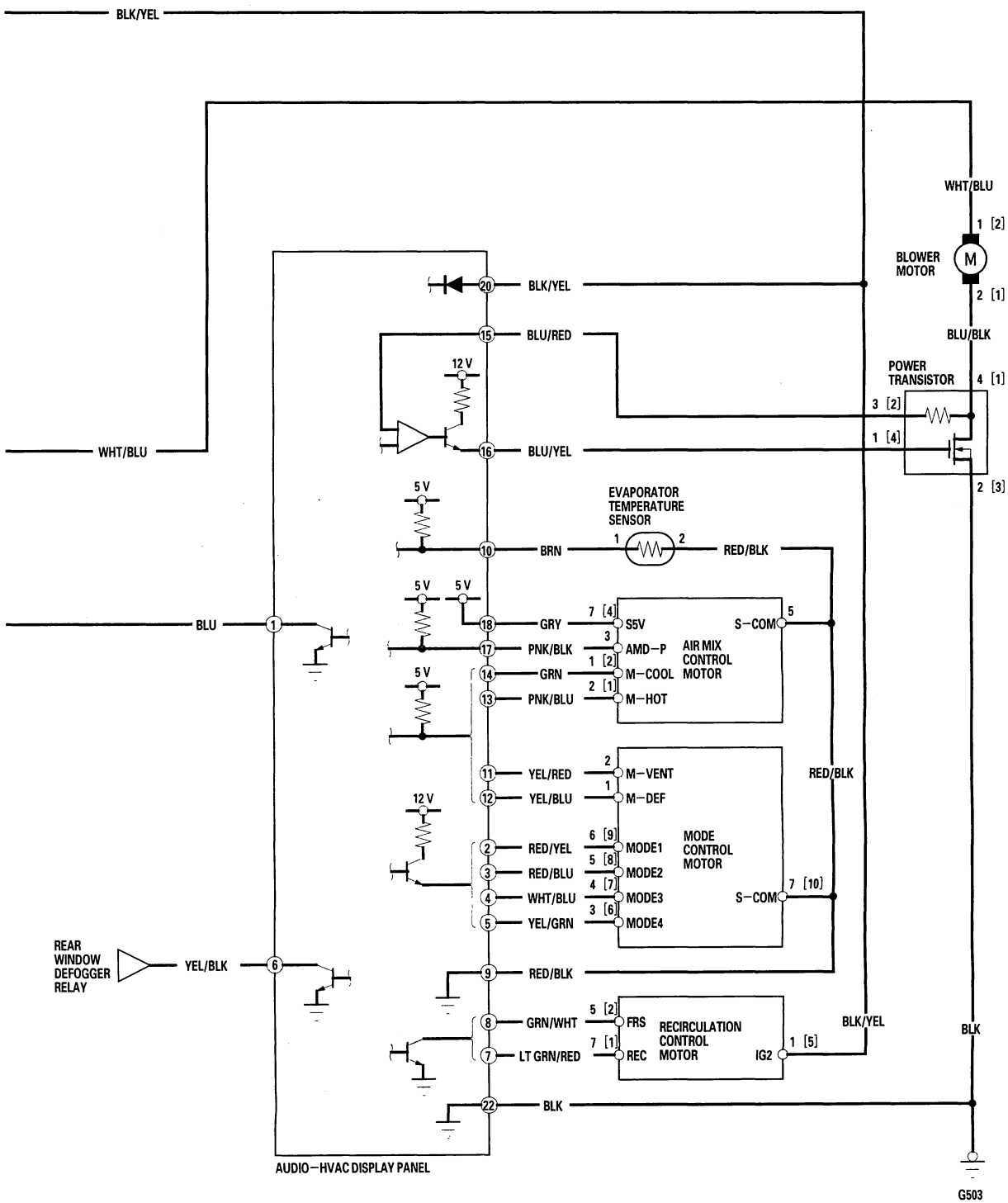

BACK

Protected by AR

Radiator and A/C Condenser Fan Low Speed Circuit Troubleshooting

NOTE:
- Do not use this troubleshooting procedure if the compressor is inoperative. Refer to the symptom troubleshooting index.
- Before performing symptom troubleshooting, check for powertrain DTCs (see page 11-3).

1. Check the No. 9 (20A) fuse in the under-hood fuse/relay box, and the No. 30 (7.5A) fuse in the under-dash fuse/relay box.

   Are the fuses OK?

   YES—Go to step 2.

   NO—Replace the fuse(s), and recheck. ■

2. Remove the A/C condenser fan relay from the under-hood fuse/relay box, and test it, refer to the 2003-2006 Accord Service Manual (see page 22-79).

   Is the relay OK?

   YES—Go to step 3.

   NO—Replace the A/C condenser fan relay. ■

3. Measure the voltage between the No. 1 terminal of the A/C condenser fan relay 4P socket and body ground.

   A/C CONDENSER FAN RELAY 4P SOCKET

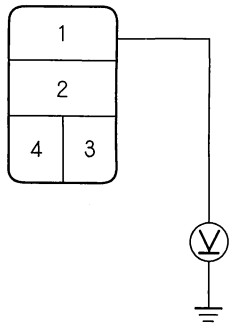

   Is there battery voltage?

   YES—Go to step 4.

   NO—Replace the under-hood fuse/relay box. ■

4. Connect the No. 1 and No. 2 terminals of the A/C condenser fan relay 4P socket with a jumper wire.

   A/C CONDENSER FAN RELAY 4P SOCKET

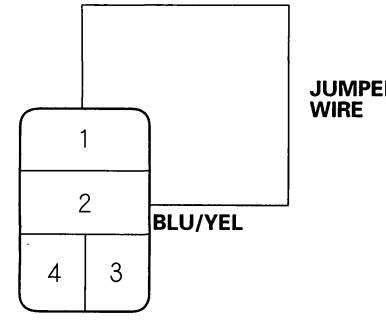

   Does the A/C condenser fan run?

   YES—Go to step 5.

   NO—Go to step 13.

5. Disconnect the jumper wire.

6. Turn the ignition switch ON (II).

7. Measure the voltage between the No. 3 terminal of the A/C condenser fan relay 4P socket and body ground.

   A/C CONDENSER FAN RELAY 4P SOCKET

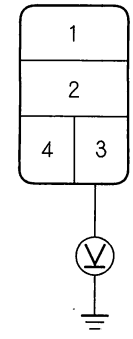

   Is there battery voltage?

   YES—Go to step 8.

   NO—Go to step 31.

8. Turn the ignition switch OFF.

BACK

Protected by AR

9. Reinstall the A/C condenser fan relay.
10. Make sure the A/C switch is OFF.
11. Turn the ignition switch ON (II).
12. Using the backprobe set, measure the voltage between the No. 6 terminal of PCM connector A (31P) and body ground with the PCM connectors connected.

PCM CONNECTOR A (31P)

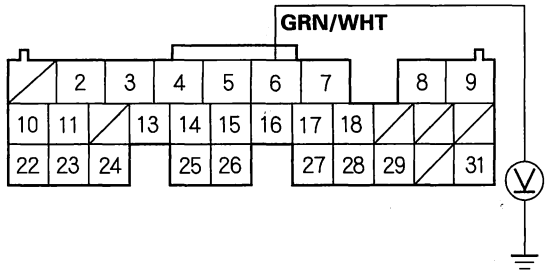

Wire side of female terminals

Is there battery voltage?

YES—Check for loose wires or poor connections at No. 6 terminal of PCM connector A (31P). If the connections are good, substitute a known-good PCM, and recheck. If the symptom/indication goes away, replace the original PCM, then perform the PCM idle learn procedure (see page 11-302).■

NO—Repair open in the wire between the condenser fan relay and the PCM.■

13. Disconnect the jumper wire.
14. Reinstall the A/C condenser fan relay.
15. Disconnect the A/C condenser fan 2P connector.
16. Turn the ignition switch ON (II), then turn the A/C and blower fan switches ON.
17. Measure the voltage between the No. 2 terminal of the A/C condenser fan 2P connector and body ground.

A/C CONDENSER FAN 2P CONNECTOR

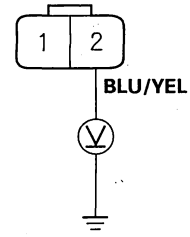

Wire side of female terminals

Is there battery voltage?

YES—Go to step 18.

NO—Repair open in the wire between the A/C condenser fan relay and the A/C condenser fan.■

18. Turn the A/C and fan switches OFF, then turn the ignition switch OFF.
19. Reconnect the A/C condenser fan 2P connector.
20. Connect the No. 1 terminal of the A/C condenser fan 2P connector to body ground with jumper wire.

A/C CONDENSER FAN 2P CONNECTOR

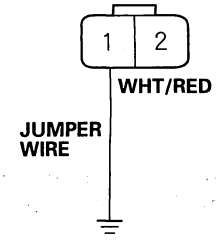

Wire side of female terminals

21. Turn the ignition switch ON (II), then turn the A/C and fan switches ON.

Does the A/C condenser fan run?

YES—Go to step 22.

NO—Replace the A/C condenser fan motor.■

(cont'd)

Protected by AR

Radiator and A/C Condenser Fan Low Speed Circuit Troubleshooting (cont'd)

22. Turn the A/C and fan switches OFF, then turn the ignition switch OFF.

23. Disconnect the jumper wire.

24. Remove the fan control relay from the multi-relay box, and test it (see page 22-51).

Is the relay OK?

YES—Go to step 25.

NO—Replace the fan control relay. ■

25. Turn the ignition switch ON (II), then turn the A/C and fan switches ON.

26. Measure the voltage between the No. 1 terminal of the fan control relay 5P socket and body ground.

FAN CONTROL RELAY 5P SOCKET

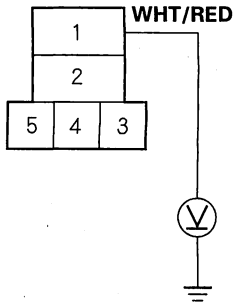

Is there battery voltage?

YES—Go to step 27.

NO—Repair open in the wire between the A/C condenser fan and the fan control relay. ■

27. Turn the A/C and fan switches OFF, then turn the ignition switch OFF.

28. Disconnect the radiator fan 2P connector.

29. Check for continuity between the No. 4 terminal of the fan control relay 5P socket and the No. 2 terminal of the radiator fan 2P connector.

FAN CONTROL RELAY 5P SOCKET

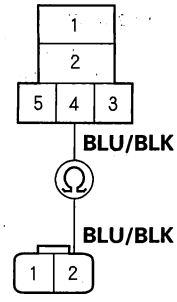

RADIATOR FAN 2P CONNECTOR
Wire side of female terminals

Is there continuity?

YES—Go to step 30.

NO—Repair open in the wire between the fan control relay and the radiator fan. ■

30. Check for continuity between the No. 1 terminal of the radiator fan 2P connector and body ground.

RADIATOR FAN 2P CONNECTOR

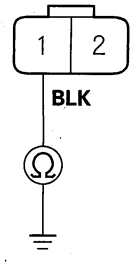

Wire side of female terminals

Is there continuity?

YES—Replace the radiator fan motor. ■

NO—Check for an open in the wire between the radiator fan and body ground. If the wire is OK, check for poor ground at G301. ■

BACK

Protected by AR

31. Turn the ignition switch OFF.

32. Remove A/C diode A from the under-hood fuse/relay box.

33. Check for current flow in both directions between the No. 1 and No. 2 terminals of A/C diode A.

A/C DIODE A

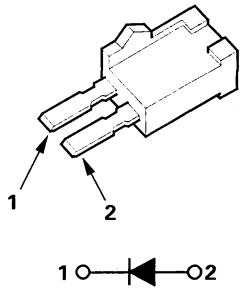

Is there current flow in only one direction?

YES—Go to step 34.

NO—Replace A/C diode A. ■

34. Turn the ignition switch ON (II).

35. Measure the voltage between the No. 2 terminal of A/C diode A 2P socket and body ground.

A/C DIODE A 2P SOCKET

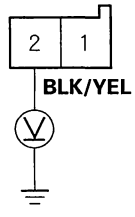

Is there battery voltage?

YES—Replace the under-hood fuse/relay box. ■

NO—Repair open in the wire between the No. 30 fuse in the under-dash fuse/relay box and A/C diode A. ■

A/C Condenser Fan High Speed Circuit Troubleshooting

NOTE:
- Do not use this troubleshooting procedure if the radiator fan and/or the A/C compressor is inoperative. Refer to the symptom troubleshooting index.
- Before performing symptom troubleshooting, check for powertrain DTCs (see page 11-3).

1. Check the No. 30 (7.5A) fuse in the under-dash fuse/relay box.

   Is the fuse OK?

   YES—Go to step 2.

   NO—Replace the fuse, and recheck. ■

2. Remove the fan control relay from the multi-relay box, and test it (see page 22-51).

   Is the relay OK?

   YES—Go to step 3.

   NO—Replace the fan control relay. ■

3. Turn the ignition switch ON (II).

4. Measure the voltage between the No. 5 terminal of the fan control relay 5P socket and body ground.

FAN CONTROL RELAY 5P SOCKET

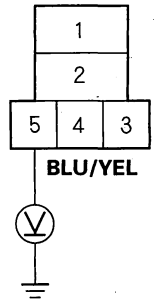

Is there battery voltage?

YES—Go to step 5.

NO—Go to step 9.

5. Turn the ignition switch OFF.

(cont'd)

Protected by AR

A/C Condenser Fan High Speed Circuit Troubleshooting (cont'd)

6. Check for continuity between the No. 2 terminal of the fan control relay 5P socket and body ground.

FAN CONTROL RELAY 5P SOCKET

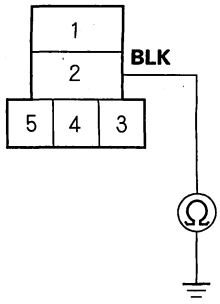

Is there continuity?

YES—Go to step 7.

NO—Check for an open in the wire between the fan control relay and body ground. If the wire is OK, check for poor ground at G301.■

7. Remove the radiator fan relay from the under-hood fuse/relay box.

8. Check for continuity between the No. 3 terminal of the fan control relay 5P socket and the No.4 terminal of the radiator fan relay 4P socket.

FAN CONTROL RELAY 5P SOCKET

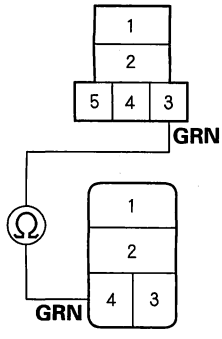

RADIATOR FAN RELAY 4P SOCKET

Is there continuity?

YES—Repair open in the wire between the radiator fan relay and the PCM.■

NO—Repair open in the wire between the fan control relay and the radiator fan relay.■

9. Turn the ignition switch OFF.

10. Remove A/C diode A from the under-hood fuse/relay box.

11. Check for current flow in both directions between the No. 1 and No. 2 terminals of A/C diode A.

A/C DIODE A

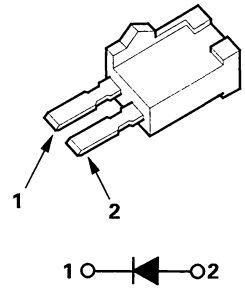

Is there current flow in only one direction?

YES—Go to step 12.

NO—Replace A/C diode A.■

12. Turn the ignition switch ON (II).

13. Measure the voltage between the No. 2 terminal of A/C diode A 2P socket and body ground.

A/C DIODE A 2P SOCKET

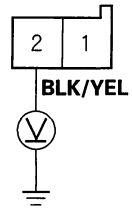

Is there battery voltage?

YES—Repair open in the wire between A/C diode A and the fan control relay.■

NO—Repair open in the wire between the No. 30 fuse in the under-dash fuse/relay box and A/C diode A.■

BACK

Protected by AR

Radiator and A/C Condenser Fan High Speed Circuit Troubleshooting

NOTE:
- Do not use this troubleshooting procedure if only one fan is inoperative, or if the A/C compressor is inoperative. Refer to the symptom troubleshooting index.
- Before performing symptom troubleshooting, check for powertrain DTCs (see page 11-3).

1. Disconnect the A/C pressure switch 4P connector.

2. Check for continuity between the No. 2 terminal of the A/C pressure switch 4P connector and body ground.

A/C PRESSURE SWITCH 4P CONNECTOR

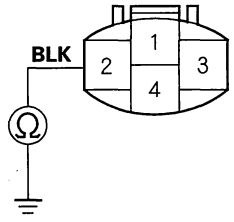

Wire side of female terminals

Is there continuity?

YES—Go to step 3.

NO—Check for an open in the wire between the A/C pressure switch and body ground. If the wire is OK, check for poor ground at G201.■

3. Using the backprobe set, check for continuity between the No. 14 terminal of PCM connector E (31P) and the No. 3 terminal of the A/C pressure switch 4P connector.

PCM CONNECTOR E (31P)
Wire side of female terminals

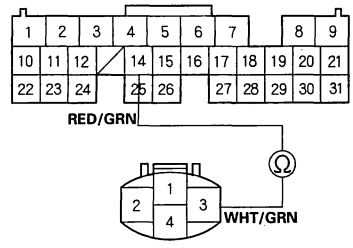

A/C PRESSURE SWITCH 4P CONNECTOR
Wire side of female terminals

Is there continuity?

YES—Go to step 4.

NO—Repair open in the wire between the PCM and the A/C pressure switch.■

4. Turn the ignition switch ON (II).

5. Turn the A/C and blower fan switches on.

6. Connect the No. 2 and No. 3 terminals of the A/C pressure switch 4P connector with a jumper wire.

A/C PRESSURE SWITCH 4P CONNECTOR

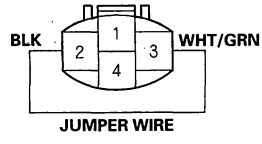

Wire side of female terminals

Does the radiator and A/C condenser fans run high speed?

YES—Replace the A/C pressure switch.■

NO—Check for loose wires or poor connections at PCM connector E (31P) and at the A/C pressure switch 4P connector. If the connections are good, substitute a known-good PCM, and recheck. If the symptom/indication goes away, replace the original PCM, the perform the PCM idle learn procedure (see page 11-302).■

Protected by AR

A/C Compressor Clutch Circuit Troubleshooting

NOTE:
- Do not use this troubleshooting procedure if the fans are also inoperative with the A/C on. Refer to the symptom troubleshooting index.
- Before performing symptom troubleshooting, check for powertrain DTCs (see page 11-3).

1. Check the No. 12 (7.5A) fuse in the under-hood fuse/relay box, and the No. 30 (7.5A) fuse in the under-dash fuse/relay box.

   Are the fuses OK?

   YES—Go to step 2.

   NO—Replace the fuse(s), and recheck. ■

2. Check the engine coolant temperature, throttle position, and idle speed (use the HDS PGM-FI data list if possible).

ECT Sensor	169—194°F (76—90°C)
TP Sensor	About 0.5 V
RPM	MT: More than 750 AT: More than 730

   Is the coolant temperature, throttle position, or idle speed OK?

   YES—Go to step 3.

   NO—Troubleshoot and repair the cause of the high engine coolant temperature, low idle, or excessively high throttle position sensor reading. ■

3. Remove the A/C compressor clutch relay from the under-hood fuse/relay box, and test it, refer to the 2003-2006 Accord service Manual (see page 22-79).

   Is the relay OK?

   YES—Go to step 4.

   NO—Replace the A/C compressor clutch relay. ■

4. Measure the voltage between the No. 1 terminal of the A/C compressor clutch relay 4P socket and body ground.

   A/C COMPRESSOR CLUTCH RELAY 4P SOCKET

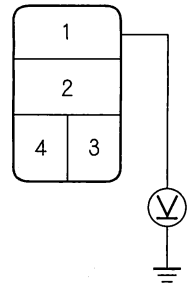

   Is there battery voltage?

   YES—Go to step 5.

   NO—Replace the under-hood fuse/relay box. ■

5. Connect the No. 1 and No. 2 terminals of the A/C compressor clutch relay 4P socket with a jumper wire.

   A/C COMPRESSOR CLUTCH RELAY 4P SOCKET

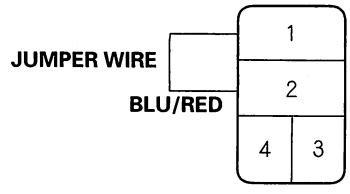

   Does the A/C compressor clutch click?

   YES—Go to step 6.

   NO—Go to step 14.

BACK

Protected by AR

6. Disconnect the jumper wire.

7. Turn the ignition switch ON (II).

8. Measure the voltage between the No. 4 terminal of the A/C compressor clutch relay 4P socket and body ground.

A/C COMPRESSOR CLUTCH RELAY 4P SOCKET

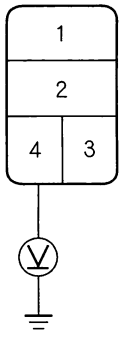

Is there battery voltage?

YES—Go to step 9.

NO—Repair open in the wire between the No. 30 fuse in the under-dash fuse/relay box and the A/C compressor clutch relay. ■

9. Turn the ignition switch OFF.

10. Reinstall the A/C compressor clutch relay.

11. Make sure the A/C switch is OFF.

12. Turn the ignition switch ON (II).

13. Using the backprobe set, measure the voltage between the No. 27 terminal of PCM connector A (31P) and body ground with the PCM connectors connected.

PCM CONNECTOR A (31P)

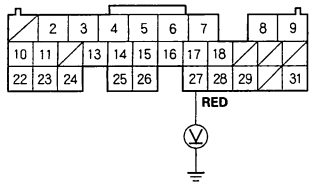

Wire side of female terminals

Is there battery voltage?

YES—Check for loose wires or poor connections at No. 27 terminal of PCM connector A (31P). If the connections are good, substitute a known-good PCM, and recheck. If the symptom/indication goes away, replace the original PCM then perform the PCM idle learn procedure (see page 11-302). ■

NO—Repair open in the wire between the A/C compressor clutch relay and the PCM. ■

14. Disconnect the jumper wire.

15. Disconnect the A/C compressor clutch 1P connector.

16. Check for continuity between the No. 2 terminal of the A/C compressor clutch relay 4P socket and the No. 1 terminal of the A/C compressor clutch 1P connector.

A/C COMPRESSOR CLUTCH RELAY 4P SOCKET

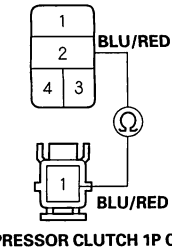

A/C COMPRESSOR CLUTCH 1P CONNECTOR
Terminal side of male terminals

Is there continuity?

YES—Check the A/C compressor clutch clearance, and the A/C compressor clutch field coil (see page 21-43). Repair as needed. ■

NO—Repair open in the wire between the A/C compressor clutch relay and the A/C compressor clutch. ■

Protected by AR

A/C Pressure Switch Circuit Troubleshooting

NOTE:
- Do not use this troubleshooting procedure if any of the following items are operative; A/C condenser fan, radiator fan, A/C compressor, or if the heater is inoperative. Refer to the symptom troubleshooting index.
- Before performing symptom troubleshooting, check for powertrain DTCs (see page 11-3).

1. Check for body DTCs in test mode A of the MICS, refer to the 2003-2006 Accord Service Manual (see page 22-91).

   Are there any DTCs indicated?

   YES—Do the appropriate troubleshooting for the DTC indicated. ■

   NO—Go to step 2.

2. Disconnect the A/C pressure switch 4P connector.

3. Turn the ignition switch ON (II).

4. Measure the voltage between the No. 1 terminal of the A/C pressure switch 4P connector and body ground.

A/C PRESSURE SWITCH 4P CONNECTOR

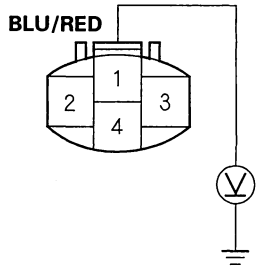

Wire side of female terminals

Is there 5 V or more?

YES—Go to step 5.

NO—Repair open in the wire between the relay module and the A/C pressure switch. If the wire is OK, replace the relay module. ■

5. Turn the ignition switch OFF.

6. Check for continuity between the No. 1 and No. 4 terminals of the A/C pressure switch.

A/C PRESSURE SWITCH

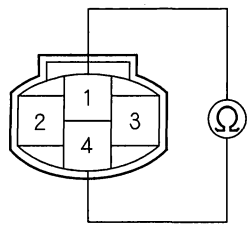

Is there continuity?

YES—Go to step 7.

NO—Go to step 16.

7. Reconnect the A/C pressure switch 4P connector.

8. Disconnect audio-HVAC display panel 22P connector.

9. Turn the ignition switch ON (II).

10. Measure the voltage between the No. 1 terminal of audio-HVAC display panel 22P connector and body ground.

AUDIO-HVAC DISPLAY PANEL 22P CONNECTOR

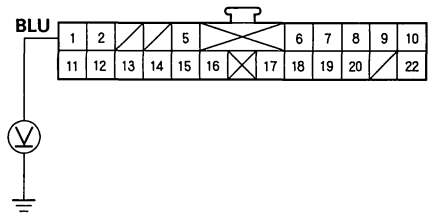

Wire side of female terminals

Is there 5 V or more?

YES—Go to step 11.

NO—Repair open in the wire between the audio-HVAC display panel and the A/C pressure switch. ■

BACK

Protected by AR

11. Turn the ignition switch OFF.

12. Measure the resistance between the No. 9 and No. 10 terminals of the audio-HVAC display panel 22P connector.

AUDIO-HVAC DISPLAY PANEL 22P CONNECTOR

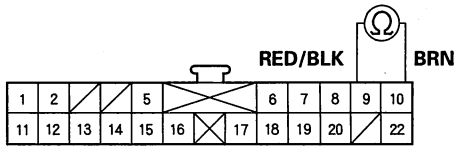

Wire side of female terminals

Is the resistance less than 24 kΩ ?

YES—Go to step 13.

NO—Repair cause of high resistance in the evaporator temperature circuit. ■

13. Reconnect the audio-HVAC display panel 22P connector.

14. Turn the ignition switch ON (II).

15. Check the blower motor operation at several speeds.

Does the blower motor operate at all speeds?

YES—Check for loose wires or poor connections at the audio-HVAC display panel 22P connector and at the A/C pressure switch 4P connector. If the connections are good, substitute a known-good audio-HVAC display panel, and recheck. If the symptom/indication goes away, replace the original front panel assembly. ■

NO—Repair the problem in the blower motor circuit. ■

16. Check for proper A/C system pressure.

Is the pressure within specifications?

YES—Replace the A/C pressure switch. ■

NO—Repair the A/C pressure problem. ■

Protected by AR

Air Mix Control Motor Replacement

4-door

1. Remove the driver's dashboard lower cover, then remove the driver's dashboard under cover, refer to the 2003-2006 Accord Service Manual (see page 20-130).
2. Disconnect the 7P connector (A) from the air mix control motor (B). Remove the self-tapping screws and the air mix control motor from the heater unit.

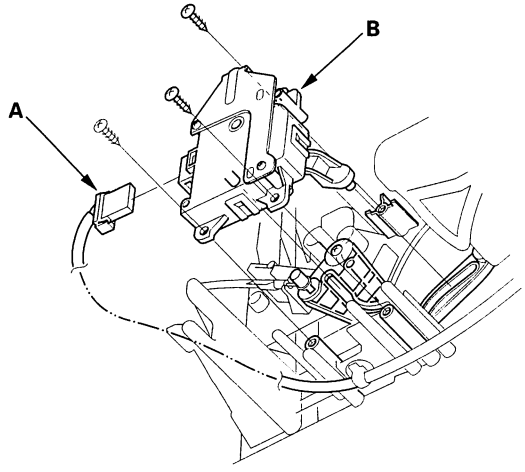

3. Install the motor in the reverse order of removal. Make sure the pin on the motor is properly engaged with the linkage. After installation, make sure the motor runs smoothly.

2-door

1. Remove the driver's dashboard lower cover, then remove the driver's dashboard under cover, refer to the 2003-2006 Accord Service Manual (see page 20-130).
2. Disconnect the 5P connector (A) from the air mix control motor (B). Remove wire harness clip (C), the self-tapping screws and the air mix control motor from the heater unit.

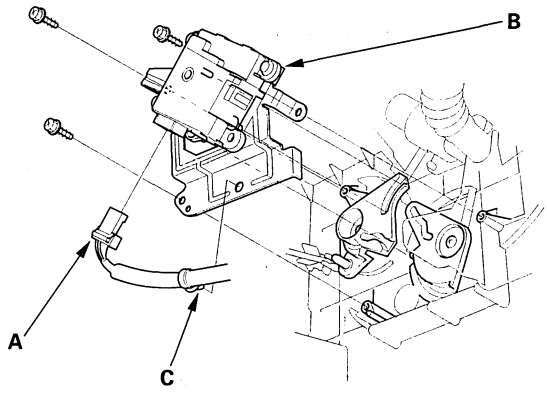

3. Install the motor in the reverse order of removal. Make sure the pin on the motor is properly engaged with the linkage. After installation, make sure the motor runs smoothly.

BACK

Protected by AR

Mode Control Motor Replacement

4-door

1. Open the glove box. Remove the damper from the glove box, then release the glove box stops and let the glove box hang down, refer to the 2003-2006 Accord Service Manual (see page 20-132).

2. Remove the relays from the bracket.

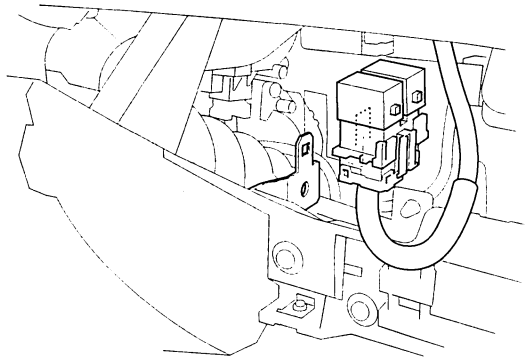

3. Disconnect the 7P connector (A) from the mode control motor (B). Remove the self-tapping screws and the mode control motor from the heater unit.

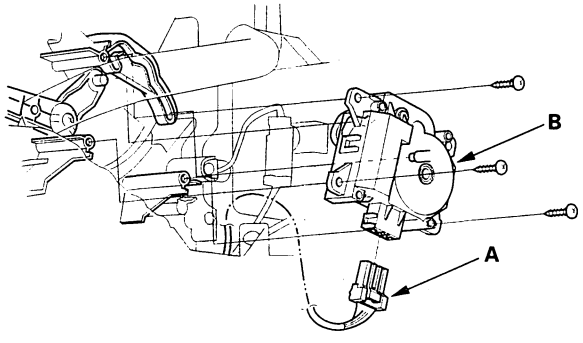

4. Install the motor in the reverse order of removal. After installation, make sure the motor runs smoothly.

2-door

1. Open the glove box. Remove the damper from the glove box, then release the glove box stops and let the glove box hang down, refer to the 2003-2006 Accord Service Manual (see page 20-132).

2. Remove the relays from the bracket.

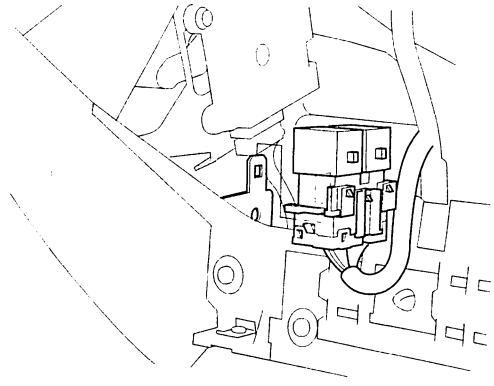

3. Disconnect the 10P connector (A) from the mode control motor (B). Remove the self-tapping screws and the mode control motor from the heater unit.

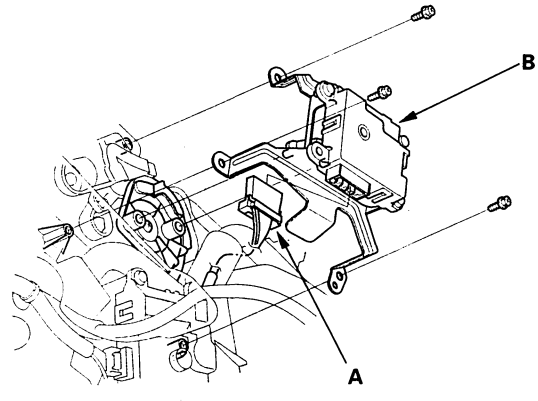

4. Install the motor in the reverse order of removal. After installation, make sure the motor runs smoothly.

Protected by AR

Recirculation Control Motor Replacement

4-door

1. Open the glove box. Remove the damper from the glove box, then release the glove box stops and let the glove box hang down, refer to the 2003-2006 Accord Service Manual (see page 20-132).
2. Remove the relays from the bracket.

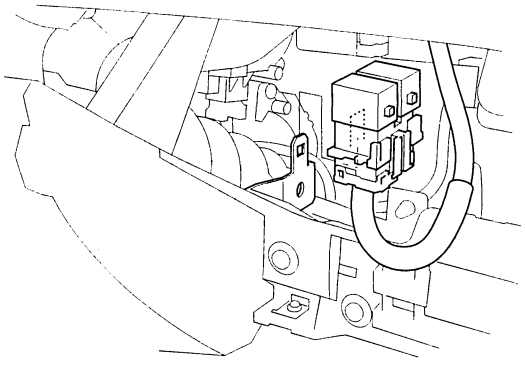

3. Disconnect the 7P connector (A) from the recirculation control motor (B). Remove the self-tapping screws and the recirculation control motor from the blower unit.

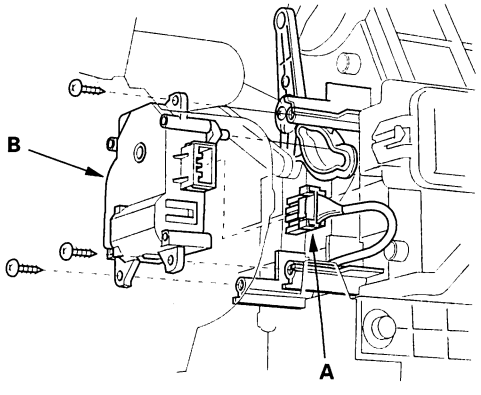

4. Install the motor in the reverse order of removal. Make sure the pin on the motor is properly engaged with the linkage. After installation, make sure the motor runs smoothly.

2-door

1. Open the glove box. Remove the damper from the glove box, then release the glove box stops and let the glove box hang down, refer to the 2003-2006 Accord Service Manual (see page 20-132).
2. Remove the relays from the bracket.

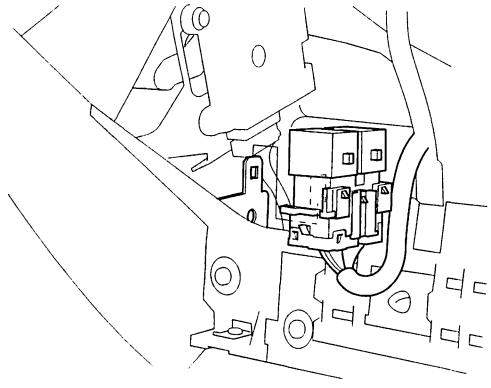

3. Disconnect the 5P connector (A) from the recirculation control motor (B). Remove the self-tapping screws and the recirculation control motor from the blower unit.

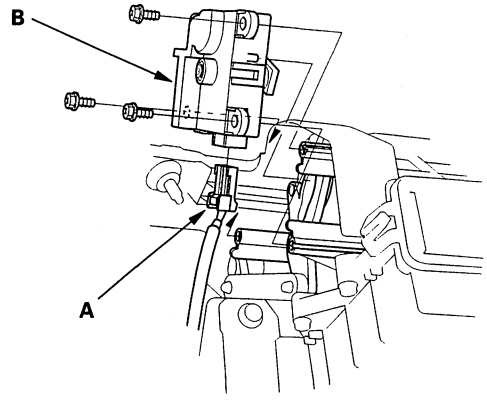

4. Install the motor in the reverse order of removal. Make sure the pin on the motor is properly engaged with the linkage. After installation, make sure the motor runs smoothly.

BACK

Protected by AR

Evaporator Temperature Sensor Replacement

4-door

1. Open the glove box. Remove the damper from the glove box, then release the glove box stops and let the glove box hang down, refer to the 2003-2006 Accord Service Manual (see page 20-132).

2. Remove the relays from the bracket.

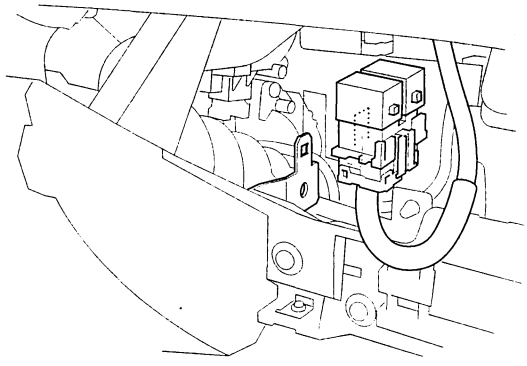

3. Disconnect the 2P connector (A) from the evaporator temperature sensor (B), then remove the connector clip (C). Remove the self-tapping screw, and carefully pull out the evaporator temperature sensor.

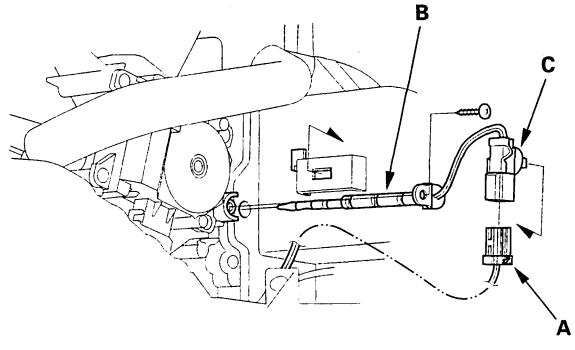

4. Install the sensor in the reverse order of removal.

2-door

1. Open the glove box. Remove the damper from the glove box, then release the glove box stops and let the glove box hang down, refer to the 2003-2006 Accord Service Manual (see page 20-132).

2. Remove the relays from the bracket.

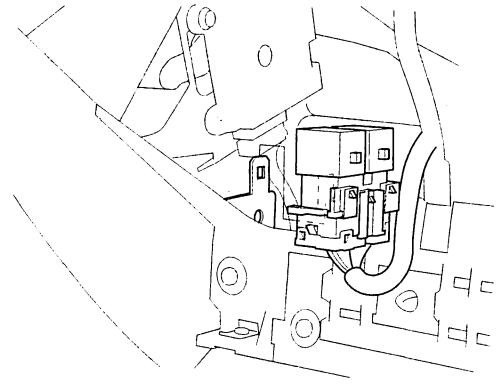

3. Disconnect the 2P connector (A) from the evaporator temperature sensor (B), then remove the connector clip (C). Remove the self-tapping screw, and carefully pull out the evaporator temperature sensor.

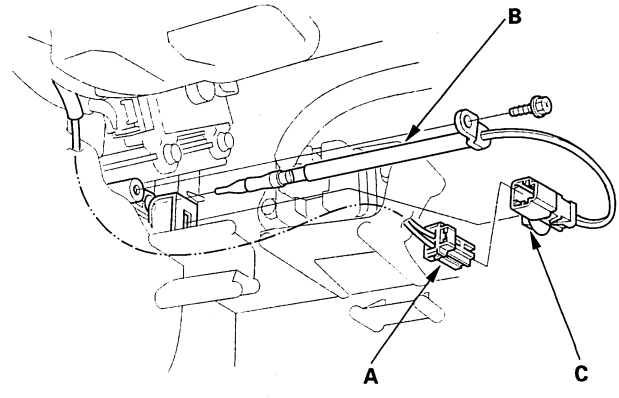

4. Install the sensor in the reverse order of removal.

Protected by AR

Blower Unit Removal and Installation

4-door

1. Remove the glove box, refer to the 2003-2006 Accord Service Manual (see page 20-132), passenger's dashboard lower cover, refer to the 2003-2006 Accord Service Manual (see page 20-130) and the passenger's kick panel, refer to the 2003-2006 Accord Service Manual (see page 20-90).

2. Remove the connector clips (A), the wire harness clip (B), and bolt. Cut the plastic cross brace (C) in the glove box opening with diagonal cutters in the area shown. Retain these parts to be reinstalled later.

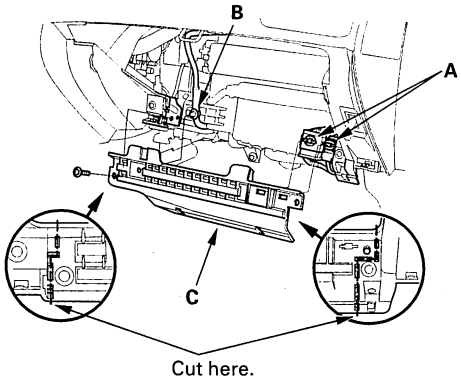

3. Disconnect the connectors (A) from the blower motor and the recirculation control motor, then remove the wire harness clips (B) and the connector clip (C). Remove the mounting nuts, the mounting bolts and the blower unit (D).

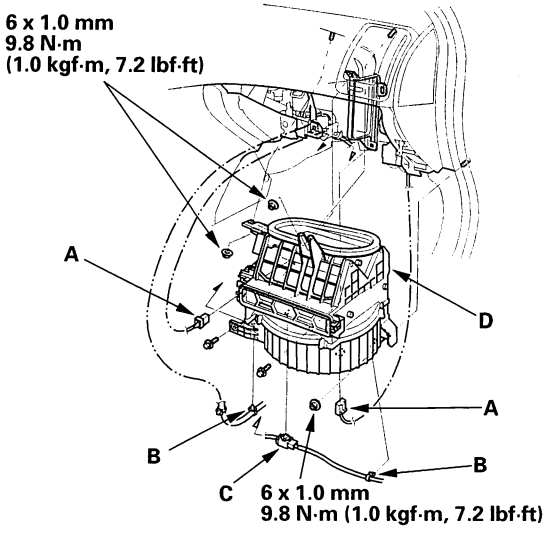

4. Install the unit in the reverse order of removal. Make sure that there is no air leakage.

2-door

1. Remove the glove box, refer to the 2003-2006 Accord Service Manual (see page 20-132), passenger's dashboard lower cover, refer to the 2003-2006 Accord Service Manual (see page 20-130) and the passenger's kick panel, refer to the 2003-2006 Accord Service Manual (see page 20-90).

2. Remove the connector clips (A), the wire harness clip (B), and bolt. Cut the plastic cross brace (C) in the glove box opening with diagonal cutters in the area shown. Retain these parts to be reinstalled later.

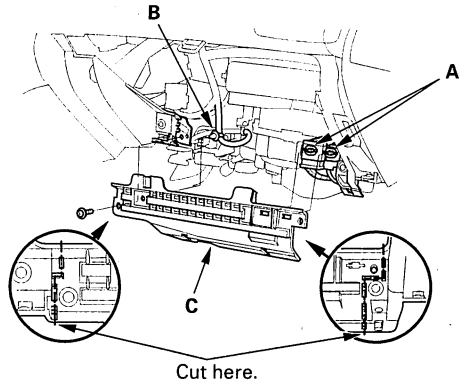

3. Disconnect the connectors (A) from the blower motor and the recirculation control motor, then remove the wire harness clip (B) and the connector clip (C). Remove the mounting nuts, the mounting bolts and the blower unit (D).

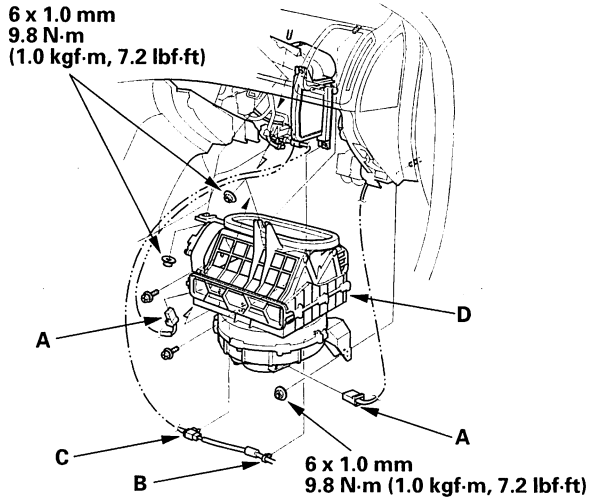

4. Install the unit in the reverse order of removal. Make sure that there is no air leakage.

BACK

Protected by AR

Evaporator Core Replacement

4-door

1. Recover the refrigerant with a recovery/recycling/charging station, refer to the 2003-2006 Accord Service Manual (see page 21-65).

2. Remove the bolt, then disconnect the suction line (A) and the receiver line (B) from the evaporator core.

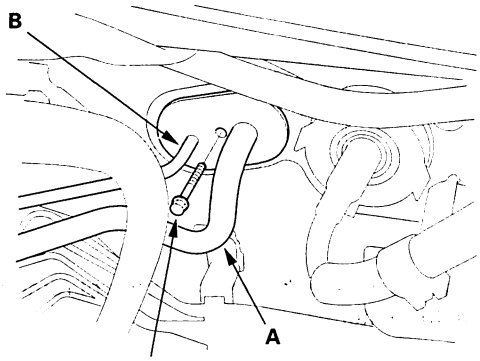

3. Remove the blower unit (see page 21-36).

4. Remove the evaporator temperature sensor (see page 21-35).

5. Disconnect the connector (A) from the power transistor, then remove the wire harness clip (B), the connector clip (C), the self-tapping screws, and the expansion valve cover (D).

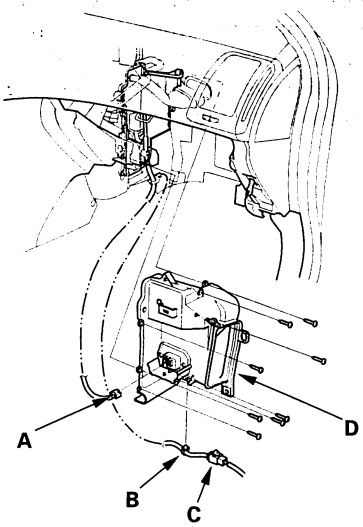

6. Carefully pull out the evaporator core (A) and the plate (B) without bending the pipes.

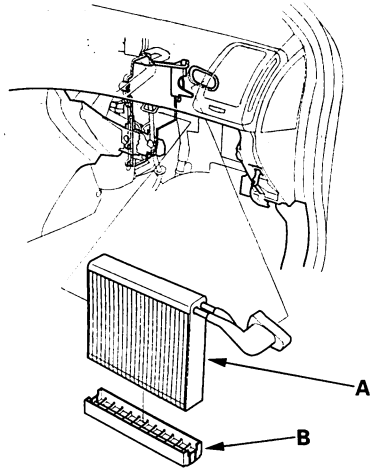

7. Install the core in the reverse order of removal, and note these items:

- If you're installing a new evaporator core, add refrigerant oil (DENSO ND-OIL 8), refer to the 2003-2006 Accord Service Manual (see page 21-8).
- Replace the O-rings with new ones at each fitting, and apply a thin coat of refrigerant oil before installing them. Be sure to use the correct O-rings for HFC-134a (R-134a) to avoid leakage.
- Immediately after using the oil, reinstall the cap on the container, and seal it to avoid moisture absorption.
- Do not spill the refrigerant oil on the vehicle; it may damage the paint; if the refrigerant oil contacts the paint, wash it off immediately.
- Make sure that there is no air leakage.
- Charge the system, refer to the 2003-2006 Accord Service Manual (see page 21-67).

Protected by AR

Evaporator Core Replacement (cont'd)

2-door

1. Recover the refrigerant with a recovery/recycling/charging station, refer to the 2003-2006 Accord Service Manual (see page 21-65).

2. Remove the bolt, then disconnect the suction line (A) and the receiver line (B) from the evaporator core.

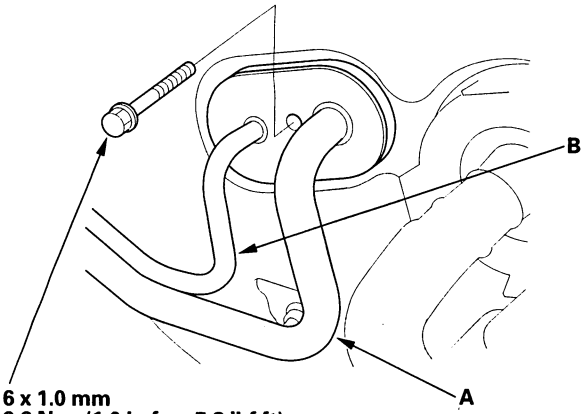

6 x 1.0 mm
9.8 N·m (1.0 kgf·m, 7.2 lbf·ft)

3. Remove the blower unit (see page 21-36).

4. Remove the evaporator temperature sensor (see page 21-35).

5. Disconnect the connector (A) from the power transistor, then remove the wire harness clip (B), the self-tapping screws, and the expansion valve cover (C).

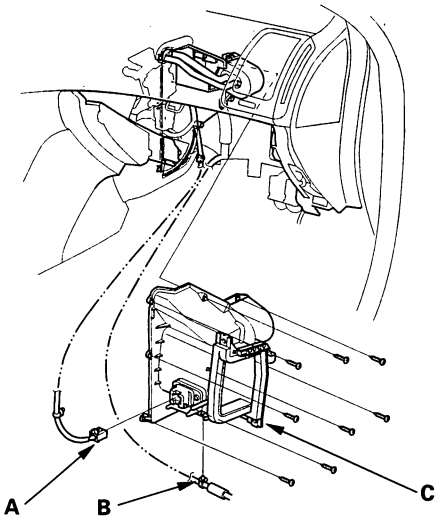

6. Carefully pull out the evaporator core without bending the pipes.

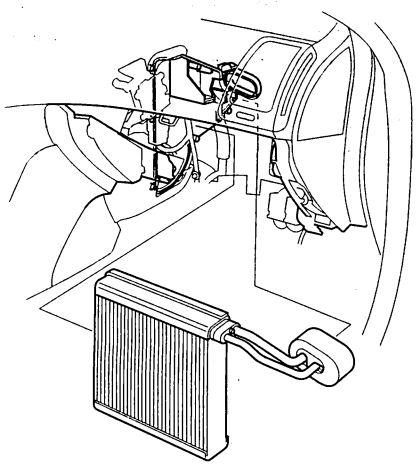

7. Install the core in the reverse order of removal, and note these items:

- If you're installing a new evaporator core, add refrigerant oil (DENSO ND-OIL 8), refer to the 2003-2006 Accord Service Manual (see page 21-8).
- Replace the O-rings with new ones at each fitting, and apply a thin coat of refrigerant oil before installing them. Be sure to use the correct O-rings for HFC-134a (R-134a) to avoid leakage.
- Immediately after using the oil, reinstall the cap on the container, and seal it to avoid moisture absorption.
- Do not spill the refrigerant oil on the vehicle; it may damage the paint; if the refrigerant oil contacts the paint, wash it off immediately.
- Make sure that there is no air leakage.
- Charge the system, refer to the 2003-2006 Accord Service Manual (see page 21-67).

BACK

Protected by AR

Heater Unit/Core Replacement

SRS components are located in this area. Review the SRS component locations, refer to the 2003-2006 Accord Service Manual (see page 23-17) and the precautions and procedures, refer to the 2003-2006 Accord Service Manual (see page 23-19) before performing repairs of service.

1. Make sure you have the anti-theft code for the radio and the navigation system, then write down the frequencies for the radio's preset buttons.

2. Disconnect the negative cable from the battery.

3. With air conditioning; disconnect the suction and receiver lines from the evaporator core.

   - 4-door (see page 21-37)
   - 2-door (see page 21-38)

4. From under the hood, open the cable clamp (A), then disconnect the heater valve cable (B) from the heater valve arm (C). Turn the heater valve arm to the fully opened position as shown.

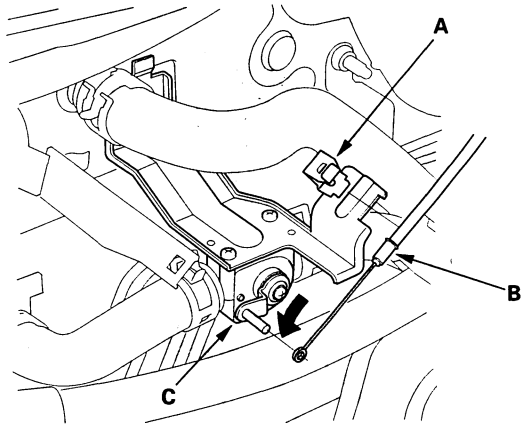

5. When the engine is cool, drain the engine coolant from the radiator, refer to the 2003-2006 Accord Service Manual (see page 10-6).

6. Slide the hose clamps (A) back, then disconnect the inlet heater hose (B) and the outlet heater hose (C) from the heater unit. Engine coolant will run out when the hoses are disconnected; drain it into a clean drip pan. Be sure not to let coolant spill on the electrical parts or the painted surfaces. If any coolant spills, rinse it off immediately.

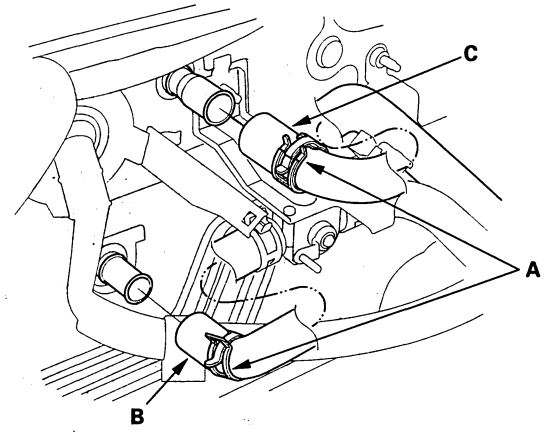

7. Remove the mounting nut from the heater unit. Take care not to damage or bend the fuel lines and the brake lines, etc..

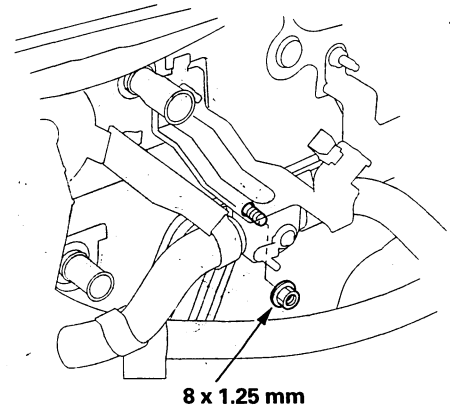

8. Remove the dashboard, refer to the 2003-2006 Accord Service Manual (see page 20-136).

(cont'd)

Protected by AR

Heater Unit/Core Replacement (cont'd)

9. Disconnect the connectors (A) from the air mix control motor, the evaporator temperature sensor, the power transistor, and the recirculation control motor, then remove the wire harness clips (B), the connector clips (C) and the wire harness (D). Remove the heater ducts (E), then remove the mounting nuts and the blower-heater unit (F).

4-door

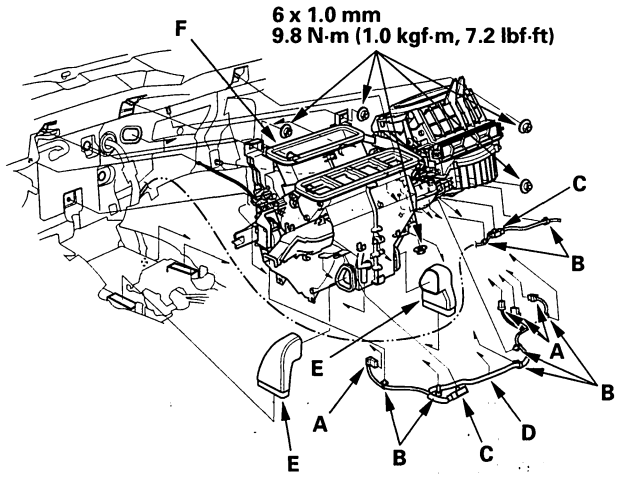

2-door

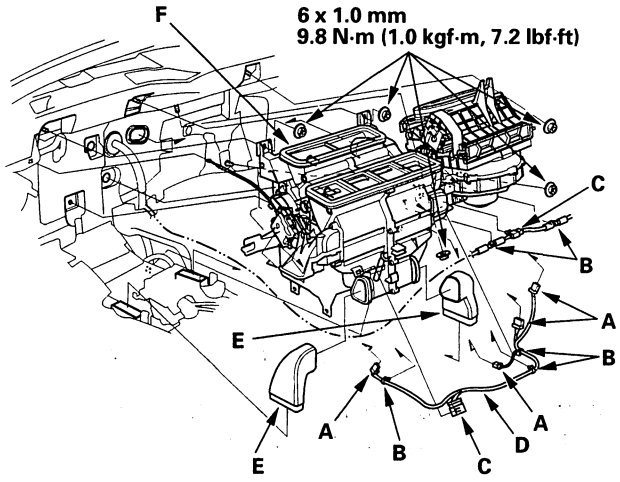

10. Remove the self-tapping screws, the evaporator temperature sensor (C) and the joint duct A, then remove the self-tapping screws and the joint duct B (4-door). Remove the self-tapping screws, then remove the passenger's heater outlet (D), and the heater core cover (E). Remove the self-tapping screws and the mode control motor (F) (2-door). Remove the self-tapping screws, the heater pipe brackets (G), the grommets (H) and carefully pull out the heater core (I) so you don't bend the inlet outlet pipes.

4-door

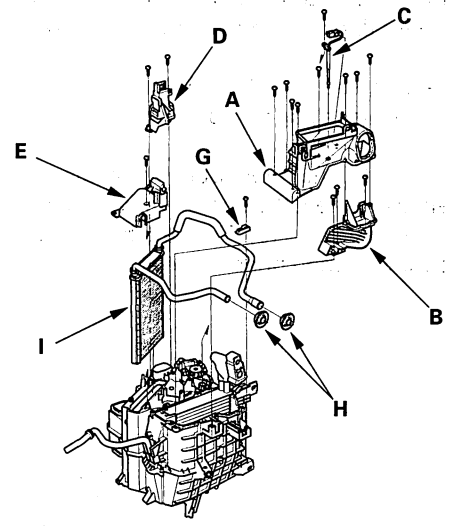

2-door

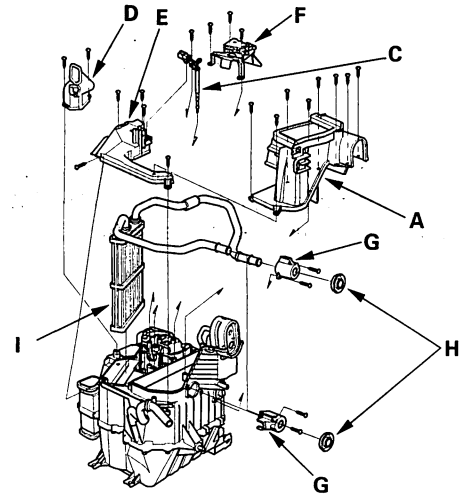

BACK

Protected by AR

11. Install the heater core, and the evaporator core in the reverse order of removal.

12. Install the heater unit in the reverse order of removal, and note these items:

    - Do not interchange the inlet and outlet heater hoses, and install the hose clamps securely.
    - Refill the cooling system with engine coolant, refer to the 2003-2006 Accord Service Manual (see page 10-6).
    - Adjust the heater valve cable, refer to the 2003-2006 Accord Service Manual (see page 21-56).
    - Make sure that there is no coolant leakage.
    - Make sure that there is no air leakage.
    - Refer to evaporator core replacement (see step 6 on page 21-37).
    - Reset the power window control unit, refer to the 2003-2006 Accord Service Manual (see page 22-232).
    - Enter the anti-theft codes for the radio and the navigation system, then enter the customer's radio station presets.

1. If the A/C compressor is marginally operable, run the engine at idle speed, and let the air conditioning work for a few minutes, then shut the engine off.

2. Make sure you have the anti-theft codes for the radio and the navigation system, then write down the frequencies for the radio's preset buttons.

3. Disconnect the negative cable from the battery.

4. Recover the refrigerant with a recovery/recycling/charging station, refer to the 2003-2006 Accord Service Manual (see page 21-65).

5. Remove the ignition coil cover (see step 1 on page 4-20), and the alternator (see page 4-38).

6. Remove the A/C compressor clutch connector (A) from the A/C condenser fan shroud (B). Disconnect the A/C condenser fan connector (C), then remove the wire harness clip (D) from the A/C condenser fan shroud. Remove the hose (E) from the radiator. Loosen the lower mounting bolt, then remove the upper mounting bolts and the A/C condenser fan shroud. Be careful not to damage the radiator fins when removing the A/C condenser fan shroud.

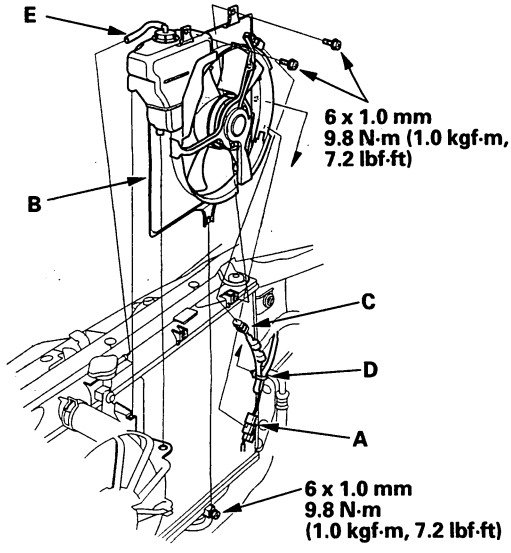

(cont'd)

Protected by AR

A/C Compressor Replacement (cont'd)

7. Disconnect the A/C compressor clutch connector (A). Remove the bolt and the nut, then disconnect the suction line (B) and discharge line (C) from the A/C compressor. Plug or cap the lines immediately after disconnecting them to avoid moisture and dust contamination.

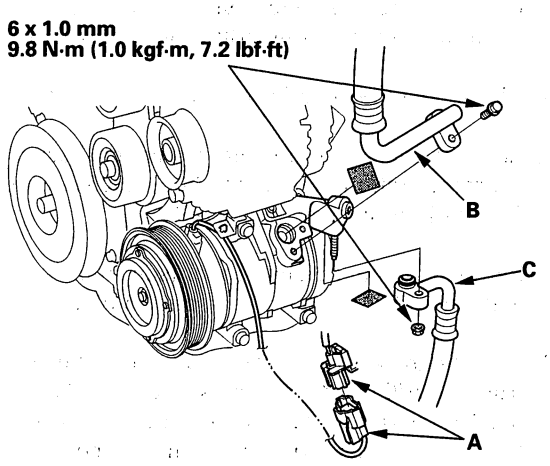

8. Remove the mounting bolts and the A/C compressor. Be careful not to damage the radiator fins when removing the A/C compressor.

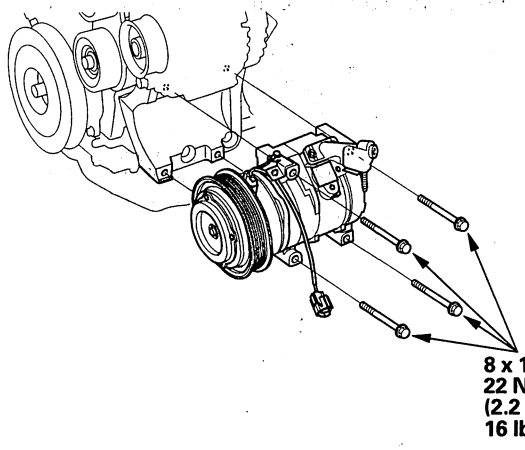

9. Install the A/C compressor in the reverse order of removal, and note these items:

- If you're installing a new A/C compressor, you must calculate the amount of refrigerant oil to be removed from it, refer to the 2003-2006 Accord Service Manual (see page 21-8).
- Replace the O-rings with new ones at each fitting, and apply a thin coat of refrigerant oil before installing them. Be sure to use the correct O-rings for HFC-134a (R-134a) to avoid leakage.
- Use refrigerant oil (DENSO ND-OIL 8) for HFC-134a DENSO piston type A/C compressor only.
- To avoid contamination, do not return the oil to the container once dispensed, and never mix it with other refrigerant oils.
- Immediately after using the oil, reinstall the cap on the container, and seal it to avoid moisture absorption.
- Do not spill the refrigerant oil on the vehicle; it may damage the paint; if the refrigerant oil contacts the paint, wash it off immediately.
- Be careful not to damage the radiator fins when installing the A/C compressor, the alternator or the A/C condenser fan shroud.
- Charge the system, refer to the 2003-2006 Accord Service Manual (see page 21-67).
- Reset the power window control unit, refer to the 2003-2006 Accord Service Manual (see page 22-232).
- Enter the anti-theft codes for the radio and the navigation system, then enter the customer's radio station presets.

BACK

Protected by AR

A/C Compressor Clutch Check

1. Check the pressure plate for discoloration, peeling, or other damage. If there is damage, replace the clutch set (see page 21-44).

2. Check the pulley bearing play and drag by rotating the pulley by hand. Replace the clutch set with a new one if it is noisy or has excessive play/drag (see page 21-44).

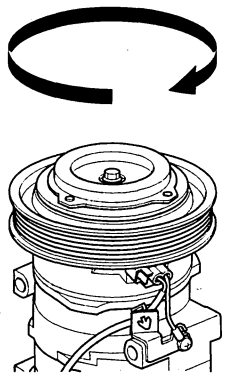

3. Measure the clearance between the rotor pulley (A) and the pressure plate (B) all the way around. If the clearance is not within specified limits, remove the pressure plate (see page 21-44) and add or remove shims as needed to increase or decrease clearance.

   Clearance: 0.35—0.6 mm (0.014—0.024 in.)

   NOTE: The shims are available in three thicknesses: 0.1 mm, 0.3 mm and 0.5 mm.

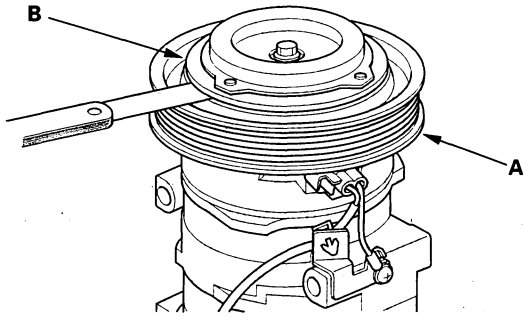

4. Check resistance of the field coil. If resistance is not within specifications, replace the field coil (see page 21-44).

   Field Coil Resistance: 3.9—4.3 Ω at 68°F (20°C)

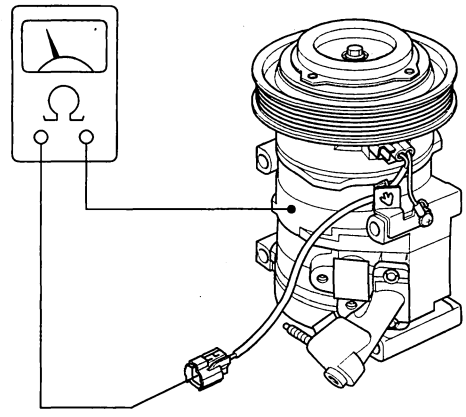

Protected by AR

A/C Compressor Clutch Overhaul

Special Tools Required
A/C clutch holder, Robinair 10204 or Kent-Moore J37872, or Honda Tool and Equipment KMT-J33939, commercially available

1. Remove the center bolt (A) while holding the pressure plate with a commercially available A/C clutch holder (B).

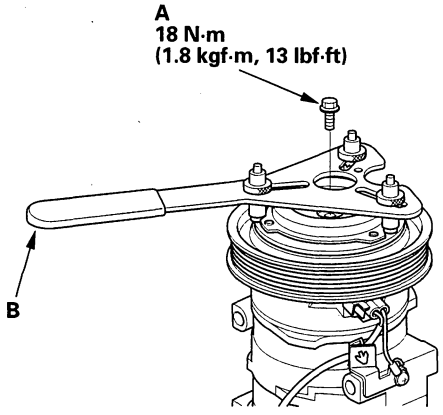

2. Remove the pressure plate (A) and shim(s) (B), taking care not to lose the shim(s). If the clutch needs adjustment, increase or decrease the number and thickness of shims as nesessary, then reinstall the pressure plate, and recheck its clearance (see page 21-43).

   NOTE: The shims are available in three thicknesses: 0.1 mm, 0.3 mm and 0.5 mm.

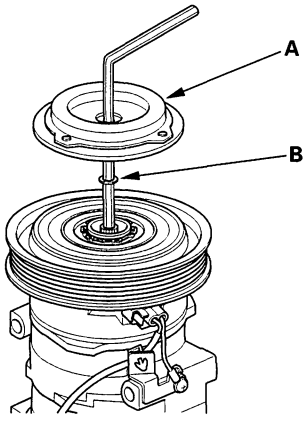

3. If you are replacing the field coil, remove the snap ring (A) with snap ring pliers, then remove the pulley (B). Be careful not to damage the pulley or the A/C compressor.

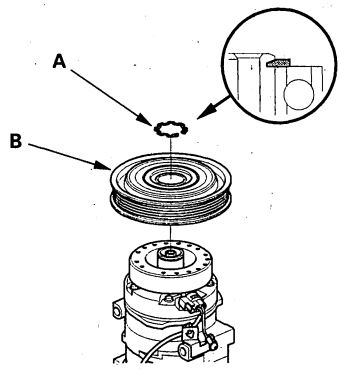

4. Remove the screw from the field coil ground terminal (A), then remove the wire harness (B) and the bracket (C). Disconnect the field coil connector (D). Remove the snap ring (E) with snap ring pliers, then remove the field coil (F). Be careful not to damage the field coil or the A/C compressor.

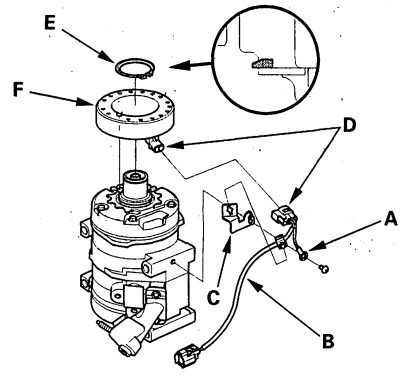

5. Reassemble the clutch in the reverse order of disassembly, and note these items:

   - Install the field coil with the wire side facing down, and align the boss on the field coil with the hole in the A/C compressor.
   - Clean the pulley and A/C compressor sliding surfaces with contact cleaner or other non-petroleum solvent.
   - Install new snap rings, note the installation direction, and make sure they are fully seated in the groove.
   - Make sure that the pulley turns smoothly after it's reassembled.
   - Route and clamp the wires properly or they can be damaged by the pulley.

BACK

Protected by AR

A/C Compressor Relief Valve Replacement

1. Recover the refrigerant with a recovery/recycling/charging station, refer to the 2003-2006 Accord Service Manual (see page 21-65).

2. Remove the relief valve (A) and the O-ring (B). Plug the opening to keep foreign matter from entering the system and the A/C compressor oil from running out.

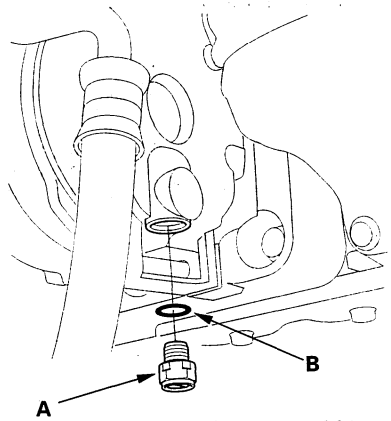

13.2 N·m (1.35 kgf·m, 9.76 lbf·ft)

3. Clean the mating surfaces.

4. Replace the O-ring with a new one at the relief valve, and apply a thin coat of refrigerant oil before installing it.

5. Remove the plug, and install and tighten the relief valve.

6. Charge the system, refer to the 2003-2006 Accord Service Manual (see page 21-67).

Protected by AR

A/C Condenser Replacement

1. Make sure you have the anti-theft code for the radio and the navigation system, then write down the frequencies for the radio's preset buttons.

2. Recover the refrigerant with a recovery/recycling charging station, refer to the 2003-2006 Accord Service Manual (see page 21-65).

3. Remove the front bulkhead cover, refer to the 2003-2006 Accord Service Manual.

   - 2-door (see page 20-184)
   - 4-door (see page 20-185)

4. Remove the battery and the battery box.

5. Remove the clips (A), then remove the air intake cover (B) and the air intake tube or duct (C).

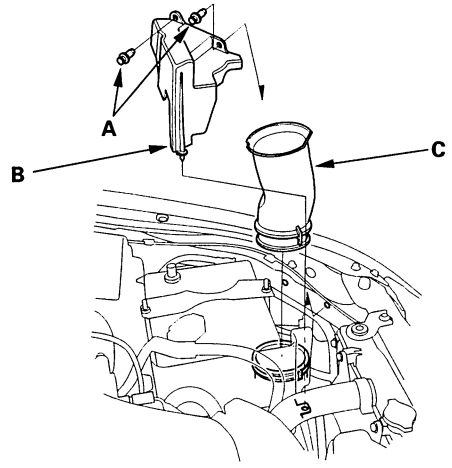

6. Remove the A/C compressor clutch connector (A) from the A/C condenser fan shroud (B). Disconnect the A/C condenser fan connector (C), then remove the wire harness clip (D) from the A/C condenser fan shroud. Remove the hose (E) from the radiator. Loosen the lower mounting bolt, then remove the upper mounting bolts and the A/C condenser fan shroud. Be careful not to damage the radiator fins when removing the A/C condenser fan shroud.

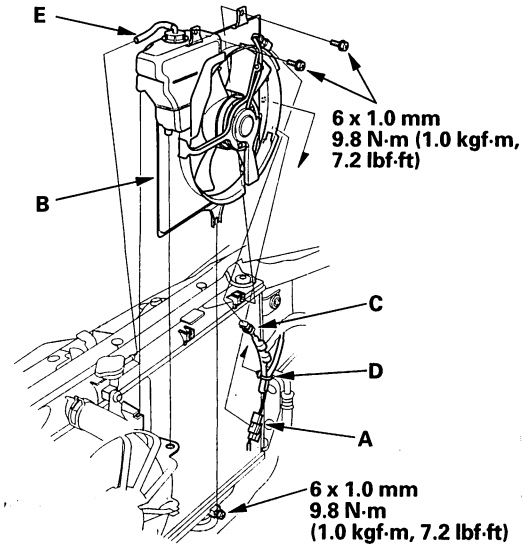

7. Remove the bolts and the radiator upper mount brackets.

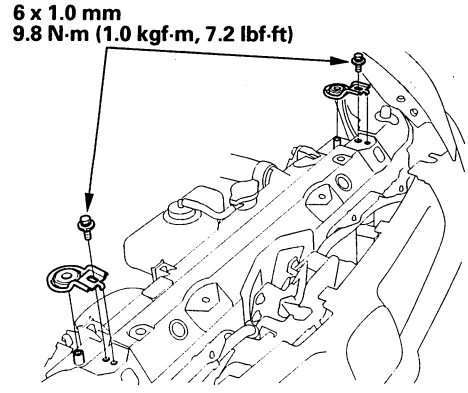

BACK

Protected by AR

8. Remove the bolt, then disconnect the receiver line (A) from the A/C condenser. Disconnect the A/C pressure switch connector (B).

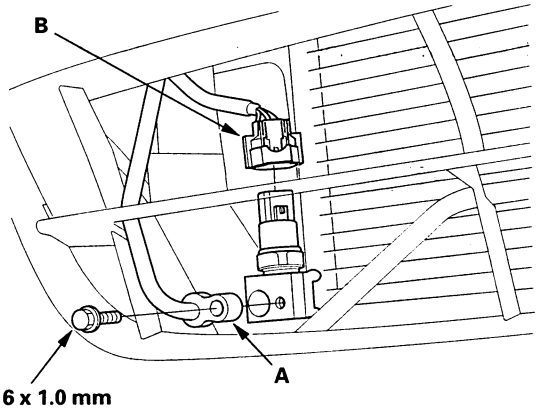

6 x 1.0 mm
9.8 N·m (1.0 kgf·m, 7.2 lbf·ft)

9. Remove the bolts from the A/C condenser.

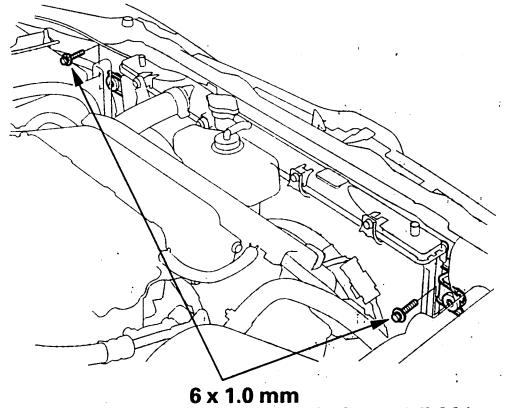

6 x 1.0 mm
9.8 N·m (1.0 kgf·m, 7.2 lbf·ft)

10. Remove the nut, then disconnect the discharge line from the A/C condenser.

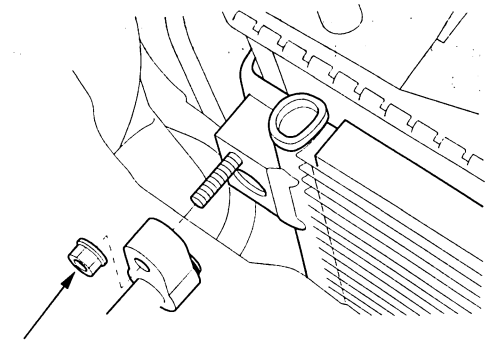

6 x 1.0 mm
9.8 N·m (1.0 kgf·m, 7.2 lbf·ft)

11. Remove the A/C condenser by lifting it up. Be careful not to damage the radiator and A/C condenser fins when removing the A/C condenser.

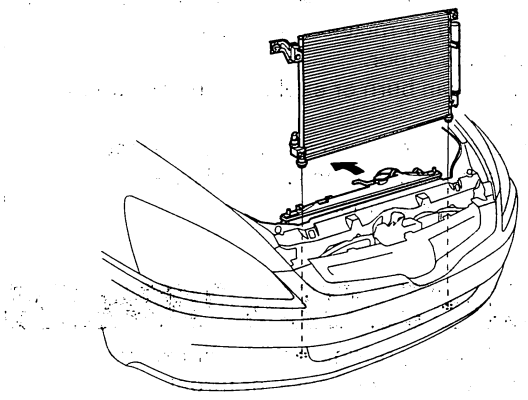

12. Install the A/C condenser in the reverse order of removal, and note these items:

- If you're installing a new A/C condenser, add refrigerant oil (DENSO ND-OIL 8), refer to the 2003-2006 Accord Service Manual (see page 21-8).
- Replace the O-rings with new ones at each fitting, and apply a thin coat of refrigerant oil before installing them. Be sure to use the correct O-rings for HFC-134a (R-134a) to avoid leakage.
- Immediately after using the oil, reinstall the cap on the container, and seal it to avoid moisture absorption.
- Do not spill the refrigerant oil on the vehicle; it may damage the paint; if the refrigerant oil contacts the paint, wash it off immediately.
- Be careful not to damage the radiator or the A/C condenser fins when installing the A/C condenser.
- Charge the system, refer to the 2003-2006 Accord Service Manual (see page 21-67).
- Reset the power window control unit, refer to the 2003-2006 Accord Service Manual (see page 22-232).
- Enter the anti-theft codes for the radio and the navigation system, then enter the customer's radio station presets.

Protected by AR

A/C System Test

Performance Test

⚠WARNING

- Compressed air mixed with R-134a forms a combustible vapor.
- The vapor can burn or explode causing serious injury.
- Never use compressed air to pressure test R-134a service equipment or vehicle air conditioning systems.

⚠CAUTION

- Air conditioning refrigerant or lubricant vapor can irritate your eyes, nose, or throat.
- Be careful when connecting service equipment.
- Do not breathe refrigerant or vapor.

The performance test will help determine if the air conditioner system is operating within specifications.

Use only service equipment that is U.L.-listed and is certified to meet the requirements of SAE J2210 to remove HFC-134a (R-134a) from the air conditioning system.

If accidental system discharge occurs, ventilate work area before resuming service.

R-134a service equipment or vehicle air conditioning systems should not be pressure tested or leak tested with compressed air.

Additional health and safety information may be obtained from the refrigerant and lubricant manufacturers.

1. Connect a R-134a refrigerant recovery/recycling/charging station to the high-pressure service port and the low-pressure service port, following the equipment manufacturer's instructions.

2. Determine the relative humidity and air temperature.

3. Open the glove box. Remove the damper from the glove box, then release the glove box stops and let the glove box hang down, refer to the 2003-2006 Accord Service Manual (see page 20-132).

4. Insert a thermometer (A) in the center vent.

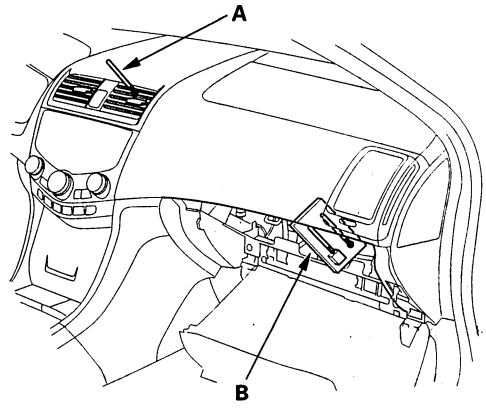

5. Place a thermometer (B) near the blower unit.

6. Test conditions:

   - Avoid direct sunlight.
   - Open hood.
   - Open front doors.
   - Set the temperature control dial to Max Cool, the mode control switch to Vent and the recirculation control switch to Recirculate.
   - Turn the A/C switch on and the fan switch to Max.
   - Run the engine at 1,500 rpm.
   - No driver or passengers in vehicle.

7. After running the air conditioning for 10 minutes under the above test conditions, read the delivery temperature from the thermometer in the center vent, the intake temperature near the blower unit, and the high and low system pressure from the A/C gauges.

BACK

Protected by AR

Pressure Test

Test results	Related symptoms	Probable cause	Remedy
Discharge (high) pressure abnormally high	After stopping A/C compressor, pressure drops about 196 kPa (2.0 kgf/cm², 28 psi) quickly, and then falls gradually.	Air in system	Recover, evacuate, refer to the 2003-2006 Accord Service Manual (see page 21-66), and recharge with specified amount, refer to the 2003-2006 Accord Service Manual (see page 21-67).
	Reduced or no airflow through A/C condenser.	• Clogged A/C condenser or radiator fins • A/C condenser or radiator fan not working properly	• Clean. • Check voltage and fan rpm. • Check fan direction.
	Line to A/C condenser is excessively hot.	Restricted flow of refrigerant in system	Restricted lines.
Discharge pressure abnormally low	High and low-pressures are balanced soon after stopping A/C compressor. Low side is higher than normal.	• Faulty A/C compressor discharge valve • Faulty A/C compressor seal	Replace the A/C compressor.
	Outlet of expansion valve is not frosted, low-pressure gauge indicates vacuum.	• Faulty expansion valve • Moisture in system	• Replace. • Recover, evacuate, and recharge with specified amount.
Suction (low) pressure abnormally low	Expansion valve is not frosted, and low-pressure line is not cold. Low-pressure gauge indicates vacuum.	• Frozen expansion valve (Moisture in system) • Faulty expansion valve	• Recover, evacuate, and recharge with specified amount. • Replace the expansion valve.
	Discharge temperature is low, and the airflow from vents is restricted.	Frozen evaporator	Run the fan with A/C compressor off, then check evaporator temperature sensor.
	Expansion valve is frosted.	Clogged expansion valve	Clean or replace.
Suction pressure abnormally high	Low-pressure hose and check joint are cooler than the temperature around evaporator.	Expansion valve open too long	Repair or replace.
	Suction pressure is lowered when A/C condenser is cooled by water.	Excessive refrigerant in system	Recover, evacuate, and recharge with specified amount.
	High and low-pressure are equalized as soon as the A/C compressor is stopped, and both gauges fluctuate while running.	• Faulty gasket • Faulty high-pressure valve • Foreign particle stuck in high-pressure valve	Replace the A/C compressor.
Suction and discharge pressures abnormally high	Reduced airflow through A/C condenser.	• Clogged A/C condenser or radiator fins • A/C condenser or radiator fan not working properly	• Clean. • Check voltage and fan rpm. • Check fan direction.
Suction and discharge pressures abnormally low	Low-pressure hose and metal end areas are cooler than evaporator.	Clogged or kinked low-pressure hose parts	Repair or replace.
	Temperature around expansion valve is too low compared with that around receiver/dryer.	Clogged high-pressure line	Repair or replace.
Refrigerant leaks	A/C compressor clutch is dirty.	A/C compressor shaft seal leaking	Replace the A/C compressor.
	A/C compressor bolt(s) are dirty.	Leaking around bolt(s)	Tighten bolt(s) or replace A/C compressor.
	A/C compressor gasket is wet with oil.	Gasket leaking	Replace the A/C compressor.
	A/C fitting is dirty.	Leaking O-ring	Clean A/C fitting and replace O-ring.

(cont'd)

Protected by AR

A/C System Test (cont'd)

8. To complete the charts:

- Mark the delivery temperature along the vertical line.
- Mark the intake temperature (ambient air temperature) along the bottom line.
- Draw a line straight up from the air temperature to the humidity.
- Mark a point 10 % above and 10 % below the humidity level.
- From each point, draw a horizontal line across the delivery temperature.
- The delivery temperature should fall between the two lines.
- Complete the low-side pressure test and high-side pressure test in the same way.
- Any measurements outside the line may indicate the need for further inspection.

Example	Intake temperature (dry):	86°F (30°C) Humidity level 70 %
	Intake temperature (wet):	77.9°F (25.5°C)
	Intake pressure:	245 kPa (2.5 kgf/cm²) (78.3 psi)
	Delivery temperature:	61.2°F (16.2°C)
	Delivery pressure:	1902 kPa (19.4 kgf/cm²) (275.9 psi)
Results:	Within normal range	

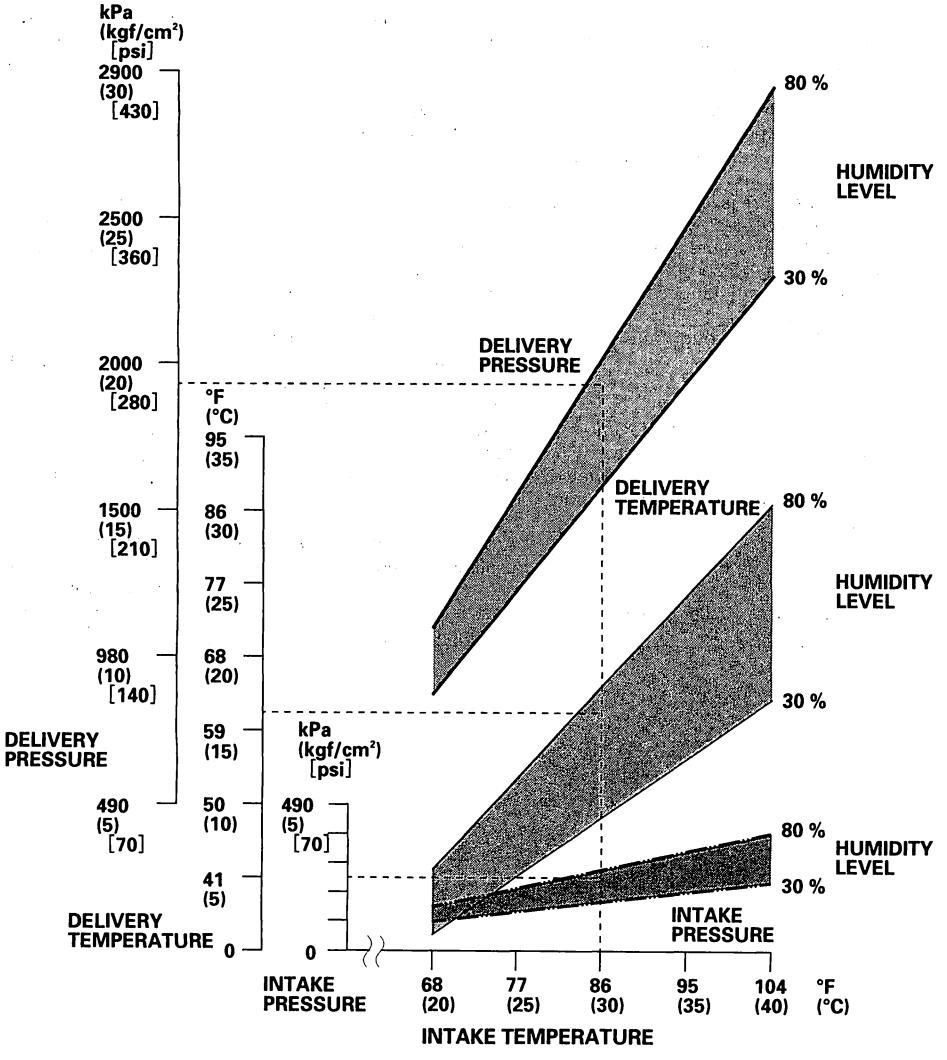

BACK

Protected by AR

Component Location Index

4-door

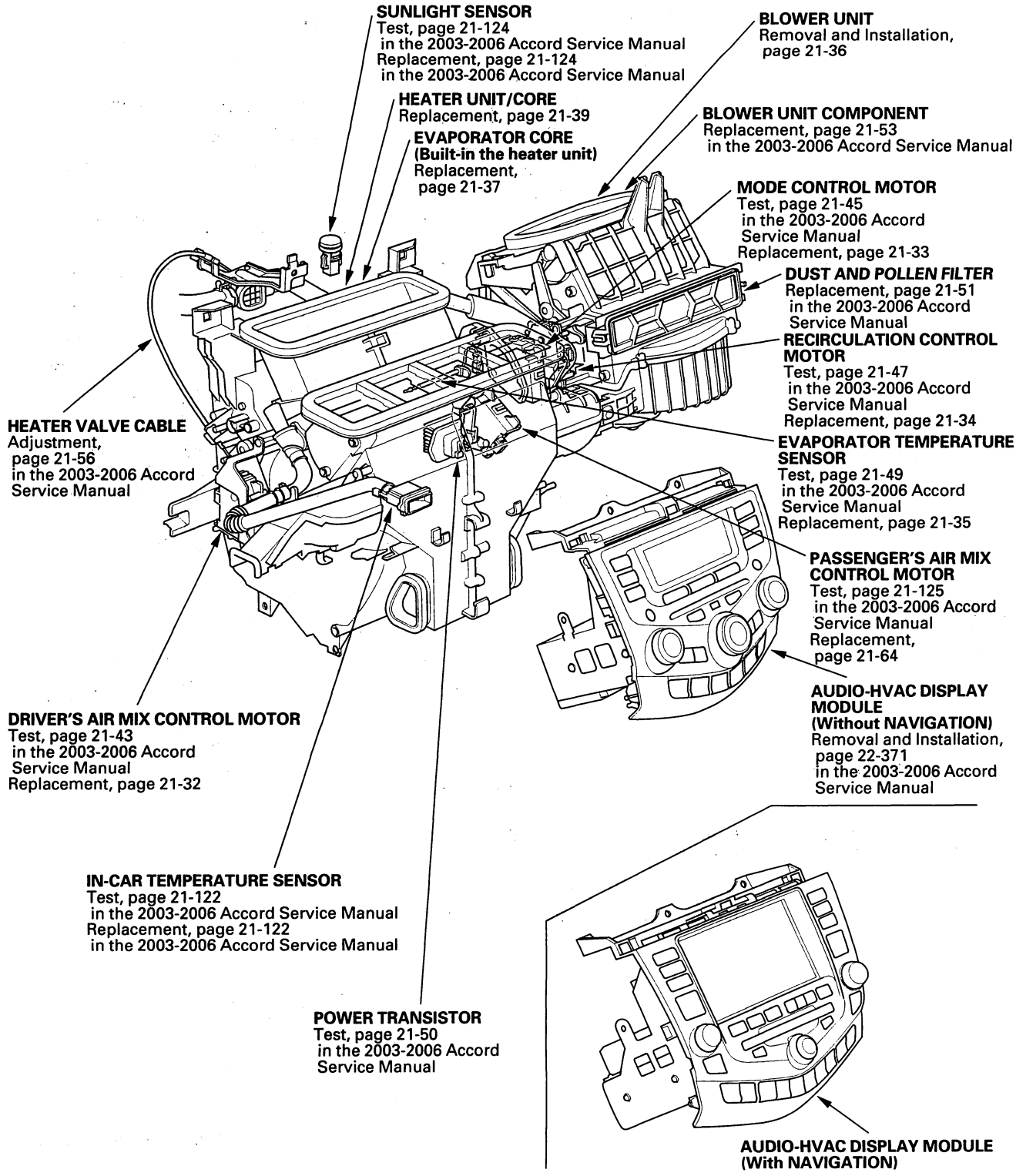

(cont'd)

Protected by AR

Component Location Index (cont'd)

2-door

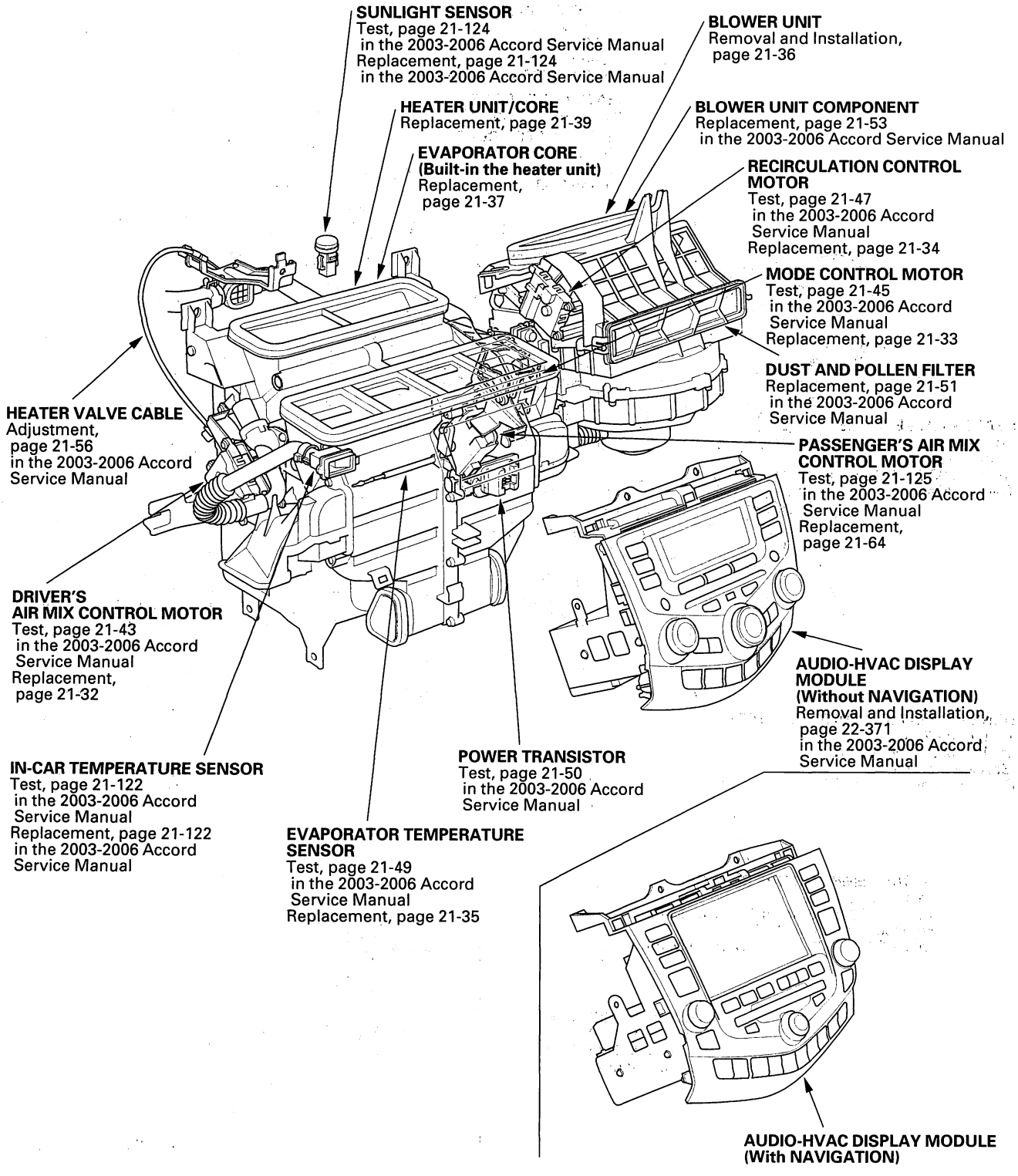

BACK

Protected by AR

4-door

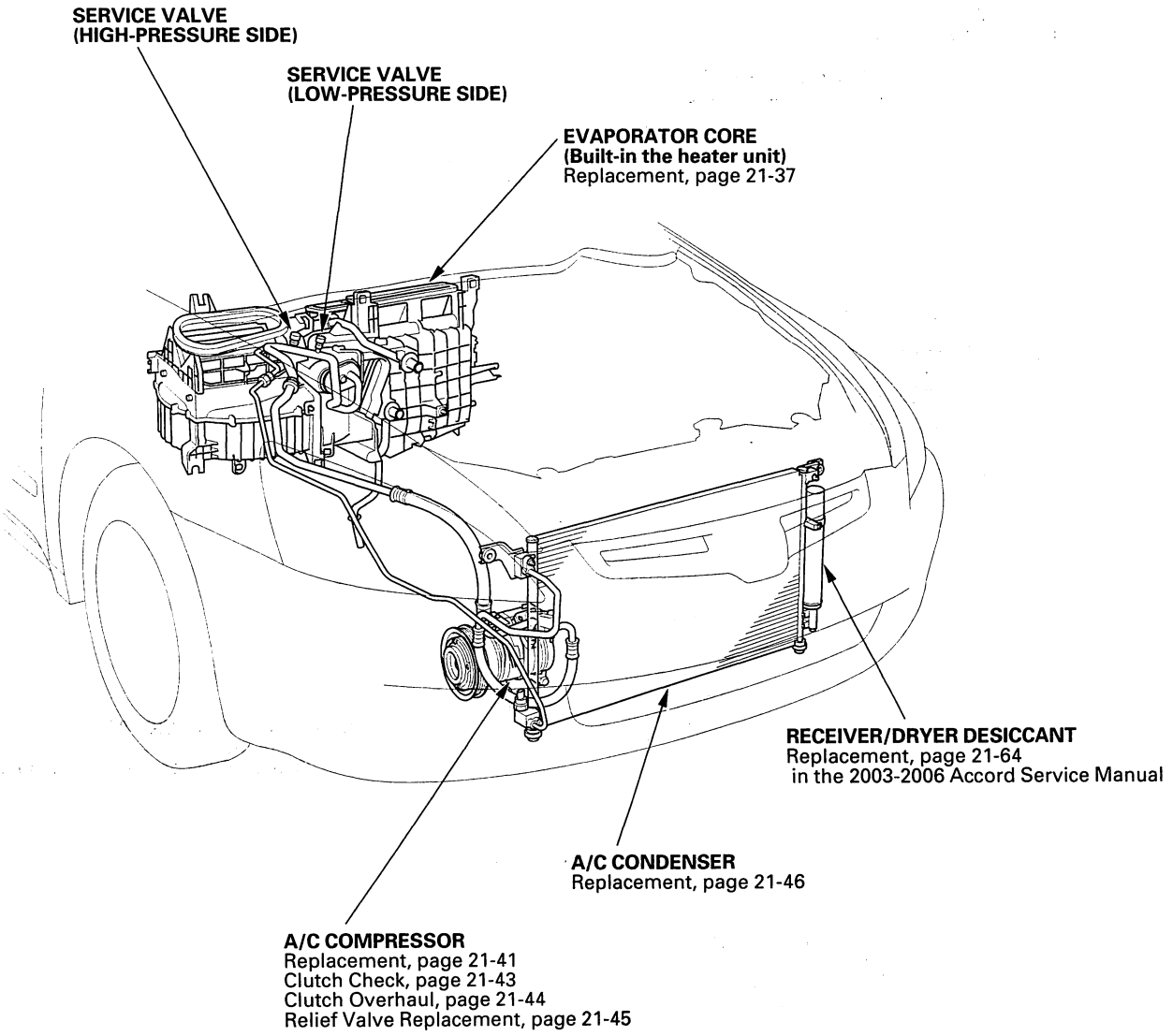

(cont'd)

Protected by AR

Component Location Index (cont'd)

2-door

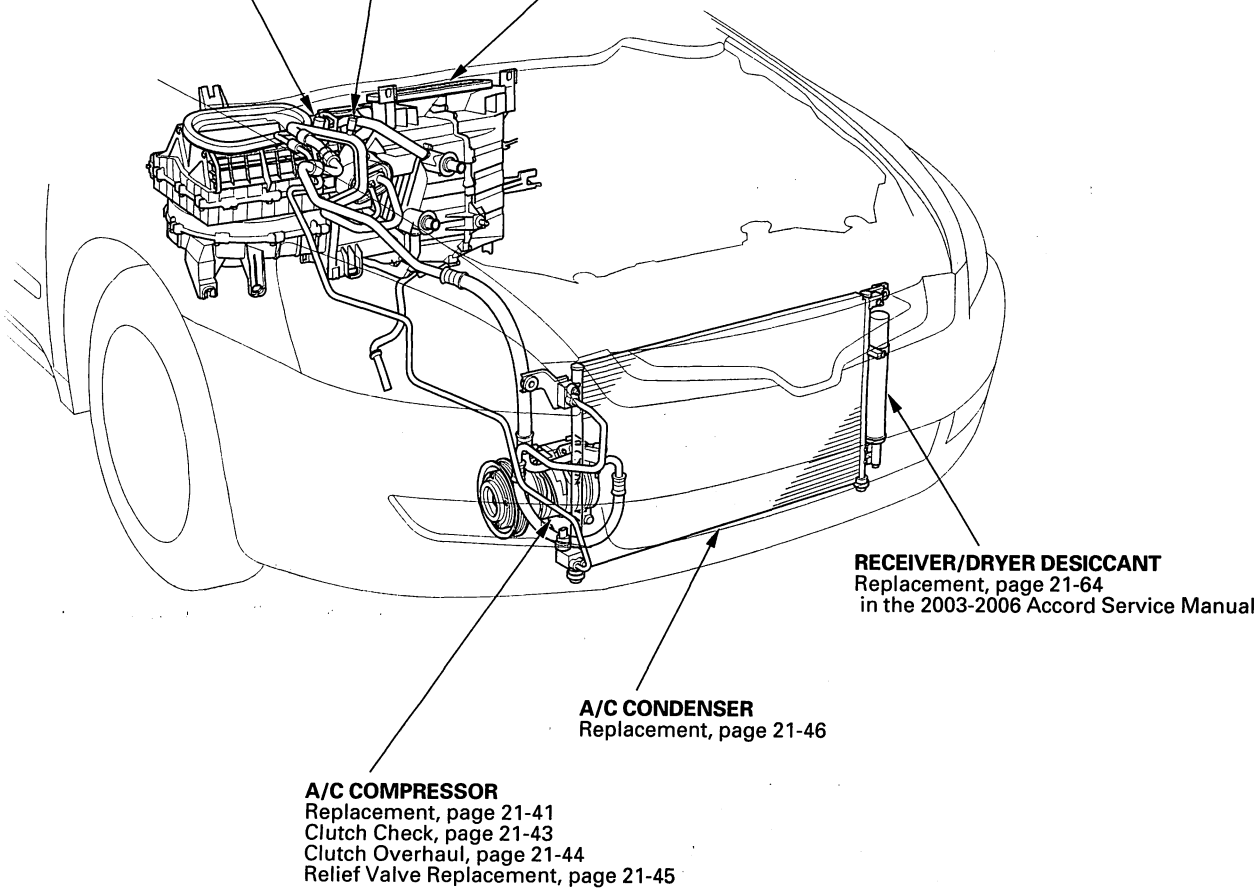

BACK

Protected by AR

4-door/2-door

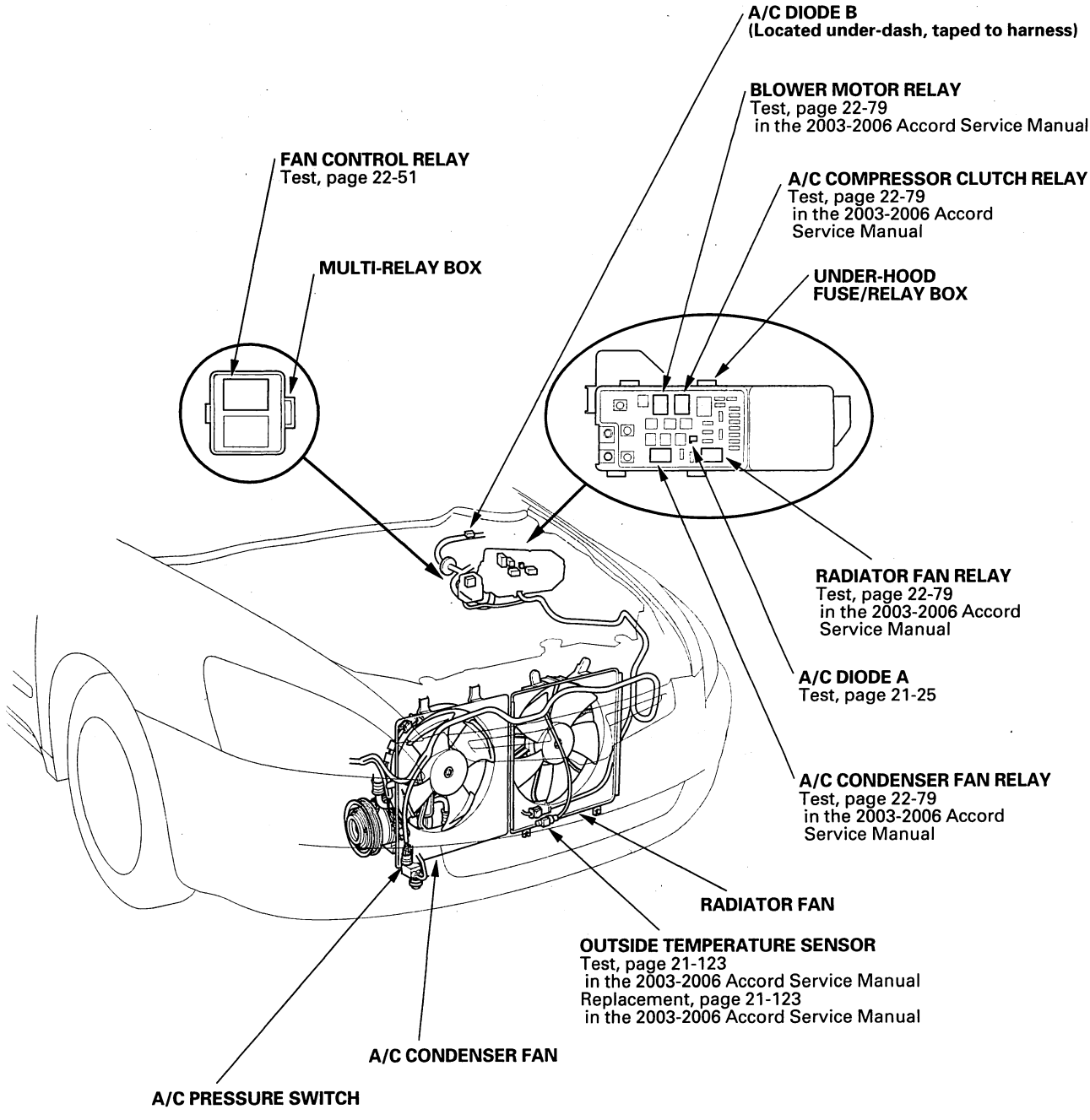

BACK

Protected by AR

Symptom Troubleshooting Index

Symptom	Diagnostic procedure	Also check for
Recirculation control doors do not change between Fresh and Recirculate	Recirculation control motor circuit troubleshooting, refer to the 2003-2006 Accord Service Manual (see page 21-117)	• HVAC DTCs, refer to the 2003-2006 Acoord Service Manual (see page 21-77) • Blown fuse No. 30 (7.5A) in the under-dash fuse/relay box • Cleanliness and tightness of all connectors
Blower, heater controls, and A/C do not work	Climate control power and ground circuits troubleshooting, refer to the 2003-2006 Accord Service Manual (see page 21-119)	• HVAC DTCs, refer to the 2003-2006 Accord Service Manual (see page 21-77) • Blown fuse No. 30 (7.5A) in the under-dash fuse/relay box • Poor ground at G503 • Cleanliness and tightness of all connectors
Both fans do not run at low speed with the A/C on (but the A/C compressor runs with the A/C on)	Radiator and A/C condenser fan low speed circuit troubleshooting (see page 21-22)	• HVAC DTCs, refer to the 2003-2006 Accord Service Manual (see page 21-77) • Blown fuse No. 9 (20A) in the under-hood fuse/relay box, and No. 30 (7.5A) in the under-dash fuse/relay box • Poor ground at G301 • Cleanliness and tightness of all connectors
The A/C condenser fan does not run at high speed with the A/C on (but both fans run at low speed and the A/C compressor operates with the A/C on)	A/C condenser fan high speed circuit troubleshooting (see page 21-25)	• HVAC DTCs, refer to the 2003-2006 Accord Service Manual (see page 21-77) • Blown fuse No. 30 (7.5A) in the under-dash fuse/relay box • Poor ground at G201 • Cleanliness and tightness of all connectors
Both fans do not run at high speed with the A/C on (but both fans run at low speed and the A/C compressor operates with the A/C on)	Radiator and A/C condenser fan high speed circuit troubleshooting (see page 21-27)	• HVAC DTCs, refer to the 2003-2006 Accord Service Manual (see page 21-77) • Cleanliness and tightness of all connectors
The A/C compressor clutch does not engage (but both fans run with the A/C on)	A/C compressor clutch circuit troubleshooting (see page 21-28)	• HVAC DTCs, refer to the 2003-2006 Accord Service Manual (see page 21-77) • Blown fuse No. 12 (7.5A) in the under-hood fuse/relay box, and No. 30 (7.5A) in the under-dash fuse/relay box • Cleanliness and tightness of all connectors
A/C system does not come on (both fans and the A/C compressor do not work); heater is OK	A/C pressure switch circuit troubleshooting (see page 21-62)	• HVAC DTCs, refer to the 2003-2006 Accord Service Manual (see page 21-77) • Cleanliness and tightness of all connectors
Blower fan runs slower than expected in cold weather	ECT troubleshooting, refer to the 2003-2006 Accord Service Manual (see page 11-3) NOTE: It is normal for the blower to run slowly until the engine coolant temperature begins to rise. If the blower continues to run slowly for an abnormal length of time, continue to troubleshoot the problem.	• Powertrain DTCs, refer to the 2003-2006 Accord Service Manual (see page 11-3)

BACK

Protected by AR

Symptom	Diagnostic procedure	Also check for
AUTO button does not work	1. Turn the ignition switch ON (II). 2. Press the OFF button, then press the AUTO button and check the display. • If AUTO is displayed, but the climate control is not working properly, do the self-diagnostic, refer to the 2003-2006 Accord Service Manual (see page 21-77). • If AUTO is not displayed, check for poor connections at the climate control connector, if the connections are OK, replace the audio-HVAC display panel.	Climate control power and ground circuit troubleshooting, refer to the 2003-2006 Accord Service Manual (see page 21-119)
OFF button does not work	1. Turn the ignition switch ON (II). 2. Press the AUTO button, then press the OFF button and check the display. • If climate control display turns off, go to self-diagnostic, refer to the 2003-2006 Accord Service Manual (see page 21-77). • If the climate control display does not turn on, replace the audio-HVAC display panel.	
Dual button does not work	1. Turn the ignition switch ON (II). 2. Press the AUTO button, then press the DUAL button several times and check the DUAL button LED. The LED should toggle on and off as the button is pressed. • If the LED turns on and off, go to self-diagnostic, refer to the 2003-2006 Accord Service Manual (see page 21-77). • If the LED does not turn on or off, replace the audio-HVAC display panel.	
Recirculation button does not work	1. Turn the ignition switch ON (II). 2. Press the recirculation button several times and check the button's LED. The LED should toggle on and off as the button is pressed. • If the LED turns on and off, go to recirculation control motor test, refer to the 2003-2006 Accord Service Manual, 4-door (see page 21-47), 2-door (see page 21-47). • If the LED does not turn on or off, replace the audio-HVAC display panel.	
Defroster button does not work	1. Turn the ignition switch ON (II). 2. Press the AUTO button, then press the defroster button several times and check the button's LED. The LED should toggle on and off as the button is pressed. • If the LED turns on and off, go to self-diagnostic, refer to the 2003-2006 Accord Service Manual (see page 21-77). • If the LED does not turn on or off, replace the audio-HVAC display panel.	
Rear window defogger button does not work	1. Turn the ignition switch ON (II). 2. Press the rear window defogger button several times and check the button's LED. The LED should toggle on and off as the button is pressed. • If the LED turns on and off, go to rear window defogger troubleshooting, refer to the 2003-2006 Accord Service Manual (see page 22-299). • If the LED does not turn on or off, replace the audio-HVAC display panel.	
MODE button does not work	1. Turn the ignition switch ON (II). 2. Press the MODE button and check the display. • If the display scrolls through the modes as the MODE button is pressed, go to self-diagnostic, refer to the 2003-2006 Accord Service Manual (see page 21-77). • If the display does not scroll the modes as the MODE button is pressed, replace the audio-HVAC display panel.	

(cont'd)

BACK

Protected by AR

Symptom Troubleshooting Index (cont'd)

Symptom	Diagnostic procedure	Also check for
Fan control button does not work	1. Turn the ignition switch ON (II). 2. Press the AUTO button, then adjust the fan control button up/down and check the display. • If the display indicates the fan speed selection up/down, go to self-diagnostic, refer to the 2003-2006 Accord Service Manual (see page 21-77). • If the display does not indicate the fan speed selection up/down, replace the audio-HVAC display panel.	
TEMP control dial does not work	1. Turn the ignition switch ON (II). 2. Press the AUTO button, then adjust the TEMP control dial up/down and check the display. • If the display indicates the change in temperature up/down, go to self-diagnostic, refer to the 2003-2006 Accord Service Manual (see page 21-77). • If the display does not indicate the change in temperature up/down, replace the audio-HVAC display panel.	
Passenger's TEMP dial does not work	1. Turn the ignition switch ON (II). 2. Press the AUTO button, press the DUAL button, then adjust the passenger's TEMP control dial up/down and check the display. • If the display indicates the change in temperature up/down for the passenger's side, go to self-diagnostic, refer to the 2003-2006 Accord Service Manual (see page 21-77). • If the display does not indicate the change in temperature up/down for the passenger's side, replace the audio-HVAC display panel.	
Audio-HVAC display panel will not run self-diagnosis	1. Turn the ignition switch ON (II). 2. Press the A/C button, and then OFF button and check the display. • If the display turns on and off as the buttons are pressed, there are no DTCs stored, troubleshoot the individual symptoms. • If the display does not respond as the buttons are pressed, check for loose or poor connections at the audio-HVAC display panel. If the connections are OK, replace the audio-HVAC display panel.	
More than one button is not working	Climate control power and ground circuit troubleshooting, refer to the 2003-2006 Accord Service Manual (see page 21-119).	HVAC DTCs, refer to the 2003-2006 Accord Service Manual (see page 21-77)
Audio-HVAC display/button illumination problems	Audio-HVAC display module illumination troubleshooting, refer to the 2003-2006 Accord Service Manual (see page 22-368).	

BACK

Protected by AR

Protected by AR

Climate Control

Circuit Diagram

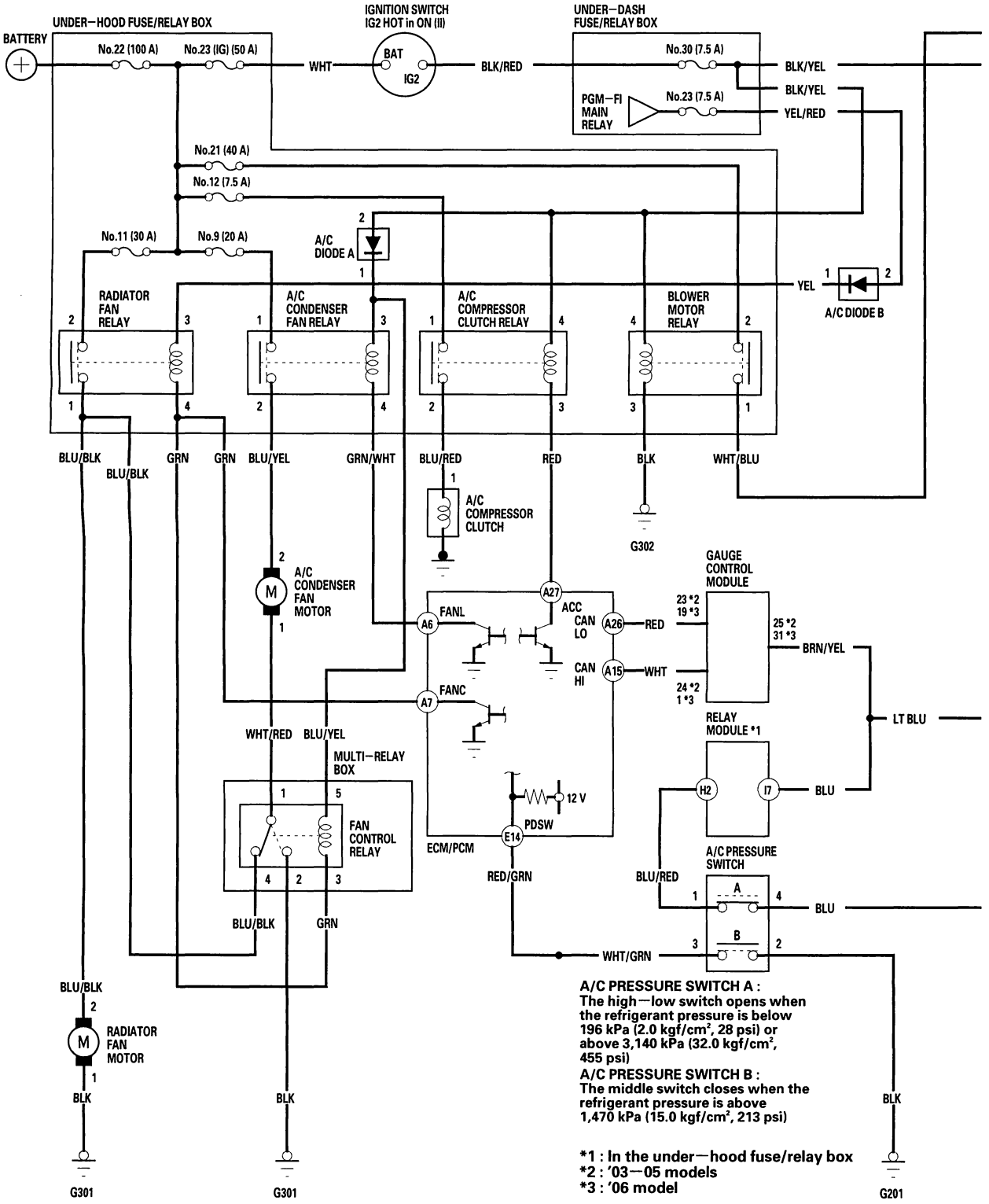

BACK

Protected by AR

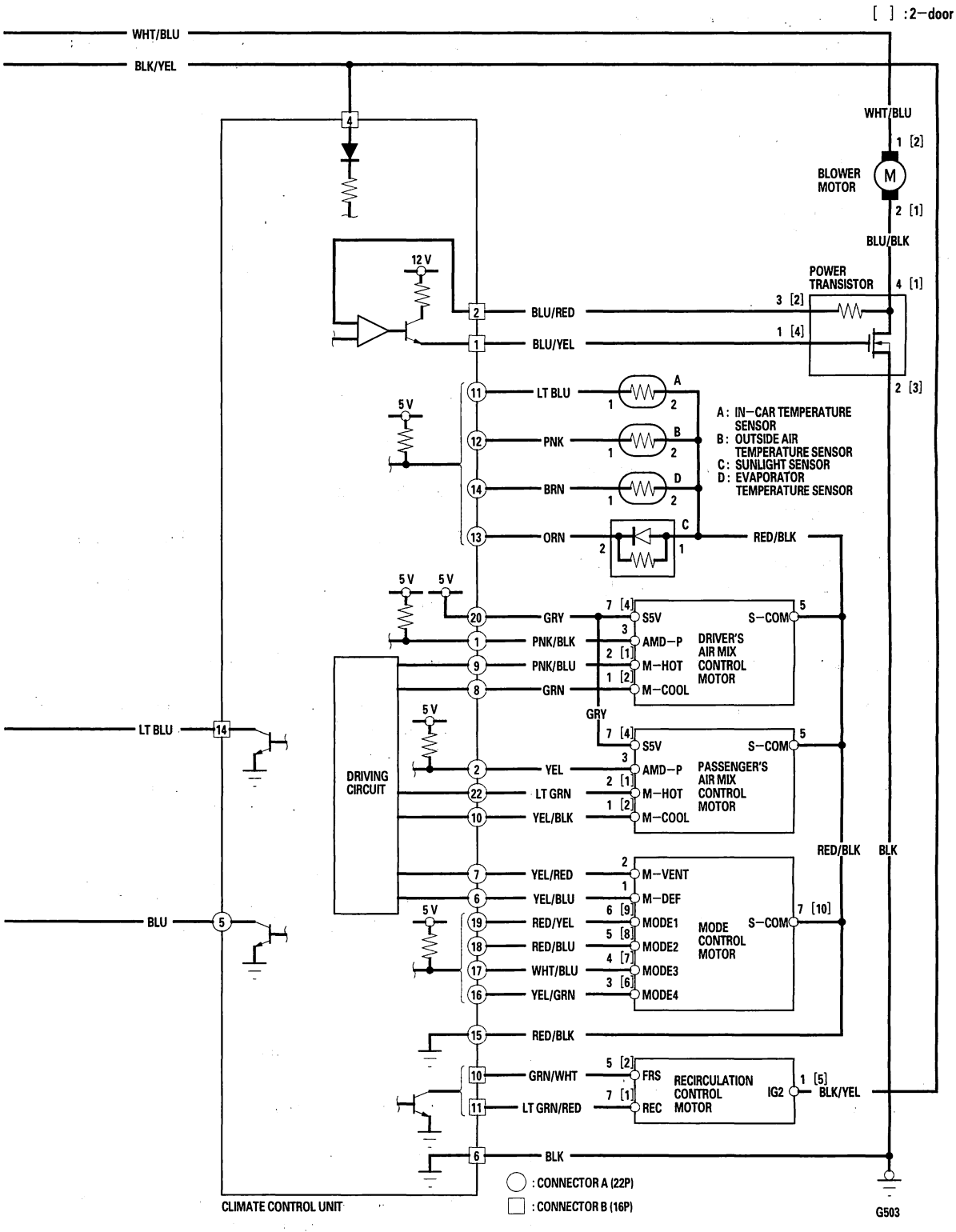

BACK

Protected by AR

A/C Pressure Switch Circuit Troubleshooting

NOTE:
- Do not use this troubleshooting procedure if the heater is inoperative or if any of the following items are operative; A/C condenser fan, radiator fan, A/C compressor. Refer to the symptom troubleshooting index.
- Before performing symptom troubleshooting, check for powertrain DTCs (see page 11-3).

1. Check for body DTCs in test mode A of the MICS, refer to the 2003-2006 Accord Service Manual (see page 22-91).

   Are there any DTCs indicated?

   YES—Do the appropriate troubleshooting for the DTC indicated.■

   NO—Go to step 2.

2. Disconnect the A/C pressure switch 4P connector.
3. Turn the ignition switch ON (II).
4. Measure the voltage between the No. 1 terminal of the A/C pressure switch 4P connector and body ground.

A/C PRESSURE SWITCH 4P CONNECTOR

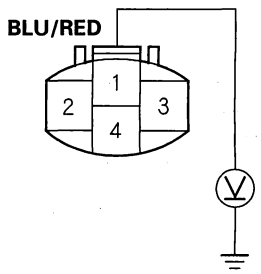

Wire side of female terminals

Is there 5 V or more?

YES—Go to step 5.

NO—Repair open in the wire between the relay module and the A/C pressure switch.■

5. Turn the ignition switch OFF.
6. Check for continuity between the No. 1 and No. 4 terminals of the A/C pressure switch.

A/C PRESSURE SWITCH

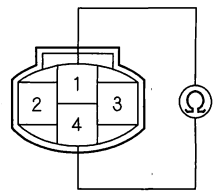

Is there continuity?

YES—Go to step 7.

NO—Go to step 16.

7. Reconnect the A/C pressure switch 4P connector.
8. Disconnect audio-HVAC display panel connector A (22P).
9. Turn the ignition switch ON (II).
10. Measure the voltage between the No. 5 terminal of audio-HVAC display panel connector A (22P) and body ground.

AUDIO-HVAC DISPLAY PANEL CONNECTOR A (22P)

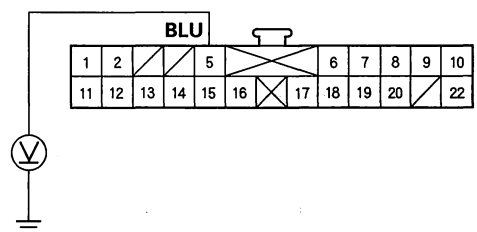

Wire side of female terminals

Is there 5 V or more?

YES—Go to step 11.

NO—Repair the open in the wire between the climate control unit and the A/C pressure switch.■

BACK

Protected by AR

11. Turn the ignition swtich OFF.

12. Measure the resistance between the No. 14 and No. 15 terminals of audio-HVAC display panel connector A (22P).

AUDIO-HVAC DISPLAY PANEL CONNECTOR A (22P)

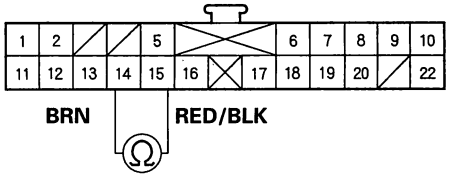

Wire side of female terminals

Is the resistance less than 24 kΩ ?

YES—Go to step 13.

NO—Repair cause of high resistance in the evaporator temperature circuit. ■

13. Reconnect audio-HVAC display panel connector A (22P).

14. Turn the ignition switch ON (II).

15. Check the blower motor at several speeds.

Does the blower motor operate at all speeds?

YES—Check for loose wires or poor connections at audio-HVAC display panel connector A (22P) and at the A/C pressure switch 2P connector. If the connections are good, substitute a known-good audio-HVAC display panel and recheck. If the symptom/indication goes away, replace the original audio-HVAC display panel. ■

NO—Repair the problem in the blower motor circuit. ■

16. Check for proper A/C system pressure.

Is the pressure within specifications?

YES—Replace the A/C pressure switch. ■

NO—Repair the A/C pressure problem. ■

Protected by AR

Passenger's Air Mix Control Motor Replacement

4-door

1. Remove the passenger's dashboard lower cover, refer to the 2003-2006 Accord Service Manual (see page 20-134).

2. Disconnect the 2P connector (A) from the evaporator temperature sensor. Disconnect the 7P connector (B) from the passenger's air mix control motor (C). Remove the self-tapping screws and the passenger's air mix control motor from the heater unit.

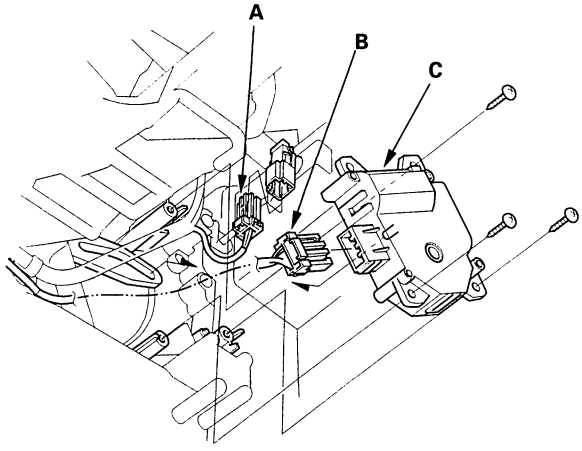

3. Install the motor in the reverse order of removal. Make sure the pin on the motor is properly engaged with the linkage. After installation, make sure the motor runs smoothly.

2-door

1. Remove the passenger's dashboard lower cover, refer to the 2003-2006 Accord Service Manual (see page 20-134).

2. Disconnect the 10P connector (A) from the mode control motor. Disconnect the 2P connector (B) from the evaporator temperature sensor. Disconnect the 5P connector (C) from the passenger's air mix control motor (D). Remove the self-tapping screws and the passenger's air mix control motor from the heater unit.

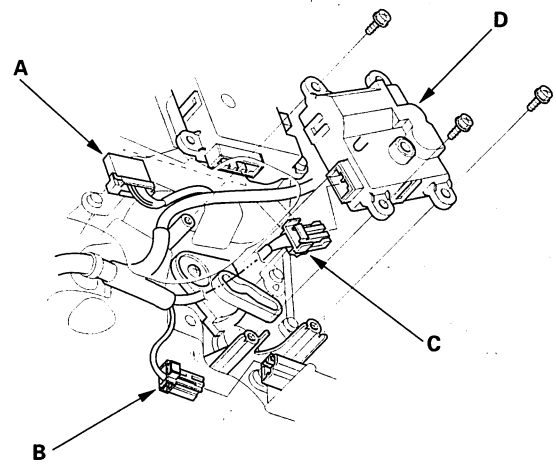

3. Install the motor in the reverse order of removal. Make sure the pin on the motor is properly engaged with the linkage. After installation, make sure the motor runs smoothly.

BACK

Protected by AR

BACK

Protected by AR

SUPPLEMENTAL RESTRAINT SYSTEM (SRS) (If electrical maintenance is required)

The Accord SRS includes a driver's airbag in the steering wheel hub, a passenger's airbag in the dashboard above the glove box, seat belt tensioners in the front seat belt retractors, side curtain airbags in the sides of the roof, and side airbags in the front seat-backs. Information necessary to safely service the SRS is included in the 2003-2006 Accord Service Manual, P/N 61SDA08. Items marked with an asterisk (*) on the contents page include or are located near SRS components. Servicing, disassembling, or replacing these items require special precautions and tools, and should be done only by an authorized Honda dealer.

- To avoid rendering the SRS inoperative, which could lead to personal injury or death in the event of a severe frontal or side collision, all SRS service work must be performed by an authorized Honda dealer.
- Improper service procedures, including incorrect removal and installation of the SRS, could lead to personal injury caused by unintentional deployment of the airbags and/or side airbags.
- Do not bump or impact the SRS unit, front impact sensors, or side impact sensors when the ignition switch is ON (II), or for at least 3 minutes after the ignition switch is turned OFF; otherwise, the system may fail in a collision, or the airbags may deploy.
- SRS electrical connectors are identified by yellow color coding. Related components are located in the steering column, front console, dashboard, dashboard lower panel, in the dashboard above the glove box, in the front seats, in the roof side, and around the floor. Do not use electrical test equipment on these circuits.

BACK

Protected by AR

Body Electrical

Relay and Control Unit Locations **22-2**
Connectors and Harnesses **22-5**
Fuse/Relay Boxes **22-44**
Power Distribution **22-47**
Ground Distribution **22-50**
Relays **22-51**
Multiplex Integrated Control System (MICS)
Component Location Index 22-53
System Description 22-55
Circuit Diagram 22-62
Exterior Lights
Circuit Diagram 22-64
Gauges
Component Location Index 22-66
Self-diagnostic Function 22-69
Resetting Maintenance Required Indicator 22-71
Circuit Diagram 22-72
Power Seats
Component Location Index 22-88
Circuit Diagram 22-89
Switch Test/Replacement 22-90
Motor Test 22-91
Audio System
Component Location Index 22-92
Circuit Diagram 22-93
System Description 22-95
Crossover Network Unit Removal/Installation 22-105
Immobilizer System
Component Location Index 22-107
System Description 22-108
Circuit Diagram 22-109
Troubleshooting 22-110
System Check 22-115
Status Log 22-116
Immobilizer Control Unit-Receiver Replacement 22-117

NOTE: Refer to the 2003-2006 Accord Service Manual, P/N 61SDA07 for the items not shown in this section.



Outline of V6 Model Changes

- J30A5 engine has been added; the related informations have been included.
- Premium audio system has been added; the related informations has been included.
- SE model (Canada) has been added: the related informations have been included (4-door A/T).

Protected by AR

Relay and Control Unit Locations

Engine Compartment

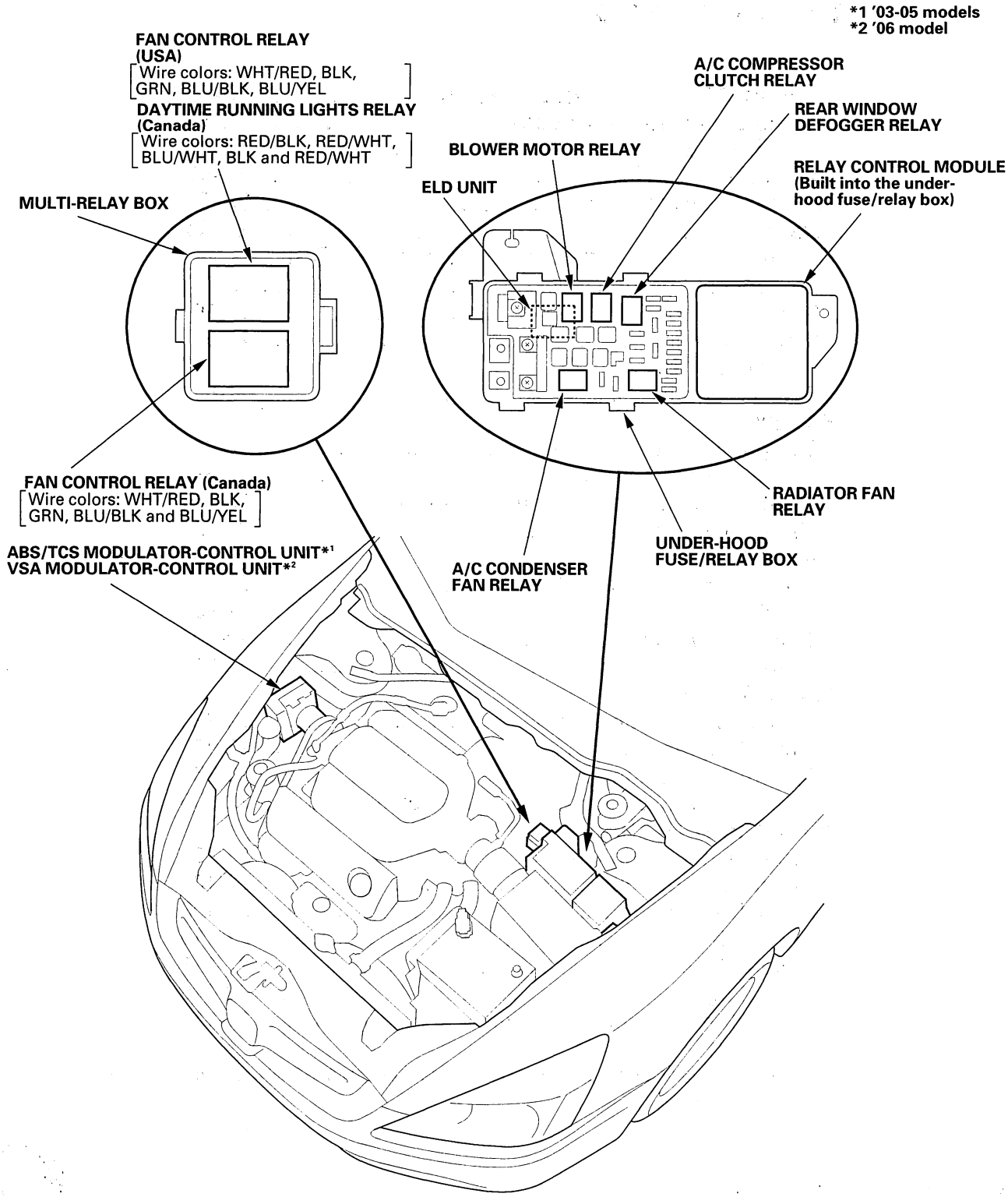

BACK

Protected by AR

Dashboard

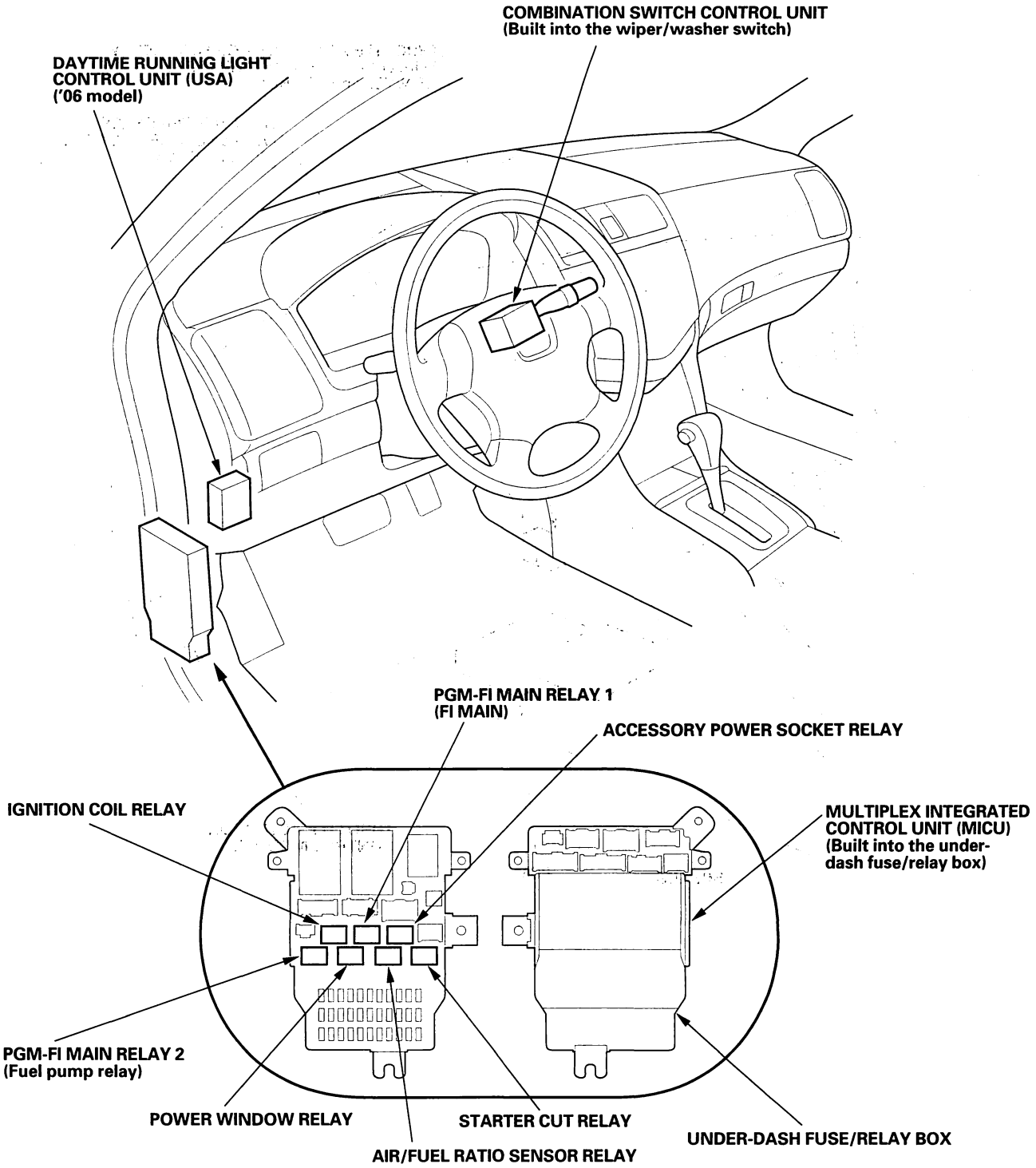

(cont'd)

Protected by AR

Relay and Control Unit Locations

Dashboard (cont'd)

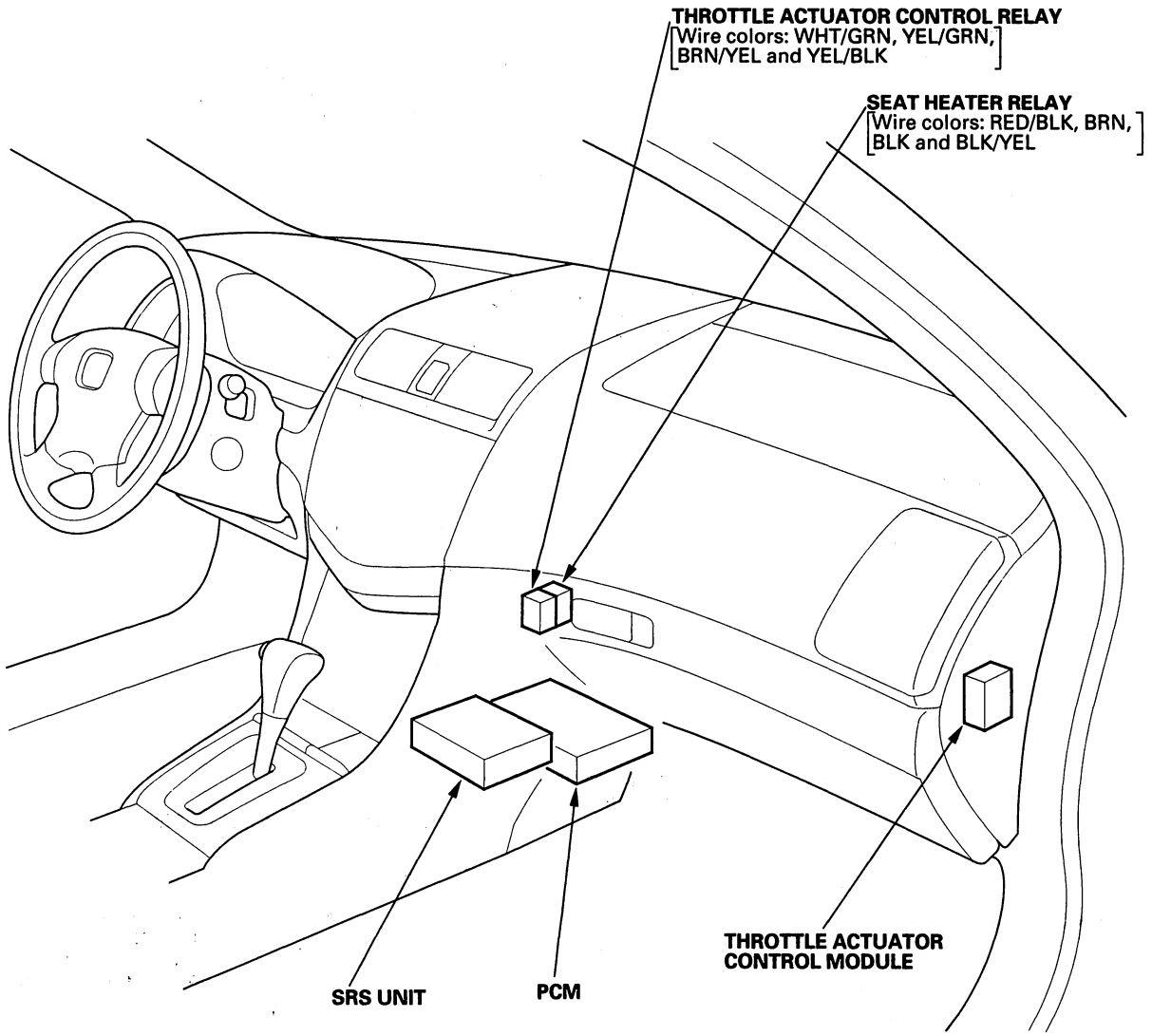

BACK

Protected by AR

Connectors and Harnesses

Connector Index

Identification numbers have been assigned to in-line connectors, junction connectors, and terminals. The number is preceded by the letter "C" for connectors, "G" for ground terminals or "T" for non-ground terminals.

Harness	Location			
	Engine Compartment	Dashboard	Others (Floor, Door, Trunk, and Roof)	Notes
Battery ground cable	(—) G1			(see page 22-6)
Engine ground cable A	T1 G2			(see page 22-6)
Engine ground cable B	T2 G3			(see page 22-6)
Starter cable	T3 and (+) T101			(see page 22-6)
Engine Wire harness	C101 and C103 C151 through C155 C201 through C203 T101 and T102 G101 and G102			(see page 22-8)
Front engine compartment wire harness (left branch)	C301 G301			(see page 22-14)
Front engine compartment wire harness (right branch)	C311 G201			(see page 22-12)
A/C compressor wire harness	C311			(see page 22-12)
Engine compartment wire harness (left branch)	C153, C301, C310, C415, G302	C401 through C403		(see page 22-18)
Engine compartment wire harness (right branch)	G202 and G203			(see page 22-16)
Knock sensor subharness	C154			(see page 22-20)
Transmission range switch subharness	C152			(see page 22-20)
CKP sensor subharness	C155			(see page 22-20)
A/T subharness	C151 G151			(see page 22-21)
Dashboard wire harness (left branch)		C401 through C408, C411, C416, C501 and C502, C601 G501 and G502, G504		(see page 22-22)
Dashboard wire harness (right branch)		C251, C551 through C557 C731 and C732, C851 G503, G505 and G506		(see page 22-26)
ECM/PCM wire harness	C201 through C203	C251, C281		(see page 22-41)
Throttle actuator control module subharness		C281		(see page 22-41)
Cable reel subharness				Refer to the 2003-2006 Accord Service Manual (see page 22-61)
Floor wire harness (left branch)		C501 and C502	C701, C751, C752, C901, C903, G601, G603	• 4-door (see page 22-30) • 2-door (see page 22-34)
Floor wire harness (right branch)		C551 through C553, C651	C781, C801, C902 G602	• 4-door (see page 22-32) • 2-door (see page 22-36)
Rear window defogger ground wire			G604	• 4-door (see page 22-32) • 2-door (see page 22-36)
XM radio subharness ('04-06 models)				• 4-door (see page 22-32) • 2-door (see page 22-36)
Rear wire harness				Refer to the 2003-2006 Accord Service Manual (see page 22-50)
OPDS unit harness ('04-05 models)			C801	(see page 22-38)
ODS unit harness ('06 model)			C801	(see page 22-38)
Driver's door wire harness				Refer to the 2003-2006 Accord Service Manual (see page 22-54)
Driver's door subharness				Refer to the 2003-2006 Accord Service manual (see page 22-54)
Front passenger's door wire harness				Refer to the 2003-2006 Accord Service manual (see page 22-56)
Left rear door wire harness				Refer to the 2003-2006 Accord Service manual (see page 22-58)
Right rear door wire harness				Refer to the 2003-2006 Accord Service manual (see page 22-59)
Driver's seat wire harness			C901	(see page 22-42)
Front passenger's seat wire harness			C902	(see page 22-43)
A/C subharness				Refer to the 2003-2006 Accord Service manual (see page 22-67)
Side curtain airbag harness				(see page 22-40)
Seat position sensor harness ('04-06 models)			C903	(see page 22-38)

Protected by AR

Connectors and Harnesses

Connector to Harness Index

Starter Cable

Connector or Terminal	Ref	Cavities	Location	Connects to	Notes
T3	9		Left side of engine compartment	Starter motor	
T101	3		Left side of engine compartment	Under-hood fuse/relay box	
(+)	6		Battery	Battery positive terminal	

Battery Ground Cable

Connector or Terminal	Ref	Cavities	Location	Connects to	Notes
G1	8		Left side of engine compartment	Body ground, via battery ground cable	
(−)	7		Battery	Battery negative terminal	

Engine Ground Cable A

Connector or Terminal	Ref	Cavities	Location	Connects to	Notes
T1	2		Right side of engine compartment	Body ground, via battery ground cables	
G2	1		Right side of engine compartment	Body ground, via engine ground cable A	

Engine Ground Cable B

Connector or Terminal	Ref	Cavities	Location	Connects to	Notes
T2	4		Left side of engine compartment	Transmission housing	
G3	5		Left side of engine compartment	Body ground, via engine ground cable B	

BACK

Protected by AR

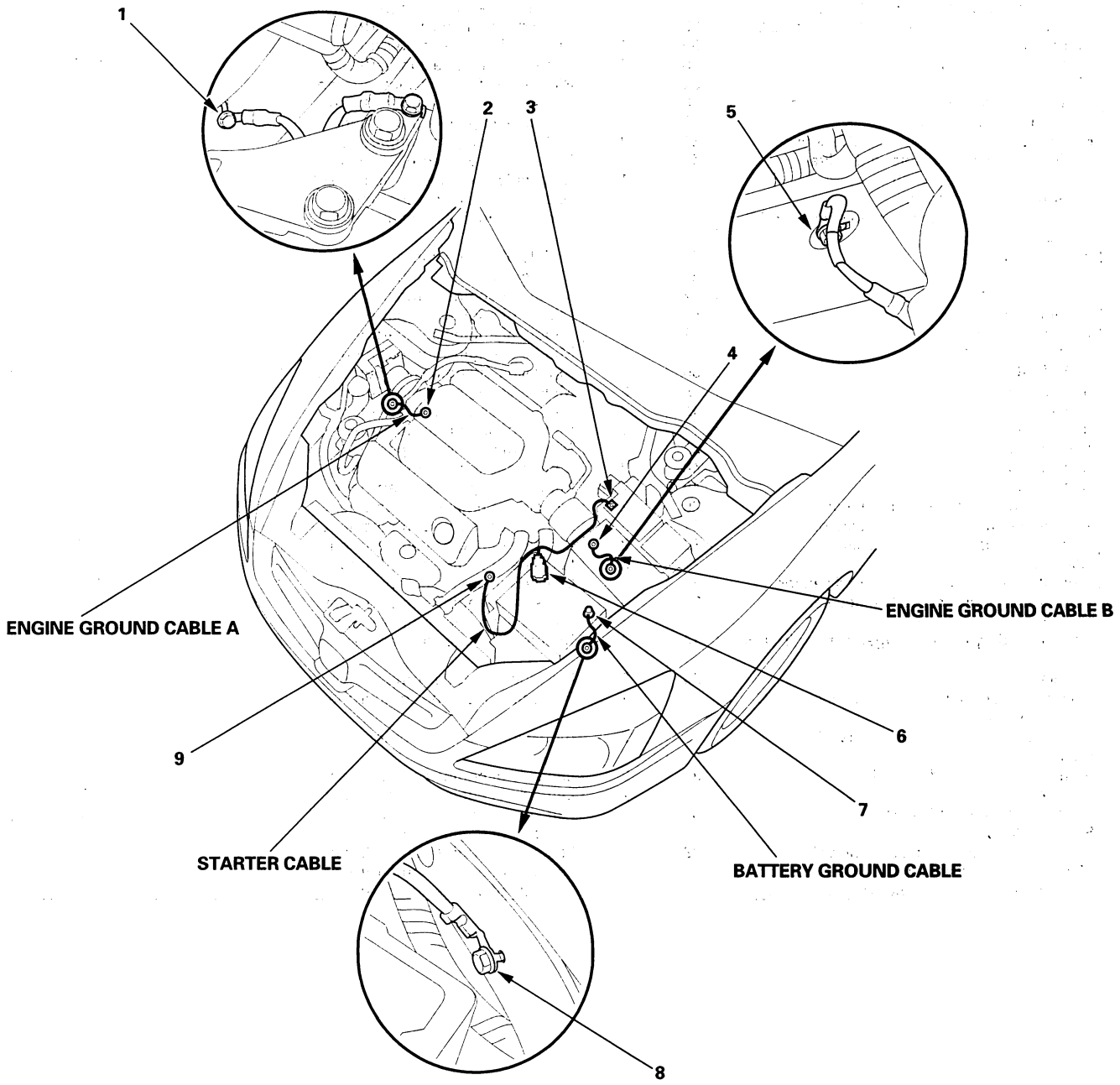

BACK

Protected by AR

Connector to Harness Index (cont'd)

Engine Wire Harness

Connector or Terminal	Ref	Cavities	Location	Connects to	Notes
A/T clutch pressure control solenoid valve A	28	2	Left side of engine compartment		
A/T clutch pressure control solenoid valve B	27	2	Left side of engine compartment		
A/T clutch pressure control solenoid valve C	33	2	Left side of engine compartment		
Alternator	50	4	Middle of engine compartment		
Back-up light switch	36	2	Left side of engine compartment		M/T
CMP sensor	54	3	Right side of engine compartment		
EGR-valve and EGR valve position sensor	40	6	Left side of engine compartment		
EVAP canister purge valve	43	2	Middle of engine compartment		
Engine coolant temperature (ECT) sensor	37	2	Left side of engine compartment		
Engine mount control solenoid valve	44	2	Middle of engine compartment		
Engine oil pressure switch	3	1	Right side of engine compartment		
Front A/F sensor (Bank2)	42	8	Middle of engine compartment		
Front secondary heated oxygen sensor (HO2S) (Bank2)	41	4	Middle of engine compartment		
Ignition coil No. 1	7	3	Middle of engine compartment		
Ignition coil No. 2	9	3	Middle of engine compartment		
Ignition coil No. 3	12	3	Middle of engine compartment		
Ignition coil No. 4	51	3	Middle of engine compartment		
Ignition coil No. 5	47	3	Middle of engine compartment		
Ignition coil No. 6	45	3	Middle of engine compartment		
IMT (IMRC) valve	55	6	Right side of engine compartment		M/T
Injector No. 1	6	2	Middle of engine compartment		
Injector No. 2	8	2	Middle of engine compartment		
Injector No. 3	11	2	Middle of engine compartment		
Injector No. 4	52	2	Middle of engine compartment		
Injector No. 5	48	2	Middle of engine compartment		
Injector No. 6	46	2	Middle of engine compartment		
Intake air temperature (IAT) sensor	25	2	Left side of engine compartment		
Input shaft (mainshaft) speed sensor	31	3	Left side of engine compartment		A/T
Input shaft (mainshaft) speed sensor	39	3	Left side of engine compartment		M/T
MAP sensor	22	3	Left side of engine compartment		
Output shaft (countershaft) speed sensor	24	3	Left side of engine compartment		A/T
Output shaft (countershaft) speed sensor	38	3	Left side of engine compartment		M/T
Rear A/F sensor (Bank1)	13	8	Middle of engine compartment		
Rear secondary heated oxygen sensor (HO2S) (Bank1)	14	4	Middle of engine compartment		
Reverse lockout solenoid	24	2	Left side of engine compartment		M/T
Rocker arm oil control solenoid valve (VTEC solenoid valve)	4	1	Right side of engine compartment		
Rocker arm oil pressure switch (VTEC oil pressure switch)	2	2	Right side of engine compartment		
Shift control solenoid valve A	38	2	Left side of engine compartment		A/T
Shift control solenoid valve B	35	2	Left side of engine compartment		A/T
Shift control solenoid valve C	39	2	Left side of engine compartment		A/T
Starter solenoid	34	1	Left side of engine compartment		
Torque converter clutch solenoid valve	29	2	Left side of engine compartment		A/T
TP sensor/throttle actuator	23	6	Left side of engine compartment		
4th clutch transmission fluid pressure switch	32	1	Left side of engine compartment		A/T

BACK

Protected by AR

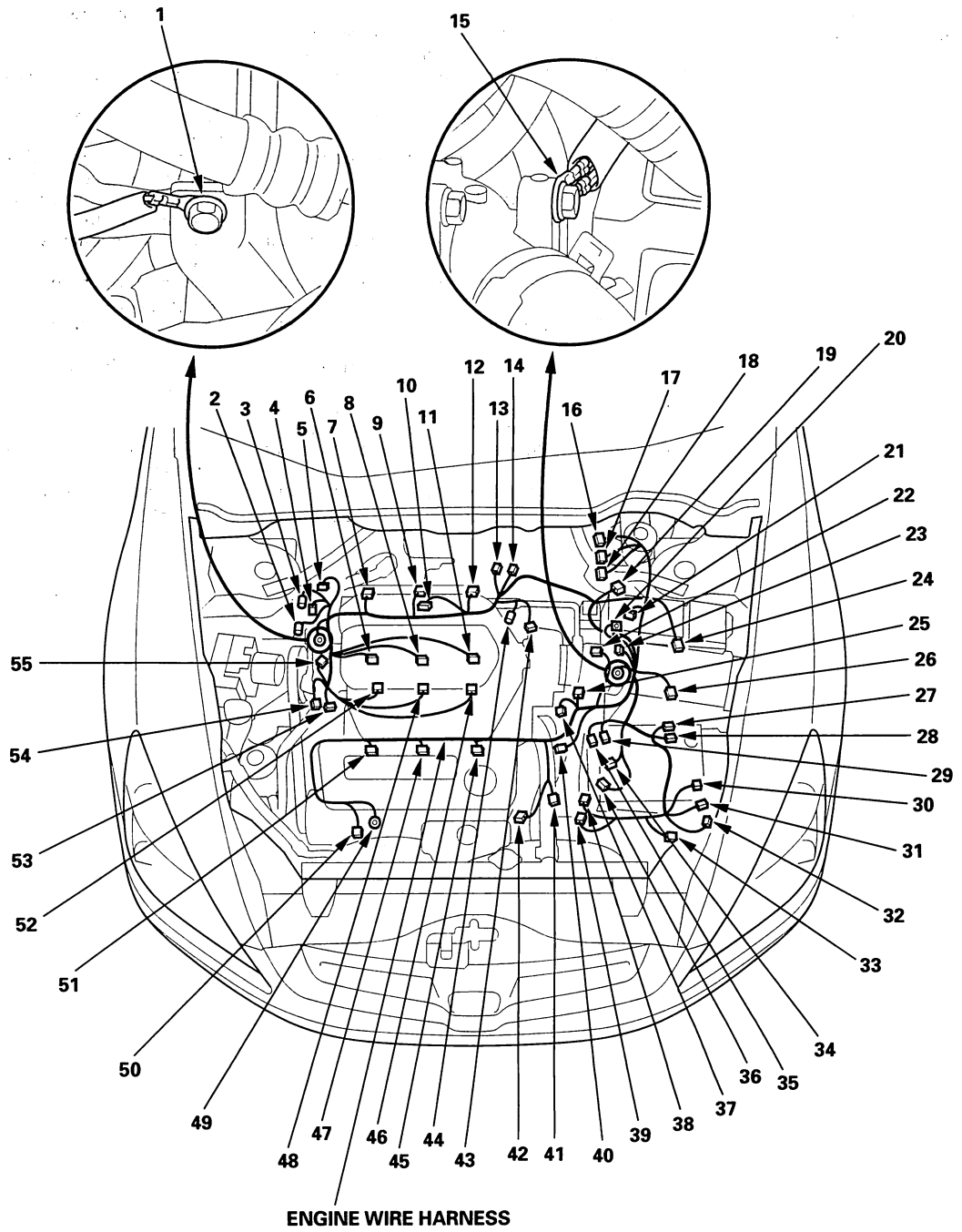

(cont'd)

Protected by AR

Connector to Harness Index (cont'd)

Engine Wire Harness (cont'd)

Connector or Terminal	Ref	Cavities	Location	Connects to	Notes
C101 (Junction connector)	10	24	Middle of engine compartment		
C103 (Junction connector)	21	24	Left side of engine compartment		
C151	30	6	Left side of engine compartment	A/T subharness (see page 22-21)	
C152	19	10	Transmission housing	Transmission range switch subharness (see page 22-20)	
C153	26	1	Left side of engine compartment	Engine compartment wire harness (see page 22-18)	
C154	53	1	Right side of engine compartment	Knock sensor subharness (see page 22-20)	
C155	5	6	Right side of engine compartment	CKP sensor subharness (see page 22-20)	
C201	17	33	Left side of engine compartment	ECM/PCM wire harness (see page 22-41)	
C202	16	33	Left side of engine compartment	ECM/PCM wire harness (see page 22-41)	
C203	18	23	Left side engine compartment	ECM/PCM wire harness (see page 22-41)	
T102	20		Under-hood fuse/relay box		
T103	49		Middle of engine compartment		
G101	15		Right side of engine compartment	Engine ground, via engine wire harness	
G102	1		Left side of engine compartment	Engine ground, via engine wire harness	

BACK

Protected by AR

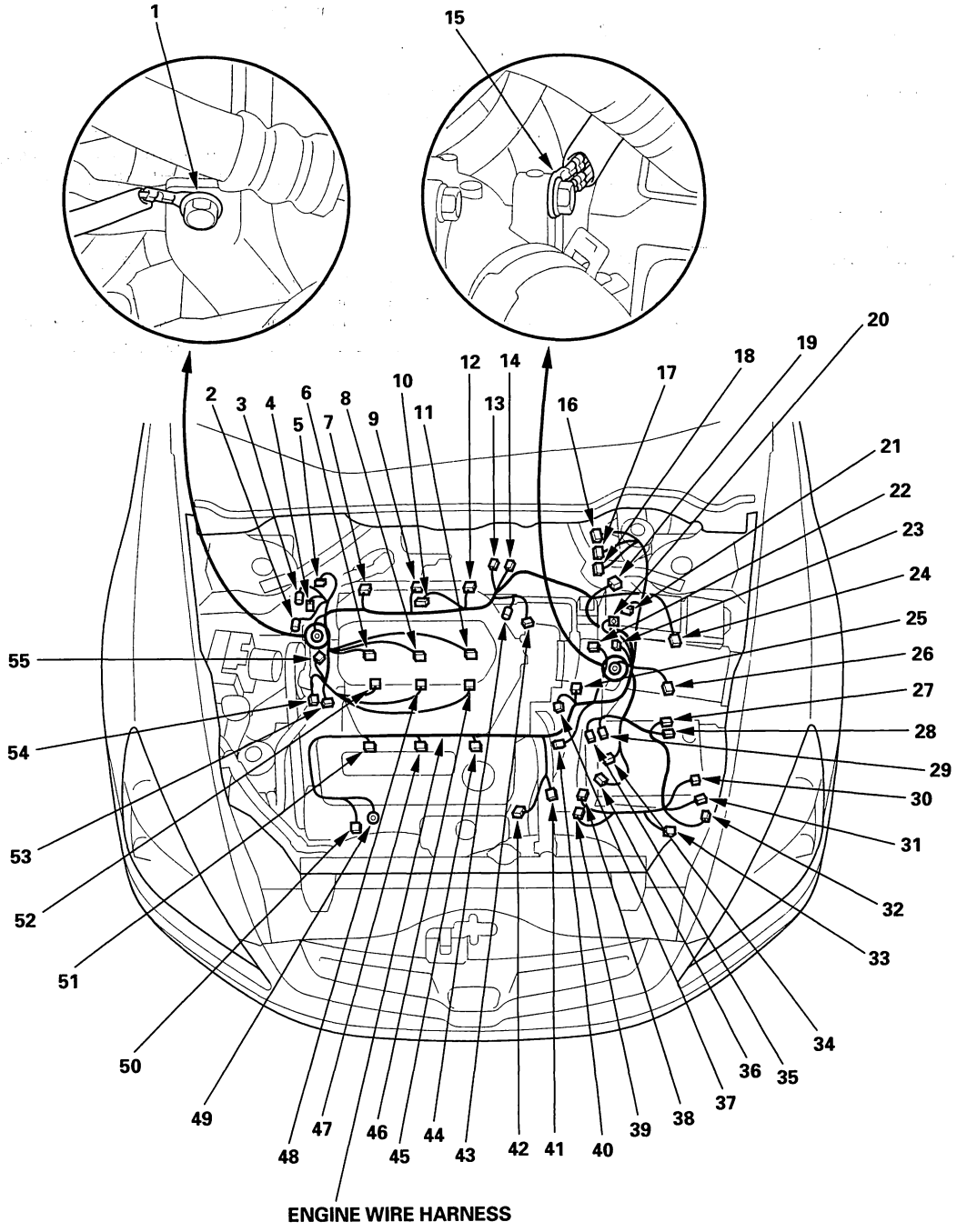

BACK

Protected by AR

Connector to Harness Index (cont'd)

Front Engine Compartment Wire Harness (Right branch)

Connector or Terminal	Ref	Cavities	Location	Connects to	Notes
A/C pressure switch	6	4	Right side of engine compartment		
A/C condenser fan motor	5	2	Right side of engine compartment		
Right front turn signal/side marker light	1	3	Behind right headlight		
Right headlight (high)	4	2	Behind right headlight		
Right headlight (low)	2	2	Behind right headlight		
C311	7	1	Right side of engine compartment	A/C compressor wire harness	
G201	3		Right side of engine compartment	Body ground, via front engine compartment wire harness	

A/C Compressor Wire Harness

Connector or Terminal	Ref	Cavities	Location	Connects to	Notes
A/C compressor clutch	9	2	Right side of engine compartment		
Case ground	8		Right side of engine compartment	A/C compressor	
C311	7	1	Right side of engine compartment	Front engine compartment wire harness	

BACK

Protected by AR

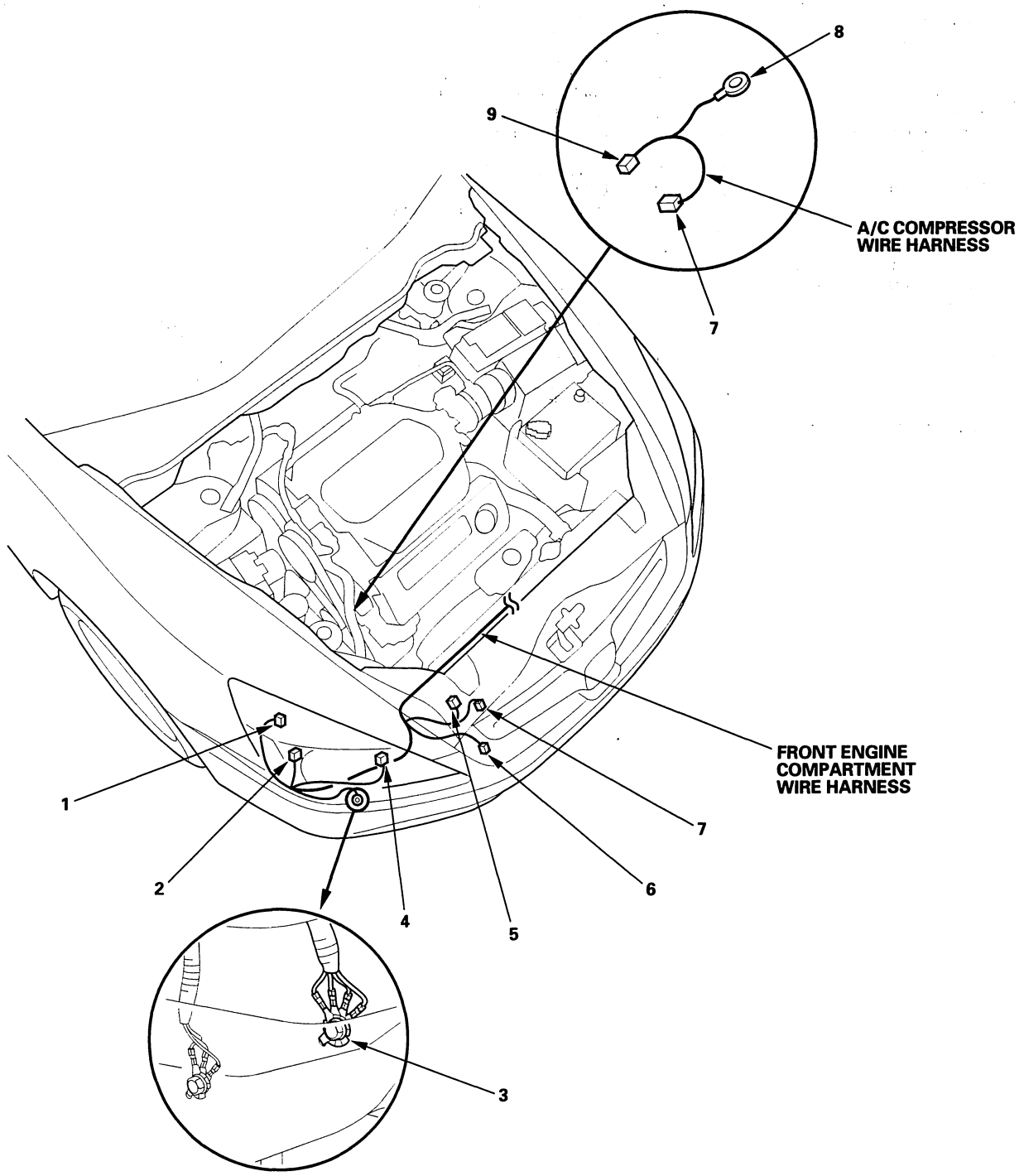

Protected by AR

Connector to Harness Index (cont'd)

Front Engine Compartment Wire Harness (Left branch)

Connector or Terminal	Ref	Cavities	Location	Connects to	Notes
Daytime running lights relay	1	5	In multi-relay box		Canada
Fan control relay	1	5	In multi-relay box		USA
Fan control relay	2	5	In multi-relay box		Canada
Hood switch	13	2	Middle of engine compartment		Security
Horn (high)	11	1	Behind middle of front bumper		
Horn (low)	14	1	Behind middle of front bumper		
Left front turn signal/side marker light	5	3	Behind left headlight		
Left headlight (high)	9	2	Behind left headlight		
Left headlight (low)	6	2	Behind left headlight		
Outside air temperature sensor	12	2	Middle of engine compartment		Climate control
Radiator fan motor	10	2	Left side of engine compartment		
Under-hood fuse/relay box connector F (see page 22-44)	3	20	Behind under-hood fuse/relay box		
Under-hood fuse/relay box connector H (see page 22-44)	4	14	Behind under-hood fuse/relay box		
C301	7	2	Left side of engine compartment	Engine compartment wire harness (see page 22-18)	* 1
C301	7	4	Left side of engine compartment	Engine compartment wire harness (see page 22-18)	* 2
G301	8		Left side of engine compartment	Body ground, via front engine compartment wire harness	

* 1: '03-04 models
* 2: '05-06 models

BACK

Protected by AR

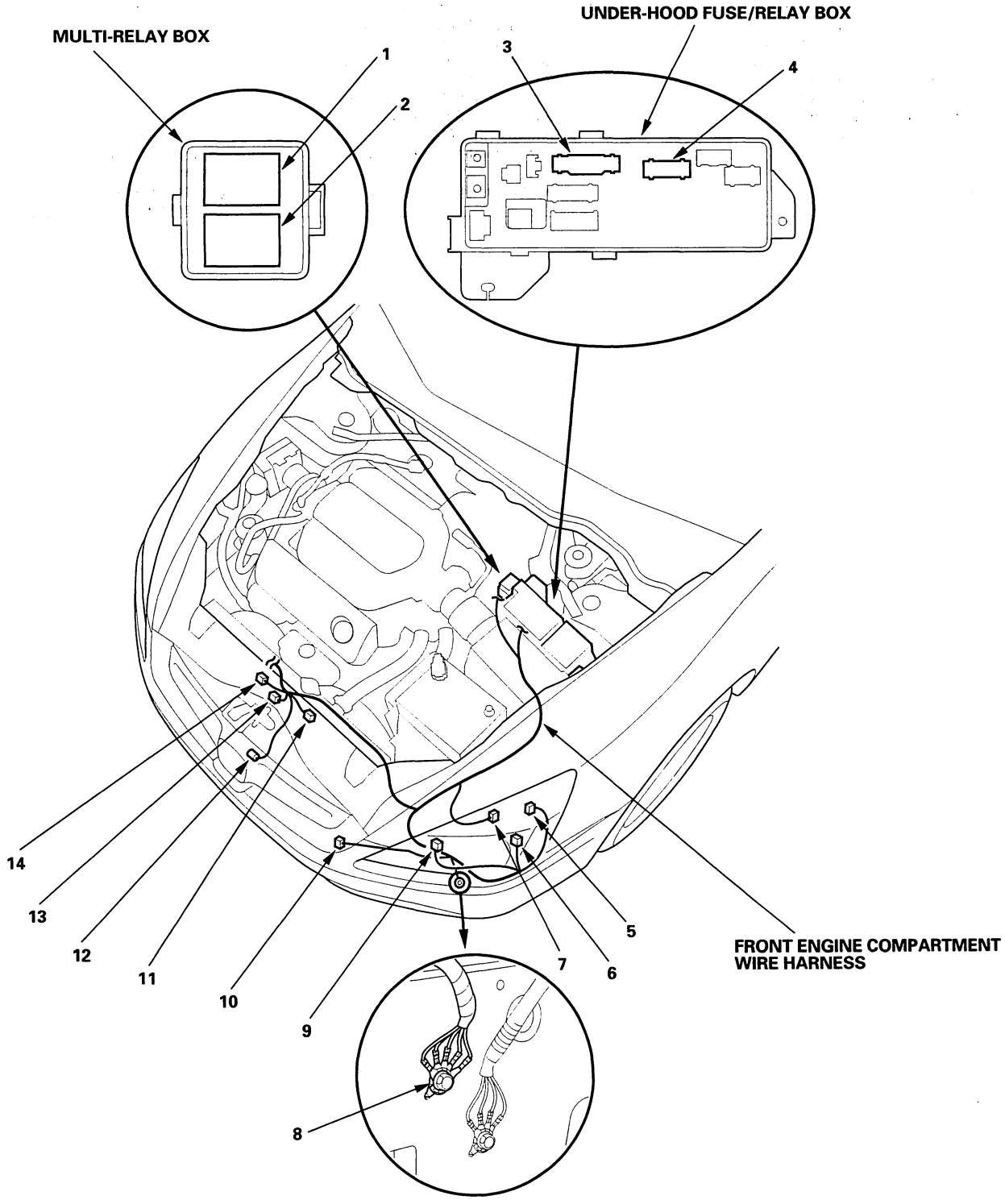

BACK

Protected by AR

Connector to Harness Index (cont'd)

Engine Compartment Wire Harness (Right branch)

Connector or Terminal	Ref	Cavities	Location	Connects to	Notes
Right front wheel sensor	1	2	Right side of engine compartment		
ABS/TCS modulator-control unit	3	47	Right side of engine compartment		* 1
Power steering pressure (PSP) switch	2	2	Right side of engine compartment		
Right front impact sensor	8	2	Right side of engine compartment		
Right washer fluid level switch	6	2	Behind right of front bumper		Canada
VSA modulator-control unit	3	37	Right side of engine compartment		* 2
Windshield washer motor	5	2	Behind right of front bumper		
G202	7		Right side of engine compartment	Body ground, via engine compartment wire harness	
G203	4		Right side of engine compartment	Body ground, via engine compartment wire harness	

* 1: '03-05 models
* 2: '06 model

BACK

Protected by AR

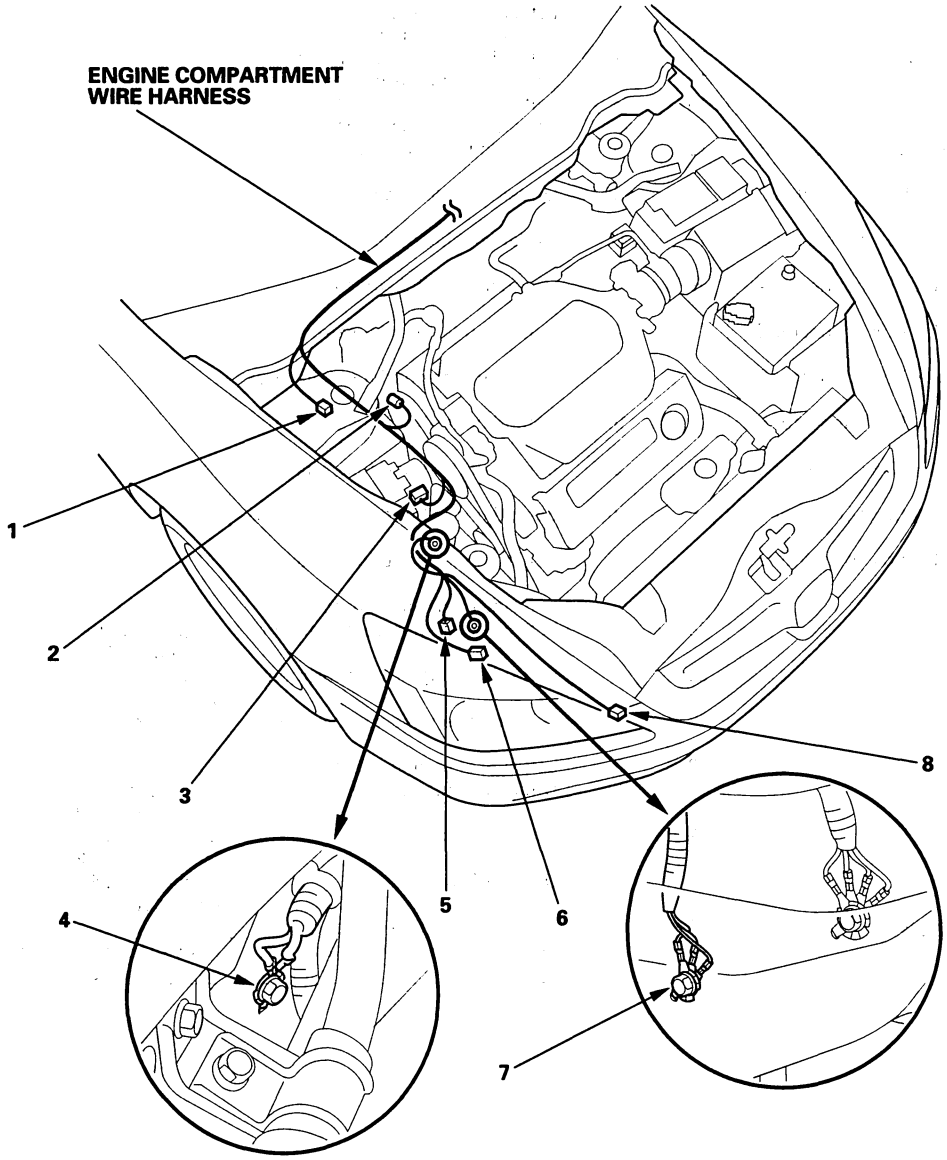

Protected by AR

Connector to Harness Index (cont'd)

Engine Compartment Wire Harness (Left branch)

Connector or Terminal	Ref	Cavities	Location	Connects to	Notes
Brake fluid level switch	8	2	Left side of engine compartment		
Diode (for A/C)	17	2	Under left side of dash		
Left front impact sensor	21	2	Left side of engine compartment		
Left front wheel sensor	18	2	Left side of engine compartment		
Optional connector A	10	3	Left side of engine compartment		
Optional connector B	19	3	Left side of engine compartment		
Under-dash fuse/relay box connector B (see page 22-46)	15	6	Under left side of dash		
Under-dash fuse/relay box connector C (see page 22-46)	14	12	Under left side of dash		
Under-dash fuse/relay box connector D (see page 22-46)	16	17	Under left side of dash		
Under-hood fuse/relay box connector A (ELD unit) (see page 22-44)	6	3	In under-hood fuse/relay box		
Under-hood fuse/relay box connector C (see page 22-44)	1	2	Behind under-hood fuse/relay box		
Under-hood fuse/relay box connector D (see page 22-44)	7	9	Behind under-hood fuse/relay box		
Under-hood fuse/relay box connector E (see page 22-44)	2	16	Behind under-hood fuse/relay box		
Under-hood fuse/relay box connector G (see page 22-44)	5	2	Behind under-hood fuse/relay box		
Under-hood fuse/relay box connector I (see page 22-44)	4	10	Behind under-hood fuse/relay box		
Under-hood fuse/relay box connector J (see page 22-44)	3	5	Behind under-hood fuse/relay box		
Windshield wiper motor	9	5	Left side of engine compartment		
C153	23	1	Left side of engine compartment	Engine wire harness (see page 22-8)	
C301	22	2	Left side of engine compartment	Front engine compartment wire harness (see page 22-14)	* 1
C301	23	4	Left side of engine compartment	Front engine compartment wire harness (see page 22-14)	* 2
C310 (optional connector)	19	3	Left side of engine compartment		
C401	11	20	Under left side of dash	Dashboard wire harness (see page 22-22)	
C402	12	5	Under left side of dash	Dashboard wire harness (see page 22-22)	
C403	13	4	Under left side of dash	Dashboard wire harness (see page 22-22)	
C415 (optional connector)	10	3	Left side of engine compartment		
G302	20		Left side of engine compartment	Body ground, via engine compartment wire harness	

* 1: '03-04 models
* 2: '05-06 models

BACK

Protected by AR

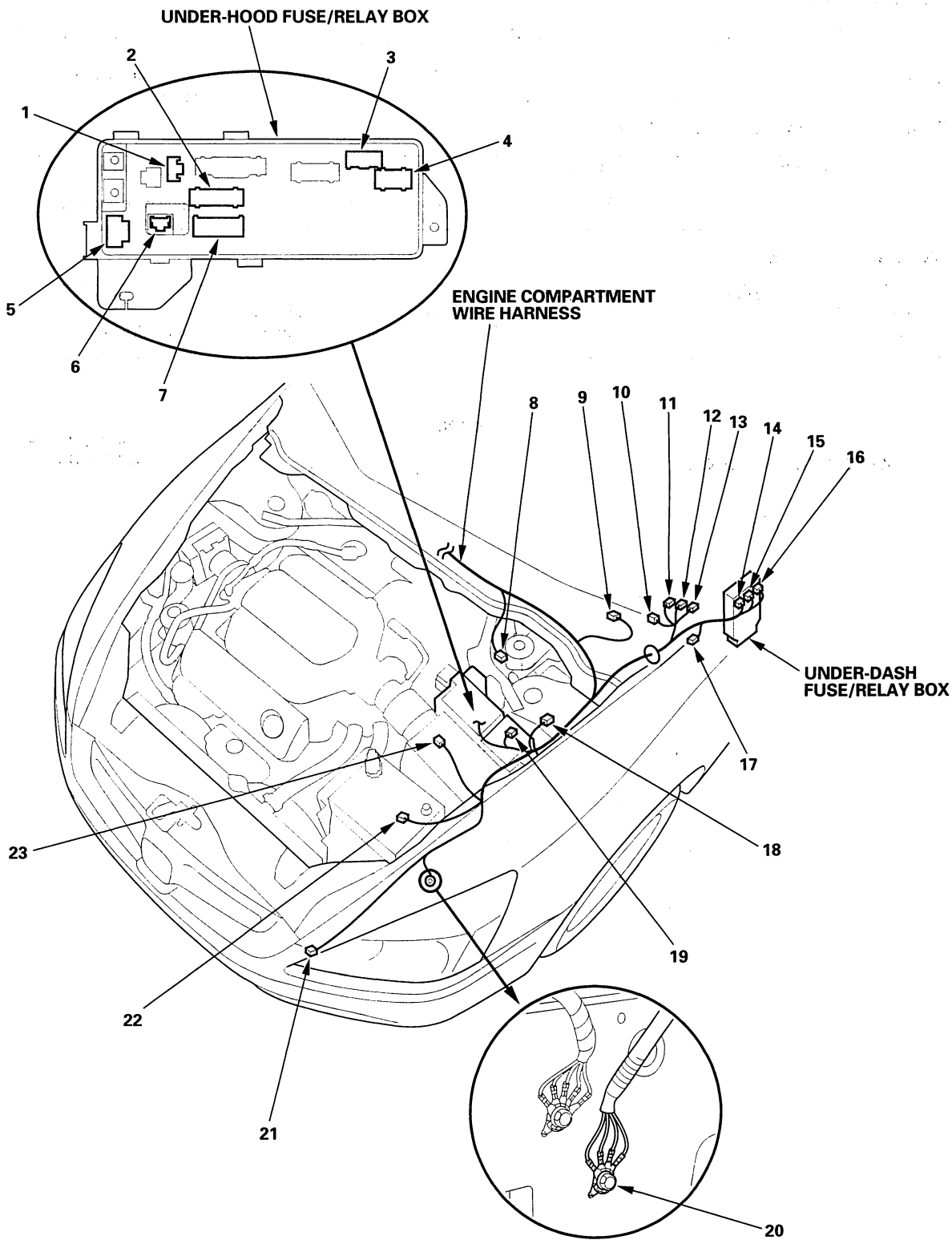

Protected by AR

Connector to Harness Index (cont'd)

Knock Sensor Subharness

Connector or Terminal	Ref	Cavities	Location	Connects to	Notes
Knock sensor	1	1	Middle of engine compartment		
C154	2	1	Right side of engine compartment	Engine wire harness (see page 22-8)	

Transmission Range Switch Subharness

Connector or Terminal	Ref	Cavities	Location	Connects to	Notes
Transmission range switch	6	10	Transmission housing		
C152	5	10	Transmission housing	Engine wire harness (see page 22-8)	

CKP Sensor Subharness

Connector or Terminal	Ref	Cavities	Location	Connects to	Notes
CKP sensor A, B	3	6	Right side of engine compartment		
C155	4	6	Right side of engine compartment	Engine wire harness (see page 22-8)	

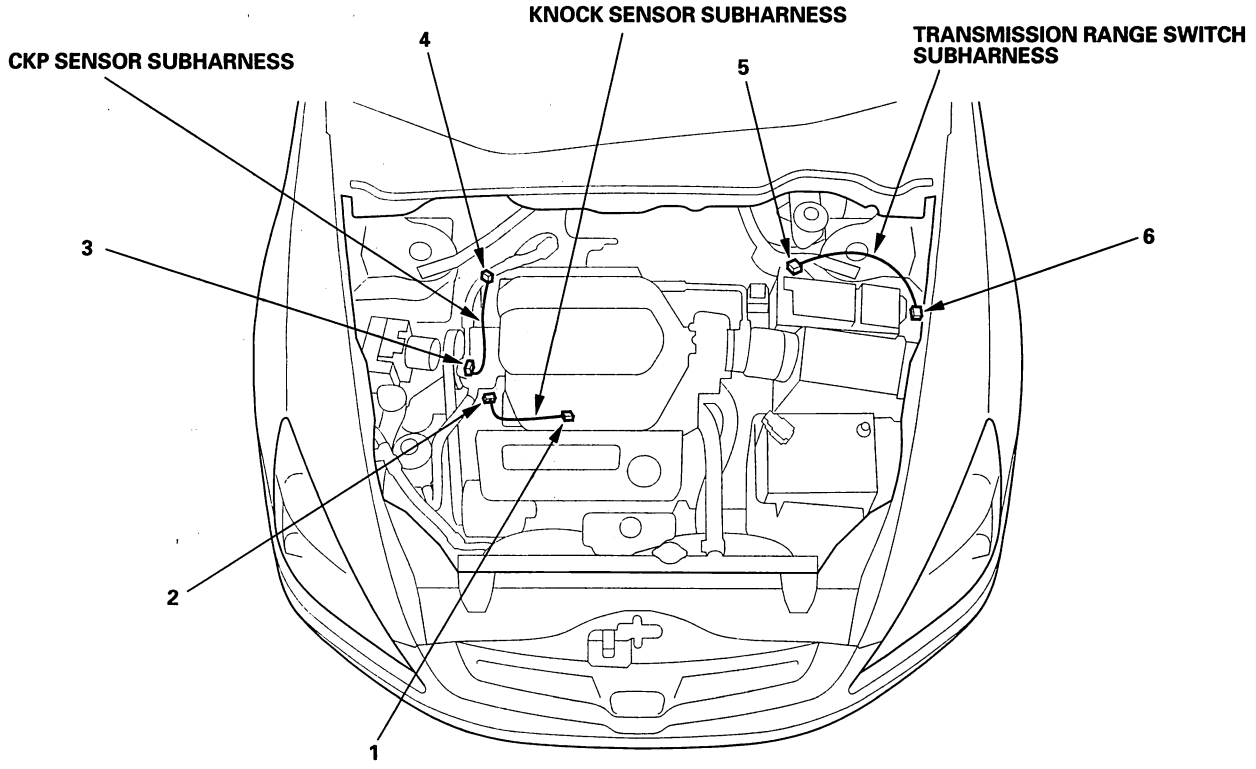

BACK

Protected by AR

A/T Subharness

Connector or Terminal	Ref	Cavities	Location	Connects to	Notes
A/T fluid temperature sensor	2	2	On transmission housing		
3rd clutch transmission fluid pressure switch	4	1	On transmission housing		
C151	1	6	Left side of engine compartment	Engine wire harness (see page 22-8)	
G151	3		On transmission housing	Engine ground, via A/T subharness	

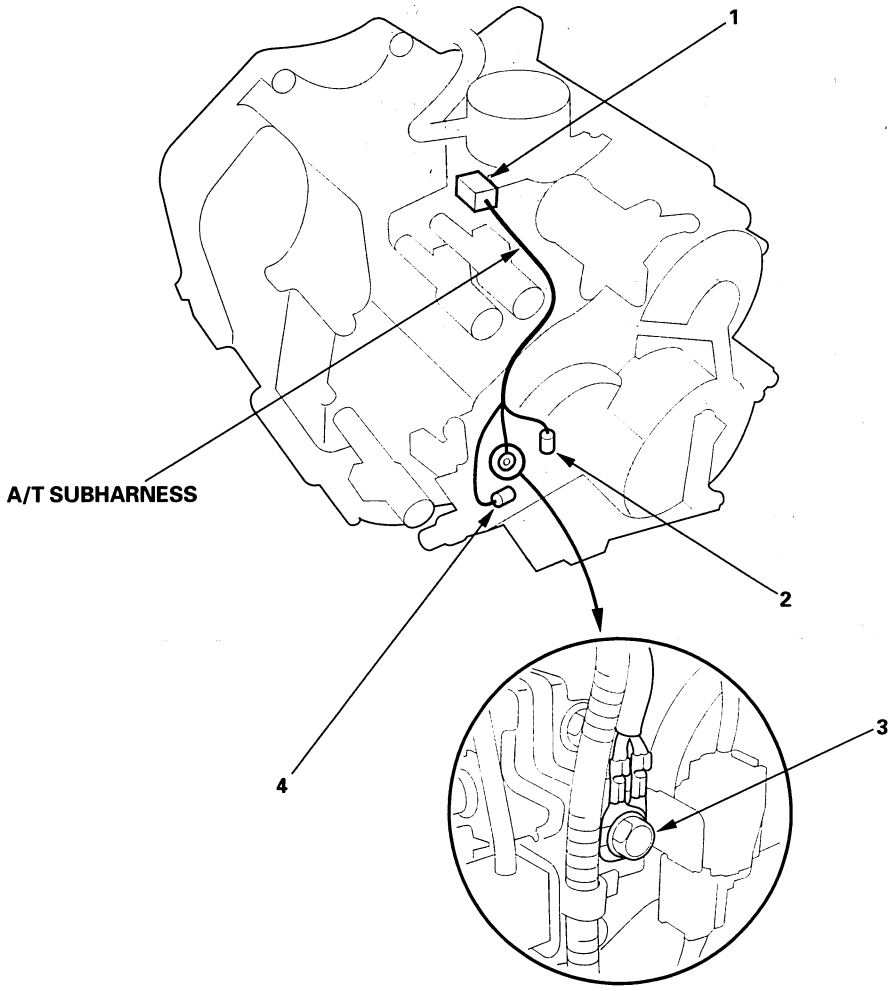

Protected by AR

Connector to Harness Index (cont'd)

Dashboard Wire Harness (Left branch)

Connector or Terminal	Ref	Cavities	Location	Connects to	Notes
Antenna lead	19	1	Under middle of dash		
Audio unit connector A	16	20	Under middle of dash		
Audio unit connector B	17	14	Under middle of dash		* 1
Brake pedal position switch	7	4	Under left side of dash		
Cable reel connector A	25	4	Under left side of dash		
Cable reel connector B	26	13	In steering column cover	Refer to the 2003-2006 Accord Service Manual Cable reel connector C (see page 22-61)	
Clutch interlock switch	28	2	Under left side of dash		* 2
Clutch pedal position switch	29	3	Under left side of dash		* 2
Data link connector (DLC)	33	16	Under left side of dash		
Gauge control module	11	30	Behind gauges assembly		
Ignition switch	27	7	In steering column cover		
Immobilizer control unit-receiver	23	7	In steering column cover		
In-car temperature sensor	12	2	Under middle of dash		Climate control
Ignition key switch/key light	24	6	In steering column cover		
Moonroof switch	9	6	Behind left side of dash		
Navigation display unit connector A	18	10	Under middle of dash		Navigation
TCS OFF switch	10	5	Behind left side of dash		* 4
Left tweeter	3	2	Left side of dash		
Under-dash fuse/relay box connector A (see page 22-46)	40	6	Left kick panel		
Under-dash fuse/relay box connector N (see page 22-46)	39	45	Left kick panel		
Under-dash fuse/relay box connector P [Multiplex integrated control unit (MICU)] (see page 22-46)	36	30	Left kick panel		
Under-dash fuse/relay box connector Q [Multiplex integrated control unit (MICU)] (see page 22-46)	37	14	Left kick panel		
Under-dash fuse/relay box connector R (see page 22-46)	41	2	Left kick panel		
Under-dash fuse/relay box connector S (see page 22-46)	42	2	Left kick panel		
Under-dash fuse/relay box connector X (see page 22-46)	38	39	Left kick panel		
VSA OFF switch	10	5	Behind left side of dash		* 3
Wiper/washer switch connector A	22	8	In steering column cover		

* 1: With navigation, '04-06 models with XM radio
* 2: M/T
* 3: '06 model
* 4: '03-05 models

BACK

Protected by AR

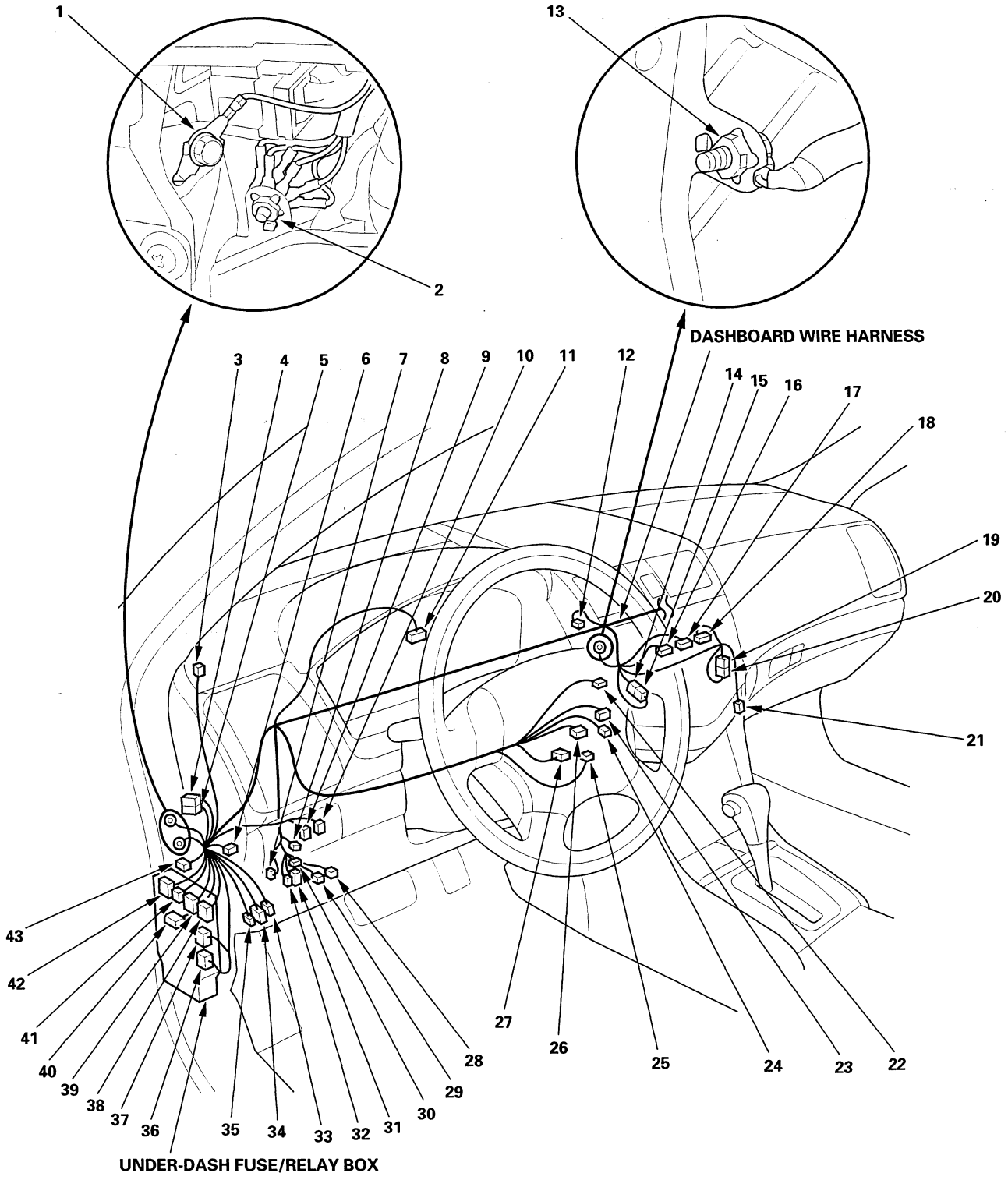

(cont'd)

BACK

Protected by AR

Connector to Harness Index (cont'd)

Dashboard Wire Harness (Left branch) (cont'd)

Connector or Terminal	Ref	Cavities	Location	Connects to	Notes
C401	31	20	Under left side of dash	Engine compartment wire harness (see page 22-18)	
C402	32	5	Under left side of dash	Engine compartment wire harness (see page 22-18)	
C403	30	4	Under left side of dash	Engine compartment wire harness (see page 22-18)	
C404 (Junction connector)	6	28	Behind left side of dash		
C405 (Junction connector)	4	28	Behind left side of dash		
C406 (Junction connector)	5	28	Behind left side of dash		
C407 (Junction connector)	19	14	Under middle of dash		* 1
C407 (Junction connector D)	14	14	Under middle of dash		* 2
C408 (Junction connector)	20	14	Under middle of dash		* 1
C408 (Junction connector E)	15	14	Under middle of dash		* 2
C411	21	2	Under middle of dash		* 3
C411	21	1	Under middle of dash		'05-06 models
C416 (optional connector)	8	2	Under left of dash		
C501	34	24	Under left side of dash	Floor wire harness • 4-door (see page 22-30) • 2-door (see page 22-34)	
C502	35	4	Under left side of dash	Floor wire harness • 4-door (see page 22-30) • 2-door (see page 22-34)	
C601	43	8	Under left side of dash	Refer to the 2003-2006 Accord Service Manual Roof wire harness (see page 22-52)	* 3
C601	41	10	Under left side of dash	Refer to the 2003-2006 Accord Service Manual Roof wire harness (see page 22-52)	* 4
C601	41	3	Under left side of dash	Refer to the 2003-2006 Accord Service Manual Roof wire harness (see page 22-52)	* 5
G501	2		Behind left side of dash	Body ground, via dashboard wire harness	
G502	1		Behind left side of dash	Body ground, via dashboard wire harness	
G504	13		Under middle of dash	Body ground, via dashboard wire harness	

* 1: '04 model with XM radio
* 2: '05-06 models with XM radio
* 3: '03-04 models
* 4: '05-06 models with moonroof
* 5: '05-06 models without moonroof

BACK

Protected by AR

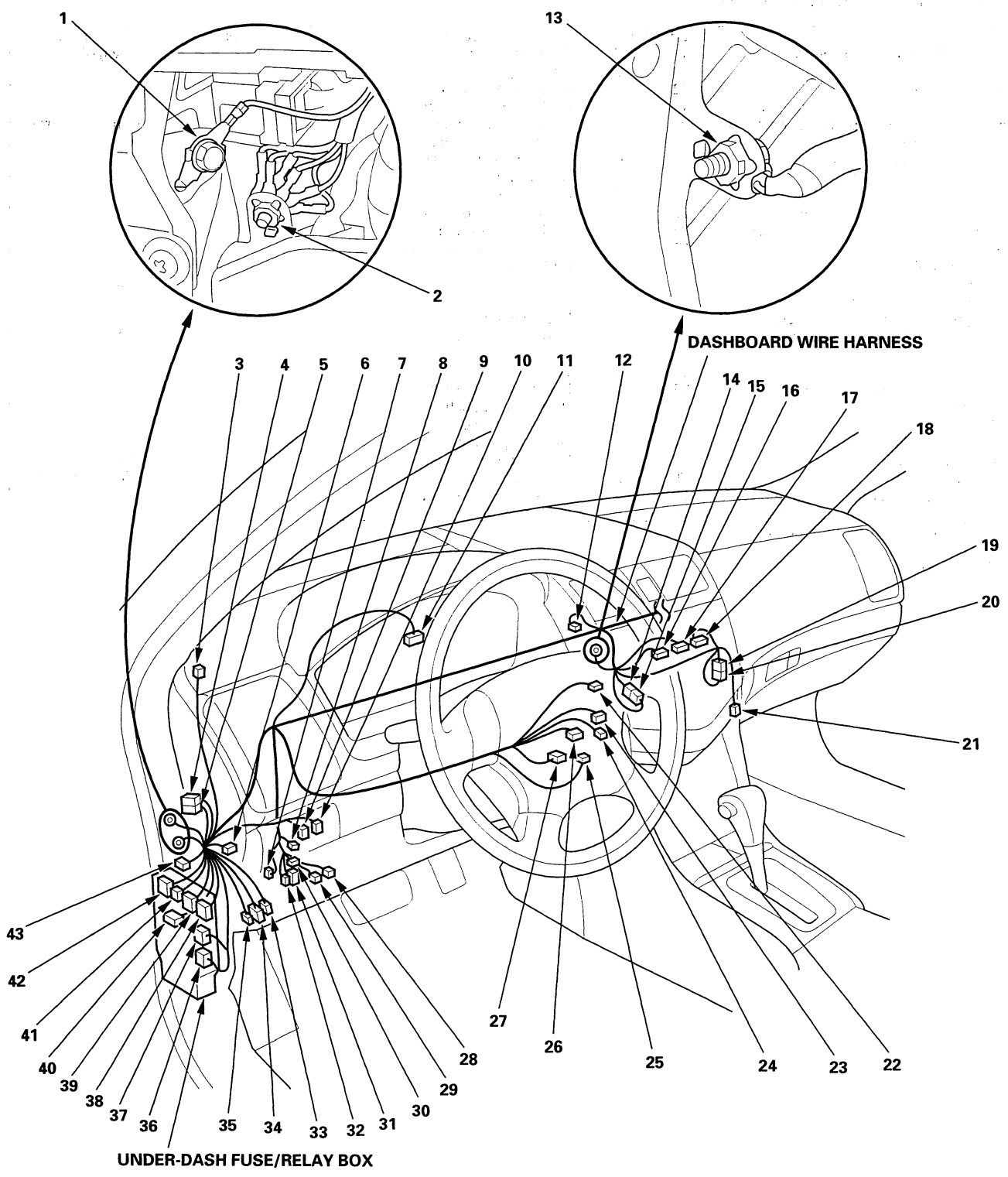

Protected by AR

Connector to Harness Index (cont'd)

Dashboard Wire Harness (Right branch)

Connector or Terminal	Ref	Cavities	Location	Connects to	Notes
Audio-HVAC subdisplay/clock	6	10	Middle of dash		Navigation
Blower motor	19	2	Under right side		
Blower power transister	22	4	Under right side of dash		
Audio-HVAC display panel connector A	8	22	Under middle of dash		
Audio-HVAC display panel connector B	4	16	Under middle of dash		Climate control
Crossover network unit	5	12	Under middle of dash		* 1
Driver's seat heater switch	38	6	Under console panel		
ECM/PCM connector E	30	31	Under middle of dash		
Front accessory power socket	31	2	Under console panel		
Front passenger's airbag inflator	26	4	Under middle of dash		
Front passenger's seat heater switch	33	6	Under console panel		
Glove box light	23	2	Under right side of dash		
Hazard warning switch	7	5	Middle of dash		* 2
Hazard warning switch/passenger's airbag cutoff indicator	7	6	Middle of dash		* 3
Navigation display unit connector B	27	20	Middle of dash		
Park pin switch /A/T gear position console light	2	4	Under console panel		A/T
Parking brake switch	36	1	Behind rear console		
Rear accessory power socket	37	2	Behind rear console		
Right tweeter	14	2	Right side of dash		
SRS unit connector A	34	28	Under middle of dash		
Seat heater relay	24	4	Under right side of dash		
Shift lock solenoid	35	2	Under console panel		A/T
Sunlight sensor	9	2	Middle of dash		Climate control
Throttle actuator control module relay	25	4	Under right side of dash		
Yaw rate-lateral acceleration sensor	32	5	Under middle of dash		* 4

* 1: 2-door M/T with premium audio
* 2: '03 model
* 3: '04-06 models
* 4: '06 model

BACK

Protected by AR

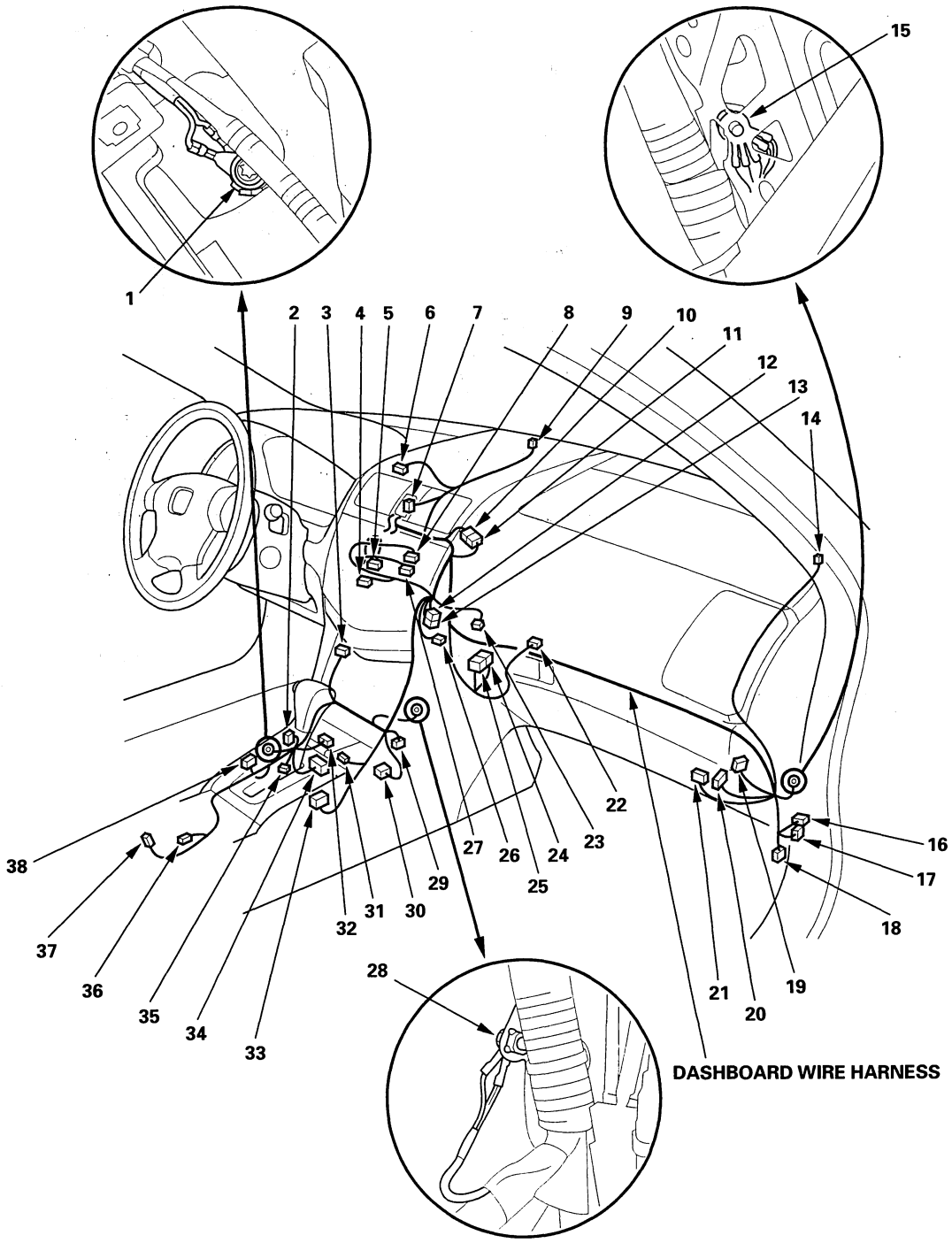

(cont'd)

BACK

Protected by AR

Connector to Harness Index (cont'd)

Dashboard Wire Harness (Right branch) (cont'd)

Connector or Terminal	Ref	Cavities	Location	Connects to	Notes
C251	29	13	Under middle of dash	ECM/PCM wire harness (see page 22-41)	
C551	17	4	Under right side of dash	Floor wire harness • 4-door (see page 22-32) • 2-door (see page 22-36)	* 1
C551	17	17	Under right side of dash	Floor wire harness • 4-door (see page 22-32) • 2-door (see page 22-36)	* 2
C552	17	13	Under right side of dash	Floor wire harness • 4-door (see page 22-32) • 2-door (see page 22-36)	Navigation
C553	16	6	Under right side of dash	Floor wire harness • 4-door (see page 22-32) • 2-door (see page 22-36)	Navigation
C554 (Junction connector)	10	28	Under right side of dash		
C555 (Junction connector)	11	28	Under right side of dash		
C556 (Junction connector)	13	28	Under right side of dash		
C557 (Junction connector)	12	28	Under right side of dash		
C731	20	13	Under right side of dash	Refer to the 2003-2006 Accord Service Manual Front passenger's door wire harness (see page 22-56)	
C732	21	12	Under right side of dash	Refer to the 2003-2006 Accord Service Manual Front passenger's door wire harness (see page 22-56)	
C851	3	21	Under middle of dash	Refer to the 2003-2006 Accord Service Manual A/C subharness (see page 22-67)	
G503	15		Behind right side of dash	Body ground via dashboard wire harness	
G505	1		Under console panel	Body ground via dashboard wire harness	
G506	28		Under middle of dash	Body ground via dashboard wire harness	

* 1: '03 model and '04-06 models without XM radio, '04-06 models without navigation
* 2: '04-06 models with XM radio or '04-06 models with navigation

BACK

Protected by AR

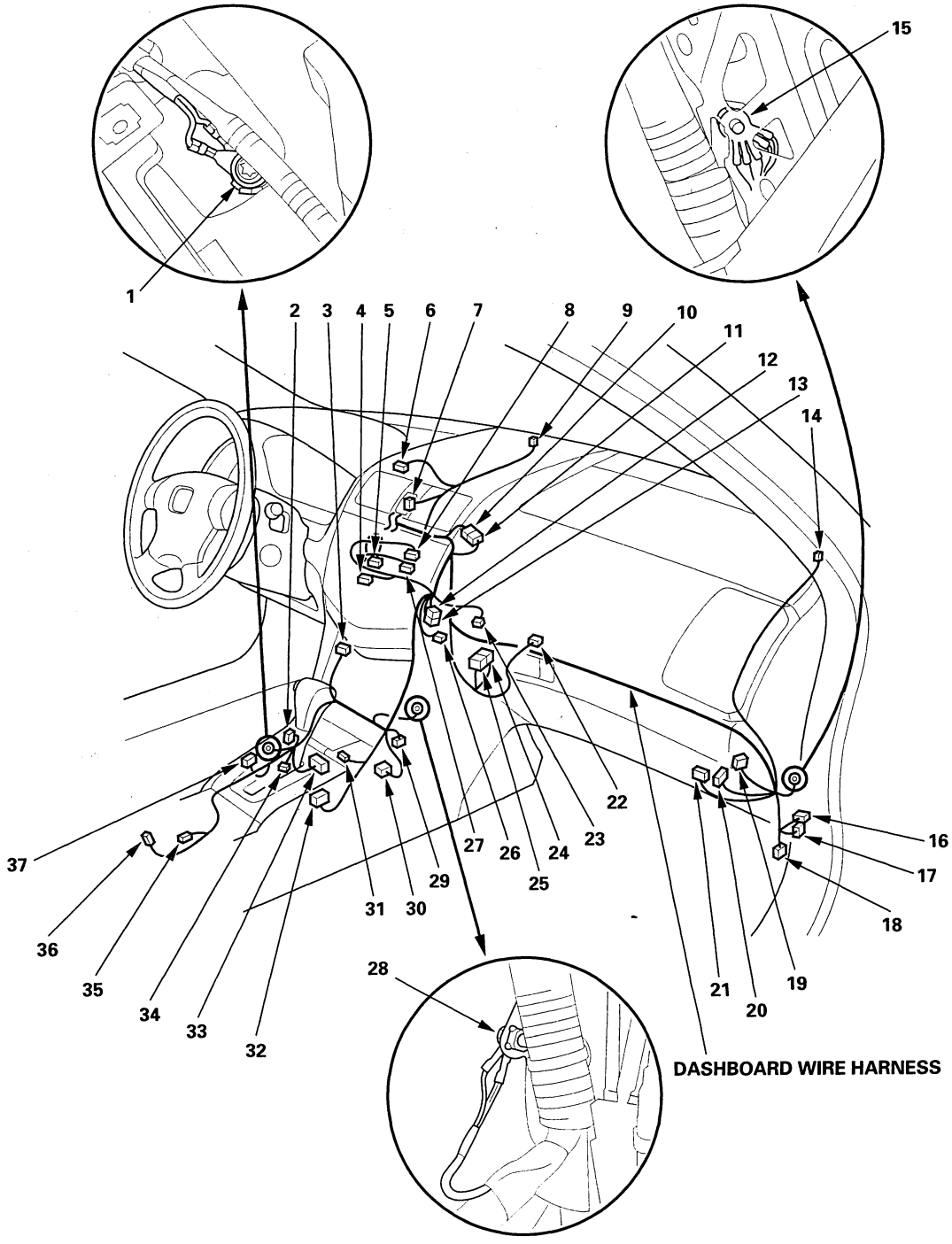

Protected by AR

Connector to Harness Index (cont'd)

Floor Wire Harness (Left branch) (4-door)

Connector or Terminal	Ref	Cavities	Location	Connects to	Notes
Driver's door switch	20	1	Left B-pillar		
Driver's seat belt tensioner	18	4	Left B-pillar		
Driver's side airbag inflator	17	2	Under driver's seat		
Driver's side impact sensor	22	2	Under driver's seat		
EVAP canister vent shut valve	14	2	Left side of trunk		
Fuel pump/fuel gauge sending unit	8	5	Fuel tank		
Fuel tank pressure (FTP) sensor	15	3	Left side of trunk		
Left rear door switch	12	1	Left C-piller		
Left rear wheel sensor	13	2	Under rear floor		
SRS unit connector B	6	28	Under middle of dash		
Under-dash fuse/relay box connector E (see page 22-46)	2	16	Under left side of dash		
Under-dash fuse/relay box connector F (see page 22-46)	1	14	Under left side of dash		
Under-dash fuse/relay box connector H (see page 22-46)	3	14	Under left side of dash		
Window antenna coil connector A	9	1	Left C-pillar		
C501	5	24	Under left side of dash	Dashboard wire harness (see page 22-22)	
C502	4	4	Under left side of dash	Dashboard wire harness (see page 22-22)	
C701	10	8	Left side of trunk	Refer to the 2003-2006 Accord Service Manual Rear wire harness • '03-05 models (see page 22-44) • '06 model (see page 22-46)	
C751	19	10	Left B-pillar	Refer to the 2003-2006 Accord Service Manual Left rear door wire harness (see page 22-58)	
C752	11	18	Left C-pillar	Refer to the 2003-2006 Accord Service Manual Rear wire harness connectors C702 and C703 via junction connector • '03-05 models (see page 22-44) • '06 model (see page 22-46)	
C901	16	10	Under driver's seat	Driver's seat wire harness (see page 22-42)	
C903	23	2	Under driver's seat	Seat position sensor harness (see page 22-38)	* 1
G601	21		Left side of floor	Body ground, via floor wire harness	
G603	7		Left front of trunk	Body ground, via floor wire harness	

* 1: '04-06 models

BACK

Protected by AR

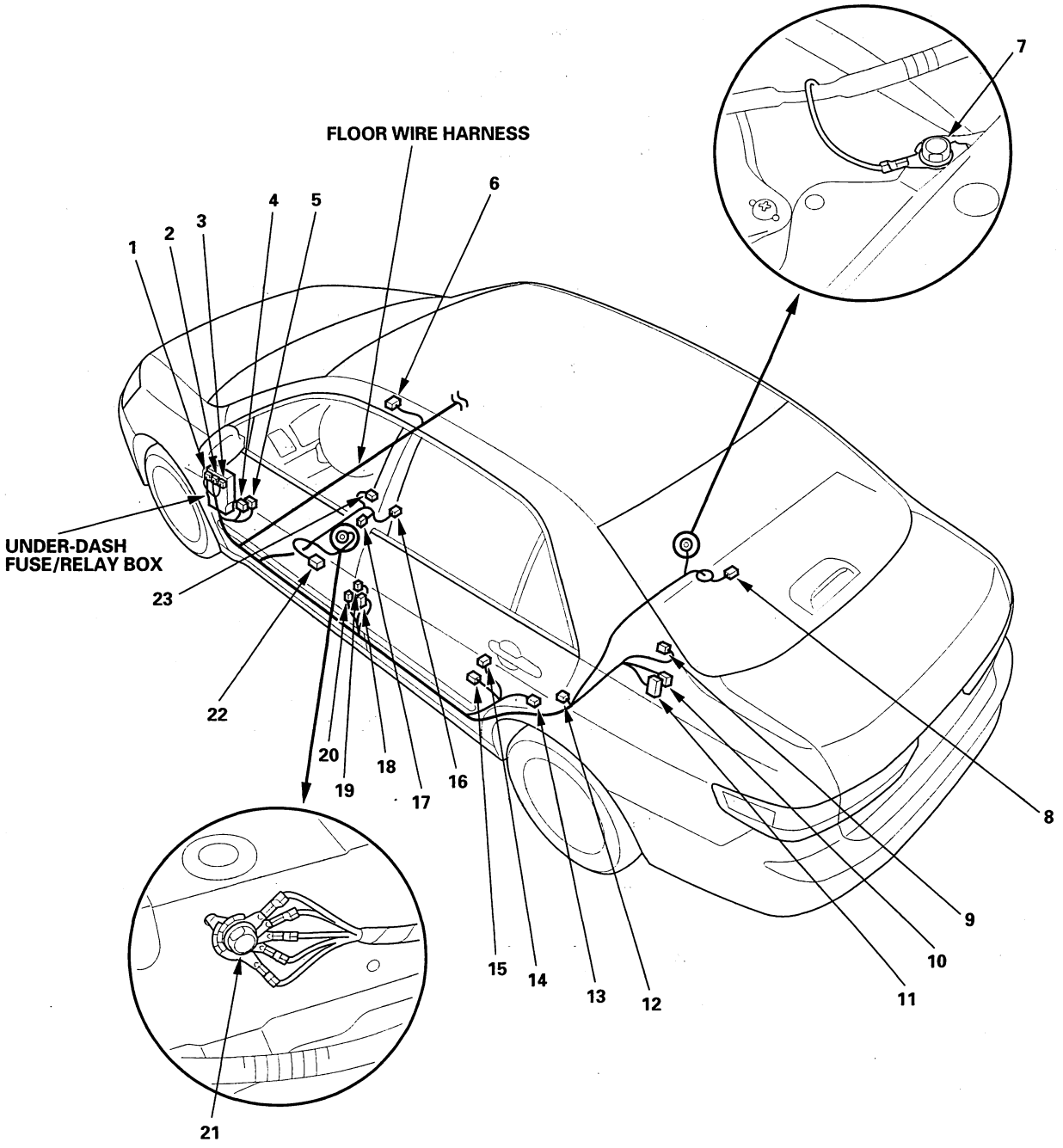

Protected by AR

Connector to Harness Index (cont'd)

Floor Wire Harness (Right branch) (4-door)

Connector or Terminal	Ref	Cavities	Location	Connects to	Notes
Front passenger's door switch	13	1	Right B-pillar		
Front passenger's seat belt switch	5	3	Under front passenger's seat		
Front passenger's seat belt tensioner	14	4	Right B-pillar		
Front passenger's side airbag inflator	16	2	Under front passenger's seat		
Front passenger's side impact sensor	11	2	Under front passenger's seat		
Front passenger's weight sensor unit	10	6	Under front passenger's seat		* 1
Navigation inspection connector	24	2	Right side of rear shelf		
Navigation unit connector A	26	20	Middle of rear shelf		
Navigation unit connector B	27	14	Middle of rear shelf		
Navigation unit connector C	25	8	Middle of rear shelf		
Right rear door switch	18	1	Right C-pillar		
Right rear speaker	23	2	Right side of rear shelf		Navigation
Right rear wheel sensor	17	2	Under rear floor		
XM receiver connector A	22	14	Right side of trunk		* 2
XM receiver connector A	21	14	Right side of trunk		* 3
C551	9	4	Under right side of dash	Dashboard wire harness (see page 22-26)	* 4
C551	9	17	Under right side of dash	Dashboard wire harness (see page 22-26)	* 5
C552	7	13	Under right side dash	Dashboard wire harness (see page 22-26)	Navigation
C553	6	6	Under right side dash	Dashboard wire harness (see page 22-26)	Navigation
C651	8	6	Under right side dash	Refer to the 2003-2006 Accord Service Manual Roof wire harness (see page 22-52)	
C781	15	10	Right B-pillar	Refer to the 2003-2006 Accord Service Manual Right rear door wire harness (see page 22-59)	
C801	3	4	Under front passenger's seat	OPDS unit harness (see page 22-38)	* 7
C801	3	4	Under front passenger's seat	ODS unit harness (see page 22-38)	* 6
C902	4	10	Under front passenger's seat	Front passenger's seat wire harness (see page 22-43)	
G602	12		Right side of floor	Body ground, via floor wire harness	

Rear Window Defogger Ground Wire (4-door)

Connector or Terminal	Ref	Cavities	Location	Connects to	Notes
Rear window defogger connector B (—)	2	1	Right C-pillar		
G604	1		Right C-pillar	Body ground, via rear window defogger ground wire	

XM Radio Subharness ('04-06 models)

Connector or Terminal	Ref	Cavities	Location	Connects to	Notes
XM receiver connector B	20	2	Right side of trunk		
XM raido antenna	19	2	Right C-pillar		

* 1: '04-06 models
* 2: '04-06 models with navigation
* 3: '04-06 models without navigation
* 4: '03 model, '04-06 models without XM radio, '04-06 models without navigation
* 5: '04-06 models with XM radio or '04-06 models with navigation
* 6: '06 model
* 7: '03-05 models

BACK

Protected by AR

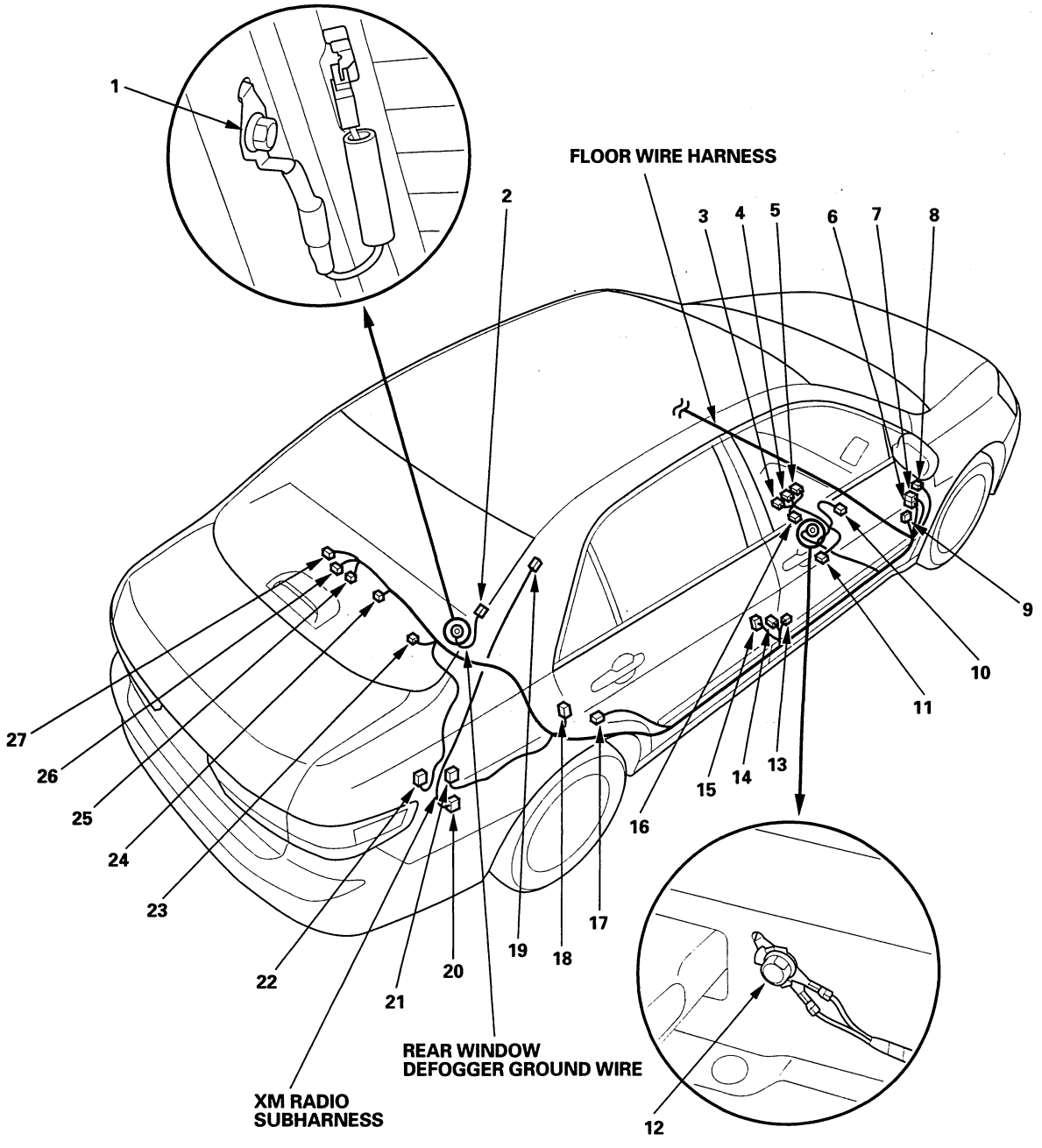

Protected by AR

Connector to Harness Index (cont'd)

Floor Wire Harness (Left branch) (2-door)

Connector or Terminal	Ref	Cavities	Location	Connects to	Notes
Driver's door switch	16	1	Left B-pillar		
Driver's seat belt tensioner	15	4	Left B-pillar		
Driver's side airbag inflator	18	2	Under driver's seat		
Driver's side impact sensor	20	2	Under driver's seat		
EVAP canister vent shut valve	13	2	Left side of trunk		
Fuel pump/fuel gauge sending unit	8	5	Fuel tank		
Fuel tank pressure (FTP) sensor	14	3	Left side of trunk		
Left rear wheel sensor	12	2	Under rear floor		
SRS unit connector B	6	28	Under middle of dash		
Under-dash fuse/relay box connector E (see page 22-46)	2	16	Under left side of dash		
Under-dash fuse/relay box connector F (see page 22-46)	1	14	Under left side of dash		
Under-dash fuse/relay box connector H (see page 22-46)	3	14	Under left side of dash		
Window antenna coil connector A	9	1	Left C-pillar		
C501	5	24	Under left side of dash	Dashboard wire harness (see page 22-22)	
C502	4	4	Under left side of dash	Dashboard wire harness (see page 22-22)	
C701	10	8	Left side of trunk	Refer to the 2003-2006 Accord Service Manual Rear wire harness • '03-05 models (see page 22-48) • '06 model (see page 22-50)	
C752 (Junction connector)	11	18	Left C-pillar	Refer to the 2003-2006 Accord Service Manual Rear wire harness connectors C702 and C703 via junction connector • '03-05 models (see page 22-44) • '06 model (see page 22-46)	
C901	17	10	Under driver's seat	Driver's seat wire harness (see page 22-42)	
C903	21	2	Under driver's seat	Seat position sensor harness (see page 22-38)	* 1
G601	19		Left side of floor	Body ground, via floor wire harness	
G603	7		Left front of trunk	Body ground, via floor wire harness	

* 1: '04-06 models

BACK

Protected by AR

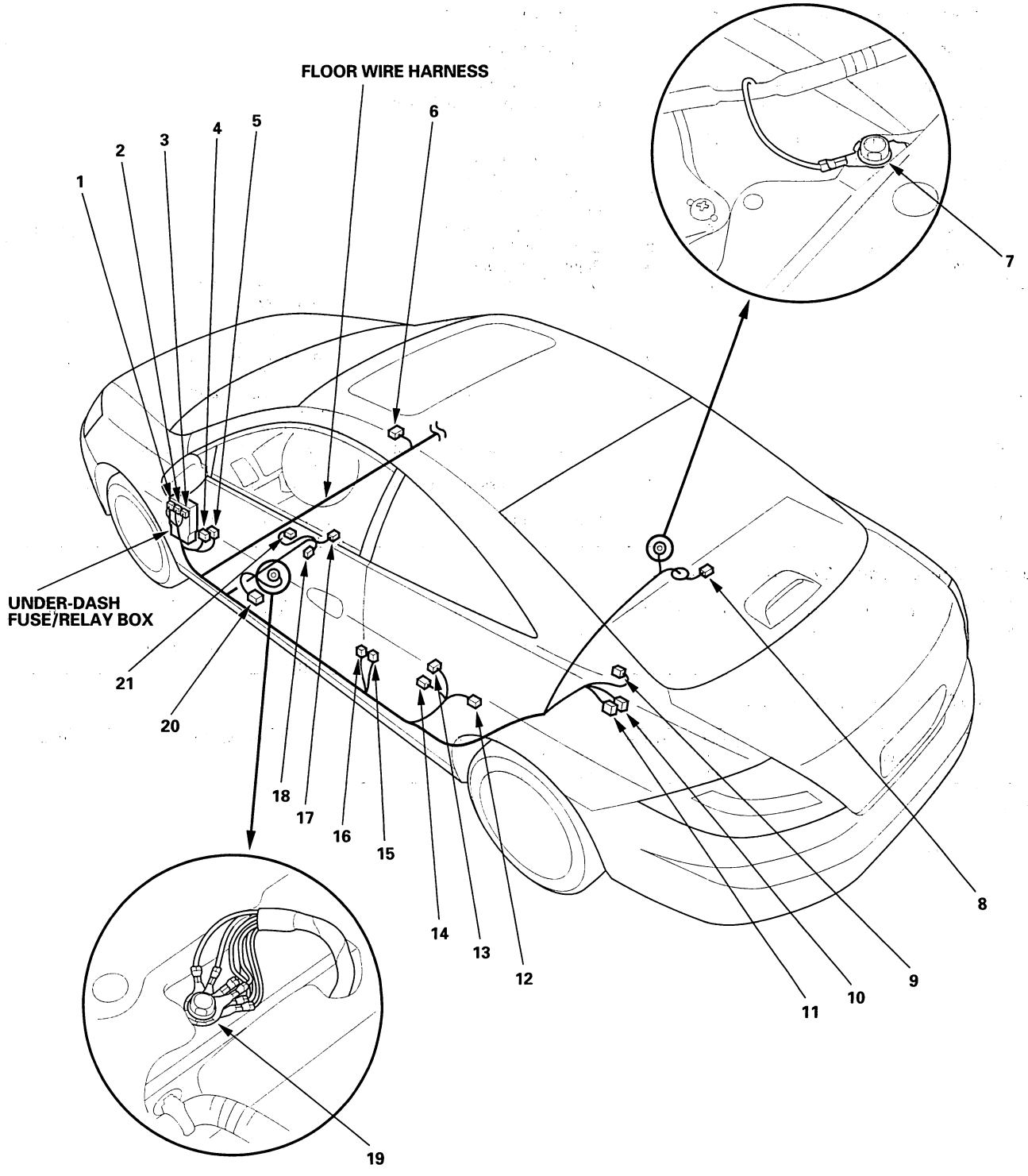

Protected by AR

Connector to Harness Index (cont'd)

Floor Wire Harness (Right branch) (2-door)

Connector or Terminal	Ref	Cavities	Location	Connects to	Notes
Front passenger's seat belt switch	5	3	Under front passenger's seat		
Front passenger's seat belt tensioner	14	4	Right B-pillar		
Front passenger's seat heater	4	4	Under front passenger's seat		
Front passenger's side airbag inflator	15	2	Under front passenger's seat		
Front passenger's side impact sensor	11	2	Right side of floor		
Front passenger's weight sensor unit connector C	10	6	Under front passenger's seat		* 1
Navigation inspection connector	22	2	Right side of rear shelf		
Navigation unit connector A	23	20	Middle of rear shelf		
Navigation unit connector B	21	14	Middle of rear shelf		
Navigation unit connector C	24	8	Middle of rear shelf		
Passenger's door switch	13	1	Right B-pillar		
Right rear speaker	20	2	Right side of rear shelf		Navigation
Right rear wheel sensor	16	2	Under rear floor		
XM receiver connector A	19	14	Right side of trunk		* 2
C551	9	17	Under right side of dash	Dashboard wire harness (see page 22-26)	* 2
C552	7	13	Under right side of dash	Dashboard wire harness (see page 22-26)	Navigation
C553	6	6	Under right side of dash	Dashboard wire harness (see page 22-26)	Navigation
C651	8	6	Under right side of dash	Refer to the 2003-2006 Accord Service Manual Roof wire harness (see page 22-52)	
C801	3	4	Under front passenger's seat	OPDS unit harness (see page 22-38)	* 4
C801	3	4	Under front passenger's seat	ODS unit harness (see page 22-38)	* 3
G602	12		Right side of floor	Body ground, via floor wire harness	

Rear Window Defogger Ground Wire (2-door)

Connector or Terminal	Ref	Cavities	Location	Connects to	Notes
Rear window defogger connector B	2	1	Right C-pillar		
G604	1		Right C-pillar	Body ground, via rear window defogger ground wire	

XM Radio Subharness ('04-06 models)

Connector or Terminal	Ref	Cavities	Location	Connects to	Notes
XM receiver connector B	18	2	Right side of trunk		
XM radio antenna	17	2	Right rear corner of roof		

* 1: '04-05 models
* 2: '04-06 models with XM radio
* 3: '06 model
* 4: '03-05 models

BACK

Protected by AR

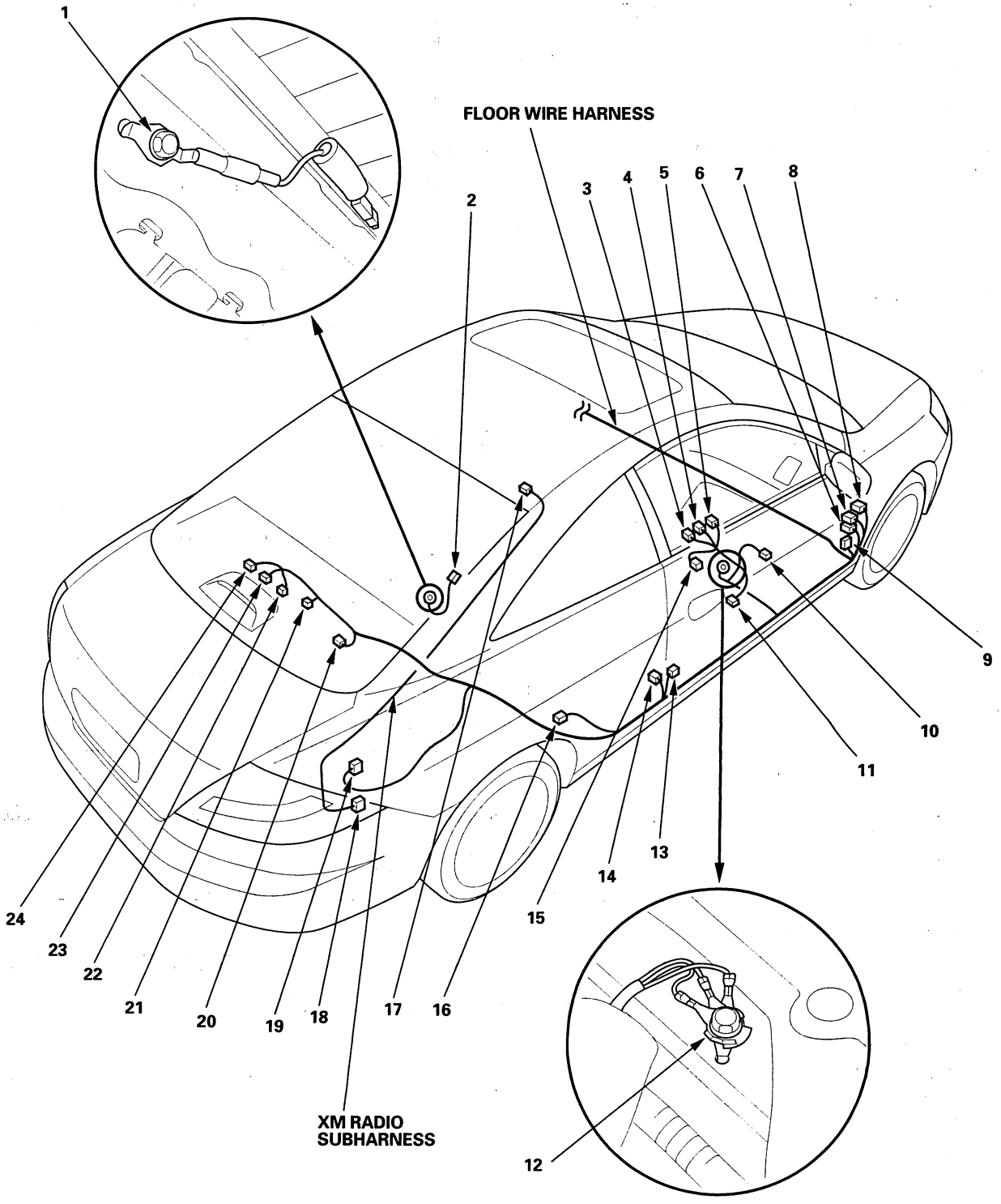

Protected by AR

Connector to Harness Index (cont'd)

Dashboard Wire Harness (SRS branch)

Connector or Terminal	Ref	Cavities	Location	Connects to	Notes
Cable reel connector A	21	4	Under left side of dash		
Front passenger's airbag inflator	6	4	Under right side of dash		
Hazard warning switch/passenger's airbag cutoff indicator	4	6	Middle of dash		* 2
SRS unit connector A	2	28	Under middle of dash		
Under-dash fuse/relay box connector R (see page 22-46)	23	2	Under left side of dash		
Under-dash fuse/relay box connector S (see page 22-46)	24	2	Under left side of dash		
C403	1	4	Under left side of dash	Engine compartment wire harness (see page 22-18)	
C501	22	24	Under left side of dash	Floor wire harness	
G505	18		Under middle of dash	Body ground, via dashboard wire harness	

Floor Wire Harness (SRS branch)

Connector or Terminal	Ref	Cavities	Location	Connects to	Notes
Driver's seat belt tensioner	17	4	Left B-pillar		
Driver's side airbag inflator	20	2	Under left side of dash		
Driver's side impact sensor (1st)	19	2	Under driver's seat		
Front passenger's seat belt tensioner	12	4	Right B-pillar		
Front passenger's side airbag inflator	10	2	Under front passenger's seat		
Front passenger's side impact sensor (1st)	13	2	Under front passenger's seat		
Front passenger's weight sensor unit connector C	8	6	Under front passenger's seat		* 1
SRS unit connector B	3	28	Under middle of dash		
C501	22	24	Under left side of dash	Dashboard wire harness	
C801	9	4	Under front passenger's seat	OPDS unit harness	* 4
C801	9	4	Under front passenger's seat	ODS unit harness	* 3
C903	7	2	Under driver's seat	Seat position sensor harness	* 2

OPDS Unit Harness ('03-05 models)

Connector or Terminal	Ref	Cavities	Location	Connects to	Notes
OPDS unit connector D	14	8	In front passenger's seat		
Seat weight sensor (inside)	15	3	Under front passenger's seat		
Seat weight sensor (outside)	11	2	Under front passenger's seat		
C801	9	4	Under front passenger's seat	Floor wire harness	

ODS Unit Harness ('06 model)

Connector or Terminal	Ref	Cavities	Location	Connects to	Notes
ODS unit connector D	14	8	In front passenger's seat		
Seat weight sensor (inside)	17	3	Under front passenger's seat		
Seat weight sensor (outside)	11	2	Under front passenger's seat		
C801	9	4	Under front passenger's seat	Floor wire harness	

Seat Position Sensor Harness

Connector or Terminal	Ref	Cavities	Location	Connects to	Notes
Driver's seat position sensor	16	2	Under driver's seat		* 2
C903	7	2	Under driver's seat	Floor wire harness	* 2

Side Curtain Airbag Harness

Connector or Terminal	Ref	Cavities	Location	Connects to	Notes
SRS unit connector C	5	16	Under middle dash		

* 1: '04 model
* 2: '04-06 models
* 3: '06 model
* 4: '03-05 models

BACK

Protected by AR

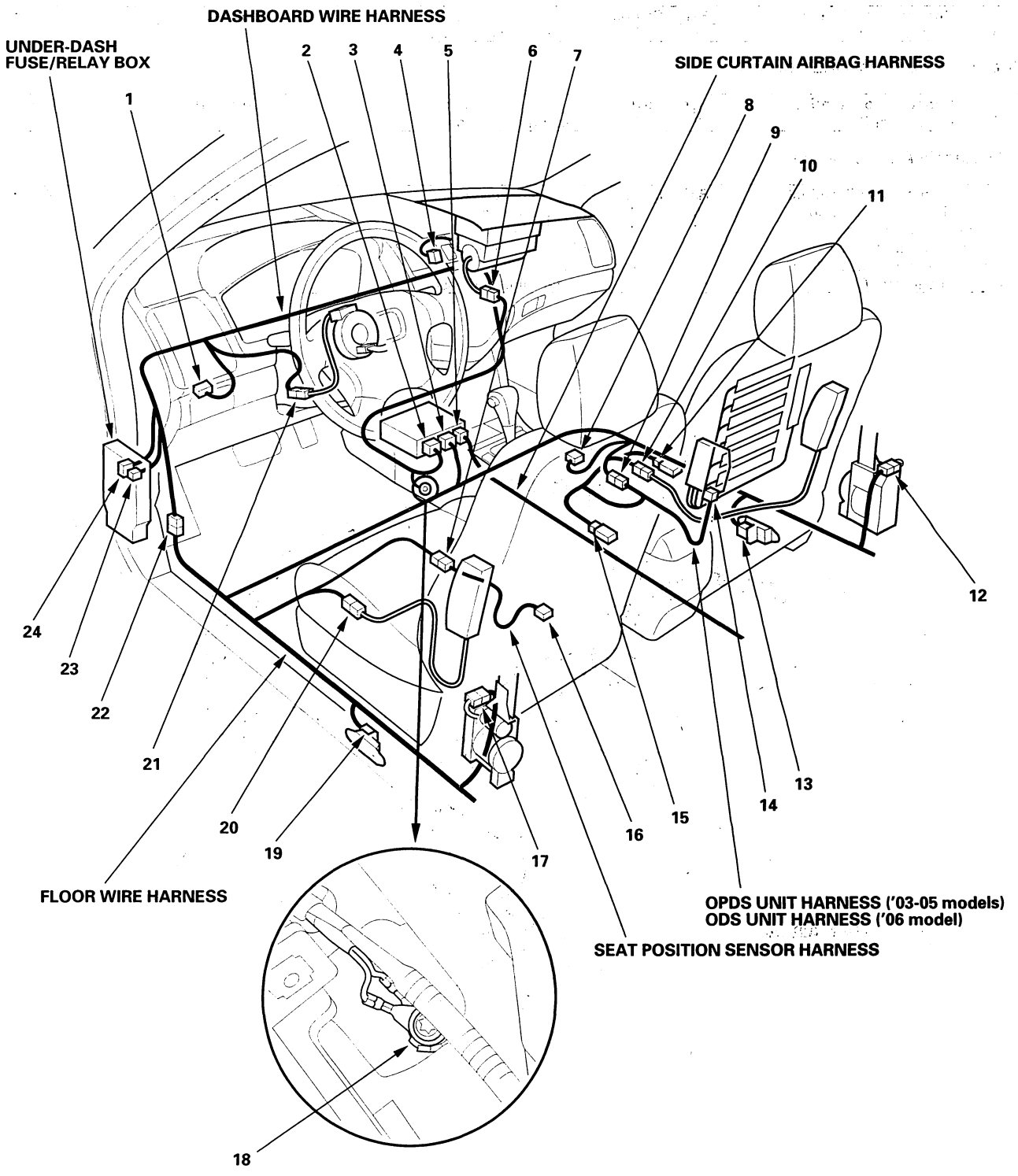

Protected by AR

Connector to Harness Index (cont'd)

Dashboard Wire Harness (SRS branch)

Connector or Terminal	Ref	Cavities	Location	Connects to	Notes
SRS unit connector A	1	28	Under middle of dash		

Floor Wire Harness (SRS branch)

Connector or Terminal	Ref	Cavities	Location	Connects to	Notes
SRS unit connector B	2	28	Under middle of dash		

Side Curtain Airbag Harness

Connector or Terminal	Ref	Cavities	Location	Connects to	Notes
Left side impact sensor (2nd)	6	2	Left quarter panel		
Left side curtain airbag	7	2	Left C-pillar		4-door
Right side curtain airbag	4	2	Right quarter panel		
Right side impact sensor (2nd)	5	2	Right C-pillar		4-door
SRS unit connector C	3	16	Under middle of dash		

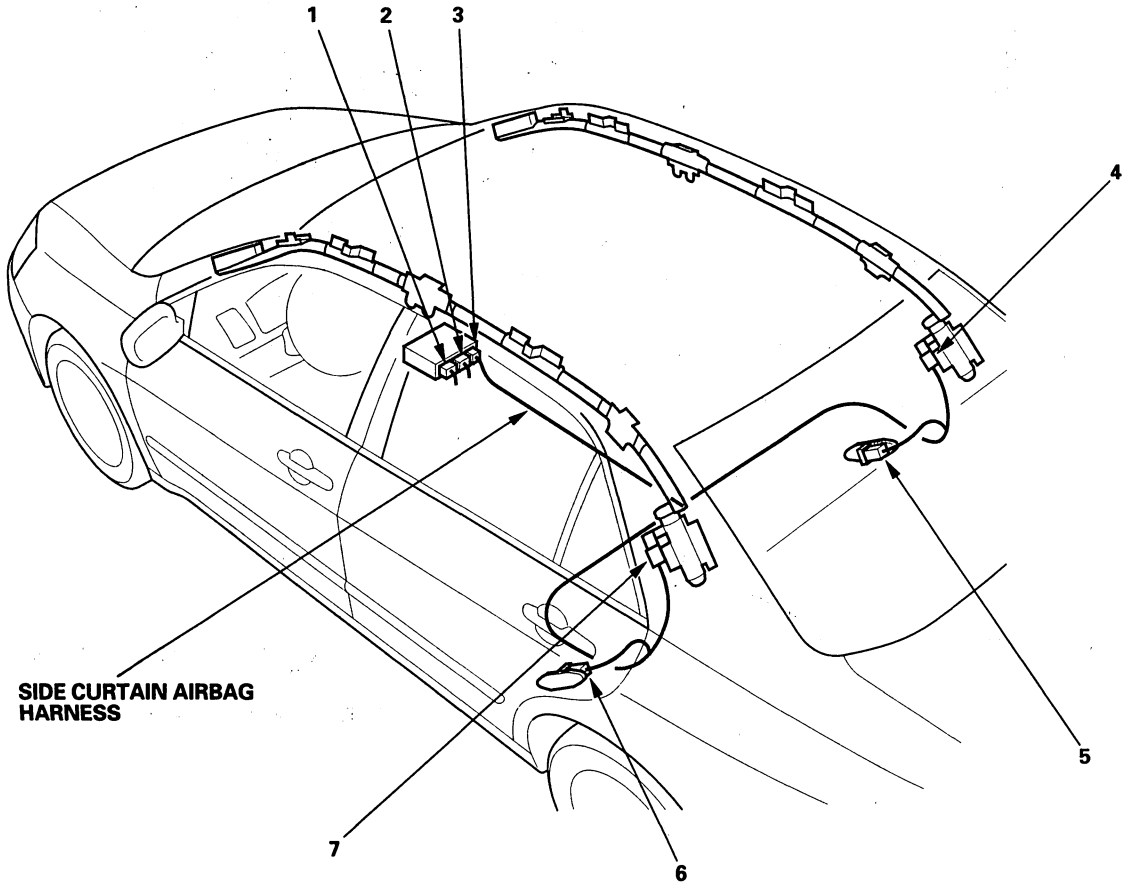

BACK

Protected by AR

ECM/PCM Wire Harness

Connector or Terminal	Ref	Cavities	Location	Connects to	Notes
APP sensor	4	6	Right side of engine compartment		
ECM/PCM connector A	11	31	Under middle of dash		
ECM/PCM connector B	8	24	Under middle of dash		
ECM/PCM connector D	10	17	Under middle of dash		
PCM connector C	9	22	Under middle of dash		
C201	2	33	Left side of engine compartment	Engine wire harness (see page 22-8)	
C202	1	33	Left side of engine compartment	Engine wire harness (see page 22-8)	
C203	3	23	Left side of engine compartment	Engine wire harness (see page 22-8)	
C251	7	13	Under middle of dash	Dashboard wire harness (see page 22-26)	
C281	6	13	Under right side of dash	Throttle actuator control module subharness	

Throttle Actuator Control Module Subharness

Connector or Terminal	Ref	Cavities	Location	Connects to	Notes
Throttle actuator control module	5	16	Under right side of dash		
C281	6	13	Under right side of dash	ECM/PCM wire harness	

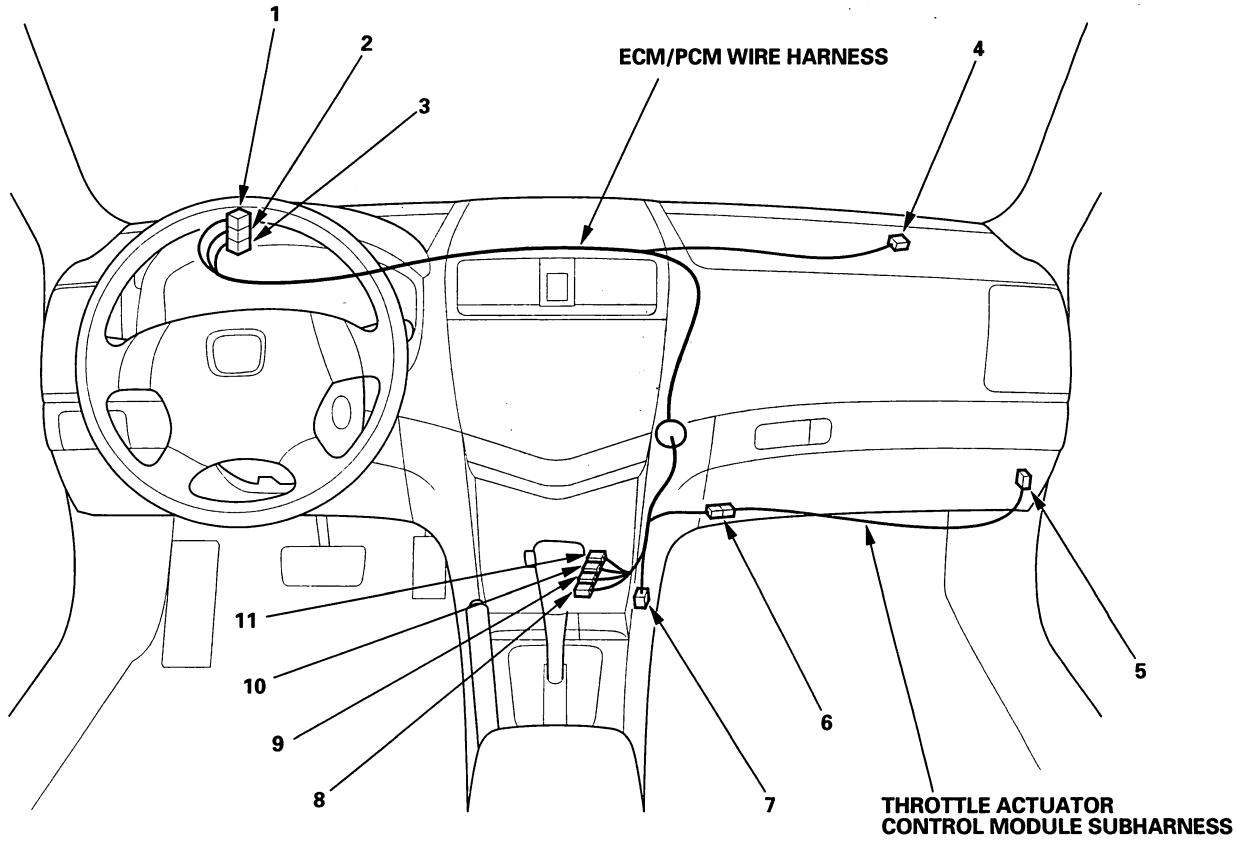

Protected by AR

Connector to Harness Index (cont'd)

Driver's Seat Wire Harness (8-Way Adjustable)

Connector or Terminal	Ref	Cavities	Location	Connects to	Notes
Driver's power seat adjustment switch	5	12	Left side of driver's seat		
Driver's seat belt switch	8	3	Under driver's seat		
Driver's seat heater	4	4	Under driver's seat		
Front up-down motor	7	2	Under driver's seat		
Rear up-down motor	1	2	Under driver's seat		
Recline motor	6	5	Under driver's seat		
Slide motor	2	2	Under driver's seat		
C901	3	10	Under driver's seat	Floor wire harness • 4-door (see page 22-30) • 2-door (see page 22-34)	

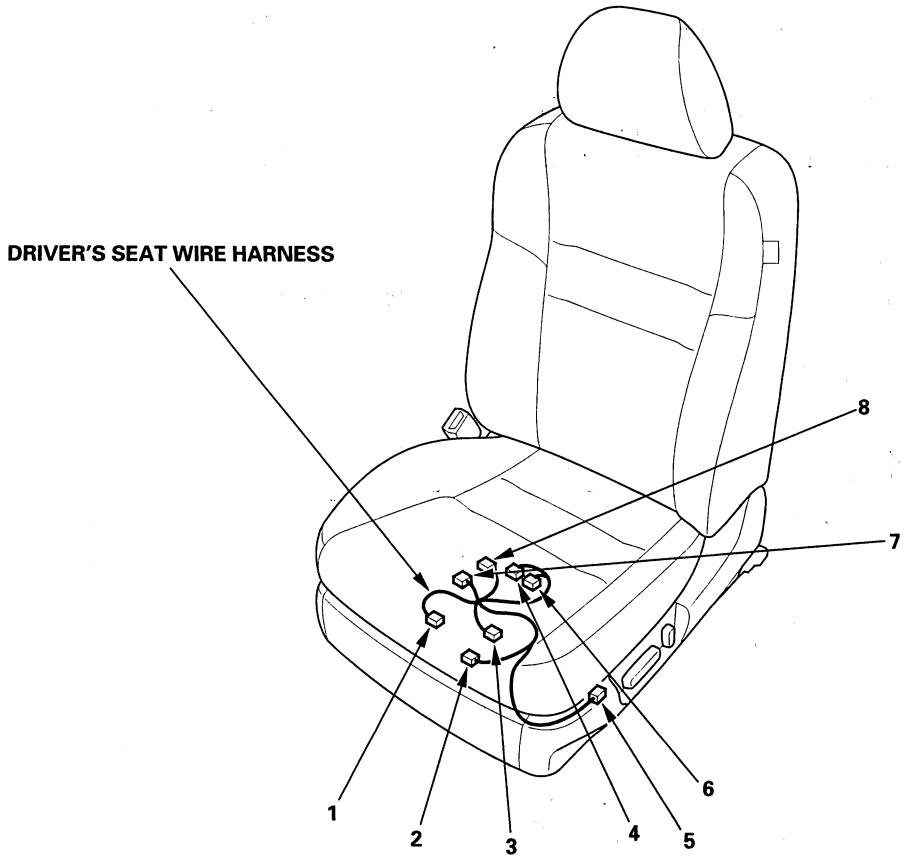

BACK

Protected by AR

Front Passenger's Seat Wire Harness (4-Way Adjustable) (4-door)

Connector or Terminal	Ref	Cavities	Location	Connects to	Notes
Front passenger's power seat adjustment switch	1	12	Right side of passenger's seat		
Front passenger's seat belt switch	4	3	Under front passenger's seat		
Front passenger's seat heater	6	4	Under front passenger's seat		
Recline motor	5	5	Under front passenger's seat		
Slide motor	3	2	Under front passenger's seat		
C902	2	10	Under front passenger's seat	Floor wire harness (see page 22-32)	

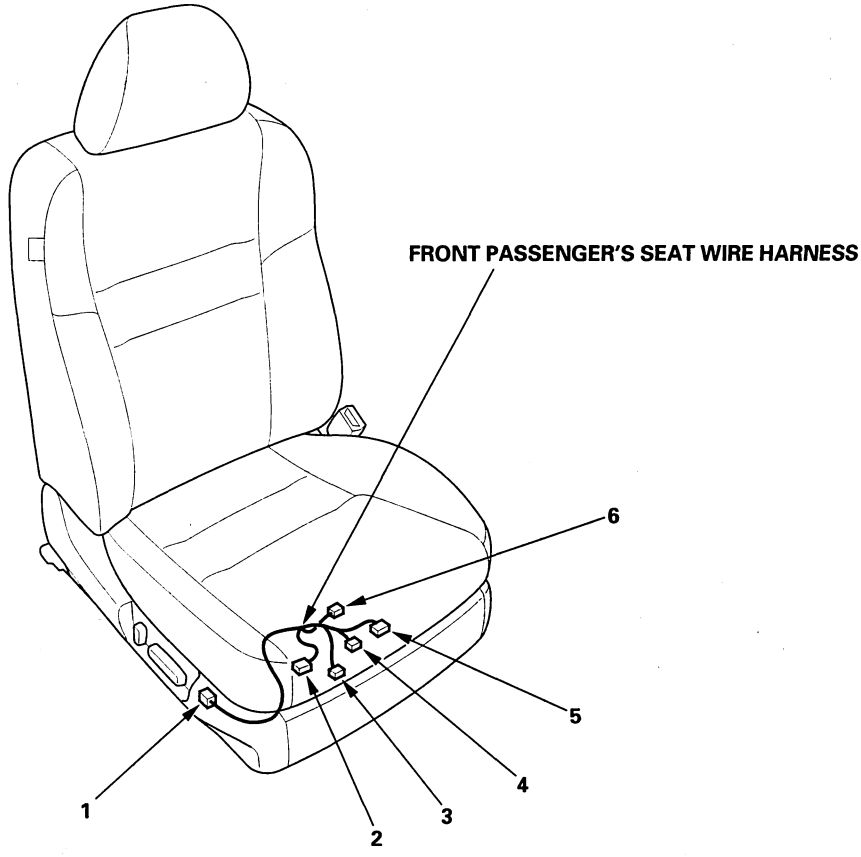

Protected by AR

Fuse/Relay Boxes

Connector to Fuse/Relay Box Index

Under-hood Fuse/Relay Box

Socket	Ref	Terminal	Connects to
A/C compressor clutch relay	2	4	
A (ELD unit)	5	3	Engine compartment wire harness (see page 22-18)
B	7		Not used
Blower motor relay	1	4	
C	8	2	Engine compartment wire harness (see page 22-18)
A/C condenser fan relay	15	4	
D	4	9	Engine compartment wire harness (see page 22-18)
E	9	16	Engine compartment wire harness (see page 22-18)
F	10	20	Front engine compartment wire harness (see page 22-14)
G	6	2	Engine compartment wire harness (see page 22-18)
H	11	14	Front engine compartment wire harness (see page 22-14)
I	13	10	Engine compartment wire harness (see page 22-18)
J	12	5	Engine compartment wire harness (see page 22-18)
Radiator fan relay	14	4	
Rear window defogger relay	3	4	
T101	16		Starter cable (see page 22-6)
T102	17		Engine wire harness (see page 22-8)

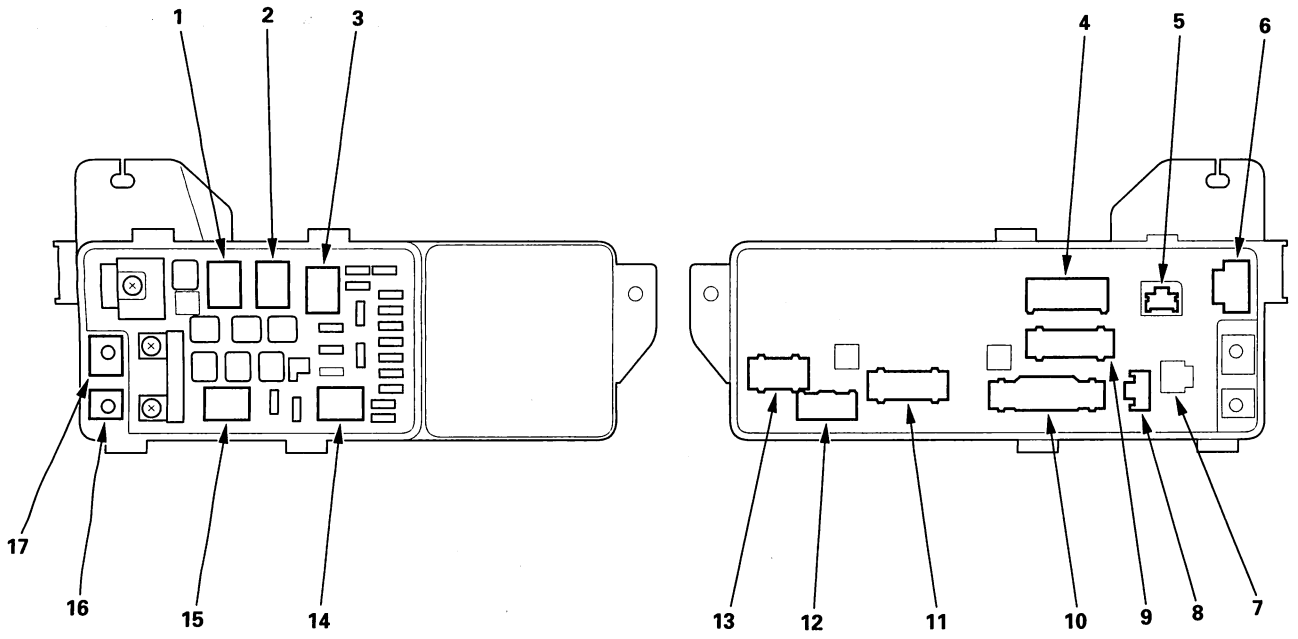

BACK

Protected by AR

Under-hood Multi-relay Box

Socket	Ref	Terminal	Connects to
Daytime running lights relay (Canada)	1	5	Front engine compartment wire harness (see page 22-14)
Fan control relay	2	5	Front engine compartment wire harness (see page 22-14)

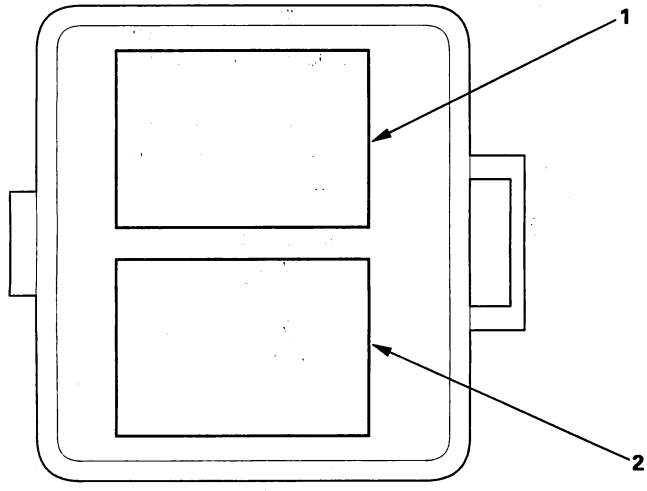

Protected by AR

Connector to Fuse/Relay Box Index (cont'd)

Under-dash Fuse/Relay Box

Socket	Ref	Terminal	Connects to
A	6	6	Dashboard wire harness (see page 22-22)
Accessory power socket relay	19	4	
A/F relay	20	4	
B	12	6	Engine compartment wire harness (see page 22-18)
C	11	12	Engine compartment wire harness (see page 22-18)
D	13	17	Engine compartment wire harness (see page 22-18)
E	8	16	Floor wire harness • 4-door (see page 22-30) • 2-door (see page 22-34)
F	9	14	Floor wire harness • 4-door (see page 22-30) • 2-door (see page 22-34)
G	14	6	Not used
H	15	14	Floor wire harness • 4-door (see page 22-30) • 2-door (see page 22-34)
I	10	5	Refer to the 2003-2006 Accord Service Manual Roof wire harness (see page 22-52)
Ignition coil relay	23	4	
J	27	21	Refer to the 2003-2006 Accord Service Manual Driver's door subharness (see page 22-54)
K	26	12	Refer to the 2003-2006 Accord Service Manual Driver's door subharness (see page 22-54)
M	25	3	MICS (MPCS) service check connector
N	2	45	Dashboard wire harness (see page 22-22)
P	17	30	Dashboard wire harness (see page 22-22)
PGM-FI main relay 1	21	4	
PGM-FI main relay 2	24	4	
Power window relay	22	4	
Q	16	14	Dashboard wire harness (see page 22-22)
R	3	2	Dashboard wire harness (see page 22-22)
S	5	2	Dashboard wire harness (see page 22-22)
Starter cut relay	18	4	
T	7	6	Optional connector
Turn signal/hazard relay	4	6	
X	1	39	Dashboard wire harness (see page 22-22)

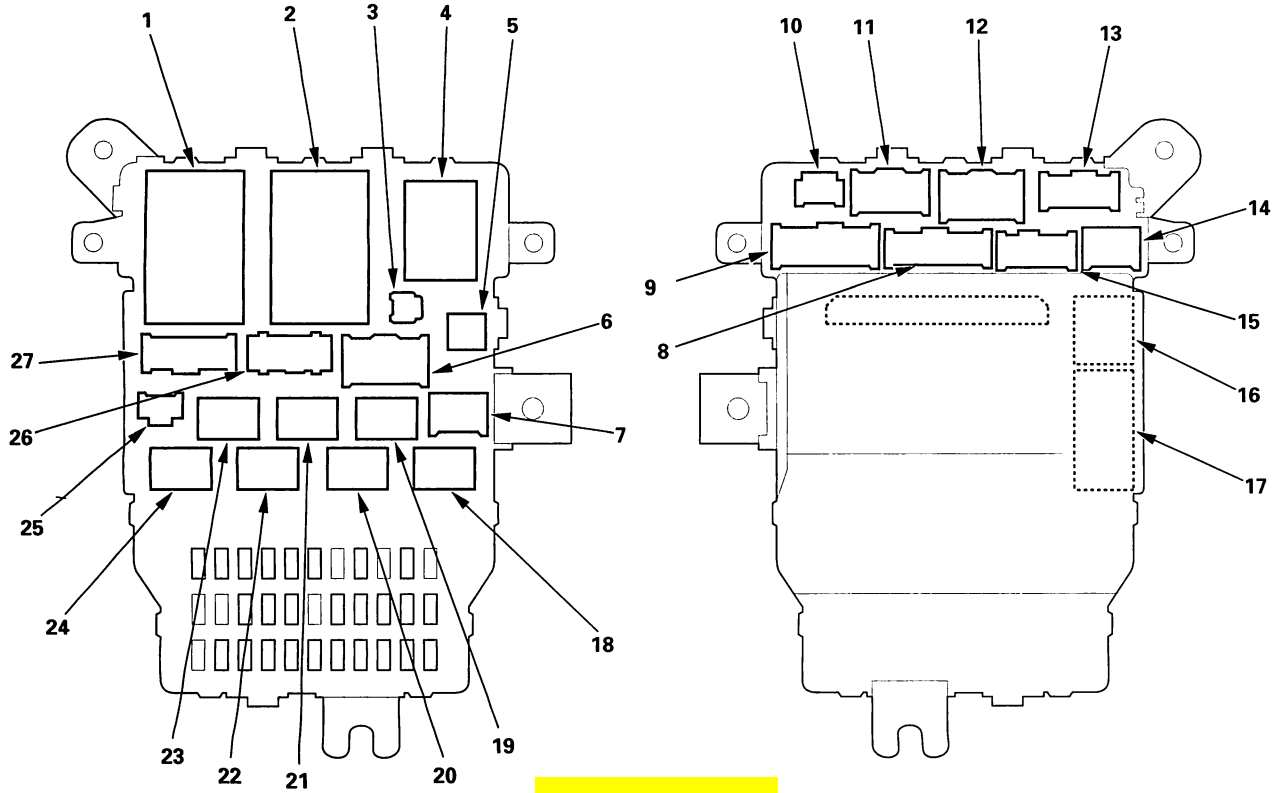

BACK

Protected by AR

Fuse to Components Index

Under-hood Fuse/Relay Box

Fuse Number	Amps	Wire Color	Component(s) or Circuit(s) Protected
1	10 A	RED/YEL	Left headlight (low beam)
2	30 A	Internal connection	Relay control module (with climate control)
3	10 A	WHT/YEL	Left headlight (high beam)
4	15 A	RED/BLK	Audio-HVAC Display module light, Front side marker lights, Glove box light, Hazard warning switch light, License plate light, Moonroof switch light, Navigation unit, Relay control module, Seat heater switches light, Taillights, TCS OFF switch light ('03-05 models), VSA OFF switch light ('06 model)
5	10 A	WHT/GRN	Right headlight (high beam)
6	10 A	RED/GRN	Right headlight (low beam)
7	7.5 A	Internal connection	Relay control module
8	15 A	WHT/GRN	CMP sensor B, CKP sensor, ECM/PCM (2 wires), IAC valve, Injectors, Mass air flow meter, PGM-FI main relay
9	20 A	BLU/YEL	Condenser fan motor (via condenser fan relay)
10	———	———	Not used
11	30 A	BLU/BLK	Radiator fan motor (via radiator fan relay)
12	7.5 A	BLU/RED	A/C compressor clutch (via A/C compressor clutch relay)
13	20 A	RED	ABS/TCS modulator-control unit ('03-05 models), VSA modulator-control unit ('06 model), Brake lights, ECM/PCM, High mount brake light, Ignition key light, Multiplex integrated control unit (MICU)
		Internal connection	Horns (via relay module), Relay control module
14	40 A	BLK/YEL	Rear window defogger (via rear window defogger relay)
15	40 A	YEL	No. 5 through No. 9 fuses in the under-dash fuse/relay box
		Internal connection	No. 7 fuse in the under-hood fuse/relay box
16	15 A	WHT/BLK	Turn signal/hazard relay
17	30 A	WHT/RED	ABS/TCS modulator-control unit (MR +B) ('03-05 models)
17	30 A	WHT/RED	VSA modulator-control unit (MR +B) ('06 model)
18	20 A	WHT	ABS/TCS modulator-control unit (+B FSR) ('03-05 models)
18	40 A	WHT	VSA modulator-control unit (+B FSR) ('06 model)
19	40 A	GRN/WHT	No. 1 through No. 4 fuses in the under-dash fuse/relay box
20	40 A	BLU	No. 12 through No. 17 fuses in the under-dash fuse/relay box
21	40 A	WHT/BLU	Blower motor (via blower motor relay)
22	100 A	———	Battery, Power distribution
23	50 A (IG)	WHT	Ignition switch (BAT)
	50 A (P/W)	WHT/BLU	Power window relay, No. 24 through No. 28 fuses in the under-dash fuse/relay box

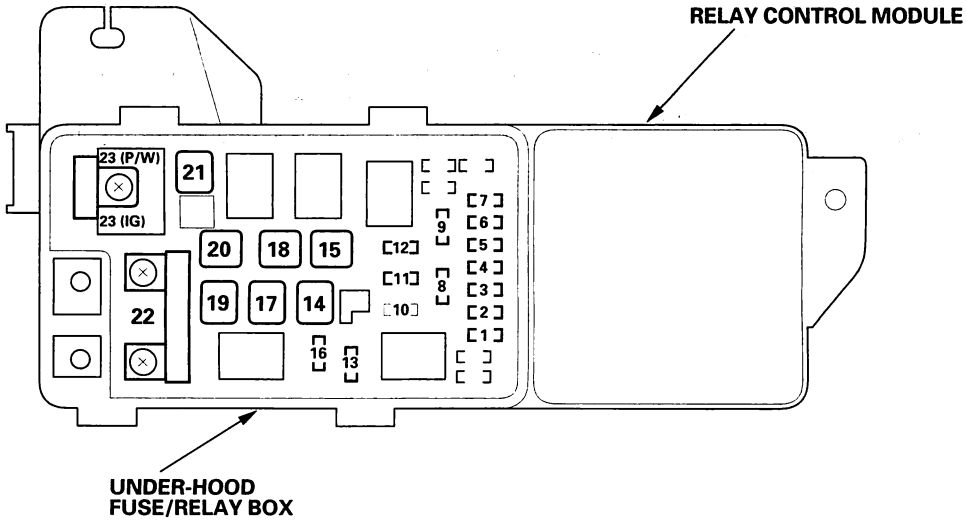

(cont'd)

Protected by AR

Power Distribution

Fuse to Components Index (cont'd)

Under-dash Fuse/Relay Box

Fuse Number	Amps	Wire Color	Component(s) or Circuit(s) Protected
1	15 A	WHT/GRN	Throttle actuator control module
2	15 A	———	Ignition coil (IG) relay
		BLK/WHT	Ignition coils (via Ignition coil relay)
3	10 A	RED/WHT	Daytime running lights relay (Canada)
4	15 A	BLU/WHT	Air/fuel ratio sensor 1, 2, Secondary heated oxygen sensor 1, 2
5	10 A	WHT/GRN	Audio unit, XM receiver ('04-06 models)
6	7.5 A	WHT/BLU	Ambient light, Ceiling light, Courtesy lights, Map lights, Trunk light, Vanity mirror lights
7	10 A	WHT/RED	Combination switch control unit, Door multiplex control unit, Gauge control module, Immobilizer control unit-receiver, Navigation display unit, Navigation unit
		Internal connection	Multiplex integrated control unit (MICU)
8	20 A	Internal connection	Multiplex integrated control unit (MICU)
9	15 A	WHT/RED	Front accessory power socket, Rear accessory power socket
10	7.5 A	WHT	Front passenger's weight sensor unit ('04-06 models), SRS unit, OPDS unit ('04-05 models), ODS unit ('06 model)
11	30 A	GRN	Windshield wiper motor
12	———	———	Not used
13	20 A	WHT/BLK	Front passenger's power seat recline motor
14	20 A	WHT/BLU	Driver's power seat slide motor and front up-down motors (8-way adjustable), Driver's power seat up-down motor (2-way adjustable)
15	20 A	RED/BLK	Seat heaters and seat heater switches indicator light
16	20 A	WHT/RED	Driver's power seat recline motor and rear up-down motor (8-way adjustable)
17	20 A	WHT/GRN	Front passenger's power seat side motor
18	15 A	BLK/RED	Alternator, ELD unit, Engine mount solenoid valve, EVAP purge cut solenoid valve, Secondary heated oxygen sensor, PCM
19	15 A	BLK/YEL	ECM/PCM, Immobilizer control unit-receiver
		YEL/GRN	Fuel pump (via fuel pump relay)
20	7.5 A	YEL/GRN	Windshield washer motor
21	7.5 A	YEL	Back-up lights, Combination switch control unit, Door multiplex control unit, Front passenger's power window switch indicator, Gauge control module, Multiplex integrated control unit (MICU), Navigation unit,Passenger's airbag cutoff indicator ('04-06 models), Shift lock solenoid (A/T)
22	10 A	WHT/RED	SRS unit
23	7.5 A	YEL/RED	Radiator fan control module
		ORN	ECM/PCM (via A/F sensor relay)
24	20 A	YEL/RED	Left rear power window motor (4-door)
25	20 A	YEL/BLU	Right rear power window motor
26	20 A	GRN/BLK	Front passenger's power window motor
27	20 A	GRN/WHT	Driver's power window motor
28	20 A	GRN	Moonroof motor, Moonroof control unit (2-door), Moonroof open/close relays (4-door)
29	———	———	Not used
30	7.5 A	BLK/YEL	A/C compressor clutch relay, Blower motor relay, Climate control unit, Condenser fan relay, Heater control panel, Power mirror defoggers (Canada), Power mirror actuators, Radiator fan relay, Recirculation control motor, Seat heater relay
31	———	———	Not used
32	7.5 A	YEL/RED	Accessory power socket relay, Audio unit, Navigation display unit, Navigation unit
33	———	———	Not used

BACK

Protected by AR

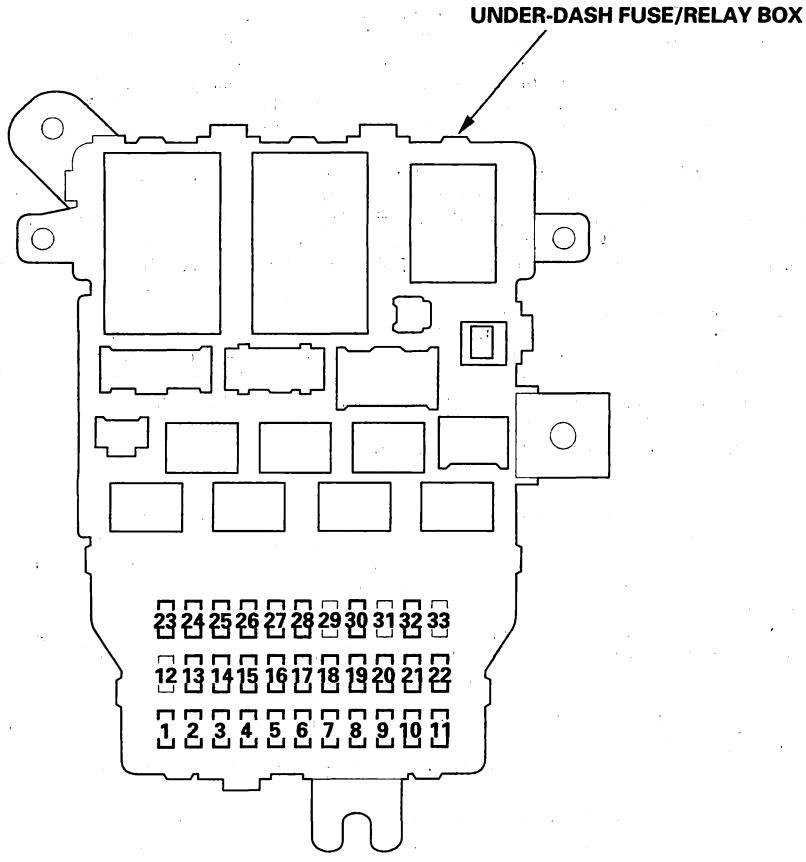

Protected by AR

Ground Distribution

Ground to Components Index

Ground	Component or circuit grounded
G1	Battery negative terminal
G2	Engine mount bracket
G3	Transmission housing
G101 and G102	ECM/PCM (PG1 and PG2 are BLK; LG1 and LG2 are BRN/YEL), CKP sensor 1, CKP sensor 2, CYP sensor, throttle actuator control module EGR valve, Ignition coils, Immobilizer control unit-receiver, VTEC oil pressure switch
	Shielding between the ECM/PCM and Knock sensor, ECM/PCM and air fuel raito sensors, ECM/PCM and secondary heated oxygen sensors, Throttle actuator control module have BRN/YEL wire
G151	Shift control solenoid A, Shift control solenoid B, shift control solenoid C, Lock-up control solenoid valve
G201	Fan control relay, Hood switch, Right front turn signal/side marker lights
G202	Brake fluid level switch, Power steering pressure (PSP) switch, Washer fluid level switch (Canada)
G203	ABS-TCS modulator-control unit ('03-05 models), VSA modulator-control unit ('06 model)
G301	Daytime running lights relay (Canada), Left headlights, Left front turn signal/side marker lights, Radiator fan motor, Radiator fan switch
G302	Blower motor relay, ELD unit, Relay control module, Windshield wiper motor
G501	Accessory power socket relay, Ambient light (with moonroof), Cable reel (with throttle actuator control module, Combination switch control unit), Data link connector (DLC), Driver's door lock knob switch, Driver's door key cylinder switch, Gauge control module, Ignition key switch, Key interlock solenoid, Moonroof switch, Moonroof control unit (2-door), Moonroof relays (4-door), Power window master switch, Relay control module, TCS OFF switch ('03-05 models), VSA OFF switch ('06 model), Vanity mirror lights (G501 connects to G601 via under-dash fuse-relay box)
G502	Multiplex integrated control unit (MICU)
G503	Climate control unit (with climate control), Data link connector (DLC), Front accessory power socket, Front passenger's door lock knob switch, Front passenger's switch, Gauge control module, Glove box light, Heater control panel (without climate control), Memory erase signal (MES) connector, Navigation display unit, Audio-HVAC subdisplay unit, Power transistor, Rear accessory power socket, Right power mirror defogger (Canada), Shift lock solenoid (A/T)
	Shielding between the ABS/TCS modulator-control unit ('03-05 models), VSA modulator-control unit ('06 model), ECM/PCM, Gauge control module and Navigation unit have BRN wire
G504	Audio unit
G505	SRS unit
G506	Driver's seat heater switch, Front passenger's seat heater switch, Seat heater relay
G601	Driver's power seat switch (2 wires for 8-way adjustable, 1 wire for 2-way adjustable), Driver's seat belt switch, Driver's seat heater, Door multiplex control unit, Left power mirror defogger (Canada), Left rear door lock knob switch (with security) (4-door), Left rear power window switch (4-door), Multiplex integrated control unit (MICU), MICU service check connector, Power mirror switch, Turn signal/hazard relay (G601 connects to G501 via under-dash fuse/relay box)
G602	Front passenger's power seat switch, Front passenger's seat belt switch, Front passenger's seat heater, Front passenger's weight sensor unit ('04-05 models), Navigation unit, OPDS unit ('04-05 models), ODS unit ('06 model), Right rear door lock knob switch (4-door), Right rear power window switch (4-door)
G603	Fuel pump
G701 (4-door)	Back-up lights, Brake lights, High mount brake light, License plate light, Taillights, Turn signal lights, Trunk latch switch, Trunk key cylinder switch
G701 (2-door)	High mount brake light, Left back-up light, Left brake light, Left taillight, Left turn signal light, License plate light, Trunk latch switch
G702 (2-door)	Right back-up light, Right brake light, Right taillight, Right turn signal light

BACK

Protected by AR

Power Relay Test

Use this chart to identify the type of relay, then do the test listed for it.

NOTE: For the turn signal/hazard relay input test, refer to the 2003-2006 Accord Service Manual (see page 22-214).

Relay	Test
A/C compressor clutch relay	Normally-open type
Accessory power socket relay	
Air fuel ratio sensor relay	
Blower motor relay	
A/C condenser fan relay	
Ignition coil relay	
PGM-FI main relay 1, 2	
Power window relay	
Radiator fan relay	
Rear window defogger relay	
Starter cut relay	
Throttle actuator control module relay	
Daytime running lights relay (Canada)	Five-terminal type
Fan control relay	
Moonroof close relay	
Moonroof open relay	
Seat heater relay	

Normally-open type

Check for continuity between the terminals.

- There should be continuity between the No. 1 and No. 2 terminals when power and ground are connected to the No. 3 and No. 4 terminals.
- There should be no continuity between the No. 1 and No. 2 terminals when power is disconnected.

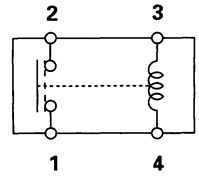

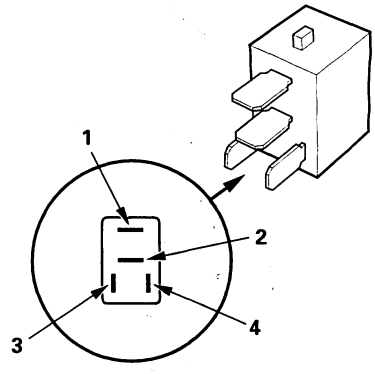

(cont'd)

Protected by AR

Power Relay Test (cont'd)

Five-terminal type B

Check for continuity between the terminals.

- There should be continuity between the No. 1 and No. 2 terminals when power and ground are connected to the No. 3 and No. 5 terminals.
- There should be continuity between the No. 1 and No. 4 terminals when power is disconnected.

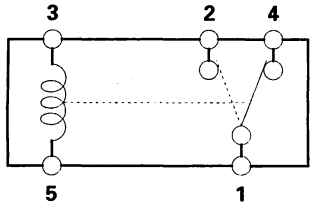

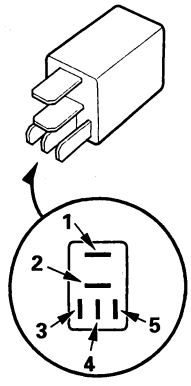

BACK

Protected by AR

Component Location Index

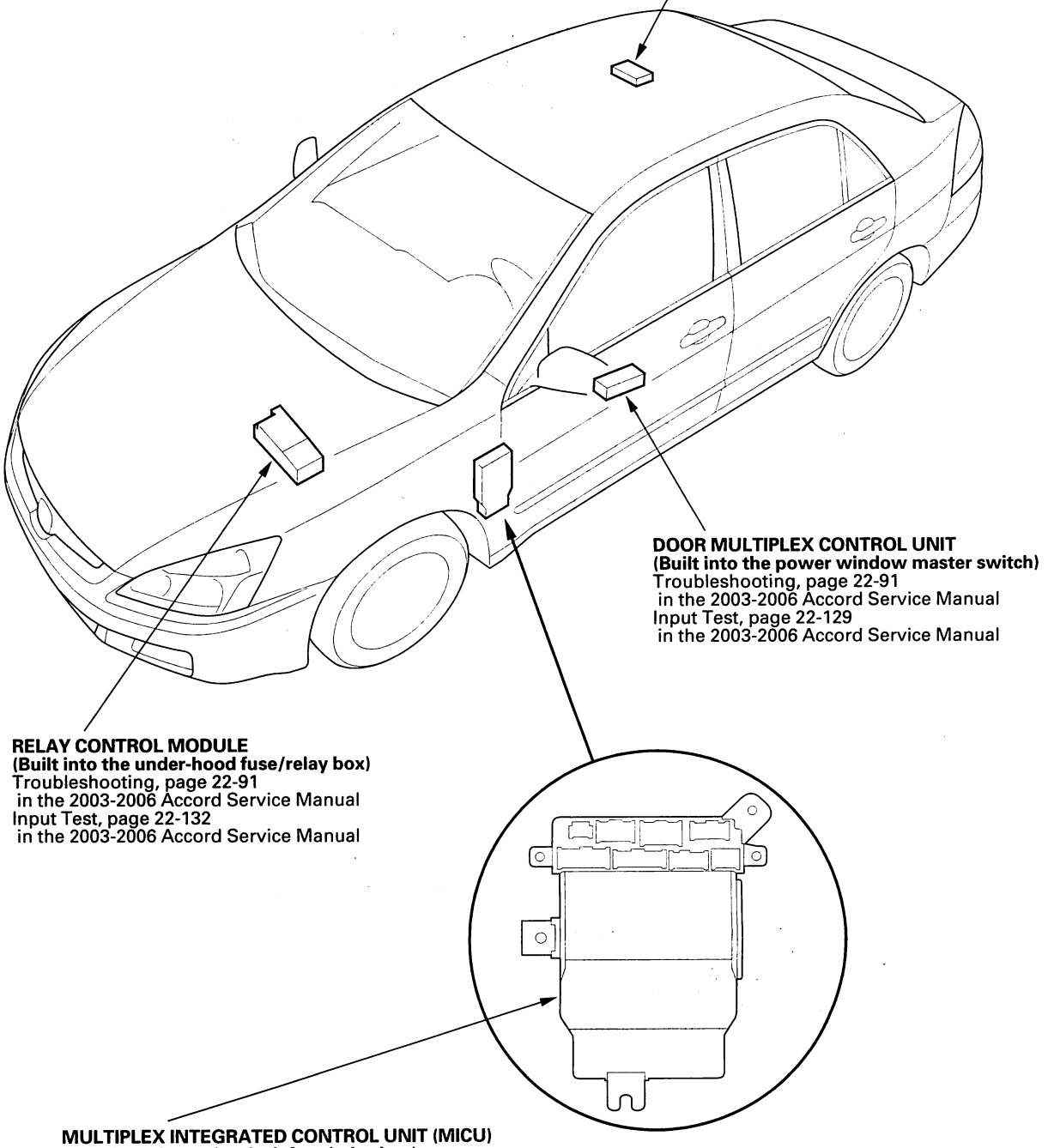

(cont'd)

Protected by AR

Component Location Index (cont'd)

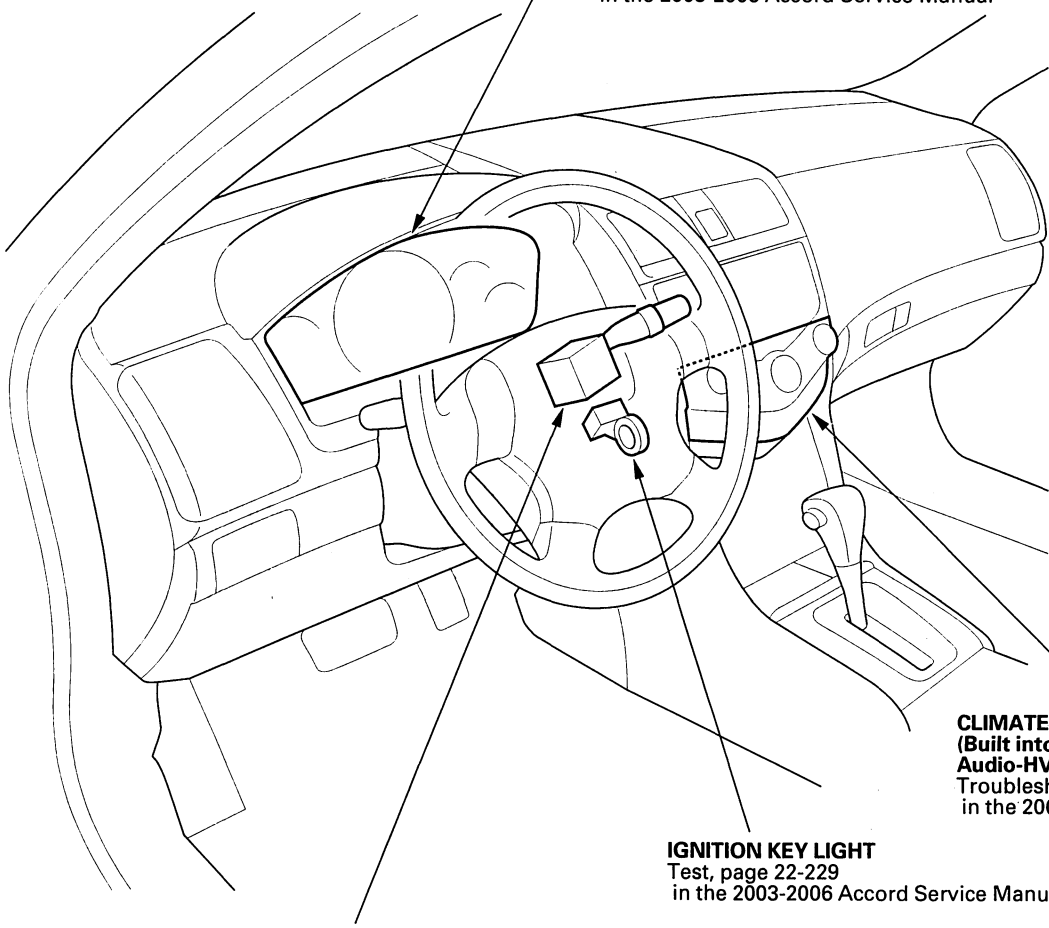

GAUGE CONTROL MODULE
Troubleshooting, page 22-91
in the 2003-2006 Accord Service Manual
Self-diagnostic Procedure, page 22-259
Input Test, page 22-127
in the 2003-2006 Accord Service Manual

CLIMATE CONTROL UNIT
(Built into the
Audio-HVAC display module)
Troubleshooting, page 22-91
in the 2003-2006 Accord Service Manual

IGNITION KEY LIGHT
Test, page 22-229
in the 2003-2006 Accord Service Manual

COMBINATION SWITCH CONTROL UNIT
(Built into the wiper/washer switch)
Troubleshooting, page 22-91
in the 2003-2006 Accord Service Manual
Input Test, page 22-131
in the 2003-2006 Accord Service Manual

BACK

Protected by AR

System Description

Body Controller Area Network (B-CAN) and Fast Controller Area Network (F-CAN)

Fast controller Area Network (F-CAN) and Body Controller Area Network (B-CAN) share information between multiple Electronic Control Units (ECUs). B-CAN communication moves at a slower speed for convenience related items, and for other functions. F-CAN information moves at a faster speed for "real time" functions such as fuel and emissions data. To allow both systems to share information, the Gauge Control Module translates information from B-CAN to F-CAN and from F-CAN to B-CAN.

The ECUs on the B-CAN and F-CAN transmit and receive information in the form of structured messages that may be received by several different ECUs on the network at one time. These message are transmitted and received across a communication circuit that consists of a single wire that is shared by all the ECUs on the curcuit. Since messages on the F-CAN network are typically of higher importance, a second wire is used for communication circuit integrity monitoring. A backup circuit is aiso added to the headlight and wiper circuits on the B-CAN network in the event of a network wire or ECU failure that would effect the operation of the system.

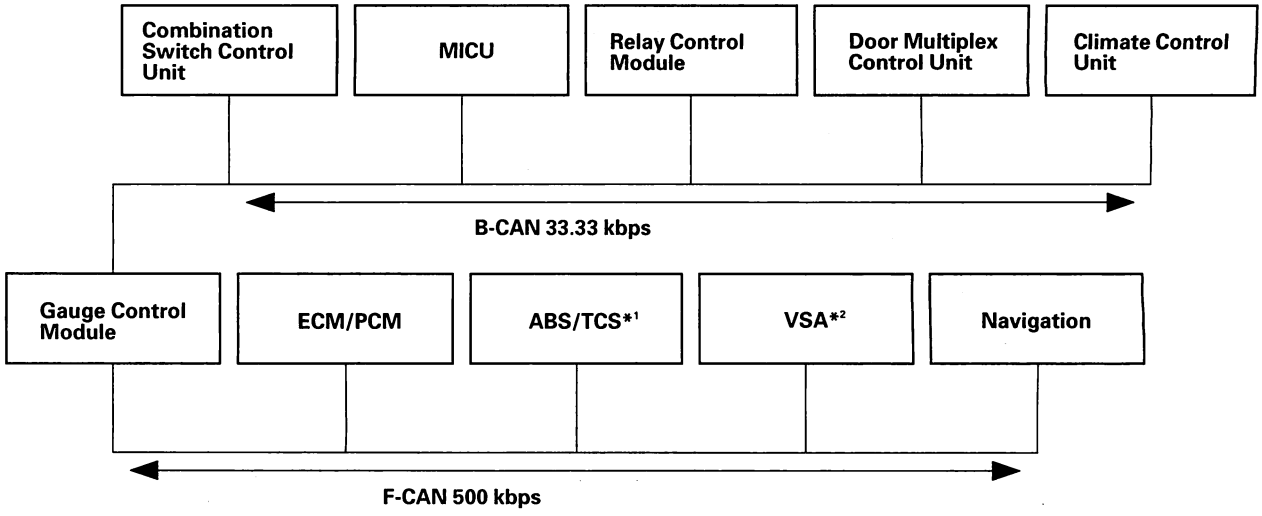

*1: '03-05 models
*2: '06 model

(cont'd)

Protected by AR

Multiplex Integrated Control System (MICS)

System Description (cont'd)

Messages are transmitted by an ECU (that monitors an input) over the communication circuit. ECUs that use the message (information related to that input) are the receivers. For example, the Combination Switch Control Unit monitors the wiper switch. When the wiper switch is placed in the low speed position, the Combination Switch Control Unit transmits that message on the communication circuit. The Relay Control Module receives the message and turns on the wipers by providing a ground for the relay.

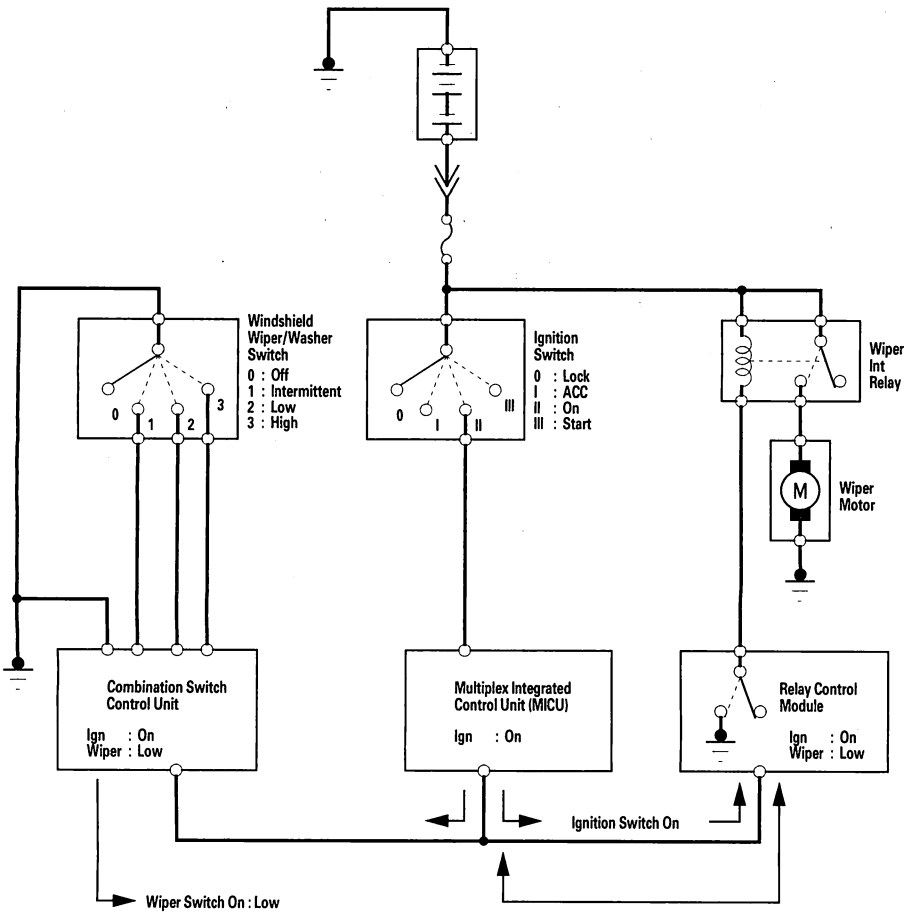

BACK

Protected by AR

"Connected" ECUs

Several ECUs are connected to each of the two networks. The Gauge Control Module is part of both networks since it is the "Gateway" between them. Below is a list of ECUs and the network they are connected to.

B-CAN ECUs

- Gauge Control Module
- Relay Control Module
- Multiplex Intergrated Control Unit (MICU)
- Door Multiplex Control Unit
- Combination Switch Control Unit
- Climate Control Unit
- Optional Security (LX model, SE model (Canada) option)
- Optional Unit (B-CAN option)

F-CAN ECUs

- Gauge Control Module
- ECM/PCM
- Navigation Control Unit
- ABS/TCS (Traction Control System) ('03-05 models)
- VSA (Vehicle Stability Assist) ('06 model)

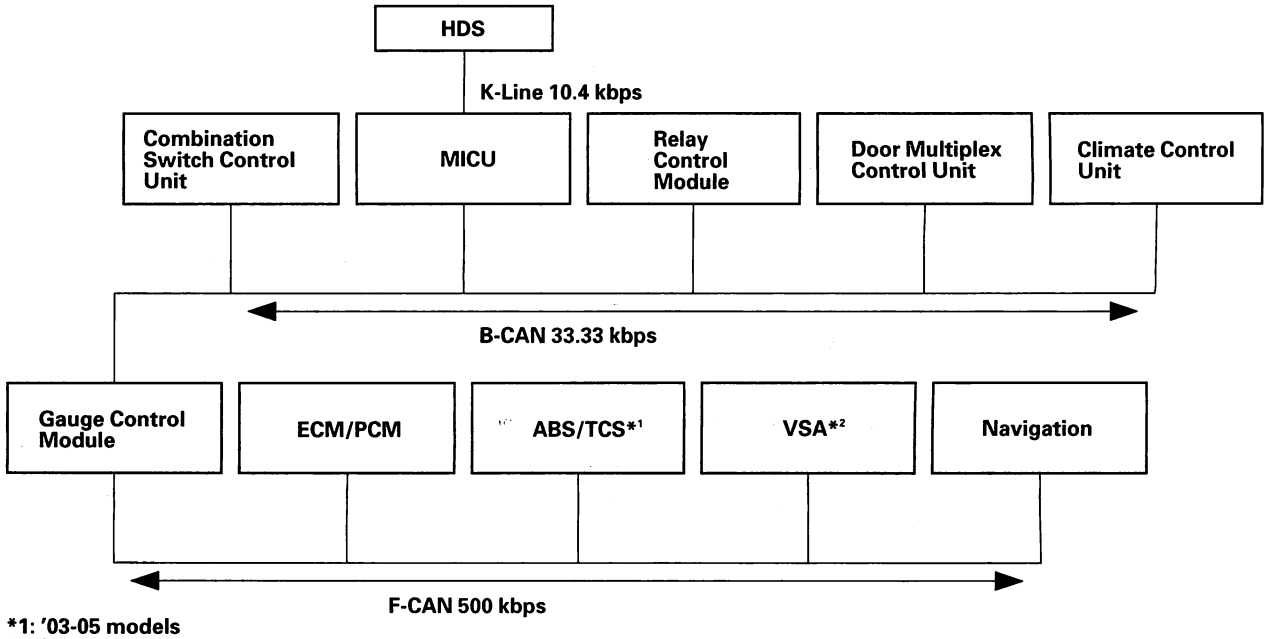

(cont'd)

Protected by AR

Multiplex Integrated Control System (MICS)

System Description (cont'd)

Network "Loss of Communication" Error Checking

The B-CAN and F-CAN systems send messages to each other to check the integrity of the network communication circuit. They do this by sending a specific digital message out after an event. For example, turning the ignition switch to ON. After the switch to ON, all the ECUs on the communication circuit expect to receive a message from other specific units within a specified amount of time. If the message is not received, the ECU will transmit a DTC reporting that the control units did not communicate.

Example of communication circuit test

Normal circuit

1. Ignition switch turned ON.
2. The door multiplex control unit transmits a door switch signal.
3. The multiplex integrated control unit (MICU), relay control module and gauge control module receive the door lock switch signal.
4. Communication circuit test is passed.

Since the door lock switch message was received by all the ECUs expecting to receive a signal, the communication circuit between those units is OK. There are multiple signal sent and received by each ECU during this time to insure that the communication circuit is intact.

Failed circuit

5. Ignition switch is turned ON.
6. The door multiplex control unit transmits a door switch signal.
7. The multiplex integrated control unit (MICU), relay control module and gauge control module expect to receive the door lock switch signal, but since there is a break in the communication circuits, it is not received.
8. Each ECU that expects to receive the door lock switch signal from the door multiplex control unit will transmit DTCs for the signal that it did not receive.

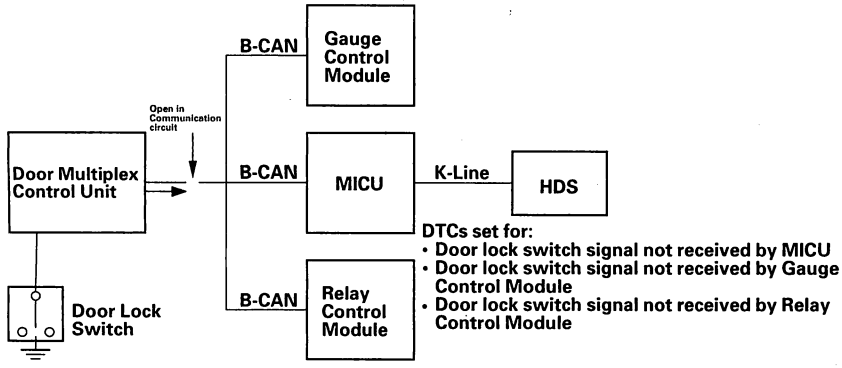

Since there is a break in the communication circuit, the door lock switch signal could not be received by the gauge control module, multiplex integrated control unit (MICU) or the relay control module. Each of these units will set "loss of communication" error codes for the signal(s) they did not receive. There may be multiple communication DTCs if the unit that has become disconnected from the network would normally transmit multiple messages during the communication line test. For example, the door multiplex control unit sends keyless panic signal and door lock switch signal during the communication circuit test.

Diagnostic Trouble Codes

There are three DTC types used by the CAN networks.

Internal error DTCs	The ECUs run internal checks. If one finds that there is an internal ECU problem, it will set an internal error DTC. Confirm that the battery and charging system are OK. If so, this indicates that the ECU needs to be replaced.
Loss of communication DTCs	Loss of communication DTCs (and Bus-off DTCs) are set when there is a problem with the communication between ECUs. This could be in the connections, the wiring, or the ECU (as called out in the DTC Troubleshooting index).
Signal error DTCs	The ECUs can run diagnostics on some input circuits to determine if that circuits is functioning properly (no opens or shorts). If a circuit falls the diagnostic test, a DTC will set (NOTE: Not all input circuits are tested for errors).

BACK

Protected by AR

Troubleshooting the CAN circuit related problems

Using the HDS (Preferred method)

1. Go to B-CAN System Diagnosis Test Mode A to check for "Connected units" and DTCs, refer to the 2003-2006 Accord Service Manual (see page 22-91).
2. If no DTCs are retrieved, go to B-CAN System Diagnosis Test Mode C or D.

Without the HDS (Should be used only if HDS is unavailable)

3. Check for communication circuit problems using B-CAN System Diagnosis Test Mode 1, refer to the 2003-2006 Accord Service Manual (see page 22-91).
4. Check for DTCs while in Mode 1, refer to the 2003-2006 Accord Service Manual (see page 22-91).
5. Sort, and then troubleshoot the DTCs in the order below. Refer to the DTC troubleshooting Index for DTC descriptions.

   1st. Internal error and voltage failure DTCs

   2nd. Loss of communication DTCs

   3rd. Signal error DTCs

6. If no DTCs are retrieved, use B-CAN System Diagnosis Test Mode 2 to check all inputs related to failure, refer to the 2003-2006 Accord Service Manual (see page 22-91).

Loss of Communication DTC cross-reference chart

When an ECU is unable to communicate with the other ECUs on the circuit, the other units will set loss of communication DTCs. Use this chart to find the control unit that is not communicating.

7. Find the Transmitting Unit that is in the same row as all of the loss of communication DTCs retrieved.
8. Perform the input test for the transmitting unit.

Transmitting Unit	Message	Receiving Unit/Loss of Communication DTC					
		MICU	Relay Control Module	Door Multiplex Control unit	Gauge Control Module	Combination Switch Control Unit	Climate Control Unit
MICU	Alarm		B1056				
	MICU		B1055	RX	B1157	B1255	
	Door Switch		B1057	RX	B1159		
Relay Control Module	Relay Control Module	B1005			B1158		
Door Multiplex Control unit	Panic	B1010	B1059				
	Door Lock Switch	B1006	B1058		B1160		
Gauge Control Module	VSP/NE		B1060				B1205
	A/T	B1008	B1061				
	ENGTEMP						B1206
	ILLUMI						B1207
Combination Switch Control Unit	Headlight Switch	B1007	B1062		B1155		
	Wiper Switch	B1009	B1063		B1156		
PCM	Engine				B1168		
	A/T				B1169		

RX: Receiving unit does not set a loss of communication DTC.

(cont'd)

Protected by AR

System Description (cont'd)

B-CAN System Switch Device Index

Combination Switch Control Unit	
Input signal	**Output signal/device**
Dimmer switch, Lighting switch, Passing switch, Turn signal switch, Wiper/washer switch, Intermittent dwell time controller.	None

Relay Control Module	
Input signal	**Output signal/Device**
A/C pressure switch, Climate control switch, Daytime running lights control (Canada), Hood switch, Horn switch, Windshield wiper motor.	Daytime running lights control (Canada), Headlight, Parking light, Horn, Windshield washer motor, Windshield wiper motor.

Door Multiplex Control Unit	
Input signal	**Output signal**
Driver's door key cylinder switch (lock/unlock), Driver's door lock knob switch (lock/unlock), Driver's door lock switch. Driver's power window switches (up, down, auto up, auto down), Passenger's power window switches (up, down), Driver's power window motor pulser.	Driver's power window motor, Passenger's power window switches, Power window relay control.

Multiplex Integrated Control Unit	
Input signal	**Output signal/Device**
Audio-HVAC display module security ground, Brake pedal position switch, Door switches, Ignition key cylinder switch, Park pin switch (A/T), Passenger's door lock knob switches (unlock), Passenger's door lock switch, Power window motor, Seat belt switch (unbuckled), Transmission range switch (P, R position), Trunk latch switch.	Door lock actuators, Hazard warning lights, Interior lights, Ignition key light, Key interlock solenoid, Turn signal lights, Moonroof relay, Trunk lid opener solenoid, Door courtesy lights, Daytime running lights.

BACK

Protected by AR

B-CAN System Switch Device Index

Gauge Control Module	
Input signal	**Output signal/Device**
Dash lights brightness controller, Daytime running lights signal (Canada), Engine oil pressure switch signal, Washer fluid level switch signal (Canada), Parking brake switch, Brake fluid level switch, fuel level sensor, Select/Reset switch, Cruise control combination switch (set, cancel, resume, master).	Dash lights, Fuel gauge, Gauge lights, Indicator, LEDs, Speedometer, Tachometer, ECT gauge, Warning buzzer, Odometer/Outside temperature display.

Climate Control Unit	
Input signal	**Output signal/Device**
Evaporator temperature sensor, In-car temperature sensor, Outside air temperature sensor, Sunlight sensor Air mix motor position (Driver's and Passenger's), Mode motor position, Blower motor control feedback.	Air mix control motors (Driver's/Passenger's), Blower motor transistor, Mode control motor, Rear defogger relay, A/C Request, Recirculation motor.

Protected by AR

Multiplex Integrated Control System (MICS)

Circuit Diagram

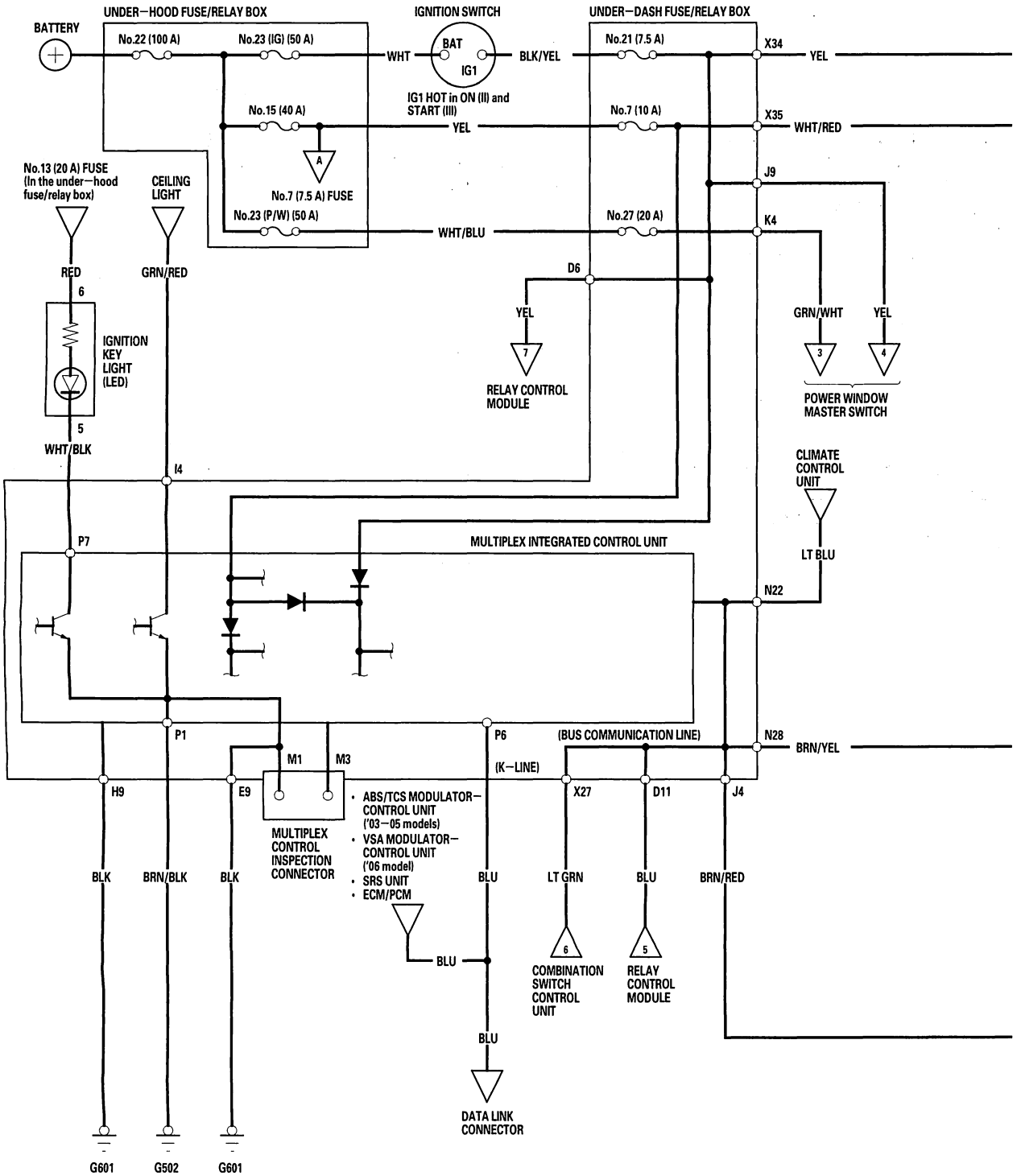

BACK

Protected by AR

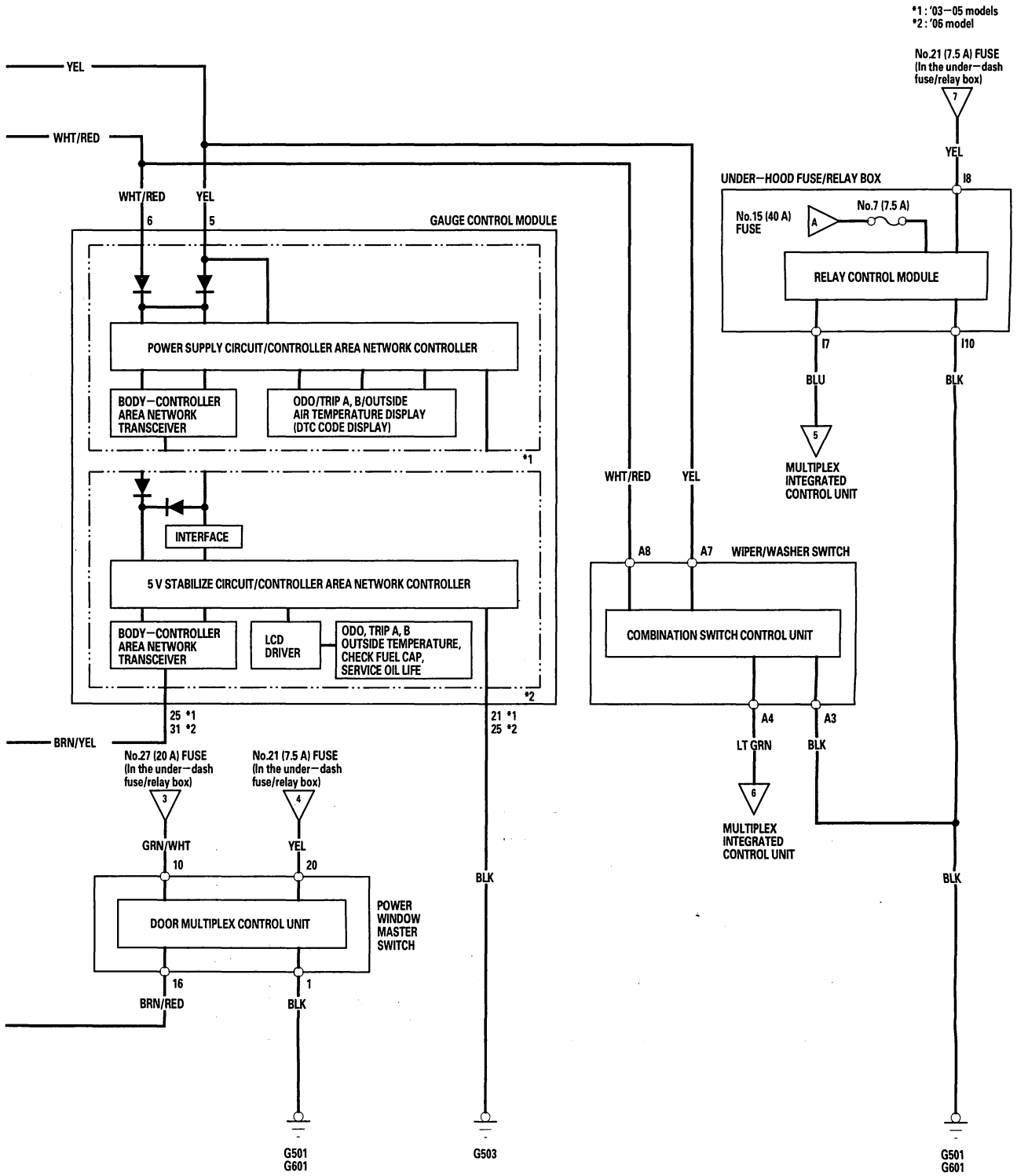

Protected by AR

Exterior Lights

Circuit Diagram - Brake Lights

2-door ('06 model)

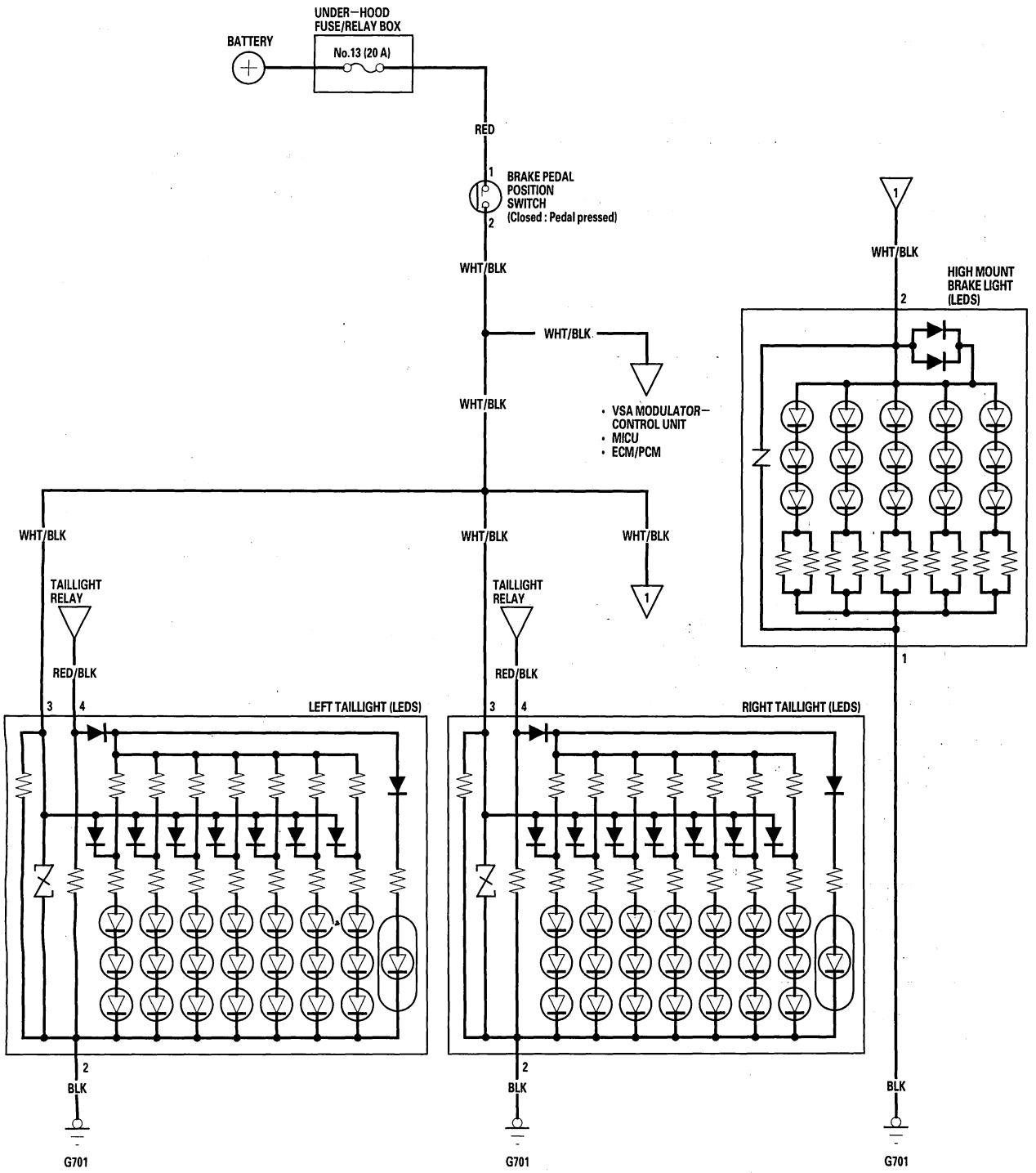

BACK

Protected by AR

4-door ('06 model)

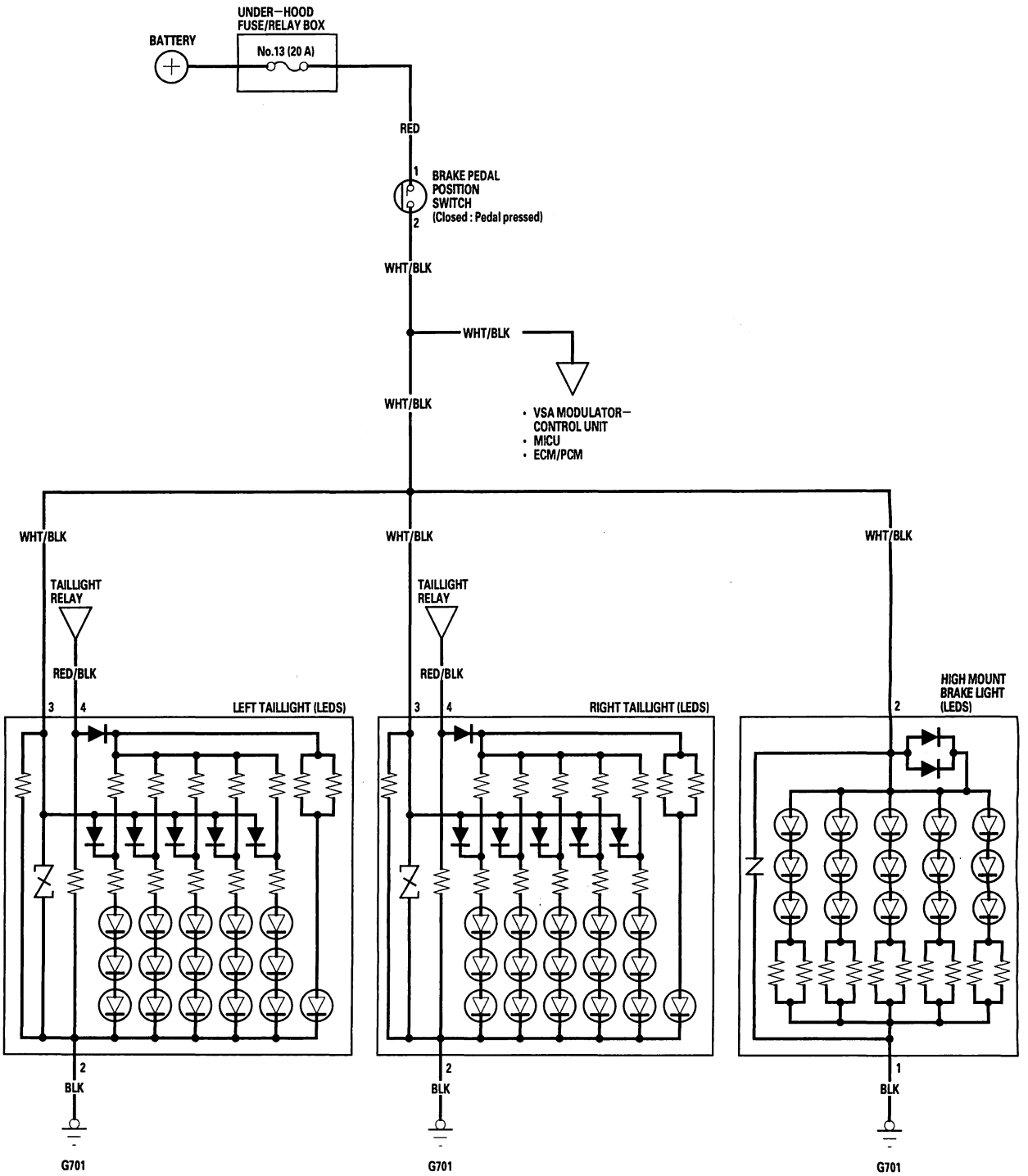

Protected by AR

Gauges

Component Location Index

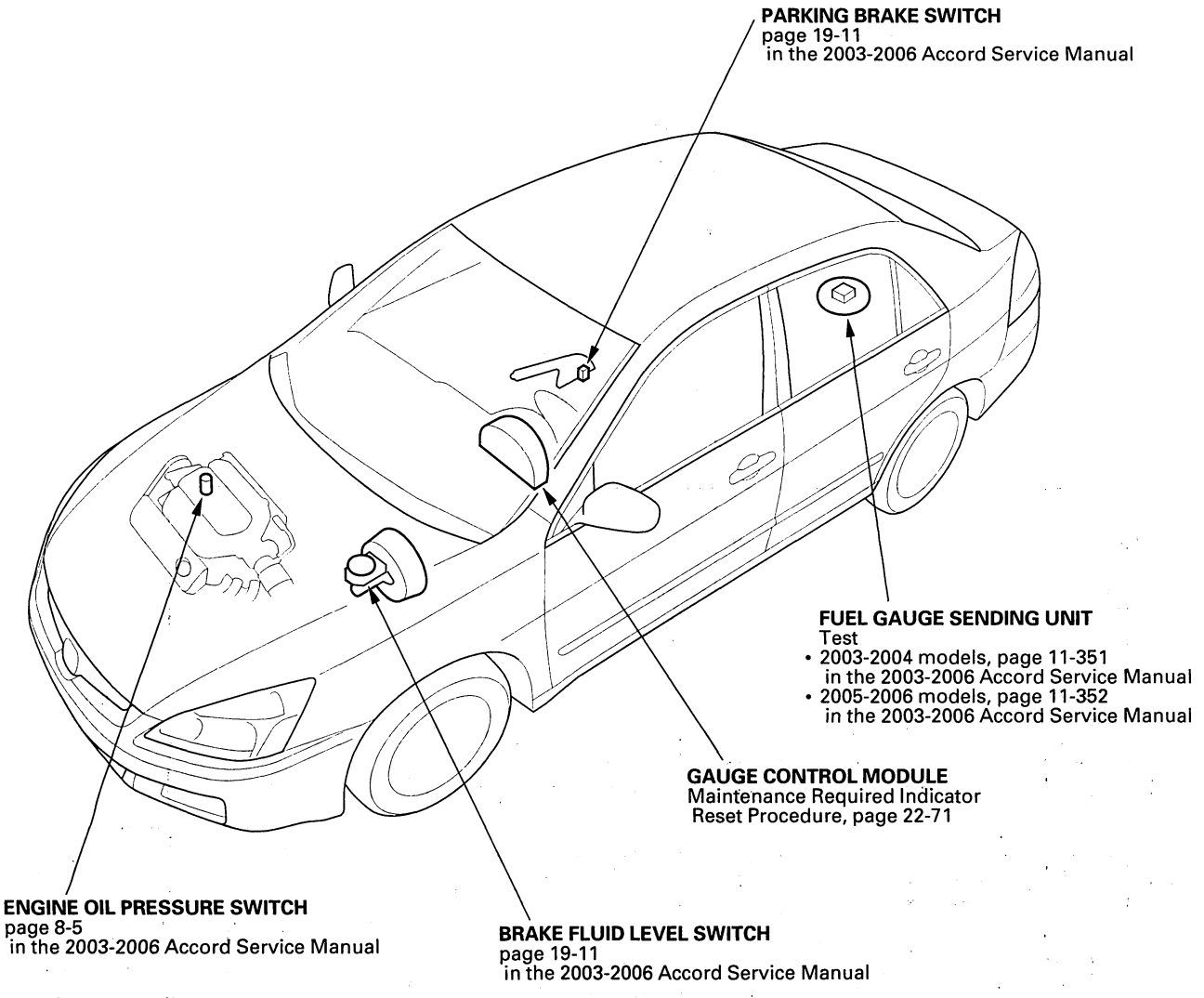

BACK

Protected by AR

'03-05 models

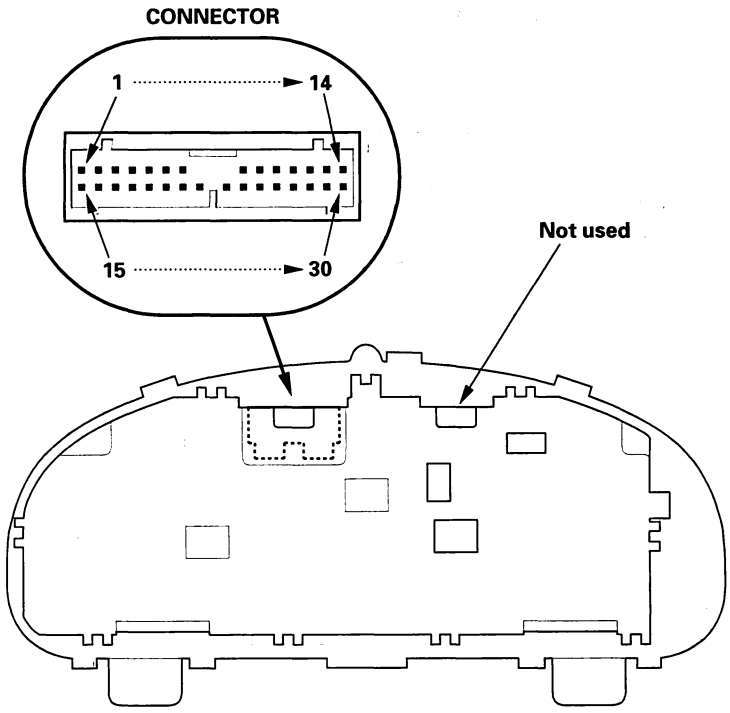

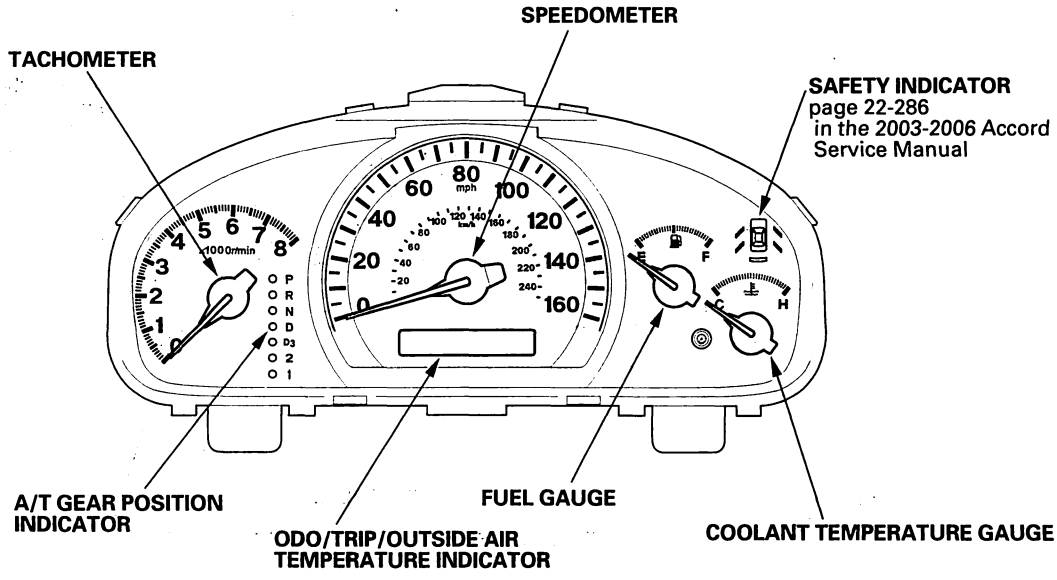

(cont'd)

Protected by AR

Gauges

Component Location Index (cont'd)

'06 model

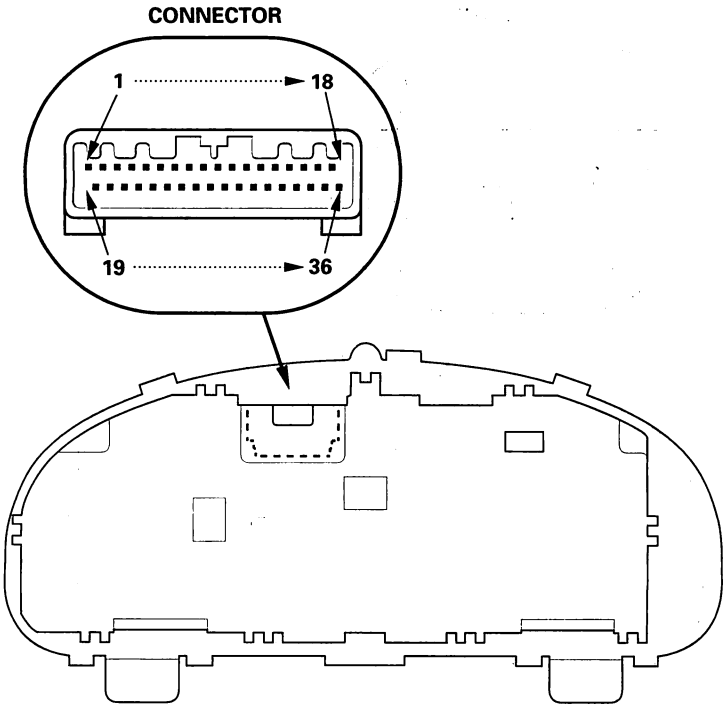

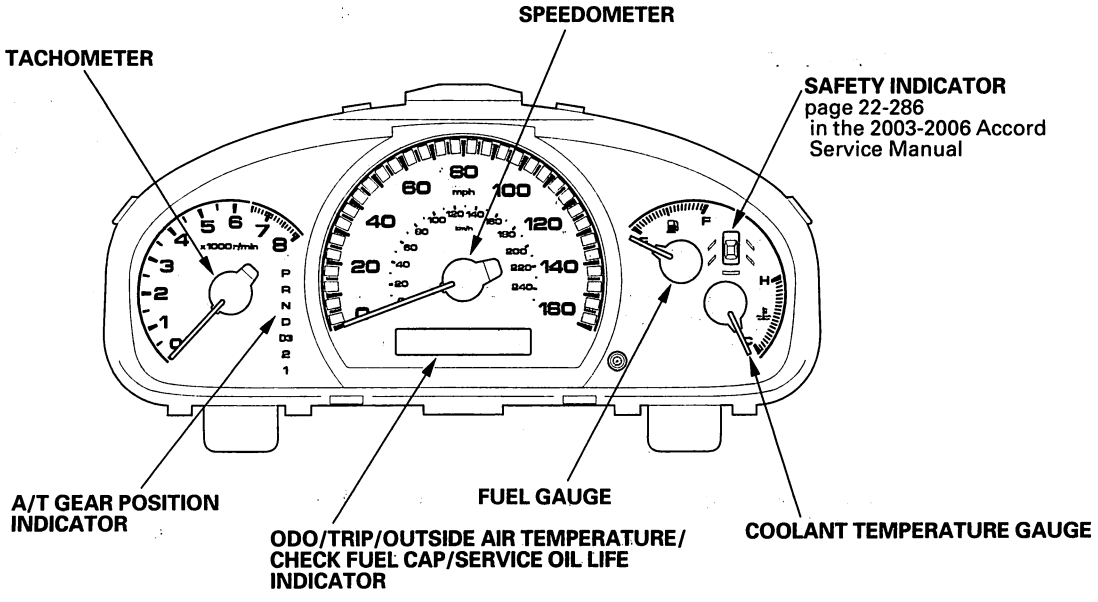

BACK

Protected by AR

Self-diagnostic Function

Before troubleshooting the gauge system, refer to multiplex integrated control system B-CAN System Diagnosis Test Mode A, refer to the 2003-2006 Accord Service Manual (see page 22-91).

The gauge control module has a self-diagnostic function.
- The beeper drive circuit check
- The indicator drive circuit check
- The switch input test
- The LCD segments check
- The gauges drive circuit check (Speedometer, Tachometer, Fuel gauge, Coolant temperature gauge)
- The communication line check (of the body-controller area network (B-CAN) communication line and the fast-controller area network (F-CAN) communication line between the gauges).

NOTE: Indicators are also controlled via the communication line.

Entering the self-diagnostic function

Before running the self-diagnostic function, check the No. 7 (10 A) fuse and the No. 21 (7.5 A) fuse in the under-dash fuse/relay box.

1. Push and hold the trip/reset button.
2. Turn the headlights ON.
3. Turn the ignition switch ON (II).
4. Within 5 sec., turn the headlights OFF, then ON and OFF again.
5. Within 5 sec., release the trip/reset button, and then push and release the button three times repeatedly.

NOTE:
- While in the self-diagnostic mode, the dash lights brightness controller operates normally.
- While in the self-diagnostic mode, the trip/reset button is used to start the Beeper Drive Circuit Test and the Gauge Drive Circuit Check.
- If the vehicle speed exceeds 1.2 mph (2 km/h) or the ignition switch is turned OFF, the self-diagnostic mode ends.

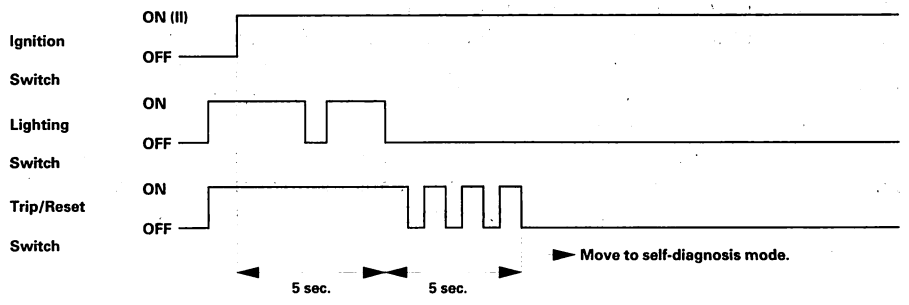

The Beeper Drive Circuit Check

When entering the self-diagnostic mode, the beeper sounds five times.

The Indicator Drive Circuit Check

When entering the self-diagnostic mode, the following indicator lights blink:
Seat belt indicator, charging system indicator, low fuel indicator, maintenance required indicator, security indicator, high beam indicator, lights on indicator, malfunction indicator lamp (MIL), A/T gear position indicator, ABS indicator, cruise main indicator and safety indicators (doors and trunk).

Switch Input Check

After the intermittent beeper sounds at the initial stage of the self-diagnostic function, a beeper sounds continuously while any of the following switch inputs are switched from OFF to ON:
Cruise control main cruise set, cruise cancel, cruise resume, TCS OFF ('03-05 models), VSA OFF ('06 model), and parking brake switches.

(cont'd)

Protected by AR

Self-diagnostic Function (cont'd)

The LCD Segment Check
When entering the self-diagnostic mode, the odo/trip segments and outside air temperature segment blink five times.

The Gauge Drive Circuit Check
When entering the self-diagnostic mode, the speedometer, the tachometer, the fuel gauge, and the coolant temperature gauge needles sweep from the minimum position to maximum position, then return to the minimum position.
NOTE:
After the beeper stops sounding and the gauge needles return to the minimum position, pushing the trip/reset button starts the Beeper Drive Circuit Check (one beep) and the Gauge Drive Circuit Check again.
The check cannot be started again until the gauge needles return to the minimum position.

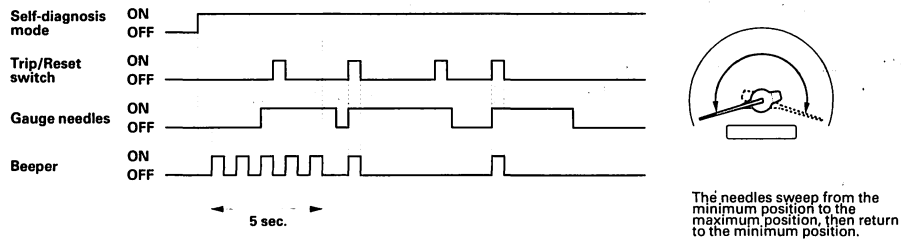

If a needle fails to sweep or the beeper does not sound, replace the gauge control module.

The Communication Line Check
While in the self-diagnostic mode, the Communication Line Check starts after the odo/trip LCD Segments Check.
If all segments comes on, the communication line is OK.

- If the word "Error 1" is indicated, there is a malfunction in the communication line between the gauge control module and the fast-controller area network (F-CAN). Check for DTCs in the ECM/PCM. If no DTCs are found, go to B-CAN System Diagnosis Test Mode A, refer to the 2003-2006 Accord Service Manual (see page 22-91).
- If the word "Error 2" is indicated, there is a malfunction in the communication line between the gauge control module and the body-controller area network (B-CAN). Go to B-CAN System Diagnosis Test Mode A, refer to the 2003-2006 Accord Service Manual (see page 22-91).
- If the word "Error 3" is indicated, there is a malfunction in the communication line between the gauge control module and the body-controller area network (B-CAN) and the fast-controller area network (F-CAN). Check for DTCs in the ECM/PCM. If no DTCs are found, go to B-CAN System Diagnosis Test Mode A, refer to the 2003-2006 Accord Service Manual (see page 22-91).

Normal:



Faulty (example Error 1):



If any communicaiton line errors are found, go to B-CAN System Diagnosis Test Mode A, refer to the 2003-2006 Accord Service Manual (see page 22-91).

Ending the self-diagnostic function
Turn the ignition switch OFF.
Note: If the vehicle speed exceeds 1.2 mph (2 km/h), the self-diagnostic function ends.

BACK

Protected by AR

Resetting the Maintenance Required Indicator

Blinking pattern:

Miles (km)	Maintenance Reminder Light
At 5,900 (9,440) to 6,100 (9,760)	Blinks for 10 seconds when the ignition switch is turned ON (II).
At 7,400 (11,840) to 7,600 (12,160)	Comes on and stays on while the ignition switch is ON (II).

How to Reset

Push and hold the trip/reset button, turn the ignition switch ON (II), and continue to hold the button for more than 10 seconds or until the indicator goes out.

Protected by AR

Gauges

Circuit Diagram

'03-05 models

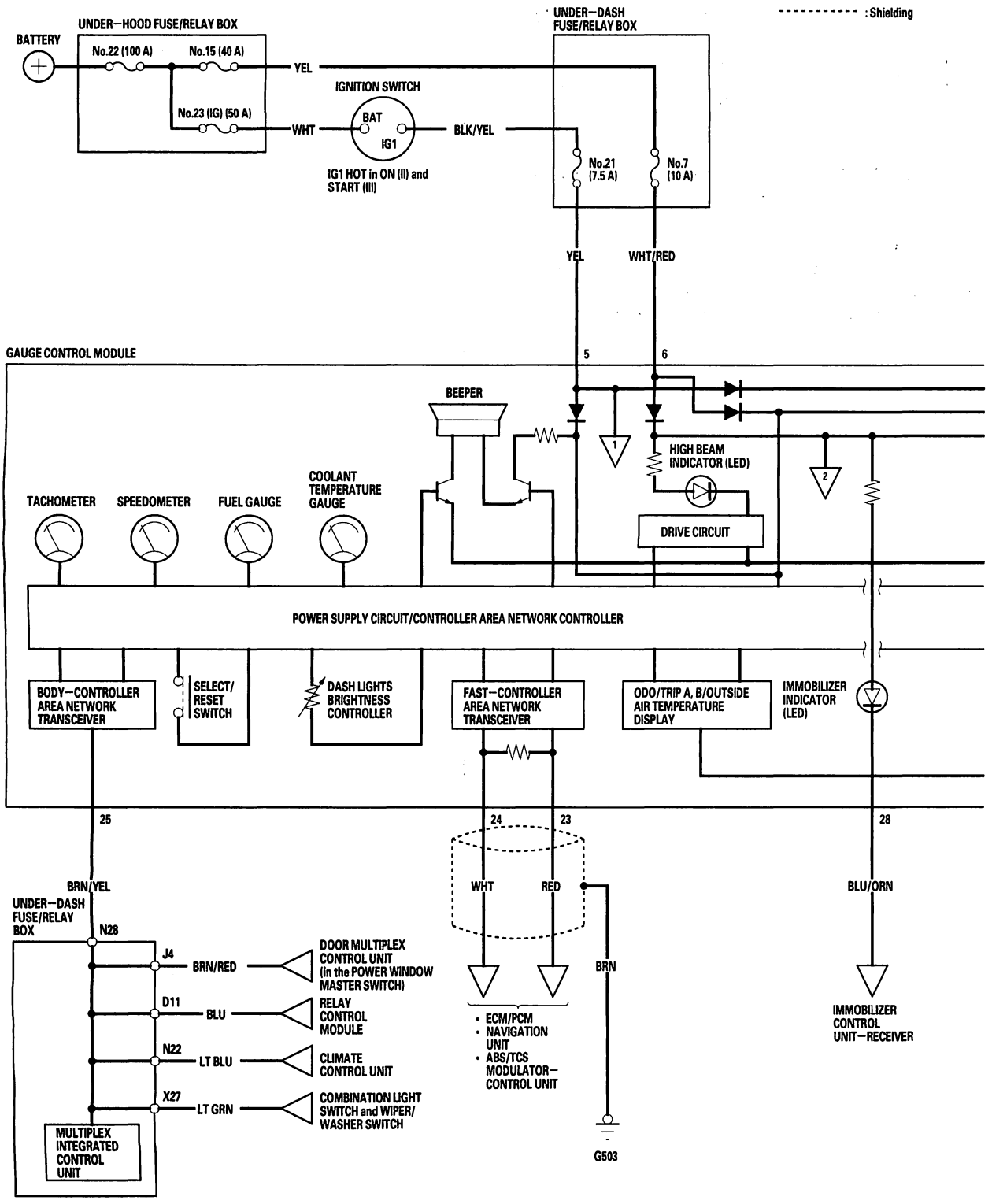

BACK

Protected by AR

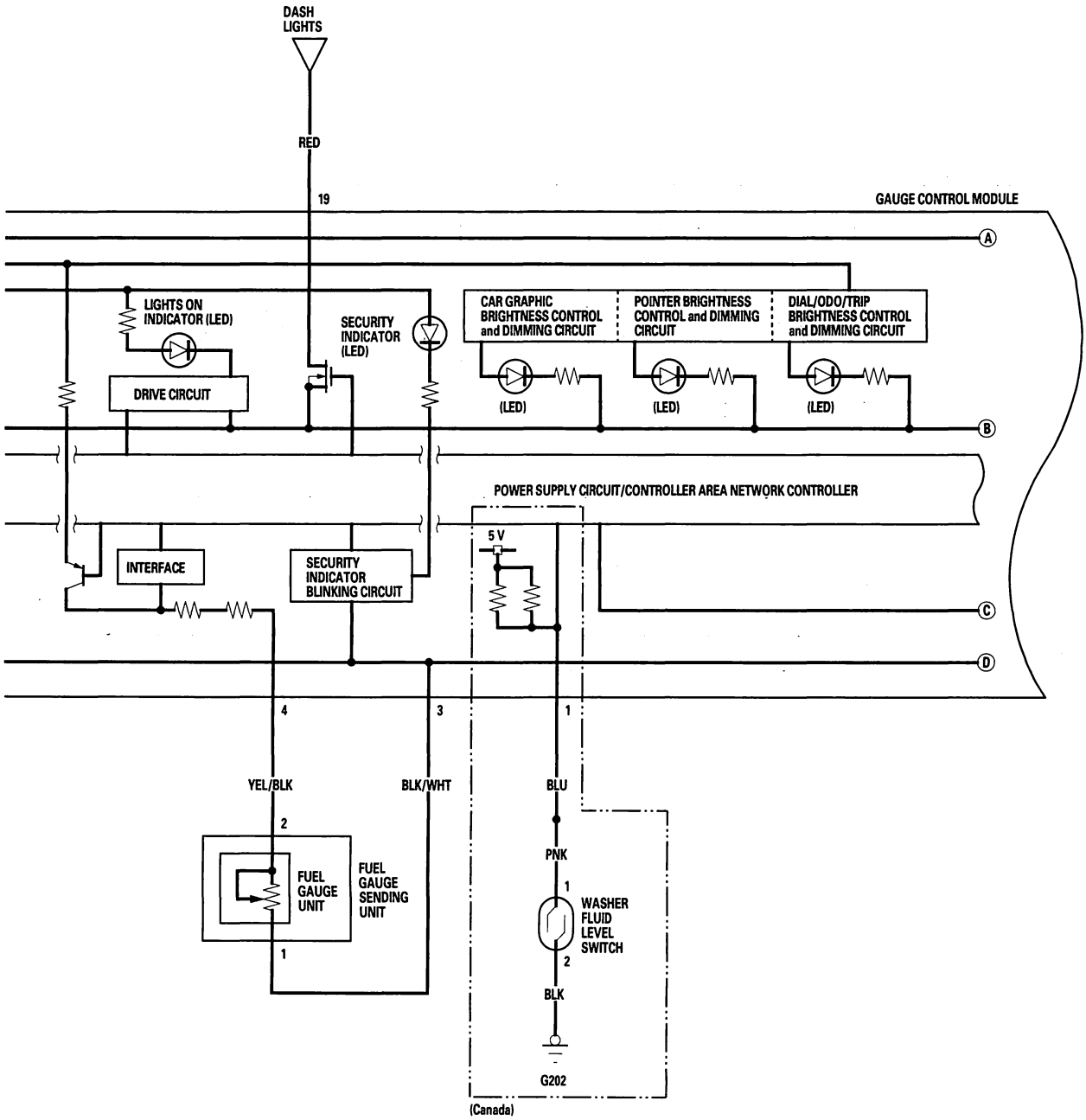

(cont'd)

BACK

Protected by AR

Circuit Diagram (cont'd)

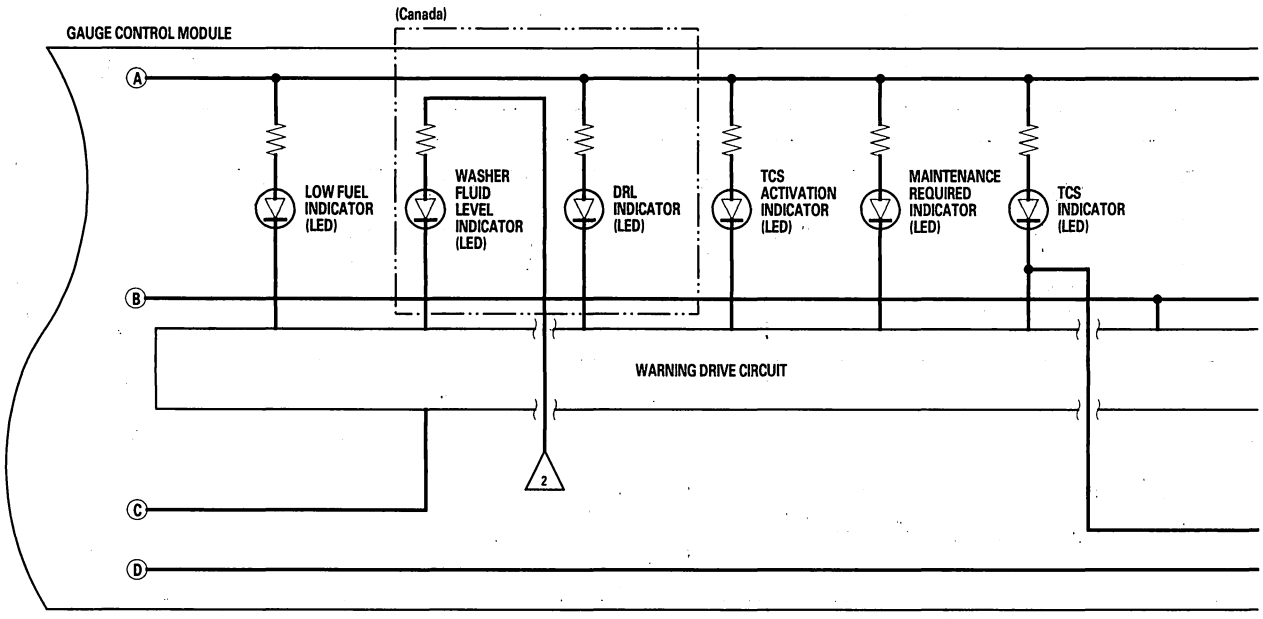

BACK

Protected by AR

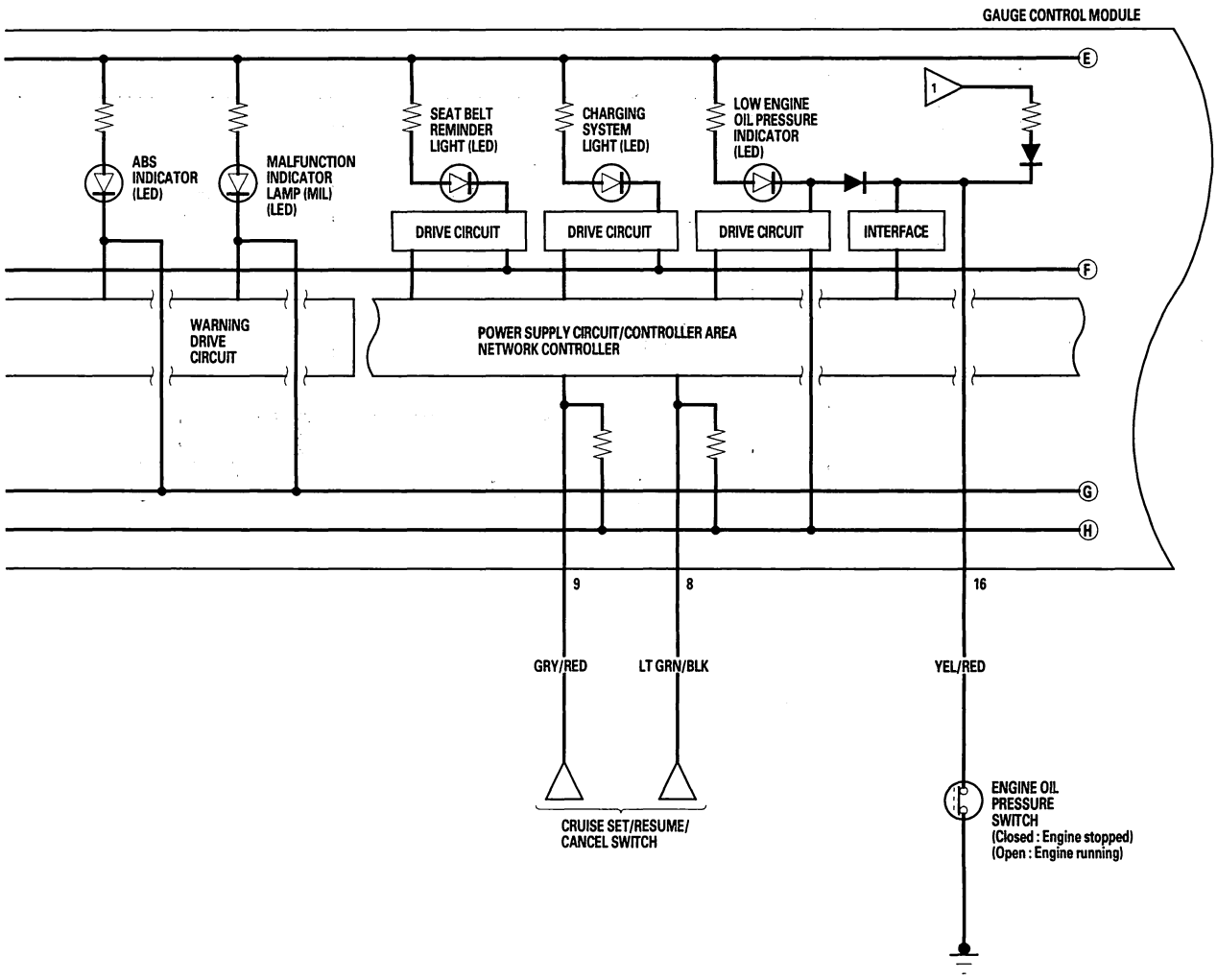

(cont'd)

Protected by AR

Circuit Diagram (cont'd)

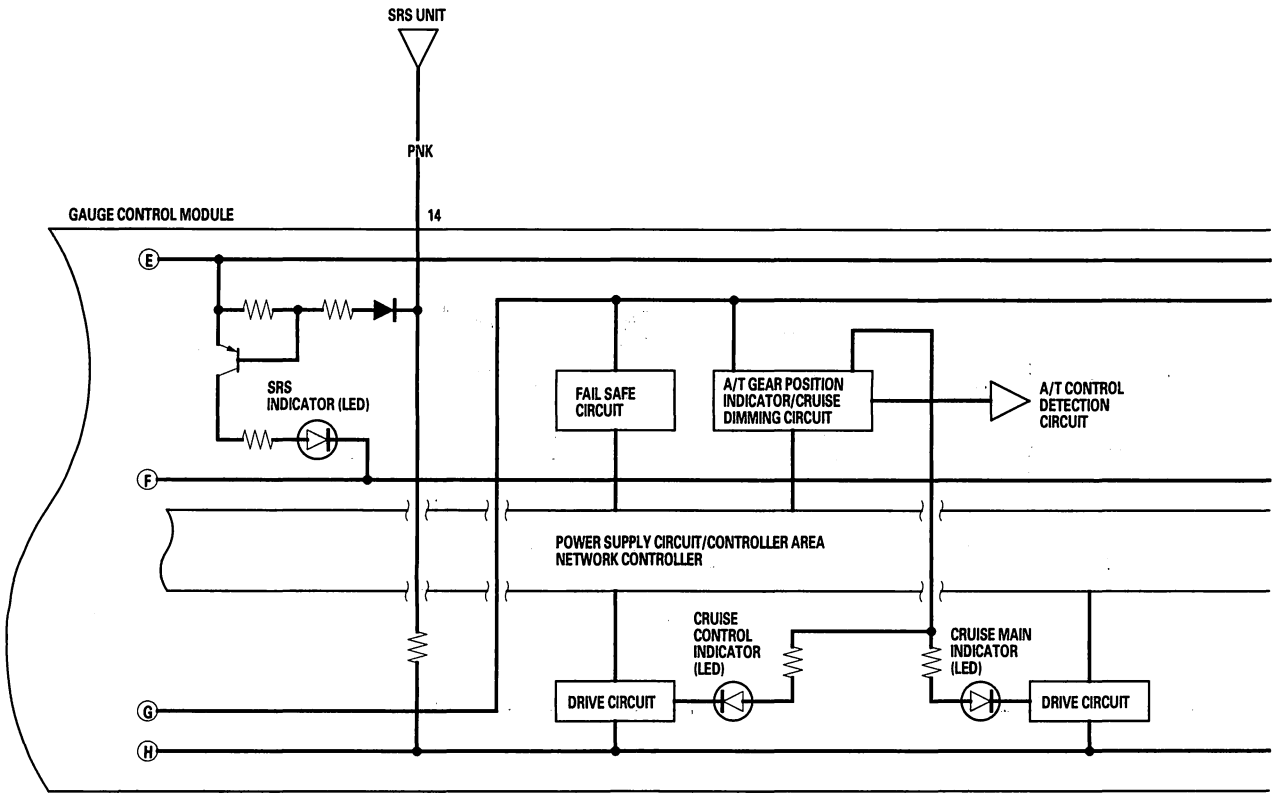

BACK

Protected by AR

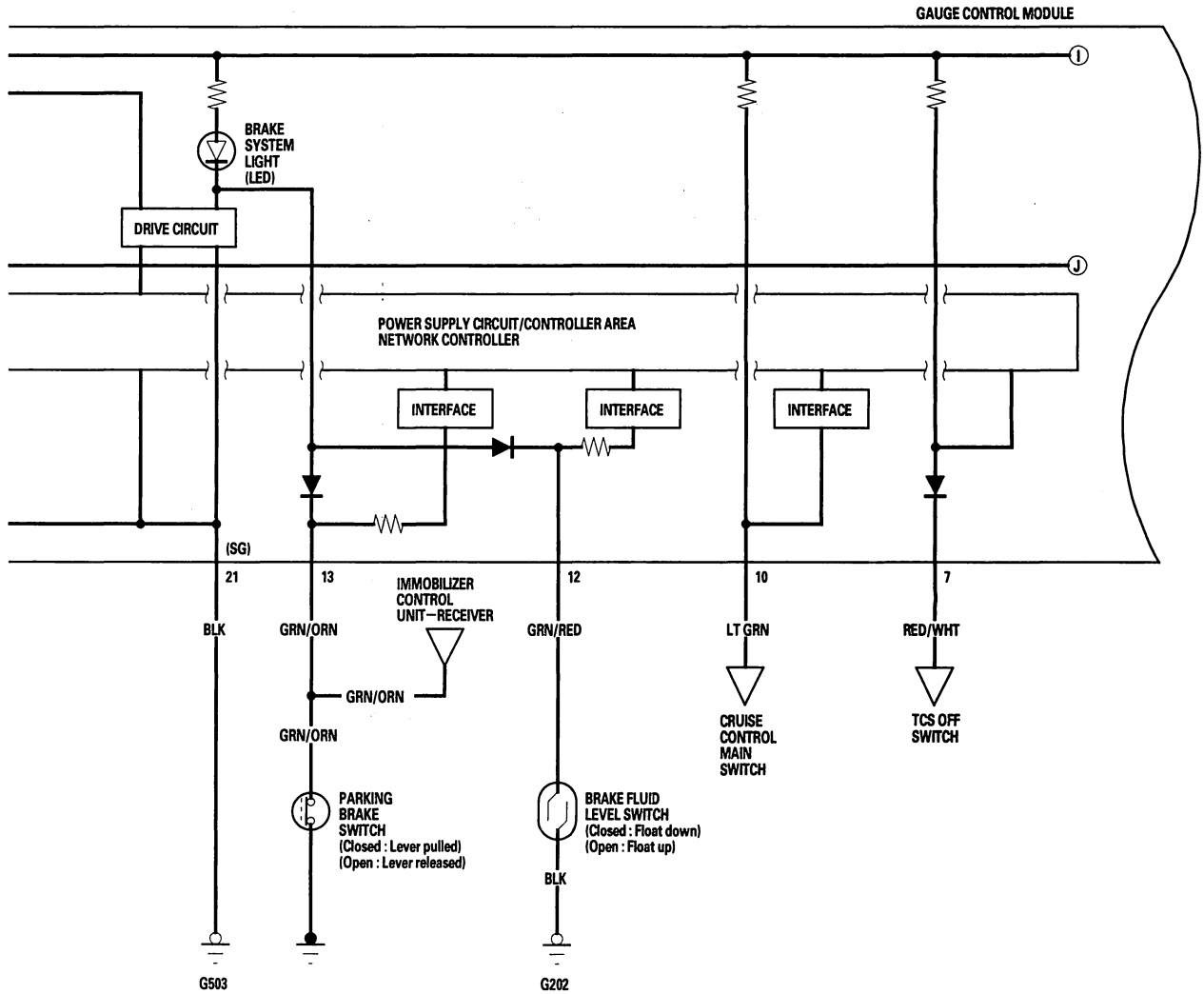

(cont'd)

Protected by AR

Circuit Diagram (cont'd)

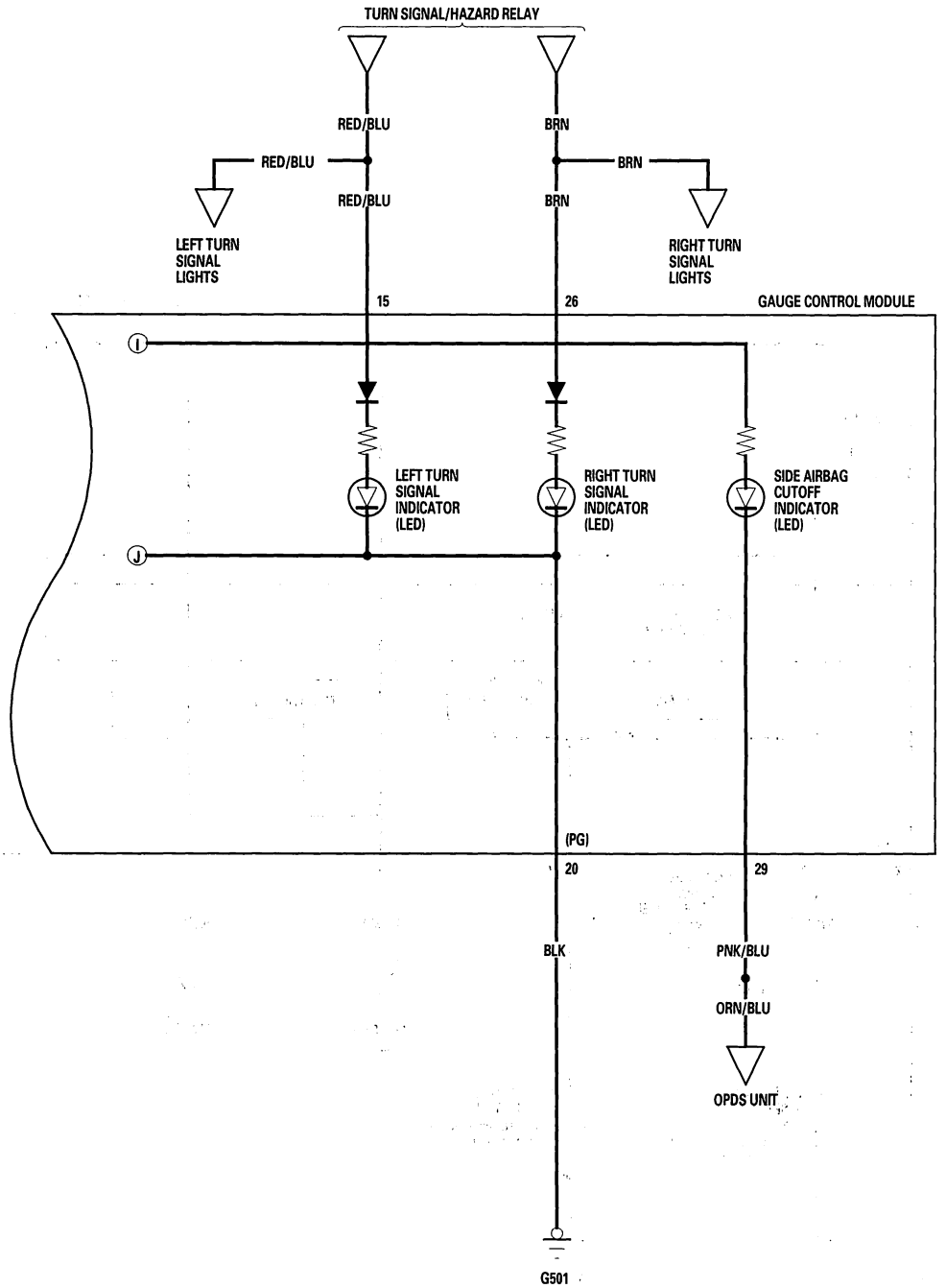

BACK

Protected by AR

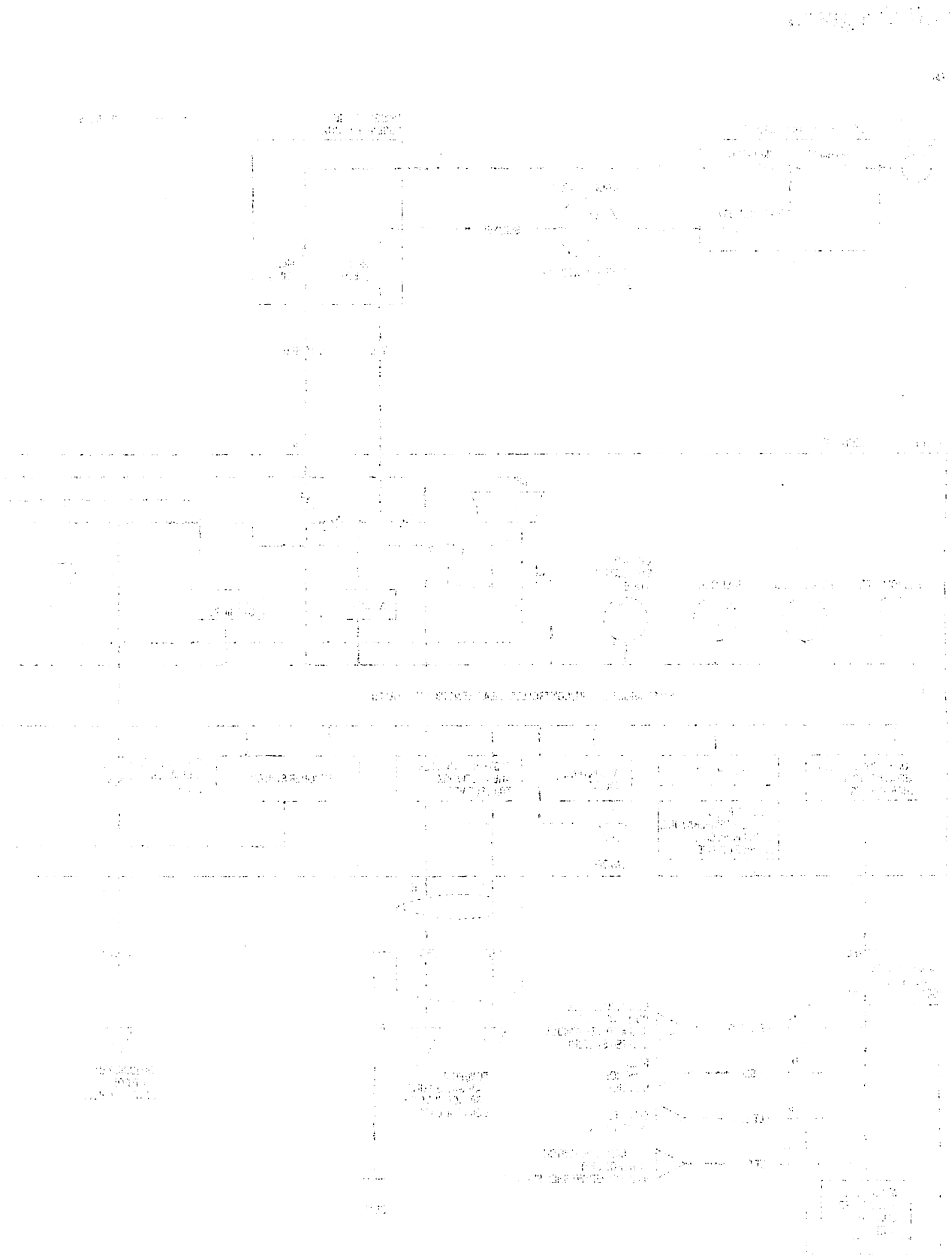

Protected by AR

Gauges

Circuit Diagram

'06 model

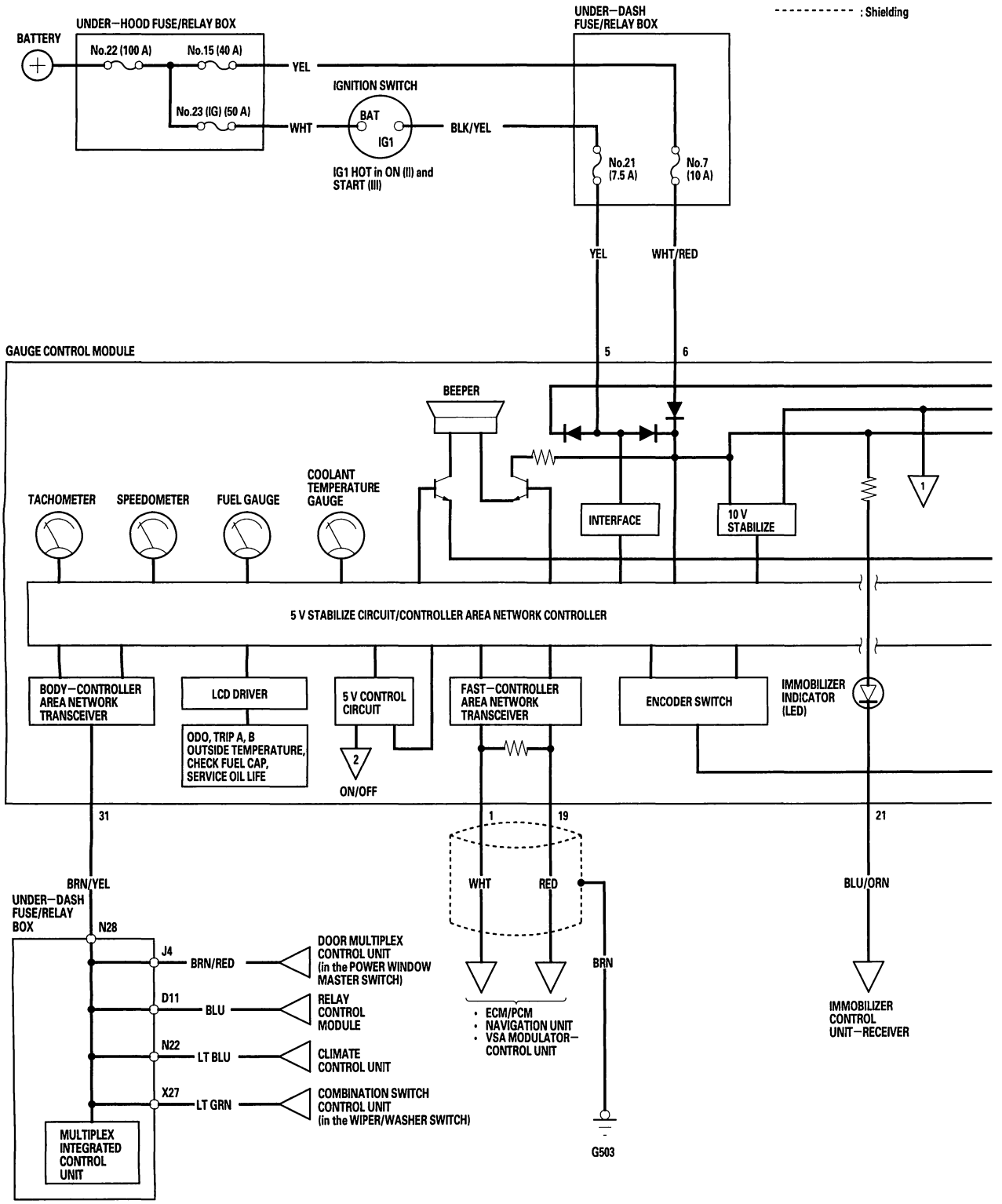

BACK

Protected by AR

*1 : M/T
*2 : A/T

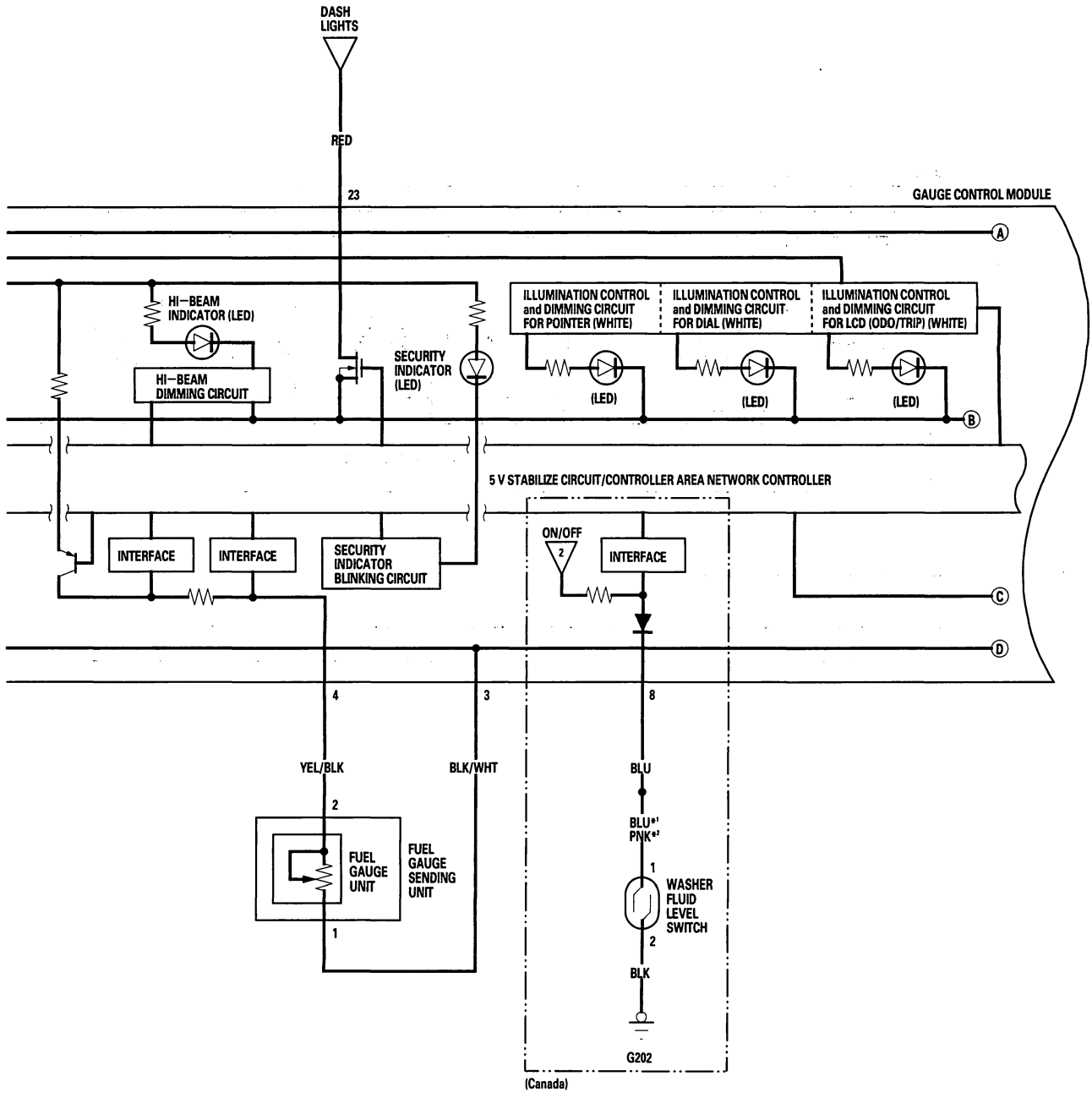

(cont'd)

Protected by AR

Circuit Diagram (cont'd)

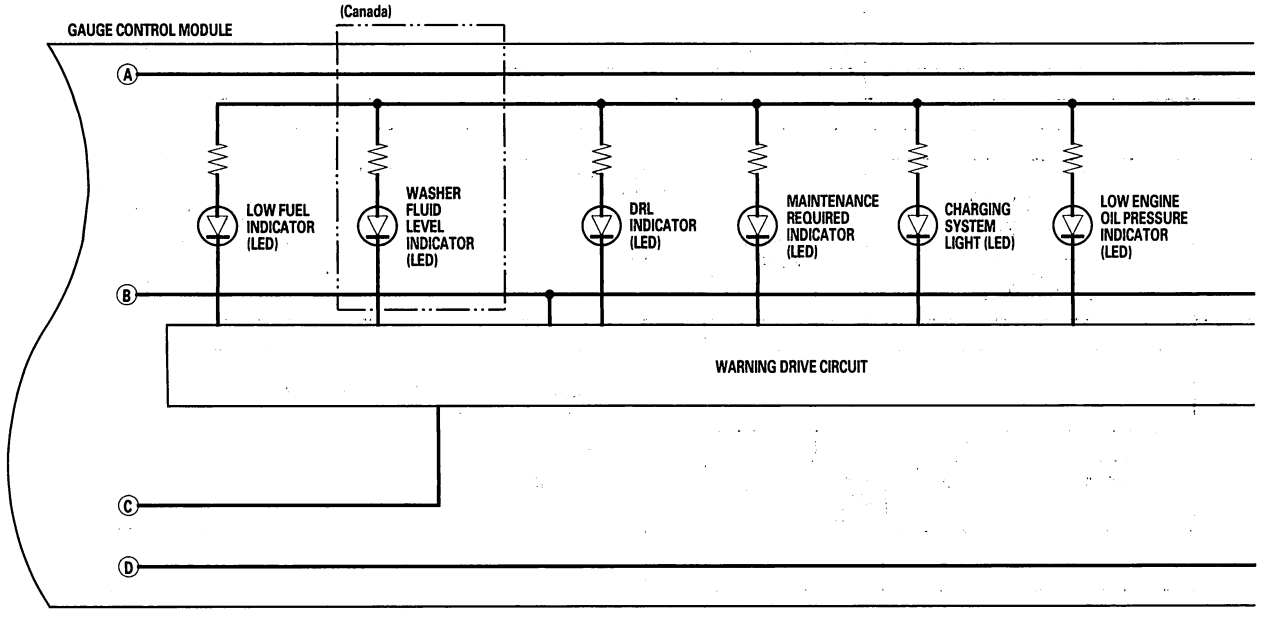

BACK

Protected by AR

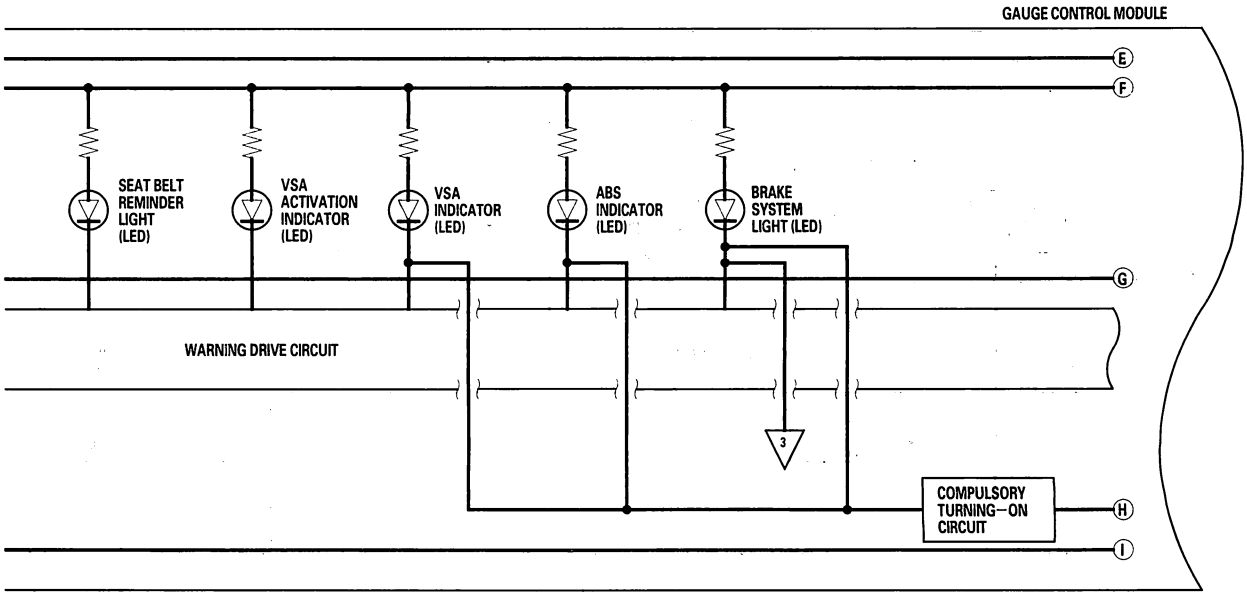

(cont'd)

Protected by AR

Circuit Diagram (cont'd)

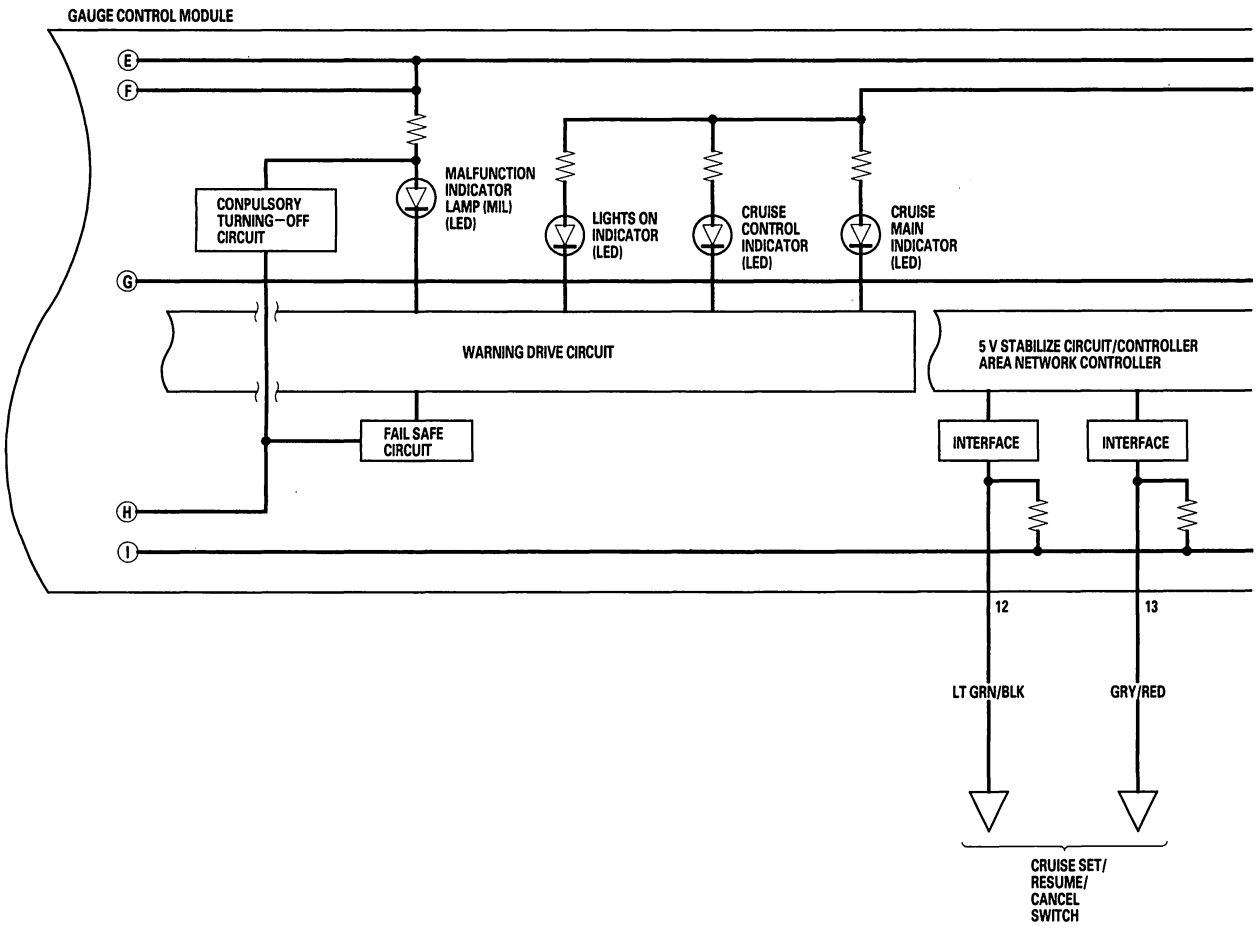

BACK

Protected by AR

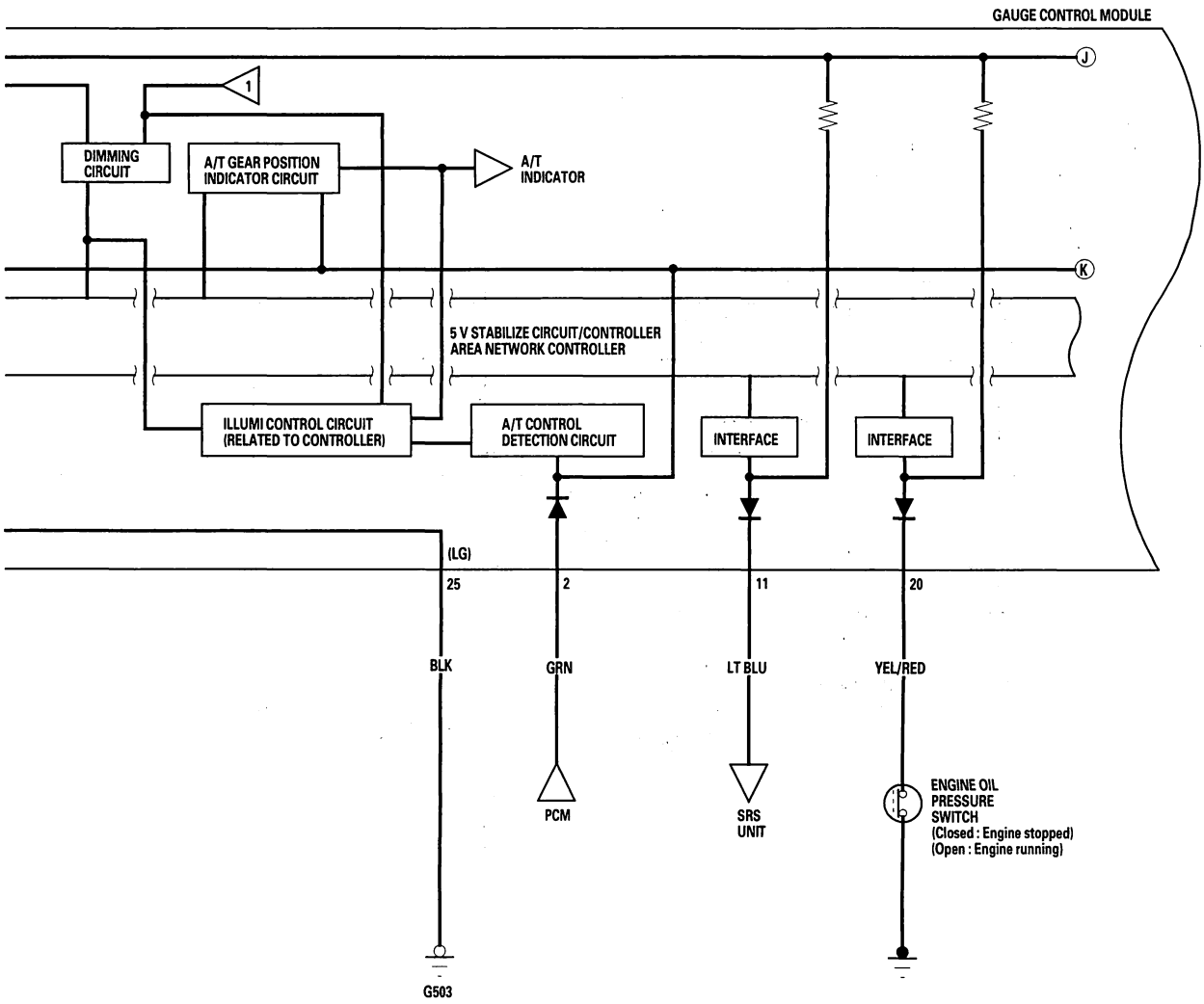

(cont'd)

Protected by AR

Circuit Diagram (cont'd)

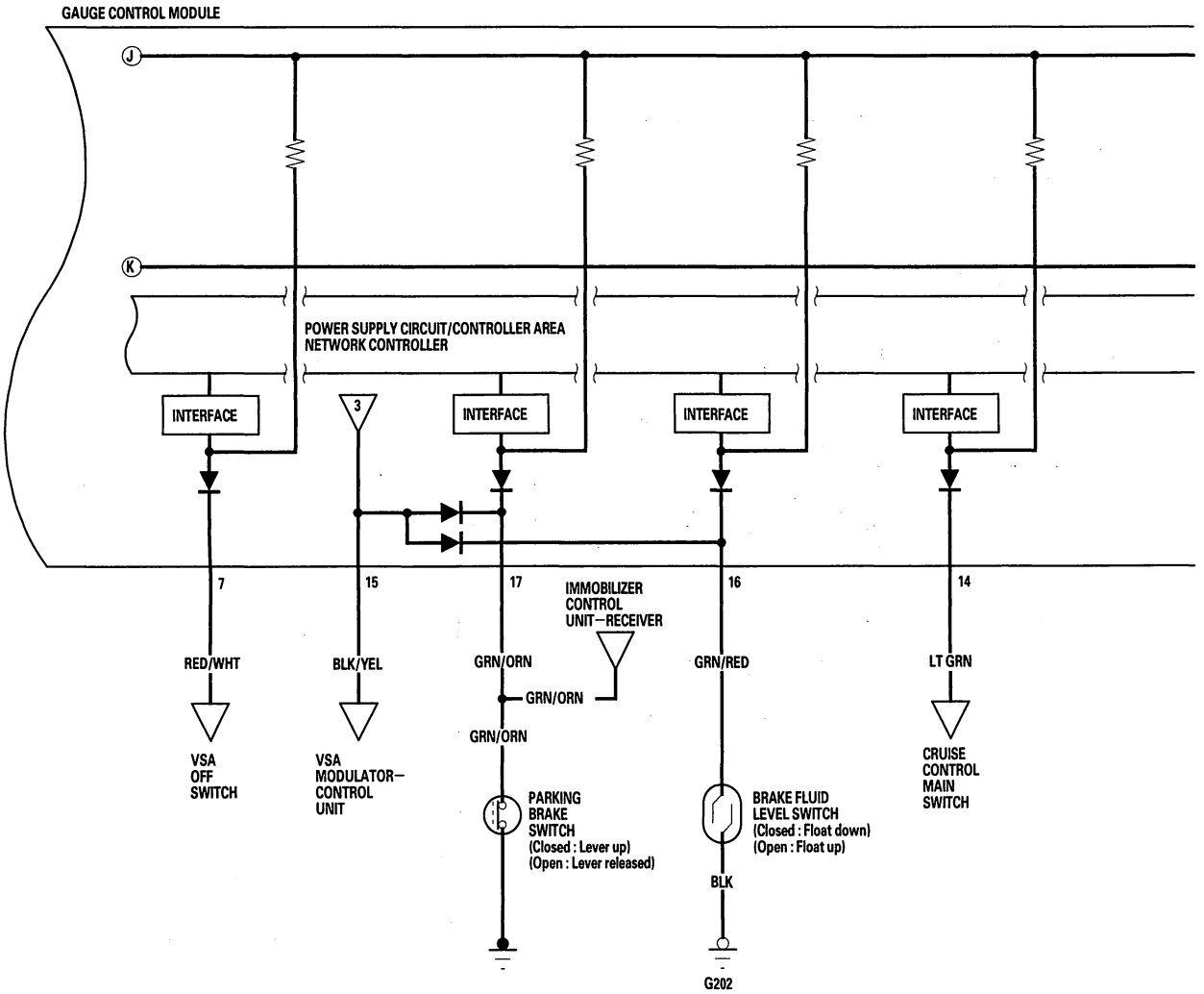

BACK

Protected by AR

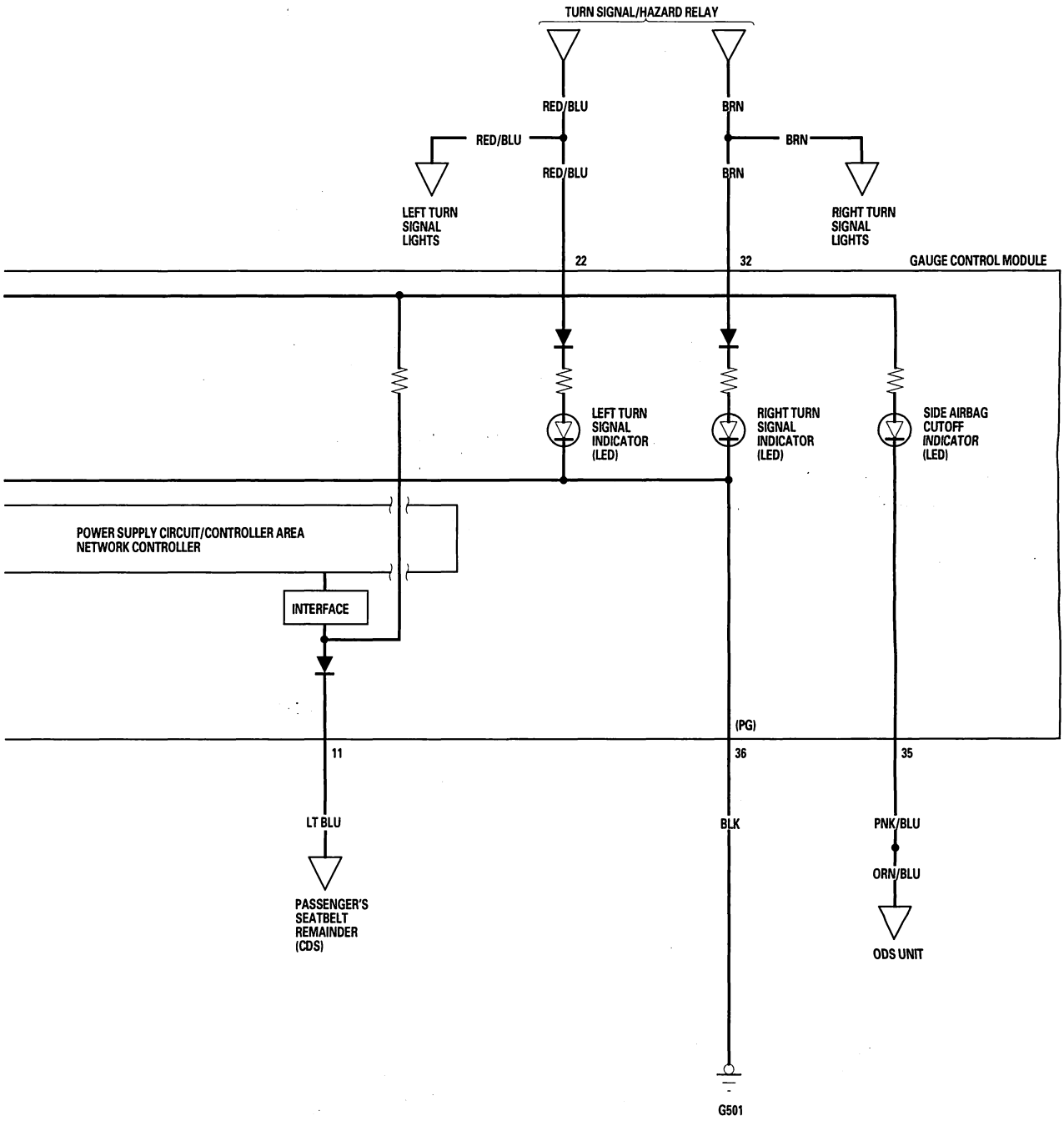

Protected by AR

Power Seats

Component Location Index

8-way Adjustable:

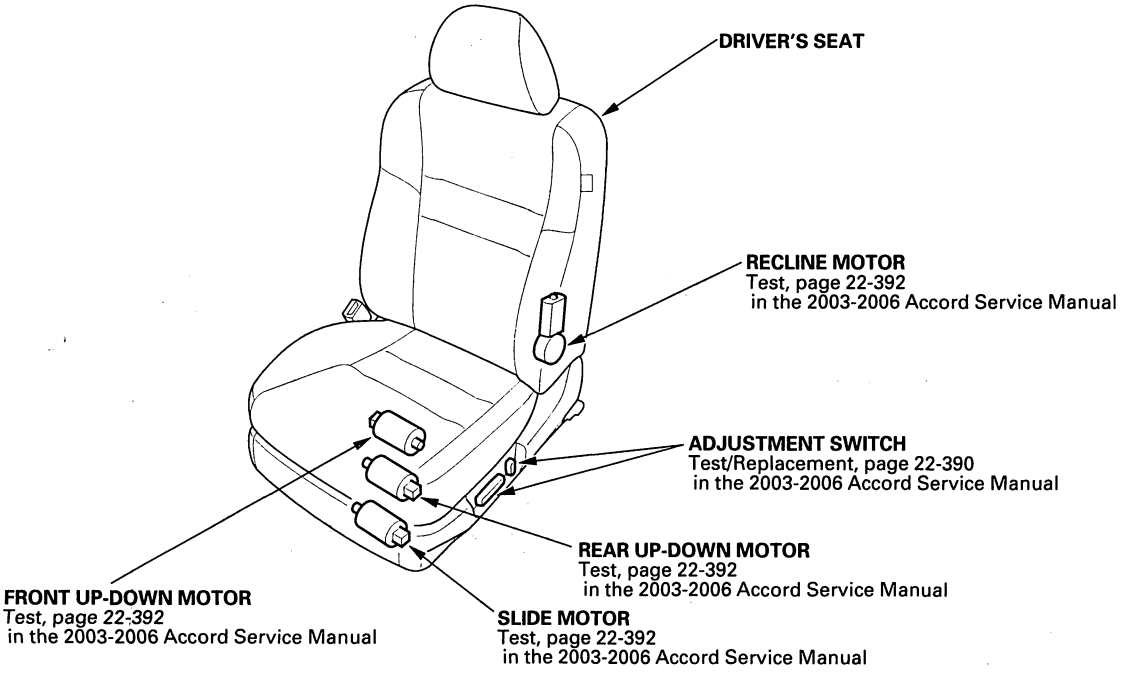

4-way Adjustable:

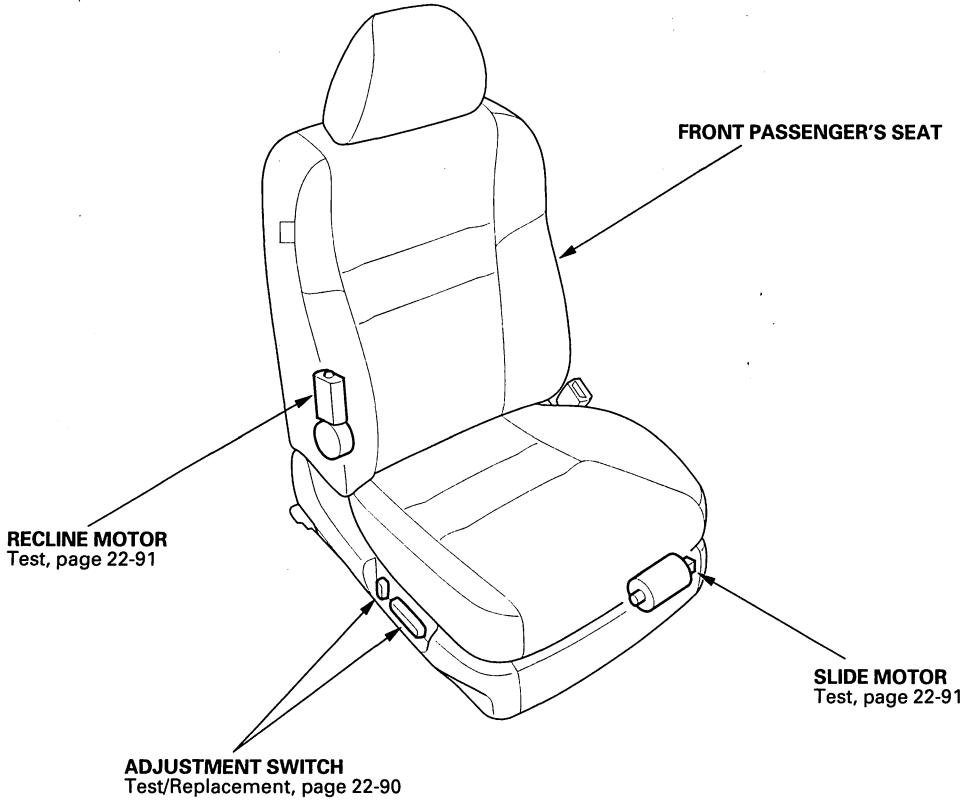

BACK

Protected by AR

Circuit Diagram

4-way Ajustable

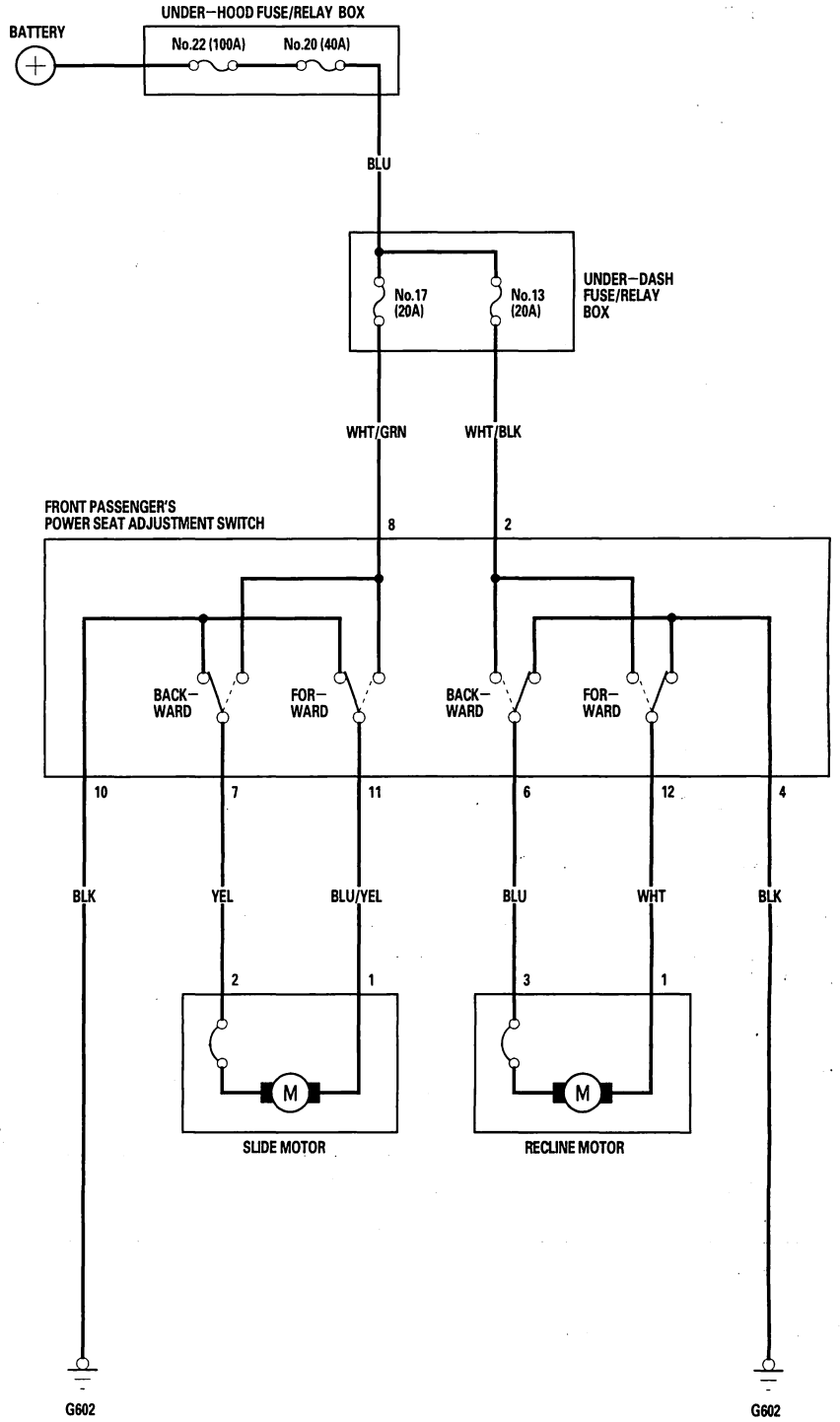

Protected by AR

Power Seats

Switch Test/Replacement

Front Passenger's power Seat (4-way Adjustable)

1. Remove the power seat adjustment switch knobs (A).

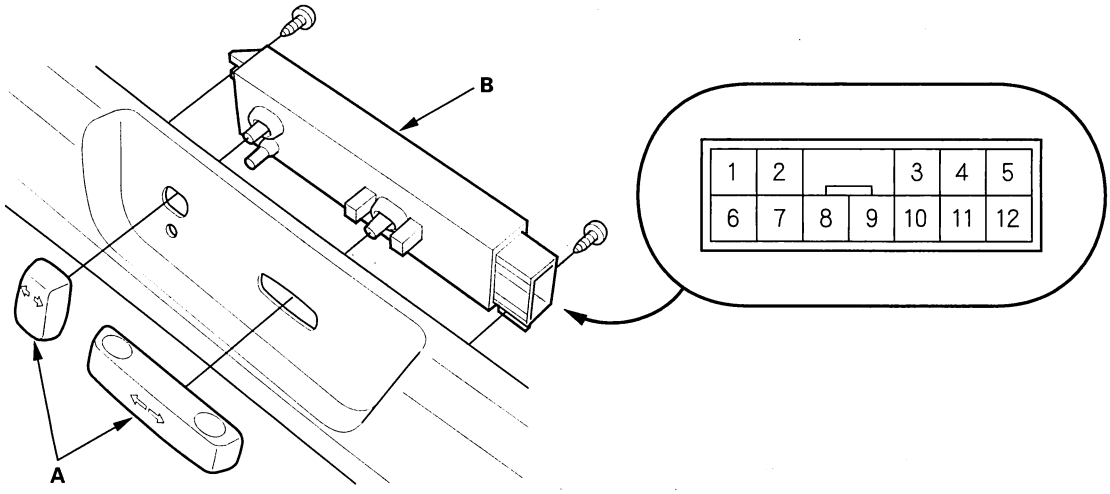

2. Remove the recline cover from the front passenger's power seat.
   - '03 model (see page 20-6)
   - '04-06 models (see page 20-7)
3. Remove the two screws and the power seat switch (B).
4. Disconnect the 12P connector from the power seat adjustment switch (A).
5. Reinstall the adjustment switch knobs to the switch.
6. Check for continuity between the terminals in each switch position according to the table.

Position \ Terminal		1	2	3	4	5	6	7	8	9	10	11	12
SLIDE SWITCH	Forward							○	○		○	○	
	Backward							○	○		○	○	
RECLINE SWITCH	Forward		○		○		○						○
	Backward		○		○		○						○

No. 1, 3, 5 and 9 terminals are not used.

7. If the continuity is not as specified, replace the switch.

BACK

Protected by AR

Motor Test

Front Passenger's 4-way Adjustable power Seat

1. Remove the front passenger's seat (see page 20-3).
2. Disconnect the 12P connector (A) from the power seat adjustment switch.

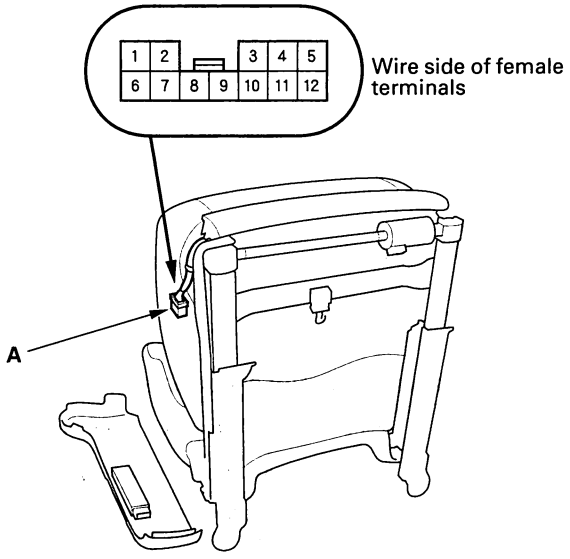

3. Test each motor by applying battery voltage and body ground to the terminals.

Slide motor

Terminal / Position	7	11
Forward	⊖	⊕
Backward	⊕	⊖

Recline motor

Terminal / Position	6	12
Forward	⊖	⊕
Backward	⊕	⊖

4. If the motor does not run or fails to run smoothly, check for an open in the passenger's seat wire harness between the 12P connector and each motor connector. If the harness is OK, replace the motor (see page 20-6).

Protected by AR

Audio System

Component Location Index

2-door

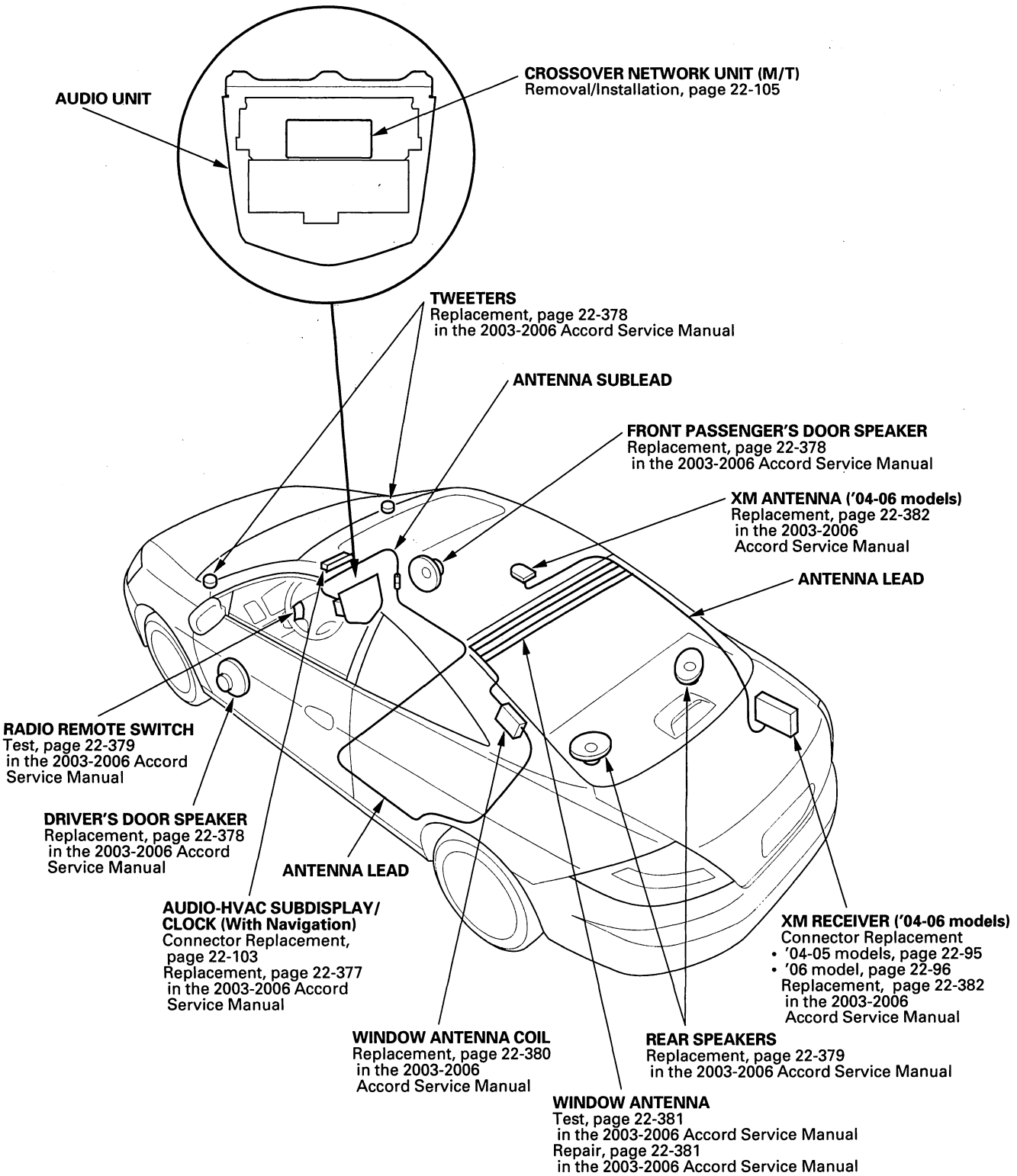

BACK

Protected by AR

Circuit Diagram

2-door

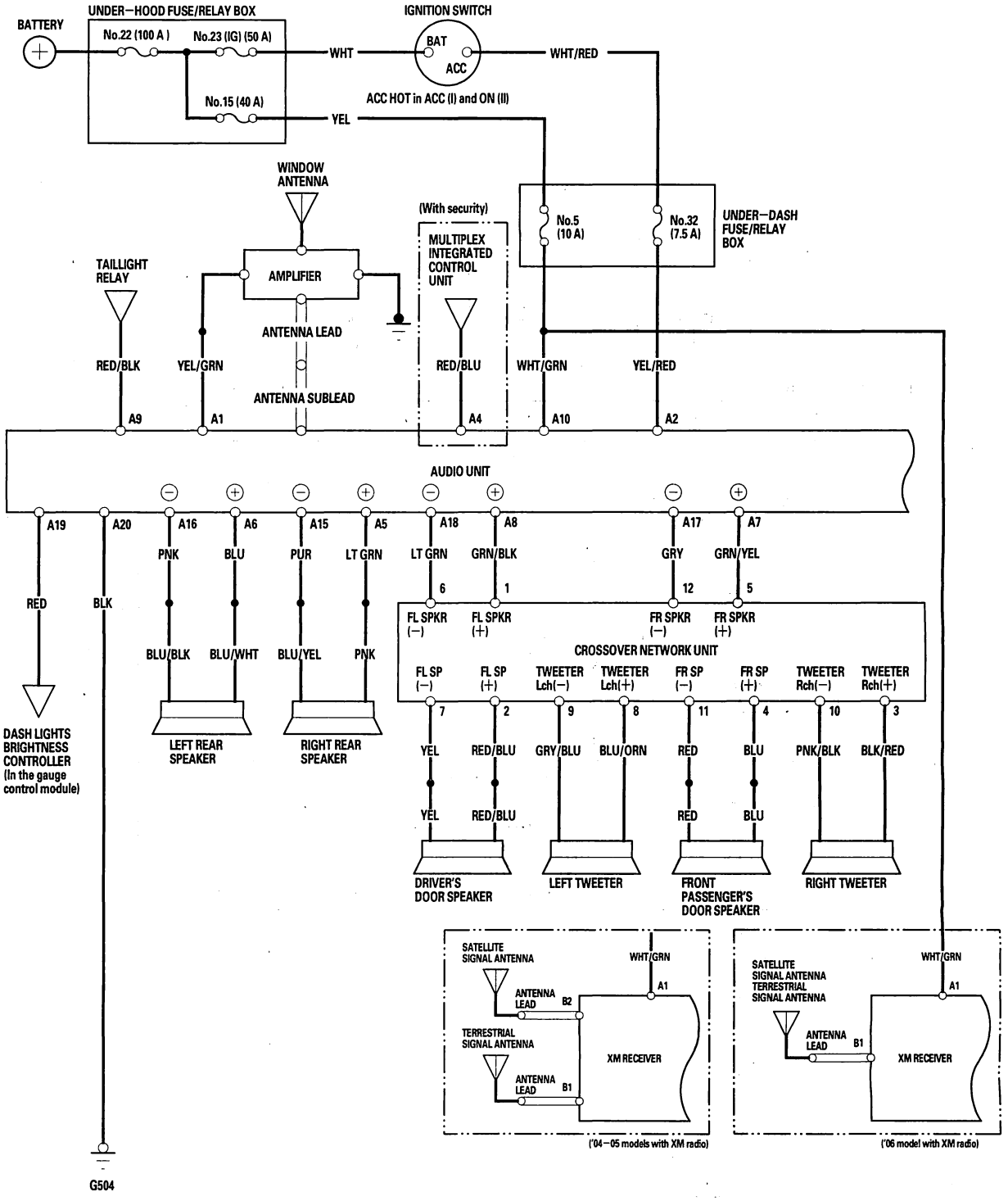

(cont'd)

Protected by AR

Audio System

Circuit Diagram (cont'd)

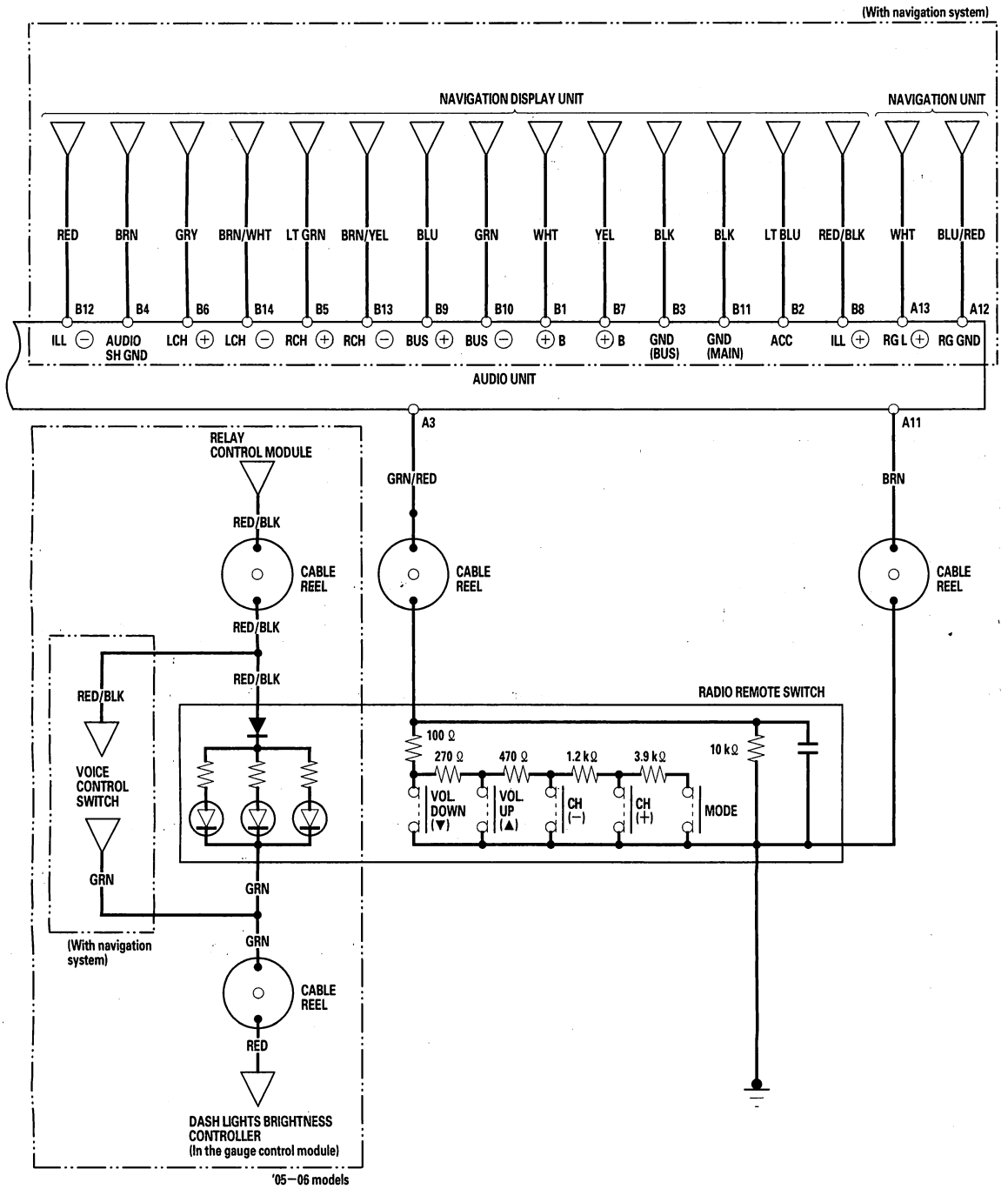

BACK

Protected by AR

System Description

XM Receiver Connector Inputs and Outputs

'04-05 models

Cavity	Wire	Connect to	Cavity	Wire	Connect to
A1	WHT/GRN	Constant power	A8	———	Not used
A2	LT BLU	XM receiver (ACC power)	A9	BLU	Audio unit bus (+)
A3	BLK	Bus ground	A10	RED	Audio unit bus (—)
A4	BRN	Audio shield ground	A11	BLK	XM receiver ground
A5	GRN	Audio unit (Right +)	A12	———	Not used
A6	BLU	Audio unit (Left +)	A13	RED	Audio unit (Right —)
A7	———	Not used	A14	WHT	Audio unit (Left —)

Cavity	Wire	Connect to
B1	———	Terrestrial signal antenna
B2	———	Satellite signal antenna

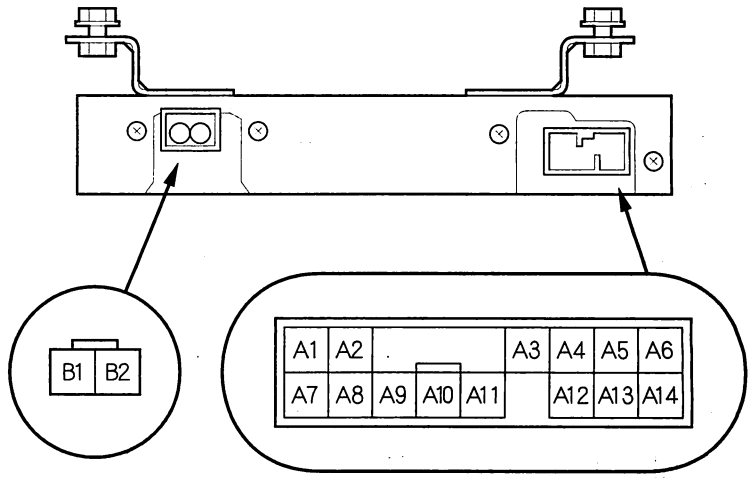

(cont'd)

Protected by AR

System Description (cont'd)

XM Receiver Connector Inputs and Outputs

'06 model

Cavity	Wire	Connect to	Cavity	Wire	Connect to
A1	WHT/GRN	Constant power	A8	———	Not used
A2	LT BLU	XM receiver (ACC power)	A9	BLU	Audio unit bus (+)
A3	BLK	Bus ground	A10	RED	Audio unit bus (—)
A4	BRN	Audio shield ground	A11	BLK	XM receiver ground
A5	GRN	Audio unit (Right +)	A12	———	Not used
A6	BLU	Audio unit (Left +)	A13	RED	Audio unit (Right —)
A7	———	Not used	A14	WHT	Audio unit (Left —)

Cavity	Wire	Connect to
1	———	XM signal input satellite and ground wave
2	———	XM signal ground

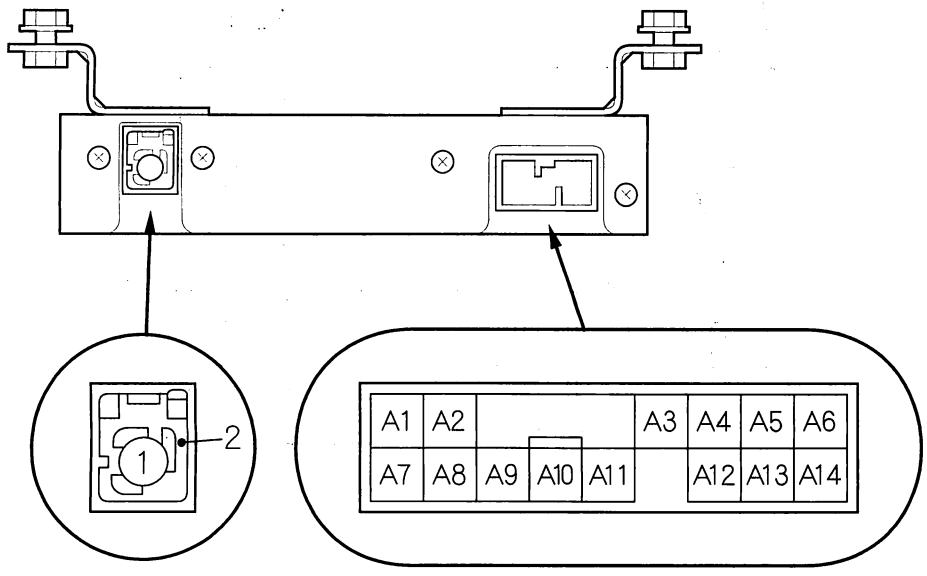

BACK

Protected by AR

Audio Unit Connector Inputs and Outputs

When replacing an audio unit connector, match the wires to the cavities listed in the following table.

Without Navigation

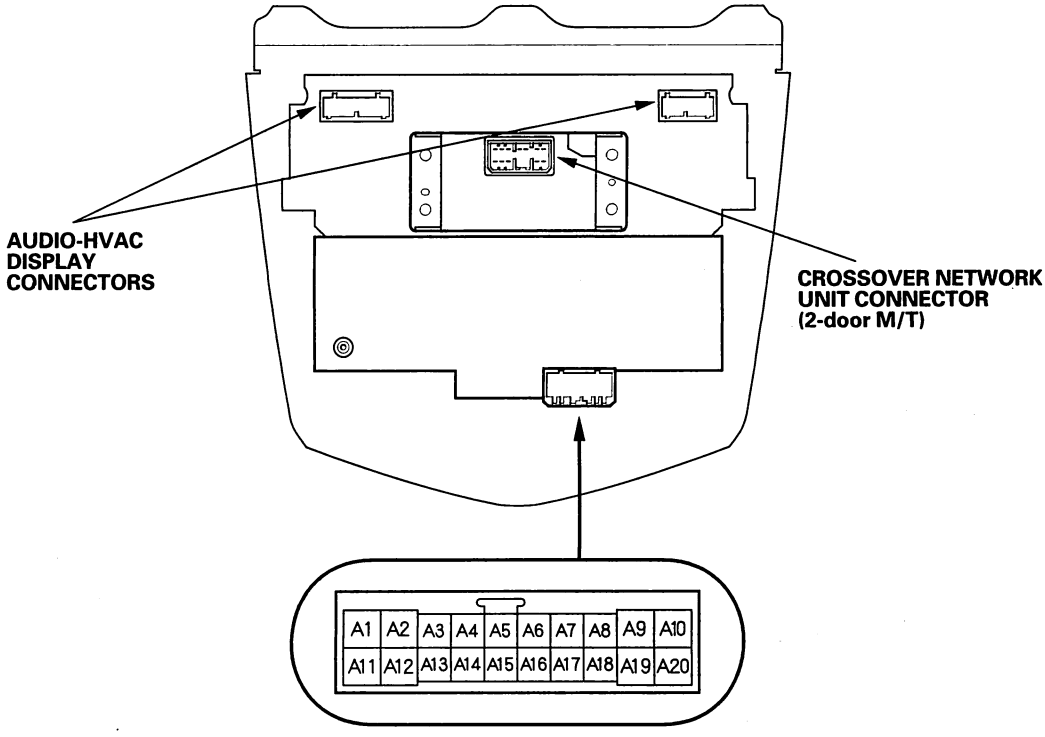

Cavity	Wire	Connect to	Cavity	Wire	Connect to
A1	YEL/GRN	Radio switch (AMP.)	A11	BRN	Radio remote switch ground
A2	YEL/RED	ACC (main stereo power supply)	A12	———	Not used
A3	GRN/RED	Radio remote switch	A13	———	Not used
A4	RED/BLU	(Security input)	A14	———	Not used
A5	LT GRN	Right rear speaker (+)	A15	PUR	Right rear speaker (—)
A6	BLU	Left rear speaker (+)	A16	PNK	Left rear speaker (—)
A7*	GRN/YEL	Crossover network unit (R ch +)	A17*	GRY	Crossover network unit (R ch —)
A8*	GRN/BLK	Crossover network unit (L ch +)	A18*	LT GRN	Crossover network unit (L ch —)
A9	RED/BLK	Lights-on signal	A19	RED	Dash lights brightness controller
A10	WHT/GRN	Constant power	A20	BLK	Ground (G504)

*: 2-door M/T

(cont'd)

Protected by AR

System Description (cont'd)

Audio Unit Connector Inputs and Outputs

When replacing an audio unit connector, match the wires to the cavities listed in the following table.

With Navigation

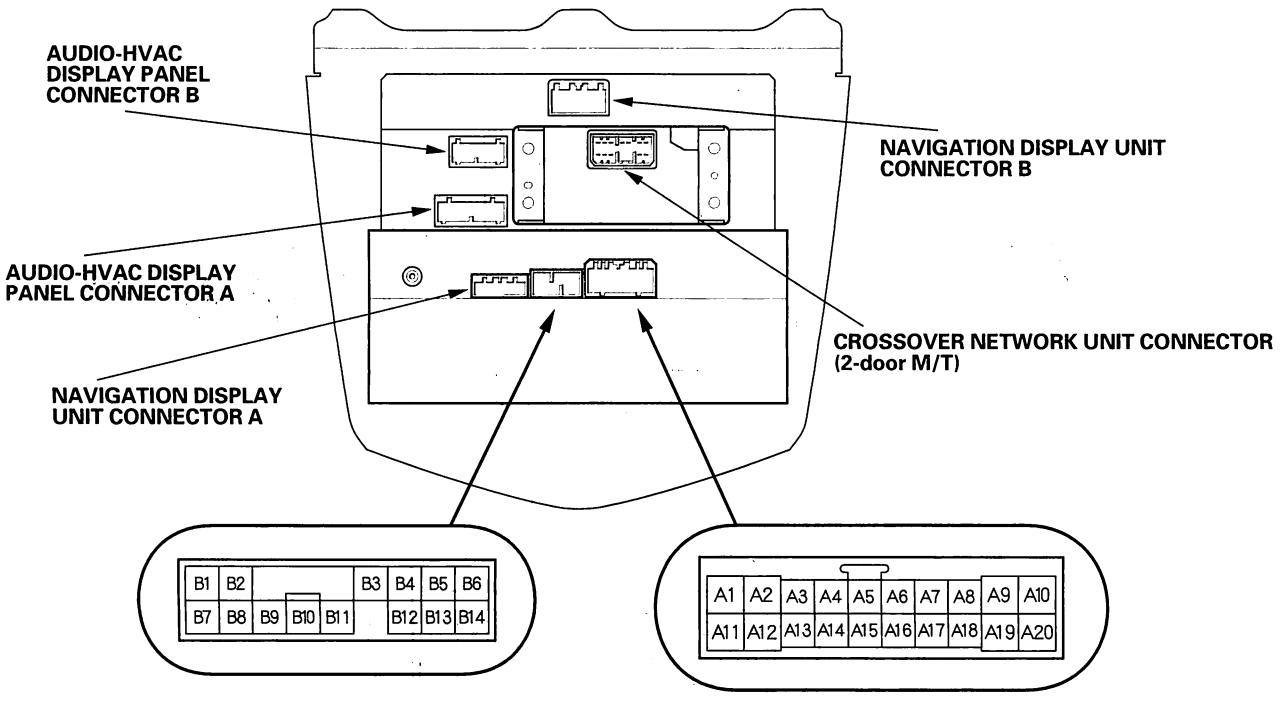

Cavity	Wire	Connect to	Cavity	Wire	Connect to
A1	YEL/GRN	Radio switch (Amp.)	A11	BRN	Radio remote switch ground
A2	YEL/RED	ACC (main stereo power supply)	A12	BLU/RED	Navigation unit (RG GND)
A3	GRN/RED	Radio remote switch	A13	WHT	Navigation unit (RG L+)
A4	RED/BLU	(Security input)	A14	———	Not used
A5	LT GRN	Right rear speaker (+)	A15	YEL	Right rear speaker (—)
A6	BLU	Left rear speaker (+)	A16	PNK	Left rear speaker (—)
A7*	GRN/YEL	Crossover network unit (R ch +)	A17*	GRY	Crossover network unit (R ch —)
A8*	GRN/BLK	Crossover network unit (L ch +)	A18*	LT GRN	Crossover network unit (L ch —)
A9	RED/BLK	Lights-on signal	A19	RED	Dash lights brightness controller
A10	WHT/GRN	Constant power	A20	BLK	Ground (G504)

*: 2-door M/T

BACK

Protected by AR

Cavity	Wire	Connect to	Cavity	Wire	Connect to
B1	WHT	Constant power	B8	RED/BLK	Lights-on signal
B2	LT BLU	ACC (system)	B9	BLU	BUS (+)
B3	BLK	Ground (BUS)	B10	GRN	BUS (−)
B4	———	Not used	B11	BLK	Ground (main)
B5	LT GRN	Audio (R ch +)	B12	———	Not used
B6	GRY	Audio (L ch +)	B13	BRN/YEL	Audio (R ch −)
B7	YEL	Constant power	B14	BRN/WHT	Audio (L ch −)

(cont'd)

Protected by AR

System Description (cont'd)

Audio Unit Connector Inputs and Outputs

Navigation type printed circuit board connector

Terminal	Signal	Terminal	Signal
1	SWD-VDD	14	D-GND
2	CD-LED-G	15	CD-LED-R
3	ANTI-IND	16	EJECT
4	TUNE VOL-UP	17	TUNE VOL-DN
5	KEY-CLK	18	KEY-DATA
6	KEY-IN	19	KEY PS
7	ENC VOL-UP	20	ENC VOL-DN
8	IS-BUS-DATA	21	PW SW
9	LAMP +B	22	IS-BUS-FLAME
10	LAMP-RET	23	LAMP +B
11	IGN-DET	24	LAMP-RET
12	BUS+	25	P-GND
13	P-GND	26	BUS−

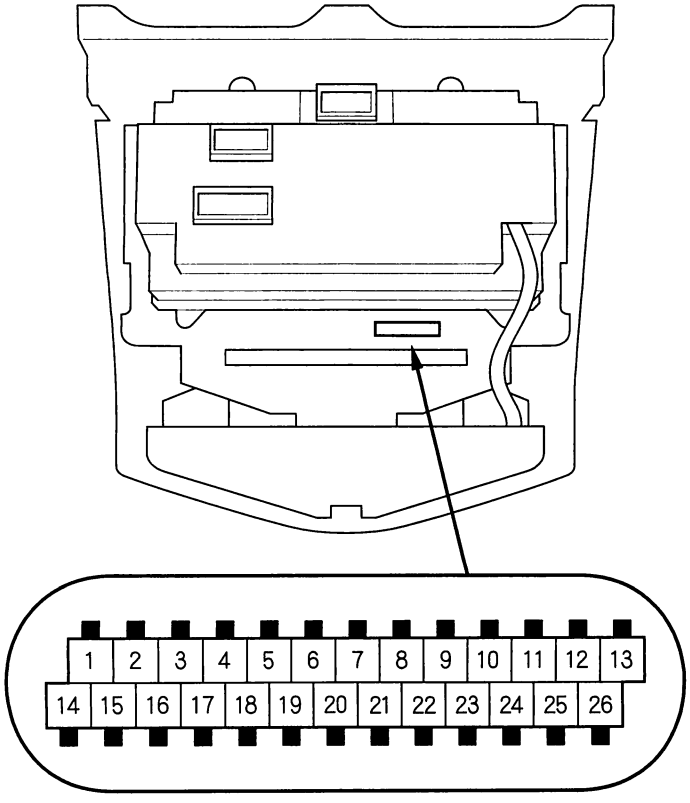

BACK

Protected by AR

6 CD type printed circuit board connector

10P Connector

Terminal	Signal	Terminal	Signal
1	AUDIO-GND	6	VDD 5V
2	Power switch	7	SEC-LED
3	ILLUMI-GND 4	8	RED-LED
4	ILLUMI 8V-4	9	GREEN-LED
5	VOL-B	10	VOL-A

20P Connector

Terminal	Signal	Terminal	Signal
1	ILLUMI-GND-1	11	ILLUMI 8V-1
2	ILLUMI-GND-3	12	LCD-CK
3	ILLUMI 8V-3	13	LCD-CE
4	ILLUMI-GND-2	14	LCD-DO
5	ILLUMI 8V-2	15	ACC 5V
6	SET4	16	LCD-GND
7	SET3	17	LCD 8V
8	SET2	18	AC-DATA
9	SET1	19	EJECT switch
10	Not used	20	LCD-DI

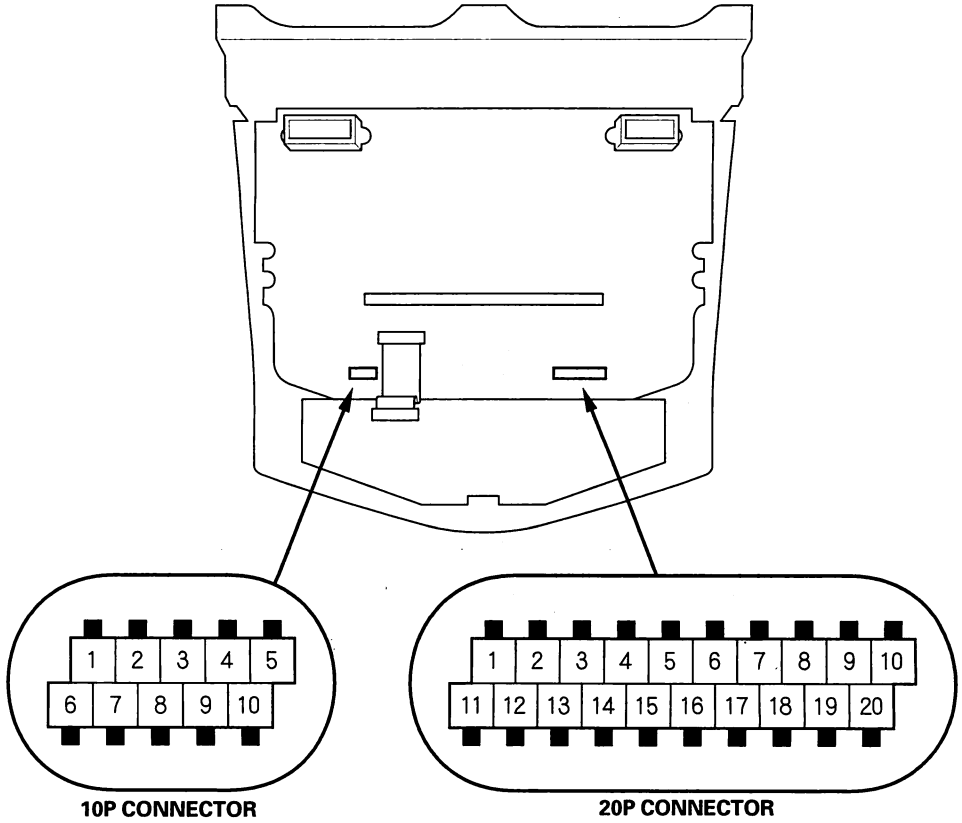

10P CONNECTOR

20P CONNECTOR

(cont'd)

Protected by AR

System Description (cont'd)

Audio Unit Connector Inputs and Outputs

1 CD type printed circuit board connector

Terminal	Signal	Terminal	Signal
1	EJECT	13	PW SW
2	ENC VOL-DN	14	ENC VOL-UP
3	LCD-RST	15	LCD-CE
4	LCD-DO	16	LCD-CLK
5	D-GND	17	LCD-DI
6	IGN DET	18	SED-VDD
7	I/S-BUS-DATA	19	CD-LED
8	P-GND	20	I/S-BUS-FRAME
9	P-GND	21	P-GND
10	LCD LAMP +B	22	LCD LAMP-RET
11	LAMP-RET	23	LAMP-RET
12	LAMP +B	24	LAMP +B

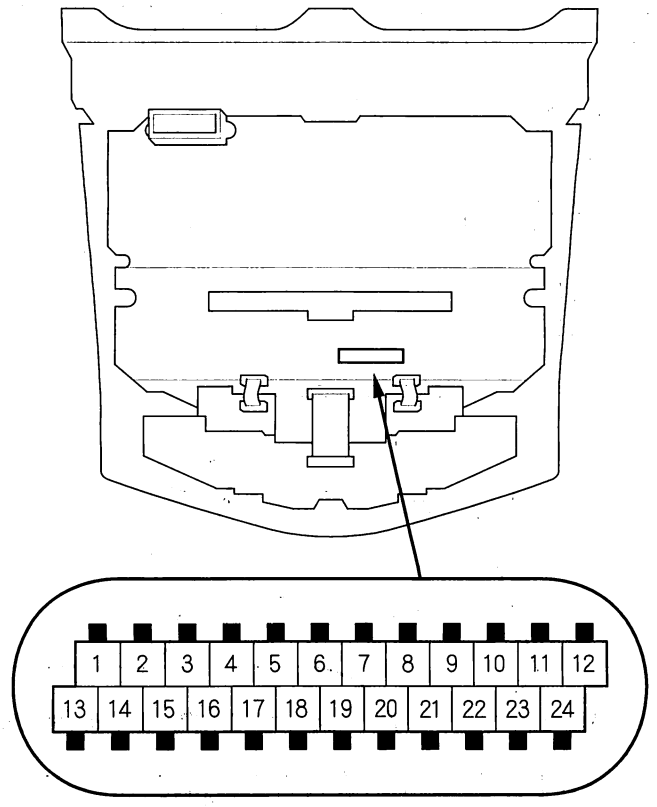

BACK

Protected by AR

Audio-HVAC Subdisplay/Clock Connector Inputs and Outputs

When replacing an audio unit connector, match the wires to the cavities listed in the following table.

With Navigation

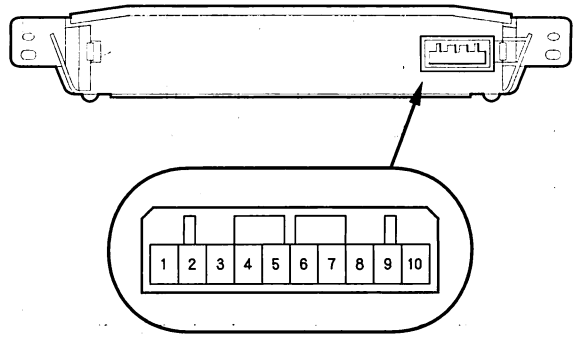

Cavity	Wire	Connect to	Cavity	Wire	Connect to
1	BLK	GND (5 V)	6	BLU/RED	DATA
2	BLU/ORN	5 V	7	BLU	CE (LOAD)
3	BLK	GND	8	GRY	SHIELDING GND
4	YEL/RED	RESET	9	RED	LCD BACKLIGHT (+)
5	YEL	CLOCK	10	GRN	LCD BACKLIGHT (−)

(cont'd)

Protected by AR

System Description (cont'd)

Crossover Network Unit Connector Inputs and Outputs

2-door M/T

When replacing the crossover network unit connector, match the wires to the cavities listed in the following table.

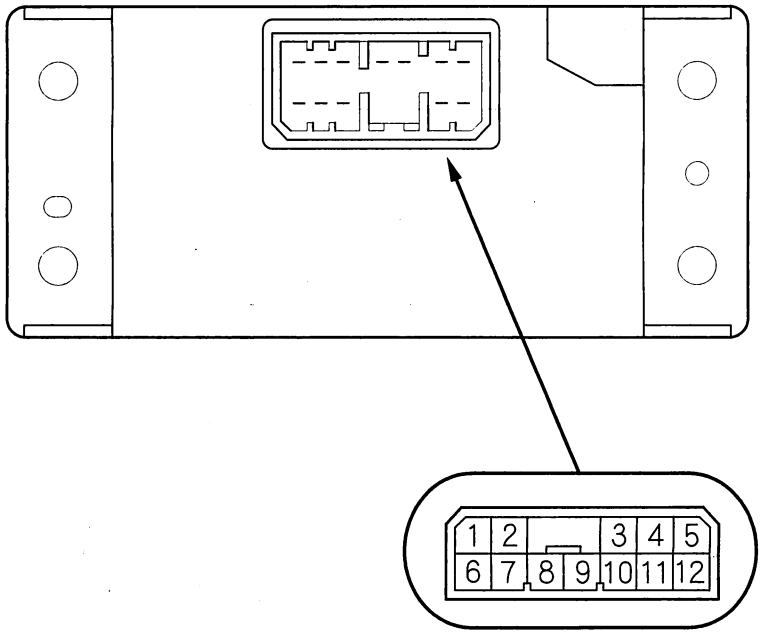

Cavity	Wire	Connect to	Cavity	Wire	Connect to
1	GRN/BLK	Audio unit (L ch +)	7	YEL	Driver's door speaker (−)
2	RED/BLU	Driver's door speaker (+)	8	BLU/ORN	Left tweeter (+)
3	BLK/RED	Right tweeter (+)	9	GRY/BLU	Left tweeter (−)
4	BLU	Front passenger's door speaker (+)	10	PNK/BLK	Right tweeter (−)
5	GRN/YEL	Audio unit (R ch +)	11	RED	Front passenger's door speaker (−)
6	LT GRN	Audio unit (L ch −)	12	GRY	Audio unit (R ch −)

BACK

Protected by AR

Crossover Network Unit Removal/Installation

2-door M/T

SRS components are located in this area.
Review the SRS component locations, refer to the 2003-2006 Accord Service Manual (see page 23-17) and the precautions and procedures, refer to the 2003-2006 Accord Service Manual (see page 23-19) before performing repairs or service.

NOTE:
- Put on gloves to protect your hands.
- Take care not to scratch the dashboard and related parts.
- Lay a workshop towel under the parts when working on them to protect the face panel from scratches or other damage.
- Do not work in a dusty or dirty place.
- Discharge static electricity from your body before and during the work.
- Do not touch the circuit board with your bare hands.
- Do not work with dirty hands.
- Be careful not to fold the flat plate cable.
- Do not touch the terminal connector of the flat plate cable with your bare hands. (If you have touched it, wipe it off thoroughly.)

1. Make sure you have the anti-theft codes for the radio and navigation system, then write down the frequencies for the radio's preset buttons.

2. Remove the upper panel, refer to the 2003-2006 Accord Service Manual (see page 20-131).

3. Remove the screws and bolts, disconnect the audio-HVAC display module connectors (A) and the antenna lead (B), then remove the audio-HVAC display module (C).

Without Navigation:

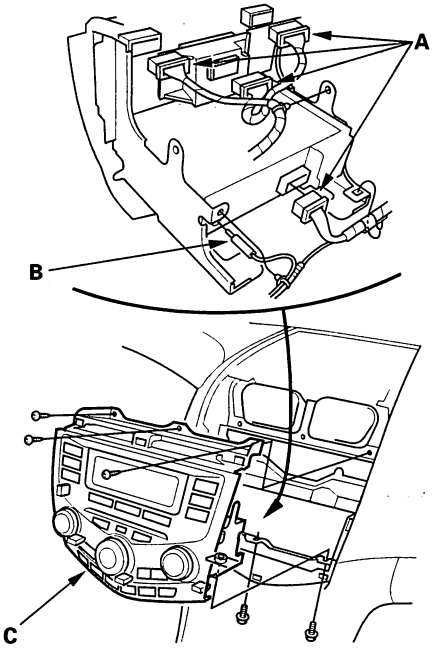

With Navigation:

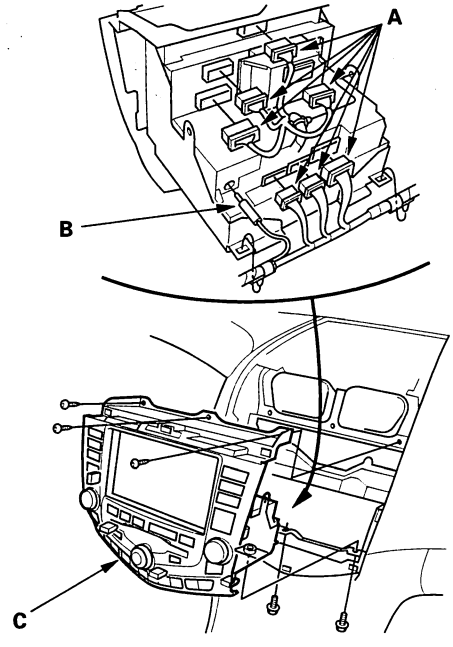

(cont'd)

Protected by AR

Crossover Network Unit Removal/Installation (cont'd)

4. Remove the four mounting bolts (A), then remove the crossover network unit (B) from the audio-HVAC display module (C).

Without Navigation:

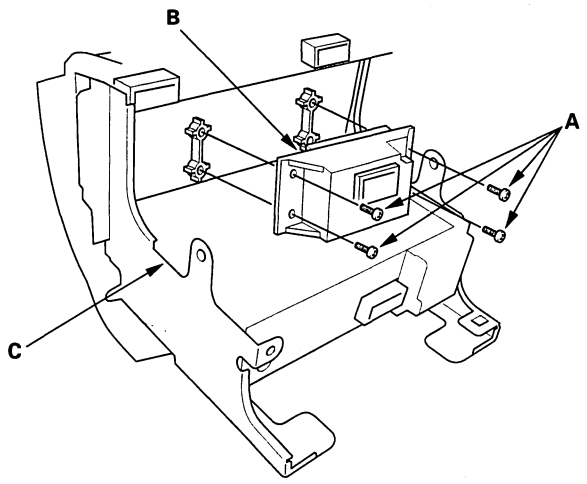

With Navigation:

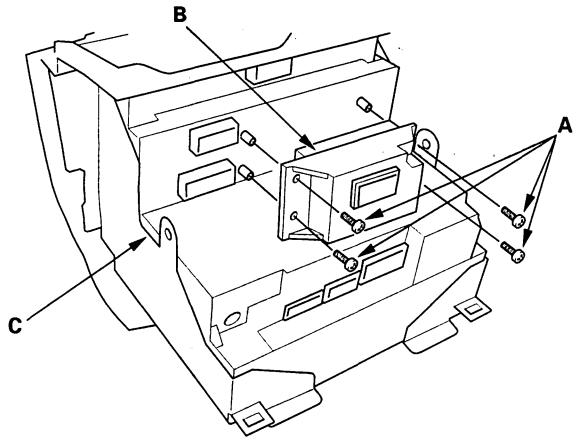

BACK

Protected by AR

Immobilizer System

Component Location Index

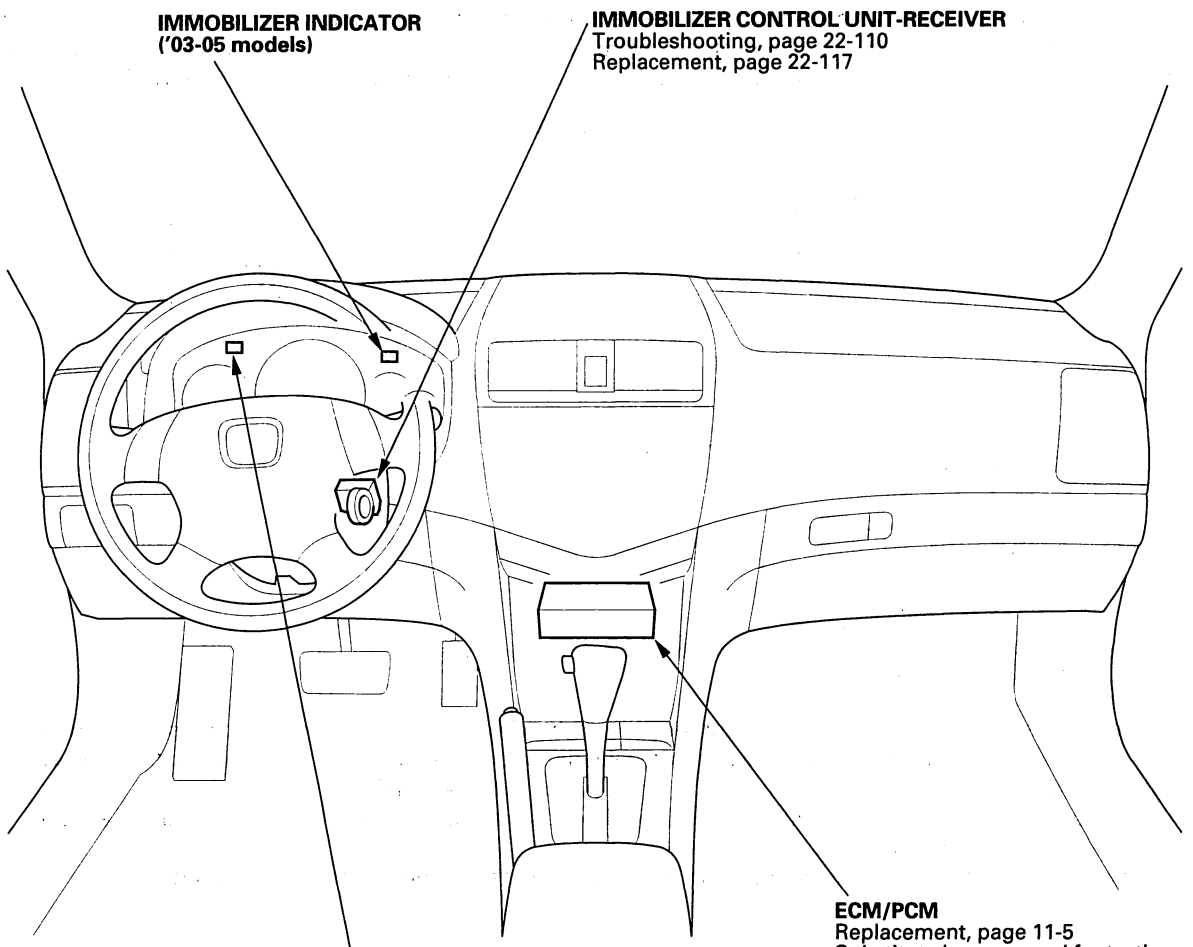

Protected by AR

Immobilizer System

System Description

The vehicle is equipped with an immobilizer system Type (IV) that will disable the vehicle unless the proper ignition key is used. This system consists of a transponder located in the ignition key, an immobilizer control unit-receiver, an indicator light, and the ECM/PCM.

When the key is inserted in the ignition switch and turned to the ON (II) position, the immobilizer control unit-receiver sends power to the transponder in the ignition key. The transponder then sends a coded signal back to the immobilizer control unit-receiver which then sends a coded signal to the ECM/PCM (rolling code embedded in receiver, handshake required at ECM/PCM repair and replacement, all keys required at control unit-receiver repair and replacement).

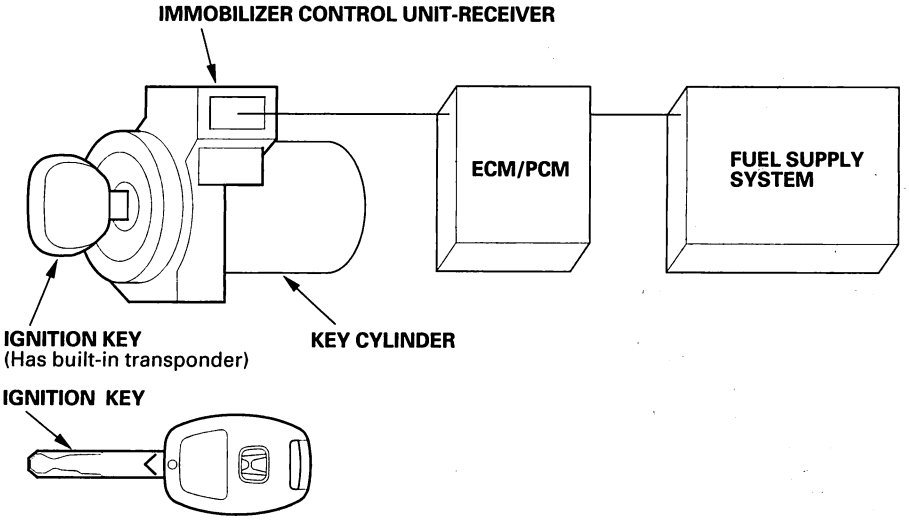

NOTE: This key is slimilar in appearance to other models, but it is a rolling code type. Only key with a V on the shank can be used.

- If the proper key has been used, the immobilizer indicator light will come on for about 2 seconds, then go off.
- If the wrong key has been used or the code was not received or recognized by the unit, the indicator light will come on for about 2 seconds, then it will blink until the ignition switch is turned OFF.
- If the ignition switch is turned OFF, the indicator will blink for about 5 seconds to signal that the unit has reset correctly, then the indicator will go off.
- If the customer has lost their key, and cannot start the engine, contact Honda Customer Relations.

IMMOBILIZER INDICATOR LIGHT BLINKING PATTERN:

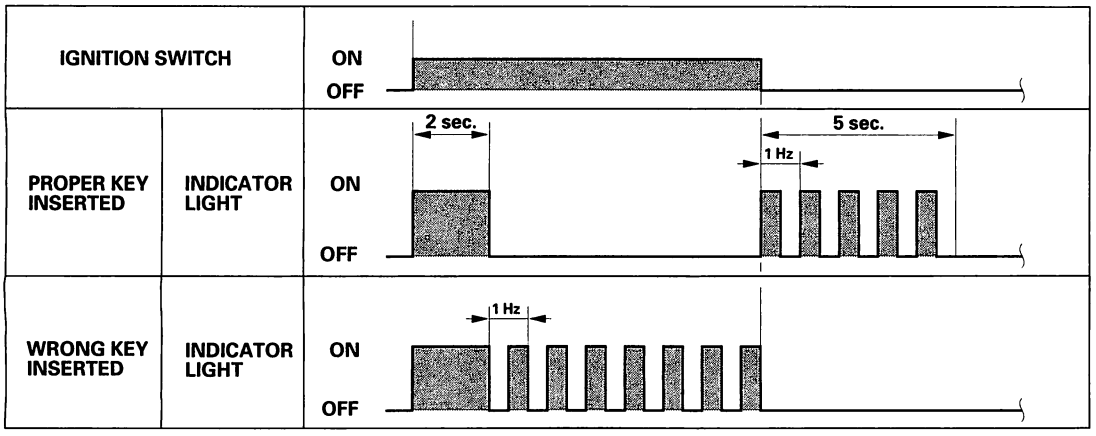

BACK

Protected by AR

Circuit Diagram

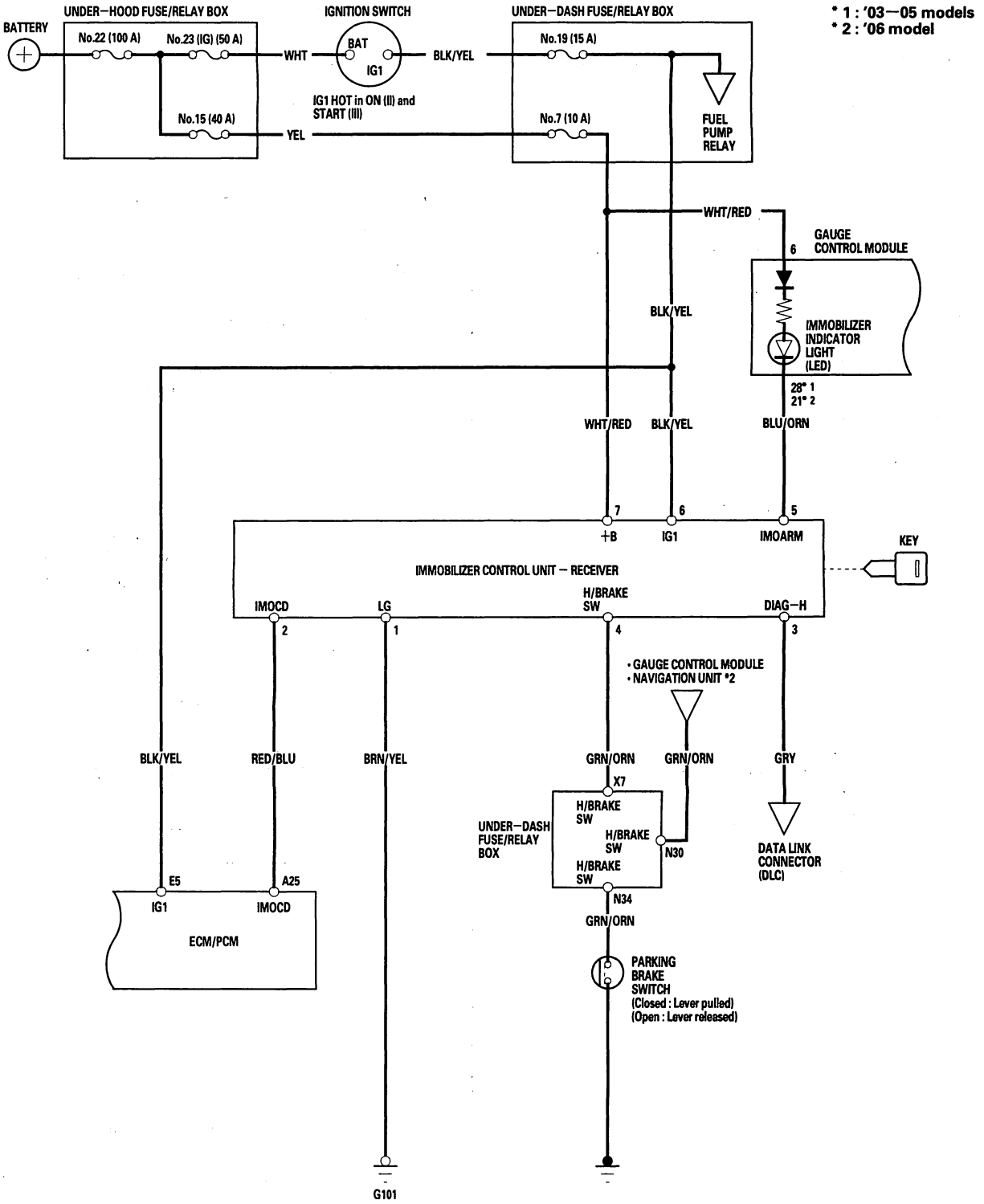

Protected by AR

Troubleshooting

1. Turn the ignition switch ON (II) with a programmed key.
2. Check to see if the immobilizer indicator comes on.

   Does the indicator come on?

   YES—Go to step 3.

   NO—Go to step 12.
3. Check the immobilizer indicator operation.

   Does the indicator come on for 2 seconds, then go off?

   YES—Go to step 4.

   NO—Go to step 6.
4. Try to crank the engine.

   Does the starter motor operate?

   YES—Go to step 5.

   NO—Check the starter motor. ■
5. Try to start the engine.

   Does the engine start?

   YES—If available, check the Status Log in the Immobilizer Info with the HDS (see page 22-116). If the Status Log is not available, the Immobilizer system is OK at this time. ■

   NO—Go to step 24.
6. Check to see if the immobilizer indicator comes on and blinks.

   Does the indicator blink?

   YES—Go to step 24.

   NO—Go to step 7.
7. Disconnect the 7P connector from the immobilizer control unit-receiver.
8. Check to see if the immobilizer indicator goes off.

   Does the indicator go off?

   YES—Substitute a known-good immobilizer control unit-receiver and/or ECM/PCM. ■

   NO—Go to step 9.
9. Turn the ignition switch OFF.
10. Remove the gauge control module, and disconnect its 30P ('03-05 models) or 36P ('06 model) connector, refer to the 2003-2006 Accord Service Manual (see page 22-276).
11. Check for continuity between the immobilizer control unit-receiver 7P connector No.5 (IMOARM) terminal and body ground.

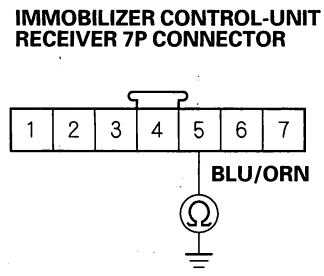

Wire side of female terminals

Is there continuity?

YES—Repair a short in the wire. ■

NO—Faulty immobilizer indicator, replace the gauge control module. ■

BACK

Protected by AR

12. Try to start the engine.

    Does the engine start?

    YES—Go to step 13.

    NO—Go to step 18.

13. Turn the ignition switch OFF.

14. Disconnect the 7P connector from the immobilizer control unit-receiver.

15. Check for voltage between the immobilizer control unit-receiver 7P connector No. 7 (+B) terminal and body ground.

IMMOBILIZER CONTROL-UNIT RECEIVER 7P CONNECTOR

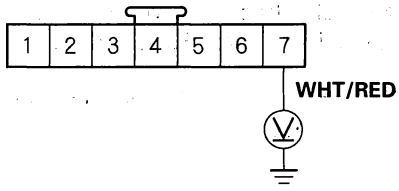

Wire side of female terminals

Is there battery voltage?

YES—Go to step 16.

NO—Faulty No.7 (10 A) fuse in the under-dash fuse /relay box. If the fuse is OK, check for an open in the wire between the immobilizer control unit-receiver and under-dash fuse/relay box.■

16. Remove the gauge control module, and disconnect its 30P ('03-05 models) or 36P ('06 model) connector, refer to the 2003-2006 Accord Service Manual (see page 22-276).

17. Check for continuity between the immobilizer control unit-receiver 7P connector No. 5 (IMOARM) terminal and gauge control module 30P ('03-05 models) or 36P ('06 model) connector No. 28 ('03-05 models) or No. 21 ('06 model) terminal.

'03-05 models

IMMOBILIZER CONTROL-UNIT RECEIVER 7P CONNECTOR

Wire side of female terminals

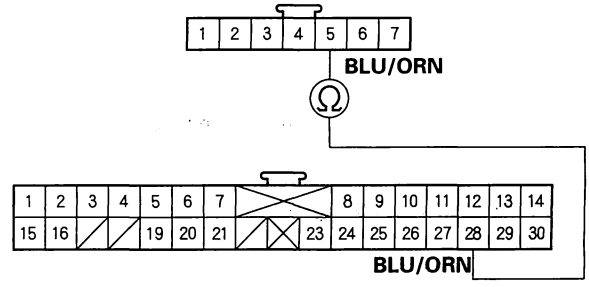

GAUGE CONTROL MODULE 30P CONNECTOR

Wire side of female terminals

'06 model

IMMOBILIZER CONTROL-UNIT RECEIVER 7P CONNECTOR

Wire side of female terminals

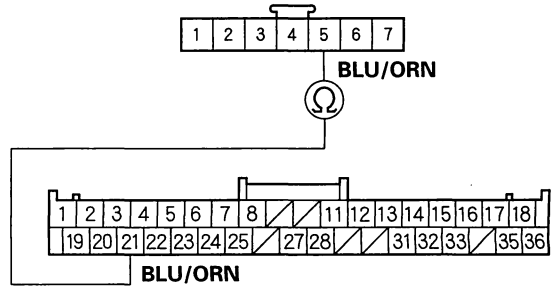

GAUGE CONTROL MODULE 36P CONNECTOR

Wire side of female terminals

Is there continuity?

YES—Faulty immobilizer indicator, replace the gauge control module.■

NO—Repair an open in the wire.■

18. Turn the ignition switch OFF.

19. Disconnect the 7P connector from the immobilizer control unit-receiver.

20. Turn the ignition switch ON (II).

(cont'd)

Protected by AR

Troubleshooting (cont'd)

21. Check for voltage between the immobilizer control unit-receiver 7P connector No. 6 (IG1) terminal and body ground.

IMMOBILIZER CONTROL-UNIT RECEIVER 7P CONNECTOR

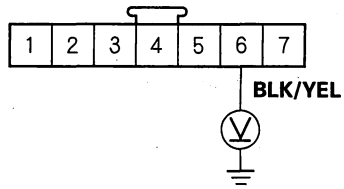

Wire side of female terminals

Is there battery voltage?

YES—Go to step 22.

NO—Faulty No. 19 (15 A) fuse in the under-dash fuse/relay box. If the fuse is OK, check for an open in the wire between the immobilizer control unit-receiver and under-dash fuse/relay box. ■

22. Turn the ignition switch OFF.

23. Check for continuity between the immobilizer control unit-receiver 7P connector No. 1 (LG3) terminal and body ground.

IMMOBILIZER CONTROL-UNIT RECEIVER 7P CONNECTOR

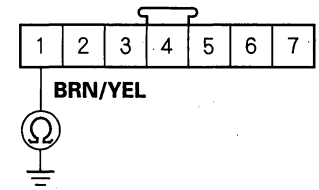

Wire side of female terminals

Is there continuity?

YES—Substitute a known-good immobilizer control unit-receiver and/or ECM/PCM. ■

NO—Repair an open in the wire. If wire is OK, repair G101. ■

BACK

Protected by AR

24. Turn the ignition switch OFF.

25. Connect the HDS to the data link connector.

26. Turn the ignition switch ON (II).

27. Look at the System Check in the Immobilizer Info with the HDS (see page 22-115).

    Is the immobilizer system normal?

    YES—Go back to step 1.

    NO—Go to step 28.

28. Verify the System Check display on the HDS for the following information:

    - Harness short from the ECM/PCM to the immobilizer unit. (IMOCD short)
    - The communication was not good between the ECM/PCM and the immobilizer unit by the battery voltage low.
    - The communication was not good between the immobilizer unit and the ECM/PCM by influence of some noise.
    - Immobilizer unit failure
    - ECM/PCM failure

    Does the HDS display any of the above information?

    YES—Go to step 29.

    NO—Go to step 33.

29. Turn the ignition switch OFF.

30. Disconnect the 7P connector from the immobilizer control unit-receiver.

31. Disconnect the 31P E connector from the ECM/PCM.

32. Check for continuity between the immobilizer control unit-receiver 7P connector No. 2 (IMOCD) terminal and body ground.

IMMOBILIZER CONTROL-UNIT RECEIVER 7P CONNECTOR

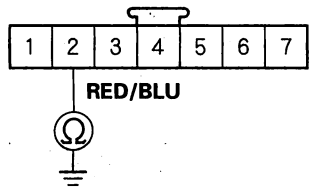

Wire side of female terminals

Is there continuity?

YES—Repair a short in the wire. ■

NO—Substitute a known-good immobilizer control unit-receiver and/or ECM/PCM. ■

33. Verify the System Check display on the HDS for the following information:

    - Blown fuse
    - Harness open from the ECM/PCM and the immobilizer unit.
    - The communication was not good between the ECM/PCM and the immobilizer unit by the battery voltage low.
    - The communication was not good between the immobilizer unit and the ECM/PCM by influence of some noise.
    - Immobilizer unit failure
    - ECM/PCM failure

    Does the HDS display any of the above information?

    YES—Go to step 34.

    NO—Check the Possible Failures shown on the System Check Troubleshooting (see page 22-115). ■

(cont'd)

Protected by AR

Troubleshooting (cont'd)

34. Turn the ignition switch OFF.

35. Disconnect the 7P connector from the immobilizer control unit-receiver.

36. Disconnect the 31P E connector from the ECM/PCM.

37. Check for continuity between the immobilizer control unit-receiver 7P connector No. 2 (IMOCD) terminal and ECM/PCM connector A (31P) No. 25 terminal.

IMMOBILIZER CONTROL-UNIT RECEIVER 7P CONNECTOR
Wire side of female terminals

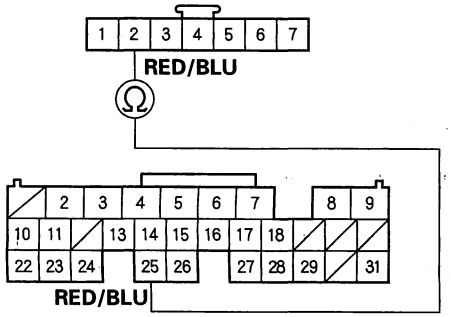

ECM/PCM CONNECTOR A (31P)
Wire side of female terminals

Is there continuity?

YES—Substitute a known-good immobilizer control unit-receiver and/or ECM/PCM. ■

NO—Repair an open in the wire. ■

BACK

Protected by AR

System Check

1. Connect the HDS to the data link connector.
2. Turn the ignition switch ON (II).
3. Monitor the System Check in the Immobilizer Info with the HDS.
4. If the HDS displays the "Immobilizer system is normal", the immobilizer system is OK. If the HDS displays any other messages, check as follows:

Status Log No.	System Check	Possible Failures
A-1	Immobilizer system is not normal	• This key is not registered in the immobilizer unit. Try to register keys by using "KEYS". • The communication was not good between the antenna and the immobilizer key by influence of metal such as key chains. • The communication was not good between the antenna and the immobilizer key by battery voltage low.
A-2	Immobilizer system is not normal	• Intermittent interruption between transponder and immobilizer unit. • The immobilizer key type is different. It is not for this vehicle but for another one or for other company's one. • Key failure (transponder failure) • The communication was not good between the antenna and the immobilizer key by influence of metal such as key chains. • The communication was not good between the antenna and the immobilizer key by battery voltage low.
A-3	Immobilizer system is not normal	• The ignition switch was turned on with a non-immobilizer key. • The immobilizer key type is defferent. It is not for this vehicle but for another one or for other company's one. • Key failure (transponder failure) • The communication was not good between the antenna and the immobilizer key by influence of metal such as key chains. • The communication was not good between the antenna and the immobilizer key by battery voltage low. • Immobilizer unit failure
B-1	Immobilizer system is not normal	• The ECM/PCM was not registered. Try to register the ECM/PCM by using "REPLACE ECM/PCM". • The communication was not good between the ECM/PCM and the immobilizer unit by battery voltage low. • The communication was not good between the immobilizer unit and the ECM/PCM by influence of some noise.
B-2	Immobilizer system is not normal	• The ECM/PCM was not registered. Try to register the ECM/PCM by using "REPLACE ECM/PCM". • The communication was not good between the ECM/PCM and the immobilizer unit by battery voltage low. • The communication was not good between the immobilizer unit and the ECM/PCM by influence of some noise.
D-1	Immobilizer system is not normal	• Harness short from the ECM/PCM to the immobilizer unit. (IMOCD short) • The communication was not good between the ECM/PCM and the immobilizer unit by battery voltage low. • The communication was not good between the immobilizer unit and the ECM/PCM by influence of some noise. • Immobilizer unit failure • ECM/PCM failure
D-3	Immobilizer system is not normal	• Blown fuse • Harness open from the ECM/PCM to the immobilizer unit. • The communication was not good between the ECM/PCM and the immobilizer unit by battery voltage low. • The communication was not good between the immobilizer unit and the ECM/PCM by influence of some noise. • Immobilizer unit failure • ECM/PCM failure

Protected by AR

Status Log

If you suspect there is a immobilizer system problem, check the status log.

NOTE: Status log may not be available for all models. If you have an updated immobilizer control unit-receiver ('03-05 models) or a '06 model, status log should be available.

1. Connect the HDS to the data link connector.
2. Turn the ignition switch ON (II).
3. On the HDS screen, select Honda systems, select immobilizer set-up, select immobilizer information, then select status log.
4. Check the Status log count. Troubleshoot the status with the highest count first. If no counts are listed, the immobilizer system is OK. Continue with normal symptom troubleshooting.

Status Log No.	Detected Item	Probable Cause
A-1	KEY CODE MISMATCH (Code format normal, but code data is mismatch)	1. The key was not registered 2. Interference from metal such as key chains 3. Low battery voltage
A-2	KEY CODE MISMATCH (Code format failure)	1. Ignition switch was turned on with another type of immobilizer key or aftermarket key 2. Interference from metal such as key chains 3. Low battery voltage
A-3	KEY CODE MISMATCH (No key code or non-immobilizer key)	1. Ignition switch was turned on with another type of immobilizer key or aftermarket key 2. Interference from metal such as key chains 3. Low battery voltage 4. Key failure 5. Immobilizer control unit-receiver failure
B-1	ECM/PCM CODE MISMATCH (Code format normal, but code data is mismatch)	1. ECM/PCM was not registered correctly 2. Low battery voltage 3. Poor or loose terminal connections at the immobilizer control unit-receiver 4. Communication line electrical noise
B-2	ECM/PCM MISMATCH (Code format failure)	1. ECM/PCM was not registered correctly 2. Low battery voltage 3. Poor or loose terminal connections at the immobilizer control unit-receiver 4. Communication line electrical noise
D-1	IMOCD LINE PROBLEM (Short to ground)	1. Low battery voltage 2. Poor or loose terminal connections at the immobilizer control unit-receiver and the ECM/PCM 3. Communication line electrical noise
D-3	IMOCD LINE PROBLEM (Open line or ECM/PCM failure)	1. Open or short in the harness from the ECM/PCM to the immobilizer control unit-receiver 2 Low battery voltage 3 Poor or loose terminal connections at the immobilizer control unit-receiver and the ECM/PCM 4 Communication line electrical noise

BACK

Protected by AR

Immobilizer Control Unit-Receiver Replacement

1. Remove the dashboard lower cover, refer to the 2003-2006 Accord Service Manual (see page 20-130).
2. Remove the steering column covers, refer to the 2003-2006 Accord Service Manual (see page 17-25).
3. Disconnect the 7P connector (A) from the immobilizer control unit-receiver (B).

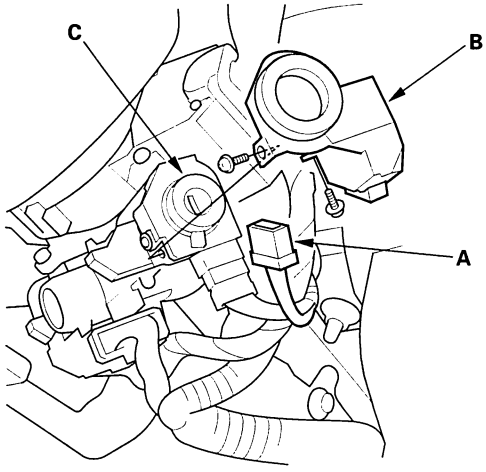

4. Remove the two screws and the immobilizer control unit-receiver from the ignition key cylinder (C).
5. Install the immobilizer control unit-receiver in the reverse order of removal.
6. After replacement, check the immobilizer system.

Protected by AR

BACK

Protected by AR

Service Manual Index

NOTE: Refer to the following list to look up DTCs, symptoms, fuses, connectors, wire harnesses, specifications, maintenance schedules, and general service information:

DTC Troubleshooting Indexes
ABS-TCS Components 19-16
Automatic Transaxle 14-3
Fuel and Emissions 11-9
VSA System (includes ABS, TCS) 19-66

Symptom Troubleshooting Indexes
A/C 21-11
ABS-TCS Components 19-17
Automatic Climate Control 21-56
Automatic Transaxle 14-5
Charging System 4-25
Cruise Control System 4-47
Fan Controls 10-12
Fuel and Emissions 11-14
Lubrication System 8-4
Starting System 4-4
Steering 17-4
VSA System (includes ABS, TCS) 19-70

Fuse/Relay Indexes
Power Distribution 22-47
Under-dash Fuse/Relay Box 22-46
Under-hood Fuse/Relay Box 22-44
Under-hood Multi-relay Box 22-45

Connector and Wire Harness Indexes
Component Connectors (to harness) ... 22-6
Grounds (to components) 22-50
In-line Connectors (to harness) 22-5

Specifications section ..... Section 2

Maintenance section ..... Section 3

General Information section ..... Section 1

A

A/C
Component Location Index 21-3
Description 21-14
Circuit Diagram 21-20
System Test 21-48

A/C Compressor
Replacement 21-41

A/C Compressor Clutch
Check 21-43
Overhaul 21-44

A/C Compressor Clutch Circuit
Troubleshooting 21-28

A/C Compressor Relief Valve
Replacement 21-45

A/C Condenser
Replacement 21-46

A/C Condenser Fan High Speed Circuit
Troubleshooting 21-25

A/C Pressure Switch Circuit
Troubleshooting 21-30, 62

A/C Signal Circuit
Troubleshooting 11-294

A/F (Air Fuel Ratio) Sensor
Replacement 11-217

A/T Assembly
Removal 14-187
Installation 14-198

A/T Clutch End Plate
Clutch Clearance Inspection 14-274

A/T Clutch Pressure Control Solenoid Valves
Test 14-172, 176
Replacement 14-175, 178

A/T Clutch Waved-plate
Inspection 14-273

A/T Countershaft Assembly
Description 14-18, 20
Disassembly/Inspection/ Reassembly 14-253

A/T Differential
Component Location Index 14-295
Backlash Inspection 14-296

A/T Electronic Control System
Description 14-30

A/T Gear Position Indicator
Troubleshooting 14-214

A/T Gear Position Indicator System
Component Location Index 14-212
Circuit Diagram 14-213

A/T Hydraulic Controls
Description 14-42, 46
Pressure Test 14-162

A/T Mainshaft Assembly
Disassembly/Inspection/ Reassembly 14-250

A/T Secondary Shaft Assembly
Disassembly/Inspection/ Reassembly 14-257
Inspection 14-258

A/T Shift Cable
Replacement 14-209

ABS Indicator Circuit
Troubleshooting
ABS-TCS Components 19-46, 47
VSA System (includes ABS, TCS) 19-125

ABS-TCS Components
Component Location Index 19-12
Description 19-18
Circuit Diagram 19-28

ABS-TCS Modulator-control Unit
General Troubleshooting Info 19-13
Removal/Installation 19-56

Accelerator Pedal
Replacement 11-349

Accumulator Body
Disassembly/Inspection/ Reassembly 14-245

Air Cleaner
Removal/Installation 11-344

Air Cleaner Element
Inspection/Replacement 11-344

Air Mix Control Motor
Replacement 21-32, 64

Alternator
Removal/Installation 4-38
Overhaul 4-41

Alternator and Regulator Circuit
Troubleshooting 4-31

Alternator Control Circuit
Troubleshooting 4-33

Alternator FR Signal Circuit
Troubleshooting 11-295, 297

APP (Accelerator Pedal Position) Sensor
Inspection 11-277
Replacement 11-278

ATF
Level Check 14-185
Replacement 14-186

ATF Feed Pipes, End Cover
Replacement 14-232

ATF Pump
Inspection 14-241

ATF Temperature Sensor
Replacement 14-183

ATF Warmer
Replacement 14-208

Audio Unit Connector
Description 22-95

Audio/Entertainment
Component Location Index 22-92
Circuit Diagram 22-93

Automatic Climate Control
Component Location Index 21-51
Circuit Diagram 21-60

Automatic Transaxle
Description 14-16
Circuit Diagram 14-68
Road Test 14-159

B

Back-up Light Switch
Test 13-11

(cont'd)

BACK

Protected by AR

Service Manual Index

(cont'd)

Blower Unit
Removal/Installation 21-36

Brake Booster
Replacement 19-8

Brake Calipers
Overhaul 19-6

Brake Discs
Inspection 19-5

Brake Lights
Circuit Diagram 22-64, 65

Brake Master Cylinder
Replacement 19-7

Brake Pads
Inspection/Replacement 19-2

Brake Pedal Position Switch Signal Circuit
Troubleshooting 11-300

Brake System Indicator Circuit
Troubleshooting 19-48, 49

Bumper, Rear
Removal/Installation 20-15, 16

C

Camshaft
Replacement 6-33
Inspection 6-39
Installation 6-49

Camshaft Seal
Installation 6-56

Catalytic Converter
Removal/Installation 11-354

Catalytic Converter System
How-to Information 11-54

Charging System
Component Location Index 4-24
Circuit Diagram 4-26
Troubleshooting 4-28, 29

CKP (Crankshaft Position) Sensor
Replacement 11-220

Clutch
Component Location Index 12-3
System Description 12-4
Replacement 12-11

Clutch Interlock Switch
Test 4-8

Clutch Master Cylinder
Replacement 12-8

Clutch Pedal
Adjustment 12-6
Replacement 12-7

Clutch Pedal Position Switch
Test 4-51

Clutch Slave Cylinder
Replacement 12-10

CMP (Camshaft Position) Sensor
Replacement 11-221

Connecting Rod Bearings
Replacement 7-9

Connecting Rods
Inspection 7-6

Connectors
(See first page of this Index)

Control Shaft Bearing
Replacement 14-231

Control Shaft Oil Seal, End Cover
Replacement 14-231

Control Shaft Oil Seal, Torque Converter Housing
Replacement 14-249

Coolant
Check 10-6
Replacement 10-6

Cooling System
Component Location Index 10-2

Countershaft Bearing, A/T Housing
Removal/Installation 14-235

Countershaft Bearing, Torque Converter Housing
Replacement 14-248

Countershaft Bearings
Replacement 13-61

Countershaft Reverse Selector Hub
Removal 14-254
Installation 14-255

Crankshaft
Removal 7-11
Inspection 7-14
Installation 7-23

Crankshaft Main Bearings
Replacement 7-7

Crankshaft Oil Seal, Pulley End
Installation 7-30

Crankshaft Oil Seal, Transmission End
Installation 7-30

Crankshaft Pulley
Removal/Installation 6-11

Crossover Network Unit
Removal/Installation 22-105

Cruise Control Combination Switch
Test/Replacement 4-51

Cruise Control System
Component Location Index 4-45
Circuit Diagram 4-46
Input Test 4-49

Cylinder Head Assembly
Component Location Index 6-3
Inspection 6-6
Removal 6-30
Installation 6-50

Cylinder Head Cover
Removal 6-27
Installation 6-28

Cylinder Head Sealing Bolt
Installation 6-56

Cylinder Head, Bare
Inspection for Warpage 6-35

D

Differential Carrier Bearing Outer Races, A/T
Replacement 14-299

Differential Carrier Bearing Outer Races, M/T
Replacement 13-76

Differential Carrier Bearings, A/T
Replacement 14-297
Preload Inspection 14-301, 304

Differential Carrier Bearings, M/T
Replacement 13-74
Adjustment 13-77

Differential Oil Seals, A/T
Replacement 14-298

Differential Oil Seals, M/T
Replacement 13-75

DLC Circuit
Troubleshooting 11-213

Drive Belt
Inspection 4-35
Replacement 4-35

Drive Belt Auto-tensioner
Inspection 4-36
Replacement 4-37, 38

Drive Plate
Removal/Installation 14-197

DTCs
(See first page of this Index)

Dynamic Damper, Driveshafts
Replacement 16-9

BACK

Protected by AR

E

ECM
Replacement 11-224

ECT Sensor
Replacement 11-219, 223

EGR System
Component Location Index 11-356

EGR Valve
Replacement 11-368

Electronic Throttle Control System
Component Location Index 11-225

Emblems
Replacement 20-20, 21, 22

End Cover, A/T
Removal 14-228
Installation 14-287

Engine Assembly
Removal 5-2
Installation 5-11

Engine Block Assembly
Component Location Index 7-3
Inspection 7-15

Engine Block Drain Bolt
Installation 7-31

Engine Block, Bare
Cylinder Bore Honing 7-17

Engine Mount Control System
Component Location Index 4-52
Circuit Diagram 4-53
Troubleshooting 4-54

Engine Mounts
Replacement 5-22

EVAP Canister
Replacement 11-402

EVAP Canister Purge Valve
Replacement 11-403

EVAP Canister Vent Shut Valve
Replacement 11-404

EVAP Control System
Component Location Index 11-371

Evaporator Core
Replacement 21-37, 38

Evaporator Temperature Sensor
Replacement 21-35

Exhaust Pipe
Replacement 9-6

F

Fan Controls
Component Location Index 10-11
Circuit Diagram 10-13

Final Driven Gear, A/T
Replacement 14-296

Frame
Repair Chart 20-26

Front Driveshaft Assembly
Component Location Index 16-3
Removal 16-4
Disassembly 16-6
Resassembly 16-11
Installation 16-20

Front Seats
Component Location Index 22-88
Circuit Diagram 22-89

Fuel and Emissions
System Description 11-16

Fuel Filter
Replacement 11-326

Fuel Gauge Sending Unit
Test 11-331, 332

Fuel Injection System (PGM-FI)
Component Location Index 11-57

Fuel Lines and Hoses
Inspection 11-319
Removal 11-322
Installation 11-323

Fuel Pressure Regulator
Replacement 11-326

Fuel Pump
Replacement 11-327

Fuel Pump Circuit
Troubleshooting 11-311

Fuel Supply System
Component Location Index 11-303
Fuel Pressure Relieving 11-315
Test 11-317

Fuel Tank
Draining 11-318
Replacement 11-328

Fuel Tank Pressure Sensor
Replacement 11-403

Fuses
(See first page of this Index)

G

Gauges
Component Location Index 22-66
Self-diagnostic Function 22-69
Circuit Diagram 22-72, 80

General Information
(See section 1)

H

Heater Unit
Replacement 21-39

Hood Support Struts
Replacement 20-17

HO2S, Secondary
Replacement 11-218

I

IAT (Intake Air Temperature) Sensor
Replacement 11-219

Idle Control System
Component Location Index 11-290
Inspection 11-301

Ignition Coil Relay Circuit
Troubleshooting 4-21

Ignition Coil(s)
Removal/Installation 4-20

Ignition System
Component Location Index 4-17
Circuit Diagram 4-18
Inspection 4-19

Immobilizer Control Unit-Receiver
Replacement 22-117

Immobilizer System
Component Location Index 22-107
System Description 22-108
Circuit Diagram 22-109
Troubleshooting 22-110, 115, 116

IMT (Intake Manifold Tuning) Actuator
Replacement 11-346

Injectors
Replacement 11-215

Intake Air System
Component Location Index 11-334

Intake Manifold
Removal/Installation 9-2

(cont'd)

BACK

Protected by AR

Service Manual Index

(cont'd)

Interlock System
Component Location Index 14-220
Circuit Diagram 14-221

Intermediate Shaft Assembly
Removal 16-22
Disassembly 16-23
Resassembly 16-24
Installation 16-26

Intput Shaft (Mainshaft) Speed Sensor
Replacement
A/T Electronic Control System 14-179
Fuel Injection System (PGM-FI) 11-222

K

Knock Sensor
Replacement 11-220

L

Low Fuel Indicator
Test 11-333

Lubrication System
Component Location Index 8-3
Oil Prssure Test 8-6

M

M/T Assembly
Removal 13-11
Installation 13-19
Disassembly 13-28
Resassembly 13-65

M/T Countershaft Assembly
Inspection 13-49, 51
Disassembly 13-50
Resassembly 13-52

M/T Differential
Component Location Index 13-73
Backlash Inspection 13-74

M/T Mainshaft Assembly
Inspection 13-40, 44
Disassembly 13-43
Resassembly 13-45
Adjustment 13-62

M/T Reverse Idler Gear Shaft Assembly
Disassembly/Reassembly 13-58

M/T Reverse Lockout System
Component Location Index 13-4
Description 13-5
Circuit Diagram 13-6
Troubleshooting 13-6

M/T Reverse Shift Lever
Clearance Inspection 13-34

M/T Shift Lever
Replacement 13-72

Main Valve Body
Removal 14-236
Repair 14-238
Installation 14-239, 282
Disassembly/Inspection/
Reassembly 14-240

Mainshaft Bearing, Torque Converter Housing
Replacement 14-247

Mainshaft Oil Seal
Replacement 13-61

Mainshaft Sealing Rings
Replacement 14-252

Maintenance
(See section 3)

Maintenance Required Indicator
Repair 22-71

MAP Sensor
Replacement 11-223

MIL Circuit
Troubleshooting 11-204

Mode Control Motor
Replacement 21-33

MTF
Inspection/Replacement 13-10

Multiplex Control System
Component Location Index 22-53
System Description 22-55
Circuit Diagram 22-62

O

Oil Filter
Replacement 8-7

Oil Filter Feed Pipe
Replacement 8-8

Oil Pan
Removal 7-11
Installation 7-29

Oil Pressure Switch
Replacement 8-5
Test 8-5

Oil Pump, Engine
Overhaul 8-9

Oil Pump, M/T
Clearance Inspection 13-36

Oil, Engine
Replacement 8-6

Output Shaft (Countershaft) Speed Sensor
Replacement
A/T Electronic Control System 14-180
Fuel Injection System (PGM-FI) 11-222

P

Park Lever Position Stop
Inspection/Adjustment 14-230

PCV Valve
Inspection 11-370
Replacement 11-370

Piston Rings
Replacement 7-21

Pistons
Replacement 7-18

Power Seat Linkage
Disassembly/Reassembly 20-8, 9

Power Seat Motors
Test 22-91

Power Seat Switch
Test/Replacement 22-90

Power Steering Fluid
Replacement 17-10

Power Steering Lines and Hoses
Replacement 17-11

Power Steering Pump
Test 17-7, 8
Replacement 17-12
Overhaul 17-13

Power Window Relay
Test 22-51

PSP (Power Steering Pressure) Switch Signal Circuit
Troubleshooting 11-298

R

Radiator
Test 10-3
Replacement 10-10

Radiator and A/C Condenser Fans High Speed Circuit
Troubleshooting 21-27

Radiator and A/C Condenser Fans Low Speed Circuit
Troubleshooting 21-22

Radiator Cap
Test 10-3

Radiator Fan Assembly
Test 10-4

BACK

Protected by AR

Radiator Fan High Speed Circuit
Troubleshooting 10-14

Recirculation Control Motor
Replacement 21-34

Refrigerant Oil
Replacement 21-8

Regulator Valve Body
Disassembly/Inspection/
Reassembly 14-242

Resonator
Removal/Installation 11-345

Reverse Lockout Solenoid
Disassembly/Reassembly 13-8
Test 13-8

Rocker Arm Assembly
Removal 6-35
Disassembly/Reassembly 6-36

Rocker Arm Oil Control Solenoid
Test 11-288
Replacement 11-289

Rocker Arm Oil Pressure Switch
Removal/Installation 11-289

Rocker Arms
Test
VTEC System 6-7
Inspection
Rocker Arm Assembly 6-37

S

Seat Cover, Front
Replacement 20-10

Seat, Front
Removal/Installation 20-3
Disassembly/Reassembly 20-6, 7

Secondary Shaft Bearing, Torque Converter Housing
Replacement 14-248

Secondary Shaft Idler Gear Bearing
Replacement 14-260

Select Arm
Clearance Inspection 13-35

Servo Body
Disassembly/Inspection/
Reassembly 14-243

Shift Arm
Clearance Inspection 13-36

Shift Control Solenoid Valves
Test 14-164, 166, 168
Replacement 14-165, 167, 169

Shift Forks
Clearance Inspection 13-37
Disassembly/Reassembly 13-39

Shift Lock System Circuit
Troubleshooting 14-222

Side Sill Panels
Replacement 20-19

Spark Plugs
Inspection 4-23

Specifications
(See section 2)

Starter
Test 4-9
Removal/Installation 4-10
Overhaul 4-12

Starter Solenoid
Test 4-8

Starting System
Component Location Index 4-3
Circuit Diagram 4-5
Troubleshooting 4-6

Steering
Component Location Index 17-3
Troubleshooting 17-6
Inspection 17-9

Steering Angle Sensor
Replacement 19-127

Steering Gearbox
Removal 17-20
Overhaul 17-26
Installation 17-37

Steering Rack Guide
Adjustment 17-18

Subframes
Replacement 20-23

Suspension
Adjustment 18-2

Synchro Ring
Inspection 13-59

Synchro Sleeve
Inspection/Reassembly 13-59

T

TCS Activation indicator Circuit
Troubleshooting 19-52

TCS Indicator Circuit
Troubleshooting 19-50

TCS OFF Switch
Test 19-54

TCS Pressure Sensor
Neutral Position Memorization 19-55

Thermostat
Test 10-4
Replacement 10-8

Throttle Actuator Control Module
Replacement 11-278

Throttle Body
Cleaning 11-343
Test 11-343
Removal/Installation 11-348

Throttle Cable
Adjustment 11-346
Removal/Installation 11-347

Timing Belt
Inspection 6-13
Removal 6-14
Installation 6-16
Replacement 6-20

Timing Belt Adjuster
Replacement 6-26

Timing Belt Drive Pulley
Replacement 6-26

Top Accumulator Body
Disassembly/Inspection/
Reassembly 14-244

Torque Converter
Description 14-63
Stall Speed Test 14-161

Torque Converter Clutch Solenoid Valve
Test 14-170
Replacement 14-171

Transmission Housing
Removal 14-233
Installation 14-284

Transmission Range Switch
Test 14-215
Replacement 14-218

Troubleshooting
(See first page of this Index)

Trunk Lid Dynamic Damper
Replacement 20-18

V

Valve Guides
Inspection 6-43
Replacement 6-44

Valve Seats
Reconditioning 6-46

Valves
Clearance Adjustment 6-8
Removal 6-42
Inspection 6-43
Installation 6-48

VSA Activation Indicator Circuit
Troubleshooting 19-126

(cont'd)

BACK

Protected by AR

Service Manual Index

(cont'd)

VSA Modulator-control Unit
Removal/Installation 19-132

VSA Off Switch
Test 19-131

VSA Pressure Sensor
Neutral Position Memorization 19-130

VSA System (includes ABS, TCS)
Component Location Index 19-62
How-to Information 19-63
Description 19-71
Circuit Diagram 19-80

VTEC System
Component Location Index 11-279

W

Water Passage
Replacement 10-9

Water Pump
Inspection 10-5
Replacement 10-5

Wheel Speed Sensors
Inspection
ABS-TCS Components 19-58
VSA System (includes ABS, TCS) 19-134
Replacement
ABS-TCS Components 19-59
VSA System (includes ABS, TCS) 19-135

Wire Harnesses
(See first page of this Index)

Wiring System
Relay and Control Unit Locations 22-2, 3

Y

Yaw Rate/Lateral Acceleration Sensor
Replacement 19-128

1

1st Clutch Hub
Replacement 14-262

1st Gear One-way Clutch
Inspection 14-261

1st/1st-hold/2nd Clutch Assembly
Disassembly 14-263
Inspection 14-266
Resassembly 14-277

3

3rd Accumulator Body Spring
Disassembly/Inspection/ Reassembly 14-246

3rd Clutch Ball Bearing
Replacement 14-256

3rd Clutch Transmission Fluid Pressure Switch
Replacement 14-181

4

4th Clutch Transmission Fluid Pressure Switch
Replacement 14-182

4th/5th Clutch Assembly
Clearance Inspection 14-251

BACK

Protected by AR

BACK