ENGINE CONTROL SYSTEM

SECTION EC

CONTENTS

TROUBLE DIAGNOSIS - INDEX 4
Alphabetical & P No. Index for DTC 4
PRECAUTIONS 6
Supplemental Restraint System (SRS) "AIR BAG" 6
Precautions for On Board Diagnostic (OBD) System of Engine 6
Engine Fuel & Emission Control System 7
Wiring Diagrams and Trouble Diagnosis 9
PREPARATION 10
Special Service Tools 10
Commercial Service Tools 10
ENGINE AND EMISSION CONTROL OVERALL SYSTEM 11
Engine Control Component Parts Location 11
Circuit Diagram 14
System Diagram 15
Vacuum Hose Drawing 16
System Chart 17
ENGINE AND EMISSION BASIC CONTROL SYSTEM DESCRIPTION 18
Multiport Fuel Injection (MFI) System 18
Electronic Ignition (EI) System 20
Air Conditioning Cut Control 21
Fuel Cut Control (at no load & high engine speed) 22
Evaporative Emission System 22
Positive Crankcase Ventilation 25
BASIC SERVICE PROCEDURE 27
Fuel Pressure Release 27
Fuel Pressure Check 27
Fuel Pressure Regulator Check 28
Injector 28
Fast Idle Cam (FIC) 29
How to Check Idle Speed and Ignition Timing 30
ON BOARD DIAGNOSTIC SYSTEM DESCRIPTION 33
Introduction 33
Diagnostic Trouble Code (DTC) 33
Malfunction Indicator Lamp (MIL) 35
CONSULT-II 39
TROUBLE DIAGNOSIS - INTRODUCTION 46
Introduction 46
Work Flow 48
TROUBLE DIAGNOSIS - BASIC INSPECTION 50
Basic Inspection 50
TROUBLE DIAGNOSIS - GENERAL DESCRIPTION 67
Fail-safe Chart 67
Symptom Matrix Chart 68
CONSULT-II Reference Value in Data Monitor Mode 72
Major Sensor Reference Graph in Data Monitor Mode 74
ECM Terminals and Reference Value 76
TROUBLE DIAGNOSIS FOR INTERMITTENT INCIDENT 82
Description 82
Diagnostic Procedure 82
TROUBLE DIAGNOSIS FOR POWER SUPPLY 83
Main Power Supply and Ground Circuit 83
DTC 0101 CAMSHAFT POSITION SENSOR (CMPS) 90
Component Description 90
ECM Terminals and Reference Value 90
On Board Diagnosis Logic 91
DTC Confirmation Procedure 91
Wiring Diagram 93
Diagnostic Procedure 94
Component Inspection 97
DTC 0102 MASS AIR FLOW SENSOR (MAFS) 98
Component Description 98
CONSULT-II Reference Value in Data Monitor Mode 98
ECM Terminals and Reference Value 98
On Board Diagnosis Logic 98
Fail-safe Mode 99
DTC Confirmation Procedure 99

CONTENTS (Cont'd)

Wiring Diagram 101
Diagnostic Procedure 102
Component Inspection 104
DTC 0103 ENGINE COOLANT TEMPERATURE SENSOR (ECTS) (CIRCUIT) 105
Component Description 105
CONSULT-II Reference Value in Data Monitor Mode 105
On Board Diagnosis Logic 105
Fail-safe Mode 106
DTC Confirmation Procedure 106
Wiring Diagram 107
Diagnostic Procedure 108
Component Inspection 109
DTC 0201 IGNITION SIGNAL 110
Component Description 110
CONSULT-II Reference Value in Data Monitor Mode 110
ECM Terminals and Reference Value 110
On Board Diagnosis Logic 111
DTC Confirmation Procedure 111
Wiring Diagram 112
Diagnostic Procedure 114
Component Inspection 119
DTC 0208 OVERHEAT (COOLING SYSTEM) 120
System Description 120
CONSULT-II Reference Value in Data Monitor Mode 120
ECM Terminals and Reference Value 120
On Board Diagnosis Logic 121
Overall Function Check 122
Wiring Diagram 123
Diagnostic Procedure 124
Main 12 Causes of Overheating 135
Component Inspection 135
DTC 0304 KNOCK SENSOR (KS) 137
Component Description 137
ECM Terminals and Reference Value 137
On Board Diagnosis Logic 137
DTC Confirmation Procedure 137
Wiring Diagram 138
Diagnostic Procedure 139
Component Inspection 140
DTC 0403 THROTTLE POSITION SENSOR 141
Component Description 141
CONSULT-II Reference Value in Data Monitor Mode 141
ECM Terminals and Reference Value 142
On Board Diagnosis Logic 142
Fail-safe Mode 142
DTC Confirmation Procedure 142
Wiring Diagram 144
Diagnostic Procedure 145
Component Inspection 146
DTC 0504 A/T CONTROL 148
System Description 148
ECM Terminals and Reference Value 148
On Board Diagnosis Logic 148
DTC Confirmation Procedure 148
Overall Function Check 149
Wiring Diagram 150
Diagnostic Procedure 151
HEATED OXYGEN SENSOR 1 (FRONT) 152
Component Description 152
CONSULT-II Reference Value in Data Monitor Mode 152
ECM Terminals and Reference Value 152
Wiring Diagram 153
Diagnostic Procedure 154
Component Inspection 156
HEATED OXYGEN SENSOR 1 HEATER (FRONT) 158
Description 158
ECM Terminals and Reference Value 158
Wiring Diagram 159
Diagnostic Procedure 160
Component Inspection 161
VEHICLE SPEED SENSOR (VSS) 162
Component Description 162
ECM Terminals and Reference Value 162
Wiring Diagram 163
Diagnostic Procedure 164
IDLE AIR CONTROL VALVE (IACV) - AUXILIARY AIR CONTROL (AAC) VALVE 166
Description 166
CONSULT-II Reference Value in Data Monitor Mode 166
ECM Terminals and Reference Value 167
Wiring Diagram 168
Diagnostic Procedure 169
Component Inspection 172
INTAKE VALVE TIMING CONTROL SOLENOID VALVE 173
Component Description 173
Operation 173
CONSULT-II Reference Value in Data Monitor Mode 174
ECM Terminals and Reference Value 174
Wiring Diagram 175
Diagnostic Procedure 176
Component Inspection 178
WASTEGATE VALVE CONTROL SOLENOID VALVE 179
Description 179

CONTENTS (Cont'd)

CONSULT-II Reference Value in Data Monitor Mode 179
ECM Terminals and Reference Value 180
Wiring Diagram 181
Diagnostic Procedure 182
Component Inspection 185
PARK/NEUTRAL POSITION (PNP) SWITCH 186
Component Description 186
CONSULT-II Reference Value in Data Monitor Mode 186
ECM Terminals and Reference Value 186
Wiring Diagram 187
Diagnostic Procedure 188
INJECTOR 194
Component Description 194
CONSULT-II Reference Value in Data Monitor Mode 194
ECM Terminals and Reference Value 194
Wiring Diagram 195
Diagnostic Procedure 196
Component Inspection 198
START SIGNAL 199
CONSULT-II Reference Value in Data Monitor Mode 199
ECM Terminals and Reference Value 199
Wiring Diagram 200
Diagnostic Procedure 201
FUEL PUMP 203
System Description 203
Component Description 203
CONSULT-II Reference Value in Data Monitor Mode 203
ECM Terminals and Reference Value 204
Wiring Diagram 205
Diagnostic Procedure 206
Component Inspection 208
IACV-FICD SOLENOID VALVE 209
Component Description 209
ECM Terminals and Reference Value 209
Wiring Diagram 210
Diagnostic Procedure 211
Component Inspection 212
POWER STEERING OIL PRESSURE SWITCH 213
Component Description 213
CONSULT-II Reference Value in Data Monitor Mode 213
ECM Terminals and Reference Value 213
Wiring Diagram 214
Diagnostic Procedure 215
Component Inspection 217
ELECTRICAL LOAD SIGNAL 218
CONSULT-II Reference Value in Data Monitor Mode 218
ECM Terminals and Reference Value 218
Wiring Diagram 219
Diagnostic Procedure 220
MI & DATA LINK CONNECTORS 224
Wiring Diagram 224
SERVICE DATA AND SPECIFICATIONS (SDS) 225
Fuel Pressure Regulator 225
Idle Speed and Ignition Timing 225
Mass Air Flow Sensor 225
Engine Coolant Temperature Sensor 225
Fuel Pump 225
IACV-AAC Valve 225
Injector 225
Throttle Position Sensor 225
Heated Oxygen Sensor 1 (Front) Heater 225

Alphabetical & P No. Index for DTC

NMEC0001

ALPHABETICAL INDEX FOR DTC

NMEC0001S01

X: Applicable —: Not applicable

Items (CONSULT-II screen terms)	DTC*1	MIL light up	Reference page
Unable to access ECM	—	X	EC-67
A/T COMM LINE	0504	—	EC-148
CAMSHAFT POSI SEN	0101	—	EC-90
COOLANT TEMP SEN	0103	X	EC-105
IGN SIGNAL-PRIMARY	0201	—	EC-110
KNOCK SENSOR	0304	—	EC-137
MASS AIR FLOW SEN	0102	X	EC-98
NATS MALFUNCTION	1401 - 1406, 1408	—	EL-134
NO DTC IS DETECTED. FURTHER TESTING MAY BE REQUIRED.	**0505**	**—**	**—**
NO DTC IS DETECTED. FURTHER TESTING MAY BE REQUIRED.	Flashing*2	—	EC-35
OVERHEAT	0208	X	EC-120
THROTTLE POSI SEN	0403	X	EC-141

NOTE:

*1: In Diagnostic Test Mode II (Self-diagnostic results).

*2: While engine is running.

NUMERICAL INDEX FOR DTC

=NMEC0001S02

X: Applicable —: Not applicable

DTC*1	Items (CONSULT-II screen terms)	MIL light up	Reference page
—	Unable to access ECM	X	EC-67
Flashing*2	NO DTC IS DETECTED. FURTHER TESTING MAY BE REQUIRED.	—	EC-35
0101	CAMSHAFT POSI SEN	—	EC-90
0102	MASS AIR FLOW SEN	X	EC-98
0103	COOLANT TEMP SEN	X	EC-105
0201	IGN SIGNAL-PRIMARY	—	EC-110
0208	OVERHEAT	X	EC-120
0304	KNOCK SENSOR	—	EC-137
0403	THROTTLE POSI SEN	X	EC-141
0504	A/T COMM LINE	—	EC-148
0505	**NO DTC IS DETECTED. FURTHER TESTING MAY BE REQUIRED.**	**—**	**—**
1401 - 1406, 1408	NATS MALFUNCTION	—	EL-134

NOTE:
*1: In Diagnostic Test Mode II (Self-diagnostic results).
*2: While engine is running.

Supplemental Restraint System (SRS) "AIR BAG"

NMEC0653

The Supplemental Restraint System such as "AIR BAG" used along with a seat belt, helps to reduce the risk or severity of injury to the driver and front passenger for certain types of collision. The SRS system composition which is available to NISSAN MODEL S15 is as follows:
The Supplemental Restraint System consists of driver air bag module (located in the center of the steering wheel), front passenger air bag module (located on the instrument panel on passenger side), a diagnosis sensor unit, warning lamp, wiring harness and spiral cable.
Information necessary to service the system safely is included in the **RS section** of this Service Manual.

WARNING:

- **To avoid rendering the SRS inoperative, which could increase the risk of personal injury or death in the event of a collision which would result in air bag inflation, all maintenance should be performed by an authorized NISSAN dealer.**
- **Improper maintenance, including incorrect removal and installation of the SRS, can lead to personal injury caused by unintentional activation of the system. For removal of Spiral Cable and Air Bag Module, see the RS section.**
- **Do not use electrical test equipment on any circuit related to the SRS unless instructed to in this Service Manual. SRS wiring harnesses can be identified with yellow harness connector.**

Precautions for On Board Diagnostic (OBD) System of Engine

NMEC0003

The ECM has an on board diagnostic system. It will light up the malfunction indicator lamp (MIL) to warn the driver of a malfunction causing emission deterioration.

CAUTION:

- **Be sure to turn the ignition switch OFF and disconnect the negative battery terminal before any repair or inspection work. The open/short circuit of related switches, sensors, solenoid valves, etc. will cause the MIL to light up.**
- **Be sure to connect and lock the connectors securely after work. A loose (unlocked) connector will cause the MIL to light up due to the open circuit. (Be sure the connector is free from water, grease, dirt, bent terminals, etc.)**
- **Be sure to route and secure the harnesses properly after work. The interference of the harness with a bracket, etc. may cause the MIL to light up due to the short circuit.**
- **Be sure to erase the unnecessary malfunction information (repairs completed) from the ECM before returning the vehicle to the customer.**

Engine Fuel & Emission Control System

=NMEC0659

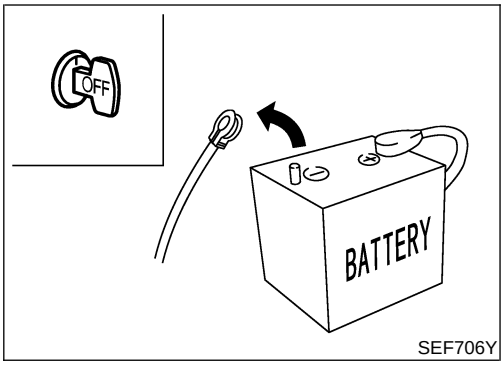

SEF706Y

- **Always use a 12 volt battery as power source.**
- **Do not attempt to disconnect battery cables while engine is running.**
- **Before connecting or disconnecting the ECM harness connector, turn ignition switch OFF and disconnect negative battery terminal. Failure to do so may damage the ECM because battery voltage is applied to ECM even if ignition switch is turned off.**

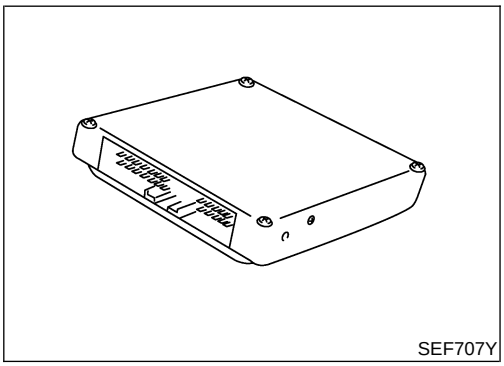
SEF707Y

- **Do not disassemble ECM.**
- **If a battery terminal is disconnected, the memory will return to the ECM value.**
  The ECM will now start to self-control at its initial value. Engine operation can vary slightly when the terminal is disconnected. However, this is not an indication of a problem. Do not replace parts because of a slight variation.

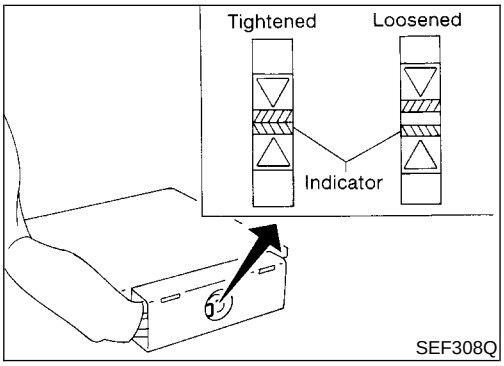

SEF308Q

- **When connecting ECM harness connector, tighten securing bolt until the gap between orange indicators disappears.**
  : 3.0 - 4.9 N·m (0.3 - 0.5 kg-m, 26 - 43 in-lb)

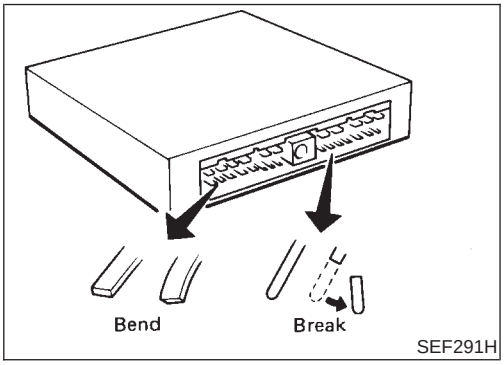

SEF291H

- **When connecting or disconnecting pin connectors into or from ECM, take care not to damage pin terminals (bend or break).**
  Make sure that there are not any bends or breaks on ECM pin terminals when connecting pin connectors.
- **Securely connect ECM harness connectors.**
  A Poor connection can cause an extremely high (surge) voltage to develop in coil and condenser, thus resulting in damage to ICs.
- **Keep ECM harness at least 10 cm (4 in) away from adjacent harness, to prevent an ECM system malfunctions due to receiving external noise, degraded operation of ICs, etc.**
- **Keep ECM parts and harness dry.**

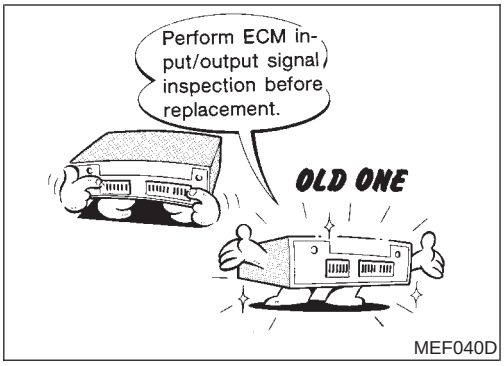

MEF040D

- **Handle mass air flow sensor carefully to avoid damage.**
- **Do not disassemble mass air flow sensor.**
- **Do not clean mass air flow sensor with any type of detergent.**
- **Do not disassemble IAC valve-AAC valve.**
- **Even a slight leak in the air intake system can cause serious problems.**
- **Do not shock or jar the camshaft position sensor and crankshaft position sensor.**
- **Before replacing ECM, perform refer to "ECM Terminals and Reference Value" inspection and make sure ECM functions properly, EC-76.**

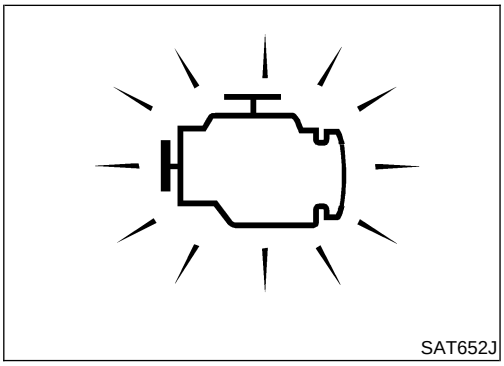
SAT652J

- **After performing each TROUBLE DIAGNOSIS, perform "DTC Confirmation Procedure" or "Overall Function Check".**
  The DTC should not be displayed in the "DTC Confirmation Procedure" if the repair is completed. The "Overall Function Check" should be a good result if the repair is completed.

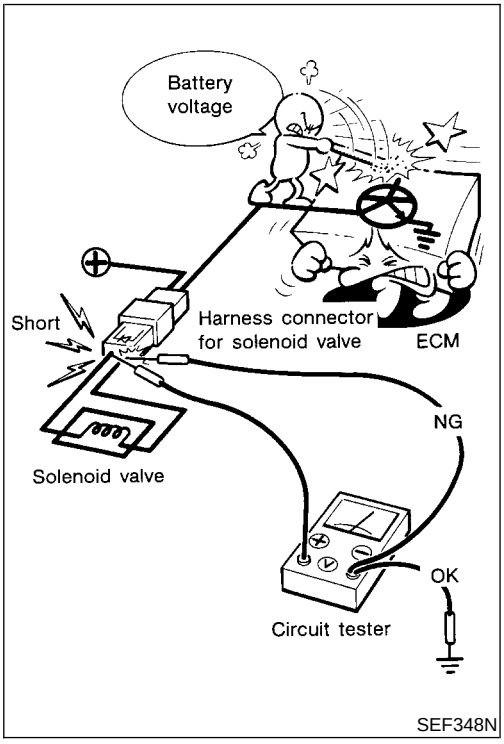

SEF348N

- **When measuring ECM signals with a circuit tester, never allow the two tester probes to contact.**
  Accidental contact of probes will cause a short circuit and damage the ECM power transistor.
- **Do not use ECM ground terminals when measuring input/output voltage. Doing so may result in damage to the ECM's transistor. Use a ground other than ECM terminals, such as the ground.**

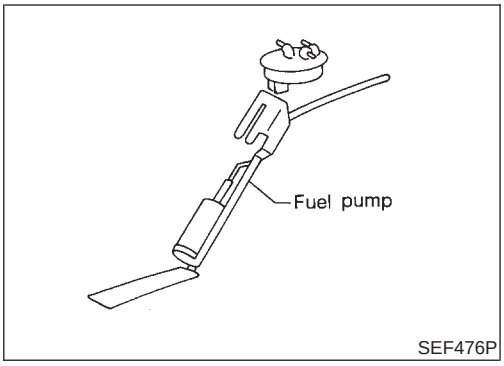

SEF476P

- **Do not operate fuel pump when there is no fuel in lines.**
- **Tighten fuel hose clamps to the specified torque.**

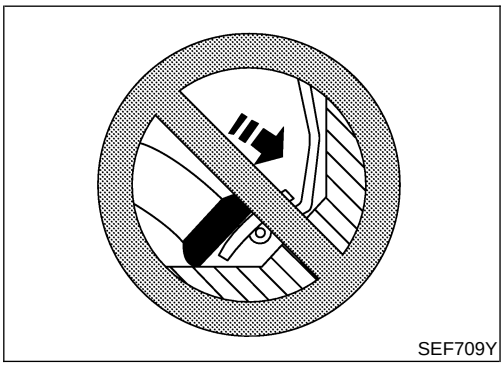
SEF709Y

- **Do not depress accelerator pedal when starting.**
- **Immediately after starting, do not rev up engine unnecessarily.**
- **Do not rev up engine just prior to shutdown.**

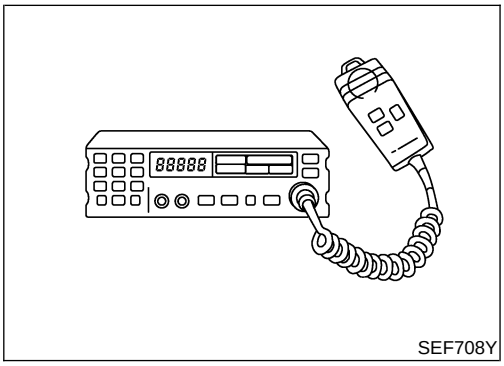

SEF708Y

- **When installing C.B. ham radio or a mobile phone, be sure to observe the following as it may adversely affect electronic control systems depending on installation location.**

1) **Keep the antenna as far as possible from the electronic control units.**
2) **Keep the antenna feeder line more than 20 cm (8 in) away from the harness of electronic controls.**
   Do not let them run parallel for a long distance.
3) **Adjust the antenna and feeder line so that the standing-wave ratio can be kept smaller.**
4) **Be sure to ground the radio to vehicle body.**

Wiring Diagrams and Trouble Diagnosis

NMEC0660

When you read Wiring diagrams, refer to the following:

- GI-11, "HOW TO READ WIRING DIAGRAMS"
- EL-7, "POWER SUPPLY ROUTING" for power distribution circuit

When you perform trouble diagnosis, refer to the following:

- GI-31, "HOW TO FOLLOW TEST GROUPS IN TROUBLE DIAGNOSES"
- GI-20, "HOW TO PERFORM EFFICIENT DIAGNOSIS FOR AN ELECTRICAL INCIDENT"

Special Service Tools

NMEC0007

Tool number Tool name	Description	
KV10117100 Heated oxygen sensor wrench	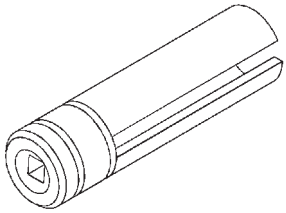 NT379	Loosening or tightening heated oxygen sensor with 22 mm (0.87 in) hexagon nut

Commercial Service Tools

NMEC0008

Tool name	Description	
Fuel filler cap adapter	 NT653	Checking fuel tank vacuum relief valve opening pressure
Oxygen sensor thread cleaner	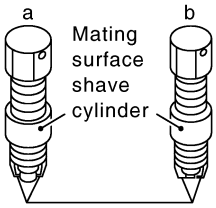 NT778	Reconditioning the exhaust system threads before installing a new oxygen sensor. Use with anti-seize lubricant shown below. **a: 18 mm dia. with pitch 1.5 mm for Zirconia Oxygen Sensor** **b: 12 mm dia. with pitch 1.25 mm for Titania Oxygen Sensor**
Anti-seize lubricant (Permatex™ 133AR or equivalent meeting MIL specification MIL-A-907)	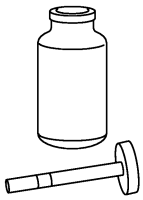 NT779	Lubricating oxygen sensor thread cleaning tool when reconditioning exhaust system threads.

Engine Control Component Parts Location

NMEC0009

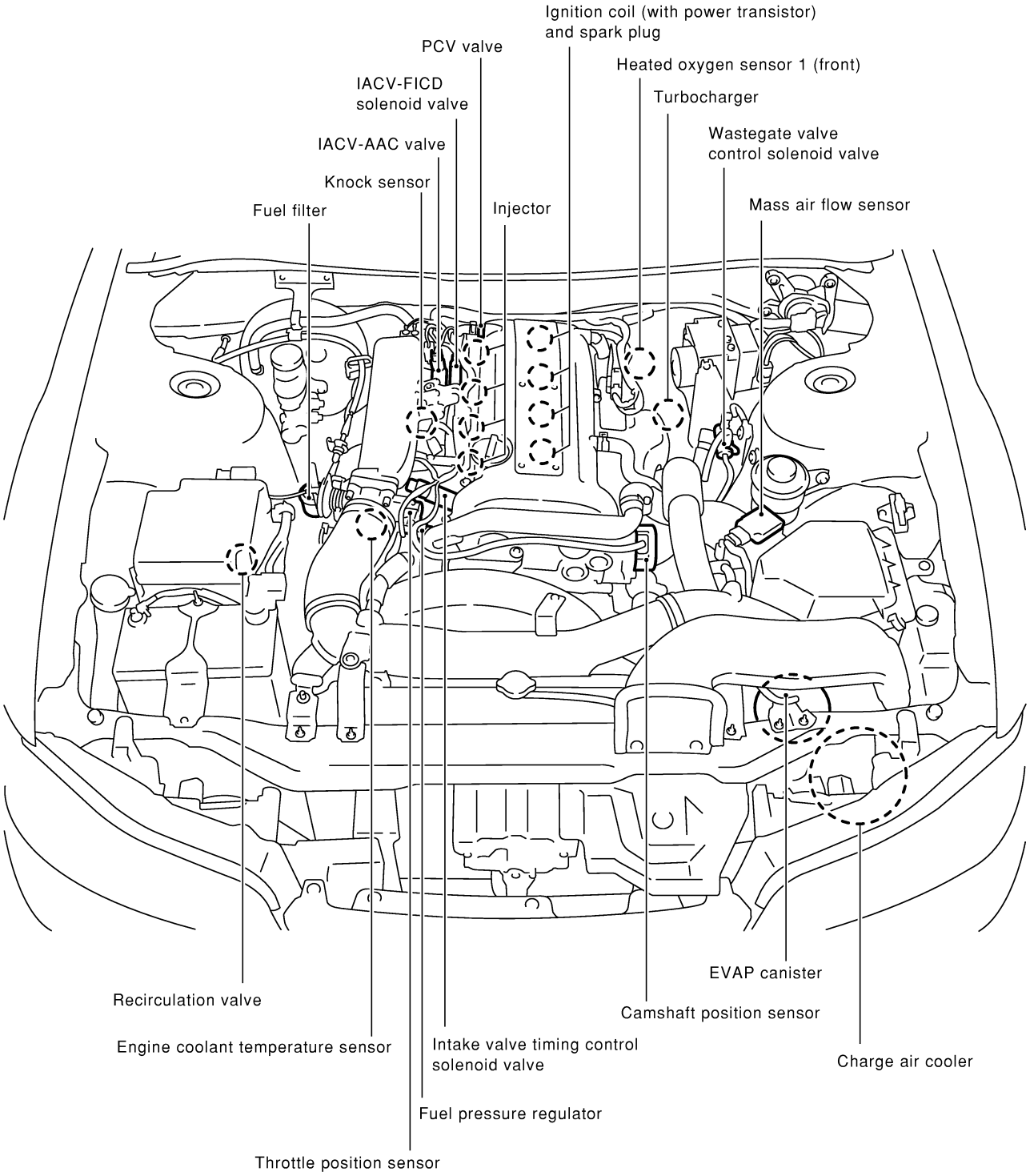

SEC317C

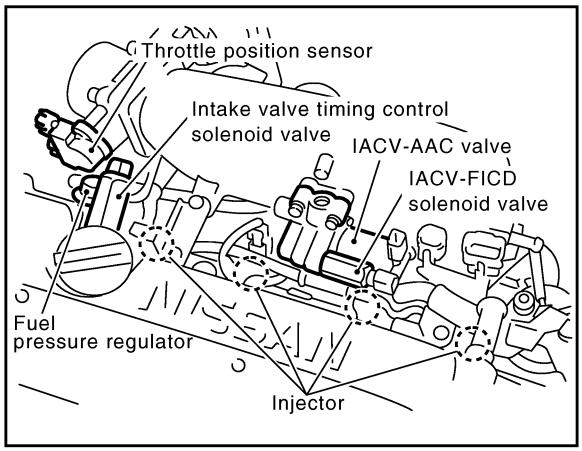
Throttle position sensor
Intake valve timing control solenoid valve
IACV-AAC valve
IACV-FICD solenoid valve
Fuel pressure regulator
Injector

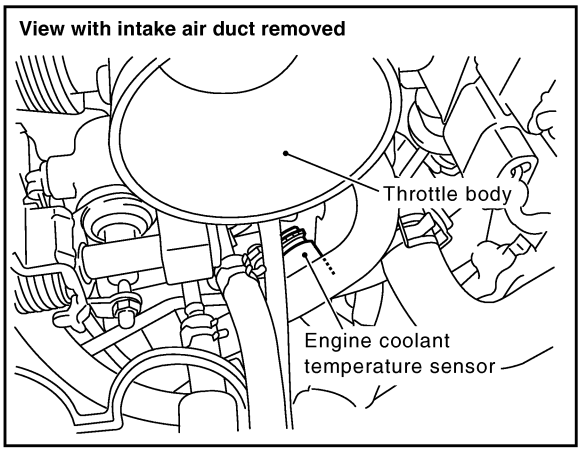
View with intake air duct removed
Throttle body
Engine coolant temperature sensor

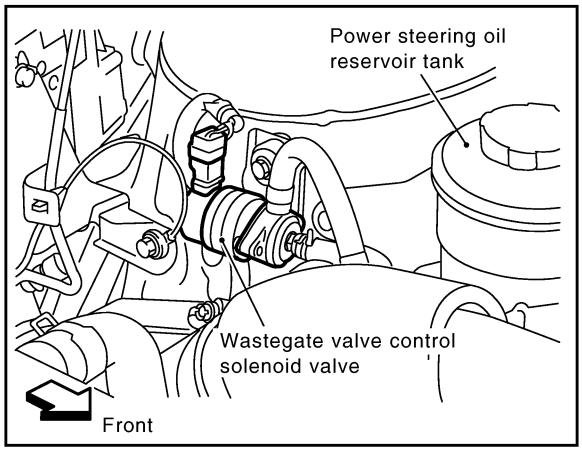
Power steering oil reservoir tank
Wastegate valve control solenoid valve
Front

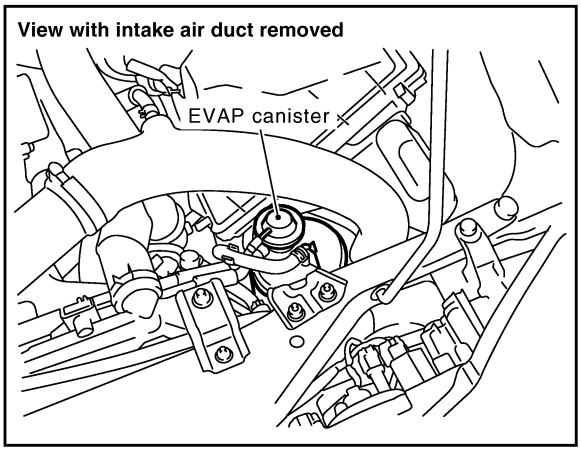
View with intake air duct removed
EVAP canister

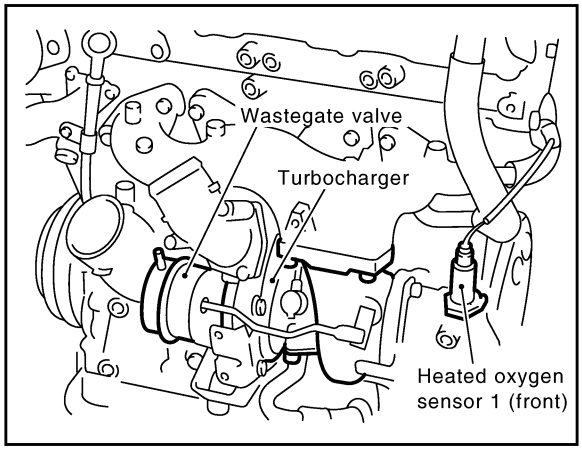
Wastegate valve
Turbocharger
Heated oxygen sensor 1 (front)

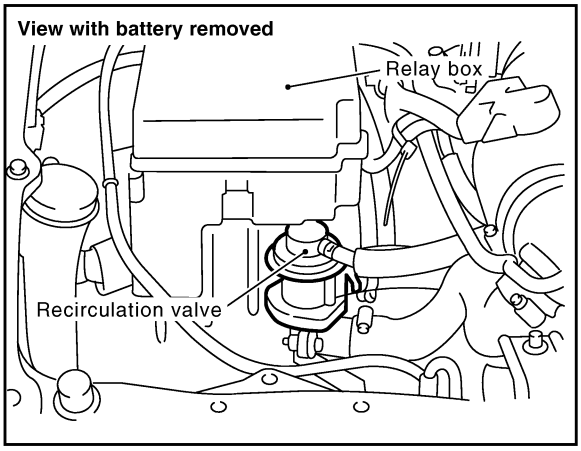
View with battery removed
Relay box
Recirculation valve

SEC318C

View with dash side lower finisher LH removed

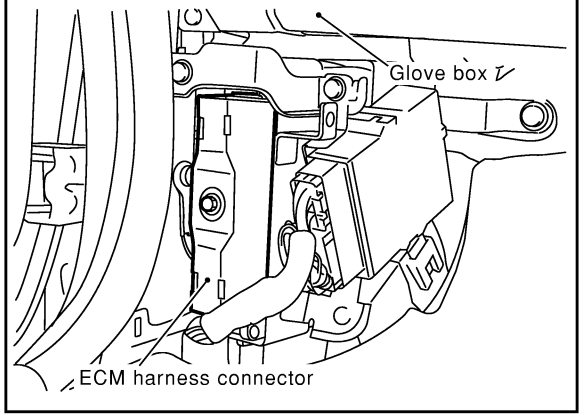

View with dash side lower finisher LH and ECM removed

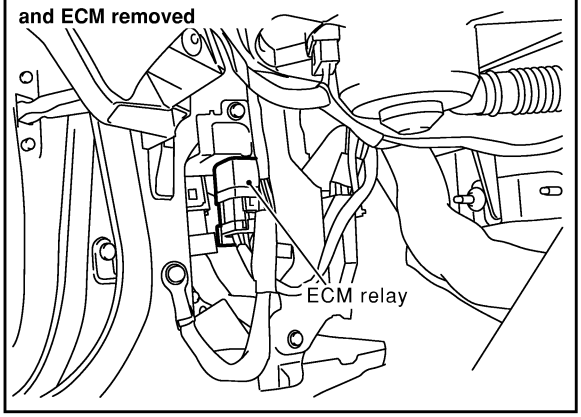

View with trunk room floor trim removed

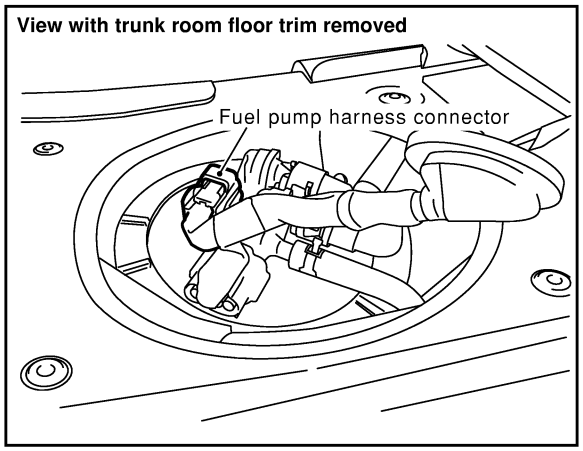

View with dash side lower finisher RH removed

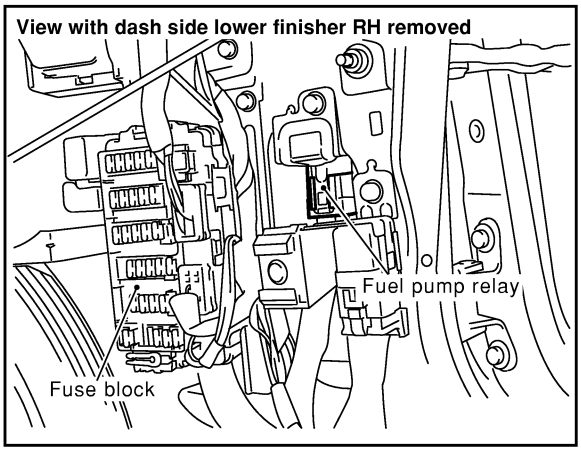

View from under the vehicle

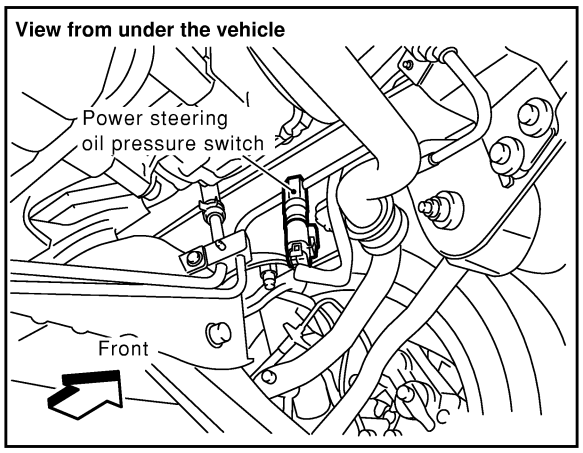

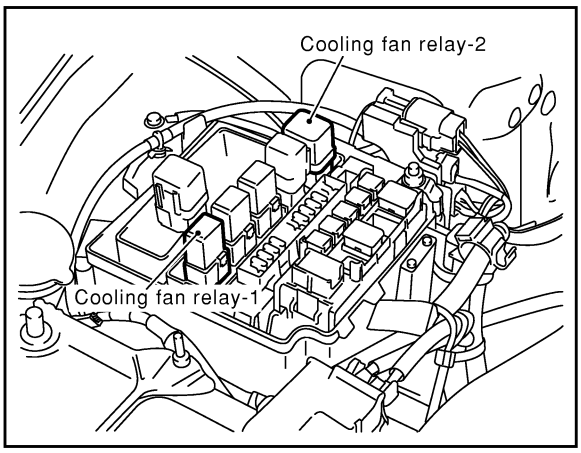

SEC319C

Circuit Diagram

NMEC0010

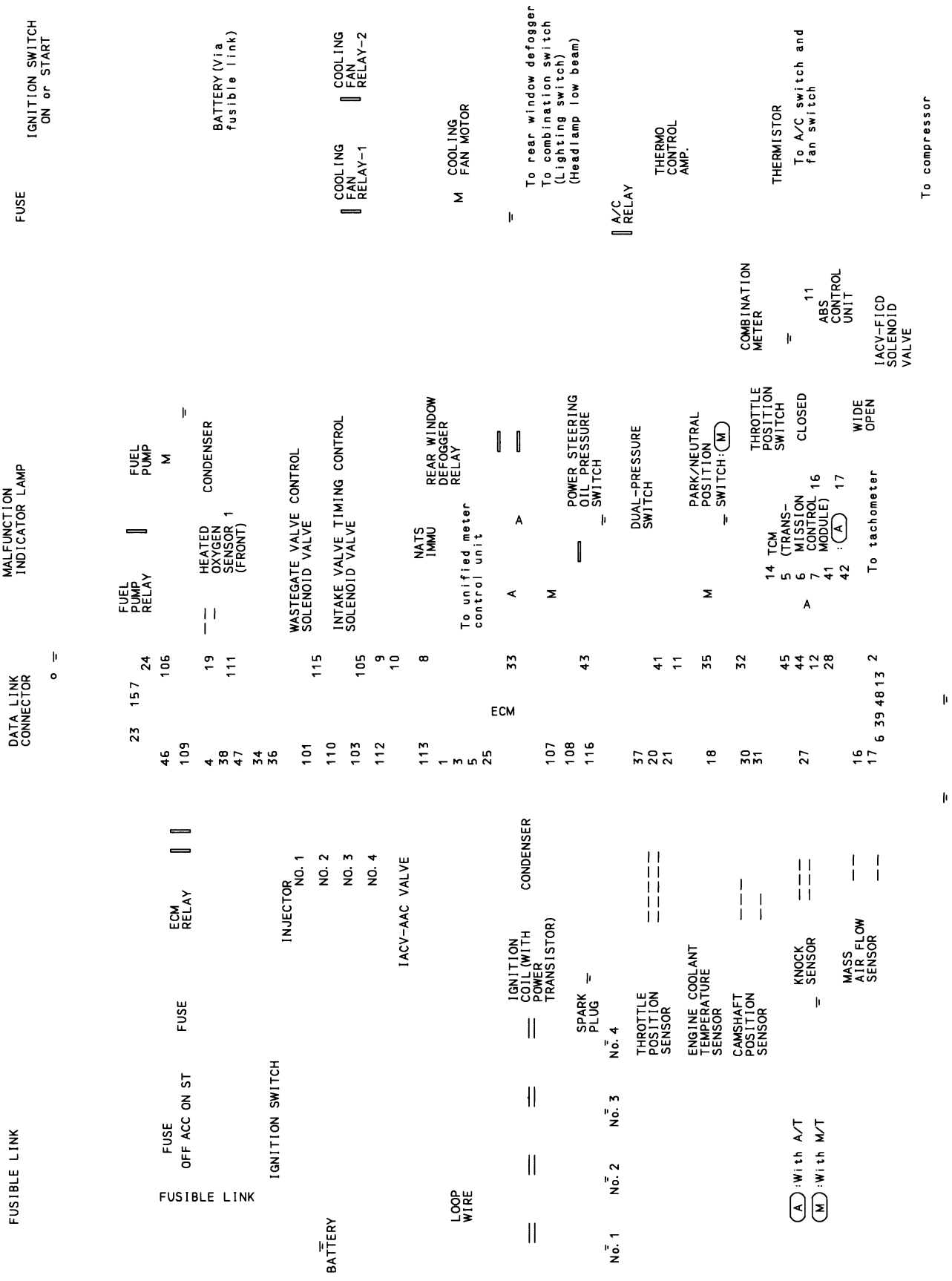

TEC797

System Diagram

NMEC0011

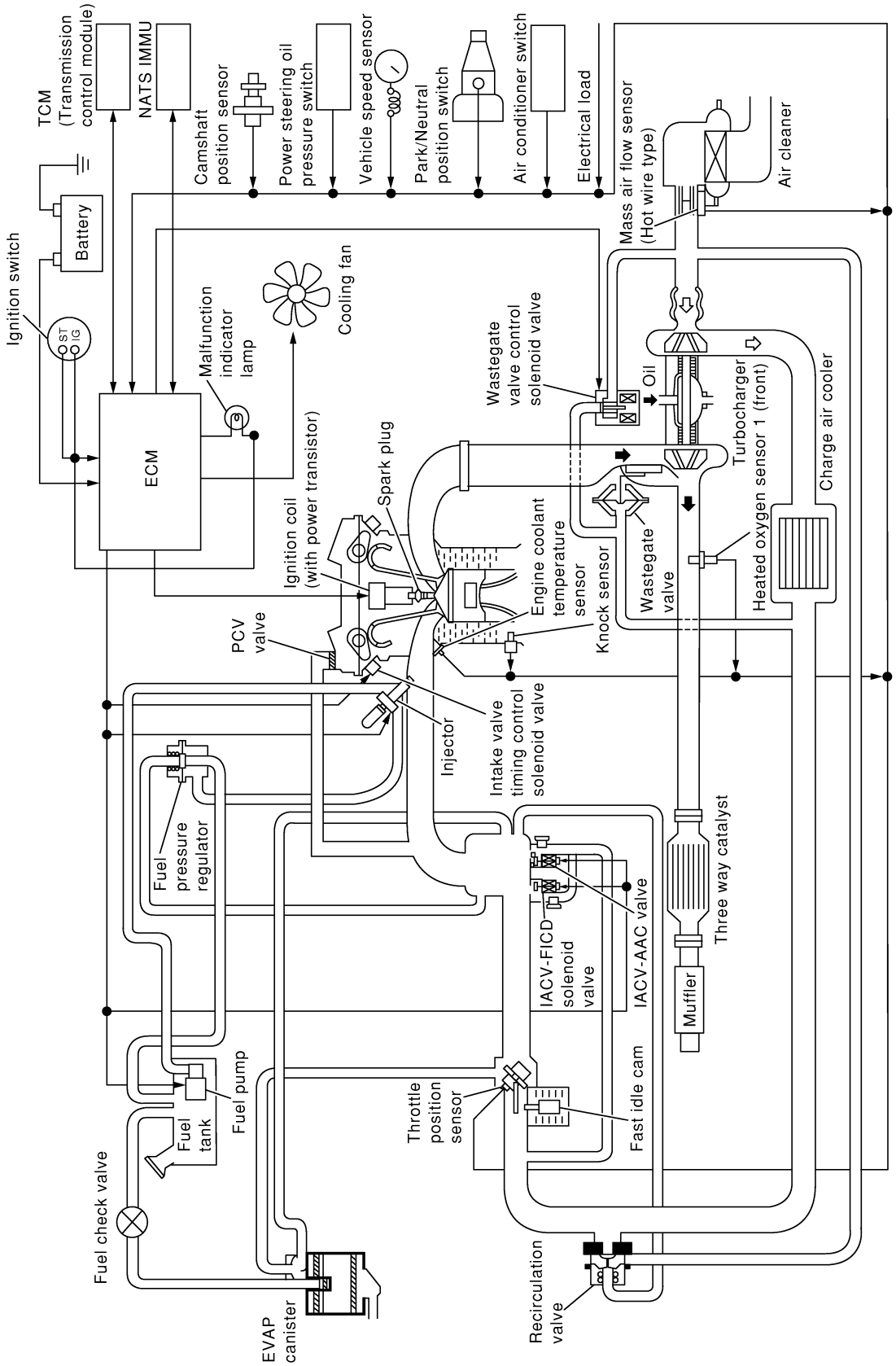

SEC320C

Vacuum Hose Drawing

NMEC0012

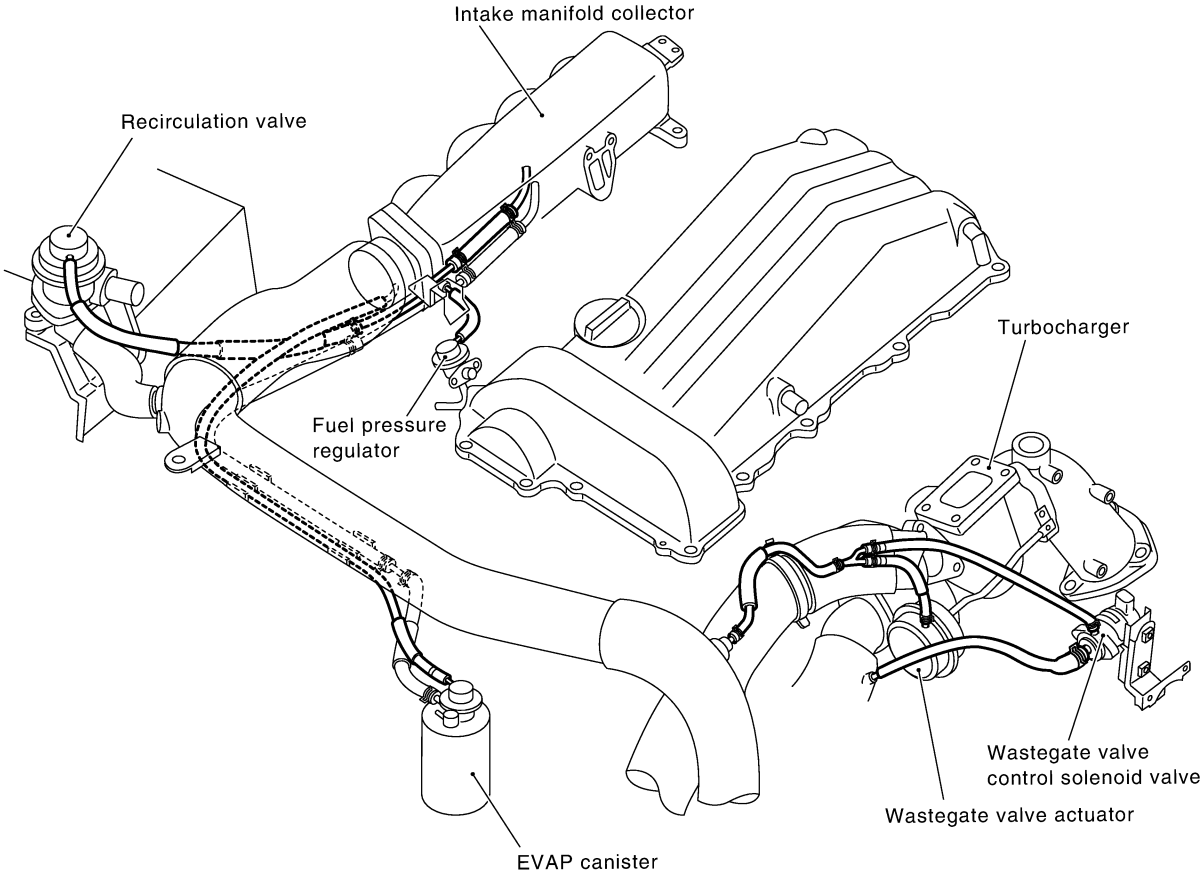

NOTE: Do not use soapy water or any type of solvent while installing vacuum hoses or purge hoses.

SEC321C

Refer to "System Diagram", EC-15 for Vacuum Control System.

System Chart

NMEC0013

Input (Sensor)	ECM Function	Output (Actuator)
• Camshaft position sensor • Mass air flow sensor • Engine coolant temperature sensor • Heated oxygen sensor 1 (front) • Ignition switch • Throttle position sensor • Park/neutral position (PNP) switch • Air conditioner switch • Knock sensor • Battery voltage • Power steering oil pressure switch • Vehicle speed sensor • TCM (Transmission control module) • Dual pressure switch • Electrical load	Fuel injection & mixture ratio control	Injectors
	Electronic ignition system	Power transistor
	Idle air control system	IACV-AAC valve and IACV-FICD solenoid valve
	Fuel pump control	Fuel pump relay
	Heated oxygen sensor monitor & on board diagnostic system	MIL (On the instrument panel)
	Heated oxygen sensor 1 heater (front) control	Heated oxygen sensor 1 heater (front)
	Wastegate valve control	Wastegate valve control solenoid valve
	Intake valve timing control	Intake valve timing control solenoid valve
	Air conditioning cut control	Air conditioner relay
	Cooling fan control	Cooling fan relays

Multiport Fuel Injection (MFI) System

DESCRIPTION

NMEC0014

Input/Output Signal Chart

NMEC0014S01

Sensor	Input Signal to ECM	ECM function	Actuator
Camshaft position sensor	Engine speed and piston position	Fuel injection & mixture ratio control	Injectors
Mass air flow sensor	Amount of intake air		
Engine coolant temperature sensor	Engine coolant temperature		
Heated oxygen sensor 1 (front)	Density of oxygen in exhaust gas		
Throttle position sensor	Throttle position Throttle valve idle position		
Park/neutral position (PNP) switch	Gear position		
Vehicle speed sensor	Vehicle speed		
Ignition switch	Start signal		
Air conditioner switch	Air conditioner operation		
Knock sensor	Engine knocking condition		
Battery	Battery voltage		
Power steering oil pressure switch	Power steering operation		

Basic Multiport Fuel Injection System

NMEC0014S02

The amount of fuel injected from the fuel injector is determined by the ECM. The ECM controls the length of time the valve remains open (injection pulse duration). The amount of fuel injected is a program value in the ECM memory. The program value is preset by engine operating conditions. These conditions are determined by input signals (for engine speed and intake air) from both the camshaft position sensor and the mass air flow sensor.

Various Fuel Injection Increase/Decrease Compensation

NMEC0014S03

In addition, the amount of fuel injected is compensated to improve engine performance under various operating conditions as listed below.

<Fuel increase>

- During warm-up
- When starting the engine
- During acceleration
- Hot-engine operation
- When selector lever is changed from “N” to “D”
- High-load, high-speed operation

<Fuel decrease>

- During deceleration
- During high engine speed operation

Mixture Ratio Feedback Control (Closed loop control)

NMEC0014S04

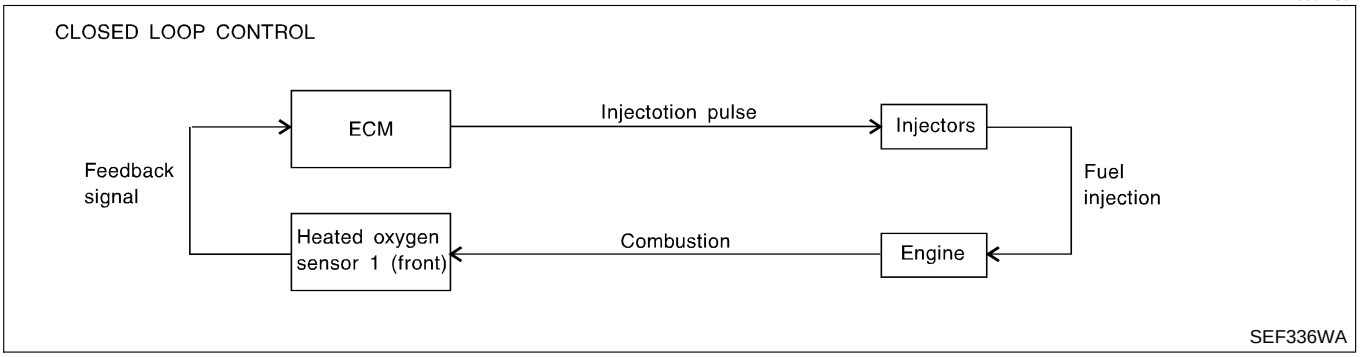

The mixture ratio feedback system provides the best air-fuel mixture ratio for driveability and emission control. The warm-up three way catalyst can then better reduce CO, HC and NOx emissions. This system uses a heated oxygen sensor 1 (front) in the exhaust manifold to monitor if the engine operation is rich or lean. The ECM adjusts the injection pulse width according to the sensor voltage signal. For more information about the front heated oxygen sensor, refer to EC-152. This maintains the mixture ratio within the range of stoichiometric (ideal air-fuel mixture).
This stage is referred to as the closed loop control condition.

Open Loop Control

NMEC0014S05

The open loop system condition refers to when the ECM detects any of the following conditions. Feedback control stops in order to maintain stabilized fuel combustion.

- Deceleration and acceleration
- High-load, high-speed operation
- Malfunction of heated oxygen sensor 1 (front) or its circuit
- Insufficient activation of heated oxygen sensor 1 (front) at low engine coolant temperature
- High engine coolant temperature
- During warm-up
- After shifting from "N" to "D"
- When starting the engine

Mixture Ratio Self-learning Control

NMEC0014S06

The mixture ratio feedback control system monitors the mixture ratio signal transmitted from the heated oxygen sensor 1 (front). This feedback signal is then sent to the ECM. The ECM controls the basic mixture ratio as close to the theoretical mixture ratio as possible. However, the basic mixture ratio is not necessarily controlled as originally designed. Both manufacturing differences (i.e., mass air flow sensor hot wire) and characteristic changes during operation (i.e., injector clogging) directly affect mixture ratio.
Accordingly, the difference between the basic and theoretical mixture ratios is monitored in this system. This is then computed in terms of "injection pulse duration" to automatically compensate for the difference between the two ratios.
"Fuel trim" refers to the feedback compensation value compared against the basic injection duration. Fuel trim includes short term fuel trim and long term fuel trim.
"Short term fuel trim" is the short-term fuel compensation used to maintain the mixture ratio at its theoretical value. The signal from the heated oxygen sensor 1 (front) indicates whether the mixture ratio is RICH or LEAN compared to the theoretical value. The signal then triggers a reduction in fuel volume if the mixture ratio is rich, and an increase in fuel volume if it is lean.
"Long term fuel trim" is overall fuel compensation carried out long-term to compensate for continual deviation of the short term fuel trim from the central value. Such deviation will occur due to individual engine differences, wear over time and changes in the usage environment.

Fuel Injection Timing

NMEC0014S07

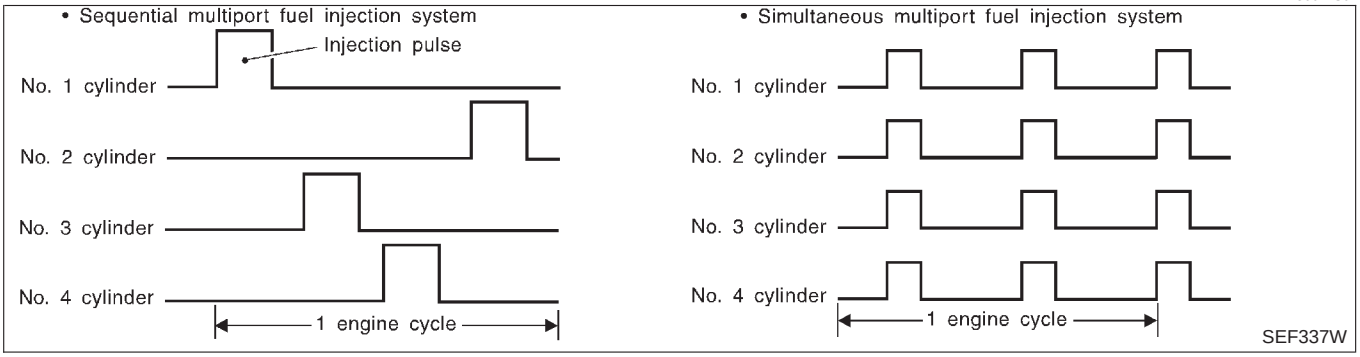

Two types of systems are used.

Sequential Multiport Fuel Injection System

NMEC0014S0701

Fuel is injected into each cylinder during each engine cycle according to the firing order. This system is used when the engine is running.

Simultaneous Multiport Fuel Injection System

NMEC0014S0702

Fuel is injected simultaneously into all four cylinders twice each engine cycle. In other words, pulse signals of the same width are simultaneously transmitted from the ECM.
The four injectors will then receive the signals two times for each engine cycle.
This system is used when the engine is being started and/or if the fail-safe system (CPU) is operating.

Fuel Shut-off

NMEC0014S08

Fuel to each cylinder is cut off during deceleration or operation of the engine at excessively high speeds.

Electronic Ignition (EI) System

DESCRIPTION

NMEC0015

Input/Output Signal Chart

NMEC0015S01

Sensor	Input Signal to ECM	ECM function	Actuator
Camshaft position sensor	Engine speed and piston position	Ignition timing control	Power transistor
Mass air flow sensor	Amount of intake air		
Engine coolant temperature sensor	Engine coolant temperature		
Throttle position sensor	Throttle position Throttle valve idle position		
Vehicle speed sensor	Vehicle speed		
Ignition switch	Start signal		
Knock sensor	Engine knocking		
Park/neutral position (PNP) switch	Gear position		
Battery	Battery voltage		

System Description

NMEC0015S02

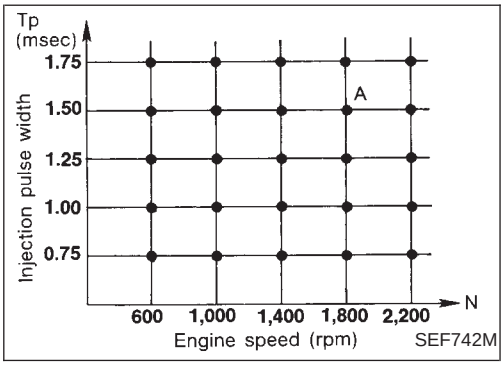

The ignition timing is controlled by the ECM to maintain the best air-fuel ratio for every running condition of the engine. The ignition timing data is stored in the ECM. This data forms the map shown.
The ECM receives information such as the injection pulse width and camshaft position sensor signal. Computing this information, ignition signals are transmitted to the power transistor.
e.g., N: 1,800 rpm, Tp: 1.50 msec
A °BTDC
During the following conditions, the ignition timing is revised by the ECM according to the other data stored in the ECM.

- At starting
- During warm-up
- At idle
- At low battery voltage
- During acceleration

The knock sensor retard system is designed only for emergencies. The basic ignition timing is programmed within the anti-knocking zone, if recommended fuel is used under dry conditions. The retard system does not operate under normal driving conditions. If engine knocking occurs, the knock sensor monitors the condition. The signal is transmitted to the ECM. The ECM retards the ignition timing to eliminate the knocking condition.

Air Conditioning Cut Control

DESCRIPTION

NMEC0016

Input/Output Signal Chart

NMEC0016S01

Sensor	Input Signal to ECM	ECM function	Actuator
Air conditioner switch	Air conditioner "ON" signal	Air conditioner cut control	Air conditioner relay
Throttle position sensor	Throttle valve opening angle		
Camshaft position sensor	Engine speed		
Engine coolant temperature sensor	Engine coolant temperature		
Ignition switch	Start signal		
Vehicle speed sensor	Vehicle speed		
Power steering oil pressure switch	Power steering operation		

System Description

NMEC0016S02

This system improves engine operation when the air conditioner is used.
Under the following conditions, the air conditioner is turned off.

- When the accelerator pedal is fully depressed.
- When cranking the engine.
- At high engine speeds.
- When the engine coolant temperature becomes excessively high.
- When operating power steering during low engine speed or low vehicle speed.
- When engine speed is excessively low.

Fuel Cut Control (at no load & high engine speed)

DESCRIPTION

Input/Output Signal Chart

NMEC0017

NMEC0017S01

Sensor	Input Signal to ECM	ECM function	Actuator
Vehicle speed sensor	Vehicle speed	Fuel cut control	Injectors
Park/neutral position (PNP) switch	Neutral position		
Throttle position sensor	Throttle position		
Engine coolant temperature sensor	Engine coolant temperature		
Camshaft position sensor	Engine speed		

If the engine speed is above 2,500 rpm with no load (for example, in neutral and engine speed over 2,500 rpm) fuel will be cut off after some time. The exact time when the fuel is cut off varies based on engine speed. Fuel cut will operate until the engine speed reaches 2,000 rpm, then fuel cut is cancelled.

NOTE:
This function is different from deceleration control listed under “Multiport Fuel Injection (MFI) System”, EC-18.

Evaporative Emission System

DESCRIPTION

NMEC0018

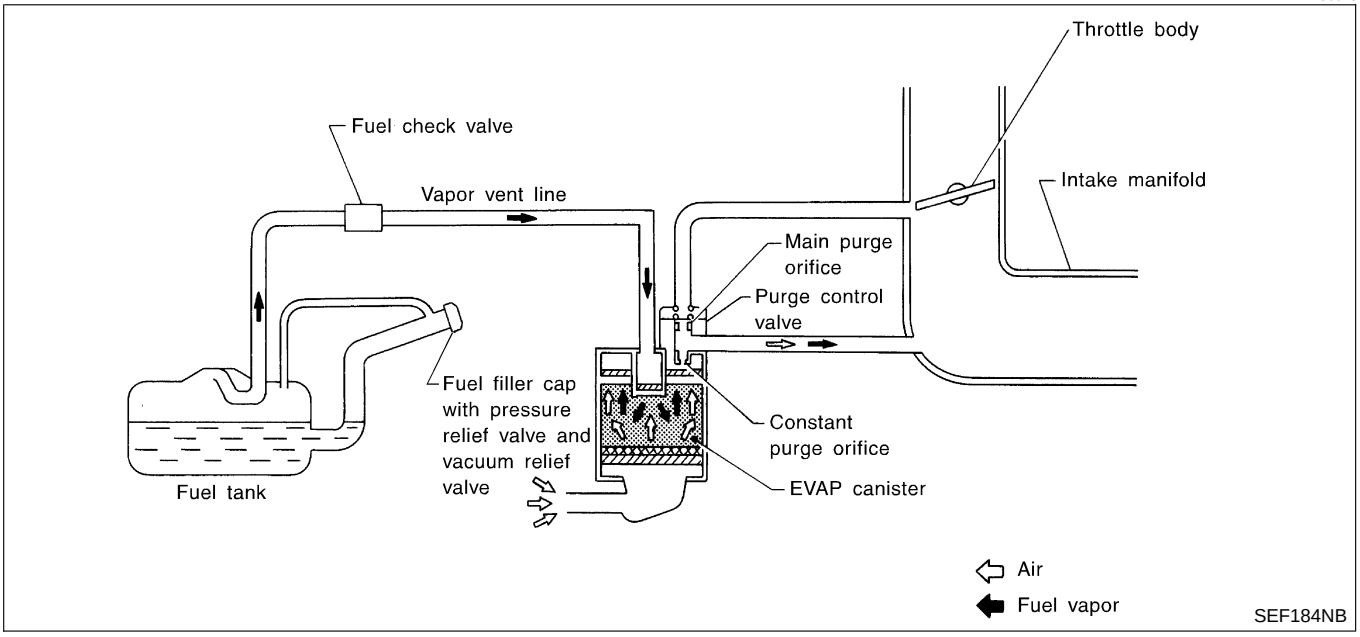

The evaporative emission system is used to reduce hydrocarbons emitted into the atmosphere from the fuel system. This reduction of hydrocarbons is accomplished by activated charcoals in the EVAP canister.
The fuel vapor from sealed fuel tank is led into the EVAP canister when the engine is off. The fuel vapor is then stored in the EVAP canister. The EVAP canister retains the fuel vapor until the EVAP canister is purged by air.
When the engine is running, the air is drawn through the bottom of the EVAP canister. The fuel vapor will then be led to the intake manifold.
When the engine runs at idle, the purge control valve is closed. Only a small amount of vapor flows into the intake manifold through the constant purge orifice.
As the engine speed increases and the throttle vacuum rises, the purge control valve opens. The vapor is sucked through both main purge and constant purge orifices.

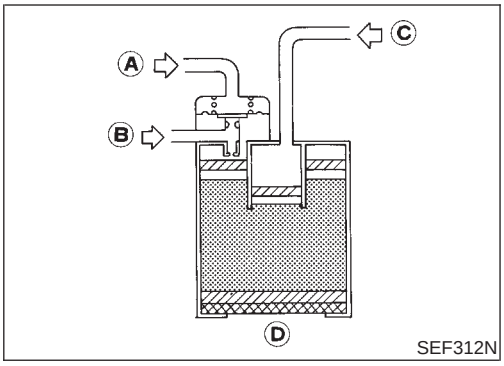

SEF312N

INSPECTION

NMEC0019

EVAP Canister

NMEC0019S01

Check EVAP canister as follows:

1. Blow air through port A orally. Make sure that there is no leakage.
2. Apply vacuum to port A. Block port D. Blow air through port C orally. Check that air flows freely through port B.

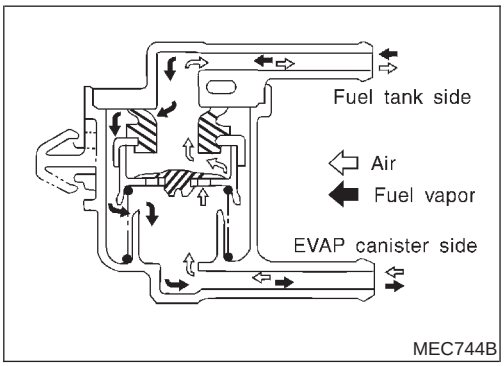

MEC744B

Fuel Check Valve

NMEC0019S11

1. Blow air through connector on fuel tank side.
   A considerable resistance should be felt and a portion of air flow should be directed toward the EVAP canister side.
2. Blow air through connector on EVAP canister side.
   Air flow should be smoothly directed toward fuel tank side.
3. If fuel check valve is suspected of not properly functioning in steps 1 and 2 above, replace it.

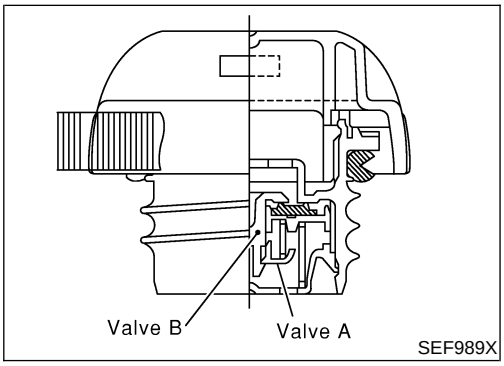

SEF989X

Fuel Tank Vacuum Relief Valve (Built into fuel filler cap)

NMEC0019S03

1. Wipe clean valve housing.
2. Check valve opening pressure and vacuum.

   Pressure:

   15.3 - 20.0 kPa (0.156 - 0.204 kg/cm^2, 2.22 - 2.90 psi)

   Vacuum:

   −6.0 to −3.4 kPa (−0.061 to −0.035 kg/cm^2, −0.87 to −0.50 psi)
3. If out of specification, replace fuel filler cap as an assembly.

CAUTION:

Use only a genuine fuel filler cap as a replacement.

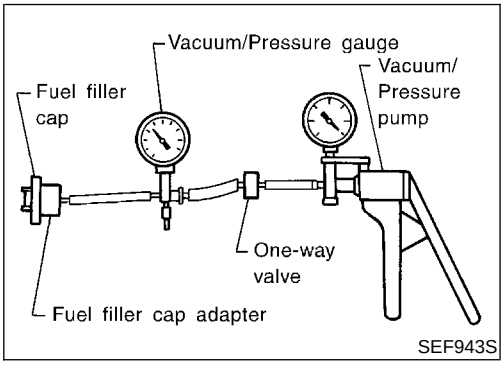

SEF943S

EVAPORATIVE EMISSION LINE DRAWING

NMEC0020

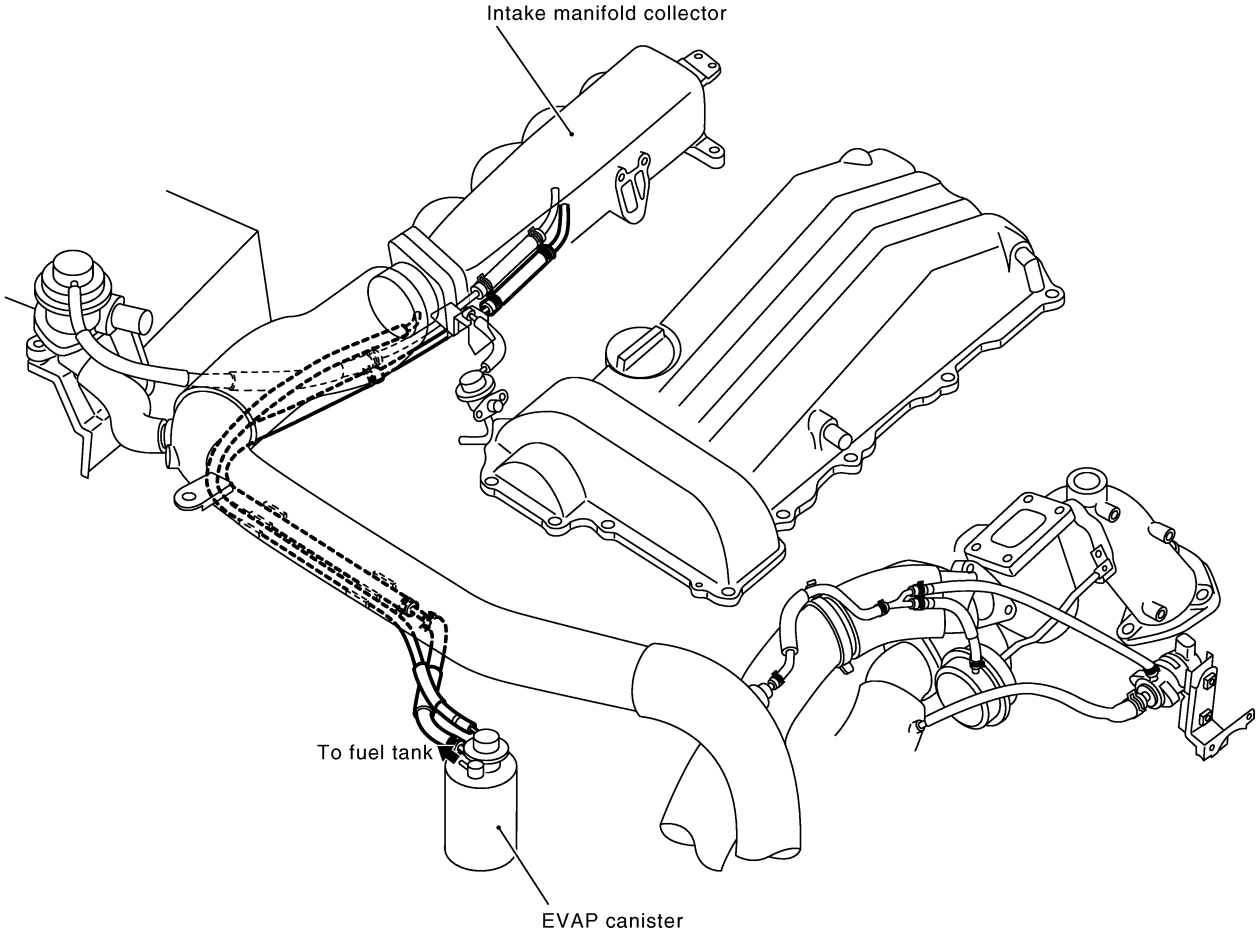

NOTE: Do not use soapy water or any type of solvent while installing vacuum hose or purge hoses.

SEC322C

Positive Crankcase Ventilation

DESCRIPTION

NMEC0021

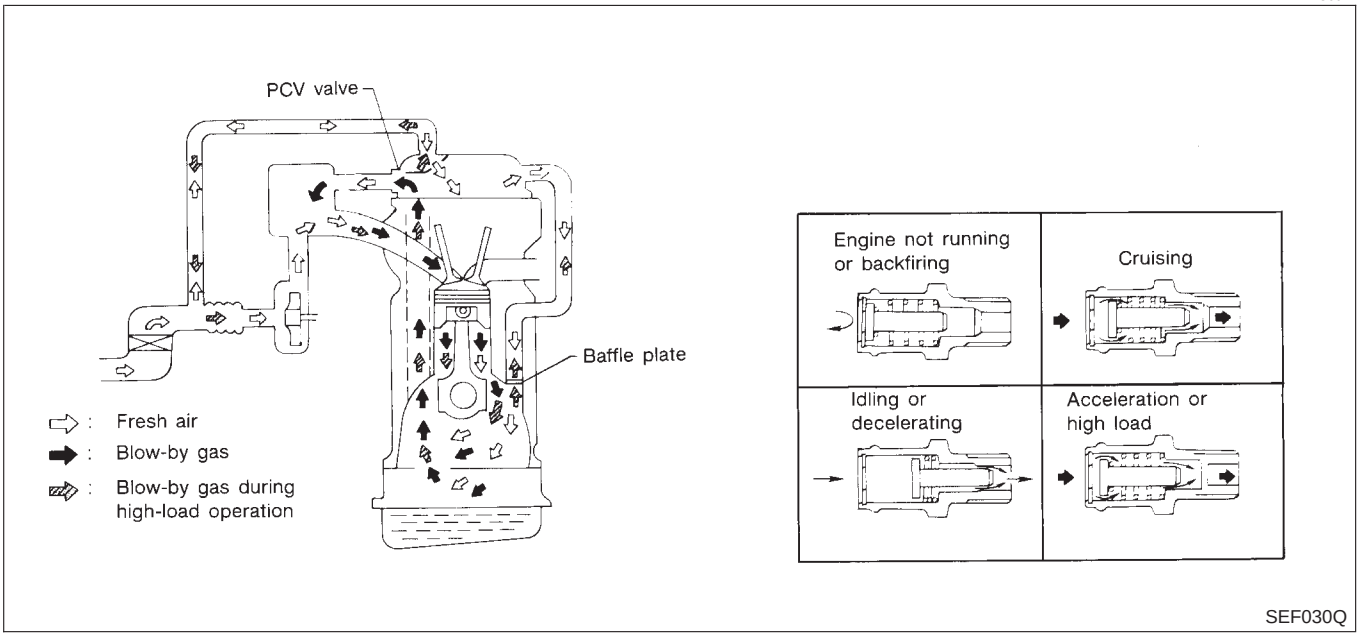

This system returns blow-by gas to the intake manifold.
The positive crankcase ventilation (PCV) valve is provided to conduct crankcase blow-by gas to the intake manifold.
During partial throttle operation of the engine, the intake manifold sucks the blow-by gas through the PCV valve.
Normally, the capacity of the valve is sufficient to handle any blow-by and a small amount of ventilating air.
The ventilating air is then drawn from the air inlet tubes into the crankcase. In this process the air passes through the hose connecting air inlet tubes to rocker cover.
Under full-throttle condition, the manifold vacuum is insufficient to draw the blow-by flow through the valve. The flow goes through the hose connection in the reverse direction.
On vehicles with an excessively high blow-by, the valve does not meet the requirement. This is because some of the flow will go through the hose connection to the air inlet tubes under all conditions.

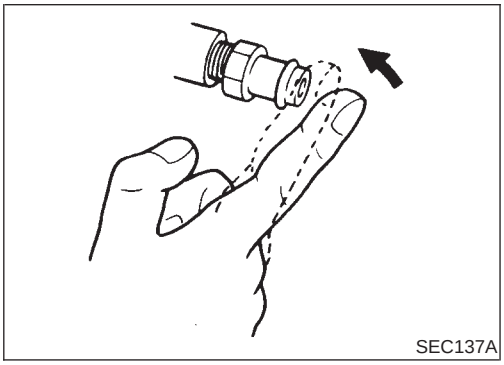

INSPECTION

NMEC0022

PCV (Positive Crankcase Ventilation) Valve

NMEC0022S01

With engine running at idle, remove PCV valve from rocker cover; if the valve is working properly, a hissing noise will be heard as air passes through it and a strong vacuum should be felt immediately when a finger is placed over valve inlet.

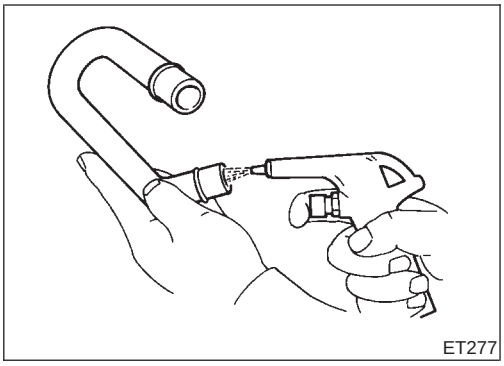

PCV Valve Ventilation Hose

NMEC0022S02

1. Check hoses and hose connections for leaks.
2. Disconnect all hoses and clean with compressed air. If any hose cannot be freed of obstructions, replace.

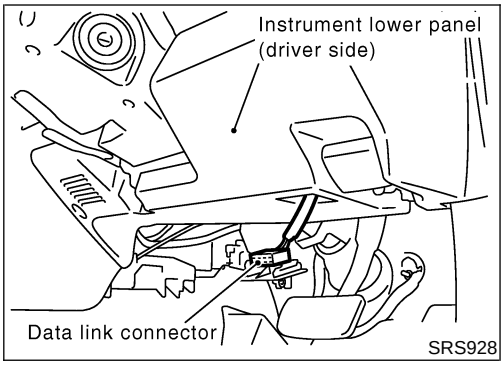

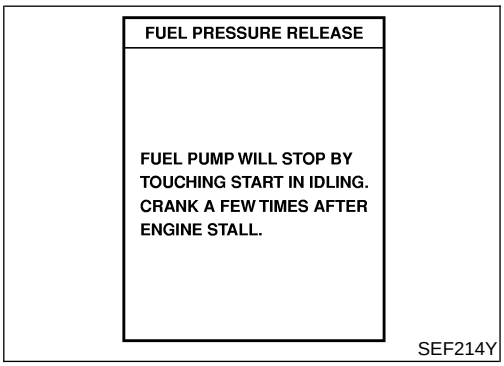

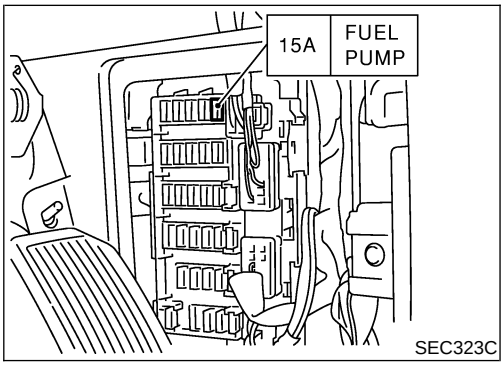

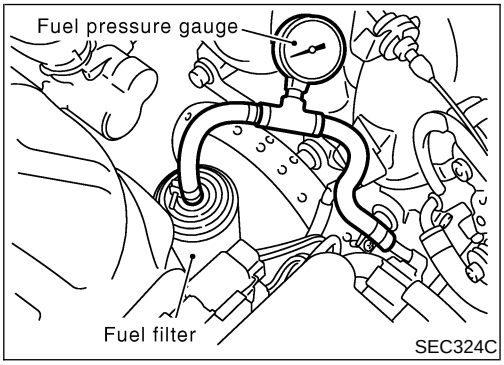

Fuel Pressure Release

NMEC0023

Before disconnecting fuel line, release fuel pressure from fuel line to eliminate danger.

WITH CONSULT-II

NMEC0023S01

1. Turn ignition switch “ON”.
2. Perform “FUEL PRESSURE RELEASE” in “WORK SUPPORT” mode with CONSULT-II.
3. Start engine.
4. After engine stalls, crank it two or three times to release all fuel pressure.
5. Turn ignition switch “OFF”.

WITHOUT CONSULT-II

NMEC0023S02

1. Remove fuel pump fuse located in fuse box.
2. Start engine.
3. After engine stalls, crank it two or three times to release all fuel pressure.
4. Turn ignition switch “OFF”.
5. Reinstall fuel pump fuse after servicing fuel system.

Fuel Pressure Check

NMEC0024

- **When reconnecting fuel line, always use new clamps.**
- **Make sure that clamp screw does not contact adjacent parts.**
- **Use a torque driver to tighten clamps.**
- **Use Pressure Gauge to check fuel pressure.**
- **Do not perform fuel pressure check with system operating. Fuel pressure gauge may indicate false readings.**

1. Release fuel pressure to zero.
2. Disconnect fuel hose from fuel filter.
3. Install pressure gauge between fuel hose and fuel filter.
4. Start engine and check for fuel leakage.
5. Read the indication of fuel pressure gauge.

At idling:

With vacuum hose connected

Approximately 235 kPa (2.4 kg/cm^2, 34 psi)

With vacuum hose disconnected

Approximately 294 kPa (3.0 kg/cm^2, 43 psi)

If results are unsatisfactory, perform Fuel Pressure Regulator Check.

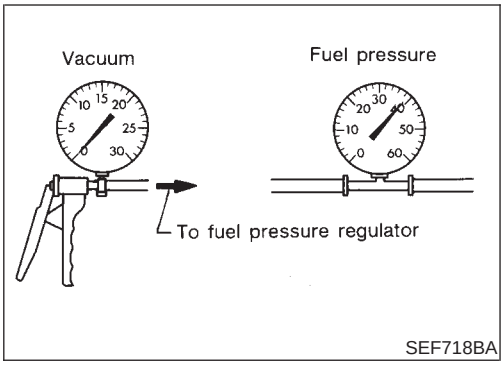

Fuel Pressure Regulator Check

NMEC0025

1. Stop engine and disconnect fuel pressure regulator vacuum hose from intake manifold collector.
2. Plug intake manifold collector with a blind cap.
3. Connect variable vacuum source to fuel pressure regulator.
4. Start engine and read indication of fuel pressure gauge as vacuum is changed.

Fuel pressure should decrease as vacuum increases. If results are unsatisfactory, replace fuel pressure regulator.

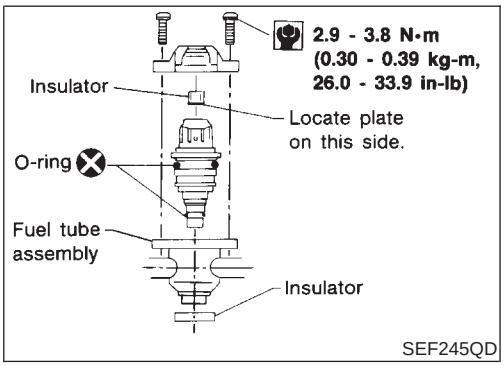

Injector

REMOVAL AND INSTALLATION

NMEC0026

1. Remove injectors with fuel tube assembly. Refer to EM-36, “INTAKE MANIFOLD”.
2. Push out any malfunctioning injector from fuel tube assembly.
- **Do not extract injector by pinching connector.**
3. Replace or clean injector as necessary.
- **Always replace O-rings and insulators with new ones.**
- **Lubricate O-ring with a smear of engine oil.**
4. Install all parts removed in reverse order of removal.

CAUTION:

After properly connecting fuel tube assembly to injector and fuel hose, check connection for fuel leakage.

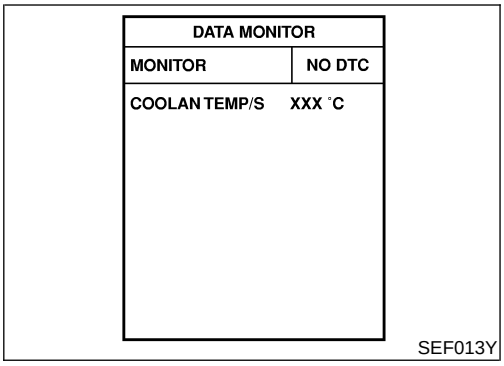

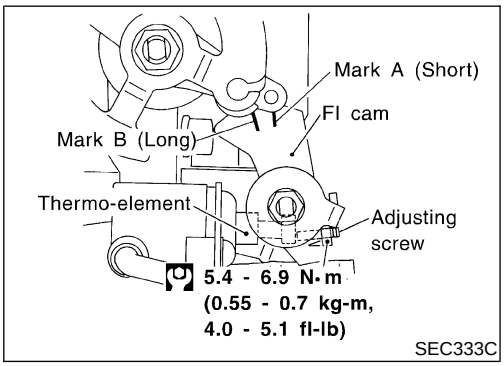

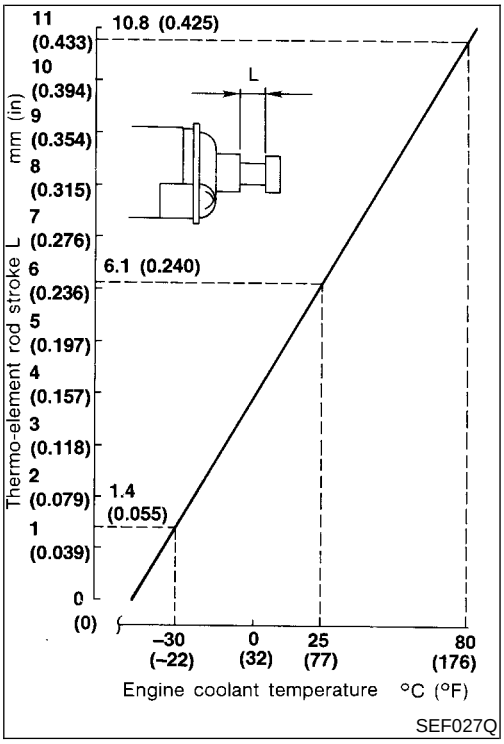

Fast Idle Cam (FIC)

NMEC0656

INSPECTION AND ADJUSTMENT

NMEC0656S01

With CONSULT-II

NMEC0656S0101

1. Start engine.
2. See “COOLAN TEMP/S” in “DATA MONITOR” mode with CONSULT-II.
3. When engine coolant temperature is 75 to 85°C (167 to 185°F), go to next step.
4. Check that mark A (short line) on FI cam aligns with roller center.
   If OK, inspection is complete.
   If NG, go to next step.
5. Measure thermo-element stroke (L) and check it is within the specification in the figure.
   If NG, replace thermo-element with a new one.
   If OK, go to next step.
6. Loosen adjusting screw and align mark A (short line) on FI cam with roller center.
   Tighten lock nut to the specification.
7. Cool down the engine until “COOLAN TEMP/S” indicates 20 to 30°C (68 to 86°F).
8. Check that mark B (long line) on FI cam aligns with roller center.

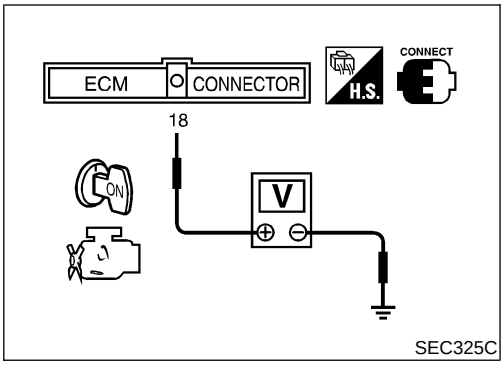

SEC325C

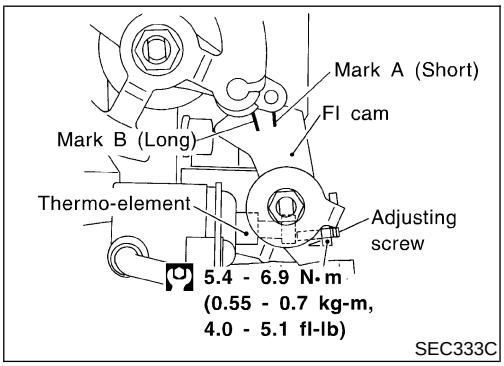

SEC333C

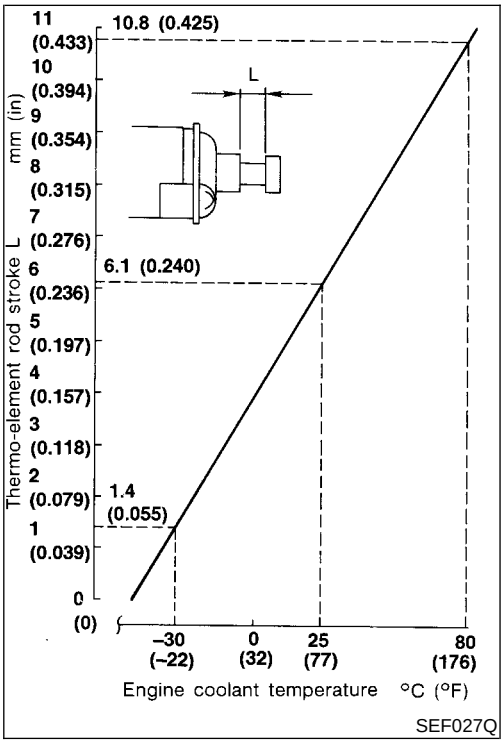

SEF027Q

DATA MONITOR	
MONITOR	NO DTC
ENG SPEED	XXX rpm

SEF058Y

Without CONSULT-II

NMEC0656S0102

1. Start engine.
2. Check voltage between ECM terminal 18 (Engine coolant temperature sensor signal) and ground.
3. When the voltage is between 0.55 to 0.68V, go to next step.
4. Check that mark A (short line) on FI cam aligns with roller center.
   If OK, inspection is complete.
   If NG, go to next step.
5. Measure thermo-element stroke (L) and check it is within the specification in the figure.
   If NG, replace thermo-element with a new one.
   If OK, go to next step.
6. Loosen adjusting screw and align mark A (short line) on FI cam with roller center.
   Tighten lock nut to the specification.
7. Cool down the engine until the voltage between ECM terminal 18 (engine coolant temperature sensor signal) and ground indicates 1.56 to 1.76V.
8. Check that mark B (long line) on FI cam aligns with roller center.

How to Check Idle Speed and Ignition Timing

NMEC0607

IDLE SPEED

NMEC0607S01

- **Method A (Using CONSULT-II)**

Check idle speed in "DATA MONITOR" mode with CONSULT-II.

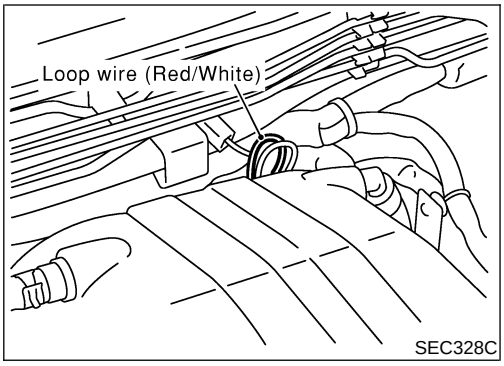

- **Method B (Using Tachometer)**

Clamp the loop wire (Red/White) using pulse type tachometer.

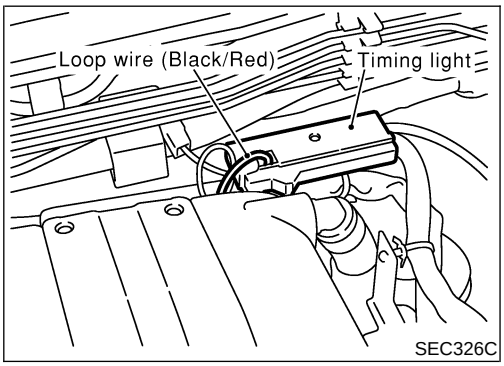

IGNITION TIMING

NMEC0607S02

Any of following two methods may be used.

- **Method A**

a) Attach timing light to loop wire as shown.
b) Check ignition timing.

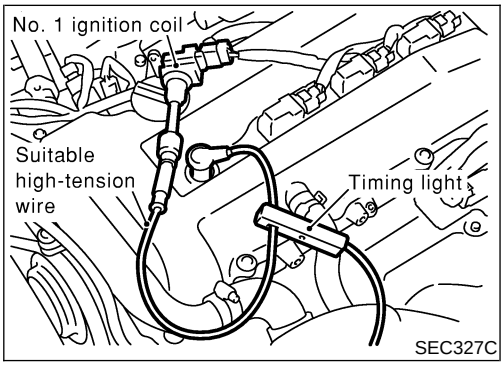

- **Method B**

a) Remove No. 1 ignition coil.
b) Connect No. 1 ignition coil and No. 1 spark plug with suitable high-tension wire as shown, and attach timing light clamp to this wire.
c) Check ignition timing.

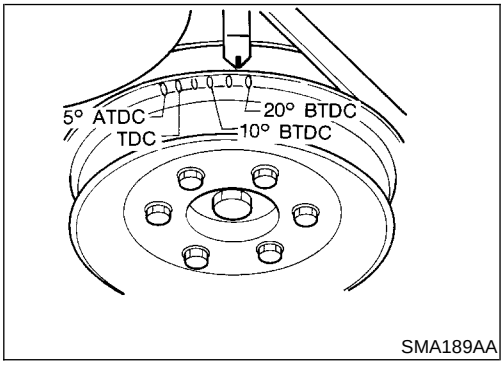

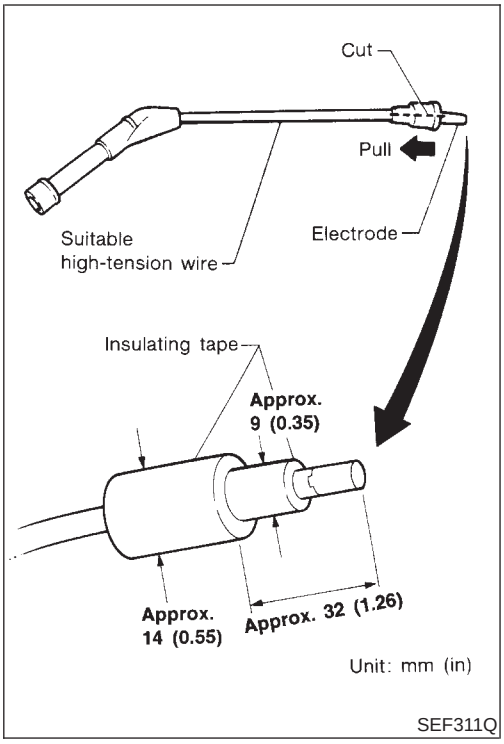
Cut
Pull
Suitable
high-tension wire
Electrode
Insulating tape
Approx.
9 (0.35)
Approx.
14 (0.55)
Approx. 32 (1.26)
Unit: mm (in)
SEF311Q

Introduction

NMEC0657

The ECM has an on board diagnostic system, which detects malfunctions related to engine sensors or actuators. Self-diagnosis items are listed in “TROUBLE DIAGNOSIS — INDEX”, EC-4.
The malfunction indicator lamp (MIL) on the instrument panel lights up when the ECM enters fail-safe mode (Refer to EC-67.).

Diagnostic Trouble Code (DTC)

NMEC0658

HOW TO READ DTC

NMEC0658S01

Malfunction items can be confirmed by the following methods.

With CONSULT-II

NMEC0658S0101

CONSULT-II displays the malfunctioning component or system.
Examples: CAMSHAFT POSI SEN, MASS AIR FLOW SEN etc.

Without CONSULT-II

NMEC0658S0102

The number of blinks of the malfunction indicator lamp in the Diagnostic Test Mode II (Self-Diagnostic Results) indicates the DTC. Examples: 0101, 1501 etc.

- **Output of a DTC indicates a malfunction. However, Mode II does not indicate whether the malfunction is still occurring or has occurred in the past and has returned to normal.**
  CONSULT-II can identify malfunction status as shown below. Therefore, using CONSULT-II (if available) is recommended.

SELF DIAG RESULTS	
DTC RESULTS	TIME
NO DTC IS DETECTED. FURTHER TESTING MAY BE REQUIRED.	

SEF560X

A sample of CONSULT-II display is shown at above. The malfunction is displayed in “SELF-DIAGNOSTIC RESULTS” mode of CONSULT-II. Time data indicates how many times the vehicle was driven after the last detection of a malfunction.
If the malfunction is being detected currently, the time data will be “0”.

HOW TO ERASE DTC

NMEC0658S03

With CONSULT-II

NMEC0658S0301

1. If the ignition switch stays “ON” after repair work, be sure to turn ignition switch “OFF” once. Wait at least 5 seconds and then turn it “ON” (engine stopped) again.
2. Touch “ENGINE”.
3. Touch “SELF-DIAG RESULTS”.
4. Touch “ERASE”. (The DTC in the ECM will be erased.)

How to erase DTC (With CONSULT-II)

1. If the ignition switch stays "ON" after repair work, be sure to turn ignition switch "OFF" once. Wait at least 5 seconds and then turn it "ON" again.

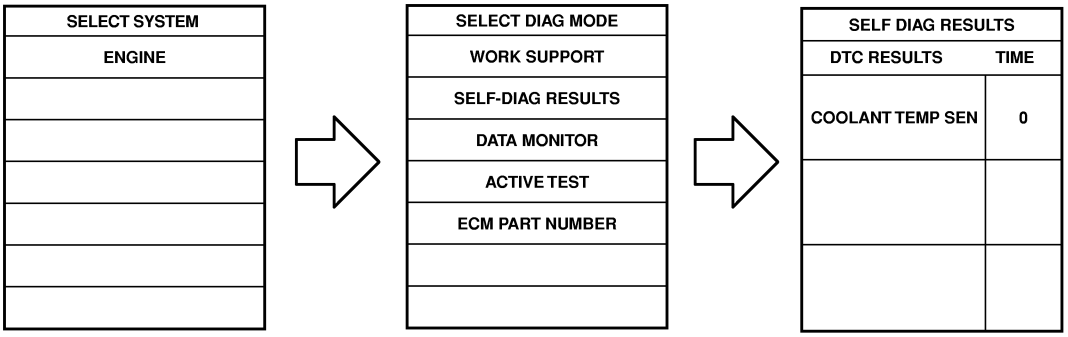

2. Turn **CONSULT-II** "ON" and touch "ENGINE".
3. Touch "SELF-DIAG RESULTS".
4. Touch "ERASE". (The DTC in the ECM will be erased.)

SEC329C

DTC in the ECM can be erased by selecting "ERASE" in the "SELF-DIAG RESULTS" mode with CONSULT-II.

No Tools

NMEC0658S0302

1. If the ignition switch stays "ON" after repair work, be sure to turn ignition switch "OFF" once. Wait at least 5 seconds and then turn it "ON" (engine stopped) again.
2. Change the diagnostic test mode from Mode II to Mode I by using the data link connector. (See EC-36.)

DTC in the ECM can be erased by changing the diagnostic test mode.

- **If the battery is disconnected, DTC will be lost after approx. 24 hours.**
- **Erasing DTC using CONSULT-II is easier and quicker than switching the diagnostic test mode using the data link connector.**
- **Be careful not to erase the stored memory before starting trouble diagnoses.**

NATS (NISSAN ANTI-THEFT SYSTEM)

NMEC0658S05

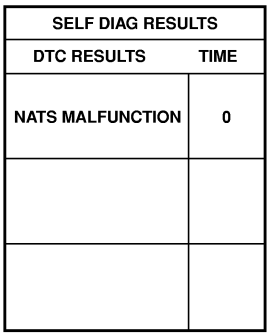

SEF252Z

- **If the security indicator lights up with the ignition switch in the "ON" position or "NATS MALFUNCTION" is displayed on "SELF-DIAG RESULTS" screen, perform self-diagnostic results mode with CONSULT-II using NATS program card. Refer to EL-134, "NATS (Nissan Anti-Theft System)".**
- **Confirm no self-diagnostic results of NATS is displayed before touching "ERASE" in "SELF-DIAG RESULTS" mode with CONSULT-II.**
- **When replacing ECM, initialization of NATS system and registration of all NATS ignition key IDs must be carried out with CONSULT-II using NATS program card.**
  Therefore, be sure to receive all keys from vehicle owner. Regarding the procedures of NATS initialization and NATS ignition key ID registration, refer to CONSULT-II operation manual, NATS.

Malfunction Indicator Lamp (MIL)

DESCRIPTION

NMEC0032

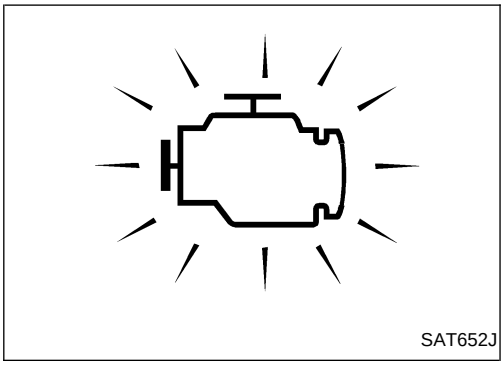

The MIL is located on the instrument panel.

1. The MIL will light up when the ignition switch is turned ON without the engine running. This is a bulb check.
- If the MIL does not light up, refer to EL-73, WARNING LAMPS or see EC-224.
2. When the engine is started, the MIL should go off.
   If the MIL remains on, the on board diagnostic system has detected an engine system malfunction.

On Board Diagnostic System Function

NMEC0032S01

The on board diagnostic system has the following four functions.

Diagnostic Test Mode	KEY and ENG. Status	Function	Explanation of Function
Mode I	Ignition switch in ON position Engine stopped	BULB CHECK	This function checks the MIL bulb for damage (blown, open circuit, etc.). If the MIL does not come on, check MIL circuit. (See EC-224.)
	Engine running	MALFUNCTION WARNING	This is a usual driving condition. When a malfunction is detected, the MIL will light up to inform the driver that a malfunction has been detected.
Mode II	Ignition switch in ON position Engine stopped	SELF-DIAGNOSTIC RESULTS	This function allows DTCs to be read.
	Engine running	HEATED OXYGEN SENSOR 1 (FRONT) MONITOR	This function allows the fuel mixture condition (lean or rich), monitored by heated oxygen sensor 1 (front), to be read.

MIL Flashing without DTC

NMEC0032S0102

If the ECM is in Diagnostic Test Mode II, MIL may flash when engine is running. In this case, check ECM diagnostic test mode following “How to Switch Diagnostic Test Modes”, EC-36.

How to switch the diagnostic test (function) modes, and details of the above functions are described later. (Refer to EC-37.)

How to Switch Diagnostic Test Modes

NMEC0032S07

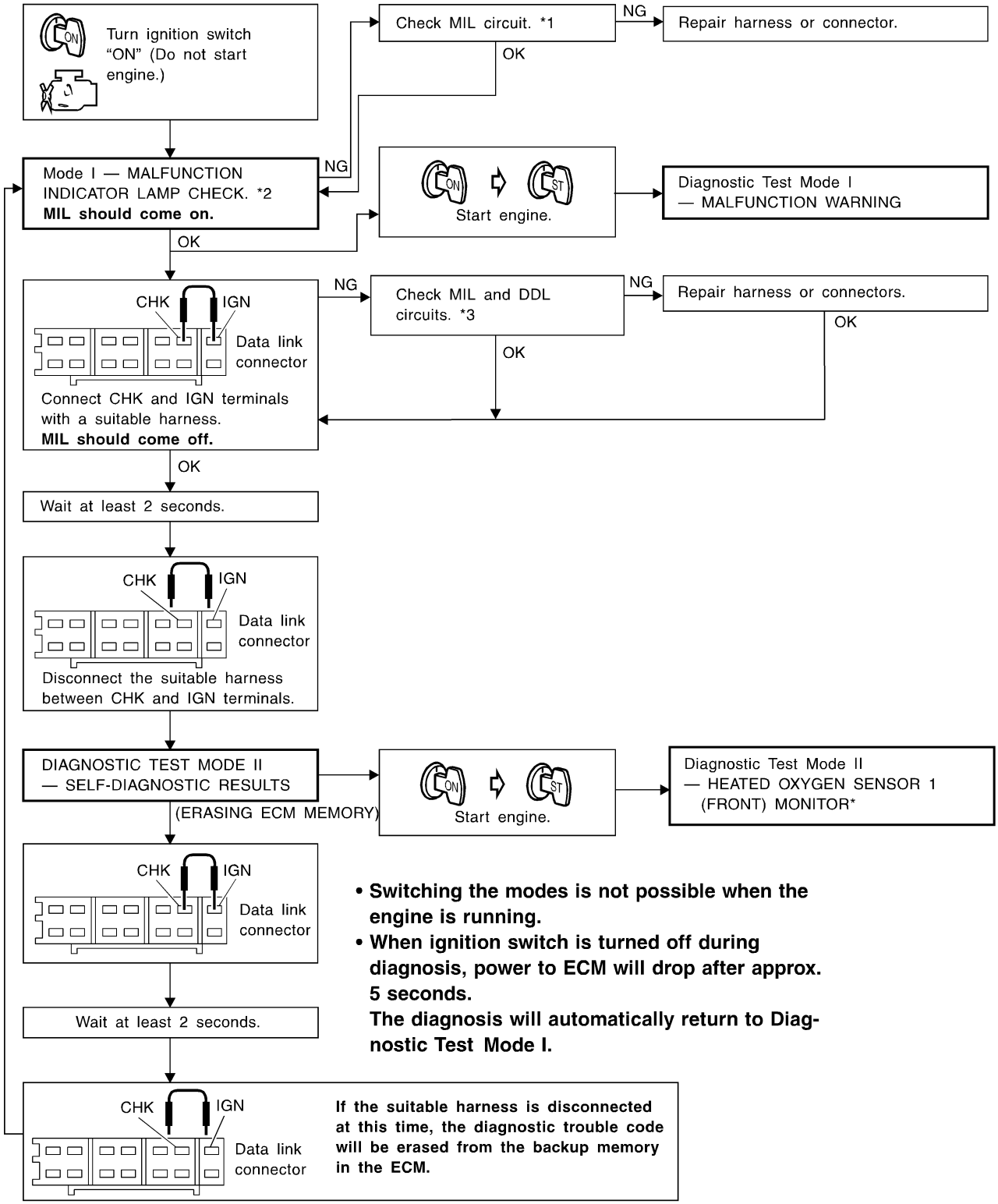

- **Switching the modes is not possible when the engine is running.**
- **When ignition switch is turned off during diagnosis, power to ECM will drop after approx. 5 seconds.**
  The diagnosis will automatically return to Diagnostic Test Mode I.

SEC330C

*1 EC-224 *2 EC-35 *3 EC-224

Diagnostic Test Mode I — Bulb Check

NMEC0032S03

In this mode, the MIL on the instrument panel should stay ON. If it remains OFF, check the bulb. Refer to EL-73, "WARNING LAMPS" or see EC-224.

Diagnostic Test Mode I — Malfunction Warning

NMEC0032S04

MIL	Condition
ON	When malfunction is detected.
OFF	No malfunction.

Diagnostic Test Mode II — Self-diagnostic Results

NMEC0032S08

In this mode, the DTC is indicated by the number of blinks of the MIL.
A DTC will be used as an example for how to read a code.

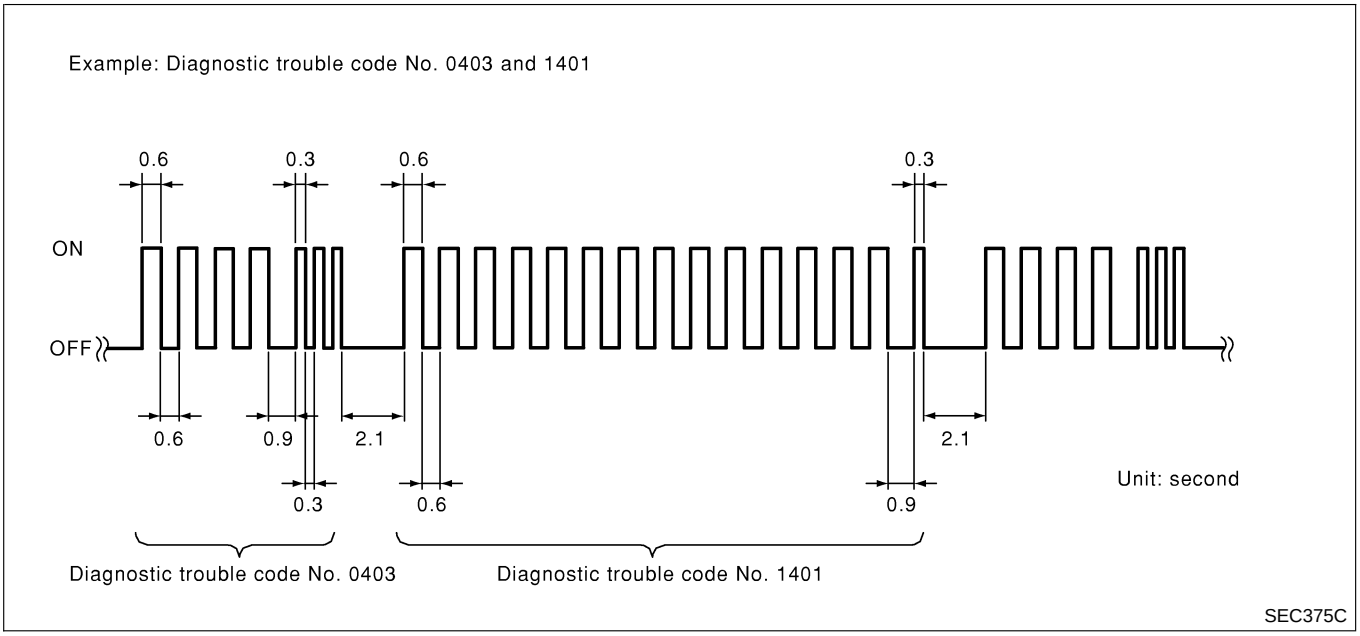

Long (0.6 second) blinking indicates the number of 1000th and 100th digits, and short (0.3 second) blinking indicates the number of tenth and single digits.
For example, the malfunction indicator lamp blinks four times for about 2.5 seconds (0.6 sec x 4 times) and then it blinks three times for about 1 second (0.3 sec x 3 times). This indicates the DTC "0403" and refers to the malfunction of the throttle position sensor.
In this way, all the detected malfunctions are classified by their diagnostic trouble code numbers. The DTC "0505" refer to no malfunction. (See TROUBLE DIAGNOSIS — INDEX, EC-4.)

How to Erase Diagnostic Test Mode II (Self-diagnostic results)

NMEC0032S0801

The DTC can be erased from the backup memory in the ECM when the diagnostic test mode is changed from Diagnostic Test Mode II to Diagnostic Test Mode I. (Refer to "How to Switch Diagnostic Test Modes", EC-36.)

- **If the battery is disconnected, the DTC will be lost from the backup memory after approx. 24 hours.**
- **Be careful not to erase the stored memory before starting trouble diagnoses.**

Diagnostic Test Mode II — Heated Oxygen Sensor 1 (Front) Monitor

=NMEC0032S09

In this mode, the MIL displays the condition of the fuel mixture (lean or rich) which is monitored by the heated oxygen sensor 1 (front).

MIL	Fuel mixture condition in the exhaust gas	Air fuel ratio feedback control condition
ON	Lean	Closed loop system
OFF	Rich	
*Remains ON or OFF	Any condition	Open loop system

*: Maintains conditions just before switching to open loop.

To check the heated oxygen sensor 1 (front) function, start engine in the Diagnostic Test Mode II and warm it up until engine coolant temperature indicator points to the middle of the gauge.
Next run engine at about 2,000 rpm for about 2 minutes under no-load conditions. Then make sure that the MIL comes ON more than 5 times within 10 seconds with engine running at 2,000 rpm under no-load.

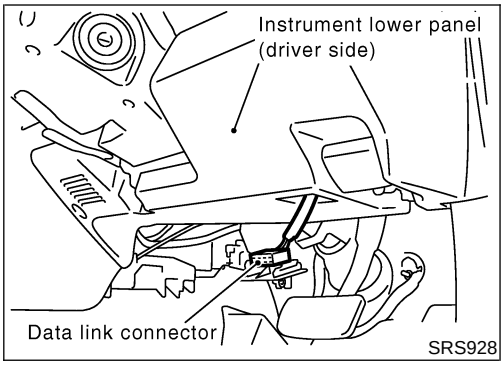

SRS928

CONSULT-II

=NMEC0034

CONSULT-II INSPECTION PROCEDURE

NMEC0034S01

1. Turn ignition switch OFF.
2. Connect “CONSULT-II” to data link connector, which is located under driver’s side dash panel.

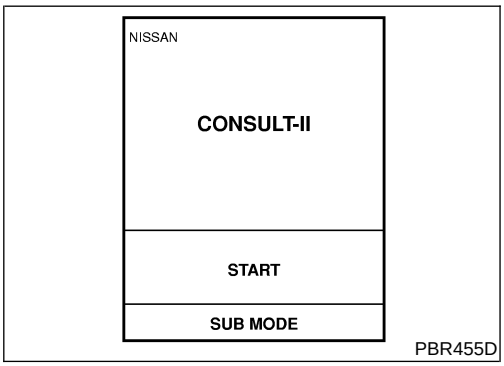

PBR455D

3. Turn ignition switch ON.
4. Touch “START”.

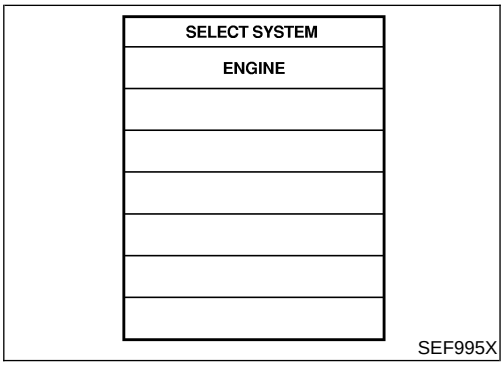

SEF995X

5. Touch “ENGINE”.

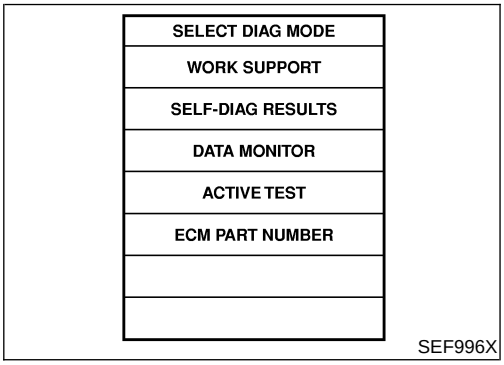

SEF996X

6. Perform each diagnostic test mode according to each service procedure.

For further information, see the CONSULT-II Operation Manual.

ENGINE CONTROL COMPONENT PARTS/CONTROL SYSTEMS APPLICATION

NMEC0034S02

Item			DIAGNOSTIC TEST MODE			
			WORK SUPPORT	SELF-DIAGNOSTIC RESULTS	DATA MONITOR	ACTIVE TEST
ENGINE CONTROL COMPONENT PARTS	INPUT	Camshaft position sensor		X	X	
		Mass air flow sensor		X	X	
		Engine coolant temperature sensor		X	X	X
		Heated oxygen sensor 1 (front)			X	
		Vehicle speed sensor			X	
		Throttle position sensor	X	X	X	
		Knock sensor		X		
		Ignition switch (start signal)			X	
		Air conditioner switch			X	
		Park/neutral position (PNP) switch			X	
		Power steering oil pressure switch			X	
		Battery voltage			X	
		Electrical load signal			X	
ENGINE CONTROL COMPONENT PARTS	OUTPUT	Injectors			X	X
		Power transistor (Ignition timing)	X	X (Ignition signal)	X	X
		IACV-AAC valve	X		X	X
		Air conditioner relay			X	
		Fuel pump relay	X		X	X
		Cooling fan relay		X	X	X
		Heated oxygen sensor 1 heater (front)			X	
		Intake valve timing control solenoid valve			X	X
		Wastegate valve control solenoid valve			X	X

X: Applicable

FUNCTION

NMEC0034S03

Diagnostic test mode	Function
Work support	This mode enables a technician to adjust some devices faster and more accurately by following the indications on the CONSULT-II unit.
Self-diagnostic results	Self-diagnostic results can be read and erased quickly.
Data monitor	Input/Output data in the ECM can be read.
Active test	Diagnostic Test Mode in which CONSULT-II drives some actuators apart from the ECMs and also shifts some parameters in a specified range.
ECM part number	ECM part number can be read.

WORK SUPPORT MODE

NMEC0034S04

WORK ITEM	CONDITION	USAGE
TP SW/TP SEN IDLE POSI ADJ	● FOLLOW THE BASIC INSPECTION IN THE SERVICE MANUAL.	When adjusting the idle throttle position.
IGNITION TIMING ADJ	● IGNITION TIMING FEEDBACK CONTROL WILL BE HELD BY TOUCHING "START". AFTER DOING SO, ADJUST IGNITION TIMING WITH A TIMING LIGHT BY TURNING THE CAMSHAFT POSITION SENSOR.	When adjusting initial ignition timing
IACV-AAC/V ADJ	SET ENGINE SPEED AT THE SPECIFIED VALUE UNDER THE FOLLOWING CONDITIONS. ● ENGINE WARMED UP ● NO-LOAD	When adjusting idle speed
FUEL PRESSURE RELEASE	● FUEL PUMP WILL STOP BY TOUCHING "START" DURING IDLING. CRANK A FEW TIMES AFTER ENGINE STALLS.	When releasing fuel pressure from fuel line
SELF-LEARNING CONT	● THE COEFFICIENT OF SELF-LEARNING CONTROL MIXTURE RATIO RETURNS TO THE ORIGINAL COEFFICIENT.	When clearing the coefficient of self-learning control value

SELF-DIAGNOSTIC MODE

NMEC0034S05

DTC

NMEC0034S0501

Regarding items of "DTC", refer to "TROUBLE DIAGNOSIS — INDEX" (See EC-4.)

DATA MONITOR MODE

NMEC0034S06

Monitored item [Unit]	ECM input signals	Main signals	Description	Remarks
CMPS-RPM (REF) [rpm]	○	○	● Indicates the engine speed computed from the REF signal (180° signal) of the camshaft position sensor.	
MAS AIR/FL SE [V]	○	○	● The signal voltage of the mass air flow sensor is displayed.	● When the engine is stopped, a certain value is indicated.
A/F ALPHA [%]		○	● The mean value of the air-fuel ratio feedback correction factor per cycle is indicated.	● When the engine is stopped, a certain value is indicated. ● This data also includes the data for the air-fuel ratio learning control.
COOLAN TEMP/S [°C] or [°F]	○	○	● The engine coolant temperature (determined by the signal voltage of the engine coolant temperature sensor) is displayed.	● When the engine coolant temperature sensor is open or short-circuited, ECM enters fail-safe mode. The engine coolant temperature determined by the ECM is displayed.
O2S1 [V]	○	○	● The signal voltage of the heated oxygen sensor 1 (front) is displayed.	
M/R F/C MNT [RICH/LEAN]	○	○	● Display of front heated oxygen sensor signal during air-fuel ratio feedback control: RICH ... means the mixture became "rich", and control is being affected toward a leaner mixture. LEAN ... means the mixture became "lean", and control is being affected toward a rich mixture.	● After turning ON the ignition switch, "RICH" is displayed until air-fuel mixture ratio feedback control begins. ● When the air-fuel ratio feedback is clamped, the value just before the clamping is displayed continuously.

CONSULT-II (Cont'd)

Monitored item [Unit]	ECM input signals	Main signals	Description	Remarks
VHCL SPEED SE [km/h] or [mph]	○	○	• The vehicle speed computed from the vehicle speed sensor signal is displayed.	
BATTERY VOLT [V]	○	○	• The power supply voltage of ECM is displayed.	
THRTL POS SEN [V]	○	○	• The throttle position sensor signal voltage is displayed.	
START SIGNAL [ON/OFF]	○	○	• Indicates [ON/OFF] condition from the starter signal.	• After starting the engine, [OFF] is displayed regardless of the starter signal.
CLSD THL POS [ON/OFF]	○	○	• Indicates idle position [ON/OFF] computed by ECM according to the throttle position sensor signal.	
AIR COND SIG [ON/OFF]	○	○	• Indicates [ON/OFF] condition of the air conditioner switch as determined by the air conditioner signal.	
P/N POSI SW [ON/OFF]	○	○	• Indicates [ON/OFF] condition from the park/neutral position (PNP) switch signal.	
PW/ST SIGNAL [ON/OFF]	○	○	• [ON/OFF] condition of the power steering oil pressure switch determined by the power steering oil pressure signal is indicated.	
LOAD SIGNAL [ON/OFF]	○	○	• Indicates [ON/OFF] condition from the electrical load signal and/or lighting switch. ON ... rear defogger is operating and/or lighting switch is on. OFF ... rear defogger is not operating and lighting switch is not on.	
INJ PULSE [msec]		○	• Indicates the actual fuel injection pulse width compensated by ECM according to the input signals.	• When the engine is stopped, a certain computed value is indicated.
IGN TIMING [BTDC]		○	• Indicates the ignition timing computed by ECM according to the input signals.	• When the engine is stopped, a certain value is indicated.
IACV-AAC/V [%]		○	• Indicates the IACV-AAC valve control value computed by ECM according to the input signals.	
W/G CONT S/V [%]		○	• Indicates the wastegate valve control solenoid valve control value computed by the ECM according to the input signals.	
AIR COND RLY [ON/OFF]		○	• The air conditioner relay control condition (determined by ECM according to the input signal) is indicated.	
FUEL PUMP RLY [ON/OFF]		○	• Indicates the fuel pump relay control condition determined by ECM according to the input signals.	

Monitored item [Unit]	ECM input signals	Main signals	Description	Remarks
INT/V TIM SOL [ON/OFF]		○	● The control condition of the intake valve timing control solenoid valve is indicated. ON ... Intake valve timing control is operating. OFF ... Intake valve timing control is not operating.	
COOLING FAN [HIGH/LOW/OFF]		○	● Indicates the control condition of the cooling fan (determined by ECM according to the input signal). HIGH ... High speed operation LOW ... Low speed operation OFF ... Stop	
Voltage [V]			● Voltage measured by the voltage probe.	
Frequency [msec] or [Hz] or [%]			● Pulse width, frequency or duty cycle measured by the pulse probe.	● Only "#" is displayed if item is unable to be measured. ● Figures with "#"s are temporary ones. They are the same figures as an actual piece of data which was just previously measured.

NOTE:

- Any monitored item that does not match the vehicle being diagnosed is deleted from the display automatically.

ACTIVE TEST MODE

NMEC0034S07

TEST ITEM	CONDITION	JUDGEMENT	CHECK ITEM (REMEDY)
FUEL INJECTION	● Engine: Return to the original trouble condition ● Change the amount of fuel injection using CONSULT-II.	If trouble symptom disappears, see CHECK ITEM.	● Harness and connector ● Fuel injectors ● Front heated oxygen sensor
IGNITION TIMING	● Engine: Return to the original trouble condition ● Timing light: Set ● Retard the ignition timing using CONSULT-II.	If trouble symptom disappears, see CHECK ITEM.	● Adjust initial ignition timing
IACV-AAC/V OPENING	● Engine: After warming up, idle the engine. ● Change the IACV-AAC valve opening percent using CONSULT-II.	Engine speed changes according to the opening percent.	● Harness and connector ● IACV-AAC valve
POWER BALANCE	● Engine: After warming up, idle the engine. ● A/C switch "OFF" ● Shift lever "N" ● Cut off each injector signal one at a time using CONSULT-II.	Engine runs rough or dies.	● Harness and connector ● Compression ● Injectors ● Power transistor ● Spark plugs ● Ignition coils
COOLING FAN	● Ignition switch: ON ● Turn the cooling fan "HIGH", "LOW" and "OFF" using CONSULT-II.	Cooling fan moves and stops.	● Harness and connector ● Cooling fan motor ● Cooling fan relay
ENG COOLANT TEMP	● Engine: Return to the original trouble condition ● Change the engine coolant temperature using CONSULT-II.	If trouble symptom disappears, see CHECK ITEM.	● Harness and connector ● Engine coolant temperature sensor ● Fuel injectors

TEST ITEM	CONDITION	JUDGEMENT	CHECK ITEM (REMEDY)
FUEL PUMP RELAY	● Ignition switch: ON (Engine stopped) ● Turn the fuel pump relay "ON" and "OFF" using CONSULT-II and listen to operating sound.	Fuel pump relay makes the operating sound.	● Harness and connector ● Fuel pump relay
VALVE TIMING SOL	● Ignition switch: ON ● Turn solenoid valve "ON" and "OFF" with CONSULT-II and listen to operating sound.	Solenoid valve makes an operating sound.	● Harness and connector ● Intake valve timing control solenoid valve
TURBOCHARGE PRES	● Ignition switch: ON ● Change the wastegate valve control solenoid valve opening percent using CONSULT-II.	Wastegate valve control solenoid valve makes an operating sound.	● Harness and connector ● Wastegate valve control solenoid valve

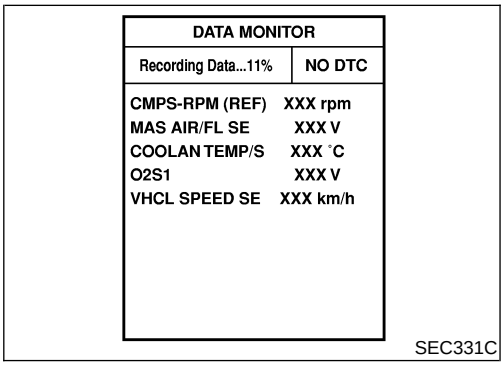

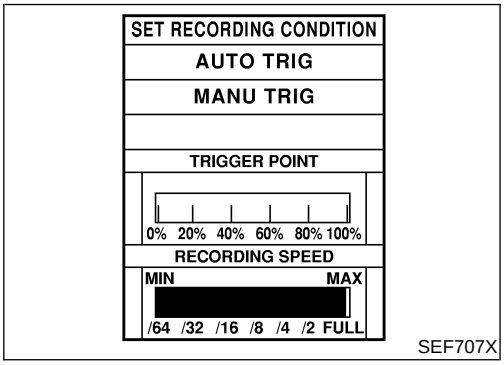

REAL TIME DIAGNOSIS IN DATA MONITOR MODE (RECORDING VEHICLE DATA)

NMEC0034S10

CONSULT-II has two kinds of triggers and they can be selected by touching "SETTING" in "DATA MONITOR" mode.

1) "AUTO TRIG" (Automatic trigger):

- The malfunction will be identified on the CONSULT-II screen in real time.
  In other words, DTC and malfunction item will be displayed if the malfunction is detected by ECM.
  At the moment a malfunction is detected by ECM, "MONITOR" in "DATA MONITOR" screen is changed to "Recording Data ... xx%" as shown at left, and the data after the malfunction detection is recorded. Then when the percentage reached 100%, "REAL-TIME DIAG" screen is displayed. If "STOP" is touched on the screen during " Recording Data ... xx%", "REAL-TIME DIAG" screen is also displayed.
  The recording time after the malfunction detection and the recording speed can be changed by "TRIGGER POINT" and "Recording Speed". Refer to CONSULT-II OPERATION MANUAL.

2) "MANU TRIG" (Manual trigger):

- DTC and malfunction item will not be displayed automatically on CONSULT-II screen even though a malfunction is detected by ECM.
  DATA MONITOR can be performed continuously even though a malfunction is detected.

Use these triggers as follows:

1) "AUTO TRIG"

- While trying to detect the DTC by performing the "DTC Confirmation Procedure", be sure to select to "DATA MONITOR (AUTO TRIG)" mode. You can confirm the malfunction at the moment it is detected.
- While narrowing down the possible causes, CONSULT-II should be set in "DATA MONITOR (AUTO TRIG)" mode, especially in case the incident is intermittent.

When you are inspecting the circuit by gently shaking (or twisting) the suspicious connectors, components and harness in the "DTC Confirmation Procedure", the moment a malfunction is found the DTC will be displayed. (Refer to GI-21, "Incident Simulation Tests".

2) "MANU TRIG"

- If the malfunction is displayed as soon as "DATA MONITOR" is selected, reset CONSULT-II to "MANU TRIG". By selecting "MANU TRIG" you can monitor and store the data. The data can be utilized for further diagnosis, such as a comparison with the value for the normal operating condition.

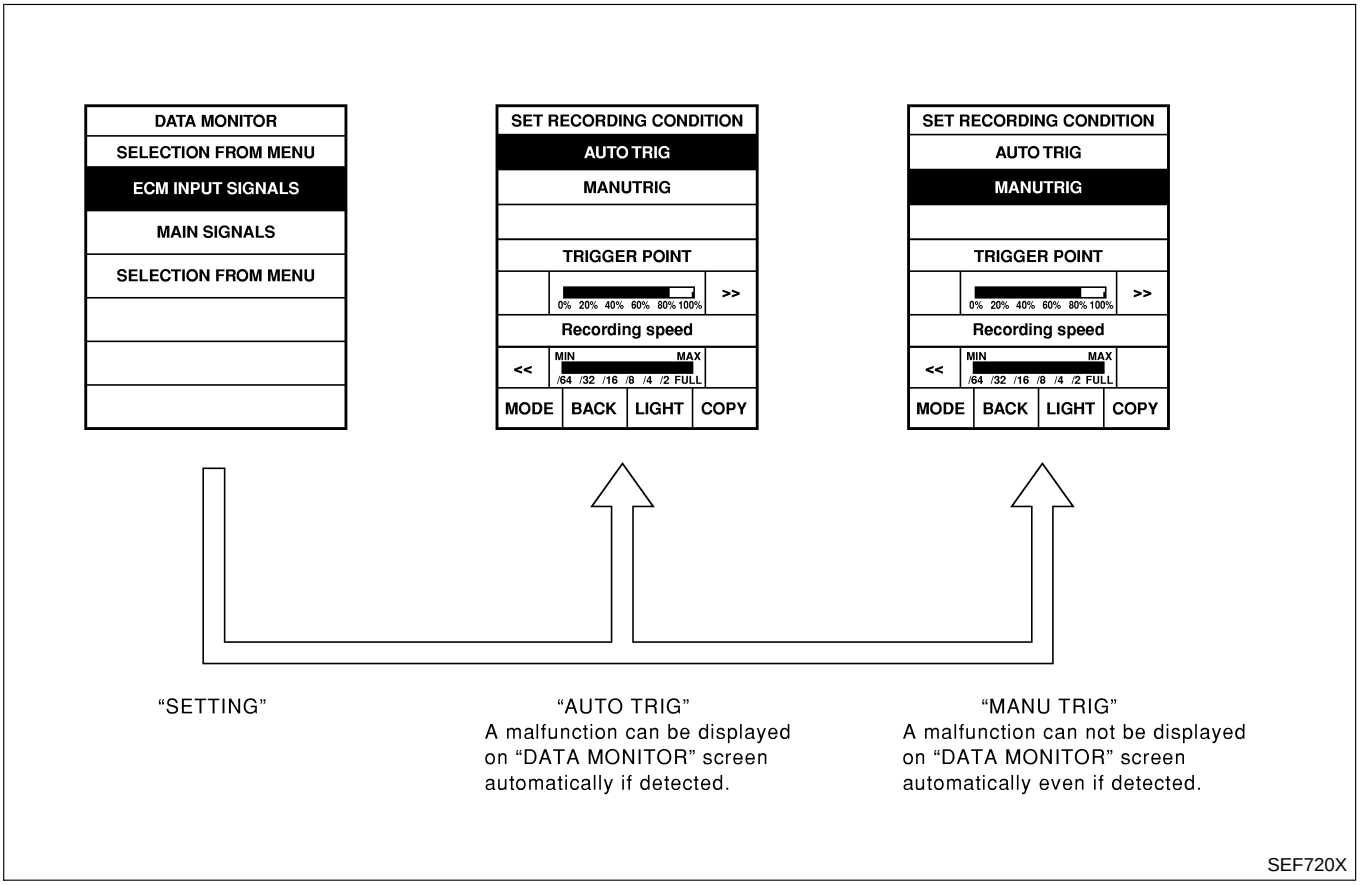

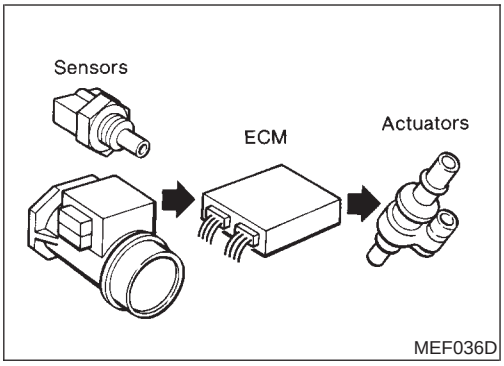

MEF036D

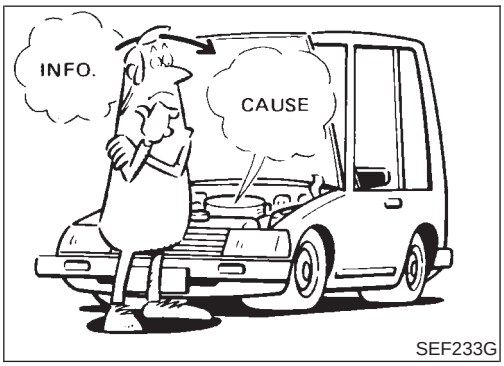

SEF233G

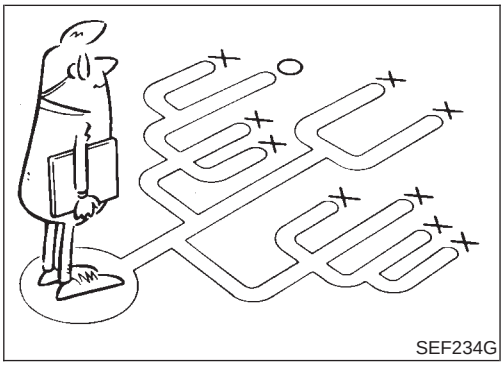
SEF234G

KEY POINTS

WHAT ..... Vehicle & engine model
WHEN ..... Date, Frequencies
WHERE..... Road conditions
HOW ..... Operating conditions, Weather conditions, Symptoms

SEF907L

Introduction

NMEC0036

The engine has an ECM to control major systems such as fuel control, ignition control, idle air control system, etc. The ECM accepts input signals from sensors and instantly drives actuators. It is essential that both input and output signals are proper and stable. At the same time, it is important that there are no problems such as vacuum leaks, fouled spark plugs, or other problems with the engine.

It is much more difficult to diagnose a problem that occurs intermittently rather than continuously. Most intermittent problems are caused by poor electric connections or improper wiring. In this case, careful checking of suspected circuits may help prevent the replacement of good parts.

A visual check only may not find the cause of the problems. A road test with CONSULT-II or a circuit tester connected should be performed. Follow the “Work Flow” on EC-48.

Before undertaking actual checks, take a few minutes to talk with a customer who approaches with a driveability complaint. The customer can supply good information about such problems, especially intermittent ones. Find out what symptoms are present and under what conditions they occur. A “Diagnostic Worksheet” like the example on next page should be used.

Start your diagnosis by looking for “conventional” problems first. This will help troubleshoot driveability problems on an electronically controlled engine vehicle.

DIAGNOSTIC WORKSHEET

NMEC0036S01

There are many operating conditions that lead to the malfunction of engine components. A good grasp of such conditions can make trouble-shooting faster and more accurate.

In general, each customer feels differently about a problem. It is important to fully understand the symptoms or conditions for a customer complaint.

Utilize a diagnostic worksheet like the one on the next page in order to organize all the information for troubleshooting.

Worksheet Sample

NMEC0036S0101

Customer name MR/MS		Model & Year	VIN
Engine #		Trans.	Mileage
Incident Date		Manuf. Date	In Service Date
Fuel and fuel filler cap		☐ Vehicle ran out of fuel causing misfire ☐ Fuel filler cap was left off or incorrectly screwed on.	
Symptoms	☐ Startability	☐ Impossible to start ☐ No combustion ☐ Partial combustion ☐ Partial combustion affected by throttle position ☐ Partial combustion NOT affected by throttle position ☐ Possible but hard to start ☐ Others [ ]	
	☐ Idling	☐ No fast idle ☐ Unstable ☐ High idle ☐ Low idle ☐ Others [ ]	
	☐ Driveability	☐ Stumble ☐ Surge ☐ Knock ☐ Lack of power ☐ Intake backfire ☐ Exhaust backfire ☐ Others [ ]	
	☐ Engine stall	☐ At the time of start ☐ While idling ☐ While accelerating ☐ While decelerating ☐ Just after stopping ☐ While loading	
Incident occurrence		☐ Just after delivery ☐ Recently ☐ In the morning ☐ At night ☐ In the daytime	
Frequency		☐ All the time ☐ Under certain conditions ☐ Sometimes	
Weather conditions		☐ Not affected	
	Weather	☐ Fine ☐ Raining ☐ Snowing ☐ Others [ ]	
	Temperature	☐ Hot ☐ Warm ☐ Cool ☐ Cold ☐ Humid ˚F	
Engine conditions		☐ Cold ☐ During warm-up ☐ After warm-up Engine speed 0 2,000 4,000 6,000 8,000 rpm	
Road conditions		☐ In town ☐ In suburbs ☐ Highway ☐ Off road (up/down)	
Driving conditions		☐ Not affected ☐ At starting ☐ While idling ☐ At racing ☐ While accelerating ☐ While cruising ☐ While decelerating ☐ While turning (RH/LH) Vehicle speed 0 10 20 30 40 50 60 MPH	
Malfunction indicator lamp		☐ Turned on ☐ Not turned on	

MTBL0017

Work Flow

NMEC0037

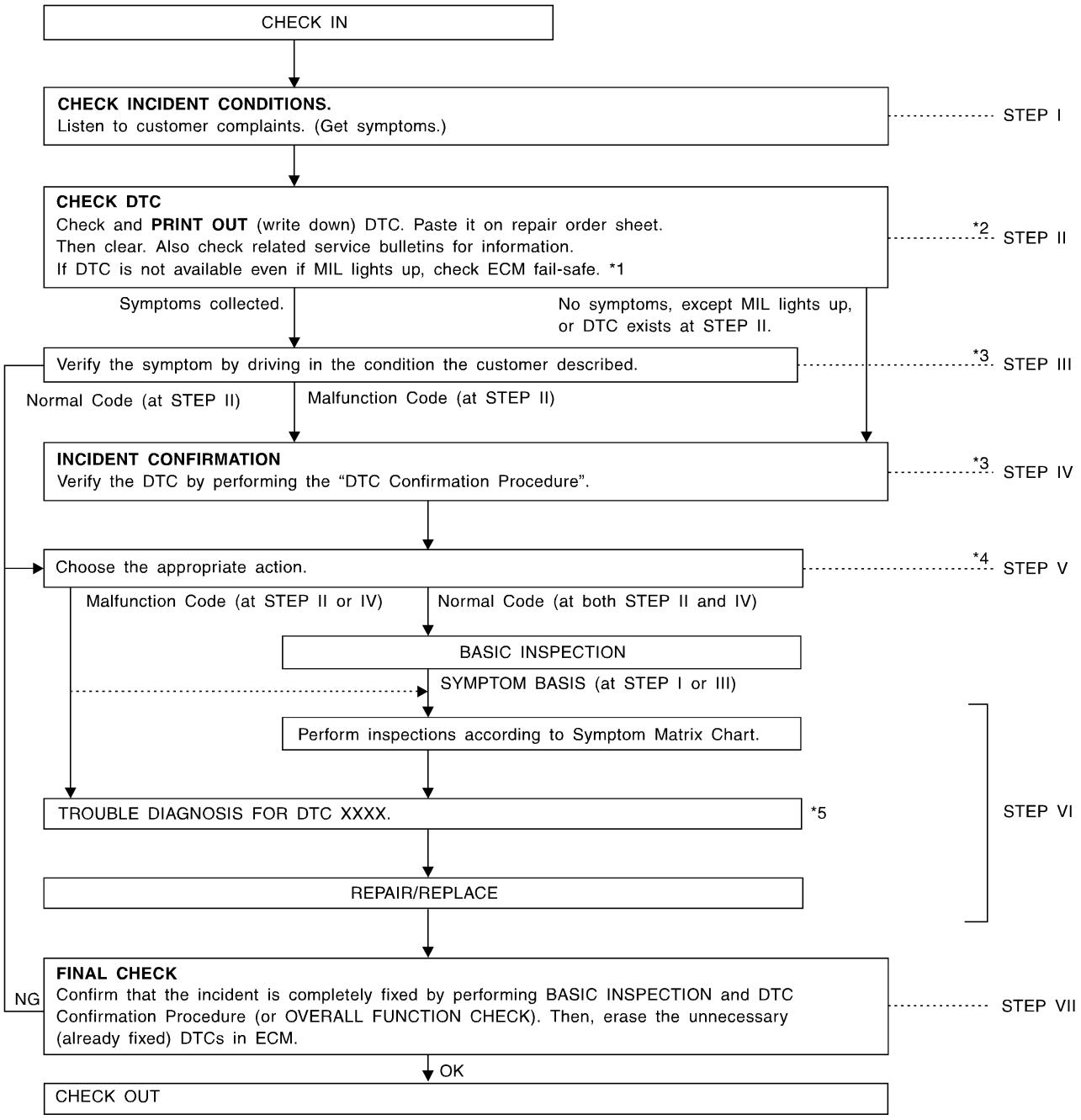

SEC332C

*1 EC-67

*2 If time data of "SELF-DIAG RESULTS" is other than "0" or "[1t]", perform "TROUBLE DIAGNOSIS FOR INTERMITTENT INCIDENT", EC-82.

*3 If the incident cannot be verified, perform "TROUBLE DIAGNOSIS FOR INTERMITTENT INCIDENT", EC-82.

*4 If the on board diagnostic system cannot be performed, check main power supply and ground circuit. Refer to "TROUBLE DIAGNOSIS FOR POWER SUPPLY", EC-83.

*5 If malfunctioning part cannot be detected, perform "TROUBLE DIAGNOSIS FOR INTERMITTENT INCIDENT", EC-82.

DESCRIPTION FOR WORK FLOW

NMEC0037S01

STEP	DESCRIPTION
STEP I	Get detailed information about the conditions and the environment when the incident/symptom occurred using the "DIAGNOSTIC WORK SHEET", EC-47.
STEP II	Before confirming the concern, check and write down (print out using CONSULT-II) then erase the DTC (Refer to EC-33.) The DTC can be used when duplicating the incident at STEP III & IV. If the incident cannot be verified, perform "TROUBLE DIAGNOSIS FOR INTERMITTENT INCIDENT", EC-82. Study the relationship between the cause, specified by DTC, and the symptom described by the customer. (The "Symptom Matrix Chart" will be useful. See EC-68.) Also check related service bulletins for information.
STEP III	Try to confirm the symptom and under what conditions the incident occurs. The "DIAGNOSTIC WORK SHEET" is useful to verify the incident. Connect CONSULT-II to the vehicle in DATA MONITOR (AUTO TRIG) mode and check real time diagnosis results. If the incident cannot be verified, perform "TROUBLE DIAGNOSIS FOR INTERMITTENT INCIDENT", EC-82. If the malfunction code is detected, skip STEP IV and perform STEP V.
STEP IV	Try to detect the DTC by driving in (or performing) the "DTC Confirmation Procedure". Check and read the DTC by using CONSULT-II. During the DTC verification, be sure to connect CONSULT-II to the vehicle in DATA MONITOR (AUTO TRIG) mode and check real time diagnosis results. If the incident cannot be verified, perform "TROUBLE DIAGNOSIS FOR INTERMITTENT INCIDENT", EC-82. In case the "DTC Confirmation Procedure" is not available, perform the "Overall Function Check" instead. The DTC cannot be displayed by this check, however, this simplified "check" is an effective alternative. The "NG" result of the "Overall Function Check" is the same as the DTC detection.
STEP V	Take the appropriate action based on the results of STEP I through IV. If the malfunction code is indicated, proceed to TROUBLE DIAGNOSIS FOR DTC XXXX. If the normal code is indicated, proceed to the BASIC INSPECTION. (Refer to EC-50.) Then perform inspections according to the Symptom Matrix Chart. (Refer to EC-68.)
STEP VI	Identify where to begin diagnosis based on the relationship study between symptom and possible causes. Inspect the system for mechanical binding, loose connectors or wiring damage using (tracing) "Harness Layouts". Gently shake the related connectors, components or wiring harness with CONSULT-II set in "DATA MONITOR (AUTO TRIG)" mode. Check the voltage of the related ECM terminals or monitor the output data from the related sensors with CONSULT-II. Refer to EC-72, 76. The "Diagnostic Procedure" in EC section contains a description based on open circuit inspection. A short circuit inspection is also required for the circuit check in the Diagnostic Procedure. For details, refer to GI-23, "Circuit Inspection". Repair or replace the malfunction parts. If malfunctioning part cannot be detected, perform "TROUBLE DIAGNOSIS FOR INTERMITTENT INCIDENT", EC-82.
STEP VII	Once you have repaired the circuit or replaced a component, you need to run the engine in the same conditions and circumstances which resulted in the customer's initial complaint. Perform the "DTC Confirmation Procedure" and confirm the normal code [DTC No. 0505] is detected. If the incident is still detected in the final check, perform STEP VI by using a different method from the previous one. Before returning the vehicle to the customer, be sure to erase the unnecessary (already fixed) DTC in ECM. (Refer to EC-33.)

Basic Inspection

NMEC0038

Precaution:
Perform Basic Inspection without electrical or mechanical loads applied;

- Headlamp switch is OFF,
- Air conditioner switch is OFF,
- Rear window defogger switch is OFF,
- Steering wheel is in the straight-ahead position, etc.

1	INSPECTION START

1. Check service records for any recent repairs that may indicate a related problem, or a current need for scheduled maintenance.
2. Open engine hood and check the following:

- Harness connectors for improper connections
- Vacuum hoses for splits, kinks and improper connections
- Wiring for improper connections, pinches and cuts
- Air cleaner clogging
- Hoses and ducts for leaks

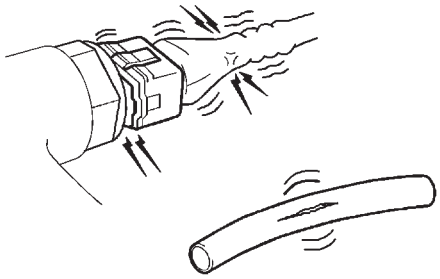

SEF983U

3. Make sure that no DTC is displayed. Refer to “Diagnostic Trouble Code (DTC)”, EC-33.

OK or NG

OK (With CONSULT-II) ▶	GO TO 2.
OK (Without CONSULT-II) ▶	GO TO 6.
NG (With CONSULT-II) ▶	1. Repair or replace. 2. GO TO 2.
NG (Without CONSULT-II) ▶	1. Repair or replace. 2. GO TO 6.

2	CHECK FI CAM FUNCTION

With CONSULT-II

1. Turn ignition switch "ON".
2. Select "COOLAN TEMP/S" in "DATA MONITOR" mode with CONSULT-II.

DATA MONITOR	
MONITOR	NO DTC
COOLAN TEMP/S	XXX °C

SEF013Y

3. Start engine and warm it up.
4. When engine coolant temperature is 75 to 85°C (167 to 185°F), check that mark A (Short line) on FI cam aligns with roller center.

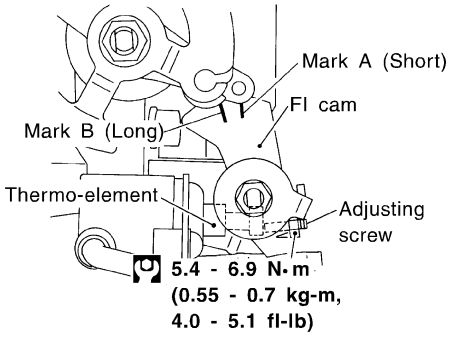

SEC333C

OK or NG

OK	▶	GO TO 3.
NG	▶	1. Check FI cam. Refer to "Fast Idle Cam (FIC)", EC-29. 2. GO TO 3.

3	CHECK IGNITION TIMING

With CONSULT-II

1. Start engine and warm it up to normal operating temperature.
2. Select "IGNITION TIMING ADJ" in "WORK SUPPORT" mode with CONSULT-II.

IGNITION TIMING ADJ
IGNITION TIMING FEEDBACK CONTROL WILL BE HELD BY TOUCHING START. AFTER DOING SO, ADJUST IGNITION TIMING WITH A TIMING LIGHT BY TURNING THE CAMSHAFT POSITION SENSOR.

PEF546N

3. Touch "START".
4. Rev engine (2,000 to 3,000 rpm) two or three times under no-load, then run engine at idle speed.
5. Check ignition timing at idle using a timing light.

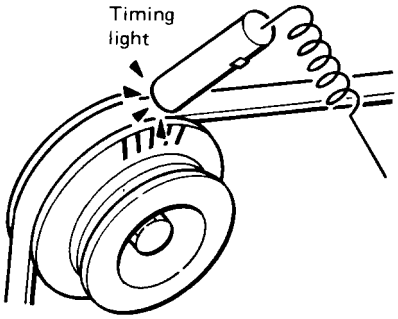

SEF284G

Ignition timing:
M/T 15°±2° BTDC
A/T 15°±2° BTDC (in "P" or "N" position)

OK or NG

OK	▶	GO TO 4.
NG	▶	1. Adjust ignition timing to the specified value by turning camshaft position sensor after loosening bolts which secure camshaft position sensor. 2. GO TO 4.

4	CHECK BASE IDLE SPEED

With CONSULT-II

1. Select "IACV-AAC/V ADJ" in "WORK SUPPORT" mode and touch "START".

IACV-AAC/V ADJ	
ADJ MONITOR	
CKPS-RPM	XXX rpm
CONDITION SETTING	
IACV-ACC/V	FIXED
MONITOR	
COOLAN TEMP/S	XXX°C
CLSD THL POS	ON

SEC334C

2. Rev engine (2,000 to 3,000 rpm) two or three times under no-load, then run engine at idle speed.
3. Read idle speed.

750±50 rpm (in "P" or "N" position)

OK or NG

OK (A/T models)	▶	GO TO 10.
OK (M/T models)	▶	GO TO 18.
NG	▶	GO TO 5.

5	ADJUST BASE IDLE SPEED

With CONSULT-II

Adjust idle speed by turning idle speed adjust screw.

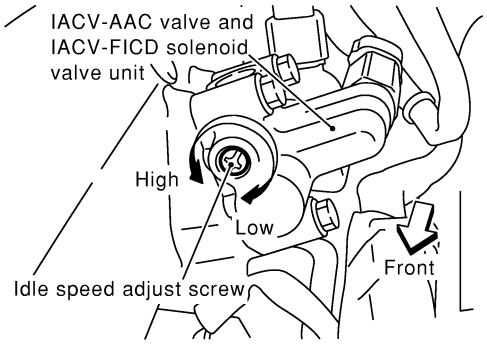

SEC335C

750±50 rpm (in "P" or "N" position)

A/T	▶	GO TO 10.
M/T	▶	GO TO 18.

6	CHECK FI CAM FUNCTION

Without CONSULT-II

1. Start engine and warm it up.
2. Check voltage between ECM terminal 18 (Engine coolant temperature sensor signal) and ground.

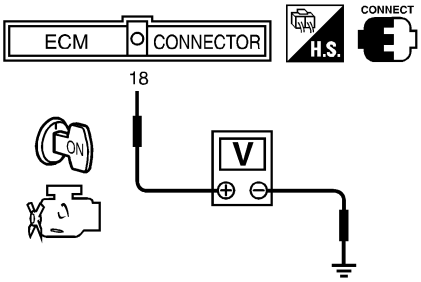

SEC325C

3. When the voltage is between 0.55 to 0.68V, check that mark A (Short line) on FI cam aligns with roller center.

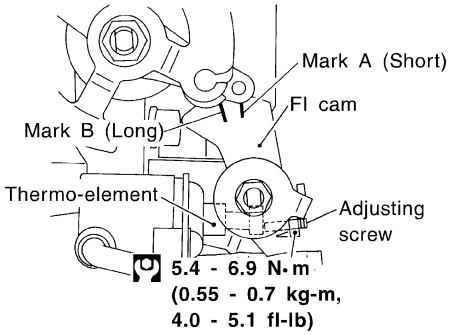

SEC333C

OK or NG

OK	▶	GO TO 7.
NG	▶	1. Check FI cam. Refer to "Fast Idle Cam (FIC)", EC-29. 2. GO TO 7.

7	CHECK IGNITION TIMING

Without CONSULT-II

1. Start engine and warm it up to normal operating temperature.
2. Turn ignition switch "OFF".
3. Disconnect throttle position sensor harness connector.

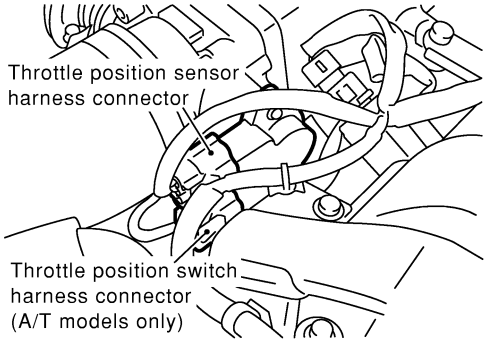

SEC336C

4. Start engine.
5. Rev engine (2,000 to 3,000 rpm) two or three times under no-load, then run engine at idle speed.
6. Check ignition timing at idle using a timing light.

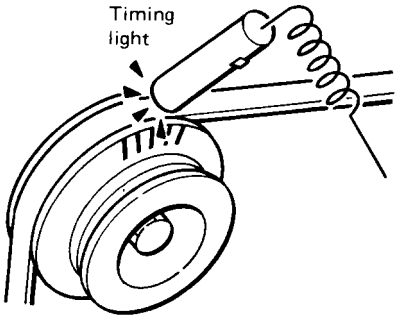

SEF284G

Ignition timing:
M/T 15°±2° BTDC
A/T 15°±2° BTDC (in "P" or "N" position)

OK or NG

OK	▶	GO TO 8.
NG	▶	1. Adjust ignition timing to the specified value by turning camshaft position sensor after loosening bolts which secure camshaft position sensor. 2. GO TO 8.

8	CHECK BASE IDLE SPEED

Without CONSULT-II

1. Rev engine (2,000 to 3,000 rpm) two or three times under no-load, then run engine at idle speed.
2. Check idle speed.
   750±50 rpm (in "P" or "N" position)

OK or NG

OK (A/T models)	▶	GO TO 14.
OK (M/T models)	▶	GO TO 21.
NG	▶	GO TO 9.

9	ADJUST BASE IDLE SPEED

Without CONSULT-II
Adjust idle speed by turning idle speed adjust screw.

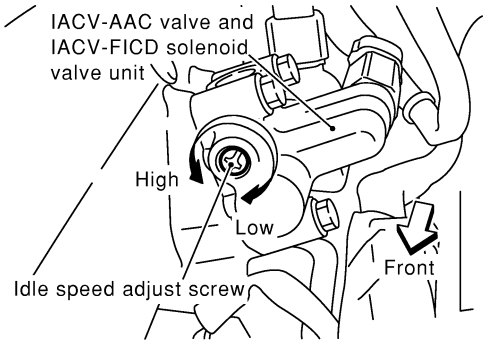

SEC335C

750±50 rpm (in "P" or "N" position)

A/T	▶	GO TO 14.
M/T	▶	GO TO 21.

10	CHECK THROTTLE POSITION SWITCH CLOSED POSITION (FOR A/T MODELS)

With CONSULT-II
1. Touch "BACK". (Cancel "IACV-AAC/V ADJ" in "WORK SUPPORT" mode.)
2. Stop engine and turn ignition switch "ON".
3. Select "A/T" and then select "CLOSED THL/SW" in "DATA MONITOR" mode with CONSULT-II.
4. Read "CLOSED THL/SW" signal under the following conditions.
   Insert a 0.75 mm (0.0295 in) and 0.85 mm (0.0335 in) feeler gauge alternately between stopper and throttle drum as shown in the figure and check the signal.

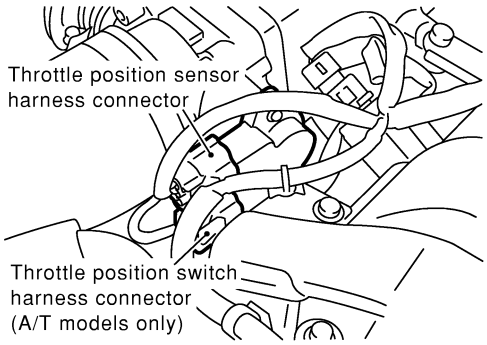

SEC336C

DATA MONITOR	
MONITOR	NO DTC
CLOSED THL/SW	ON

SEF059Y

"CLSD THL/P SW" signal should remain "ON" while inserting 0.75 mm (0.0295 in) feeler gauge.
"CLSD THL/P SW" signal should remain "OFF" while inserting 0.85 mm (0.0335 in) feeler gauge.

OK or NG

OK	▶	GO TO 24.
NG	▶	GO TO 11.

11	ADJUST THROTTLE POSITION SWITCH CLOSED POSITION-I (FOR A/T MODELS)

With CONSULT-II

1. Loosen throttle position sensor fixing bolts.
2. Insert 0.75 mm (0.0295 in) feeler gauge between stopper and throttle drum as shown in the figure.

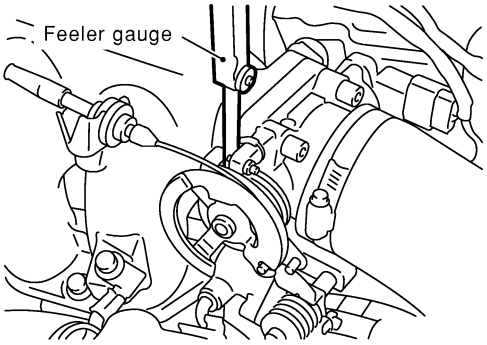

SEC350C

3. Turn throttle position sensor body counterclockwise until "CLOSED THL/SW" signal switches to "OFF".

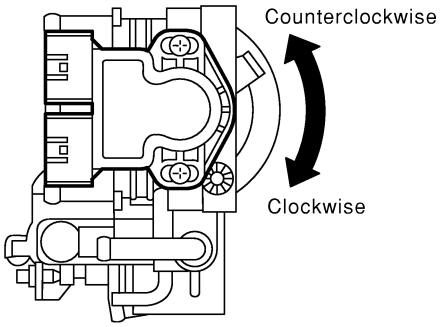

SEC351C

DATA MONITOR	
MONITOR	NO DTC
CLOSED THL/SW	OFF

SEF060Y

▶	GO TO 12.

12	ADJUST THROTTLE POSITION SWITCH CLOSED POSITION-II (FOR A/T MODELS)

With CONSULT-II

1. Temporarily tighten sensor body fixing bolts as follows.
   Gradually move the sensor body clockwise and stop it when "CLOSED THL/SW" signal switches from "OFF" to "ON", then temporarily tighten sensor body fixing bolts.

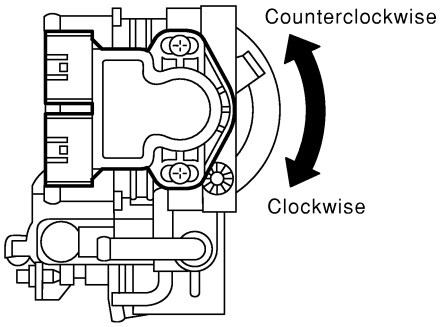

SEC351C

2. Make sure two or three times that the signal is "ON" when the throttle valve is closed and "OFF" when it is opened.
3. Remove 0.75 mm (0.0295 in) feeler gauge then insert 0.85 mm (0.0335 in) feeler gauge.
4. Make sure two or three times that the signal remains "OFF" when the throttle valve is closed.
5. Tighten throttle position sensor.
6. Check the "CLOSED THL/SW" signal again.
   The signal remains "OFF" while closing throttle valve.

OK or NG

OK	▶	GO TO 13.
NG	▶	GO TO 11.

13	RESET THROTTLE POSITION SENSOR IDLE POSITION MEMORY (FOR A/T MODELS)

With CONSULT-II

NOTE:
Always warm up engine to normal operating tempearture. If engine is cool, the throttle position sensor idle position memory will not be reset correctly.

1. Start engine.
2. Warm up engine to normal operating temperature.
3. Select "ENGINE" and then select "CLSD THL POS" in "DATA MONITOR" mode.
4. Stop engine. (Turn ignition switch "OFF".)
5. Turn ignition switch "ON" and wait at least 5 seconds.

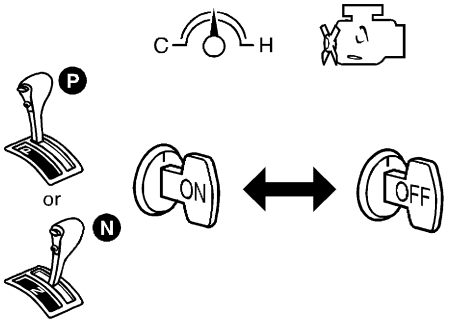

SEF864V

6. Turn ignition switch "OFF" and wait at least 5 seconds.
7. Repeat steps 5 and 6 until "CLSD THL POS" signal changes to "ON".

	▶	GO TO 24.

14	CHECK THROTTLE POSITION SWITCH CLOSED POSITION (FOR A/T MODELS)

Without CONSULT-II

1. Turn ignition switch "OFF".
2. Check continuity between closed throttle position switch terminals 4 and 5 under the following conditions.

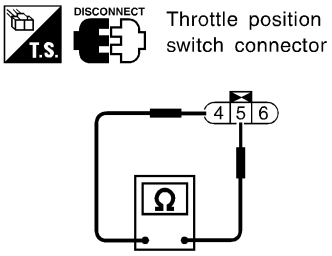

SEF711X

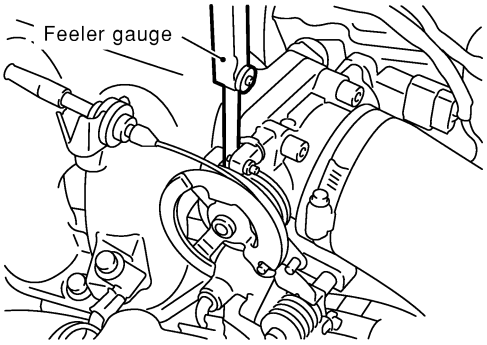

SEC350C

"Continuity should exist" while inserting 0.75 mm (0.0295 in) feeler gauge.
"Continuity should not exist" while inserting 0.85 mm (0.0335 in) feeler gauge.

OK or NG

OK	▶	GO TO 24.
NG	▶	GO TO 15.

15	ADJUST THROTTLE POSITION SWITCH CLOSED POSITION-I (FOR A/T MODELS)

Without CONSULT-II

1. Loosen throttle position sensor fixing bolts.
2. Insert 0.75 mm (0.0295 in) feeler gauge between stopper and throttle drum as shown in the figure.

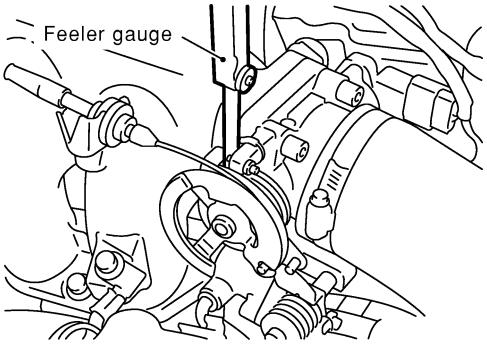

SEC350C

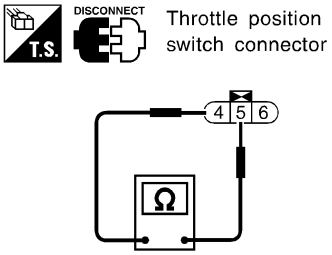

SEF711X

3. Turn throttle position sensor body counterclockwise until "CLOSED THL/SW" signal switches to "OFF".

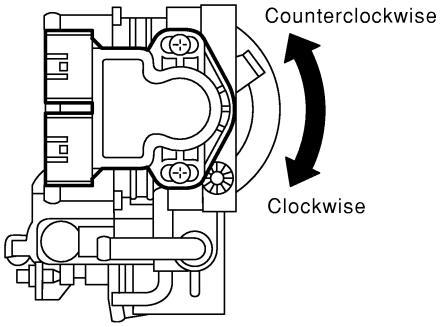

SEC351C

▶	GO TO 16.

16	ADJUST THROTTLE POSITION SWITCH CLOSED POSITION-II (FOR A/T MODELS)

Without CONSULT-II

1. Temporarily tighten sensor body fixing bolts as follows.
   Gradually move the sensor body clockwise and stop it when the continuity comes to exist, then temporarily tighten sensor body fixing bolts.

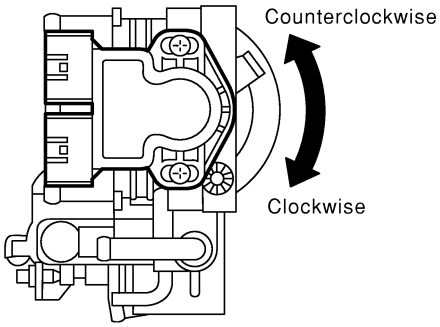

SEC351C

2. Make sure two or three times that the continuity exists when the throttle valve is closed and continuity does not exist when it is opened.
3. Remove 0.75 mm (0.0295 in) feeler gauge then insert 0.85 mm (0.0335 in) feeler gauge.
4. Make sure two or three times that the continuity does not exist when the throttle valve is closed.
5. Tighten throttle position sensor.
6. Check the continuity again.
   Continuity does not exist while closing the throttle valve.

OK or NG

OK	▶	GO TO 17.
NG	▶	GO TO 15.

17	RESET THROTTLE POSITION SENSOR IDLE POSITION MEMORY (FOR A/T MODELS)

Without CONSULT-II

NOTE:
Always warm up engine to normal operating tempearture. If engine is cool, the throttle position sensor idle position memory will not be reset correctly.

1. Start engine.
2. Warm up engine to normal operating temperature.
3. Stop engine. (Turn ignition switch "OFF".)
4. Turn ignition switch "ON" and wait at least 5 seconds.

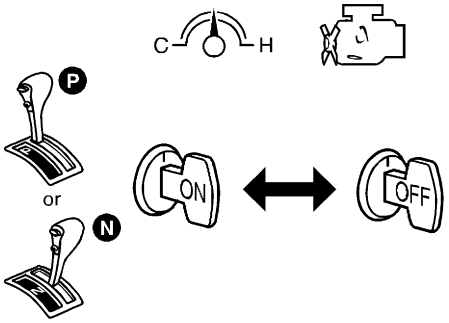

SEF864V

5. Turn ignition switch "OFF" and wait at least 5 seconds.
6. Repeat steps 4 and 5, 20 times.

	▶	GO TO 24.

18	CHECK THROTTLE POSITION SENSOR IDLE POSITION-I (FOR M/T MODELS)

With CONSULT-II

1. Touch "BACK". (Cancel "IACV-AAC/V ADJ" in "WORK SUPPORT" mode.)
2. Select "THRTL POS SEN" and "CLSD THL POS" in "DATA MONITOR" mode with CONSULT-II.

DATA MONITOR	
MONITOR	NO DTC
THRL POS SEN	XXXV
CLSD THL POS	ON

SEC353C

3. Check that output voltage of "THRTL POS SEN" is 0.35 to 0.65V, and "CLSD THL POS" stays "ON". (Accelerator pedal fully released.)

OK or NG

OK	▶	GO TO 24.
NG	▶	GO TO 19.

19	ADJUST THROTTLE POSITION SENSOR IDLE POSITION (FOR M/T MODELS)

With CONSULT-II

1. Loosen throttle position sensor fixing bolts.
2. Turn throttle position sensor body clockwise or counterclockwise until "THRTL POS SEN" voltage becomes 0.35 to 0.65V.

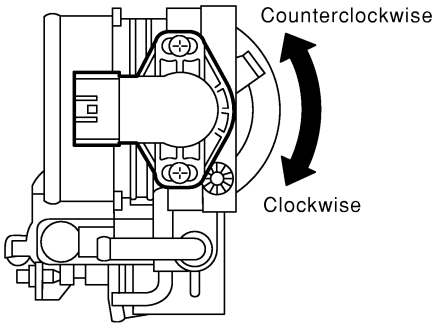

SEC352C

3. Tighten throttle position sensor.

	▶	GO TO 20.

20	RESET THROTTLE POSITION SENSOR IDLE POSITION MEMORY (FOR M/T MODELS)

With CONSULT-II

NOTE:

Always warm up engine to normal operating tempearture. If engine is cool, the throttle position sensor idle position memory will not be reset correctly.

1. Start engine.
2. Warm up engine to normal operating temperature.
3. Select "CLSD THL POS" in "DATA MONITOR" mode with CONSULT-II.
4. Stop engine. (Turn ignition switch "OFF".)
5. Turn ignition switch "ON" and wait at least 5 seconds.

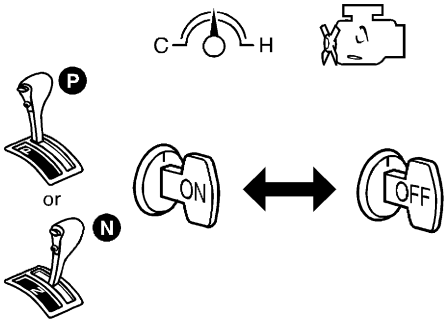

SEF864V

6. Turn ignition switch "ON" and wait at least 5 seconds.
7. Repeat steps 5 and 6 until "CLSD THL POS" signal changes to "ON".

DATA MONITOR	
MONITOR	NO DTC
CLSD THL POS	ON

SEF061Y

OK or NG

▶	GO TO 24.

21	CHECK THROTTLE POSITION SENSOR IDLE POSITION-I (FOR M/T MODELS)

Without CONSULT-II

1. Turn ignition switch "OFF".
2. Connect throttle position sensor harness connector.
3. Turn ignition switch "ON" and accelerator pedal fully released.
4. Check voltage between ECM terminal 20 and engine ground.

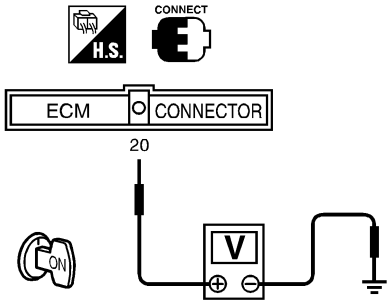

SEC354C

Voltage: 0.35 - 0.65V

OK or NG

OK	▶	GO TO 24.
NG	▶	GO TO 22.

22	ADJUST THROTTLE POSITION SENSOR IDLE POSITION (FOR M/T MODELS)

Without CONSULT-II

1. Loosen throttle position sensor fixing bolts.
2. Turn throttle position sensor body clockwise or counterclockwise until voltage between ECM terminal 20 and ground becomes 0.35 to 0.65V.

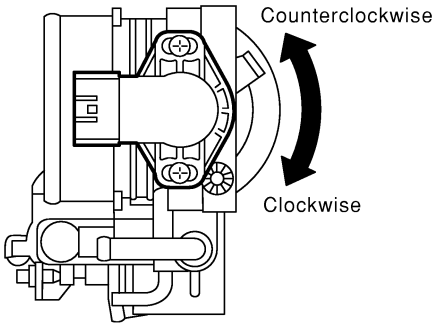

SEC352C

3. Tighten throttle position sensor.

	▶	GO TO 23.

23	RESET THROTTLE POSITION SENSOR IDLE POSITION MEMORY (FOR M/T MODELS)

Without CONSULT-II

NOTE:

Always warm up engine to normal operating tempearture. If engine is cool, the throttle position sensor idle position memory will not be reset correctly.

1. Start engine.
2. Warm up engine to normal operating temperature.
3. Stop engine. (Turn ignition switch "OFF".)
4. Turn ignition switch "ON" and wait at least 5 seconds.

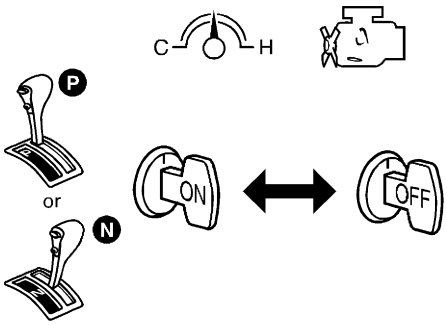

SEF864V

5. Turn ignition switch "OFF" and wait at least 5 seconds.
6. Repeat steps 4 and 5, 20 times.

▶	GO TO 24.

24	CHECK TARGET IDLE SPEED

With CONSULT-II

1. Start and rev engine (2,000 to 3,000 rpm) two or three times under no-load, then run engine at idle speed.
2. Select "CMPS-RPM (REF)" in "DATA MONITOR" mode with CONSULT-II.
3. Read idle speed.

   800±50 rpm (in "P" or "N" position)

Without CONSULT-II

1. Start and rev engine (2,000 to 3,000 rpm) two or three times under no-load, then run engine at idle speed.
2. Check idle speed.

   800±50 rpm (in "P" or "N" position)

OK or NG

OK	▶	GO TO 30.
NG	▶	GO TO 25.

25	CHECK FOR INTAKE AIR LEAK

1. Start engine and let it idle.
2. Listen for an air leak from PCV hose and after IACV-AAC valve.

OK or NG

OK	▶	GO TO 27.
NG	▶	GO TO 26.

26	REPAIR MALFUNCTION

1. Stop engine.
2. Repair or replace malfunctioning part.

OK or NG

With CONSULT-II	▶	GO TO 3.
Without CONSULT-II	▶	GO TO 7.

27	CHECK IACV-AAC VALVE CIRCUIT AND FUNCTION
Check the IACV-AAC valve circuit and function. Refer to EC-166.	
OK or NG	
OK ▶	GO TO 29.
NG ▶	GO TO 28.

28	REPAIR MALFUNCTION
Repair or replace malfunction part following the "Diagnostic Procedure" corresponding the detected malfunction.	
With CONSULT-II ▶	GO TO 3.
Without CONSULT-II ▶	GO TO 7.

29	CHECK ECM FUNCTION
1. Substitute another known-good ECM to check ECM function. (ECM may be the cause of a problem, but this is rarely the case.) 2. Perform initialization of NATS system and registration of NATS ignition key IDs. Refer to "NATS (Nissan Anti-Theft System)", EC-34.	
With CONSULT-II ▶	GO TO 3.
Without CONSULT-II ▶	GO TO 7.

30	ERASE UNNECESSARY DTC
After this inspection, unnecessary DTC might be displayed. Erase the stored memory in ECM. Refer to "HOW TO ERASE DTC", EC-33.	
▶	**INSPECTION END**

Fail-safe Chart

=NMEC0040

The ECM enters fail-safe mode, if any of the following malfunctions is detected due to the open or short circuit. When the ECM enters the fail-safe mode of ECM, the MIL lights up.

DTC No.	Detected items	Engine operating condition in fail-safe mode	
0102	Mass air flow sensor circuit	Engine speed will not rise more than 2,400 rpm due to the fuel cut.	
0103	Engine coolant temperature sensor circuit	Engine coolant temperature will be determined by ECM based on the time after turning ignition switch “ON” or “START”. CONSULT-II displays the engine coolant temperature decided by ECM.	
		Condition	Engine coolant temperature decided (CONSULT-II display)
		Just as ignition switch is turned ON or Start	20°C (68°F)
		More than approx. 6 minutes after ignition ON or Start	80°C (176°F)
		Except as shown above	20 - 80°C (68 - 176°F) (Depends on the time)
0403	Throttle position sensor circuit	Throttle position will be determined based on the injected fuel amount and the engine speed. Therefore, acceleration will be poor.	
		Condition	Driving condition
		When engine is idling	Normal
		When accelerating	Poor acceleration
Unable to access ECM	ECM	**ECM fail-safe activating condition** The computing function of the ECM was judged to be malfunctioning. When the fail-safe system activates (i.e., if the ECM detects a malfunction condition in the CPU of ECM), the MIL on the instrument panel lights to warn the driver. However it is not possible to access ECM and DTC cannot be confirmed. **Engine control with fail-safe** When ECM fail-safe is operating, fuel injection, ignition timing, fuel pump operation, IACV-AAC valve operation and cooling fan operation are controlled under certain limitations.	
			ECM fail-safe operation
		Engine speed	**Engine speed will not rise more than 3,000 rpm**
		Fuel injection	Simultaneous multiport fuel injection system
		Ignition timing	Ignition timing is fixed at the preset valve
		Fuel pump	Fuel pump relay is “ON” when engine is running and “OFF” when engine stalls
		IACV-AAC valve	Full open
		Cooling fans	Cooling fan relay “ON” (High speed condition) when engine is running, and “OFF” when engine stalls.
		Replace ECM, if ECM fail-safe condition is confirmed.	

Symptom Matrix Chart

SYSTEM — BASIC ENGINE CONTROL SYSTEM

NMEC0041

NMEC0041S01

		SYMPTOM													Reference page
		HARD/NO START/RESTART (EXCP. HA)	ENGINE STALL	HESITATION/SURGING/FLAT SPOT	SPARK KNOCK/DETONATION	LACK OF POWER/POOR ACCELERATION	HIGH IDLE/LOW IDLE	ROUGH IDLE/HUNTING	IDLING VIBRATION	SLOW/NO RETURN TO IDLE	OVERHEATS/WATER TEMPERATURE HIGH	EXCESSIVE FUEL CONSUMPTION	EXCESSIVE OIL CONSUMPTION	BATTERY DEAD (UNDER CHARGE)	
Warranty symptom code		AA	AB	AC	AD	AE	AF	AG	AH	AJ	AK	AL	AM	HA	
Fuel	Fuel pump circuit	1	1	2	3	2		2	2			3		2	EC-203
	Fuel pressure regulator system	3	3	4	4	4	4	4	4	4		4			EC-28
	Injector circuit	1	1	2	3	2		2	2			2			EC-194
	Evaporative emission system	3	3	4	4	4	4	4	4	4		4			EC-22
Air	Positive crankcase ventilation system												1		EC-25
	Incorrect idle speed adjustment						1	1	1	1		1			EC-50
	IACV-AAC valve circuit	1	1	2	3	3	2	2	2	2		2		2	EC-166
Ignition	Incorrect ignition timing adjustment	3	3	1	1	1		1	1			1			EC-50
	Ignition circuit	1	1	2	2	2		2	2			2			EC-110
Main power supply and ground circuit		2	2	3	3	3		3	3		2	3			EC-83
Air conditioner circuit							3			3				2	HA section

1 - 6: The numbers refer to the order of inspection.

(continued on next page)

Symptom Matrix Chart (Cont'd)

		SYMPTOM													Reference page
		HARD/NO START/RESTART (EXCP. HA)	ENGINE STALL	HESITATION/SURGING/FLAT SPOT	SPARK KNOCK/DETONATION	LACK OF POWER/POOR ACCELERATION	HIGH IDLE/LOW IDLE	ROUGH IDLE/HUNTING	IDLING VIBRATION	SLOW/NO RETURN TO IDLE	OVERHEATS/WATER TEMPERATURE HIGH	EXCESSIVE FUEL CONSUMPTION	EXCESSIVE OIL CONSUMPTION	BATTERY DEAD (UNDER CHARGE)	
Warranty symptom code		AA	AB	AC	AD	AE	AF	AG	AH	AJ	AK	AL	AM	HA	
Engine control	Camshaft position sensor circuit	2	2	3	3	3		3	3			3			EC-90
	Mass air flow sensor circuit	1			2										EC-98
	Heated oxygen sensor 1 (front) circuit		1	2	3	2		2	2			2			EC-152
	Engine coolant temperature sensor circuit	1					3			3					EC-105
	Throttle position sensor circuit						2			2					EC-141
	Incorrect throttle position sensor adjustment		3	1		1	1	1	1	1		1			EC-50
	Vehicle speed sensor circuit		2	3		3									EC-162
	Knock sensor circuit			2								3			EC-137
	ECM	2	2	3	3	3	3	3	3	3	3				EC-67
	Start signal circuit	2													EC-199
	Park/Neutral position switch circuit			3		3						3			EC-186
	Power steering oil pressure switch circuit		2					3	3						EC-213
	Electrical load signal circuit														EC-218

1 - 6: The numbers refer to the order of inspection.

(continued on next page)

Symptom Matrix Chart (Cont'd)

SYSTEM — ENGINE MECHANICAL & OTHER

NMEC0041S02

		SYMPTOM													Reference section
		HARD/NO START/RESTART (EXCP. HA)	ENGINE STALL	HESITATION/SURGING/FLAT SPOT	SPARK KNOCK/DETONATION	LACK OF POWER/POOR ACCELERATION	HIGH IDLE/LOW IDLE	ROUGH IDLE/HUNTING	IDLING VIBRATION	SLOW/NO RETURN TO IDLE	OVERHEATS/WATER TEMPERATURE HIGH	EXCESSIVE FUEL CONSUMPTION	EXCESSIVE OIL CONSUMPTION	BATTERY DEAD (UNDER CHARGE)	
Warranty symptom code		AA	AB	AC	AD	AE	AF	AG	AH	AJ	AK	AL	AM	HA	
Fuel	Fuel tank	5	5												FE section
	Fuel piping			5	5	5		5	5			5			—
	Vapor lock														
	Valve deposit	5		5	5	5		5	5			5			
	Poor fuel (Heavy weight gasoline, Low octane)														
Air	Air duct	5	5	5	5	5	5	5	5	5		5			
	Air cleaner														
	Air leakage from air duct (Mass air flow sensor — throttle body)														
	Throttle body, Throttle wire														FE section
	Air leakage from intake manifold/ Collector/Gasket														—
Cranking	Battery	1	1	1		1		1	1			1		1	EL section
	Alternator circuit														
	Starter circuit	3													
	Flywheel/Drive plate	6													EM section
	PNP switch	4													AT section

1 - 6: The numbers refer to the order of inspection.

(continued on next page)

Symptom Matrix Chart (Cont'd)

		SYMPTOM													Reference section
		HARD/NO START/RESTART (EXCP. HA)	ENGINE STALL	HESITATION/SURGING/FLAT SPOT	SPARK KNOCK/DETONATION	LACK OF POWER/POOR ACCELERATION	HIGH IDLE/LOW IDLE	ROUGH IDLE/HUNTING	IDLING VIBRATION	SLOW/NO RETURN TO IDLE	OVERHEATS/WATER TEMPERATURE HIGH	EXCESSIVE FUEL CONSUMPTION	EXCESSIVE OIL CONSUMPTION	BATTERY DEAD (UNDER CHARGE)	
Warranty symptom code		AA	AB	AC	AD	AE	AF	AG	AH	AJ	AK	AL	AM	HA	
Engine	Cylinder head	5	5	5	5	5		5	5			5			EM section
	Cylinder head gasket										4		3		
	Cylinder block	6	6	6	6	6		6	6			6	4		
	Piston														
	Piston ring														
	Connecting rod														
	Bearing														
	Crankshaft														
Valve mechanism	Timing chain	5	5	5	5	5		5	5			5			
	Camshaft														
	Intake valve												3		
	Exhaust valve														
Exhaust	Exhaust manifold/Tube/Muffler/Gasket	5	5	5	5	5	5	5		5					FE section
	Three way catalyst														
Lubrication	Oil pan/Oil strainer/Oil pump/Oil filter/Oil gallery	5	5	5	5	5		5	5			5			MA, EM, LC section
	Oil level (Low)/Filthy oil														LC section
Cooling	Radiator/Hose/Radiator filler cap	5	5	5	5	5		5	5		4	5			
	Thermostat									5					
	Water pump														
	Water gallery														
	Cooling fan									5					EC section
	Coolant level (low)/Contaminated coolant														MA section

1 - 6: The numbers refer to the order of inspection.

	SYMPTOM													Reference section
	HARD/NO START/RESTART (EXCP. HA)	ENGINE STALL	HESITATION/SURGING/FLAT SPOT	SPARK KNOCK/DETONATION	LACK OF POWER/POOR ACCELERATION	HIGH IDLE/LOW IDLE	ROUGH IDLE/HUNTING	IDLING VIBRATION	SLOW/NO RETURN TO IDLE	OVERHEATS/WATER TEMPERATURE HIGH	EXCESSIVE FUEL CONSUMPTION	EXCESSIVE OIL CONSUMPTION	BATTERY DEAD (UNDER CHARGE)	
Warranty symptom code	AA	AB	AC	AD	AE	AF	AG	AH	AJ	AK	AL	AM	HA	
NATS (Nissan Anti-Theft System)	1	1												EC-34 or EL section

1 - 6: The numbers refer to the order of inspection.

CONSULT-II Reference Value in Data Monitor Mode

NMEC0042

Remarks:

- Specification data are reference values.
- Specification data are output/input values which are detected or supplied by the ECM at the connector.

  * Specification data may not be directly related to their components signals/values/operations.

  i.e. Adjust ignition timing with a timing light before monitoring IGN TIMING, because the monitor may show the specification data in spite of the ignition timing not being adjusted to the specification data. This IGN TIMING monitors the data calculated by the ECM according to the signals input from the camshaft position sensor and other ignition timing related sensors.
- If the real-time diagnosis results are NG and the on board diagnostic system results are OK when diagnosing the mass air flow sensor, first check to see if the fuel pump control circuit is normal.

MONITOR ITEM	CONDITION		SPECIFICATION
CMPS-RPM (REF)	• Tachometer: Connect • Run engine and compare tachometer indication with the CONSULT-II value		Almost the same speed as the CONSULT-II value.
MAS AIR/FL SE	• Engine: After warming up • Air conditioner switch: "OFF" • Shift lever: "N" • No-load	Idle	0.8 - 1.5V
		3,000 rpm	1.4 - 2.0V
A/F ALPHA	• Engine: After warming up	Maintaining engine speed at 2,000 rpm	75 - 125%
COOLAN TEMP/S	• Engine: After warming up		More than 70°C (158°F)
O2S1	• Engine: After warming up	Maintaining engine speed at 2,000 rpm	0 - 0.3V ⟷ Approx. 0.6 - 0.9V
M/R F/C MNT			LEAN ⟷ RICH Changes more than 5 times during 10 seconds.
VHCL SPEED SE	• Turn drive wheels and compare speedometer indication with the CONSULT-II value		Almost the same speed as the CONSULT-II value.
BATTERY VOLT	• Ignition switch: ON (Engine stopped)		11 - 14V

MONITOR ITEM	CONDITION		SPECIFICATION
THRTL POS SEN	• Engine: After warming up, idle the engine • Ignition switch: ON (Engine stopped)	Throttle valve: fully closed	0.35 - 0.65V
	• Engine: After warming up • Ignition switch: ON (Engine stopped)	Throttle valve: fully opened	Approx. 4.0V
START SIGNAL	• Ignition switch: ON → OFF → ON		OFF → ON → OFF
CLSD THL POS	• Engine: After warming up, idle the engine	Throttle valve: Idle position	ON
		Throttle valve: Slightly open	OFF
AIR COND SIG	• Engine: After warming up, idle the engine	Air conditioner switch: "OFF"	OFF
		Air conditioner switch: "ON" (Compressor operates.)	ON
P/N POSI SW	• Ignition switch: ON	Shift lever: "P" or "N" (A/T models) Neutral (M/T models)	ON
		Except above	OFF
PW/ST SIGNAL	• Engine: After warming up, idle the engine	Steering wheel in neutral position (forward direction)	OFF
		The steering wheel is turned	ON
LOAD SIGNAL	• Ignition switch: ON	Rear window defogger switch "ON" and/or lighting switch "2ND"	ON
		Rear window defogger switch and lighting switch "OFF"	OFF
INJ PULSE	• Engine: After warming up • Air conditioner switch: "OFF" • Shift lever: "N" • No-load	Idle	1.7 - 2.5 msec
		2,000 rpm	1.5 - 2.3 msec
IGN TIMING	• Engine: After warming up • Air conditioner switch: "OFF" • Shift lever: "N" • No-load	Idle	15° BTDC
		2,000 rpm	More than 25° BTDC
IACV-AAC/V	• Engine: After warming up • Air conditioner switch: "OFF" • Shift lever: "N" • No-load	Idle	20 - 40%
		2,000 rpm	—
W/G CONT S/V	• Engine: After warming up • Air conditioner switch: "OFF" • Shift lever: "N" • No-load	Idle	0%
		Racing up to 4,000 rpm	20%
AIR COND RLY	• Air conditioner switch: OFF → ON		OFF → ON
FUEL PUMP RLY	• Ignition switch is turned to ON (Operates for 1 second) • Engine running and cranking		ON
	Except as shown above		OFF
INT/V TIM SOL	• Lift up the vehicle • Engine: After warming up	Idle	OFF
		• Shift lever to any position except "P" or "N" position • Quickly depress accelerator pedal, then quickly release it	OFF → ON → OFF

MONITOR ITEM	CONDITION		SPECIFICATION
COOLING FAN	• After warming up engine, idle the engine. • Air conditioner switch: "OFF"	Engine coolant temperature is 94°C (201°F) or less	OFF
		Engine coolant temperature is between 95°C (203°F) and 100°C (212°F)	LOW
		Engine coolant temperature is 100°C (212°F) or more	HIGH

Major Sensor Reference Graph in Data Monitor Mode

NMEC0043

The following are the major sensor reference graphs in "DATA MONITOR" mode.

THRTL POS SEN, CLSD THL POS

NMEC0043S01

Below is the data for "THRTL POS SEN" and "CLSD THL POS" when depressing the accelerator pedal with the ignition switch "ON".
The signal of "THRTL POS SEN" should rise gradually without any intermittent drop or rise after "CLSD THL POS" is changed from "ON" to "OFF".

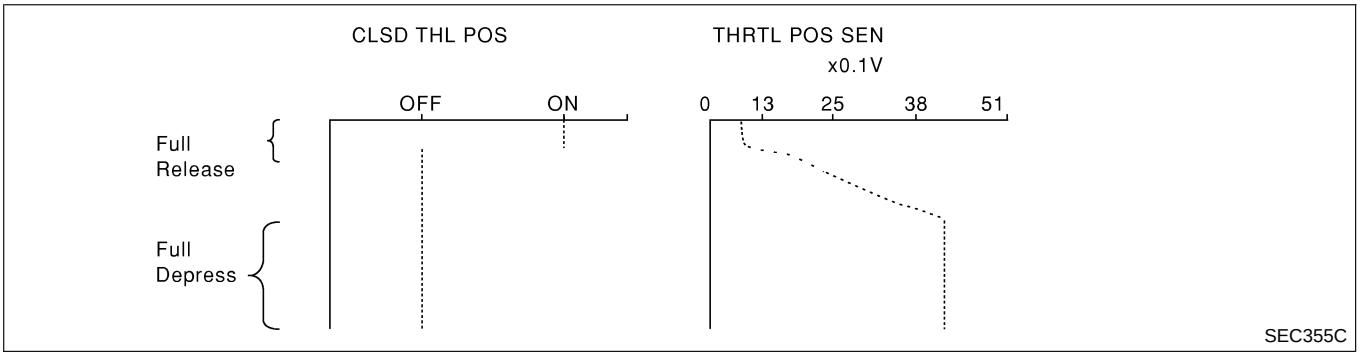

CMPS-RPM (REF), MAS AIR/FL SE, THRTL POS SEN, O2S1, INJ PULSE

NMEC0043S02

Below is the data for "CMPS-RPM (REF)", "MAS AIR/FL SE", "THRTL POS SEN", "O2S1" and "INJ PULSE" when revving engine quickly up to 4,800 rpm under no load after warming up engine sufficiently.
Each value is for reference, the exact value may vary.

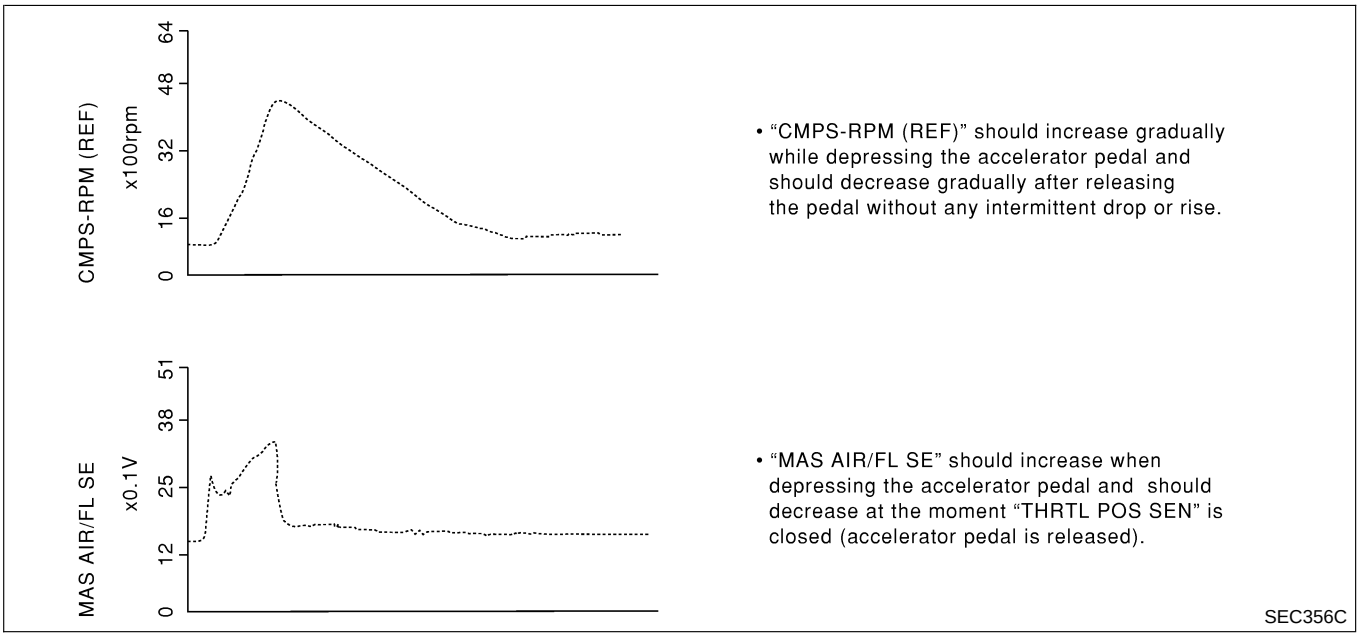

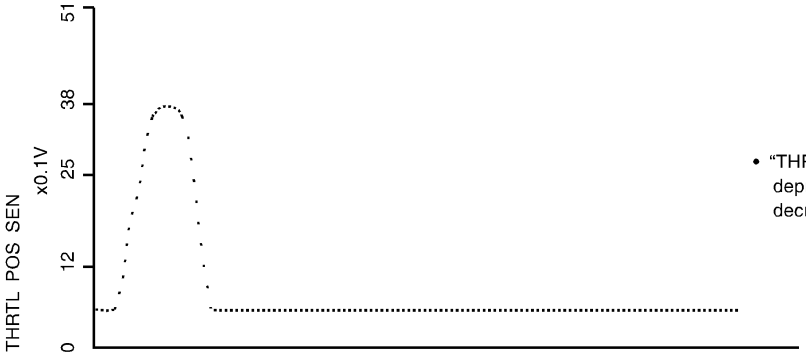

- "THRTL POS SEN" should increase while depressing the accelerator pedal and should decrease while releasing it.

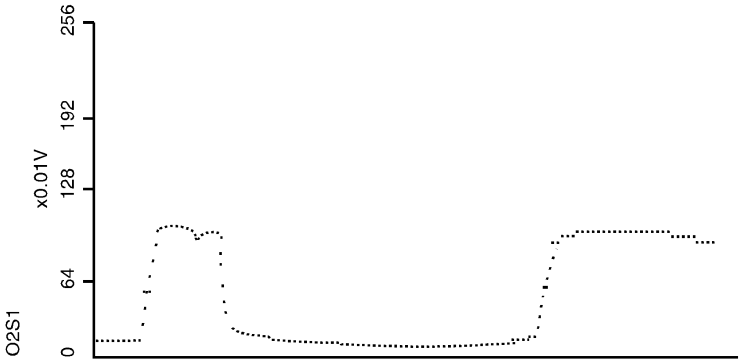

- "O2S1" may increase immediately after depressing the accelerator pedal and may decrease after releasing the pedal.

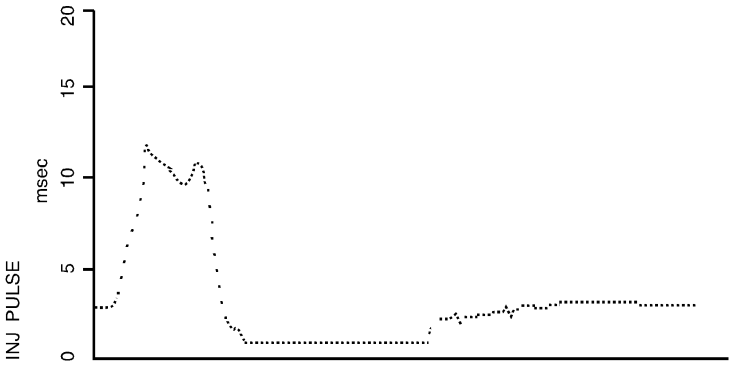

- "INJ PULSE" should increase when depressing the accelerator pedal and should decrease when the pedal is released.

SEC357C

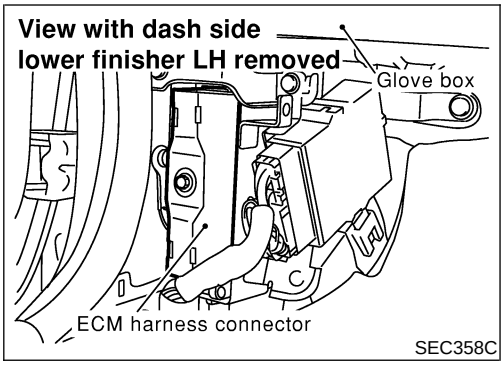

ECM Terminals and Reference Value

NMEC0044

PREPARATION

NMEC0044S01

1. ECM is located behind the dash side lower finisher LH. For this inspection, remove dash side lower cover.

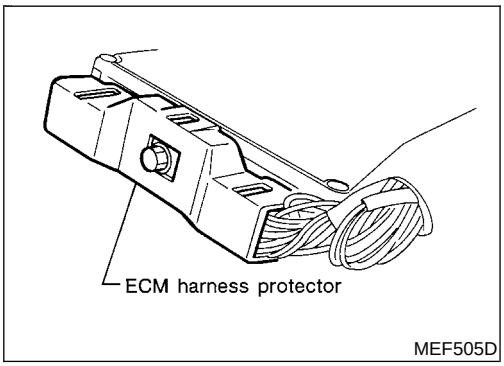

2. Remove ECM harness protector.

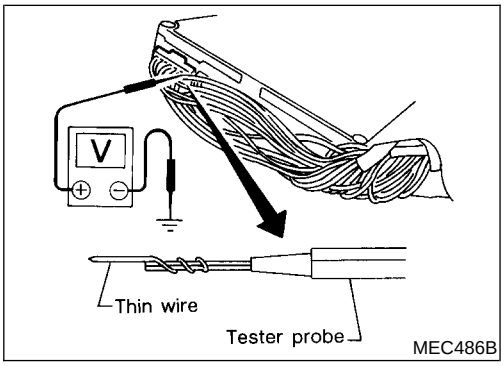

3. Perform all voltage measurements with the connector connected. Extend tester probe as shown to perform tests easily.
- Open harness securing clip to make testing easier.
- Use extreme care not to touch 2 pins at one time.
- Data is for comparison and may not be exact.

ECM HARNESS CONNECTOR TERMINAL LAYOUT

NMEC0044S02

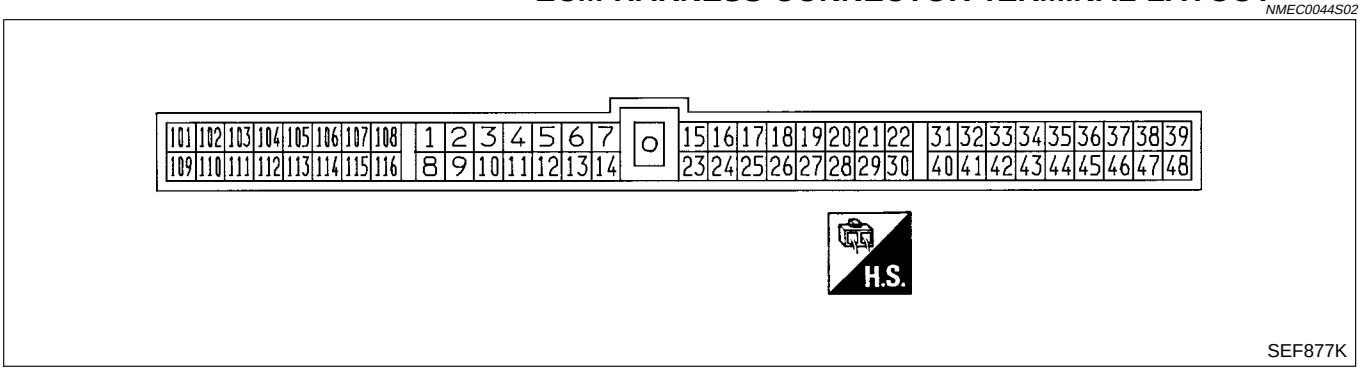

ECM INSPECTION TABLE

NMEC0044S03

Specification data are reference values and are measured between each terminal and ground.

CAUTION:

Do not use ECM ground terminals when measuring input/output voltage. Doing so may result in damage to the ECM's transistor. Use a ground other than ECM terminals, such as the ground.

TERMINAL NO.	WIRE COLOR	ITEM	CONDITION	DATA (DC Voltage)
1 3 5 25	R/W BR/R R/G R/L	Ignition signal No. 1 Ignition signal No. 2 Ignition signal No. 3 Ignition signal No. 4	**[Engine is running]** ● **Warm-up condition** ● Idle speed	0 - 0.2V★ 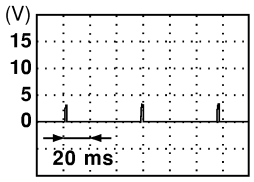 SEC359C
			[Engine is running] ● **Warm-up condition** ● Engine speed is 2,000 rpm.	0.1 - 1.0V★ 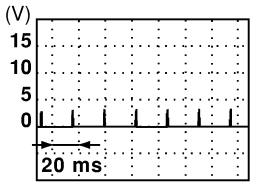 SEC360C
2	L/OR	Tachometer	**[Engine is running]** ● **Warm-up condition** ● Idle speed	Approximately 1.0V★ 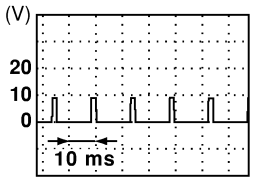 SEC361C
			[Engine is running] ● **Warm-up condition** ● Engine speed is 2,000 rpm.	Approximately 1.5V★ 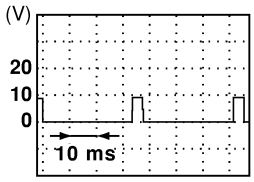 SEC362C
4	R/B	ECM relay (Self shut-off)	**[Engine is running]** **[Ignition switch "OFF"]** ● For a few seconds after turning ignition switch "OFF"	0 - 1.5V
			[Ignition switch "OFF"] ● A few seconds passed after turning ignition switch "OFF"	BATTERY VOLTAGE (11 - 14V)
6 13	B B	ECM ground	**[Engine is running]** ● Idle speed	Engine ground
7	BR/Y	Data link connector	**[Ignition switch "ON"]** ● CONSULT-II is connected and turn "ON".	Approximately 0V
9	P/B	Cooling fan relay (Low)	**[Engine is running]** ● Cooling fan is operating.	0 - 1.0V
			[Engine is running] ● Cooling fan is not operating.	BATTERY VOLTAGE (11 - 14V)

ECM Terminals and Reference Value (Cont'd)

TERMINAL NO.	WIRE COLOR	ITEM	CONDITION	DATA (DC Voltage)
10	L/G	Cooling fan relay (High)	**[Engine is running]** ● Cooling fan is operating at high speed.	0 - 1.0V
			[Engine is running] ● Cooling fan is operating.	BATTERY VOLTAGE (11 - 14V)
11	G	Air conditioner relay	**[Engine is running]** ● Both A/C switch and blower fan switch are "ON" (Compressor is operating).	0 - 1.0V
			[Engine is running] ● A/C switch is "OFF".	BATTERY VOLTAGE (11 - 14V)
12	PU/W	A/T signal No. 3	**[Engine is running]** ● Idle speed	0 - 0.1V
15	SB	Data link connector	**[Ignition switch "ON"]** ● CONSULT-II is connected and turn "ON".	3 - 9V
16	L	Mass air flow sensor	**[Engine is running]** ● **Warm-up condition** ● Idle speed	0.8 - 1.5V
			[Engine is running] ● **Warm-up condition** ● Engine speed is 3,000 rpm.	1.4 - 2.0V
17	P	Mass air flow sensor ground	**[Engine is running]** ● **Warm-up condition** ● Idle speed	Approximately 0V
18	P/B	Engine coolant temperature sensor	**[Engine is running]**	Approximately 0 - 4.8V Output voltage varies with engine coolant temperature.
19	W	Heated oxygen sensor 1 (front)	**[Engine is running]** ● **Warm-up condition** ● Engine speed is 2,000 rpm.	0 - Approximately 1.0V (Periodically change) 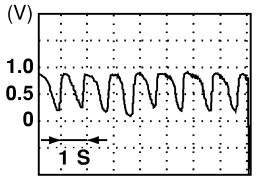 SEC363C
20	R	Throttle position sensor	**[Engine is running]** ● **Warm-up condition** ● Accelerator pedal fully released	0.15 - 0.85V
			[Ignition switch "ON"] ● Accelerator pedal fully depressed	3.5 - 4.7V
21	GY	Sensor's ground	**[Engine is running]** ● **Warm-up condition** ● Idle speed	Approximately 0V
23	G/R	Data link connector	**[Ignition switch "ON"]** ● CONSULT-II is connected and turn "ON".	Approximately 0V
24	OR	Malfunction indicator lamp	**[Ignition switch "ON"]**	0 - 1.0V
			[Engine is running] ● Idle speed	BATTERY VOLTAGE (11 - 14V)
27	W	Knock sensor	**[Engine is running]** ● Idle speed	Approximately 2.5V

TERMINAL NO.	WIRE COLOR	ITEM	CONDITION	DATA (DC Voltage)
28	R/Y	Throttle position sensor signal output	**[Engine is running]** ● **Warm-up condition** ● Accelerator pedal fully released	Approximately 0.4V
			[Ignition switch "ON"] ● Accelerator pedal fully depressed	Approximately 3.0V
30	B/Y	Camshaft position sensor (Position signal)	**[Engine is running]** ● **Warm-up condition** ● Idle speed	Approximately 2.5V 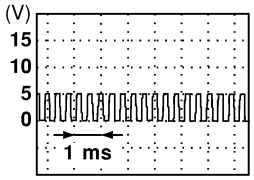 SEC364C
			[Engine is running] ● **Warm-up condition** ● Engine speed is 2,000 rpm.	Approximately 2.4V 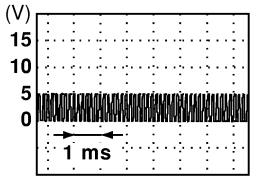 SEC365C
31	LG	Camshaft position sensor (Reference signal)	**[Engine is running]** ● **Warm-up condition** ● Idle speed	0.4 - 0.8V 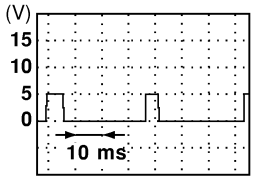 SEC366C
			[Engine is running] ● **Warm-up condition** ● Engine speed is 2,000 rpm.	Approximately 0.6V 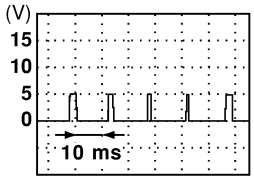 SEC367C
32	W/PU	Vehicle speed sensor	**[Engine is running]** ● Lift up the vehicle ● Vehicle speed is 40 km/h (25 MPH).	2.0 - 3.0V 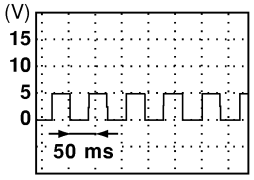 SEC368C
33	PU (With A/T) G/R (With M/T)	Electrical load signal (Headlamp and Rear defogger)	**[Engine is running]** ● Lighting switch is "2ND" and/or rear defogger switch is "ON".	BATTERY VOLTAGE (11 - 14V)
			[Engine is running] ● Lighting switch and rear defogger switch are "OFF".	Approximately 0V

ECM Terminals and Reference Value (Cont'd)

TERMINAL NO.	WIRE COLOR	ITEM	CONDITION	DATA (DC Voltage)
34	OR/L	Start signal	**[Ignition switch "ON"]**	Approximately 0V
			[Ignition switch "START"]	9 - 12V
35	R/G (With A/T) G/OR (With M/T)	PNP switch	**[Ignition switch "ON"]** ● Selector lever "P" or "N" position	BATTERY VOLTAGE (11 - 14V)
			[Ignition switch "ON"] ● Except the above position	Approximately 0V
36	B/R	Ignition switch	**[Ignition switch "OFF"]**	Approximately 0V
			[Ignition switch "ON"]	BATTERY VOLTAGE (11 - 14V)
37	LG/R	Sensor's power supply	**[Ignition switch "ON"]**	Approximately 5V
38 47	B/W B/W	Power supply for ECM	**[Ignition switch "ON"]**	BATTERY VOLTAGE (11 - 14V)
39 48	B B	ECM ground	**[Engine is running]** ● Idle speed	Engine ground
41	L/B	Air conditioner switch	**[Engine is running]** ● Both A/C switch and blower fan switch are "ON" (Compressor is operating).	0 - 1.0V
			[Engine is running] ● A/C switch is "OFF".	BATTERY VOLTAGE (11 - 14V)
43	PU/W	Power steering oil pressure switch	**[Engine is running]** ● Steering wheel is fully turned.	Approximately 0V
			[Engine is running] ● Steering wheel is not turned.	Approximately 5V
44	L/W	A/T signal No. 2	**[Engine is running]** ● Idle speed	6 - 8V
45	L/OR	A/T signal No. 1	**[Engine is running]** ● Idle speed	6 - 8V
46 109	W W	Power supply for ECM (Back-up)	**[Ignition switch "OFF"]**	BATTERY VOLTAGE (11 - 14V)
101 103 110 112	W/G G/B L/R L/B	Injector No. 1 Injector No. 3 Injector No. 2 Injector No. 4	**[Engine is running]** ● **Warm-up condition** ● Idle speed	BATTERY VOLTAGE (11 - 14V) 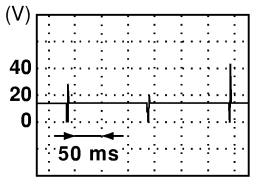 SEC369C
			[Engine is running] ● **Warm-up condition** ● Engine speed is 2,000 rpm.	BATTERY VOLTAGE (11 - 14V) 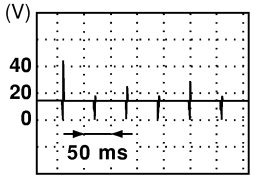 SEC371C

TERMINAL NO.	WIRE COLOR	ITEM	CONDITION	DATA (DC Voltage)
105	R/L	Intake valve timing control solenoid valve	**[Engine is running]** ● Idle speed	BATTERY VOLTAGE (11 - 14V)
			[Engine is running] ● Lift up the vehicle. ● Shift lever to any position except "P" or "N" position ● Engine speed 2,000 rpm	0 - 1.0V
106	B/P	Fuel pump relay	**[Ignition switch "ON"]** ● For 1 second after turning ignition switch "ON" **[Engine is running]**	0 - 1.0V
			[Ignition switch "ON"] ● More than 1 second after turning ignition switch "ON"	BATTERY VOLTAGE (11 - 14V)
107 108 116	B B B	ECM ground	**[Engine is running]** ● Idle speed	Engine ground
111	B/R	Heated oxygen sensor 1 heater (front)	**[Engine is running]** ● Engine speed is below 4,400 rpm.	Approximately 0V
			[Engine is running] ● Engine speed is above 4,400 rpm.	BATTERY VOLTAGE (11 - 14V)
113	SB	IACV-AAC valve	**[Engine is running]** ● **Warm-up condition** ● Idle speed	Approximately 10V 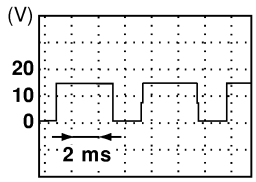 SEC372C
			[Engine is running] ● **Warm-up condition** ● Idle speed ● Both A/C switch and blower fan switch are "ON" (Compressor is operating). ● Rear window defogger switch is "ON"	Approximately 11V 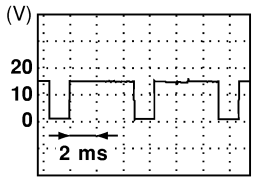 SEC373C
115	OR/B	Wastegate valve control solenoid valve	**[Engine is running]** ● Idle speed	BATTERY VOLTAGE (11 - 14V)
			[Engine is running] ● Engine speed is 2,000 rpm.	BATTERY VOLTAGE (11 - 14V) 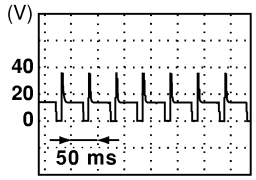 SEC374C

★: Average voltage for pulse signal (Actual pulse signal can be confirmed by oscilloscope.)

Description

NMEC0045

Intermittent incidents (I/I) may occur. In many cases, the problem resolves itself (the part or circuit function returns to normal without intervention). It is important to realize that the symptoms described in the customer's complaint often do not recur on DTC visits. Realize also that the most frequent cause of I/I occurrences is poor electrical connections. Because of this, the conditions under which the incident occurred may not be clear. Therefore, circuit checks made as part of the standard diagnostic procedure may not indicate the specific problem area.

COMMON I/I REPORT SITUATIONS

NMEC0045S01

STEP in Work Flow	Situation
II	The CONSULT-II is used. The SELF-DIAG RESULTS screen shows time data other than "0".
III	The symptom described by the customer does not recur.
IV	DTC does not appear during the DTC Confirmation Procedure.
VI	The Diagnostic Procedure for XXXX does not indicate the problem area.

Diagnostic Procedure

NMEC0046

1	**INSPECTION START**
Erase DTCs. Refer to "HOW TO ERASE DTC", EC-33.	
▶	GO TO 2.

2	**CHECK GROUND TERMINALS**
Check ground terminals for corroding or loose connection. Refer to GI-26, "GROUND INSPECTION".	
OK or NG	
OK ▶	GO TO 3.
NG ▶	Repair or replace.

3	**SEARCH FOR ELECTRICAL INCIDENT**
Perform GI-21, "Incident Simulation Tests".	
OK or NG	
OK ▶	**INSPECTION END**
NG ▶	Repair or replace.

Main Power Supply and Ground Circuit

WIRING DIAGRAM

NMEC0661

EC-MAIN-01

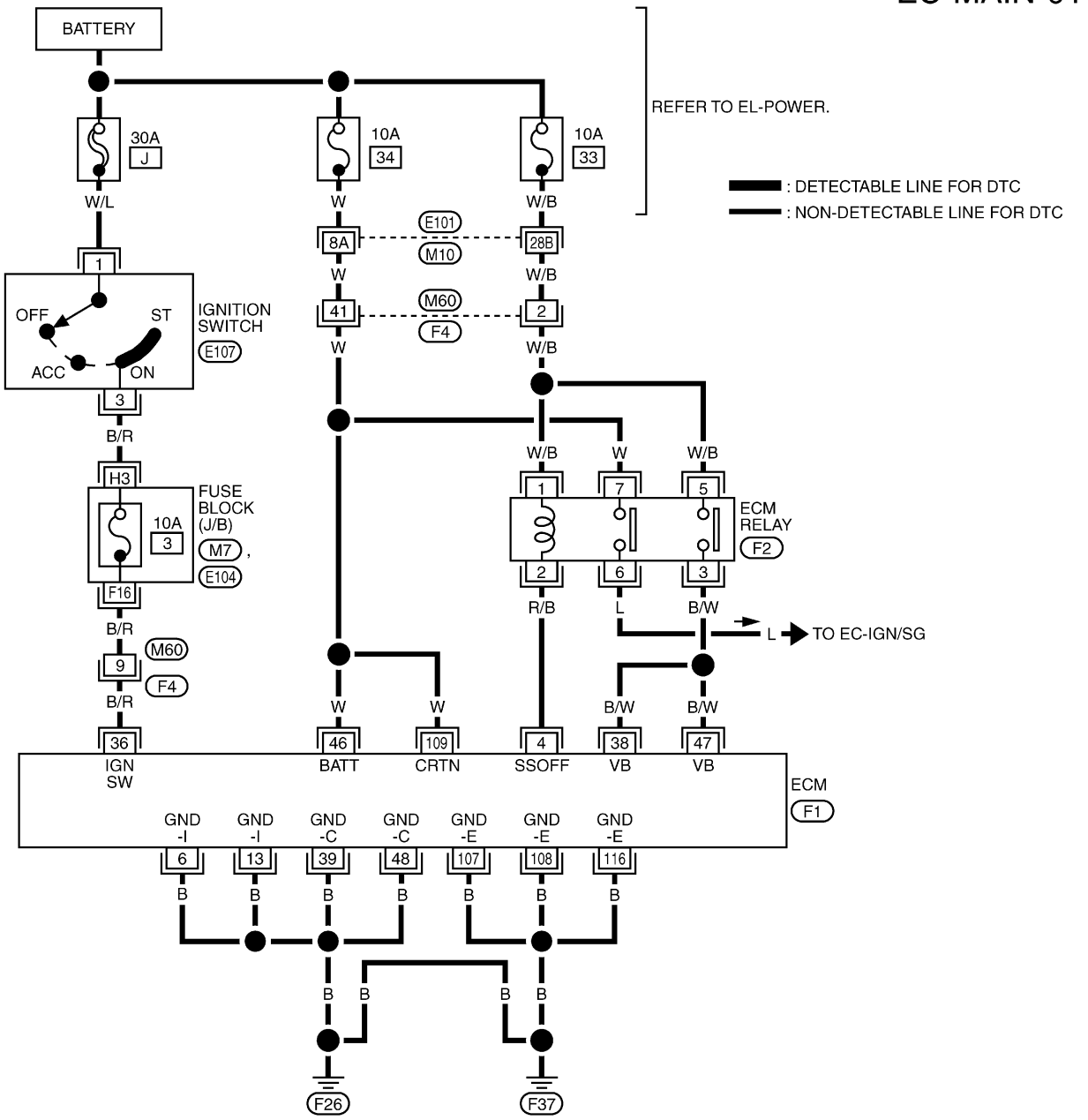

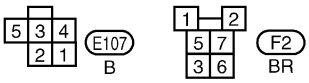

REFER TO THE FOLLOWING.
E101 , F4 -SUPER MULTIPLE JUNCTION (SMJ)
M7 , E104 -FUSE BLOCK-JUNCTION BOX (J/B)

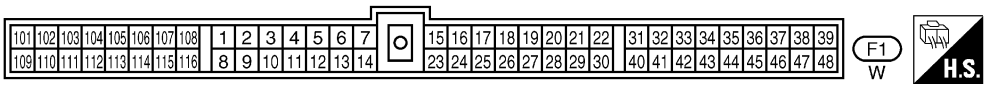

TEC798

ECM TERMINALS AND REFERENCE VALUE

NMEC0662

Specification data are reference values and are measured between each terminal and ground.

CAUTION:

Do not use ECM ground terminals when measuring input/output voltage. Doing so may result in damage to the ECM's transistor. Use a ground other than ECM terminals, such as the ground.

TERMINAL NO.	WIRE COLOR	ITEM	CONDITION	DATA (DC Voltage)
4	R/B	ECM relay (Self shut-off)	**[Engine is running]** **[Ignition switch "OFF"]** ● For a few seconds after turning ignition switch "OFF"	0 - 1V
			[Ignition switch "OFF"] ● A few seconds passed after turning ignition switch "OFF"	BATTERY VOLTAGE (11 - 14V)
6 13	B B	ECM ground	**[Engine is running]** ● Idle speed	Engine ground
36	B/R	Ignition switch	**[Ignition switch "OFF"]**	0V
			[Ignition switch "ON"]	BATTERY VOLTAGE (11 - 14V)
38 47	B/W B/W	Power supply for ECM	**[Ignition switch "ON"]**	BATTERY VOLTAGE (11 - 14V)
39 48	B B	ECM ground	**[Engine is running]** ● Idle speed	Engine ground
46	W	Power supply for ECM (Back-up)	**[Ignition switch "OFF"]**	BATTERY VOLTAGE (11 - 14V)
107 108 116	B B B	ECM ground	**[Engine is running]** ● Idle speed	Engine ground
109	W	Current return	**[Ignition switch "OFF"]**	BATTERY VOLTAGE (11 - 14V)

DIAGNOSTIC PROCEDURE

NMEC0663

1	**INSPECTION START**	
Start engine. **Is engine running?** **Yes or No**		
Yes	▶	GO TO 8.
No	▶	GO TO 2.

2	CHECK ECM POWER SUPPLY CIRCUIT-I

1. Turn ignition switch "OFF" and then "ON".
2. Check voltage between ECM terminal 36 and ground with CONSULT-II or tester.

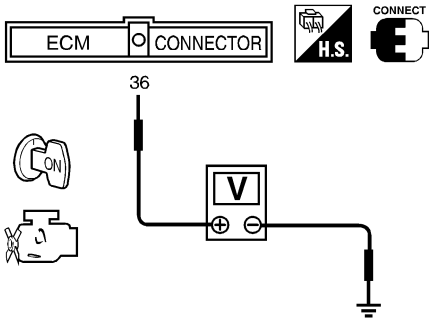

Voltage: Battery voltage

SEC401C

OK or NG

OK	▶	GO TO 4.
NG	▶	GO TO 3.

3	DETECT MALFUNCTIONING PART

Check the following.
- Harness connectors M60, F4
- Fuse block (J/B) connector M7, E104
- 10A fuse
- Harness for open or short between ECM and ignition switch

	▶	Repair harness or connectors.

4	CHECK ECM GROUND CIRCUIT FOR OPEN AND SHORT-I

1. Turn ignition switch "OFF".
2. Disconnect ECM harness connector.
3. Check harness continuity between ECM terminals 6, 13, 39, 48, 107, 108, 116 and engine ground.
   Refer to WIRING DIAGRAM.
   Continuity should exist.
4. Also check harness for short to power.

OK or NG

OK	▶	GO TO 5.
NG	▶	Repair open circuit or short to power in harness or connectors.

5	CHECK POWER SUPPLY-II

1. Disconnect ECM relay.

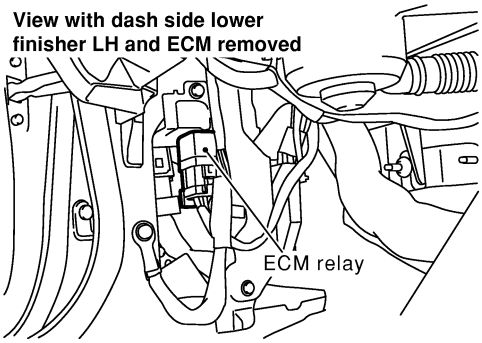

SEC376C

2. Check voltage between ECM relay terminals 1, 7 and ground with CONSULT-II or tester.

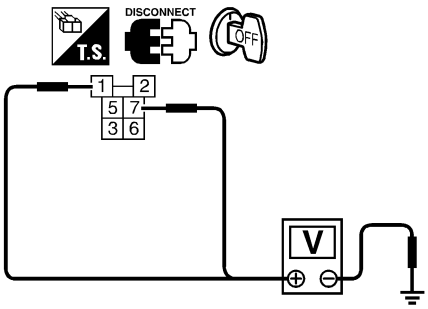

Voltage: Battery voltage

SEC402C

OK or NG

OK	▶	GO TO 7.
NG	▶	GO TO 6.

6	DETECT MALFUNCTIONING PART

Check the following.
- 10A fuses
- Harness connectors E101, M10
- Harness connectors M60, F4
- Harness for open or short between ECM relay and battery

	▶	Repair open circuit or short to ground or short to power in harness or connectors.

7	CHECK OUTPUT SIGNAL CIRCUIT FOR OPEN AND SHORT

1. Check harness continuity between ECM terminal 4 and ECM relay terminal 2.
   Continuity should exist.
2. Also check harness for short to ground and short to power.

OK or NG

OK	▶	Go to "DTC 0201 IGNITION SIGNAL", EC-110.
NG	▶	Repair open circuit or short to ground or short to power in harness or connectors.

8	CHECK ECM POWER SUPPLY CIRCUIT-II

1. Stop engine.
2. Check voltage between ECM terminals 46, 109 and ground with CONSULT-II or tester.

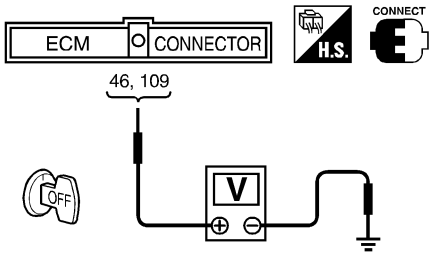

Voltage: Battery voltage

SEC403C

OK or NG

OK	▶	GO TO 10.
NG	▶	GO TO 9.

9	DETECT MALFUNCTIONING PART

Check the following.
- Harness connectors M60, F4
- Harness for open or short between ECM and harness connector F4

	▶	Repair harness or connectors.

10	CHECK ECM POWER SUPPLY CIRCUIT-III

1. Turn ignition switch "ON" and then "OFF".
2. Check voltage between ECM terminals 38, 47 and ground with CONSULT-II or tester.

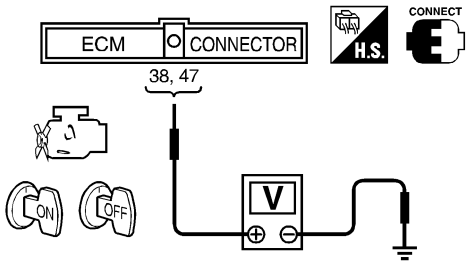

Voltage:
After turning ignition switch "OFF", battery voltage will exist for a few seconds, then drop approximately 0V.

SEC404C

OK or NG

OK	▶	GO TO 15.
NG (Battery voltage does not exist.)	▶	GO TO 11.
NG (Battery voltage exists for more than a few seconds.)	▶	GO TO 13.

11	CHECK ECM POWER SUPPLY CIRCUIT-IV

1. Disconnect ECM relay.

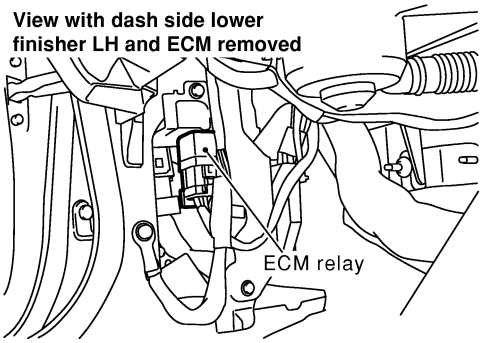

SEC376C

2. Check voltage between ECM relay terminal 5 and ground with CONSULT-II or tester.

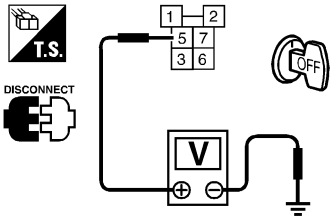

Voltage: Battery voltage

SEC405C

OK or NG

OK	▶	GO TO 13.
NG	▶	GO TO 12.

12	DETECT MALFUNCTIONING PART

Check the following.
- Harness for open or short between ECM relay and harness connector F4

	▶	Repair open circuit or short to ground or short to power in harness or connectors.

13	CHECK HARNESS CONTINUITY BETWEEN ECM RELAY AND ECM FOR OPEN AND SHORT

1. Check harness continuity between ECM terminals 38, 47 and ECM relay terminal 3.
   Refer to WIRING DIAGRAM.
   Continuity should exist.
2. Also check harness for short to ground and short to power.

OK or NG

OK	▶	GO TO 14.
NG	▶	Repair open circuit or short to ground or short to power in harness or connectors.

14	CHECK ECM RELAY

1. Apply 12V direct current between ECM relay terminals 1 and 2.
2. Check continuity between relay terminals 3 and 5, 6 and 7.

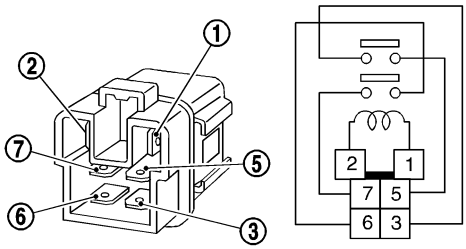

Condition	Continuity
12V direct current supply between terminals 1 and 2	Yes
OFF	No

SEF296X

OK or NG

OK	▶	GO TO 15.
NG	▶	Replace ECM relay.

15	CHECK ECM GROUND CIRCUIT FOR OPEN AND SHORT-II

1. Turn ignition switch "OFF".
2. Disconnect ECM harness connector.
3. Check harness continuity between ECM terminals 6, 13, 39, 48, 107, 108, 116 and engine ground.
   Refer to WIRING DIAGRAM.
   Continuity should exist.
4. Also check harness for short to power.

OK or NG

OK	▶	GO TO 16.
NG	▶	Repair open circuit or short to power in harness or connectors.

16	CHECK INTERMITTENT INCIDENT
Refer to "TROUBLE DIAGNOSIS FOR INTERMITTENT INCIDENT", EC-82.	
▶	**INSPECTION END**

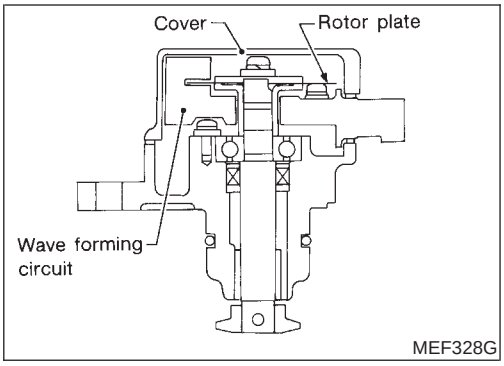

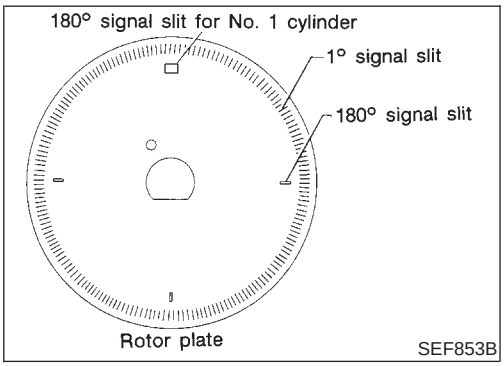

Component Description

NMEC0664

The camshaft position sensor is a basic component of the engine control system. It monitors engine speed and piston position. These input signals to the engine control system are used to control fuel injection, ignition timing and other functions.

The camshaft position sensor has a rotor plate and a wave-forming circuit. The rotor plate has 360 slits for a 1° (POS) signal and 4 slits for a 180° (REF) signal. The wave-forming circuit consists of Light Emitting Diodes (LED) and photo diodes.

The rotor plate is positioned between the LED and the photo diode. The LED transmits light to the photo diode. As the rotor plate turns, the slits cut the light to generate rough-shaped pulses. These pulses are converted into on-off signals by the wave-forming circuit and sent to the ECM.

The distributor is not repairable and must be replaced as an assembly except distributor cap and rotor head.

ECM Terminals and Reference Value

NMEC0665

Specification data are reference values and are measured between each terminal and ground.

CAUTION:

Do not use ECM ground terminals when measuring input/output voltage. Doing so may result in damage to the ECM's transistor. Use a ground other than ECM terminals, such as the ground.

TERMINAL NO.	WIRE COLOR	ITEM	CONDITION	DATA (DC Voltage)
31	LG	Camshaft position sensor (Reference signal)	**[Engine is running]** ● **Warm-up condition** ● Idle speed	0.4 - 0.8V 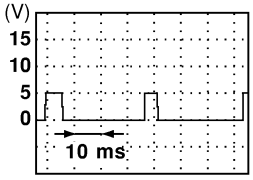 SEC366C
			[Engine is running] ● Engine speed is 2,000 rpm	Approximately 0.6V 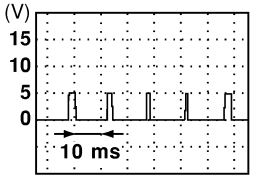 SEC367C

TERMINAL NO.	WIRE COLOR	ITEM	CONDITION	DATA (DC Voltage)
30	B/Y	Camshaft position sensor (Position signal)	**[Engine is running]** ● **Warm-up condition** ● Idle speed	Approximately 2.5V 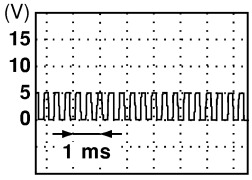 SEC364C
			[Engine is running] ● Engine speed is 2,000 rpm	Approximately 2.4V 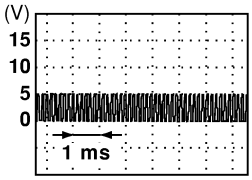 SEC365C

On Board Diagnosis Logic

NMEC0666

DTC No.	Malfunction is detected when ...		Check Items (Possible Cause)
0101	A)	Either 1° or 180° signal is not sent to ECM for the first few seconds during engine cranking.	● Harness or connectors (The camshaft position sensor circuit is open or shorted.) ● Camshaft position sensor ● Starter motor (Refer to SC-12, "STARTING SYSTEM".) ● Starting system circuit (Refer to SC-12, "STARTING SYSTEM".) ● Dead (Weak) battery
	B)	Either 1° or 180° signal is not sent to ECM often enough while the engine speed is higher than the specified engine speed.	
	C)	The relation between 1° and 180° signal is not in the normal range during the specified engine speed.	

DTC Confirmation Procedure

NMEC0667

Perform "Procedure for malfunction A" first. If DTC cannot be confirmed, perform "Procedure for malfunction B and C".

NOTE:
If "DTC Confirmation Procedure" has been previously conducted, always turn ignition switch "OFF" and wait at least 5 seconds before conducting the next test.

TESTING CONDITION:
Before performing the following procedure, confirm that battery voltage is more than 10.5V.

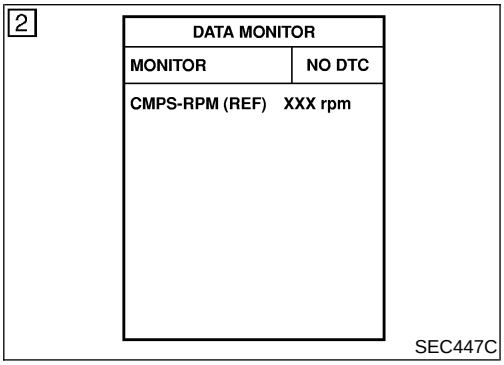

PROCEDURE FOR MALFUNCTION A

NMEC0667S01

With CONSULT-II

1) Turn ignition switch "ON".
2) Select "DATA MONITOR" mode with CONSULT-II.
3) Crank engine for at least 2 seconds.
4) If DTC is detected, go to "Diagnostic Procedure", EC-94.

Without CONSULT-II

1) Crank engine for at least 2 seconds.
2) Turn ignition switch "OFF", wait at least 5 seconds and then turn "ON".

3) Perform "Diagnostic Test Mode II" (Self-diagnostic results) with ECM.
4) If DTC is detected, go to "Diagnostic Procedure", EC-94.

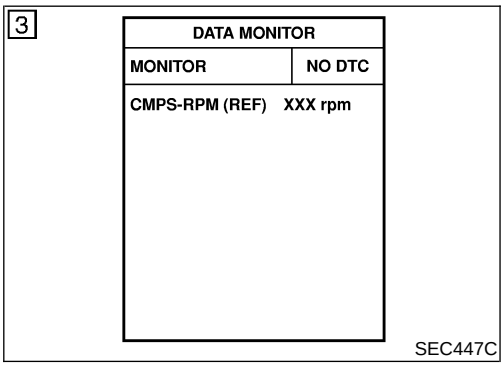

PROCEDURE FOR MALFUNCTION B AND C

NMEC0667S02

With CONSULT-II

1) Turn ignition switch "ON".
2) Select "DATA MONITOR" mode with CONSULT-II.
3) Start engine and run it for at least 2 seconds at idle speed.
4) If DTC is detected, go to "Diagnostic Procedure", EC-94.

Without CONSULT-II

1) Start engine and run it for at least 2 seconds at idle speed.
2) Turn ignition switch "OFF", wait at least 5 seconds and then turn "ON".
3) Perform "Diagnostic Test Mode II" (Self-diagnostic results) with ECM.
4) If DTC is detected, go to "Diagnostic Procedure", EC-94.

Wiring Diagram

NMEC0668

EC-CMPS-01

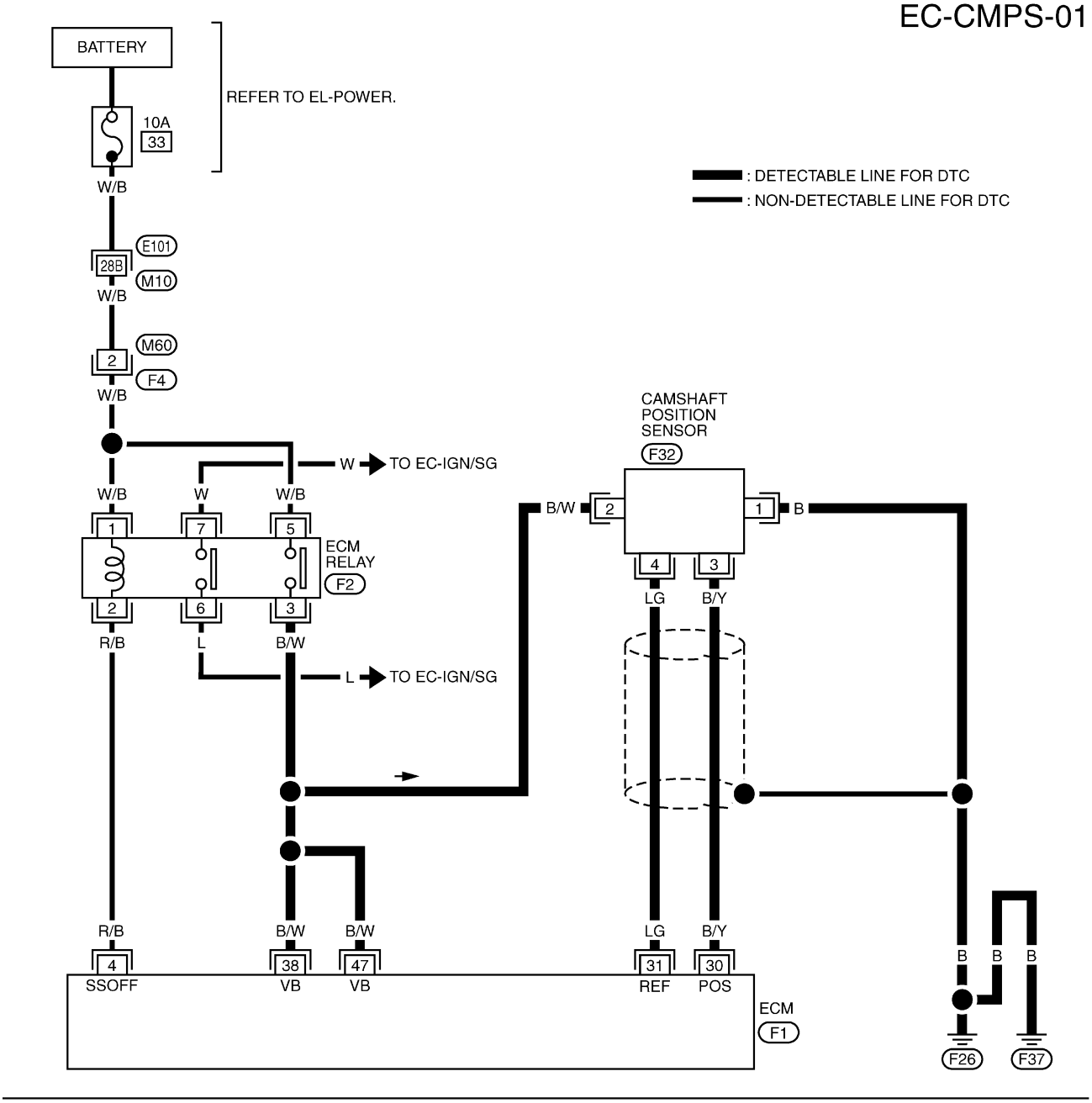

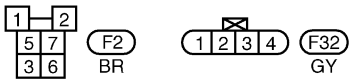

REFER TO THE FOLLOWING.
E101 , F4 -SUPER MULTIPLE JUNCTION (SMJ)

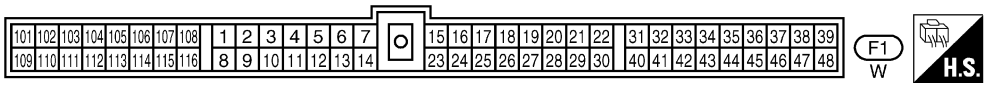

TEC799

Diagnostic Procedure

NMEC0669

1	CHECK STARTING SYSTEM	
Does the engine turn over? (Does the starter motor operate?)		
	Yes or No	
Yes	▶	GO TO 2.
No	▶	Check starting system. (Refer to SC-12, “STARTING SYSTEM”.)

2	RETIGHTEN GROUND SCREWS	
1. Turn ignition switch “OFF”. 2. Loosen and retighten engine ground screws.		
	▶	GO TO 3.

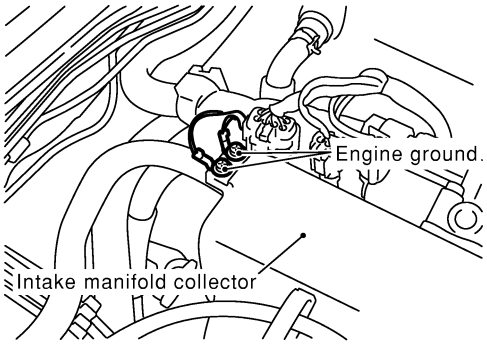

SEC377C

3	CHECK POWER SUPPLY

1. Disconnect camshaft position sensor (CMPS) harness connector.

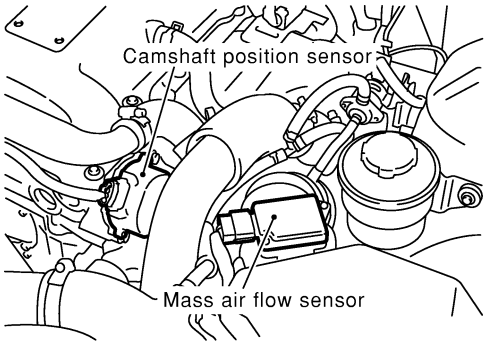

SEC378C

2. Turn ignition switch "ON".
3. Check voltage between CMPS terminal 2 and ground with CONSULT-II or tester.

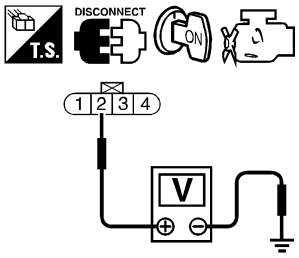

SEC406C

Voltage: Battery voltage

OK or NG

OK	▶	GO TO 5.
NG	▶	GO TO 4.

4	DETECT MALFUNCTIONING PART

Check the following.
- Harness for open or short between CMPS and ECM relay
- Harness for open or short between CMPS and ECM

	▶	Repair open circuit or short to ground or short to power in harness or connectors.

5	CHECK INPUT SIGNAL CIRCUIT

1. Turn ignition switch "OFF".
2. Disconnect ECM harness connector.
3. Check harness continuity between CMPS terminal 3 and ECM terminal 30, CMPS terminal 4 and ECM terminal 31. Refer to Wiring Diagram.
   Continuity should exist.
4. Also check harness for short to ground and short to power.

OK or NG

OK	▶	GO TO 6.
NG	▶	Repair open circuit or short to ground or short to power in harness or connectors.

6	CHECK GROUND CIRCUIT	
1. Turn ignition switch "OFF". 2. Check harness continuity between CMPS terminal 1 and engine ground. Refer to Wiring Diagram. **Continuity should exist.** 3. Also check harness for short to power.		
OK or NG		
OK	▶	GO TO 7.
NG	▶	Repair open circuit or short to power in harness or connectors.

7	CHECK CAMSHAFT POSITION SENSOR	
Refer to "Component Inspection", EC-97.		
OK or NG		
OK	▶	GO TO 8.
NG	▶	Replace camshaft position sensor.

8	CHECK INTERMITTENT INCIDENT	
Perform "TROUBLE DIAGNOSIS FOR INTERMITTENT INCIDENT", EC-82.		
	▶	**INSPECTION END**

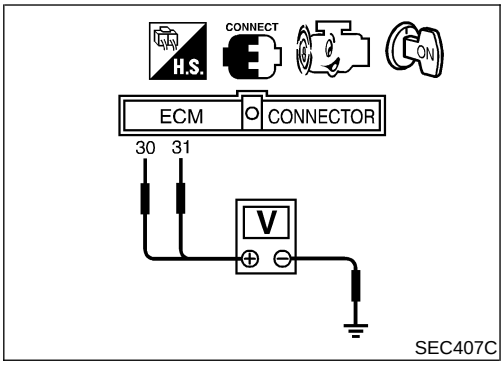

Component Inspection

=NMEC0670

CAMSHAFT POSITION SENSOR

NMEC0670S01

1. Start engine and warm it up to normal operating temperature.
2. Check voltage between ECM terminals 30, 31 and engine ground under the following conditions.

Terminal 31 and engine ground

Condition	Idle	2,000 rpm
Voltage	0.4 - 0.8V	Approximately 0.6V
Pulse signal	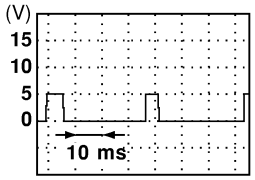 SEC366C	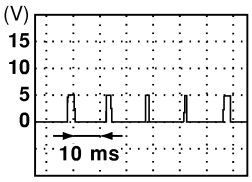 SEC367C

Terminal 30 and engine ground

Condition	Idle	2,000 rpm
Voltage	Approximately 2.5V	Approximately 2.4V
Pulse signal	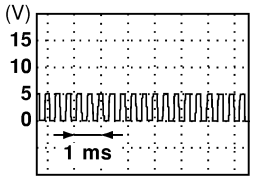 SEC364C	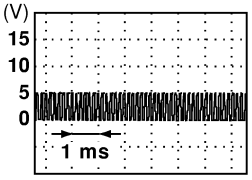 SEC365C

If NG, replace camshaft position sensor.

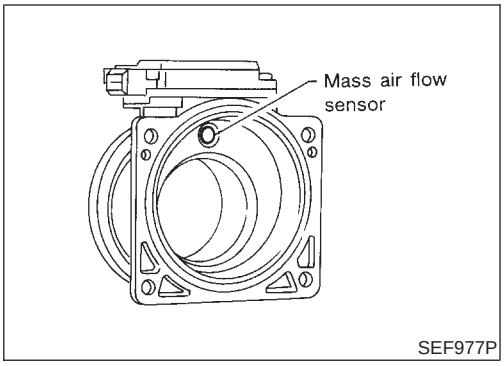

Component Description

NMEC0671

The mass air flow sensor is placed in the stream of intake air. It measures the intake flow rate by measuring a part of the entire intake flow. It consists of a hot wire that is supplied with electric current from the ECM. The temperature of the hot wire is controlled by the ECM a certain amount. The heat generated by the hot wire is reduced as the intake air flows around it. The more air, the greater the heat loss.
Therefore, the ECM must supply more electric current to maintain the temperature of the hot wire as air flow increases. The ECM detects the air flow by means of this current change.

CONSULT-II Reference Value in Data Monitor Mode

NMEC0672

Specification data are reference values.

MONITOR ITEM	CONDITION		SPECIFICATION
MAS AIR/FL SE	• Engine: After warming up • Air conditioner switch: “OFF” • Shift lever: “N” • No-load	Idle	0.8 - 1.5V
		3,000 rpm	1.4 - 2.0V

ECM Terminals and Reference Value

NMEC0673

Specification data are reference values and are measured between each terminal and ground.

CAUTION:

Do not use ECM ground terminals when measuring input/output voltage. Doing so may result in damage to the ECM’s transistor. Use a ground other than ECM terminals, such as the ground.

TERMINAL NO.	WIRE COLOR	ITEM	CONDITION	DATA (DC Voltage)
16	L	Mass air flow sensor	**[Engine is running]** • **Warm-up condition** • Idle speed	0.8 - 1.5V
			[Engine is running] • **Warm-up condition** • Engine speed is 3,000 rpm	1.4 - 2.0V
17	P	Mass air flow sensor ground	**[Engine is running]** • **Warm-up condition** • Idle speed	Approximately 0V

On Board Diagnosis Logic

NMEC0674

DTC No.	Malfunction is detected when ...		Check Items (Possible Cause)
0102	A)	An excessively high voltage from the sensor is sent to ECM when engine is not running.	• Harness or connectors (The sensor circuit is open or shorted.) • Mass air flow sensor
	B)	An excessively low voltage from the sensor is sent to ECM* when engine is running.	• Harness or connectors (The sensor circuit is open or shorted.) • Intake air leaks • Mass air flow sensor

*: When this malfunction is detected, the ECM enters fail-safe mode and the MIL lights up.

Fail-safe Mode

NMEC0675

Detected items	Engine operating condition in fail-safe mode
Mass air flow sensor circuit	Engine speed will not rise more than 2,400 rpm due to the fuel cut.

DTC Confirmation Procedure

NMEC0676

CAUTION:
Always drive vehicle at a safe speed.

NOTE:
If "DTC Confirmation Procedure" has been previously conducted, always turn ignition switch "OFF" and wait at least 5 seconds before conducting the next test.

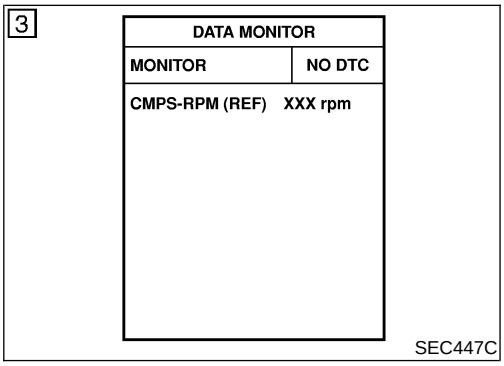

PROCEDURE FOR MALFUNCTION A

NMEC0676S01

With CONSULT-II

1) Turn ignition switch "ON".
2) Select "DATA MONITOR" mode with CONSULT-II.
3) Wait at least 5 seconds.
4) If DTC is detected, go to "Diagnostic Procedure", EC-102.

Without CONSULT-II

1) Turn ignition switch "ON", and wait at least 5 seconds.
2) Turn ignition switch "OFF", wait at least 5 seconds and then turn "ON".
3) Perform "Diagnostic Test Mode II (Self-diagnostic results)" with ECM.
4) If DTC is detected, go to "Diagnostic Procedure", EC-102.

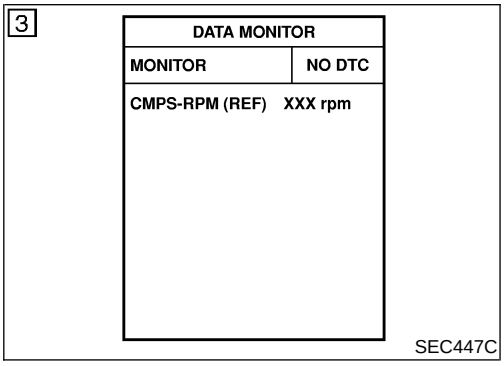

PROCEDURE FOR MALFUNCTION B

NMEC0676S02

With CONSULT-II

1) Turn ignition switch "ON".
2) Select "DATA MONITOR" mode with CONSULT-II.
3) Start engine and wait at least 2 seconds.
4) If DTC is detected, go to "Diagnostic Procedure", EC-102.

Without CONSULT-II

1) Start engine and wait at least 2 seconds.
2) Turn ignition switch "OFF", wait at least 5 seconds and then turn "ON".

3) Perform "Diagnostic Test Mode II (Self-diagnostic results)" with ECM.
4) If DTC is detected, go to "Diagnostic Procedure", EC-102.

Wiring Diagram

NMEC0677

EC-MAFS-01

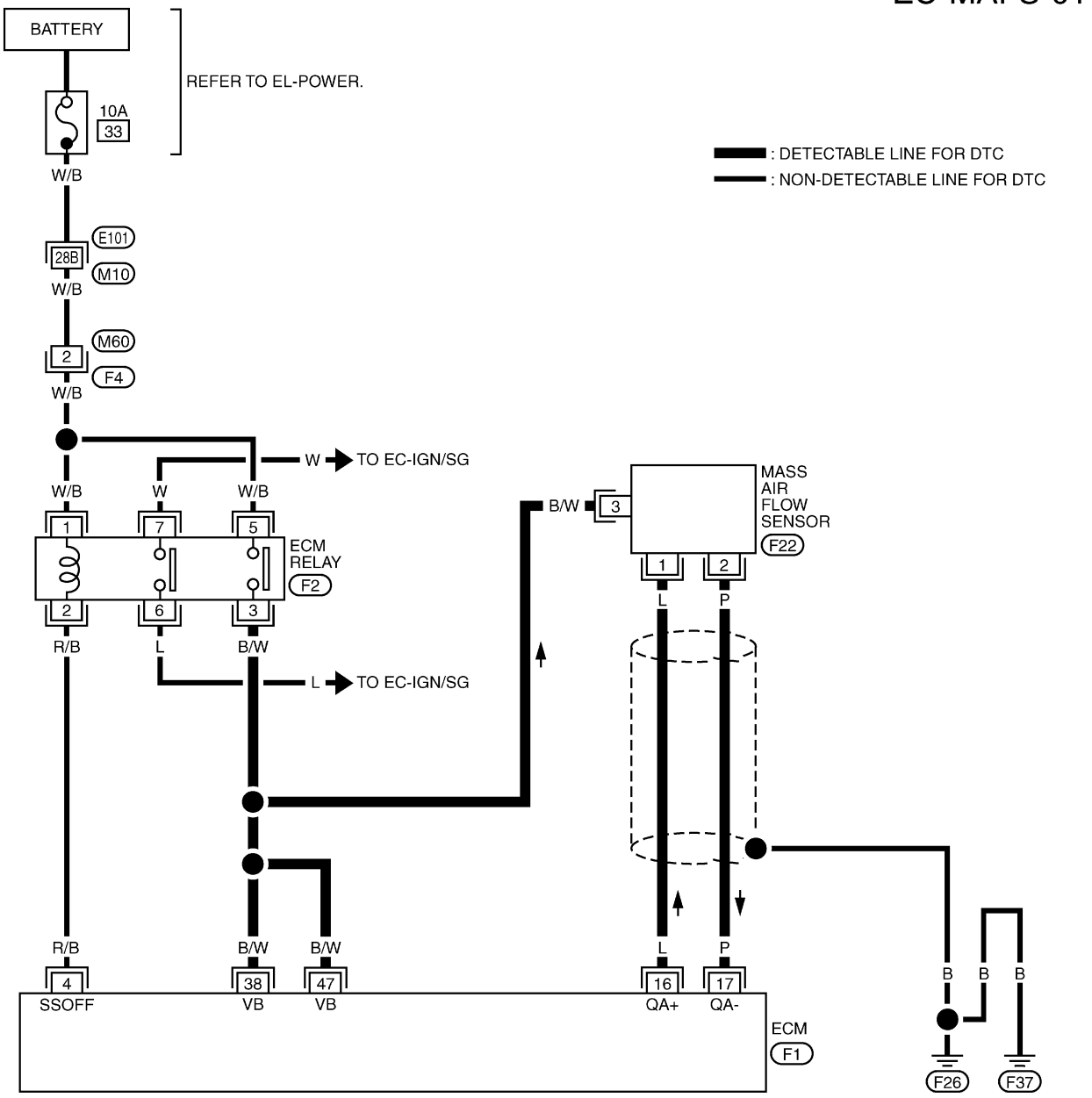

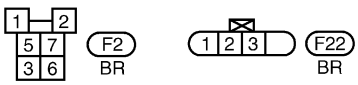

REFER TO THE FOLLOWING.
E101 , F4 -SUPER MULTIPLE JUNCTION (SMJ)

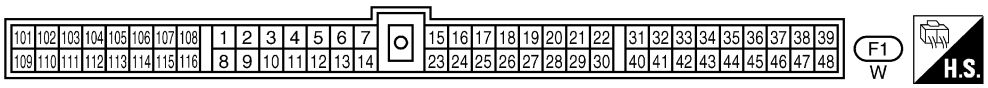

TEC800

Diagnostic Procedure

NMEC0678

1	INSPECTION START	
Which malfunction (A, or B) is duplicated?		
	Malfunction A or B	
A	▶	GO TO 3.
B	▶	GO TO 2.

2	CHECK INTAKE SYSTEM	
Check the following for connection. ● Air duct ● Vacuum hoses ● Intake air passage between air duct to collector		
	OK or NG	
OK	▶	GO TO 3.
NG	▶	Reconnect the parts.

3	RETIGHTEN GROUND SCREWS	
1. Turn ignition switch “OFF”. 2. Loosen and retighten engine ground screws.		
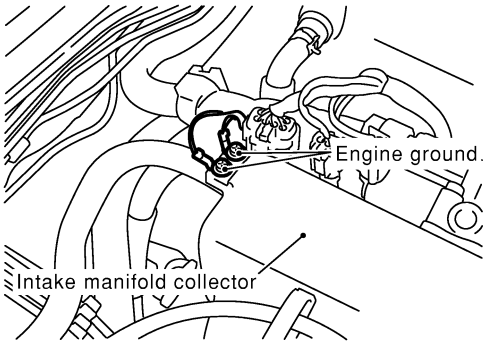 SEC377C		
	▶	GO TO 4.

4	CHECK POWER SUPPLY

1. Disconnect mass air flow sensor harness connector.

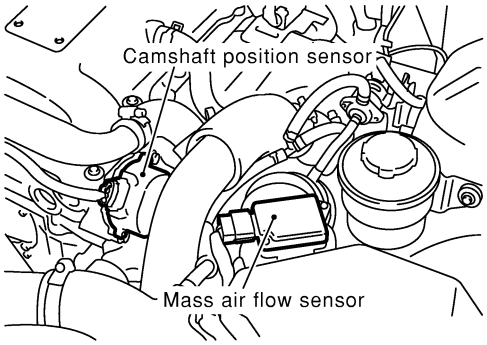

SEC378C

2. Turn ignition switch "ON".
3. Check voltage between terminal 3 and ground with CONSULT-II or tester.

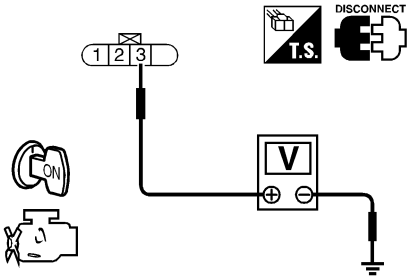

Voltage: Battery voltage

SEC408C

OK or NG

OK	▶	GO TO 6.
NG	▶	GO TO 5.

5	DETECT MALFUNCTIONING PART

Check the following.
- Harness for open or short between ECM relay and mass air flow sensor
- Harness for open or short between mass air flow sensor and ECM

	▶	Repair harness or connectors.

6	CHECK GROUND CIRCUIT

1. Turn ignition switch "OFF".
2. Disconnect ECM harness connector.
3. Check harness continuity between mass air flow sensor terminal 2 and ECM terminal 17.
   Refer to wiring diagram.
   Continuity should exist.
4. Also check harness for short to ground and short to power.

OK or NG

OK	▶	GO TO 7.
NG	▶	Repair open circuit or short to ground or short to power in harness or connectors.

7	CHECK INPUT SIGNAL CIRCUIT	
1. Check harness continuity between mass air flow sensor terminal 1 and ECM terminal 16. Refer to wiring diagram. **Continuity should exist.** 2. Also check harness for short to ground and short to power.		
OK or NG		
OK	▶	GO TO 8.
NG	▶	Repair open circuit or short to ground or short to power in harness or connectors.

8	CHECK MASS AIR FLOW SENSOR	
Refer to "Component Inspection", EC-104.		
OK or NG		
OK	▶	GO TO 9.
NG	▶	Replace mass air flow sensor.

9	CHECK INTERMITTENT INCIDENT	
Perform "TROUBLE DIAGNOSIS FOR INTERMITTENT INCIDENT", EC-82.		
	▶	**INSPECTION END**

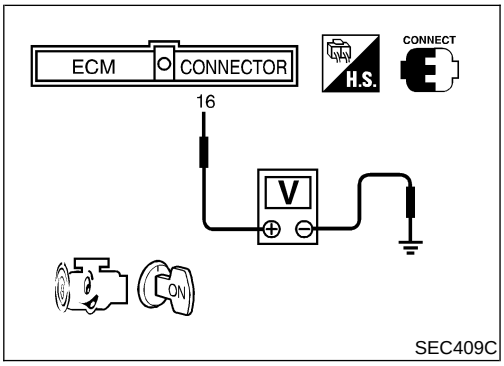

SEC409C

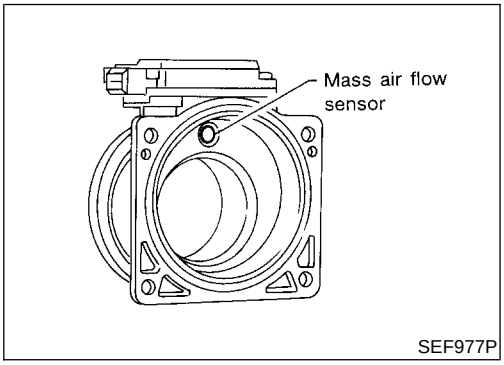

SEF977P

Component Inspection

NMEC0679

MASS AIR FLOW SENSOR

NMEC0679S01

1. Turn ignition switch "ON".
2. Start engine and warm it up to normal operating temperature.
3. Check voltage between ECM terminal 16 (Mass air flow sensor signal) and ground.

Conditions	Voltage V
Ignition switch "ON" (Engine stopped.)	Less than 1.2
Idle (Engine is warmed-up to normal operating temperature.)	0.8 - 1.5
3,000 rpm (Engine is warmed-up to normal operating temperature.)	1.4 - 2.0
Idle to about 4,000 rpm*	0.8 - 1.5 to Approx. 4.0

*: Check for linear voltage rise in response to increases to about 4,000 rpm in engine speed.

4. If the voltage is out of specification, disconnect mass air flow sensor harness connector and connect it again. Repeat above check.
5. If NG, remove mass air flow sensor from air duct. Check hot wire for damage or dust.

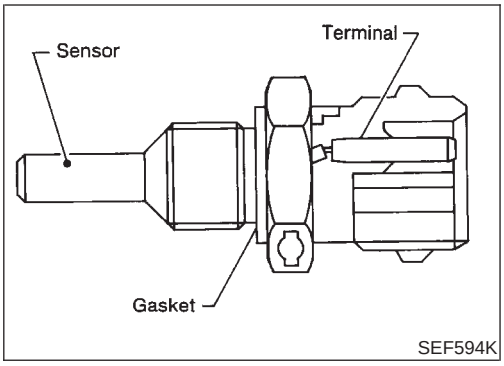

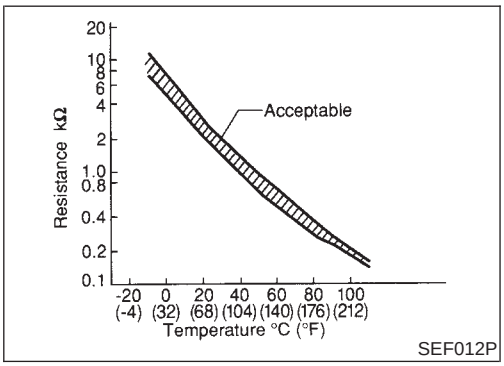

Component Description

NMEC0680

The engine coolant temperature sensor is used to detect the engine coolant temperature. The sensor modifies a voltage signal from the ECM. The modified signal returns to the ECM as the engine coolant temperature input. The sensor uses a thermistor which is sensitive to the change in temperature. The electrical resistance of the thermistor decreases as temperature increases.

<Reference data>

Engine coolant temperature °C (°F)	Voltage* mV	Resistance kΩ
−10 (14)	222	7.0 - 11.4
20 (68)	176	2.1 - 2.9
50 (122)	114	0.68 - 1.00
90 (194)	47	0.236 - 0.260
110 (230)	32	0.143 - 0.153
150 (302)	16	0.050 - 0.065

*: These data are reference values and are measured between ECM terminal 18 (Engine coolant temperature sensor) and ground.

CAUTION:

Do not use ECM ground terminals when measuring input/output voltage. Doing so may result in damage to the ECM's transistor. Use a ground other than ECM terminals, such as the ground.

CONSULT-II Reference Value in Data Monitor Mode

NMEC0681

MONITOR ITEM	CONDITION	SPECIFICATION
COOLAN TEMP/S	• Engine: After warming up	More than 70°C (158°F)

On Board Diagnosis Logic

NMEC0682

DTC No.	Malfunction is detected when ...	Check Items (Possible Cause)
0103	• An excessively high or low voltage from the sensor is sent to ECM.*	• Harness or connectors (The sensor circuit is open or shorted.) • Engine coolant temperature sensor

*: When this malfunction is detected, the ECM enters fail-safe mode and the MIL lights up.

Fail-safe Mode

NMEC0683

Detected items	Engine operating condition in fail-safe mode	
Engine coolant temperature sensor circuit	Engine coolant temperature will be determined by ECM based on the time after turning ignition switch “ON” or “START”. CONSULT-II displays the engine coolant temperature decided by ECM.	
	Condition	Engine coolant temperature decided (CONSULT-II display)
	Just as ignition switch is turned ON or Start	20°C (68°F)
	More than approx. 6 minutes after ignition ON or Start	80°C (176°F)
	Except as shown above	20 - 80°C (68 - 176°F) (Depends on the time)
	When the fail-safe system for engine coolant temperature sensor is activated, the cooling fan operates while the engine is running.	

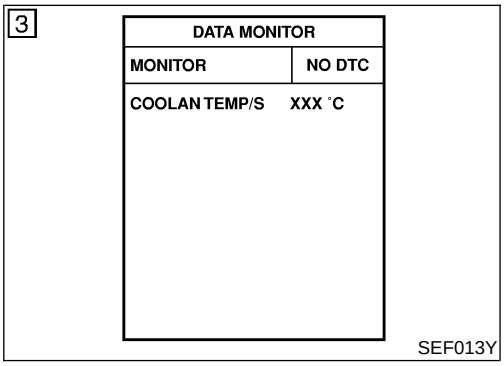

DTC Confirmation Procedure

NMEC0684

NOTE:
If “DTC Confirmation Procedure” has been previously conducted, always turn ignition switch “OFF” and wait at least 5 seconds before conducting the next test.

With CONSULT-II

1) Turn ignition switch “ON”.
2) Select “DATA MONITOR” mode with CONSULT-II.
3) Wait at least 5 seconds.
4) If DTC is detected, go to “Diagnostic Procedure”, EC-108 .

Without CONSULT-II

1) Turn ignition switch “ON” and wait at least 5 seconds.
2) Turn ignition switch “OFF”, wait at least 5 seconds and then turn “ON”.
3) Perform “Diagnostic Test Mode II (Self-diagnostic results)” with ECM.
4) If DTC is detected, go to “Diagnostic Procedure”, EC-108.

Wiring Diagram

NMEC0685

EC-ECTS-01

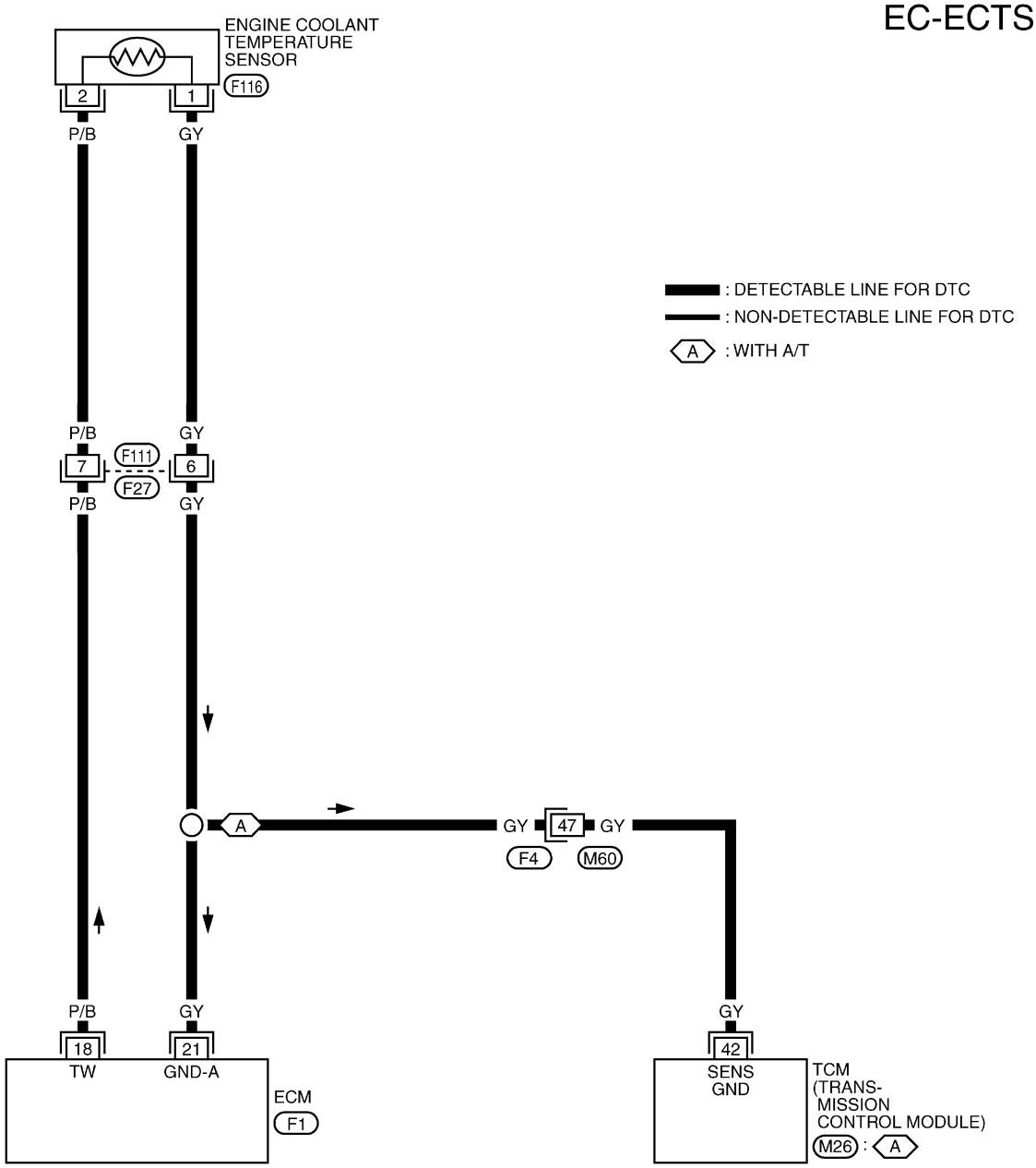

REFER TO THE FOLLOWING.
F4 -SUPER MULTIPLE JUNCTION (SMJ)

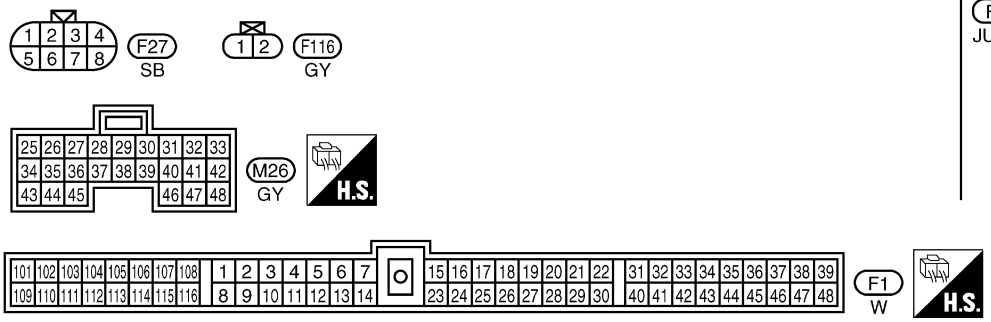

TEC801

Diagnostic Procedure

NMEC0686

1	CHECK POWER SUPPLY

1. Turn ignition switch “OFF”.
2. Disconnect engine coolant temperature sensor harness connector.

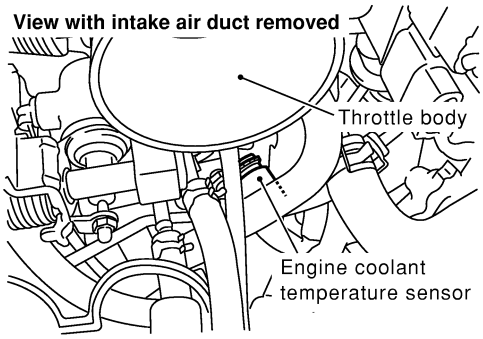

SEC379C

3. Turn ignition switch “ON”.
4. Check voltage between terminal 2 and ground with CONSULT-II or tester.

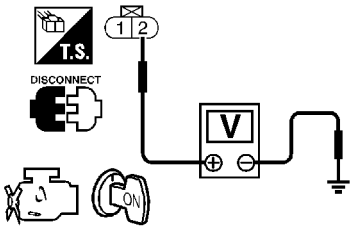

SEF690U

Voltage: Approximately 5V

OK or NG

OK	▶	GO TO 3.
NG	▶	GO TO 2.

2	DETECT MALFUNCTIONING PART

Check the following.
- Harness connectors F27, F111
- Harness for open or short between ECM and engine coolant temperature sensor

	▶	Repair harness or connectors.

3	CHECK GROUND CIRCUIT

1. Turn ignition switch “OFF”.
2. Check harness continuity between engine coolant temperature sensor terminal 1 and engine ground.
   Refer to wiring diagram.
   Continuity should exist.
3. Also check harness for short to power.

OK or NG

OK	▶	GO TO 5.
NG	▶	GO TO 4.

4	DETECT MALFUNCTIONING PART
Check the following. ● Harness connectors F27, F111 ● Harness connectors F4, M60 ● Harness for open or short between ECM and engine coolant temperature sensor ● Harness for open or short between engine coolant temperature sensor and TCM (Transmission Control Module)	
▶	Repair open circuit or short to power in harness or connectors.

5	CHECK ENGINE COOLANT TEMPERATURE SENSOR
Refer to "Component Inspection", EC-109.	
OK or NG	
OK ▶	GO TO 6.
NG ▶	Replace engine coolant temperature sensor.

6	CHECK INTERMITTENT INCIDENT
Perform "TROUBLE DIAGNOSIS FOR INTERMITTENT INCIDENT", EC-82.	
▶	**INSPECTION END**

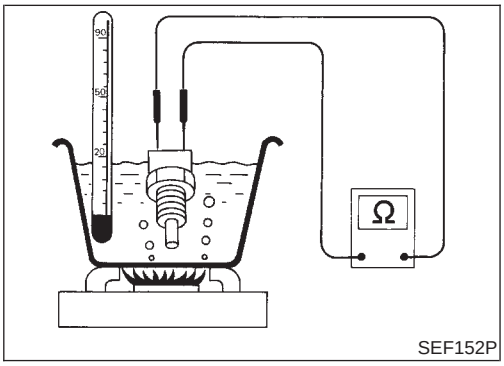

SEF152P

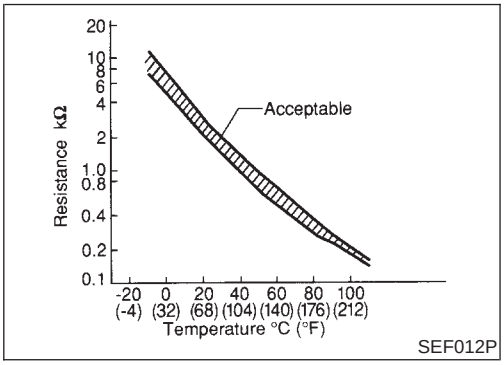

SEF012P

Component Inspection

ENGINE COOLANT TEMPERATURE SENSOR

NMEC0687

NMEC0687S01

Check resistance as shown in the figure.
<Reference data>

Temperature °C (°F)	Resistance kΩ
20 (68)	2.1 - 2.9
50 (122)	0.68 - 1.00
90 (194)	0.236 - 0.260

If NG, replace engine coolant temperature sensor.

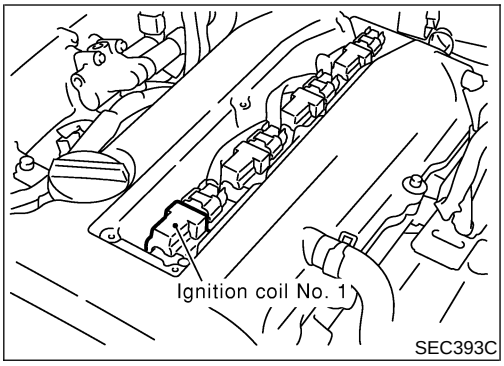

Component Description

NMEC0688

IGNITION COIL & POWER TRANSISTOR

NMEC0688S01

The ignition signal from the ECM is sent to and amplified by the power transistor. The power transistor turns on and off the ignition coil primary circuit. This on-off operation induces the proper high voltage in the coil secondary circuit.

CONSULT-II Reference Value in Data Monitor Mode

NMEC0689

Specification data are reference values.

MONITOR ITEM	CONDITION		SPECIFICATION
IGN TIMING	• Engine: After warming up • Air conditioner switch: OFF • Shift lever: “N” • No-load	Idle	15°±2° BTDC
		2,000 rpm	More than 25° BTDC

ECM Terminals and Reference Value

NMEC0690

Specification data are reference values and are measured between each terminal and ground.

CAUTION:

Do not use ECM ground terminals when measuring input/output voltage. Doing so may result in damage to the ECM’s transistor. Use a grond other than ECM terminals, such as the ground.

TERMINAL NO.	WIRE COLOR	ITEM	CONDITION	DATA (DC Voltage)
1 3 5 25	R/W BR/R R/G R/L	Ignition signal (No. 1) Ignition signal (No. 2) Ignition signal (No. 3) Ignition signal (No. 4)	**[Engine is running]** • **Warm-up condition** • Idle speed	0 - 0.2V 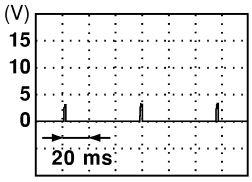 SEC359C
			[Engine is running] • Engine speed is 2,000 rpm	0.1 - 1.0V 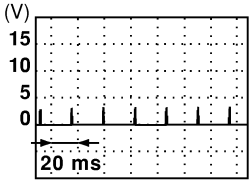 SEC360C

On Board Diagnosis Logic

NMEC0691

DTC No.	Malfunction is detected when ...	Check Items (Possible Cause)
0201	● The ignition signal in the primary circuit is not sent to ECM during engine cranking or running.	● Harness or connectors (The ignition primary circuit is open or shorted.) ● Power transistor unit built into ignition coil ● Condenser ● Camshaft position sensor ● Camshaft position sensor circuit

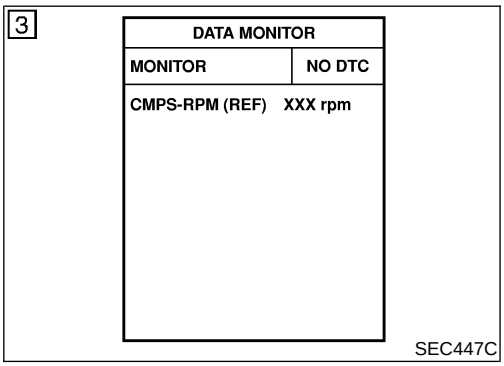

DTC Confirmation Procedure

NMEC0692

NOTE:

- If "DTC Confirmation Procedure" has been previously conducted, always turn ignition switch "OFF" and wait at least 5 seconds before conducting the next test.
- **If DTC 0201 is displayed with DTC 0101, perform trouble diagnosis for DTC 0101 first. Refer to EC-90.**

WITH CONSULT-II

NMEC0692S01

1) Turn ignition switch "ON".
2) Select "DATA MONITOR" mode with CONSULT-II.
3) Start engine. (If engine does not run, turn ignition switch to "START" for at least 5 seconds.)
4) If DTC is detected, go to "Diagnostic Procedure", EC-114.

WITHOUT CONSULT-II

NMEC0692S02

1) Turn ignition switch "ON".
2) Start engine. (If engine does not run, turn ignition switch to "START" for at least 5 seconds.)
3) Turn ignition switch "OFF", wait at least 5 seconds and then turn "ON".
4) Perform "Diagnostic Test Mode II (Self-diagnostic results)" with ECM.
5) If DTC is detected, go to "Diagnostic Procedure", EC-114.

Wiring Diagram

NMEC0693

EC-IGN/SG-01

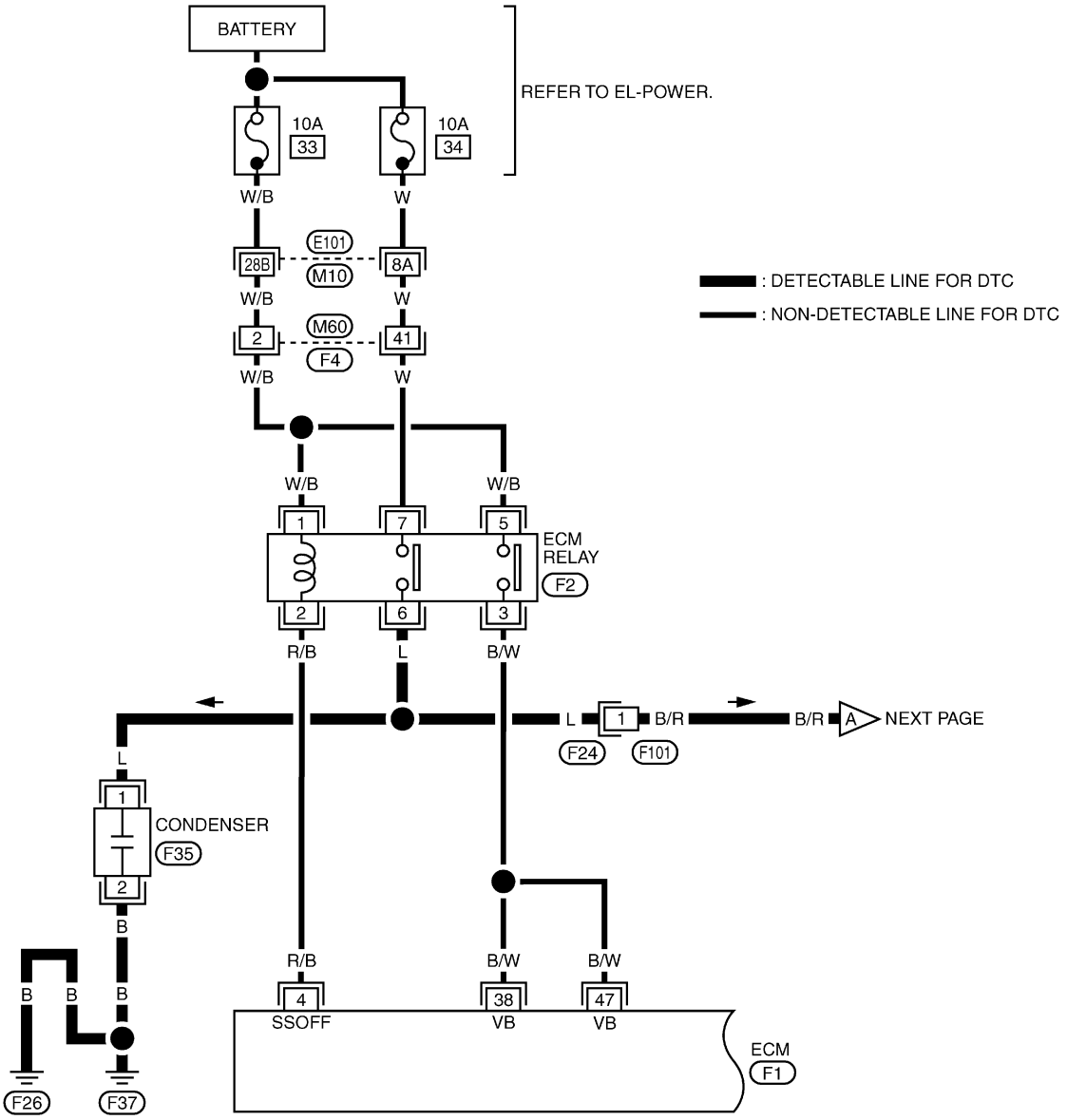

F2
BR

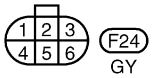
F24
GY

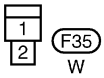
F35
W

REFER TO THE FOLLOWING.
E101 , F4 -SUPER MULTIPLE JUNCTION (SMJ)

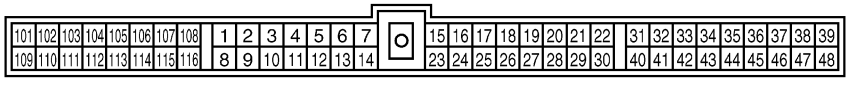
F1
W

TEC802

EC-IGN/SG-02

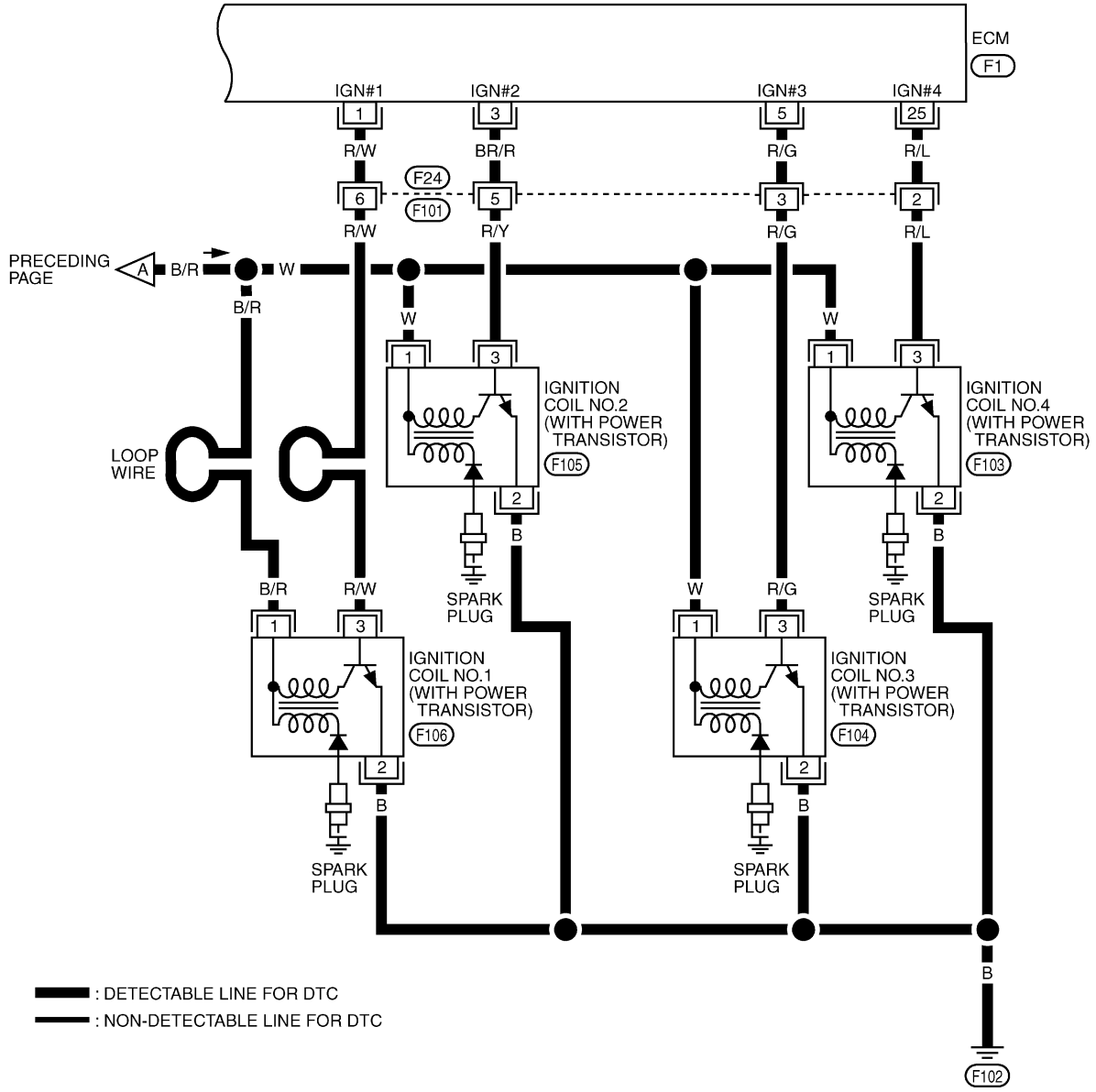

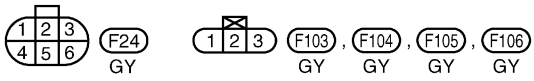

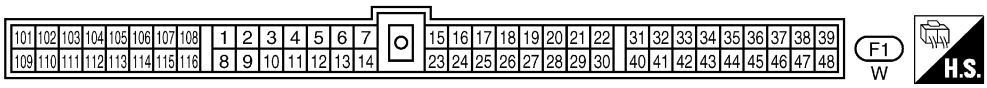

TEC803

Diagnostic Procedure

NMEC0694

1	CHECK ENGINE START
Turn ignition switch “OFF”, and restart engine. **Is engine running?**	
Yes or No	
Yes (With CONSULT-II) ▶	GO TO 2.
Yes (Without CONSULT-II) ▶	GO TO 12.
No ▶	GO TO 3.

2	SEARCH FOR MALFUNCTIONING CIRCUIT
With CONSULT-II 1. Perform “POWER BALANCE” in “ACTIVE TEST” mode with CONSULT-II. 2. Search for circuit which does not produce a momentary engine speed drop.	

ACTIVE TEST	
POWER BALANCE	
MONITOR	
CMPS~RPM(REF)	XXX rpm
MAS AIR/FL SE	XXX V
IACV-AAC/V	XXX %

PEF389V

▶	GO TO 12.

3	CHECK IGNITION COIL POWER SUPPLY CIRCUIT-I
1. Turn ignition switch ON. 2. Check voltage between ECM terminals 38, 47 and ground with CONSULT-II or tester.	

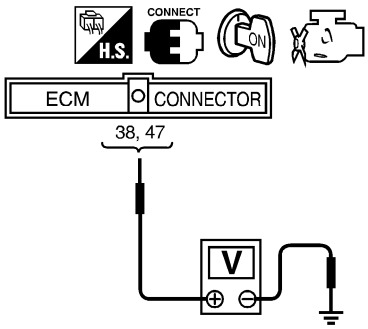

Voltage: Battery voltage

SEC410C

OK or NG

OK ▶	GO TO 4.
NG ▶	Go to TROUBLE DIAGNOSIS FOR POWER SUPPLY, EC-83.

4	CHECK IGNITION COIL POWER SUPPLY CIRCUIT-II

1. Turn ignition switch OFF.
2. Disconnect condenser harness connector.

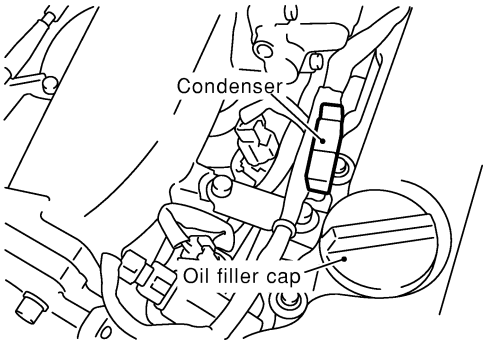

SEC380C

3. Turn ignition switch ON.
4. Check voltage between condenser terminal 1 and ground with CONSULT-II or tester.

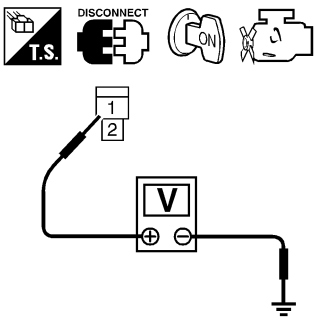

Voltage: Battery voltage

SEF367X

OK or NG

OK	▶	GO TO 10.
NG	▶	GO TO 5.

5	CHECK IGNITION COIL POWER SUPPLY CIRCUIT-III

1. Turn ignition switch OFF.
2. Disconnect ECM relay.

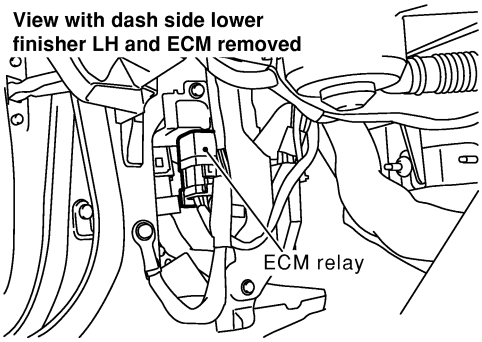

SEC376C

3. Check harness continuity between ECM relay terminal 6 and condenser terminal 1. Refer to Wiring Diagram.
   Continuity should exist.
4. Also check harness for short to ground and short to power.

OK or NG

OK	▶	GO TO 7.
NG	▶	GO TO 6.

6	DETECT MALFUNCTIONING PART
Check the harness for open or short between ECM relay and condenser.	
▶	Repair open circuit or short to ground or short to power in harness or connectors.

7	CHECK IGNITION COIL POWER SUPPLY CIRCUIT-IV
Check voltage between ECM relay terminal 7 and ground with CONSULT-II or tester.	

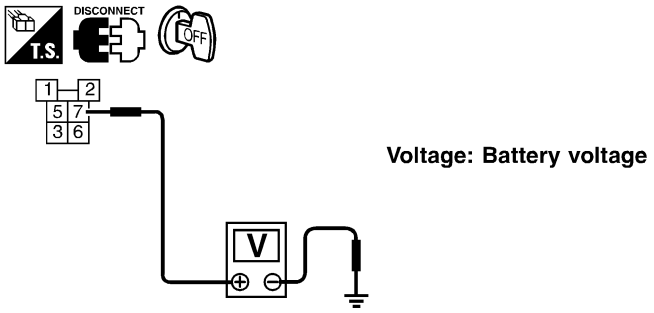

Voltage: Battery voltage

SEC411C

OK or NG

OK	▶	GO TO 9.
NG	▶	GO TO 8.

8	DETECT MALFUNCTIONING PART
Check the following. ● 10A fuse ● Harness connectors F4, M60 ● Harness connectors M10, E101 ● Harness for open and short between ECM relay and fuse	
▶	Repair or replace harness or connectors.

9	CHECK ECM RELAY
Refer to "Component Inspection", EC-119.	

OK or NG

OK	▶	GO TO 18.
NG	▶	Replace ECM relay.

10	CHECK CONDENSER GROUND CIRCUIT FOR OPEN AND SHORT
1. Turn ignition switch OFF. 2. Check harness continuity between condenser terminal 2 and engine ground. Refer to Wiring Diagram. **Continuity should exist.** 3. Also check harness for short to power.	

OK or NG

OK	▶	GO TO 11.
NG	▶	Repair open circuit or short to power in harness or connectors.

11	CHECK CONDENSER	
Refer to "Component Inspection", EC-119.		
	OK or NG	
OK	▶	GO TO 12.
NG	▶	Replace condenser.

12	CHECK IGNITION COIL POWER SUPPLY CIRCUIT-V	

1. Turn ignition switch OFF.
2. Reconnect harness connectors disconnected.
3. Disconnect ignition coil harness connector.

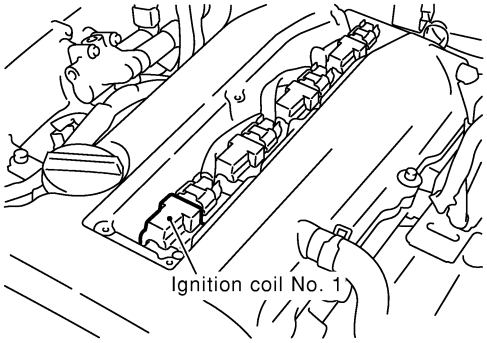

SEC393C

4. Turn ignition switch ON.
5. Check voltage between ignition coil terminal 1 and ground with CONSULT-II or tester.

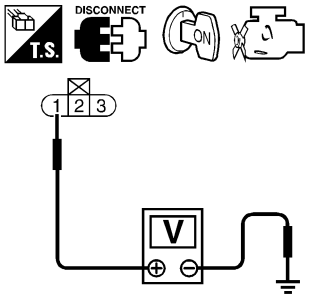

Voltage: Battery voltage

SEF122Y

	OK or NG	
OK	▶	GO TO 14.
NG	▶	GO TO 13.

13	DETECT MALFUNCTIONING PART	
Check the harness for open or short between ignition coil and ECM relay terminal 7.		
	▶	Repair or replace harness or connectors.

14	CHECK IGNITION COIL GROUND CIRCUIT FOR OPEN AND SHORT	

1. Turn ignition switch OFF.
2. Check harness continuity between ignition coil terminal 2 and engine ground. Refer to Wiring Diagram.
   Continuity should exist.
3. Also check harness for short to power.

	OK or NG	
OK	▶	GO TO 15.
NG	▶	Repair open circuit or short to power in harness or connectors.

15	CHECK IGNITION COIL OUTPUT SIGNAL CIRCUIT FOR OPEN AND SHORT
1. Disconnect ECM harness connector. 2. Check harness continuity between ECM terminals 1, 3, 5, 25 and ignition coil terminal 3. Refer to Wiring Diagram. **Continuity should exist.** 3. Also check harness for short to ground and short to power.	
OK or NG	
OK ▶	GO TO 17.
NG ▶	GO TO 16.

16	DETECT MALFUNCTIONING PART
Check the following. ● Harness connector F24, F101 ● Harness for open and short between ignition coil and ECM	
▶	Repair or replace harness or connectors.

17	CHECK IGNITION COIL WITH POWER TRANSISTOR
Refer to "Component Inspection", EC-119.	
OK or NG	
OK ▶	GO TO 18.
NG ▶	Replace ignition coil with power transistor.

18	CHECK INTERMITTENT INCIDENT
Refer to "TROUBLE DIAGNOSIS FOR INTERMITTENT INCIDENT", EC-82.	
▶	**INSPECTION END**

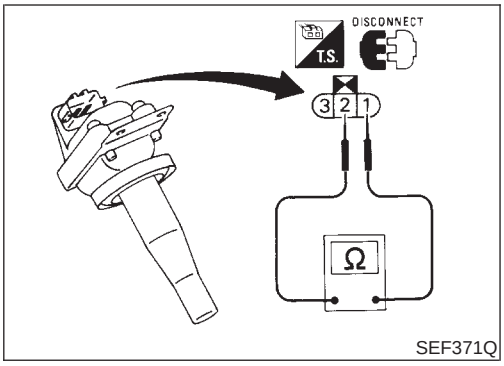

SEF371Q

Component Inspection

IGNITION COIL WITH POWER TRANSISTOR

=NMEC0695

NMEC0695S01

1. Disconnect ignition coil with power transistor harness connector.
2. Check ignition coil with power transistor for resistance as show in the figure.

Terminal No. (Polarity)	Resistance Ω [at 25°C (77°F)]
3 (+) - 2 (−)	Except 0 or ∞
1 (+) - 3 (−)	Except 0
1 (+) - 2 (−)	

If NG, replace ignition coil with power transistor assembly.

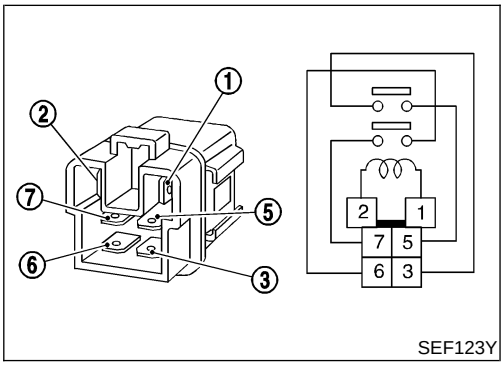

SEF123Y

ECM RELAY

NMEC0695S02

1. Apply 12V direct current between ECM relay terminals 1 and 2.
2. Check continuity between ECM relay terminals 3 and 5, 6 and 7.

Condition	Continuity
12V direct current supply between terminals 1 and 2	Yes
OFF	No

If NG, replace ECM relay.

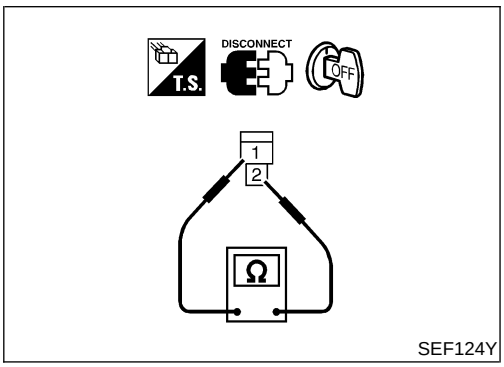

SEF124Y

CONDENSER

NMEC0695S03

1. Disconnect condenser harness connector.
2. Check condenser continuity between terminals 1 and 2.

Resistance: Above 100 MΩ at 20°C (68°F)

If NG, replace condenser.

System Description

NMEC0696

COOLING FAN CONTROL

NMEC0696S01

Sensor	Input Signal to ECM	ECM function	Actuator
Vehicle speed sensor	Vehicle speed	Cooling fan control	Cooling fan relay(s)
Engine coolant temperature sensor	Engine coolant temperature		
Air conditioner switch	Air conditioner “ON” signal		
Ignition switch	Start signal		

The ECM controls the cooling fan corresponding to the vehicle speed, engine coolant temperature, and air conditioner ON signal. The control system has 3-step control [HIGH/LOW/OFF].

OPERATION

NMEC0696S02

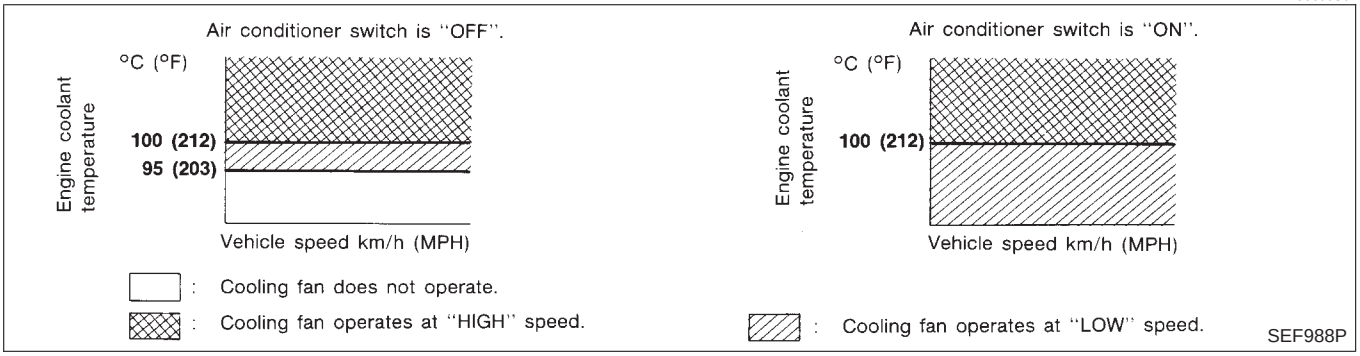

CONSULT-II Reference Value in Data Monitor Mode

NMEC0697

Specification data are reference values.

MONITOR ITEM	CONDITION		SPECIFICATION
AIR COND SIG	● Engine: After warming up, idle the engine	Air conditioner switch: OFF	OFF
		Air conditioner switch: ON (Compressor operates)	ON
COOLING FAN	● After warming up engine, idle the engine. ● Air conditioner switch: OFF	Engine coolant temperature is less than 95°C (203°F)	OFF
		Engine coolant temperature is 95°C (203°F) and 100°C (212°F)	LOW
		Engine coolant temperature is 100°C (212°F) or more	HIGH

ECM Terminals and Reference Value

NMEC0698

Specification data are reference values and are measured between each terminal and ground.

CAUTION:

Do not use ECM ground terminals when measuring input/output voltage. Doing so may result in damage to the ECM’s transistor. Use a ground other than ECM terminals, such as the ground.

TERMINAL NO.	WIRE COLOR	ITEM	CONDITION	DATA (DC Voltage)
9	P/B	Cooling fan relay (Low)	**[Engine is running]** ● Cooling fan is not operating	BATTERY VOLTAGE (11 - 14V)
			[Engine is running] ● Cooling fan is operating	0 - 0.6V

TERMINAL NO.	WIRE COLOR	ITEM	CONDITION	DATA (DC Voltage)
10	L/G	Cooling fan relay (High)	**[Engine is running]** ● Cooling fan is not operating ● Cooling fan is operating at low speed	BATTERY VOLTAGE (11 - 14V)
			[Engine is running] ● Cooling fan is operating at high speed	0 - 0.6V

On Board Diagnosis Logic

NMEC0699

If the cooling fan or another component in the cooling system malfunctions, engine coolant temperature will rise.
When the engine coolant temperature reaches an abnormally high temperature condition, a malfunction is indicated.

Diagnostic Trouble Code No.	Malfunction is detected when ...	Check Items (Possible Cause)
0208	● Cooling fan does not operate properly (Overheat). ● Cooling fan system does not operate properly (Overheat). ● Engine coolant was not added to the system using the proper filling method.	● Harness or connectors (The cooling fan circuit is open or shorted.) ● Cooling fan ● Radiator hose ● Radiator ● Radiator cap ● Water pump ● Thermostat For more information, refer to "MAIN 12 CAUSES OF OVERHEATING", EC-135.

CAUTION:
When a malfunction is indicated, be sure to replace the coolant following the procedure in the LC-15, "Changing Engine Coolant". Also, replace the engine oil.

1) Fill radiator with coolant up to specified level with a filling speed of 2 liters per minute. Be sure to use coolant with the proper mixture ratio. Refer to MA-9, "Engine Coolant Mixture Ratio".
2) After refilling coolant, run engine to ensure that no water-flow noise is emitted.

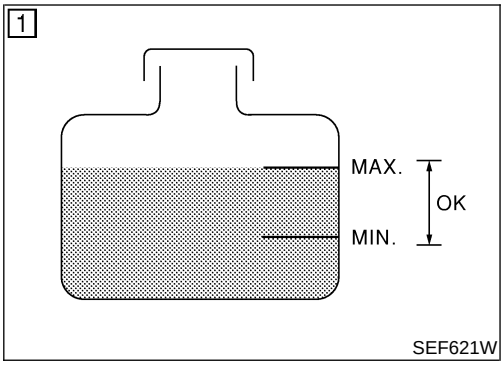

4

ACTIVE TEST	
COOLING FAN	OFF
MONITOR	
COOLAN TEMP/S	XXX °C

SEF111X

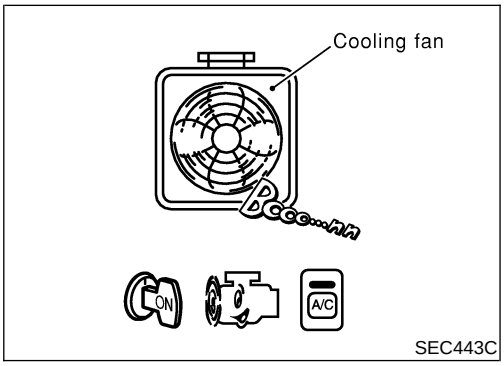

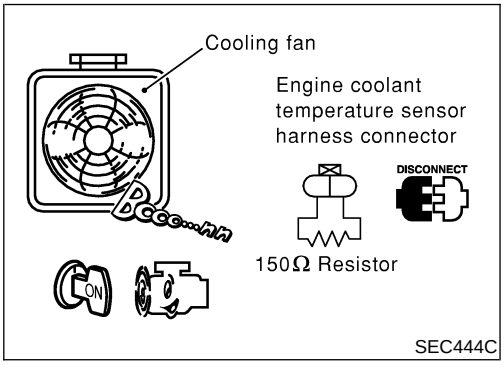

Overall Function Check

NMEC0700

Use this procedure to check the overall function of the cooling fan. During this check, a DTC might not be confirmed.

WARNING:

Never remove the radiator cap when the engine is hot. Serious burns could be caused by high pressure fluid escaping from the radiator.
Wrap a thick cloth around cap. Carefully remove the cap by turning it a quarter turn to allow built-up pressure to escape. Then turn the cap all the way off.

With CONSULT-II

1) Check the coolant level in the reservoir tank and radiator.
   Allow engine to cool before checking coolant level.
   If the coolant level in the reservoir tank and/or radiator is below the proper range, skip the following steps and go to “Diagnostic Procedure”, EC-124.
2) Confirm whether customer filled the coolant or not. If customer filled the coolant, skip the following steps and go to “Diagnostic Procedure”, EC-124.
3) Turn ignition switch “ON”.
4) Perform “COOLING FAN” in “ACTIVE TEST” mode with CONSULT-II.
5) If the results are NG, go to “Diagnostic Procedure”, EC-124.

Without CONSULT-II

1) Check the coolant level in the reservoir tank and radiator.
   Allow engine to cool before checking coolant level.
   If the coolant level in the reservoir tank and/or radiator is below the proper range, skip the following steps and go to “Diagnostic Procedure”, EC-124.
2) Confirm whether customer filled the coolant or not. If customer filled the coolant, skip the following steps and go to “Diagnostic Procedure”, EC-124.
3) Start engine.
   Be careful not to overheat engine.
4) Set temperature control lever to full cold position.
5) Turn air conditioner switch “ON”.
6) Turn blower fan switch “ON”.
7) Run engine at idle for a few minutes with air conditioner operating.
   Be careful not to overheat engine.
8) Make sure that cooling fan operates at low speed.
   If NG, go to “Diagnostic Procedure”, EC-124.
   If OK, go to the following step.
9) Turn ignition switch “OFF”.
10) Turn air conditioner switch and blower fan switch “OFF”.
11) Disconnect engine coolant temperature sensor harness connector.
12) Connect 150Ω resistor to engine coolant temperature sensor harness connector.
13) Restart engine and make sure that cooling fan operates at higher speed than low speed.
    Be careful not to overheat engine.
14) If NG, go to “Diagnostic Procedure”, EC-124.

Wiring Diagram

NMEC0701

EC-COOL/F-01

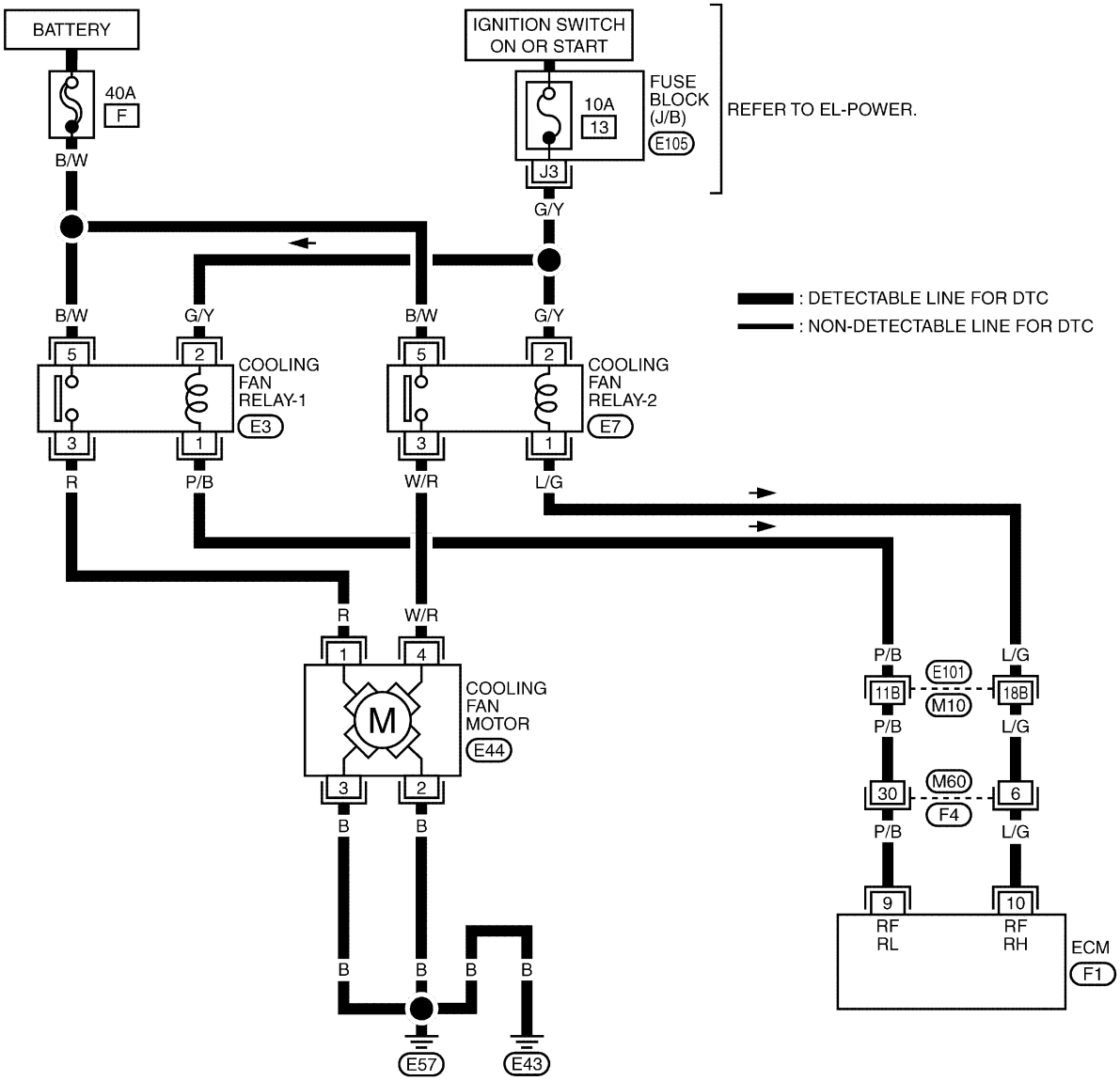

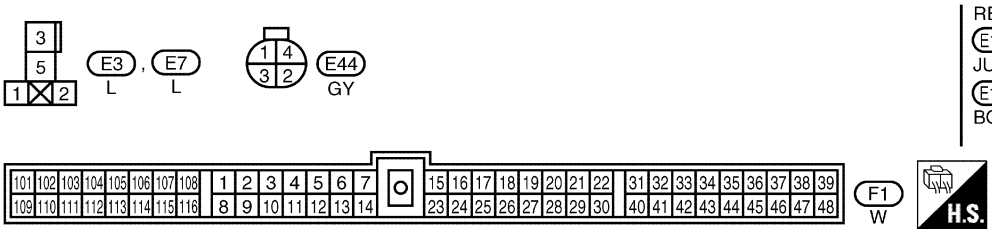

REFER TO THE FOLLOWING.
E101 , F4 -SUPER MULTIPLE JUNCTION (SMJ)
E105 -FUSE BLOCK-JUNCTION BOX (J/B)

TEC817

Diagnostic Procedure

NMEC0702

1	INSPECTION START	
Do you have CONSULT-II?		
	Yes or No	
Yes	▶	GO TO 2.
No	▶	GO TO 4.

2	CHECK COOLING FAN LOW SPEED OPERATION	

With CONSULT-II
1. Turn ignition switch “ON”.
2. Select “COOLING FAN” in “ACTIVE TEST” mode with CONSULT-II.
3. Touch “LOW”.

ACTIVE TEST	
COOLING FAN	LOW
MONITOR	
COOLAN TEMP/S	XXX °C

SEF784Z

4. Make sure that cooling fan operates at low speed.

	OK or NG	
OK	▶	GO TO 3.
NG	▶	Check cooling fan low speed control circuit. (Go to PROCEDURE A, EC-129.)

3	CHECK COOLING FAN HIGH SPEED OPERATION	

With CONSULT-II
1. Turn ignition switch “ON”.
2. Select “COOLING FAN” in “ACTIVE TEST” mode with CONSULT-II.
3. Touch “HIGH”.

ACTIVE TEST	
COOLING FAN	HIGH
MONITOR	
COOLAN TEMP/S	XXX °C

SEF785Z

4. Make sure that cooling fan operates at higher speed than low speed.

	OK or NG	
OK	▶	GO TO 6.
NG	▶	Check cooling fan high speed control circuit. (Go to PROCEDURE B, EC-132.)

4	CHECK COOLING FAN LOW SPEED OPERATION

Without CONSULT-II

1. Disconnect cooling fan relay-2.

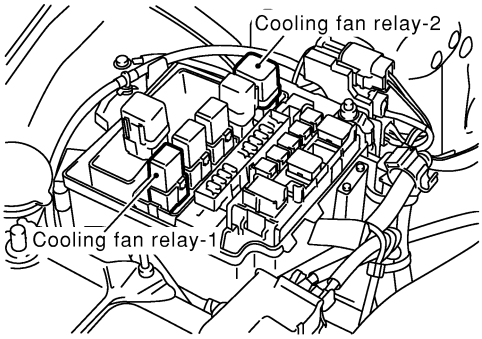

SEC381C

2. Start engine and let it idle.
3. Set temperature lever at full cold position.
4. Turn air conditioner switch "ON".
5. Turn blower fan switch "ON".
6. Make sure that cooling fan operates at low speed.

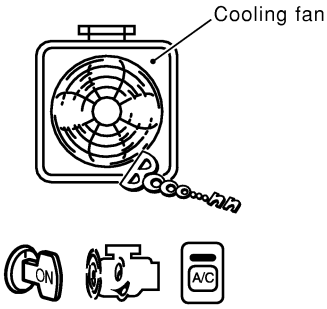

SEC443C

OK or NG

OK	▶	GO TO 5.
NG	▶	Check cooling fan low speed control circuit. (Go to PROCEDURE A, EC-129.)

5	CHECK COOLING FAN HIGH SPEED OPERATION

Without CONSULT-II

1. Turn ignition switch "OFF".
2. Reconnect cooling fan relay-2.
3. Turn air conditioner switch and blower fan switch "OFF".
4. Disconnect engine coolant temperature sensor harness connector.
5. Connect 150Ω resistor to engine coolant temperature sensor harness connector.
6. Restart engine and make sure that cooling fan operates at higher speed than low speed.

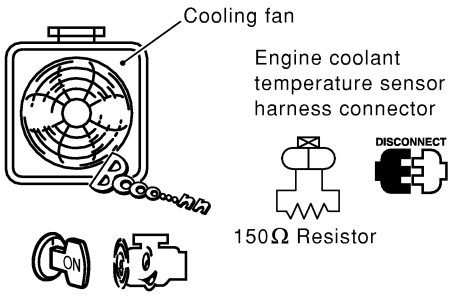

SEC444C

OK or NG

OK	▶	GO TO 6.
NG	▶	Check cooling fan high speed control circuit. (Go to PROCEDURE B, EC-132.)

6	CHECK COOLING SYSTEM FOR LEAK

Apply pressure to the cooling system with a tester, and check if the pressure drops.

Testing pressure: 157 kPa (1.57 bar, 1.6 kg/cm^2, 23 psi)

CAUTION:

Higher than the specified pressure may cause radiator damage.

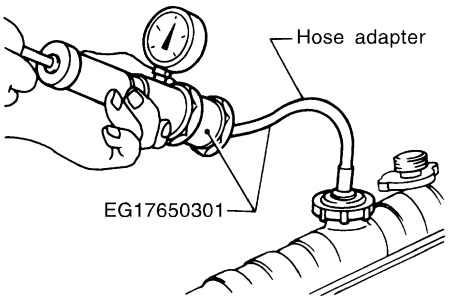

SLC754AB

Pressure should not drop.

OK or NG

OK	▶	GO TO 7.
NG	▶	**Check the following for leak** ● Hose ● Radiator ● Water pump Refer to LC-12, "Water Pump".

7	CHECK RADIATOR CAP

Apply pressure to cap with a tester.

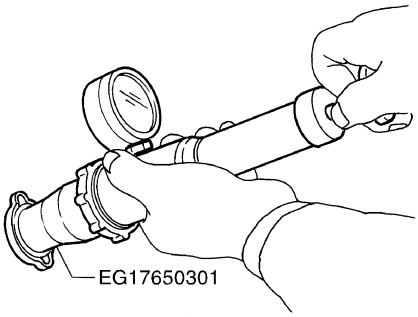

SLC755AE

Radiator cap relief pressure:
59 - 98 kPa (0.59 - 0.98 bar, 0.6 - 1.0 kg/cm^2, 9 - 14 psi)

OK or NG

OK	▶	GO TO 8.
NG	▶	Replace radiator cap.

8	CHECK THERMOSTAT

1. Check valve seating condition at normal room temperatures.
   It should seat tightly.
2. Check valve opening temperature and valve lift.

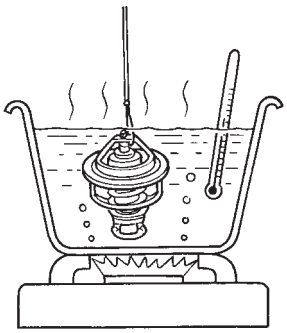

SLC343

Valve opening temperature:
76.5°C (170°F)
Valve lift:
More than 8 mm/90°C (0.31 in/194°F)

3. Check if valve is closed at 5°C (9°F) below valve opening temperature.

For details, refer to LC-13, "Thermostat".

OK or NG

OK	▶	GO TO 9.
NG	▶	Replace thermostat

9	CHECK ENGINE COOLANT TEMPERATURE SENSOR

Refer to "COMPONENT INSPECTION", EC-109.

OK or NG

OK	▶	GO TO 10.
NG	▶	Replace engine coolant temperature sensor.

10	**CHECK MAIN 12 CAUSES**
If the cause cannot be isolated, go to "MAIN 12 CAUSES OF OVERHEATING", EC-135.	
▶	**INSPECTION END**

PROCEDURE A

=NMEC0702S01

1	CHECK POWER SUPPLY

1. Turn ignition switch "OFF".
2. Disconnect cooling fan relay-1.

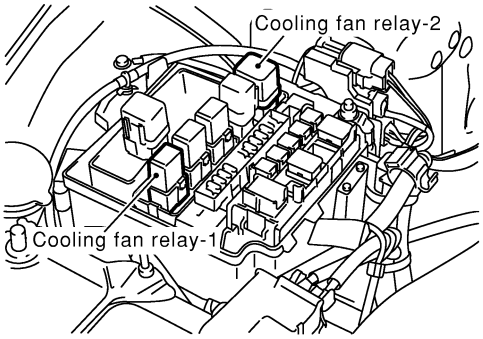

SEC381C

3. Turn ignition switch "ON".
4. Check voltage between cooling fan relay-1 terminals 2, 5 and ground with CONSULT-II or tester.

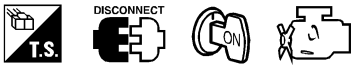

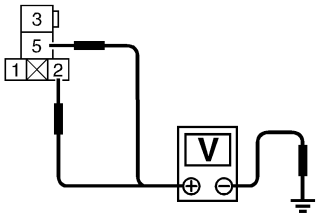

Voltage: Battery voltage

SEC412C

OK or NG

OK	▶	GO TO 3.
NG	▶	GO TO 2.

2	DETECT MALFUNCTIONING PART

Check the following.
- 10A fuse
- 40A fusible link
- Harness for open or short between cooling fan relay-1 and fuse
- Harness for open or short between cooling fan relay-1 and battery

	▶	Repair open circuit or short to ground or short to power in harness or connectors.

3	CHECK COOLING FAN MOTOR CIRCUIT FOR OPEN AND SHORT-I

1. Turn ignition switch "OFF".
2. Disconnect cooling fan motor harness connector.

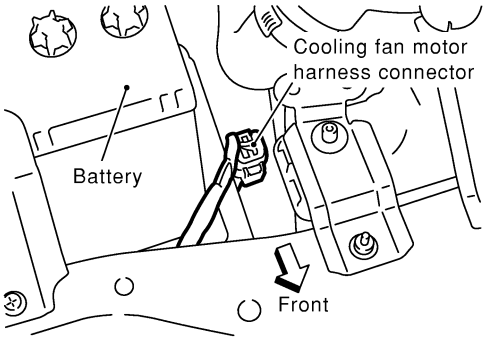

SEC382C

3. Check harness continuity between cooling fan relay-1 terminal 3 and cooling fan motor terminal 1, cooling fan motor terminal 3 and body ground.
   Refer to Wiring Diagram.
   Continuity should exist.
4. Also check harness for short to ground and short to power.

OK or NG

OK	▶	GO TO 4.
NG	▶	Repair open circuit or short to ground or short to power in harness or connectors.

4	CHECK OUTPUT SIGNAL CIRCUIT

1. Disconnect ECM harness connector.
2. Check harness continuity between ECM terminal 9 and cooling fan relay-1 terminal 1.
   Refer to Wiring Diagram.
   Continuity should exist.
3. Also check harness for short to ground and short to power.

OK or NG

OK	▶	GO TO 6.
NG	▶	GO TO 5.

5	DETECT MALFUNCTION PART

Check the following.
- Harness connectors F4, M60
- Harness connectors M10, E101
- Harness for open or short between cooling fan relay-1 and ECM

	▶	Repair open circuit or short to ground or short to power in harness connectors.

6	CHECK COOLING FAN RELAY-1

Refer to "Component Inspection", EC-135.

OK or NG

OK	▶	GO TO 7.
NG	▶	Replace cooling fan relay-1.

7	CHECK COOLING FAN MOTOR	
Refer to "Component Inspection", EC-136.		
	OK or NG	
OK	▶	GO TO 8.
NG	▶	Replace cooling fan motor.

8	CHECK INTERMITTENT INCIDENT	
Perform "TROUBLE DIAGNOSIS FOR INTERMITTENT INCIDENT", EC-82.		
	▶	**INSPECTION END**

PROCEDURE B

=NMEC0702S02

1	CHECK COOLING FAN POWER SUPPLY CIRCUIT

1. Turn ignition switch "OFF".
2. Disconnect cooling fan relay-2.

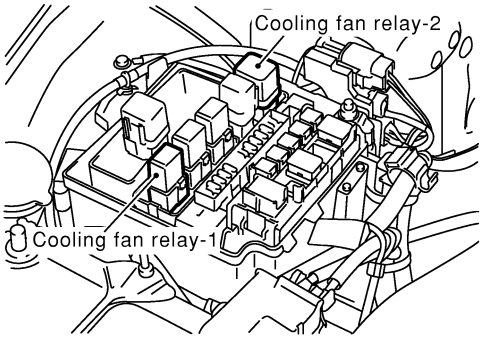

SEC381C

3. Turn ignition switch "ON".
4. Check voltage between cooling fan relays-2 terminals 2, 5 and ground with CONSULT-II or tester.

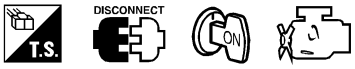

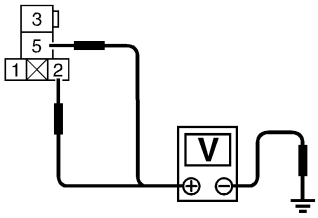

Voltage: Battery voltage

SEC412C

OK or NG

OK	▶	GO TO 3.
NG	▶	GO TO 2.

2	DETECT MALFUNCTIONING PART

Check the following.
- 10A fuse
- 40A fusible link
- Harness for open or short between cooling fan relay-2 and fuse
- Harness for open or short between cooling fan relay-2 and fusible link

	▶	Repair open circuit or short to ground or short to power in harness or connectors.

3	CHECK COOLING FAN MOTOR CIRCUIT FOR OPEN AND SHORT

1. Turn ignition switch "OFF".
2. Disconnect cooling fan motor harness connector.

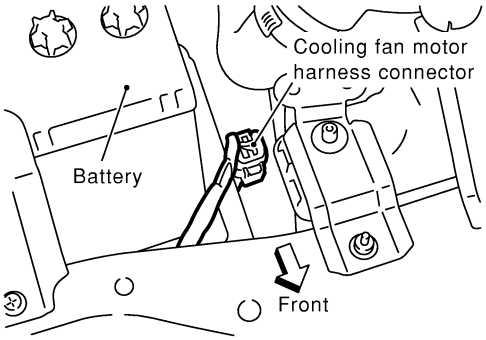

SEC382C

3. Check harness continuity between cooling fan relay-2 terminal 3 and cooling fan motor terminal 4, cooling fan motor terminal 2 and body ground.
   Refer to Wiring Diagram.
   Continuity should exist.
4. Also check harness for short to ground and short to power.

OK or NG

OK	▶	GO TO 4.
NG	▶	Repair open circuit or short to ground or short to power in harness or connectors.

4	CHECK COOLING FAN OUTPUT SIGNAL CIRCUIT FOR OPEN AND SHORT

1. Disconnect ECM harness connector.
2. Check harness continuity between ECM terminal 10 and cooling fan relay-2 terminal 1.
   Refer to Wiring Diagram.
   Continuity should exist.
3. Also check harness for short to ground and short to power.

OK or NG

OK	▶	GO TO 6.
NG	▶	GO TO 5.

5	DETECT MALFUNCTIONING PART

Check the following.
- Harness connectors F4, M60
- Harness connectors M10, E101
- Harness for open or short between cooling fan relay-2 and ECM

	▶	Repair open circuit or short to ground or short to power in harness or connectors.

6	CHECK COOLING FAN RELAY-2

Refer to "Component Inspection", EC-135.

OK or NG

OK	▶	GO TO 7.
NG	▶	Replace cooling fan relay-2.

7	CHECK COOLING FAN MOTOR	
Refer to "Component Inspection", EC-136.		
	OK or NG	
OK	▶	GO TO 8.
NG	▶	Replace cooling fan motors.

8	CHECK INTERMITTENT INCIDENT
Perform "TROUBLE DIAGNOSIS FOR INTERMITTENT INCIDENT", EC-82.	
▶	**INSPECTION END**

Main 12 Causes of Overheating

=NMEC0703

Engine	Step	Inspection item	Equipment	Standard	Reference page
OFF	1	• Blocked radiator • Blocked condenser • Blocked radiator grille • Blocked bumper	• Visual	No blocking	—
	2	• Coolant mixture	• Coolant tester	50 - 50% coolant mixture	See MA-9, “Engine Coolant Mixture Ratio”.
	3	• Coolant level	• Visual	Coolant up to MAX level in reservoir tank and radiator filler neck	See LC-15, “Changing Engine Coolant”.
	4	• Radiator cap	• Pressure tester	59 - 98 kPa (0.59 - 0.98 bar, 0.6 - 1.0 kg/cm^2, 9 - 14 psi) (Limit)	See LC-10, “System Check”.
ON*2	5	• Coolant leaks	• Visual	No leaks	See LC-10, “System Check”.
ON*2	6	• Thermostat	• Touch the upper and lower radiator hoses	Both hoses should be hot	See LC-13, “Thermostat” and LC-14, “Radiator”.
ON*1	7	• Cooling fan	• CONSULT-II	Operating	See “DTC P0208 OVERHEAT” (EC-120).
OFF	8	• Combustion gas leak	• Color checker chemical tester 4 Gas analyzer	Negative	—
ON*3	9	• Coolant temperature gauge	• Visual	Gauge less than 3/4 when driving	—
		• Coolant overflow to reservoir tank	• Visual	No overflow during driving and idling	See LC-15, “Changing Engine Coolant”.
OFF*4	10	• Coolant return from reservoir tank to radiator	• Visual	Should be initial level in reservoir tank	See LC-16, “Refilling Engine Coolant”.
OFF	11	• Cylinder head	• Straight gauge feeler gauge	0.1 mm (0.004 in) Maximum distortion (warping)	See EM-43, “Inspection”, “CYLINDER HEAD”.
	12	• Cylinder block and pistons	• Visual	No scuffing on cylinder walls or piston	See EM-70, “Inspection”, “CYLINDER BLOCK”.

*1: Turn the ignition switch ON.
*2: Engine running at 3,000 rpm for 10 minutes.
*3: Drive at 90 km/h (55 MPH) for 30 minutes and then let idle for 10 minutes.
*4: After 60 minutes of cool down time.
For more information, refer to LC-21, “OVERHEATING CAUSE ANALYSIS”.

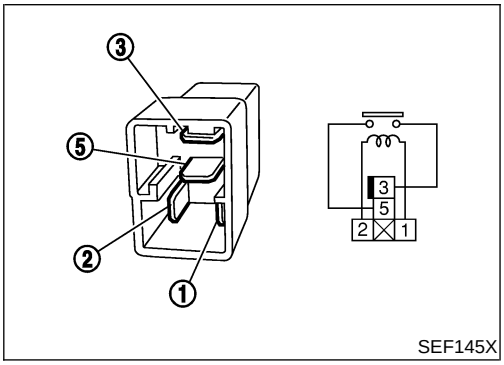

SEF145X

Component Inspection

NMEC0704

COOLING FAN RELAYS-1 AND -2

NMEC0704S01

Check continuity between terminals 3 and 5.

Conditions	Continuity
12V direct current supply between terminals 1 and 2	Yes
No current supply	No

If NG, replace relay.

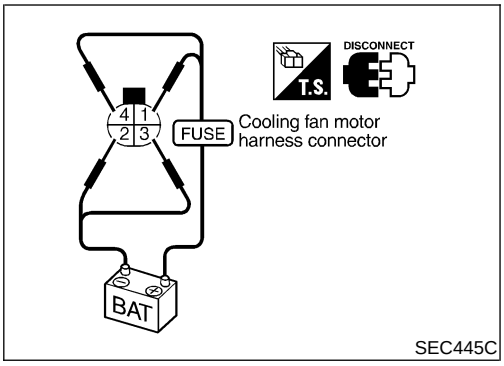

COOLING FAN MOTOR

NMEC0704S03

1. Disconnect cooling fan motor harness connectors.
2. Supply cooling fan motor terminals with battery voltage and check operation.

	Speed	Terminals	
		(+)	(−)
Cooling fan motor	Low	1	3
	High	1, 4	2, 3

Cooling fan motor should operate.
If NG, replace cooling fan motor.

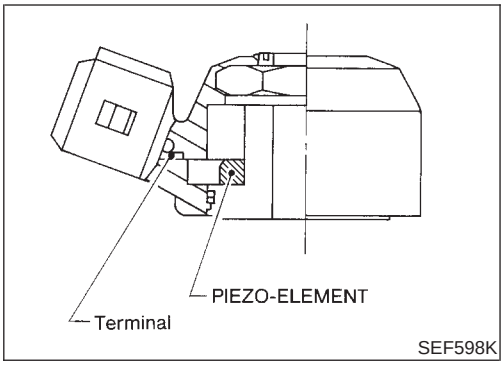

Component Description

NMEC0705

The knock sensor is attached to the cylinder block. It senses engine knocking using a piezoelectric element. A knocking vibration from the cylinder block is sensed as vibrational pressure. This pressure is converted into a voltage signal and sent to the ECM.

ECM Terminals and Reference Value

NMEC0706

Specification data are reference values and are measured between each terminal and ground.

CAUTION:

Do not use ECM ground terminals when measuring input/output voltage. Doing so may result in damage to the ECM's transistor. Use a ground other than ECM terminals, such as the ground.

TERMINAL NO.	WIRE COLOR	ITEM	CONDITION	DATA (DC Voltage)
27	W	Knock sensor	**[Engine is running]** ● Idle speed	Approximately 2.5V

On Board Diagnosis Logic

NMEC0707

DTC No.	Malfunction is detected when ...	Check Items (Possible Cause)
0304	● An excessively low or high voltage from the knock sensor is sent to ECM.	● Harness or connectors (The knock sensor circuit is open or shorted.) ● Knock sensor

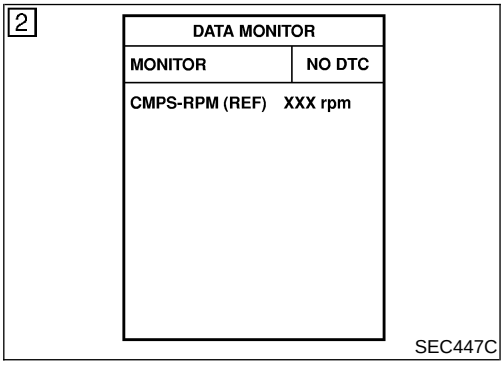

DTC Confirmation Procedure

NMEC0708

NOTE:

If "DTC Confirmation Procedure" has been previously conducted, always turn ignition switch "OFF" and wait at least 5 seconds before conducting the next test.

TESTING CONDITION:

Before performing the following procedure, confirm that battery voltage is more than 10V at idle.

With CONSULT-II

1) Turn ignition switch "ON" and select "DATA MONITOR" mode with CONSULT-II.
2) Start engine and run it for at least 5 seconds at idle speed.
3) If DTC is detected, go to "Diagnostic Procedure", EC-139.

Without CONSULT-II

1) Start engine and run it for at least 5 seconds at idle speed.
2) Turn ignition switch "OFF", wait at least 5 seconds and then turn "ON".
3) Perform "Diagnostic Test Mode II (Self-diagnostic results)" with ECM.
4) If DTC is detected, go to "Diagnostic Procedure", EC-139.

Wiring Diagram

NMEC0709

EC-KS-01

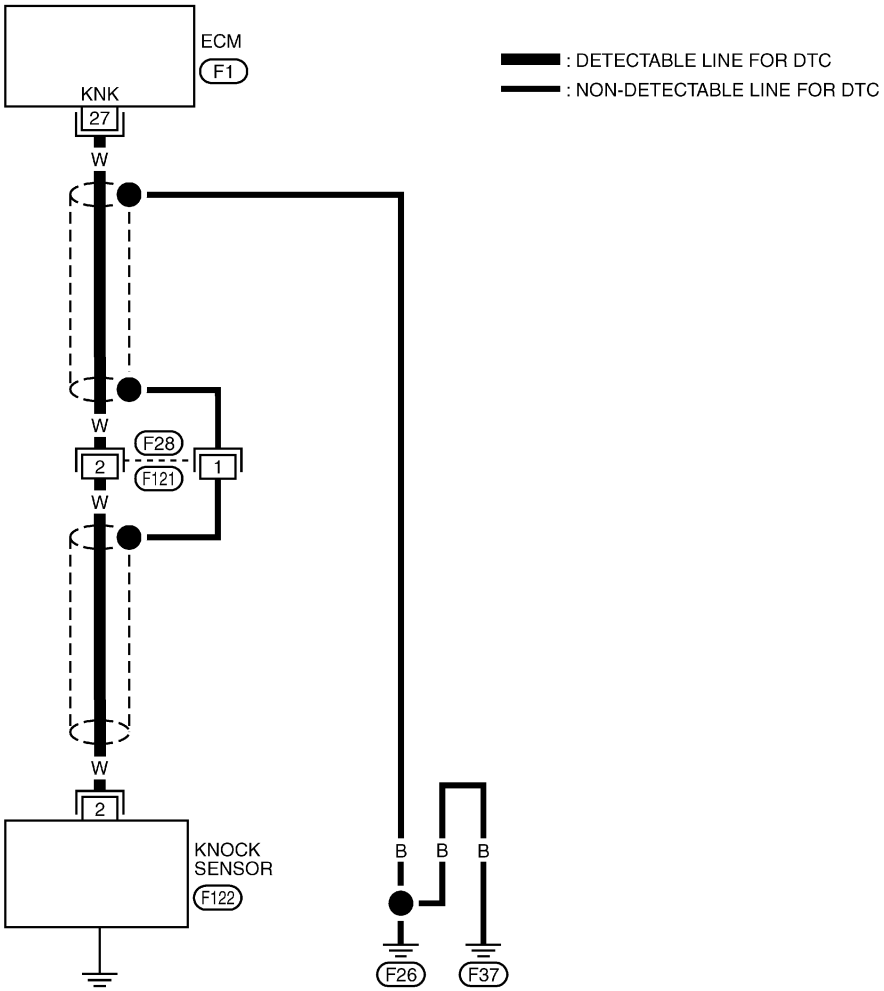

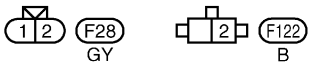

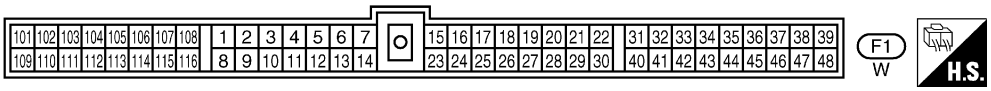

TEC804

Diagnostic Procedure

NMEC0710

1	RETIGHTEN GROUND SCREWS
Loosen and retighten engine ground screws. 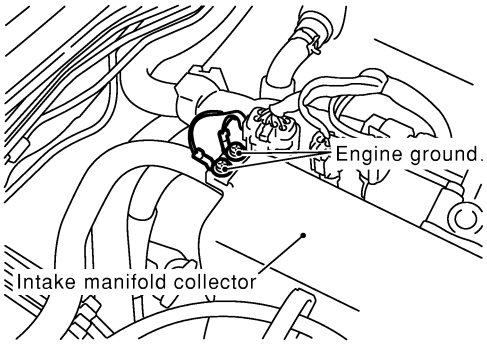 SEC377C	
▶	GO TO 2.

2	CHECK INPUT SIGNAL CIRCUIT
1. Turn ignition switch “OFF”. 2. Disconnect ECM harness connector and knock sensor harness connector. 3. Check harness continuity between knock sensor terminal 2 and ECM terminal 27. Refer to wiring diagram. **Continuity should exist.** 4. Also check harness for short to ground and short to power.	
OK or NG	
OK ▶	GO TO 4.
NG ▶	GO TO 3.

3	DETECT MALFUNCTIONING PART
Check the following. ● Harness connectors F28, F121 ● Harness for open or short between knock sensor and ECM	
▶	Repair open circuit or short to ground or short to power in harness or connectors.

4	CHECK KNOCK SENSOR
Refer to “Component Inspection”, EC-140.	
OK or NG	
OK ▶	GO TO 5.
NG ▶	Replace knock sensor.

5	CHECK SHIELD CIRCUIT
1. Reconnect harness connectors disconnected. 2. Disconnect harness connectors F28, F121. 3. Check harness continuity between F28 terminal 1 and engine ground. Refer to wiring diagram. **Continuity should exist.** 4. Also check harness for short to power. 5. Then reconnect harness connectors.	
OK or NG	
OK ▶	GO TO 6.
NG ▶	Repair open circuit or short to power in harness or connectors.

6	CHECK INTERMITTENT INCIDENT
Perform "TROUBLE DIAGNOSIS FOR INTERMITTENT INCIDENT", EC-82.	
▶	INSPECTION END

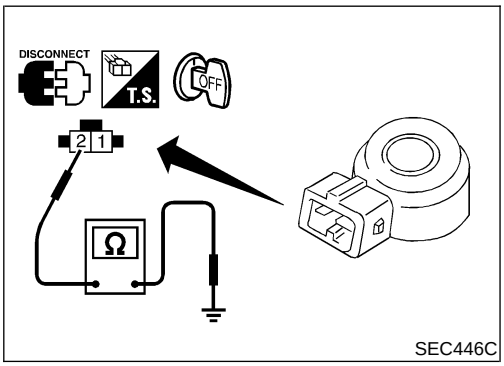

Component Inspection

NMEC0711

KNOCK SENSOR

NMEC0711S01

- Use an ohmmeter which can measure more than 10 MΩ.

1. Disconnect knock sensor harness connector.
2. Check resistance between terminal 2 and ground.

Resistance: 500 - 620 kΩ [at 25°C (77°F)]

CAUTION:

Discard any knock sensors that have been dropped or physically damaged. Use only new ones.

Component Description

NMEC0712

The throttle position sensor responds to the accelerator pedal movement. This sensor is a kind of potentiometer which transforms the throttle position into output voltage, and emits the voltage signal to the ECM. In addition, the sensor detects the opening and closing speed of the throttle valve and feeds the voltage signal to the ECM.

Idle position of the throttle valve is determined by the ECM receiving the signal from the throttle position sensor. This sensor controls engine operation such as fuel cut. On the other hand, the “Wide open and closed throttle position switch”, which is built into the throttle position sensor unit (for A/T models only), is not used for engine control.

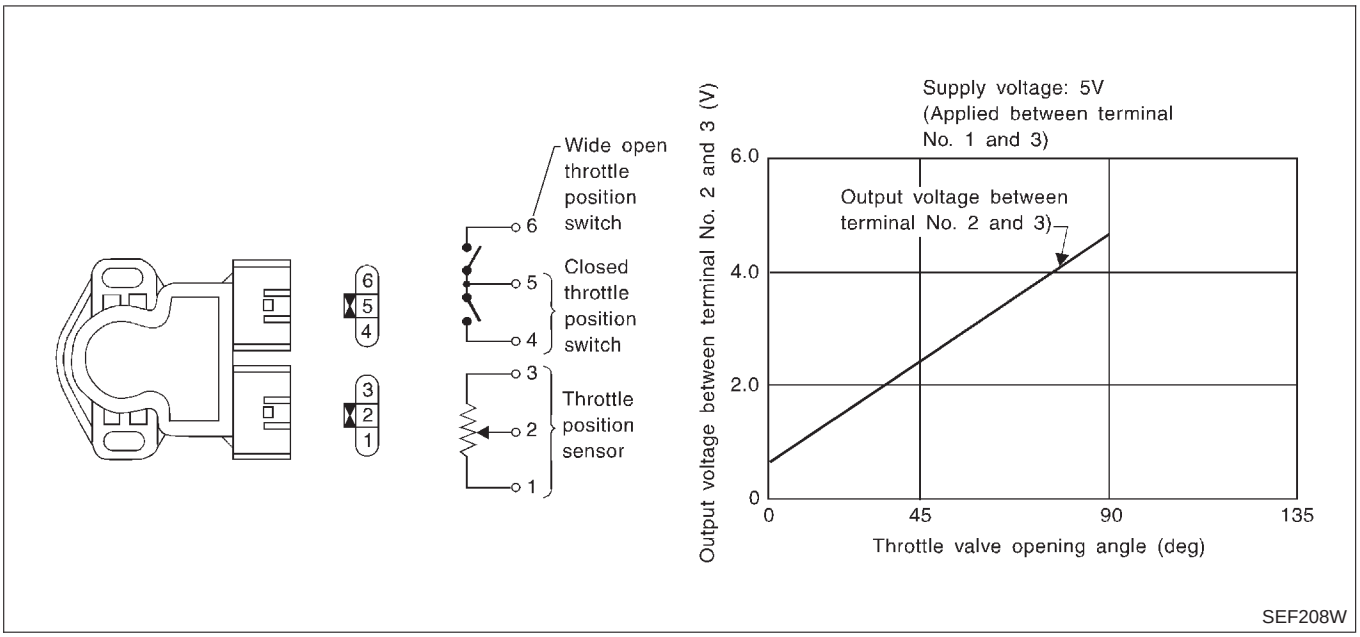

CONSULT-II Reference Value in Data Monitor Mode

NMEC0713

Specification data are reference values.

MONITOR ITEM	CONDITION		SPECIFICATION
THRTL POS SEN	● Engine: Idle	Throttle valve: fully closed	0.15 - 0.85V
	● Ignition switch: ON (Engine stopped)	Throttle valve: fully opened	3.5 - 4.7V
CLSD THL POS	● Engine: Idle	Throttle valve: fully closed	ON
		Throttle valve: slightly opened	OFF

ECM Terminals and Reference Value

=NMEC0714

Specification data are reference values and are measured between each terminal and ground.

CAUTION:

Do not use ECM ground terminals when measuring input/output voltage. Doing so may result in damage to the ECM's transistor. Use a ground other than ECM terminals, such as the ground.

TERMINAL NO.	WIRE COLOR	ITEM	CONDITION	DATA (DC Voltage)
20	R	Throttle position sensor	**[Engine is running]** ● Accelerator pedal fully released	0.15 - 0.85V
			[Ignition switch "ON"] ● Accelerator pedal fully depressed	3.5 - 4.7V
21	GY	Sensors' ground	**[Engine is running]** ● Warm up condition ● Idle speed	Approximately 0V
37	LG/R	Sensors' power supply	**[Ignition switch "ON"]**	Approximately 5V

On Board Diagnosis Logic

NMEC0715

DTC No.	Malfunction is detected when ...	Check Items (Possible Cause)
0403	An excessively low or high voltage from the sensor is sent to ECM* while driving.	● Harness or connectors (The throttle position sensor circuit is open or shorted.) ● Throttle position sensor

*: When this malfunction is detected, the ECM enters fail-safe mode and the MIL lights up.

Fail-safe Mode

NMEC0716

Detected items	Engine operating condition in fail-safe mode	
Throttle position sensor circuit	Throttle position will be determined based on the injected fuel amount and the engine speed. Therefore, acceleration will be poor.	
	Condition	Driving condition
	When engine is idling	Normal
	When accelerating	Poor acceleration

DTC Confirmation Procedure

NMEC0717

NOTE:

If "DTC Confirmation Procedure" has been previously conducted, always turn ignition switch "OFF" and wait at least 5 seconds before conducting the next test.

CAUTION:

Always drive vehicle at a safe speed.

TESTING CONDITION:

- **This test may be conducted with the drive wheels lifted in the shop or by driving the vehicle. If a road test is expected to be easier, it is unnecessary to lift the vehicle.**

2

DATA MONITOR	
MONITOR	NO DTC
CMPS-RPM (REF)	XXX rpm
VHCL SPEED SE	XXX km/h
THRTL POS SEN	XXX V

SEC448C

With CONSULT-II

1) Turn ignition switch "ON" and select "DATA MONITOR" mode with CONSULT-II.
2) Start engine and maintain the following conditions for at least 5 consecutive seconds.

VHCL SPEED SE	More than 4 km/h (2 MPH)
Selector lever	Suitable position except "P" or "N" position

3) If DTC is detected, go to "Diagnostic Procedure", EC-145.

Without CONSULT-II

1) Start engine and maintain the following conditions for at least 5 consecutive seconds.

Vehicle speed	More than 4 km/h (2 MPH)
Selector lever	Suitable position except "P" or "N" position

2) Turn ignition switch "OFF" and wait at least 5 seconds.
3) Turn ignition switch "ON" and perform "Diagnostic Test Mode II (Self-diagnostic results)" with ECM.
4) If DTC is detected, go to "Diagnostic Procedure", EC-145.

Wiring Diagram

NMEC0718

EC-TPS-01

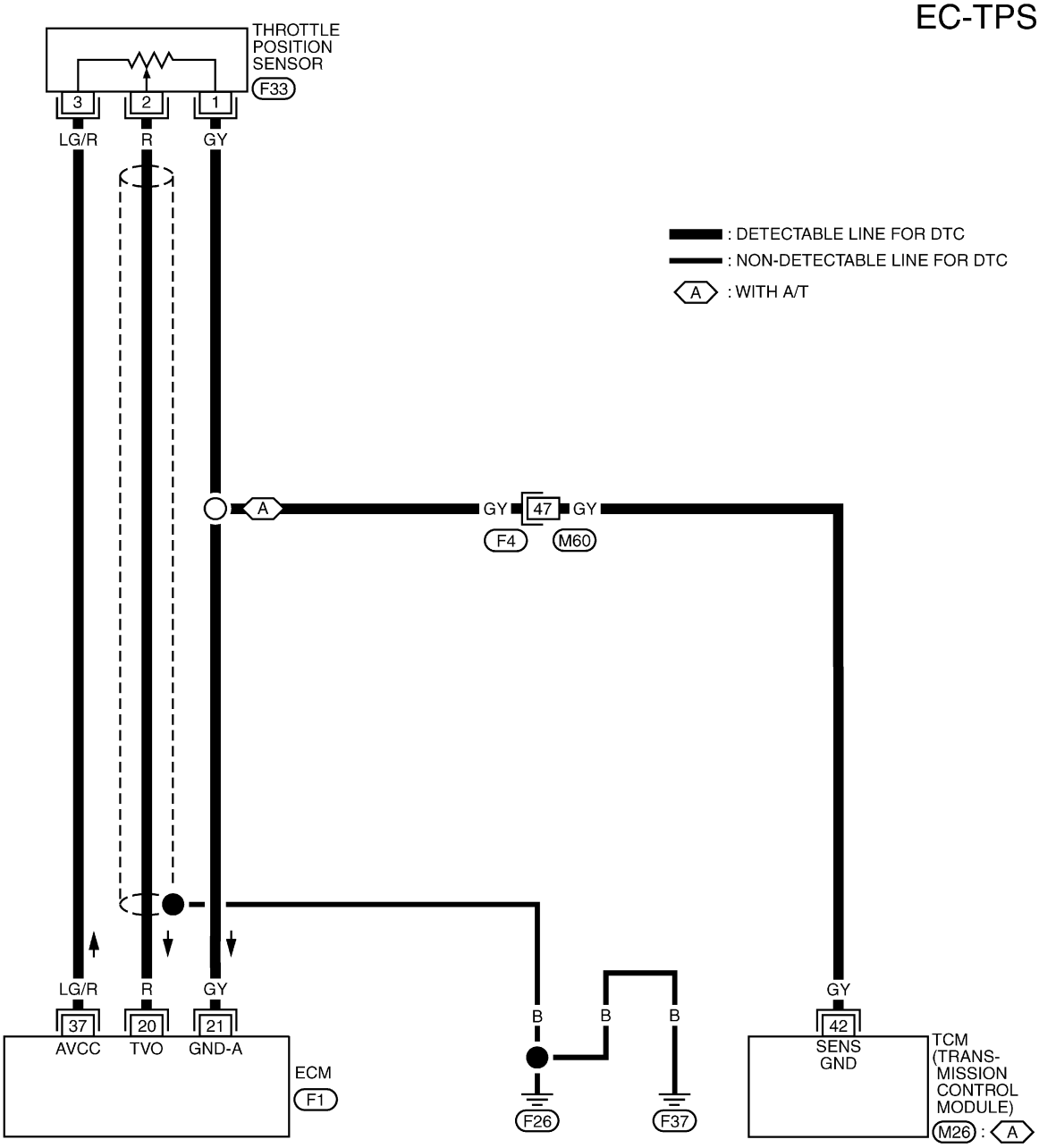

REFER TO THE FOLLOWING.
F4 -SUPER MULTIPLE JUNCTION (SMJ)

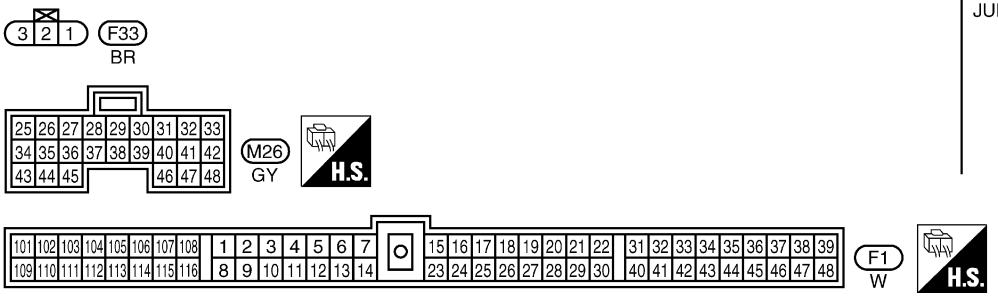

TEC805

Diagnostic Procedure

NMEC0719

1	RETIGHTEN GROUND SCREWS

1. Turn ignition switch “OFF”.
2. Loosen and retighten engine ground screws.

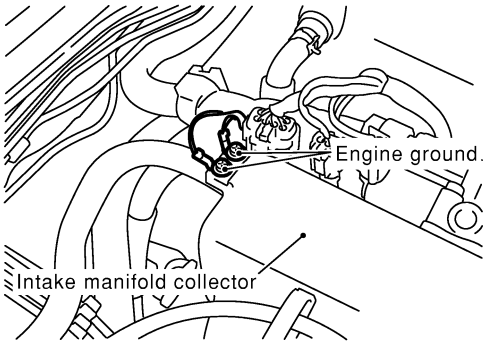

SEC377C

▶	GO TO 2.

2	CHECK POWER SUPPLY

1. Disconnect throttle position sensor harness connector.

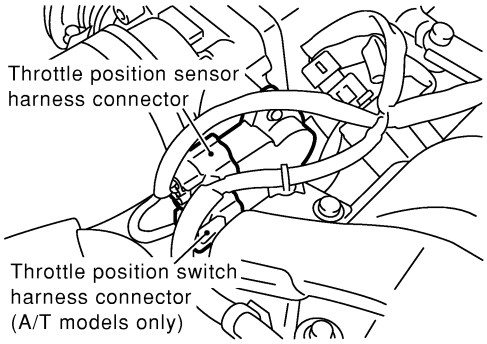

SEC336C

2. Turn ignition switch “ON”.
3. Check voltage between throttle position sensor terminal 3 and ground with CONSULT-II or tester.

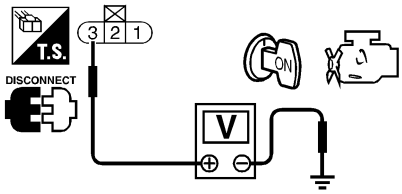

Voltage: Approximately 5V

SEF306X

OK or NG

OK	▶	GO TO 3.
NG	▶	Repair harness or connectors.

3	CHECK GROUND CIRCUIT
1. Turn ignition switch "OFF". 2. Check harness continuity between throttle position sensor terminal 1 and engine ground. Refer to wiring diagram. **Continuity should exist.** 3. Also check harness for short to power.	
OK or NG	
OK ▶	GO TO 5.
NG ▶	GO TO 4.

4	DETECT MALFUNCTIONING PART
Check the following. ● Harness connectors F4, M60 ● Harness for open or short between ECM and throttle position sensor ● Harness for open or short between TCM (Transmission Control Module) and throttle position sensor	
▶	Repair open circuit or short to power in harness or connectors.

5	CHECK INPUT SIGNAL CIRCUIT
1. Disconnect ECM harness connector. 2. Check harness continuity between ECM terminal 20 and throttle position sensor terminal 2. Refer to wiring diagram. **Continuity should exist.** 3. Also check harness for short to ground and short to power.	
OK or NG	
OK ▶	GO TO 6.
NG ▶	Repair open circuit or short to ground or short to power in harness or connectors.

6	CHECK THROTTLE POSITION SENSOR
Refer to "Component Inspection", EC-146.	
OK or NG	
OK ▶	GO TO 7.
NG ▶	Replace throttle position sensor. To adjust it, perform "Basic Inspection", EC-50.

7	CHECK INTERMITTENT INCIDENT
Perform "TROUBLE DIAGNOSIS FOR INTERMITTENT INCIDENT", EC-82.	
▶	**INSPECTION END**

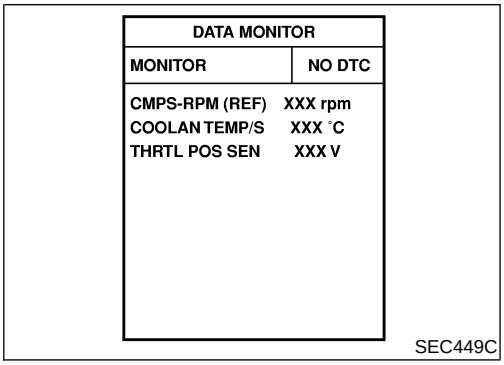

DATA MONITOR	
MONITOR	NO DTC
CMPS-RPM (REF)	XXX rpm
COOLAN TEMP/S	XXX °C
THRTL POS SEN	XXX V

SEC449C

Component Inspection

NMEC0720

THROTTLE POSITION SENSOR

NMEC0720S01

With CONSULT-II

1) Start engine and warm it up to normal operating temperature.
2) Stop engine (ignition switch OFF).
3) Turn ignition switch ON.
4) Select "DATA MONITOR" mode with CONSULT-II.
5) Check voltage of "THRTL POS SEN" under the following conditions.

NOTE:
Voltage measurement must be made with throttle position sensor installed in vehicle.

Throttle valve conditions	Voltage (V)
Completely closed	0.15 - 0.85 (a)
Partially open	Between (a) and (b)
Completely open	3.5 - 4.7 (b)

If NG, adjust closed throttle position switch. Refer to "Basic Inspection", EC-50.

6) If it is impossible to adjust closed throttle position switch in "Basic Inspection", replace throttle position sensor.

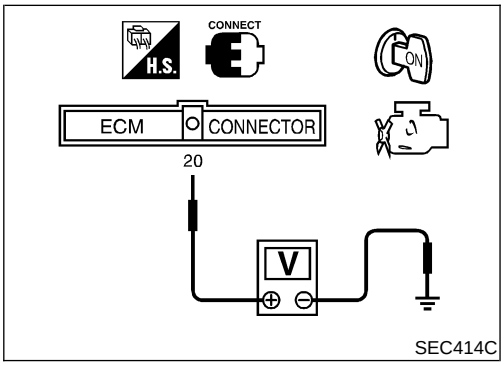

Without CONSULT-II

1) Start engine and warm it up to normal operating temperature.
2) Stop engine (ignition switch OFF).
3) Turn ignition switch ON.
4) Check voltage between ECM terminal 20 (Throttle position sensor signal) and ground under the following conditions.

NOTE:
Voltage measurement must be made with throttle position sensor installed in vehicle.

Throttle valve conditions	Voltage (V)
Completely closed	0.15 - 0.85 (a)
Partially open	Between (a) and (b)
Completely open	3.5 - 4.7 (b)

If NG, adjust closed throttle position switch. Refer to "Basic Inspection", EC-50.

5) If it is impossible to adjust closed throttle position switch in "Basic Inspection", replace throttle position sensor.

System Description

NMEC0721

These circuit lines are used to control the smooth shifting up and down of A/T during the hard acceleration/deceleration. Pulse signals are exchanged between ECM and TCM (Transmission control module).

ECM Terminals and Reference Value

NMEC0722

Specification data are reference values and are measured between each terminal and ground.

CAUTION:
Do not use ECM ground terminals when measuring input/output voltage. Doing so may result in damage to the ECM's transistor. Use a grond other than ECM terminals, such as the ground.

TERMINAL NO.	WIRE COLOR	ITEM	CONDITION	DATA (DC Voltage)
12	PU/W	A/T signal No. 3	**[Engine is running]** ● Idle speed	0 - 0.1V
44	L/W	A/T signal No. 2	**[Engine is running]** ● Idle speed	6 - 8V
45	L/OR	A/T signal No. 1	**[Engine is running]** ● Idle speed	6 - 8V

On Board Diagnosis Logic

NMEC0723

DTC No.	Malfunction is detected when ...	Check Items (Possible Cause)
0504	● ECM receives incorrect voltage from TCM (Transmission control module) continuously.	● Harness or connectors [The circuit between ECM and TCM (Transmission control module) is open or shorted.]

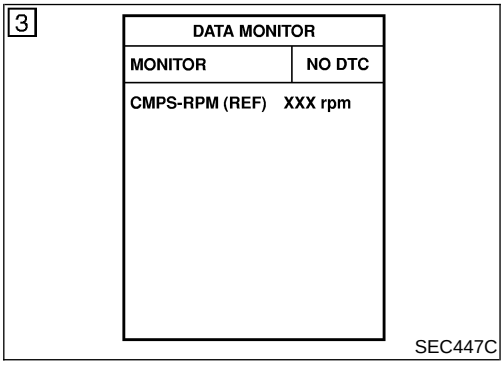

DTC Confirmation Procedure

NMEC0724

NOTE:
If "DTC Confirmation Procedure" has been previously conducted, always turn ignition switch "OFF" and wait at least 5 seconds before conducting the next test.

TESTING CONDITION:
Before performing the following procedure, confirm that battery voltage is more than 10.5V at idle.

With CONSULT-II

1) Turn ignition switch "ON".
2) Select "DATA MONITOR" mode with CONSULT-II.
3) Start engine, and let it idle for at least 15 seconds.
4) If DTC is detected, go to "Diagnostic Procedure", EC-151.

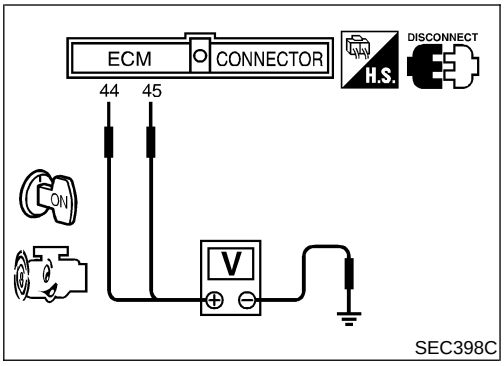

Overall Function Check

NMEC0818

Use this procedure to check the overall function of the A/T control circuit. During this check, a DTC might not be confirmed.

Without CONSULT-II

1) Start engine.
2) Check voltage between
   ECM terminal 44 and ground.
   ECM terminal 45 and ground.
   Voltage: 6 - 8V
3) If NG, go to “Diagnostic Procedure”, EC-151.

Wiring Diagram

NMEC0725

EC-AT/C-01

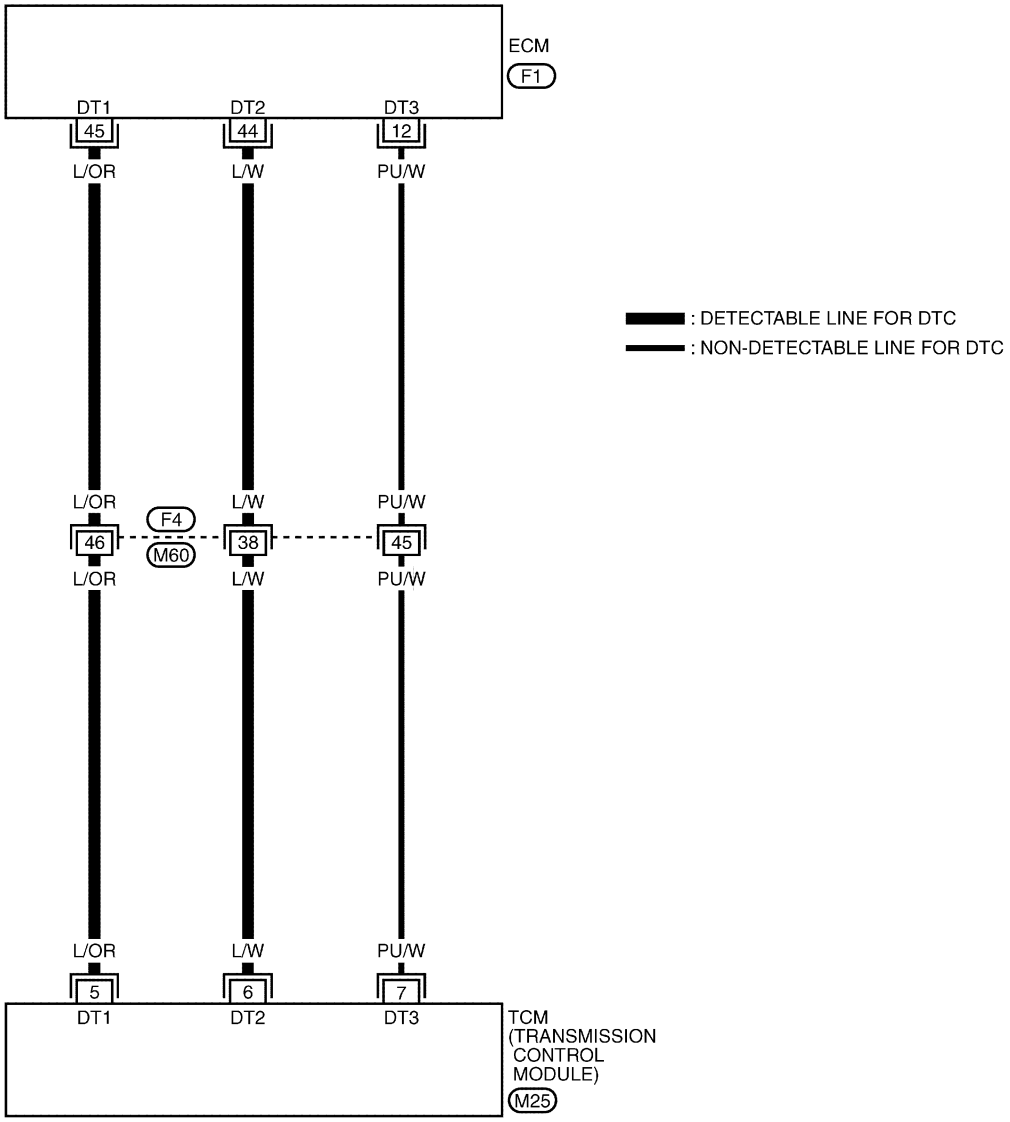

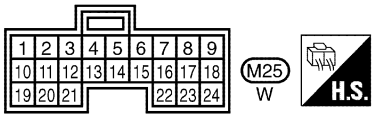

REFER TO THE FOLLOWING.
F4 -SUPER MULTIPLE JUNCTION (SMJ)

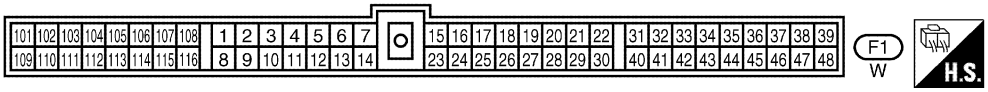

TEC806

Diagnostic Procedure

NMEC0726

1	CHECK INPUT SIGNAL CIRCUIT
1. Turn ignition switch “OFF”. 2. Disconnect ECM harness connector and TCM (Transmission control module) harness connector. 3. Check harness continuity between ECM terminal 12 and TCM terminal 7, ECM terminal 44 and terminal TCM 6, ECM terminal 45 and TCM terminal 5. Refer to wiring diagram. **Continuity should exist.**	
OK or NG	
OK ▶	GO TO 2.
NG ▶	Repair harness or connectors.

2	CHECK INPUT SIGNAL CIRCUIT
1. Check harness continuity between ECM terminals 12, 44, 45 and ground. Refer to wiring diagram. **Continuity should not exist.** 2. Also check harness for short to power.	
OK or NG	
OK ▶	GO TO 3.
NG ▶	Repair short to ground or short to power in harness.

3	CHECK INTERMITTENT INCIDENT
Refer to “TROUBLE DIAGNOSIS FOR INTERMITTENT INCIDENT”, EC-82.	
▶	**INSPECTION END**

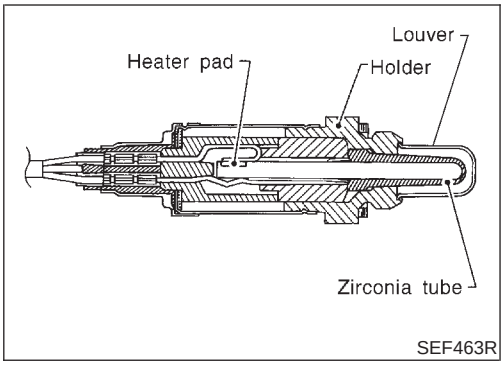

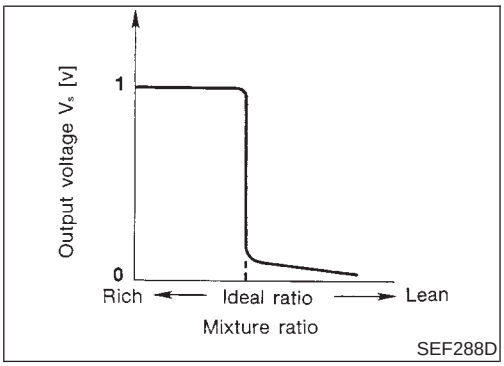

Component Description

NMEC0727

The heated oxygen sensor 1 (front) is placed into the exhaust manifold. It detects the amount of oxygen in the exhaust gas compared to the outside air. The heated oxygen sensor 1 (front) has a closed-end tube made of ceramic zirconia. The zirconia generates voltage from approximately 1V in richer conditions to 0V in leaner conditions. The heated oxygen sensor 1 (front) signal is sent to the ECM. The ECM adjusts the injection pulse duration to achieve the ideal air-fuel ratio. The ideal air-fuel ratio occurs near the radical change from 1V to 0V.

CONSULT-II Reference Value in Data Monitor Mode

NMEC0728

Specification data are reference values.

MONITOR ITEM	CONDITION		SPECIFICATION
O2S1	● Engine: After warming up	Maintaining engine speed at 2,000 rpm	0 - 0.3V ⟷ Approx. 0.6 - 1.0V
M/R F/C MNT			LEAN ⟷ RICH Changes more than 5 times during 10 seconds.

ECM Terminals and Reference Value

NMEC0729

Specification data are reference values and are measured between each terminal and ground.

CAUTION:

Do not use ECM ground terminals when measuring input/output voltage. Doing so may result in damage to the ECM's transistor. Use a ground other than ECM terminals, such as the ground.

TERMINAL NO.	WIRE COLOR	ITEM	CONDITION	DATA (DC Voltage)
19	W	Heated oxygen sensor 1 (front)	**[Engine is running]** ● After warming up to normal operating temperature and engine speed is 2,000 rpm	0 - Approximately 1.0V 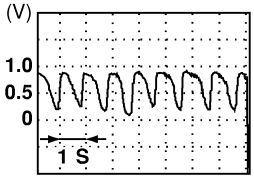 SEC363C

Wiring Diagram

NMEC0730

EC-HO2S-01

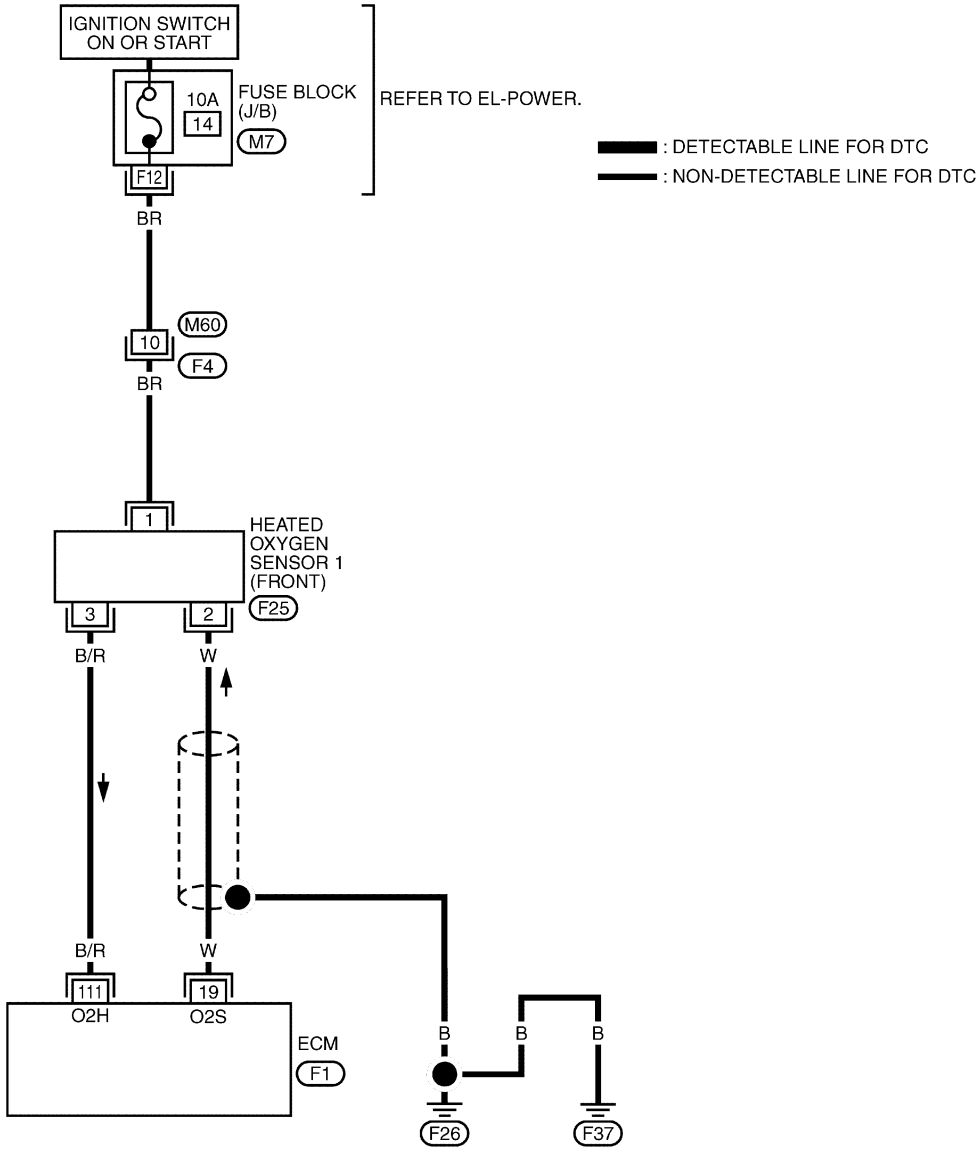

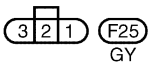

REFER TO THE FOLLOWING.
F4 -SUPER MULTIPLE JUNCTION (SMJ)
M7 -FUSE BLOCK-JUNCTION BOX (J/B)

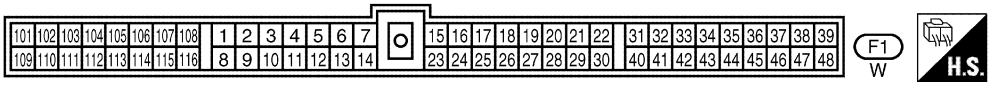

TEC808

Diagnostic Procedure

NMEC0731

1	INSPECTION START	
Do you have CONSULT-II?		
	Yes or No	
Yes	▶	GO TO 2.
No	▶	GO TO 3.

2	CHECK OVERALL FUNCTION	

With CONSULT-II

1. Start engine and warm it up to normal operating temperature.
2. Select M/R F/C MNT in “DATA MONITOR” mode with CONSULT-II.
3. Keep the engine speed at 2,000 rpm under no load, and make sure that the monitors fluctuate between LEAN and RICH more than five times in 10 seconds.

DATA MONITOR	
MONITOR	NO DTC
CMPS-RPM (REF)	XXX rpm
MAS AIR/FL SE	XXX V
COOLAN TEMP/S	XXX °C
O2S1	XXX V
M/R F/C MNT	LEAN

1 time: RICH → LEAN → RICH
2 times: RICH → LEAN → RICH → LEAN → RICH

SEC419C

	OK or NG	
OK	▶	**INSPECTION END**
NG	▶	GO TO 4.

3	CHECK OVERALL FUNCTION	

Without CONSULT-II

1. Start engine and warm it up to normal operating temperature.
2. Stop engine and wait at least 5 seconds.
3. Set ECM in “Diagnostic test mode-II [Heated oxygen sensor 1 monitor (front)]”. Refer to “How to Switch Diagnostic Test Modes”, EC-36.
4. Keep the engine speed at 2,000 rpm under no load, and make sure that the MIL comes ON more than five times in 10 seconds.

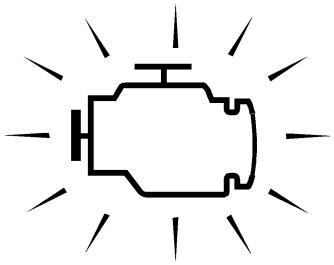

SAT652J

	OK or NG	
OK	▶	**INSPECTION END**
NG	▶	GO TO 4.

4	RETIGHTEN GROUND SCREWS

1. Turn ignition switch "OFF".
2. Loosen and retighten engine ground screws.

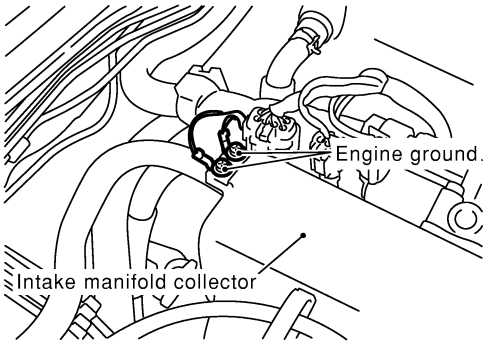

SEC377C

3. Disconnect heated oxygen sensor 1 (HO2S1) (front) harness connector.

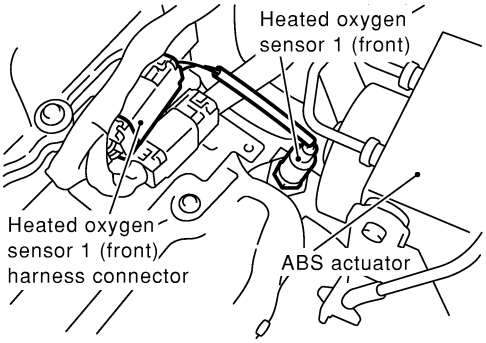

SEC383C

▶	GO TO 5.

5	RETIGHTEN HEATED OXYGEN SENSOR 1 (FRONT)

Loosen and retighten corresponding heated oxygen sensor 1 (front).

Tightening torque:
40 - 60 N·m (4.1 - 6.1 kg-m, 30 - 44 ft-lb)

▶	GO TO 6.

6	CHECK INPUT SIGNAL CIRCUIT

1. Disconnect ECM harness connector.
2. Check harness continuity between ECM terminal 19 and HO2S1 terminal 2.
   Refer to wiring diagram.
   Continuity should exist.
3. Check harness continuity between ECM terminal 19 (or HO2S1 terminal 2) and ground.
   Continuity should not exist.
4. Also check harness for short to power.

OK or NG

OK	▶	GO TO 7.
NG	▶	Repair open circuit or short to ground or short to power in harness or connectors.

7	CHECK HEATED OXYGEN SENSOR 1 (FRONT)	
Refer to "Component Inspection", EC-156.		
	OK or NG	
OK	▶	GO TO 8.
NG	▶	Replace heated oxygen sensor 1 (front).

8	CHECK INTERMITTENT INCIDENT	
Perform "TROUBLE DIAGNOSIS FOR INTERMITTENT INCIDENT", EC-82.		
	▶	**INSPECTION END**

4

DATA MONITOR	
MONITOR	NO DTC
CMPS-RPM (REF)	XXX rpm
MAS AIR/FL SE	XXX V
COOLAN TEMP/S	XXX °C
O2S1	XXX V
M/R F/C MNT	LEAN

SEC415C

5

cycle | 1 | 2 | 3 | 4 | 5 |
M/R F/C MNT R-L-R-L-R-L-R-L-R-L-R

R means M/R F/C MNT indicates RICH
L means M/R F/C MNT indicates LEAN

SEC416C

Component Inspection

NMEC0732

HEATED OXYGEN SENSOR 1 (FRONT)

NMEC0732S01

With CONSULT-II

1) Start engine and warm it up to normal operating temperature.
2) Select "MANU TRIG" in "DATA MONITOR" mode, and select "O2S1" and "M/R F/C MNT".
3) Hold engine speed at 2,000 rpm under no load during the following steps.
4) Touch "RECORD" on CONSULT-II screen.
5) Check the following.

- "M/R F/C MNT" in "DATA MONITOR" mode changes from "RICH" to "LEAN" to "RICH" 5 times in 10 seconds.
  5 times (cycles) are counted as shown below:
  R = "M/R F/C MNT", "RICH"
  L = "M/R F/C MNT", "LEAN"
- "O2S1" voltage goes above 0.6V at least once.
- "O2S1" voltage goes below 0.3V at least once.
- "O2S1" voltage never exceeds 1.0V.

CAUTION:

- **Discard any heated oxygen sensor which has been dropped from a height of more than 0.5 m (19.7 in) onto a hard surface such as a concrete floor; use a new one.**
- **Before installing new oxygen sensor, clean exhaust system threads using Oxygen Sensor Thread Cleaner tool and approved anti-seize lubricant.**

Trigger	CMPS RPM (REF)	O2S1
	rpm	V
XXX	XXX	XXX
XXX	XXX	XXX
XXX	XXX	XXX
XXX	XXX	XXX
XXX	XXX	XXX
XXX	XXX	XXX
XXX	XXX	XXX
XXX	XXX	XXX
XXX	XXX	XXX
XXX	XXX	XXX
XXX	XXX	XXX
XXX	XXX	XXX

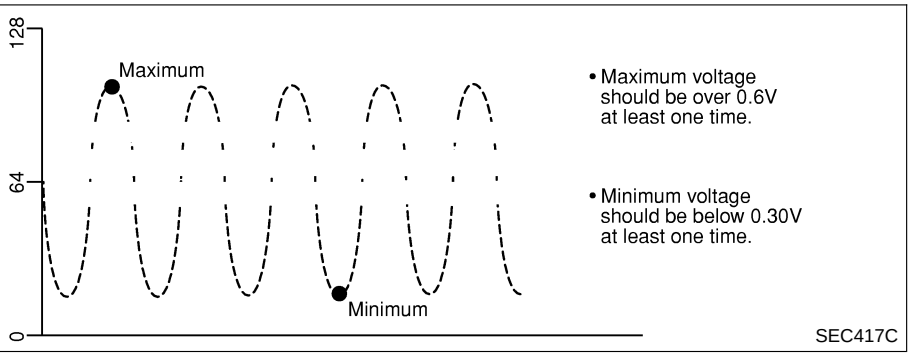

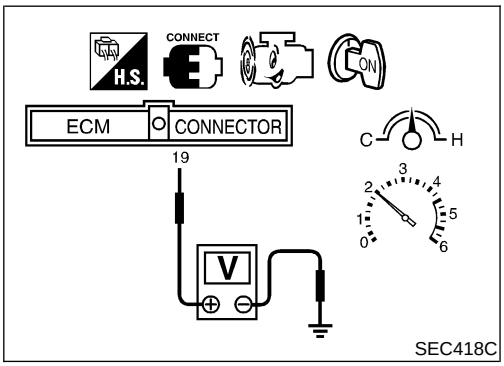

Without CONSULT-II

1) Start engine and warm it up to normal operating temperature.
2) Set voltmeter probes between ECM terminal 19 (HO2S1 signal) and engine ground.
3) Check the following with engine speed held at 2,000 rpm constant under no load.

- Malfunction indicator goes on more than five times within 10 seconds in Diagnostic Test Mode II [HEATED OXYGEN SENSOR 1 MONITOR (FRONT).]
- The maximum voltage is over 0.6V at least one time.
- The minimum voltage is below 0.3V at least one time.
- The voltage never exceeds 1.0V.

CAUTION:

- **Discard any heated oxygen sensor which has been dropped from a height of more than 0.5 m (19.7 in) onto a hard surface such as a concrete floor; use a new one.**
- **Before installing new oxygen sensor, clean exhaust system threads using Oxygen Sensor Thread Cleaner tool and approved anti-seize lubricant.**

Description

NMEC0733

SYSTEM DESCRIPTION

NMEC0733S01

Sensor	Input Signal to ECM	ECM function	Actuator
Camshaft position sensor	Engine speed	Heated oxygen sensor 1 heater (front) control	Heated oxygen sensor 1 heater (front)

The ECM performs ON/OFF control of the heated oxygen sensor 1 heater (front) corresponding to the engine operating condition.

OPERATION

NMEC0733S02

Engine speed	Heated oxygen sensor 1 heater (front)
Above 4,000 rpm	OFF
Below 4,000 rpm	ON

ECM Terminals and Reference Value

NMEC0735

Specification data are reference values and are measured between each terminal and ground.

CAUTION:

Do not use ECM ground terminals when measuring input/output voltage. Doing so may result in damage to the ECM's transistor. Use a ground other than ECM terminals, such as the ground.

TERMINAL NO.	WIRE COLOR	ITEM	CONDITION	DATA (DC Voltage)
111	B/R	Heated oxygen sensor 1 heater (front)	**[Engine is running]** ● Engine speed is below 4,000 rpm.	Approximately 0V
			[Engine is running] ● Engine speed is above 4,000 rpm.	BATTERY VOLTAGE (11 - 14V)

Wiring Diagram

NMEC0736

EC-HO2SH-01

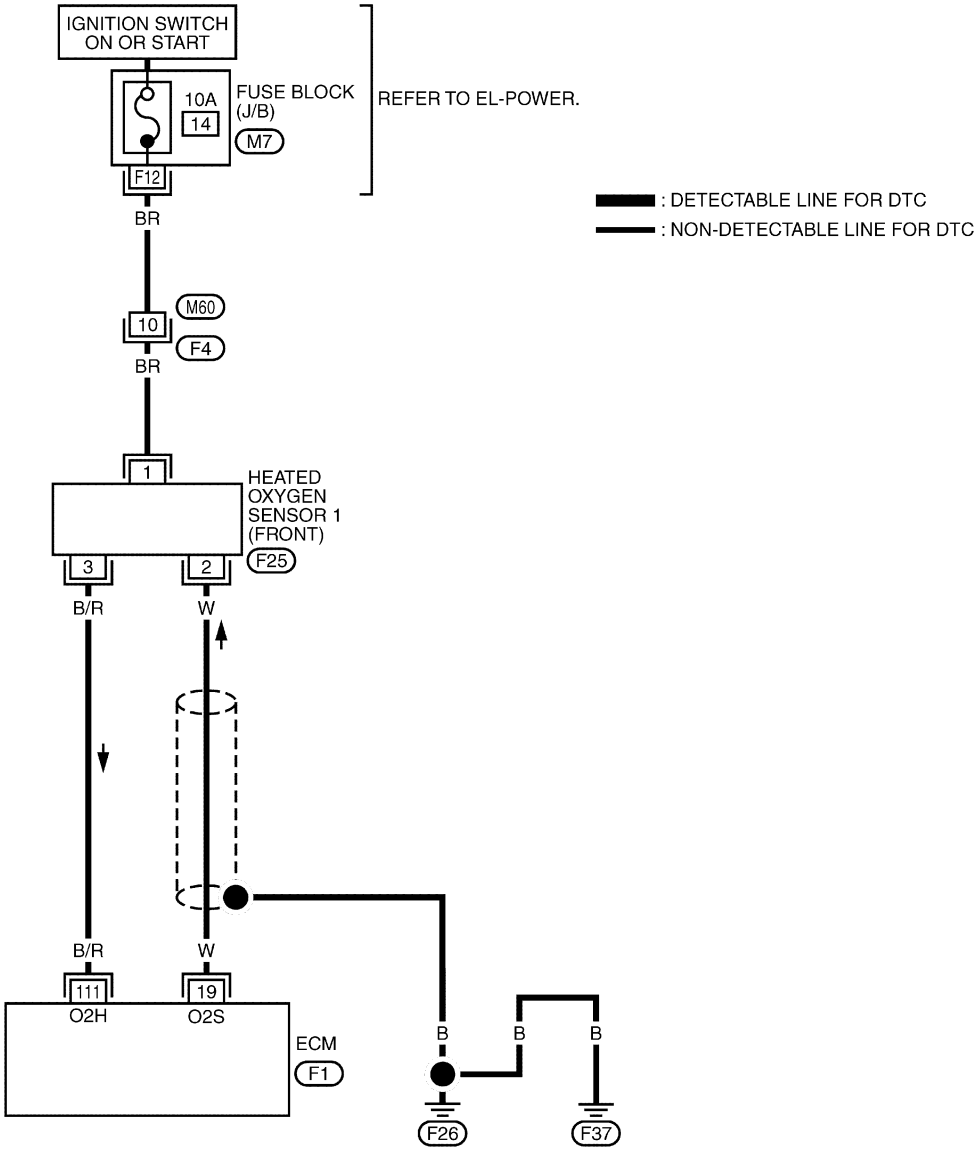

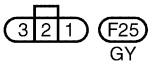

REFER TO THE FOLLOWING.
F4 -SUPER MULTIPLE JUNCTION (SMJ)
M7 -FUSE BLOCK-JUNCTION BOX (J/B)

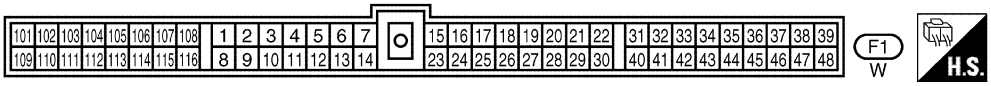

TEC809

Diagnostic Procedure

NMEC0737

1	CHECK OVERALL FUNCTION

1. Turn ignition switch “ON”.
2. Set the tester probe between ECM terminal 111 [HO2S1 heater (front) signal] and ground.
3. Start engine and let it idle.
4. Check the voltage under the following conditions.

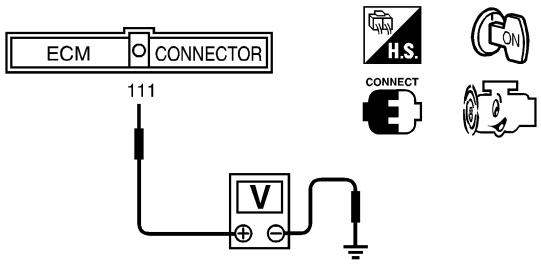

Conditions	Voltage
At idle	0 - 1V
Engine speed is above 4,000 rpm.	Battery voltage

SEC420C

OK or NG

OK	▶	**INSPECTION END**
NG	▶	GO TO 2.

2	CHECK POWER SUPPLY

1. Turn ignition switch “OFF”.
2. Disconnect heated oxygen sensor 1 (front) harness connector.

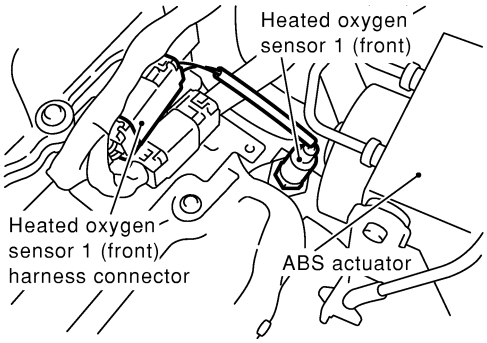

SEC383C

3. Turn ignition switch “ON”.
4. Check voltage between HO2S1 terminal 1 and ground with CONSULT-II or tester.

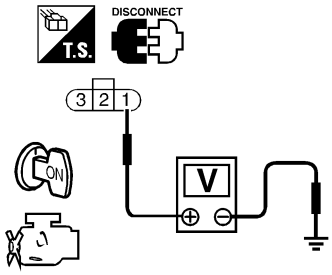

Voltage: Battery voltage

SEC399C

OK or NG

OK	▶	GO TO 4.
NG	▶	GO TO 3.

3	DETECT MALFUNCTIONING PART
Check the following. ● Harness connectors F4, M60 ● Fuse block (J/B) connector M7 ● 10A fuse ● Harness for open or short between heated oxygen sensor 1 (front) and fuse	
▶	Repair harness or connectors.

4	CHECK GROUND CIRCUIT
1. Turn ignition switch "OFF". 2. Disconnect ECM harness connector. 3. Check harness continuity between HO2S1 terminal 3 and ECM terminal 111. Refer to wiring diagram. **Continuity should exist.** 4. Also check harness for short to ground and short to power.	
OK or NG	
OK ▶	GO TO 5.
NG ▶	Repair open circuit or short to ground or short to power in harness or connectors.

5	CHECK HEATED OXYGEN SENSOR 1 HEATER (FRONT)
Refer to "Component Inspection", EC-161.	
OK or NG	
OK ▶	GO TO 6.
NG ▶	Replace heated oxygen sensor 1 (front).

6	CHECK INTERMITTENT INCIDENT
Perform "TROUBLE DIAGNOSIS FOR INTERMITTENT INCIDENT", EC-82.	
▶	**INSPECTION END**

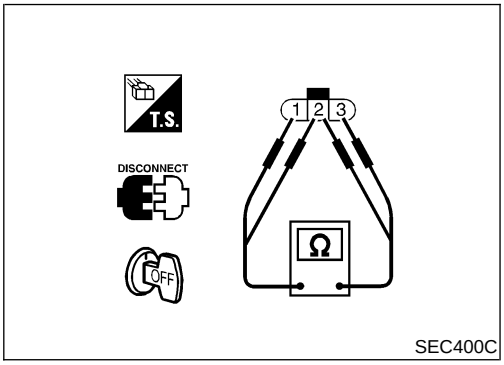

Component Inspection

NMEC0738

HEATED OXYGEN SENSOR 1 HEATER (FRONT)

NMEC0738S01

Check resistance between terminals 3 and 1.

Resistance: 2.3 - 4.3 Ω at 25°C (77°F)

Check continuity between terminals 2 and 1, 3 and 2.

Continuity should not exist.

If NG, replace the heated oxygen sensor 1 (front).

CAUTION:

- **Discard any heated oxygen sensor which has been dropped from a height of more than 0.5 m (19.7 in) onto a hard surface such as a concrete floor; use a new one.**
- **Before installing new oxygen sensor, clean exhaust system threads using Oxygen Sensor Thread Cleaner tool and approved anti-seize lubricant.**

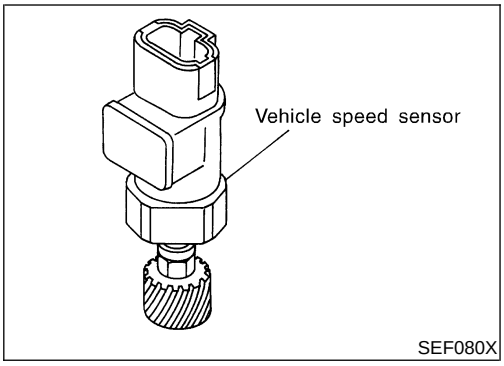

Component Description

NMEC0739

The vehicle speed sensor is installed in the transaxle. It contains a pulse generator which provides a vehicle speed signal to the speedometer. The speedometer then sends a signal to the ECM.

ECM Terminals and Reference Value

NMEC0740

Specification data are reference values and are measured between each terminal and ground.

CAUTION:

Do not use ECM ground terminals when measuring input/output voltage. Doing so may result in damage to the ECM's transistor. Use a grond other than ECM terminals, such as the ground.

TERMINAL NO.	WIRE COLOR	ITEM	CONDITION	DATA (DC Voltage)
32	W/PU	Vehicle speed sensor	**[Engine is running]** ● Lift up the vehicle ● Shift gear "ON" ● Vehicle speed is 40 km/h (25 MPH)	2.0 - 3.0V 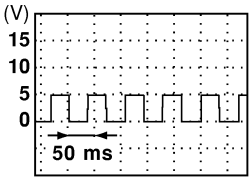 SEC368C

Wiring Diagram

=NMEC0741

EC-VSS-01

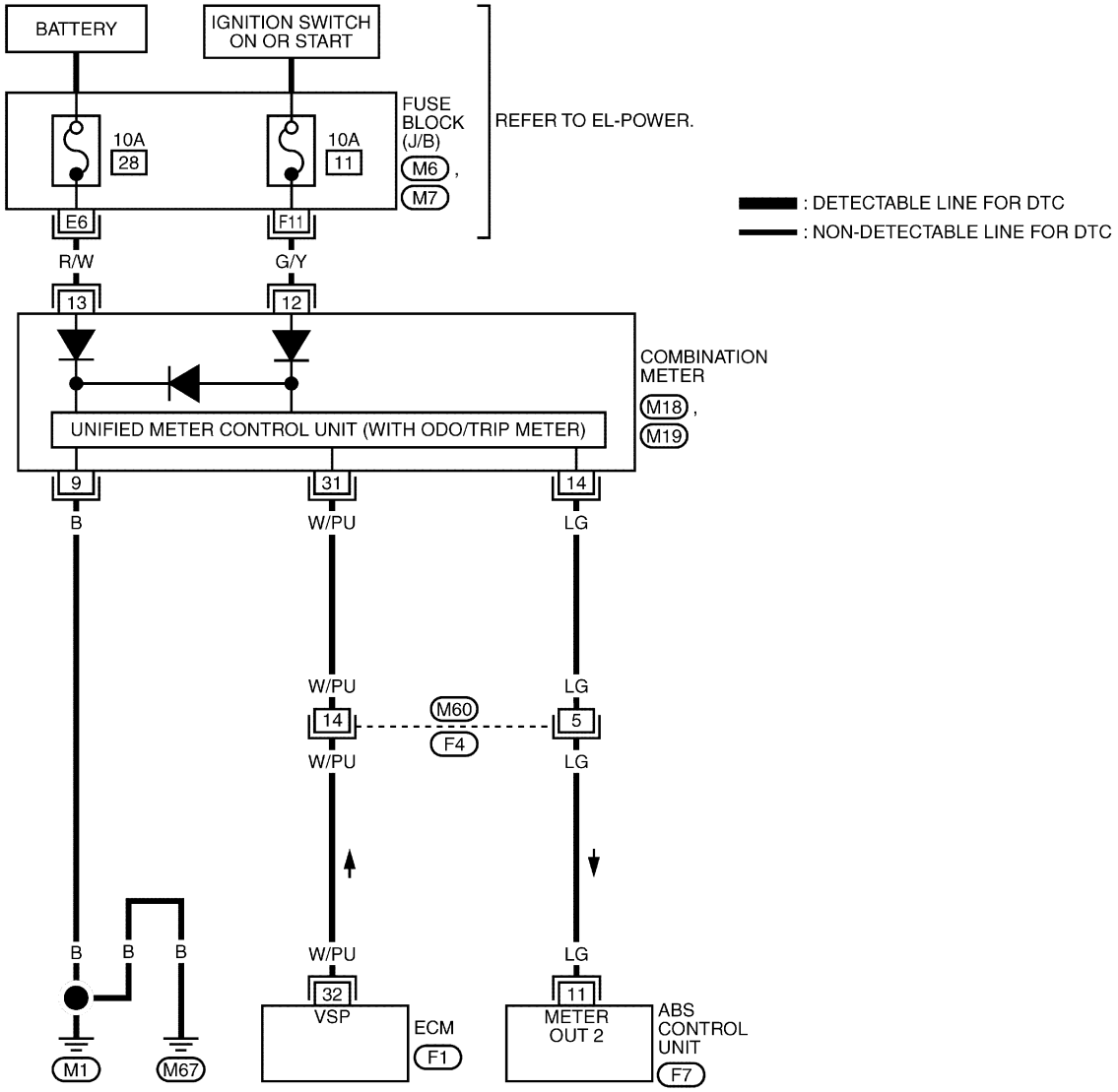

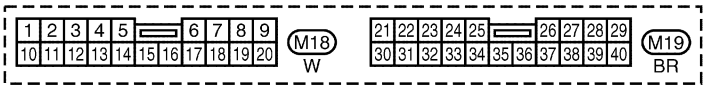

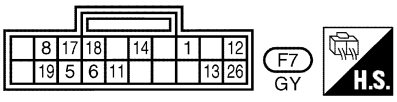

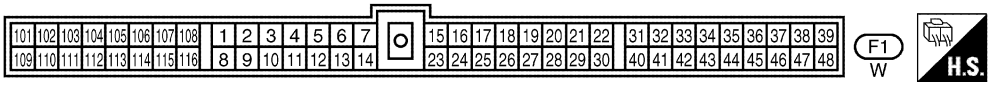

REFER TO THE FOLLOWING.
F4 -SUPER MULTIPLE JUNCTION (SMJ)
M6 , M7 -FUSE BLOCK-JUNCTION BOX (J/B)

TEC807

Diagnostic Procedure

NMEC0742

1	INSPECTION START
Do you have CONSULT-II?	
Yes or No	
Yes ▶	GO TO 2.
No ▶	GO TO 3.

2	CHECK OVERALL FUNCTION

With CONSULT-II

1. Turn ignition switch “OFF”.
2. Lift up the vehicle.
3. Start engine and let it idle.
4. Select “VHCL SPEED SE” in “DATA MONITOR” mode with CONSULT-II.
5. Check “VHCL SPEED SE” indication when rotating wheels with suitable gear position.

DATA MONITOR	
MONITOR	NO DTC
CMPS-RPM (REF)	XXX rpm
COOLAN TEMP/S	XXX °C
PW/ST SIGNAL	OFF
VHCL SPEED SE	XXX km/h

“VHCL SPEED SE” indication should exceed 10 km/h (6 MPH).

SEC421C

OK or NG

OK ▶	**INSPECTION END**
NG ▶	GO TO 4.

3	CHECK OVERALL FUNCTION

Without CONSULT-II

1. Turn ignition switch “OFF”.
2. Lift up the vehicle.
3. Start engine and let it idle.
4. Read the voltage signal between ECM terminal 32 and ground with an oscilloscope.
5. Verify that the oscilloscope screen shows a signal wave as shown below under the following conditions.

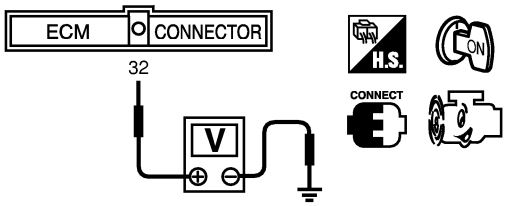

Conditions	Voltage
Vehicle speed is 40 km/h (25 MPH).	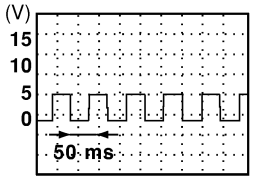

SEC422C

OK or NG

OK ▶	**INSPECTION END**
NG ▶	GO TO 4.

4	CHECK VEHICLE SPEED SENSOR INPUT SIGNAL CIRCUIT FOR OPEN AND SHORT
1. Turn ignition switch "OFF". 2. Disconnect ECM harness connector and combination meter harness connector. 3. Check harness continuity between ECM terminal 32 and combination meter terminal 31. Refer to Wiring Diagram. **Continuity should exist.** 4. Also check harness for short to ground and short to power.	
OK or NG	
OK ▶	GO TO 6.
NG ▶	GO TO 5.

5	DETECT MALFUNCTIONING PART
Check the following. ● Harness connectors F4, M60 ● Harness for open or short between ECM and combination meter	
▶	Repair open circuit or short to ground or short to power in harness or connectors.

6	CHECK SPEEDOMETER FUNCTION
Make sure that speedometer functions properly.	
OK or NG	
OK ▶	GO TO 8.
NG ▶	GO TO 7.

7	CHECK SPEEDOMETER CIRCUIT FOR OPEN AND SHORT
Check the following. ● Harness connectors F4, M60 ● Harness for open or short between combination meter and ABS control unit	
OK or NG	
OK ▶	Check combination meter and vehicle speed sensor. Refer to EL section.
NG ▶	Repair open circuit or short to ground or short to power in harness or connectors.

8	CHECK INTERMITTENT INCIDENT
Refer to "TROUBLE DIAGNOSIS FOR INTERMITTENT INCIDENT", EC-82.	
▶	**INSPECTION END**

Description

NMEC0743

SYSTEM DESCRIPTION

NMEC0743S01

Sensor	Input Signal to ECM	ECM function	Actuator
Camshaft position sensor	Engine speed	Idle air control	IACV-AAC valve
Mass air flow sensor	Amount of intake air		
Engine coolant temperature sensor	Engine coolant temperature		
Ignition switch	Start signal		
Throttle position sensor	Throttle position		
Park/Neutral position switch	Park/Neutral position		
Air conditioner switch	Air conditioner operation		
Power steering oil pressure switch	Power steering load signal		
Battery	Battery voltage		
Vehicle speed sensor	Vehicle speed		

This system automatically controls engine idle speed to a specified level. Idle speed is controlled through fine adjustment of the amount of air which bypasses the throttle valve via IACV-AAC valve. The IACV-AAC valve repeats ON/OFF operation according to the signal sent from the ECM. The camshaft position sensor detects the actual engine speed and sends a signal to the ECM. The ECM then controls the ON/OFF time of the IACV-AAC valve so that engine speed coincides with the target value memorized in ECM. The target engine speed is the lowest speed at which the engine can operate steadily. The optimum value stored in the ECM is determined by taking into consideration various engine conditions, such as during warm up, deceleration, and engine load (air conditioner and power steering).

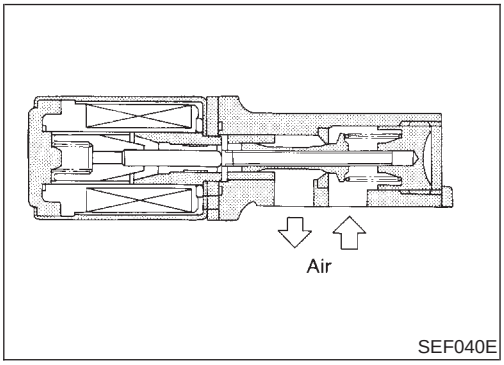

COMPONENT DESCRIPTION

NMEC0743S02

IACV-AAC Valve

NMEC0743S0201

The IACV-AAC valve is moved by ON/OFF pulses from the ECM. The longer the ON pulse, the greater the amount of air that will flow through the valve. The more air that flows through the valve, the higher the idle speed.

CONSULT-II Reference Value in Data Monitor Mode

NMEC0744

Specification data are reference values.

MONITOR ITEM	CONDITION		SPECIFICATION
IACV-AAC/V	• Engine: After warming up • Air conditioner switch: “OFF” • Shift lever: “N” • No-load	Idle	20 - 40%
		2,000 rpm	—

ECM Terminals and Reference Value

NMEC0745

Specification data are reference values and are measured between each terminal and ground.

CAUTION:

Do not use ECM ground terminals when measuring input/output voltage. Doing so may result in damage to the ECM's transistor. Use a ground other than ECM terminals, such as the ground.

TERMINAL NO.	WIRE COLOR	ITEM	CONDITION	DATA (DC Voltage)
113	SB	IACV-AAC valve	**[Engine is running]** ● **Warm-up condition** ● Idle speed	Approximately 10V 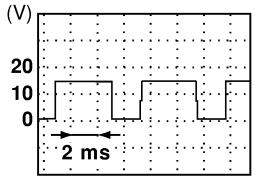 SEC372C
			[Engine is running] ● **Warm-up condition** ● Idle speed ● Both A/C switch and blower fan switch are "ON" (Compressor is operating) ● Rear window defogger switch is "ON".	Approximately 11V 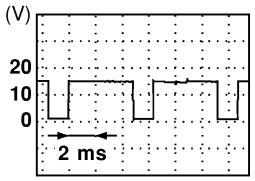 SEC373C

Wiring Diagram

NMEC0746

EC-AAC/V-01

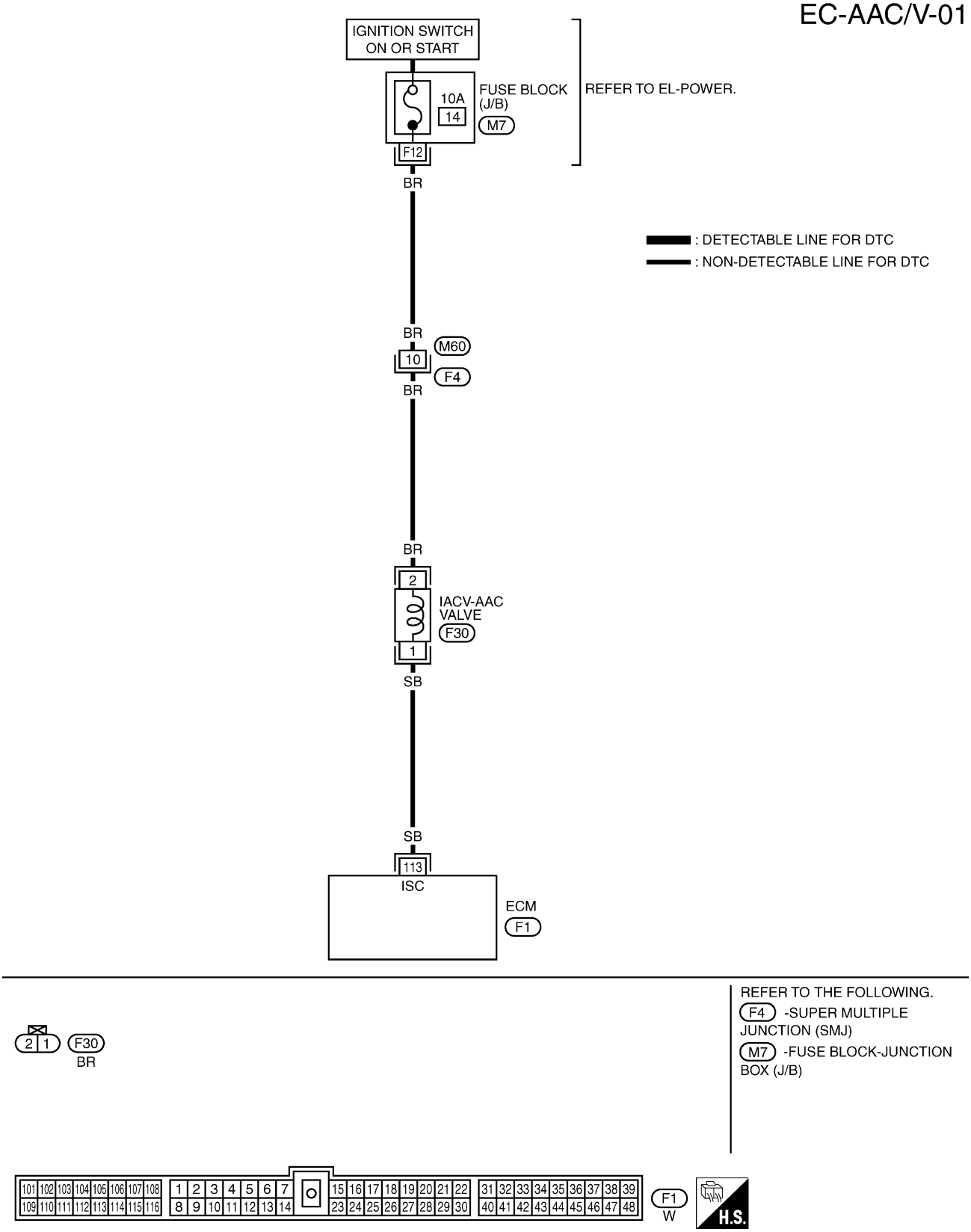

TEC815

Diagnostic Procedure

NMEC0747

1	INSPECTION START
Do you have CONSULT-II?	
Yes or No	
Yes ▶	GO TO 2.
No ▶	GO TO 3.

2	CHECK OVERALL FUNCTION

With CONSULT-II

1. Start engine and warm it up to normal operating temperature.
2. Perform “IACV-AAC/V OPENING” in ACTIVE TEST mode with CONSULT-II.
3. Check engine speed varies corresponding to IACV-AAC VALVE opening percent.

IACV-AAC/V ADJ	
ADJ MONITOR	
CKPS-RPM	XXX rpm
CONDITION SETTING	
IACV-ACC/V	FIXED
MONITOR	
COOLAN TEMP/S	XXX˚C
CLSD THL POS	ON

SEC334C

OK or NG

OK ▶	**INSPECTION END**
NG ▶	GO TO 4.

3	CHECK OVERALL FUNCTION

Without CONSULT-II

1. Start engine and warm it up to normal operating temperature.
2. Check idle speed.
   M/T: 800±50 rpm
   A/T: 800±50 rpm (in “P” or “N” position)
   If NG, adjust idle speed. Refer to “Basic Inspection”, EC-50.
3. Stop engine and disconnect throttle position sensor harness connector.
4. Restart engine and let it idle after revving it to 2,000 to 3,000 rpm a few times.
5. Check idle speed again.
   750±50 rpm

OK or NG

OK ▶	**INSPECTION END**
NG ▶	GO TO 4.

4	CHECK POWER SUPPLY

1. Stop engine.
2. Disconnect IACV-AAC valve harness connector.

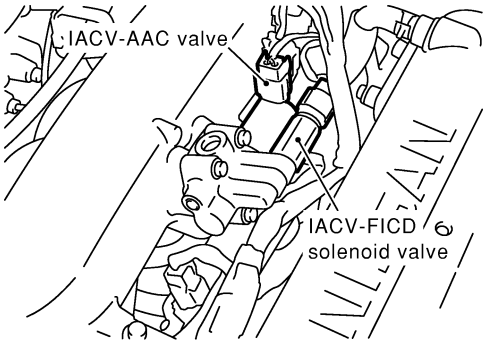

SEC384C

3. Turn ignition switch "ON".
4. Check voltage between terminal 2 and ground with CONSULT-II or tester.

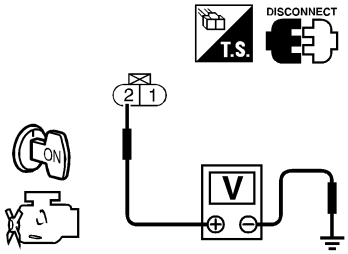

SEC441C

Voltage: Battery voltage

OK or NG

OK	▶	GO TO 3.
NG	▶	GO TO 2.

5	DETECT MALFUNCTIONING PART

Check the following.
- Harness connectors M60, F4
- Fuse block (J/B) connector M7
- 10A fuse
- Harness for open or short between IACV-AAC valve and fuse

	▶	Repair harness or connectors.

6	CHECK OUTPUT SIGNAL CIRCUIT

1. Turn ignition switch "OFF".
2. Disconnect ECM harness connector.
3. Check harness continuity between ECM terminal 113 and IACV-AAC valve terminal 1. Refer to Wiring Diagram.
   Continuity should exist.
4. Also check harness for short to ground and short to power.

OK or NG

OK	▶	GO TO 7.
NG	▶	Repair open circuit or short to ground or short to power in harness or connectors.

7	CHECK IACV-AAC VALVE	
Refer to "Component Inspection", EC-172.		
	OK or NG	
OK	▶	GO TO 8.
NG	▶	Replace IACV-AAC valve.

8	CHECK INTERMITTENT INCIDENT
Refer to "TROUBLE DIAGNOSIS FOR INTERMITTENT INCIDENT", EC-82.	
▶	**INSPECTION END**

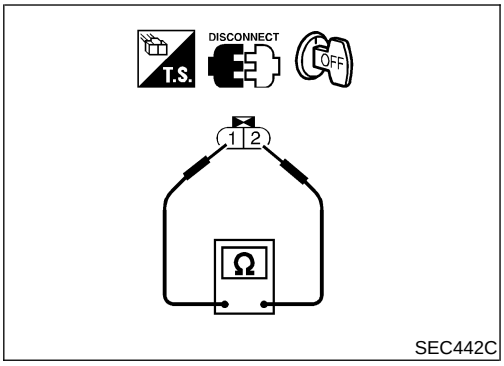

Component Inspection

=NMEC0748

IACV-AAC VALVE

NMEC0748S01

1. Disconnect IACV-AAC valve harness connector.
2. Remove IACV-AAC valve.

- Check IACV-AAC valve resistance.

  Resistance:

  Approximately 10Ω [at 20°C (68°F)]

- Check plunger for seizing or sticking.
- Check for broken spring.

3. Supply battery voltage between IACV-AAC valve connector terminals.
   Plunger should move.
   If NG, replace IACV-AAC valve.

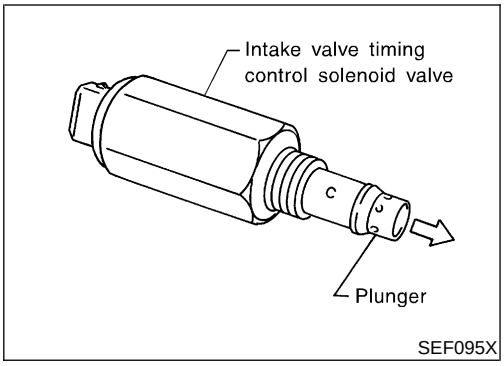

Component Description

NMEC0749

The valve timing control system is utilized to control intake valve opening and closing timing. Engine coolant temperature signals, engine speed and throttle position are used to determine intake valve timing.
The intake camshaft sprocket position is regulated by oil pressure controlled by the intake valve timing control.
When ECM sends ON signal to intake valve timing control solenoid valve, oil pressure is transmitted to camshaft sprocket. Then, intake side camshaft is advanced.

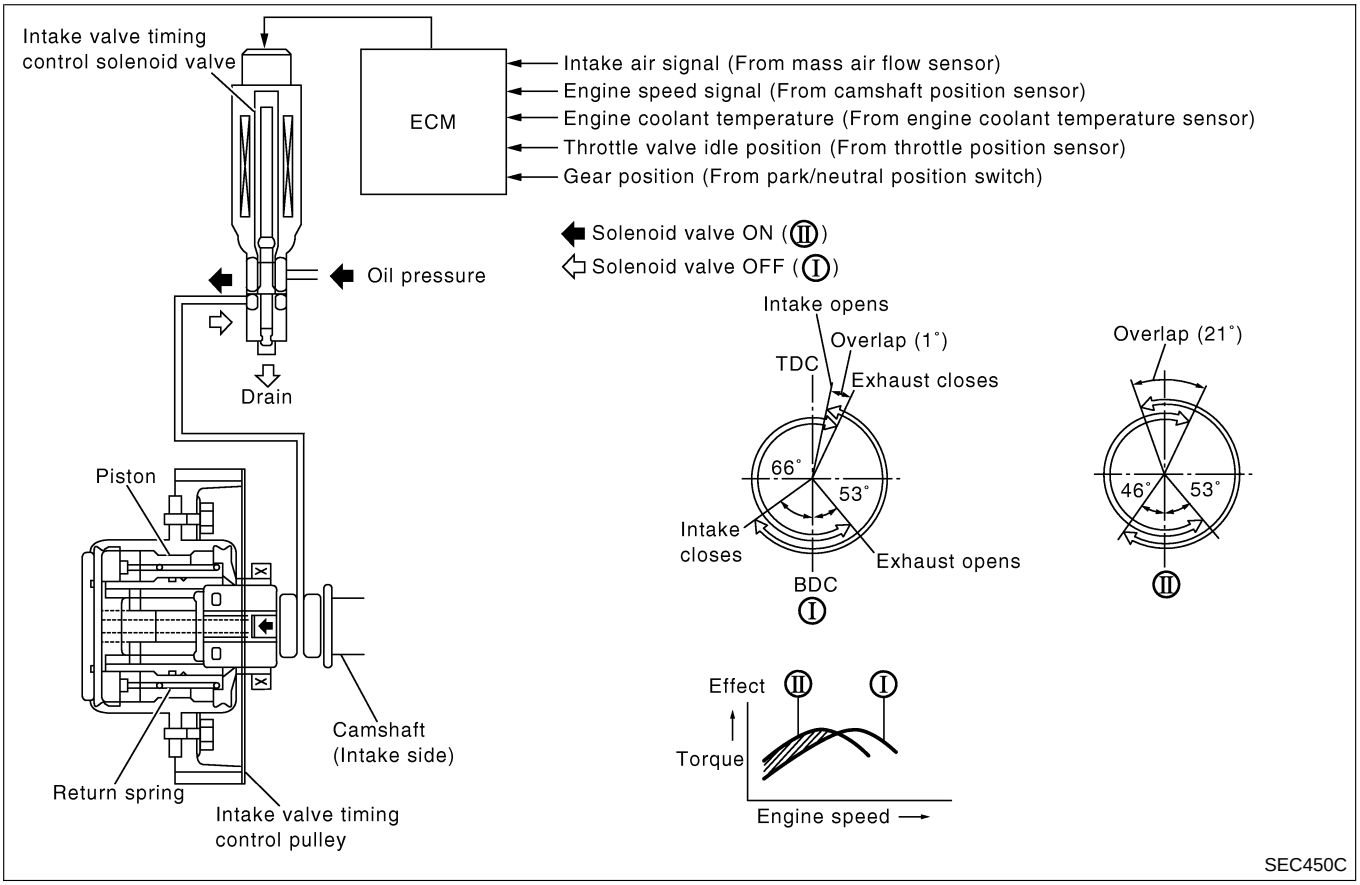

Operation

NMEC0750

Engine operating condition			Intake valve timing control solenoid valve	Intake valve opening and closing time	Valve overlap
Engine speed	B/FUEL SCHDL	Neutral switch			
Below 1,050 rpm	Above 1.3 msec (M/T)	OFF	ON	Advance	Increased
	Above 1.5 msec (A/T)				
1,050 - 5,700 rpm	—				
Conditions other than those above			OFF	Normal	Normal

CONSULT-II Reference Value in Data Monitor Mode

NMEC0751

MONITOR ITEM	CONDITION		SPECIFICATION
INT/V TIM SOL	● Engine: After warming up ● Lift up drive wheels and shift to suitable gear position other than “P” or “N”	Idle	OFF
		Quickly depress the accelerator pedal, then quickly release it.	OFF → ON → OFF

ECM Terminals and Reference Value

NMEC0752

Specification data are reference values and are measured between each terminal and engine ground.

CAUTION:

Do not use ECM ground terminals when measuring input/output voltage. Doing so may result in damage to the ECM’s transistor. Use a grond other than ECM terminals, such as the ground.

TERMINAL NO.	WIRE COLOR	ITEM	CONDITION	DATA (DC Voltage)
105	R/L	Intake valve timing control solenoid valve	**[Engine is running]** ● Idle speed	BATTERY VOLTAGE (11 - 14V)

Wiring Diagram

NMEC0753

EC-IVC-01

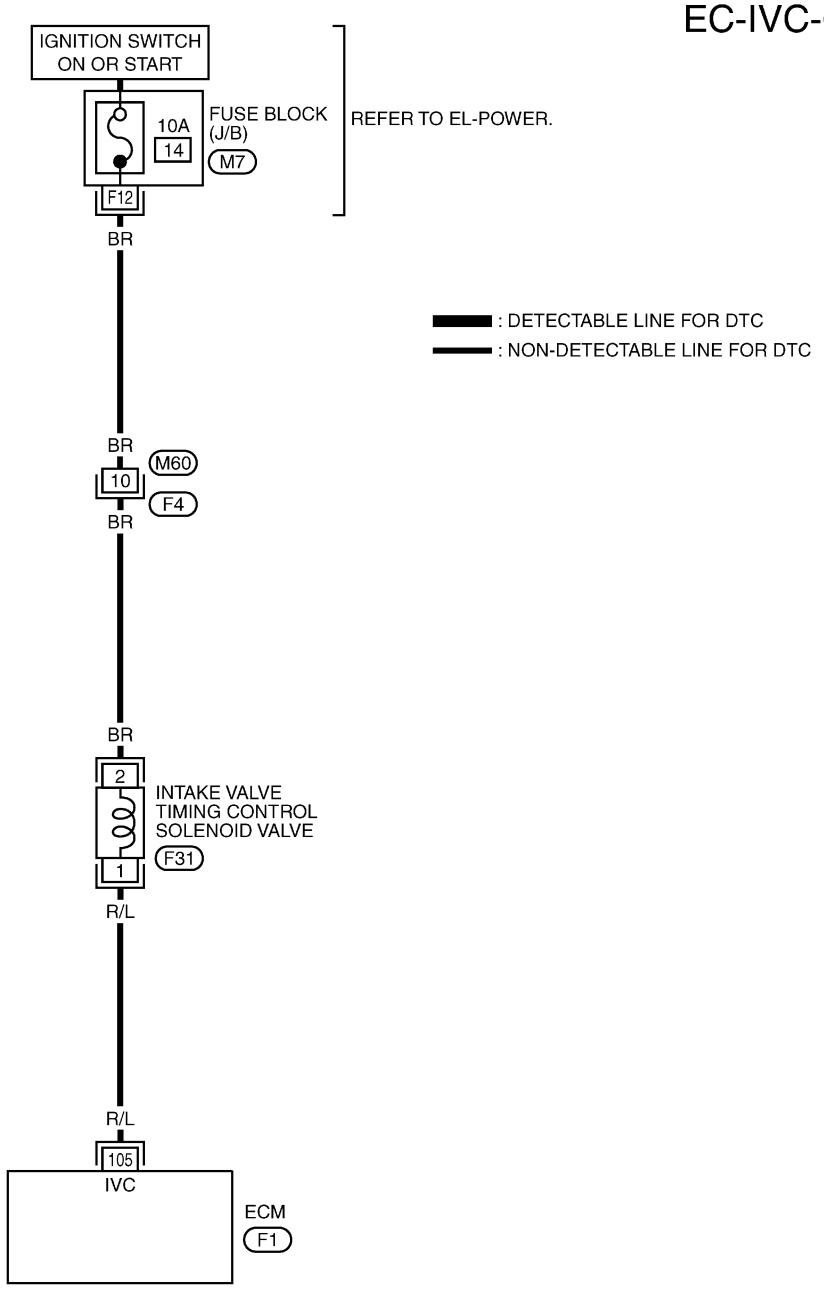

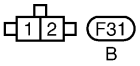

REFER TO THE FOLLOWING.
F4 -SUPER MULTIPLE JUNCTION (SMJ)
M7 -FUSE BLOCK-JUNCTION BOX (J/B)

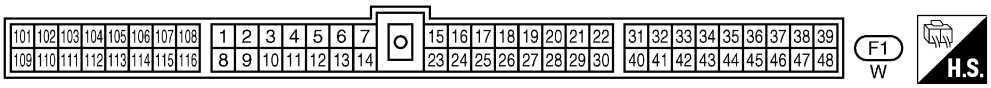

TEC814

Diagnostic Procedure

NMEC0754

1	INSPECTION START

Do you have CONSULT-II?

Yes or No

Yes	▶	GO TO 2.
No	▶	GO TO 3.

2	CHECK OVERALL FUNCTION

With CONSULT-II

1. Turn ignition switch “ON”.
2. Select “VALVE TIMING SOL” in “ACTIVE TEST” mode with CONSULT-II.
3. Touch “ON” CONSULT-II screen.

ACTIVE TEST	
VALVE TIMING SOL	OFF
MONITOR	
CMPS-RPM (REF)	XXX rpm
IACV-AAC/V	XXX %

SEC437C

4. Check for operating sound of the intake valve timing control solenoid valve.
   Clicking noise should be heard.

OK or NG

OK	▶	**INSPECTION END**
NG	▶	GO TO 4.

3	CHECK OVERALL FUNCTION

Without CONSULT-II

1. Lift up vehicle, start engine and warm it up to normal operation temperature.
2. Shift to a suitable gear position other than “P” or “N” position.
3. Check voltage between ECM terminal 105 (Intake valve timing control solenoid valve signal) and ground under the following conditions.

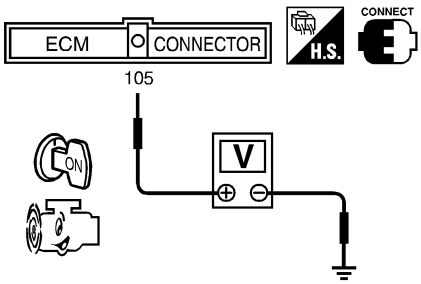

Conditions	Voltage
Not revving engine.	Approximately 0V
Quickly depress accelerator pedal, then quickly release it.	Battery voltage (Momentary)

SEC438C

OK or NG

OK	▶	**INSPECTION END**
NG	▶	GO TO 4.

4	CHECK POWER SUPPLY

1. Turn ignition switch "OFF".
2. Disconnect intake valve timing control solenoid valve harness connector.

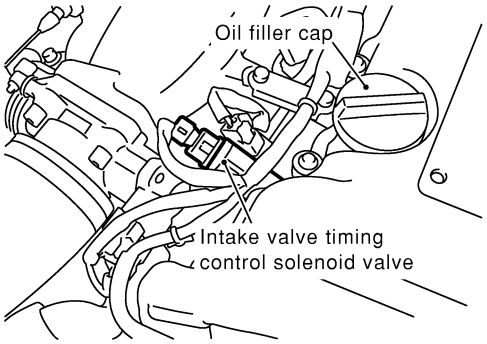

SEC385C

3. Turn ignition switch "ON".
4. Check voltage between terminal 2 and ground with CONSULT-II or tester.

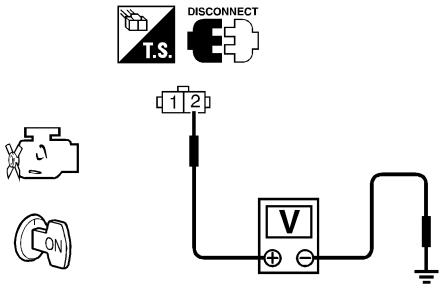

Voltage: Battery voltage

SEC439C

OK or NG

OK	▶	GO TO 6.
NG	▶	GO TO 5.

5	DETECT MALFUNCTIONING PART

Check the following.
- Harness connector F4, M60
- 10A fuse
- Harness for open or short between valve timing control solenoid valve and fuse

	▶	Repair harness or connectors.

6	CHECK OUTPUT SIGNAL CIRCUIT

1. Turn ignition switch "OFF".
2. Disconnect ECM harness connector.
3. Check harness continuity between ECM terminal 105 and intake valve timing control solenoid valve harness connector terminal 1. Refer to wiring diagram.
   Continuity should exist.
4. Also check harness for short to ground and short to power.

OK or NG

OK	▶	GO TO 7.
NG	▶	Repair open circuit or short to ground to short to power or connectors.

7	CHECK VALVE TIMING CONTROL SOLENOID VALVE	
Refer to "Component Inspection", EC-178.		
	OK or NG	
OK	▶	GO TO 8.
NG	▶	Replace valve timing control solenoid valve.

8	CHECK INTERMITTENT INCIDENT	
Perform "TROUBLE DIAGNOSIS FOR INTERMITTENT INCIDENT", EC-82.		
	▶	**INSPECTION END**

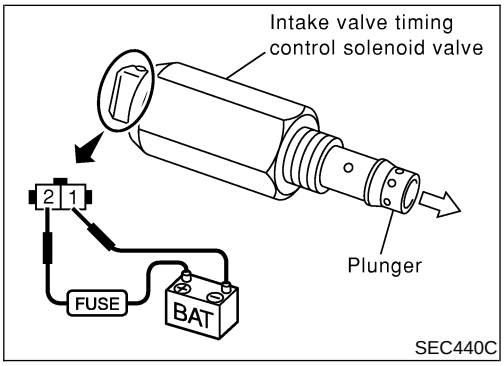

Component Inspection

NMEC0755

INTAKE VALVE TIMING CONTROL SOLENOID VALVE

NMEC0755S01

1. Check oil passage visually for any metal debris.
2. Supply intake valve timing control solenoid valve terminals with battery voltage.
3. Make sure that inside plunger protrudes.
   If NG, replace intake valve timing control solenoid valve.

Description

NMEC0756

SYSTEM DESCRIPTION

NMEC0756S01

Sensor	Input Signal to ECM	ECM function	Actuator
Camshaft position sensor	Engine speed	Charged air pressure control	Wastegate valve control solenoid valve
Mass air flow sensor	Amount of intake air		
Engine coolant temperature sensor	Engine coolant temperature		
Ignition switch	Start signal		
Throttle position sensor	Throttle position		
Park/Neutral position switch	Park/Neutral position		
Battery	Battery voltage		
Vehicle speed sensor	Vehicle speed		
Knock sensor	Engine knocking condition		

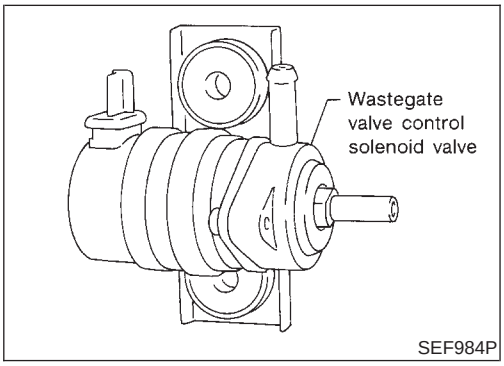

SEF984P

This system controls charged air pressure corresponding to the driving conditions through wastegate valve control solenoid valve. The wastegate valve control solenoid valve repeats ON/OFF operation according to the signal sent from the ECM. The ECM controls the ON/OFF time of the wastegate valve control solenoid valve according to the data memorized in the ECM. The optimum value stored in the ECM is determined by taking into consideration various engine conditions, such as engine speed, throttle valve opening angle, gear position, etc., and fuel octane rating. Knock sensor signal is used to determine the fuel octane rating.

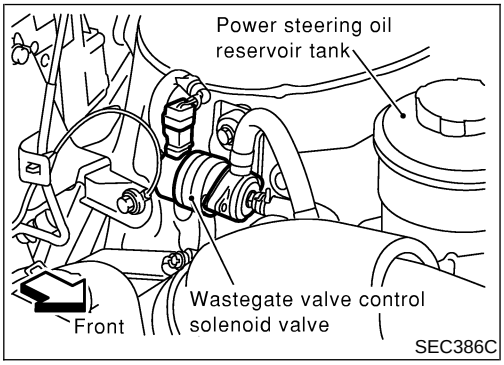

SEC386C

COMPONENT DESCRIPTION

NMEC0756S02

Wastegate Valve Control Solenoid Valve

NMEC0756S0201

The wastegate valve control solenoid valve is moved by ON/OFF pulses from the ECM. The longer the ON pulse, the higher the charged air pressure is provided.

CONSULT-II Reference Value in Data Monitor Mode

NMEC0757

MONITOR ITEM	CONDITION		SPECIFICATION
W/G CONT S/V	• Engine: After warming up • Air conditioner switch: OFF • Shift lever: N • No-load	Idle	0%
		Revving engine up to 4,000 rpm	20%

ECM Terminals and Reference Value

=NMEC0758

Specification data are reference values and are measured between each terminal and ground.

CAUTION:

Do not use ECM ground terminals when measuring input/output voltage. Doing so may result in damage to the ECM's transistor. Use a ground other than ECM terminals, such as the ground.

TERMINAL NO.	WIRE COLOR	ITEM	CONDITION	DATA (DC Voltage)
115	OR/B	Wastegate valve control solenoid valve	**[Engine is running]** ● Idle speed	BATTERY VOLTAGE (11 - 14V)
			[Engine is running] ● Warm-up condition ● Rev engine up to 4,000 rpm	Approximately 0V

Wiring Diagram

NMEC0759

EC-WG/V-01

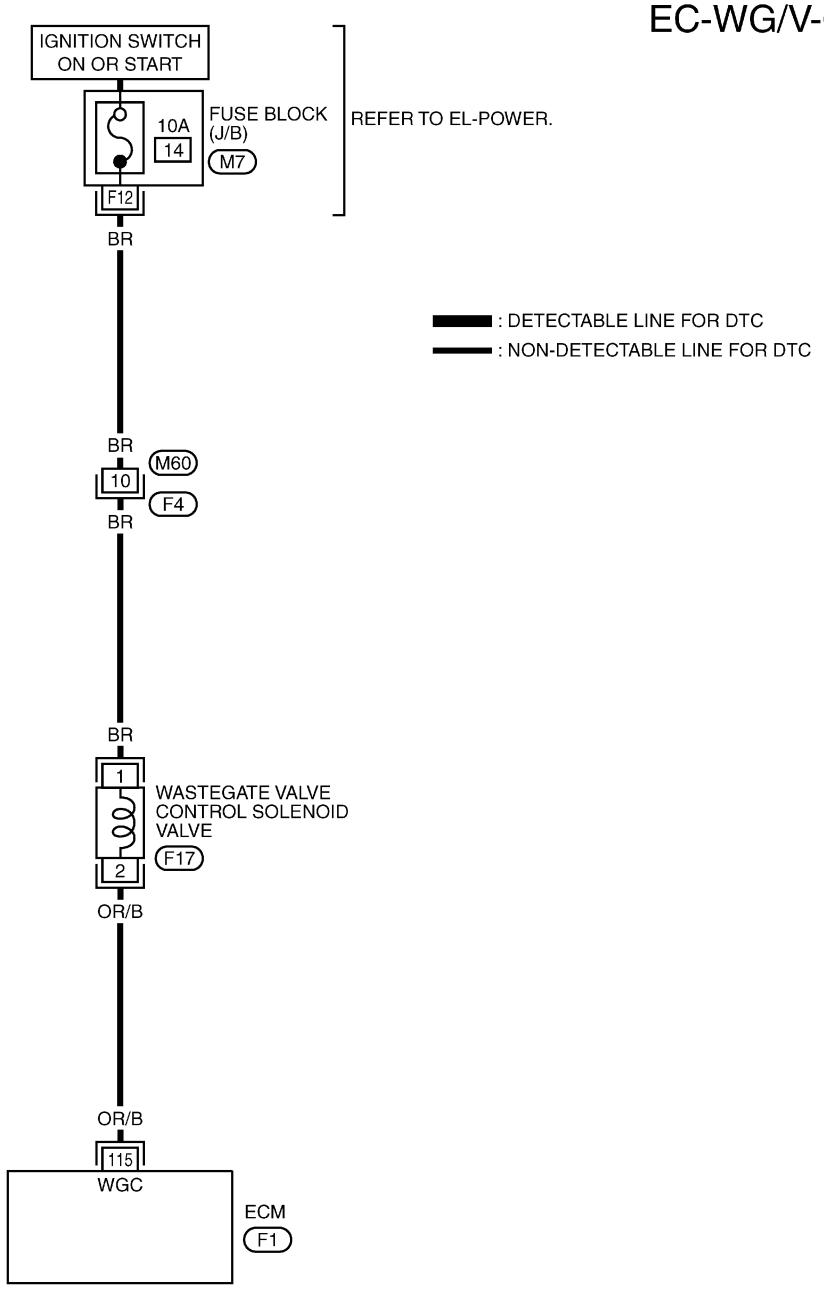

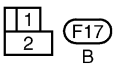

REFER TO THE FOLLOWING.
F4 -SUPER MULTIPLE JUNCTION (SMJ)
M7 -FUSE BLOCK-JUNCTION BOX (J/B)

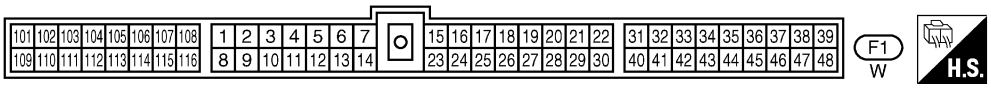

TEC813

Diagnostic Procedure

NMEC0760

1	CHECK OVERALL FUNCTION

1. Turn ignition switch “OFF”.
2. Disconnect air passage hose connected to wastegate valve control solenoid valve.

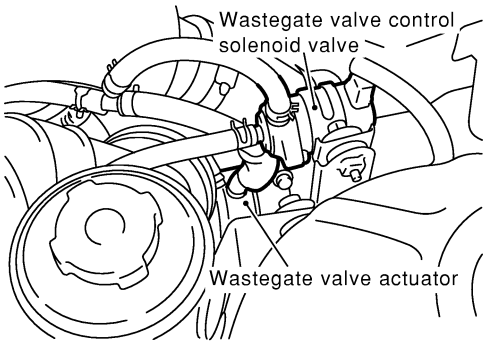

SEC394C

3. Start engine.
4. Make sure that charged air pressure exists under the following conditions.

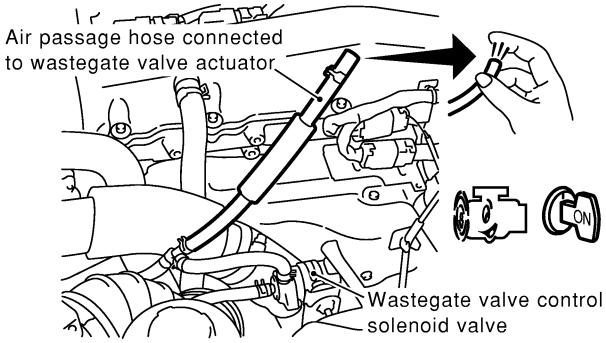

Condition	Charged air pressure
At idle	Should not exist.
Engine speed is about 2,000 rpm.	Should exist.

SEC395C

OK or NG

OK	▶	GO TO 2.
NG (With CONSULT-II)	▶	GO TO 3.
NG (Without CONSULT-II)	▶	GO TO 4.

2	CHECK WASTEGATE VALVE ACTUATOR

1. Stop engine.
2. Check wastegate valve actuator. Refer to EM-62, “WASTEGATE VALVE ACTUATOR”.

OK or NG

OK	▶	**INSPECTION END**
NG	▶	Replace wastegate valve actuator.

3	CHECK WASTEGATE VALVE CONTROL SOLENOID VALVE CIRCUIT

With CONSULT-II

1. Turn ignition switch "ON".
2. Select "TURBOCHARGE PRES" in ACTIVE TEST mode with CONSULT-II.
3. Check wastegate valve control solenoid valve operating sound when touching "Qd" and "Qu" on the CONSULT-II screen.

ACTIVE TEST	
TURBOCHARGE PRES	XXX %
MONITOR	
CMPS-RPM(REF)	XXXrpm
MAS AIR/FL SE	XXXV
INJ PULSE	XXXmsec
IGN TIMING	XXXBTDC
W/G CONT S/V	XXX%

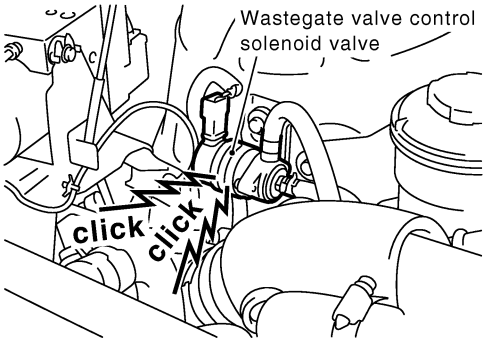

SEC396C

Clicking sound should be heard.

OK or NG

OK	▶	GO TO 5.
NG	▶	GO TO 6.

4	CHECK WASTEGATE VALVE CONTROL SOLENOID VALVE CIRCUIT

Without CONSULT-II

1. Start engine.
2. Check wastegate valve control solenoid valve operating sound when revving engine up to 2,000 rpm and returning it to idle.

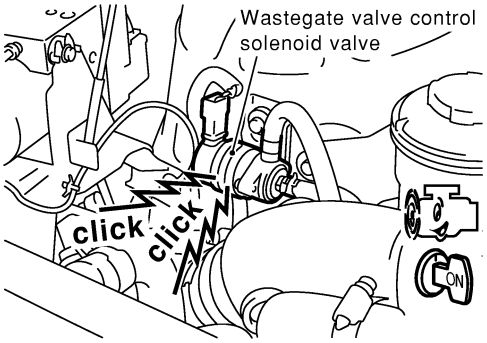

SEC397C

Clicking sound should be heard.

OK or NG

OK	▶	GO TO 5.
NG	▶	GO TO 6.

5	CHECK AIR PASSAGE HOSES

Check air passage hoses for clogging, cracks and improper connections. Refer to "Vacuum Hose Drawing", EC-16.

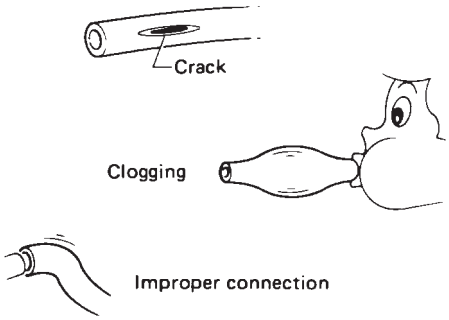

SEF816F

OK or NG

OK	▶	GO TO 10.
NG	▶	Repair or replace air passage hoses.

6	CHECK POWER SUPPLY CIRCUIT

1. Turn ignition switch "OFF".
2. Disconnect wastegate valve control solenoid valve harness connector.
3. Turn ignition switch "ON".
4. Check voltage between wastegate valve control solenoid valve terminal 1 and ground with CONSULT-II or tester.

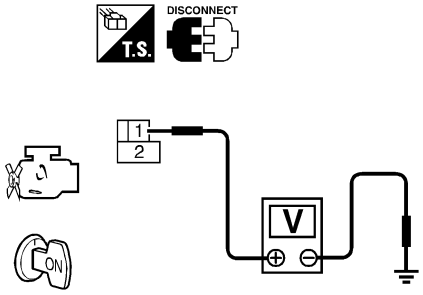

SEC451C

Voltage: Battery voltage

OK or NG

OK	▶	GO TO 8.
NG	▶	GO TO 7.

7	DETECT MALFUNCTIONING PART

Check the following.
- Harness connectors M60, F4
- Fuse block (J/B) connector M7
- Harness for open and short between wastegate valve control solenoid valve and fuse

	▶	Repair open circuit or short to ground or short to power in harness or connectors.

8	CHECK OUTPUT SIGNAL CIRCUIT	
1. Turn ignition switch "OFF". 2. Disconnect ECM harness connector. 3. Check harness continuity between ECM terminal 115 and wastegate valve control solenoid valve terminal 2. Refer to Wiring Diagram. **Continuity should exist.**		
OK or NG		
OK	▶	GO TO 9.
NG	▶	Repair open circuit or short to ground or short to power in harness or connectors.

9	CHECK WASTEGATE VALVE CONTROL SOLENOID VALVE	
Refer to "Component Inspection", EC-185.		
OK or NG		
OK	▶	GO TO 10.
NG	▶	Replace wastegate valve control solenoid valve.

10	CHECK INTERMITTENT INCIDENT	
Perform "TROUBLE DIAGNOSIS FOR INTERMITTENT INCIDENT", EC-82.		
	▶	**INSPECTION END**

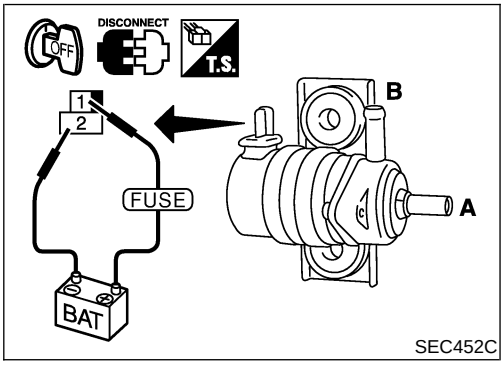

Component Inspection

WASTEGATE VALVE CONTROL SOLENOID VALVE

NMEC0761

NMEC0761S01

Check air passage continuity under the following conditions.

Condition	Air passage continuity between **A** and **B**
12V direct current supply between terminals 1 and 2	No
No supply	Yes

If NG, replace wastegate valve control solenoid valve.

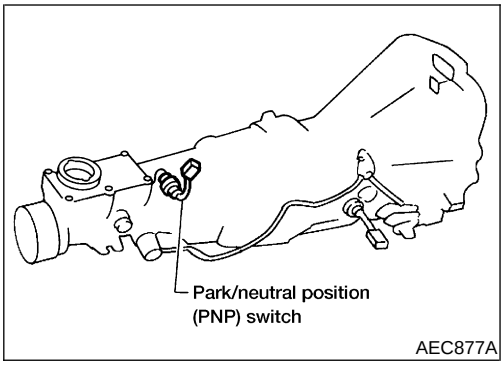

Component Description

NMEC0762

When the gear position is “P” or “N”, park/neutral position (PNP) switch is “ON”.
ECM detects the park/neutral position when continuity with ground exists.

CONSULT-II Reference Value in Data Monitor Mode

NMEC0763

Specification data are reference values.

MONITOR ITEM	CONDITION		SPECIFICATION
P/N POSI SW	● Ignition switch: ON	Shift lever: “P” or “N”	ON
		Except above	OFF

ECM Terminals and Reference Value

NMEC0764

Specification data are reference values and are measured between each terminal and ground.

CAUTION:
Do not use ECM ground terminals when measuring input/output voltage. Doing so may result in damage to the ECM’s transistor. Use a ground other than ECM terminals, such as the ground.

TERMINAL NO.	WIRE COLOR	ITEM	CONDITION	DATA (DC Voltage)
35	R/G (A/T) G/OR (M/T)	PNP switch	**[Ignition switch “ON”]** ● Gear position is “N” or “P” (A/T models) ● Gear position is in neutral position (M/T models)	Approximately 0V
			[Ignition switch “ON”] ● Except the above gear position	BATTERY VOLTAGE (11 - 14V)

Wiring Diagram

NMEC0765

EC-PNP/SW-01

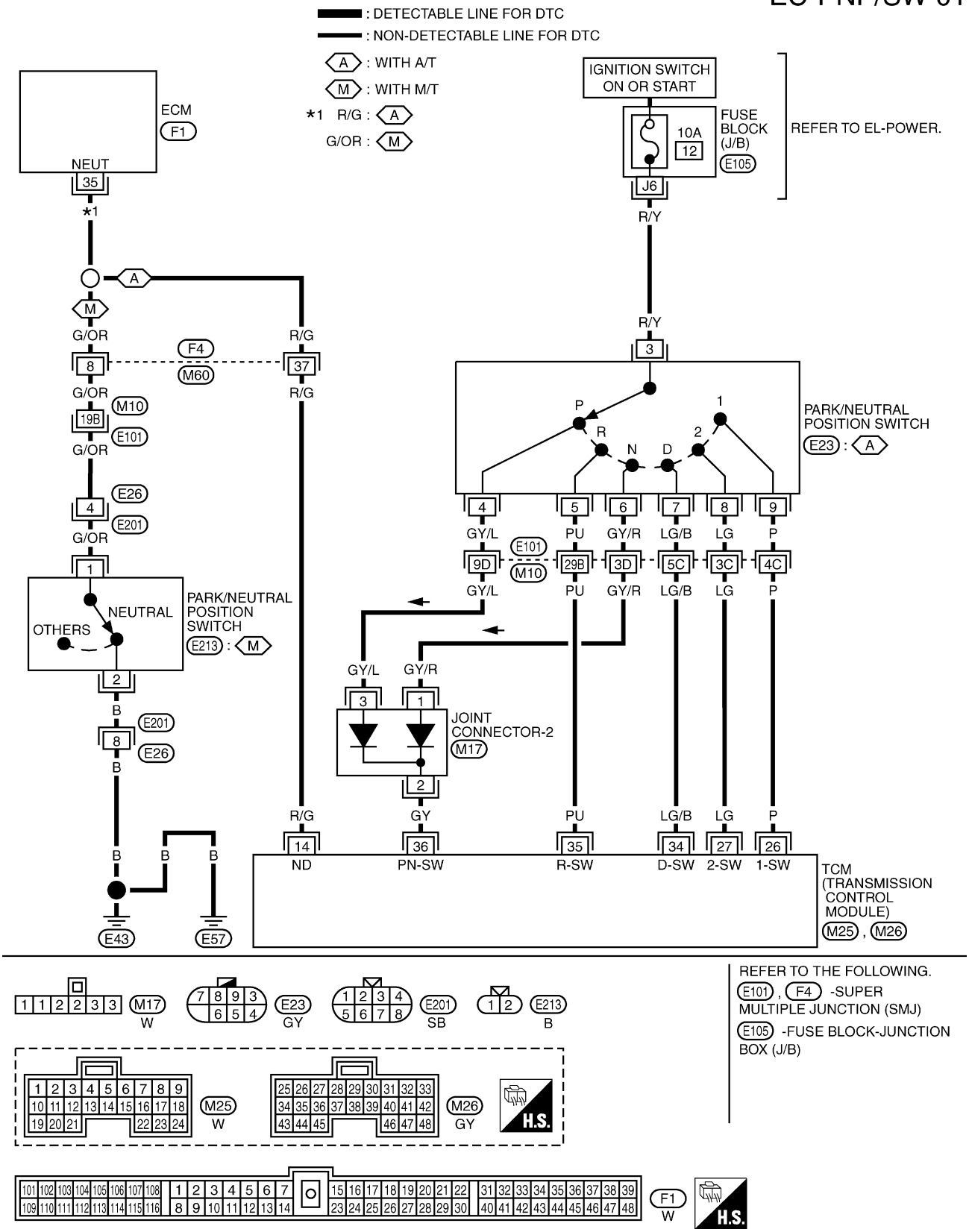

REFER TO THE FOLLOWING.
E101 , F4 -SUPER MULTIPLE JUNCTION (SMJ)
E105 -FUSE BLOCK-JUNCTION BOX (J/B)

TEC820

Diagnostic Procedure

NMEC0766

FOR M/T MODELS

NMEC0766S01

1	INSPECTION START
Do you have CONSULT-II?	
Yes or No	
Yes ▶	GO TO 2.
No ▶	GO TO 3.

2	CHECK OVERALL FUNCTION

With CONSULT-II

1. Turn ignition switch “ON”.
2. Select “P/N POSI SW” in “DATA MONITOR” mode with CONSULT-II.
3. Check the “P/N POSI SW” signal under the following conditions.

DATA MONITOR	
MONITOR	NO DTC
P/N POSI SW	ON

Shift lever position	P/N POSI SW
Neutral position	ON
Except the above position	OFF

SEF049Y

OK or NG

OK ▶	**INSPECTION END**
NG ▶	GO TO 4.

3	CHECK OVERALL FUNCTION

Without CONSULT-II

1. Turn ignition switch “ON”.
2. Check voltage between ECM terminal 35 and ground under the following conditions.

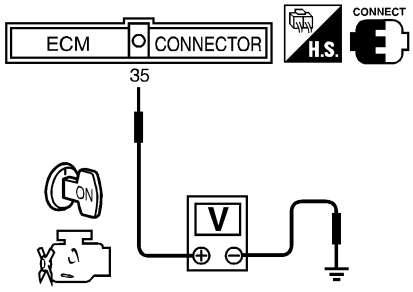

Shift lever position	Voltage
Neutral position	Apporox. 0V
Except the above position	Battery voltage

SEC432C

OK or NG

OK ▶	**INSPECTION END**
NG ▶	GO TO 4.

4	CHECK PNP SWITCH GROUND CIRCUIT FOR OPEN AND SHORT	
1. Turn ignition switch "OFF". 2. Disconnect park/neutral position (PNP) switch harness connector. 3. Check harness continuity between PNP switch terminal 2 and body ground. Refer to Wiring Diagram. **Continuity should exist.** 4. Also check harness for short to power.		
OK or NG		
OK	▶	GO TO 6.
NG	▶	GO TO 5.

5	DETECT MALFUNCTIONING PART	
Check the following. ● Harness connectors E26, E201 ● Harness for open or short between PNP switch and body ground		
	▶	Repair open circuit or short to power in harness or connectors.

6	CHECK PNP SWITCH INPUT SIGNAL CIRCUIT FOR OPEN AND SHORT	
1. Disconnect ECM harness connector. 2. Check harness continuity between ECM terminal 35 and PNP switch terminal 1. Refer to Wiring Diagram. **Continuity should exist.** 3. Also check harness for short to ground and short to power.		
OK or NG		
OK	▶	GO TO 8.
NG	▶	GO TO 7.

7	DETECT MALFUNCTIONING PART	
Check the following. ● Harness connectors M10, E101 ● Harness connectors E26, E201 ● Harness for open or short between ECM and PNP switch		
	▶	Repair open circuit or short to ground or short to power in harness or connectors.

8	CHECK PARK/NEUTRAL POSITION (PNP) SWITCH	
Refer to MT-8, "Position Switch Check".		
OK or NG		
OK	▶	GO TO 9.
NG	▶	Replace park/neutral position (PNP) switch.

9	CHECK INTERMITTENT INCIDENT	
Refer to "TROUBLE DIAGNOSIS FOR INTERMITTENT INCIDENT", EC-82.		
	▶	**INSPECTION END**

FOR A/T MODELS

=NMEC0766S02

1	INSPECTION START
Do you have CONSULT-II?	
Yes or No	
Yes ▶	GO TO 2.
No ▶	GO TO 3.

2	CHECK OVERALL FUNCTION

With CONSULT-II

1. Turn ignition switch "ON".
2. Select "P/N POSI SW" in "DATA MONITOR" mode with CONSULT-II.
3. Check the "P/N POSI SW" signal under the following conditions.

DATA MONITOR	
MONITOR	NO DTC
P/N POSI SW	ON

Selector lever position	P/N POSI SW
"N" and "P" position	ON
Except the above position	OFF

SEF028Y

OK or NG

OK ▶	**INSPECTION END**
NG ▶	GO TO 4.

3	CHECK OVERALL FUNCTION

Without CONSULT-II

1. Turn ignition switch "ON".
2. Check voltage between ECM terminal 35 and ground under the following conditions.

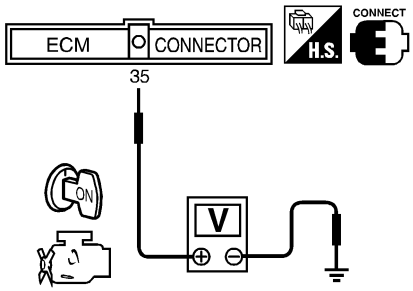

Selector lever position	Voltage
"P" and "N" position	Apporox. 0V
Except the above position	Battery voltage

SEC433C

OK or NG

OK ▶	**INSPECTION END**
NG ▶	GO TO 5.

4	CHECK PARK/NEUTRAL POSITION (PNP) SWITCH CIRCUIT

With CONSULT-II

1. Select "A/T", then "DATA MONITOR" with CONSULT-II.
2. Select "P/N POSI SW" signal, and check it under the following conditions.

DATA MONITOR	
MONITORING	NO FAIL
P/N POSI SW	ON

PEF963N

Condition (Gear position)	P/N POSI SW
"P" or "N" position	ON
Other positions	OFF

MTBL0126

OK or NG

OK	▶	GO TO 10.
NG	▶	GO TO 6.

5	CHECK PARK/NEUTRAL POSITION (PNP) SWITCH CIRCUIT

Without CONSULT-II

1. Turn ignition switch "OFF".
2. Disconnect TCM (Transmission control module) harness connector.
3. Turn ignition switch "ON".
4. Check voltage between TCM terminal 36 and ground under the following conditions.

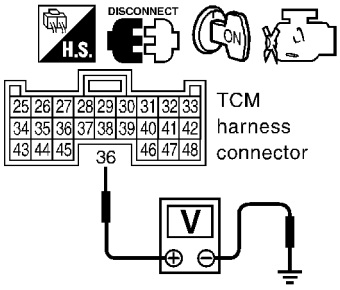

SEF073W

Condition (Gear position)	Voltage
"P" or "N" position	Battery voltage
Other positions	0V

MTBL0647

OK or NG

OK	▶	GO TO 10.
NG	▶	GO TO 6.

6	CHECK POWER SUPPLY

1. Turn ignition switch "OFF".
2. Disconnect park/neutral position (PNP) switch harness connector.
3. Turn ignition switch "ON".
4. Check voltage between terminal 3 and ground with CONSULT-II or tester.

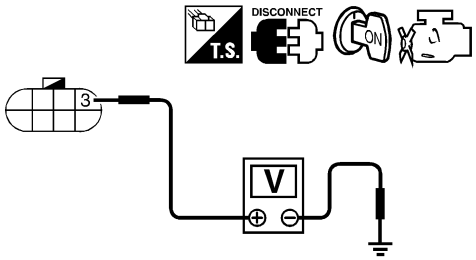

SEC434C

Voltage: Battery voltage

OK or NG

OK	▶	GO TO 8.
NG	▶	GO TO 7.

7	DETECT MALFUNCTIONING PART

Check the following.
- Fuse block (J/B) connector E105
- 10 A fuse
- Harness for open or short between park/neutral position (PNP) switch and fuse

	▶	Repair harness or connectors.

8	CHECK INPUT SIGNAL CIRCUIT-I

1. Turn ignition switch "OFF".
2. Disconnect TCM (Transmission control module) harness connector.
3. Check harness continuity between TCM terminal 36 and switch terminals 4, 6.

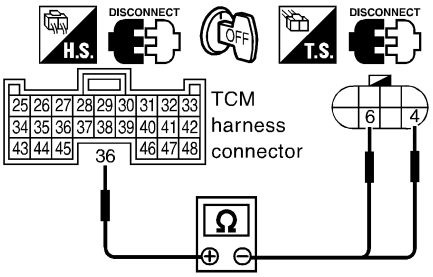

SEC435C

Continuity should exist.

4. Also check harness for short to ground and short to power.

OK or NG

OK	▶	GO TO 9.
NG	▶	Repair open circuit or short to ground or short to power in harness or connectors.

9	CHECK PARK/NEUTRAL POSITION (PNP) SWITCH	
Refer to "PARK/NEUTRAL POSITION SWITCH", AT-196.		
	OK or NG	
OK	▶	GO TO 10.
NG	▶	Replace park/neutral position (PNP) switch.

10	CHECK INPUT SIGNAL CIRCUIT-II	
1. Turn ignition switch "OFF". 2. Disconnect ECM harness connector and TCM (Transmission control module) harness connector. 3. Check harness continuity between ECM terminal 35 and TCM terminal 14. Refer to Wiring Diagram. **Continuity should exist.** 4. Also check harness for short to ground and short to power.		
	OK or NG	
OK	▶	GO TO 12.
NG	▶	GO TO 11.

11	DETECT MALFUNCTIONING PART	
Check the following. ● Harness connectors F4, M60 ● Harness for open or short between ECM and TCM		
	▶	Repair open circuit or short to ground or short to power in harness or connectors.

12	CHECK INTERMITTENT INCIDENT	
Refer to "TROUBLE DIAGNOSIS FOR INTERMITTENT INCIDENT", EC-82.		
	▶	**INSPECTION END**

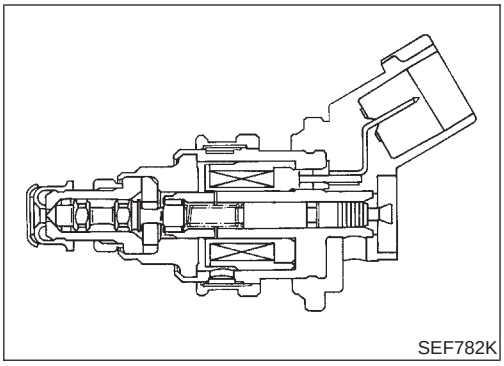

Component Description

NMEC0767

The fuel injector is a small, precise solenoid valve. When the ECM supplies a ground to the injector circuit, the coil in the injector is energized. The energized coil pulls the needle valve back and allows fuel to flow through the injector into the intake manifold. The amount of fuel injected depends upon the injection pulse duration. Pulse duration is the length of time the injector remains open. The ECM controls the injection pulse duration based on engine fuel needs.

CONSULT-II Reference Value in Data Monitor Mode

NMEC0768

MONITOR ITEM	CONDITION		SPECIFICATION
INJ PULSE	• Engine: After warming up • Air conditioner switch: OFF • Shift lever: “N” • No-load	Idle	1.7 - 2.5 msec
		2,000 rpm	1.5 - 2.3 msec

ECM Terminals and Reference Value

NMEC0769

Specification data are reference values and are measured between each terminal and ground.

CAUTION:

Do not use ECM ground terminals when measuring input/output voltage. Doing so may result in damage to the ECM’s transistor. Use a ground other than ECM terminals, such as the ground.

TERMINAL NO.	WIRE COLOR	ITEM	CONDITION	DATA (DC Voltage)
101 110 103 112	W/B L/R G/B L/B	Injector No. 1 Injector No. 2 Injector No. 3 Injector No. 4	**[Engine is running]** • **Warm-up condition** • Idle speed	BATTERY VOLTAGE (11 - 14V) 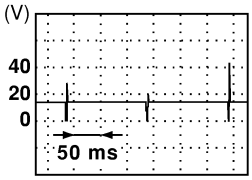 SEC369C
			[Engine is running] • **Warm-up condition** • Engine speed is 2,000 rpm	BATTERY VOLTAGE (11 - 14V) 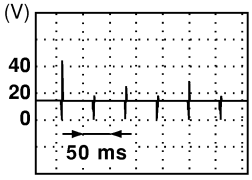 SEC371C

Wiring Diagram

NMEC0770

EC-INJECT-01

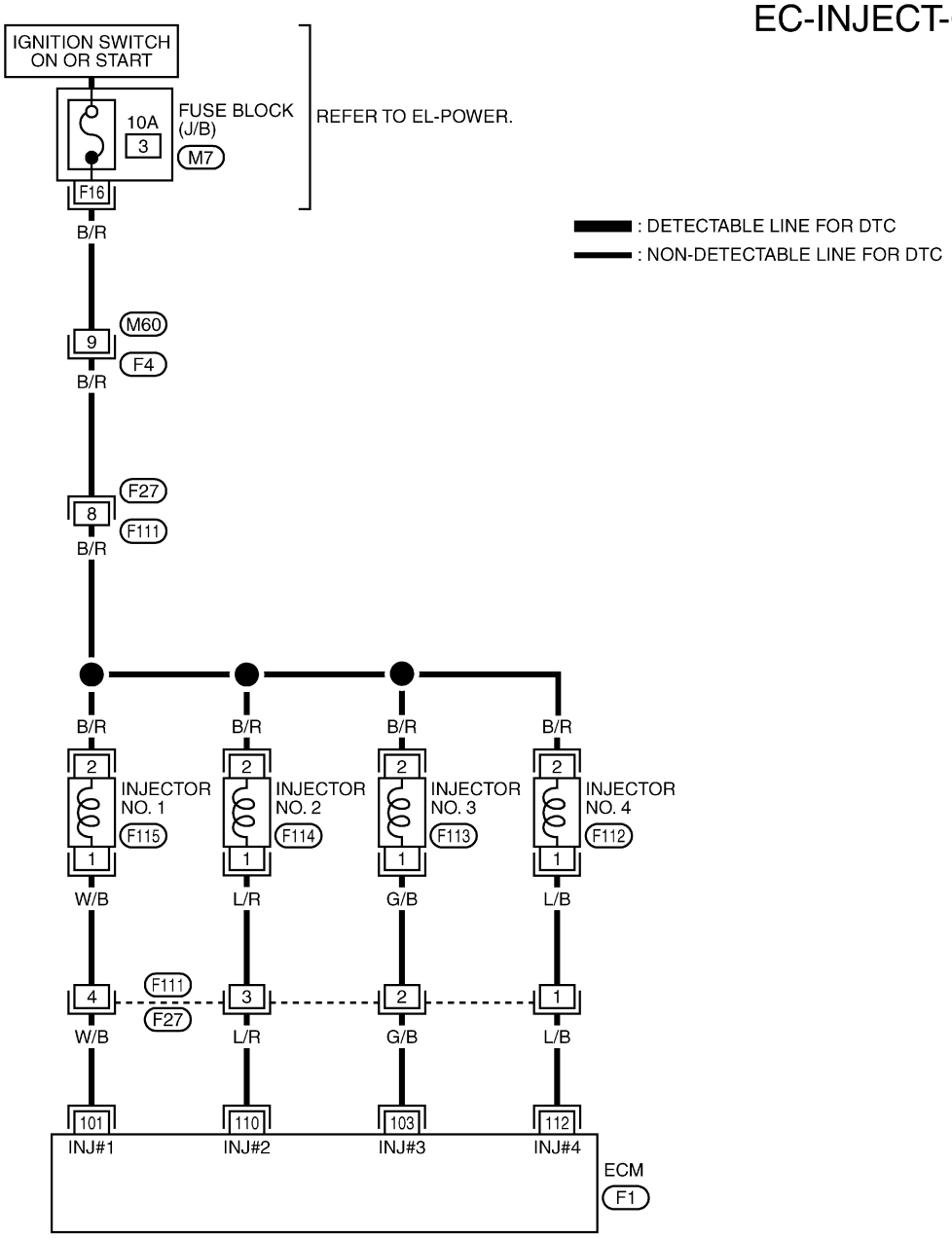

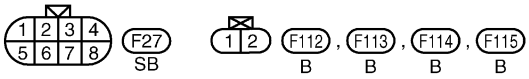

REFER TO THE FOLLOWING.

F4 -SUPER MULTIPLE JUNCTION (SMJ)

M7 -FUSE BLOCK-JUNCTION BOX (J/B)

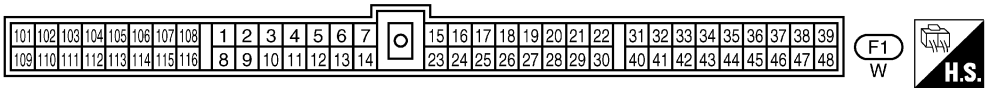

TEC811

Diagnostic Procedure

NMEC0771

1	CHECK OVERALL FUNCTION

With CONSULT-II

1. Start engine.
2. Perform “POWER BALANCE” in “ACTIVE TEST” mode with CONSULT-II.

ACTIVE TEST	
POWER BALANCE	
MONITOR	
CMPS~RPM(REF)	XXX rpm
MAS AIR/FL SE	XXX V
IACV-AAC/V	XXX %

PEF389V

3. Make sure that each circuit produces a momentary engine speed drop.

Without CONSULT-II

1. Start engine.
2. Listen to each injector operating sound.

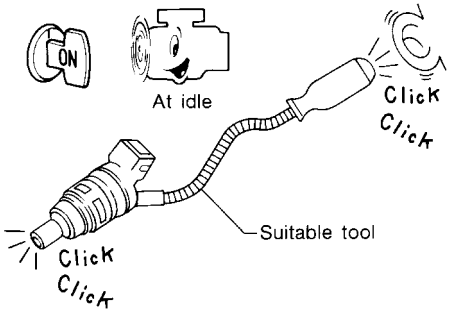

MEC703B

Clicking noise should be heard.

OK or NG

OK	▶	**INSPECTION END**
NG	▶	GO TO 2.

2	CHECK POWER SUPPLY

1. Stop engine.
2. Disconnect injector harness connector.

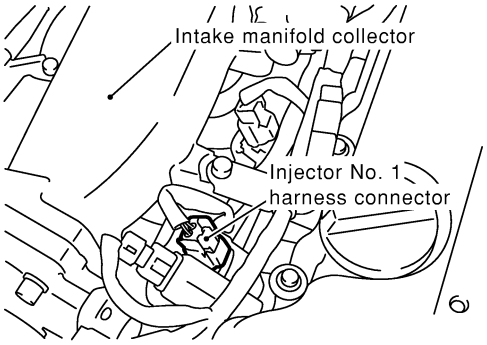

SEC392C

3. Turn ignition switch "ON".
4. Check voltage between terminal 2 and ground with CONSULT-II or tester.

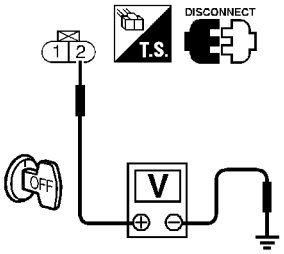

SEF078W

Voltage: Battery voltage

OK or NG

OK	▶	GO TO 4.
NG	▶	GO TO 3.

3	DETECT MALFUNCTIONING PART

Check the following.
- 10A fuse
- Harness connectors M60, F4
- Harness connectors F27, F111
- Harness for open or short between injector and fuse

	▶	Repair harness or connectors.

4	CHECK OUTPUT SIGNAL CIRCUIT

1. Turn ignition switch "OFF".
2. Disconnect ECM harness connector.
3. Check harness continuity between injector harness connector terminal 1 and ECM terminals 101, 103, 110, 112. Refer to wiring diagram.
   Continuity should exist.
4. Also check harness for short to ground and short to power.

OK or NG

OK	▶	GO TO 6.
NG	▶	GO TO 5.

5	DETECT MALFUNCTIONING PART
Check the following. ● Harness connectors F27, F111 ● Harness for open or short between ECM and injector.	
▶	Repair open circuit or short to ground or short to power in harness or connectors.

6	CHECK INJECTOR
Refer to "Component Inspection", EC-198.	
OK or NG	
OK ▶	GO TO 7.
NG ▶	Replace injector.

7	CHECK INTERMITTENT INCIDENT
Perform "TROUBLE DIAGNOSIS FOR INTERMITTENT INCIDENT", EC-82.	
▶	**INSPECTION END**

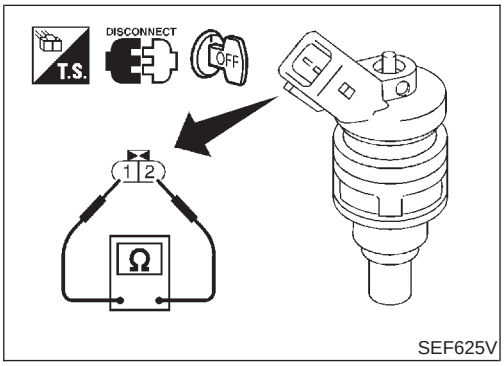

Component Inspection

NMEC0772

INJECTOR

NMEC0772S01

1. Disconnect injector harness connector.
2. Check resistance between terminals as shown in the figure.

   Resistance: Approximately 11Ω [at 20°C (68°F)]

   If NG, replace injector.

CONSULT-II Reference Value in Data Monitor Mode

NMEC0773

Specification data are reference values.

MONITOR ITEM	CONDITION	SPECIFICATION
START SIGNAL	● Ignition switch: ON → START → ON	OFF → ON → OFF

ECM Terminals and Reference Value

NMEC0774

Specification data are reference values and are measured between each terminal and ground.

CAUTION:
Do not use ECM ground terminals when measuring input/output voltage. Doing so may result in damage to the ECM's transistor. Use a ground other than ECM terminals, such as the ground.

TERMINAL NO.	WIRE COLOR	ITEM	CONDITION	DATA (DC Voltage)
34	OR/L	Start signal	**[Ignition switch "ON"]**	Approximately 0V
			[Ignition switch "START"]	9 - 12V

Wiring Diagram

NMEC0775

EC-S/SIG-01

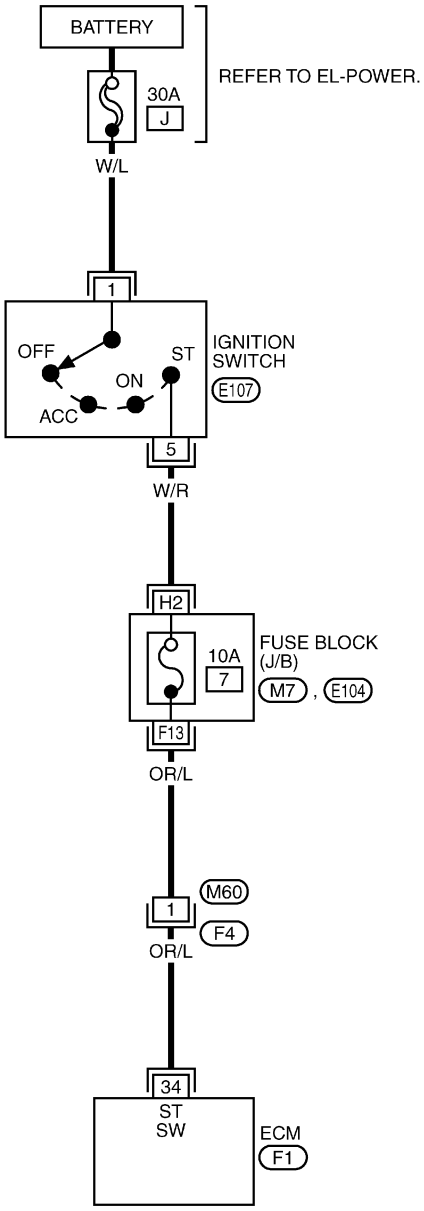

: DETECTABLE LINE FOR DTC
: NON-DETECTABLE LINE FOR DTC

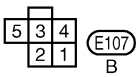

REFER TO THE FOLLOWING.
F4 -SUPER MULTIPLE JUNCTION (SMJ)
M7 , E104 -FUSE BLOCK-JUNCTION BOX (J/B)

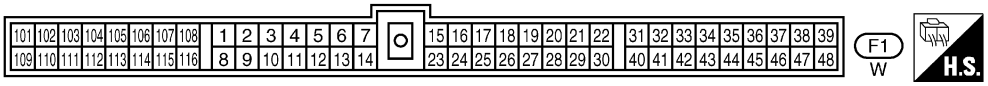

TEC810

Diagnostic Procedure

=NMEC0776

1	INSPECTION START	
Do you have CONSULT-II?		
	Yes or No	
Yes	▶	GO TO 2.
No	▶	GO TO 3.

2	CHECK OVERALL FUNCTION	

With CONSULT-II

1. Turn ignition switch “ON”.
2. Check “START SIGNAL” in “DATA MONITOR” mode with CONSULT-II under the following conditions.

DATA MONITOR	
MONITOR	NO DTC
START SIGNAL	OFF

Condition	“START SIGNAL”
Ignition switch “ON”	OFF
Ignition switch “START”	ON

SEF227Y

OK or NG		
OK	▶	**INSPECTION END**
NG	▶	GO TO 4.

3	CHECK OVERALL FUNCTION	

Without CONSULT-II

1. Turn ignition switch to “START”.
2. Check voltage between ECM terminal 34 and ground under the following conditions.

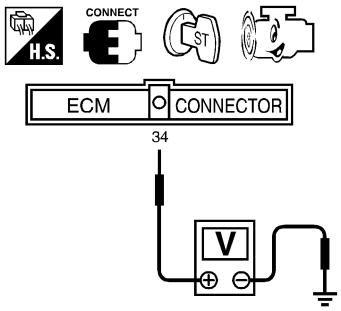

Condition	Voltage
Ignition switch “START”	Battery Voltage
Except above	Approximately 0V

SEC423C

OK or NG		
OK	▶	**INSPECTION END**
NG	▶	GO TO 4.

4	DETECT MALFUNCTIONING PART	
Check the following. ● Harness connectors M60, F4 ● Fuse block (J/B) connectors M7, E104 ● 10A fuse ● Harness for open or short between ECM and ignition switch		
OK or NG		
OK	▶	GO TO 5.
NG	▶	Repair open circuit or short to ground or short to power in harness or connectors.

5	CHECK INTERMITTENT INCIDENT
Perform "TROUBLE DIAGNOSIS FOR INTERMITTENT INCIDENT", EC-82.	
▶	**INSPECTION END**

System Description

NMEC0777

Sensor	Input Signal to ECM	ECM function	Actuator
Camshaft position sensor	Engine speed	Fuel pump control	Fuel pump relay
Ignition switch	Ignition signal and start signal		

The ECM activates the fuel pump for several seconds after the ignition switch is turned on to improve engine startability. If the ECM receives a 180° signal from the camshaft position sensor, it knows that the engine is rotating, and causes the pump to perform. If the 180° signal is not received when the ignition switch is on, the engine stalls. The ECM stops pump operation and prevents battery discharging, thereby improving safety. The ECM does not directly drive the fuel pump. It controls the ON/OFF fuel pump relay, which in turn controls the fuel pump.

Condition	Fuel pump operation
Ignition switch is turned to ON.	Operates for 1 second
Engine running and cranking	Operates
When engine is stopped (Signal is not sent from camshaft position sensor.)	Stops in 1 second
Except as shown above	Stops

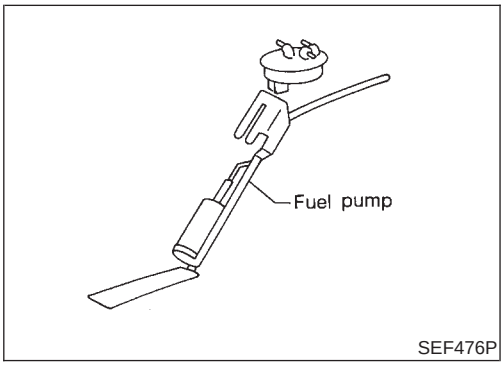

SEF476P

Component Description

NMEC0778

A turbine type design fuel pump is used in the fuel tank.

CONSULT-II Reference Value in Data Monitor Mode

NMEC0779

MONITOR ITEM	CONDITION	SPECIFICATION
FUEL PUMP RLY	• Ignition switch is turned to ON (Operates for 1 second) • Engine running and cranking • When engine is stopped (stops in 1 second)	ON
	• Except as shown above	OFF

ECM Terminals and Reference Value

=NMEC0780

Specification data are reference values and are measured between each terminal and ground.

CAUTION:

Do not use ECM ground terminals when measuring input/output voltage. Doing so may result in damage to the ECM's transistor. Use a ground other than ECM terminals, such as the ground.

TERMINAL NO.	WIRE COLOR	ITEM	CONDITION	DATA (DC Voltage)
106	B/P	Fuel pump relay	**[Ignition switch "ON"]** ● For 1 second after turning ignition switch "ON" **[Engine is running]**	0 - 1V
			[Ignition switch "ON"] ● More than 1 second after turning ignition switch "ON"	BATTERY VOLTAGE (11 - 14V)

Wiring Diagram

NMEC0781

EC-F/PUMP-01

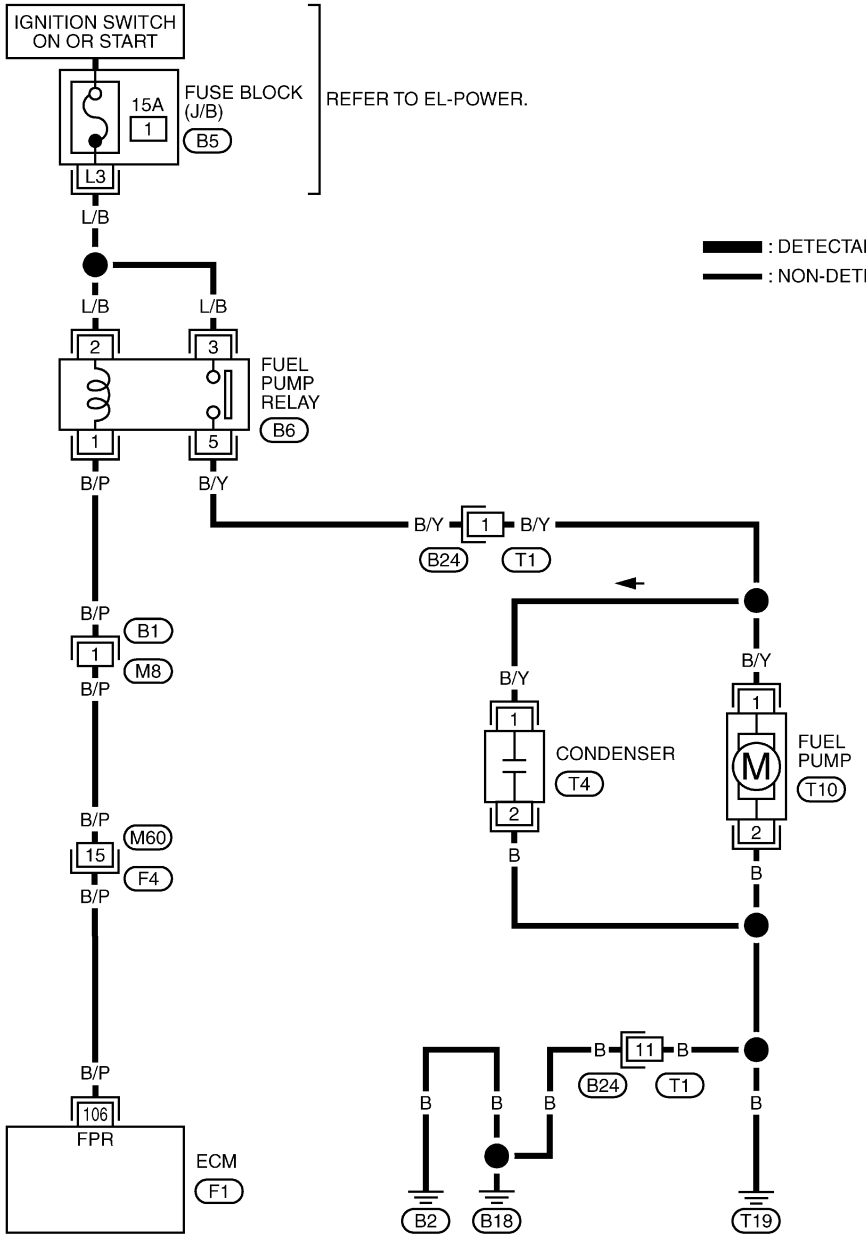

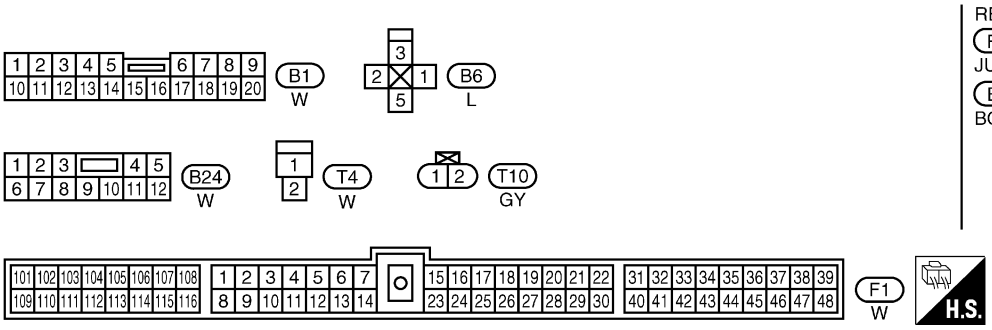

REFER TO THE FOLLOWING.
F4 -SUPER MULTIPLE JUNCTION (SMJ)
B5 -FUSE BLOCK-JUNCTION BOX (J/B)

TEC812

Diagnostic Procedure

NMEC0782

1	CHECK OVERALL FUNCTION

1. Turn ignition switch “ON”.
2. Pinch fuel feed hose with fingers.

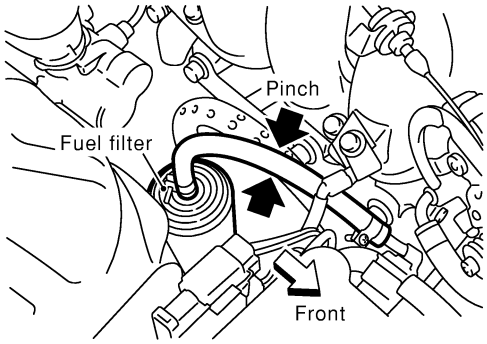

SEC387C

Fuel pressure pulsation should be felt on the fuel feed hose for 1 second after ignition switch is turned “ON”.

OK or NG

OK	▶	**INSPECTION END**
NG	▶	GO TO 2.

2	CHECK POWER SUPPLY

1. Turn ignition switch “OFF”.
2. Disconnect fuel pump relay.

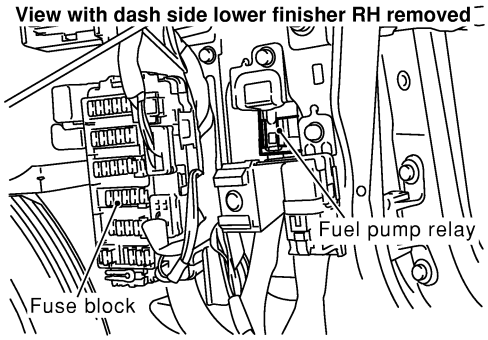

SEC388C

3. Turn ignition switch “ON”.
4. Check voltage between terminals 2, 3 and ground with CONSULT-II or tester.

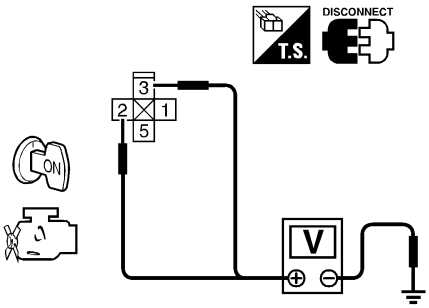

Voltage: Battery voltage

SEC424C

OK or NG

OK	▶	GO TO 4.
NG	▶	GO TO 3.

3	DETECT MALFUNCTIONING PART
Check the following. ● 15A fuse ● Harness for open or short between fuse and fuel pump relay	
▶	Repair harness or connectors.

4	CHECK POWER GROUND CIRCUIT

1. Turn ignition switch "OFF".
2. Disconnect fuel pump harness connector.

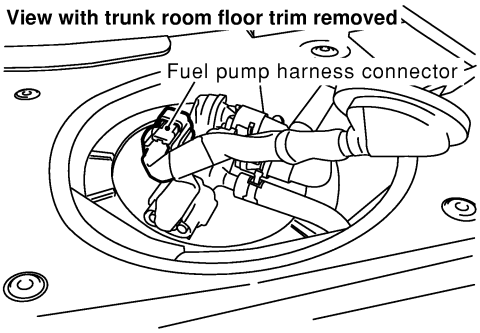

SEC389C

3. Check harness continuity between fuel pump terminal 2 and body ground, fuel pump terminal 1 and fuel pump relay terminal 5.
   Refer to wiring diagram.
   Continuity should exist.
4. Also check harness for short to ground and short to power.

OK or NG

OK	▶	GO TO 6.
NG	▶	GO TO 5.

5	DETECT MALFUNCTIONING PART
Check the following. ● Harness connectors B24, T1 ● Harness for open or short between fuel pump and body ground ● Harness for open or short between fuel pump and fuel pump relay	
▶	Repair open circuit or short to ground or short to power in harness or connectors.

6	CHECK OUTPUT SIGNAL CIRCUIT

1. Disconnect ECM harness connector.
2. Check harness continuity between ECM terminal 106 and fuel pump relay connector terminal 1.
   Refer to wiring diagram.
   Continuity should exist.
3. Also check harness for short to ground and short to power.

OK or NG

OK	▶	GO TO 8.
NG	▶	GO TO 7.

7	DETECT MALFUNCTIONING PART	
Check the following. ● Harness connectors B1, M8 ● Harness connectors M60, F4 ● Harness for open or short between ECM and fuel pump relay		
NG	▶	Repair open circuit or short to ground or short to power in harness or connectors.

8	CHECK FUEL PUMP RELAY	
Refer to "Component Inspection", EC-208.		
	OK or NG	
OK	▶	GO TO 9.
NG	▶	Replace fuel pump relay.

9	CHECK FUEL PUMP	
Refer to "Component Inspection", EC-208.		
	OK or NG	
OK	▶	GO TO 10.
NG	▶	Replace fuel pump.

10	CHECK INTERMITTENT INCIDENT	
Perform "TROUBLE DIAGNOSIS FOR INTERMITTENT INCIDENT", EC-82.		
	▶	**INSPECTION END**

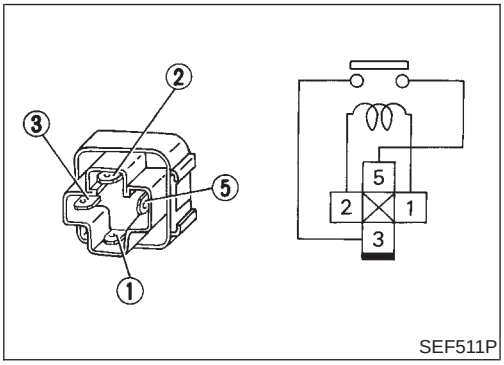

SEF511P

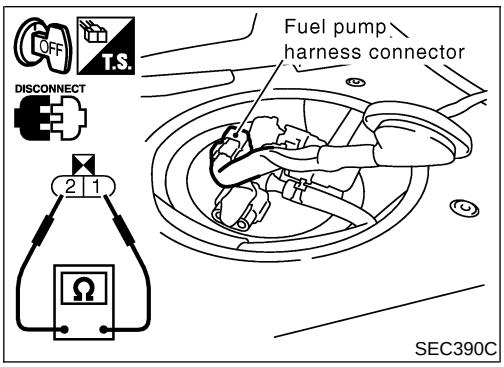

SEC390C

Component Inspection

NMEC0783

FUEL PUMP RELAY

NMEC0783S01

Check continuity between terminals 3 and 5.

Conditions	Continuity
12V direct current supply between terminals 1 and 2	Yes
No current supply	No

If NG, replace relay.

FUEL PUMP

NMEC0783S02

1. Disconnect fuel pump harness connector.
2. Check resistance between terminals 1 and 2.

   Resistance: 0.2 - 5.0Ω [at 25°C (77°F)]

   If NG, replace fuel pump.

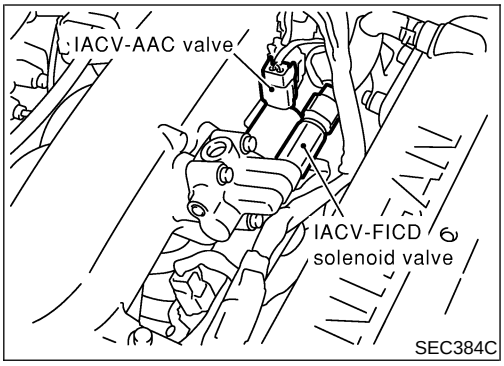

Component Description

NMEC0784

When the air conditioner is on, the IACV-FICD solenoid valve supplies additional air to adjust to the increased load.

ECM Terminals and Reference Value

NMEC0785

Specification data are reference values and are measured between each terminal and ground.

CAUTION:

Do not use ECM ground terminals when measuring input/output voltage. Doing so may result in damage to the ECM's transistor. Use a ground other than ECM terminals, such as the ground.

TERMINAL NO.	WIRE COLOR	ITEM	CONDITION	DATA (DC Voltage)
11	G	Air conditioner relay	**[Engine is running]** ● Both A/C switch and blower fan switch are "ON"	0 - 1V
			[Engine is running] ● A/C switch is "OFF"	BATTERY VOLTAGE (11 - 14V)
41	L/B	Air conditioner switch	**[Engine is running]** ● Both A/C switch and blower fan switch are "ON" (Compressor operates)	Approximately 0V
			[Engine is running] ● Air conditioner switch is "OFF"	Approximately 5V

Wiring Diagram

NMEC0786

EC-FICD-01

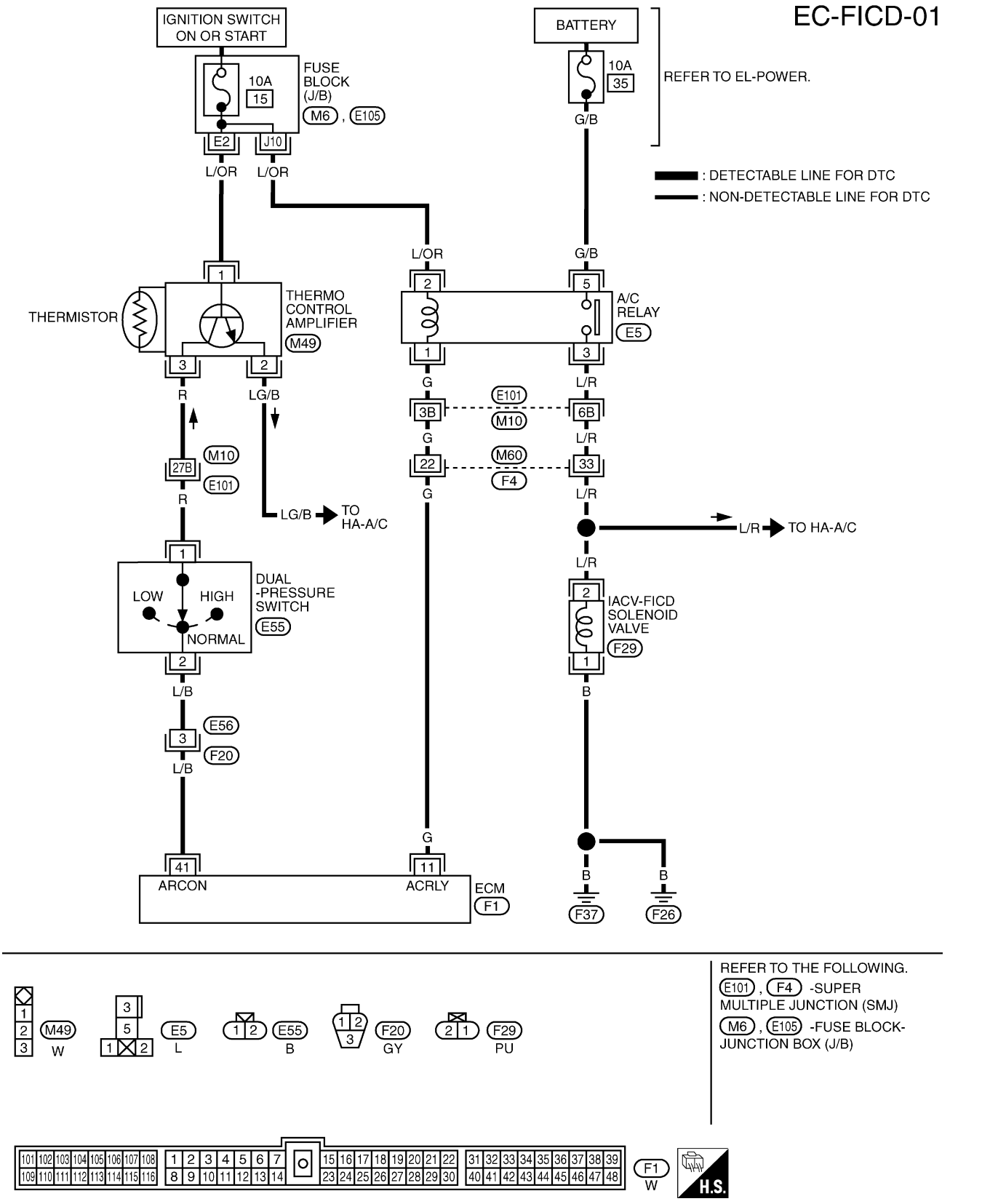

REFER TO THE FOLLOWING.
E101 , F4 -SUPER MULTIPLE JUNCTION (SMJ)
M6 , E105 -FUSE BLOCK-JUNCTION BOX (J/B)

TEC816

Diagnostic Procedure

=NMEC0787

1	CHECK OVERALL FUNCTION

1. Start engine and warm it up to normal operating temperature.
2. Check idle speed.
   800±50 rpm (in “N” position)
   If NG, adjust idle speed.
3. Turn air conditioner switch and blower fan switch “ON”.
4. Recheck idle speed.

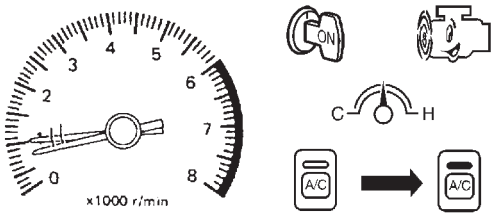

SEF742U

800 rpm or more (in “P” or “N” position)

OK or NG

OK	▶	**INSPECTION END**
NG	▶	GO TO 2.

2	CHECK AIR CONDITIONER FUNCTION

Check if air conditioner compressor functions normally.

OK or NG

OK	▶	GO TO 3.
NG	▶	Refer to “TROUBLE DIAGNOSES”, HA-19.

3	CHECK POWER SUPPLY

1. Turn air conditioner switch and blower fan switch “OFF”.
2. Stop engine.
3. Disconnect IACV-FICD solenoid valve harness connector.

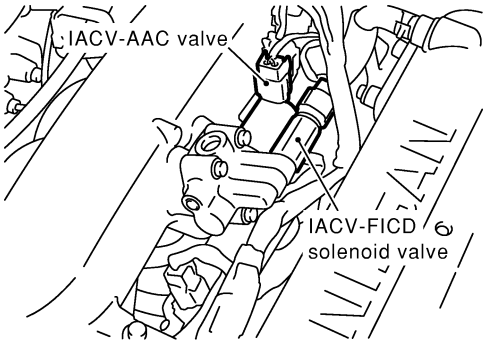

SEC384C

4. Disconnect A/C relay.
5. Check harness continuity between A/C relay terminal 3 and IACV-FICD solenoid valve terminal 2. Refer to Wiring Diagram.
   Continuity should exist.
6. Also check harness for short to ground and short to power.

OK or NG

OK	▶	GO TO 5.
NG	▶	GO TO 4.

4	DETECT MALFUNCTIONING PART
Check the following. ● Harness for open or short between IACV-FICD solenoid valve and harness connector F4	
▶	Repair harness or connectors.

5	CHECK GROUND CIRCUIT
1. Check harness continuity between IACV-FICD solenoid valve terminal 1 and engine ground. Refer to Wiring Diagram. **Continuity should exist.** 2. Also check harness for short to power.	
OK or NG	
OK ▶	GO TO 6.
NG ▶	Repair open circuit or short to power in harness or connectors.

6	CHECK IACV-FICD SOLENOID VALVE
Refer to "Component Inspection", EC-212.	
OK or NG	
OK ▶	GO TO 7.
NG ▶	Replace IACV-FICD solenoid valve.

7	CHECK INTERMITTENT INCIDENT
Refer to "TROUBLE DIAGNOSIS FOR INTERMITTENT INCIDENT", EC-82.	
▶	**INSPECTION END**

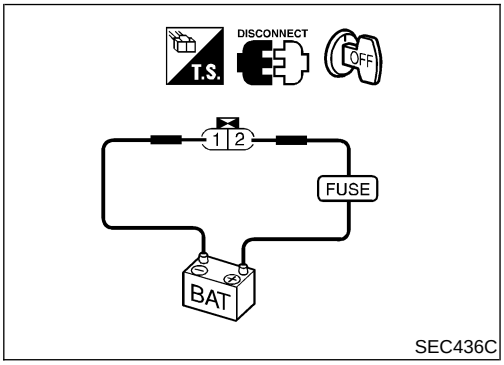

SEC436C

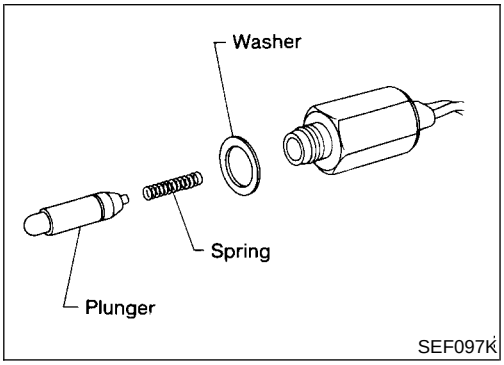

SEF097K

Component Inspection

NMEC0788

IACV-FICD SOLENOID VALVE

NMEC0788S01

Disconnect IACV-FICD solenoid valve harness connector.

- Check for clicking sound when applying 12V direct current to terminals.

- Check plunger for seizing or sticking.
- Check for broken spring.

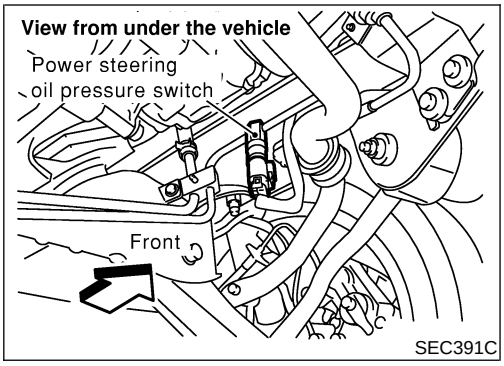

Component Description

NMEC0789

The power steering oil pressure switch is attached to the power steering high-pressure tube and detects a power steering load. When a power steering load is detected, it signals the ECM. The ECM adjusts the IACV-AAC valve to increase the idle speed and adjust for the increased load.

CONSULT-II Reference Value in Data Monitor Mode

NMEC0790

Specification data are reference values.

MONITOR ITEM	CONDITION		SPECIFICATION
PW/ST SIGNAL	● Engine: After warming up, idle the engine	Steering wheel in neutral position (forward direction)	OFF
		The steering wheel is fully turned	ON

ECM Terminals and Reference Value

NMEC0791

Specification data are reference values and are measured between each terminal and ground.

CAUTION:

Do not use ECM ground terminals when measuring input/output voltage. Doing so may result in damage to the ECM's transistor. Use a ground other than ECM terminals, such as the ground.

TERMINAL NO.	WIRE COLOR	ITEM	CONDITION	DATA (DC Voltage)
43	PU/W	Power steering oil pressure switch	**[Engine is running]** ● Steering wheel is fully turned	Approximately 0V
			[Engine is running] ● Steering wheel is not turned	Approximately 5V

Wiring Diagram

NMEC0792

EC-PST/SW-01

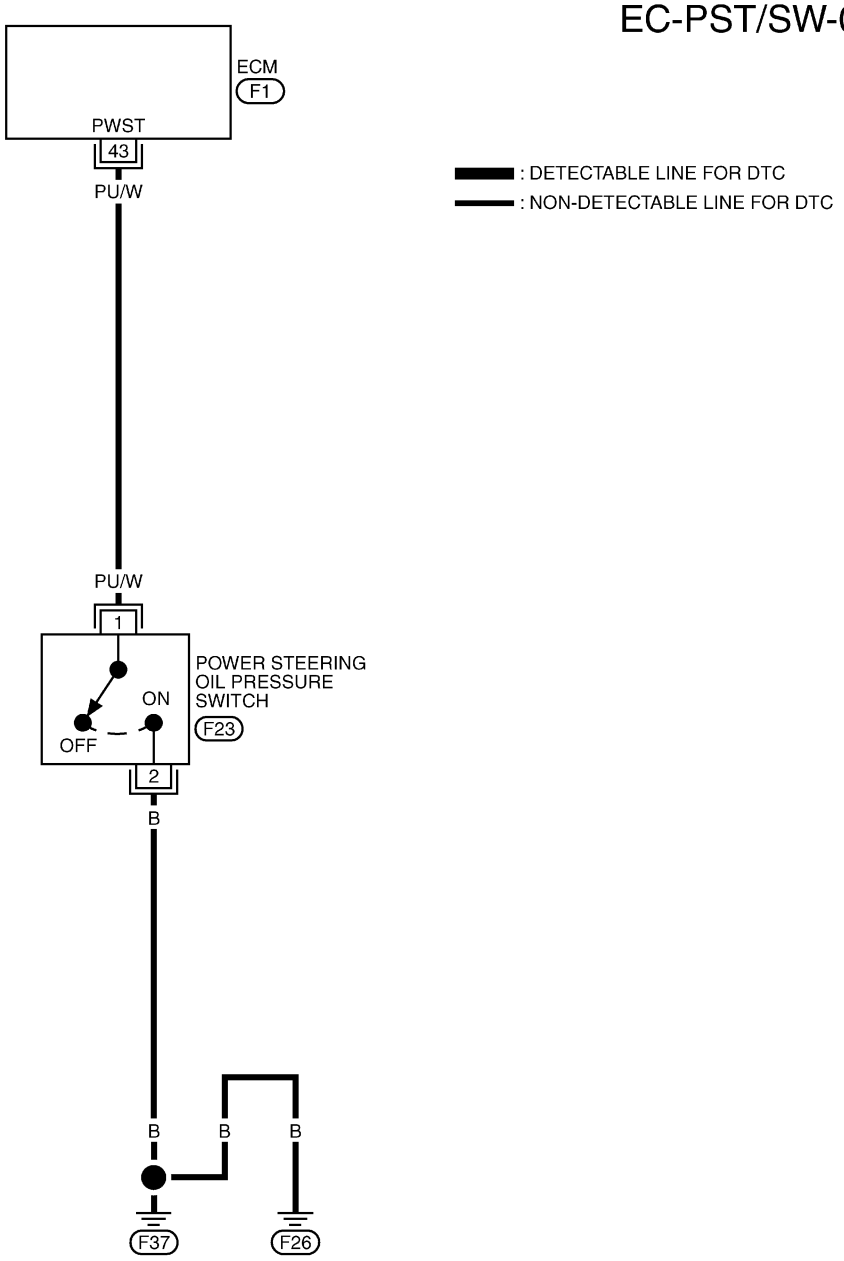

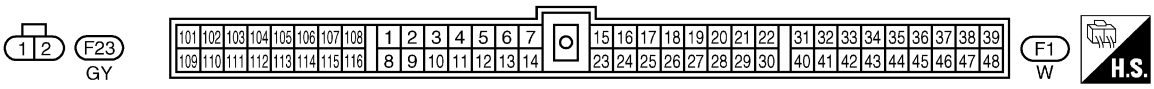

TEC819

Diagnostic Procedure

=NMEC0793

1	INSPECTION START
Do you have CONSULT-II?	
Yes or No	
Yes ▶	GO TO 2.
No ▶	GO TO 3.

2	CHECK OVERALL FUNCTION

With CONSULT-II

1. Start engine.
2. Check “PW/ST SIGNAL” in “DATA MONITOR” mode with CONSULT-II under the following conditions.

DATA MONITOR	
MONITOR	NO DTC
PW/ST SIGNAL	OFF

Conditions	PW/ST SIGNAL
Steering is in neutral position	OFF
Steering is turned	ON

SEF311Y

OK or NG

OK ▶	**INSPECTION END**
NG ▶	GO TO 4.

3	CHECK OVERALL FUNCTION

Without CONSULT-II

1. Start engine.
2. Check voltage between ECM terminal 43 and ground under the following conditions.

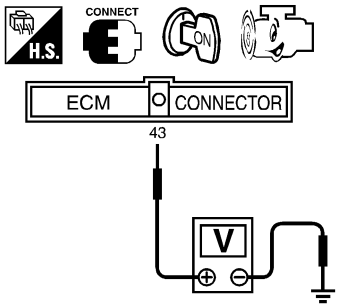

Condition	Voltage
When steering wheel is turned quickly	Approximately 0V
Except above	Approximately 5V

SEC425C

OK or NG

OK ▶	**INSPECTION END**
NG ▶	GO TO 4.

4	CHECK GROUND CIRCUIT

1. Turn ignition switch "OFF".
2. Disconnect power steering oil pressure switch harness connector.

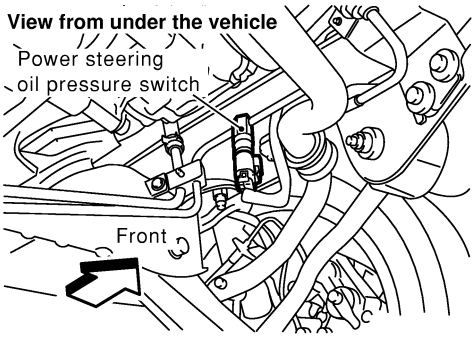

SEC391C

3. Check harness continuity between power steering oil pressure switch terminal 2 and engine ground.
   Refer to wiring diagram.
   Continuity should exist.
4. Also check harness for short to power.

OK or NG

OK	▶	GO TO 5.
NG	▶	Repair open circuit or short to power in harness or connectors.

5	CHECK INPUT SIGNAL CIRCUIT

1. Disconnect ECM harness connector.
2. Check harness continuity between ECM terminal 43 and power steering oil pressure switch terminal 1.
   Refer to wiring diagram.
   Continuity should exist.
3. Also check harness for short to ground and short to power.

OK or NG

OK	▶	GO TO 7.
NG	▶	GO TO 6.

6	DETECT MALFUNCTIONING PART
Check the harness for open or short between ECM and power steering oil pressure switch.	
▶	Repair open circuit or short to ground or short to power in harness or connectors.

7	CHECK POWER STEERING OIL PRESSURE SWITCH

Refer to "Component Inspection", EC-217.

OK or NG

OK	▶	GO TO 8.
NG	▶	Replace power steering oil pressure switch.

8	CHECK INTERMITTENT INCIDENT
Perform "TROUBLE DIAGNOSIS FOR INTERMITTENT INCIDENT", EC-82.	
▶	**INSPECTION END**

Component Inspection

NMEC0794

POWER STEERING OIL PRESSURE SWITCH

NMEC0794S01

1. Disconnect power steering oil pressure switch harness connector then start engine.
2. Check continuity between terminals 1 and 2.
   Refer to wiring diagram.

Conditions	Continuity
Steering wheel is being fully turned.	Yes
Steering wheel is not being turned.	No

If NG, replace power steering oil pressure switch.

CONSULT-II Reference Value in Data Monitor Mode

NMEC0795

Specification data are reference values.

MONITOR ITEM	CONDITION		SPECIFICATION
LOAD SIGNAL	● Ignition switch: ON	Rear window defogger is operating and/or lighting switch is “2ND” position.	ON
		Rear window defogger is not operating and lighting switch is “OFF”.	OFF

ECM Terminals and Reference Value

NMEC0796

Specification data are reference values and are measured between each terminal and ground.

CAUTION:

Do not use ECM ground terminals when measuring input/output voltage. Doing so may result in damage to the ECM’s transistor. Use a ground other than ECM terminals, such as the ground.

TERMINAL NO.	WIRE COLOR	ITEM	CONDITION	DATA (DC Voltage)
33	PU (A/T) G/R (M/T)	Electric load signal (Load switch)	**[Ignition switch “ON”]** ● Rear window defogger is operating and/or lighting switch is “2ND” position	BATTERY VOLTAGE (11 - 14V)
			[Ignition switch “ON”] ● Rear window defogger is not operating and lighting switch is “OFF”	Approximately 0V

Wiring Diagram

NMEC0797

EC-LOAD-01

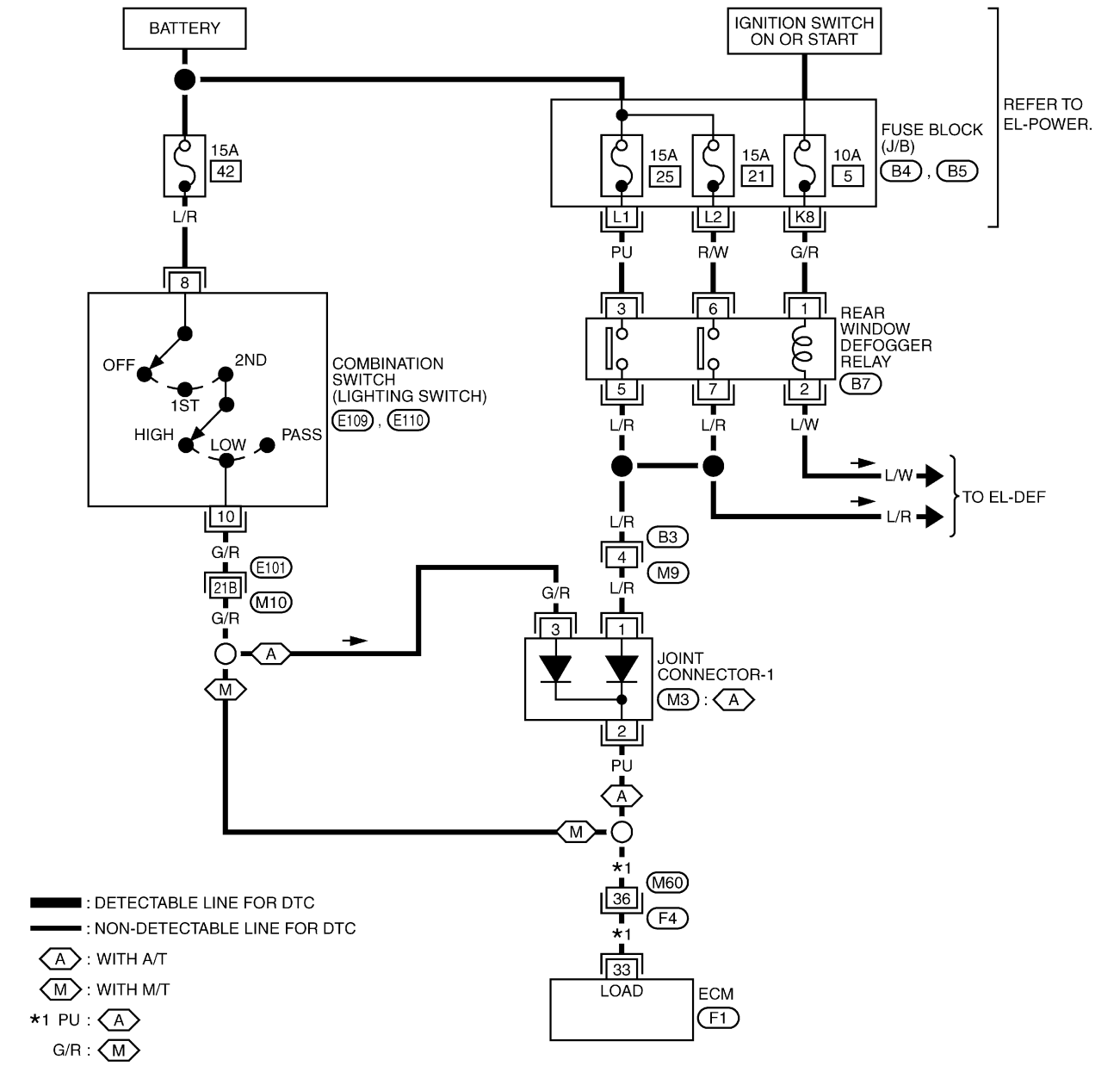

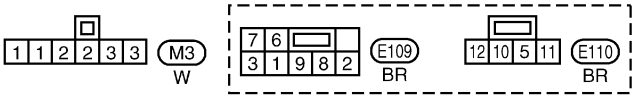

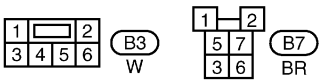

REFER TO THE FOLLOWING.
E101 , F4 -SUPER MULTIPLE JUNCTION (SMJ)
B4 , B5 -FUSE BLOCK-JUNCTION BOX (J/B)

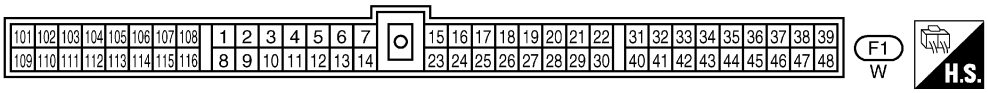

TEC821

Diagnostic Procedure

NMEC0798

1	INSPECTION START
Do you have CONSULT-II?	
Yes or No	
Yes ▶	GO TO 2.
No ▶	GO TO 4.

2	CHECK LOAD SIGNAL CIRCUIT OVERALL FUNCTION-I

With CONSULT-II

1. Turn ignition switch “ON”.
2. Check “LOAD SIGNAL” in “DATA MONITOR” mode with CONSULT-II under the following conditions.

DATA MONITOR	
MONITOR	NO DTC
LOAD SIGNAL	ON

CONDITION	LOAD SIGNAL
Rear window defogger switch "ON"	ON
Rear window defogger switch "OFF"	OFF

SEC426C

OK or NG

OK ▶	GO TO 3.
NG ▶	GO TO 6.

3	CHECK LOAD SIGNAL CIRCUIT OVERALL FUNCTION-II

With CONSULT-II

1. Turn ignition switch “ON”.
2. Check “LOAD SIGNAL” in “DATA MONITOR” mode with CONSULT-II under the following conditions.

DATA MONITOR	
MONITOR	NO DTC
LOAD SIGNAL	ON

CONDITION	LOAD SIGNAL
Lighting switch "2ND" position	ON
Lighting switch "OFF"	OFF

SEC427C

OK or NG

OK ▶	**INSPECTION END**
NG ▶	GO TO 9.

4	CHECK LOAD SIGNAL CIRCUIT OVERALL FUNCTION-I

Without CONSULT-II

1. Turn ignition switch "ON".
2. Check voltage between ECM terminal 33 and ground under the following conditions.

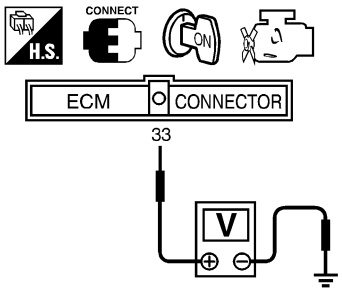

Condition	Voltage
Rear window defogger switch "ON"	BATTERY VOLTAGE
Rear window defogger switch "OFF"	0V

SEC428C

OK or NG

OK	▶	GO TO 5.
NG	▶	GO TO 6.

5	CHECK LOAD SIGNAL CIRCUIT OVERALL FUNCTION-II

Without CONSULT-II

1. Turn ignition switch "ON".
2. Check voltage between ECM terminal 33 and ground under the following conditions.

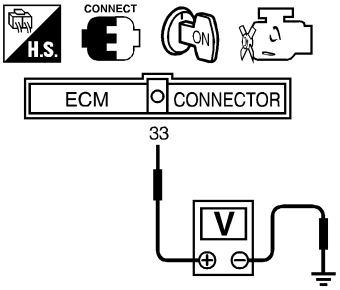

Condition	Voltage
Lighting switch "2ND" position	BATTERY VOLTAGE
Lighting switch "OFF"	0V

SEC429C

OK or NG

OK	▶	**INSPECTION END**
NG	▶	GO TO 9.

6	CHECK REAR WINDOW DEFOGGER FUNCTION

1. Start engine.
2. Turn "ON" the rear window defogger switch.
3. Check the rear windshield. Is the rear windshield heated up?

Yes or No

Yes	▶	GO TO 7.
No	▶	Refer to EL-96, "Rear Window Defogger".

7	CHECK REAR WINDOW DEFOGGER INPUT SIGNAL CIRCUIT

1. Stop engine
2. Disconnect ECM harness connector.
3. Disconnect rear window defogger relay.
4. Check harness continuity between ECM terminal 33 and rear window defogger relay terminals 5, 7 under the following conditions.

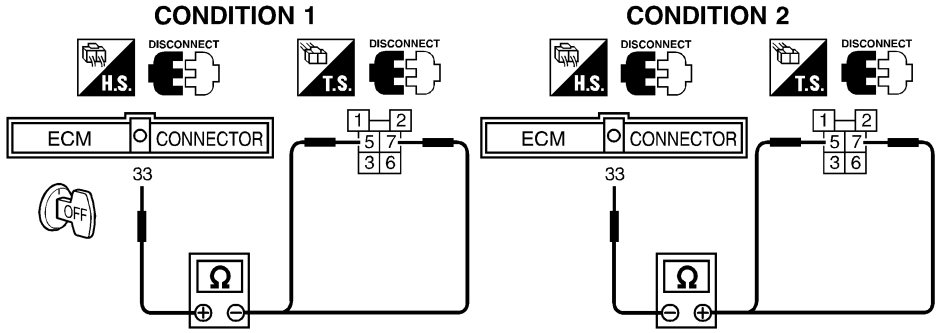

CONDITION	CONTINUITY
1	Should exist.
2	Should not exist.

SEC430C

5. Also check harness for short to ground and short to power.

OK or NG

OK	▶	GO TO 12.
NG	▶	GO TO 8.

8	DETECT MALFUNCTIONING PART

Check the following.
- Harness connectors F4, M60
- Harness connectors B3, M9
- Joint connector 1
- Harness open and short between ECM and rear window defogger relay

	▶	Repair open circuit or short to ground or short to power in harness or connectors.

9	CHECK HEADLAMP FUNCTION

1. Start engine.
2. Turn the lighting switch "2ND".
3. Check that headlamps are illuminated.
   Do the headlamps illuminate in both "High" and "Low" positions?

Yes or No

Yes	▶	GO TO 10.
No	▶	Refer to EL-28, "HEADLAMP".

10	CHECK HEADLAMP INPUT SIGNAL CIRCUIT

A/T models

1. Stop engine.
2. Disconnect ECM harness connector.
3. Disconnect lighting switch harness connector.
4. Check harness continuity between ECM terminal 33 and lighting switch terminal 10 under the following conditions.

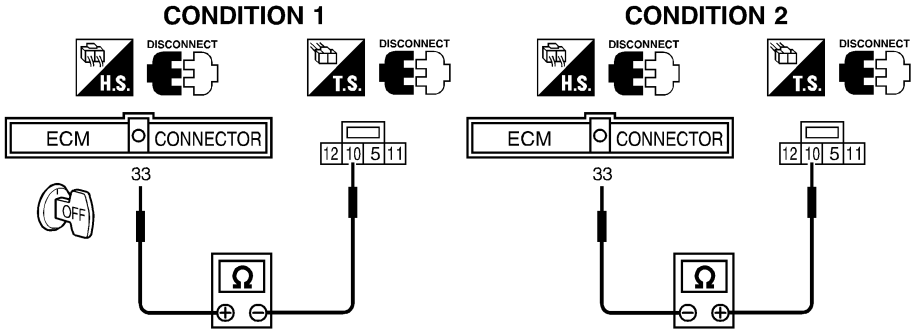

CONDITION	CONTINUITY
1	Should exist.
2	Should not exist.

SEC431C

5. Also check harness for short to ground and short to power.

M/T models

1. Stop engine.
2. Disconnect ECM harness connector.
3. Disconnect lighting switch harness connector.
4. Check harness continuity between ECM terminal 33 and lighting switch terminal 10. Refer to Wiring Diagram.
5. Also check harness for short to ground and short to power.

OK or NG

OK	▶	GO TO 12.
NG	▶	GO TO 11.

11	DETECT MALFUNCTIONING PART

Check the following.

- Harness connectors F4, M60
- Harness connectors M10, E101
- Joint connector-1
- Harness for open and short between ECM and lighting switch

	▶	Repair open circuit or short to ground or short to power in harness or connectors.

12	CHECK INTERMITTENT INCIDENT

Perform "TROUBLE DIAGNOSIS FOR INTERMITTENT INCIDENT", EC-82.

	▶	**INSPECTION END**

Wiring Diagram

NMEC0800

EC-MIL/DL-01

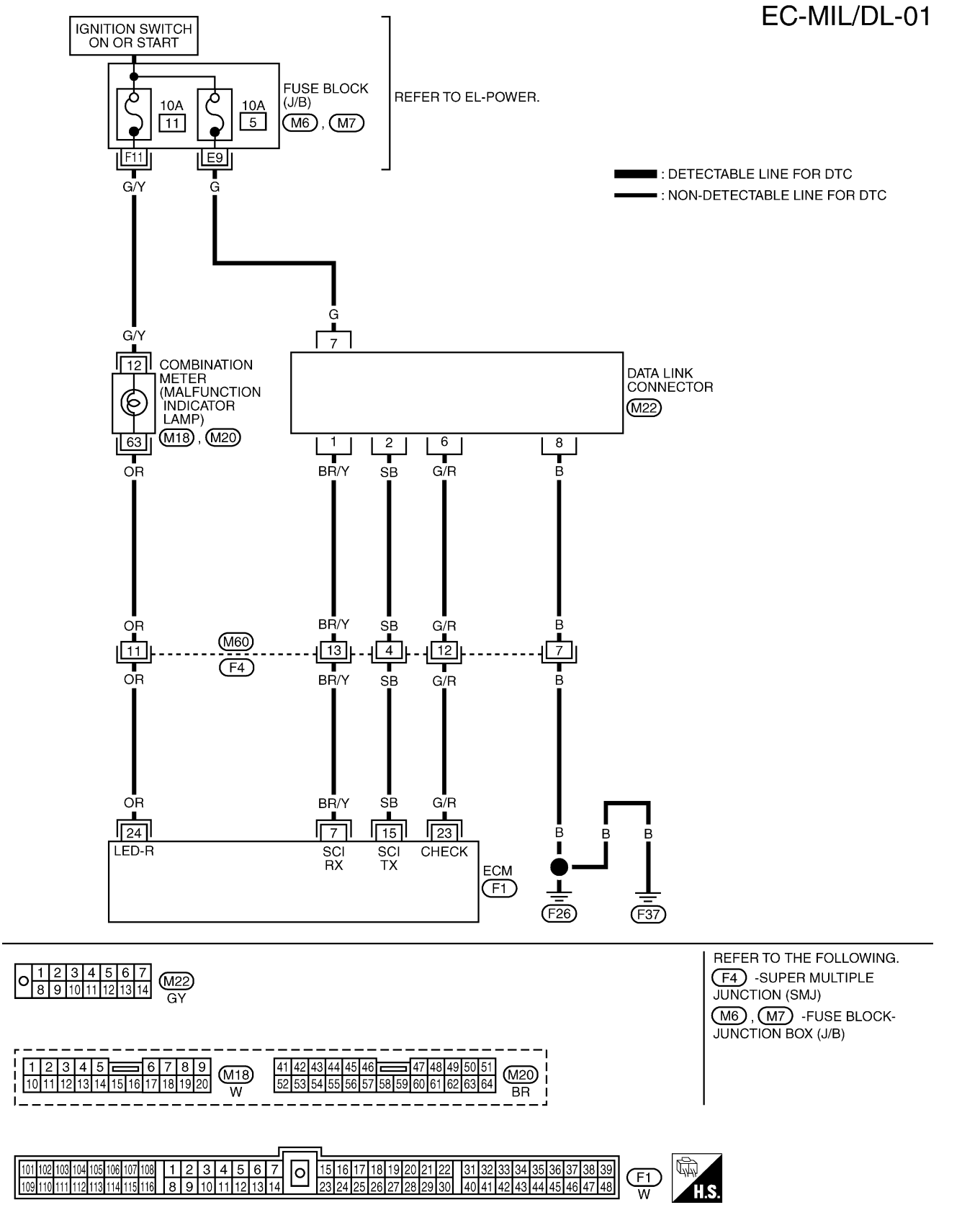

TEC822

Fuel Pressure Regulator

NMEC0801

Fuel pressure at idling kPa (bar, kg/cm^2, psi)	Vacuum hose is connected	Approximately 245 (2.45, 2.5, 36)
	Vacuum hose is disconnected	Approximately 294 (2.94, 3.0, 43)

Idle Speed and Ignition Timing

NMEC0802

Target idle speed*1 rpm	No-load*3 (in “P” or “N” position)	800±50
Air conditioner: ON rpm	In “P” or “N” position	800±50
Ignition timing*2	In “P” or “N” position	15°±2° BTDC
Throttle position sensor idle position V		0.15 - 0.85

*1: Throttle position sensor harness connector connected
*2: Throttle position sensor harness connector disconnected
*3: Under the following conditions:

- Air conditioner switch: OFF
- Electrical load: OFF (Lights & rear window defogger)
- Steering wheel: Kept in straight-ahead position

Mass Air Flow Sensor

NMEC0804

Supply voltage V	Battery voltage (11 - 14)
Output voltage V	0.8 - 1.5

Engine Coolant Temperature Sensor

NMEC0805

Temperature °C (°F)	Resistance kΩ
20 (68)	2.1 - 2.9
50 (122)	0.68 - 1.00
90 (194)	0.236 - 0.260

Fuel Pump

NMEC0808

Resistance [at 25°C (77°F)] Ω	0.2 - 5.0

IACV-AAC Valve

NMEC0809

Resistance [at 20°C (68°F)] Ω	Approximately 10

Injector

NMEC0810

Resistance [at 20°C (68°F)] Ω	Approximately 11

Throttle Position Sensor

NMEC0812

Throttle valve conditions	Voltage (at normal operating temperature, engine off, ignition switch ON, throttle opener disengaged)
Completely closed (a)	0.15 - 0.85V
Partially open	Between (a) and (b)
Completely open (b)	3.5 - 4.7V

Heated Oxygen Sensor 1 (Front) Heater

NMEC0813

Resistance [at 25°C (77°F)] Ω	2.3 - 4.3

NOTES