Repair Manual

Golf 2015 ➤
Golf Variant 2015 ➤

Brake System

Edition 12.2015

Protected by copyright. Copying for private or commercial purposes, in part or in whole, is not permitted unless authorised by Volkswagen AG. Volkswagen AG does not guarantee or accept any liability with respect to the correctness of information in this document. Copyright by Volkswagen AG.

List of Workshop Manual Repair Groups

Repair Group

00 - General, Technical Data
45 - Antilock Brake System
46 - Mechanical Components
47 - Hydraulic Components

Protected by copyright. Copying for private or commercial purposes, in part or in whole, is not permitted unless authorised by Volkswagen AG. Volkswagen AG does not guarantee or accept any liability with respect to the correctness of information in this document. Copyright by Volkswagen AG.

Technical information should always be available to the foremen and mechanics, because their careful and constant adherence to the instructions is essential to ensure vehicle road-worthiness and safety. In addition, the normal basic safety precautions for working on motor vehicles must, as a matter of course, be observed.

All rights reserved.
No reproduction without prior agreement from publisher.

Copyright © 2016 Volkswagen AG, Wolfsburg

D4B80416632

Contents

00 - General, Technical Data 1

1 Safety Precautions 1
1.1 Safety Precautions during Road Test with Testing Equipment 1
1.2 Safety Precautions when Working on Vehicles with Start/Stop System 1

2 Identification 2
2.1 PR Number Allocation - Brakes 2

3 Technical Data 3
3.1 Brakes Technical Data 3

4 Brakes Inspection 9
4.1 General Information 9
4.2 Front Wheel Drive Vehicles, Checking 9

45 - Antilock Brake System 10

1 General Information 10
1.1 ABS Repair Instructions 10

2 Component Location Overview 13
2.1 Component Location Overview - ABS/ESP 13

3 Control Module and Hydraulic Unit 15
3.1 Overview - Control Module and Hydraulic Unit 15
3.2 ABS Control Module J104 / ABS Hydraulic Unit N55 , Removing and Installing 17
3.3 Control Module, Separating from Hydraulic Unit 31
3.4 Control Module, Attaching to Hydraulic Unit 32
3.5 Brake Lines, Attaching to Hydraulic Unit 33

4 Sensors 35
4.1 Overview - Front Axle Speed Sensor 35
4.2 Overview - Rear Axle Speed Sensor 36
4.3 Right/Left Front ABS Wheel Speed Sensor G45 / G47 , Removing and Installing 37
4.4 Right/Left Rear ABS Wheel Speed Sensor G44 / G46 , Removing and Installing 38
4.5 ESP Sensor Unit G419 , Removing and Installing 39
4.6 Steering Angle Sensor G85 , Removing and Installing 39
4.7 ABS Sensor Ring, Checking 39

5 Special Tools 41

46 - Mechanical Components 43

1 Front Brakes 43
1.1 Overview - Front Brakes 43
1.2 Brake Pads, Removing and Installing 45
1.3 Brake Caliper, Removing and Installing 47
1.4 Brake Carrier, Removing and Installing 49
1.5 Brake Rotor, Removing and Installing 51
1.6 Brake Shield, Removing and Installing 52

2 Rear Brakes 55
2.1 Overview - Rear Brakes 55
2.2 Brake Pads, Removing and Installing 60
2.3 Brake Caliper, Removing and Installing 66
2.4 Brake Carrier, Removing and Installing 72
2.5 Brake Rotor, Removing and Installing 74
2.6 Brake Shield, Removing and Installing 76

3 Parking Brake 81
3.1 Overview - Parking Brake 81
3.2 Parking Brake, Adjusting 81

Protected by copyright. Copying for private or commercial purposes, in part or in whole, is not permitted unless authorised by Volkswagen AG. Volkswagen AG does not guarantee or accept any liability with respect to the correctness of information in this document. Copyright by Volkswagen AG.

3.3 Rear Brake Cable, Removing and Installing . . . 82
4 Brake Pedal . . . 87
4.1 Overview - Brake Pedal . . . 87
4.2 Brake Pedal, Removing from Brake Booster . . . 88
4.3 Brake Pedal, Attaching to Brake Booster . . . 89
4.4 Brake Pedal, Removing and Installing . . . 89
4.5 Mounting Bracket, Removing and Installing . . . 90
5 Special Tools . . . 93

47 - Hydraulic Components . . . 97
1 Front Brake Caliper . . . 97
1.1 Overview - Front Brake Caliper . . . 97
1.2 Brake Caliper Piston, Removing and Installing . . . 98
2 Rear Brake Caliper . . . 100
2.1 Overview - Rear Brake Caliper . . . 100
2.2 Brake Caliper Piston, Removing and Installing . . . 103
3 Brake Booster/Brake Master Cylinder . . . 106
3.1 Overview - Brake Booster/Brake Master Cylinder . . . 106
3.2 Brake Lamp Switch, Removing and Installing . . . 108
3.3 Brake Master Cylinder, Removing and Installing . . . 110
3.4 Brake Booster, Removing and Installing . . . 113
3.5 Brake Fluid Reservoir, Removing and Installing . . . 118
4 Vacuum System . . . 121
4.1 Overview - Vacuum Pump . . . 121
4.2 Check Valve, Checking . . . 122
4.3 Vacuum Sensor G608 , Removing and Installing . . . 122
4.4 Vacuum System, Checking . . . 123
5 Brake Lines . . . 127
5.1 Brake Lines, Repairing . . . 127
6 Hydraulic System . . . 132
6.1 Brake Fluid General Information . . . 132
6.2 Hydraulic System, Standard Bleeding . . . 132
6.3 Hydraulic System, Post-Bleeding . . . 133
6.4 Checking for Leaks . . . 133
7 Special Tools . . . 134
8 Revision History . . . 137

Protected by copyright. Copying for private or commercial purposes, in part or in whole, is not permitted unless authorised by Volkswagen AG. Volkswagen AG does not guarantee or accept any liability with respect to the correctness of information in this document. Copyright by Volkswagen AG.

00 – General, Technical Data

1 Safety Precautions

(Edition 12.2015)

⇒ "1.1 Safety Precautions during Road Test with Testing Equipment", page 1

⇒ "1.2 Safety Precautions when Working on Vehicles with Start/Stop System", page 1

1.1 Safety Precautions during Road Test with Testing Equipment

If the Use of Testing Equipment Is Required on Road Tests, Note the Following:

WARNING

Distraction and unsecured testing equipment increase the risk of an accident.

- *Operating testing equipment while driving causes distractions.*
- *Testing equipment that is not secure increases the risk of injury.*
- *Always secure testing equipment on the rear seat.*
- *Have a second person operate the testing equipment.*
- *Operate the testing equipment from the rear seat.*
- *Do not operate the testing equipment from the front passenger seat.*
- *The deployment of the front passenger airbag during an accident can cause injury to the person.*

1.2 Safety Precautions when Working on Vehicles with Start/Stop System

Note the following When Working on Vehicles with a Start/Stop System:

WARNING

There is a risk of injury due to the engine starting automatically in vehicles with the Start/Stop System.

- *If necessary, the engine can start automatically for vehicles with an active Start/Stop System.*
- *This is recognized by a message in the instrument cluster.*
- *Therefore, make sure that the Start/Stop System is deactivated when working on the vehicle (turn off ignition, turn the ignition back on when necessary).*

Protected by copyright. Copying for private or commercial purposes, in part or in whole, is not permitted unless authorised by Volkswagen AG. Volkswagen AG does not guarantee or accept any liability with respect to the correctness of information in this document.

2 Identification

⇒ “2.1 PR Number Allocation - Brakes”, page 2

2.1 PR Number Allocation - Brakes

⇒ “2.1.1 General Information”, page 2

⇒ “2.1.2 Front Brakes”, page 2

⇒ “2.1.3 Rear Brakes”, page 2

2.1.1 General Information

The PR number on the vehicle data label describes which brake system is installed in the vehicle.

There is a vehicle data label in the spare wheel well and also one in the customer Maintenance booklet.

– For information regarding each brake installed. Refer to ELSA/ Vehicle Individual.

In this example, the vehicle has “1KU” rear brakes.

- For allocation. Refer to the Parts Catalog.
- The following tables explain the PR numbers. These are important for the combination brake caliper/brake rotor and brake pad.

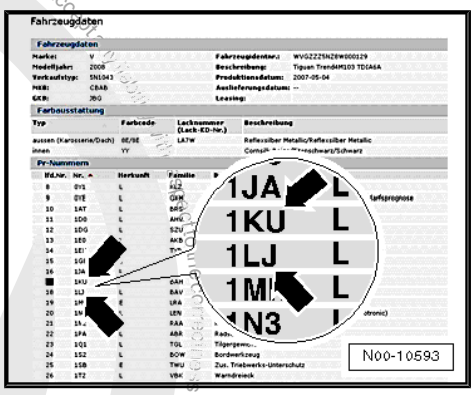

2.1.2 Front Brakes

PR Number	Front Brakes
1ZE/1ZP	PC57 (15”)
1ZB/1ZD/1LV	PC57 (16”)
1LJ/1LM	C60 (17”)
1LJ	PC60 (17”)

2.1.3 Rear Brakes

Rear Axle	PR Number	Rear Brakes
Torsion Beam Rear Suspension	1KD	C 38
Torsion Beam Rear Suspension	1KD/1KQ	CI 38 (15”)
Torsion Beam Rear Suspension	1KD/1KQ	CI 38 HRA
Multi-Link Rear Axle	1KS/1KT	PC 38 HRA
Multi-Link Rear Axle	1KS/1KT	TRW

Protected by copyright. Copying for private or commercial purposes, in part or whole, is not permitted unless authorised by Volkswagen AG. Volkswagen AG does not guarantee or accept any liability with respect to the correctness of information in this document. Copyright by Volkswagen AG.

3 Technical Data

⇒ “3.1 Brakes Technical Data”, page 3

3.1 Brakes Technical Data

⇒ “3.1.1 Brake Master Cylinder and Brake Booster”, page 3
⇒ “3.1.2 Front Brakes”, page 3
⇒ “3.1.3 Rear Brakes”, page 5

3.1.1 Brake Master Cylinder and Brake Booster

Brake master cylinder, depending on the engine installed	Diameter in mm	23.81 or 25.4
Brake booster, depending on the engine installed	Diameter in inches	10 or 11

3.1.2 Front Brakes

Front Brakes PC57 (15”)

Item	PR Number		1ZE/1ZP
1	Brake caliper		PC57 (15”)
2	Brake pad, thickness	mm	14
	Brake pad, wear limit without back plate	mm	2
3	Brake rotor	diameter in mm	288
	Brake rotor, thickness	mm	25
	Brake rotor, wear limit	mm	22
4	Brake caliper, piston	diameter in mm	57

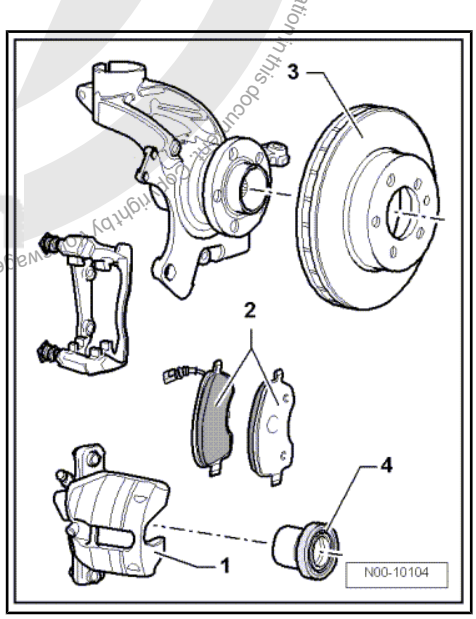

Protected by copyright. Copying for private or commercial purposes, in part or whole, is not permitted unless authorised by Volkswagen AG. Volkswagen AG does not guarantee or accept any liability with respect to the correctness of information in this document.

Front Brakes PC57 (16”)

Item	PR Number		1ZA/1ZD/1ZB
1	Brake caliper		PC57 (16”)
2	Brake pad, thickness	mm	14
	Brake pad, wear limit without back plate	mm	2
3	Brake rotor	diam-eter in mm	312
	Brake rotor, thickness	mm	25
	Brake rotor, wear limit	mm	22
4	Brake caliper, piston	diam-eter in mm	57

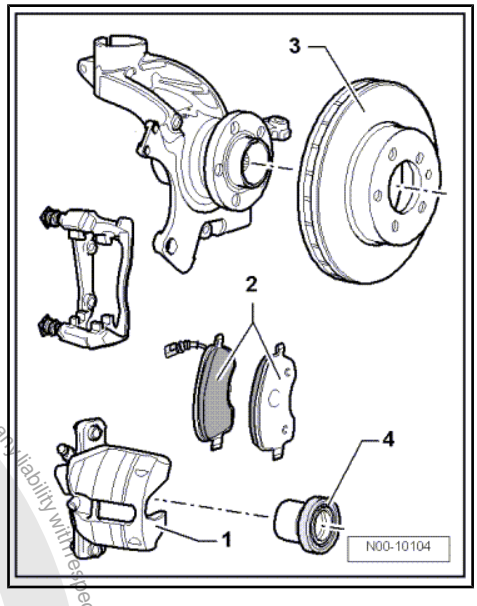

Front Brakes C60 (17”)

Item	PR Number		1LJ/1LM
1	Brake caliper		C60 (17”)
2	Brake pad, thickness	mm	13
	Brake pad, wear limit without back plate	mm	2
3	Brake rotor	diam-eter in mm	340
	Brake rotor, thickness	mm	30
	Brake rotor, wear limit	mm	Refer to 27.
4	Brake caliper, piston	diam-eter in mm	60

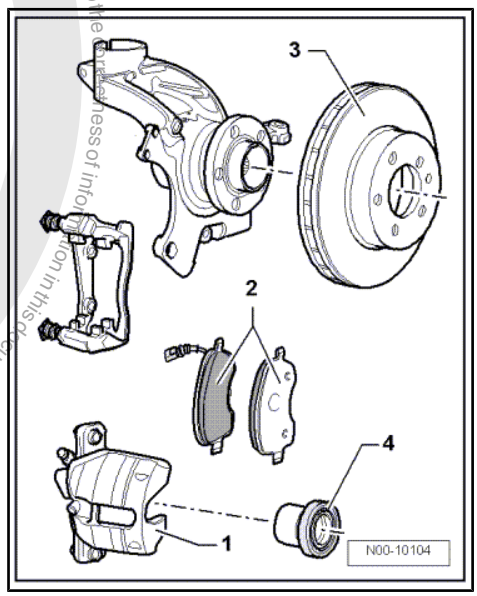

Protected by copyright. Copying for private or commercial purposes, in part or in whole, is not permitted unless authorised by Volkswagen AG. Volkswagen AG does not guarantee or accept any liability with respect to the correctness of information in this document. Copyright by Volkswagen AG.

Front Brakes PC60 (17”):

Item	PR Number		1LJ
1	Brake Caliper		PC60 (17”)
2	Brake pad, thickness	mm	14
	Brake pad, wear limit without backing plate	mm	2
3	Brake Rotor	diam-eter in mm	340
	Brake rotor, thickness	mm	30
	Brake rotor, wear limit	mm	27
4	Brake caliper, piston	diam-eter in mm	60

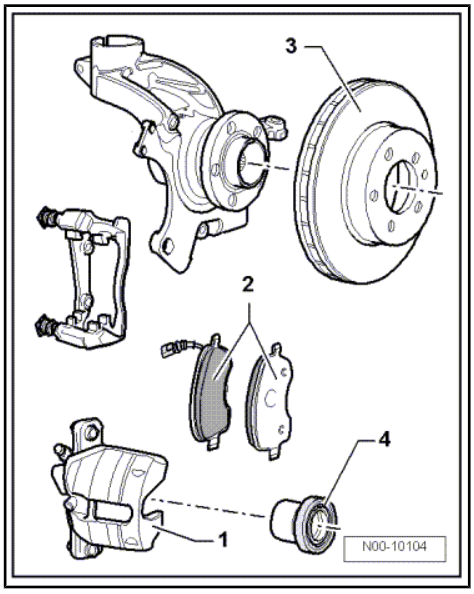

3.1.3 Rear Brakes

Rear Brakes - Bosch Multi-link Rear Axle

Item	PR Number		1KS/1KT
1	Brake caliper		Bosch
2	Brake pad, thickness with-out backing plate	mm	11
	Brake pad, wear limit without back plate	mm	3
3	Brake rotor	diam-eter in mm	272
	Brake rotor, thickness	mm	10
	Brake rotor, wear limit	mm	8
4	Brake caliper, piston	diam-eter in mm	38

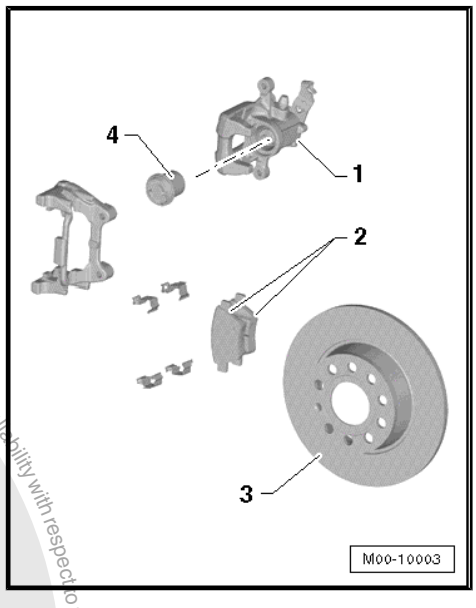

Protected by copyright. Copying for private or commercial purposes, in part or in whole, is not permitted unless authorised by Volkswagen AG. Volkswagen AG does not guarantee or accept any liability with respect to the correctness of information in this document. Copyright by Volkswagen AG.

Rear Brakes - PC 38 HRA Multi-Link Rear Axle

Item	PR Number		1KS/1KT
1	Brake Caliper		PC 38 HRA
2	Brake pad, thickness without backing plate	mm	11
	Brake pad, wear limit without backing plate	mm	3
3	Brake Rotor	diameter in mm	272
	Brake rotor, thickness	mm	10
	Brake rotor, wear limit	mm	8
4	Brake caliper, piston	diameter in mm	38

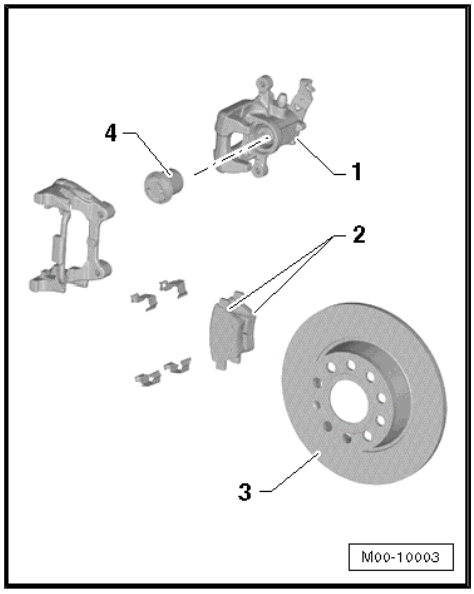

Rear Brakes - TRW Multi-Link Rear Axle

Item	PR Number		1KS/1KT
1	Brake Caliper		TRW
2	Brake pad, thickness without backing plate	mm	11
	Brake pad, wear limit without backing plate	mm	3
3	Brake Rotor	diameter in mm	272
	Brake rotor, thickness	mm	10
	Brake rotor, wear limit	mm	8
4	Brake caliper, piston	diameter in mm	38

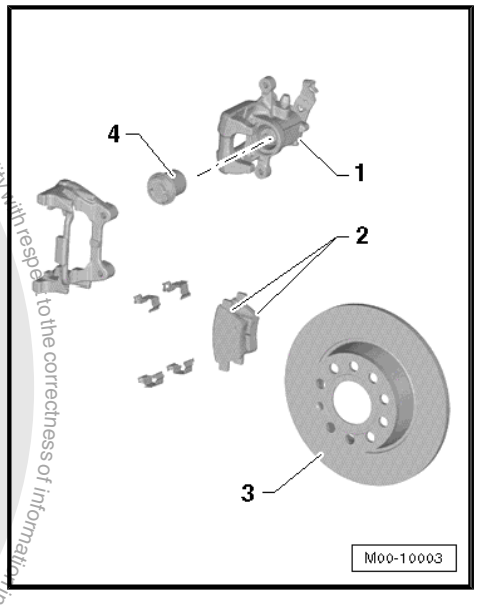

Protected by copyright. Copyright by Volkswagen AG. Volkswagen AG does not guarantee or accept any liability with respect to the correctness of information in this document. Copying for private or commercial purposes, in part or in whole, is not permitted unless authorized by Volkswagen AG.

Rear Brakes - CL 38 (15”) Torsion Beam Rear Suspension

Item	PR Number		1KD
1	Brake Caliper		CI 38 (15”)
2	Brake pad, thickness	mm	11
	Brake pad, wear limit without backing plate	mm	3
3	Brake Rotor	diam-eter in mm	253
	Brake rotor, thickness	mm	10
	Brake rotor, wear limit	mm	8
4	Brake caliper, piston	diam-eter in mm	38

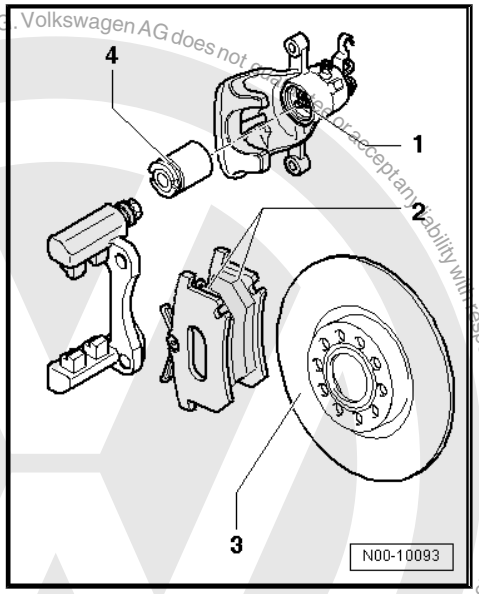

Rear Brakes - CL 38 HRA Torsion Beam Rear Suspension

Item	PR Number		1KD
1	Brake Caliper		CI 38 HRA
2	Brake pad, thickness	mm	11
	Brake pad, wear limit without backing plate	mm	3
3	Brake Rotor	diam-eter in mm	253
	Brake rotor, thickness	mm	10
	Brake rotor, wear limit	mm	8
4	Brake caliper, piston	diam-eter in mm	38

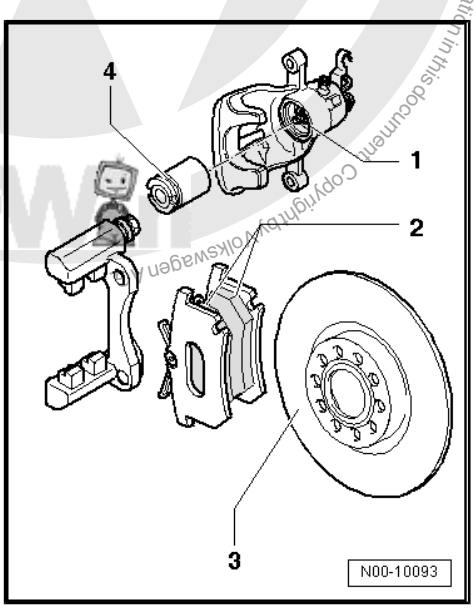

Protected by copyright. Copying for private or commercial purposes, in part or in whole, is not permitted unless authorised by Volkswagen AG. Volkswagen AG does not guarantee or accept any liability with respect to the correctness of information in this document. Copyright by Volkswagen AG.

Rear Brakes - C 38 Torsion Beam Rear Suspension

Item	PR Number		1KD
1	Brake Caliper		C 38
2	Brake pad, thickness	mm	11
	Brake pad, wear limit without backing plate	mm	3
3	Brake Rotor	diameter in mm	253
	Brake rotor, thickness	mm	10
	Brake rotor, wear limit	mm	8
4	Brake caliper, piston	diameter in mm	38

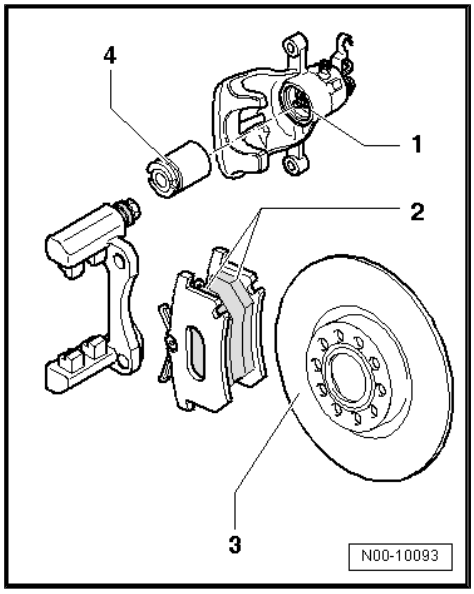

Protected by copyright. Copying for private or commercial purposes, in part or in whole, is not permitted unless authorised by Volkswagen AG. Volkswagen AG does not guarantee or accept any liability with respect to the correctness of information in this document. Copyright by Volkswagen AG.

4 Brakes Inspection

⇒ “4.1 General Information”, page 9

⇒ “4.2 Front Wheel Drive Vehicles, Checking”, page 9

4.1 General Information

- The testing takes place on a test stand.
- During testing, manual transmission vehicles must be placed in neutral and automatic transmission vehicles placed in »N«.
- Always follow the instructions provided by the test stand manufacturer.

Note

The brake control systems do not function when the ignition is off.

4.2 Front Wheel Drive Vehicles, Checking

The brake test is to be performed on a one-axle roller test stand.

Do not exceed a test speed of 6 km/h (4 mph).

Volkswagen approved test stands meet these requirements.

Protected by copyright. Copying for private or commercial purposes, in part or in whole, is not permitted unless authorised by Volkswagen AG. Volkswagen AG does not guarantee or accept any liability with respect to the correctness of information in this document. Copyright by Volkswagen AG.

45 – Antilock Brake System

1 General Information

⇒ “1.1 ABS Repair Instructions”, page 10

1.1 ABS Repair Instructions

The ABS brake system is divided diagonally (two circuits). The vacuum brake servo unit boosts the brakes pneumatically.

Models with ABS do not have a mechanical brake pressure regulator. A specially coordinated software program inside the ABS Control Module - J104- determines brake pressure allocation at the rear axle.

Protected by copyright. Copying for private or commercial purposes, in part or in whole, is not permitted unless authorised by Volkswagen AG. Volkswagen AG does not guarantee or accept any liability with respect to the correctness of information in this document. Copyright by Volkswagen AG.

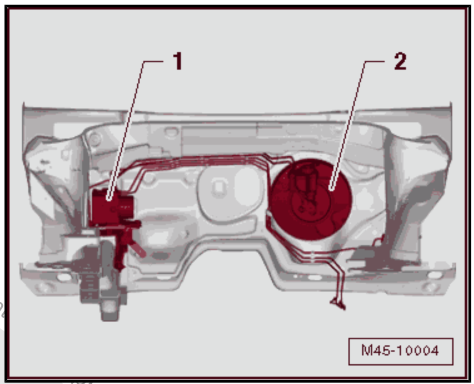

Note

ABS malfunctions do not affect the brake system and the booster. Conventional brake system stays operative even without ABS. A change in braking behavior should be checked. When the ABS indicator lamp is lit up, the rear wheels may lock prematurely during braking!

Configuration

1 - ABS Hydraulic Unit - N55- and ABS Control Module - J104-

2 - Brake Booster

The ABS Hydraulic Unit - N55- and ABS Control Module - J104- are one unit. Separation can only be performed when removed from vehicle. The hydraulic pump may also not be separated from the ABS Hydraulic Unit - N55- .

Anti-Lock Braking System (ABS) Repair Information

- Before carrying out repair work on the ABS, determine the cause of damage as well as the control module code using “Guided Fault Finding”.

“Guided Fault Finding” is performed. Refer to Vehicle Diagnostic Tester .

- Disconnect the battery ground cable when the ignition is switched off.
- Before welding with an electric welding tool, observe the information found here ⇒ General Information; Body Repairs, Body Collision Repair .
- When handling brake fluid, observe the relevant safety precautions and notes.
- After finishing any work that required opening the brake system, bleed the brake system using the Brake Charger/Bleeder Unit - VAS5234- .
- During the final road test, make sure a controlled braking maneuver is performed at least one time (pulsing must be felt in brake pedal).
- It is necessary to maintain a high level of cleanliness when working on the ABS system.
- Do not use fluid containing mineral oils, for example oils, grease, etc.
- Thoroughly clean all connection points and their surrounding areas before loosening. However, do not use aggressive cleaning agents such as brake cleaner, gasoline, thinners or similar compounds.
- Place the removed parts on a clean surface and cover them.
- Carefully cover or seal opened components if the repair is not performed immediately. (Use plugs from repair set 1 H0 698 311 A)
- Only use lint-free cloths.
- Remove the replacement parts from their packaging just prior to installing them.
- Only use parts in their original packaging.
- Do not work with compressed air when the system is open.
- Do not move the vehicle.

Protected by copyright. Copying for private or commercial purposes, in part or in whole, is not permitted unless authorised by Volkswagen AG. Volkswagen AG does not guarantee or accept any liability with respect to the correctness of information in this document. Copyright by Volkswagen AG.

- The valve coils in the ABS Control Module - J104- cannot be readjusted.
- The valve coils in the ABS Control Module - J104- cannot be replaced.
- The pressure sensor must not be changed or damaged.
- The pressure sensor cannot be replaced.
- The sensor housing must not be under any mechanical load.
- No measurements can be taken at the contacts inside the ABS Control Module - J104- .
- No measurements can be taken at the contacts inside the ABS Hydraulic Unit - N55- .
- The valve bodies inside the ABS Hydraulic Unit - N55- must not be damaged or bent.
- The contacts cannot be replaced.
- Using contact sprays on the contacts and pressure sensor are not permitted.
- No foreign objects may be between the ABS Control Module - J104- and the ABS Hydraulic Unit - N55- .
- The ABS Control Module - J104- may be briefly exposed to a maximum temperature of 95 °C (203 °F) when painting.
- The ABS Control Module - J104- may be exposed to a temperature of 85 °C (185 °F) for approximately two hours.
- Make sure that brake fluid cannot get into the connectors.

Protected by copyright. Copying for private or commercial purposes, in part or in whole, is not permitted unless authorised by Volkswagen AG. Volkswagen AG does not guarantee or accept any liability with respect to the correctness of information in this document. Copyright by Volkswagen AG.

2 Component Location Overview

⇒ “2.1 Component Location Overview - ABS/ESP”, page 13

2.1 Component Location Overview - ABS/ESP

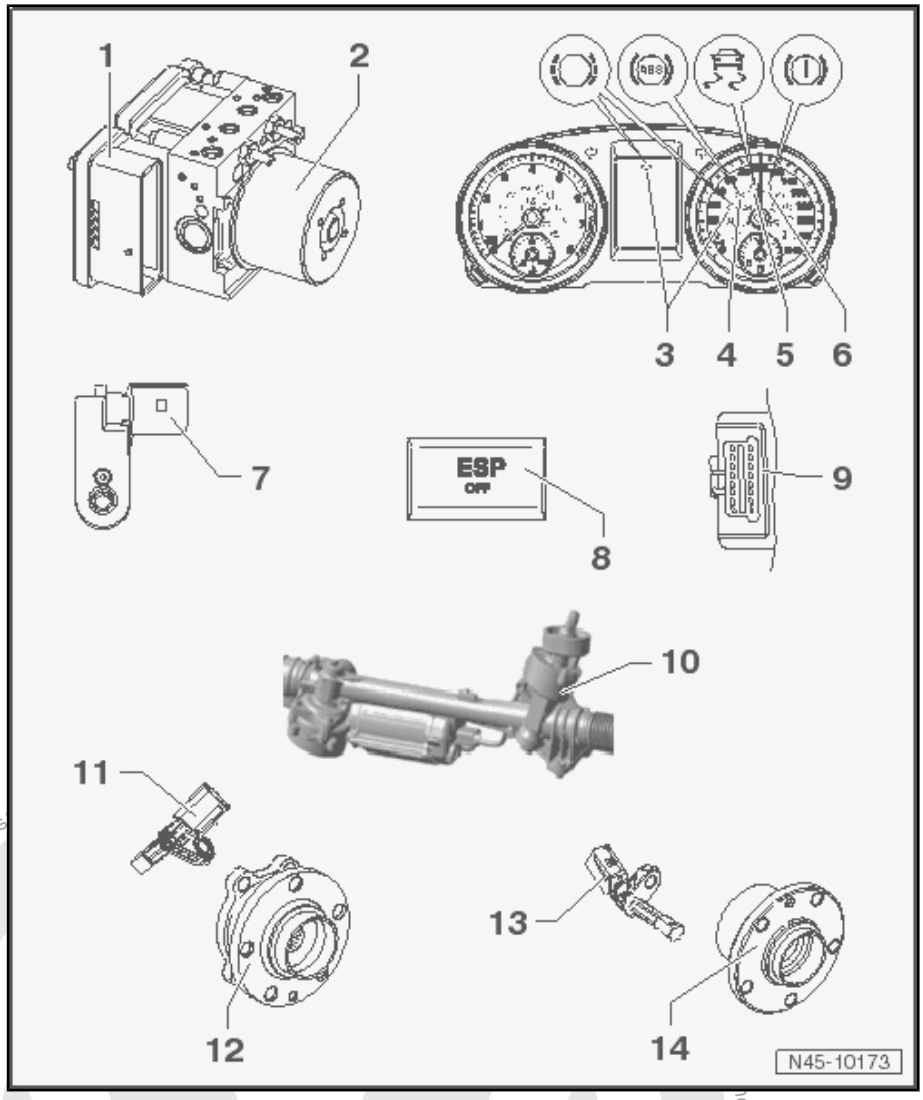

1 - ABS Control Module - J104-

- ❑ Component location: on the ABS Hydraulic Unit - N55- in the engine compartment on the front passenger side.
- ❑ Do not disconnect the connector before successfully completing On Board Diagnostic (OBD). Switch ignition off before separating connector

Components:

- ♦ Electromechanical Parking Brake Control Module - J540-
- ♦ Transverse Acceleration Sensor - G200-
- ♦ Rotation Rate Sensor - G202-
- ♦ Longitudinal Acceleration Sensor - G251- (depending on vehicle equipment)
- ♦ The components cannot be replaced individually.
  - ❑ Removing and installing. Refer to ⇒ “3.2.1 ABS Control Module J104 / ABS Hydraulic Unit N55 , Gasoline Engine, Removing and Installing”, page 17 .

2 - ABS Hydraulic Unit - N55-

- ❑ Component location: in the engine compartment on the front passenger side

The ABS Hydraulic Unit - N55- consists of the following components:

- ♦ ABS Hydraulic Pump - V64-
- ♦ Brake Pressure Sensor 1 - G201-
- ♦ Valve block (contains inlet and outlet valves)
  - ❑ The ABS Hydraulic Pump - V64- and valve block must not be separated from one another.
  - ❑ Removing and installing. Refer to ⇒ “3.2.1 ABS Control Module J104 / ABS Hydraulic Unit N55 , Gasoline Engine, Removing and Installing”, page 17 .

3 - Brake Pad Wear Indicator Lamp - K32-

- ❑ Component location: inside the instrument cluster

4 - ABS Indicator Lamp - K47-

- ❑ Component location: inside the instrument cluster

Protected by copyright. Copyright by Volkswagen AG.

5 - ASR/ESP Indicator Lamp - K155-

- ❑ Component location: inside the instrument cluster

6 - Brake System Indicator Lamp - K118-

- ❑ Component location: inside the instrument cluster

7 - Brake Lamp Switch - F-

- ❑ Installed location: on the master brake cylinder
- ❑ Removing and installing

8 - ASR/ESP Button - E256-

- ❑ Two versions, two component locations:

- ♦ As a button in the center console
- ♦ via the functioning surfaces in the Infotainment system menu
  - ❑ ASR/ESP Button - E256- in the center console removing and installing. Refer to ⇒ Electrical Equipment; Rep. Gr. 96 ; Controls; ASR/ESP Button - E256- , Removing and Installing .

9 - Diagnostic Connection

- ❑ Component location: driver side footwell cover

10 - Steering Angle Sensor - G85-

- ❑ Installed location: inside the steering gear
- ❑ The Steering Angle Sensor - G85- cannot be changed separately.
- ❑ Steering removing and installing. Refer to ⇒ Suspension, Wheels, Steering; Rep. Gr. 48 ; Steering Gear; Steering Gear, Removing and Installing .

11 - Right/Left Front ABS Wheel Speed Sensor -G45- / -G47-

- ❑ Removing and installing. Refer to ⇒ “4.1 Overview - Front Axle Speed Sensor”, page 35 .

12 - Wheel Hub with Wheel Bearing

- ❑ The ABS sensor ring is installed in the wheel bearing

13 - Right/Left Rear ABS Wheel Speed Sensor -G44- / -G46-

- ❑ Removing and installing (FWD). Refer to ⇒ “4.2 Overview - Rear Axle Speed Sensor”, page 36 .

14 - Wheel Hub with Wheel Bearing

- ❑ The ABS sensor ring is installed in the wheel bearing

Protected by copyright. Copyright by Volkswagen AG.
Volkswagen AG does not guarantee or assume any liability with respect to the correctness of information in this document. Copyright by Volkswagen AG.

3 Control Module and Hydraulic Unit

⇒ “3.1 Overview - Control Module and Hydraulic Unit”, page 15

⇒ “3.2 ABS Control Module J104 / ABS Hydraulic Unit N55 , Removing and Installing”, page 17

⇒ “3.3 Control Module, Separating from Hydraulic Unit”, page 31

⇒ “3.4 Control Module, Attaching to Hydraulic Unit”, page 32

⇒ “3.5 Brake Lines, Attaching to Hydraulic Unit”, page 33

3.1 Overview - Control Module and Hydraulic Unit

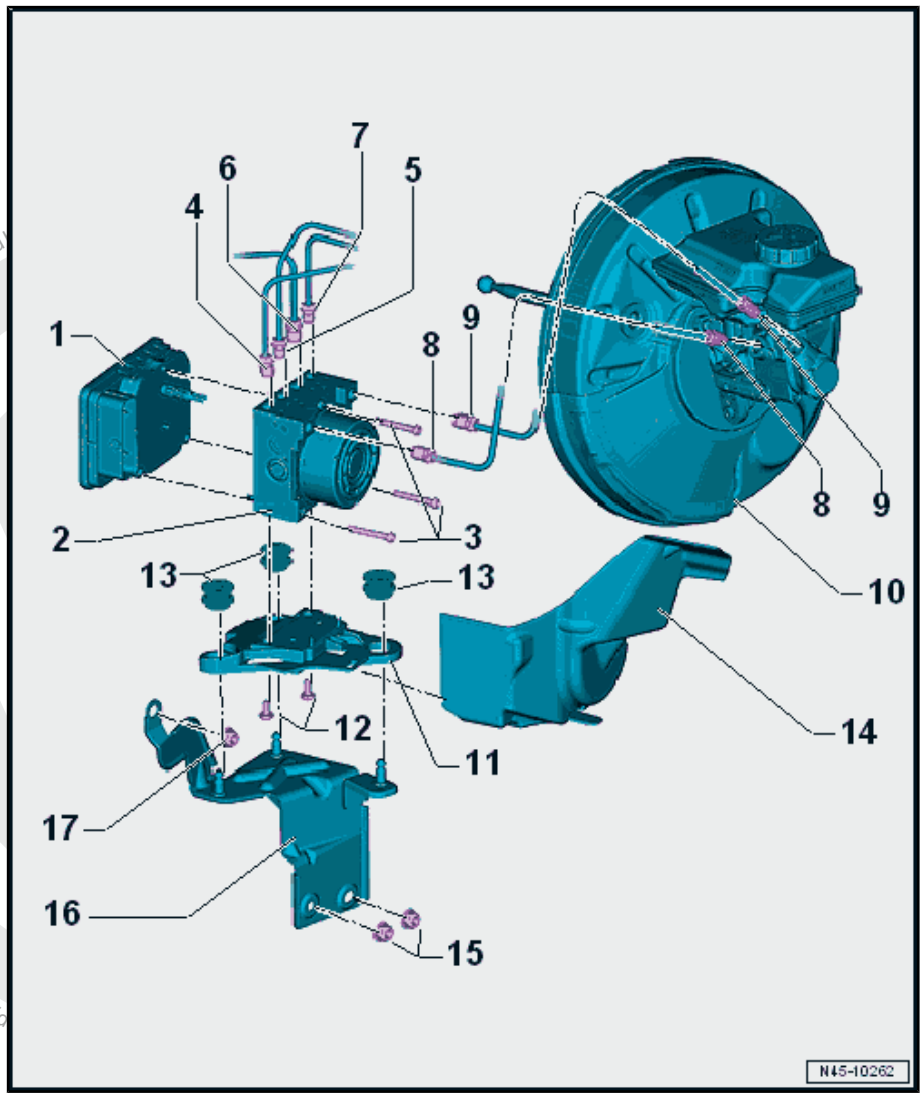

1 - ABS Control Module - J104-

- ❑ Removing and installing. Refer to ⇒ “3.2.1 ABS Control Module J104 / ABS Hydraulic Unit N55 , Gasoline Engine, Removing and Installing”, page 17 .

2 - ABS Hydraulic Unit - N55-

- ❑ Removing and installing. Refer to ⇒ “3.2.1 ABS Control Module J104 / ABS Hydraulic Unit N55 , Gasoline Engine, Removing and Installing”, page 17 .

3 - TORX® Bolt

- ❑ 1. Step: Preliminary tightening specification 1 Nm to 1.5 Nm (to install the seal)
- ❑ 2. Step: final tightening specification: 2.5 Nm
- ❑ Install the new TORX® bolt in two steps switching back and forth.

4 - Brake Line

- ❑ 14 Nm
- ❑ Identification: 5.25 mm diameter and tube fitting with a M12 x 1 thread
- ❑ To the right rear brake caliper

5 - Brake Line

- ❑ 14 Nm
- ❑ Identification: 5.25 mm diameter and tube fitting with a M10 x 1 thread
- ❑ To the left front brake caliper

6 - Brake Line

- ❑ 14 Nm
- ❑ To the right front brake caliper

- ❑ Identification: 5.25 mm diameter and tube fitting with a M12 x 1 thread

7 - Brake line

- ❑ 14 Nm
- ❑ Identification: 5.25 mm diameter and tube fitting with a M10 x 1 thread
- ❑ To the left rear brake caliper

8 - Brake Line

- ❑ 14 Nm
- ❑ Identification: 6 mm diameter and tube fitting with a M12 x 1 thread
- ❑ Brake master cylinder/primary piston circuit to the ABS Hydraulic Unit - N55-

9 - Brake Line

- ❑ 14 Nm
- ❑ Identification: 6 mm diameter and tube fitting with a M12 x 1 thread
- ❑ Brake master cylinder/secondary piston circuit to the ABS Hydraulic Unit - N55-

10 - Brake Booster

- ❑ Removing and installing

11 - Bracket

12 - Bolt

- ❑ 8 Nm

13 - Rubber Buffer

14 - Heat Shield

For allocation. Refer to the Parts Catalog

15 - Hex Nut

- ❑ 20 Nm

16 - Bracket

17 - Hex Nut

- ❑ 20 Nm

Protected by copyright. Copying for private or commercial purposes, in part or in whole, is not permitted unless authorised by Volkswagen AG. Volkswagen AG does not guarantee or accept any liability with respect to the correctness of information in this document. Copyright by Volkswagen AG.

3.2 ABS Control Module - J104- / ABS Hydraulic Unit - N55- , Removing and Installing

⇒ "3.2.1 ABS Control Module J104 / ABS Hydraulic Unit N55 , Gasoline Engine, Removing and Installing", page 17

⇒ "3.2.2 ABS Control Module and ABS Hydraulic Unit, Removing and Installing", page 21

3.2.1 ABS Control Module - J104- / ABS Hydraulic Unit - N55- , Gasoline Engine, Removing and Installing

Special tools and workshop equipment required

- Torque Wrench 1331 5-50Nm - VAG1331-
- Open Ring Spanner Insert - AF 11mm - VAG1410/6-
- Torque Wrench - Universal Joint - VAG1410/7-
- Mini Torque Wrench - VAS6854-
- Brake Pedal Actuator - VAG1869/2- .
- Torque Wrench - Assembly Tool - VAG1410/8-

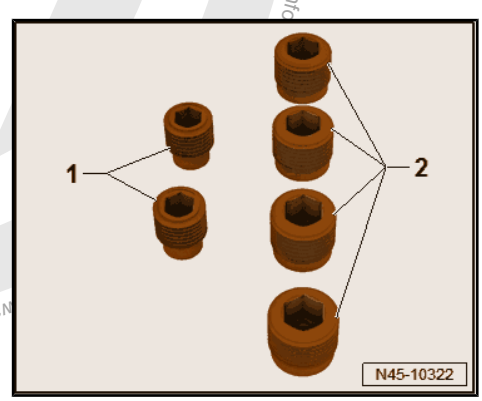

Plugs 5Q0 698 311

1 - M10 Plug

2 - M12 Plug

Installed Component Location

The ABS Control Module - J104- -1- is attached to the ABS Hydraulic Unit - N55- and is located inside the engine compartment on the right side.

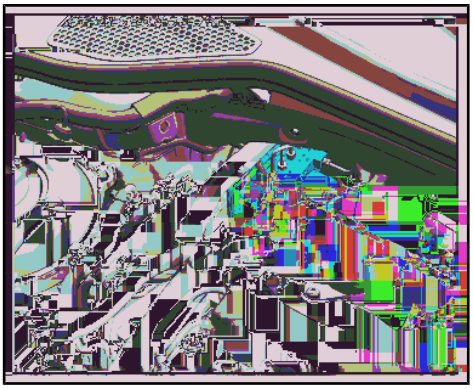

Removing

> **WARNING**
>
> *Do not bend the brake lines near the ABS Hydraulic Unit - N55- !*

– Read and note the present control module coding.

– If the vehicle has a coded radio, get the radio code from the customer before beginning.

– Disconnect the battery. Refer to ⇒ Electrical Equipment; Rep. Gr. 27 ; Battery; Battery, Disconnecting and Connecting .

– If equipped, remove the engine cover. Refer to ⇒ Engine Mechanical, Fuel Injection and Ignition; Rep. Gr. 10 ; Engine Cover; Engine Cover, Removing and Installing .

Protected by copyright. Copying for private or commercial purposes, in part or in whole, is not permitted unless authorised by Volkswagen AG. Volkswagen AG does not guarantee or accept any liability with respect to the correctness of information.

Protected by copyright. Copyright by Volkswagen AG. Copyright by Volkswagen AG does not guarantee or accept any liability with respect to the correctness of information. Copying for private or commercial purposes, in part or in whole, is not permitted unless authorised by Volkswagen AG.

– If equipped, remove the heat shield -1-.
– Unclip the heat shield -1- from the bracket -2- -arrow-.
– Unclip the wire routing.

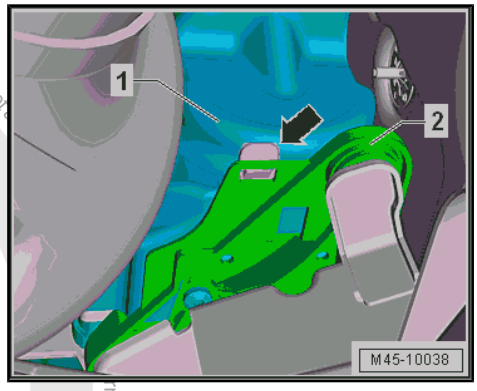

– Push the lock washer downward in the direction of -arrow A-.
– Release the locking mechanism in the direction of -arrow B-.
– Remove the connector -1-.

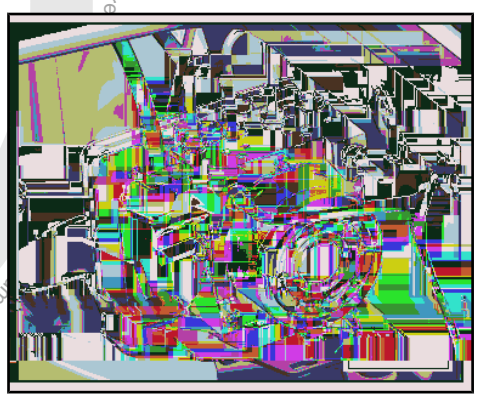

– Install the Brake Pedal Actuator - VAG1869/2-.

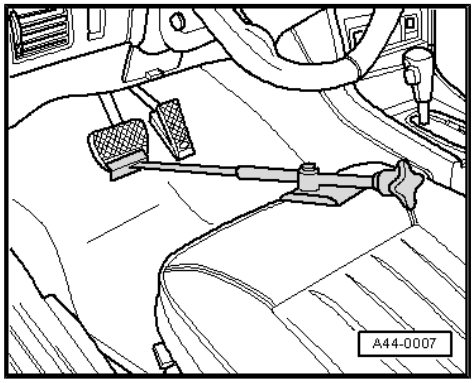

– Attach the bleeder bottle bleed hose -1- to the left front brake caliper bleed valve.
– Open the bleed valve.

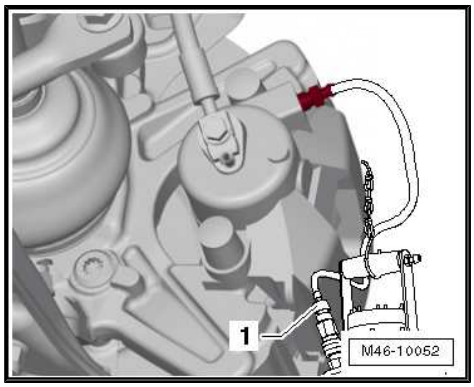

– Attach the bleeder bottle bleed hose -1- to the left rear brake caliper bleed valve.
– Open the bleed valve.
– Push the brake pedal with the Brake Pedal Actuator - VAG1869/2- at least 60 mm.
– Close left front and left rear bleeder valves.
– Do not remove the Brake Pedal Actuator - VAG1869/2- .

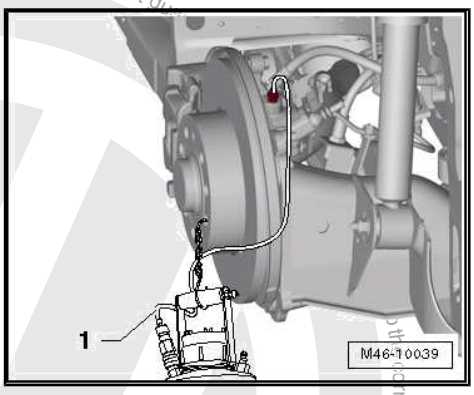

Note

Make sure no brake fluid gets onto contacts.

– Remove the cover from the bulkhead and unclip the brake line.
– Label both brake lines -5 and 6-.
– Remove the brake lines -5 and 6- from the ABS Hydraulic Unit - N55- .
– Close brake lines and open connections using Sealing Plugs from the Repair Kit - 1H0 698 311 A- or with suitable plugs from the Engine Bung Set - VAS6122- .

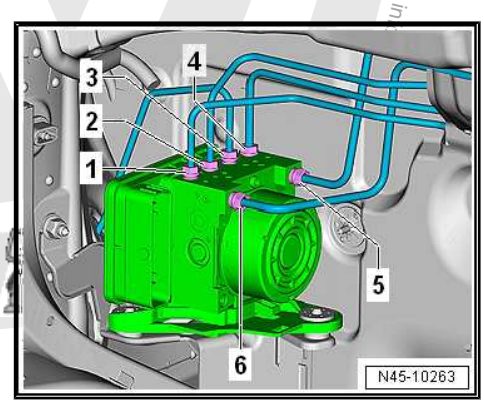

– Label the remaining brake lines (brake caliper) -arrows- and remove.
– Close brake lines and open connections using Sealing Plugs from the Repair Kit - 1H0 698 311 A- or with suitable plugs from the Engine Bung Set - VAS6122- .

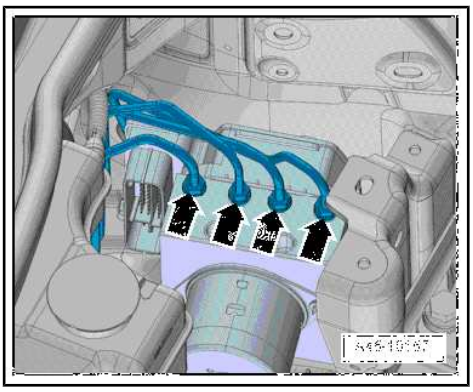

Protected by copyright. Copying for private or commercial purposes, in part or in whole, is not permitted unless authorised by Volkswagen AG. Volkswagen AG does not guarantee or accept any liability with respect to the correctness of information.

– Pull the ABS Control Module - J104- with the ABS Hydraulic Unit - N55- upward from the shock absorber -arrow-.

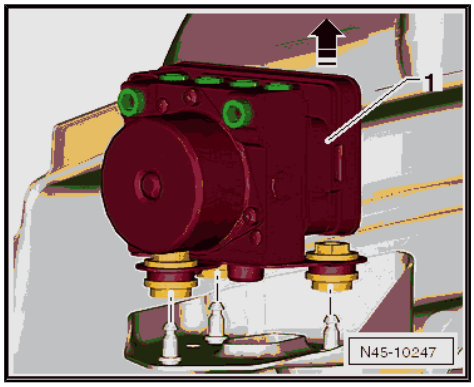

Installing

Install in reverse order of removal. Note the following:

Note

- *Remove the plugs on the new ABS Hydraulic Unit - N55- only when installing the brake line.*
- *Brake fluid will leak out if the plugs are removed too early from the ABS Hydraulic Unit - N55- . The system will then not have sufficient brake fluid and will not adequately bled.*
- *Pay attention when installing the ABS Hydraulic Unit - N55- that the rubber bushings are not pushed out of the console.*

– Before assembling the holder for the ABS Hydraulic Unit - N55- in the bracket, spray the rubber bushings with Silicone Lubricant Spray - D 007 000 A2- .

– Install the brake lines carefully with the Torque Wrench - Assembly Tool - VAG1410/8- .

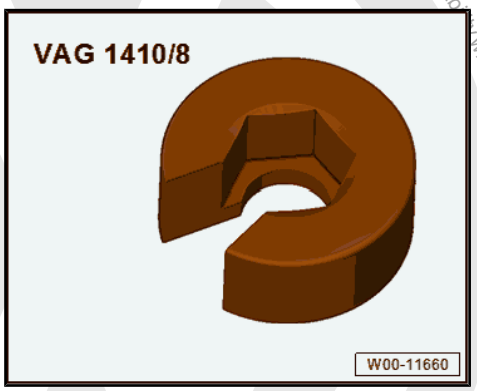

Tightening Sequence

– Remove the Brake Pedal Actuator - VAG1869/2- .

– Bleed the brake system. Refer to ⇒ “6 Hydraulic System”, page 132 .

– Enter radio code.

– Code ABS Control Module - J104- using the Vehicle Diagnostic Tester in "Guided Fault Finding".

A Steering Angle Sensor - G85- , Transverse Acceleration Sensor - G200- , Longitudinal Acceleration Sensor - G251- and Brake Pressure Sensor 1 - G201- basic setting must be done.

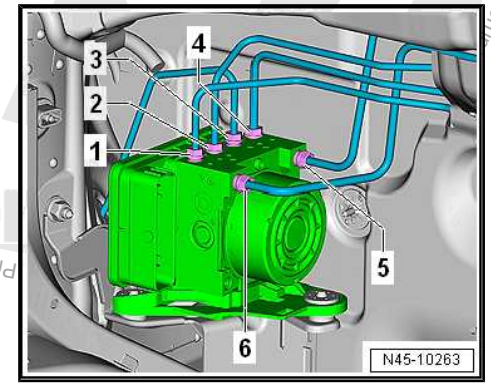

Tightening Specifications

Protected by copyright. Copying for private or commercial purposes, in part or in whole, is not permitted unless authorised by Volkswagen AG. Volkswagen AG does not guarantee or accept any liability with respect to the correctness of information in

Special Tool Assembly for Tightening the Brake Lines

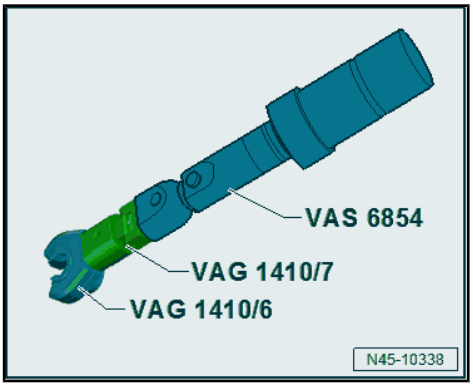

- Refer to
  ⇒ "3.1 Overview - Control Module and Hydraulic Unit", page 15
- Refer to ⇒ Engine Mechanical, Fuel Injection and Ignition; Rep. Gr. 10 ; Engine Cover; Engine Cover, Removing and Installing .
- Refer to ⇒ Engine Mechanical, Fuel Injection and Ignition; Rep. Gr. 26 ; Exhaust Pipes/Mufflers; Overview - Muffler .
- Refer to ⇒ "1.1 Overview - Front Brake Caliper", page 97
- Refer to ⇒ "2.1 Overview - Rear Brake Caliper", page 100

3.2.2 ABS Control Module and ABS Hydraulic Unit, Removing and Installing

Special tools and workshop equipment required

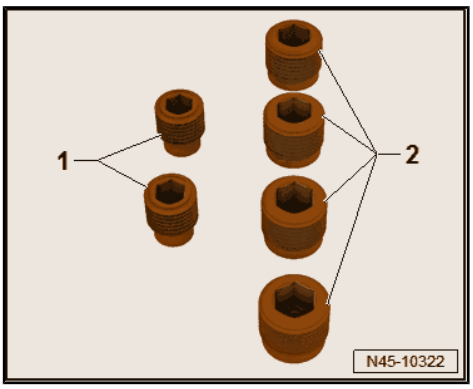

- Torque Wrench 1331 5-50Nm - VAG1331-
- Open Ring Spanner Insert - AF 11mm - VAG1410/6-
- Torque Wrench - Universal Joint - VAG1410/7-
- Mini Torque Wrench - VAS6854-
- Brake Pedal Actuator - VAG1869/2- .
- Torque Wrench - Assembly Tool - VAG1410/8-

Plugs 5Q0 698 311

1 - M10 Plug

2 - M12 Plug

Installed Component Location

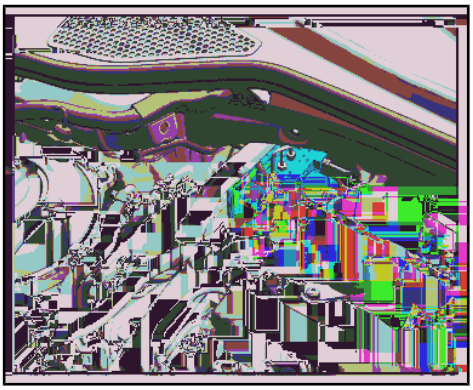

The ABS Control Module - J104- is attached to the ABS Hydraulic Unit - N55- -1- and is located inside the engine compartment on the right side.

Removing

> **WARNING**
>
> *Do not bend the brake lines near the ABS Hydraulic Unit - N55- !*

– Read and note the present control module coding.

– If the vehicle has a coded radio, get the radio code from the customer before beginning.

– Disconnect the battery. Refer to ⇒ Electrical Equipment; Rep. Gr. 27 ; Battery; Battery, Disconnecting and Connecting .

– Remove the engine cover. Refer to ⇒ Engine Mechanical, Fuel Injection and Ignition; Rep. Gr. 10 ; Engine Cover; Engine Cover, Removing and Installing .

Diesel Engine with Particulate Filter

– Remove the noise insulation. Refer to ⇒ Body Exterior; Rep. Gr. 66 ; Noise Insulation; Overview - Noise Insulation .

Protected by copyright. Copyright by Volkswagen AG. Volkswagen AG does not guarantee or accept any liability with respect to the correctness of information in this document. Copyright by Volkswagen AG. Protected by copyright. Copying for private or commercial purposes, in part or in whole, is not permitted unless authorised by Volkswagen AG.

Protected by copyright. Copying for private or commercial purposes, in part or in whole, is not permitted unless authorised by Volkswagen AG. Volkswagen AG does not guarantee or

– Remove the drive axle heat shield if equipped -arrows-. Refer to ⇒ Suspension, Wheels, Steering; Rep. Gr. 40 ; Drive Axle; Drive Axle Heat Shield, Removing and Installing .

– Remove the front exhaust pipe. Refer to ⇒ Rep. Gr. 26 ; Exhaust Pipes/Mufflers; Front Exhaust Pipe, Removing and Installing .

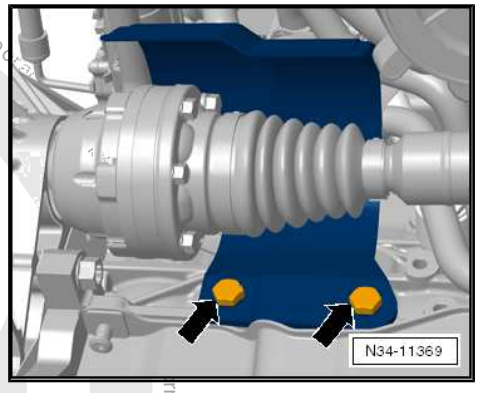

– Disconnect the connector -1-.

– Loosen the clamping sleeve -2- and slide it toward the rear.

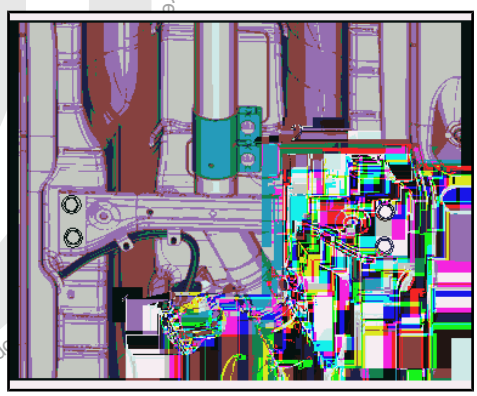

– Remove the bolts -1-.

– Loosen the bolt -2- and remove the clamp.

– Remove the front exhaust pipe.

For Vehicles with a Parking/Auxiliary Heater

– Remove the front exhaust pipe. Refer to ⇒ Engine Mechanical, Fuel Injection and Ignition; Rep. Gr. 26 ; Exhaust Pipes/Mufflers; Muffler, Removing and Installing .

– Remove both nuts -arrows- from the coolant line bracket -1- on the longitudinal member and the bracket.

– Pull the bracket from the pins and pull the coolant line as far downward as possible.

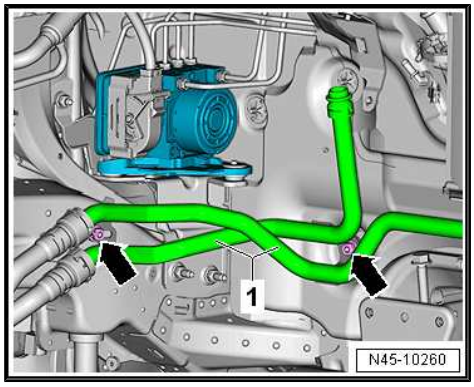

Continuation for All Vehicles

– If equipped, remove the heat shield -1-.

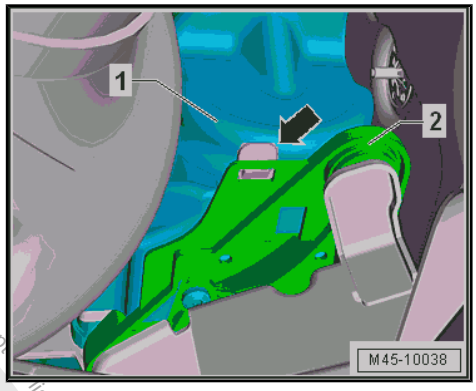

– Unclip the heat shield -1- from the bracket -2- -arrow-.
– On vehicles with heat shield, remove heat shield -item 14- ⇒ Item 14 (page 16) .
– Unclip the wire routing.
– Push the lock washer downward in the direction of -arrow A-.
– Release the locking mechanism in the direction of -arrow B-.
– Remove the connector -1-.

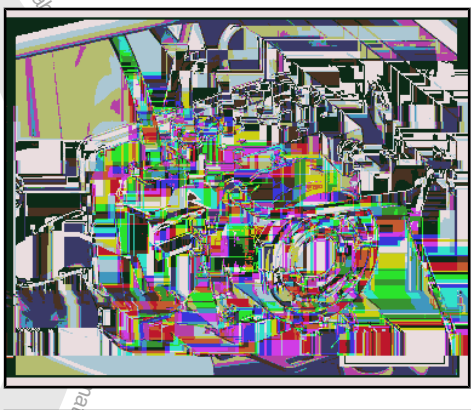

– Install the Brake Pedal Actuator - VAG1869/2- .

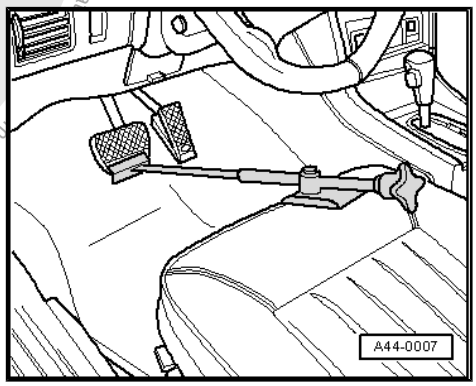

– Attach the bleeder bottle bleed hose -1- to the left front brake caliper bleed valve.
– Open the bleed valve.

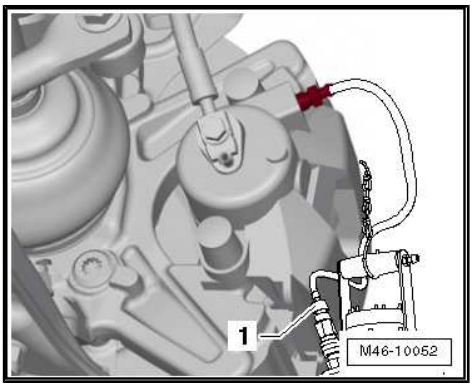

Protected by copyright. Copyright for private or commercial purposes, in part or in whole, is not permitted unless authorised by Volkswagen AG. Volkswagen AG does not guarantee or accept any liability with respect to the correctness of information. Copyright by Volkswagen AG.

– Attach the bleeder bottle bleed hose -1- to the left rear brake caliper bleed valve.

– Open the bleed valve.

– Push the brake pedal with the Brake Pedal Actuator - VAG1869/2- at least 60 mm.

– Close left front and left rear bleeder valves.

– Do not remove the Brake Pedal Actuator - VAG1869/2- .

– Place a lint-free cloth under the ABS Control Module - J104- and the ABS Hydraulic Unit - N55- .

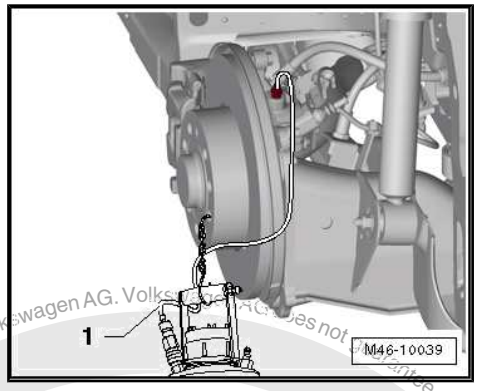

Note

Make sure no brake fluid gets onto contacts.

– Remove the cover from the bulkhead and unclip the brake line.

– Label both brake lines -5 and 6-.

– Remove the brake lines -5 and 6- from the ABS Hydraulic Unit - N55- .

– Seal off the brake lines and the threaded holes right away with the plugs from repair kit 1H0 698 311 A.

– Mark, unfasten and plug the remaining brake lines (brake calipers).

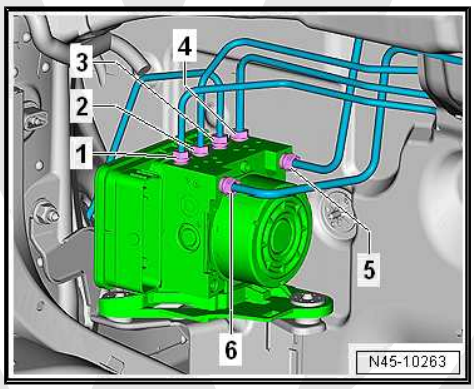

– Pull the ABS Hydraulic Unit - N55- with the ABS Control Module - J104- upward from the shock absorber -arrow-.

– Place the ABS Hydraulic Unit - N55- with the ABS Control Module - J104- at the bottom of the engine compartment.

Caution

Set aside the ABS Hydraulic Unit - N55- with the ABS Control Module - J104- so that it cannot fall down.

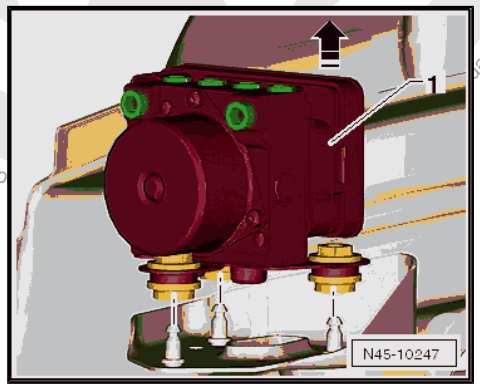

– Raise the vehicle.

Copyright by Volkswagen AG. Volkswagen AG does not guarantee or accept any liability with respect to the correctness of information in this document. Copying for private or commercial purposes, in part or in whole, is not permitted unless authorised by Volkswagen AG.

For Vehicles with a Parking/Auxiliary Heater

– Remove the bracket in the vehicle from the ABS Hydraulic Unit - N55- -arrows-.

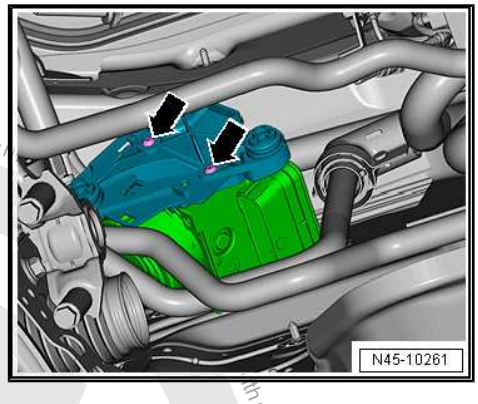

Continuation for All Vehicles

– Guide the ABS Hydraulic Unit - N55- from the vehicle.

Installing

Install in reverse order of removal. Note the following:

Note

- *Remove the plugs on the new ABS Hydraulic Unit - N55- only when installing the brake line.*
- *Brake fluid will leak out if the plugs are removed too early from the ABS Hydraulic Unit - N55- . The system will then not have sufficient brake fluid and will not adequately bled.*
- *Pay attention when installing the ABS Hydraulic Unit - N55- that the rubber bushings are not pushed out of the console.*

– Before assembling the holder for the ABS Hydraulic Unit - N55- in the bracket, spray the rubber bushings with Silicone Lubricant Spray - D 007 000 A2- .

– Install the brake lines carefully with the Torque Wrench - Assembly Tool - VAG1410/8- .

Brake Line Tightening Sequence

– Remove the Brake Pedal Actuator - VAG1869/2- .

– Bleed the brake system. Refer to ⇒ “6 Hydraulic System”, page 132 .

– Enter radio code.

– Code the ABS Control Module - J104- using the Vehicle Diagnostic Tester .

A Steering Angle Sensor - G85- , Transverse Acceleration Sensor - G200- , Longitudinal Acceleration Sensor - G251- and Brake Pressure Sensor 1 - G201- basic setting must be done.

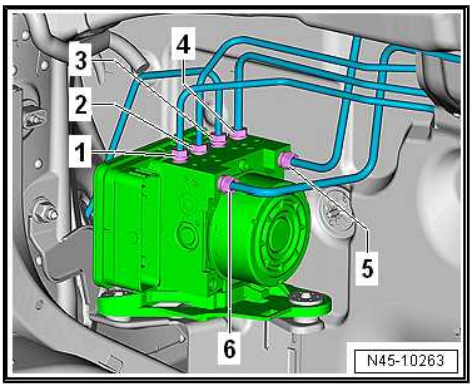

Tightening Specifications

Protected by copyright. Copying for private or commercial purposes, in part or in whole, is not permitted unless authorised by Volkswagen AG. Volkswagen AG does not guarantee or accept any liability with respect to the correctness of information in this document. Copyright by Volkswagen AG.

Special Tool Assembly for Tightening the Brake Lines

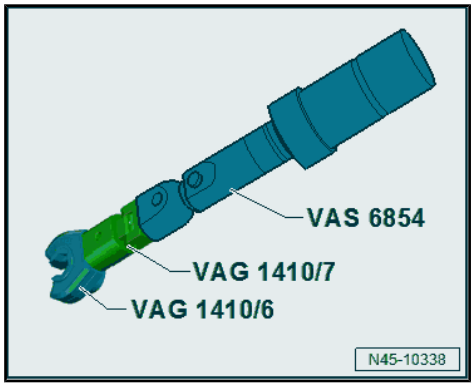

- Refer to
  ⇒ “3.1 Overview - Control Module and Hydraulic Unit”, page 15
- Refer to ⇒ Engine Mechanical, Fuel Injection and Ignition; Rep. Gr. 26 ; Exhaust Pipes/Mufflers; Overview - Muffler .
- Refer to ⇒ Body Exterior; Rep. Gr. 66 ; Noise Insulation; Overview - Noise Insulation .
- Refer to ⇒ Engine Mechanical, Fuel Injection and Ignition; Rep. Gr. 26 ; Exhaust Pipes/Mufflers; Muffler, Removing and Installing .
- Refer to ⇒ Engine Mechanical, Fuel Injection and Ignition; Rep. Gr. 10 ; Subframe Mount; Overview - Subframe Mount .
- Refer to ⇒ Engine Mechanical, Fuel Injection and Ignition; Rep. Gr. 10 ; Engine Cover; Engine Cover, Removing and Installing .
- Front bleeder valve. Refer to
  ⇒ “1.1 Overview - Front Brake Caliper”, page 97
- Rear bleeder valves. Refer to
  ⇒ “2.1 Overview - Rear Brake Caliper”, page 100

3.2.3 ABS Control Module and ABS Hydraulic Unit, Removing and Installing

Special tools and workshop equipment required

- Torque Wrench 1331 5-50Nm - VAG1331-
- Open Ring Spanner Insert - AF 11mm - VAG1410/6-
- Torque Wrench - Universal Joint - VAG1410/7-
- Mini Torque Wrench - VAS6854-
- Brake Pedal Actuator - VAG1869/2- .
- Torque Wrench - Assembly Tool - VAG1410/8-

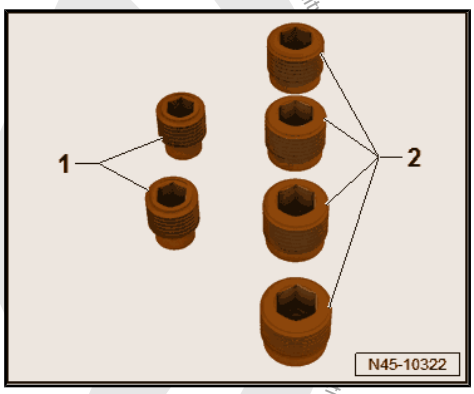

Plug assembly part number 5Q0 698 311

1 - M10 plug

2 - M12 plug

Removing

Component location:

Protected by copyright. Copying for private or commercial purposes, in part or in whole, is not permitted unless authorised by Volkswagen AG. Volkswagen AG does not guarantee or accept any liability with respect to the correctness of information in this document. Copyright by Volkswagen AG.

The control module is bolted to the hydraulic unit -1- and is located at right in the engine compartment.

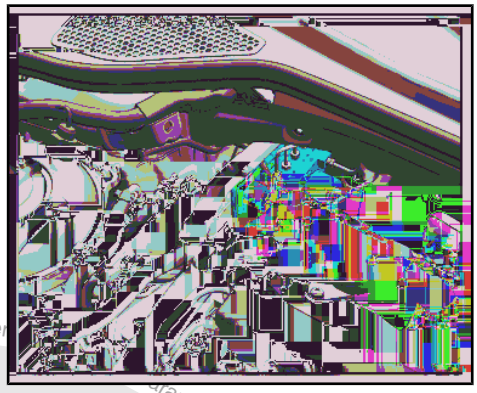

WARNING

Do not bend the brake lines near the ABS Hydraulic Unit - N55- !

- Read and note the present control module coding.
- If the vehicle has a coded radio, get the radio code from the customer before beginning.
- Disconnect the battery. Refer to ⇒ Electrical Equipment; Rep. Gr. 27 ; Battery; Battery, Disconnecting and Connecting .
- Remove the engine cover.
- Remove the noise insulation. Refer to ⇒ Body Exterior; Rep. Gr. 66 ; Noise Insulation; Overview - Noise Insulation .
- Remove the front exhaust pipe. Refer to ⇒ Rep. Gr. 26 ; Exhaust Pipes/Mufflers; Front Exhaust Pipe, Removing and Installing .
- Disconnect the connector -1-.
- Loosen the clamping sleeve -2- and slide it toward the rear.

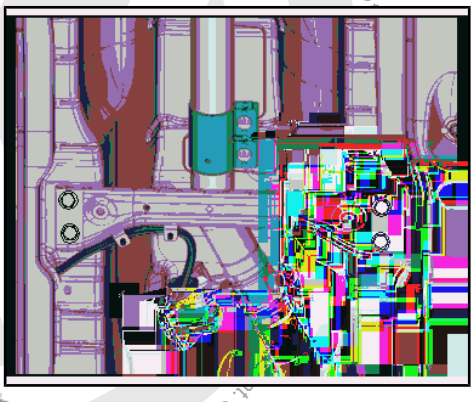

- Remove the bolts -1-.
- Loosen the bolt -2- and the clamp.
- Remove the front exhaust pipe.
- Remove the right driveshaft. Refer to ⇒ Suspension, Wheels, Steering; Rep. Gr. 40 ; Driveshaft; Driveshaft, Removing and Installing
- Pivot the suspension strut to the rear and lock.
- On vehicles with heat shield, remove heat shield.
- Unclip the wire routing.

Protected by copyright. Copying for private or commercial purposes, in part or in whole, is not permitted unless authorised by Volkswagen AG. Volkswagen AG does not guarantee or accept any liability with respect to

– Press the securing clip down -arrow A-.

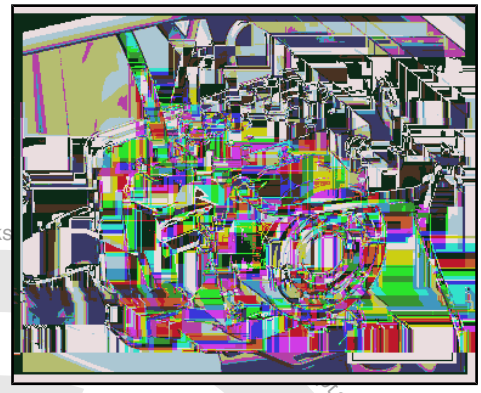

– Disconnect the connector -arrow B-.
– Remove the connector -1-.

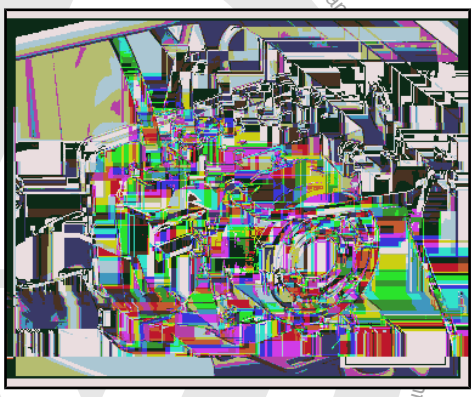

– Install the Brake Pedal Actuator - VAG1869/2- .

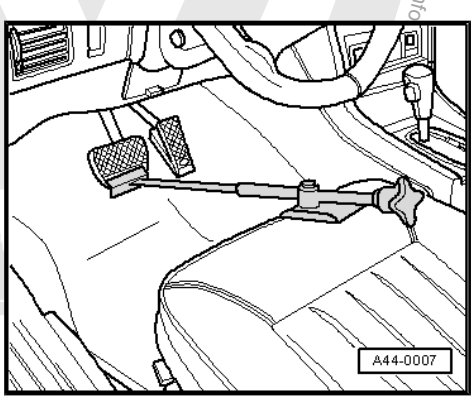

– Attach the bleeder bottle bleed hose -1- to the left front brake caliper bleed valve.
– Open the bleed valve.

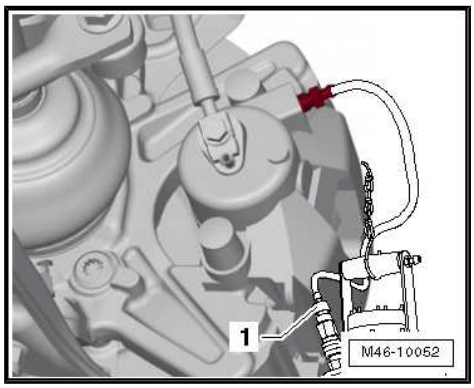

Protected by copyright. Copying for private or commercial purposes, in part or in whole, is not permitted unless authorised by Volkswagen AG. Volks

– Attach the bleeder bottle bleed hose -1- to the left rear brake caliper bleed valve.

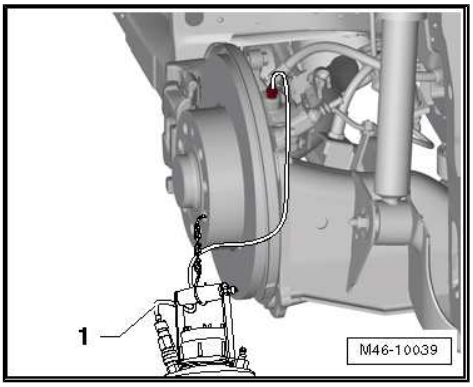

– Open the bleed valve.

– Push the brake pedal with the Brake Pedal Actuator - VAG1869/2- at least 60 mm.

– Close left front and left rear bleeder valves.

– Do not remove the Brake Pedal Actuator - VAG1869/2- .

– Place sufficient lint-free cloths under the control module and hydraulic unit.

Note

Make sure that brake fluid does not come in contact with the terminals.

– Remove the cover from the bulkhead and unclip the brake line.

– First, mark both brake lines from master cylinder and remove from the hydraulic unit.

– Seal the threaded holes immediately with plugs from the assembly part set part number 5Q0 698 311.

– Mark, remaining brake lines (brake calipers), unfasten and plug the threaded holes.

– Lift the hydraulic unit with control module up and out of the dampers -arrow-.

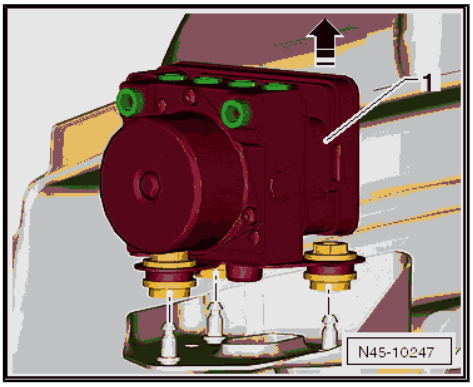

– Place the hydraulic unit with the control module carefully below in the engine compartment.

Caution

Set aside the ABS Hydraulic Unit - N55- with the ABS Control Module - J104- so that it cannot fall down.

– Raise the vehicle.

– Remove the bracket in the vehicle from the hydraulic unit -arrows-.

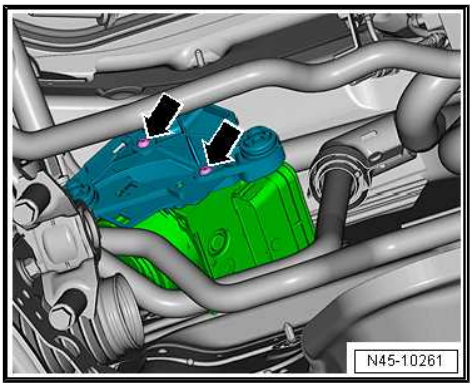

– Pivot the suspension strut -1- to the side and toward the rear. Lock it in this position with a wooden block -2-.

– Carefully guide the hydraulic unit with the control module downward.

– Carefully place the hydraulic unit with the control module at the bottom of the engine compartment.

Note

Position the ABS Hydraulic Unit - N55- with the ABS Control Module - J104- so that it cannot fall down.

– Raise the vehicle.

Volkswagen AG. Volkswagen AG does not guarantee or accept any liability with respect to the correctness of information in this document. Copyright by Volkswagen AG. Not permitted unless authorised by Volkswagen AG. Copyright by Volkswagen AG. Free copy for private or commercial purposes, in part or in whole, is not permitted unless authorised by Volkswagen AG.

– Guide out the hydraulic unit -3- out of the vehicle through the wheel housing.

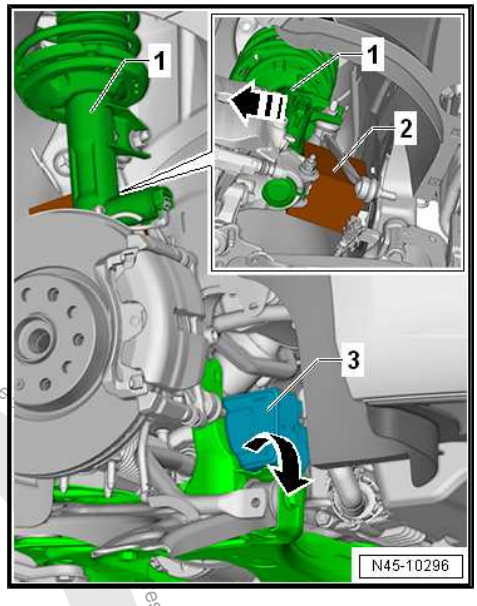

Installing

Note

- *Do not remove sealing plugs at new hydraulic unit until the corresponding brake line is about to be installed.*
- *If the sealing plugs are removed too early, brake fluid can escape and unit may not be sufficiently filled or adequately bled.*
- *When installing the hydraulic unit, make sure the damper rubber is not pushed out of the console.*

– Before assembling the holder for the ABS Hydraulic Unit - N55- in the bracket, spray the rubber bushings with Silicone Lubricant Spray - D 007 000 A2- .

– Install the brake lines carefully with the Torque Wrench - Assembly Tool - VAG1410/8- .

– Install in reverse order of removal.

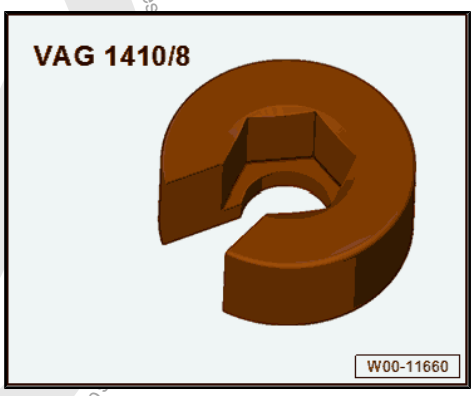

Brake Line Tightening Sequence

– Remove the Brake Pedal Actuator - VAG1869/2- .

– Bleed the brake system. Refer to ⇒ “6.2 Hydraulic System, Standard Bleeding”, page 132 .

– Enter radio code.

– Code the ABS Control Module - J104- using the Vehicle Diagnostic Tester .

A Steering Angle Sensor - G85- , Transverse Acceleration Sensor - G200- , Longitudinal Acceleration Sensor - G251- and Brake Pressure Sensor 1 - G201- basic setting must be done.

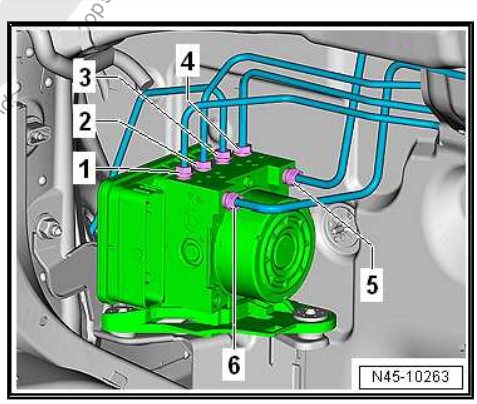

Tightening Specifications

Protected by copyright. Copying for private or commercial purposes, in part or in whole, is not permitted unless authorised by Volkswagen AG. Volkswagen AG does not guarantee or accept any liability with respect to the correctness and completeness of this document. Copyright by Volkswagen AG.

Special Tool Assembly for Tightening the Brake Lines

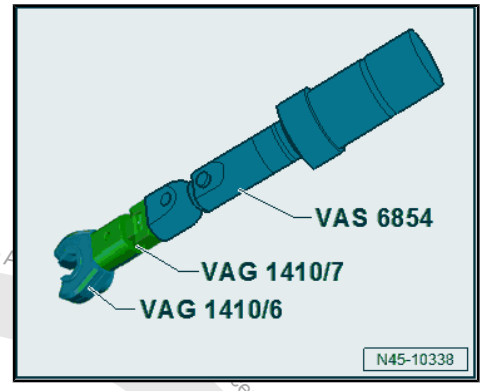

- Refer to
  ⇒ “3.1 Overview - Control Module and Hydraulic Unit”, page 15
- Battery. Refer to ⇒ Electrical Equipment; Rep. Gr. 27 ; Battery; Overview - Battery .
- Noise insulation bolts. Refer to ⇒ Body Exterior; Rep. Gr. 66 ; Noise Insulation; Overview - Noise Insulation .
- Front exhaust pipe. Refer to ⇒ Rep. Gr. 26 ; Exhaust Pipes/ Mufflers; Front Exhaust Pipe, Removing and Installing .
- Pendulum support. Refer to ⇒ Engine Mechanical, Fuel Injection and Ignition; Rep. Gr. 10 ; Subframe Mount; Overview - Subframe Mount .
- Driveshaft. Refer to ⇒ Suspension, Wheels, Steering; Rep. Gr. 40 ; Drive Axle; Overview - Drive Axle .
- Lower control arm. Refer to ⇒ Suspension, Wheels, Steering; Rep. Gr. 40 ; Lower Control Arm and Ball Joint; Overview - Lower Control Arm and Ball Joint .
- Front bleeder valve. Refer to
  ⇒ “1.1 Overview - Front Brake Caliper”, page 97 .
- Rear bleeder valves. Refer to
  ⇒ “2.1 Overview - Rear Brake Caliper”, page 100

3.3 Control Module, Separating from Hydraulic Unit

Special tools and workshop equipment required

- ESD Work Surface - VAS6613-
- TORX® Insert T25
- If the ABS Control Module - J104- is faulty, then the control module is to be separated from the ABS Hydraulic Unit - N55- and only the control module replaced.
- If the ABS Hydraulic Unit - N55- is faulty, then replace the ABS Hydraulic Unit - N55- together with the ABS Control Module - J104- .
- To separate the ABS Control Module - J104- and the ABS Hydraulic Unit - N55- the unit must be removed.

WARNING

- *The return flow pump may also not be separated from the ABS Hydraulic Unit - N55- .*
- *The circuit board is exposed when the ABS Control Module - J104- is removed.*
- *Protect the ABS Control Module - J104- from moisture and dirt particles from getting inside.*
- *Avoid build-up of static electricity!*

This build-up of static electricity can lead to malfunctions when contacting electrical components.

– Touch a grounded object, before working on electrical equipment ESD Work Surface - VAS6613- . Do not touch directly on the connector terminals or the electrical components.

Copyright by Volkswagen AG. Volkswagen AG does not accept any liability with respect to the correctness of information in this document. Copyright by Volkswagen AG. Protected by copyright. Copying for private or commercial purposes, in part or in whole, is not permitted unless authorised by Volkswagen AG. Volkswagen A

– Place the ABS Hydraulic Unit - N55- with the ABS Control Module - J104- on the ESD Work Surface - VAS6613- .

– Remove the three TORX® bolts from the ABS Control Module - J104- and set aside immediately (risk of confusing them with the new TORX® bolts).

– Place the ABS Hydraulic Unit - N55- with the ABS Control Module - J104- upward on the ESD Work Surface - VAS6613- .

– Remove the ABS Control Module - J104- from the ABS Hydraulic Unit - N55- without tilting it.

– Cover ABS Control Module - J104- solenoid coils with a lint-free cloth.

– Clean the ABS Hydraulic Unit - N55- sealing surface using mineral spirits and a lint-free cloth.

The ABS Hydraulic Unit - N55- sealing surface must not be worked with a file, metal scraper, sand paper or similar.

If the ABS Hydraulic Unit - N55- sealing surface is damaged (for example through grooves or scrapes) the ABS Hydraulic Unit - N55- must be replaced with the ABS Control Module - J104- .

The seal on the ABS Control Module - J104- must not be pulled out or raised up.

The seal on the ABS Control Module - J104- cannot be replaced.

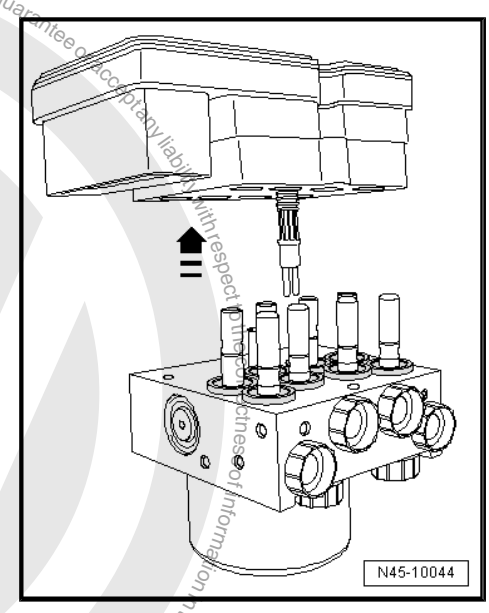

3.4 Control Module, Attaching to Hydraulic Unit

Special tools and workshop equipment required

- Torque Screwdriver - VAG1624-
- ESD Work Surface - VAS6613-
- TORX® insert T25

WARNING

Excessive shaking (for example, dropping, impact) can damage the ABS Control Module - J104- . Do not use the ABS Control Module - J104- again if this happens.

• Surface must be cleaned before assembling.

– Place the ABS Control Module - J104- on the ABS Hydraulic Unit - N55- without tilting it.

– Tighten the ABS Hydraulic Unit - N55- and the ABS Control Module - J104- with the supplied new TORX® bolts in two steps switching back and forth to the tightening specification.

Protected by copyright. Copying for private or commercial purposes, in part or in whole, is not permitted unless authorised by Volkswagen AG. Volkswagen AG does not guarantee or accept any liability with respect to the correctness of information in this document. Copyright by Volkswagen AG.

Note

- *The ABS Hydraulic Unit - N55- threads cannot be re-cut to secure the ABS Control Module - J104- .*
- *If the threads are damaged, the ABS Hydraulic Unit - N55- must be replaced.*
- *If the bolts are difficult to remove by hand or cannot be tightened to the tightening specification then the threads are damaged.*

Tightening Specification

- Refer to ⇒ "3.1 Overview - Control Module and Hydraulic Unit", page 15

Note

- *A new ABS Control Module - J104- can be installed on an old ABS Hydraulic Unit - N55- three times, maximum. This assures the elastic seal will not leak.*
- *A used ABS Control Module - J104- may not be installed a second time.*

3.5 Brake Lines, Attaching to Hydraulic Unit

On Tandem Master Brake Cylinder:

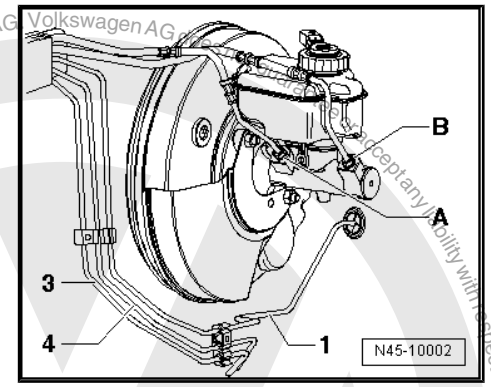

A - Master Brake Cylinder Primary Piston Circuit to the ABS Hydraulic Unit - N55- .

- Identification: 6 mm diameter and tube fitting with a M12 x 1 thread

B - Master Brake Cylinder Secondary Piston Circuit to the ABS Hydraulic Unit - N55- .

- Identification: 6 mm diameter and tube fitting with a M12 x 1 thread

1 - ABS Hydraulic Unit - N55- to the Left Front Brake Caliper

3 - ABS Hydraulic Unit - N55- to the Left Rear Brake Caliper

4 - ABS Hydraulic Unit - N55- to the Right Rear Brake Caliper

Volkswagen AG
Protected by copyright. Copying for private or commercial purposes, in part or in whole, is not permitted unless authorised by Volkswagen AG. Volkswagen AG does not guarantee or accept any liability with respect to the correctness of information in this document. Copyright by Volkswagen AG.

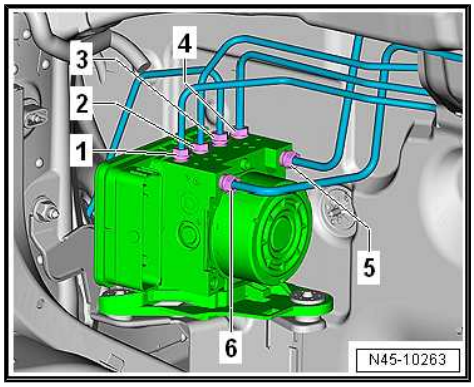

Tightening Sequence:

1 - ABS Hydraulic Unit - N55- to the Right Rear Brake Caliper

- Identification: 5.25 mm diameter and tube fitting with a M12 x 1 short thread

2 - ABS Hydraulic Unit - N55- to the Left Front Brake Caliper

- Identification: 5.25 mm diameter and tube fitting with a M10 x 1 thread

3 - ABS Hydraulic Unit - N55- to the Right Front Brake Caliper

- Identification: 5.25 mm diameter and tube fitting with a M12 x 1 short thread

4 - ABS Hydraulic Unit - N55- to the Left Rear Brake Caliper

- Identification: 5.25 mm diameter and tube fitting with a M10 x 1 thread

5 - ABS Hydraulic Unit - N55- to the Master Brake Cylinder Secondary Piston Circuit

- Identification: 6 mm diameter and tube fitting with a M12 x 1 thread

6 - ABS Hydraulic Unit - N55- to the Master Brake Cylinder Primary Piston Circuit

- Identification: 6 mm diameter and tube fitting with a M12 x 1 thread

Tightening Specification

- Refer to
  ⇒ “3.1 Overview - Control Module and Hydraulic Unit”, page 15

Protected by copyright. Copying for private or commercial purposes, in part or in whole, is not permitted unless authorised by Volkswagen AG. Volkswagen AG does not guarantee or accept any liability with respect to the correctness of information in this document. Copyright by Volkswagen AG.

4 Sensors

⇒ “4.1 Overview - Front Axle Speed Sensor”, page 35

⇒ “4.2 Overview - Rear Axle Speed Sensor”, page 36

⇒ “4.3 Right/Left Front ABS Wheel Speed Sensor G45 / G47 , Removing and Installing”, page 37

⇒ “4.4 Right/Left Rear ABS Wheel Speed Sensor G44 / G46 , Removing and Installing”, page 38

⇒ “4.5 ESP Sensor Unit G419 , Removing and Installing”, page 39

⇒ “4.6 Steering Angle Sensor G85 , Removing and Installing”, page 39

⇒ “4.7 ABS Sensor Ring, Checking”, page 39

4.1 Overview - Front Axle Speed Sensor

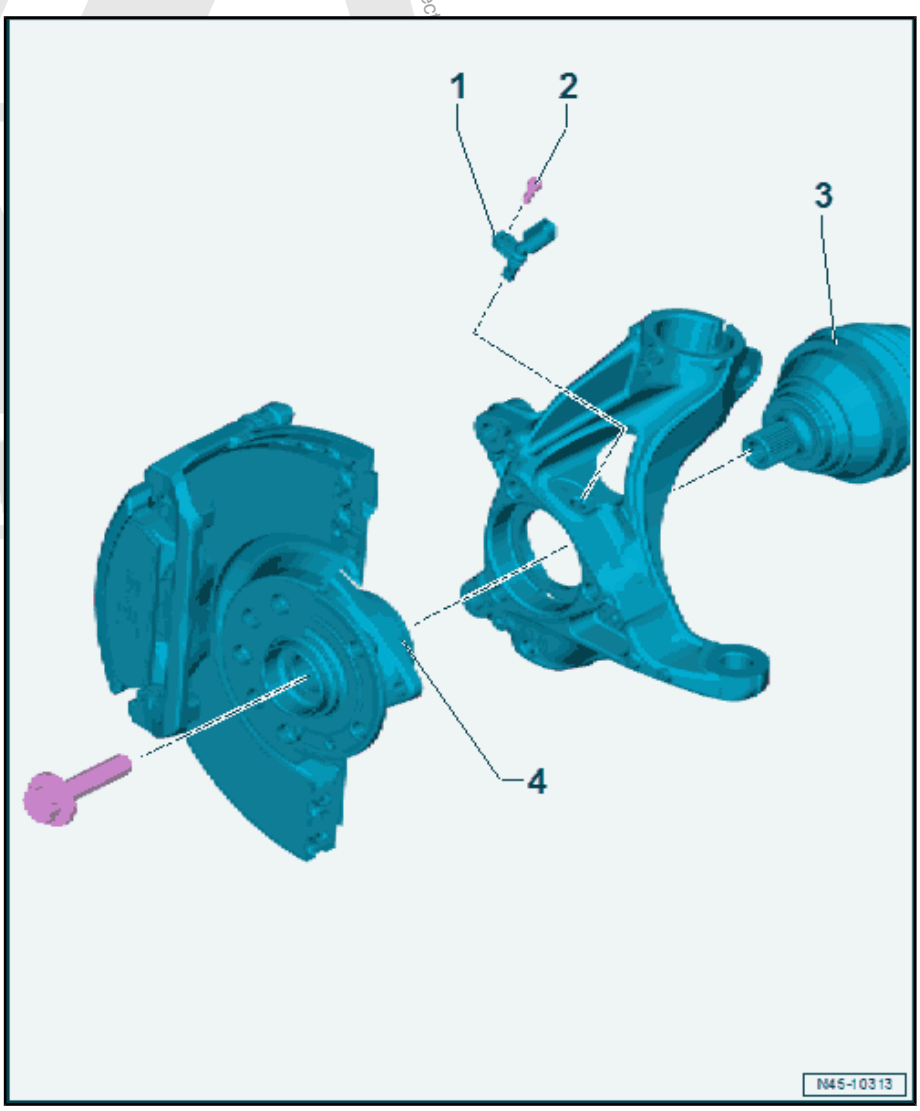

1 - Wheel Speed Sensor - G47- / -G45-

- ❑ Left Front ABS Wheel Speed Sensor - G47- / Right Front ABS Wheel Speed Sensor - G45-
- ❑ Removing and installing. Refer to ⇒ “4.3 Right/Left Front ABS Wheel Speed Sensor G45 / G47 , Removing and Installing”, page 37 .
- ❑ Clean the inner surface of the opening before inserting the sensor
- ❑ Coat the hole with Hot Bolt Paste - G 052 112 A3- .

2 - Bolt

- ❑ 8 Nm

3 - Drive Axle

- ❑ Overview. Refer to ⇒ Suspension, Wheels, Steering; Rep. Gr. 40 ; Drive Axle; Overview - Drive Axle .
- ❑ Removing and installing. Refer to ⇒ Suspension, Wheels, Steering; Rep. Gr. 40 ; Drive Axle; Drive Axle, Removing and Installing .

4 - Wheel Hub with Wheel Bearing Unit

- ❑ The ABS sensor ring is integrated in the wheel bearing unit
- ❑ Removing and installing. Refer to ⇒ Suspension, Wheels, Steering; Rep. Gr. 40 ; Wheel Bearing; Wheel Bearing Unit, Removing and Installing .

© Volkswagen AG, Wolfsburg
Protected by copyright. Copying for private or commercial purposes, in part or in whole, is not permitted unless authorised by Volkswagen AG. Volkswagen AG does not guarantee or accept any liability with respect to the correctness and completeness of this document.

4.2 Overview - Rear Axle Speed Sensor

⇒ “4.2.1 Overview - Rear Axle Speed Sensor, FWD”, page 36

⇒ “4.2.2 Overview - Rear Axle Speed Sensor, AWD”, page 37

4.2.1 Overview - Rear Axle Speed Sensor, FWD

1 - ABS Speed Sensor

- ❑ Removing and Installing. Refer to ⇒ “4.4 Right/Left Rear ABS Wheel Speed Sensor G44 / G46 , Removing and Installing”, page 38 .
- ❑ Clean the inner surface of the hole before inserting the sensor
- ❑ Coat the hole with Hot Bolt Paste - G 052 112 A3- .

2 - Bolt

- ❑ 8 Nm

3 - Wheel Hub with Wheel Bearing Unit

- ❑ The ABS sensor ring is integrated in the wheel bearing unit

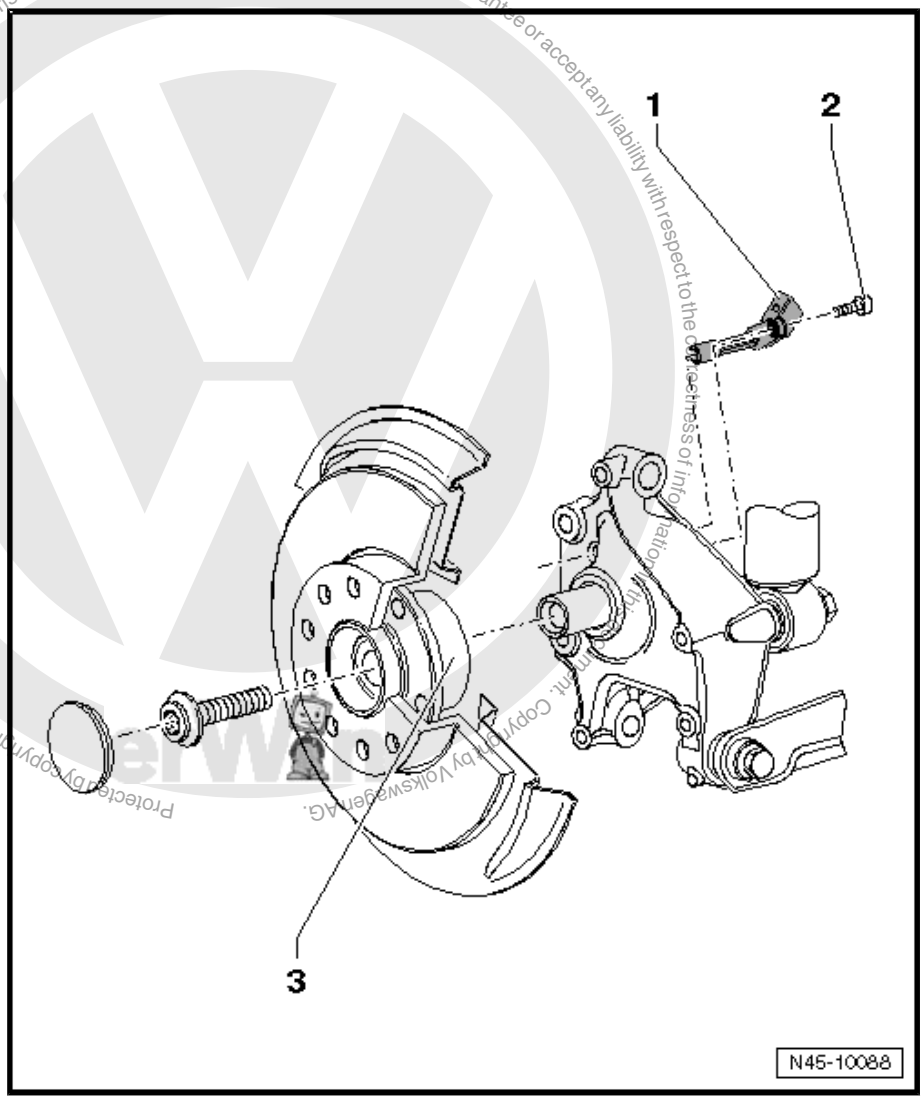

Protected by copyright. Copying for private or commercial purposes, in part or in whole, is not permitted unless authorised by Volkswagen AG. Volkswagen AG does not guarantee or accept any liability with respect to the correctness of information in this document. Copyright by Volkswagen AG.

4.2.2 Overview - Rear Axle Speed Sensor, AWD

1 - ABS Speed Sensor

- ❑ Clean the inner surface of the hole before inserting the sensor
- ❑ Coat the inner surface with Hot Bolt Paste - G 052 112 A3- .
- ❑ Removing and Installing

2 - Bolt

- ❑ 8 Nm

3 - Driveshaft

- ❑ Overview. Refer to ⇒ Suspension, Wheels, Steering; Rep. Gr. 42 ; Overview - Driveshaft .
- ❑ Removing and installing. Refer to ⇒ Suspension, Wheels, Steering; Rep. Gr. 42 ; Driveshaft; Driveshaft, Removing and Installing .

4 - Wheel Hub with Wheel Bearing Unit

- ❑ The ABS sensor ring is integrated in the wheel bearing unit
- ❑ Check the ABS sensor ring. Refer to ⇒ "4.7 ABS Sensor Ring, Checking", page 39 .
- ❑ Removing and Installing. Refer to ⇒ Suspension, Wheels, Steering; Rep. Gr. 42 ; Wheel Bearing, Trailing Arm; Wheel Bearing Unit, Removing and Installing .

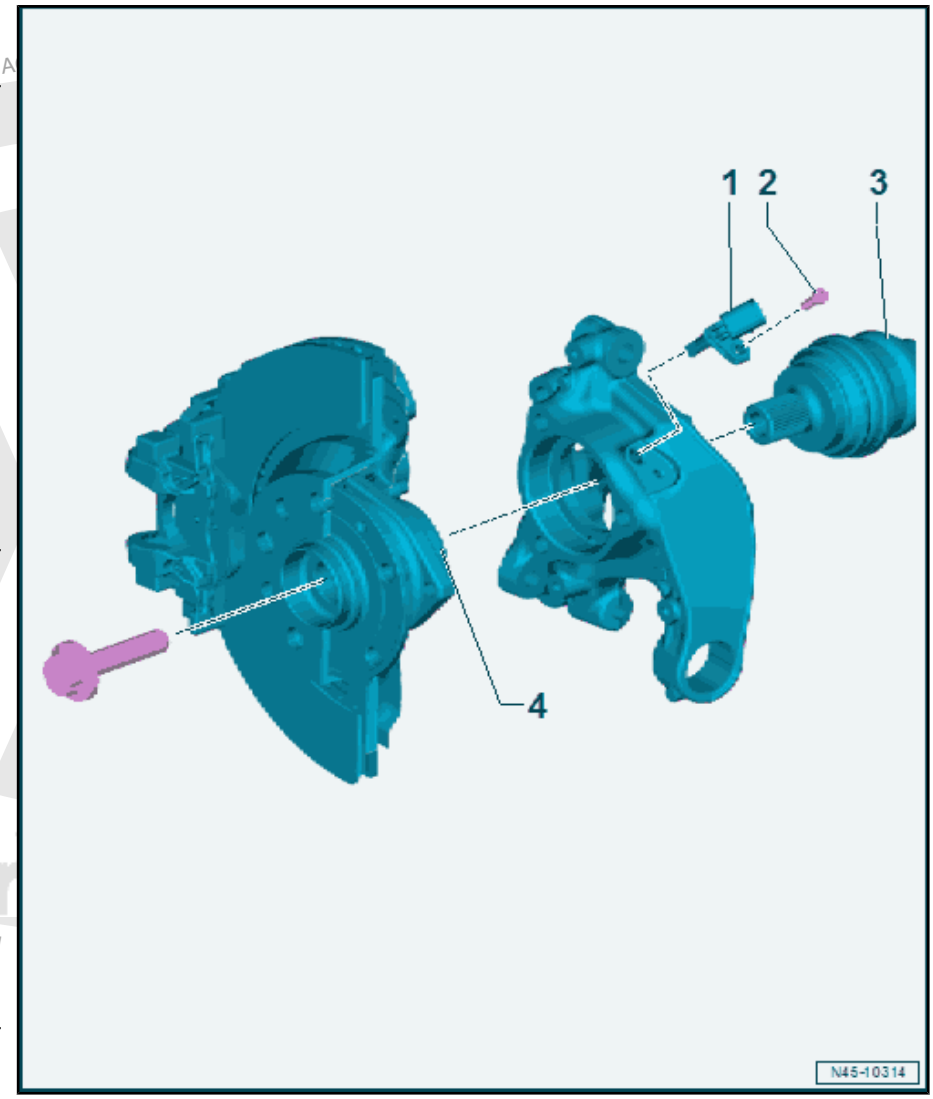

4.3 Right/Left Front ABS Wheel Speed Sensor -G45- / -G47- , Removing and Installing

Special tools and workshop equipment required

- ♦ Torque Wrench 1331 5-50Nm - VAG1331-

Note

The example describes the removal and installation of the left front ABS wheel speed sensor. The removal and installation of the right front ABS wheel speed sensor is identical.

Removing

– Raise the vehicle.

– Disconnect the connector -3- from the wheel speed sensor -1-.

– Remove the bolt -2- and pull the wheel speed sensor -1- from the wheel bearing housing.

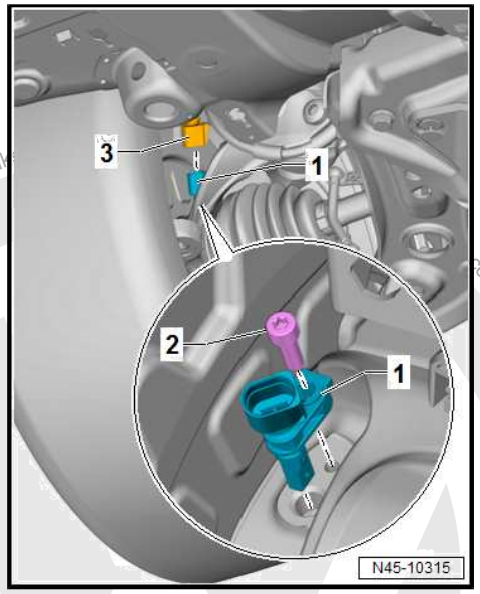

Installing

Install in reverse order of removal. Note the following:

– Clean the inner surface of the opening before inserting the sensor

– Coat the hole with Hot Bolt Paste - G 052 112 A3- .

Tightening Specification

♦ Refer to
⇒ “4.1 Overview - Front Axle Speed Sensor, page 35

4.4 Right/Left Rear ABS Wheel Speed Sensor -G44- / -G46- , Removing and Installing

Special tools and workshop equipment required

♦ Torque Wrench 1331 5-50Nm - VAG1331-

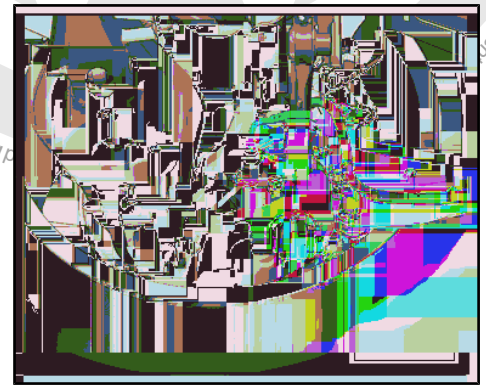

Note

The example describes the removal and installation of the left rear ABS wheel speed sensor. The removal and installation of the right rear ABS wheel speed sensor is identical.

Wheel Speed Sensor -1-

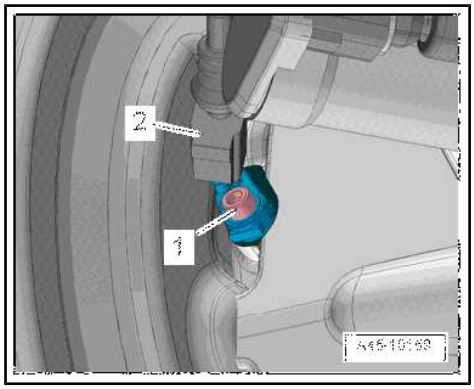

Removing

– Raise the vehicle.

– Disconnect the connector -2- from the wheel speed sensor.

– Remove bolt -1-, and remove the wheel speed sensor from the wheel bearing housing.

Installing

Install in reverse order of removal. Note the following:

– Clean the inner surface of the opening before inserting the sensor

– Coat the hole with Hot Bolt Paste - G 052 112 A3- .

Tightening Specification

♦ Refer to
⇒ “4.2.1 Overview - Rear Axle Speed Sensor, FWD”, page 36

4.5 ESP Sensor Unit - G419- , Removing and Installing

The Transverse Acceleration Sensor - G200- , the Rotation Rate Sensor - G202- and the Longitudinal Acceleration Sensor - G251- are installed together with the Electromechanical Parking Brake Control Module - J540- in the ABS Control Module - J104- .

The components cannot be replaced individually.

– ABS Control Module - J104- , removing and installing. Refer to
⇒ “3.2 ABS Control Module J104 / ABS Hydraulic Unit N55 , Removing and Installing”, page 17 .

4.6 Steering Angle Sensor - G85- , Removing and Installing

The Steering Angle Sensor - G85- is installed in the steering gear.

The Steering Angle Sensor - G85- cannot be replaced separately.

– Remove the steering. Refer to ⇒ Suspension, Wheels, Steering; Rep. Gr. 48 ; Steering Gear; Steering Gear, Removing and Installing .

4.7 ABS Sensor Ring, Checking

Special tools and workshop equipment required

♦ Gauge - Sender Wheel - T10473-

Procedure

• The wheel bearing unit is removed.

– Check the entire circumference of the ABS sensor ring -2- with the Gauge - Sender Wheel - T10473- as shown.

1 - Wheel Bearing Unit

2 - Seal with integrated ABS Sensor Ring

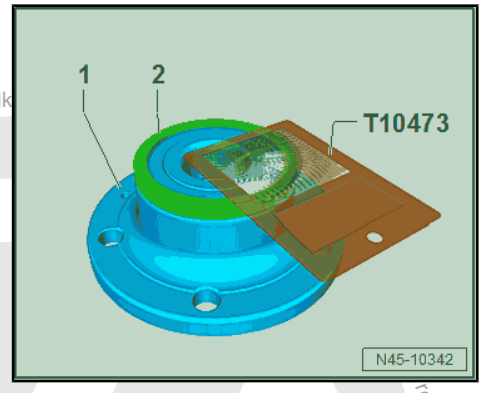

Protected by copyright. Copying for private or commercial purposes, in part or in whole, is not permitted unless authorised by Volkswagen AG. Volk
Copyright by Volkswagen AG. respect to the correctness of information in this document.

ABS sensor ring test diagram.

A - ABS Sensor Ring is OK

B - ABS Sensor Ring is Faulty

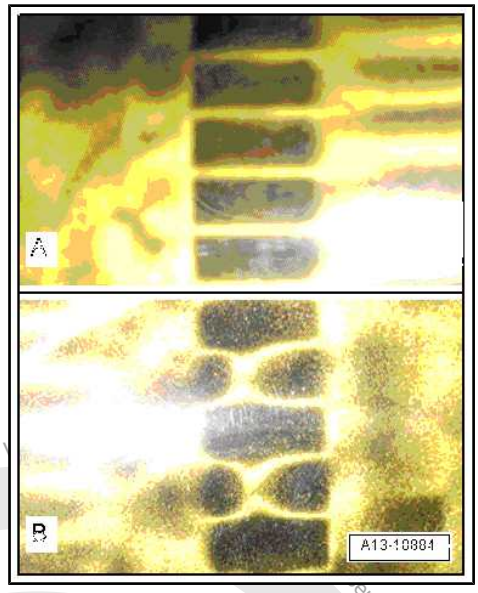

Protected by copyright. Copying for private or commercial purposes, in part or in whole, is not permitted unless authorised by Volkswagen AG. Copyright by Volkswagen AG. We accept any liability with respect to the correctness of information in this document.

5 Special Tools

Special tools and workshop equipment required

- Torque Wrench 1331 5-50Nm - VAG1331-
- Open Ring Spanner Insert - AF 11mm - VAG1410/6-
- Torque Wrench - Universal Joint - VAG1410/7-
- Mini Torque Wrench - VAS6854-
- Brake Pedal Actuator - VAG1869/2- .
- Torque Wrench - Assembly Tool - VAG1410/8-

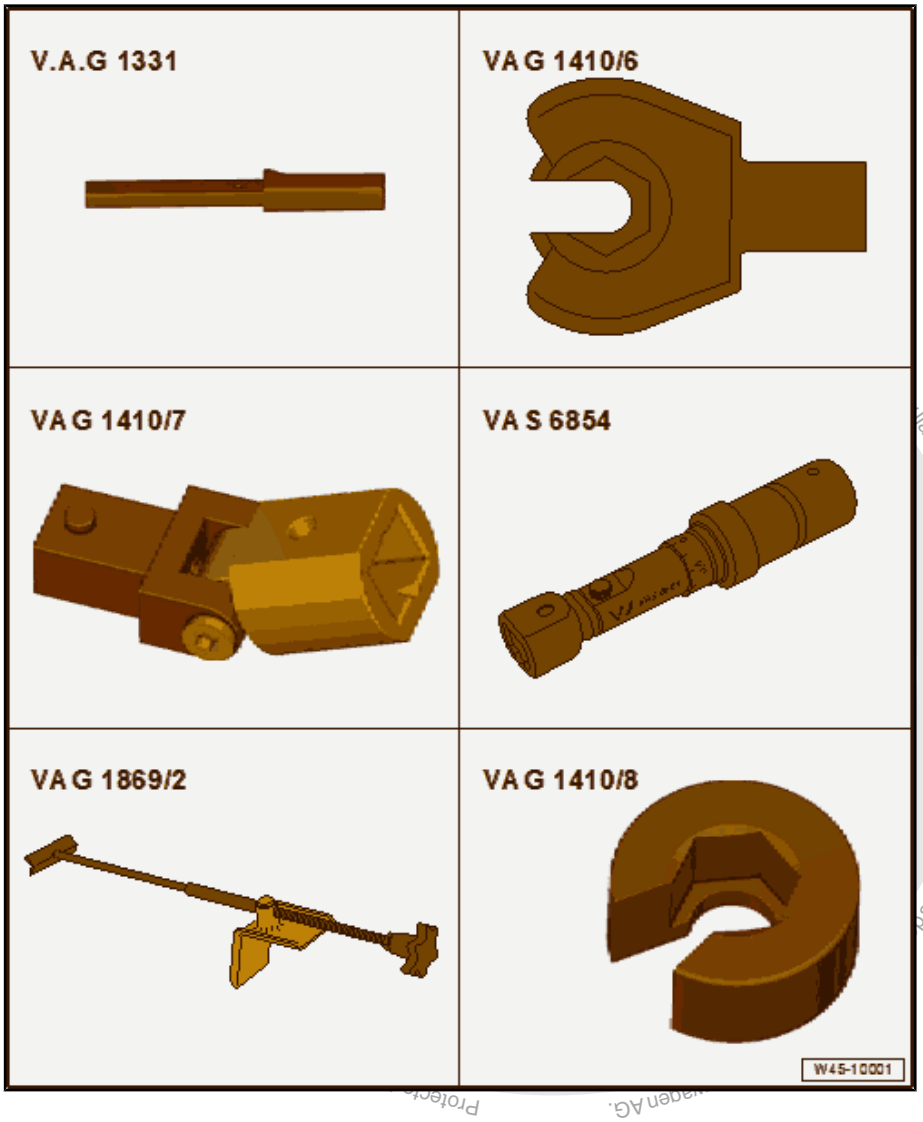

- Gauge - Sender Wheel - T10473-

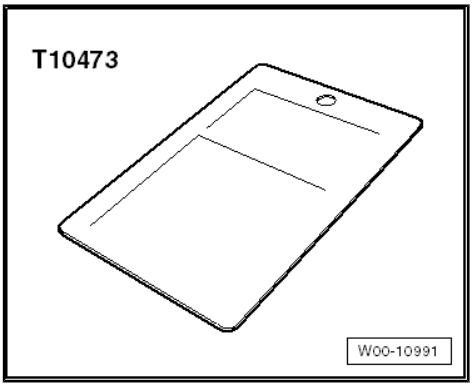

- Torque Wrench 1410 - VAG1410-

- Torque Screwdriver - VAG1624-

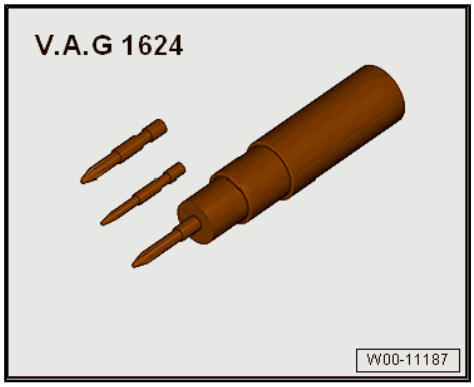

- ESD Work Surface - VAS6613-

Protected by copyright. Copying for private or commercial purposes, in part or in whole, is not permitted unless authorised by Volkswagen AG. Volkswagen AG does not guarantee or accept any liability with respect to the correctness of information in this document. Copyright by Volkswagen AG.

46 – Mechanical Components

1 Front Brakes

⇒ “1.1 Overview - Front Brakes”, page 43

⇒ “1.2 Brake Pads, Removing and Installing”, page 45

⇒ “1.3 Brake Caliper, Removing and Installing”, page 47

⇒ “1.4 Brake Carrier, Removing and Installing”, page 49

⇒ “1.5 Brake Rotor, Removing and Installing”, page 51

⇒ “1.6 Brake Shield, Removing and Installing”, page 52

1.1 Overview - Front Brakes

⇒ “1.1.1 Overview - Front Brakes (PC57 and C60)”, page 43

1.1.1 Overview - Front Brakes (PC57 and C60)

Note

- *After replacing brake pads, depress brake pedal firmly several times with vehicle stationary so that the brake pads are properly seated in their normal operating position.*
- *Use Brake Charger/Bleeder Unit - VAS5234- to extract brake fluid from brake fluid reservoir.*
- *Install the Brake Pedal Actuator - VAG1869/2- to relieve pressure before removing a brake caliper or disconnecting a brake hose.*

Protected by copyright. Copying for private or commercial purposes, in part or in whole, is not permitted unless authorised by Volkswagen AG. Volkswagen AG does not guarantee or accept any liability with respect to the correctness of information in this document. Copyright by Volkswagen AG.

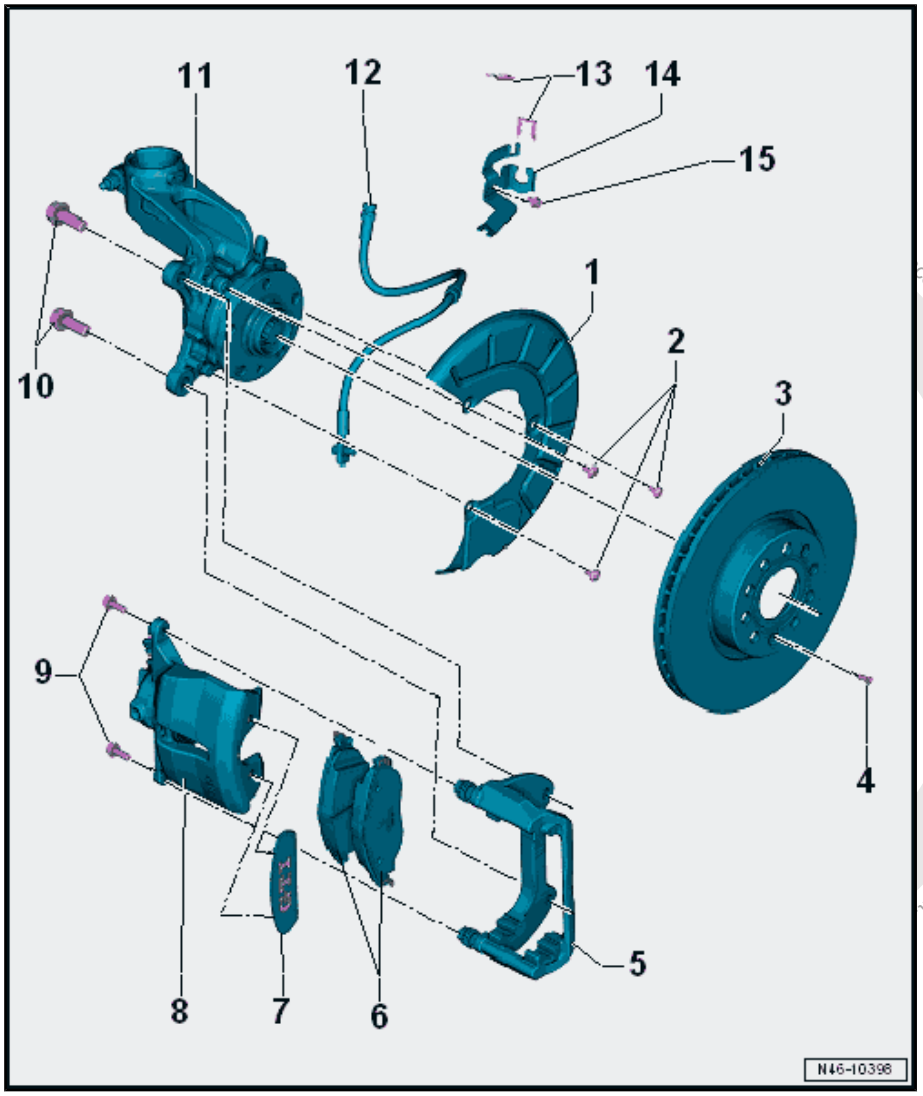

1 - Cover Plate

2 - Bolt

- ❑ 12 Nm

3 - Brake Rotor

- ❑ Vented on the inside
- ❑ Wear limits
- ❑ Replace in pairs (Rotors replaced in pairs per axle)
- ❑ Remove brake caliper and brake carrier before removing

4 - Bolt

- ❑ 8 Nm

5 - Brake Carrier

- ❑ Lightly grease the pad guide surface with Lithium Grease - G 052150 A2- .

6 - Brake Pads

- ❑ Thickness 14 mm without backing plate
- ❑ Vehicles with front right brake pad wear indicator
- ❑ When wear limit is reached (limit: approximately 4 mm) the warning lamp in instrument cluster will come on, the contact sensor can be replaced separately.
- ❑ Wear limit: 2 mm without backing plate
- ❑ Check the thickness. Refer to ⇒ Maintenance ; Booklet 36.1 ; Procedure Descriptions; Front and Rear Brake Rotors, Checking Brake Pad Thickness and Condition .
- ❑ Replace in pairs
- ❑ Removing and installing. Refer to ⇒ “1.2 Brake Pads, Removing and Installing”, page 45 .

7 - Trim

- ❑ Vehicles with emblem
- ❑ For allocation. Refer to the Parts Catalog

8 - Brake Caliper

- ❑ Do not disconnect the brake hose when replacing a brake pad
- ❑ Removing and installing. Refer to ⇒ “1.3 Brake Caliper, Removing and Installing”, page 47 .
- ❑ Servicing. Refer to ⇒ “1.2 Brake Caliper Piston, Removing and Installing”, page 98 .
- ❑ For allocation. Refer to the Parts Catalog

9 - Hex Bolt, Self-Locking

- ❑ 35 Nm
- ❑ Replace after removing

10 - Ribbed Bolt

- ❑ 200 Nm
- ❑ Clean if using again.

ccept any liability with respect to the correctness of information in this document.

11 - Wheel Bearing Housing

- ❑ Vehicles with fastened brake carrier
- ❑ For allocation. Refer to the Parts Catalog

12 - Brake Hose

- ❑ 35 Nm
- ❑ Vehicles with ring connection and banjo bolt
- ❑ Make sure it is installed in the correct position

13 - Clip

14 - Bracket

15 - Bolt

- ❑ 8 Nm

1.2 Brake Pads, Removing and Installing

Special tools and workshop equipment required

- ♦ Torque Wrench 1331 5-50Nm - VAG1331-
- ♦ Piston Resetting Tool - T10145-

Caution

This procedure contains mandatory replaceable parts. Refer to component overview prior to starting procedure.

Mandatory Replacement Parts

- ♦ Hex Bolt, Self-Locking - Brake caliper to brake carrier

Removing

Note

When removing, mark brake pads that will be used again. Install in the same position, otherwise braking effect will be uneven.

– Remove the wheels.

– Release and disconnect the brake pad wear indicator connector.

The brake pad wear indicator is installed at the front right.

Copyright by Volkswagen AG. Volkswagen AG does not guarantee or accept any liability with respect to the correctness of information in this document. Copying for private or commercial purposes, in part or in whole, is not permitted unless authorised by Volkswagen AG.

– Counterhold the guide pins and remove both screws from the brake caliper.

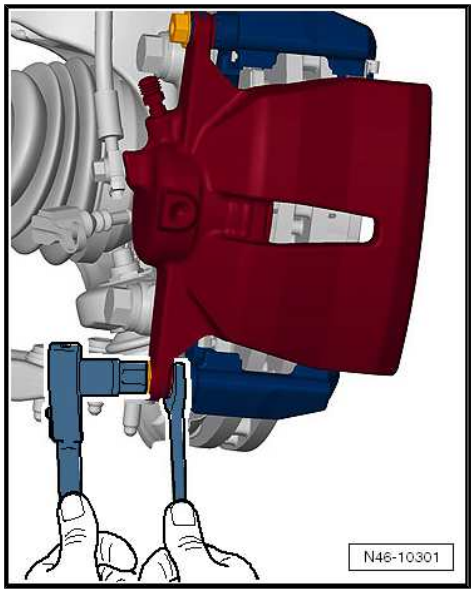

– Remove the brake caliper -1- and secure with wire so that the weight of the brake caliper does not stress or damage the brake hose.

– Remove the brake pads -2 and 3- from the brake carrier -4-.

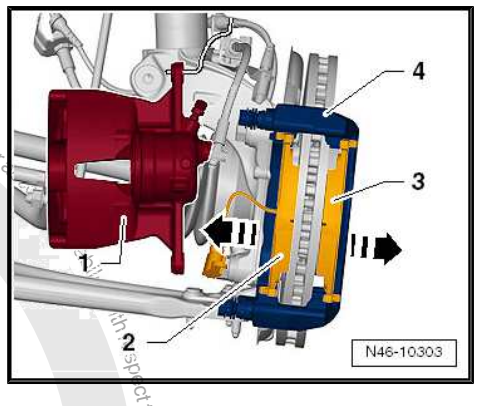

Cleaning

WARNING

Do not blow brake system using compressed air, the dust produced is harmful to health!

– Always thoroughly clean contact surfaces for brake pads at brake carrier, remove corrosion.

– Clean the brake caliper.

Note

Use only appropriate solvents for cleaning brake caliper.

Installing

Note

Before pressing pistons into cylinder using piston resetting tool, brake fluid must be extracted from brake fluid reservoir. Otherwise, especially if reservoir has been topped off, fluid will overflow and cause damage.

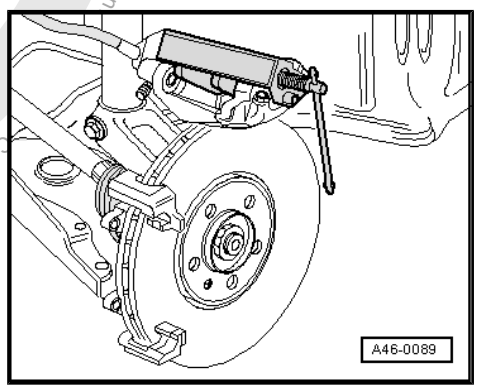

– Press the piston back.

– Lightly grease the pad guide surface on the brake carrier with lithium grease G 052150 A2.

Copyright by Volkswagen AG. Protected by copyright. Copying for private or commercial purposes, in part or in whole, is not permitted unless authorized by Volkswagen AG. Volkswagen AG does not guarantee or assume any liability with respect to the correctness of information.

– Place the brake pads -1- and the springs -2- into the opening in the brake carrier -3-.

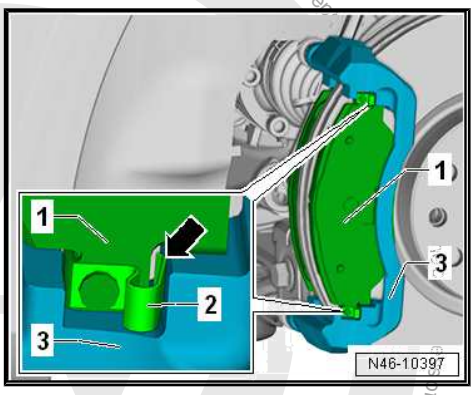

Note

After installing the brake pads -arrow-, check the seating of all the springs -2-.

– Place the brake caliper carefully on the brake carrier.

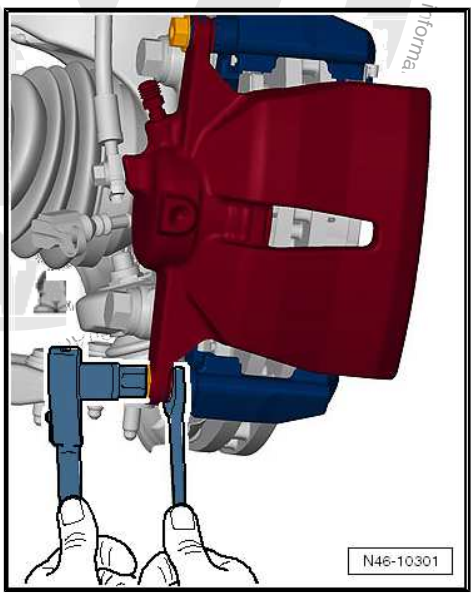

– Counterhold the guide pins and attach the brake caliper to the brake carrier with new self-locking screws.

– Connect the brake pad wear indicator connector.

– Install the wheels.

Tightening Specification

♦ Refer to
⇒ “1.1.1 Overview - Front Brakes (PC57 and C60)”, page 43

♦ Wheel bolts. Refer to ⇒ Suspension, Wheels, Steering; Rep. Gr. 44 ; Wheels and Tires; Wheel Bolt Tightening Specifications .

Note

♦ *After replacing brake pads, depress brake pedal firmly several times with vehicle stationary so that the brake pads are properly seated in their normal operating position.*

♦ *Check brake fluid level after replacing brake pad.*

1.3 Brake Caliper, Removing and Installing

Special tools and workshop equipment required

♦ Torque Wrench 1331 5-50Nm - VAG1331-

♦ Brake Pedal Actuator - VAG1869/2- .

Caution

This procedure contains mandatory replaceable parts. Refer to component overview prior to starting procedure.

Mandatory Replacement Parts

♦ Hex Bolt, Self-Locking - Brake caliper to brake carrier

Note

Work procedure applies only for replacing or when performing subsequent service work on brake caliper.

Volkswagen AG does not guarantee the accuracy of this data. Data is not permitted unless authorised by Volkswagen AG. Volkswagen AG, is not permitted for commercial purposes, in part or in whole, is not permitted for private or commercial purposes, in part or in whole, is not permitted unless authorised by Volkswagen AG. Volkswagen AG does not guarantee the accuracy of this data.

Removing

- Remove the wheels.
- Disconnect the brake pad wear indicator connector.
- Attach the bleeder bottle bleed hose -1- to the brake caliper bleed valve.
- Open the bleeder valve.

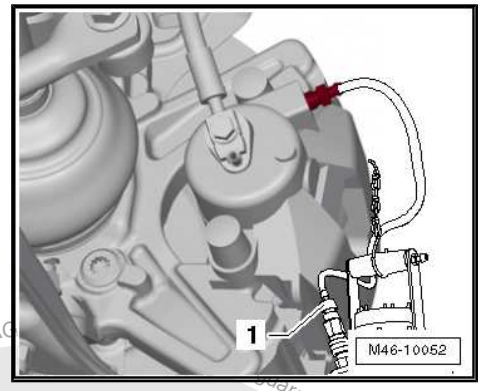

- Install the Brake Pedal Actuator - VAG1869/2-.
- Close the bleed valve and remove the bleeder bottle.
- Remove the brake hose.

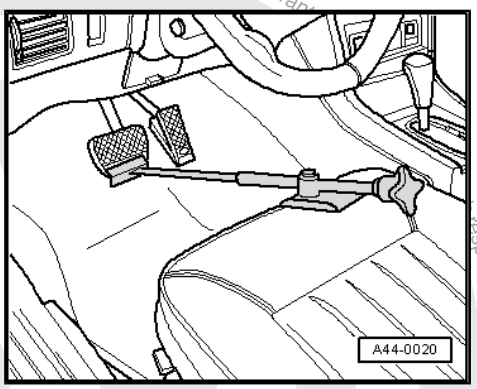

Protected by copyright. Copying for private or commercial purposes, in part or in whole, is not permitted unless authorised by Volkswagen AG. Copyright by Volkswagen AG. No liability is accepted with respect to the correctness of information in this document.

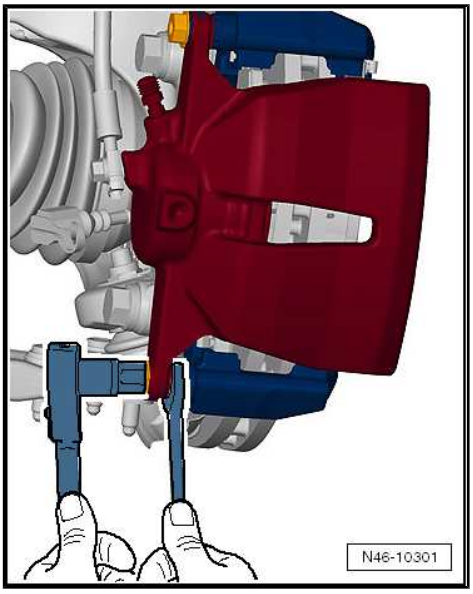

– Counterhold the guide pins and remove both bolts from the brake caliper.

– Remove the brake caliper from the brake carrier.

Installing

- Piston is pressed back.
- Both brake pads and their springs fit into the opening in the brake carrier.

– Place the brake caliper carefully on the brake carrier.

– Counterhold the guide pins and attach the brake caliper to the brake carrier with new self-locking screws.

– Attach the brake hose to the brake caliper.

– Remove the Brake Pedal Actuator - VAG1869/2- .

– Connect the brake pad wear indicator connector.

– Bleed the brake system. Refer to ⇒ “6 Hydraulic System”, page 132 .

– Install the wheels.

– Before moving the vehicle, press the brake pedal firmly several times to seat the brake pads correctly in their operating position.

– Check brake fluid level.

Tightening Specification

♦ Refer to ⇒ “1.1.1 Overview - Front Brakes (PC57 and C60)”, page 43

♦ Refer to ⇒ “1.1 Overview - Front Brake Caliper”, page 97

♦ Refer to ⇒ Suspension, Wheels, Steering; Rep. Gr. 44 ; Wheels and Tires; Wheel Bolt Tightening Specifications

Note

♦ *With the vehicle stationary, firmly press the brake pedal several times so that the brake pads in the operating condition properly sit in their respective position.*

♦ *Check the brake fluid level.*

1.4 Brake Carrier, Removing and Installing

Special tools and workshop equipment required

♦ Torque Wrench 1331 5-50Nm - VAG1331-

♦ Torque Wrench 1332 40-200Nm - VAG1332-

♦ Piston Resetting Tool - T10145-

Removing

Note

♦ *When removing, mark brake pads that will be used again. Install in the same position, otherwise braking effect will be uneven.*

♦ *Do not open the brake hydraulic system when removing!*

Copyright. Copying for private or commercial purposes, in part or in whole, is not permitted unless authorised by Volkswagen AG. Volkswagen AG does not guarantee or accept any liability with respect to the correctness of information in this document.

– Loosen the wheel bolts.

– Raise the vehicle.

– Remove the wheel.

– Remove brake pads. Refer to
⇒ “1.2 Brake Pads, Removing and Installing”, page 45 .

– Remove brake caliper and secure with wire so that the weight of the brake caliper does not burden or damage the brake hose.

– Unscrew the threaded connection -arrows- from the cover plate -1-.

– Remove the brake carrier -1-.

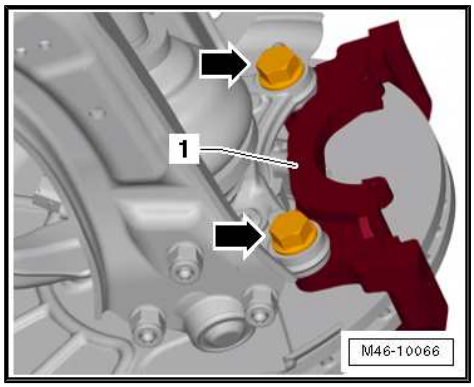

Cleaning

WARNING

Do not blow brake system using compressed air, the dust produced is harmful to health!

Note

Clean brake caliper with mineral spirits exclusively.

Installing

Install in reverse order of removal. Note the following:

Note

Before installing, clean carefully and check for wear and damage.

– Thoroughly clean the contact surfaces on the brake carrier for the brake pads and remove any corrosion.

If using the brake pads again, install the marked pads in the same location.

Note

Before pushing back the piston, extract some of the brake fluid out of the brake fluid reservoir using a bleeder bottle. Otherwise, especially if reservoir has been topped off, fluid will overflow and cause damage.

– Before moving the vehicle, press the brake pedal firmly several times to seat the brake pads correctly in their operating position.

– Check brake fluid level.

Tightening Specification

♦ Refer to
⇒ “1.1.1 Overview - Front Brakes (PC57 and C60)”, page 43

♦ Refer to ⇒ “1.1 Overview - Front Brake Caliper”, page 97

♦ Refer to ⇒ Suspension, Wheels, Steering; Rep. Gr. 44 ; Wheels and Tires; Wheel Bolt Tightening Specifications .

Protected by copyright. Copyright by Volkswagen AG. Volkswagen AG does not guarantee or accept any liability with respect to the correctness of information in this document. Copying for private or commercial purposes, in part or in whole, is not permitted unless authorised by Volkswagen AG.

1.5 Brake Rotor, Removing and Installing

Special tools and workshop equipment required

- Torque Wrench 1331 5-50Nm - VAG1331-
- Torque Wrench 1332 40-200Nm - VAG1332-
- Piston Resetting Tool - T10145-
- Torque Wrench 1783 - 2-10Nm - VAG1783-

Removing

Note

- *When removing, mark brake pads that will be used again. Install in the same position, otherwise braking effect will be uneven.*
- *Do not open the brake hydraulic system when removing!*

– Loosen the wheel bolts.

– Raise the vehicle.

– Remove the wheel.

– Remove the brake carrier. Refer to
⇒ “1.4 Brake Carrier, Removing and Installing”, page 49 .

Protected by copyright. Copying for private or commercial purposes, in part or in whole, is not permitted unless authorised by Volkswagen AG. Volkswagen AG does not guarantee or accept any liability with respect to the correctness of information in this document. Copyright by Volkswagen AG.

– Remove the bolt -arrow-.

– Remove the brake rotor -1-.

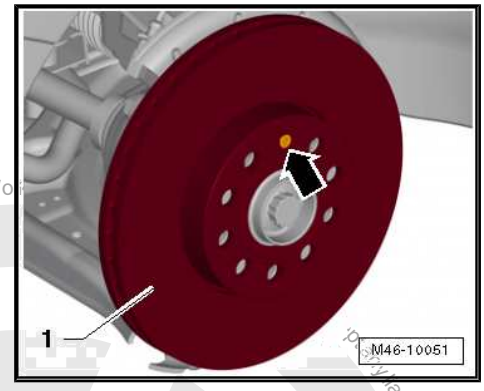

Cleaning

WARNING

Do not blow brake system using compressed air, the dust produced is harmful to health!

Note

Clean brake caliper with mineral spirits exclusively.

Installing

Install in reverse order of removal. Note the following:

Note

- *Carefully clean before installing.*
- *Check for wear, damage, dimension and damaged threading.*
- *Replace on both sides of axle if worn (Rotors replaced in pairs per axle).*

– Thoroughly clean the contact surfaces on the brake carrier for the brake pads and remove any corrosion.

If using the brake pads again, install the marked pads in the same location.

Note

Before pushing back the piston, extract some of the brake fluid out of the brake fluid reservoir using a bleeder bottle. Otherwise, especially if reservoir has been topped off, fluid will overflow and cause damage.

– Before moving the vehicle, press the brake pedal firmly several times to seat the brake pads correctly in their operating position.

– Check brake fluid level.

Tightening Specification

- Refer to ⇒ “1.1.1 Overview - Front Brakes (PC57 and C60)”, page 43
- Refer to ⇒ “1.1 Overview - Front Brake Caliper”, page 97
- Refer to ⇒ Suspension, Wheels, Steering; Rep. Gr. 44 ; Wheels and Tires; Wheel Bolt Tightening Specifications .

1.6 Brake Shield, Removing and Installing

Special tools and workshop equipment required

- Torque Wrench 1331 5-50Nm - VAG1331-
- Torque Wrench 1332 40-200Nm - VAG1332-

Protected by copyright. Copying for private or commercial purposes, in part or in whole, is not permitted unless authorised by Volkswagen AG. Volkswagen AG does not guarantee or assume any liability with respect to the correctness of information in this document. Copyright by Volkswagen AG.

- Piston Resetting Tool - T10145-
- Torque Wrench 1783 - 2-10Nm - VAG1783-

Removing

Note

- *When removing, mark brake pads that will be used again. Install in the same position, otherwise braking effect will be uneven.*
- *Do not open the brake hydraulic system when removing!*

– Loosen the wheel bolts.

– Raise the vehicle.

– Remove the wheel.

– Remove the brake carrier. Refer to
⇒ “1.4 Brake Carrier, Removing and Installing”, page 49 .

– Remove brake rotor. Refer to
⇒ “1.5 Brake Rotor, Removing and Installing”, page 51 .

Protected by copyright. Copying for private or commercial purposes, in part or in whole, is not permitted unless authorised by Volkswagen AG. Volkswagen AG does not guarantee or accept any liability with respect to the correctness of information in this document. Copyright by Volkswagen AG.

– Unscrew the threaded connection -arrows- from the cover plate -1-.

– Remove cover plate -1-.

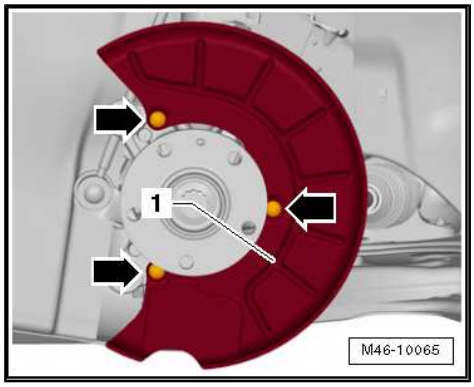

Cleaning

WARNING

Do not blow brake system using compressed air, the dust produced is harmful to health!

Note

Clean brake caliper with mineral spirits exclusively.

Installing

Install in reverse order of removal. Note the following:

Note

Before installing, clean carefully and check for wear and damage.

– Thoroughly clean the contact surfaces on the brake carrier for the brake pads and remove any corrosion.

If using the brake pads again, install the marked pads in the same location.

Note

Before pushing back the piston, extract some of the brake fluid out of the brake fluid reservoir using a bleeder bottle. Otherwise, especially if reservoir has been topped off, fluid will overflow and cause damage.

– Before moving the vehicle, press the brake pedal firmly several times to seat the brake pads correctly in their operating position.

– Check brake fluid level.

Tightening Specification

- Refer to ⇒ “1.1.1 Overview - Front Brakes (PC57 and C60)”, page 43
- Refer to ⇒ “1.1 Overview - Front Brake Caliper”, page 97
- Refer to ⇒ Suspension, Wheels, Steering; Rep. Gr. 44 ; Wheels and Tires; Wheel Bolt Tightening Specifications .

Protected by copyright. Copying for private or commercial purposes, in part or in whole, is not permitted unless authorised by Volkswagen AG. Volkswagen AG does not guarantee or accept any liability with respect to the correctness of information in this document. Copyright by Volkswagen AG.

Protected by copyright. Copying for private or commercial purposes, in part or in whole, is not permitted unless authorised by Volkswagen AG. Volkswagen AG does not guarantee or accept any liability with respect to the correctness of information in this document. Copyright by Volkswagen AG.

2 Rear Brakes

⇒ “2.1 Overview - Rear Brakes”, page 55

⇒ “2.2 Brake Pads, Removing and Installing”, page 60

⇒ “2.3 Brake Caliper, Removing and Installing”, page 66

⇒ “2.4 Brake Carrier, Removing and Installing”, page 72

⇒ “2.5 Brake Rotor, Removing and Installing”, page 74

⇒ “2.6 Brake Shield, Removing and Installing”, page 76

2.1 Overview - Rear Brakes

⇒ “2.1.1 Overview - Rear Brakes, Multi-Link Rear Axle”, page 55

⇒ “2.1.2 Overview - Rear Brakes, Torsion Beam Axle”, page 58

2.1.1 Overview - Rear Brakes, Multi-Link Rear Axle

Note

- *Use Brake Charger/Bleeder Unit - VAS5234- to extract brake fluid from brake fluid reservoir.*
- *Install the Brake Pedal Actuator - VAG1869/2- to relieve pressure before removing a brake caliper or disconnecting a brake hose.*
- *After replacing brake pads, depress brake pedal firmly several times with vehicle stationary so that the brake pads are properly seated in their normal operating position.*

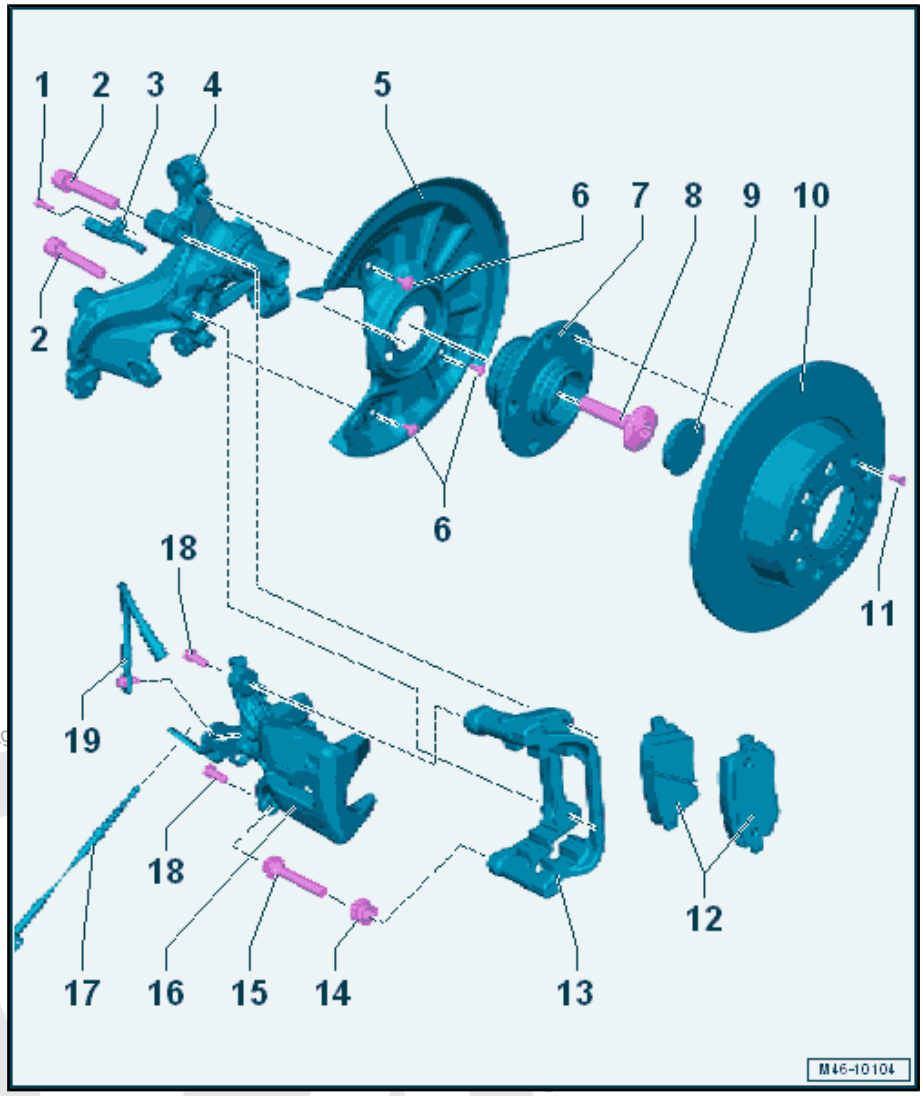

1 - Bolt

- ❑ 8 Nm

2 - Bolt

- ❑ 90 Nm +90°
- ❑ Quantity: 2
- ❑ Replace after removing

3 - Wheel Speed Sensor

- ❑ Overview. Refer to ⇒ “4.2 Overview - Rear Axle Speed Sensor”, page 36 .
- ❑ Removing and installing. Refer to ⇒ “4.4 Right/Left Rear ABS Wheel Speed Sensor G44 / G46 , Removing and Installing”, page 38 .
- ❑ Before inserting sensor, clean inner surface of mounting hole and coat with Hot Bolt Paste - G 052 112 A3- .

4 - Wheel Bearing Housing

- ❑ Refer to ⇒ Suspension, Wheels, Steering; Rep. Gr. 42 ; Wheel Bearing and Trailing Arm; Overview - Wheel Bearing .
- ❑ For allocation. Refer to the Parts Catalog

5 - Cover Plate

- ❑ Removing and installing. Refer to ⇒ “2.6.2 Brake Shield, Multi-Link Rear Axle, Removing and Installing”, page 78 .

6 - Bolt

- ❑ 12 Nm
- ❑ Quantity: 3

7 - Wheel Hub with Wheel Bearing

- ❑ Refer to ⇒ Suspension, Wheels, Steering; Rep. Gr. 42 ; Wheel Bearing and Trailing Arm; Overview - Wheel Bearing .
- ❑ For allocation. Refer to the Parts Catalog

8 - Bolt

- ❑ Replace after every removal
- ❑ Refer to ⇒ Suspension, Wheels, Steering; Rep. Gr. 42 ; Wheel Bearing and Trailing Arm; Overview - Wheel Bearing .
- ❑ For allocation. Refer to the Parts Catalog

9 - Dust Cap

- ❑ Replace after removing
- ❑ Refer to ⇒ Suspension, Wheels, Steering; Rep. Gr. 42 ; Wheel Bearing and Trailing Arm; Overview - Wheel Bearing .

10 - Brake Rotor

- ❑ Diameter 272 mm
- ❑ Brake rotor thickness 10 mm

Protected by copyright. Copyright by Volkswagen AG. Copying for private or commercial purposes, in part or in whole, is not permitted unless authorised by Volkswagen AG. The correctness of information in this document

- ❑ Wear limit: 8 mm
- ❑ Check the thickness. Refer to ⇒ Maintenance ; Booklet 36.1 ; Procedure Descriptions; Front and Rear Brake Rotors, Checking Brake Pad Thickness and Condition .
- ❑ Replace both sides if worn.
- ❑ Remove brake caliper before removing
- ❑ For allocation. Refer to the Parts Catalog

11 - Bolt

- ❑ 8 Nm

12 - Brake Pads

- ❑ Thickness without protective plate 11 mm
- ❑ Wear limit without protective plate 3 mm
- ❑ Check the thickness. Refer to ⇒ Maintenance ; Booklet 36.1 ; Procedure Descriptions; Front and Rear Brake Rotors, Checking Brake Pad Thickness and Condition .
- ❑ Always replace on both sides of the axle.
- ❑ Removing and installing. Refer to ⇒ “2.2 Brake Pads, Removing and Installing”, page 60 .

13 - Brake Carrier

- ❑ Overview. Refer to ⇒ “2.1 Overview - Rear Brake Caliper”, page 100 .
- ❑ Vehicles with guide pins and protective caps

14 - Cap

- ❑ Install on brake carrier and guide pin

15 - Guide Pin

- ❑ Lubricate before installing the cap

16 - Brake Caliper

- ❑ Overview. Refer to ⇒ “2.1 Overview - Rear Brake Caliper”, page 100 .
- ❑ Do not detach the brake line when replacing the brake pads.
- ❑ Removing and installing. Refer to ⇒ “2.3 Brake Caliper, Removing and Installing”, page 66 .
- ❑ Parking brake must be adjusted after repair work or replacing.
- ❑ Adjusting the parking brake. Refer to ⇒ “3.2 Parking Brake, Adjusting”, page 81 .

17 - Parking Brake Cable

- ❑ Overview. Refer to ⇒ “3.1 Overview - Parking Brake”, page 81 .
- ❑ Adjusting. Refer to ⇒ “3.2 Parking Brake, Adjusting”, page 81 .
- ❑ Removing and installing. Refer to ⇒ “3.3 Rear Brake Cable, Removing and Installing”, page 82 .

18 - Bolt

- ❑ 35 Nm
- ❑ Replace after removing
- ❑ Quantity: 2
- ❑ Self-locking

19 - Brake Line

- ❑ 35 Nm
- ❑ Vehicles with banjo bolt

Protected by copyright. Copying for private or commercial purposes, in part or in whole, is not permitted unless authorised by Volkswagen AG. Volkswagen AG does not guarantee or accept any liability with respect to the correctness of information in this document. Copyright by Volkswagen AG.

2.1.2 Overview - Rear Brakes, Torsion Beam Axle

Reproduction of any part or in whole, in any form or medium without express permission is prohibited. It may not be reproduced, distributed or published by any other entity than authorised by Volkswagen AG. Volkswagen AG does not guarantee or accept any liability with respect

Note

- *Use Brake Charger/Bleeder Unit - VAS5234- to extract brake fluid from brake fluid reservoir.*
- *Install the Brake Pedal Actuator - VAG1869/2- to relieve pressure before removing a brake caliper or disconnecting a brake hose.*
- *After replacing brake pads, depress brake pedal firmly several times with vehicle stationary so that the brake pads are properly seated in their normal operating position.*

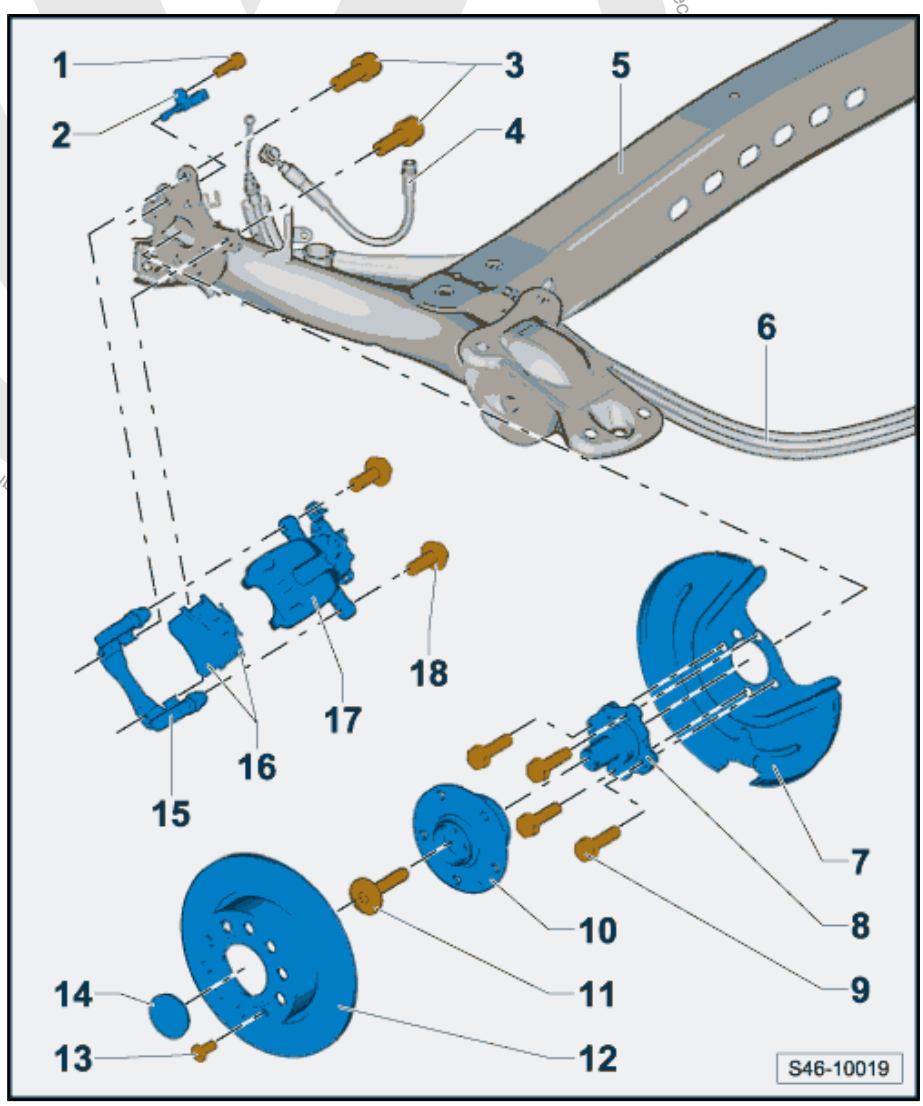

1 - Bolt

- ❑ 8 Nm

2 - Wheel Speed Sensor

- ❑ Overview. Refer to ⇒ “4.2 Overview - Rear Axle Speed Sensor”, page 36 .
- ❑ Removing and installing. Refer to ⇒ “4.4 Right/Left Rear ABS Wheel Speed Sensor G44 / G46 , Removing and Installing”, page 38 .
- ❑ Before inserting sensor, clean inner surface of mounting hole and coat with Hot Bolt Paste - G 052 112 A3- .

3 - Bolt

- ❑ 90 Nm +90°
- ❑ Replace after removing
- ❑ Quantity: 2

4 - Brake Line

- ❑ 35 Nm

5 - Subframe

- ❑ Refer to ⇒ Suspension, Wheels, Steering; Rep. Gr. 42 ; Rear Axle; Overview - Rear Axle

6 - Parking Brake Cable

- ❑ Overview. Refer to ⇒ “3.1 Overview - Parking Brake”, page 81 .
- ❑ Adjusting. Refer to ⇒ “3.2 Parking Brake, Adjusting”, page 81 .
- ❑ Removing and installing. Refer to ⇒ “3.3 Rear Brake Cable, Removing and Installing”, page 82 .

7 - Cover Plate

- ❑ For allocation. Refer to the Parts Catalog

8 - Axle Stub

- ❑ Refer to ⇒ Suspension, Wheels, Steering; Rep. Gr. 42 ; Wheel Bearing and Trailing Arm; Overview - Wheel Bearing .

9 - Bolt

- ❑ 30 Nm +90°

- ❑ Replace after removing
- ❑ Quantity: 4

10 - Wheel Hub with Wheel Bearing

- ❑ Refer to ⇒ Suspension, Wheels, Steering; Rep. Gr. 42 ; Wheel Bearing and Trailing Arm; Overview - Wheel Bearing .
- ❑ For allocation. Refer to the Parts Catalog

11 - Bolt

- ❑ Replace after removing
- ❑ Refer to ⇒ Suspension, Wheels, Steering; Rep. Gr. 42 ; Wheel Bearing and Trailing Arm; Overview - Wheel Bearing .

12 - Brake Rotor

- ❑ Diameter 252 mm
- ❑ Brake rotor thickness 10 mm
- ❑ Wear limit: 8 mm
- ❑ Replace both sides if worn.
- ❑ Remove brake caliper before removing
- ❑ For allocation. Refer to the Parts Catalog

13 - Bolt

- ❑ 8 Nm

14 - Dust Cap

- ❑ Replace after every removal
- ❑ Refer to ⇒ Suspension, Wheels, Steering; Rep. Gr. 42 ; Wheel Bearing and Trailing Arm; Overview - Wheel Bearing .

15 - Brake Carrier

- ❑ Overview. Refer to ⇒ “2.1 Overview - Rear Brake Caliper”, page 100 .
- ❑ Vehicles with guide pins and protective caps

16 - Brake Pads

- ❑ Brake pad thickness without protective plate 11 mm
- ❑ Wear limit without protective plate 3 mm
- ❑ Always replace on both sides of the axle.
- ❑ Removing and installing. Refer to ⇒ “2.2.2 Brake Pads, Torsion Beam Axle, Removing and Installing”, page 63 .

17 - Brake Caliper

- ❑ Overview. Refer to ⇒ “2.1 Overview - Rear Brake Caliper”, page 100 .
- ❑ Do not detach the brake line when replacing the brake pads.
- ❑ Removing and installing. Refer to ⇒ “2.3 Brake Caliper, Removing and Installing”, page 66 .
- ❑ Parking brake must be adjusted after repair work or replacing.
- ❑ Adjusting the parking brake. Refer to ⇒ “3.2 Parking Brake, Adjusting”, page 81 .

18 - Bolt

- ❑ 35 Nm
- ❑ Replace after removing
- ❑ Quantity: 2
- ❑ Self-locking

Volkswagen AG does not guarantee or accept any liability with respect to the correctness of information in this document. Copyright by Volkswagen AG. Protected by copyright. Copying for private or commercial purposes, in part or in whole, is not permitted unless authorised by Volkswagen AG.

2.2 Brake Pads, Removing and Installing

⇒ "2.2.1 Brake Pads, Multi-Link Rear Axle, Removing and Installing", page 60

⇒ "2.2.2 Brake Pads, Torsion Beam Axle, Removing and Installing", page 63

2.2.1 Brake Pads, Multi-Link Rear Axle, Removing and Installing

Special tools and workshop equipment required

- Torque Wrench 1331 5-50Nm - VAG1331-
- Brake Caliper Tool - T10165-

Caution

This procedure contains mandatory replaceable parts. Refer to component overview prior to starting procedure.

Mandatory Replacement Parts

- Bolt - Wheel bearing housing to brake carrier
- Bolt - Wheel hub with wheel bearing
- Dust cap
- Bolts - Brake caliper to brake carrier

Installed Location on a Multi-Link Suspension.

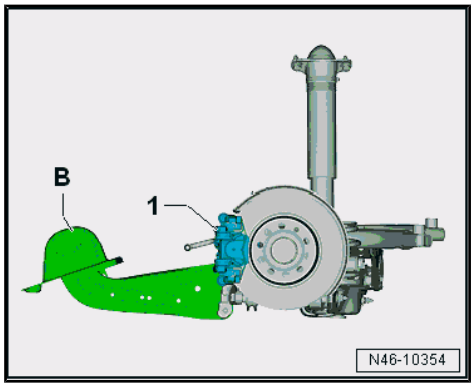

1 - Brake caliper

B - Multi-link suspension.

Removing

Note

When removing, mark brake pads that will be used again. Install in the same position, otherwise braking effect will be uneven.

WARNING

Adjust the brake piston is permitted only with the Brake Caliper Tool - T10165- .

– Loosen the wheel bolts.
– Raise the vehicle.
– Remove the wheel.

Protected by copyright. Copying for private or commercial purposes, in part or in whole, is not permitted unless authorised by Volkswagen AG. Volkswagen AG does not guarantee or accept any liability with respect to the correctness of information in this document. Copyright by Volkswagen AG.

– Remove the brake caliper -1- from the brake carrier.
– To do this, remove bolts -arrows-.
– While doing so counterhold the guide pin on the brake carrier with a suitable wrench.
– Remove brake caliper and secure with wire so that the weight of the brake caliper does not burden or damage the brake hose.

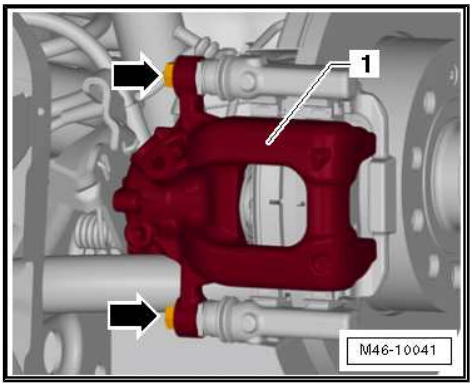

– Remove the brake pads -arrows- from the brake carrier.

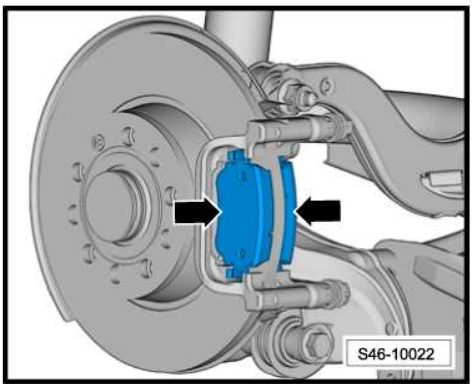

Cleaning

WARNING

Do not blow brake system using compressed air, the dust produced is harmful to health!

Use only Appropriate Solvents for Cleaning Brake Caliper

– Thoroughly clean the contact surfaces -arrows -for the brake pads on the brake carrier -1- and remove any corrosion.

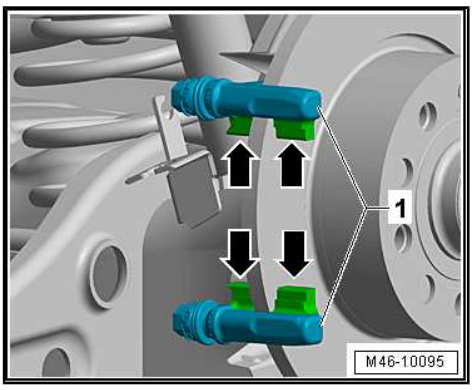

Installing

Install in reverse order of removal. Note the following:

Note

- *The repair kit has 4 self-locking screws for installing the brake caliper. Always use these.*
- *After replacing brake pads, depress brake pedal firmly several times with vehicle stationary so that the brake pads are properly seated in their normal operating position.*
- *Check brake fluid level after replacing brake pad.*

If using the brake pads again, install the marked pads in the same location.

Protected by copyright. Copying for private or commercial purposes, in part or in whole, is not permitted unless authorised by Volkswagen AG. Volkswagen AG does not guarantee or accept any liability with respect to the correctness of information in this document.

Press the Piston Back.

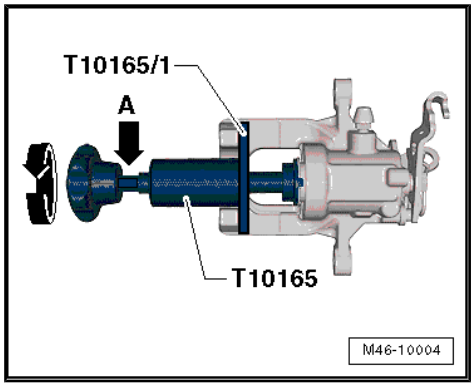

WARNING

Before pushing back the piston, extract some of the brake fluid out of the brake fluid reservoir using a bleeder bottle. Otherwise, especially if reservoir has been topped off, fluid will overflow and cause damage.

– Install the Brake Caliper Tool - T10165- so that the collar on the Resetting & Extracting Tool - Plate - T10165/1- is touching.

– Use the Resetting & Extracting Tool - Plate - T10165/1- to help you bolt it on.

– Turn the thumbwheel on the Brake Caliper Tool - T10165- to the right to install the piston. Be careful not to damage the piston collar.

Note

For pistons that are difficult to move, an open-end wrench (size 13 mm) can be applied at the appropriate wrench surface -arrow A-.

– check the protective caps for damage and correct seating -item 9- ⇒ Item 9 (page 102) .

– Check the guide pins for ease of movement -item 8- ⇒ Item 8 (page 102) .

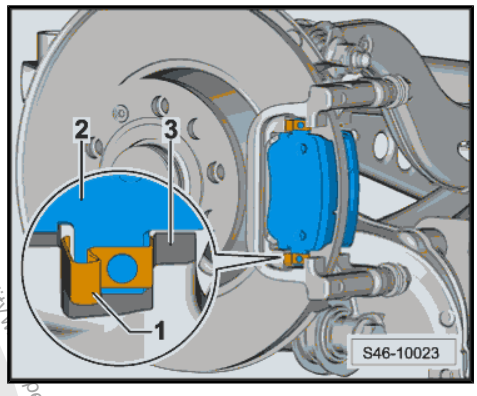

– install the brake pads -2- with the spring -1- in the opening in the brake carrier -3-.

– Carefully install the brake caliper on the brake carrier.

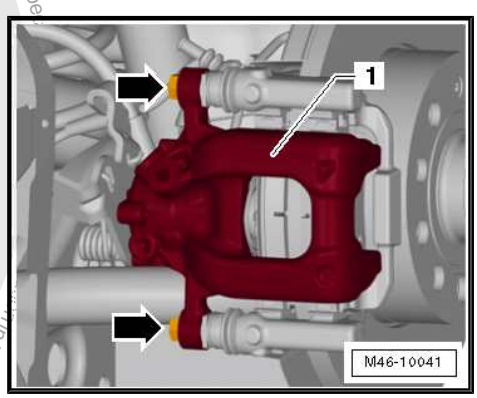

– Tighten the brake caliper -1- to the brake carrier.

– Use new self-locking bolts -arrows-.

– Tighten the brake caliper to the brake carrier.

– While tightening counterhold the guide pin with a suitable wrench.

– After replacing brake pads, depress brake pedal firmly several times with vehicle stationary so that the brake pads are properly seated in their normal operating position.

– Check brake fluid level.

Protected by copyright. Copying for private or commercial purposes, in part or in whole, is not permitted unless authorised by Volkswagen AG. Volkswagen AG does not guarantee or accept any liability with this document. Copyright by Volkswagen AG.

– Brake fluid level must be between the markings -1- and -2-.

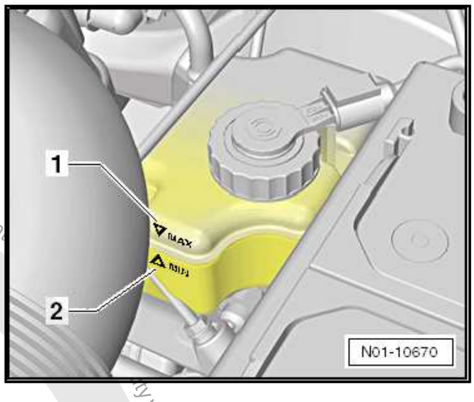

Tightening Specification

- Refer to ⇒ “2.1 Overview - Rear Brakes”, page 55
- Refer to ⇒ “2.1 Overview - Rear Brake Caliper”, page 100
- Wheel bolts. Refer to ⇒ Suspension, Wheels, Steering; Rep. Gr. 44 ; Wheels and Tires; Wheel Bolt Tightening Specifications .

2.2.2 Brake Pads, Torsion Beam Axle, Removing and Installing

Special tools and workshop equipment required

- Torque Wrench 1331 5-50Nm - VAG1331-
- Brake Caliper Tool - T10165-

> **Caution**
>
> *This procedure contains mandatory replaceable parts. Refer to component overview prior to starting procedure.*

Mandatory Replacement Parts

- Bolt - Subframe to brake carrier
- Bolt - Axle stub to subframe
- Bolt - Wheel hub with wheel bearing
- Dust cap
- Bolts - Brake caliper to brake carrier

Installed Location of the Brake Caliper on a Torsion Beam Axle

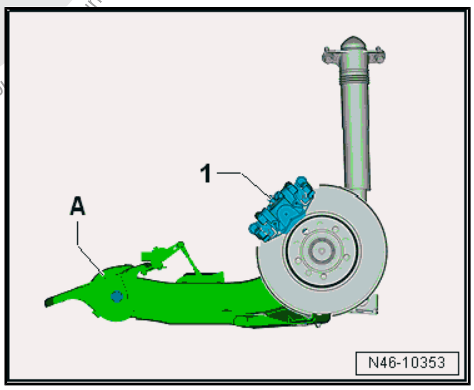

1 - Brake caliper

A - Torsion beam axle

Removing

> **Note**
>
> *When removing, mark brake pads that will be used again. Install in the same position, otherwise braking effect will be uneven.*

> **WARNING**
>
> *Adjust the brake piston is permitted only with the Brake Caliper Tool - T10165- .*

– Loosen the wheel bolts.

– Raise the vehicle.

– Remove the wheel.

Protected by copyright. Copying for private or commercial purposes, in part or in whole, is not permitted unless authorised by Volkswagen AG. Volkswagen AG does not guarantee or accept any liability with respect to the correctness of information in this document. Copyright by Volkswagen AG.

– Remove the brake caliper -1- from the brake carrier.

– Remove the bolts -arrows-.

– While doing so counterhold the guide pin on the brake carrier with a suitable wrench.

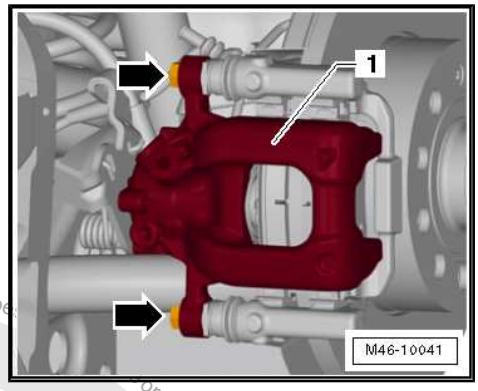

– Remove brake caliper -1- and secure with wire -A- so that the weight of the brake caliper does not stress or damage the brake hose.

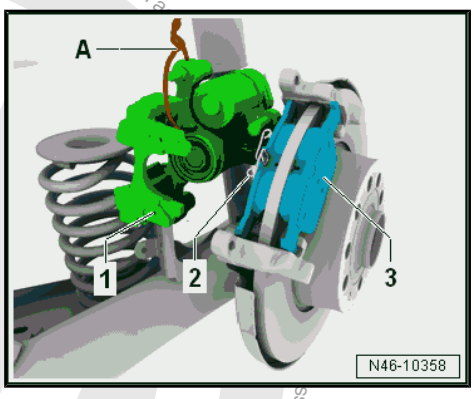

– Remove the brake pads -arrows-.

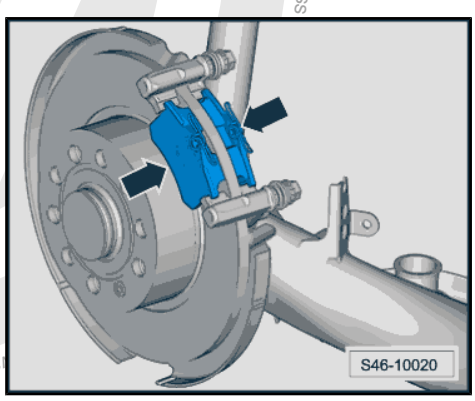

Cleaning

> **WARNING**
>
> ***Do not blow brake system using compressed air, the dust produced is harmful to health!***

Use only Appropriate Solvents for Cleaning Brake Caliper

– Thoroughly clean the contact surfaces -arrows -for the brake pads on the brake carrier -1- and remove any corrosion.

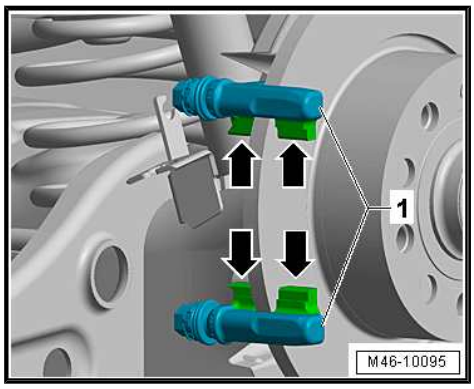

Installing

Install in reverse order of removal. Note the following:

Note

- *The repair kit has four self-locking screws for installing the brake caliper. Always use these.*
- *After replacing brake pads, depress brake pedal firmly several times with vehicle stationary so that the brake pads are properly seated in their normal operating position.*
- *Check brake fluid level after replacing brake pad.*

If using the brake pads again, install the marked pads in the same location.

Protected by copyright. Copying for private or commercial purposes, in part or in whole, is not permitted unless authorised by Volkswagen AG. Volkswagen AG does not give any warranty or assumption of liability for any other use.

Protected by copyright. Copying, distribution or commercial purposes, in part or in whole, is not permitted unless authorised by Volkswagen AG. Volkswagen AG does not guarantee or accept any liability with respect to the correctness of information in this document. Copyright by Volkswagen AG.

Press the Piston Back.

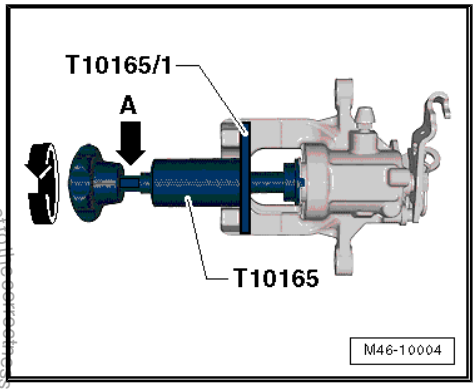

WARNING

Before pushing back the piston, extract some of the brake fluid out of the brake fluid reservoir using a bleeder bottle. Otherwise, especially if reservoir has been topped off, fluid will overflow and cause damage.

– Install the Brake Caliper Tool - T10165- so that the collar on the Resetting & Extracting Tool - Plate - T10165/1- is touching.
– Use the Resetting & Extracting Tool - Plate - T10165/1- to help you bolt it on.
– Turn the thumbwheel on the Brake Caliper Tool - T10165- to the right to install the piston. Be careful not to damage the piston collar.

Note

For pistons that are difficult to move, an open-end wrench (size 13 mm) can be applied at the appropriate wrench surface -arrow A-.

– check the protective caps for damage and correct seating -item 9- ⇒ Item 9 (page 102) .
– Check the guide pins for ease of movement -item 8- ⇒ Item 8 (page 102) .

– Install new brake pads -arrows- in the brake carrier.
– Carefully install the brake caliper on the brake carrier.

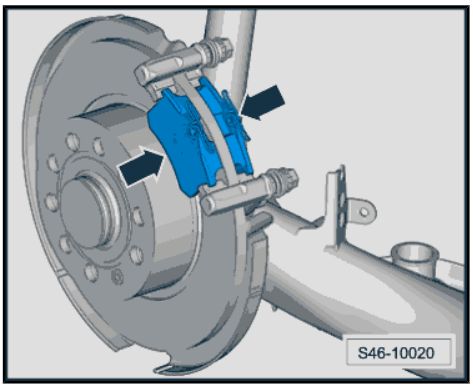

– Tighten the brake caliper -1- to the brake carrier.
– Use new self-locking bolts -arrows-.
– Tighten the brake caliper to the brake carrier.
– While tightening counterhold the guide pin with a suitable wrench.
– After replacing brake pads, depress brake pedal firmly several times with vehicle stationary so that the brake pads are properly seated in their normal operating position.
– Check brake fluid level.

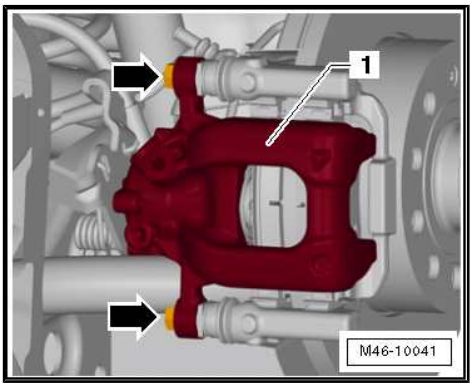

– Brake fluid level must be between the markings -1- and -2-.

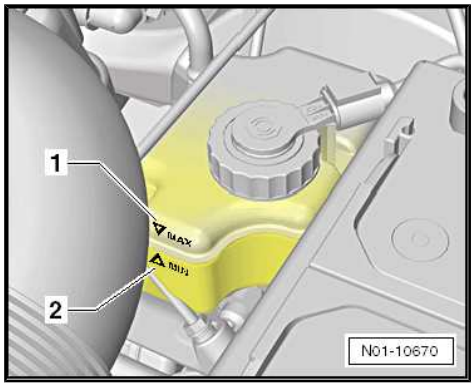

Tightening Specification

- Refer to ⇒ “2.1 Overview - Rear Brakes”, page 55
- Refer to ⇒ “2.1 Overview - Rear Brake Caliper”, page 100
- Wheel bolts. Refer to ⇒ Suspension, Wheels, Steering; Rep. Gr. 44 ; Wheels and Tires; Wheel Bolt Tightening Specifications .

2.3 Brake Caliper, Removing and Installing

⇒ “2.3.1 Brake Carrier, Multi-Link Rear Axle, Removing and Installing”, page 66

⇒ “2.3.2 Brake Caliper, Torsion Beam Axle, Removing and Installing”, page 69

2.3.1 Brake Carrier, Multi-Link Rear Axle, Removing and Installing

Special tools and workshop equipment required

- Torque Wrench 1331 5-50Nm - VAG1331-
- Brake Pedal Actuator - VAG1869/2- .

Caution

This procedure contains mandatory replaceable parts. Refer to component overview prior to starting procedure.

Mandatory Replacement Parts

- Bolt - Wheel bearing housing to brake carrier
- Bolt - Wheel hub with wheel bearing
- Dust cap
- Bolts - Brake caliper to brake carrier

Removing

Note

Work procedure applies only for replacing or when performing subsequent service work on brake caliper.

– Loosen the wheel bolts.

– Raise the vehicle.

– Remove the wheel.

Protected by copyright. Copying for private or commercial purposes, in part or in whole, is not permitted unless authorised by Volkswagen AG. Volkswagen AG does not guarantee or accept any liability with respect to the correctness of information in this document. Copyright by Volkswagen AG.

Protected by copyright. Copying for private or commercial purposes, in part or in whole, is not permitted unless authorised by Volkswagen AG. Volkswagen AG does not guarantee or accept any liability with respect to the correctness of information.

– Push the lever on the brake caliper -2- in the direction of the -arrow-.
– Disengage the parking brake cable -1- from the lever on the brake caliper -2-.
– Squeeze the retainers -3-.
– Remove the parking brake cable -1- from the bracket on the brake caliper -4-.

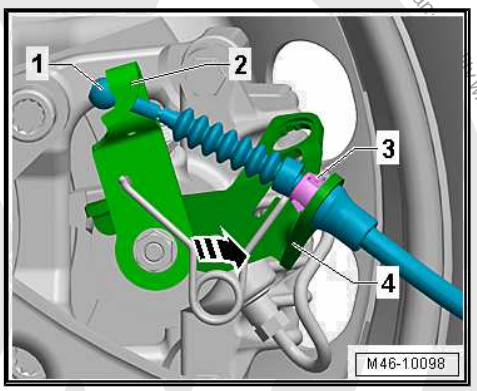

– Connect the bleed hose -1- from the bleeder bottle to the brake caliper bleed valve and open the bleed valve.

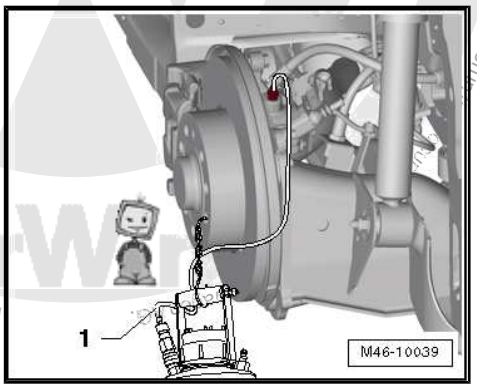

– Install the Brake Pedal Actuator - VAG1869/2- .
– Close the bleed valve and remove the bleeder bottle.

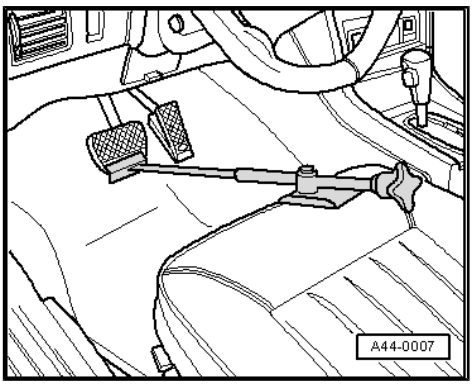

– Remove the brake hose -1- from the brake caliper -2-.

– To do this, remove banjo bolt -arrow-.

– Close the brake line and threaded hole immediately using Sealing Plugs from the Repair Kit - 1H0 698 311 A- .

– Counterhold the guide bolt and remove the bolts -arrows- from the brake caliper -1-.

– Remove the brake caliper from the brake carrier.

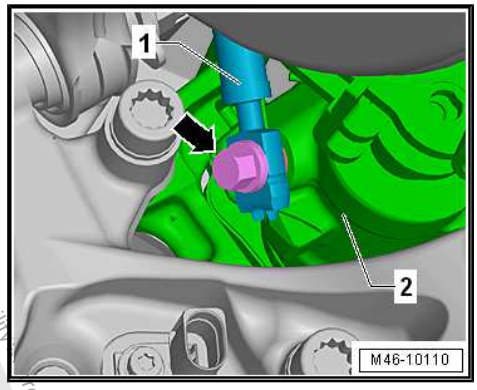

Cleaning

WARNING

Do not blow brake system using compressed air, the dust produced is harmful to health!

Note

Use only appropriate solvents for cleaning brake system.

Installing

Install in reverse order of removal. Note the following:

- Piston is pressed back.
- Brake pads sit in retaining springs on the brake carrier.

– Attach the brake caliper -1- with the new self-locking screws -arrows- to the brake carrier.

– Tighten the brake hose with banjo bolt on the brake caliper.

– Remove the Brake Pedal Actuator - VAG1869/2- .

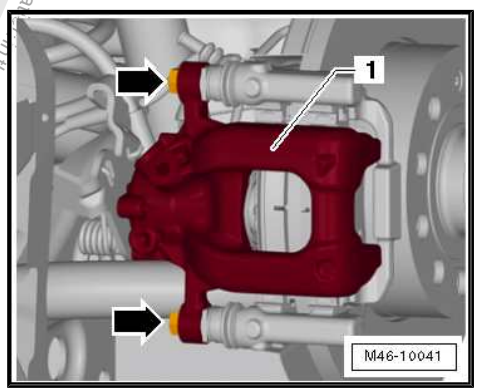

Protected by copyright. Copying for private or commercial purposes, in part or in whole, is not permitted unless authorised by Volkswagen AG. Volkswagen AG does not guarantee or accept any liability with respect to the correctness of information in this document. Copyright by Volkswagen AG.

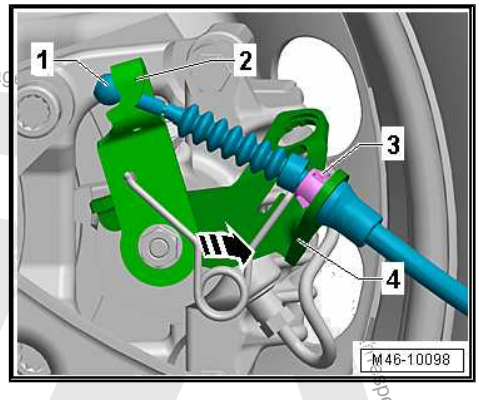

– Guide the parking brake cable -1- through the bracket -4- on the brake caliper until the tabs -3- engage.
– Push the lever on the brake caliper -2- in direction of -arrow-.
– Attach the parking brake cable -1- to the lever -2- on the brake caliper.
– Pre-bleed the brake caliper before installing. Refer to ⇒ “2.2.2 Brake Caliper, Pre-Bleeding”, page 105 .
– Bleed the brake system. Refer to ⇒ “6 Hydraulic System”, page 132 .
– Adjust parking brake. Refer to ⇒ “3.2 Parking Brake, Adjusting”, page 81 .
– Install wheel and tighten.
– Before moving the vehicle, press the brake pedal firmly several times to seat the brake pads correctly in their operating position.
– Check brake fluid level.

Tightening Specification

- Refer to ⇒ “2.1 Overview - Rear Brakes”, page 55
- Refer to ⇒ “2.1 Overview - Rear Brake Caliper”, page 100
- Wheel bolts. Refer to ⇒ Suspension, Wheels, Steering; Rep. Gr. 44 ; Wheels and Tires; Wheel Bolt Tightening Specifications .

2.3.2 Brake Caliper, Torsion Beam Axle, Removing and Installing

Special tools and workshop equipment required

- Torque Wrench 1331 5-50Nm - VAG1331-
- Brake Pedal Actuator - VAG1869/2- .

Caution

This procedure contains mandatory replaceable parts. Refer to component overview prior to starting procedure.

Mandatory Replacement Parts

- Bolt - Subframe to brake carrier
- Bolt - Axle stub to subframe
- Bolt - Wheel hub with wheel bearing
- Dust cap
- Bolts - Brake caliper to brake carrier

Protected by copyright. Copyright by Volkswagen AG.

Removing

Note

- *Work procedure applies only for replacing or when performing subsequent service work on brake caliper.*
- *When removing, mark brake pads that will be used again. Install in the same position, otherwise braking effect will be uneven.*

– Loosen the wheel bolts.
– Raise the vehicle.
– Remove the wheel.
– Push the lever on the brake caliper -2- in the direction of the -arrow-.
– Disengage the parking brake cable -1- from the lever on the brake caliper -2-.
– Squeeze the retainers -3-.
– Remove the parking brake cable -1- from the bracket -4- on the brake caliper.

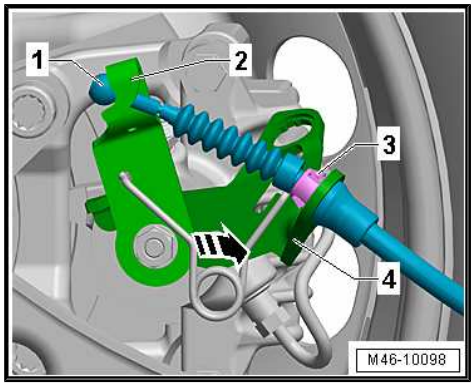

– Connect the bleed hose -1- from the bleeder bottle to the brake caliper bleed valve and open the bleed valve.

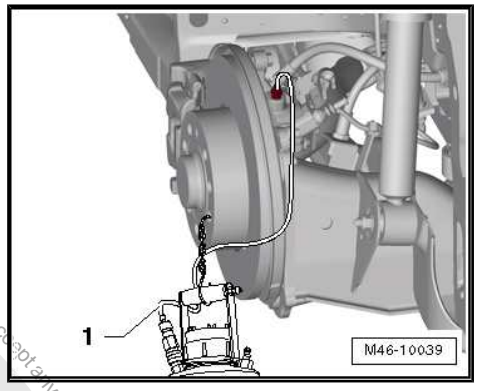

– Install the Brake Pedal Actuator - VAG1869/2- .
– Close the bleed valve and remove the bleeder bottle.

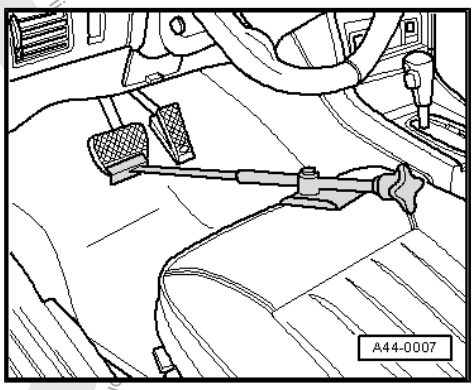

Protected by copyright. Copying for private or commercial purposes, in part or in whole, is not permitted unless authorised by Volkswagen AG. Volkswagen AG does not guarantee or accept any liability with respect to the correctness of information in this document. Copyright by Volkswagen AG.

– Remove the brake hose -1- and banjo bolt -2- to the brake caliper.

– Close the brake hose immediately with Sealing Plugs from the Repair Kit - 1H0 698 311 A- .

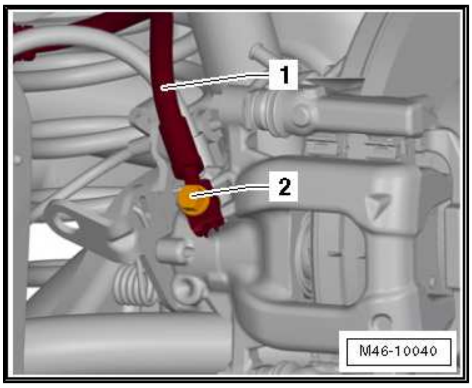

– Remove the brake caliper -1- from the brake carrier.

– To do this, remove bolts -arrows-.

– Remove the brake caliper from the brake carrier.

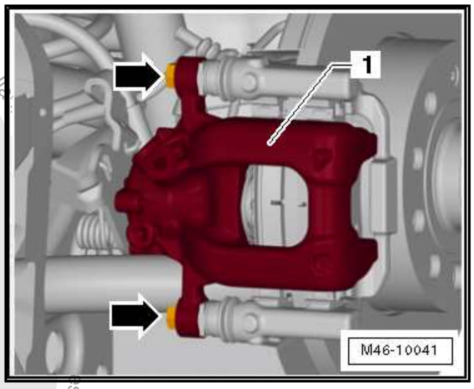

Cleaning

WARNING

Do not blow brake system using compressed air, the dust produced is harmful to health!

Note

Use only appropriate solvents for cleaning brake system.

Installing

Install in reverse order of removal. Note the following:

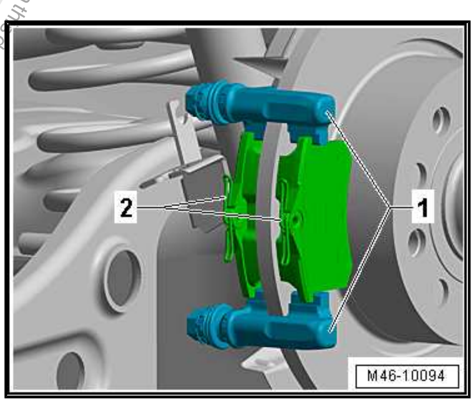

Note

♦ *Replace the self-locking screws for installing the brake caliper.*

♦ *After installing, press the brake pedal several times firmly to properly seat brake pads in their normal operating position.*

• Piston is pressed back. Refer to ⇒ page 65 .

• Brake pads sit on the brake carrier.

– check the protective caps for damage and correct seating -item 9- ⇒ Item 9 (page 102) .

– Check the guide pins for ease of movement -item 8- ⇒ Item 8 (page 102) .

Protected by copyright. Copying for private or commercial purposes, in part or in whole, is not permitted unless authorised by Volkswagen AG. Volkswagen AG does not guarantee or accept any liability with respect to the correctness of information in this document. Copyright by Volkswagen AG.

Protected by copyright. Copying for private or commercial purposes, in part or in whole, is not permitted unless authorised by Volkswagen AG. Volkswagen AG does not guarantee or accept

– Attach the brake caliper -1- with the new self-locking screws -arrows- to the brake carrier.

– While tightening counterhold the guide pin with a suitable wrench.

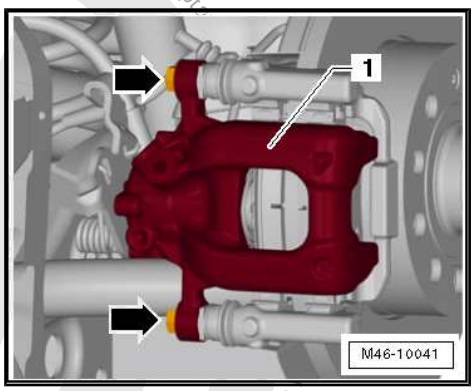

– Attach the brake hose connection -1- and the banjo bolt -2- to the brake caliper.

– Remove the Brake Pedal Actuator - VAG1869/2- .

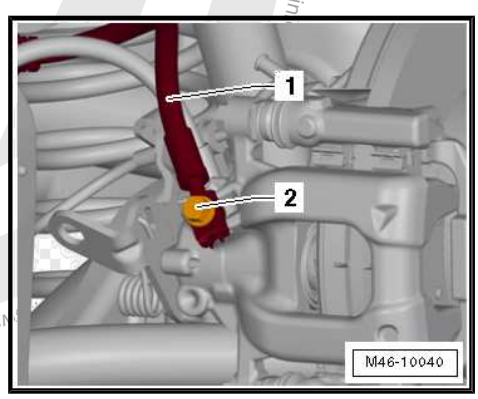

– Push the parking brake cable -1- through the bracket -4- on the brake caliper until the tabs -3- engage.

– Push the lever on the brake caliper -2- in the direction of the -arrow-.

– Engage the parking brake cable -1- in the lever on the brake caliper -2-.

– Bleed the brake system. Refer to ⇒ “6 Hydraulic System”, page 132 .

– Adjust parking brake. Refer to ⇒ “3.2 Parking Brake, Adjusting”, page 81 .

– Before moving the vehicle, press the brake pedal firmly several times to seat the brake pads correctly in their operating position.

– Check brake fluid level.

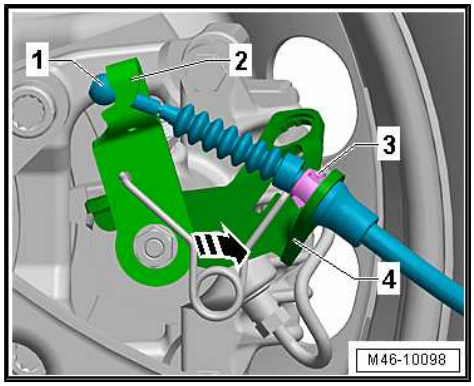

Tightening Specification

- Refer to ⇒ “2.1 Overview - Rear Brakes”, page 55
- Refer to ⇒ “2.1 Overview - Rear Brake Caliper”, page 100
- For installing the wheel bolts. Refer to ⇒ Suspension, Wheels, Steering; Rep. Gr. 44 ; Wheels and Tires; Wheel Bolt Tightening Specifications .

2.4 Brake Carrier, Removing and Installing

Special tools and workshop equipment required

- Torque Wrench 1331 5-50Nm - VAG1331-
- Torque Wrench 1332 40-200Nm - VAG1332-
- Brake Caliper Tool - T10165-
- Multipoint Socket - T10035-

Caution

This procedure contains mandatory replaceable parts. Refer to component overview prior to starting procedure.

Protected by copyright. Copying for private or commercial purposes, in part or in whole, is not permitted unless authorised by Volkswagen AG. Volkswagen AG does not guarantee or accept any liability with respect to the correctness of information in this document. Copyright by Volkswagen AG.

Mandatory Replacement Parts

- Bolt - Wheel bearing housing to brake carrier
- Bolt - Wheel hub with wheel bearing
- Dust cap
- Bolts - Brake caliper to brake carrier

Removing

Note

- *When removing, mark brake pads that will be used again. Install in the same position, otherwise braking effect will be uneven.*
- *Do not open the brake hydraulic system when removing!*

– Loosen the wheel bolts.

– Raise the vehicle.

– Remove the wheel.

– Remove brake pads. Refer to ⇒ “2.2.1 Brake Pads, Multi-Link Rear Axle, Removing and Installing”, page 60 .

– Remove brake caliper and secure with wire so that the weight of the brake caliper does not burden or damage the brake hose.

– Unscrew the threaded connection -arrows- on the brake carrier -1-.

– Remove the brake carrier -1-.

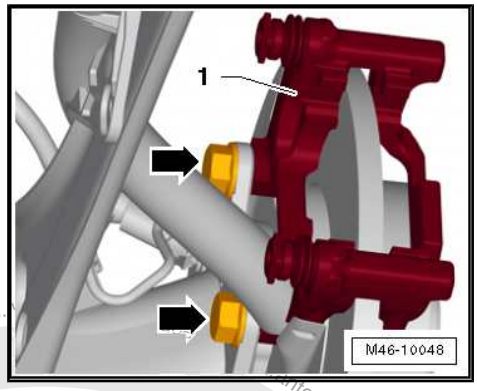

Cleaning

WARNING

Do not blow brake system using compressed air, the dust produced is harmful to health!

Note

Use only appropriate solvents for cleaning brake system.

Installing

Install in reverse order of removal. Note the following:

– Thoroughly clean the contact surfaces on the brake carrier for the brake pads and remove any corrosion.

If using the brake pads again, install the marked pads in the same location.

– Secure the brake caliper with new self-locking bolts. Refer to the Parts Catalog.

– Install wheel and tighten.

– Before moving the vehicle, press the brake pedal firmly several times to seat the brake pads correctly in their operating position.

– Check brake fluid level.

Tightening Specification

- Refer to ⇒ “2.1 Overview - Rear Brakes”, page 55
- Refer to ⇒ “2.1 Overview - Rear Brake Caliper”, page 100
- Wheel bolts. Refer to ⇒ Suspension, Wheels, Steering; Rep. Gr. 44 ; Wheels and Tires; Wheel Bolt Tightening Specifications .

2.5 Brake Rotor, Removing and Installing

Special tools and workshop equipment required

- Torque Wrench 1331 5-50Nm - VAG1331-
- Torque Wrench 1332 40-200Nm - VAG1332-
- Brake Caliper Tool - T10165-

Removing

Note

- *When removing, mark brake pads that will be used again. Install in the same position, otherwise braking effect will be uneven.*
- *Do not open the brake hydraulic system when removing!*

– Loosen the wheel bolts.

Copyright by Volkswagen AG. Copying for private or commercial purposes, in part or in whole, is not permitted unless authorised by Volkswagen AG. Volkswagen AG does not guarantee or accept any liability with respect to the correctness of information in this document.

– Raise the vehicle.
– Remove the wheel.
– Remove brake pads. Refer to
⇒ “2.2.1 Brake Pads, Multi-Link Rear Axle, Removing and Installing”, page 60 .
– Remove brake caliper and secure with wire so that the weight of the brake caliper does not burden or damage the brake hose.
– Remove the brake carrier. Refer to
⇒ “2.4 Brake Carrier, Removing and Installing”, page 72 .

Protected by copyright. Copying for private or commercial purposes, in part or in whole, is not permitted unless authorised by Volkswagen AG. Volkswagen AG does not guarantee or accept any liability with respect to the correctness of information in this document. Copyright by Volkswagen AG.

– Loosen the threaded connection -arrow- on the brake rotor -1-.

– Remove the brake rotor.

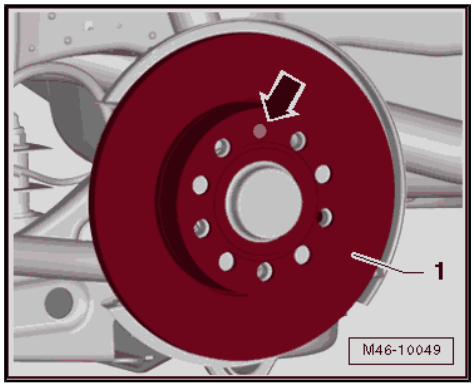

Cleaning

WARNING

Do not blow brake system using compressed air, the dust produced is harmful to health!

Note

Use only appropriate solvents for cleaning brake system.

Installing

Install in reverse order of removal. Note the following:

Note

- *Carefully clean before installing.*
- *Check for wear, damage, dimension and damaged threading.*
- *Always replace pads on both sides of axle if worn.*

– Thoroughly clean the contact surfaces on the brake carrier for the brake pads and remove any corrosion.

If using the brake pads again, install the marked pads in the same location.

– Secure the brake caliper with new self-locking screws. Refer to the Parts Catalog.

– Install wheel and tighten.

– Before moving the vehicle, press the brake pedal firmly several times to seat the brake pads correctly in their operating position.

– Check brake fluid level.

Tightening Specification

- Refer to ⇒ “2.1 Overview - Rear Brakes”, page 55
- Refer to ⇒ “2.1 Overview - Rear Brake Caliper”, page 100
- Wheel bolts. Refer to ⇒ Suspension, Wheels, Steering; Rep. Gr. 44 ; Wheels and Tires; Wheel Bolt Tightening Specifications .

2.6 Brake Shield, Removing and Installing

⇒ “2.6.1 Brake Shield, Torsion Beam Axle, Removing and Installing”, page 76

⇒ “2.6.2 Brake Shield, Multi-Link Rear Axle, Removing and Installing”, page 78

2.6.1 Brake Shield, Torsion Beam Axle, Removing and Installing

Special tools and workshop equipment required

Copyright by Volkswagen AG. Volkswagen AG does not guarantee or accept any liability with respect to the correctness of information in this document. Copyright by Volkswagen AG. Volkswagen AG does not guarantee or accept any liability with respect to the correctness of information in this document. Copying for private or commercial purposes, in part or in whole, is not permitted unless authorised by Volkswagen AG.

- Torque Wrench 1331 5-50Nm - VAG1331-
- Torque Wrench 1332 40-200Nm - VAG1332-
- Brake Caliper Tool - T10165-

Removing

Note

- *When removing, mark brake pads that will be used again. Install in the same position, otherwise braking effect will be uneven.*
- *Do not open the brake hydraulic system when removing!*

– Loosen the wheel bolts.

– Raise the vehicle.

– Remove the wheel.

– Remove the brake carrier. Refer to
⇒ “2.4 Brake Carrier, Removing and Installing”, page 72 .

– Remove brake rotor. Refer to
⇒ “2.5 Brake Rotor, Removing and Installing”, page 74 .

– Remove the wheel bearing unit. Refer to ⇒ Suspension, Wheels, Steering; Rep. Gr. 42 ; Wheel Bearing and Trailing Arm; Overview - Wheel Bearing .

Protected by copyright. Copying for private or commercial purposes, in part or in whole, is not permitted unless authorised by Volkswagen AG. Volkswagen AG does not guarantee or accept any liability with respect to the correctness of information in this document. Copyright by Volkswagen AG.

– Unscrew the threaded connection -arrows- on the cover plate -1-.

– Remove the cover plate -1- and the stub axle.

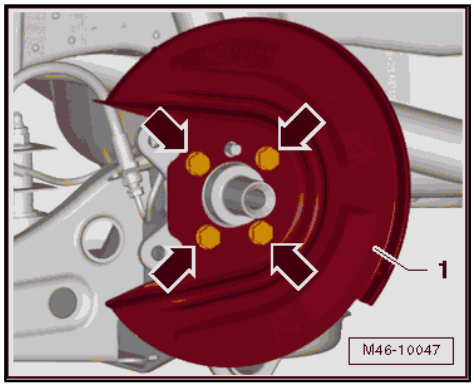

Cleaning

WARNING

Do not blow brake system using compressed air, the dust produced is harmful to health!

Note

Use only appropriate solvents for cleaning brake system.

Installing

Install in reverse order of removal. Note the following:

If using the brake pads again, install the marked pads in the same location.

– Secure the brake caliper with new self-locking screws. Refer to the Parts Catalog.

– Install wheel and tighten.

– Before moving the vehicle, press the brake pedal firmly several times to seat the brake pads correctly in their operating position.

– Check brake fluid level.

Tightening Specification

- Refer to ⇒ “2.1 Overview - Rear Brakes”, page 55
- Refer to ⇒ “2.1 Overview - Rear Brake Caliper”, page 100
- Wheel bolts. Refer to ⇒ Suspension, Wheels, Steering; Rep. Gr. 44 ; Wheels and Tires; Wheel Bolt Tightening Specifications .
- Wheel bearing unit. Refer to ⇒ Suspension, Wheels, Steering; Rep. Gr. 42 ; Wheel Bearing and Trailing Arm; Overview - Wheel Bearing .

2.6.2 Brake Shield, Multi-Link Rear Axle, Removing and Installing

Special tools and workshop equipment required

- Torque Wrench 1331 5-50Nm - VAG1331-
- Torque Wrench 1332 40-200Nm - VAG1332-
- Brake Caliper Tool - T10165-

Protected by copyright. Copying for private or commercial purposes, in part or in whole, is not permitted unless authorised by Volkswagen AG. Volkswagen AG does not guarantee or accept any liability with respect to the correctness of information in this document. Copyright by Volkswagen AG.

Removing

Note

- *When removing, mark brake pads that will be used again. Install in the same position, otherwise braking effect will be uneven.*
- *Do not open the brake hydraulic system when removing!*

– Loosen the wheel bolts.

– Raise the vehicle.

– Remove the wheel.

– Remove the brake carrier. Refer to
⇒ “2.4 Brake Carrier, Removing and Installing”, page 72 .

– Remove brake rotor. Refer to
⇒ “2.5 Brake Rotor, Removing and Installing”, page 74 .

– Remove the wheel bearing unit. Refer to ⇒ Suspension, Wheels, Steering; Rep. Gr. 42 ; Wheel Bearing and Trailing Arm; Overview - Wheel Bearing .

Protected by copyright. Copying for private or commercial purposes, in part or in whole, is not permitted unless authorised by Volkswagen AG. Volkswagen AG does not guarantee or accept any liability with respect to the correctness of information in this document. Copyright by Volkswagen AG.

– Unscrew the threaded connection -arrows- on the cover plate -1-.

– Remove cover plate -1-.

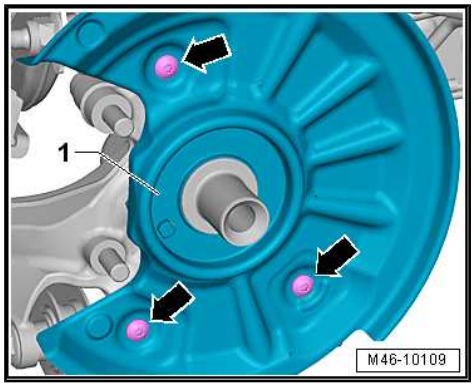

Cleaning

WARNING

Do not blow brake system using compressed air, the dust produced is harmful to health!

Note

Use only appropriate solvents for cleaning brake system.

Installing

Install in reverse order of removal. Note the following:

If using the brake pads again, install the marked pads in the same location.

– Secure the brake caliper with new self-locking screws. Refer to the Parts Catalog.

– Install wheel and tighten.

– Before moving the vehicle, press the brake pedal firmly several times to seat the brake pads correctly in their operating position.

– Check brake fluid level.

Tightening Specification

- Refer to ⇒ "2.1 Overview - Rear Brakes", page 55
- Refer to ⇒ "2.1 Overview - Rear Brake Caliper", page 100
- Wheel bolts. Refer to ⇒ Suspension, Wheels, Steering; Rep. Gr. 44 ; Wheels and Tires; Wheel Bolt Tightening Specifications
- Wheel bearing unit. Refer to ⇒ Suspension, Wheels, Steering; Rep. Gr. 42 ; Wheel Bearing and Trailing Arm; Overview - Wheel Bearing .

Protected by copyright. Copyright for private or commercial purposes, in part or in whole, is not permitted unless authorised by Volkswagen AG. Volkswagen AG does not guarantee or accept any liability with respect to the correctness of information in this document. Copyright by Volkswagen AG.

3 Parking Brake

⇒ “3.1 Overview - Parking Brake”, page 81

⇒ “3.2 Parking Brake, Adjusting”, page 81

⇒ “3.3 Rear Brake Cable, Removing and Installing”, page 82

3.1 Overview - Parking Brake

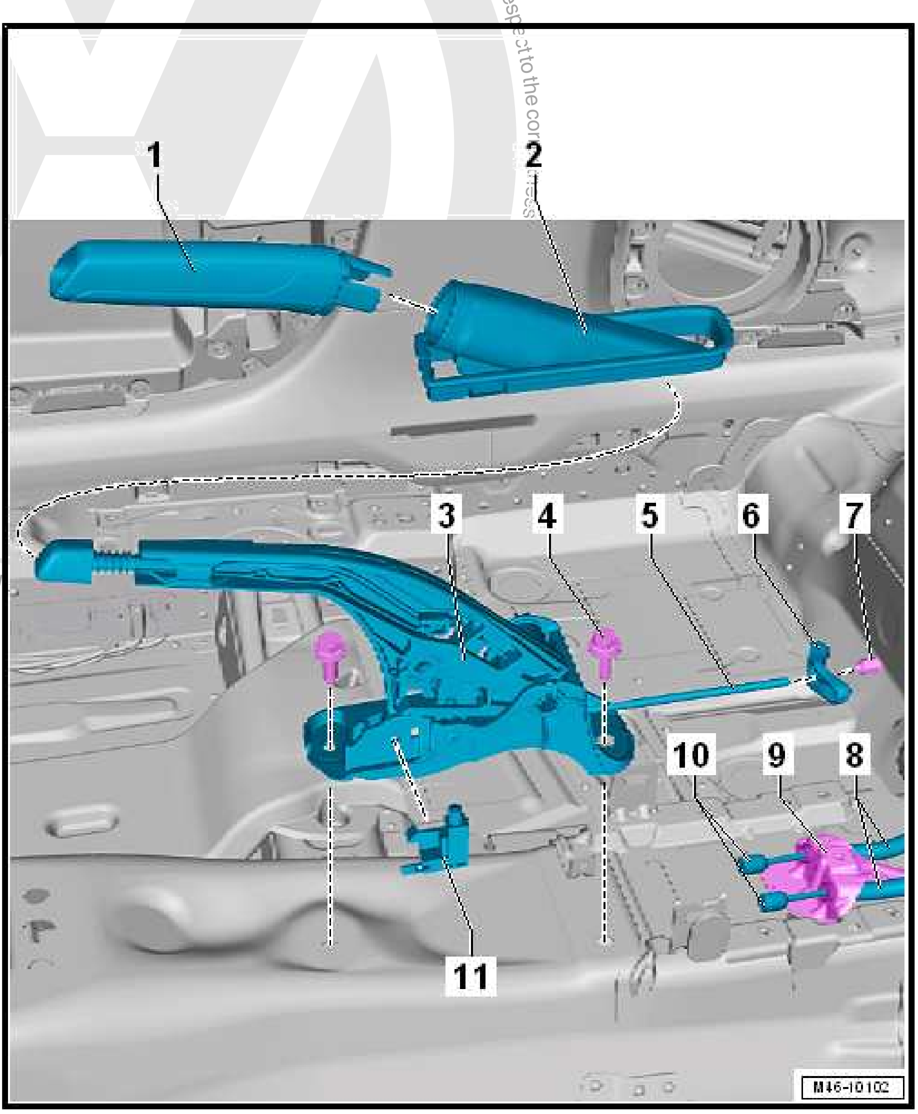

1 - Handle
- ❑ For allocation. Refer to the Parts Catalog

2 - Trim for Parking Brake Lever
- ❑ For allocation. Refer to the Parts Catalog

3 - Parking Brake Lever

4 - Bolt
- ❑ 20 Nm +90°
- ❑ Replace after removing
- ❑ Quantity: 2

5 - Relay Pull Rod

6 - Compensator Bracket

7 - Adjusting Nut
- ❑ Adjusting the parking brake. Refer to ⇒ “3.2 Parking Brake, Adjusting”, page 81 .

8 - Guide Tube
- ❑ Make sure the mount fits correctly.

9 - Mount

10 - Parking Brake Cable
- ❑ Removing and installing. Refer to ⇒ “3.3.1 Rear Brake Cable, Multi-Link Rear Axle, Removing and Installing”, page 82 .

11 - Parking Brake Indicator Lamp Switch - F9-

3.2 Parking Brake, Adjusting

Note

A new adjustment is necessary only after replacing brake cables, brake calipers or brake rotors.

Adjusting

– Raise the vehicle.

Protected by copyright. Copying for private or commercial purposes, in part or in whole, is not permitted unless authorised by Volkswagen AG. Volkswagen AG does not guarantee or accept any liability with respect to the correctness

– Press the brake pedal forcefully at least three times.

– Apply the parking brake three times and then release.

The parking brake lever must go back into the rest position by itself under the first detent.

• Parking brake lever in released position.

– Remove the center console. Refer to ⇒ Body Interior; Rep. Gr. 68 ; Center Console; Overview - Center Console .

– Adjust the parking brake using the adjusting nut -1-.

• The extra thread on the groove must be less than 1 mm -item 5- ⇒ Item 5 (page 81) .

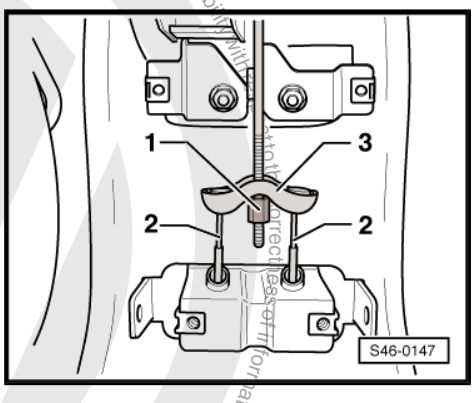

– Tighten the adjusting nut until the levers -1- on the brake calipers lift off from their stops -2-.

– The distance -a- to the stop -2- on the left and right brake caliper must not exceed 1.5 mm together.

– Check whether wheels turn freely.

Due to the automatic rear brake adjuster, there is no need to adjust the parking brake after making initial adjustment.

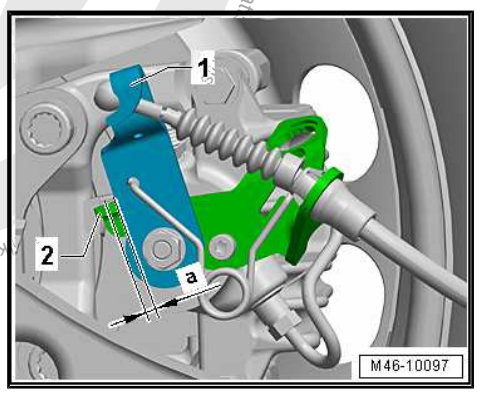

3.3 Rear Brake Cable, Removing and Installing

⇒ “3.3.1 Rear Brake Cable, Multi-Link Rear Axle, Removing and Installing”, page 82

⇒ “3.3.2 Rear Brake Cable, Torsion Beam Axle, Removing and Installing”, page 85

3.3.1 Rear Brake Cable, Multi-Link Rear Axle, Removing and Installing

Removing

– Loosen the wheel bolts.

– Raise the vehicle.

– Remove the wheel.

– Loosen the parking brake lever.

• Parking brake lever in released position.

– Press the lever -2- located on the brake caliper in the direction of the -arrow- and disengage the brake cable -1-.

– Squeeze the tabs -3- and remove the brake cable from the bracket -4- on the brake caliper.

– Remove the center console. Refer to ⇒ Body Interior; Rep. Gr. 68 ; Center Console; Overview - Center Console .

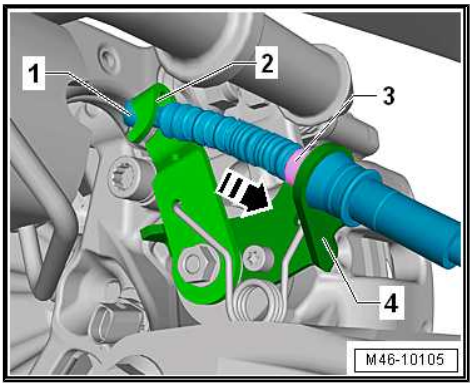

– Loosen the adjusting nut -1- until it is possible to disengage the parking brake cable -2- from the compensator bracket -3-.

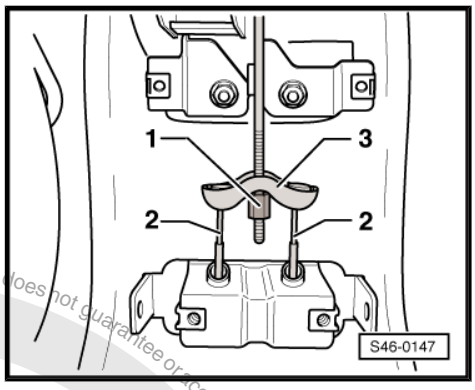

– Pull the brake cable -1- out of the retainer -arrow A- on the bracket -2-.

– Pull the brake cable -1- in the direction of the -arrow- out of the guide -arrow B- on the bracket -2-.

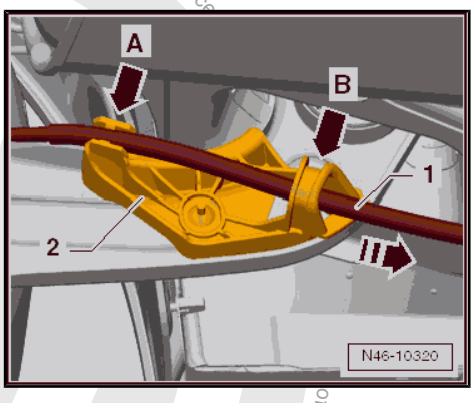

– Disengage the brake cable -1- from the bracket -3- and pull it from the guide tube -2-.

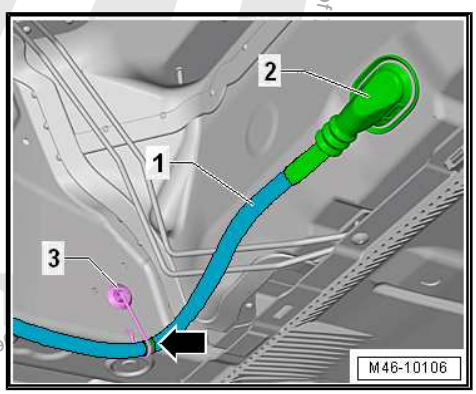

Protected by copyright. Copying for private or commercial purposes, in part or in whole, is not permitted unless authorised by Volkswagen AG. Volkswagen AG does not guarantee or accept any liability with respect to the correctness of information in this document. Copyright by Volkswagen AG.

Installing

Install in reverse order of removal. Note the following:

– Pay attention that the guide tube and the seal are seated correctly.

– Push the brake cable -1- in the guide tube -2- until stop.

– Engage the brake cable -1- in the bracket -3- and push in wire.

– Engage the brake cable at the marking -arrow-.

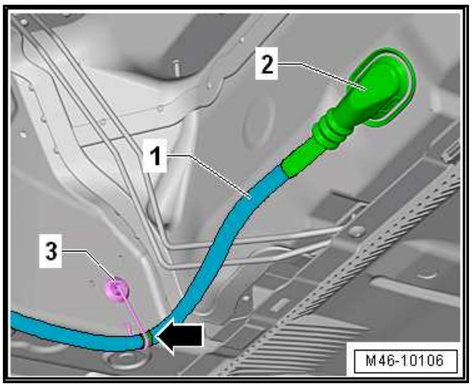

– Insert the brake cable -1- into the guide -arrow B- on the bracket -2- opposite the direction of -arrow-.

– Clip the brake cable -1- back into the retainer -arrow A- on the bracket -2-.

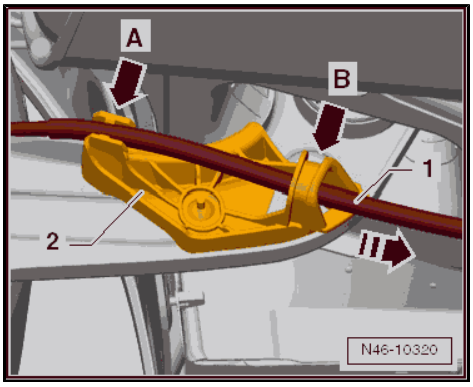

– Push the brake cable -1- through the bracket -4- on the brake caliper until both tabs -3- engage.

– Press the lever -2- located on the brake caliper in direction of -arrow- and engage the brake cable -1-.

The brake cable must be installed without tension between the bracket on the brake caliper and the bracket on the rear axle.

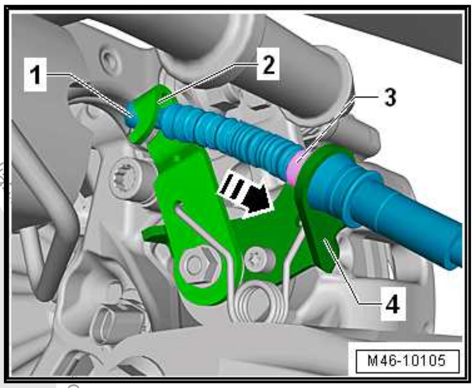

– Install the parking brake cable -2- in the compensator bracket -3-.

– Pay attention that the guide tube is seated correctly in the mount -item 9- ⇒ Item 9 (page 81) .

– Pretension the parking brake cable using the adjustment nut -1-.

– Adjust the parking brake. Refer to ⇒ “3.2 Parking Brake, Adjusting”, page 81 .

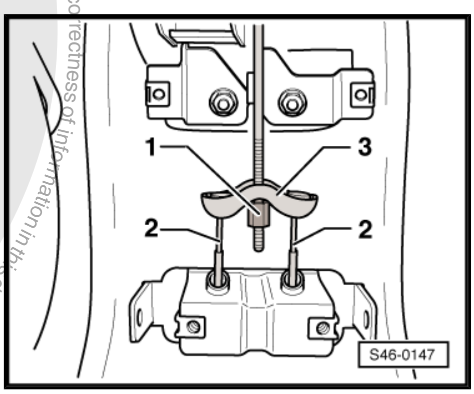

Tightening Specification

- Refer to ⇒ Body Interior; Rep. Gr. 68 ; Center Console; Overview - Center Console .
- For installing the wheel bolts. Refer to ⇒ Suspension, Wheels, Steering; Rep. Gr. 44 ; Wheels and Tires; Wheel Bolt Tightening Specifications .

Protected by copyright. Copying for private or commercial purposes, in part or in whole, is not permitted unless authorised by Volkswagen AG. Volkswagen AG does not guarantee or accept any liability with respect to the correctness of information in this document. Copyright by Volkswagen AG.

3.3.2 Rear Brake Cable, Torsion Beam Axle, Removing and Installing

Removing

– Loosen the wheel bolts.

– Raise the vehicle.

– Remove the wheel.

– Loosen the parking brake lever.

• Parking brake lever in released position.

– Press the lever -2- located on the brake caliper in the direction of the -arrow- and disengage the brake cable -1-.

– Squeeze the tabs -3- and remove the brake cable from the bracket -4- on the brake caliper.

– Remove the center console. Refer to ⇒ Body Interior; Rep. Gr. 68 ; Center Console; Overview - Center Console .

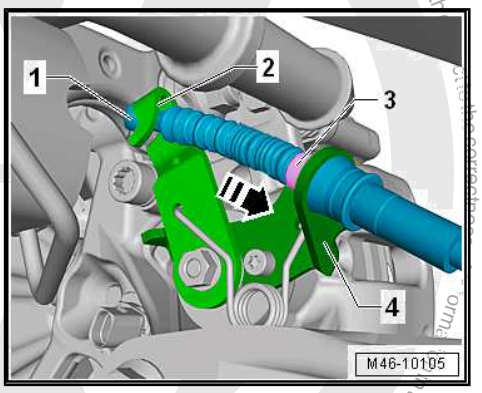

– Loosen the adjusting nut -1- until it is possible to disengage the parking brake cable -2- from the compensator bracket -3-.

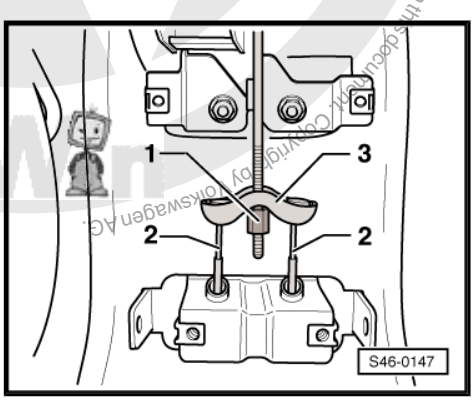

– Disengage the brake cable -1- from the bracket -3- and pull it from the guide tube -2-.

– Release the bracket from the rear axle and remove upward.

– Remove the brake cable rearward from the guide bushing on the rear axle.

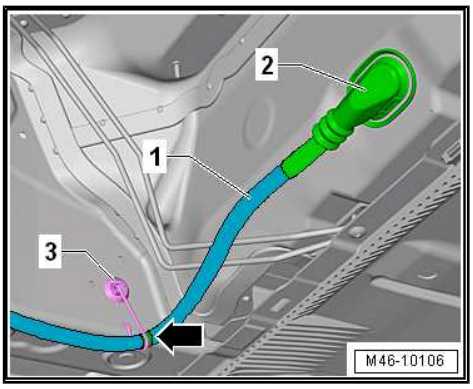

Protected by copyright. Copying for private or commercial purposes, part of this work is not permitted unless authorised by Volkswagen AG. Volkswagen AG does not guarantee or accept any liability with respect to the correctness of information in this document. Copyright by Volkswagen AG.

Installing

Install in reverse order of removal. Note the following:

– Guide the brake cable from the rear in the guide bushing.

– Clip in the bracket on the rear axle.

– Check for secure fit by pulling on it.

– Pay attention that the guide tube and the seal are seated correctly.

– Push the brake cable -1- in the guide tube -2- until stop.

– Engage the brake cable -1- in the bracket -3- and push in wire.

– Engage the brake cable at the marking -arrow-.

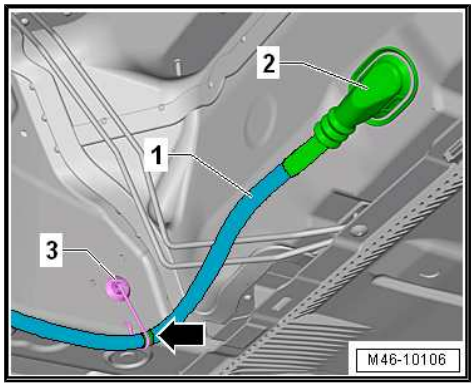

– Push the brake cable -1- through the bracket -4- on the brake caliper until both tabs -3- engage.

– Press the lever -2- located on the brake caliper in the direction of the -arrow- and engage the brake cable -1-.

The brake cable must be installed without tension between the bracket on the brake caliper and the bracket on the rear axle.

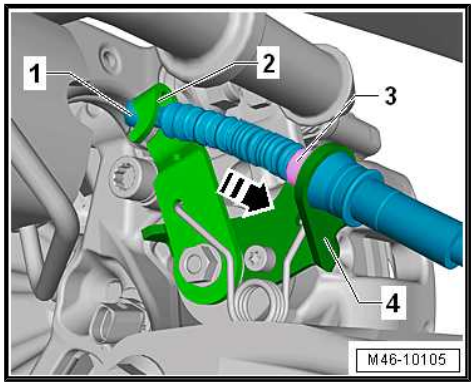

– Install the parking brake cable -2- in the compensator bracket -3-.

– Pay attention that the guide tube is seated correctly in the mount -item 9- ⇒ Item 9 (page 81) .

– Pretension the parking brake cable using the adjustment nut -1-.

– Adjust the parking brake. Refer to ⇒ “3.2 Parking Brake, Adjusting”, page 81 .

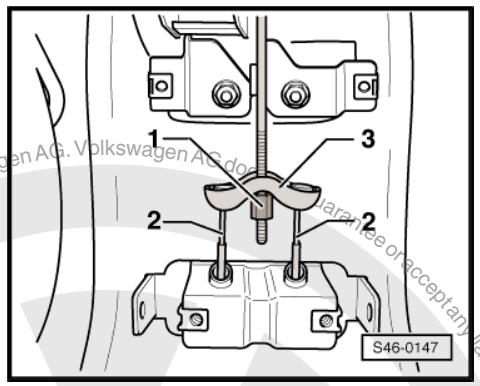

Tightening Specification

♦ Refer to ⇒ Body Interior; Rep. Gr. 68 ; Center Console; Overview - Center Console .

♦ For installing the wheel bolts. Refer to ⇒ Suspension, Wheels, Steering; Rep. Gr. 44 ; Wheels and Tires; Wheel Bolt Tightening Specifications .

Protected by copyright. Copying for private or commercial purposes, in part or in whole, is not permitted unless authorised by Volkswagen AG. Volkswagen AG does not guarantee or accept any liability with respect to the correctness of information in this document. Copyright by Volkswagen AG.

4 Brake Pedal

⇒ “4.1 Overview - Brake Pedal”, page 87
⇒ “4.2 Brake Pedal, Removing from Brake Booster”, page 88
⇒ “4.3 Brake Pedal, Attaching to Brake Booster”, page 89
⇒ “4.4 Brake Pedal, Removing and Installing”, page 89
⇒ “4.5 Mounting Bracket, Removing and Installing”, page 90

Copyright by Volkswagen AG. Volkswagen AG does not guarantee or accept any liability with respect to the correctness of information in this document. Copyright by Volkswagen AG. Volkswagen AG does not guarantee or accept any liability with respect to the correctness of

4.1 Overview - Brake Pedal

WARNING

The path of the brake pedal must not be shortened via extra floor mats.

Note

Do not lubricate or grease the mounting pin. The mounting pin must remain dry.

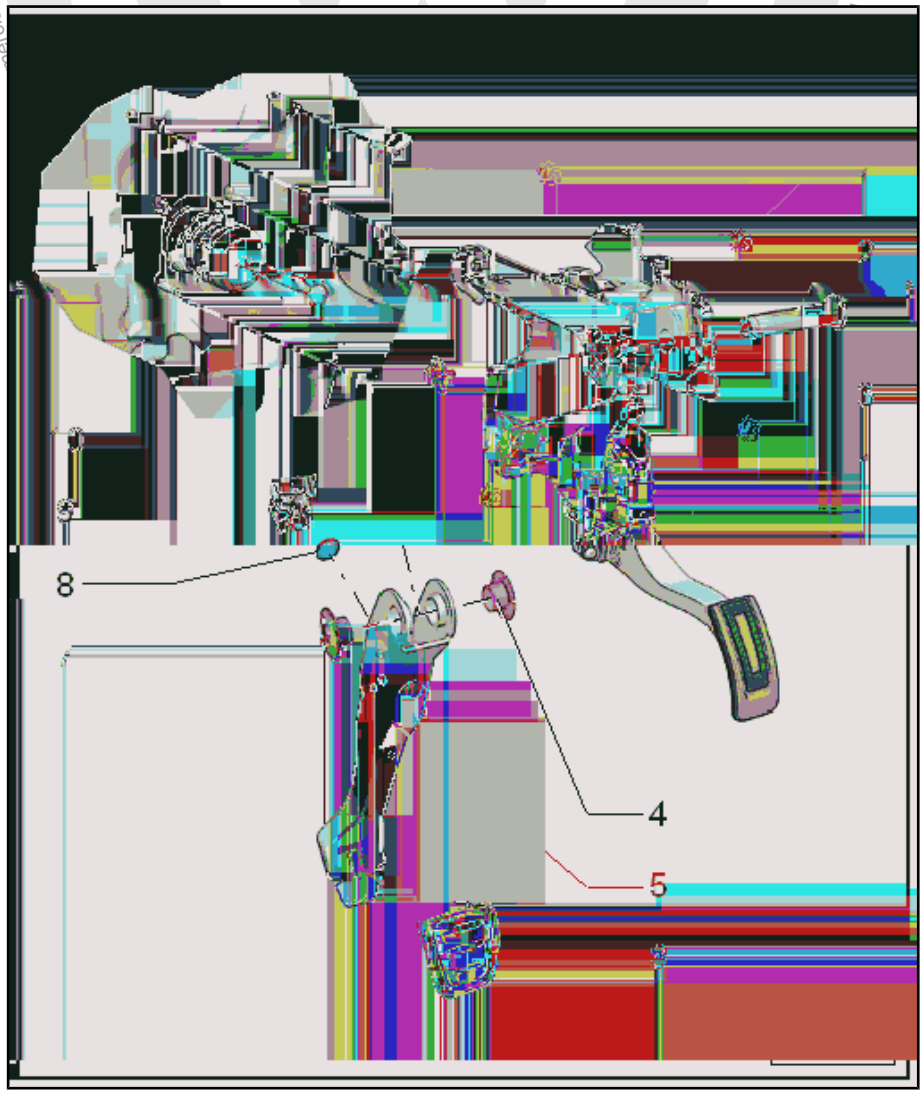

1 - Self-Locking Hex Nut

- ❑ 25 Nm
- ❑ Replace after removing
- ❑ Bolt tightening sequence. Refer to ⇒ Fig. ““Tightening Sequence”“ , page 88

2 - Mounting Pin

- ❑ Remove the bracket to remove.
- ❑ Removing: Turn the mounting pin clockwise, while doing so the tabs on the mounting pin break
- ❑ Replacing the mounting pin
- ❑ Do not lubricate or grease the mounting pin. The mounting pin must remain dry
- ❑ Installing: Turn the mounting pin counter-clockwise, until the tabs at stop engage audibly

3 - Foot Pedal Assembly/ Bracket

- ❑ Removing and installing. Refer to ⇒ “4.5 Mounting Bracket, Removing and Installing”, page 90 .

4 - Bearing Bushing

- ❑ Not exchangeable,

make sure that it is in-
stalled in the correct position.

5 - Brake Pedal

- ❑ Separate the brake pedal from brake booster. Refer to ⇒ “4.2 Brake Pedal, Removing from Brake Booster”, page 88 .
- ❑ Brake pedal to brake booster connecting. Refer to ⇒ “4.3 Brake Pedal, Attaching to Brake Booster”, page 89 .
- ❑ Removing and installing. Refer to ⇒ “4.4 Brake Pedal, Removing and Installing”, page 89 .

6 - Cover

7 - Bearing Bushing

- ❑ Not exchangeable, make sure that it is installed in the correct position.

8 - Bearing Shell

9 - Mount

- ❑ For the ball head on the brake booster push rod

10 - Clip

- ❑ Replace
- ❑ Install in both holes on the bracket.

Tightening Sequence

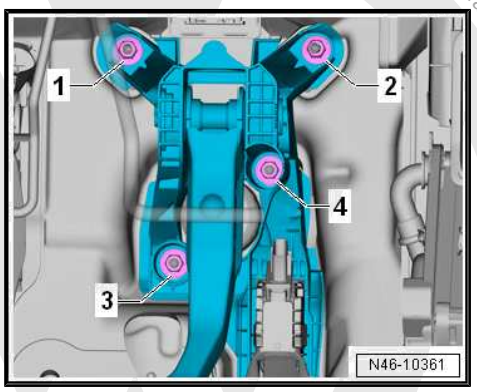

4.2 Brake Pedal, Removing from Brake Booster

Special tools and workshop equipment required

- ♦ Brake Servo Release Tool - T10159A-

– Remove the footwell cover on the driver side. Refer to ⇒ Body Interior; Rep. Gr. 68 ; Storage Compartments and Covers .

Protected by copyright. Copying for private or commercial purposes, in part or in whole, is not permitted unless authorised by Volkswagen AG. Volkswagen AG does not guarantee or accept any liability with respect to the correctness of information in this document. Copyright by Volkswagen AG.

– First press brake pedal in direction of brake booster and hold.

2 - Pressure rod

3 - Retaining tabs

– Insert Release Tool - Brake Servo - T10159- and pull in direction of driver seat. When doing this, counter-hold on brake pedal. (At this moment the pedal must not be allowed to move to the driver seat). The mount retaining tabs -3- will thereby be pressed off the ball head of the pushrod -2-.

The process of separating the brake pedal from the brake booster is shown with the pedal assembly removed.

– Pull Release Tool - Brake Servo - T10159- and brake pedal together toward the driver seat. (This will pull the brake pedal off the push rod ball head).

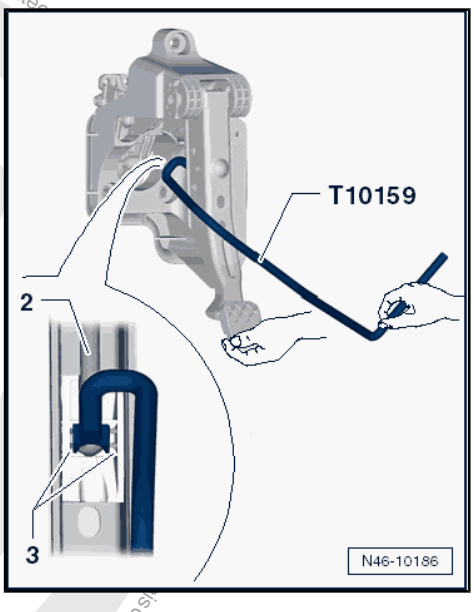

Tightening Specification

♦ Footwell cover on the driver side. Refer to ⇒ Body Interior; Rep. Gr. 68 ; Storage Compartments and Covers; Component Location Overview - Storage Compartment/Covers .

4.3 Brake Pedal, Attaching to Brake Booster

– Hold the push rod ball head in front of the mount and push the brake pedal toward the brake booster until the ball head engages audibly.

– Check the lock by pulling on the brake pedal.

4.4 Brake Pedal, Removing and Installing

Removing the brake pedal separately from the vehicle is not possible.

– Remove the bracket. Refer to ⇒ “4.5 Mounting Bracket, Removing and Installing”, page 90 .

Note

Remove the brake pedal from the removed bracket.

Protected by copyright. Copying or private or commercial purposes, in part or in whole, is not permitted unless authorised by Volkswagen AG. Volkswagen AG does not guarantee ... is document. Copyright by Volkswagen AG.

– Turn the mounting pins clockwise in the direction of the -arrow-.

-1- = Hex Socket Wrench SW 14.

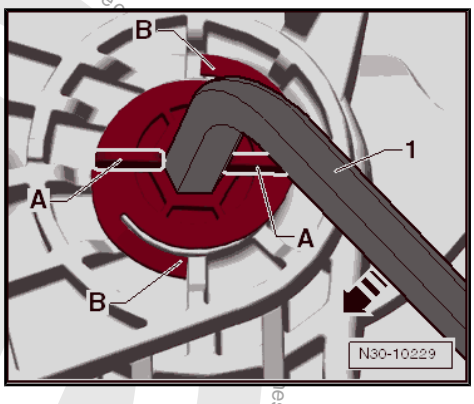

Note

At the same time the tabs -B- break. Replacing the mounting pin.

– Remove the clip from the mounting pin.

– Remove the mounting pin from the right.

– Remove the brake pedal from the bracket.

Installing

Install in reverse order of removal. Pay attention to the following:

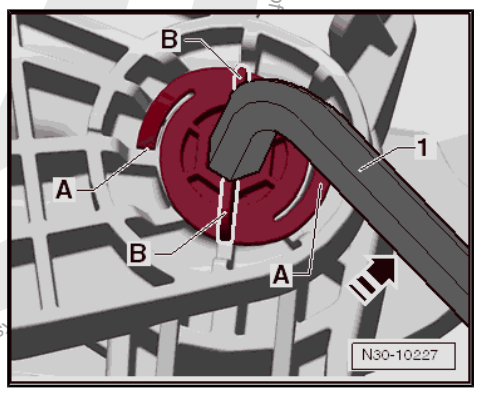

Note

Replace the mounting pin and clip.

Note

Do not lubricate or grease the mounting pin. The mounting pin must remain dry.

– Install the brake pedal in the bracket.

– Push the mounting pin from the right to the left through the bracket and brake pedal.

– Place the clip on the mounting pin.

– Turn the mounting pins counter clockwise direction of the -arrow- until the latches -A- engage audibly in the bracket.

– Install the pedal assembly and the bracket. Refer to ⇒ “4.5 Mounting Bracket, Removing and Installing”, page 90 .

4.5 Mounting Bracket, Removing and Installing

Special tools and workshop equipment required

♦ Torque Wrench 1331 5-50Nm - VAG1331-

– Remove the side cover from the driver side instrument panel. Refer to ⇒ Body Interior; Rep. Gr. 70 ; Instrument Panel; Instrument Panel Side Cover, Removing and Installing .

– Remove the footwell cover on the driver side. Refer to ⇒ Body Interior; Rep. Gr. 68 ; Storage Compartments and Covers .

– Remove the driver side center console cover. Refer to ⇒ Body Interior; Rep. Gr. 68 ; Rearview Mirror; Rearview Mirror, Removing and Installing .

– Remove the driver side storage compartment. Refer to ⇒ Body Interior; Rep. Gr. 68 ; Storage Compartments and Covers .

– Remove the driver side instrument panel cover. Refer to ⇒ Body Interior; Rep. Gr. 68 ; Storage Compartments and Cov-

Protected by copyright. Copying for private or commercial purposes, in whole or in part, is not permitted unless authorised by Volkswagen AG. Volkswagen AG does not guarantee or accept any liability with respect to the correctness of information in this document.

ers; Driver Side Instrument Panel Cover, Removing and Installing .

– Remove the knee airbag. Refer to ⇒ Body Interior; Rep. Gr. 69 ; Knee Airbags; Overview - Knee Airbag .

– Remove the footwell vent on the driver side. Refer to ⇒ Heating, Ventilation and Air Conditioning; Rep. Gr. 87 ; Air Routing; Overview - Air Routing and Air Distribution in Passenger Compartment .

– Remove the brake pedal crash bolster and set aside. Refer to ⇒ Body Interior; Rep. Gr. 70 ; Instrument Panel Central Tube; Overview - Instrument Panel Central Tube .

– Remove the Data Bus On Board Diagnostic Interface - J533- and set aside. Refer to ⇒ Electrical Equipment; Rep. Gr. 97 ; Control Modules; Overview - Data Bus On Board Diagnostic Interface .

– Disconnect brake pedal from brake booster. Refer to ⇒ “4.2 Brake Pedal, Removing from Brake Booster”, page 88 .

– Remove the accelerator pedal position sensor connector.

– Remove the bolt -1- and fold the footwell trim panel -2- in the direction of the -arrow- into the vehicle interior.

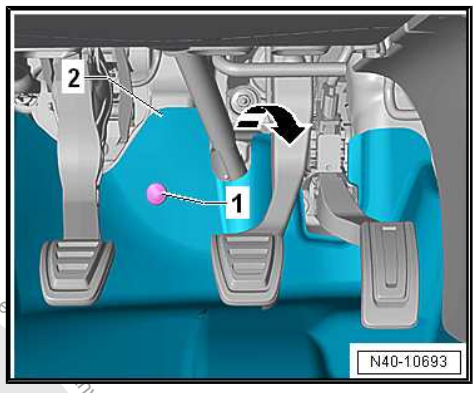

– Remove the nuts -1 to 4-.

– Carefully remove the pedal assembly.

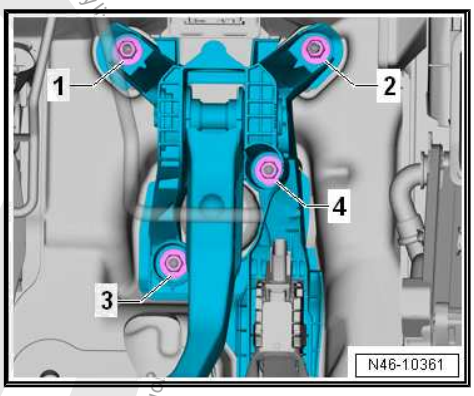

Installing

Install in reverse order of removal. Note the following:

– Connect the brake pedal together with the brake booster. Refer to ⇒ “4.3 Brake Pedal, Attaching to Brake Booster”, page 89 .

Protected by copyright. Copying for private or commercial purposes, in part or in whole, is not permitted unless authorised by Volkswagen AG. Volkswagen AG does not guarantee the accuracy of information in this document. Copyright by Volkswagen AG.

Protected by copyright. Copying for private or commercial purposes, in part or in whole, is not permitted unless authorised by Volkswagen AG. Volkswagen AG does not guarantee the accuracy and completeness of information in this document. Copyright by Volkswagen AG.

Tightening Sequence

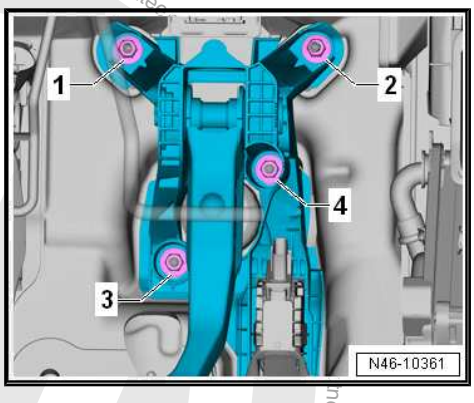

Tightening Specification

- Refer to ⇒ “4.1 Overview - Brake Pedal”, page 87
- Crash bolster. Refer to ⇒ Body Interior; Rep. Gr. 70 ; Instrument Panel Central Tube; Overview - Instrument Panel Central Tube .
- Footwell vent. Refer to ⇒ Heating, Ventilation and Air Conditioning; Rep. Gr. 87 ; Air Routing; Overview - Air Routing and Air Distribution in Passenger Compartment .
- Knee airbag. Refer to ⇒ Body Interior; Rep. Gr. 69 ; Knee Airbags; Overview - Knee Airbag
- Covers on the driver side. Refer to ⇒ Body Interior; Rep. Gr. 68 ; Storage Compartments and Covers; Component Location Overview - Storage Compartment/Covers .

5 Special Tools

Special tools and workshop equipment required

- Torque Wrench 1331 5-50Nm - VAG1331-
- Torque Wrench 1332 40-200Nm - VAG1332-
- Piston Resetting Tool - T10145-

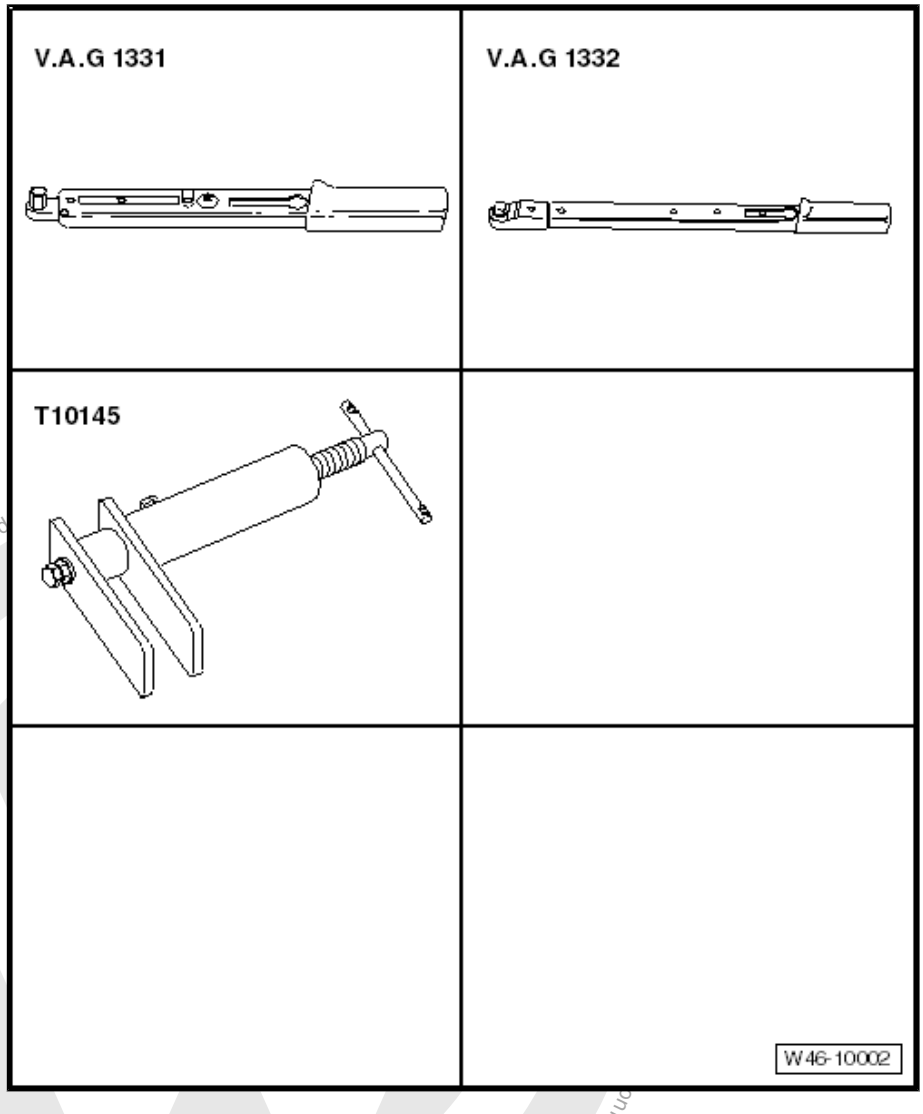

Protected by copyright. Copying for private or commercial purposes, in part or in whole, is not permitted unless authorised
on this document. Copyright by Volkswagen AG.

Volkswagen AG. Volkswagen AG does n
ceptany liability with respect to the correctness of information in this document

- Torque Wrench 1331 5-50Nm - VAG1331-
- Torque Wrench 1332 40-200Nm - VAG1332-
- Brake Caliper Tool - T10165-

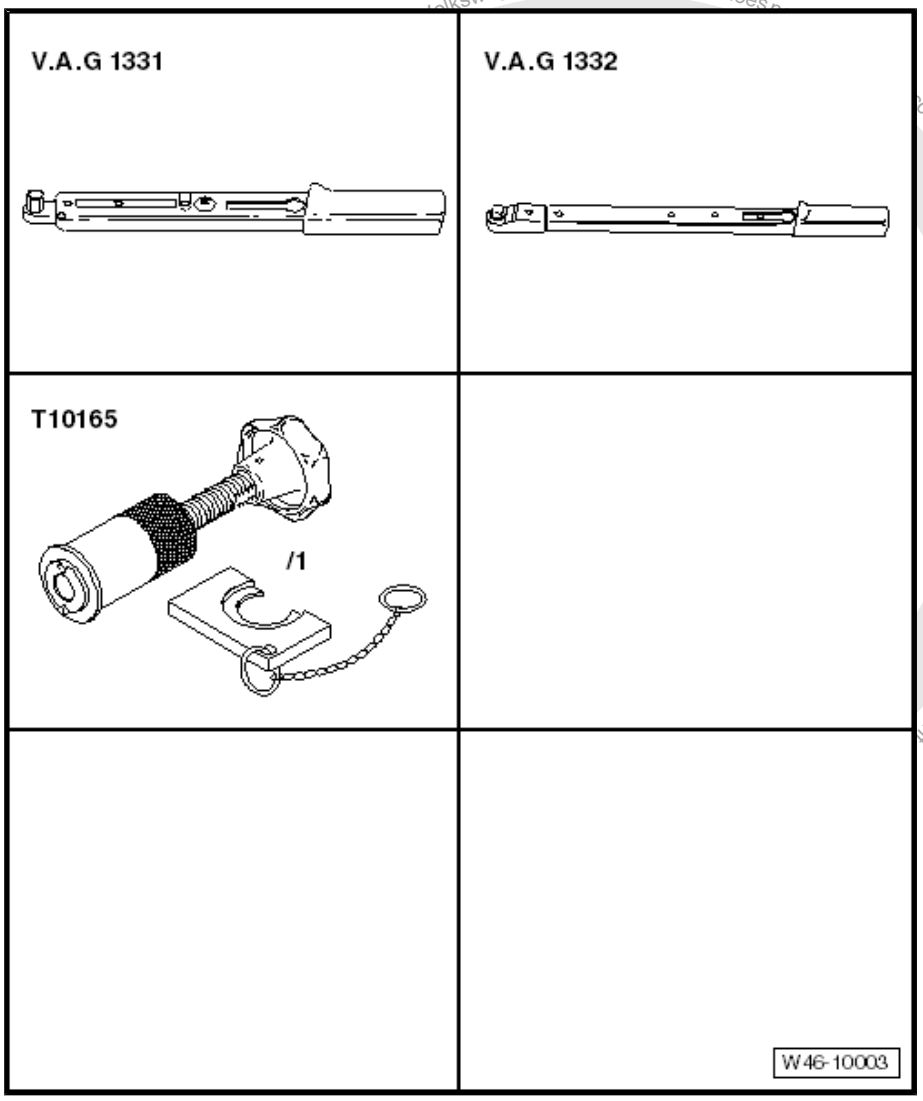

- Multipoint Socket - T10035-

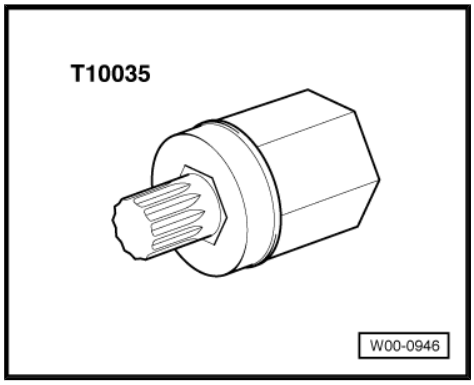

- Brake Servo Release Tool - T10159A-

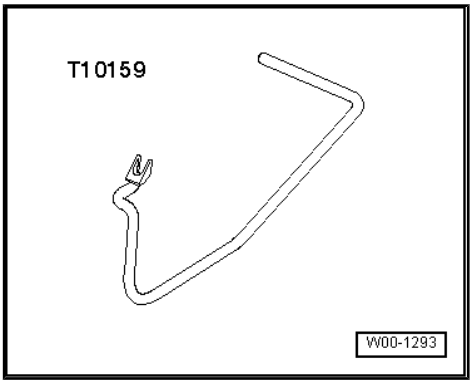

- Brake Caliper Tool - T10165-

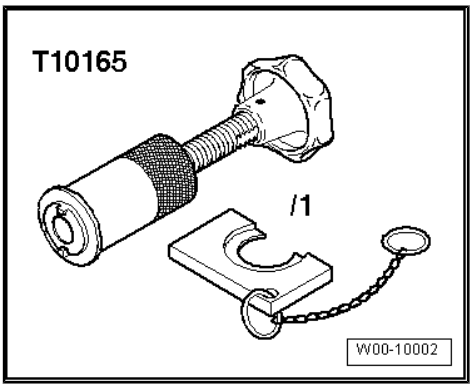

- Torque Wrench 1783 - 2-10Nm - VAG1783-

- Brake Pedal Actuator - VAG1869/2- .

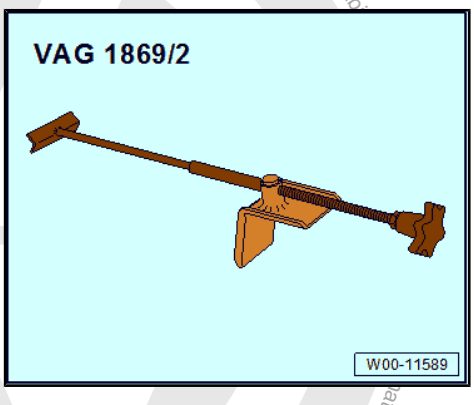

Protected by copyright. Copying for private or commercial purposes, in part or in whole, is not permitted unless authorised by Volkswagen AG. Volksw
Copyright by Volkswagen AG.

- Trim Removal Wedge - 3409-

Protected by copyright. Copying for private or commercial purposes, in part or in whole, is not permitted unless authorised by Volkswagen AG. Volkswagen AG does not guarantee or accept any liability with respect to the correctness of information in this document. Copyright by Volkswagen AG.

47 – Hydraulic Components

1 Front Brake Caliper

⇒ “1.1 Overview - Front Brake Caliper”, page 97

⇒ “1.2 Brake Caliper Piston, Removing and Installing”, page 98

1.1 Overview - Front Brake Caliper

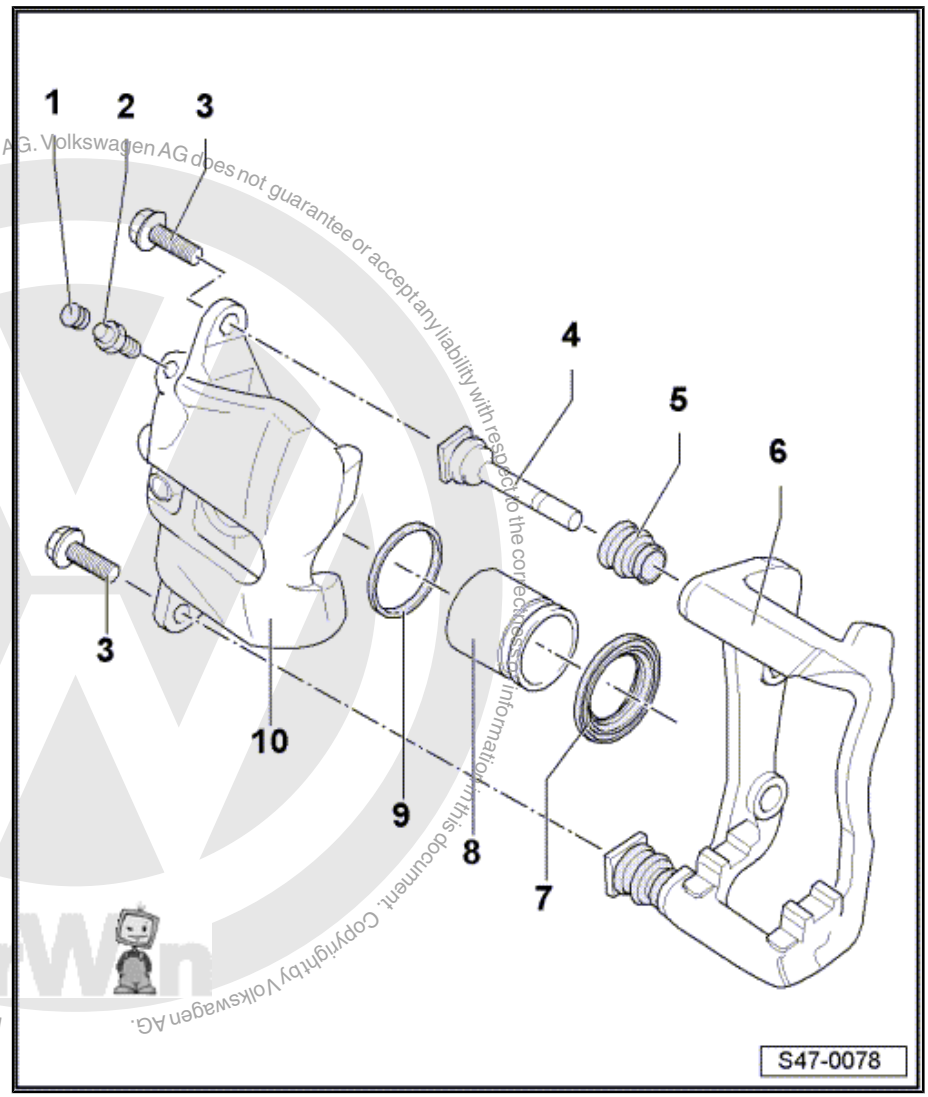

1 - Dust Cap

- ❑ Install onto bleeder valve

2 - Bleeder Valve

- ❑ 10 Nm
- ❑ Apply a thin coat of Assembly Paste - G 052 150 A2- to the threads before screwing in.

3 - Hex Bolt

- ❑ 35 Nm
- ❑ Replace after removing

4 - Guide Pin

5 - Cap

- ❑ Lubricate the groove with the grease that comes with the repair kit and then install the cap into the groove on the brake carrier and the guide pin.

6 - Brake Carrier

- ❑ Is assembled with the guide pins and cap as well as with sufficient grease on the guide pins.
- ❑ If protective caps or guide pins are damaged use repair kit. Use supplied grease packet to lubricate guide pins.

7 - Cap

- ❑ Removing and installing. Refer to ⇒ “1.2 Brake Caliper Piston, Removing and Installing”, page 98 .
- ❑ Do not damage when installing piston

8 - Piston

- ❑ Removing and installing. Refer to ⇒ “1.2 Brake Caliper Piston, Removing and Installing”, page 98 .
- ❑ Apply thin coat of Assembly Paste - G 052 150 A2- to piston before inserting

9 - Seal

- ❑ Removing and installing. Refer to ⇒ “1.2 Brake Caliper Piston, Removing and Installing”, page 98 .

10 - Brake Caliper

Protected by Volkswagen AG. Volkswagen AG does not guarantee or accept any liability with respect to the correctness of information in this document. Copyright by Volkswagen AG.

1.2 Brake Caliper Piston, Removing and Installing

Special tools and workshop equipment required

- Trim Removal Wedge - 3409-
- Piston Resetting Tool - T10145-

Removing

– Force piston from brake caliper using compressed air.

Place a wooden board into the recess of the caliper housing so it is not damaged.

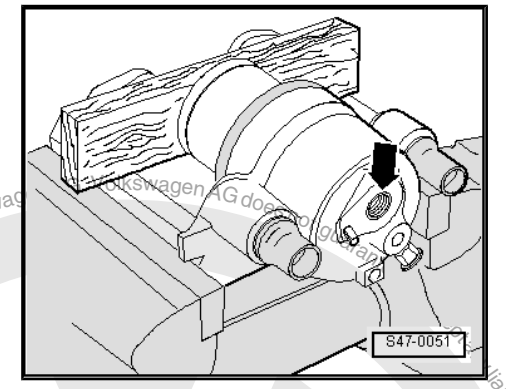

– Remove seal with Trim Removal Wedge - 3409- .

When removing, make sure that surface of cylinder is not damaged.

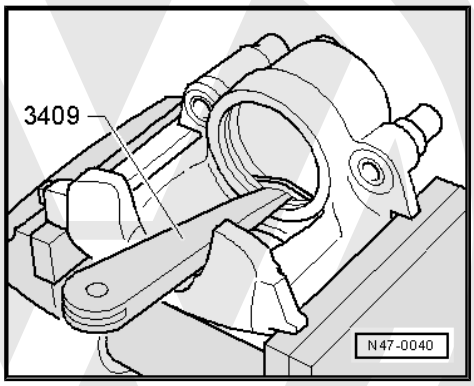

Installing

– Clean the surfaces on the pistons and seal with mineral spirits.

– Apply a thin coat of installation paste G 052 150 A2 on the piston and the seal before installing.

– Insert oil seal into brake caliper.

– Place the cap with the outer sealing lip on the piston.

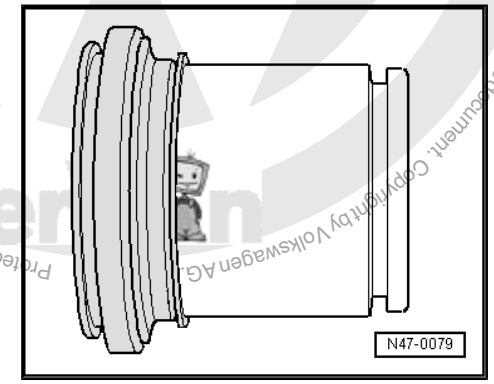

Protected by copyright. Copying for private or commercial purposes, in part or in whole, is not permitted unless authorised by Volkswagen AG. Volkswagen AG does not guarantee or accept any liability with respect to the correctness of information in this document. Copyright by Volkswagen AG.

– Insert inner sealing lip in cylinder groove with Trim Removal Wedge - 3409- .

Hold piston in front of brake caliper for this procedure.

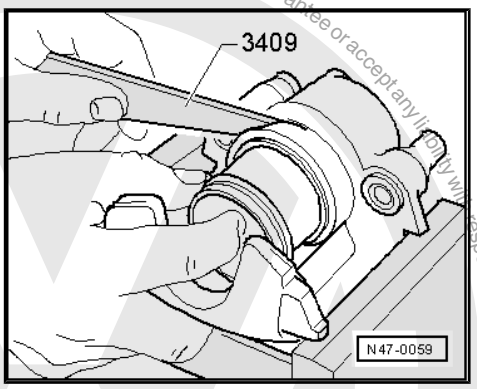

– Press piston into the brake caliper using piston resetting tool.

The outer seal lip of the cap thereby slips into the groove on the piston.

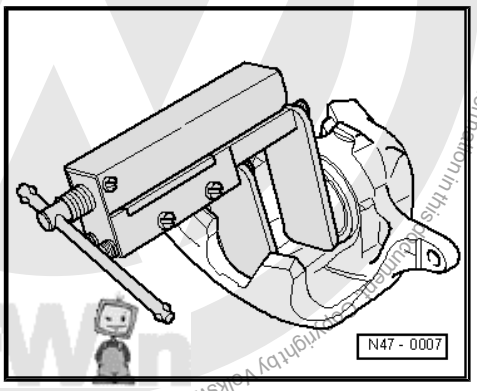

Protected by copyright. Copying for private or commercial purposes, in part or in whole, is not permitted unless authorised by Volkswagen AG. Volkswagen AG does not guarantee or accept any liability with respect to the correctness of information in this document. Copyright by Volkswagen AG.

2 Rear Brake Caliper

⇒ “2.1 Overview - Rear Brake Caliper”, page 100

⇒ “2.2 Brake Caliper Piston, Removing and Installing”, page 103

2.1 Overview - Rear Brake Caliper

⇒ “2.1.1 Overview - Rear Brake Caliper, Multi-Link Rear Axle”, page 100

⇒ “2.1.2 Overview - Rear Brake Caliper, Torsion Beam Axle”, page 102

2.1.1 Overview - Rear Brake Caliper, Multi-Link Rear Axle

Note

- *Install complete repair kit when servicing.*
- *Only use mineral spirits to clean brake parts.*
- *Apply thin coat of Lithium Grease - G 052 150 A2- to brake cylinders, pistons and seals.*
- *When servicing or replacing the brake caliper the brake caliper must be pre-bleed before installing in the vehicle (without brake pads). Refer to ⇒ “2.2.2 Brake Caliper, Pre-Bleeding”, page 105 .*

Protected by copyright. Copying for private or commercial purposes, in part or in whole, is not permitted unless authorised by Volkswagen AG. Volkswagen AG does not guarantee or accept any liability with respect to the correctness of information in this document. Copyright by Volkswagen AG.

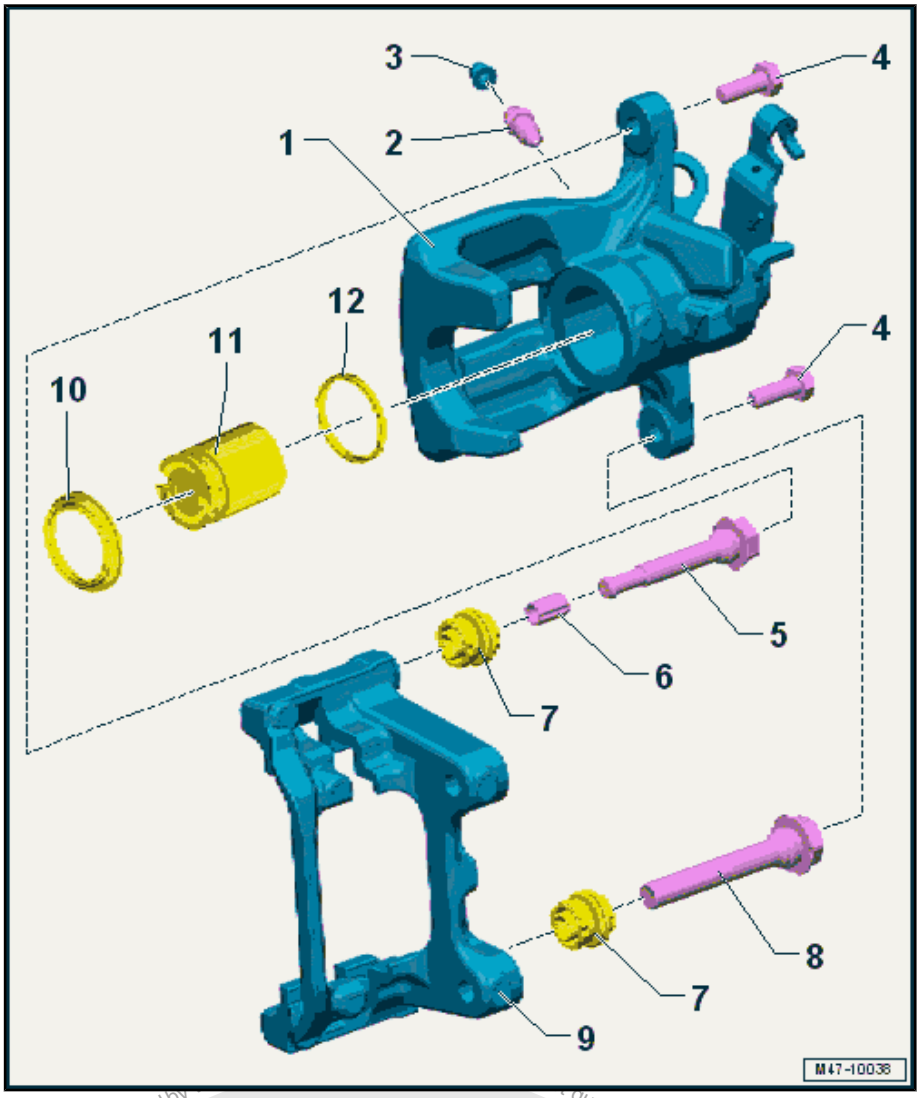

1 - Brake Caliper

- ❑ Vehicles with parking brake cable lever
- ❑ If a leak exists at lever for parking brake cable, replace brake caliper.
- ❑ Pre-bleed brake caliper after replacing. Refer to ⇒ "2.1 Overview - Rear Brake Caliper", page 100 .

2 - Bleeder Valve

- ❑ 10 Nm
- ❑ Before installing lightly coat the threads with Lithium Grease - G 052 150 A2- .

3 - Dust Cap

4 - Bolt

- ❑ 35 Nm
- ❑ Replace after removing
- ❑ Quantity: 2
- ❑ Self-locking
- ❑ When loosening and tightening, counterhold at guide pin

5 - Guide Pin

- ❑ Vehicles with recess
- ❑ Lubricate before installing the cap
- ❑ For allocation. Refer to the Parts Catalog

6 - Guide Grommet

7 - Cap

- ❑ Install on brake carrier and guide pin.

8 - Guide Pin

- ❑ Lubricate before installing the cap

9 - Brake Carrier

- ❑ Supplied as an assembled replacement part with sufficient grease on guide pins.
- ❑ If protective caps or guide pins are damaged use repair kit. Use supplied grease packet to lubricate guide pins.
- ❑ For allocation. Refer to the Parts Catalog

10 - Cap

- ❑ Pull onto piston with outer sealing lip
- ❑ Removing and installing. Refer to ⇒ "2.2 Brake Caliper Piston, Removing and Installing", page 103 .

11 - Piston with Automatic Adjustment

- ❑ Removing and installing. Refer to ⇒ "2.2 Brake Caliper Piston, Removing and Installing", page 103 .
- ❑ Apply thin coat of Assembly Paste - G 052 150 A2- to piston before inserting

12 - Seal

- ❑ Removing and installing. Refer to ⇒ "2.2 Brake Caliper Piston, Removing and Installing", page 103 .

Protected by copyright. Copying for private or commercial purposes, in part or in whole, is not permitted unless authorised by Volkswagen AG. Copyright by Volkswagen AG. We guarantee or accept any liability with respect to the correctness of information in this document.

2.1.2 Overview - Rear Brake Caliper, Torsion Beam Axle

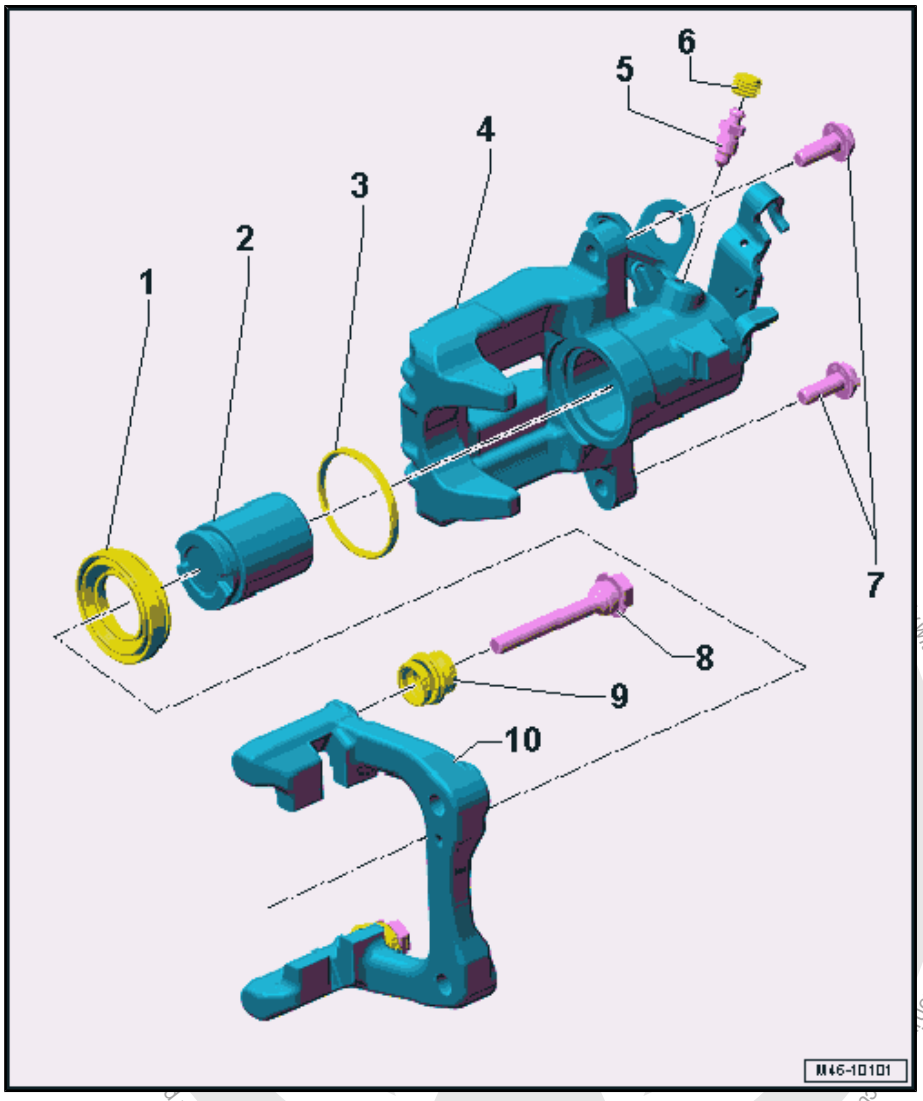

1 - Cap

- ❑ Pull onto piston with outer sealing lip
- ❑ Removing and installing. Refer to ⇒ "2.2.1 Brake Caliper Piston, Removing and Installing", page 103 .

2 - Piston with Automatic Adjustment

- ❑ Removing and installing. Refer to ⇒ "2.2.1 Brake Caliper Piston, Removing and Installing", page 103 .
- ❑ Apply thin coat of Assembly Paste - G 052 150 A2- to piston before inserting

3 - Seal

- ❑ Removing and installing. Refer to ⇒ "2.2.1 Brake Caliper Piston, Removing and Installing", page 103 .

4 - Brake Caliper

- ❑ Removing and installing. Refer to ⇒ "2.3 Brake Caliper, Removing and Installing", page 66 .
- ❑ Vehicles with parking brake cable lever
- ❑ Replace brake caliper if leaking at parking brake cable lever
- ❑ Pre-bleed brake caliper after repairing. Refer to ⇒ "2.3.1 Brake Carrier, Multi-Link Rear Axle, Removing and Installing", page 66 .

5 - Bleeder Valve

- ❑ 10 Nm
- ❑ Apply a thin coat of Assembly Paste - G 052 150 A2- to the threads before screwing in

6 - Dust Cap

7 - Bolt

- ❑ 35 Nm
- ❑ Replace after removing
- ❑ Self-locking
- ❑ When loosening and tightening, counterhold at guide pin

8 - Guide Pin

- ❑ Lubricate before installing the cap
- ❑ Check for ease of movement

9 - Cap

- ❑ Install on brake carrier and guide pin

Protected by copyright. Copyright by Volkswagen AG.
with respect to the correctness of information.

- ❑ Check for damage and correct seating

10 - Brake Carrier

- ❑ Supplied as an assembled replacement part with sufficient grease on guide pins
- ❑ If protective caps or guide pins are damaged use repair kit. Use supplied grease packet to lubricate guide pins

2.2 Brake Caliper Piston, Removing and Installing

⇒ "2.2.1 Brake Caliper Piston, Removing and Installing", page 103

⇒ "2.2.2 Brake Caliper, Pre-Bleeding", page 105

2.2.1 Brake Caliper Piston, Removing and Installing

Special tools and workshop equipment required

- ♦ Brake Caliper Tool - T10165-
- ♦ Trim Removal Wedge - 3409-

Removing

> **WARNING**
>
> *Adjust the brake piston is permitted only with the Brake Caliper Tool - T10165- .*

– Install the Brake Caliper Tool - T10165- so that the collar touches the piston.

– Remove piston from brake caliper by turning knurled wheel toward left.

– For pistons that are difficult to move, an open-end wrench (size 13 mm) can be applied at the appropriate wrench surface -arrow A-.

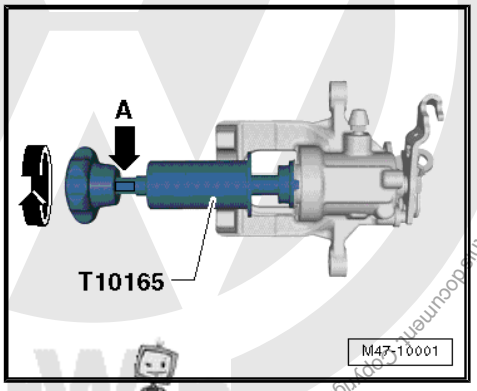

– Remove the sealing ring using the Trim Removal Wedge 3409- .

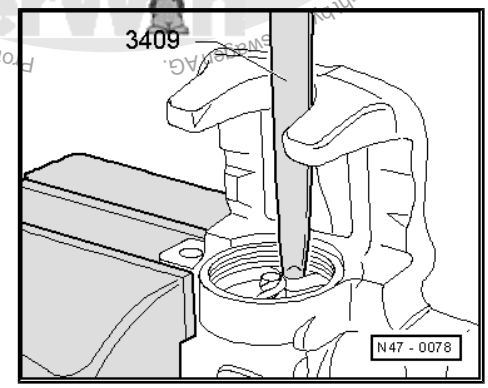

Protected by copyright. Copying for private or commercial purposes, in part or in whole, is not permitted unless authorised by Volkswagen AG. Volkswagen AG does not guarantee or accept any liability with respect to the correctness of information in this document. Copyright by Volkswagen AG.

Installing

Install in reverse order of removal. Note the following:

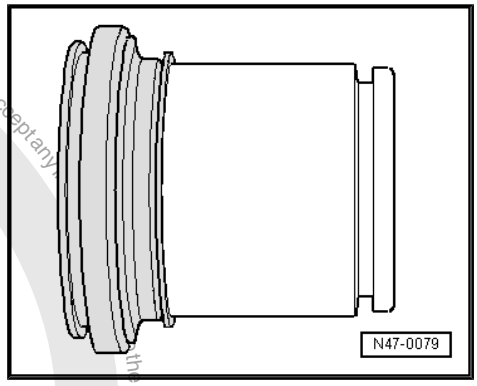

Note

- *Install complete repair kit when servicing.*
- *Only use mineral spirits to clean brake parts.*
- *New brake calipers are filled with brake fluid and are pre-bled.*
- *Apply thin coat of Assembly Paste - G 052 150 A2- to brake cylinders, pistons and seals.*
- *In case of repair, brake calipers must always be pre-bled before being installed into vehicle (without brake pads). Refer to* *⇒"2.2.2 Brake Caliper, Pre-Bleeding", page 105* *.*

– Clean the surfaces on the pistons and seal only with mineral spirits and then dry.

– Place the sealing ring in the groove.

– Apply a thin coat of Assembly Paste - G 052 150 A2- on the piston and the seal before installing.

– Place the cap with the outer sealing lip on the piston.

– Insert inner sealing lip in cylinder groove with Trim Removal Wedge - 3409- .

– Hold piston in front of brake caliper for this procedure.

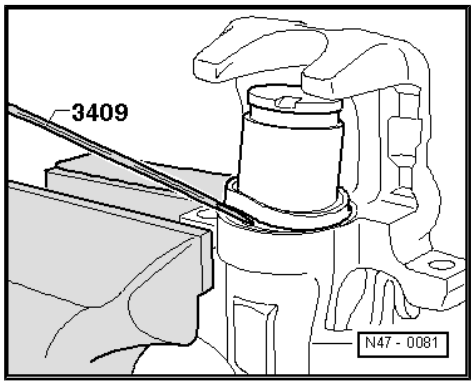

– Install the pistons by turning clockwise.

– Be careful not to damage the cap.

– Use the Resetting & Extracting Tool - Plate - T10165/1- to help you bolt it on.

– Install the Brake Caliper Tool - T10165- so that the collar on the Resetting & Extracting Tool - Plate - T10165/1- is touching.

– Install by turning the thumbwheel on the Brake Caliper Tool - T10165- clockwise.

The automatic adjustment in brake caliper is destroyed when piston is moved with piston resetting tool (for example T 10145) or foot brake is pressed.

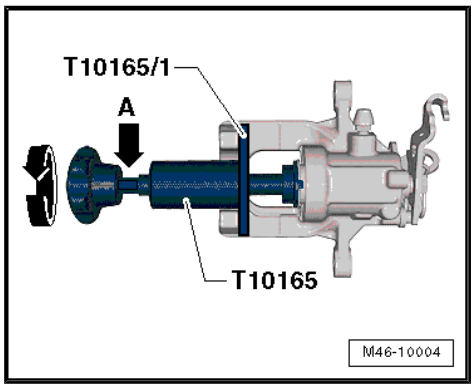

Copyright by Volkswagen AG. Volkswagen AG does not guarantee or accept any ... the correctness of information in this document. Copyright by Volkswagen AG. Protected by copyright. Copying for private or commercial purposes, in part or in whole, is not permitted unless authorised by Volkswagen AG.

2.2.2 Brake Caliper, Pre-Bleeding

– Open the bleeder valve -arrow A- and using a standard bleeder bottle, fill with brake fluid until brake fluid with no bubbles flows from the threaded hole (brake hose connection) -arrow B-. Close the bleed valve.

Position brake caliper as shown during pre-bleed procedure.

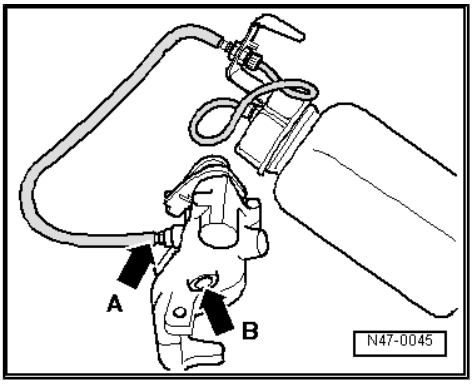

Protected by copyright. Copying for private or commercial purposes, in part or in whole, is not permitted unless authorised by Volkswagen AG. Volkswagen AG does not guarantee or accept any liability with respect to the correctness of information in this document. Copyright by Volkswagen AG.

3 Brake Booster/Brake Master Cylinder

⇒ “3.1 Overview - Brake Booster/Brake Master Cylinder”, page 106

⇒ “3.2 Brake Lamp Switch, Removing and Installing”, page 108

⇒ “3.3 Brake Master Cylinder, Removing and Installing”, page 110

⇒ “3.4 Brake Booster, Removing and Installing”, page 113

⇒ “3.5 Brake Fluid Reservoir, Removing and Installing”, page 118

3.1 Overview - Brake Booster/Brake Master Cylinder

WARNING

Only use new brake fluid conforming to VW standard (VW 501 14).

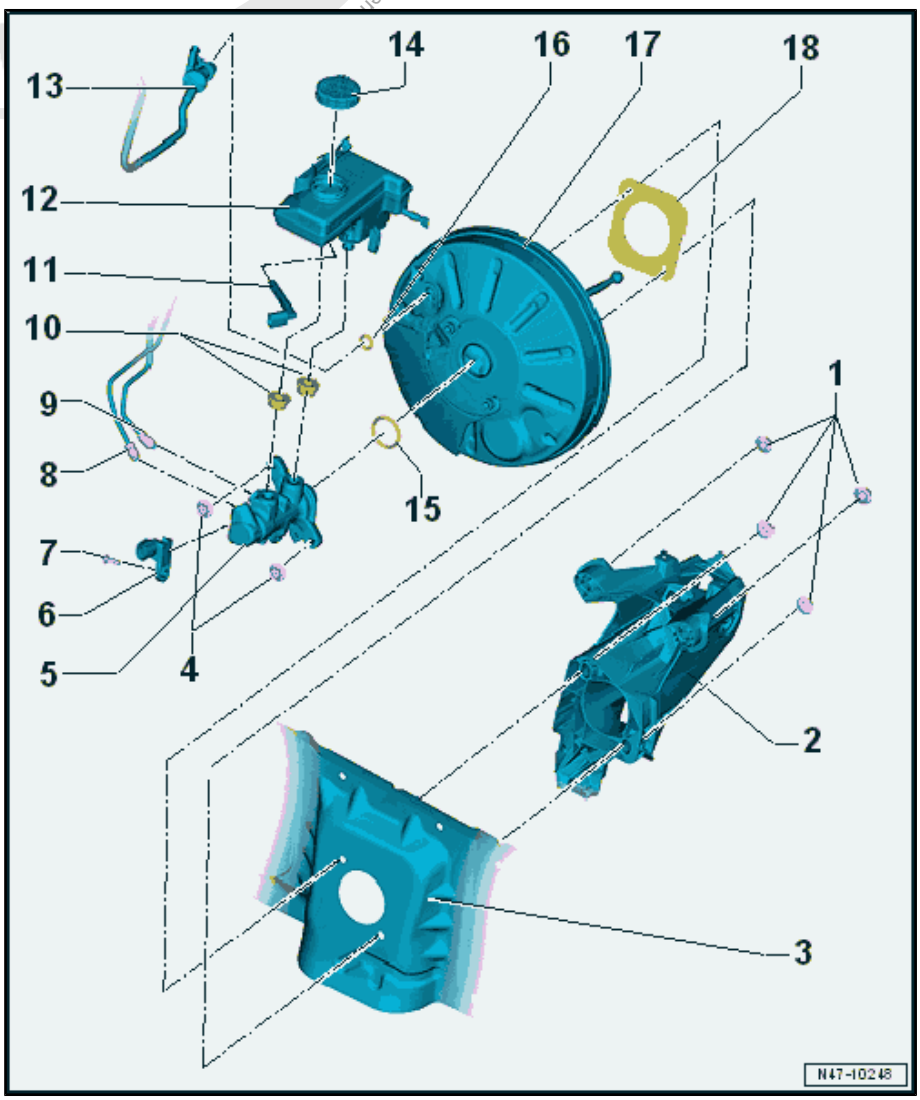

1 - Hex Nut

- 25 Nm
- Self-locking
- Replace after removing
- Tightening sequence. Refer to ⇒ Fig. ““Tightening Sequence”“ , page 108

2 - Bracket/Pedal Assembly

- Assembly sequence. Refer to ⇒ “4.1 Overview - Brake Pedal”, page 87 .
- Mounting bracket, removing and installing. Refer to ⇒ “4.5 Mounting Bracket, Removing and Installing”, page 90 .
- Separate the brake pedal from brake booster. Refer to ⇒ “4.2 Brake Pedal, Removing from Brake Booster”, page 88 .
- Brake pedal to brake booster, connecting. Refer to ⇒ “4.3 Brake Pedal, Attaching to Brake Booster”, page 89 .
- Brake Pedal, removing and installing. Refer to ⇒ “4.4 Brake Pedal, Removing and Installing”, page 89 .

3 - Bulkhead

4 - Hex Nut

- ❑ 23 Nm
- ❑ Self-locking
- ❑ Replace after removing

5 - Brake Master Cylinder

- ❑ Cannot be serviced. Replace as complete unit if malfunctioning.
- ❑ Removing and installing. Refer to ⇒ “3.3 Brake Master Cylinder, Removing and Installing”, page 110 .

6 - Brake Lamp Switch - F-

- ❑ Removing and installing. Refer to ⇒ “3.2 Brake Lamp Switch, Removing and Installing”, page 108 .

7 - Bolt

- ❑ 8 Nm

8 - Brake Line

- ❑ 14 Nm
- ❑ Brake master cylinder/secondary piston circuit to the ABS Hydraulic Unit - N55-

9 - Brake Line

- ❑ 14 Nm
- ❑ Brake master cylinder/primary piston circuit to the ABS Hydraulic Unit - N55-

10 - Sealing Plug

- ❑ Moisten with brake fluid and press into brake fluid reservoir

11 - Brake Fluid Level Warning Switch - F34-

12 - Brake Fluid Reservoir

- ❑ Bolt 8 Nm

13 - Vacuum Hose

- ❑ Vehicles with check valve
- ❑ Insert into brake booster
- ❑ On some vehicles with a gasoline engine the Brake Booster Vacuum Sensor - G608- is installed. Refer to ⇒ “4.3 Vacuum Sensor G608 , Removing and Installing”, page 122 .

14 - Cap

15 - Seal

- ❑ Master brake cylinder/brake booster

16 - Seal

- ❑ Vacuum hose/brake booster

17 - Brake Booster

- ❑ Functional check:
  - Vehicles with engine switched off, depress brake pedal firmly several times (to exhaust the vacuum in the unit).
  - Depress and hold brake pedal with average foot pressure and start engine. If brake booster is working properly, pedal will be felt to give noticeably under foot (booster assistance becomes effective).
- ❑ Replace completely if there are malfunctions (check the vacuum system for the brake booster first; refer to ⇒ “4.4 Vacuum System, Checking”, page 123)
- ❑ Removing and installing. Refer to ⇒ “3.4 Brake Booster, Removing and Installing”, page 113 .

18 - Seal

- ❑ Replacing
- ❑ Attached, only at the factory
- ❑ Do not replace the gluing on the brake booster and plenum chamber

Protected by copyright. Copying for private or commercial purposes, in part or in whole, is not permitted unless authorised by Volkswagen AG. Volkswagen AG does not guarantee or accept any liability with respect to the correctness of information in this document. Copyright by Volkswagen AG.

Protected by copyright. Copying for private or commercial purposes, in part or in whole, is not permitted unless authorised by Volkswagen AG. Volkswagen AG does not guarantee or accept any liability with respect to the correctness of information

Tightening Sequence

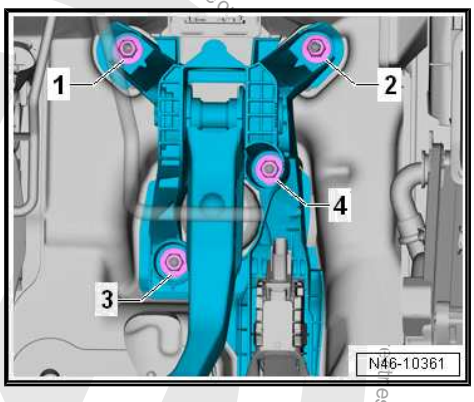

3.2 Brake Lamp Switch, Removing and Installing

Removing

Diesel Vehicles

– Unclip the vacuum line from the air guide hose.
– Open the clamps -1 and 2-.
– Remove the air guide hose.

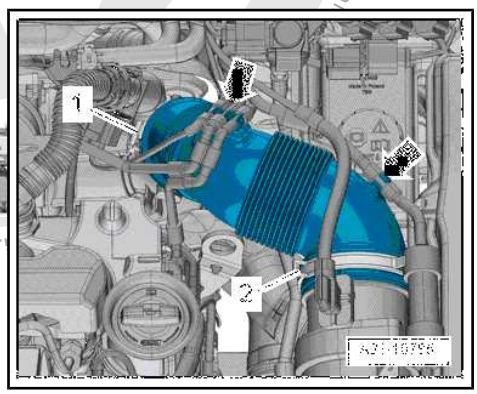

Vehicles with 2.0 L Gasoline Engine

– Open the clamps -2 and 3-.
– Remove the air guide hose -1-.

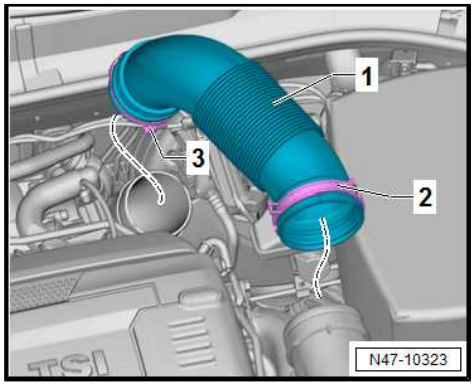

Continuation for All Vehicles

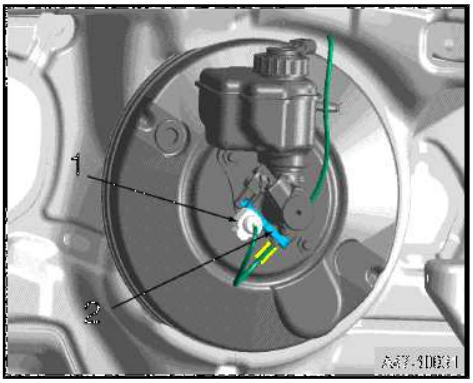

– Release the connector -1- from the Brake Lamp Switch - F- and remove.

– Remove the Brake Lamp Switch - F- -2- bolt.

– Remove the Brake Lamp Switch - F- down from the brake master cylinder and remove it upward from the retaining tab.

Installing

– Install in reverse order of removal.

Tightening Specification

♦ Refer to ⇒ “3.1 Overview - Brake Booster/Brake Master Cylinder”, page 106

♦ Refer to ⇒ Engine Mechanical, Fuel Injection and Glow Plug; Rep. Gr. 23 ; Air Filter; Overview - Air Filter Housing .

♦ Refer to ⇒ Engine Mechanical, Fuel Injection and Ignition; Rep. Gr. 24 ; Air Filter; Overview - Air Filter Housing .

Protected by copyright. Copying for private or commercial purposes, in part or in whole, is not permitted unless authorised by Volkswagen AG. Volkswagen AG does not guarantee or accept any liability with respect to the correctness of information in this document. Copyright by Volkswagen AG.

3.3 Brake Master Cylinder, Removing and Installing

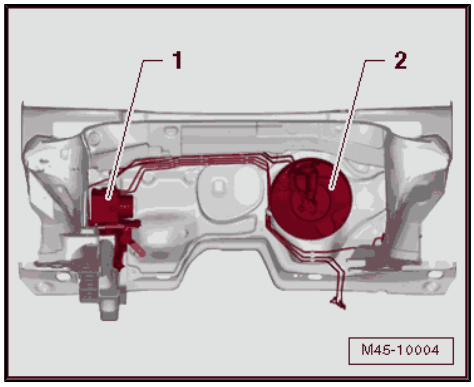

Special tools and workshop equipment required

- Torque Wrench 1331 5-50Nm - VAG1331-
- Torque Wrench 1410 - VAG1410-
- Brake Charger/ Bleeder Unit - VAS5234-
- Torque Wrench 1331 Insert - Ring Wrench - 11mm & 17mm - VAG1331/2-
- Engine Bung Set - VAS6122-
- Sealing Tool - T10249-
- Sealing Plugs from the Repair Kit - 1H0 698 311 A-

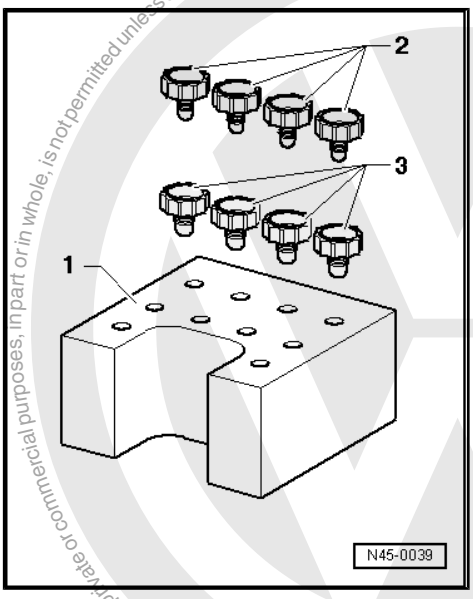

Protected by copyright. Copying for private or commercial purposes, in part or in whole, is not permitted unless authorised by Volkswagen AG. Volkswagen AG does not guarantee or accept any liability with respect to the correctness of information in this document. Copyright by Volkswagen AG.

Component Location

1 - ABS Hydraulic Unit - N55- and ABS Control Module - J104-

2 - Brake Booster

Removing

– If the vehicle has a coded radio, get the radio code from the customer before beginning.

– Disconnect the battery. Refer to ⇒ Electrical Equipment; Rep. Gr. 27 ; Battery; Battery, Disconnecting and Connecting .

– Remove the battery. Refer to ⇒ Electrical Equipment; Rep. Gr. 27 ; Battery; Battery, Removing and Installing .

– Remove the engine cover. Refer to ⇒ Engine Mechanical, Fuel Injection and Ignition; Rep. Gr. 10 ; Engine Cover; Engine Cover, Removing and Installing .

Diesel Vehicles

– Unclip the vacuum line from the air guide hose.

– Open the clamps -1 and 2-.

– Remove the air guide hose.

– Remove the air filter housing. Refer to ⇒ Engine Mechanical, Fuel Injection and Glow Plug; Rep. Gr. 23 ; Air Filter; Air Filter Housing, Removing and Installing .

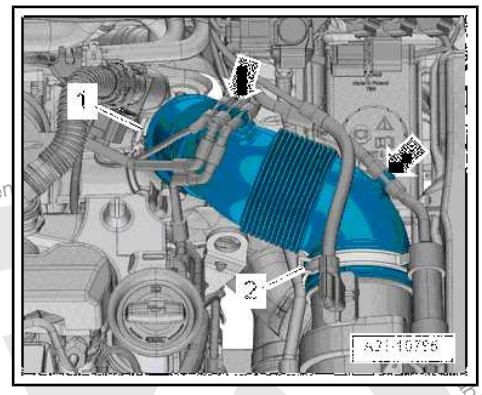

Vehicles with 2.0 L Gasoline Engine

– Open the clamps -2 and 3-.

– Remove the air guide hose -1-.

– Remove the air filter housing. Refer to ⇒ Engine Mechanical, Fuel Injection and Ignition; Rep. Gr. 24 ; Air Filter; Air Filter Housing, Removing and Installing .

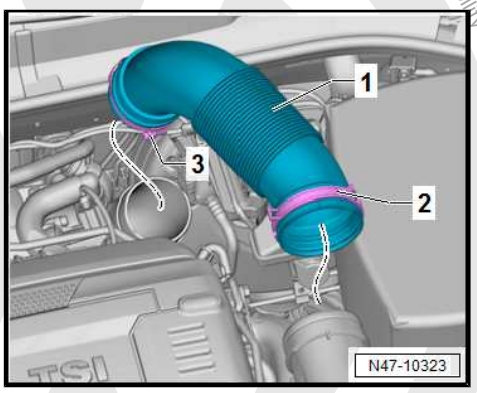

Protected by copyright. Copying for private or commercial purposes, in part or in whole, is not permitted unless authorised by Volkswagen AG. Copyright by Volkswagen AG. No liability with respect to the correctness of information in this document.

Continuation for All Vehicles

– Remove the battery holder. Refer to ⇒ Electrical Equipment; Rep. Gr. 27 ; Battery; Battery Tray, Removing and Installing .

– Place sufficient lint-free cloths in the area of the engine and transmission.

– Extract as much brake fluid as possible from the brake fluid reservoir with the Brake Charger/Bleeder Unit - VAS5234- .

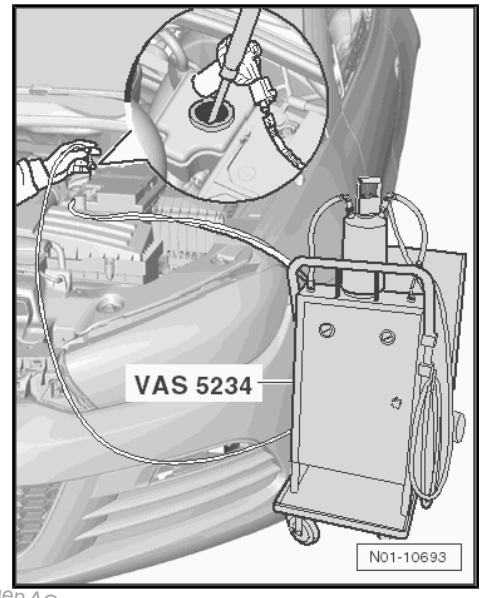

Vehicles with a Manual Transmission

– Remove the supply hose -2- for the clutch master cylinder -3- from the brake fluid reservoir -4-.

– Seal the supply hose -2- for the clutch master cylinder -3- using Sealing Tool - T10249- -1- or Engine Bung Set - VAS6122- .

– Tie up the return hose -2-.

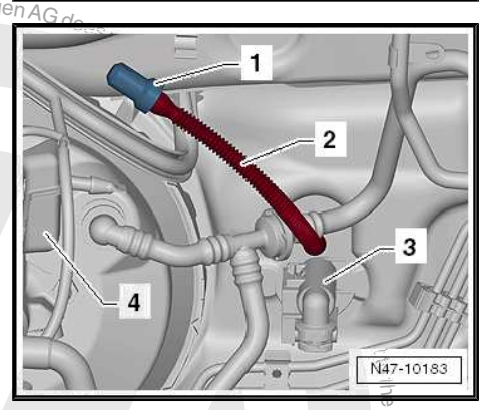

Continuation for All Vehicles

– If equipped release the connector -2- from the Vacuum Sensor - G608- .

– Release and remove the connector -3- from the Brake Fluid Level Warning Switch - F34- .

– Release the connector -1- from the Brake Lamp Switch - F- and remove.

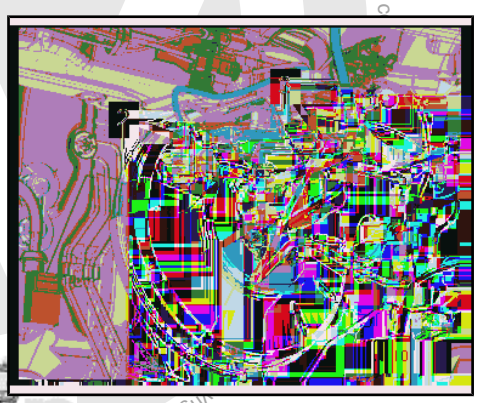

– Remove the bolt -1- and pull the brake fluid reservoir -2- from the sealing plugs.

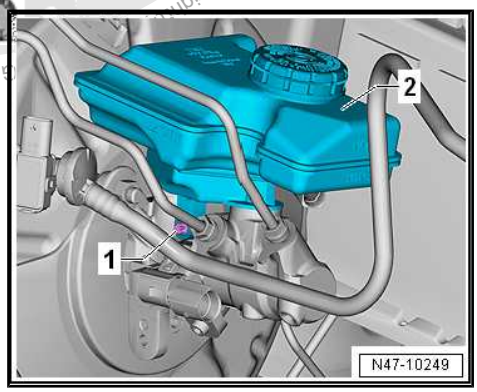

Protected by copyright. Copying for private or commercial purposes, in part or in whole, is not permitted unless authorised by Volkswagen AG. Volkswagen AG does

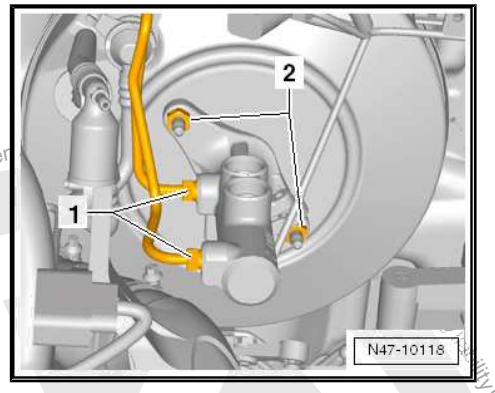

– Remove the brake lines -1- on brake master cylinder.
– Close the brake line with Sealing Plugs from the Repair Kit - 1H0 698 311 A- .
– Close the open connections on the brake master cylinder with a suitable plug from the Engine Bung Set - VAS6122- .
– Remove the nuts -2- from the brake master cylinder.
– Remove the heat shield, if equipped.
– Carefully take brake master cylinder out of brake booster.
– Remove the Brake Light Switch - F- from brake master cylinder.

Installing

Install in reverse order of removal. Note the following:

– When installing together the brake master cylinder and brake booster, make sure that the push rod is correctly located in the brake master cylinder.
– Make sure the seal fits correctly when attaching the master brake cylinder to the brake booster -item 15- ⇒ Item 15 (page 107) .
– Make sure the sealing plugs are seated correctly in the brake master cylinder -item 10- ⇒ Item 10 (page 107) .
– Coat the plugs with brake fluid before pushing the brake fluid reservoir into the master brake cylinder -item 10- ⇒ Item 10 (page 107) .
– Bleed the brake system. Refer to ⇒ “6.2 Hydraulic System, Standard Bleeding”, page 132 .

Vehicles with Manual Transmission

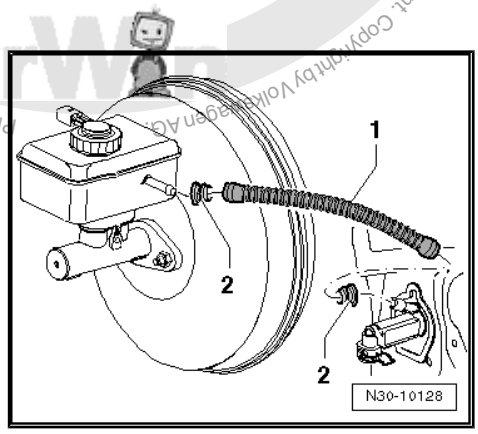

– The seals -2- must be located in the return hose -1- to the clutch master cylinder.
– Bleed the clutch mechanism. Refer to ⇒ Manual Transmission; Rep. Gr. 30 ; Clutch Mechanism; Clutch Mechanism, Bleeding .

Tightening Specification

- Refer to ⇒ “3.1 Overview - Brake Booster/Brake Master Cylinder”, page 106
- Refer to ⇒ Engine Mechanical, Fuel Injection and Ignition; Rep. Gr. 10 ; Engine Cover; Engine Cover, Removing and Installing .
- Refer to ⇒ Engine Mechanical, Fuel Injection and Glow Plug; Rep. Gr. 23 ; Air Filter; Overview - Air Filter Housing .
- Refer to ⇒ Engine Mechanical, Fuel Injection and Ignition; Rep. Gr. 24 ; Air Filter; Overview - Air Filter Housing .
- Refer to ⇒ Electrical Equipment; Rep. Gr. 27 ; Battery; Overview - Battery .

3.4 Brake Booster, Removing and Installing

Special tools and workshop equipment required

- Sealing Tool - T10249-
- Torque Wrench 1331 5-50Nm - VAG1331-

Protected by copyright. Copying for private and commercial purposes, in part or in whole, is not permitted unless authorised by Volkswagen AG. Copyright by Volkswagen AG. No liability with respect to the correctness of information in this document.

Reproduced by copyright authorised by Volkswagen AG. Volkswagen AG does not guarantee or accept any liability with respect to the correctness of information in this document. Copying for private or commercial purposes, in part or in whole, is not permitted unless

- Torque Wrench 1331 Insert - Ring Wrench - 11mm & 17mm - VAG1331/2-
- Torque Wrench 1410 - VAG1410-
- Hot air gun for example Wiring Harness Repair Set - Hot Air Blower - VAS1978/14A- .
- Brake Charger/Bleeder Unit - VAS5234-
- Engine Bung Set - VAS6122-
- Adhesive Strip Remover - VAS6349-
- Sealing Plugs from the Repair Kit - 1H0 698 311 A-
- Drill for example cordless drill or straight sander.

Note

First check the brake booster vacuum system in case of complaints regarding the brake booster.
⇒ "4.4 Vacuum System, Checking", page 123

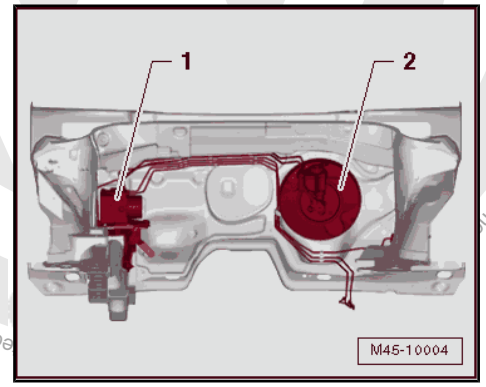

Component Location

1 - ABS Hydraulic Unit - N55- and ABS Control Module - J104-

2 - Brake Booster

Removing

– If the vehicle has a coded radio, get the radio code from the customer before beginning.

– Disconnect the battery. Refer to ⇒ Electrical Equipment; Rep. Gr. 27 ; Battery; Battery, Disconnecting and Connecting .

– Remove the battery. Refer to ⇒ Electrical Equipment; Rep. Gr. 27 ; Battery; Battery, Removing and Installing .

– Remove the engine cover. Refer to ⇒ Engine Mechanical, Fuel Injection and Ignition; Rep. Gr. 10 ; Engine Cover; Engine Cover, Removing and Installing .

Diesel Vehicles

– Unclip the vacuum line from the air guide hose.

– Open the clamps -1 and 2-.

– Remove the air guide hose.

– Remove the air filter housing. Refer to ⇒ Engine Mechanical, Fuel Injection and Glow Plug; Rep. Gr. 23 ; Air Filter; Air Filter Housing, Removing and Installing .

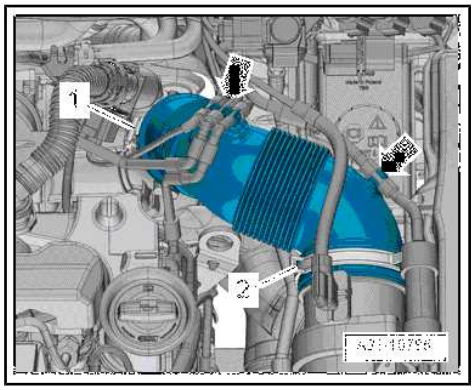

Vehicles with 2.0 L Gasoline Engine

– Open the clamps -2 and 3-.

– Remove the air guide hose -1-.

– Remove the air filter housing. Refer to ⇒ Engine Mechanical, Fuel Injection and Ignition; Rep. Gr. 24 ; Air Filter; Air Filter Housing, Removing and Installing .

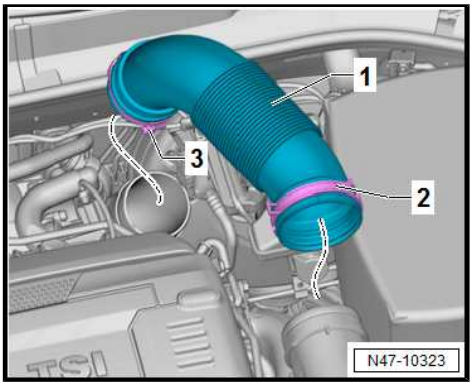

Continuation for All Vehicles

– Remove the battery holder. Refer to ⇒ Electrical Equipment; Rep. Gr. 27 ; Battery; Battery Tray, Removing and Installing .

– Place sufficient lint-free cloths in the area of the engine and transmission.

– Extract as much brake fluid as possible from the brake fluid reservoir with the Brake Charger/Bleeder Unit - VAS5234- .

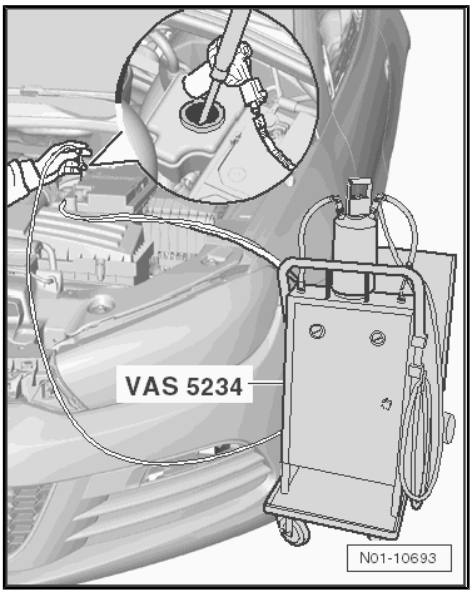

Vehicles with Manual Transmission

– Remove the supply hose -2- for the clutch master cylinder -3- from the brake fluid reservoir -4-.

– Seal the supply hose -2- for the clutch master cylinder -3- using Sealing Tool - T10249- -1- or Engine Bung Set - VAS6122- .

– Tie up the return hose -2-.

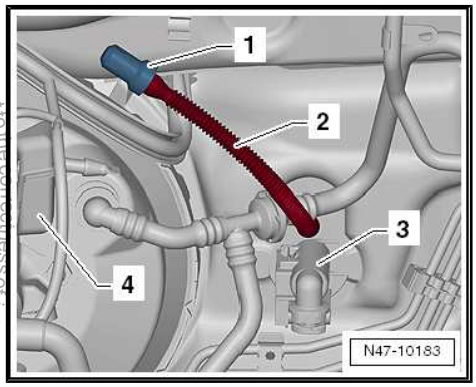

Continuation for All Vehicles

– If equipped release the connector -2- from the Vacuum Sensor - G608- .

– Release and remove the connector -3- from the Brake Fluid Level Warning Switch - F34- .

– Release the connector -1- from the Brake Lamp Switch - F- and remove.

– Remove the vacuum in the brake booster by pressing the brake pedal repeatedly.

– Remove the vacuum hose from the brake booster.

Protected by copyright. Copying for private or commercial purposes, in part or in whole, is not permitted unless authorised by Volkswagen AG. Volkswagen AG does not guarantee or accept any liability with respect to the correctness of information in this document. Copyright by Volkswagen AG.

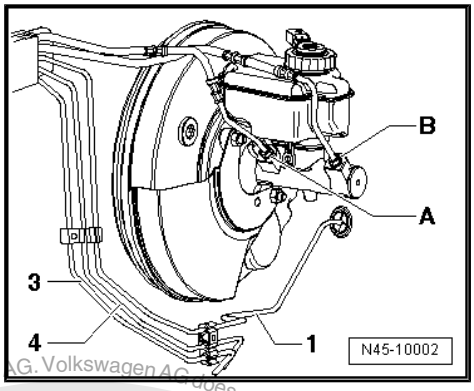

– Remove brake lines -A and B- from brake master cylinder.

– Close brake lines and open connections using Sealing Plugs from the Repair Kit - 1H0 698 311 A- or with suitable plugs from the Engine Bung Set - VAS6122- .

Vehicles with DSG Transmission

– Remove the selector lever cable and cable bracket from the transmission. Refer to ⇒ Direct Shift Gearbox; Rep. Gr. 34 ; Selector Mechanism; Overview - Selector Mechanism .

Vehicles with Manual Transmission

– Remove the connector station and cable bracket from the transmission. Refer to ⇒ Manual Transmission; Rep. Gr. 34 ; Selector Mechanism; Overview - Selector Mechanism .

Continuation for All Vehicles

– Remove the side cover from the driver side instrument panel. Refer to ⇒ Body Interior; Rep. Gr. 70 ; Instrument Panel; Instrument Panel Side Cover, Removing and Installing .

– Remove the footwell cover on the driver side. Refer to ⇒ Body Interior; Rep. Gr. 68 ; Storage Compartments and Covers .

– Remove the driver side center console cover. Refer to ⇒ Body Interior; Rep. Gr. 68 ; Center Console; Center Console, Removing and Installing .

– Remove the driver side storage compartment. Refer to ⇒ Body Interior; Rep. Gr. 68 ; Storage Compartments and Covers .

– Remove the driver side instrument panel cover. Refer to ⇒ Body Interior; Rep. Gr. 68 ; Storage Compartments and Covers; Driver Side Instrument Panel Cover, Removing and Installing .

– Remove the knee airbag. Refer to ⇒ Body Interior; Rep. Gr. 69 ; Knee Airbags; Overview - Knee Airbag .

– Remove the footwell vent on the driver side. Refer to ⇒ Heating, Ventilation and Air Conditioning; Rep. Gr. 87 ; Air Routing; Overview - Air Routing and Air Distribution in Passenger Compartment .

– Remove the crash bolster. Refer to ⇒ Body Interior; Rep. Gr. 70 ; Instrument Panel Central Tube; Overview - Instrument Panel Central Tube .

– Remove the Data Bus on Board Diagnostic Interface - J533- and set aside. Refer to ⇒ Electrical Equipment; Rep. Gr. 97 ; Control Modules; Data Bus On Board Diagnostic Interface - J533- , Removing and Installing .

– Disconnect brake pedal from brake booster. Refer to ⇒ “4.2 Brake Pedal, Removing from Brake Booster”, page 88 .

Protected by copyright. Copyright by Volkswagen AG. Volkswagen AG does not guarantee or accept any liability with respect to the correctness of information in this document. Copyright by Volkswagen AG. Volkswagen AG does not guarantee or accept any liability with respect to the correctness of information in this document. Copyright by Volkswagen AG. Volkswagen AG does not guarantee or accept any liability with respect to the correctness of information in this document. Copyright by Volkswagen AG. Volkswagen AG does not guarantee or accept any liability with respect to the correctness of information in this document. Copyright by Volkswagen AG.

– Remove the bolt -1- and fold the footwell trim panel -2- in the direction of the -arrow- into the vehicle interior.

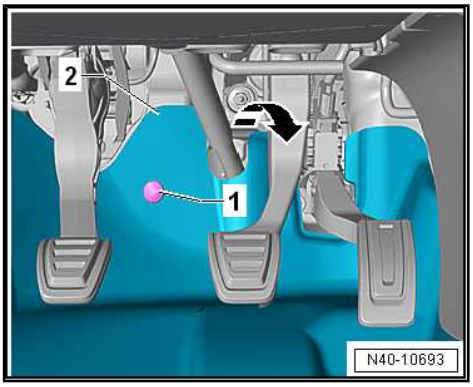

– Remove the nuts -3 and 4- from the brake booster.
– Pull the brake booster from the plenum chamber against the seal adhesiveness.
– Carefully remove the brake booster from the vehicle.
– Remove the master brake cylinder nuts.
– Remove any heat shield.
– Carefully remove the master brake cylinder from the brake booster.

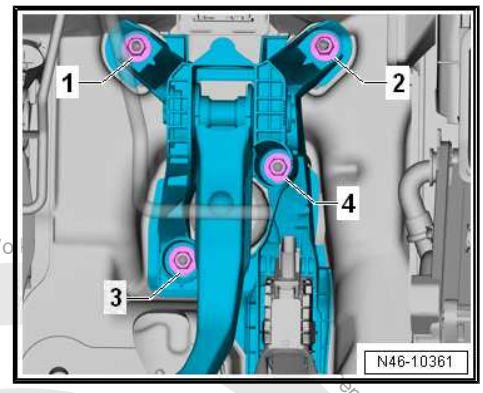

Installing

Install in reverse order of removal. Note the following:

Note

- *The brake booster is only additionally glued with the seal at the factory.*
- *Do not replace the gluing on the brake booster and plenum chamber, but replace the seal.*

– Remove all adhesive residue from the plenum chamber and if necessary the brake booster. To do this use Adhesive Strip Remover - VAS6349- with a dill for example a cordless drill or straight sander.
– Warm the adhesive residue gentle heat using a hot air gun and remove.
– Let the Adhesive Strip Remover - VAS6349- run slowly and rub against the direction or travel.
– Clean the surface thoroughly.
– Replace the seal -item 18- ⇒ Item 18 (page 107) .
– Carefully install the brake booster and tighten the nuts.
– Attach the brake pedal to the brake booster. Refer to ⇒ “4.3 Brake Pedal, Attaching to Brake Booster”, page 89 .
– Bleed the brake system. Refer to ⇒ “6.2 Hydraulic System, Standard Bleeding”, page 132 .

Protected by copyright. Copying for private or commercial purposes, in part, is not permitted unless authorised by Volkswagen AG. Volkswagen AG does not guarantee or accept any liability with respect to the correctness of information in this document. Copyright by Volkswagen AG.

Vehicles with Manual Transmission

– The seals -2- must be located in the return hose -1- to the clutch master cylinder.

– Bleed the clutch mechanism. Refer to ⇒ Manual Transmission; Rep. Gr. 30 ; Clutch Mechanism; Clutch Mechanism, Bleeding .

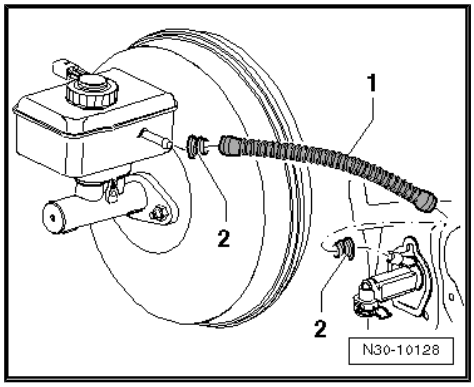

Tightening Specification

- Refer to ⇒ "3.1 Overview - Brake Booster/Brake Master Cylinder", page 106
- Refer to ⇒ Body Interior; Rep. Gr. 70 ; Instrument Panel Central Tube; Overview - Instrument Panel Central Tube .
- Refer to ⇒ Heating, Ventilation and Air Conditioning; Rep. Gr. 87 ; Air Routing; Overview - Air Routing and Air Distribution in Passenger Compartment .
- Refer to ⇒ Body Interior; Rep. Gr. 69 ; Knee Airbags; Overview - Knee Airbag
- Refer to ⇒ Body Interior; Rep. Gr. 68 ; Storage Compartments and Covers; Component Location Overview - Storage Compartment/Covers .
- Refer to ⇒ Manual Transmission; Rep. Gr. 34 ; Selector Mechanism; Overview - Selector Mechanism .
- Refer to ⇒ Electrical Equipment; Rep. Gr. 97 ; Control Modules; Data Bus On Board Diagnostic Interface - J533- , Removing and Installing .
- Refer to ⇒ Engine Mechanical, Fuel Injection and Ignition; Rep. Gr. 10 ; Engine Cover; Engine Cover, Removing and Installing .
- Refer to ⇒ Engine Mechanical, Fuel Injection and Glow Plug; Rep. Gr. 23 ; Air Filter; Overview - Air Filter Housing .
- Refer to ⇒ Engine Mechanical, Fuel Injection and Ignition; Rep. Gr. 24 ; Air Filter; Overview - Air Filter Housing .
- Refer to ⇒ Electrical Equipment; Rep. Gr. 27 ; Battery; Overview - Battery .

3.5 Brake Fluid Reservoir, Removing and Installing

Special tools and workshop equipment required

- Sealing Tool - T10249-
- Brake Charger/Bleeder Unit - VAS5234-
- Engine Bung Set - VAS6122-

Protected by copyright. Copying for private or commercial purposes, in part or in whole, is not permitted unless authorised by Volkswagen AG. Volkswagen AG does not guarantee or accept any liability with respect to the correctness of information in this document. Copyright by Volkswagen AG.

Removing

– Place sufficient lint-free cloths in the area of the engine and transmission.

– Extract as much brake fluid as possible from the brake fluid reservoir with the Brake Charger/Bleeder Unit - VAS5234- .

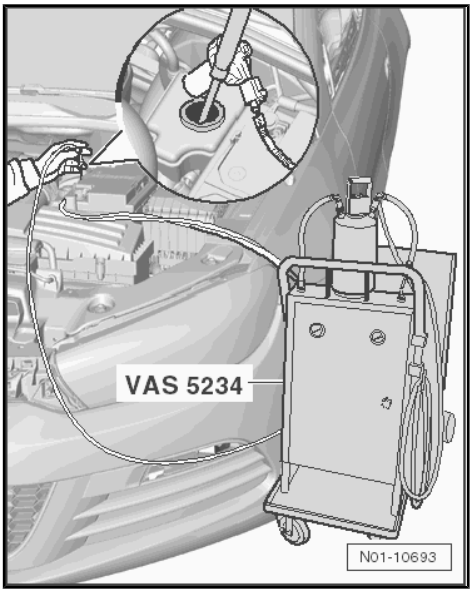

Vehicles with Manual Transmission

– Remove the supply hose -2- for the clutch master cylinder -3- from the brake fluid reservoir -4-.

– Seal the supply hose -2- for the clutch master cylinder -3- using Sealing Tool - T10249- -1- or Engine Bung Set - VAS6122- .

– Tie up the return hose -2-.

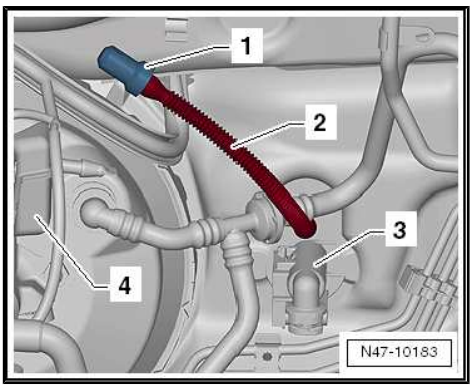

Vehicles with Diesel Engine and 2.0L Gasoline Engine

– Remove the engine cover. Refer to ⇒ Engine Mechanical, Fuel Injection and Ignition; Rep. Gr. 10 ; Engine Cover; Engine Cover, Removing and Installing . or ⇒ Engine Mechanical, Fuel Injection and Glow Plug; Rep. Gr. 10 ; Engine Cover; Engine Cover, Removing and Installing .

– Loosen hose clamps and remove the air guide hose and air filter housing. Refer to ⇒ Engine Mechanical, Fuel Injection and Ignition; Rep. Gr. 24 ; Air Filter; Air Filter Housing, Removing and Installing .

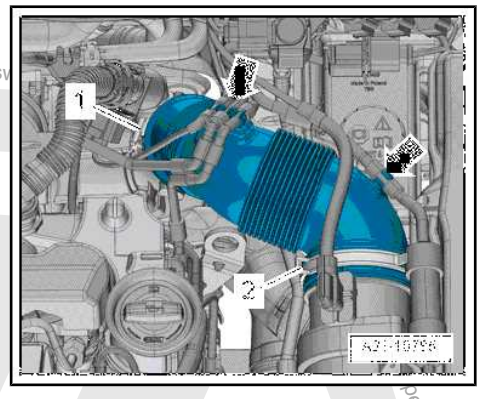

Continuation for All Vehicles

– Release the connection -2- for the Brake Fluid Level Warning Switch - F34- and remove.

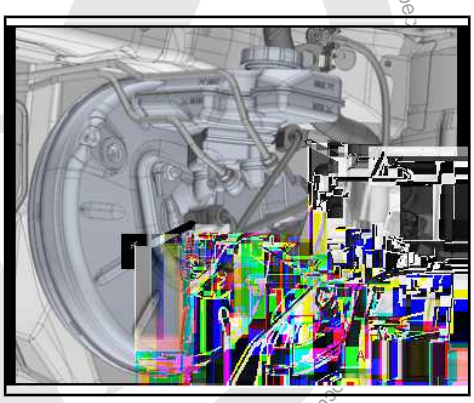

Protected by copyright. Copying for private or commercial purposes, in part or in whole, is not permitted unless authorised by Volkswagen AG. Volkswagen AG

– Release the left and right catches -2- in direction of -arrow- and remove the brake fluid reservoir from the sealing plug upward.

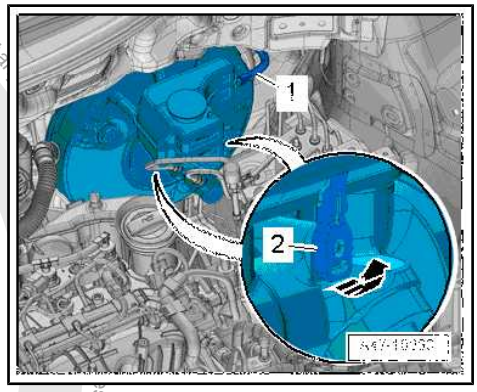

Note

Lightly push the brake line aside.

Installing

Install in reverse order of removal. Note the following:

– Make sure the sealing plugs are seated correctly in the brake master cylinder -item 10- ⇒ Item 10 (page 107) .

– Coat the plugs with brake fluid before pushing the brake fluid reservoir into the master brake cylinder -item 10- ⇒ Item 10 (page 107) .

– Bleed the brake system. Refer to ⇒ “6.2 Hydraulic System, Standard Bleeding”, page 132 .

Vehicles with Manual Transmission

– The seals -2- must be located in the return hose -1- to the clutch master cylinder.

– Bleed the clutch mechanism. Refer to ⇒ Manual Transmission; Rep. Gr. 30 ; Clutch Mechanism; Clutch Mechanism, Bleeding .

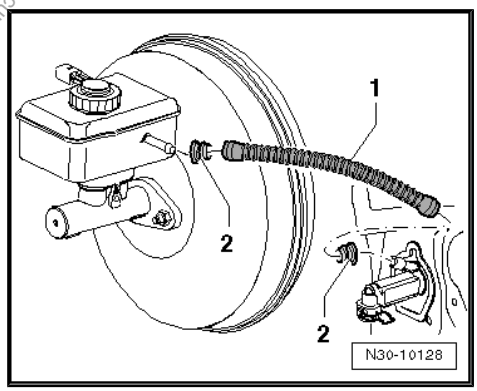

Tightening Specification

- Refer to ⇒ “3.1 Overview - Brake Booster/Brake Master Cylinder”, page 106
- Refer to ⇒ Engine Mechanical, Fuel Injection and Glow Plug; Rep. Gr. 23 ; Air Filter; Air Filter Housing, Removing and Installing
- Refer to ⇒ Engine Mechanical, Fuel Injection and Ignition; Rep. Gr. 10 ; Engine Cover; Engine Cover, Removing and Installing or ⇒ Engine Mechanical, Fuel Injection and Glow Plug; Rep. Gr. 10 ; Engine Cover; Engine Cover, Removing and Installing .

Volkswagen AG. Volkswagen AG does not guarantee or accept any liability for the authenticity, accuracy or completeness of information in this document. Copyright by Volkswagen AG. Copyright of this document is not permitted for commercial purposes, in part or in whole, is not permitted without the authorisation of Volkswagen AG.

4 Vacuum System

⇒ “4.1 Overview - Vacuum Pump”, page 121

⇒ “4.2 Check Valve, Checking”, page 122

⇒ “4.3 Vacuum Sensor G608 , Removing and Installing”, page 122

⇒ “4.4 Vacuum System, Checking”, page 123

4.1 Overview - Vacuum Pump

⇒ “4.1.1 Overview - Vacuum Pump, 2.0L Gasoline Engine”, page 121

⇒ “4.1.2 Brake Booster Vacuum Pump, Diesel Vehicles”, page 121

4.1.1 Overview - Vacuum Pump, 2.0L Gasoline Engine

1 - Vacuum Hose

- ❑ Replace if damaged.

2 - Vacuum Line

- ❑ Replace if damaged.

3 - Seal

- ❑ Replace

4 - Vacuum Pump

- ❑ Refer to ⇒ Engine Mechanical, Fuel Injection and Ignition; Rep. Gr. 15 ; Cylinder Head; Overview - Cylinder Head or ⇒ Engine Mechanical, Fuel Injection and Glow Plug; Rep. Gr. 15 ; Cylinder Head; Overview - Cylinder Head .

5 - Bolt

- ❑ 9 Nm

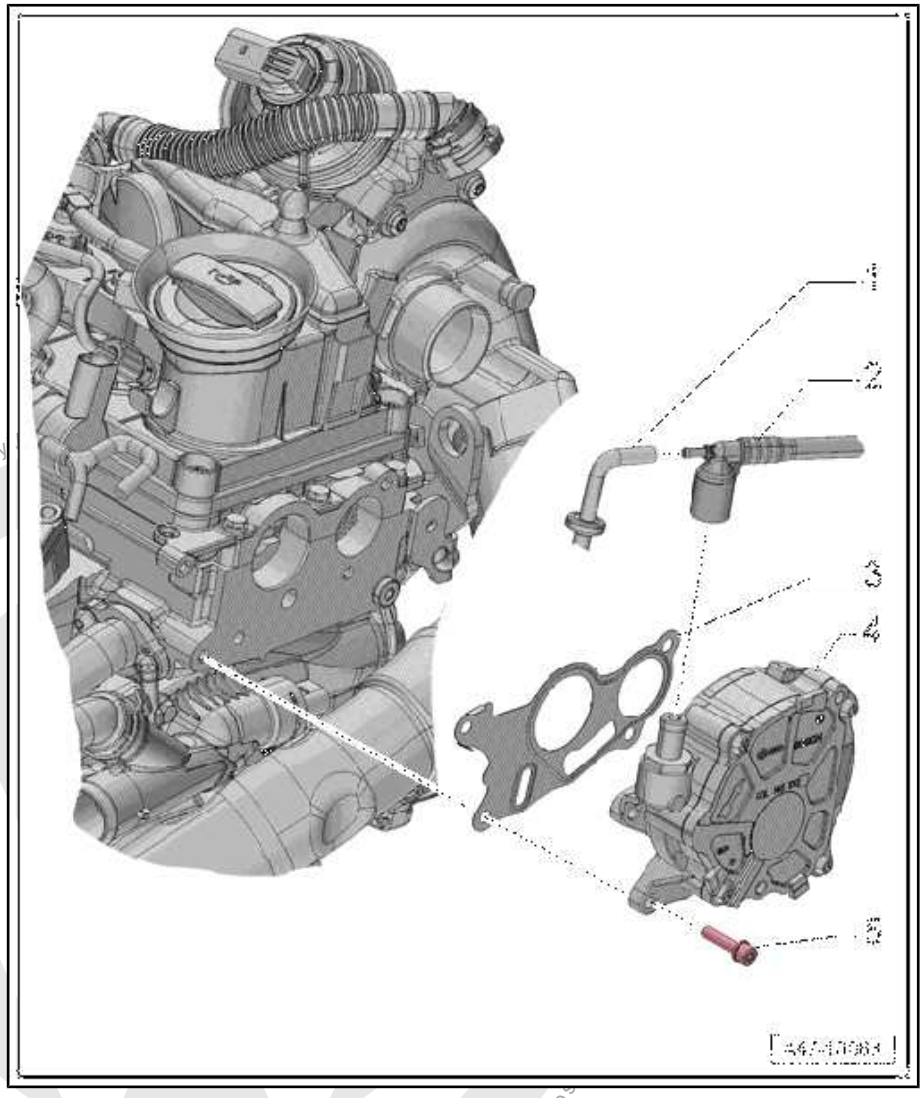

4.1.2 Brake Booster Vacuum Pump, Diesel Vehicles

The vacuum pump is installed behind the oil pump.

Protected by copyright. Copyright by Volkswagen AG. Copying for private or commercial purposes, in part or in whole, is not permitted unless authorized by Volkswagen AG. Copyright by Volkswagen AG.

– Vacuum Pump/oil pump removing and installing. Refer to ⇒ Engine Mechanical, Fuel Injection and Ignition; Rep. Gr. 17 ; Oil Pan/Oil Pump; Overview - Oil Pan/Oil Pump or⇒ Engine Mechanical, Fuel Injection and Glow Plug; Rep. Gr. 17 ; Oil Pan/Oil Pump; Overview - Oil Pan/Oil Pump .

4.2 Check Valve, Checking

– Blow some air first in one then in the other direction through the check valve.

♦ The check valve -A- must allow air to flow through in the direction of the -arrow-.

♦ The check-valve must remain closed for opposite direction.

Observe correct installation position!

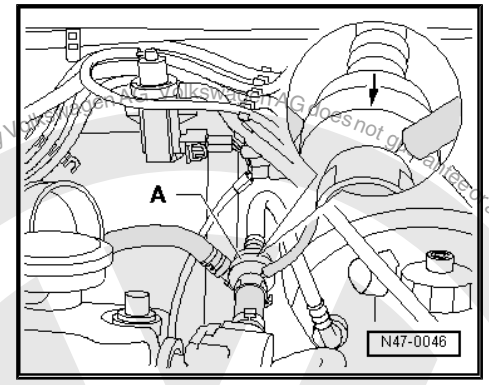

4.3 Vacuum Sensor - G608- , Removing and Installing

The Vacuum Sensor - G608- -2- is only installed on some gasoline engines.

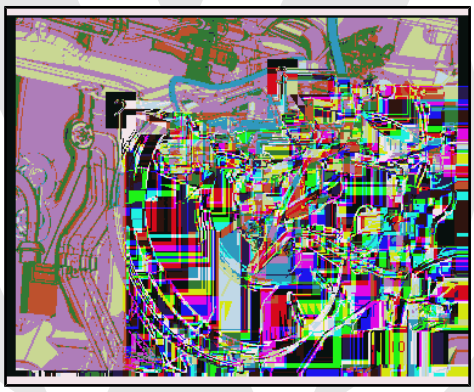

Removing

– Disconnect the connector -1- from the Vacuum Sensor - G608- -2-.

– Pull vacuum line out of brake booster.

– Unclip the Vacuum Sensor - G608- from the vacuum line.

Installing

Install in reverse order of removal. Note the following:

copyright. Copying for private or commercial purposes, in part or in whole, is not permitted unless authorised by Volkswagen AG. Volkswagen AG does not give any warranty or accept any liability with respect to the correctness of information in this document.

4.4 Vacuum System, Checking

⇒ “4.4.1 General Information”, page 123

⇒ “4.4.2 Brake Servo Tester VAS6721 , Connecting”, page 123

⇒ “4.4.3 Vacuum, Checking”, page 124

⇒ “4.4.4 Leak Test”, page 125

⇒ “4.4.5 Vacuum, Creating with Hand Vacuum Pump VAS6213 ”, page 126

4.4.1 General Information

Special tools and workshop equipment required

- Brake Servo Tester - VAS6721-

The following checks will be helpful when performing “Fault Finding” if there are complaints regarding the brake booster or the so-called hard brake pedal.

The following components are included in the check:

- Brake Booster
- Seal between the master brake cylinder and the brake booster
- Check valve
- Vacuum hoses and connectors
- Vacuum pump (if equipped)

The geographic location will influence the measurement results. The higher above sea level, the lower the air pressure.

Observe test requirements:

- Check all the vacuum hoses for damage (for example, tears or damaged caused by animals) and make sure they are secure
- Maintain clean working conditions when working on the vacuum system
- Clean the engine compartment before starting, if necessary

4.4.2 Brake Servo Tester - VAS6721- , Connecting

– Remove the vacuum hose from the brake booster.

Pressing the brake pedal a few times beforehand makes it easier to remove the vacuum hose.

Protected by copyright. Copyright by Volkswagen AG. Volkswagen AG does not guarantee or accept any liability with respect to the correctness of information in this document. Copyright by Volkswagen AG.

– Connect the Brake Servo Tester - VAS6721- -see following illustrations-.

Designation	Component	Explanation
A	Shut-off valve	In direction toward the vacuum hose, the check valve and vacuum pump (if equipped)
B	Shut-off valve	♦ Opening the Brake Servo Tester - VAS6721- makes it easier to remove. ♦ Open to simulate an incorrect source ♦ Connect the Hand Vacuum Pump - VAS6213- .
C	Shut-off valve	Toward the brake booster

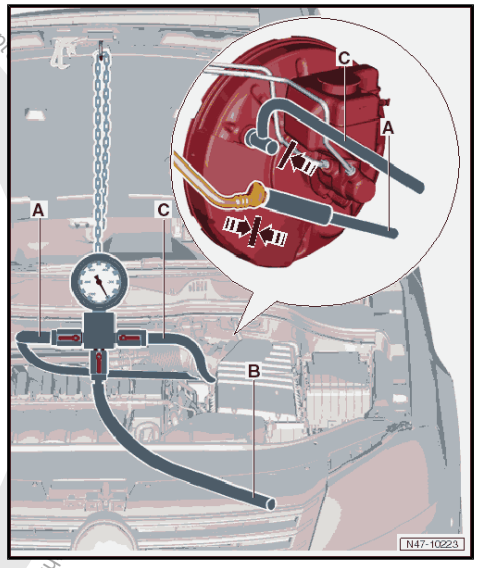

– Connect the Brake Servo Tester - VAS6721- hose -A- to the vacuum hose.

– Push the adapter -C- into the brake booster.

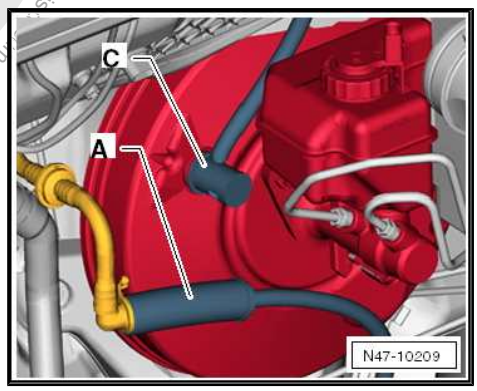

4.4.3 Vacuum, Checking

Note

♦ *The average earth atmospheric air pressure at sea level (N. N.) is 1,013 mbar (15 psi).*

♦ *At higher altitudes the air pressure decreases dramatically (approximately 11 mbar (.2 psi) per 1,000 m (3,281 ft) altitude).*

♦ *Local and time fluctuations will influence the vacuum.*

♦ *A cold engine, the Air Conditioning (A/C) switched being on and even only the engine idling can negatively influence the vacuum.*

– Check all the vacuum hoses beforehand for damage (for example, tears or damaged caused by animals) and make sure they are secure

– Connect the Brake Servo Tester - VAS6721- . Refer to ⇒ “4.4.2 Brake Servo Tester VAS6721 , Connecting”, page 123 .

– Open the shut-off valve -A-.

Protected by copyright. Copying for private or commercial purposes, in part or in whole, is not permitted unless authorised by Volkswagen AG. Volkswagen AG does not guarantee or accept any liability for this document. Copyright by Volkswagen AG.

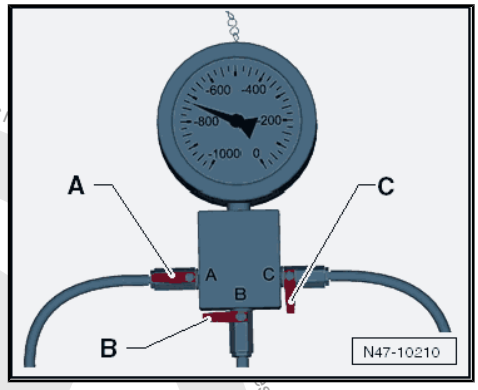

– Close the shut-off valves -B+C-.

– Start the warm (above 60 °C (140 °F)) engine and press the accelerator pedal one time quickly (engine RPM higher than 2,000).

– Read the measured value displayed.

Normally (see note) the vacuum should be between 600 and 950 mbar (8.7 and 13.7 psi) (depending on the engine installed).

Check the vacuum system for leaks if the measured value is not reached, even though all requirements (see notes).

– Create the vacuum using a Hand Vacuum Pump - VAS6213- for comparison purposes. Refer to ⇒ “4.4.5 Vacuum, Creating with Hand Vacuum Pump VAS6213 ”, page 126 .

Opening the shut-off valve -B- makes it easier to remove the hose connections and the adapter.

4.4.4 Leak Test

Note

- *The average earth atmospheric air pressure at sea level (N. N.) is 1,013 mbar (15 psi).*
- *At higher altitudes the air pressure decreases dramatically (approximately 11 mbar (.2 psi) per 1,000 m (3,281 ft) altitude).*
- *Local and time fluctuations will influence the vacuum.*
- *A cold engine, the Air Conditioning (A/C) switched being on and even only the engine idling can negatively influence the vacuum.*

– Check all the vacuum hoses beforehand for damage (for example, tears or damaged caused by animals) and make sure they are secure

– Connect the Brake Servo Tester - VAS6721- . Refer to ⇒ “4.4.2 Brake Servo Tester VAS6721 , Connecting”, page 123 .

– Open the shut-off valve -A-.

– Close the shut-off valves -B+C-.

– Start the warm (greater than 60 °C (140 °F)) engine and press the accelerator pedal one time quickly (engine RPM higher than 2,000).

Normally (see note) the vacuum should be between 600 and 950 mbar (8.7 and 13.7 psi) (depending on the engine installed).

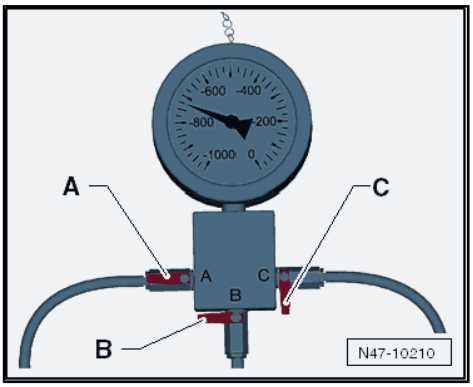

– Open the shut-off valve -C- and evacuate the brake booster.

– Turn off the engine.

– Read the measured value displayed and write it down.

The vacuum may drop 400 mbar (5.8 psi) within 12 hours.

If the vacuum drops more, check at the following points:

1 - Brake Booster

2 - Check valve, vacuum hoses and connections and vacuum pump/intake manifold

The vacuum will drop considerably within a few seconds if there are large leaks.

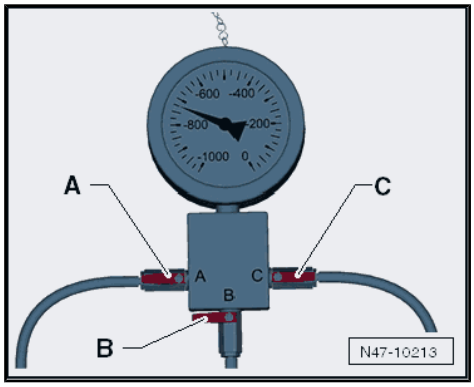

Checking the Vacuum Near the Brake Booster

– Close the shut-off valve -A- after creating the vacuum to test the brake booster vacuum.

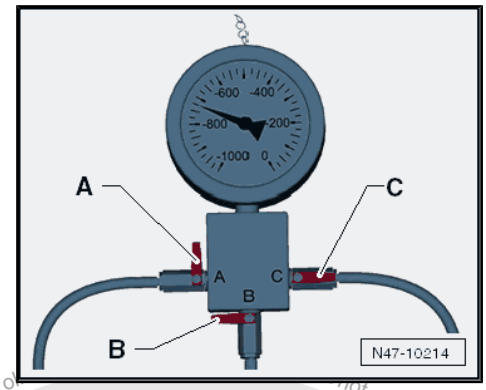

Note

Vacuum test near the check valve, vacuum hoses and connections and vacuum pump/intake manifold.

– Close the shut-off valve -C- after creating the vacuum to check the Brake Servo Tester - VAS6721- vacuum up to the intake manifold or up to the vacuum pump.

Opening the shut-off valve -B- makes it easier to remove the hose connections and the adapter.

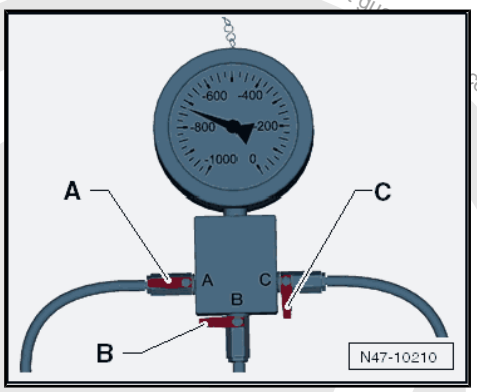

4.4.5 Vacuum, Creating with Hand Vacuum Pump - VAS6213-

In certain situations, the vacuum can be created using a Hand Vacuum Pump - VAS6213- instead of using the engine or a vacuum pump.

– Connect the Hand Vacuum Pump - VAS6213- to the vacuum hose on the connection -B- on the Brake Servo Tester - VAS6721- .

– Open the shut-off valve -B-.

– Create the vacuum using the Hand Vacuum Pump - VAS6213- until a vacuum between 600 and 950 mbar (8.7 and 13.7 psi) on the Brake Servo Tester - VAS6721- is displayed.

– Perform the tests.

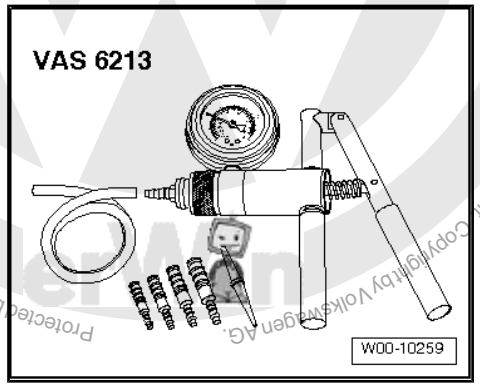

Protected by copyright. Copyright by Volkswagen AG. Copying for private or commercial purposes, in part or in whole, is not permitted unless authorised by Volkswagen AG. Volkswagen AG does not guarantee or accept any liability with respect to the correctness of information in this document.

5 Brake Lines

⇒ “5.1 Brake Lines, Repairing”, page 127

5.1 Brake Lines, Repairing

⇒ “5.1.1 General Information”, page 127

⇒ “5.1.2 Overview - Flanging Tool”, page 129

⇒ “5.1.3 Instructions”, page 129

5.1.1 General Information

Special tools and workshop equipment required

- Brake Line Tool Kit - VAS6056-
- Brake Charger/Bleeder Unit - VAS5234-

Flare brake lines with 5 mm outer diameter using Brake Line Tool Kit - VAS6056- without damaging coating. In this way, brake lines can be inexpensively partially replaced in certain cases.

Working with Brake Line Kit - VAG1356- is not permitted because of the coating and diameter of black brake lines.

Note

- *Do not bend the brake lines more than maximum 90°.*
- *Otherwise the lines will kink or otherwise deform.*
- *From this the diameter of the line will be narrowed.*
- *Disconnect brake lines preferably at underbody.*
- *Position of intermediate pieces should be selected so that they cannot rub against moving parts.*
- *Do not lubricate spindle, clean only with mineral spirits.*

List of Individual Tools

Protected by copyright. Copying for private or commercial purposes, partially or in whole, is only permitted with the authorised by Volkswagen AG. Volkswagen AG does not guarantee or accept any liability with respect to the correctness of information in this document. Copyright by Volkswagen AG.

1 - Brake Line Tool Kit - Flanging Tool - VAS6056/1-

- ❑ The Brake Line Tool Kit - Flanging Tool - VAS6056/1VAS 6056/6- the Clamp Jaws - VAS6056/6- .

2 - Brake Line Tool Kit - Pipe Cutter - VAS6056/2-

3 - Brake Line Tool Kit - Brake Line Scraper - VAS6056/3-

- ❑ The threaded pins (in shaft and at sides) are set and must not be adjusted!

4 - Brake Line Tool Kit - Line Grips - VAS6056/4-

5 - Brake Line Tool Kit - Pipe Bending Tool - VAS6056/5-

6 - AF 6 Angle Screwdriver

7 - Brake Line Tool Kit - Set Of Clamp Jaws - VAS6056/7-

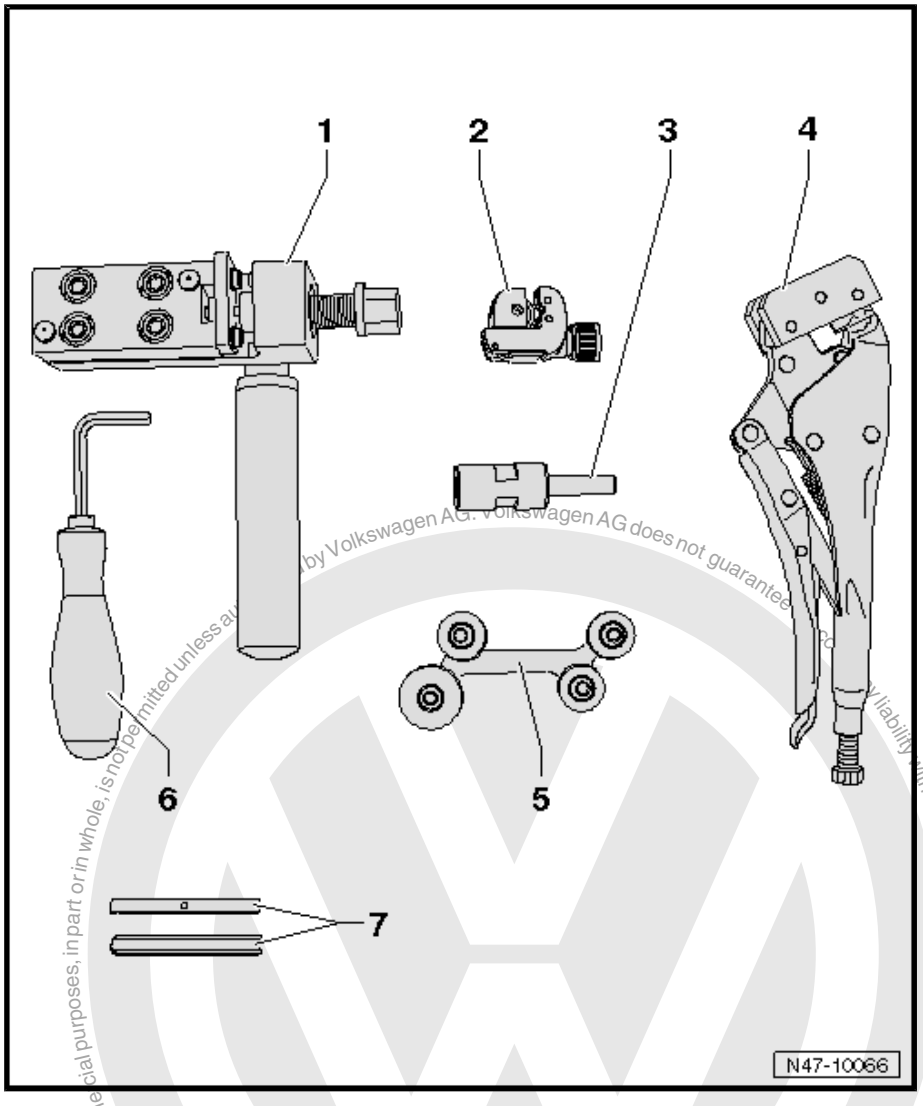

Protected by copyright. Copying for private or commercial purposes, in part or in whole, is not permitted unless authorised by Volkswagen AG. Volkswagen AG does not guarantee or accept any liability with respect to the correctness of information in this document. Copyright by Volkswagen AG.

5.1.2 Overview - Flanging Tool

1 - Flanging Tool Upper Section

- ❑ Remove to change Clamp Jaws

2 - Hand Grip Mount

- ❑ Must be removed to reach the upper section retaining bolt

3 - Bolt

- ❑ For flanging tool upper section

4 - Clamp Jaws Threaded Pins

- ❑ Center and hold the clamp jaws
- ❑ 2 mm inner hex socket

5 - Clamp Jaws

- ❑ Various
- ❑ Assembly instructions. Refer to ⇒ Fig. ""Clamp Jaws Installation Instructions"", page 129

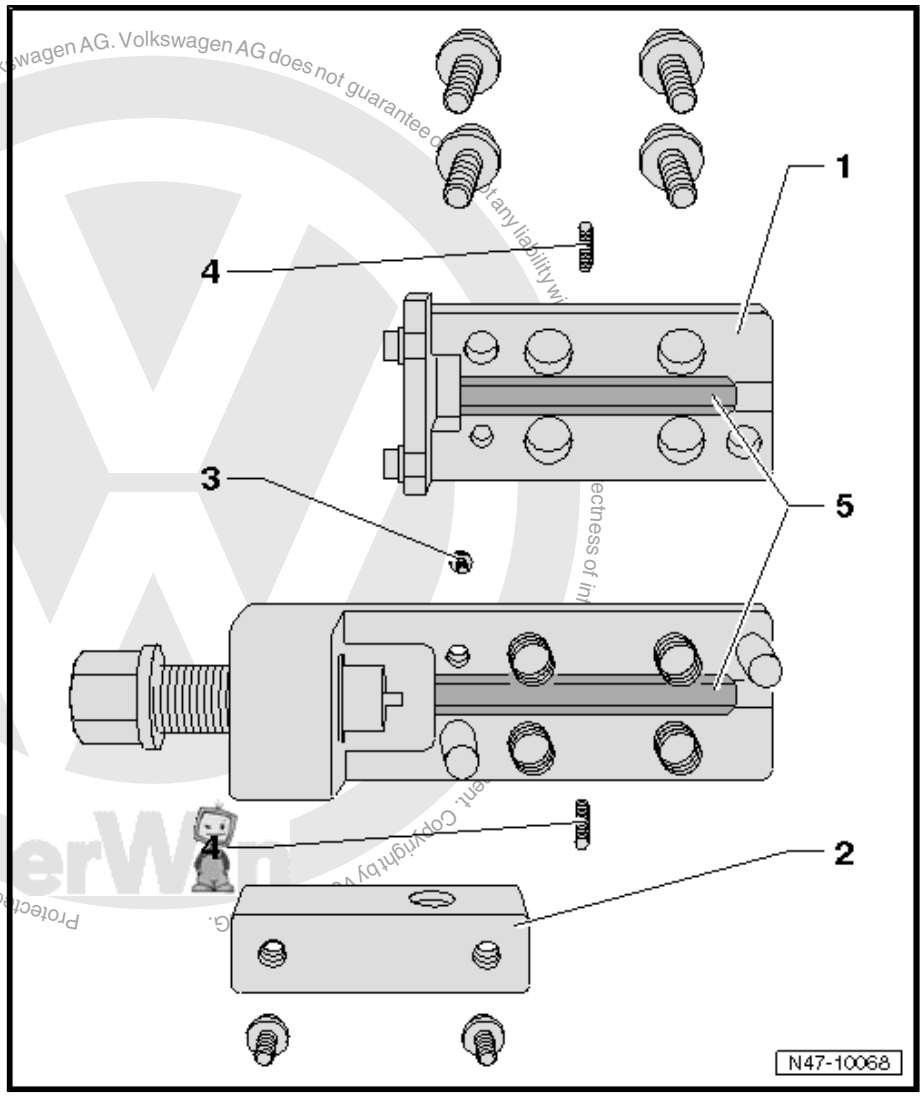

Clamp Jaws Installation Instructions

- VAS6056/6 (dark) for black brake lines
- VAS6056/7 (light) for green brake lines

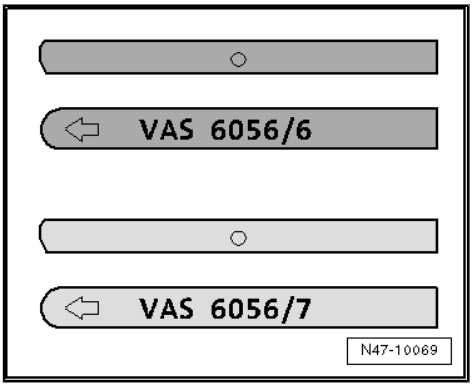

Note

- *The arrow on the rounded side of the clamp jaws must point toward the edge of the housing.*
- *The straight side of the clamp jaws must be installed toward the spindle, otherwise the flanged head will not be formed correctly.*

5.1.3 Instructions

– Remove the corresponding brake line on the brake caliper or wheel brake cylinder.

– Be sure to catch any leaking brake fluid and dispose of it correctly.

– Cut the brake line at a suitable place (straight, easily accessible piece) with the tube cutter -2-.
– Remove the piece to be exchanged.
– Lubricate brake line surface.

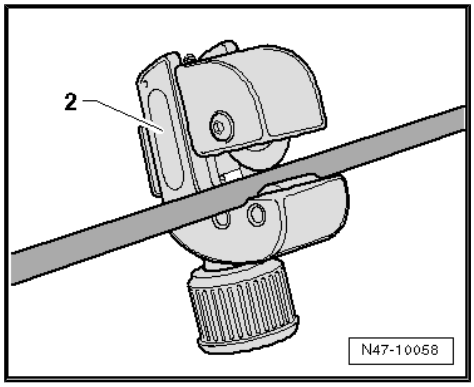

– Clamp the brake line in a set of locking pliers -4- so that 50 mm is sticking out of the plastic jaws.
– Install the peeling tool -3- in a power drill and place it on the brake line.
– Shear coating from brake line at a slow drill RPM and with light pressure against the line.

The length of the sheared-off portion is determined by the stop in the shearing tool.

– Remove shearing tool from brake line and remove shavings.

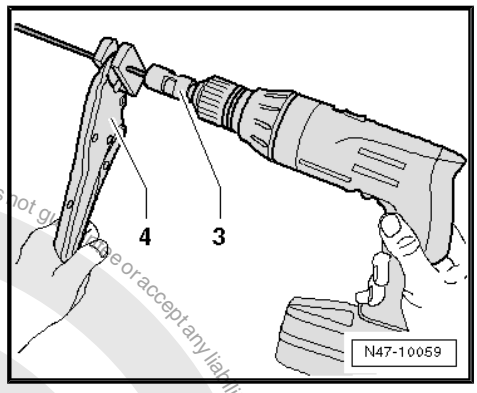

– Remove the locking pliers and push the tube fitting -D- onto the brake line.

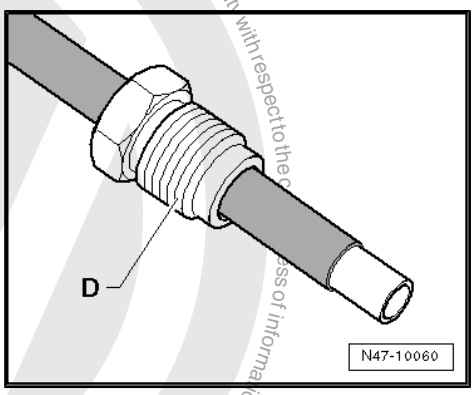

– Push the brake line -B- against the stop -A- inside the flaring tool.

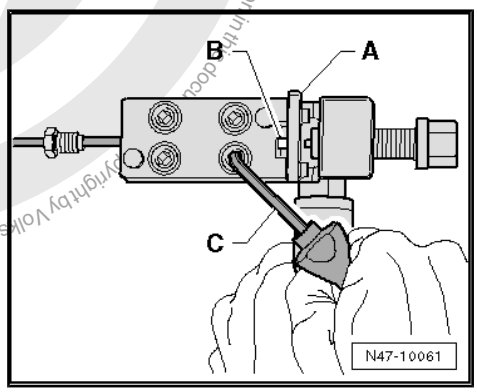

Note

Brake line must contact stop when hex socket heat screws are tightened, otherwise the flanged head will not be formed correctly.

– Tension the brake line in the flanging tool.
– Push the brake line forward until it can no longer be moved.
– Fold up the stop -A-.
– Tighten the hex socket head bolts diagonally using a long reach special wrench -C-.

Protected by copyright. Copying for private or commercial purposes, in part or in whole, is not permitted unless authorised by Volkswagen AG. Volkswagen AG does not guarantee or accept any liability with respect to the correctness of information in this document. Copyright by Volkswagen AG.

– Turn the spindle all the way in the flange unit.
– Turn the spindle back.
– Loosen the hex socket head bolts diagonally.
– Remove the brake line from the flanging tool, clean the brake line and the flared head and check.

Briefly rinse part of brake line remaining in vehicle:

– Connect the Brake Charger/Bleeder Unit - VAS5234- , place the bleeder container hose on the flared head of the brake line and run the Brake Charger/Bleeder Unit - VAS5234- briefly until some brake fluid runs through.
– Clean the brake line with compressed air.

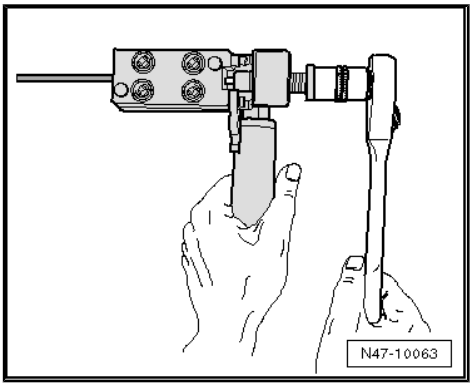

– Join brake lines with connecting piece -E-.
– Assemble brake line.
– Bleed the brake system. Refer to ⇒ “6.2 Hydraulic System, Standard Bleeding”, page 132 .

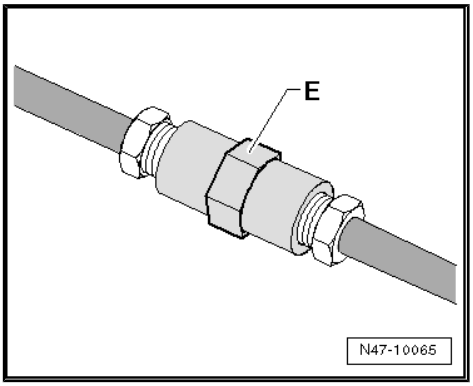

Protected by copyright. Copying for private or commercial purposes, in part or in whole, is not permitted unless authorised by Volkswagen AG. Volkswagen AG does not guarantee or accept any liability with respect to the correctness of information in this document. Copyright by Volkswagen AG.

6 Hydraulic System

⇒ “6.1 Brake Fluid General Information”, page 132
⇒ “6.2 Hydraulic System, Standard Bleeding”, page 132
⇒ “6.3 Hydraulic System, Post-Bleeding”, page 133
⇒ “6.4 Checking for Leaks”, page 133

6.1 Brake Fluid General Information

WARNING

Only use new brake fluid conforming to VW standard (VW 501 14).

Note

- *Brake fluid is poisonous. Due to its caustic nature, it must also never come in contact with paint.*
- *Brake fluid is hygroscopic, meaning that it absorbs moisture from the surrounding air, and must therefore be stored in air-tight containers.*
- *Rinse any spilled brake fluid with plenty of water.*

Brake Fluid, Changing

Refer to ⇒ Maintenance ; Booklet 36.1 ; Procedure Descriptions; Brake and Clutch System, Changing Brake Fluid .

6.2 Hydraulic System, Standard Bleeding

Special tools and workshop equipment required

- Brake Charger/Bleeder Unit - VAS5234-
- Brake Bleeding Tool Set - VAS6564-

Note

- *The bleeding of hydraulic system using the Brake Charger/ Bleeder Unit - VAS5234- is described.*
- *A positive pressure of 2 bar (29 psi) required to bleed the ABS Hydraulic Unit - N55- .*

– Remove the rear wheels on vehicles with 15" rims.

Adhere strictly to work sequence when bleeding brake system.

– Connect the Brake Charger/Bleeder Unit - VAS5234-

– Open the bleeder valves in the specified sequence and bleed the brake calipers.

1- Front left brake caliper

2 - Right front brake caliper

3 - Left rear brake caliper

4 - Right rear brake caliper

Protected by copyright. Copying for private or commercial purposes, in part or in whole, is not permitted unless authorised by Volkswagen AG. Volkswagen AG does not guarantee or accept any liability with respect to the correctness of information in this document. Copyright by Volkswagen AG.

Use suitable bleeder hose. It must fit tightly on bleeder valve so that no air gets into brake system.

– Vehicles with bleeder bottle hose attached, leave bleeder valve open long enough that brake fluid exits without bubbles.

6.3 Hydraulic System, Post-Bleeding

Perform a post-bleeding when:

♦ The brake pedal travel is too long, or the so-called soft brake pedal

A second technician is required during the post-bleeding.

– Connect the Brake Charger/Bleeder Unit - VAS5234-

– Press brake pedal forcefully and hold.

– Open bleeder valve at brake caliper.

– Press brake pedal down onto stop.

– Close bleeder valve with pedal depressed.

– Release brake pedal slowly.

Note

This bleeding procedure must be performed five times per brake caliper.

Bleeding sequence:

1- Front left brake caliper

2 - Right front brake caliper

3 - Left rear brake caliper

4 - Right rear brake caliper

Note

A road test must be performed after bleeding. During this, at least one ABS regulation must be performed!

6.4 Checking for Leaks

Special tools and workshop equipment required

♦ Brake Pressure Gauge - VAG1310A-

♦ Brake Pressure Gauge - Adapter M10 - VAG1310/6-

Test Prerequisites

• Brake system (ABS Hydraulic Unit - N55- , brake hoses, brake lines and brake calipers) operating properly and free of leaks.

Checking

– Remove the bleeder valve at one front brake caliper.

– Attach and bleed the Brake Pressure Gauge - VAG1310A- .

– Apply pressure to brake pedal until the gauge indicates a pressure of 50 bar (725 psi). The pressure must not drop by more than 4 bar (58 psi) during the test period of 45 seconds. Replace master cylinder if pressure drops greatly.

Protected by copyright. Copying for private or commercial purposes, in part or in whole, is not permitted unless authorised by Volkswagen AG. Volkswagen AG does not guarantee or accept any liability with respect to the correctness of information in this document. Copyright by Volkswagen AG.

Protected by copyright. Copying for private or commercial purposes, in part or in whole, is not permitted unless authorised by Volkswagen AG. Volkswagen AG does not guarantee or accept any liability with respect to the correctness of information in this docume

7 Special Tools

Special tools and workshop equipment required

- Brake Caliper Tool - T10165-

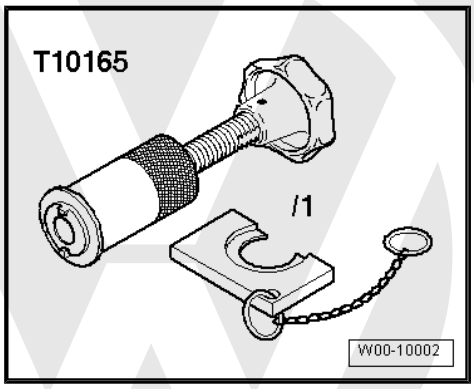

- Sealing Tool - T10249-

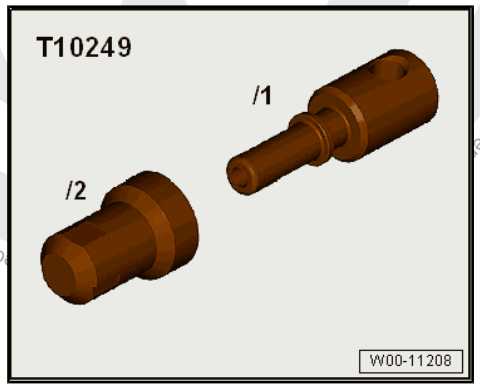

- Brake Pressure Gauge - VAG1310A-

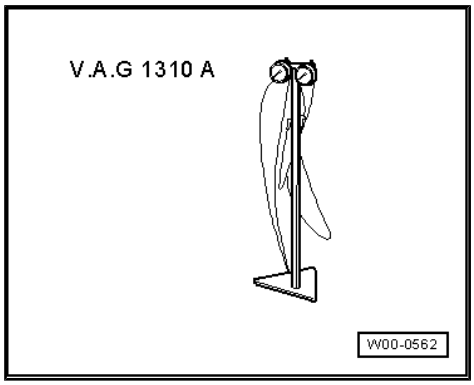

- Brake Pressure Gauge - Adapter M10 - VAG1310/6-
- Torque Wrench 1331 5-50Nm - VAG1331-

- Torque Wrench 1331 Insert - Ring Wrench - 11mm & 17mm - VAG1331/2-
- Brake Line Kit - VAG1356-
- Torque Wrench 1410 - VAG1410-

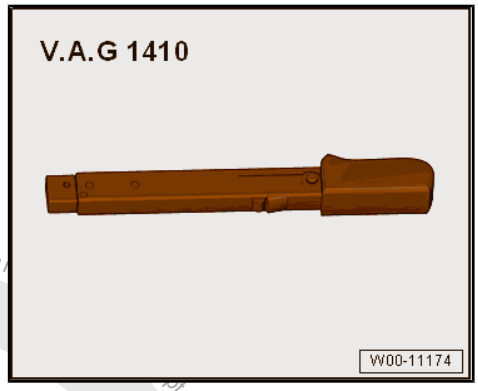

- Wiring Harness Repair Set - Hot Air Blower - VAS1978/14A-
- Brake Charger/Bleeder Unit - VAS5234-

- Brake Line Tool Kit - VAS6056-

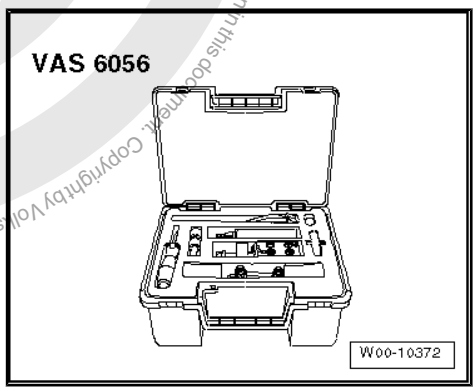

- Engine Bung Set - VAS6122-

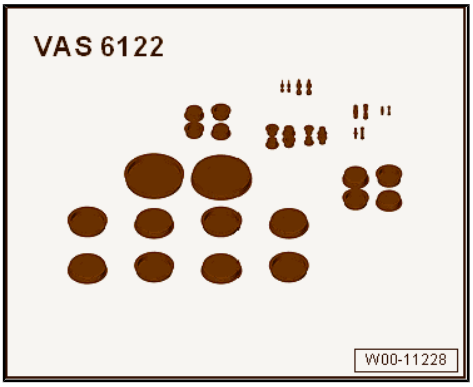

- Hand Vacuum Pump - VAS6213-

Protected by copyright. Copying for private or commercial purposes, in part or in whole, is not permitted unless authorised by Volkswagen AG. Volkswagen AG does not accept any liability for information in this document. Copyright by Volkswagen AG.

- Adhesive Strip Remover - VAS6349-

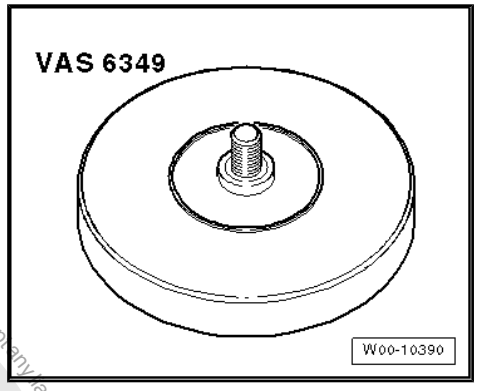

- Brake Bleeding Tool Set - VAS6564-

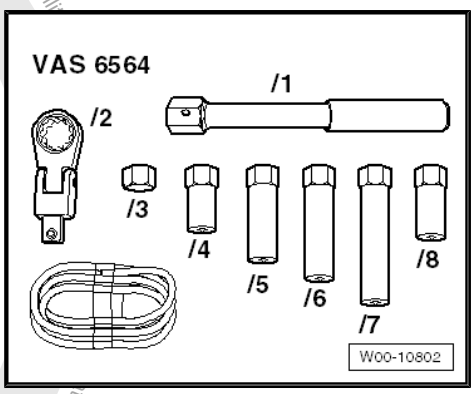

- Brake Servo Tester - VAS6721-

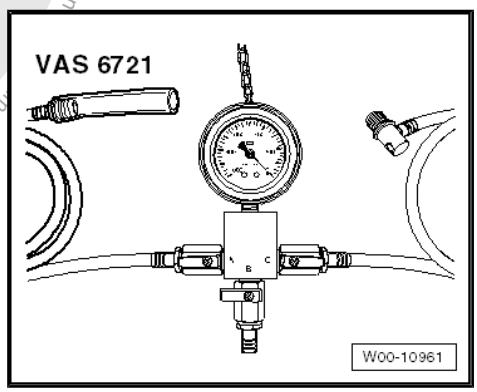

- Trim Removal Wedge - 3409-

Protected by copyright. Copying for private or commercial purposes, in part or in whole, is not permitted unless authorised by Volkswagen AG. Volkswagen AG does not guarantee or accept any liability with respect to the content. Copyright by Volkswagen AG.

8 Revision History

DRUCK NUMBER: K0059241321

Factory Edition	Edit Edition	Job Type	Feedback	Notes	Quality Checked By
12.2015	02/11/2016	Factory Update	N/A		Eric P.
01.2015	10/09/2015	Local Update	N/A	(Rotors replaced in pairs per axle) added until factory update is provided	Tom Perry
01.2015	08/18/2015	Editing Review	N/A		Tom Perry
01.2015	08/10/2015	Local Feedback	111533 2	AU1 metadata removed from two chapters that were blocked when viewing BX5 in ElsaPRo. Link changed to correct chapter.	Tom Perry
01.2015	02/13/2015	Local Feedback	N/A	updated ext-rl	Eric P.
01.2015	1/23/2015	Factory Update	N/A		Jim H
	12/15/2014	Factory Update	N/A		Tom Perry
	04/25/2014	Factory New	N/A		Tom Perry

Protected by copyright. Copying for private or commercial purposes, in part or whole, is not permitted unless authorised by Volkswagen AG. Volkswagen AG does not guarantee or accept any liability with respect to the correctness of information in this document. Copyright by Volkswagen AG.

Cautions & Warnings

Please read these WARNINGS and CAUTIONS before proceeding with maintenance and repair work. You must answer that you have read and you understand these WARNINGS and CAUTIONS before you will be allowed to view this information.

- If you lack the skills, tools and equipment, or a suitable workshop for any procedure described in this manual, we suggest you leave such repairs to an authorized Volkswagen retailer or other qualified shop. We especially urge you to consult an authorized Volkswagen retailer before beginning repairs on any vehicle that may still be covered wholly or in part by any of the extensive warranties issued by Volkswagen.

- Disconnect the battery negative terminal (ground strap) whenever you work on the fuel system or the electrical system. Do not smoke or work near heaters or other fire hazards. Keep an approved fire extinguisher handy.

- Volkswagen is constantly improving its vehicles and sometimes these changes, both in parts and specifications, are made applicable to earlier models. Therefore, part numbers listed in this manual are for reference only. Always check with your authorized Volkswagen retailer parts department for the latest information.

- Any time the battery has been disconnected on an automatic transmission vehicle, it will be necessary to reestablish Transmission Control Module (TCM) basic settings using the VAG 1551 Scan Tool (ST).

- Never work under a lifted vehicle unless it is solidly supported on stands designed for the purpose. Do not support a vehicle on cinder blocks, hollow tiles or other props that may crumble under continuous load. Never work under a vehicle that is supported solely by a jack. Never work under the vehicle while the engine is running.

- For vehicles equipped with an anti-theft radio, be sure of the correct radio activation code before disconnecting the battery or removing the radio. If the wrong code is entered when the power is restored, the radio may lock up and become inoperable, even if the correct code is used in a later attempt.

- If you are going to work under a vehicle on the ground, make sure that the ground is level. Block the wheels to keep the vehicle from rolling. Disconnect the battery negative terminal (ground strap) to prevent others from starting the vehicle while you are under it.

- Do not attempt to work on your vehicle if you do not feel well. You increase the danger of injury to yourself and others if you are tired, upset or have taken medicine or any other substances that may impair you or keep you from being fully alert.

- Never run the engine unless the work area is well ventilated. Carbon monoxide (CO) kills.

- Always observe good workshop practices. Wear goggles when you operate machine tools or work with acid. Wear goggles, gloves and other protective clothing whenever the job requires working with harmful substances.

- Tie long hair behind your head. Do not wear a necktie, a scarf, loose clothing, or a necklace when you work near machine tools or running engines. If your hair, clothing, or jewelry were to get caught in the machinery, severe injury could result.

- Do not re-use any fasteners that are worn or deformed in normal use. Some fasteners are designed to be used only once and are unreliable and may fail if used a second time. This includes, but is not limited to, nuts, bolts, washers, circlips and cotter pins. Always follow the recommendations in this manual - replace these fasteners with new parts where indicated, and any other time it is deemed necessary by inspection.

next

© 2002 Volkswagen of America, Inc.
All rights reserved. Information contained in this document is based on the latest information available at the time of printing and is subject to the copyright and other intellectual property rights of Volkswagen of America, Inc., its affiliated companies and its licensors. All rights are reserved to make changes at any time without notice. No part of this document may be reproduced, stored in a retrieval system, or transmitted in any form or by any means, electronic, mechanical, photocopying, recording, or otherwise, nor may these materials be modified or reposted to other sites, without the prior expressed written permission of the publisher.
Version 1.0

Cautions & Warnings

- Illuminate the work area adequately but safely. Use a portable safety light for working inside or under the vehicle. Make sure the bulb is enclosed by a wire cage. The hot filament of an accidentally broken bulb can ignite spilled fuel or oil.

- Friction materials such as brake pads and clutch discs may contain asbestos fibers. Do not create dust by grinding, sanding, or by cleaning with compressed air. Avoid breathing asbestos fibers and asbestos dust. Breathing asbestos can cause serious diseases such as asbestosis or cancer, and may result in death.

- Finger rings should be removed so that they cannot cause electrical shorts, get caught in running machinery, or be crushed by heavy parts.

- Before starting a job, make certain that you have all the necessary tools and parts on hand. Read all the instructions thoroughly; do not attempt shortcuts. Use tools that are appropriate to the work and use only replacement parts meeting Volkswagen specifications. Makeshift tools, parts and procedures will not make good repairs.

- Catch draining fuel, oil or brake fluid in suitable containers. Do not use empty food or beverage containers that might mislead someone into drinking from them. Store flammable fluids away from fire hazards. Wipe up spills at once, but do not store the oily rags, which can ignite and burn spontaneously.

- Use pneumatic and electric tools only to loosen threaded parts and fasteners. Never use these tools to tighten fasteners, especially on light alloy parts. Always use a torque wrench to tighten fasteners to the tightening torque listed.

- Keep sparks, lighted matches, and open flame away from the top of the battery. If escaping hydrogen gas is ignited, it will ignite gas trapped in the cells and cause the battery to explode.

- Be mindful of the environment and ecology. Before you drain the crankcase, find out the proper way to dispose of the oil. Do not pour oil onto the ground, down a drain, or into a stream, pond, or lake. Consult local ordinances that govern the disposal of wastes.

- The air-conditioning (A/C) system is filled with a chemical refrigerant that is hazardous. The A/C system should be serviced only by trained automotive service technicians using approved refrigerant recovery/recycling equipment, trained in related safety precautions, and familiar with regulations governing the discharging and disposal of automotive chemical refrigerants.

- Before doing any electrical welding on vehicles equipped with anti-lock brakes (ABS), disconnect the battery negative terminal (ground strap) and the ABS control module connector.

- Do not expose any part of the A/C system to high temperatures such as open flame. Excessive heat will increase system pressure and may cause the system to burst.

- When boost-charging the battery, first remove the fuses for the Engine Control Module (ECM), the Transmission Control Module (TCM), the ABS control module, and the trip computer. In cases where one or more of these components is not separately fused, disconnect the control module connector(s).

- Some of the vehicles covered by this manual are equipped with a supplemental restraint system (SRS), that automatically deploys an airbag in the event of a frontal impact. The airbag is operated by an explosive device. Handled improperly or without adequate safeguards, it can be accidentally activated and cause serious personal injury. To guard against personal injury or airbag system failure, only trained Volkswagen Service technicians should test, disassemble or service the airbag system.

back next

© 2002 Volkswagen of America, Inc.
All rights reserved. Information contained in this document is based on the latest information available at the time of printing and is subject to the copyright and other intellectual property rights of Volkswagen of America, Inc., its affiliated companies and its licensors. All rights are reserved to make changes at any time without notice. No part of this document may be reproduced, stored in a retrieval system, or transmitted in any form or by any means, electronic, mechanical, photocopying, recording, or otherwise, nor may these materials be modified or reposted to other sites, without the prior expressed written permission of the publisher.
Version 1.0

Cautions & Warnings

- Do not quick-charge the battery (for boost starting) for longer than one minute, and do not exceed 16.5 volts at the battery with the boosting cables attached. Wait at least one minute before boosting the battery a second time.

- Never use a test light to conduct electrical tests of the airbag system. The system must only be tested by trained Volkswagen Service technicians using the VAG 1551 Scan Tool (ST) or an approved equivalent. The airbag unit must never be electrically tested while it is not installed in the vehicle.

- Some aerosol tire inflators are highly flammable. Be extremely cautious when repairing a tire that may have been inflated using an aerosol tire inflator. Keep sparks, open flame or other sources of ignition away from the tire repair area. Inflate and deflate the tire at least four times before breaking the bead from the rim. Completely remove the tire from the rim before attempting any repair.

- When driving or riding in an airbag-equipped vehicle, never hold test equipment in your hands or lap while the vehicle is in motion. Objects between you and the airbag can increase the risk of injury in an accident.

I have read and I understand these Cautions and Warnings.

back OK

Protected by copyright. Copying for private or commercial purposes, in part or in whole, is not permitted unless authorised by Volkswagen AG. Copyright by Volkswagen AG does not guarantee or accept any liability with respect to the correctness of information in this document.

© 2002 Volkswagen of America, Inc.
All rights reserved. Information contained in this document is based on the latest information available at the time of printing and is subject to the copyright and other intellectual property rights of Volkswagen of America, Inc., its affiliated companies and its licensors. All rights are reserved to make changes at any time without notice. No part of this document may be reproduced, stored in a retrieval system, or transmitted in any form or by any means, electronic, mechanical, photocopying, recording, or otherwise, nor may these materials be modified or reposted to other sites, without the prior expressed written permission of the publisher.
Version 1.0