OPEL INSIGNIA

Owner's Manual

Contents

Introduction 2
In brief 6
Keys, doors and windows 21
Seats, restraints 46
Storage 70
Instruments and controls 85
Lighting 129
Climate control 141
Driving and operating 155
Vehicle care 225
Service and maintenance 274
Technical data 277
Customer information 312
Index 320

Introduction

Fuel	Designation			
Engine oil	Grade			
	Viscosity			
Tyre pressure		Tyre size	Front	Rear
	Summer tyres			
	Winter tyres			
Weights				
	Gross vehicle weight rating			
	- Kerb weight, basic model			
	= Loading			

Vehicle specific data

Please enter your vehicle's data on the previous page to keep it easily accessible. This information is available in the sections "Service and maintenance" and "Technical data" as well as on the identification plate.

Introduction

Your vehicle is a designed combination of advanced technology, safety, environmental friendliness and economy.

This Owner's Manual provides you with all the necessary information to enable you to drive your vehicle safely and efficiently.

Make sure your passengers are aware of the possible risk of accident and injury which may result from improper use of the vehicle.

You must always comply with the specific laws and regulations of the country that you are in. These laws may differ from the information in this Owner's Manual.

Disregarding the description given in this manual may affect your warranty.

When this Owner's Manual refers to a workshop visit, we recommend your Opel Service Partner. For gas vehicles, we recommend an Opel Repairer authorised for servicing gas vehicles.

All Opel Service Partners provide first-class service at reasonable prices. Experienced mechanics trained by Opel work according to specific Opel instructions.

The customer literature pack should always be kept ready to hand in the vehicle.

Using this manual

- This manual describes all options and features available for this model. **Certain descriptions, including those for display and menu functions, may not apply to your vehicle due to model variant, country specifications, special equipment or accessories.**
- The "In brief" section will give you an initial overview.
- The table of contents at the beginning of this manual and within each section shows where the information is located.
- The index will enable you to search for specific information.
- This Owner's Manual depicts left-hand drive vehicles. Operation is similar for right-hand drive vehicles.
- The Owner's Manual uses the engine identifier code. The corresponding sales designation and engineering code can be found in the section "Technical data".
- Directional data, e.g. left or right, or front or back, always relate to the direction of travel.
- Displays may not support your specific language.
- Display messages and interior labelling are written in **bold** letters.

Danger, Warnings and Cautions

⚠ Danger

Text marked ⚠ **Danger** provides information on risk of fatal injury. Disregarding this information may endanger life.

⚠ Warning

Text marked ⚠ **Warning** provides information on risk of accident or injury. Disregarding this information may lead to injury.

Caution

Text marked **Caution** provides information on possible damage to the vehicle. Disregarding this information may lead to vehicle damage.

Symbols

Page references are indicated with ⇨. ⇨ means "see page".

Chronological order to select menu entries in the vehicle personalisation is indicated with ➧.

Page references and index entries refer to the indented headings given in the section table of content.

We wish you many hours of pleasurable driving.

Adam Opel AG

In brief

Initial drive information

Vehicle unlocking

Press 🔓 to unlock the doors and load compartment. Open the doors by pulling the handles. To open the tailgate, pull the button under the tailgate moulding.

Press 🚗; only the load compartment is unlocked and opens.

Radio remote control ⇨ 22, Central locking system ⇨ 25, Electronic key system ⇨ 23, Load compartment ⇨ 30.

Seat adjustment

Longitudinal adjustment

Pull handle, slide seat, release handle. Try to move the seat back and forth to ensure that the seat is locked in place.

Seat position ⇨ 48, Manual seat adjustment ⇨ 49, Power seat adjustment ⇨ 51.

Backrest inclination

Pull lever, adjust inclination and release lever. Allow the seat to engage audibly.

Seat position ⇨ 48, Manual seat adjustment ⇨ 49, Power seat adjustment ⇨ 51.

Seat height

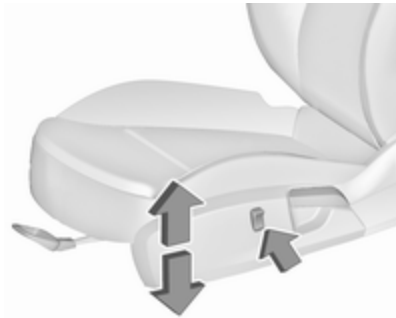

Press switch

top : seat higher
bottom : seat lower

Seat position ⇨ 48, Manual seat adjustment ⇨ 49, Power seat adjustment ⇨ 51.

Seat inclination

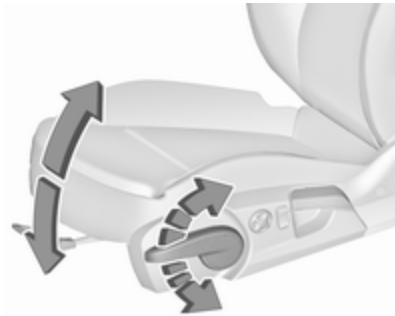

Lever pumping motion

up : front end higher
down : front end lower

Seat position ⇨ 48, Manual seat adjustment ⇨ 49, Power seat adjustment ⇨ 51.

Head restraint adjustment

Press release button, adjust height, engage.

Head restraints ⇨ 46.

Seat belt

Pull out the seat belt and engage in belt buckle. The seat belt must not be twisted and must fit close against the body. The backrest must not be tilted back too far (maximum approx. 25°).

To release belt, press red button on belt buckle.

Seat position ⇨ 48, Seat belts ⇨ 55, Airbag system ⇨ 58.

Mirror adjustment

Interior mirror

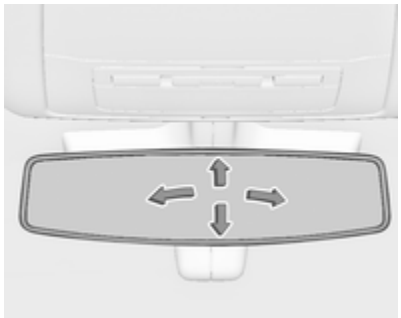

To adjust the mirror, move the mirror housing in the desired direction.

Manual anti-dazzle interior mirror ⇨ 39, Automatic anti-dazzle interior mirror ⇨ 40.

Exterior mirrors

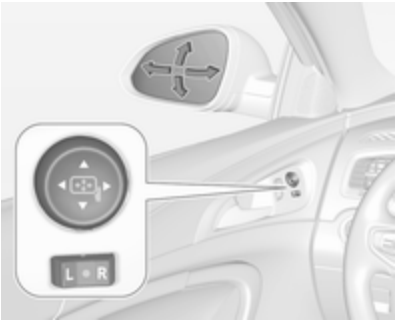

Select the relevant exterior mirror by switching the control to left mirror **(L)** or right mirror **(R)**, then adjust.

Convex exterior mirrors ⇨ 37, Electric adjustment ⇨ 37, Folding exterior mirrors ⇨ 38, Heated exterior mirrors ⇨ 39.

Steering wheel adjustment

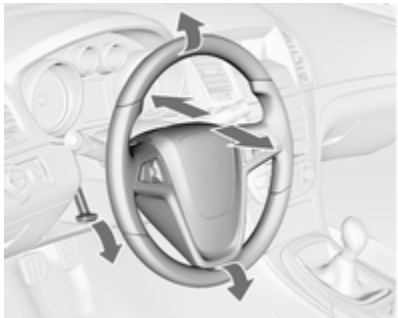

Unlock lever, adjust steering wheel, then engage lever and ensure it is fully locked. Do not adjust steering wheel unless vehicle is stationary and steering wheel lock has been released.

Airbag system ⇨ 58, Ignition positions ⇨ 156.

Instrument panel overview

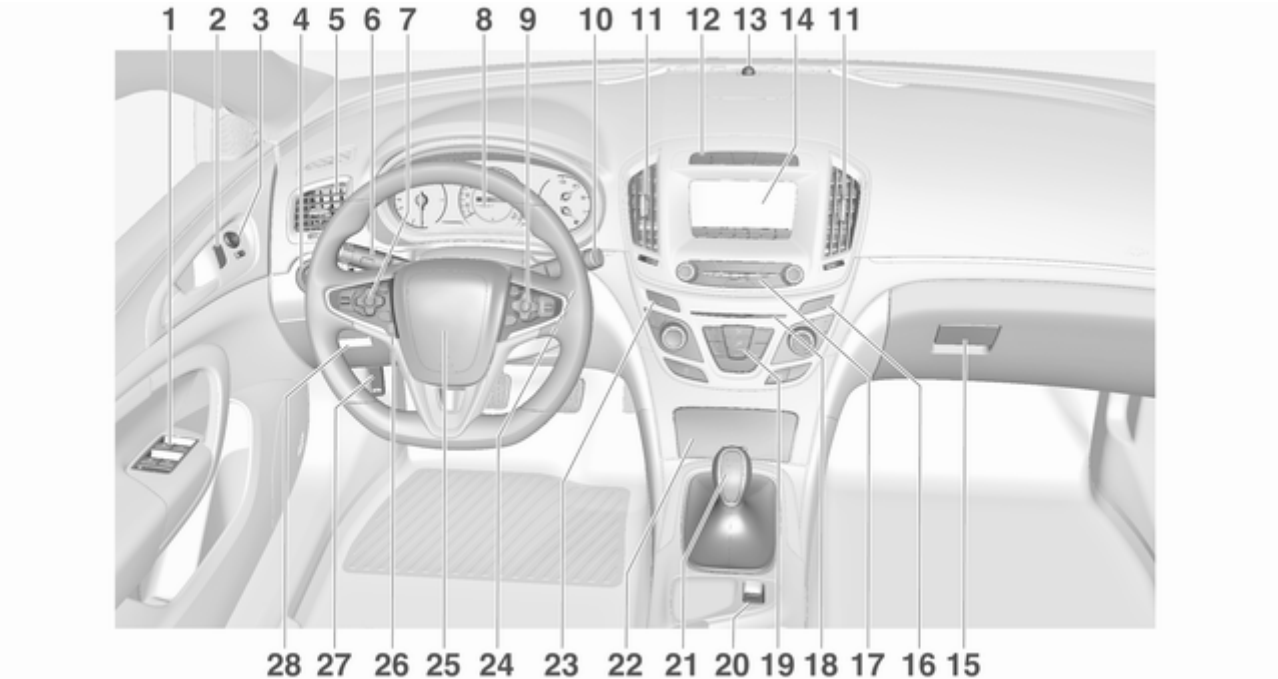

1 Power windows 41
2 Central locking system 25
3 Exterior mirrors 37
4 Light switch 129
Headlight range adjustment 132
Front/rear fog lights 136
Instrument illumination 137
5 Side air vents 152
6 Turn and lane-change signals, headlight flash, low/high beam, high beam assist 135
Exit lighting 139
Parking lights 136
Buttons for Driver Information Centre 111
7 Cruise control 181
Speed limiter 183
Adaptive cruise control 184
Forward collision alert 191
8 Instruments 100
Driver Information Centre 111
9 Buttons for Driver Information Centre 111
10 Windscreen wiper and washer, headlight washer, rear wiper and washer 87
11 Centre air vents 152
12 Sport/Tour mode 178
Traction Control system 176
Electronic Stability Control . 177
Hazard warning flashers 135
Parking assist/Advanced parking aid 197
Lane departure warning 212
13 Anti-theft alarm system status LED 35
14 Colour-Info-Display 118
15 Glovebox 70
16 Control indicator for airbag activation/deactivation 105
Control indicator for front passenger seat belt 104
17 Controls for Colour-Info-Display operation 118
18 CD-slot
19 Climate control system 141
20 Electric parking brake 174
21 Manual transmission 172
Automatic transmission 168
22 Storage 70
23 Eco button for stop-start system 160
Fuel selector button 102
24 Ignition/Power switch 156
25 Horn 87
26 Steering wheel adjustment . . 86
27 Bonnet release lever 227
28 Storage compartment 71
Fuse box 249

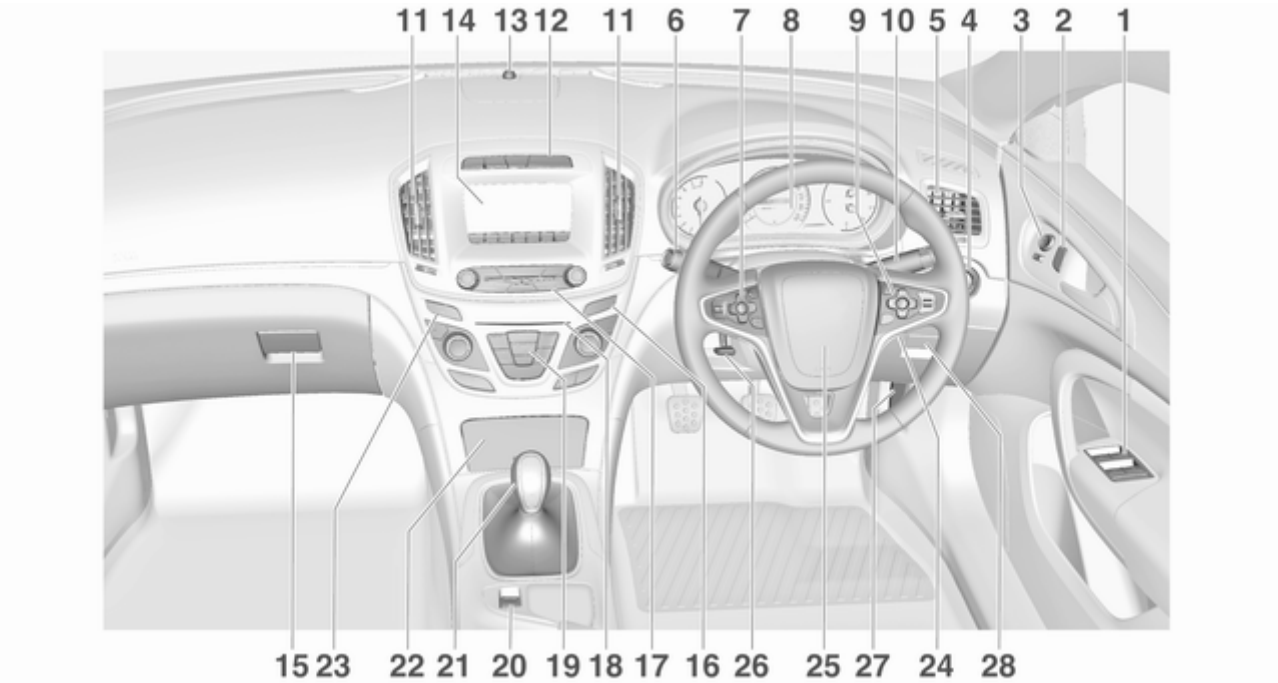
11 14 13 12 11 6 7 8 9 10 5 4 3 2 1
15 23 22 21 20 19 18 17 16 26 25 27 24 28

Exterior lighting

Automatic light control

AUTO : automatic light control: exterior lighting is switched on and off automatically

⏻ : activation or deactivation of the automatic light control

: sidelights

: headlights

Fog lights

: front fog lights

: rear fog light

Lighting ➪ 129.

Headlight flash, high beam and low beam

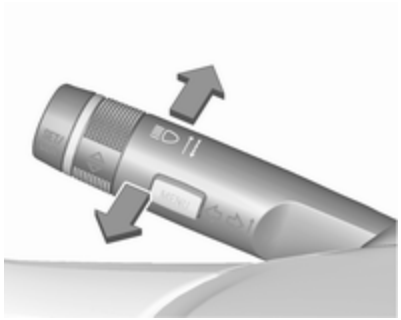

headlight flash : pull lever
high beam : push lever
low beam : push or pull lever

Automatic light control ➪ 130, High beam ➪ 130, High beam assist ➪ 131, Headlight flash ➪ 131, Adaptive forward lighting ➪ 133.

Turn and lane-change signals

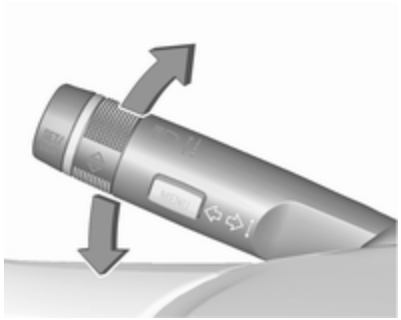

lever up : right turn signal
lever down : left turn signal

Turn and lane-change signals ➪ 135, Parking lights ➪ 136.

Hazard warning flashers

Operated by pressing ⚠.

Hazard warning flashers ⇨ 135.

Horn

Press 📯.

Washer and wiper systems

Windscreen wiper

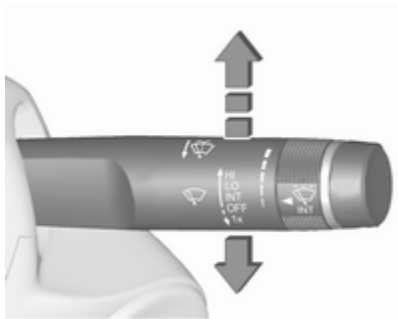

HI : fast
LO : slow
INT : interval wiping or automatic wiping with rain sensor
OFF : off

For a single wipe when the windscreen wiper is off, press the lever down to position **1x**.

Windscreen wiper ⇨ 87, Wiper blade replacement ⇨ 234.

Windscreen and headlight washer

Pull lever.

Windscreen and headlight washer system ⇨ 87, Washer fluid ⇨ 231.

Rear window wiper

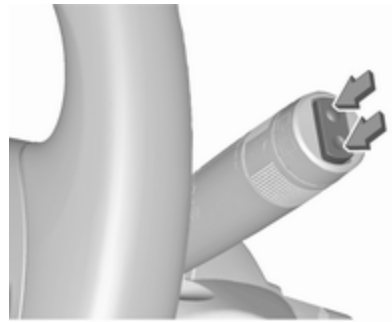

Press the rocker switch to activate the rear window wiper:

upper switch : continuous operation

lower switch : intermittent operation

middle position : off

Rear window washer

Push lever.

Washer fluid is sprayed on the rear window and the wiper wipes a few times.

Rear window wiper/washer ⇨ 89.

Climate control

Heated rear window, heated exterior mirrors

Heating is operated by pressing ⊞.

Heated rear window ⇨ 43.

Demisting and defrosting the windows, air conditioning system

Press ⊞.

Set temperature control to warmest level.

Switch on heated rear window ⊞.

Air conditioning system ⇨ 141.

Demisting and defrosting the windows, automatic climate control

Press ⊞.

Temperature and air distribution are set automatically and the fan runs at high speed.

Switch on heated rear window ⊞.

Dual automatic climate control ⇨ 148

Transmission

Manual transmission

Reverse: with the vehicle stationary, depress clutch pedal, press the release button on the selector lever and engage the gear.

If the gear does not engage, set the lever to neutral, release the clutch pedal and depress again; then repeat gear selection.

Manual transmission ⇨ 172.

Automatic transmission

P : park
R : reverse
N : neutral
D : automatic mode
M : manual mode: move selector lever from **D** to the left.
+ : manual mode upshifting
– : manual mode downshifting

The selector lever can only be moved out of **P** when the ignition is on and the brake pedal is applied. To engage **P** or **R**, press the release button.

Automatic transmission ⇨ 168.

Starting off

Check before starting off

- Tyre pressure and condition ⇨ 253, ⇨ 293.
- Engine oil level and fluid levels ⇨ 228.
- All windows, mirrors, exterior lighting and number plates are free from dirt, snow and ice and are operational.
- Proper position of mirrors, seats, and seat belts ⇨ 37, ⇨ 48, ⇨ 56.
- Brake function at low speed, particularly if the brakes are wet.

Starting the engine

- Ignition switch: turn key to position **2**.

  Power button: press **Engine Start/Stop** for a few seconds until green LED illuminates.
- Move the steering wheel slightly to release the steering wheel lock.
- Operate clutch and brake.
- Automatic transmission in **P** or **N**.
- Do not operate accelerator pedal.
- Ignition switch: turn key to position **3** and release.

  Power button: press **Engine Start/Stop** and release.
- The engine starts after a short delay.

Starting the engine ⇨ 159.

Stop-start system

If the vehicle is at a low speed or at a standstill and certain conditions are fulfilled, activate an Autostop as follows:

- Depress the clutch pedal.
- Set the lever to neutral.
- Release the clutch pedal.

An Autostop is indicated by the needle at the **AUTOSTOP** position in the tachometer or by a control indicator in the instrument cluster.

To restart the engine, depress the clutch pedal again.

Stop-start system ⇨ 160.

Parking

⚠Warning

- Do not park the vehicle on an easily ignitable surface. The high temperature of the exhaust system could ignite the surface.
- Always apply the parking brake. Activate the manual parking brake without pressing the release button. Apply as firmly as possible on a downhill slope or uphill slope. Depress brake pedal at the same time to reduce operating force.

  For vehicles with electric parking brake, pull switch Ⓟ for approx. one second.

  The electric parking brake is applied when control indicator Ⓟ illuminates ⇨ 106.
- Switch off the engine.
- If the vehicle is on a level surface or uphill slope, engage first gear or set the selector lever to position **P** before removing the ignition key or switching off ignition on vehicles with power button. On an uphill slope, turn the front wheels away from the kerb.

  If the vehicle is on a downhill slope, engage reverse gear or set the selector lever to position **P** before removing the ignition key or switching off ignition on vehicles with power button. Turn the front wheels towards the kerb.
- Close the windows and the sunroof.
- Remove the ignition key from the ignition switch or switch off ignition on vehicles with power button. Turn the steering wheel until the steering wheel lock is felt to engage.

  For vehicles with automatic transmission, the key can only be removed when the selector lever is in position **P**.

- Lock the vehicle with button on the radio remote control.

  Activate the anti-theft alarm system ⇨ 35.
- The engine cooling fans may run after the engine has been switched off ⇨ 227.

Caution
After running at high engine speeds or with high engine loads, operate the engine briefly at a low load or run in neutral for approx. 30 seconds before switching off, in order to protect the turbocharger.

Keys, locks ⇨ 21, Laying the vehicle up for a long period of time ⇨ 226.

Keys, doors and windows

Keys, locks **21**
Keys 21
Car Pass 22
Radio remote control 22
Electronic key system 23
Memorised settings 24
Central locking system 25
Automatic locking 28
Child locks 29
Doors **30**
Load compartment 30
Vehicle security **34**
Anti-theft locking system 34
Anti-theft alarm system 35
Immobiliser 37
Exterior mirrors **37**
Convex shape 37
Electric adjustment 37
Folding mirrors 38
Heated mirrors 39
Automatic dimming 39
Parking assist 39
Interior mirrors **39**
Manual anti-dazzle 39
Automatic anti-dazzle 40
Windows **40**
Windscreen 40
Manual windows 40
Power windows 41
Heated rear window 43
Sun visors 43
Roller blinds 43
Roof **43**
Sunroof 43

Keys, locks

Keys

Caution
Do not attach heavy or bulky items to the ignition key.

Replacement keys

The key number is specified in the Car Pass or on a detachable tag.

The key number must be quoted when ordering replacement keys as it is a component of the immobiliser system.

Locks ⇨ 270, Radio remote control ⇨ 22, Electronic key ⇨ 23, Central locking ⇨ 25, Starting the engine ⇨ 159.

The code number of the adapter for the locking wheel nuts is specified on a card. It must be quoted when ordering a replacement adapter.

Wheel changing ⇨ 260.

Key with foldaway key section

Press button to extend. To fold the key, first press the button.

Car Pass

The Car Pass contains security related vehicle data and should therefore be kept in a safe place.

When the vehicle is taken to a workshop, this vehicle data is needed in order to perform certain operations.

Radio remote control

Enables operation of the following functions via the use of the remote control buttons:

- central locking system ⇨ 25
- anti-theft locking system ⇨ 34
- anti-theft alarm system ⇨ 35
- tailgate ⇨ 30
- power windows ⇨ 41
- sunroof ⇨ 43
- mirror folding ⇨ 38

The remote control has a range of approx. 50 metres. It can be restricted by external influences. The hazard warning flashers confirm operation.

Handle with care, protect from moisture and high temperatures and avoid unnecessary operation.

Replacing battery in radio remote control

Replace the battery as soon as the range reduces.

Batteries do not belong in household waste. They must be disposed of at an appropriate recycling collection point.

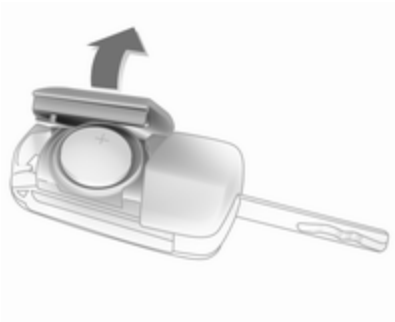

Extend the key and open the unit. Replace the battery (battery type CR 2032), paying attention to the installation position. Close the unit and synchronise.

Radio remote control synchronisation

After replacing the battery, unlock the door with the key in the driver's door lock. The radio remote control will be synchronised when you switch on the ignition.

Fault

If the central locking system cannot be operated with the radio remote control, the cause may be one of the following:

- Fault in radio remote control.
- The range is exceeded.
- The battery voltage is too low.
- Frequent, repeated operation of the radio remote control while not in range, which will require re-synchronisation.
- Overload of the central locking system by operating at frequent intervals, the power supply is interrupted for a short time.
- Interference from higher-power radio waves from other sources.

Manual unlocking ⇨ 25.

Electronic key system

Enables a keyless operation of the following functions:

- central locking system ⇨ 25
- tailgate ⇨ 30
- ignition switching on and starting the engine ⇨ 159

The electronic key simply needs to be on the driver's person.

Additionally, the electronic key includes the functionality of the radio remote control ⇨ 22.

Handle with care, protect from moisture and high temperatures and avoid unnecessary operation.

Note
Do not put the electronic key in the load compartment or in front of the Info-Display.

Replacing battery in electronic key

Replace the battery as soon as the system no longer operates properly or the range is reduced. The need for battery replacement is indicated by a message in the Driver Information Centre ⇨ 120.

Battery replacement, see 'Radio remote control' ⇨ 22.

Electronic key synchronisation

The electronic key synchronises itself automatically during every starting procedure.

Fault

If the central locking cannot be operated or the engine cannot be started, the cause may be one of the following:

- Fault in electronic key.
- Electronic key is out of reception range.
- The battery voltage is too low.
- Overload of the central locking system by operating at frequent intervals; the power supply is interrupted for a short time.
- Interference from higher-power radio waves from other sources.

To rectify the cause of the fault, change the position of the electronic key.

Manual unlocking ⇨ 25.

Memorised settings

Whenever the ignition is switched off, the following settings are automatically memorised by the remote control unit or the electronic key:

- automatic climate control
- lighting
- Infotainment system
- central locking system
- Sport mode settings
- comfort settings

The saved settings are automatically used the next time the ignition is switched on with the memorised key with remote control unit ⇨ 156 or electronic key ⇨ 23.

A precondition is that **Personalisation by Driver** is activated in the personal settings of the Info-Display. This must be set for each remote control unit or electronic key which is used.

Also memorised are the adjustments of the driver's seat and exterior mirrors, independent of the memory positions ⇨ 51.

Power seat automatically moves into the saved position when unlocking and opening the driver's door with the memorised remote control or electronic key and **Auto Memory Recall** in the Info-Display is activated.

Vehicle personalisation ⇨ 122.

Central locking system

Unlocks and locks doors, load compartment and fuel filler flap.

A pull on an interior door handle unlocks the respective door. Pulling the handle once more opens the door.

Note
In the event of an accident in which airbags or belt pretensioners are deployed, the vehicle is automatically unlocked.

Note
A short time after unlocking with the remote control the doors are locked automatically if no door has been opened.

Remote control operation

Unlocking

Press 🔓.

Unlocking mode can be set in the vehicle personalisation menu in the Colour-Info-Display. Two settings are selectable:

- All doors, load compartment and fuel filler flap are unlocked by pressing 🔓 once.
- Only the driver's door, load compartment and fuel filler flap are unlocked by pressing 🔓 once. To unlock all doors, press 🔓 twice.

Select the relevant setting in **Settings**, ➧ **Vehicle** in the Colour-Info-Display.

Colour-Info-Display ⇨ 118.

Vehicle personalisation ⇨ 122.

The setting can be saved for the remote control being used. Memorised settings ⇨ 24.

Locking

Close doors, load compartment and fuel filler flap.

Press 🔒.

If the driver's door is not closed properly, the central locking system will not work.

Unlocking and opening the tailgate 4-door Saloon, Country Tourer, Sports Tourer with power tailgate

Press when the ignition is off until tailgate opens automatically. The doors remain locked.

Power tailgate ⇨ 30.

Confirmation

Operation of central locking system is confirmed by the hazard warning flashers.

Electronic key system operation

The electronic key must be outside the vehicle, within a range of approx. one metre of the relevant door side.

Unlocking

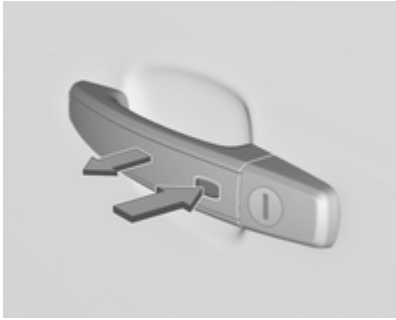

Press the button on any exterior door handle and pull the handle.

Unlocking mode can be set in the vehicle personalisation menu in the Colour-Info-Display. Two settings are selectable:

- All doors, load compartment and fuel filler flap are unlocked by pressing a button on any exterior handle once.
- Only the driver's door, load compartment and fuel filler flap are unlocked by pressing the button on driver's door exterior handle once. To unlock all doors, press button twice.

Select the relevant setting in **Settings**, ➧ **Vehicle** in the Colour-Info-Display.

Colour-Info-Display ⇨ 118.

Vehicle personalisation ⇨ 122.

The setting can be saved for the electronic key being used. Memorised settings ⇨ 24.

Locking

Press the button on any exterior door handle.

All doors, load compartment and fuel filler flap are locked.

The system only locks if any of the following occurs:

- It has been more than 5 seconds since unlocking.
- The button on an exterior handle has been pressed twice within 5 seconds.
- Any door has been opened and then all doors are closed.

If the driver's door is not closed properly or the electronic key remains in the vehicle and the ignition is not off, locking will not be permitted and a warning tone sounds three times.

If there have been two or more electronic keys in the vehicle and the ignition was on once, the doors will be locked even if just one electronic key is taken out of the vehicle.

Unlocking and opening the tailgate

The tailgate and the doors can be unlocked by pressing the button under the tailgate moulding when electronic key is in range.

Passive Locking

See 'Automatic locking' ⇨ 28.

Confirmation

Operation of central locking system is confirmed by the hazard warning flashers.

Central locking buttons

Locks or unlocks all doors, the load compartment and fuel filler flap from the passenger compartment by a switch in the driver's door panel.

Press 🔒 to lock.

Press 🔓 to unlock.

Fault in radio remote control unit or electronic key system

Manual unlocking

Manually unlock the driver's door by turning the key in the lock. Switch on the ignition and press the central locking button 🔓 to unlock all doors, load compartment and fuel filler flap. By switching on the ignition, the anti-theft locking system is deactivated.

Manual locking

Manually lock the driver's door by turning the key in the lock.

Fault in central locking system

Manual unlocking

Manually unlock the driver's door by turning the key in the lock. The other doors can be opened by pulling the interior handle twice. The load compartment and fuel filler flap cannot be opened. To deactivate the anti-theft locking system, switch on the ignition ⇨ 35.

Manual locking

Push inside locking knob of all doors except driver's door. Then close the driver's door and lock it from the outside with the key. The fuel filler flap and tailgate cannot be locked.

Automatic locking

Automatic locking after driving off

This security feature can be configured to automatically lock all doors, load compartment and fuel filler flap after driving off and exceeding a certain speed.

When at a standstill after driving, the vehicle will be unlocked automatically as soon as the key is removed from the ignition switch, or with electronic key system when the ignition is switched off.

Activation or deactivation of automatic locking can be set in the menu **Settings**, ➧ **Vehicle** in the Colour-Info-Display.

Colour-Info-Display ⇨ 118.

Vehicle personalisation ⇨ 122.

The setting can be saved for the remote control or electronic key being used ⇨ 24.

Automatic relock after unlocking

This feature can be configured to automatically lock all doors, load compartment and fuel filler flap a short time after unlocking with the remote control or electronic key, provided no door has been opened.

Activation or deactivation of automatic relock can be set in the menu **Settings**, ➧ **Vehicle** in the Colour-Info-Display.

Colour-Info-Display ⇨ 118.

Vehicle personalisation ⇨ 122.

The setting can be saved for the remote control or electronic key being used ⇨ 24.

Passive locking

In vehicles with electronic key system, this feature locks the vehicle automatically after several seconds if an electronic key has been recognised previously inside the vehicle, all doors have then been closed and the electronic key does not remain in the interior.

If the electronic key remains in the vehicle or the ignition is not off, passive locking will not be permitted and a warning tone sounds three times.

If there have been two or more electronic keys in the vehicle and the ignition was on once, the feature locks the vehicle if just one electronic key is taken out of the vehicle.

Passive locking can be disabled by pressing 🔓 for a few seconds while one door is open. It remains disabled until 🔒 is pressed or the ignition is switched on.

Activation or deactivation of passive locking can be set in the menu **Settings**, ➧ **Vehicle** in the Colour-Info-Display.

Colour-Info-Display ⇨ 118.

Vehicle personalisation ⇨ 122.

The setting can be saved for the remote control or electronic key being used ⇨ 24.

Child locks

⚠ Warning

Use the child locks whenever children are occupying the rear seats.

Using a key or suitable screwdriver, turn the child lock in the rear door to the horizontal position. The door cannot be opened from the inside. For deactivation, turn the child lock to the vertical position.

Doors

Load compartment

Tailgate

Opening

5-door Hatchback, Sports Tourer, Country Tourer

After unlocking, press the button under the tailgate moulding and open the tailgate manually.

4-door Saloon

Press on radio remote control until the tailgate is opened automatically, or press the button under the tailgate moulding after unlocking.

Central locking system ⇨ 25.

Closing

Use the interior handle.

Do not pull the button under the moulding whilst closing as this will unlock the tailgate again.

Central locking system ⇨ 25.

Power tailgate

⚠ Warning

Take care when operating the power tailgate. Risk of injury, particularly to children.

Keep a close watch on the movable tailgate when operating. Ensure that nothing becomes trapped during operating and no one is standing within the moving area.

The power tailgate is operated by:

- on the radio remote control.
- The switch in the door panel of the driver's door.
- The touchpad switch and in the tailgate.

On vehicles with automatic transmission, the tailgate can only be operated when the vehicle is stationary and automatic transmission in **P**.

The tail lights flash and a chime sounds when the power tailgate is operating.

Note

Operating the power tailgate does not operate the central locking system. To open the tailgate with the remote control, it is not necessary to unlock the vehicle. Unlock the vehicle first when operating with the touchpad switch or the switch in the driver's door. Lock the vehicle after closing.

Central locking system ⇨ 25.

Operation with radio remote control

Press and hold until the tailgate starts to open or close.

Operation with the switch in the driver's door

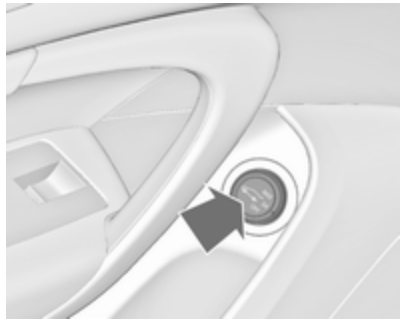

Press and hold until the tailgate starts to open or close.

Operation with switches in the tailgate

To open the tailgate, press the touchpad switch under the tailgate moulding until the tailgate starts to move.

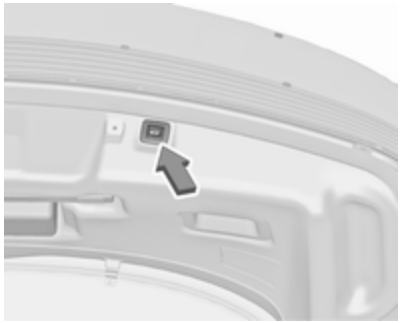

To close, press in the open tailgate until the tailgate starts to move.

Stop or change direction of movement

Pressing on radio remote control or on the tailgate or press on the touchpad switch whilst the tailgate is moving will stop the tailgate in the current position. Pressing or again will reverse the direction of movement.

Operation modes

The power tailgate has three modes of operation, which are controlled by the switch in the driver's door. To change the mode, turn the switch:

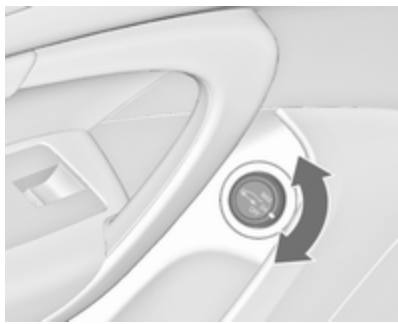

- Normal mode **MAX**: Power tailgate opens to full height.
- Intermediate mode **3/4**: Power tailgate opens to a reduced height that can be adjusted.
- Mode **Off**: Tailgate can only be operated manually.

Adjust reduced opening height in intermediate mode

1. Turn operation mode switch to **3/4**.
2. Open power tailgate with any operation switch.
3. Stop movement at the desired height by pressing any operation switch. If required, manually move the stopped tailgate to the desired position.

4. Press and hold the button on the inside of the open tailgate for 3 seconds.

Note
Adjusting opening height should be programmed at ground level.

A chime sound indicates the new setting and the outer rear lights will flash if the tailgate is below an opening angel of 30°.

When turning the adjuster wheel in the driver's door to intermediate mode **3/4**, the power tailgate will stop opening at the newly set position.

The tailgate can only be held open if a minimum height is exceeded (minimum opening angle from 30°). The opening height cannot be programmed below that height.

Safety function

If the power tailgate encounters an obstacle during opening or closing, the direction of movement will automatically be reversed slightly. Multiple obstacles in one power cycle will deactivate the function. In this case, close or open the tailgate manually.

The power tailgate has pinch sensors on the side edges. If the sensors detect obstacles between tailgate and chassis, the tailgate will open, until it is activated again or closed manually.

The safety function is indicated by a warning chime.

Remove all obstacles before resuming normal power operation.

If the vehicle is equipped with factory-fitted towing equipment and a trailer is electrically connected, the power tailgate can only be opened with the touchpad switch or closed with in the open tailgate. Ensure that there are no obstacles in the moving area.

General hints for operating tailgate

⚠ Danger

Do not drive with the tailgate open or ajar, e.g. when transporting bulky objects, since toxic exhaust gases, which cannot be seen or

smelled, could enter the vehicle. This can cause unconsciousness and even death.

Caution

Before opening the tailgate, check overhead obstructions, such as a garage door, to avoid damage to the tailgate. Always check the moving area above and behind the tailgate.

Note
Power tailgate: If the lifters of the open tailgate lose pressure, the tailgate falls a bit and will then be stopped by the system. Following the tailgate will be power opened and closed. During this the tail lights will flash and a chime will sound. After closing, the tailgate may not be operated until it has been serviced by a workshop.

Note
The operation of the power tailgate is disabled under low vehicle battery conditions. In this case, the tailgate may not even by manually operable.

Note
With the power tailgate disabled and all doors unlocked, the tailgate can only be operated manually. In this event, manually closing the tailgate requires significantly greater force.

Note
At low outside temperatures the tailgate may not open fully by itself. In this case lift the tailgate manually to its normal end position.

Note
The installation of certain heavy accessories onto the tailgate may affect its ability to remain open.

Vehicle security

Anti-theft locking system

⚠ Warning

Do not use the system if there are people in the vehicle! The doors cannot be unlocked from the inside.

The system deadlocks all the doors. All doors must be closed and the electronic key must not remain in the vehicle. Otherwise the system cannot be activated.

If the ignition was on, the driver's door must be opened and closed once so that the vehicle can be secured.

Unlocking the vehicle disables the mechanical anti-theft locking system. This is not possible with the central locking button in the passenger compartment.

Activating

Radio remote control or electronic key: press 🔒 twice within 5 seconds.

Anti-theft alarm system

The anti-theft alarm system incorporates and is operated in conjunction with the anti-theft locking system.

It monitors:

- doors, tailgate, bonnet
- passenger compartment including adjoining load compartment
- vehicle inclination, e.g. if it is raised
- ignition

Activation

All doors must be closed and the electronic key must not remain in the vehicle. Otherwise the system cannot be activated.

- Radio remote control: self-activated 30 seconds after locking the vehicle by pressing 🔒 once.
- Electronic key system: self-activated 30 seconds after locking the vehicle by pressing the button on any exterior door handle.

- Radio remote control or electronic key: directly by pressing 🔒 twice within 5 seconds.
- Electronic key system with passive locking enabled: briefly activated after passive locking occurs.

Note

Changes to the vehicle interior such as the use of seat covers, and open windows or sunroof, could impair the function of passenger compartment monitoring.

Activation without monitoring of passenger compartment and vehicle inclination

Switch off the monitoring of passenger compartment and vehicle inclination when animals are being left in the vehicle, because of high volume ultrasonic signals or movements triggering the alarm. Also switch off when the vehicle is on a ferry or train.

1. Close tailgate, bonnet, windows and sunroof.
2. Press . LED in the button illuminates for a maximum of 10 minutes.
3. Close the doors.
4. Activate the anti-theft alarm system.

Status message is displayed in the Driver Information Centre.

Status LED

Status LED is integrated in the sensor on top of the instrument panel.

Status during the first 30 seconds of anti-theft alarm system activation:

LED illuminates	:	test, arming delay
LED flashes quickly	:	doors, tailgate or bonnet not completely closed, or system fault

Status after system is armed:

LED flashes slowly	:	system is armed

Seek the assistance of a workshop in the event of faults.

Deactivation

Radio remote control: Unlocking the vehicle by pressing deactivates anti-theft alarm system.

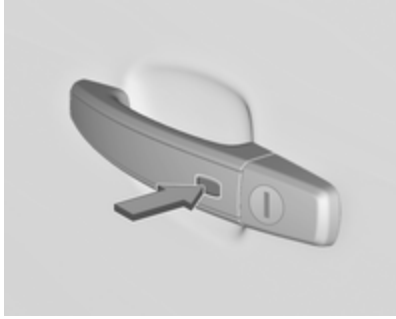

Electronic key system: Unlocking the vehicle by pressing the button on any exterior door handle deactivates anti-theft alarm system.

The system is not deactivated when unlocking the driver's door with the key or with the central locking button in the passenger compartment.

Alarm

When triggered, the alarm horn sounds and the hazard warning lights flash simultaneously. The number and duration of alarm signals are stipulated by legislation.

The anti-theft alarm system can be deactivated only by pressing 🔓 or by pressing the switch on the door handle (electronic key system) or switching on the ignition.

A triggered alarm, which has not been interrupted by the driver, will be indicated by the hazard warning lights. They will flash quickly three times when the vehicle is unlocked next time with the radio remote control. Additionally, a warning message is displayed in the Driver Information Centre after switching on the ignition.

Vehicle messages ⇨ 120.

Immobiliser

The system is part of the ignition switch and checks whether the vehicle is allowed to be started with the key being used.

The immobiliser is activated automatically after the key is removed from the ignition switch.

If control indicator 🚗 flashes when the ignition is on, there is a fault in the system; the engine cannot be started. Switch off the ignition and repeat start attempt.

If control indicator 🚗 continues flashing, attempt to start the engine using the spare key and seek the assistance of a workshop.

Note
The immobiliser does not lock the doors. You should always lock the vehicle after leaving it and switch on the anti-theft alarm system ⇨ 25, ⇨ 35.

Control indicator 🚗 ⇨ 109.

Exterior mirrors

Convex shape

The convex exterior mirror contains an aspherical area and reduces blind spots. The shape of the mirror makes objects appear smaller, which will affect the ability to estimate distances.

Electric adjustment

Select the relevant exterior mirror by switching the control to left mirror **(L)** or right mirror **(R)**. Then swivel the control to adjust the mirror.

In position ● no mirror is selected.

Folding mirrors

For pedestrian safety, the exterior mirrors will swing out of their normal mounting position if they are struck with sufficient force. Reposition the mirror by applying slight pressure to the mirror housing.

Electric folding

Switch control to ●, then push the control button ▽ down. Both exterior mirrors will fold.

Push the control down again - both exterior mirrors return to their original position.

If an electrically folded mirror is manually extended, pressing down the control will only electrically extend the other mirror.

Folding mirrors with remote control

This function is only available if the vehicle is equipped with electrical seat memory.

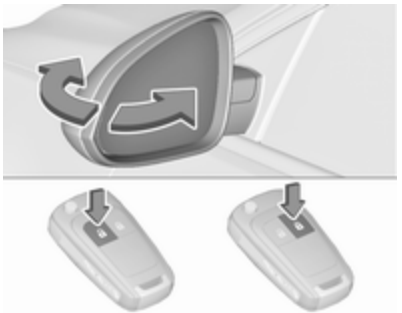

Press 🔒 again after locking for one second to fold in mirrors.

Press 🔓 again after unlocking for one second to fold out mirrors.

Pressing for three seconds activates window operation. Power windows ⇨ 41. Sunroof ⇨ 43.

If the mirrors were folded in using the control in the driver's door, they are not folded out by pressing 🔓.

This function can be activated or deactivated in the Vehicle personalisation.

Select the relevant setting in **Settings**, ➧ **Vehicle** in the Colour-Info-Display.

Colour-Info-Display ⇨ 118.

Vehicle personalisation ⇨ 122.

The settings are automatically stored for the key being used ⇨ 24.

Heated mirrors

Operated by pressing ⊞.

The LED in the button indicates activation.

Heating works with the engine running and is switched off automatically after a short time.

Automatic dimming

Dazzling by following vehicles at night is automatically reduced by dimming the exterior mirror on the driver's side.

Parking assist

For mirrors with position memory, the exterior mirror on the passenger side is automatically aimed at the rear tyres as a parking aid when reverse gear is selected, except during trailer operation.

Position memory ⇨ 51.

Activation or deactivation of this function can be changed in the menu **Settings** in the Info-Display. Vehicle personalisation ⇨ 122.

Interior mirrors

Manual anti-dazzle

To reduce dazzle, adjust the lever on the underside of the mirror housing.

Automatic anti-dazzle

Dazzling by following vehicles at night is automatically reduced by dimming the interior mirror.

Windows

Windscreen

Heat-reflecting windscreen

The heat-reflecting windscreen has a coating which reflects solar radiation. Also data signals, e.g. from toll stations, might be reflected.

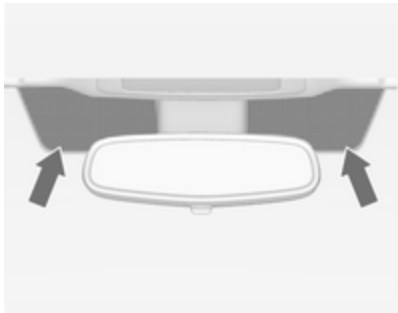

The marked areas on the windscreen are not covered with the coating. Devices for electronic data recording and fee payment must be attached in these areas. Otherwise data recording malfunctions may occur.

Windscreen stickers

Do not attach stickers such as toll road stickers or similar on the windscreen in the area of the interior mirror. Otherwise the detection zone of the sensor and the view area of the camera in the mirror housing could be restricted.

Windscreen replacement

Caution
If the vehicle has a front-looking camera sensor for the driver assistance systems, it is very important that any windscreen replacement is performed accurately according to Opel specifications. Otherwise, these systems may not work properly and there is a risk of unexpected behaviour and/or messages from these systems.

Manual windows

The rear door windows can be opened or closed manually with the window cranks.

Power windows

⚠ Warning

Take care when operating the power windows. Risk of injury, particularly to children.

If there are children on the rear seats, switch on the child safety system for the power windows.

Keep a close watch on the windows when closing them. Ensure that nothing becomes trapped in them as they move.

Operable with ignition in position **Accessory power mode** or **Ignition on power mode** ⇨ 156, ⇨ 157.

Retained power off ⇨ 158.

Operate the switch for the respective window by pushing to open or pulling to close.

Pushing or pulling gently to the first detent: window moves up or down as long as the switch is operated.

Pushing or pulling firmly to the second detent and then releasing: window moves up or down automatically with safety function enabled. To stop movement, operate the switch once more in the same direction.

Power windows can be operated for approx. 10 minutes after the ignition is switched off or until the driver's door is opened.

Safety function

If the window glass encounters resistance above the middle of the window during automatic closing, it is immediately stopped and opened again.

Override safety function

In the event of closing difficulties due to frost or the like, switch on the ignition, then pull the switch to the first detent and hold. The window moves up without safety function enabled. To stop movement, release the switch.

Child safety system for rear windows

Press ⊠ to deactivate rear door power windows; the LED illuminates. To activate, press ⊠ again.

Comfort operating with the remote control

Front windows or all windows can be operated remotely from outside the vehicle.

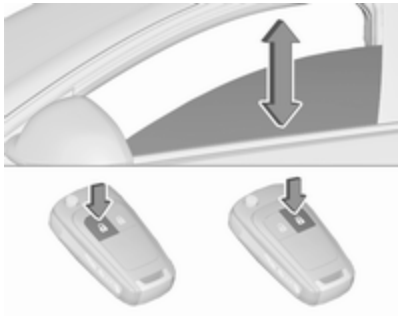

Press 🔓 again for three seconds after unlocking: windows will be opened.

Press 🔒 again for three seconds after locking: windows will be closed.

Press any button to stop window movement.

Folding mirrors ⇨ 38.

Closing sunroof ⇨ 43.

Confirmation

Complete opening or closing of the windows is confirmed by the hazard warning flashers.

Overload

If the windows are repeatedly operated within short intervals, the window operation is disabled for some time.

Initialising the power windows

If the windows cannot be closed automatically (e.g. after disconnecting the vehicle battery), a warning message is displayed in the Driver Information Centre.

Vehicle messages ⇨ 120.

Activate the window electronics for each window as following:

1. Close doors.
2. Switch on ignition.
3. Pull switch to the second detent until the window starts to close and hold pulled for additional 4 seconds.
4. Push switch to the second detent until the window starts to open automatically.
5. Repeat for each window.

Heated rear window

Operated by pressing ⊟.

The LED in the button indicates activation.

Heating works with the engine running and is switched off automatically after a short time.

Sun visors

The sun visors can be folded down or swivelled to the side to prevent dazzling.

If the sun visors have integral mirrors, the mirror covers should be closed when driving.

Roller blinds

To reduce sunlight at the rear seats, pull the blind upwards using the grip and engage it at the top of the door frame.

Roof

Sunroof

⚠ Warning

Take care when operating the sunroof. Risk of injury, particularly to children.

Keep a close watch on the movable parts when operating them. Ensure that nothing becomes trapped in them as they move.

Operable with ignition in position **Accessory power mode** or **Ignition on power mode** ⇨ 156, ⇨ 157.

Retained power off ⇨ 158.

Sunroof, 5-door Hatchback/ 4-door Saloon

Open or close

Press or gently to the first detent: sunroof is opened or closed with safety function enabled as long as the switch is operated.

Press or firmly to the second detent and then release: the sunroof is opened or closed automatically with safety function enabled. To stop movement, operate the switch once more.

Raise or close

Press or : sunroof is raised or closed automatically with safety function enabled.

If the sunroof is raised, it can be opened in one step by pressing .

Sunblind

The sunblind is manually operated.

Close or open the sunblind by sliding. When the sunroof is open, the sunblind is always open.

Panoramaroof, Sports Tourer/ Country Tourer

Open

Press gently to the first detent: sunroof is opened in the spoiler position.

Press firmly to the second detent and then release: the sunroof is opened automatically with safety function enabled. To stop movement, operate the switch once more.

Close

Press gently to the first detent: sunroof is closed from fully open or spoiler position with safety function enabled as long as the switch is operated.

Press firmly to the second detent and then release: the sunroof is completely closed automatically with safety function enabled. To stop movement, operate the switch once more.

Sunblind

The sunblind is power operated.

Close or open the sunblind by pressing ⊟ or ⊞.

General hints

Safety function

If the sunroof or sunblind encounters resistance during automatic closing, it is immediately stopped and opened again.

Override safety function

In the event of closing difficulties due to frost or the like, hold ⌂ pressed to the second detent. The sunroof closes without safety function enabled. To stop movement, release the switch.

Comfort closing with the remote control

The sunroof can be closed remotely from outside the vehicle.

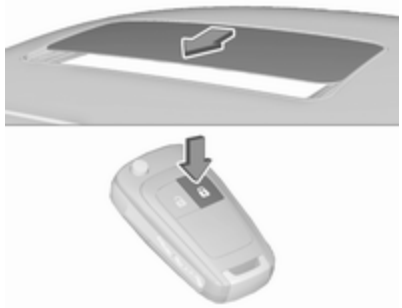

Press and hold 🔒 to close the sunroof.

Release the button to stop the movement.

Initialising after a power failure

After a power failure, it may only be possible to operate the sunroof to a limited extent. Have the system initialised by a workshop.

Seats, restraints

Head restraints **46**
Active head restraints 47
Front seats **48**
Seat position 48
Manual seat adjustment 49
Power seat adjustment 51
Armrest 53
Heating 54
Ventilating 54
Rear seats **54**
Armrest 54
Seat belts **55**
Three-point seat belt 56
Airbag system **58**
Front airbag system 61
Side airbag system 62
Curtain airbag system 62
Airbag deactivation 63
Child restraints **64**
Child restraint systems 64
Child restraint installation locations 66
ISOFIX child restraint systems .. 69
Top-tether fastening eyes 69

Head restraints

Position

⚠ Warning

Only drive with the head restraint set to the proper position.

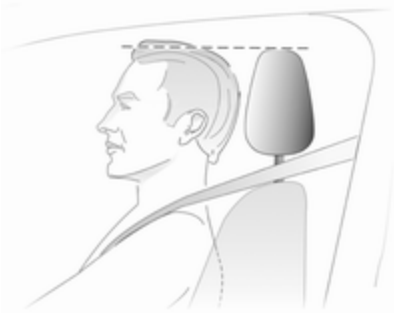

The upper edge of the head restraint should be at upper head level. If this is not possible for extremely tall people, set to highest position, and set to lowest position for small people.

Adjustment

Head restraints on front seats

Height adjustment
Press release button, adjust height, engage.

Horizontal adjustment

Pull bolster of head restraint forwards slowly. It engages in several positions.

To return to its rearmost position, pull fully forwards and release.

Head restraints on rear seats

Height adjustment

Pull the head restraint upwards and let engage. To move downwards, press the catch to release and push the head restraint downwards.

Active head restraints

In the event of a rear-end impact, the front parts of the active head restraints are moved slightly forwards. Thus the head is supported so that the risk of whiplash injury is reduced.

Note

Approved accessories may only be attached if the seat is not in use.

Front seats

Seat position

⚠ Warning

Only drive with the seat correctly adjusted.

⚠ Danger

Do not sit nearer than 25 cm from the steering wheel, to permit safe airbag deployment.

⚠ Warning

Never adjust seats while driving as they could move uncontrollably.

⚠ Warning

Never store any objects under the seats.

- Sit with buttocks as far back against the backrest as possible. Adjust the distance between the seat and the pedals so that legs are slightly angled when fully pressing the pedals. Slide the front passenger seat as far back as possible.
- Set seat height high enough to have a clear field of vision on all sides and of all display instruments. There should be at least one hand of clearance between head and the roof frame. Your thighs should rest lightly on the seat without pressing into it.
- Sit with shoulders as far back against the backrest as possible. Set the backrest rake so that it is possible to easily reach the steering wheel with arms slightly bent. Maintain contact between shoulders and the backrest when turning the steering wheel. Do not angle the backrest too far back. We recommend a maximum rake of approx. 25°.
- Adjust seat and steering wheel in a way that the wrist rests on top of the steering wheel while the arm is fully extended and shoulders on the backrest.
- Adjust the steering wheel ⇨ 86.
- Adjust the head restraint ⇨ 46.
- Adjust the height of the seat belt ⇨ 56.
- Adjust the thigh support so that there is a space approx. two fingers wide between the edge of the seat and the hollow of the knee.
- Adjust the lumbar support so that it supports the natural shape of the spine.

Manual seat adjustment

Drive only with engaged seats and backrests.

Longitudinal adjustment

Pull handle, slide seat, release handle. Try to move the seat back and forth to ensure that the seat is locked in place.

Backrest inclination

Pull lever, adjust inclination and release lever. Allow the backrest to engage audibly.

Seat height

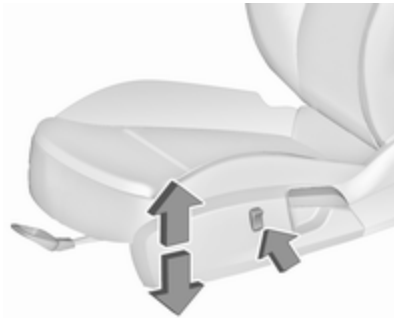

Press switch

top : seat higher
bottom : seat lower

Seat inclination

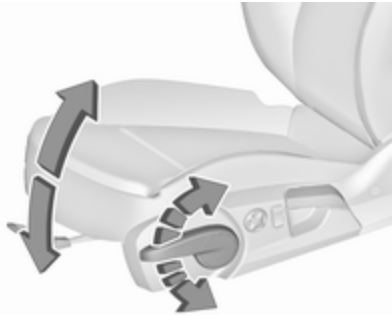

Lever pumping motion

up : front end higher
down : front end lower

Lumbar support

Adjust lumbar support using the four-way switch to suit personal requirements.

Moving support up and down: push switch up or down.

Increasing and decreasing support: push switch forwards or backwards.

Adjustable thigh support

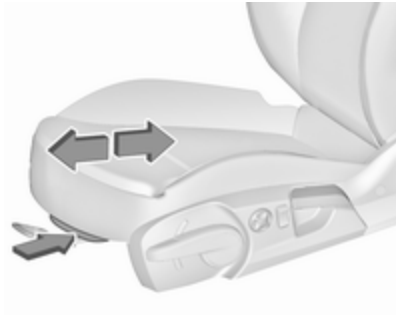

Pull the lever and slide the thigh support.

Power seat adjustment

⚠ Warning

Care must be taken when operating the power seats. There is a risk of injury, particularly for children. Objects could become trapped.

Keep a close watch on the seats when adjusting them. Vehicle passengers should be informed accordingly.

Longitudinal adjustment

Move switch forwards/backwards.

Seat height

Move switch upwards/downwards.

Seat inclination

Tilt front of switch upwards/ downwards.

Backrest inclination

Tilt switch forwards/backwards.

Lumbar support

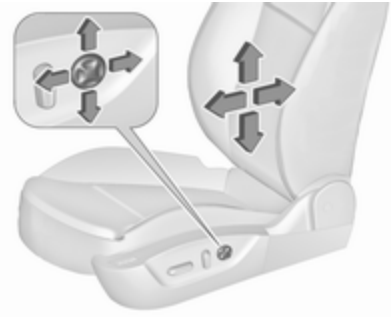

Adjust lumbar support using the four-way switch to suit personal requirements.

Moving support up and down: push switch up or down.

Increasing and decreasing support: push switch forwards or backwards.

Adjustable thigh support

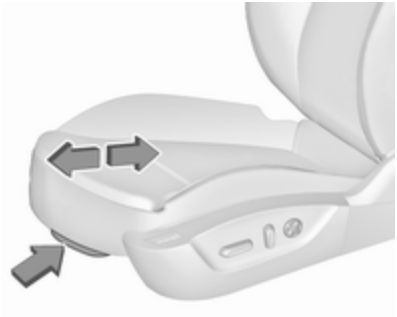

Pull the lever and slide the thigh support.

Memory function for power seat adjustment and exterior mirrors

Two different driver's seat and exterior mirror settings can be stored.

Memorised settings ⇨ 24, Vehicle personalisation ⇨ 122.

Storing memory position

- Adjust driver's seat and then adjust exterior mirrors to desired positions.
- Press and hold **MEM** and **1** or **2** simultaneously until a chime sounds.

Recall of memory positions

Press and hold button **1** or **2** until the stored seat and exterior mirror positions have been reached. Releasing the button during seat movement cancels the recall.

Storing positions by remote control

Actual driver's seat and exterior mirror positions are automatically stored by the radio remote control key each time the ignition is switched off. These stored positions are independent of the memory positions stored by the buttons **1** or **2**.

The stored positions are automatically recalled by unlocking and opening the driver's door with the memorised radio remote control key. If the door is already open, press 🔓 on remote control to activate the recall.

To stop recall movement, press one of the memory-, power mirror- or power seat controls.

This function can be activated or deactivated in the vehicle personalisation.

Select the relevant setting in **Settings**, ➧ **Vehicle** in the Colour-Info-Display.

Colour-Info-Display ⇨ 118.

Vehicle personalisation ⇨ 122.

Easy exit function

For a convenient exit out of the vehicle, the power driver seat moves rearwards when vehicle is stationary. To activate, switch off ignition, remove key from the ignition switch and open the driver's door. If the door is already open, switch off ignition to activate the recall.

To stop recall movement, press one of the memory- or power seat controls.

This function can be activated or deactivated in the vehicle personalisation.

Select the relevant setting in **Settings**, ➧ **Vehicle** in the Colour-Info-Display.

Colour-Info-Display ⇨ 118.

Vehicle personalisation ⇨ 122.

Safety function

If the driver's seat encounters resistance during movement, the recall may stop. After removing the obstruction, press and hold the appropriate power seat position button for the memory item for two seconds. Try recalling the memory position again. If the recall does not operate, consult a workshop.

Overload

If the seat setting is electrically overloaded, the power supply is automatically cut-off for a short time.

Note
After an accident in which airbags have been deployed, the memorised settings for each position button will be deactivated.

Armrest

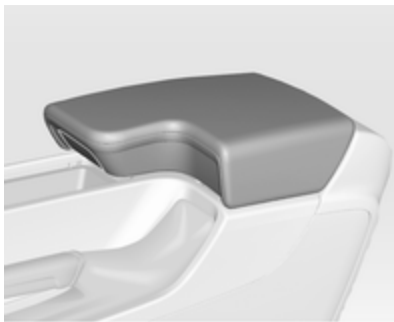

Push button and fold armrest upwards. Under the armrest there is a storage compartment.

Auxiliary devices, see Infotainment manual.

Heating

Adjust heating to the desired setting by pressing for the respective seat one or more times. The control indicator in the button indicates the setting.

Prolonged use of the highest setting for people with sensitive skin is not recommended.

Seat heating is operational when engine is running and during an Autostop.

Stop-start system ⇨ 160.

Ventilating

Adjust ventilation to the desired setting by pressing for the respective seat one or more times.

The control indicator in the button indicates the setting.

Ventilated seats are operational when engine is running and during an Autostop.

Stop-start system ⇨ 160.

Rear seats

Armrest

Fold armrest down. The armrest contains cupholders and a storage box.

Seat belts

The seat belts are locked during heavy acceleration or deceleration of the vehicle holding the occupants in the sitting position. Thereby the risk of injury is considerably reduced.

⚠ Warning

Fasten seat belt before each trip.

In the event of an accident, people not wearing seat belts endanger their fellow occupants and themselves.

Seat belts are designed to be used by only one person at a time. Child restraint system ⇨ 64.

Periodically check all parts of the belt system for damage, pollution and proper functionality.

Have damaged components replaced. After an accident, have the belts and triggered belt pretensioners replaced by a workshop.

Note
Make sure that the belts are not damaged by shoes or sharp-edged objects or trapped. Prevent dirt from getting into the belt retractors.

Seat belt reminder

Each seat is equipped with a seat belt reminder, indicated for front seats by control indicators and ², or for rear seats by the symbol in the Driver Information Centre ⇨ 104.

Depending on version, the passenger's seat may not be equipped with a seat belt reminder.

Belt force limiters

Stress on the body is reduced by the gradual release of the belt during a collision.

Belt pretensioners

In the event of a head-on or rear-end collision of a certain severity, the front seat belts are tightened.

⚠ Warning

Incorrect handling (e.g. removal or fitting of belts) can trigger the belt pretensioners.

Deployment of the belt pretensioners is indicated by continuous illumination of control indicator ⇨ 105.

Triggered belt pretensioners must be replaced by a workshop. Belt pretensioners can only be triggered once.

Note
Do not affix or install accessories or other objects that may interfere with the operation of the belt

pretensioners. Do not make any modifications to belt pretensioner components as this will invalidate the vehicle type approval.

Three-point seat belt

Fasten

Withdraw the belt from the retractor, guide it untwisted across the body and insert the latch plate into the buckle. Tighten the lap belt regularly whilst driving by pulling the shoulder belt.

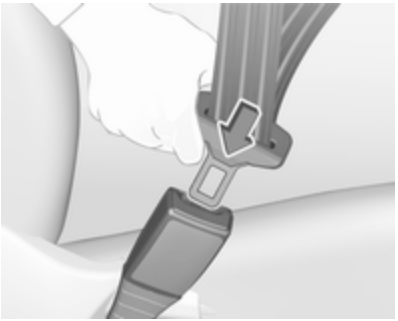

Loose or bulky clothing prevents the belt from fitting snugly. Do not place objects such as handbags or mobile phones between the belt and your body.

⚠ Warning

The belt must not rest against hard or fragile objects in the pockets of your clothing.

Seat belt reminder, ⇨ 104.

Insignia OPC

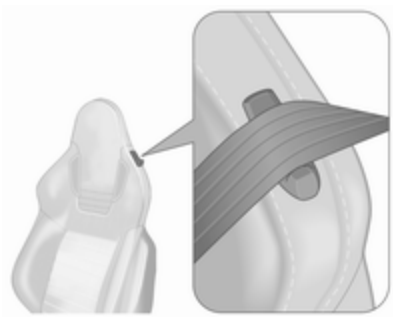

Feed seat belt through belt mount on backrest when fastening seat belt.

Height adjustment

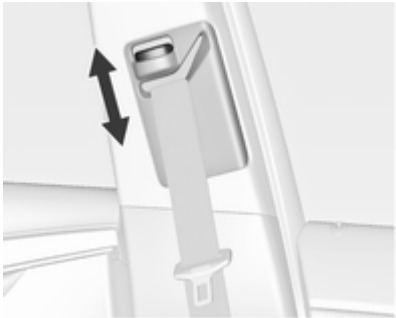

1. Pull belt out slightly.
2. Shift the height adjuster upwards or press button to disengage and push the height adjuster downwards.

Adjust the height so that the belt lies across the shoulder. It must not lie across the throat or upper arm.

Do not adjust while driving.

Unfasten

To release belt, press red button on belt buckle.

Insignia OPC

Feed seat belt through belt mount on backrest after releasing.

Seat belts on the rear seats

The seat belt for the rear centre seat can only be withdrawn from the retractor if the backrest is in the rear position.

Using the seat belt while pregnant

⚠ Warning

The lap belt must be positioned as low as possible across the pelvis to prevent pressure on the abdomen.

Airbag system

The airbag system consists of a number of individual systems depending on the scope of equipment.

When triggered the airbags inflate within milliseconds. They also deflate so quickly that it is often unnoticeable during the collision.

⚠ Warning

If handled improperly the airbag systems can be triggered in an explosive manner.

Note
The airbag systems and belt pretensioner control electronics are located in the centre console area. Do not put any magnetic objects in this area.

Do not stick anything on the airbag covers and do not cover them with other materials.

Each airbag is triggered only once. Have deployed airbags replaced by a workshop. Furthermore, it might be necessary to have the steering wheel, the instrument panel, parts of the panelling, the door seals, handles and the seats replaced.

Do not make any modifications to the airbag system as this will invalidate the vehicle type approval.

When the airbags inflate, escaping hot gases may cause burns.

Control indicator for airbag systems ⇨ 105.

Child restraint systems on front passenger seat with airbag systems

Warning according to ECE R94.02:

EN: NEVER use a rearward-facing child restraint on a seat protected by an ACTIVE AIRBAG in front of it; DEATH or SERIOUS INJURY to the CHILD can occur.

DE: Nach hinten gerichtete Kindersitze NIEMALS auf einem Sitz verwenden, der durch einen davor befindlichen AKTIVEN AIRBAG geschützt ist, da dies den TOD oder SCHWERE VERLETZUNGEN DES KINDES zur Folge haben kann.

FR: NE JAMAIS utiliser un siège d'enfant orienté vers l'arrière sur un siège protégé par un COUSSIN GONFLABLE ACTIF placé devant lui, sous peine d'infliger des BLESSURES GRAVES, voire MORTELLES à l'ENFANT.

ES: NUNCA utilice un sistema de retención infantil orientado hacia atrás en un asiento protegido por un AIRBAG FRONTAL ACTIVO. Peligro de MUERTE o LESIONES GRAVES para el NIÑO.

RU: ЗАПРЕЩАЕТСЯ устанавливать детское удерживающее устройство лицом назад на сиденье автомобиля, оборудованном фронтальной подушкой безопасности, если ПОДУШКА НЕ ОТКЛЮЧЕНА! Это может привести к СМЕРТИ или СЕРЬЕЗНЫМ ТРАВМАМ РЕБЕНКА.

NL: Gebruik NOOIT een achterwaarts gericht kinderzitje op een stoel met een ACTIEVE AIRBAG ervoor, om DODELIJK of ERNSTIG LETSEL van het KIND te voorkomen.

DA: Brug ALDRIG en bagudvendt autostol på et forsæde med AKTIV AIRBAG, BARNET kan komme i LIVSFARE eller komme ALVORLIGT TIL SKADE.

SV: Använd ALDRIG en bakåtvänd barnstol på ett säte som skyddas med en framförvarande AKTIV AIRBAG. DÖDSFALL eller ALLVARLIGA SKADOR kan drabba BARNET.

FI: ÄLÄ KOSKAAN sijoita taaksepäin suunnattua lasten turvaistuinta istuimelle, jonka edessä on AKTIIVINEN TURVATYYNY, LAPSI VOI KUOLLA tai VAMMAUTUA VAKAVASTI.

NO: Bakovervendt barnesikringsutstyr må ALDRI brukes på et sete med AKTIV KOLLISJONSPUTE foran, da det kan føre til at BARNET utsettes for LIVSFARE og fare for ALVORLIGE SKADER.

PT: NUNCA use um sistema de retenção para crianças voltado para trás num banco protegido com um AIRBAG ACTIVO na frente do mesmo, poderá ocorrer a PERDA DE VIDA ou FERIMENTOS GRAVES na CRIANÇA.

IT: Non usare mai un sistema di sicurezza per bambini rivolto all'indietro su un sedile protetto da AIRBAG ATTIVO di fronte ad esso: pericolo di MORTE o LESIONI GRAVI per il BAMBINO!

EL: ΠΟΤΕ μη χρησιμοποιείτε παιδικό κάθισμα ασφαλείας με φορά προς τα πίσω σε κάθισμα που προστατεύεται από μετωπικό ΕΝΕΡΓΟ ΑΕΡΟΣΑΚΟ, διότι το παιδί μπορεί να υποστεί ΘΑΝΑΣΙΜΟ ή ΣΟΒΑΡΟ ΤΡΑΥΜΑΤΙΣΜΟ.

PL: NIE WOLNO montować fotelika dziecięcego zwróconego tyłem do kierunku jazdy na fotelu, przed którym znajduje się WŁĄCZONA PODUSZKA POWIETRZNA. Niezastosowanie się do tego zalecenia może być przyczyną ŚMIERCI lub POWAŻNYCH OBRAŻEŃ u DZIECKA.

TR: Arkaya bakan bir çocuk emniyet sistemini KESİNLİKLE önünde bir AKTİF HAVA YASTIĞI ile korunmakta olan bir koltukta kullanmayınız. ÇOCUK ÖLEBİLİR veya AĞIR ŞEKİLDE YARALANABİLİR.

UK: НІКОЛИ не використовуйте систему безпеки для дітей, що встановлюється обличчям назад, на сидінні з УВІМКНЕНОЮ ПОДУШКОЮ БЕЗПЕКИ, інакше це може призвести до СМЕРТІ чи СЕРЙОЗНОГО ТРАВМУВАННЯ ДИТИНИ.

HU: SOHA ne használjon hátrafelé néző biztonsági gyerekülést előlről AKTÍV LÉGZSÁKKAL védett ülésen, mert a GYERMEK HALÁLÁT vagy KOMOLY SÉRÜLÉSÉT okozhatja.

HR: NIKADA nemojte koristiti sustav zadržavanja za djecu okrenut prema natrag na sjedalu s AKTIVNIM ZRAČNIM JASTUKOM ispred njega, to bi moglo dovesti do SMRTI ili OZBILJNJIH OZLJEDA za DIJETE.

SL: NIKOLI ne nameščajte otroškega varnostnega sedeža, obrnjenega v nasprotni smeri vožnje, na sedež z AKTIVNO ČELNO ZRAČNO BLAZINO, saj pri tem obstaja nevarnost RESNIH ali SMRTNIH POŠKODB za OTROKA.

SR: NIKADA ne koristiti bezbednosni sistem za decu u kome su deca okrenuta unazad na sedištu sa AKTIVNIM VAZDUŠNIM JASTUKOM ispred sedišta zato što DETE može da NASTRADA ili da se TEŠKO POVREDI.

MK: НИКОГАШ не користете детско седиште свртено наназад на седиште заштитено со АКТИВНО ВОЗДУШНО ПЕРНИЧЕ пред него, затоа што детето може ДА ЗАГИНЕ или да биде ТЕШКО ПОВРЕДЕНО.

BG: НИКОГА не използвайте детска седалка, гледаща назад, върху седалка, която е защитена чрез АКТИВНА ВЪЗДУШНА ВЪЗГЛАВНИЦА пред нея - може да се стигне до СМЪРТ или СЕРИОЗНО НАРАНЯВАНЕ на ДЕТЕТО.

RO: Nu utilizați NICIODATĂ un scaun pentru copil îndreptat spre partea din spate a mașinii pe un scaun protejat de un AIRBAG ACTIV în fața sa; acest lucru poate duce la DECESUL sau VĂTĂMAREA GRAVĂ a COPILULUI.

CS: NIKDY nepoužívejte dětský zádržný systém instalovaný proti směru jízdy na sedadle, které je chráněno před sedadlem AKTIVNÍM AIRBAGEM. Mohlo by dojít k VÁŽNÉMU PORANĚNÍ nebo ÚMRTÍ DÍTĚTE.

SK: NIKDY nepoužívajte detskú sedačku otočenú vzad na sedadle chránenom AKTÍVNYM AIRBAGOM, pretože môže dôjsť k SMRTI alebo VÁŽNYM ZRANENIAM DIEŤAŤA.

LT: JOKIU BŪDU nemontuokite atgal atgręžtos vaiko tvirtinimo sistemos sėdynėje, prieš kurią įrengta AKTYVI ORO PAGALVĖ, nes VAIKAS GALI ŽŪTI arba RIMTAI SUSIŽALOTI.

LV: NEKĀDĀ GADĪJUMĀ neizmantojiet uz aizmuguri vērstu bērnu sēdeklīti sēdvietā, kas tiek aizsargāta ar tās priekšā uzstādītu AKTĪVU DROŠĪBAS SPILVENU, jo pretējā gadījumā BĒRNS var gūt SMAGAS TRAUMAS vai IET BOJĀ.

ET: ÄRGE kasutage tahapoole suunatud lapseturvaistet istmel, mille ees on AKTIIVSE TURVAPADJAGA kaitstud iste, sest see võib põhjustada LAPSE SURMA või TÕSISE VIGASTUSE.

MT: QATT tużа trażżin għat-tfal li jħares lejn in-naħa ta' wara fuq sit protett b'AIRBAG ATTIV quddiemu; dan jista' jikkawża l-MEWT jew ĠRIEĦI SERJI lit-TFAL.

Beyond the warning required by ECE R94.02, for safety reasons never use a forward-facing child restraint system on the passenger seat with an active front airbag.

⚠ Danger

Do not use a child restraint system on the passenger seat with active front airbag.

The airbag label is located on both sides of the front passenger sun visor.

Airbag deactivation ➪ 63.

Front airbag system

The front airbag system consists of one airbag in the steering wheel and one in the instrument panel on the front passenger side. These can be identified by the word **AIRBAG**.

The front airbag system is triggered in the event of a front-end impact of a certain severity. The ignition must be switched on.

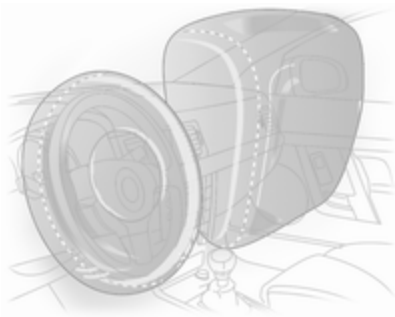

The inflated airbags cushion the impact, thereby reducing the risk of injury to the upper body and head of the front seat occupants considerably.

⚠ Warning

Optimum protection is only provided when the seat is in the proper position.

Seat position ➪ 48.

Keep the area in which the airbag inflates clear of obstructions.

Fit the seat belt correctly and engage securely. Only then is the airbag able to protect.

Side airbag system

The side airbag system consists of an airbag in each front seat backrest and in the rear outboard seat backrests. This can be identified by the word **AIRBAG**.

The side airbag system is triggered in the event of a side impact of a certain severity. The ignition must be switched on.

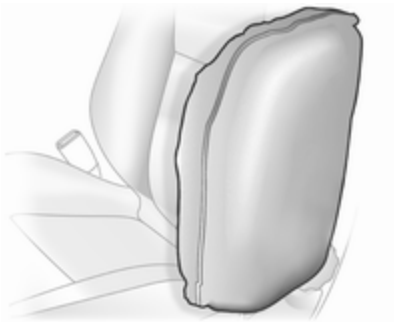

The inflated airbags cushion the impact, thereby reducing the risk of injury to the upper body and pelvis in the event of a side-on collision considerably.

⚠ Warning

Keep the area in which the airbag inflates clear of obstructions.

Note
Only use protective seat covers that have been approved for the vehicle. Be careful not to cover the airbags.

Curtain airbag system

The curtain airbag system consists of an airbag in the roof frame on each side. This can be identified by the word **AIRBAG** on the roof pillars.

The curtain airbag system is triggered in the event of a side-on impact of a certain severity. The ignition must be switched on.

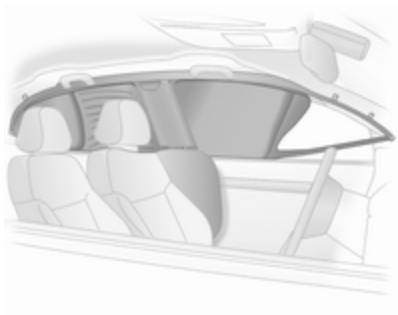

The inflated airbags cushion the impact, thereby reducing the risk of injury to the head in the event of a side-on impact considerably.

⚠ Warning

Keep the area in which the airbag inflates clear of obstructions.

The hooks on the handles in the roof frame are only suitable for hanging up light articles of clothing, without coat hangers. Do not keep any items in these clothes.

Airbag deactivation

Front airbag and side airbag systems for the front passenger seat must be deactivated if a child restraint system is to be fitted on this seat. The curtain airbag system, the belt pretensioners and all driver airbag systems will remain active.

The front passenger airbag system can be deactivated via a key-operated switch on the right side of the instrument panel.

Use the ignition key to choose the position:

- : front passenger airbags are deactivated and will not inflate in the event of a collision. Control indicator illuminates continuously. A child restraint system can be installed in accordance with the chart **Child restraint installation locations** ⇨ 66. No adult person is allowed to occupy the front passenger seat
- : front passenger airbags are active. Control indicator illuminates continuously. A child restraint system must not be installed

⚠ Danger

Risk of fatal injury for a child using a child restraint system on a seat with activated front passenger airbag.

Risk of fatal injury for an adult person on a seat with deactivated front passenger airbag.

If the control indicator illuminates, the front passenger airbag system will inflate in the event of a collision.

If both control indicators are illuminated simultaneously, there is a system failure. The status of the system is not discernible, therefore no person is allowed to occupy the front passenger seat. Contact a workshop immediately.

Consult a workshop immediately if neither of the two control indicators are illuminated.

Change status only when the vehicle is stopped with the ignition off.

Status remains until the next change.

Control indicator for airbag deactivation ⇨ 105.

Child restraints

Child restraint systems

We recommend the Opel child restraint system which is tailored specifically to the vehicle.

When a child restraint system is being used, pay attention to the following usage and installation instructions and also those supplied with the child restraint system.

Always comply with local or national regulations. In some countries, the use of child restraint systems is forbidden on certain seats.

⚠ Danger

When using a child restraint system on the front passenger seat, the airbag systems for the front passenger seat must be deactivated; if not, the triggering of the airbags poses a risk of fatal injury to the child.

This is especially the case if rear-facing child restraint systems are used on the front passenger seat.

Airbag deactivation ⇨ 63.

Airbag label ⇨ 58.

Selecting the right system

The rear seats are the most convenient location to fasten a child restraint system.

Children should travel facing rearwards in the vehicle as long as possible. This makes sure that the child's backbone, which is still very weak, is under less strain in the event of an accident.

Suitable are restraint systems that comply with valid UN ECE regulations. Check local laws and regulations for mandatory use of child restraint systems.

Ensure that the child restraint system to be installed is compatible with the vehicle type.

Ensure that the mounting location of the child restraint system within the vehicle is correct, see following tables.

Allow children to enter and exit the vehicle only on the side facing away from the traffic.

When the child restraint system is not in use, secure the seat with a seat belt or remove it from the vehicle.

Note

Do not stick anything on the child restraint systems and do not cover them with any other materials.

A child restraint system which has been subjected to stress in an accident must be replaced.

Child restraint installation locations

Permissible options for fitting a child restraint system

Weight and age class	On front passenger seat activated airbag	On front passenger seat deactivated airbag	On rear outboard seats	On rear centre seat
Group 0: up to 10 kg or approx. 10 months	X	U[1]	U	U
Group 0+: up to 13 kg or approx. 2 years	X	U[1]	U	U
Group I: 9 to 18 kg or approx. 8 months to 4 years	X	U[1]	U	U
Group II: 15 to 25 kg or approx. 3 to 7 years	X	X	U	U
Group III: 22 to 36 kg or approx. 6 to 12 years	X	X	U	U

[1] : if the child restraint system is being secured using a three-point seat belt, move seat height adjustment to uppermost position and ensure that vehicle safety belt runs forwards from the upper anchorage point. Adjust seat backrest inclination as far as necessary to a vertical position to ensure that the belt is tight on the buckle side

U : universal suitability in conjunction with three-point seat belt

X : no child restraint system permitted in this weight class

Permissible options for fitting an ISOFIX child restraint system

Weight class	Size class	Fixture	On front passenger seat	On rear outboard seats	On rear centre seat
Group 0: up to 10 kg	E	ISO/R1	X	IL	IL
Group 0+: up to 13 kg	E	ISO/R1	X	IL	IL
	D	ISO/R2	X	IL	IL
	C	ISO/R3	X	IL	IL
Group I: 9 to 18 kg	D	ISO/R2	X	IL	IL
	C	ISO/R3	X	IL	IL
	B	ISO/F2	X	IL, IUF	IL, IUF
	B1	ISO/F2X	X	IL, IUF	IL, IUF
	A	ISO/F3	X	IL, IUF	IL, IUF
Group II: 15 to 25 kg or approx. 3 to 7 years			X	IL	X
Group III: 22 to 36 kg or approx. 6 to 12 years			X	IL	X

IL : suitable for particular ISOFIX restraint systems of the 'specific-vehicle', 'restricted' or 'semi-universal' categories. The ISOFIX restraint system must be approved for the specific vehicle type
IUF : suitable for ISOFIX forward-facing child restraint systems of universal category approved for use in this weight class
X : no ISOFIX child restraint system approved in this weight class

ISOFIX size class and seat device

A – ISO/F3	:	forward-facing child restraint system for children of maximum size in the weight class 9 to 18 kg
B – ISO/F2	:	forward-facing child restraint system for smaller children in the weight class 9 to 18 kg
B1 – ISO/F2X	:	forward-facing child restraint system for smaller children in the weight class 9 to 18 kg
C – ISO/R3	:	rear-facing child restraint system for children of maximum size in the weight class up to 18 kg
D – ISO/R2	:	rear-facing child restraint system for smaller children in the weight class up to 18 kg
E – ISO/R1	:	rear-facing child restraint system for young children in the weight class up to 13 kg

ISOFIX child restraint systems

Fasten vehicle-approved ISOFIX child restraint systems to the ISOFIX mounting brackets. Specific vehicle ISOFIX child restraint system positions are marked in the table by IL ⇨ 66.

No more than two ISOFIX child restraint systems can be installed on the rear seats at the same time, though not right next to each other.

ISOFIX mounting brackets are indicated by a logo ISOFIX on the backrest.

Top-tether fastening eyes

The vehicle has three fastening eyes on the backside of the rear backrests or in the area behind the head restraints.

Top-Tether fastening eyes are marked with the symbol for a child seat.

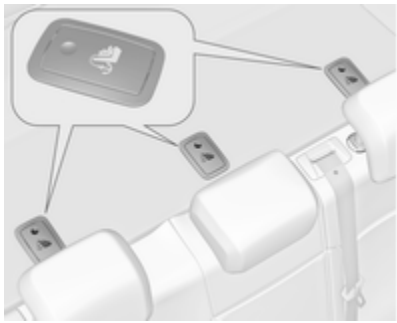

Open the flap of the required fastening eye, marked by the child seat symbol.

In addition to the ISOFIX mounting, fasten the Top-Tether strap to the Top-Tether fastening eyes. The strap must run between the two guide rods of the head restraint.

ISOFIX child restraint systems of universal category positions are marked in the table by IUF ⇨ 66.

Storage

Storage compartments **70**
Glovebox 70
Cupholders 70
Front storage 71
Armrest storage 71
Load compartment **72**
Load compartment cover 74
Rear floor storage cover 75
Lashing eyes 76
Cargo management system 76
Safety net 78
Warning triangle 81
First aid kit 81
Roof rack system **82**
Roof rack 82
Loading information **83**

Storage compartments

⚠ Warning

Do not store heavy or sharp objects in the storage compartments. Otherwise, the storage compartment lid could open and vehicle occupants could be injured by objects being thrown around in the event of hard braking, a sudden change in direction or an accident.

Glovebox

The glovebox features a pen holder, a coin holder and an adapter for the locking wheel nuts.

The glovebox should be closed whilst driving.

Cupholders

Cupholders are located in the centre console.

Additional cupholders are located in the rear armrest. Fold down armrest.

Front storage

A storage box is located behind a cover below the climate controls. Press cover to open.

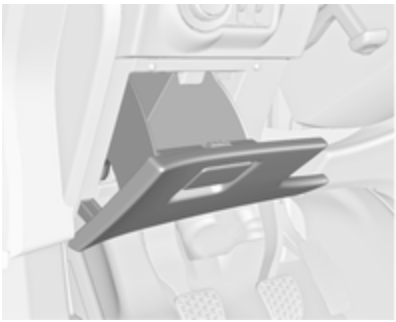

Another storage compartment is located next to the steering wheel.

Armrest storage

Storage in the front armrest

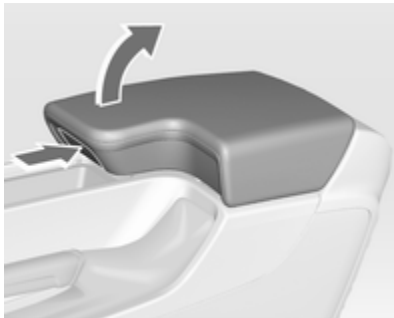

Push button to fold up the armrest.

Storage in the rear armrest

Fold down armrest and open cover.

Close cover before folding the armrest up.

Load compartment

Folding down rear seat backrests

The rear seat backrest is divided into two parts. Both parts can be folded down.

Remove the load compartment cover if necessary.

Press and hold the catch, then push the head restraints down.

Fold up the rear armrest.

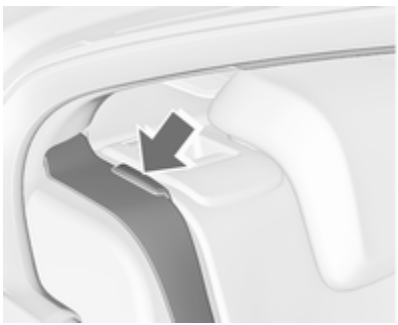

Put the seat belts of the outboard seats into the belt guides.

Pull the release lever on one or both sides and fold down the backrests onto the seat cushion.

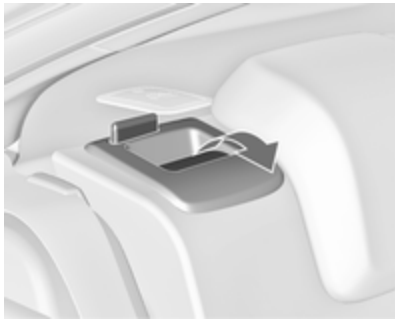

To fold up, raise backrests and guide them into an upright position until they engage audibly.

Ensure that the seat belts of the outboard seats are placed in the corresponding belt guides.

The backrests are properly engaged when both red marks on the side near the release lever are no longer visible.

⚠ Warning

Only drive the vehicle when the backrests are securely locked into position. Otherwise there is a risk of personal injury or damage to the load or vehicle in the event of hard braking or a collision.

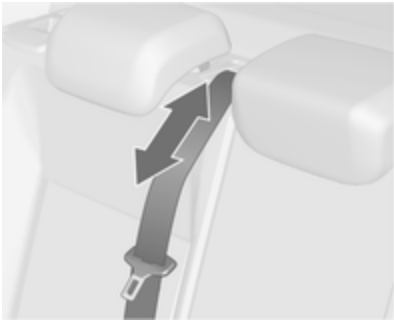

The seat belt of the centre seat could be blocked when the backrest is folded up too quickly. To unlock the retractor, push in the seat belt or pull it out by approx. 20 mm and then release.

Opening the pass-through in the rear centre backrest

Fold down rear armrest.

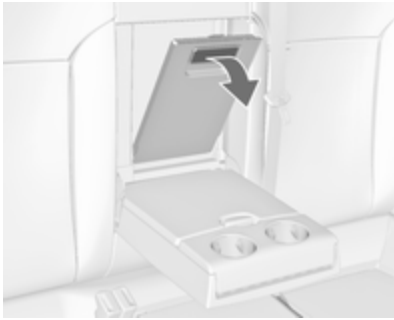

Pull grip and open the cover.

Suitable for loading long, narrow objects.

Ensure the cover engages after folding up.

The closed cover can be secured from inside the load compartment. Turn knob by 90°:

knob horizontal : cover secured from the passenger compartment side
knob vertical : cover not secured

Storage in the load compartment

Depending on the equipment, there are storage boxes under the load compartment cover.

Load compartment cover

Do not place any objects on the cover.

5-door Hatchback

Removing cover

Unhook retaining straps from tailgate.

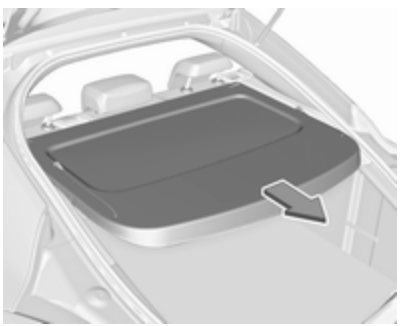

Pull cover from the side guides.

Fitting cover

Engage cover in side guides and fold downwards. Attach the retaining straps to the tailgate.

Sports Tourer, Country Tourer

Closing cover

Pull the cover towards the rear using the handle until it engages in the sideward retainers.

Opening cover

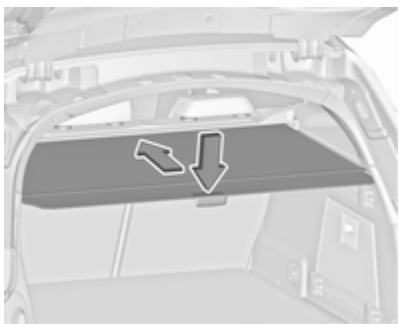

Push down the handle at the end of the cover. It rolls up automatically.

Removing cover

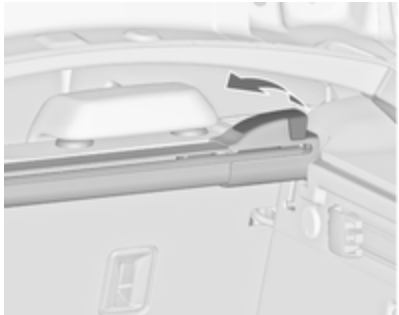

Open the load compartment cover.

Pull the release lever on the right side up and hold it. Lift the cover first on the right side and remove from retainers.

The removed cover can be stored under the load compartment floor ⇨ 78.

Installing cover

Insert the left side of the load compartment cover in the recess, pull the release lever up and hold it, insert the right side of the load compartment cover and engage.

Blind in the tailgate

To cover the load compartment completely, mount the blind at four fixing points on the inside of the tailgate.

Rear floor storage cover

Sliding floor cover (FlexFloor)

For a convenient setting of the load compartment, the floor cover can be pulled out.

Pulling out the floor cover

- Raise the floor at the handle slightly until the spring rolls pop-up on each side.

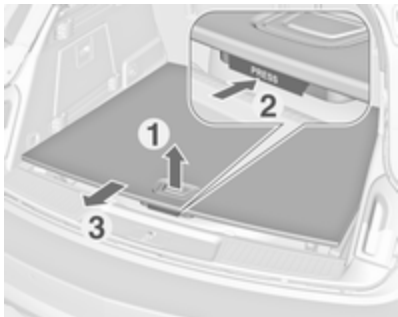

- Press the button under the handle and pull out the floor cover until it engages.

Load the floor in this position.

Sliding back into load compartment

- Press the button under the handle and slide in the floor cover until it engages at the end position.

  Leave the floor cover in the raised position as long as it is loaded.

To return the floor cover to its original position after unloading

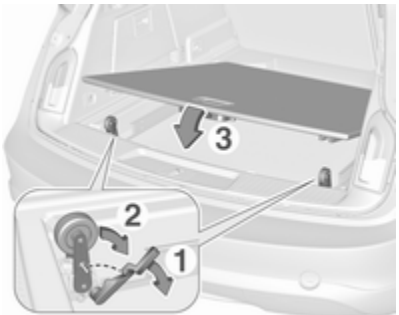

- Raise the floor cover slightly. Swivel the handle to the front (1) and push down the spring roll on each side manually (2). Both spring rolls must engage in position.
- Lower the floor cover (3).

The pulled out floor cover can be loaded with max. 120 kg. A warning label is shown on the floor cover.

Secure objects with lashing straps attached to lashing eyes ⇨ 76. Loading information ⇨ 83.

⚠ Warning

Do not load or unload the compartment by using the sliding floor cover when the vehicle is parked on a slope, as the floor cover could run uncontrolled into the end positions.

Lift the floor cover up or down only when unloaded. Danger of injury.

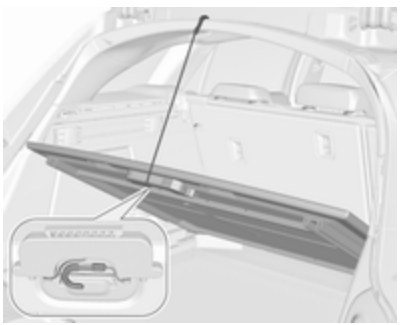

For access to the spare wheel or tyre repair kit, lift up the floor cover and attach the retaining strap at the upper edge of the tailgate recess. Lift up and attach the cover only without loading.

Lashing eyes

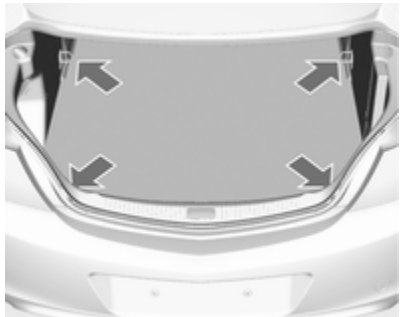

The lashing eyes are designed to secure items against slippage, e.g. using lashing straps or luggage net.

Cargo management system

The FlexOrganizer is a flexible system for dividing up the load compartment.

The system consists of:

- adapters
- mesh pockets
- hooks

- service box
- strap set

The components are fitted in rails on both side panels using adapters and hooks.

Installation of adapters in the rails

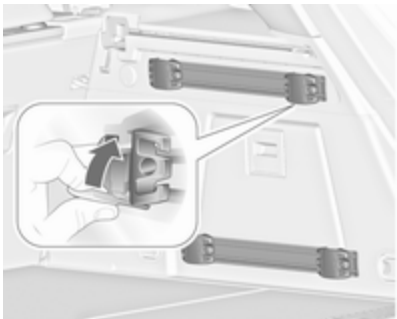

Fold open the handle plate, insert the adapter into the upper and lower groove of the rail and move to the required position. Turn the handle plate upwards to lock the adapter. To remove, turn the handle plate downwards and move out of the rail.

Variable partition net

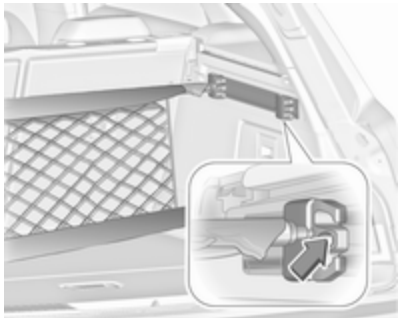

Insert adapters into the required position in the rails. Stick together the halves of the net rods.

To install, push rods together a little and insert into the relevant openings in the adapters.

To remove, press the net rods together and remove from the adapters.

Net pocket

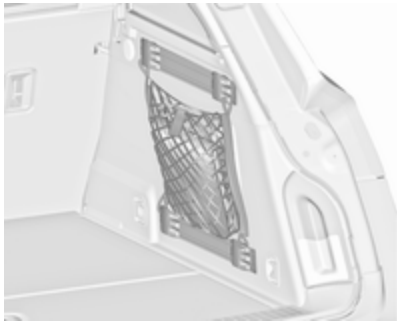

Insert adapters into the required position in the rails. The net pocket can be suspended from the adapters.

Installation of hooks in the rails

Insert the hook in the desired position first into the upper groove of the rail and then press into the lower groove. To remove, first pull out of the upper groove.

Service box

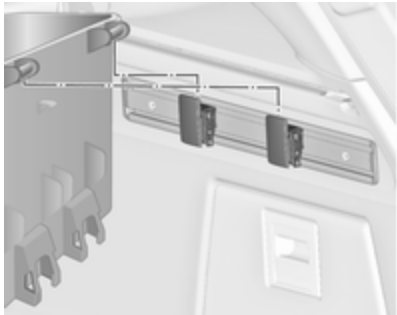

Install two hooks in the upper rail. Insert the upper brackets of the box from above into the hooks.

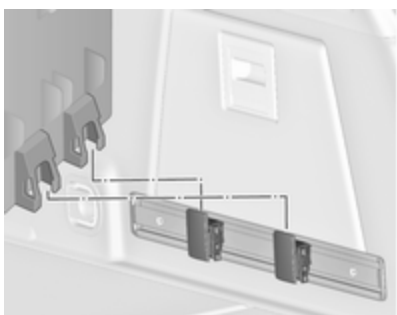

Alternatively install both hooks in the lower rail. Plug in the lower brackets of the box from above into the lower hooks.

Strap set

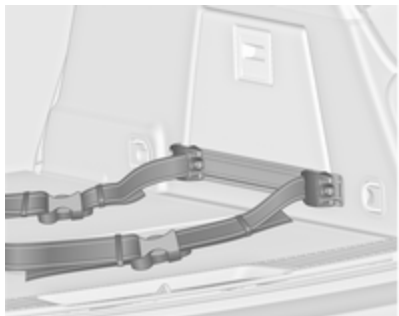

Insert the adapters of the strap set into a rail. Make sure that the belt is not twisted.

The strap set has two locks to open.

The belt can be tightened.

Safety net

Two different safety nets can be installed behind the front seats or rear seats.

Passengers must not be transported behind the safety net.

Safety net behind the front seats

Push head restraints of the rear seats down and fold down rear seat backrests ⇨ 72.

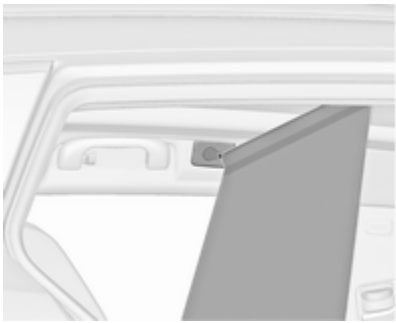

Front installation openings in the roof frame: latch rod of the net at one side, compress rod and latch at the other side.

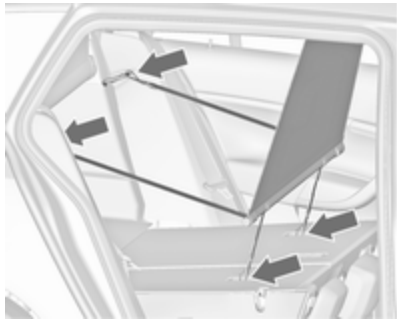

Fit the hooks of the small belts into the Top-Tether mounting loops on the back side of the folded rear seat backrests.

Fit the hooks of the wider belts into the locking devices of the rear seat backrests.

Safety net cassette behind the rear seats

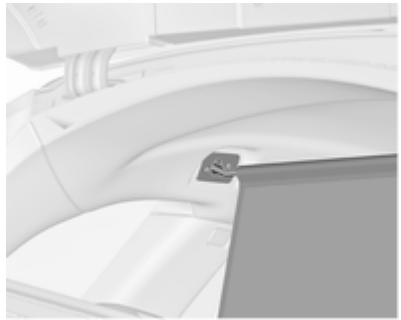

Pull out the net from the cassette and latch the rod of the net at one side into the rear installation opening in the roof frame. Compress the rod and latch at the other side.

Removal of the cassette

Roll up safety net.

Remove load compartment cover ⇨ 74.

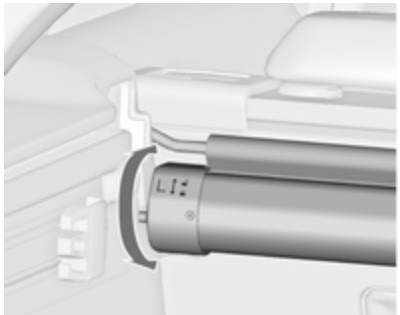

To unlock, turn cassette slightly backwards and remove it upwards from the retainers.

Installation of the cassette

Remove load compartment cover.

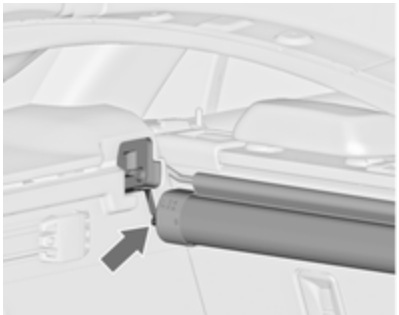

Insert the cassette into the retainers on left and right side. Note the signs **L** (left side) and **R** (right side) on the cassette as an installation hint.

Turn cassette slightly forwards to lock.

Stowage of safety nets and load compartment cover

Rear safety net cassette can be placed, together with the load compartment cover and the coiled up safety net, under the load compartment floor.

Open the load compartment floor by pulling the handle. Fold and place the floor behind the rear seats.

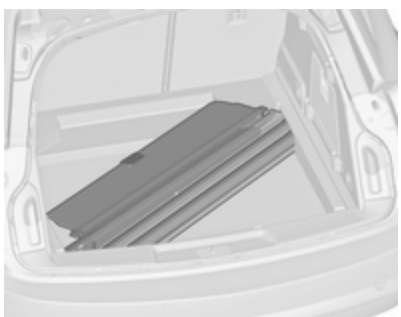

Put the load compartment cover into the hollow with the upper side downwards and with the release lever in the front right edge.

Warning triangle

5-door Hatchback/4-door Saloon

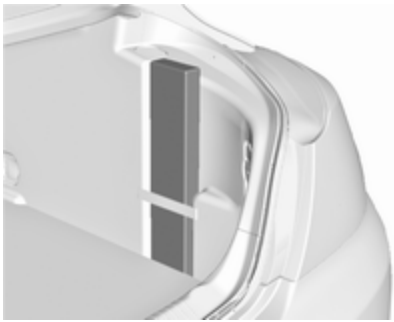

Stow the warning triangle in the space behind the strap on the right side of the load compartment.

Sports Tourer, Country Tourer

Stow the warning triangle in the space behind the straps on the inside of the tailgate.

First aid kit

5-door Hatchback/4-door Saloon

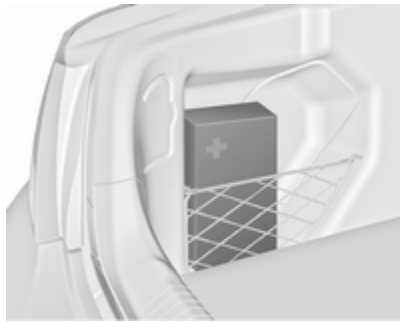

Stow the first aid kit in the space behind the mesh net on the left side of the load compartment.

Sports Tourer, Country Tourer

Stow the first aid kit in the space behind a strap on the inside of the tailgate.

Roof rack system

Roof rack

For safety reasons and to avoid damage to the roof, the vehicle-approved roof rack system is recommended.

Follow the installation instructions and remove the roof rack when not in use.

Mounting roof rack

5-door Hatchback/4-door Saloon

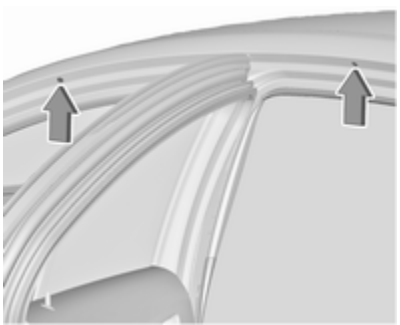

Open all doors.

Mounting points are located in each door frame of the vehicle body.

Detach the cover from each mounting point and fasten the roof rack with the attached screws.

Sports Tourer/Country Tourer with roof railing

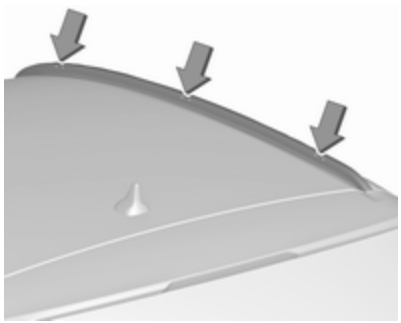

To fasten the roof rack, insert the mounting bolts in the holes indicated in the figure.

Loading information

- Heavy objects in the load compartment should be placed against the seat backrests. Make sure that the backrests are securely engaged, i.e. no longer showing the red markings on the side near the release lever. If objects can be stacked, heavier objects should be placed at the bottom.
- Secure objects with lashing straps attached to lashing eyes ⇨ 76.
- Secure loose objects in the load compartment to prevent from sliding.
- When transporting objects in the load compartment, the backrests of the rear seats must not be angled forward.
- Do not allow the load to protrude above the upper edge of the backrests.
- Do not place any objects on the load compartment cover or the instrument panel, and do not cover the sensor on top of the instrument panel.
- The load must not obstruct the operation of the pedals, parking brake and gear selector, or hinder the freedom of movement of the driver. Do not place any unsecured objects in the interior.
- Do not drive with an open load compartment.

⚠ Warning

Always make sure that the load in the vehicle is securely stowed. Otherwise objects can be thrown around inside the vehicle and cause personal injury or damage to the load or car.

- The payload is the difference between the permitted gross vehicle weight (see identification plate ⇨ 277) and the EC kerb weight.

  To calculate the payload, enter the data for your vehicle in the weights table at the front of this manual.

  The EC kerb weight includes weights for the driver (68 kg), luggage (7 kg) and all fluids (fuel tank 90% full).

  Optional equipment and accessories increase the kerb weight.
- Driving with a roof load increases the sensitivity of the vehicle to cross-winds and has a

detrimental effect on vehicle handling due to the vehicle's higher centre of gravity. Distribute the load evenly and secure it properly with retaining straps. Adjust the tyre pressure and vehicle speed according to the load conditions. Check and retighten the straps frequently.

Do not drive faster than 120 km/h.

The permissible roof load is 100 kg. The roof load is the combined weight of the roof rack and the load.

Instruments and controls

Controls **86**
Steering wheel adjustment 86
Steering wheel controls 86
Heated steering wheel 86
Horn 87
Windscreen wiper/washer 87
Rear window wiper/washer 89
Outside temperature 90
Clock 90
Power outlets 92
Ashtrays 93
Warning lights, gauges and indicators **94**
Instrument cluster 94
Speedometer 100
Odometer 100
Trip odometer 100
Tachometer 101
Fuel gauge 101
Fuel selector 102
Engine coolant temperature gauge 102
Service display 102
Control indicators 104
Turn signal 104
Seat belt reminder 104
Airbag and belt tensioners 105
Airbag deactivation 105
Charging system 105
Malfunction indicator light 106
Brake and clutch system 106
Operate pedal 106
Electric parking brake 106
Electric parking brake fault 106
Antilock brake system (ABS) ... 107
Upshift 107
Variable effort steering 107
Following distance 107
Lane departure warning 107
Ultrasonic parking assist 107
Electronic Stability Control off . 108
Electronic Stability Control and Traction Control system 108
Traction Control system off 108
Engine coolant temperature 108
Preheating 108
Diesel particle filter 108
AdBlue 108
Tyre pressure monitoring system 109
Engine oil pressure 109
Low fuel 109
Immobiliser 109
Autostop 110
Exterior light 110
High beam 110
High beam assist 110
Adaptive forward lighting 110
Fog light 110
Rear fog light 110
Cruise control 110
Adaptive cruise control 110
Vehicle detected ahead 110
Speed limiter 111
Traffic sign assistant 111
Door open 111
Information displays **111**
Driver Information Centre 111
Colour-Info-Display 118
Smartphone controller 119
Vehicle messages **120**
Warning chimes 121
Battery voltage 121
Vehicle personalisation **122**
OnStar **125**

Controls

Steering wheel adjustment

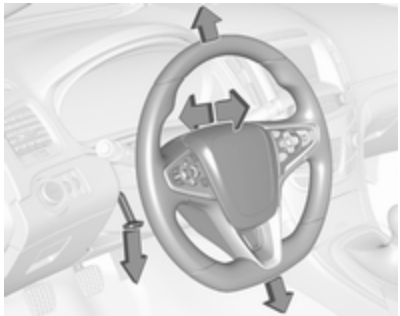

Unlock lever, adjust steering wheel, then engage lever and ensure it is fully locked.

Do not adjust steering wheel unless vehicle is stationary and steering wheel lock has been released.

Steering wheel controls

Driver Information Centre, some driver assistance systems, Infotainment system and a connected mobile phone can be operated via the controls on the steering wheel.

Driver Information Centre ⇨ 111.

Driver assistance systems ⇨ 181.

Further information is available in the Infotainment manual.

Heated steering wheel

Activate heating by pressing ♨. Activation is indicated by the LED in the button.

The recommended grip areas of the steering wheel are heated quicker and to a higher temperature than the other areas.

Heating is operational when the engine is running and during an Autostop.

Stop-start system ⇨ 160.

Horn

Press 📯.

Windscreen wiper/washer

Windscreen wiper

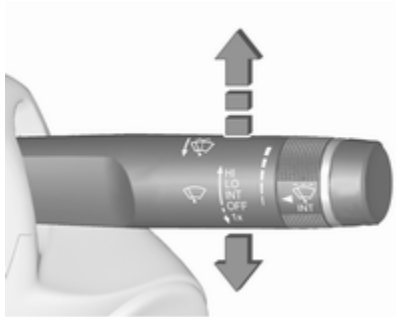

HI : fast
LO : slow
INT : interval wiping or automatic wiping with rain sensor
OFF : off

For a single wipe when the windscreen wiper is off, press the lever down to position **1x**.

Do not use if the windscreen is frozen.

Switch off in car washes.

Adjustable wiper interval

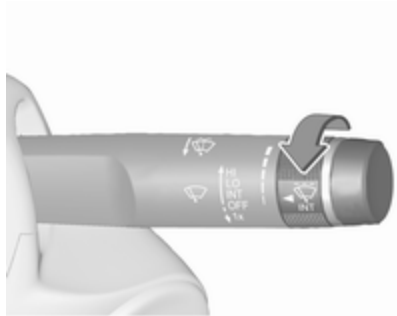

Wiper lever in position **INT**.

Turn the adjuster wheel to adjust the desired wipe interval:

short interval : turn adjuster wheel upwards
long interval : turn adjuster wheel downwards

Automatic wiping with rain sensor

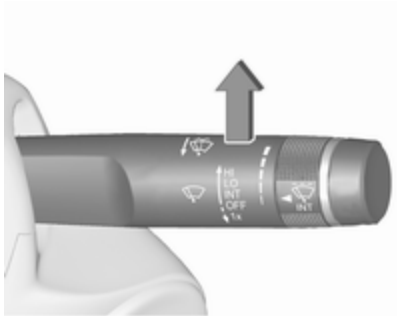

INT : automatic wiping with rain sensor

The rain sensor detects the amount of water on the windscreen and automatically regulates the frequency of the windscreen wiper.

Adjustable sensitivity of the rain sensor

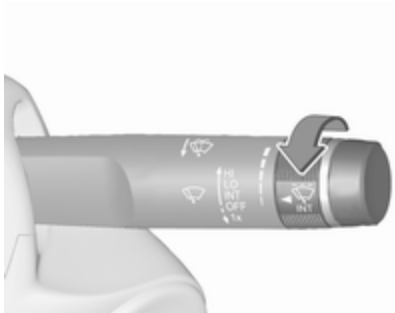

Turn the adjuster wheel to adjust the sensitivity:

low sensitivity : turn adjuster wheel downwards

high sensitivity : turn adjuster wheel upwards

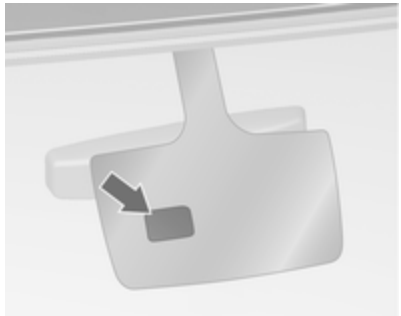

Keep the sensor free from dust, dirt and ice.

Rain sensor function can be activated or deactivated in the Vehicle personalisation.

Select the relevant setting in **Settings**, ➧ **Vehicle** in the Colour-Info-Display.

Colour-Info-Display ⇨ 118.

Vehicle personalisation ⇨ 122.

Windscreen and headlight washer

Pull lever. Washer fluid is sprayed onto the windscreen and the wiper wipes a few times.

If the headlights are on, washer fluid is also sprayed onto the headlights, provided that the lever is pulled sufficiently long. Afterwards the headlight washer system is inoperable for 5 wash cycles or until engine or headlights have been switched off and on again.

Washer fluid ⇨ 231

Rear window wiper/washer

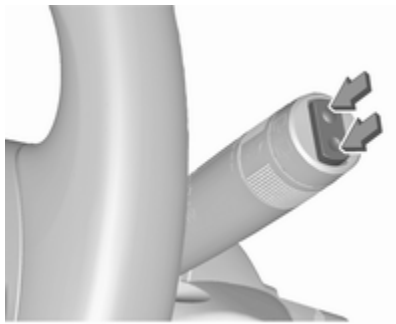

Push the rocker switch to activate the rear window wiper:

upper position	:	continuous operation
lower position	:	intermittent operation
middle position	:	off

Push lever. Washer fluid is sprayed onto the rear window and the wiper wipes a few times.

Do not use if the rear window is frozen.

Switch off in car washes.

The rear window wiper comes on automatically when the windscreen wiper is switched on and reverse gear is engaged.

Activation or deactivation of this function can be changed in the menu **Settings** in the Info-Display.

Vehicle personalisation ⇨ 122.

The rear window washer system is deactivated when the fluid level is low.

Washer fluid ⇨ 231

Outside temperature

A drop in temperature is indicated immediately and a rise in temperature after a time delay.

If outside temperature drops to 3 °C, a warning message is displayed in the Driver Information Centre.

⚠ Warning

The road surface may already be icy even though the display indicates a few degrees above 0 °C.

Clock

Time is shown in the 4.2" Colour-Info-Display.

Date and time are shown in the 8" Colour-Info-Display.

Colour-Info-Display operation ⇨ 118

4.2" Display

Operate the display by the buttons below the display.

Press ⌂ and then select the **SETTINGS** icon by turning and pressing **MENU**.

Select Time menu page.

Set time

Select the **Set Time** menu item to enter the respective submenu.

Select the **AUTO SET** screen button at the bottom of the screen. Activate either **On - RDS** mode or **Off - Manual** mode.

If **Off - Manual** mode is selected, adjust hours and minutes by turning and pressing **MENU**.

Repeatedly select the **12-24 HR** screen button at the bottom of the screen to choose a time mode.

If 12-hour mode is selected, a third column for AM and PM setting is displayed. Select the desired option.

In **On - RDS** Mode the RDS signal of most VHF transmitters automatically sets the time. RDS time synchronisation can take a few minutes. Some transmitters do not send a correct time signal. In such cases, it is recommended to switch off automatic time synchronisation.

Return to homepage by pressing ⌂.

For further information, see Infotainment manual

8" Display

Press ⌂ and then select the **SETTINGS** icon. Inputs can be done directly by the finger on the touch screen icons.

Select **Time and Date** menu page.

Set time

Select the **Set Time** menu item to enter the respective submenu.

Select the **Auto Set** screen button at the bottom of the screen. Activate either **On - RDS** mode or **Off - Manual** mode.

If **Off - Manual** mode is selected, adjust hours and minutes using ∧ ∨ screen buttons.

Tap on the **12-24 Hr** screen button on the right side of the screen to select a time mode.

If 12-hour mode is selected, a third column for AM and PM setting is displayed. Select the desired option.

In **On - RDS** Mode the RDS signal of most VHF transmitters automatically sets the time. RDS time synchronisation can take a few minutes. Some transmitters do not send a correct time signal. In such cases, it is recommended to switch off automatic time synchronisation.

Set date

Select the **Set Date** menu item to enter the respective submenu.

Select the **Auto Set** screen button at the bottom of the screen. Activate either **On - RDS** mode or **Off - Manual** mode.

If **Off - Manual** mode is selected, adjust the date using the ∧ or ∨ screen buttons.

In **On - RDS** mode date is set automatically.

Return to homepage by pressing ⌂.

For further information, see Infotainment manual.

Power outlets

A 12 Volt power outlet is behind the storage cover below the climate controls. Press cover to open.

More 12 Volt power outlets are located in the front and rear centre console.

Do not exceed the maximum power consumption of 120 watts.

A 230 Volt power outlet is located in the rear centre console. If ignition is on and a device is plugged in, an LED in the outlet illuminates green.

Do not exceed the maximum power consumption of 150 watts.

⚠ Danger
Power outlet works under high electrical voltage!

With ignition off the power outlets are deactivated. Additionally the power outlets are deactivated in the event of low vehicle battery voltage.

Electrical accessories that are connected must comply with the electromagnetic compatibility requirements laid down in DIN VDE 40 839.

Do not connect any current-delivering accessories, e.g. electrical charging devices or batteries.

Do not damage the outlets by using unsuitable plugs.

Stop-start system ⇨ 160.

Ashtrays

Caution
To be used only for ash and not for combustible rubbish.

A portable ashtray can be placed in the cupholders.

Warning lights, gauges and indicators

Instrument cluster

Depending on the version, three instrument clusters are available:

- Baselevel
- Midlevel
- Uplevel

Uplevel instrument cluster can be displayed as Sport mode or Tour mode.

Baselevel instrument cluster

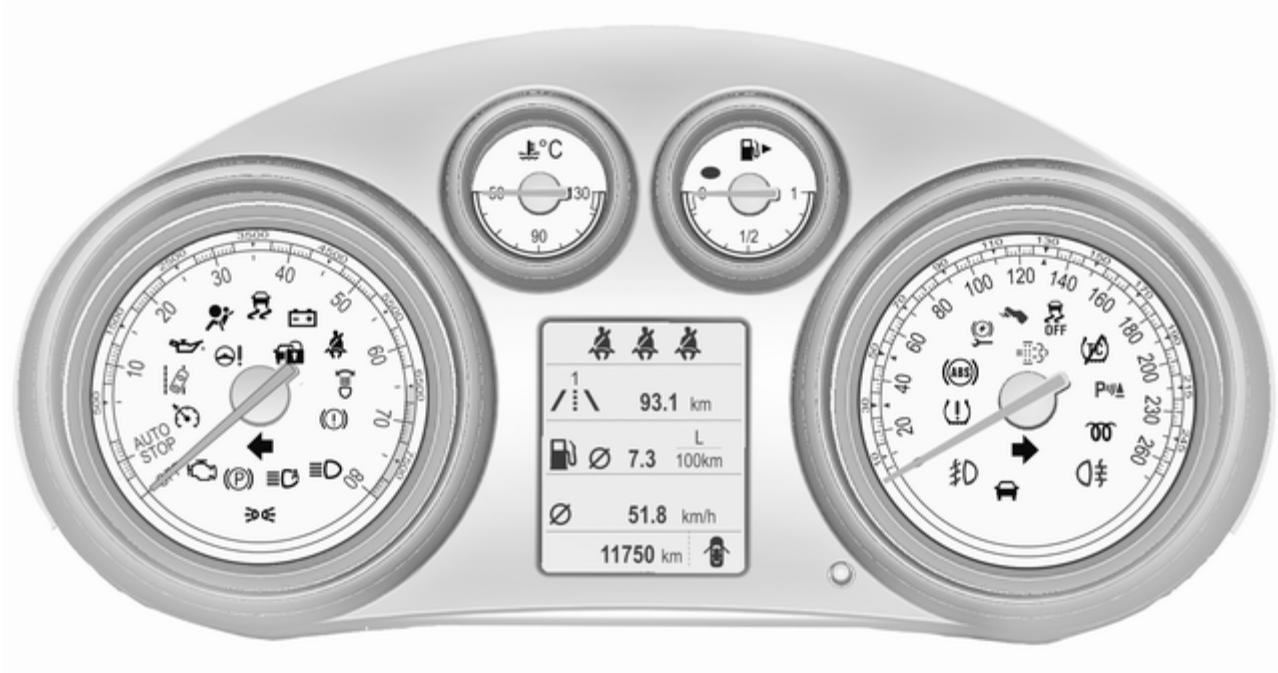

Midlevel instrument cluster

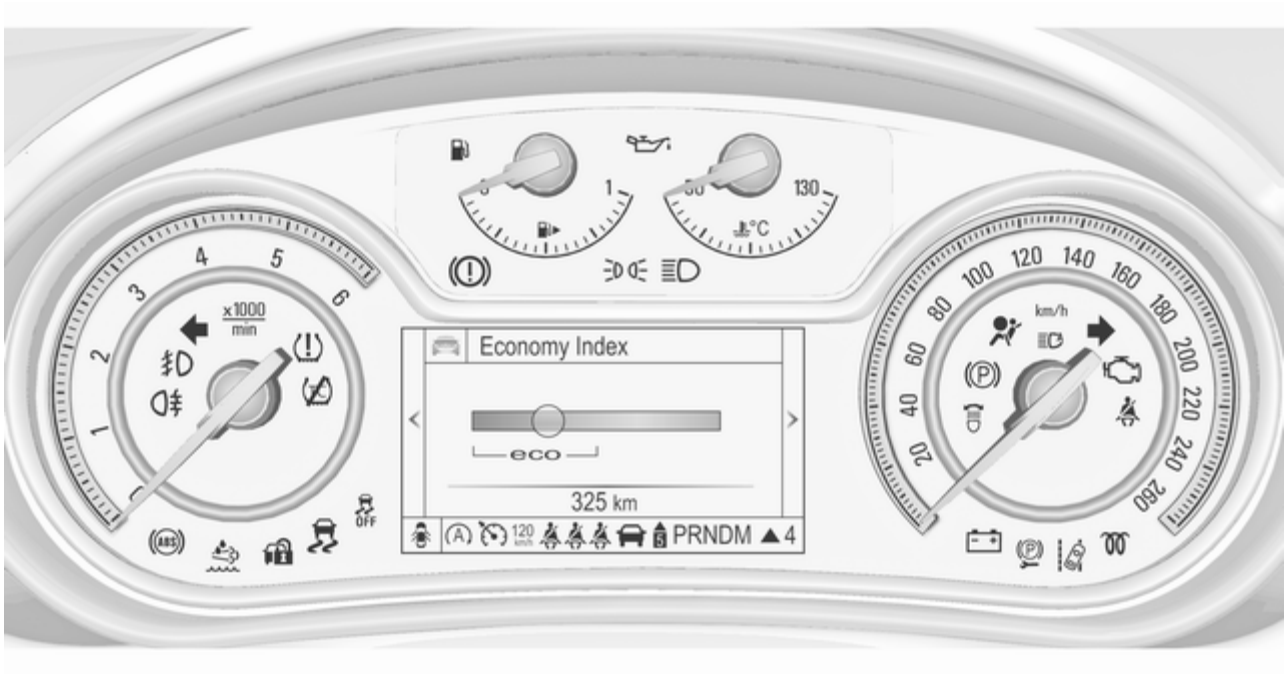

Uplevel instrument cluster, Sport mode

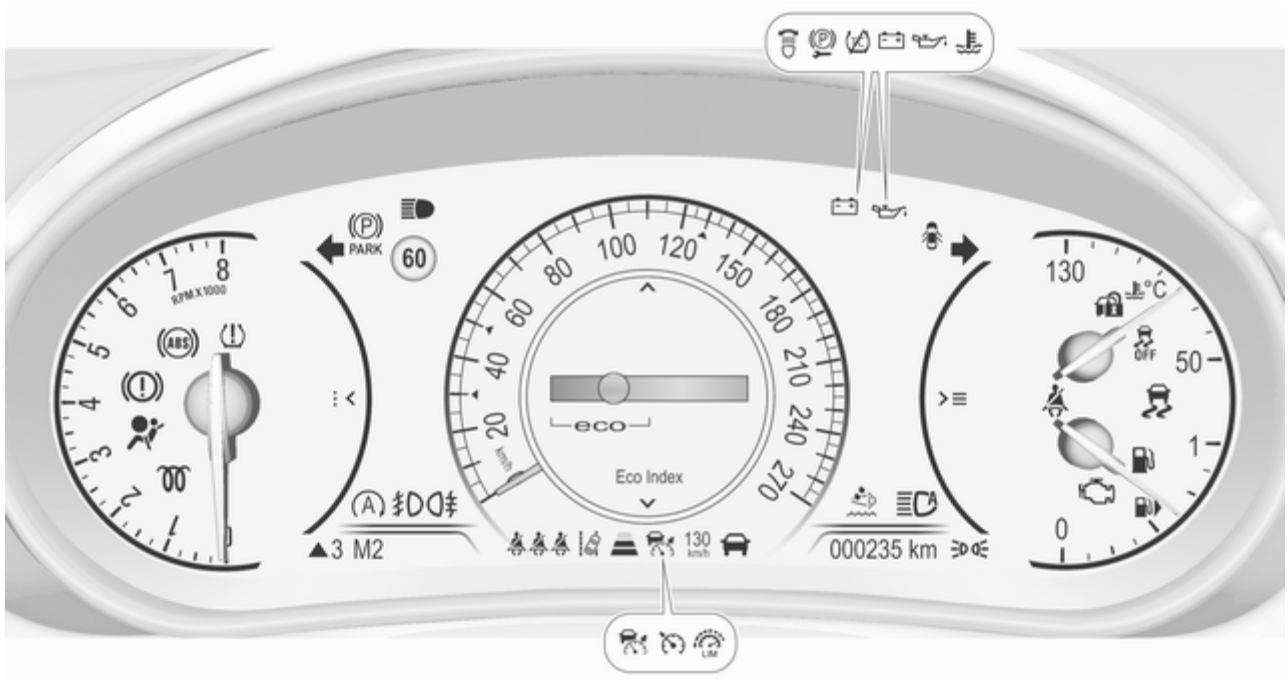

Uplevel instrument cluster, Tour mode

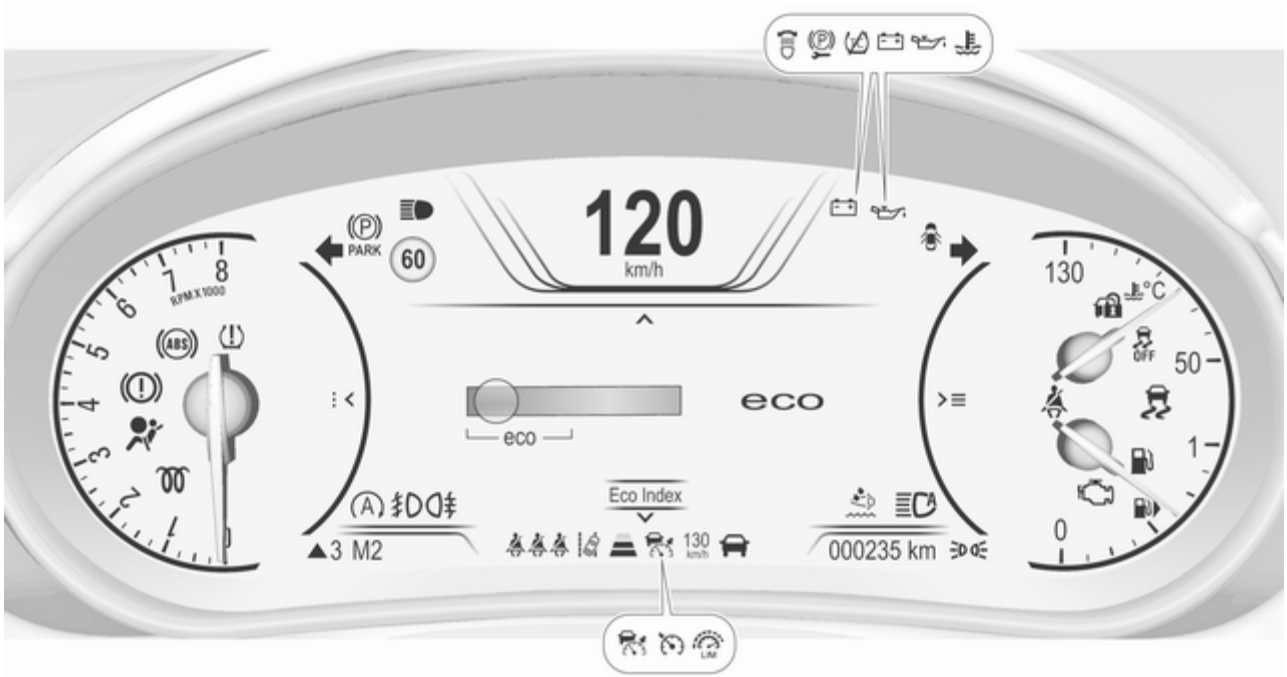

Overview

Turn signal ⇨ 104

Seat belt reminder ⇨ 104

Airbag and belt tensioners ⇨ 105

Airbag deactivation ⇨ 105

Charging system ⇨ 105

Malfunction indicator light ⇨ 106

Brake and clutch system ⇨ 106

Operate pedal ⇨ 106

Electric parking brake ⇨ 106

Electric parking brake fault ⇨ 106

Antilock brake system (ABS) ⇨ 107

Upshift ⇨ 107 or

Variable effort steering ⇨ 107

Following distance ⇨ 107

Lane departure warning ⇨ 107

Ultrasonic parking assist ⇨ 107

Electronic Stability Control off ⇨ 108

Electronic Stability Control and Traction Control system ⇨ 108

Traction Control system off ⇨ 108

Engine coolant temperature ⇨ 108

Preheating ⇨ 108

Diesel particle filter ⇨ 108

AdBlue ⇨ 108

Tyre pressure monitoring system ⇨ 109

Engine oil pressure ⇨ 109

Low fuel ⇨ 109 or

Immobiliser ⇨ 109

Autostop ⇨ 110

Exterior light ⇨ 110

High beam ⇨ 110

High beam assist ⇨ 110

Adaptive forward lighting ⇨ 110

Fog light ⇨ 110

Rear fog light ⇨ 110

Cruise control ⇨ 110

Adaptive cruise control ⇨ 110 or

Vehicle detected ahead ⇨ 110

Speed limiter ⇨ 111

Traffic sign assistant ⇨ 111

Door open ⇨ 111

Speedometer

Indicates vehicle speed.

Odometer

The total recorded distance is displayed in km.

Trip odometer

The recorded distance since the last reset is displayed on the trip computer page. Two trip odometer are selectable for different trips.

Baselevel instrument cluster
Select between page 1 and page 2 by turning the adjuster wheel on turn signal lever.

Each trip odometer can be reset separately when ignition is on: select respective page, hold the reset knob depressed for a few seconds or press **SET/CLR** on the turn signal lever.

Midlevel and Uplevel instrument cluster

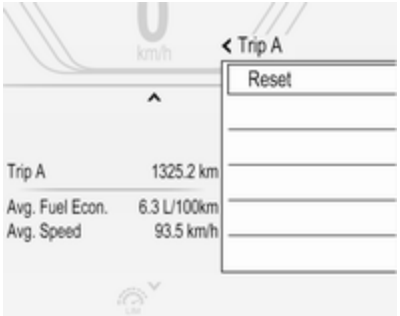

Select page **Trip A** or **Trip B** in the **Info** page by pressing ∨ on the steering wheel.

Each trip odometer can be reset separately when ignition is on: select respective page, press >. Confirm by pressing ✔.

General
Trip odometer counts up to a distance of 2000 km and then restarts at 0.

Driver Information Centre ⇨ 111.

Tachometer

Displays the engine speed.

Drive in a low engine speed range for each gear as much as possible.

Caution
If the needle is in the red warning zone, the maximum permitted engine speed is exceeded. Engine at risk.

Fuel gauge

Displays the level in the fuel or gas tank depending on the operation mode.

The arrow indicates the vehicle side where the fuel filler flap is located.

Control indicator ⬬ or ⛽ illuminates if the level in the tank is low. Refuel immediately if it flashes.

During liquid gas operation, the system automatically switches over to petrol operation when gas tank is empty ⇨ 102.

Never run the fuel tank dry.

Because of the fuel remaining in the tank, the top-up quantity may be less than the specified tank capacity.

Fuel selector

Pressing **LPG** switches between petrol and liquid gas operation. The status LED ▬ shows the current operating mode.

▬ off : petrol operation
▬ flashes : checking conditions for fuel transition to liquid gas operation. Illuminates if conditions are fulfilled.
▬ illuminates : liquid gas operation
▬ flashes 5 times and extinguishes : liquid gas tank is empty or failure in liquid gas system. A message is displayed in the Driver Information Centre.

As soon as the liquid gas tank is empty, petrol operation is automatically engaged until the ignition is switched off.

Fuel for liquid gas operation ⇨ 214.

Engine coolant temperature gauge

Displays the coolant temperature.

50° : engine operating temperature not yet reached
90° (central area) : normal operating temperature
130° : temperature too high

Caution
If engine coolant temperature is too high, stop vehicle, switch off engine. Danger to engine. Check coolant level.

Service display

The engine oil life system lets you know when to change the engine oil and filter. Based on driving conditions, the interval at which an engine oil and filter change will be indicated can vary considerably.

The remaining oil life duration menu is displayed in the Driver Information Centre ⇨ 111.

On Baselevel display select the **Settings** Menu by pressing **MENU** on the turn signal lever. Turn the adjuster wheel to select the **Remaining Oil Life** page.

On Midlevel and Uplevel display select **Info** Menu by pressing < on steering wheel. Press ∨ to select **Remaining Oil Life** page.

Remaining oil life duration is indicated in percentage.

Reset

On Baselevel display press **SET/CLR** on turn signal lever for several seconds to reset. The ignition must be switched on but engine not running.

On Midlevel or Uplevel display press > on steering wheel to open the subfolder. Select **Reset** and confirm by pressing ✔ for several seconds. The ignition must be switched on but engine not running.

The system must be reset every time the engine oil is changed to allow proper functionality. Seek the assistance of a workshop.

Next service

When the system has calculated that engine oil life has been diminished, **Change Engine Oil Soon** appears in the Driver Information Centre. Have engine oil and filter changed by a workshop within one week or 500 km (whichever occurs first).

Service information ⇨ 274.

Control indicators

The control indicators described are not present in all vehicles. The description applies to all instrument versions. Depending on the equipment, the position of the control indicators may vary. When the ignition is switched on, most control indicators will illuminate briefly as a functionality test.

The control indicator colours mean:

red	:	danger, important reminder
yellow	:	warning, information, fault
green	:	confirmation of activation
blue	:	confirmation of activation
white	:	confirmation of activation

See all control indicators on different instrument clusters ⇨ 94.

Turn signal

⇦⇨ illuminates or flashes green.

Illuminates briefly

The parking lights are switched on.

Flashes

A turn signal or the hazard warning flashers are activated.

Rapid flashing: failure of a turn signal light or associated fuse, failure of turn signal light on trailer.

Bulb replacement ⇨ 235, Fuses ⇨ 245.

Turn signals ⇨ 135.

Seat belt reminder

Seat belt reminder on front seats

for driver's seat illuminates or flashes red in the instrument cluster.

2 for front passenger seat illuminates or flashes red in the centre console, when seat is occupied.

Illuminates

After the ignition has been switched on until the seat belt has been fastened.

Flashes

After having started the engine for a maximum of 100 seconds until the seat belt has been fastened.

Seat belt status on rear seats, base level instrument cluster

flashes or illuminates in the Driver Information Centre.

Illuminates

After having started the engine when the seat belt has been fastened.

Flashes

After starting off when the seat belt is unfastened.

Fastening the seat belt ⇨ 56.

Seat belt status on rear seats, midlevel and uplevel instrument cluster

illuminates red or green or grey in the instrument cluster, after having started the engine.

Illuminates red

Seat occupied and the seat belt is unfastened.

Illuminates green
Seat occupied and the seat belt has been fastened.

Illuminates grey
Seat not occupied.

Fastening the seat belt ⇨ 56.

Airbag and belt tensioners

illuminates red.

When the ignition is switched on, the control indicator illuminates for approx. 4 seconds. If it does not illuminate, does not go out after 4 seconds or illuminates whilst driving, there is a fault in the airbag system. Seek the assistance of a workshop. The airbags and belt pretensioners may fail to trigger in the event of an accident.

Deployment of the belt pretensioners or airbags is indicated by continuous illumination of .

⚠ Warning

Have the cause of the fault remedied immediately by a workshop.

Belt pretensioners, airbag system ⇨ 55, ⇨ 58.

Airbag deactivation

2 illuminates yellow.

The front passenger airbag is activated.

2 illuminates yellow.

The front passenger airbag is deactivated ⇨ 63.

⚠ Danger

Risk of fatal injury for a child using a child restraint system together with activated front passenger airbag.

Risk of fatal injury for an adult person with deactivated front passenger airbag.

Charging system

illuminates red.

Illuminates when the ignition is switched on and extinguishes shortly after the engine starts.

Illuminates when the engine is running

Stop, switch off engine. Vehicle battery is not charging. Engine cooling may be interrupted. The brake servo unit may cease to be effective. Seek the assistance of a workshop.

Malfunction indicator light

illuminates or flashes yellow.

Illuminates when the ignition is switched on and extinguishes shortly after the engine starts.

Illuminates when the engine is running

Fault in the emission control system. The permitted emission limits may be exceeded.

On Diesel engines the cleaning process of the diesel particle filter is potentially not possible.

Seek the assistance of a workshop immediately.

Flashes when the engine is running

Fault that could lead to catalytic converter damage. Ease up on the accelerator until the flashing stops. Seek the assistance of a workshop immediately.

Brake and clutch system

illuminates red.

The brake and clutch fluid level is too low, when manual parking brake is not applied ⇨ 232.

⚠ Warning
Stop. Do not continue your journey. Consult a workshop.

Illuminates when the manual parking brake is applied and ignition is switched on ⇨ 174.

Operate pedal

illuminates or flashes yellow.

Illuminates

Brake pedal needs to be depressed to release the electric parking brake ⇨ 174.

Clutch pedal needs to be depressed to start the engine in Autostop mode. Stop-start system ⇨ 160.

Flashes

Clutch pedal needs to be depressed for a main start of the engine ⇨ 17, ⇨ 159.

On Midlevel and Uplevel display the operate pedal message is indicated in the Driver Information Display ⇨ 120.

Electric parking brake

(P) illuminates or flashes red.

Illuminates

Electric parking brake is applied ⇨ 174.

Flashes

Electric parking brake is not fully applied or released. Depress the brake pedal and attempt to reset the system by first releasing and then applying the electric parking brake. If (P) remains flashing, do not drive and seek the assistance of a workshop.

Electric parking brake fault

illuminates or flashes yellow.

Illuminates

Electric parking brake is operating with degraded performance ⇨ 174.

Flashes

Electric parking brake is in service mode. Stop vehicle, apply and release the electric parking brake to reset.

⚠ Warning
Have the cause of the fault remedied immediately by a workshop.

Antilock brake system (ABS)

(ABS) illuminates yellow.

Illuminates for a few seconds after the ignition is switched on. The system is ready for operation when the control indicator extinguishes.

If the control indicator does not go out after a few seconds, or if it illuminates while driving, there is a fault in the ABS. The brake system remains operational but without ABS regulation.

Antilock brake system ⇨ 173.

Upshift

SHIFT or ▲ with the number of the next higher gear is indicated when upshifting is recommended.

On some versions gear shift indication is popped up as full page in the Driver Information Centre ⇨ 111.

Variable effort steering

! illuminates yellow.

Fault in variable effort steering system. This may lead to a higher or lower steering effort. Consult a workshop.

Following distance

indicates the following distance setting of adaptive cruise control or the alert timing sensitivity of forward collision alert by filled distance bars.

Adaptive cruise control ⇨ 184.

Forward collision alert ⇨ 191.

Lane departure warning

illuminates green or flashes yellow.

Illuminates green

The system is switched on and ready to operate.

Flashes yellow

The system recognizes an unintended lane change.

Ultrasonic parking assist

P illuminates yellow.

Fault in system

or

Fault due to sensors that are dirty or covered by ice or snow

or

Interference due to external sources of ultrasound. Once the source of interference is removed, the system will operate normally.

Have the cause of the fault in the system remedied by a workshop.

Ultrasonic parking assist ⇨ 197.

Electronic Stability Control off

illuminates yellow.

The system is deactivated.

Electronic Stability Control and Traction Control system

illuminates or flashes yellow.

Illuminates

A fault in the system is present. Continued driving is possible. Driving stability, however, may deteriorate depending on road surface conditions.

Have the cause of the fault remedied by a workshop.

Flashes

The system is actively engaged. Engine output may be reduced and the vehicle may be braked automatically to a small degree.

Electronic Stability Control ⇨ 177, Traction Control system ⇨ 176.

Traction Control system off

illuminates yellow.

The system is deactivated.

Engine coolant temperature

illuminates red.

Illuminates when the engine is running

Stop, switch off engine.

Caution
Coolant temperature too high.

Check coolant level immediately ⇨ 230.

If there is sufficient coolant, consult a workshop.

Preheating

illuminates yellow.

Preheating of diesel engine is activated. Only activates when outside temperature is low.

Diesel particle filter

illuminates or flashes yellow.

The diesel particle filter requires cleaning.

Continue driving until extinguishes. If possible, do not allow engine speed to drop below 2000 rpm.

Illuminates

The diesel particle filter is full. Start cleaning process as soon as possible.

Flashes

The maximum filling level of the filter is reached. Start cleaning process immediately to avoid damage to the engine.

Diesel particle filter ⇨ 164, Stop-start system ⇨ 160.

AdBlue

flashes yellow.

AdBlue level is low. Refill AdBlue soon to avoid prevention of the engine start.

AdBlue ⇨ 165.

Tyre pressure monitoring system

(!) illuminates or flashes yellow.

Illuminates

Tyre pressure loss. Stop immediately and check tyre pressure.

Flashes

Fault in system or tyre without pressure sensor mounted (e.g. spare wheel). After 60-90 seconds the control indicator illuminates continuously. Consult a workshop.

Engine oil pressure

illuminates red.

Illuminates when the ignition is switched on and extinguishes shortly after the engine starts.

Illuminates when the engine is running

Caution

Engine lubrication may be interrupted. This may result in damage to the engine and/or locking of the drive wheels.

1. Depress clutch.
2. Select neutral gear, set selector lever to **N**.
3. Move out of the flow of traffic as quickly as possible without impeding other vehicles.
4. Switch off ignition.

⚠Warning

When the engine is off, considerably more force is needed to brake and steer. During an Autostop the brake servo unit will still be operational.

Do not remove key until vehicle is stationary, otherwise the steering wheel lock could engage unexpectedly.

Check oil level before seeking assistance of a workshop ⇨ 228.

Low fuel

● or ⛽ illuminates or flashes yellow.

Illuminates

Level in fuel tank is too low.

Flashes

Fuel used up. Refuel immediately. Never run the fuel tank dry.

Refuelling ⇨ 216.

Catalytic converter ⇨ 165.

Bleeding the diesel fuel system ⇨ 234.

Immobiliser

flashes yellow.

Fault in the immobiliser system. The engine cannot be started.

Autostop

Ⓐ illuminates when engine is in an Autostop.

Stop-start system ⇨ 160.

Exterior light

illuminates green.

The exterior lights are on ⇨ 129.

High beam

illuminates blue.

Illuminated when high beam is on or during headlight flash ⇨ 130.

High beam assist

illuminates green.

The high beam assist is activated, see adaptive forward lighting ⇨ 133.

Adaptive forward lighting

illuminates or flashes yellow.

Illuminates

Fault in the system.

Seek the assistance of a workshop.

Flashes

System is switched to symmetrical low beam.

Control indicator flashes for approx. 4 seconds after the ignition is switched on as a reminder for symmetrical headlight ⇨ 132.

Fog light

illuminates green.

The front fog lights are on ⇨ 136.

Rear fog light

illuminates yellow.

The rear fog light is on ⇨ 136.

Cruise control

illuminates white or green.

Illuminates white

The system is on.

Illuminates green

Cruise control is active. Set speed is indicated on midlevel or uplevel display near symbol.

Cruise control ⇨ 181.

Adaptive cruise control

or illuminates white or green.

Illuminates white

The system is on.

Illuminates green

Adaptive cruise control is active. Set speed is indicated near or symbol.

Adaptive cruise control ⇨ 184.

Vehicle detected ahead

illuminates green or yellow.

Illuminates green

A vehicle ahead is detected in the same lane.

Illuminates yellow

The distance to a preceding moving vehicle gets too small or when approaching another vehicle too rapidly.

Forward collision alert ⇨ 191, Adaptive cruise control ⇨ 184.

Speed limiter

illuminates white or green.

Illuminates white

The system is on.

Illuminates green

Speed limiter is active. Set speed is indicated near symbol.

Speed limiter ⇨ 183.

Traffic sign assistant

displays detected traffic signs as control indicator.

Traffic sign assistant ⇨ 209.

Door open

illuminates red.

A door or the tailgate is open.

Information displays

Driver Information Centre

The Driver Information Centre is located in the instrument cluster.

Depending on the version and the instrument cluster, the Driver Information Centre is available as Baselevel display, Midlevel display or Uplevel display.

Driver Information Centre indicates depending on the equipment:

- overall and trip odometer
- vehicle information
- trip/fuel information
- economic information
- performance information
- vehicle and warning messages
- audio and infotainment information
- phone information
- navigation information
- vehicle settings

Baselevel display

The menu pages of the Baselevel display are selected by pressing **MENU** on the turn signal lever. Main menu symbols are indicated in the top line of the display:

- **Info Menu**
- **Settings Menu**
- **eco Economic Menu**

Some of the displayed functions differ when the vehicle is being driven or at a standstill. Some functions are only available when the vehicle is being driven.

Vehicle personalisation ⇨ 122.
Memorised settings ⇨ 24.

Selecting menus and functions

The menus and functions can be selected via the buttons on the turn signal lever.

Press **MENU** to switch between the main menus or to return from a submenu to the next higher menu level.

Turn the adjuster wheel to select a subpage of the main menu or to set a numeric value.

Press **SET/CLR** to select and confirm a function.

Vehicle and service messages are popped-up in the Driver Information Centre when required. Confirm messages by pressing **SET/CLR**. Vehicle messages ⇨ 120.

Midlevel and Uplevel display

Menu pages are indicated by pressing < on the steering wheel. Press ∧ or ∨ to select a menu, press ✔ to confirm. Selectable menu pages are:

- **Info**
- **Performance**
- **Audio**

- Phone
- Navigation
- Settings

Some of the displayed functions differ when the vehicle is being driven or at a standstill. Some functions are only available when the vehicle is being driven.

Uplevel instrument cluster can be displayed as Sport mode or Tour mode. See below: Settings Menu, Display Themes.

Vehicle personalisation ⇨ 122. Memorised settings ⇨ 24.

Selecting menus and functions

The menus and functions can be selected via the buttons on the right side of the steering wheel.

Press < to open main menu page.

Select a main menu page with ∧ or ∨.

Confirm a main menu page with ✔.

Once a main menu page is selected, press ∧ or ∨ to select subpages.

Press > to open the next folder of the selected subpage.

Press ∧ or ∨ to select functions or to set a numeric value, if required.

Press ✔ to select and confirm a function.

If the Driver Information Centre requests the driver to confirm a function or message by pressing SEL (Select), confirm by pressing ✔.

Once a main menu page is selected, this selection remains stored until another main menu page is selected. This means once the 'Info Menu' page is selected, you can change the subpages just by pressing ∨ or ∧.

Vehicle and service messages are popped-up in the Driver Information Centre when required. Confirm messages by pressing ✔. Vehicle messages ⇨ 120.

Info Menu

The following list contains all possible Info Menu pages. Some may not be available for your particular vehicle. Depending on the display some functions are symbolised.

Turn the adjuster wheel or press ∧ or ∨ to select a page:

- trip odometer 1/A

  average fuel consumption

average speed
- trip odometer 2/B
  average fuel consumption
  average speed
- digital speed
- fuel range
- fuel range LPG
- instantaneous fuel consumption
- remaining oil life
- tyre pressure
- fuel level
  LPG fuel level
- timer
- traffic sign assistant
- following distance
- battery voltage
- Top consumers
- Economy trend
- Eco index
- blank page

On Baselevel display, the pages "Remaining Oil Life", "Tyre Pressure", "Traffic Sign Assistant" and "Following distance indication" are displayed in the **Settings Menu** 🚗. Select by pressing **MENU**.

On Baselevel display, the pages "Top consumers", "Economy trend" and "Eco index" are displayed in the **Eco Menu** ECO. Select by pressing **MENU**.

Trip odometer 1/A and 2/B

Trip odometer displays the current distance since a certain reset.

Trip odometer counts up to a distance of 2,000 km then restarts at 0.

To reset on Baselevel display, press **SET/CLR** for a few seconds, on Midlevel and Uplevel display, press > and confirm with ✔.

The information of trip odometer page 1/A and 2/B can be reset separately for odometer, average consumption and average speed while the respective display is active.

Average fuel consumption

Display of average consumption. The measurement can be reset at any time and starts with a default value.

To reset on Baselevel display, press **SET/CLR** for a few seconds, on Midlevel and Uplevel display, press > and confirm with ✔.

On vehicles with LPG engines, average consumption is indicated for the currently selected mode, LPG or Petrol.

Average speed

Display of average speed. The measurement can be reset at any time.

To reset on Baselevel display, press **SET/CLR** for a few seconds, on Midlevel and Uplevel display, press > and confirm with ✔.

Digital speed

Digital display of the instantaneous speed.

Fuel range

Range is calculated from current fuel tank level and current consumption. The display shows average values.

After refuelling, the range is updated automatically after a brief delay.

When the fuel level in the tank is low, a message appears on the display and control indicator ⬬ or ⛽ in the fuel gauge illuminates.

When the tank must be refuelled immediately, a warning message appears and remains on the display. Additionally, control indicator ⬬ or ⛽ in the fuel gauge flashes ⇨ 109.

Fuel range LPG version

Display of approximate fuel range available with the remaining fuel in each respective fuel tank of Petrol and LPG fuel, along with a total range of both fuel types together. Switch between the modes by pressing **SET/CLR** or ✔.

Gasoline fuel level/LPG fuel level

Displays the fuel level for the fuel type not currently being used, e.g. in petrol mode the fuel level for LPG is displayed. A dedicated Driver Information Centre cluster gauge shows the fuel level for the fuel currently being used.

Instantaneous fuel consumption

Display of the instantaneous consumption.

On vehicles with LPG engines, instantaneous consumption is indicated for the currently selected mode, LPG or Petrol.

Remaining oil life

Indicates an estimate of the oil's useful life. The number in % means the remaining of current oil life ⇨ 102.

Tire pressure

Checks tyre pressure of all wheels during driving ⇨ 254.

Timer

To start and stop press ✔. To reset, press > and confirm Reset.

Traffic sign assistant

Displays the detected traffic signs for the current route section ⇨ 209.

Following distance

Displays the distance in seconds to a preceding moving vehicle ⇨ 195. If Adaptive cruise control is active this page shows the following distance setting instead.

Battery voltage

Displays the vehicle battery voltage.

Top consumers

List of top comfort consumers currently switched on is displayed in descending order. Fuel saving potential is indicated.

During sporadic driving conditions, the engine will activate the heated rear window automatically to increase the engine load. In this event, the heated rear window is indicated as one of the top consumers, without activation by the driver.

Economy trend

Displays the average consumption development over a distance of 50 km. Filled segments display the consumption in 5 km steps and shows the effect of topography or driving behaviour on fuel consumption.

Economy index

The current fuel consumption is indicated on a segment display. For economical driving, adapt driving style to keep the filled segments within the Eco area. The more segments are filled, the higher the fuel consumption. Simultaneously, the consumption value is indicated.

Shift indication: On Baselevel display, the current gear is indicated inside an arrow. The figure above recommends upshifting for fuel saving reasons.

Blank page

Shows a blank page without any information.

Performance Menu

Performance menu is only viewable on Uplevel display.

The following list contains all possible Performance Menu pages. Some may not be available for your particular vehicle.

Press ∧ or ∨ to select a page:

- oil temperature
- oil pressure
- battery voltage
- g-force indication
- lap timer

Depending on settings of the Uplevel display, gauges for "Oil temperature", "Oil pressure" or "Battery voltage" are also displayed on the left and right of the speedometer.

Oil temperature

Indicates oil temperature in degrees Celsius.

Oil pressure

Indicates the oil pressure in kPa.

Battery voltage

Displays the vehicle battery voltage.

G-force indication

Indicates the force of vehicle performance. The amount of positive/negative longitudinal force and lateral force will be displayed. The g-force value unit will be calculated and displayed as a numerical value.

Lap timer

The lap timer function measures the time that has passed since the last time the user started or stopped the lap timer through ignition cycles. Timer values are displayed from hours to tenths of a second. Start and stop the timer by pressing ✔.

Current and Previous lap times are displayed accurate to the tenth of a second. Gain or loss time is indicated in ss.s format.

Audio Menu

Audio menu enables browsing for music, selecting from favourites or changing the audio source.

See Infotainment manual.

Phone Menu

Phone menu enables managing and performing of phone calls, scrolling through contacts or operating handsfree phoning.

See Infotainment manual.

Navigation Menu

Navigation menu enables route guidance.

See Infotainment manual.

Settings Menu

The following list contains all possible Settings Menu pages. Some may not be available for your particular vehicle. Depending on the display some functions are symbolised.

Turn the adjuster wheel or press ∧ or ∨ to select a page and follow the instructions given in the submenus:

- units
- display themes
- info pages
- speed warning
- tyre loading
- software information

Units

Press > while units page is displayed. Select imperial or metric units by pressing ✔.

Display themes

Press > while display themes is displayed. Select Sport or Touring mode by pressing ✔. Sport mode includes more vehicle information, Tour mode includes more media information.

This setting is only available with Uplevel display.

Info pages

Press > while Info pages is displayed. A list of all items in the Info Menu is displayed. Select the functions to be displayed in the Info page by pressing ✔. Selected pages have a ✔ in a checkbox. Non viewable functions have a blank checkbox. See **Info Menu** above.

Speed warning

The speed warning display allows you to set a speed that you do not want to exceed.

To set the speed warning, press > while the page is displayed. Press ∧ or ∨ to adjust the value. Press ✔ to set the speed. Once the speed is set, this feature can be turned off by pressing ✔ while viewing this page. If the selected speed limit is exceeded, a pop-up warning is displayed with a chime.

Tyre loading

The tyre pressure category according to the actual tyre inflation pressure can be selected ⇨ 254.

Software information

Displays the open source software information.

Valet mode

Some functions of the Driver Information Centre and the Colour-Info-Display can be limited for some drivers.

Activation or deactivation of valet mode can be set in the menu **Settings** in the vehicle personalisation menu.

Colour-Info-Display ⇨ 118.

Vehicle personalisation ⇨ 122.

For more information, see Infotainment manual.

Colour-Info-Display

The Colour-Info-Display is located in the instrument panel near the instrument cluster.

Depending on the vehicle configuration the vehicle has a

- **4.2" colour display**

  or
- **8" colour display** with Touch-Screen functionality

The Info displays indicate:

- time ⇨ 90
- outside temperature ⇨ 90
- date ⇨ 90
- Infotainment system, see description in the Infotainment manual
- navigation, see description in the Infotainment manual
- system messages
- vehicle messages ⇨ 120
- settings for vehicle personalisation ⇨ 122

4.2" Colour display

Selecting menus and settings

Menus and settings are accessed via the display.

Press ⏻ to switch on the display.

Press ⌂ to display the homepage.

Turn **MENU** to select a menu display icon.

Press **MENU** to confirm a selection

Press **BACK** to exit a menu without changing a setting.

Press ⌂ to return to the homepage.

For further information, see Infotainment manual.

Vehicle personalisation ⇨ 122.

8" Colour display

Selecting menus and settings

There are three options to operate the system:

- via buttons below the display
- directly per touchscreen operation by the finger
- via speech recognition

Button operation

Press ⏻ to switch on the display.

Press ⌂ to display the homepage.

Turn **MENU** to select a menu display icon or a function.

Press **MENU** to confirm a selection.

Turn **MENU** to scroll a submenu list.

Press **MENU** to confirm a selection.

Press **BACK** to exit a menu without changing a setting.

Press ⌂ to return to the homepage.

For further information, see Infotainment manual.

Touchscreen operation

Display must be switched on by pressing ⏻ and homepage must be selected by pressing ⌂.

Tap required menu display icon or a function with the finger.

Scroll a longer submenu list with the finger up or down.

Confirm a required function or selection by tapping.

Tap ⮌ on the display to exit a menu without changing a setting.

Press ⌂ to return to the homepage.

For further information, see Infotainment manual.

Speech recognition

Description see Infotainment manual.

Vehicle personalisation ⇨ 122.

Valet mode

Some functions of the Driver Information Centre and the Colour-Info-Display can be limited for some drivers.

Activation or deactivation of valet mode can be set in the menu **SETTINGS** in the vehicle personalisation menu.

Vehicle personalisation ⇨ 122.

For more information see Infotainment manual.

Smartphone controller

The smartphone controller allows a smartphone to access vehicle data via WLAN or Bluetooth connection. This data can then be displayed and analysed on the smartphone.

Vehicle messages

Messages are indicated in the Driver Information Centre, in some cases together with a warning and signal buzzer.

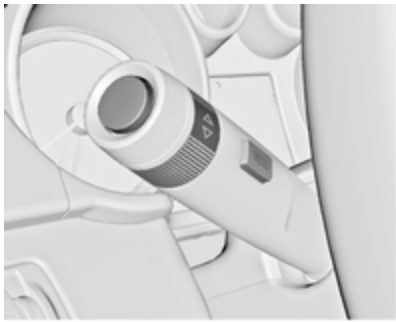

On Baselevel display press **SET/CLR**, **MENU** or turn the adjuster wheel to confirm a message.

On Midlevel and Uplevel display press ✔ to confirm a message.

Vehicle and service messages

The vehicle messages are displayed as text. Follow the instructions given in the messages.

The system displays messages regarding the following topics:

- service messages
- fluid levels
- anti-theft alarm system
- brakes
- drive systems
- ride control systems
- driver assistance systems
- cruise control
- speed limiter
- adaptive cruise control
- forward collision alert
- collision imminent braking system
- parking assist systems
- lighting, bulb replacement
- adaptive forward lighting
- wiper/washer system
- doors, windows
- side blind spot alert
- traffic sign assistant
- lane departure warning
- load compartment, boot lid
- radio remote control
- electronic key system
- keyless starting
- seat belts
- airbag systems
- engine and transmission
- tyre pressure
- diesel particle filter

- vehicle battery status
- selective catalytic reduction, diesel exhaust fluid (DEF), AdBlue ⇨ 165

Messages in the Colour-Info-Display

Some important messages may appear additionally in the Colour-Info-Display. Press the multifunction knob to confirm a message. Some messages only pop-up for a few seconds.

Warning chimes

When starting the engine or whilst driving

Only one warning chime will sound at a time.

The warning chime regarding not fastened seat belts has priority over any other warning chime.

- If seat belt is not fastened.
- If a door or the tailgate is not fully closed when starting off.
- If a certain speed is exceeded with parking brake applied.
- If adaptive cruise control deactivates automatically.
- If approaching a vehicle ahead too closely.
- If a programmed speed or speed limit is exceeded.
- If a warning message appears in the Driver Information Centre.
- If the electronic key is not in the passenger compartment.
- If the parking assist detects an object.
- If an unintended lane change occurs.
- If the diesel particle filter has reached the maximum filling level.
- If AdBlue needs to be refilled.

When the vehicle is parked and/or the driver's door is opened

- With exterior lights on.
- If the trailer hitch is not engaged.

During an Autostop

- If the driver's door is opened.

Battery voltage

When the vehicle battery voltage is running low, a warning message will appear in the Driver Information Centre.

1. Switch off any electrical consumers which are not required for a safe ride, e.g. seat heating, heated rear window or other main consumers.
2. Charge the vehicle battery by driving continuously for a while or by using a charging device.

The warning message will disappear after the engine has been started twice without a voltage drop.

If the vehicle battery cannot be recharged, have the cause of the fault remedied by a workshop.

Vehicle personalisation

The vehicle's behaviour can be personalised by changing the settings in the Colour-Info-Display.

Some of the personal settings for different drivers can be memorised individually for each vehicle key. Memorised settings ⇨ 24.

Depending on vehicle equipment and country-specific regulations some of the functions described below might not be available.

Some functions are only displayed or active when the engine is running.

Personal settings

Following the changing of personal settings is described via the buttons below the display. This is valid for 4.2" as well as 8" Colour-Info-Display. Additionally, the 8" display is operable as a touchscreen. See description 'Colour-Info-Display' ⇨ 118 and the Infotainment manual.

With active display, press ⌂.

Turn **MENU** to select **SETTINGS** display icon.

Press **MENU** to confirm.

The following settings can be selected by turning and pressing the multifunction knob:

- **Time and Date**
- **Sport Mode**
- **Language (Language)**
- **Valet Mode**
- **Radio**
- **Vehicle**
- **Bluetooth**
- **Voice**
- **Display**
- **Rear Camera**
- **Return to Factory Settings**
- **Software Information**

In the corresponding submenus, the following settings can be changed:

Time and Date

See 'Clock' ⇨ 90.

Sport Mode

The driver can select the functions which will be activated in Sport mode ⇨ 178.

- **Sport Mode Backlighting**: Changes the instrument illumination colour.
- **Engine Sport Performance**: Accelerator pedal and gear change characteristics become more responsive.
- **Sport Steering**: Steering support is reduced.

- **Sport Suspension**: Damping becomes harder.
- **All Wheel Drive**: Engine torque is distributed to a greater extent to the rear axle.

Language (Language)
Selection of the desired language. See Infotainment manual.

Valet Mode
See Infotainment manual.

Radio
See Infotainment manual.

Vehicle

- **Climate and Air Quality**

  Auto Fan Speed: Modifies the level of the cabin airflow of the climate control in automatic mode.

  Air Conditioning Mode: Controls the state of the cooling compressor when the vehicle is started. Last setting (recommended) or at vehicle start is either always on or always off.

  Auto Compartment Zone Temp: Change between single zone or dual zone temperature setting.

  Auto Demist: Supports windscreen dehumidification by automatically selecting the necessary settings and automatic air conditioning mode.

  Auto Rear Demist: Activates automatically the heated rear window.

- **Collision / Detection Systems**

  Park Assist: Activates or deactivates the ultrasonic parking assist.

  Auto Collision Preparation: Activates or deactivates the automatic brake functionality of the vehicle in the event of imminent collision danger. The following is selectable: the system will take over brake control, warn by chimes only or is deactivated completely.

  Go Notifier: Activates or deactivates the reminder function of the adaptive cruise control.

  Side Blind Zone Alert: Activates or deactivates side blind zone alert.

  Rear Cross Traffic Alert: Activates or deactivates rear cross traffic alert.

- **Comfort and Convenience**

  Auto Memory Recall: Changes the settings to the recall of memorised settings for power seat adjustment and exterior mirrors.

  Easy Exit Driver Seat: Activates or deactivates easy exit function of the power seat.

  Chime Volume: Changes the volume of warning chimes.

  Reverse Tilt Mirror: Activates or deactivates the parking assist function of the exterior mirror on the passenger side.

  Auto Mirror Folding: Activates or deactivates folding of the exterior mirrors with the remote control.

  Personalisation by Driver: Activates or deactivates the personalisation function.

Rainsense Wipers: Activates or deactivates automatic wiping with rain sensor.

Auto Wipe in Reverse Gear: Activates or deactivates automatic switching on of the rear window wiper when reverse gear is engaged.

- **Lighting**

  Vehicle Locator Lights: Activates or deactivates the welcome lighting.

  Exit Lighting: Activates or deactivates and changes the duration of exit lighting.

  Left or Right Hand Traffic: Changes between lighting for left or right hand traffic.

  Adaptive Forward Lighting: Changes the settings of the functions of the adaptive forward lighting.

- **Power Door Locks**

  Unlocked Door Anti-Lockout: Activates or deactivates the automatic driver's door locking function when the door is open.

  Auto Door Lock: Activates or deactivates the automatic door locking function after switching on ignition.

  Auto Door Unlock: Changes the configuration to unlock only the driver's door or the whole vehicle after switching off ignition.

  Delayed Door Lock: Activates or deactivates the delayed door locking function. This feature delays the actual locking of the doors until all doors are closed.

- **Remote Lock, Unlock, Start**

  Remote Unlock Light Feedback: Activates or deactivates the hazard warning flasher feedback whilst unlocking.

  Remote Lock Feedback: Changes what kind of feedback is given when locking the vehicle.

  Remote Door Unlock: Changes the configuration to unlock only the driver's door or the whole vehicle whilst unlocking.

  Relock Remote Unlocked Doors: Activates or deactivates the automatic relock function after unlocking without opening the vehicle.

  Passive Door Lock: Activates or deactivates the passive locking function. This feature locks the vehicle automatically after several seconds if all doors have been closed and an electronic key has been removed from the vehicle.

  Remote Left in Vehicle Alert: Activates or deactivates the warning chime when the electronic key remains in the vehicle.

Bluetooth

See Infotainment manual.

Voice

See Infotainment manual.

Display

See Infotainment manual.

Rear Camera

Guidance Lines: Activates or deactivates the guiding lines.

Rear Park Assist Symbols: Activates or deactivates the rear park assist symbols.

Return to Factory Settings

Restore Vehicle Settings: Resets all settings to the default settings.

Clear All Private Data: Deletes all private information from the vehicle.

Restore Radio Settings: Resets all radio settings to the default settings. See Infotainment manual.

Software Information

See Infotainment manual.

OnStar

OnStar is a personal connectivity and service assistant with integrated Wi-Fi hotspot. The OnStar service is available 24 hours a day, seven days a week.

Note
OnStar is not available for all markets. For further information, contact your workshop.

Note
In order to be available and operational, OnStar needs a valid OnStar subscription, functioning vehicle electrics, mobile service and GPS satellite link.

To activate the OnStar services and set up an account, press On and speak with an advisor.

Depending on the equipment of the vehicle, the following services are available:

- Emergency services and support in the case of a vehicle breakdown
- Wi-Fi hotspot
- Smartphone application
- Remote control, e.g. location of the vehicle, activation of horn and lights, control of central locking system
- Stolen vehicle assistance
- Vehicle diagnostics
- Destination download

Note
The OnStar module of the vehicle is deactivated after ten days without an ignition cycle. Functions requiring a data connection will be available again after switching on the ignition.

OnStar buttons

Note
Depending on the equipment, the OnStar buttons can also be integrated in the rear view mirror.

Privacy button

Press and hold ⊘ until a message is heard to activate or deactivate the transmission of the vehicle location.

Press ⊘ to answer a call or to end a call to an advisor.

Press ⊘ to access the Wi-Fi settings.

Service button

Press ⊙ to establish a connection to an advisor.

SOS button

Press SOS to establish a priority emergency connection to a specially trained emergency advisor.

Status LED

Green: The system is ready.

Green flashing: The system is on a call.

Red: A problem arose.

Off: System is in standby mode.

Red / green flashing for a short period of time: Transmission of the vehicle location has been deactivated.

OnStar services

General services

If you need any information concerning e.g. opening hours, points of interest and destinations or if you need any support e.g. in the case of a vehicle breakdown, a flat tyre and empty fuel tank, press ⊙ to establish a connection to an advisor.

Emergency services

In the case of an emergency situation, press SOS and talk to an advisor. The advisor then contacts emergency or assistance service providers and directs them to your vehicle.

In the case of an accident with activation of airbags or belt tensioners, an automatic emergency call is established. The advisor is immediately connected to your vehicle to see whether help is needed.

Wi-Fi hotspot

The Wi-Fi hotspot of the vehicle provides internet connectivity with a maximum speed of 4G/LTE.

Note
The Wi-Fi hotspot functionality is not available for all markets.

Up to seven devices may be connected.

To connect a mobile device with the Wi-Fi hotspot:

1. Press ⊘ and then select Wi-Fi settings on the Info-Display. The settings displayed include the Wi-Fi hotspot name (SSID), password and connection type.
2. Start a Wi-Fi network search on your mobile device.
3. Select your vehicle hotspot (SSID) when listed.
4. When prompted, enter the password on your mobile device.

Note
To change the SSID or password, press ⓞ and talk to an advisor or log in to your account.

To switch off the Wi-Fi hotspot functionality, press ⓞ to call an advisor.

Smartphone app
With the myOpel smartphone app, some vehicle functions can be operated remotely.

The following functions are available:

- Lock or unlock vehicle.
- Honk horn or flash lights.
- Check fuel level, engine oil life and tyre pressure (only with tyre pressure monitoring system).
- Send navigation destination to the vehicle, if equipped with a built-in navigation system.
- Locate vehicle on a map.
- Manage Wi-Fi settings.

To operate these functions, download the app from Apple's App Store or Google Play Store.

Remote control
If desired, use any phone to call an advisor, who can remotely operate specific vehicle functions. Find the respective OnStar phone number on our country-specific website.

The following functions are available:

- Lock or unlock vehicle.
- Provide information on the vehicle location.
- Honk horn or flash lights.

Stolen vehicle assistance
If the vehicle is stolen, report the theft to the authorities and request OnStar stolen vehicle assistance. Use any phone to call an advisor. Find the respective OnStar phone number on our country-specific website.

OnStar can provide support in locating and recovering the vehicle.

Theft alert
When the anti-theft alarm system is triggered, a notification is sent to OnStar. You are then informed about this event by text message or email.

Restart prevention
By sending remote signals, OnStar can prevent the vehicle from restarting once it has been turned off.

On-demand diagnostics
At any time e.g. if the vehicle displays a vehicle message, press ⓞ to contact an advisor and ask to complete a real-time diagnostic check to directly determine the issue. Depending on the results, the advisor will provide further support.

Diagnostic report
The vehicle automatically transmits diagnostic data to OnStar which sends a monthly email report to you and your preferred workshop.

Note
The workshop notification function can be disabled in your account.

The report contains the status of key operating systems of the vehicle like engine, transmission, airbags, ABS, and other major systems. It also provides information on possible

maintenance items and tyre pressure (only with tyre pressure monitoring system).

To look at the information in greater detail, select the link within the email and log in to your account.

Destination download

A desired destination can be directly downloaded to the navigation system.

Press ⓞ to call an advisor and describe the destination or point of interest.

The advisor can look up any address or point of interest and directly send the destination to the built-in navigation system.

OnStar settings

OnStar PIN

To have full access to all OnStar services, a four-digit PIN is required. The PIN has to be personalised when first talking to an advisor.

To change the PIN, press ⓞ to call an advisor.

Account data

An OnStar subscriber has an account where all the data is stored. To request a change of the account information, press ⓞ and talk to an advisor or log in to your account.

If the OnStar service is used on another vehicle, press ⓞ and request that the account be transferred to the new vehicle.

Note
In any case, if the vehicle is disposed of, sold or otherwise transferred, immediately inform OnStar about the changes and terminate the OnStar service on this vehicle.

Vehicle location

The vehicle location is transmitted to OnStar when service is requested or triggered. A message on the Info-Display informs about this transmission.

To activate or deactivate the transmission of the vehicle location, press and hold ⓝ until an audio message is heard.

The deactivation is indicated by the status light flashing red and green for a short period of time and each time the vehicle is started.

Note
If the transmission of the vehicle location is deactivated, some services are no longer available.

Note
The vehicle location always remains accessible to OnStar in the case of an emergency.

Find the privacy policy in your account.

Software updates

OnStar may remotely carry out software updates without further notice or consent. These updates are to enhance or maintain safety and security or the operation of the vehicle.

These updates may concern privacy issues. Find the privacy policy in your account.

Lighting

Exterior lighting **129**
Light switch 129
Automatic light control 130
High beam 130
High beam assist 131
Headlight flash 131
Headlight range adjustment 132
Headlights when driving abroad 132
Daytime running lights 132
Adaptive forward lighting 133
Hazard warning flashers 135
Turn and lane-change signals . 135
Front fog lights 136
Rear fog lights 136
Parking lights 136
Reversing lights 137
Misted light covers 137
Interior lighting **137**
Instrument panel illumination control 137
Interior lights 137
Reading lights 138
Sunvisor lights 138
Lighting features **139**
Centre console lighting 139
Entry lighting 139
Exit lighting 139
Battery discharge protection 140

Exterior lighting

Light switch

Light switch with Automatic light control

Turn light switch:

AUTO : automatic light control: exterior lighting is switched on and off automatically depending on external lighting conditions

⏻ : activation or deactivation of the automatic light control. Switch turns back to **AUTO**

≡D : sidelights

≡D : headlights

The current status of the automatic light control is displayed in the Driver Information Centre.

When switching on the ignition, automatic light control is active.

Control indicator ≡D ⇨ 110.

Tail lights

Tail lights are illuminated together with low/high beam and sidelights.

Additional lights in the tailgate frame, Sports Tourer/Country Tourer
Additional tail light assemblies, consisting of tail lights and hazard warning flasher lights, are located in the tailgate frame. They are illuminated when the tailgate is open. Additional tail lights are only intended as position lights when the tailgate is open and are not to be used when driving.

Automatic light control

When the automatic light control function is switched on and the engine is running, the system switches between daytime running light and low/high beam automatically depending on the lighting conditions and information given by the rain sensor system.

Daytime running light ⇨ 132.

Automatic headlight activation

During poor lighting conditions headlights are switched on.

Furthermore headlights are switched on if the windscreen wipers have been activated for several wipes.

Tunnel detection

When a tunnel is entered headlights are switched on without delay.

Adaptive forward lighting ⇨ 133.

High beam

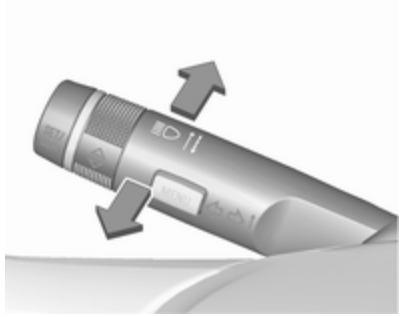

To switch from low to high beam, push lever.

To switch to low beam, push lever again or pull.

High beam assist

Description for version with halogen headlights. High beam assist with adaptive forward lighting ⇨ 133.

This feature allows the high beam to function as the main driving light at night and when vehicle speed is faster than 40 km/h.

It switches automatically to low beam when:

- A sensor detects the lights of oncoming or preceding vehicles.
- The vehicle speed is slower than 20 km/h.
- It is foggy or snowy.
- Driving in urban areas.

If there are no restrictions detected, the system switches back to high beam.

Activation

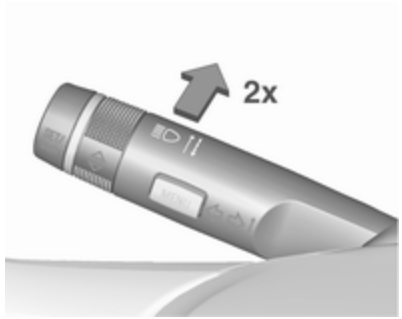

The high beam assist is activated by pushing the indicator lever twice with a speed above 40 km/h.

The green control indicator ≡◐ illuminates continuously when the assist is activated, the blue one ≡D illuminates when high beam is on.

Control indicator ≡◐ ⇨ 110.

Deactivation

Push indicator lever once. It is also deactivated when front fog lights are switched on.

If a headlight flash is activated when the high beam is on, the high beam assist will be deactivated.

If a headlight flash is activated when the high beam is off, the high beam assist will remain activated.

The latest setting of the high beam assist will be stored after the ignition is switched on again.

Headlight flash

To activate the headlight flash, pull lever.

Headlight range adjustment

Manual headlight range adjustment

To adapt headlight range to the vehicle load to prevent dazzling: turn thumb wheel to required position.

0 : front seats occupied
1 : all seats occupied
2 : all seats occupied and load compartment laden
3 : driver's seat occupied and load compartment laden

Dynamic automatic headlight levelling ⇨ 133.

Headlights when driving abroad

The asymmetrical headlight beam extends visibility at the edge of the road at the passenger side.

However, when driving in countries where traffic drives on the opposite side of the road, adjust the headlights to prevent dazzling of oncoming traffic.

Vehicles with halogen headlight system

The headlights do not have to be adjusted.

Vehicles with Xenon headlight system and Adaptive forward lighting system

Headlights can be set to right-hand or left-hand drive traffic mode in the vehicle personalisation menu in the Colour-Info-Display.

Select the relevant setting in **Settings**, ➧ **Vehicle** in the Colour-Info-Display.

Colour-Info-Display ⇨ 118.

Vehicle personalisation ⇨ 122.

Every time the ignition is switched on, control indicator flashes for approx. 4 seconds as a reminder that right-hand drive traffic mode is selected.

Change back to left-hand drive traffic mode in the vehicle personalisation menu as described above. will not flash when left-hand drive traffic mode is selected.

Control indicator ⇨ 110.

Daytime running lights

Daytime running light increases visibility of the vehicle during daylight.

They are switched on automatically when ignition is on.

If the vehicle is equipped with automatic light control function, the system switches between daytime running light and low/high beam automatically depending on the lighting conditions and information given by the rain sensor system. Automatic light control ⇨ 130.

Adaptive forward lighting

The Adaptive forward lighting functions are only available with Bi-Xenon headlights. Light range, light distribution and intensity of light are variably triggered depending on the light conditions, weather and road type.

Some functions of the Adaptive forward lighting can be deactivated or activated in the vehicle personalisation menu. Select the relevant setting in **Settings**, ➧ **Vehicle** in the Info-Display. Vehicle personalisation ⇨ 122.

With the light switch in position **AUTO** all lighting functions are available.

The following functions are available also with light switch in position ≣D:

- dynamic curve lighting
- corner lighting
- reversing function
- dynamic automatic headlight levelling

Playstreet lighting

Activated automatically at low speed up to approx. 30 km/h. The light beam is turned at an angle of 8° to the roadside.

Town lighting

Activated automatically at a speed range between approx. 40 and 55 km/h and when street lights are detected by the light sensor. The light range is reduced by an extended light distribution.

Country lighting

Activated automatically at a speed range between approx. 55 and 115 km/h. The beam of light and the brightness is different between the left and the right side.

Motorway lighting

Activated automatically at a speed above approx. 115 km/h and minimal steering movements. It switches on after a delay or immediately when the vehicle is powerfully accelerated. The light beam is longer and brighter.

Adverse weather lighting

Activated automatically up to a speed of approx. 70 km/h, when the rain sensor recognizes condensation or the wiper operates continuously. The range, distribution and light intensity is regulated variably depending on visibility.

Dynamic curve lighting

The light beam pivots based on steering wheel angle and speed, improving lighting in curves.

Control indicator ⇨ 110.

Corner lighting

On tight bends or when turning off, depending on the steering angle or the turn signal light, an additional left or right reflector is switched on which illuminates the road at a right angle to the direction of travel. It is activated up to a speed of 40 km/h.

Control indicator ⇨ 110.

Reversing function

If the headlights are on and reverse gear is engaged, both corner lights are switched on. They remain illuminated for 20 seconds after disengaging reverse gear or until driving faster than 7 km/h in a forward gear.

High Beam Assist

This feature allows the high beam to function as the main driving light at night and when vehicle speed is faster than 40 km/h.

It switches automatically to low beam when:

- The camera in the windscreen detects the lights of oncoming or preceding vehicles.
- The vehicle speed is slower than 20 km/h.
- It is foggy or snowy.
- Driving in urban areas.

If there are no restrictions detected, the system switches back to high beam.

Activation

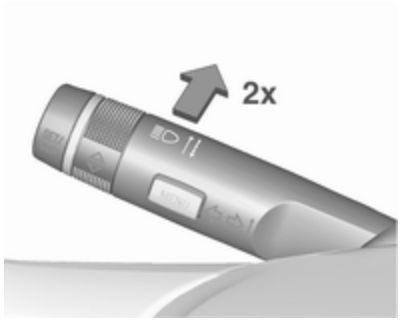

The high beam assist is activated by pushing the indicator lever twice with a speed above 40 km/h.

The green control indicator illuminates continuously when the assist is activated, the blue one illuminates when high beam is on.

Control indicator ⇨ 110.

Deactivation

Push indicator lever once. It is also deactivated when front fog lights are switched on.

If a headlight flash is activated when the high beam is on, the high beam assist will be deactivated.

If a headlight flash is activated when the high beam is off, the high beam assist will remain activated.

The latest setting of the high beam assist will remain after the ignition is switched on again.

Dynamic automatic headlight levelling

To prevent oncoming traffic from dazzle, headlight levelling is automatically adjusted based on inclination information measured by front and rear axle, acceleration or deceleration and vehicle speed.

Fault in Adaptive forward lighting system

When the system detects a failure in the Adaptive forward lighting system, the system moves to a preset position to avoid dazzling of oncoming traffic. If this is not possible, the affected headlight will be automatically switched off. In any case, one headlight will stay on. A warning is displayed in the Driver Information Centre.

Hazard warning flashers

Operated by pressing ⚠.

In the event of an accident with airbag deployment the hazard warning flashers are activated automatically.

Turn and lane-change signals

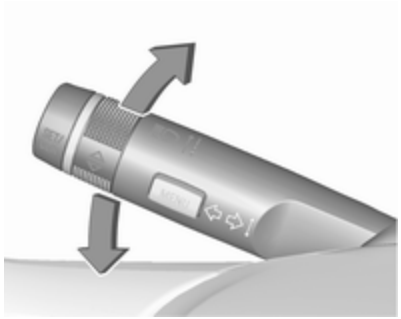

lever up : right turn signal
lever down : left turn signal

If the lever is moved past the resistance point, the turn signal is switched on constantly. When the steering wheel moves back, the turn signal is automatically deactivated.

For three flashes, e.g. when changing lanes, press the lever until resistance is felt and then release.

With a trailer connected, turn signal flashes six times and tone frequency changes when pressing the lever until resistance is felt and then releasing.

Move the lever to the resistance point and hold for longer indication.

Switch the turn signal off manually by moving the lever to its original position.

Front fog lights

Operated by pressing ≠D.

Light switch in position **AUTO**: switching on front fog lights will switch headlights on automatically.

Rear fog lights

Operated by pressing ≠.

Light switch in position **AUTO**: switching on rear fog light will switch headlights on automatically.

Light switch in position ≠: rear fog light can only be switched on with front fog lights.

The vehicle rear fog light is deactivated when towing.

Parking lights

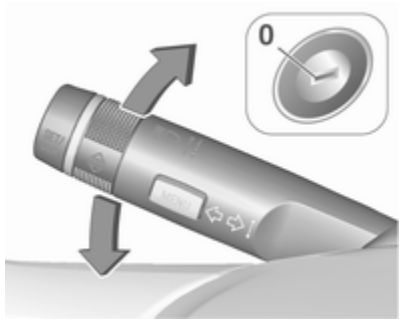

When the vehicle is parked, the parking lights on one side can be activated:

1. Switch off ignition.
2. Move turn signal lever all the way up (right parking lights) or down (left parking lights).

Confirmed by a signal and the corresponding turn signal control indicator.

Reversing lights

The reversing light comes on when the ignition is on and reverse gear is selected.

Misted light covers

The inside of the light housing may mist up briefly in poor, wet and cold weather conditions, in heavy rain or after washing. The mist disappears quickly by itself; to help switch on the headlights.

Interior lighting

Instrument panel illumination control

Brightness of the following lights can be adjusted when the exterior lights are on:

- instrument panel illumination
- Info-Display
- dome light
- illuminated switches and operation elements

Turn thumb wheel ⚙ and hold until the desired brightness is obtained.

On vehicles with light sensor, the brightness can only be adjusted when the exterior lights are on and the light sensor detects night conditions.

Interior lights

During entry and exit of the vehicle, the front and rear courtesy lights automatically switch on and then off after a delay.

Note
In the event of an accident with airbag deployment the courtesy lights are turned on automatically.

Front courtesy light

Operate rocker switch:

	:	automatic switching on and off
press	:	on
press	:	off

Rear courtesy lights

Illuminate in conjunction with the front courtesy light depending on rocker switch position.

Reading lights

Operated by pressing and in front and rear courtesy lights.

On vehicles with panoramaroof, rear interior lights are located near the rear handles.

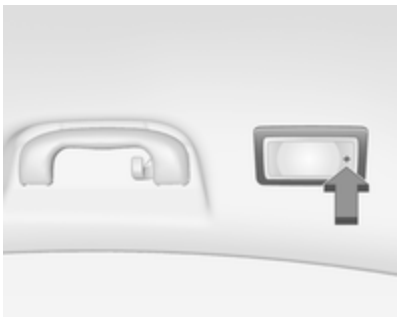

Switch on reading lights by pressing + on the cover.

Sunvisor lights

Illuminates when the cover is opened.

Lighting features

Centre console lighting

Spotlight incorporated in the interior lighting comes on when headlights are switched on.

Entry lighting

Welcome lighting

Headlights, tail lights, number plate lights, instrument panel light, interior lights and puddle lights are switched on for a short time by unlocking the vehicle with the radio remote control. This function works only in the dark and facilitates locating the vehicle.

The lighting switches off immediately when the ignition is switched on. Starting off ⇨ 17.

This function can be activated or deactivated in the Vehicle personalisation.

Select the relevant setting in **Settings**, ➧ **Vehicle** in the Colour-Info-Display.

Colour-Info-Display ⇨ 118.

Vehicle personalisation ⇨ 122.

The settings can be saved for the key being used ⇨ 24.

The following lights will additionally switch on when the driver's door is opened:

- illumination of all switches
- Driver Information Centre
- door pocket lights

Exit lighting

The following lights switch on if the key is removed from the ignition switch:

- interior lights
- instrument panel light
- puddle lights

They will switch off automatically after a delay. This function works only in the dark. Theatre lighting is activated if the driver's door is opened during this time.

Path lighting

Headlights, tail lights and number plate lights illuminate the surrounding area for an adjustable time after leaving the vehicle.

Activating

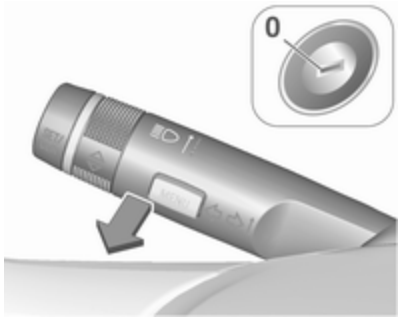

1. Switch off the ignition.
2. Remove the ignition key.
3. Open the driver's door.
4. Pull the turn signal lever.
5. Close the driver's door.

If the driver's door is not closed the lights switch off after two minutes.

Exit lighting is switched off immediately if the turn signal lever is pulled while the driver's door is open.

This function can be activated or deactivated in the Vehicle personalisation.

Select the relevant setting in **Settings**, ➧ **Vehicle** in the Colour-Info-Display.

Colour-Info-Display ⇨ 118.

Vehicle personalisation ⇨ 122.

The settings can be saved for the key being used ⇨ 24.

Battery discharge protection

Vehicle battery state of charge function

The function guarantees longest vehicle battery life via a generator with controllable power output and optimised power distribution.

To prevent discharge of the vehicle battery when driving, the following systems are reduced automatically in two stages and finally switched off:

- auxiliary heater
- heated rear window and mirrors
- heated seats
- fan

In the second stage, a message which confirms the activation of the vehicle battery discharge protection will be displayed in the Driver Information Centre.

Switching off electric lights

To prevent discharge of the vehicle battery when the ignition is switched off, some interior lights are switched off automatically after some time.

Climate control

Climate control systems **141**
Air conditioning system 141
Automatic climate control system 143
Dual automatic climate control system 148
Auxiliary heater 152
Air vents **152**
Adjustable air vents 152
Fixed air vents 153
Maintenance **153**
Air intake 153
Pollen filter 153
Air conditioning regular operation 154
Service 154

Climate control systems

Air conditioning system

Controller and buttons for the following functions:

- **temperature TEMP**
- **air distribution**
- **fan speed**
- **cooling A/C**
- **air recirculation**
- **demisting and defrosting**

Heated rear window ⇨ 43.

Heated seats ⇨ 54.

Ventilated seats ⇨ 54.

Heated steering wheel ⇨ 86.

Temperature TEMP

Turn controller:

red : warm
blue : cold

Heating will not be fully effective until the engine has reached normal operating temperature.

Air distribution

Press:

- : to windscreen and front door windows
- : to head area via adjustable air vents
- : to foot well and windscreen

Combinations are possible.

Setting is indicated by the LED in the button.

Fan speed

Adjust the air flow by turning the controller to the desired speed. O means fan off.

Cooling A/C

Press **A/C** to switch on cooling. Activation is indicated by the LED in the button. Cooling is only functional when the engine is running and climate control fan is switched on.

Press **A/C** again to switch off cooling.

The air conditioning system cools and dehumidifies (dries) cabin air as required. Therefore condensation may form and is drained under the vehicle.

If no cooling or drying is required, switch off the cooling system for fuel saving reasons. Activated cooling might inhibit Autostops.

Stop-start system ⇨ 160.

Demisting and defrosting the windows

- Press : fan automatically switches to higher speed, the air distribution is directed towards the windscreen.
- Set temperature controller **TEMP** to warmest level.
- Switch on heated rear window .
- Open side air vents as required and direct them towards the door windows.

Note

If is pressed while the engine is running, an Autostop will be inhibited until is pressed again.

If is pressed while the engine is in an Autostop, the engine will restart automatically.

Stop-start system ⇨ 160.

Maximum cooling

Briefly open the windows so that hot air can disperse quickly.

- Switch on cooling **A/C**.
- Press for air distribution.
- Set temperature controller **TEMP** to coldest level.
- Set fan speed controller to highest level.
- Open all vents.

Air recirculation system

Press to activate air recirculation mode. Activation is indicated by the LED in the button.

Select air recirculation to assist in cooling the interior or in blocking outside odors or exhaust. When recirculation is selected, a partial ventilation to refresh the interior air will occur every 10 minutes.

Press again to deactivate recirculation mode.

In warm and very humid ambient air conditions, the windscreen might mist up from outside, when cold air is directed to it. If windscreen mists up from outside, activate windscreen wiper and deactivate .

Air distribution to : Air recirculation is deactivated.

Automatic climate control system

In automatic mode, temperature, fan speed and air distribution are regulated automatically.

Controller and buttons for the following functions:

- **temperature TEMP**
- **air distribution**
- **fan speed**
- **automatic mode AUTO**
- **cooling A/C**
- **air recirculation**
- **demisting and defrosting**
- **system ON/OFF**

Heated rear window ⇨ 43.

Heated front seats ⇨ 54.

Ventilated front seats ⇨ 54.

Heated steering wheel ⇨ 86.

Indication

Settings of temperature and fan speed are indicated in the climate display.

Each change of settings is shown briefly in the Info-Display.

The electronic climate control system is only fully operational when the engine is running.

Climate control system settings are saved in the key used to lock the vehicle.

Automatic mode AUTO

Basic setting for maximum comfort:

- Press **AUTO**, the air distribution and fan speed are regulated automatically. The LED in the button illuminates to indicate activation.
- Press **A/C** to switch on optimal cooling and demisting. The LED in the button illuminates to indicate activation.

- Set temperature by turning controller **TEMP**. Suggested comfort setting is 22 °C.
- Open all air vents to allow optimised air distribution in automatic mode.

Setting of fan speed regulation in automatic mode can be changed in the vehicle personalisation menu in the Colour-Info-Display.

Select the relevant setting in **Settings**, ➧ **Vehicle** in the Colour-Info-Display.

Colour-Info-Display ⇨ 118.

Vehicle personalisation ⇨ 122.

Temperature preselection TEMP

Set temperature by turning controller **TEMP** to the desired value.

Selected temperature is indicated in the climate display.

If the minimum temperature **Lo** is set, the climate control system runs at maximum cooling, if cooling **A/C** is switched on.

If the maximum temperature **Hi** is set, the climate control system runs at maximum heating.

Note
If **AC** is switched on, reducing the set cabin temperature can cause the engine to restart from an Autostop or inhibit an Autostop.

Stop-start system ⇨ 160.

Demisting and defrosting the windows

- Press . The LED in the button illuminates to indicate activation.
- Temperature and air distribution are set automatically and the fan runs at high speed.
- Switch on heated rear window .
- To return to previous mode: press . To return to automatic mode: press **AUTO**.

Setting of automatic rear window heating can be changed in the vehicle personalisation menu in the Colour-Info-Display.

Select the relevant setting in **Settings**, ➧ **Vehicle** in the Colour-Info-Display.

Colour-Info-Display ⇨ 118.

Vehicle personalisation ⇨ 122.

Note

If ⊞ is pressed while the engine is running, an Autostop will be inhibited until ⊞ is pressed again.

If ⊞ is pressed while the engine is in an Autostop, the engine will restart automatically.

Stop-start system ⇨ 160.

Manual settings

Climate control system settings can be manually adapted by using the air distribution buttons and the fan speed controller as follows. Manual changing of settings will deactivate automatic mode.

Fan speed ⌘

Turn controller ⌘. The selected fan speed is indicated by the number of segments in the climate display.

If the fan is switched off, the air conditioning is also deactivated.

To return to automatic mode: Press **AUTO**.

Air distribution

Press appropriate button for desired adjustment. The LED in the button illuminates to indicate activation.

- : to windscreen and front door windows
- : to head area via adjustable air vents
- : to foot well and windscreen

Combinations are possible.

Return to automatic air distribution: press **AUTO**.

Cooling A/C

Press **A/C** to switch on cooling. The LED in the button illuminates to indicate activation. Cooling is only functional when the engine is running and climate control fan is switched on.

Press **A/C** again to switch off cooling.

The air conditioning system cools and dehumidifies (dries) cabin air as required. Therefore condensation may form and is drained under the vehicle.

If no cooling or drying is required, switch off the cooling system for fuel saving reasons.

System ON/OFF ⏻

Cooling, fan and automatic mode can be switched off by pressing ⏻. When the system is deactivated, LED in the button ⏻ extinguishes.

Activate by pressing ⏻ or cooling button **A/C** or automatic mode button **AUTO**. The LED in the button illuminates to indicate activation.

Manual air recirculation

Press to activate air recirculation mode. The LED in the button illuminates to indicate activation.

Select air recirculation to assist in cooling the interior or in blocking outside odours or exhaust. When recirculation is selected, a partial ventilation to refresh the interior air will occur every 10 minutes.

Press again to deactivate recirculation mode.

In warm and very humid ambient air conditions, the windscreen may mist up from outside, when cold air is directed towards it. If windscreen mists up from outside, activate windscreen wiper and deactivate .

Basic settings

Some basic settings can be changed in the vehicle personalisation menu in the Colour-Info-Display.

Select the relevant settings in **Settings**, ➧ **Vehicle** in the Colour-Info-Display.

Colour-Info-Display ⇨ 118.

Vehicle personalisation ⇨ 122.

Dual automatic climate control system

The dual automatic climate control allows different climatisation temperatures for driver and front passenger side.

In Automatic mode, temperature, fan speed and air distribution are regulated automatically.

Panels and buttons for the following functions:

- **temperature ▲▼**
- **air distribution**
- **fan speed ▲▼**
- **automatic mode AUTO**
- **cooling A/C**
- **air recirculation**
- **demisting and defrosting**
- **system ON/OFF**
- **dual zone temperature synchronisation SYNC**

Heated rear window ⇨ 43.

Heated front seats ⇨ 54.

Ventilated front seats ⇨ 54.

Heated steering wheel ⇨ 86.

Indication

Temperature settings are indicated separately on the panels for driver and passenger side.

Each change of settings is shown in the Info-Display for a few seconds.

The dual automatic climate control system is only fully operational when the engine is running.

Climate control system settings are saved in the key used to lock the vehicle.

Automatic mode AUTO

Basic setting for maximum comfort:

- Press **AUTO**, the air distribution and fan speed are regulated automatically. The LED in the button illuminates to indicate activation.
- Press **A/C** to switch on optimal cooling and demisting. The LED in the button illuminates to indicate activation.
- Set temperature by touching ▲ or ▼ on the driver side. Suggested comfort setting is 22 °C. Temperature can be set differently for driver and passenger. Touch ▲ or ▼ on the passenger side to allow different temperature zones.
- Open all air vents to allow optimised air distribution in automatic mode.

Setting of fan speed regulation in automatic mode can be changed in the vehicle personalisation menu in the Colour-Info-Display.

Select the relevant setting in **Settings**, ➧ **Vehicle** in the Colour-Info-Display.

Colour-Info-Display ⇨ 118.

Vehicle personalisation ⇨ 122.

Temperature preselection ▼▲

Set desired temperature by touching ▲ for higher temperatures or ▼ for lower temperatures.

Selected temperature is indicated in the panels. Using driver's side panel changes temperatures for both sides (when **SYNC** is selected), while using the passenger side panel changes only the passenger side temperature and turns off **SYNC** (if previously selected).

If the minimum temperature **Lo** is set, the climate control system runs at maximum cooling, if cooling **A/C** is switched on.

If the maximum temperature **Hi** is set, the climate control system runs at maximum heating.

Note
If **AC** is switched on, reducing the set cabin temperature can cause the engine to restart from an Autostop or inhibit an Autostop.

Stop-start system ⇨ 160.

Dual zone temperature synchronisation SYNC

Press **SYNC** to link passenger side temperature setting to the driver side. The LED in the button illuminates to indicate activation.

When passenger side settings will be adjusted, the LED extinguishes.

Demisting and defrosting the windows

- Press . The LED in the button illuminates to indicate activation.
- Temperature and air distribution are set automatically and the fan runs at high speed.
- Switch on heated rear window .
- To return to previous mode: press . To return to automatic mode: press **AUTO**.

Setting of automatic rear window heating based on cool outside temperatures can be changed in the vehicle personalisation menu in the Colour-Info-Display.

Select the relevant setting in **Settings**, ➧ **Vehicle** in the Colour-Info-Display.

Colour-Info-Display ⇨ 118.

Vehicle personalisation ⇨ 122.

Note

If is pressed while the engine is running, an Autostop will be inhibited until is pressed again.

If is pressed while the engine is in an Autostop, the engine will restart automatically.

Stop-start system ⇨ 160.

Manual settings

Climate control system settings can be manually adapted by using the air distribution buttons and the fan speed controller as follows. Manual changing of settings will deactivate the automatic mode.

Fan speed ▼⌘▲

Touch ⌘▼ or ▲. The selected fan speed is briefly indicated in the Info-Display.

If the fan is switched off, the air conditioning is also deactivated.

To return to automatic mode: Press **AUTO**.

Air distribution

Press appropriate button for desired adjustment. The LED in the button illuminates to indicate activation.

- : to windscreen and front door windows
- : to head area via adjustable air vents
- : to foot well and windscreen

Combinations are possible.

Return to automatic air distribution: press **AUTO**.

Cooling A/C

Press **A/C** to switch on cooling. The LED in the button illuminates to indicate activation. Cooling is only functional when the engine is running and climate control fan is switched on.

Press **A/C** again to switch off cooling.

The air conditioning system cools and dehumidifies (dries) cabin air as required. Therefore condensation may form and is drained under the vehicle.

If no cooling or drying is required, switch off the cooling system for fuel saving reasons.

System ON/OFF

Cooling, fan and automatic mode can be switched off by pressing . When the system is deactivated, the LED extinguishes in button .

Activate by pressing or cooling button **A/C** or automatic mode button **AUTO**. The LED in the button illuminates to indicate activation.

Manual air recirculation

Press to activate air recirculation mode. The LED in the button illuminates to indicate activation.

Select air recirculation to assist in cooling the interior or in blocking outside odours or exhaust. When recirculation is selected, a partial ventilation to refresh the interior air will occur every 10 minutes.

Press again to deactivate recirculation mode.

In warm and very humid ambient air conditions, the windscreen may mist up from outside when cold air is directed towards it. If windscreen mists up from outside, activate windscreen wiper and deactivate .

Automatic air recirculation

An air humidity sensor automatically switches the system to external air if internal air humidity is too high.

Basic settings

Some basic settings can be changed in the vehicle personalisation menu in the Colour-Info-Display.

Select the relevant settings in **Settings**, ➧ **Vehicle** in the Colour-Info-Display.

Colour-Info-Display ⇨ 118.

Vehicle personalisation ⇨ 122.

Auxiliary heater

Air heater

Quickheat is an electric auxiliary air heater which automatically warms up the passenger compartment more quickly.

Air vents

Adjustable air vents

Front air vents

To open the vent, turn the adjuster wheel to . Adjust the air amount at the vent outlet by turning the adjuster wheel.

Direct the flow of air by tilting and swivelling the slats.

To close the vent, turn the adjuster wheel to **O**.

Rear air vents

Air vents for rear passenger are in the centre console between the front seats.

⚠ Warning
Do not attach any objects to the slats of the air vents. Risk of damage and injury in case of an accident.

Fixed air vents

Additional air vents are located beneath the windscreen and door windows and in the foot wells.

Maintenance

Air intake

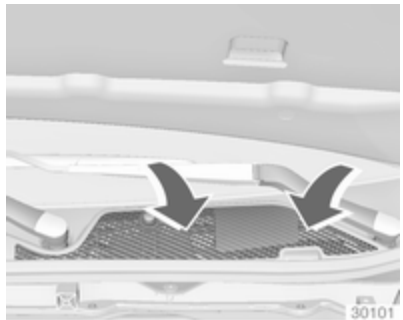

The air intake in front of the windscreen in the engine compartment must be kept clear to allow air intake. Remove any leaves, dirt or snow.

Pollen filter

Cabin air filtration

A particle filter cleans the cabin air from dust, soot, pollen and spores.

Active carbon filter

In addition to the particle filter, the active carbon filter reduces odours.

Air conditioning regular operation

In order to ensure continuously efficient performance, it is recommended that air conditioning should be operated for a few minutes once a month, irrespective of the weather and time of year.

Service

For optimal cooling performance, it is recommended to annually check the climate control system, starting three years after initial vehicle registration, including:

- functionality and pressure test
- heating functionality
- leakage check
- check of drive belts
- cleaning of condenser and evaporator drainage
- performance check

Driving and operating

Driving hints **156**
Control of the vehicle 156
Steering 156
Starting and operating **156**
New vehicle running-in 156
Ignition switch positions 156
Power button 157
Retained power off 158
Starting the engine 159
Overrun cut-off 160
Stop-start system 160
Parking 163
Engine exhaust **164**
Diesel particle filter 164
Catalytic converter 165
AdBlue 165
Automatic transmission **168**
Transmission display 168
Selector lever 169
Manual mode 170
Electronic driving programmes 171
Fault 171
Interruption of power supply 171
Manual transmission **172**
Drive systems **173**
All-wheel drive 173
Brakes **173**
Antilock brake system 173
Parking brake 174
Brake assist 176
Hill start assist 176
Ride control systems **176**
Traction Control system 176
Electronic Stability Control 177
Interactive driving system 178
Driver assistance systems **181**
Cruise control 181
Speed limiter 183
Adaptive cruise control 184
Forward collision alert 191
Following distance indication ... 195
Active emergency braking 195
Parking assist 197
Side blind spot alert 203
Lane change alert 205
Rear view camera 206
Rear cross traffic alert 208
Traffic sign assistant 209
Lane departure warning 212
Fuel **214**
Fuel for petrol engines 214
Fuel for diesel engines 214
Fuel for liquid gas operation 214
Refuelling 216
Fuel consumption - CO_2-Emissions 221
Trailer hitch **221**
General information 221
Driving characteristics and towing tips 222
Trailer towing 222
Towing equipment 223
Trailer stability assist 224

Driving hints

Control of the vehicle

Never coast with engine not running (except during Autostop)

Many systems will not function in this situation (e.g. brake servo unit, power steering). Driving in this manner is a danger to yourself and others. All systems function during an Autostop, but there will be a controlled reduction in power steering assist and vehicle speed is reduced.

Stop-start system ⇨ 160.

Pedals

To ensure the pedal travel is uninhibited, there must be no mats in the area of the pedals.

Use only floor mats, which fit properly and are fixed by the retainers on the driver side.

Steering

If power steering assist is lost because the engine stops or due to a system malfunction, the vehicle can be steered but may require increased effort.

Control indicator ⊖! ⇨ 107.

Caution

Vehicles equipped with hydraulic power steering:

If the steering wheel is turned until it reaches the end of its travel, and is held in that position for more than 15 seconds, damage may occur to the power steering system and there may be loss of power steering assist.

Starting and operating

New vehicle running-in

Do not brake unnecessarily hard for the first few journeys.

During the first drive, smoke may occur because of wax and oil evaporating off the exhaust system. Park the vehicle in the open for a while after the first drive and avoid inhaling the fumes.

During the running-in period fuel and engine oil consumption may be higher and the cleaning process of the diesel particle filter may take place more often.

Diesel particle filter ⇨ 164.

Ignition switch positions

Turn key:

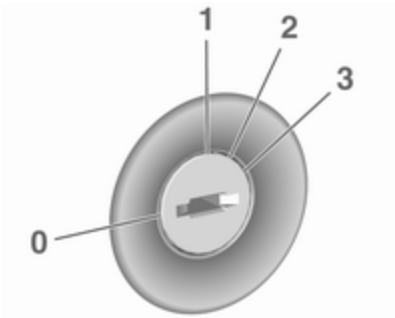

0 : ignition off: Some functions remain active until key is removed or driver's door is opened, provided the ignition was on previously
1 : accessory power mode: Steering wheel lock released, some electrical functions are operable, ignition is off
2 : ignition on power mode: Ignition is on, diesel engine is preheating. Control indicators illuminate and most electrical functions are operable
3 : engine start: Release key after starting procedure begins

Steering wheel lock

Remove key from ignition switch and turn steering wheel until it engages.

⚠ Danger

Never remove the key from ignition switch during driving as this will cause steering wheel lock.

Power button

Electronic key must be inside the vehicle.

Accessory power mode
Press **Engine Start/Stop** once without operating clutch or brake pedal. The yellow LED in the button illuminates. Steering wheel lock is released and some electrical functions are operable, ignition is off.

Ignition on power mode
Press and hold **Engine Start/Stop** for 6 seconds without operating clutch or brake pedal. The green LED in the button illuminates, diesel engine is preheating. Control indicators illuminate and most electrical functions are operable.

Engine start
Operate clutch pedal (manual transmission) or brake pedal (automatic transmission) and press **Engine Start/Stop** once more. Release button after starting procedure begins.

Ignition off
Press **Engine Start/Stop** briefly in each mode or when engine is running and vehicle is stationary. Some functions remain active until driver's door is opened, provided the ignition was on previously.

Emergency shut off during driving
Press **Engine Start/Stop** for longer than 2 seconds or press twice briefly within 5 seconds ⇨ 159.

Steering wheel lock

The steering wheel lock activates automatically when:

- The vehicle is stationary.
- The ignition has been switched off.
- The driver's door is opened.

To release steering wheel lock, open and close driver's door and switch on accessory mode or start the engine directly.

⚠ Warning

If the vehicle battery is discharged, the vehicle must not be towed, tow-started or jump-started as the steering wheel lock cannot be disengaged.

Operation on vehicles with electronic key system in case of failure

If either the electronic key fails or the battery of the electronic key is weak, the Driver Information Centre may display **No Remote Detected** or **Replace Battery in Remote Key** when you try to start the vehicle.

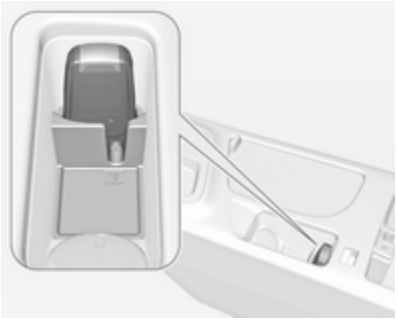

Open the centre console storage area by lifting up the armrest. Place the electronic key in the transmitter pocket.

Other objects, e.g. other keys, transponder, tags, coins etc. must be removed from the pocket.

Depress the clutch pedal (manual transmission) or the brake pedal (automatic transmission) and press **Engine Start/Stop**.

To switch off the engine, press **Engine Start/Stop** again. Remove the electronic key from the transmitter pocket.

This option is intended for emergencies only. Replace the electronic key battery as soon as possible ⇨ 23.

For unlocking or locking the doors see fault in radio remote control unit or electronic key system ⇨ 25.

Retained power off

The following electronic systems can work until the driver's door is opened or for 10 minutes after the ignition is switched off:

- power windows
- sunroof
- power outlets

Starting the engine

Vehicles with ignition switch

Manual transmission: operate clutch and brake pedal.

Automatic transmission: operate brake pedal and move selector lever to **P** or **N**.

Do not operate accelerator pedal.

Diesel engine: turn the key to position **2** for preheating until control indicator ⌇ extinguishes.

Turn key briefly to position **3** and release: an automatic procedure operates the starter with a short delay until the engine is running, see Automatic Starter Control.

During an Autostop, the engine can be started by depressing the clutch pedal ⇨ 160.

Vehicles with power button

Manual transmission: operate clutch and brake pedal.

Automatic transmission: operate brake pedal and move selector lever to **P** or **N**.

Do not operate accelerator pedal.

Press and release **Engine Start/Stop**: an automatic procedure operates the starter with a short delay until the engine is running, see Automatic Starter Control.

Before restarting or to switch off the engine when vehicle is stationary, press **Engine Start/Stop** once more briefly.

During an Autostop, the engine can be started by depressing the clutch pedal ⇨ 160.

Emergency shut off during driving

If the engine needs to be switched off during driving in case of emergency, press **Engine Start/Stop** for longer than 2 seconds or press twice briefly within 5 seconds.

⚠ Danger

Switching off the engine during driving may cause loss of power support for brake and steering systems. Assistance systems and airbag systems are disabled. Lighting and brake lights will

extinguish. Therefore power down the engine and ignition while driving only when required in case of emergency.

Starting the vehicle at low temperatures

Starting the engine without additional heaters is possible down to -25 °C for diesel engines and -30 °C for petrol engines. Required is an engine oil with the correct viscosity, the correct fuel, performed services and a sufficiently charged vehicle battery. With temperatures below -30 °C the automatic transmission requires a warming phase of approx. 5 minutes. The selector lever must be in position **P**.

Automatic Starter Control

This function controls the engine starting procedure. The driver does not need to hold the key in position **3** or to hold **Engine Start/Stop** pressed. Once applied, the system will go on starting automatically until the engine is running. Because of the checking procedure, the engine starts running after a short delay.

Possible reasons for a non-starting engine:

- Clutch pedal not operated (manual transmission).
- Brake pedal not operated or selector lever not in **P** or **N** (automatic transmission).
- Timeout occurred.

Turbo engine warm-up

Upon start-up, engine available torque may be limited for a short time, especially when the engine temperature is cold. The limitation is to allow the lubrication system to fully protect the engine.

Overrun cut-off

The fuel supply is automatically cut off during overrun, i.e. when the vehicle is driven with a gear engaged but accelerator is released.

Stop-start system

The stop-start system helps to save fuel and to reduce the exhaust emissions. When conditions allow, it switches off the engine as soon as the vehicle is at a low speed or at a standstill, e.g. at a traffic light or in a traffic jam. It starts the engine automatically as soon as the clutch is depressed. A battery sensor ensures that an Autostop is only performed if the vehicle battery is sufficiently charged for a restart.

Activation

The stop-start system is available as soon as the engine is started, the vehicle starts-off and the conditions as stated below in this section are fulfilled.

Deactivation

Deactivate the stop-start system manually by pressing **eco**. Deactivation is indicated when the LED in the button extinguishes.

Autostop

If the vehicle is at a low speed or at a standstill, activate an Autostop as follows:

- Depress the clutch pedal.
- Move the selector lever to neutral.
- Release the clutch pedal.

The engine will be switched off while the ignition stays on.

An Autostop is indicated by the needle at the **AUTOSTOP** position in the tachometer. On some versions, a control indicator in the instrument cluster illuminates when engine is in Autostop.

During an Autostop, the heating and brake performance will be maintained.

Caution
The steering assist can be reduced during an Autostop.

Conditions for an Autostop

The stop-start system checks if each of the following conditions is fulfilled.

- The stop-start system is not manually deactivated.
- The bonnet is fully closed.
- The driver's door is closed or the driver's seat belt is fastened.
- The vehicle battery is sufficiently charged and in good condition.
- The engine is warmed up.
- The engine coolant temperature is not too high.
- The engine exhaust temperature is not too high, e.g. after driving with high engine load.
- The ambient temperature is above -5 °C.

- The climate control system allows an Autostop.
- The brake vacuum is sufficient.
- The self-cleaning function of the diesel particle filter is not active.
- The vehicle was driven at least at walking speed since the last Autostop.

Otherwise an Autostop will be inhibited.

Certain settings of the climate control system may inhibit an Autostop. See Climate control chapter for more details ⇨ 141.

Immediately after motorway driving, an Autostop may be inhibited.

New vehicle running-in ⇨ 156.

Vehicle battery discharge protection

To ensure reliable engine restarts, several battery discharge protection features are implemented as part of the stop-start system.

Power saving measures

During an Autostop, several electrical features e.g. auxiliary electric heater or heated rear window are disabled or switched to a power saving mode. The fan speed of the climate control system is reduced to save power.

Restart of the engine by the driver

Depress the clutch pedal to restart the engine.

The engine start is indicated by the needle at the idle speed position in the tachometer.

If the selector lever is shifted out of neutral before depressing the clutch first, control indicator illuminates or is shown as a symbol in the Driver Information Centre.

Control indicator ⇨ 106.

Restart of the engine by the stop-start system

The selector lever must be in neutral to enable an automatic restart.

If one of the following conditions occurs during an Autostop, the engine will be restarted automatically by the stop-start system:

- The stop-start system is manually deactivated.
- The bonnet is opened.
- The driver's seat belt is unfastened and the driver's door is opened.
- The engine temperature is too low.
- The charging level of the vehicle battery is below a defined level.
- The brake vacuum is not sufficient.
- The vehicle is driven at least at walking speed.
- The climate control system requests an engine start.
- The air conditioning is manually switched on.

If the bonnet is not fully closed, a warning message is displayed in the Driver Information Centre.

If an electrical accessory, e.g. a portable CD player, is connected to the power outlet, a brief power drop during the restart might be noticeable.

Parking

⚠ Warning

- Do not park the vehicle on an easily ignitable surface. The high temperature of the exhaust system could ignite the surface.
- Always apply the parking brake. Activate the manual parking brake without pressing the release button. Apply as firmly as possible on a downhill slope or uphill slope. Depress brake pedal at the same time to reduce operating force.

  For vehicles with electric parking brake, pull switch Ⓟ for approx. one second.

  The electric parking brake is applied when control indicator Ⓟ illuminates ⇨ 106.
- Switch off the engine.
- If the vehicle is on a level surface or uphill slope, engage first gear or set the selector lever to position **P** before removing the ignition key or switching off ignition on vehicles with power button. On an uphill slope, turn the front wheels away from the kerb.

  If the vehicle is on a downhill slope, engage reverse gear or set the selector lever to position **P** before removing the ignition key or switching off ignition on vehicles with power button. Turn the front wheels towards the kerb.
- Close the windows and the sunroof.
- Remove the ignition key from the ignition switch or switch off ignition on vehicles with power button. Turn the steering wheel until the steering wheel lock is felt to engage.

  For vehicles with automatic transmission, the key can only be removed when the selector lever is in position **P**.
- Lock the vehicle with button on the radio remote control.

  Activate the anti-theft alarm system ⇨ 35.
- The engine cooling fans may run after the engine has been switched off ⇨ 227.

Caution

After running at high engine speeds or with high engine loads, operate the engine briefly at a low load or run in neutral for approx. 30 seconds before switching off, in order to protect the turbocharger.

Note

In the event of an accident with airbag deployment, the engine is turned off automatically if the vehicle comes to a standstill within a certain time.

Engine exhaust

⚠ Danger

Engine exhaust gases contain poisonous carbon monoxide, which is colourless and odourless and could be fatal if inhaled.

If exhaust gases enter the interior of the vehicle, open the windows. Have the cause of the fault rectified by a workshop.

Avoid driving with an open load compartment, otherwise exhaust gases could enter the vehicle.

Diesel particle filter

The diesel particle filter system filters harmful soot particles out of the exhaust gases. The system includes a self-cleaning function that runs automatically during driving without any notification. The filter is cleaned by periodically burning off the soot particles at high temperature. This process takes place automatically under set driving conditions and may take up to 25 minutes. Typically it needs between 7 and 12 minutes. Autostop is not available and fuel consumption may be higher during this period. The emission of smells and smoke during this process is normal.

Under certain driving conditions, e.g. short distances, the system cannot clean itself automatically.

If cleaning of the filter is required and if previous driving conditions did not enable automatic cleaning, it will be indicated by and a warning message in the Driver Information Centre.

with a warning message illuminates when diesel particle filter is full. Start cleaning process as soon as possible.

with a warning message flashes when diesel particle filter has reached the maximum filling level. Start cleaning process immediately to avoid damage to the engine.

Cleaning process

To activate cleaning process, continue driving, keep engine speed above 2000 revolutions per minute. Shift down if necessary. Diesel particle filter cleaning is then started.

Caution

If the cleaning process is interrupted, there is a risk of provoking severe engine damage.

If cleaning is not possible for any reasons, illuminates and a warning message appears in the Driver Information Centre. Engine power may be reduced. Seek the assistance of a workshop immediately.

Cleaning takes place quickest at high engine speeds and loads.

The control indicator extinguishes as soon as the self-cleaning operation is complete. Keep on driving until self-cleaning operation is complete.

Catalytic converter

The catalytic converter reduces the amount of harmful substances in the exhaust gases.

Caution

Fuel grades other than those listed on pages ⇨ 214, ⇨ 282 could damage the catalytic converter or electronic components.

Unburnt petrol will overheat and damage the catalytic converter. Therefore avoid excessive use of the starter, running the fuel tank dry and starting the engine by pushing or towing.

In the event of misfiring, uneven engine running, a reduction in engine performance or other unusual problems, have the cause of the fault rectified by a workshop as soon as possible. In an emergency, driving can be continued for a short period, keeping vehicle speed and engine speed low.

AdBlue

General information

The selective catalytic reduction (BlueInjection) is a method to substantially reduce the nitrogen oxides in the exhaust emission. This is achieved by injecting a Diesel Exhaust Fluid (DEF) into the exhaust system.

The designation of this fluid is AdBlue ®[1]. It is a non-toxic, non-flammable, colourless and odourless fluid which consists of 32% urea and 68% water.

⚠Warning

Avoid contact of your eyes or skin with AdBlue.

In case of eye or skin contact, rinse off with water.

Caution

Avoid contact of the paintwork with AdBlue.

In case of contact, rinse off with water.

AdBlue freezes at a temperature of approx. -11 °C. As the vehicle is equipped with an AdBlue pre-heater, the emissions reduction at low temperatures is ensured. The AdBlue pre-heater works automatically.

Level warnings

The AdBlue consumption is approx. 0.7 litres per 1000 km and depends on the driving behaviour.

If the AdBlue level falls below a certain value, a level warning **AdBlue Range: 2400 km** will be displayed in the Driver Information Centre.

A volume of at least 5 litres of AdBlue must be refilled as soon as possible.

Driving is possible without any restrictions.

[1] Registered trademark of the Verband der Automobilindustrie e.V. (VDA).

If AdBlue is not refilled within a certain distance, further level warnings are displayed in the Driver Information Centre depending on the current AdBlue level. Later on requests to refill AdBlue and finally the announcement to prevent an engine restart are displayed. These restrictions are a legal requirement.

At an AdBlue range of 900 km, the following warning messages are alternately displayed in the Driver Information Centre:

- **AdBlue Low Refill Now**
- **Engine Restart Prevented in 900 km**

Additionally, control indicator flashes continuously and a warning chime sounds four times every three minutes.

Before the prevention of an engine restart is activated, the following warning messages:

- **AdBlue Empty Refill Now**
- **Engine Will Not Restart**

are alternately displayed in the Driver Information Centre.

Additionally, control indicator flashes continuously and a warning chime sounds four times every three minutes.

After the prevention of an engine start, the following message:

Refill AdBlue To Start Vehicle

will be displayed.

To restart the engine, the tank must be filled with AdBlue first.

High emission warnings

If the exhaust emission rises above a certain value, warnings similar to the range warnings as described above will be displayed in the Driver Information Centre.

Requests to have the exhaust system checked and finally the announcement to prevent an engine restart are displayed. These restrictions are a legal requirement.

Seek your workshop for assistance.

Refilling AdBlue

Caution

Only use AdBlue that complies with European standards DIN 70 070 and ISO 22241-1.

Do not use additives.

Do not dilute AdBlue.

Otherwise the selective catalytic reduction system could be damaged.

Note
Only use the designated AdBlue canisters for refilling, to prevent a topping-up of too much AdBlue. Additionally, the fumes in the tank are captured in the canister and do not emerge.

Since AdBlue has a limited durability, check the date of expiry before refilling.

Note
A volume of at least 5 litres of AdBlue must be added when refilling. Otherwise the refilling of AdBlue may not be detected by the system.

In case AdBlue refill is not successfully detected:

1. Continuously drive the vehicle for 10 minutes making sure that vehicle speed is always higher than 20 km/h.
2. If AdBlue refill is detected successfully, AdBlue supply-driven limitations will disappear.

If AdBlue refill is still not detected, seek the assistance of a workshop.

If AdBlue must be refilled at temperatures below -11 °C, the refilling of AdBlue may not be detected by the system. In this event, park the vehicle in a space with a higher ambient temperature until AdBlue is liquefied.

Note
When unscrewing the protective cap from the filler neck, ammonia fumes may emerge. Do not inhale as the fumes have a pungent smell. The fumes are not harmful by inhalation.

The vehicle must be parked on a level surface.

The filler neck for AdBlue is located behind the fuel filler flap.

The fuel filler flap is located at right rear side of the vehicle.

The fuel filler flap can only be opened if the vehicle is unlocked.

1. Remove key from ignition lock.
2. Close all doors to avoid ammonia fumes entering the interior of the vehicle.
3. Release the fuel filler flap by pushing the flap ⇨ 216.

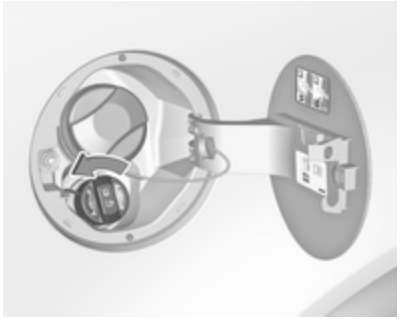

4. Unscrew protective cap from the filler neck.
5. Open AdBlue canister.
6. Mount one end of the hose on the canister and screw the other end on the filler neck.
7. Lift the canister until it is empty.
8. Unscrew the hose from the filler neck.
9. Mount the protective cap and turn clockwise until it engages.

Note
Dispose of AdBlue canister and hose according to environmental requirements.

Exchanging AdBlue

If less than 5 litres of AdBlue have been refilled during the last 2 years, the remaining fluid should be exchanged since AdBlue has a limited durability. Seek the assistance of a workshop.

Caution
Disregard could lead to damage to the selective catalytic reduction system.

Automatic transmission

The automatic transmission permits automatic gearshifting (automatic mode) or manual gearshifting (manual mode).

Manual shifting is possible in manual mode by tapping the selector lever or pulling the steering wheel paddles ⇨ 170.

Transmission display

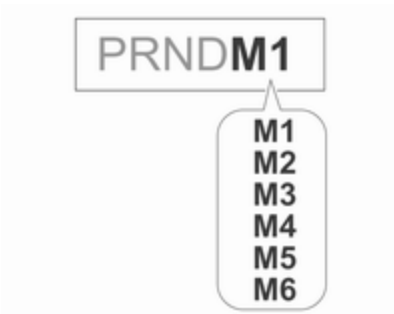

The mode or selected gear is shown in the transmission display.

In automatic mode, the driving programme is indicated by **D** in the Driver Information Centre.

In manual mode, **M** and the number of the selected gear is indicated.

R indicates reverse gear.

N indicates neutral position.

P indicates park position.

Selector lever

P : park position, press release button, wheels are locked, engage only when the vehicle is stationary and parking brake is applied
R : reverse gear, press release button, engage only when vehicle is stationary
N : neutral
D : automatic mode
M : manual mode: move selector lever from **D** to the left.
+ : manual mode upshifting: move selector lever in position **M** and tap upwards
– : manual mode downshifting: move selector lever in position **M** and tap rearwards

The selector lever is locked in **P** and can only be moved when the ignition is on and the brake pedal is applied.

Without applied brake pedal the control indicator illuminates.

If the selector lever is not in **P** when the ignition is switched off, control indicator and **P** will flash.

To engage **P** or **R**, press the release button.

The engine can only be started with lever in position **P** or **N**. When position **N** is selected, press brake pedal or apply parking brake before starting.

Do not accelerate while engaging a gear. Never depress the accelerator pedal and brake pedal at the same time.

When a gear is engaged, the vehicle slowly begins to creep when the brake is released.

Engine braking

To utilise the engine braking effect, select a lower gear in good time when driving downhill, see manual mode.

Rocking the vehicle

Rocking the vehicle is only permissible if the vehicle is stuck in sand, mud or snow. Move the selector lever between **D** and **R** in a repeat pattern. Do not race the engine and avoid sudden acceleration.

Parking

Apply the parking brake and engage **P**.

The ignition key can only be removed when the selector lever is in position **P**.

Manual mode

Selector lever

Move selector lever out of position **D** towards the left to select manual mode.

Tap selector lever

forwards **+** : shift to a higher gear

backwards **−** : shift to a lower gear

The selected gear is indicated in the instrument cluster.

Steering wheel paddles

Move selector lever out of position **D** towards the left to select manual mode.

Pull steering wheel paddles to select gears manually

right paddle **+** : pull briefly to shift one gear up

left paddle **−** : pull briefly to shift one gear down, multiple pulls allows gears to be skipped

The selected gear is indicated in the instrument cluster.

Temporary manual mode in drive mode D

Manual paddle shifting is also possible in automatic mode **D**. Upon completion of manual shifting operation, transmission changes to automatic mode **D** after a defined time.

To interrupt manual mode, do one of the following:

- Press **+** paddle for 1 second.
- Move selector lever towards the left to manual mode and back to position **D**.

If the vehicle is at a standstill and engine is idling, the transmission will remain in temporary manual mode. It changes to automatic mode when accelerator pedal is operated for a defined time, and no paddle shifting at the steering wheel is performed.

General

If a higher gear is selected when vehicle speed is too low, or a lower gear when vehicle speed is too high,

the shift is not executed. This can cause a message in the Driver Information Centre.

In manual mode, no automatic shifting to a higher gear takes place at high engine revolutions.

Gear shift indication

The symbol ▲ with a number below it is indicated when gearshifting is recommended for fuel saving reasons.

Shift indication appears only in manual mode.

Electronic driving programmes

- Following a cold start, the operating temperature programme increases engine speed to quickly bring the catalytic converter to the required temperature.
- The automatic neutral shift function automatically shifts to idling when the vehicle is stopped with a forward gear engaged and the brake pedal is pressed.
- When SPORT mode is engaged, the vehicle shifts at higher engine speeds (unless cruise control is on). SPORT mode ⇨ 178.
- Special programmes automatically adapt the shifting points when driving up inclines or down hills.
- When starting off in snowy or icy conditions or on other slippery surfaces, the electronic transmission control selects a higher gear automatically.

Kickdown

If the accelerator pedal is pressed down completely in automatic mode, the transmission shifts to a lower gear depending on engine speed.

Overheat protection

In the event of transmission-overheating due to high outside temperatures or sporty driving style, the torque and the maximum speed of the engine can be temporarily reduced.

Fault

In the event of a fault a vehicle message is displayed in the Driver Information Centre. Vehicle messages ⇨ 120.

The transmission no longer shifts automatically. Continued travel is possible with manual shifting.

Only the highest gear is available. Depending on the fault, 2nd gear may also be available in manual mode. Shift only when vehicle is stationary.

Have the cause of the fault remedied by a workshop.

Interruption of power supply

In the event of an interruption of power supply, the selector lever cannot be moved out of the **P** position. The ignition key cannot be removed from the ignition switch.

If the vehicle battery is discharged, start the vehicle using jump leads ⇨ 265.

If the vehicle battery is not the cause of the fault, release the selector lever.

1. Apply parking brake.

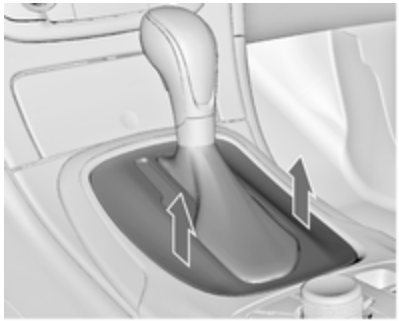

2. Release selector lever trim from centre console at rear, fold upwards and rotate to the left.

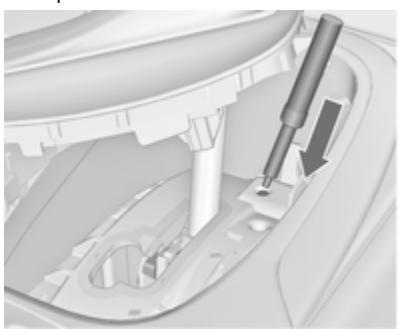

3. Insert the special tool into the opening as far as it will go and move the selector lever out of **P** or **N**. If **P** or **N** is engaged again, the selector lever will be locked in position again. Have the cause of the power supply interruption remedied by a workshop.
4. Mount the selector lever trim on the centre console and refit.

Manual transmission

To engage reverse, with the vehicle stationary press the release button on the selector lever and engage the gear.

If the gear does not engage, set the lever to neutral, release the clutch pedal and depress again; then repeat gear selection.

Do not slip the clutch unnecessarily.

When operating, depress the clutch pedal completely. Do not use the pedal as a foot rest.

Caution
It is not advisable to drive with the hand resting on the selector lever.

Upshift ⇨ 107.

Stop-start system ⇨ 160.

Drive systems

All-wheel drive

The All-wheel drive system enhances driving characteristics and stability, and helps to achieve the best possible driveability regardless of ground surface. The system is always active and cannot be deactivated.

The torque is distributed steplessly between the wheels of the front and rear axle, depending on the driving conditions. Additionally the torque between the rear wheels is distributed depending on the surface.

For optimum system performance, the vehicle's tyres should not have varying degrees of wear.

If a service message is displayed in the Driver Information Centre, the system may have limited functionality (or be completely disabled in some cases, i.e. the vehicle switches to Front-wheel drive). Seek the assistance of a workshop.

Towing the vehicle ⇨ 267.

Brakes

The brake system comprises two independent brake circuits.

If a brake circuit fails, the vehicle can still be braked using the other brake circuit. However, braking effect is achieved only when the brake pedal is depressed firmly. Considerably more force is needed for this. The braking distance is extended. Seek the assistance of a workshop before continuing the journey.

When the engine is not running, the support of the brake servo unit disappears once the brake pedal has been depressed once or twice. Braking effect is not reduced, but braking requires significantly greater force. It is especially important to bear this in mind when being towed.

Control indicator (!) ⇨ 106.

Antilock brake system

Antilock brake system (ABS) prevents the wheels from locking.

ABS starts to regulate brake pressure as soon as a wheel shows a tendency to lock. The vehicle remains steerable, even during hard braking.

ABS control is made apparent through a pulse in the brake pedal and the noise of the regulation process.

For optimum braking, keep the brake pedal fully depressed throughout the braking process, despite the fact that the pedal is pulsating. Do not reduce the pressure on the pedal.

After starting off, the system performs a self-test which may be audible.

Control indicator (ABS) ⇨ 107.

Adaptive brake light

During full braking, all three brake lights flash for the duration of ABS control.

Fault

⚠ Warning

If there is a fault in the ABS, the wheels may be liable to lock due to braking that is heavier than normal. The advantages of ABS are no longer available. During hard braking, the vehicle can no longer be steered and may swerve.

Have the cause of the fault remedied by a workshop.

Parking brake

Manual parking brake

⚠ Warning

Always apply parking brake firmly without operating the release button, and apply as firmly as possible on a downhill or uphill slope.

To release the parking brake, pull the lever up slightly, press the release button and fully lower the lever.

To reduce the operating forces of the parking brake, depress the brake pedal at the same time.

Control indicator ⓘ ⇨ 106.

Electric parking brake

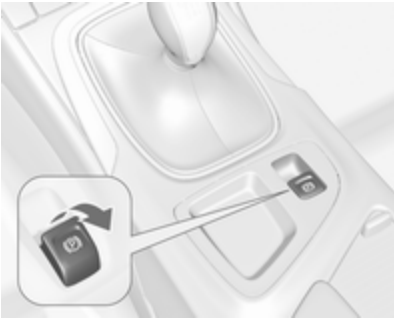

Applying when vehicle is stationary

⚠ Warning

Pull switch Ⓟ for a minimum of one second until control indicator Ⓟ illuminates constantly and electric parking brake is applied ⇨ 106. The electric parking brake operates automatically with adequate force.

Before leaving the vehicle, check the electric parking brake status. Control indicator Ⓟ ⇨ 106.

The electric parking brake can always be activated, even if the ignition is off.

Do not operate electric parking brake system too often without engine running as this will discharge the vehicle battery.

Releasing

Switch on ignition. Keep brake pedal depressed and then push switch Ⓟ.

Drive away function

Vehicles with manual transmission: Depressing the clutch pedal and then slightly releasing the clutch pedal and slightly depressing the accelerator pedal releases the electric parking brake automatically. This is not possible when switch Ⓟ is pulled at the same time.

Vehicles with automatic transmission: Engaging **D** and then depressing the accelerator pedal releases the electric parking brake automatically. This is not possible when switch Ⓟ is pulled at the same time.

Dynamic braking when vehicle is moving

When the vehicle is moving and switch Ⓟ is kept pulled, the electric parking brake system will decelerate the vehicle, but will not apply statically.

As soon as switch Ⓟ is released, dynamic braking will be stopped.

Automatic applying

If the vehicle is equipped with Automatic transmission and Adaptive cruise control is active, electric parking brake is applied automatically when vehicle is stopped by the system for more than two minutes.

Parking brake is released automatically after moving off.

Functionality check

When the vehicle is not moving, the electric parking brake might be applied automatically. This is done to check the system.

Fault

Failure mode of electric parking brake is indicated by control indicator ⓟ and by a vehicle message which is displayed in the Driver Information Centre. Vehicle messages ⇨ 120.

Apply electric parking brake: pull and hold switch ⓟ for more than 5 seconds. If control indicator ⓟ illuminates, electric parking brake is applied.

Release electric parking brake: push and hold switch ⓟ for more than 2 seconds. If control indicator ⓟ extinguishes, electric parking brake is released.

Control indicator ⓟ flashes: electric parking brake is not fully applied or released. When continuously flashing, release electric parking brake and retry applying.

Brake assist

If brake pedal is depressed quickly and forcefully, maximum brake force is automatically applied.

Operation of brake assist might become apparent by a pulse in the brake pedal and a greater resistance when depressing the brake pedal.

Maintain steady pressure on the brake pedal as long as full braking is required. Maximum brake force is automatically reduced when brake pedal is released.

Hill start assist

The system helps prevent unintended movement when driving away on inclines.

When releasing the foot brake after stopping on an incline, brakes remain on for further two seconds. Brakes release automatically as soon as the vehicle begins to accelerate.

The hill start assist is not active during an Autostop.

Stop-start system ⇨ 160.

Ride control systems

Traction Control system

The Traction Control system (TC) is a component of the Electronic Stability Control.

TC improves driving stability when necessary, regardless of the type of road surface or tyre grip, by preventing the drive wheels from spinning.

As soon as the drive wheels starts to spin, engine output is reduced and the wheel spinning the most is braked individually. This considerably improves the driving stability of the vehicle on slippery road surfaces.

TC is operational as soon as control indicator ⚹ extinguishes.

When TC operates ⚹ flashes.

⚠ Warning

Do not let this special safety feature tempt you into taking risks when driving.

Adapt speed to the road conditions.

Control indicator ⛐ ⇨ 108.

Deactivation

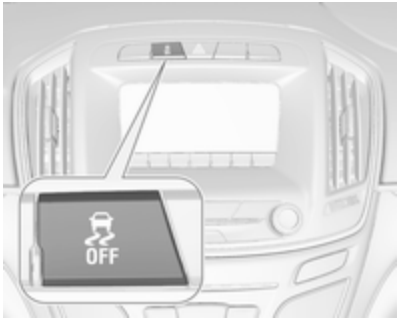

TC can be switched off when spinning of drive wheels is required:

press ⛐ briefly to deactivate TC, ⛐ illuminates. A status message appears in the Driver Information Centre when TC is deactivated.

Control indicator ⛐ illuminates.

When TC is deactivated, ESC remains active.

TC is reactivated by pressing ⛐ again.

TC is also reactivated the next time the ignition is switched on.

Electronic Stability Control

Electronic Stability Control (ESC) improves driving stability when necessary, regardless of the type of road surface or tyre grip.

As soon as the vehicle starts to swerve (understeer/oversteer), engine output is reduced and the wheels are braked individually.

ESC operates in combination with the Traction Control system (TC) ⇨ 176. It also prevents the drive wheels from spinning.

ESC is operational after each engine start as soon as the control indicator ⛐ extinguishes.

When ESC operates, control indicator ⛐ flashes.

⚠ Warning

Do not let this special safety feature tempt you into taking risks when driving.

Adapt speed to the road conditions.

Control indicator ⛐ ⇨ 108.

Deactivation

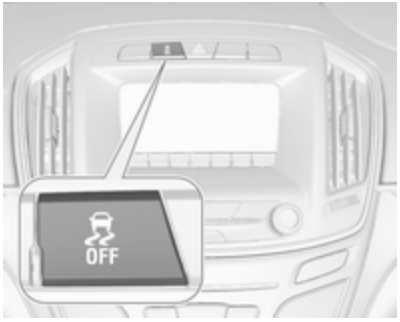

ESC and TC can be deactivated:

- hold pressed for min. five seconds: TC and ESC are deactivated, and illuminate and status messages appear in the Driver Information Centre.

- to deactivate only Traction control system press button briefly: TC is inactive but ESC remains active, illuminates. A status message appears in the Driver Information Centre when TC is deactivated.

If the vehicle comes into threshold with deactivated ESC, the system will reactivate ESC for the time duration of the threshold, when the brake pedal is depressed once.

ESC is reactivated by pressing again. If the TC system was previously disabled, both TC and ESC are reactivated. and extinguishes when TC and ESC are reactivated.

ESC is also reactivated the next time the ignition is switched on.

Fault

If there is a fault in the system the control indicator illuminates continuously and a message appears in the Driver Information Centre. The system is not operational.

Have the cause of the fault remedied by a workshop.

Interactive driving system

Flex Ride

Flex Ride driving system allows the driver to select between three driving modes:

- SPORT mode: press **SPORT**, LED illuminates.
- TOUR mode: press **TOUR**, LED illuminates.
- NORMAL mode: neither **SPORT** nor **TOUR** is pressed, no LED illuminates.

Deactivate SPORT mode and TOUR mode by pressing corresponding button once more.

In each driving mode Flex Ride networks the following electronic systems:

- Continuous Damping Control
- Accelerator Pedal Control
- Steering Control
- All-wheel drive
- Electronic Stability Control (ESC)

- Antilock Brake System (ABS) with cornering brake control (CBC)
- Automatic transmission

SPORT mode

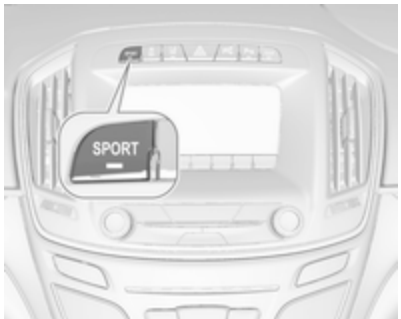

The settings of the systems are adapted to a sportier driving style:

- Damping of shock absorbers reacts more stiffly to provide better contact with the road surface.
- The engine reacts more quickly to the accelerator pedal.
- Steering support is reduced.
- Engine torque of All-wheel drive is distributed more to the rear axle.
- Shift points of automatic transmission occur later.
- Depending on the instrument cluster the colouring of the display will be adapted.

TOUR mode

The settings of the systems are adapted to a comfort driving style:

- Damping of shock absorbers reacts more softly.
- Accelerator pedal reacts with standard settings.
- Steering support is in standard mode.
- Engine torque of All-wheel drive is distributed mainly to the front axle.
- Shift points of automatic transmission occur in a comfort mode.

NORMAL mode

All settings of the systems are adapted to standard values.

Drive mode control

Within each manually selected driving mode SPORT, TOUR or NORMAL, the Drive Mode Control (DMC) detects and analyses continuously the real driving characteristic, responses by the driver, and the active dynamic state of the vehicle. If necessary, the control unit of DMC automatically changes the settings within the selected driving mode or, when recognising greater variations, the driving mode is changed for the length of variation.

If, for example, NORMAL mode is selected and DMC detects a sporty driving behaviour, DMC changes several settings of the Normal mode into sporty settings. The DMC changes to SPORT mode in case of very sporty driving behaviour.

If, for another example, TOUR mode is selected and whilst driving on a winding road a sudden hard brake is necessary, DMC will detect the dynamic vehicle condition and changes the settings for suspension to SPORT mode to increase vehicle stability.

When the driving characteristic or the dynamic vehicle state returns to the former state, DMC will change the settings to the preselected driving mode.

Personalised settings in SPORT mode

The driver can select the functions of the SPORT mode when **SPORT** is pressed.

Select the relevant settings in **Settings**, ➧ **Sport Mode** in the Colour-Info-Display.

Colour-Info-Display ⇨ 118.

Vehicle personalisation ⇨ 122.

Flex Ride - OPC Version

The OPC Version of Flex Ride system works in the same way as the standard Flex Ride system with the difference that the modes have a more sporty characteristic.

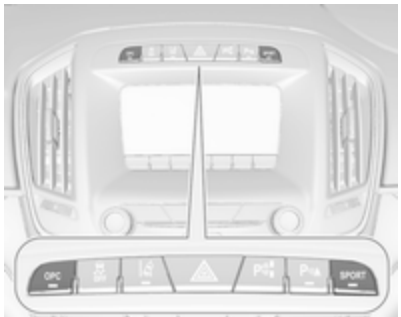

OPC Flex Ride driving system allows the driver to select between three driving modes:

- OPC mode: press **OPC**, LED illuminates.
- SPORT mode: press **SPORT**, LED illuminates.
- NORMAL mode: neither **SPORT** nor **OPC** is pressed, no LED illuminates.

Deactivate SPORT mode and OPC mode by pressing corresponding button once more.

In each driving mode OPC Flex Ride networks the following electronic systems:

- Continuous Damping Control
- Accelerator Pedal Control
- Steering Control
- All-wheel drive
- Electronic Stability Control (ESC)
- Antilock Brake System (ABS) with cornering brake control (CBC)
- Automatic transmission

OPC mode
The drive dynamic characteristics are adapted to high performance settings.

Depending on the instrument cluster the colouring of the display will be adapted.

SPORT mode
The settings of the systems are adapted to a sportier driving style.

NORMAL mode
In NORMAL mode, when neither SPORT nor OPC is pressed, all settings of the systems are adapted to standard values.

Personalised settings in the OPC mode
The driver can select the functions of the OPC mode when **OPC** is pressed.

Select the relevant settings in **Settings**, ➧ **Sport Mode** in the Colour-Info-Display.

Colour-Info-Display ⇨ 118.

Vehicle personalisation ⇨ 122.

Driver assistance systems

⚠ Warning

Driver assistance systems are developed to support the driver and not to replace the driver's attention.

The driver accepts full responsibility when driving the vehicle.

When using driver assistance systems, always take care regarding the current traffic situation.

Cruise control

The cruise control can store and maintain speeds of approx. 30 to 200 km/h. Deviations from the stored speeds may occur when driving uphill or downhill.

For safety reasons, the cruise control cannot be activated until the brake pedal has been operated once. Activating in first gear is not possible.

Do not use the cruise control if it is not advisable to maintain a constant speed.

On vehicles with automatic transmission or manual transmission automated cruise control can be activated in automatic mode and manual mode.

Control indicator ⇨ 110.

Switching on

Press ⏲; control indicator ⏲ in instrument cluster illuminates white.

Activation

Accelerate to the desired speed and turn thumb wheel to **SET/-**, the current speed is stored and maintained. Control indicator ⏲ in instrument cluster illuminates green. Set speed is indicated on midlevel or uplevel display near ⏲ symbol. Accelerator pedal can be released.

Vehicle speed can be increased by depressing the accelerator pedal. When the accelerator pedal is released, the previously stored speed is resumed.

Cruise control remains activated while gearshifting.

Increase speed

With cruise control active, hold thumb wheel turned to **RES/+** or briefly turn to **RES/+** repeatedly: speed increases continuously or in small increments.

Alternatively accelerate to the desired speed and store by turning to **SET/-**.

Reduce speed

With cruise control active, hold thumb wheel turned to **SET/-** or briefly turn to **SET/-** repeatedly: speed decreases continuously or in small increments.

Deactivation

Press ⏲; control indicator ⏲ in instrument cluster illuminates white. Cruise control is deactivated. Last stored speed remains in memory for later speed resume.

Automatic deactivation:

- Vehicle speed is below approx. 30 km/h.
- Vehicle speed drops more than 25 km/h below the set speed.
- The brake pedal is depressed.
- The clutch pedal is depressed for a few seconds.
- The selector lever is in **N**.
- The engine speed is in a very low range.
- The Traction Control system or Electronic Stability Control is operating.
- The forward collision alert has been triggered.

Resume stored speed

Turn thumb wheel to **RES/+** at a speed above 30 km/h. The stored speed will be obtained.

Switching off

Press ⊘, control indicator ⊘ in instrument cluster extinguishes. The stored speed is deleted.

Pressing ⊘ to activate the speed limiter or switching off the ignition also switches off cruise control and deletes the stored speed.

Speed limiter

The speed limiter prevents the vehicle exceeding a preset maximum speed.

The maximum speed can be set at speeds above 25 km/h up to 200 km/h.

The driver can only accelerate up to the preset speed. Deviations from the limited speed may occur when driving downhill.

The preset speed limit is displayed in the Driver Information Centre when the system is active.

Activation

Press ⊘. The control indicator ⊘ in the instrument cluster illuminates white. If cruise control or adaptive cruise control has been activated before, it is switched off when speed limiter is activated and control indicator ⊘ extinguishes.

Set speed limit

Accelerate to the desired speed and briefly turn thumb wheel to **SET/-**: the current speed is stored as maximum speed. Speed limit is displayed in the Driver Information Centre.

Control indicator ⊘ in the instrument cluster illuminates green.

If the vehicle is equipped with Uplevel display and Sport mode is selected ⇨ 111, the scale of the speedometer is only indicated up to the set speed limit. The speed limiter setting is marked by a green dot, it changes to white when the system is active but not engaged.

Change speed limit

With speed limiter active, hold or briefly turn thumb wheel to **RES/+** to increase or **SET/-** to decrease the desired maximum speed.

Exceeding the speed limit

When exceeding the limited speed without driver input, the speed will flash in the Driver Information Centre and a chime sounds during this period.

In the event of an emergency, it is possible to exceed the speed limit by depressing the accelerator pedal firmly nearly to the final point. In this case no chime appears.

Release the accelerator pedal and the speed limiter function is reactivated once a speed lower than the limit speed is obtained.

Deactivation

Press : speed limiter is deactivated and the vehicle can be driven without speed limit.

The limited speed will be stored and is indicated in brackets in the Driver Information Centre. Additionally, a corresponding message appears.

Resume limit speed

Turn thumb wheel to **RES/+**. The stored speed limit will be obtained.

Switching off

Press , the speed limit indication in the Driver Information Centre extinguishes. The stored speed is deleted.

By pressing to activate cruise control or adaptive cruise control, speed limiter is also deactivated and the stored speed is deleted.

By switching off the ignition, speed limiter is also deactivated, but the speed limit will be stored for next speed limiter activation.

Adaptive cruise control

Adaptive cruise control (ACC) is an enhancement to traditional cruise control with the additional feature of maintaining a certain distance behind the vehicle ahead.

Adaptive cruise control automatically decelerates the vehicle when approaching a slower moving vehicle. It then adjusts the vehicle speed to follow the vehicle ahead at the selected following distance. The vehicle speed increases or decreases to follow the vehicle in front, but will not exceed the set speed. It may apply limited braking with activated brake lights.

The adaptive cruise control can store and maintain speeds over approx. 25 km/h. If following a vehicle ahead driving slower than 25 km/h, the slower speed will be set. On vehicles with automatic transmission, the system brakes to a stop.

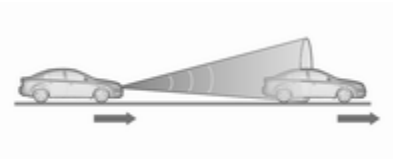

Adaptive cruise control uses a radar sensor to detect the vehicles ahead. If no vehicle is detected in the driving path, the adaptive cruise control will behave like a traditional cruise control.

For safety reasons, the system cannot be activated before the brake pedal or clutch pedal has been depressed once since switching on ignition.

Adaptive cruise control is mainly advised to be used on long straight roads like highways or country roads with steady traffic. Do not use the system if it is not advisable to maintain a constant speed.

Control indicator ⇨ 110, ⇨ 110, ⇨ 110.

⚠Warning

The complete driver attention is always required while driving with adaptive cruise control. The driver stays fully in control of the vehicle because the brake pedal, the accelerator pedal and the cancel switch have priority over any adaptive cruise control operation.

Switching on

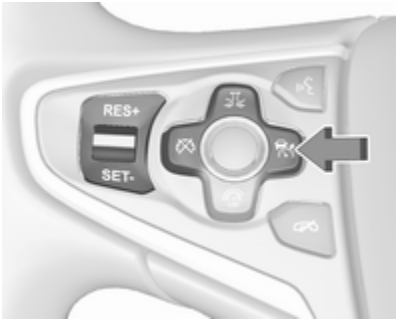

Press to switch on adaptive cruise control. The control indicator or in the instrument cluster illuminates white.

Activation by setting the speed

Adaptive cruise control can be activated between 25 km/h and 180 km/h.

Accelerate to the desired speed and turn thumb wheel to **SET/-**, the current speed is stored and maintained. Control indicator or in the instrument cluster illuminates green.

The adaptive cruise control symbol, the following distance setting and set speed are indicated in the Driver Information Centre.

The accelerator pedal can be released. Adaptive cruise control remains activated while gearshifting.

Overriding set speed

It is always possible to drive faster than the selected set speed by depressing the accelerator pedal. When the accelerator pedal is released, the vehicle returns to the desired distance if a slower vehicle is ahead. Otherwise it returns to the stored speed.

Once the system is activated, adaptive cruise control decelerates or brakes if it detects a vehicle ahead, which is slower or closer than the desired following distance.

⚠ Warning

Accelerating by the driver deactivates automatic braking by the system. This is indicated as a pop-up warning in the Driver Information Centre.

Increase speed

With adaptive cruise control active, hold thumb wheel turned to RES/+: speed increases continuously in large increments, or activate repeatedly RES/+: speed increases in small increments.

If the vehicle is driven with adaptive cruise control active much faster than the desired speed, e.g. after depressing the accelerator pedal, then the current speed can be stored and maintained by turning the thumb wheel to SET/-.

Reduce speed

With adaptive cruise control active, hold thumb wheel turned to SET/-: speed decreases continuously in large increments, or activate repeatedly SET/-: speed decreases in small increments.

If the vehicle is driven with adaptive cruise control active much slower than the desired speed, e.g. because of a slower vehicle ahead, then the current speed can be stored and maintained by turning the thumb wheel to SET/-.

Resume stored speed

If the system is switched on but inactive, then turn thumb wheel to RES/+ at a speed above 25 km/h to resume the stored speed.

Full speed range adaptive cruise control on vehicles with automatic transmission

Full speed range adaptive cruise control will maintain a following gap behind a detected vehicle and slow your vehicle to a stop behind that vehicle.

When the vehicle ahead drives away within two minutes, turn thumb wheel to RES/+ or operate the accelerator pedal to a speed of 10 km/h to resume full speed range adaptive cruise control.

If the stopped vehicle ahead begins to move forward and full speed range adaptive cruise control has not resumed, the green illuminated vehicle ahead control indicator 🚗 will flash and a warning chime will sound as a reminder that the vehicle ahead is pulling away.

When the vehicle ahead stops for more than two minutes, the electric parking brake will apply automatically and the full speed range adaptive cruise control is deactivated. In this event, drive the vehicle normally by operating the accelerator pedal. Turn thumb wheel to RES/+ at a speed above 10 km/h to resume full speed range adaptive cruise control.

⚠ Warning

When full speed range adaptive cruise control is deactivated or cancelled, the vehicle will no longer be held at a stop and can start to move. Always be prepared to manually apply the brake to hold the vehicle stationary.

Do not leave the vehicle while it is being held at a stop by the full speed range adaptive cruise control. Always move selector lever to park position **P** and switch off the ignition before leaving the vehicle.

Setting the following distance

When adaptive cruise control detects a slower moving vehicle in the driving path, it will adjust the vehicle speed to maintain the following distance selected by the driver.

The following distance can be set to near, medium or far.

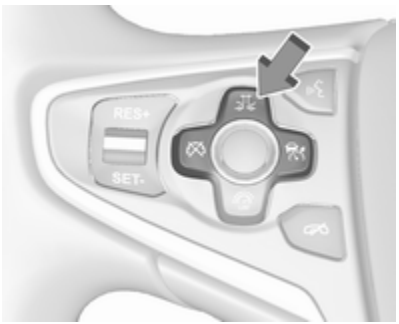

Press ⛷, the current setting is shown in the Driver Information Centre. Press ⛷ again to change the following distance. The setting is also displayed in the Driver Information Centre.

The selected following distance is indicated by filled distance bars in the adaptive cruise control page.

Note that the following distance setting is shared with the sensitivity setting of forward collision alert ⇨ 191.

Example: If setting 3 (far) is selected, then the driver is warned sooner before a possible collision, also if adaptive cruise control is inactive or switched off.

⚠Warning

The driver accepts full responsibility for the appropriate following distance based on traffic, weather and visibility conditions. Following distance must be adjusted or the system switched off when required by the prevailing conditions.

Detecting the vehicle ahead

The green illuminated vehicle ahead control indicator is displayed when the system detects a vehicle in the driving path.

Forward collision alert ⇨ 191.

If this symbol does not display, or displays briefly, adaptive cruise control will not respond to vehicles ahead.

Deactivation

Adaptive cruise control is deactivated by the driver when:

- is pressed.
- Brake pedal is applied.
- Clutch pedal is depressed for more than four seconds.
- Gear selector lever of automatic transmission is moved to **N**.

The system is also automatically deactivated when:

- Vehicle speed accelerates above 190 km/h or slows down below 15 km/h (on vehicles with automatic transmission it slows down to a stop without deactivating within two minutes).
- The Traction Control system is operating.
- The Electronic Stability Control is operating.
- There is no traffic and nothing detected on the road sides for several minutes. In this case there are no radar echoes and the sensor may report that it is blocked.
- The collision imminent braking system is applying the brakes.
- The radar sensor is blocked by an ice or water film.
- A fault is detected in the radar, engine or brake system.

Additionally the system is automatically deactivated on vehicles with automatic transmission (full speed range adaptive cruise control) when:

- The electric parking brake is applied.
- The vehicle is being held to a stop by the system for more than two minutes.
- The vehicle stops, the driver safety belt is released and the driver's door is opened.

When adaptive cruise control is deactivated automatically, the control indicator or illuminates white and a warning message is displayed as a pop-up in the Driver Information Centre.

The stored speed is maintained.

⚠Warning

When adaptive cruise control is deactivated, the driver must take over full brake and engine control.

Switching off

Press to switch off adaptive cruise control. The control indicator or extinguishes. The stored speed is deleted.

Switching off the ignition also switches off adaptive cruise control and deletes the stored speed.

Driver's attention

- Use adaptive cruise control carefully on bends or mountain roads, as it can lose the vehicle ahead and need time to detect it again.
- Do not use the system on slippery roads as it can create rapid changes in tyre traction (wheel spinning), so that you could lose control of the vehicle.
- Do not use adaptive cruise control during rain, snow or heavy dirt, as the radar sensor can be covered by a water film, dust, ice or snow. This reduces or suppresses completely the visibility. In case of sensor blockage, clean the sensor cover.

System limits

- The system's automatic brake force does not permit hard braking and the braking level may not be sufficient to avoid a collision.
- After a sudden lane change, the system needs a certain time to detect the next preceding vehicle. So if a new vehicle is detected, the system may accelerate instead of braking.
- Adaptive cruise control does ignore the oncoming traffic.
- Adaptive cruise control does not brake for pedestrians, animals, very slow speed driving or stopped vehicles.
- Don't use adaptive cruise control when towing a trailer.

Bends

The adaptive cruise control calculates a predicted path based on the centrifugal force. This predicted path considers the current bend characteristic, but cannot consider a future bend change. The system may lose the current vehicle ahead or consider a vehicle which is not in the actual lane. This can happen when entering or exiting a bend or if the bend gets stronger or weaker. If it no longer detects any vehicle ahead, then control indicator will extinguish.

If the centrifugal force is too high in a bend, the system slows down the vehicle slightly. This braking level is not designed to avoid spinning-off the bend. The driver is responsible for reducing the selected speed before entering a bend and in general to adapt the speed to the road type and to existing speed limits.

Motorways

On motorways, adapt the set speed to the situation and the weather. Always consider that adaptive cruise control has a limited visibility range, a limited braking level and a certain reaction time to verify if a vehicle is on the driving path or not. Adaptive cruise control may not be able to brake the vehicle in time to avoid a collision with a much slower vehicle or after a lane change. This is particularly true if driving fast or if the visibility is reduced due to weather conditions.

While entering or exiting a motorway, adaptive cruise control may lose the vehicle ahead and accelerate up to the set speed. For this reason, decrease the set speed before the exit or before the entry.

Vehicle path changes

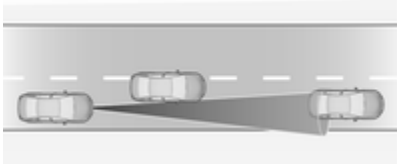

If another vehicle enters your driving path, adaptive cruise control will first consider the vehicle when it is completely in your path. Be ready to take action and press the brake pedal, if you need to brake more quickly.

Hill and trailer considerations

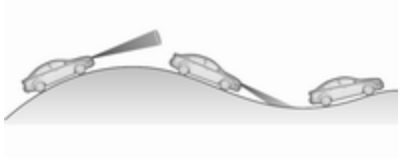

System performance on hills depends on vehicle speed, vehicle load, traffic conditions and the road gradient. It may not detect a vehicle in your path while driving on hills. On steep hills, you may have to use the accelerator pedal to maintain your vehicle speed. When going downhill you may have to brake to maintain or reduce your speed.

Note that applying the brake deactivates the system. It is not recommended to use adaptive cruise control on steep hills.

Radar unit

The radar unit is mounted behind the radiator grille below the brand emblem.

⚠ Warning

The radar unit was aligned carefully during manufacture. Therefore, after a frontal accident, do not use the system. The front bumper may appear to be intact, however the sensor behind can be out of position and react incorrectly. After an accident, consult a workshop to verify and correct the adaptive cruise control sensor position.

Settings

Settings can be changed in the vehicle personalisation menu in the Colour-Info-Display.

Select the relevant setting in **Settings**, ➧ **Vehicle** in the Colour-Info-Display.

Colour-Info-Display ⇨ 118.

Vehicle personalisation ⇨ 122.

Fault

If the adaptive cruise control does not work due to temporary conditions (e.g. blockage by ice) or if there is a permanent system error, then a message is displayed in the Driver Information Centre.

Vehicle messages ⇨ 120.

Forward collision alert

The forward collision alert can help to avoid or reduce the harm caused by front-end crashes.

A vehicle ahead is indicated by a control indicator 🚗.

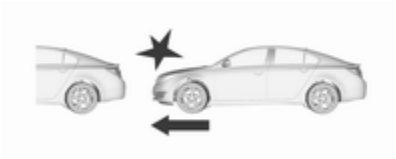

If a vehicle directly ahead is approached too quickly, a warning chime and alert in the Driver Information Centre is provided.

A precondition is that forward collision alert is activated in the vehicle personalisation menu ⇨ 122 or that it is not deactivated by pressing (depending on the system, see below).

Depending on the vehicle's equipment, there are two variants of the forward collision alert available:

- **Forward collision alert based on radar system**

  on vehicles equipped with adaptive cruise control ⇨ 184.
- **Forward collision alert based on front camera system**

  on vehicles with no cruise control or traditional cruise control only ⇨ 181.

Forward collision alert based on radar system

The system uses the radar sensor behind the radiator grille to detect a vehicle directly ahead, in your path, within a distance of max. 150 metres.

Activation

Forward collision alert operates automatically above walking speed, provided that **Auto Collision Preparation** setting is not deactivated in the vehicle personalisation menu ⇨ 122.

Selecting the alert sensitivity

The alert sensitivity can be set to near, medium or far.

Press , the current setting is shown in the Driver Information Centre. Press again to change the alert sensitivity. The setting is also displayed in the Driver Information Centre.

Note that the alert timing sensitivity setting is shared with the following distance setting of the adaptive cruise control ⇨ 184. So changing the alert timing sensitivity changes the adaptive cruise control following distance setting.

Alerting the driver

A green illuminated vehicle ahead control indicator illuminates in the instrument cluster when the system has detected a vehicle in the driving path. The control indicator changes to yellow when the distance to a preceding moving vehicle gets too small or when approaching another vehicle too rapidly.

Caution

The colour lighting of this control indicator does not correspond to local traffic laws on following distance. The driver bears full responsibility for maintaining safe following distance according to applicable traffic rules, weather and road conditions etc. at all times.

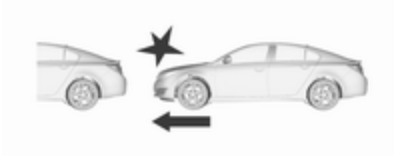

If a collision is imminent the collision alert symbol pops-up in the Driver Information Centre and a warning chime sounds. Depress the brake pedal, if it is required by the situation.

Settings

Settings can be changed in the vehicle personalisation menu in the Colour-Info-Display.

Select the relevant setting in **Settings**, ➧ **Vehicle** in the Colour-Info-Display.

Colour-Info-Display ⇨ 118.

Vehicle personalisation ⇨ 122.

Forward collision alert based on front camera system

Forward collision alert uses the front camera system in the windscreen to detect a vehicle directly ahead, in your path, within a distance of approx. 60 metres.

Activation

Forward collision alert operates automatically above 40 km/h, if it is not deactivated by pressing , see below.

Selecting the alert sensitivity

The alert sensitivity can be set to near, medium or far.

Press ⚙, the current setting is shown in the Driver Information Centre. Press ⚙ again to change the alert sensitivity.

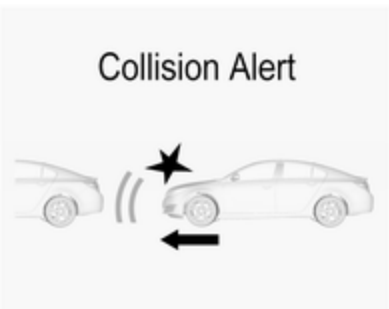

Alerting the driver

A green illuminated vehicle ahead control indicator 🚗 illuminates in the instrument cluster when the system has detected a vehicle in the driving path.

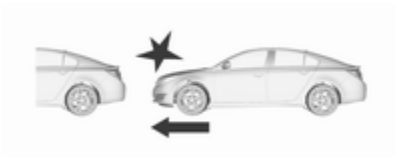

When the distance to a preceding moving vehicle gets too small or when approaching another vehicle too rapidly and a collision is imminent, the collision alert symbol pops-up in the Driver Information Centre.

Simultaneously, a warning chime sounds. Depress the brake pedal, if it is required by the situation.

Deactivation

The system can be deactivated. Press ⚙ repeatedly until **Forward Collision Alert Off** appears in the Driver Information Centre.

General information for both variants of forward collision alert

⚠Warning

Forward collision alert is just a warning system and does not apply the brakes. When approaching a vehicle ahead too rapidly, it may not provide you enough time to avoid a collision.

The driver accepts full responsibility for the appropriate following distance based on traffic, weather and visibility conditions.

The complete attention of the driver is always required while driving. The driver must always be ready to take action and apply the brakes.

System limitations

The system is designed to warn only for vehicles, but may react also to other metallic objects.

In the following cases, forward collision alert may not detect a vehicle ahead or sensor performance may be limited:

- on winding roads
- when weather limits visibility, e.g. fog, rain, or snow
- when the sensor is blocked by snow, ice, slush, mud, dirt, or windscreen damage

Following distance indication

The following distance indication displays the distance to a preceding moving vehicle. The system uses, depending on the vehicle equipment, either the radar behind the radiator grille or the front camera in the windscreen to detect the distance of a vehicle directly ahead in your path. It is active at speeds above 40 km/h.

When a preceding vehicle is detected ahead, the distance is indicated in seconds, displayed on a page in the Driver Information Centre ⇨ 111.

On Baselevel display set **Settings** with the Menu button and select **Following distance indication** via the adjuster wheel on the turn signal lever ⇨ 111.

On Midlevel or Uplevel display, select **Info** menu and press ∨ to select **Following distance indication** ⇨ 111.

The minimum indicated distance is 0.5 seconds.

If there is no vehicle ahead or the vehicle ahead is out of range, two dashes will be displayed: -.- s.

If Adaptive cruise control is active, this page shows the following distance setting instead ⇨ 184.

Active emergency braking

Active emergency braking can help to reduce the damage from crashes with vehicles and obstacles directly ahead, when a collision can no longer be avoided either by manual braking or by steering. Before the active emergency braking applies, the driver is warned by the forward collision alert ⇨ 191.

The feature uses various inputs (e.g. radar sensor, brake pressure, vehicle speed) to calculate the probability of a frontal collision.

Active emergency braking operates automatically above walking speed, provided that **Auto Collision Preparation** setting is not deactivated in the vehicle personalisation menu ⇨ 122.

The system includes:

- **brake preparation system**
- **emergency automatic braking**
- **forward looking brake assist**

⚠Warning

This system is not intended to replace the driver responsibility for driving the vehicle and looking ahead. Its function is limited to supplemental use only. The driver must continue to apply the brake pedal as the driving situation dictates.

Brake preparation system

When approaching a vehicle ahead so quickly that a collision is likely, the brake preparation system slightly pressurises the brakes. This reduces the response time, when a manual or automatic braking is requested.

The brake system is prepared so that braking can occur more rapidly.

Emergency automatic braking

After the brake preparation and just before the imminent collision, this function automatically applies limited braking to reduce the impact speed of the collision.

Below a speed of 18 km/h the system can apply full braking.

Forward looking brake assist

In addition to the brake preparation system and emergency automatic braking, the forward looking brake assist function makes the brake assist more sensitive. Therefore, depressing the brake pedal less strongly results in immediate hard braking. This function helps the driver brake quicker and harder before the imminent collision.

⚠Warning

Active emergency braking is not designed to apply hard autonomous braking or to automatically avoid a collision. It is designed to reduce the vehicle speed before a collision. It may not react for stopped vehicles, pedestrians or animals. After a sudden lane change, the system needs a certain time to detect the next preceding vehicle.

The complete attention of the driver is always required while driving. The driver shall always be ready to take action and apply the brakes and steer to avoid collisions. The system is designed to work with all occupants wearing their seat belts.

System limitations

The active emergency braking has limited or no function during rain, snow or heavy dirt, as the radar sensor can be covered by a water film, dust, ice or snow. In case of sensor blockage, clean the sensor cover.

In some cases, the active emergency braking system may provide an automatic braking in situations that seem to be unnecessary, for instance in parking garages, due to traffic signs in a curve or due to vehicles in another lane. This is normal operation, the vehicle does not need service. Firmly apply the accelerator pedal to override the automatic braking.

Settings

Settings can be changed in the vehicle personalisation menu in the Colour-Info-Display.

Select the relevant setting in **Settings**, ➧ **Vehicle** in the Colour-Info-Display.

Colour-Info-Display ⇨ 118.

Vehicle personalisation ⇨ 122.

Fault

In the event of a system service requirement, a message is displayed in the Driver Information Centre.

If the system does not work as it should do, vehicle messages are displayed in the Driver Information Centre.

Vehicle messages ⇨ 120.

Parking assist

⚠Warning

The driver bears full responsibility for the parking manoeuvre.

Always check the surrounding area when driving backwards or forwards while using parking assist system.

Front-rear parking assist

The front-rear parking assist measures the distance between the vehicle and obstacles in front and behind the vehicle. The system gives acoustic signals and display messages.

The system has four ultrasonic parking sensors each in the rear and front bumper.

It uses two different acoustic warning signals for the front and rear monitoring areas, each with a different tone frequency. The signal

for front obstacles sounds via the front speakers, for rear obstacles it sounds from the rear of the vehicle.

Activation

When reverse gear is engaged, the front and rear parking assist is ready to operate.

The front parking assist is also activated automatically at a speed up to 11 km/h.

An illuminated LED in the parking assist button P⁄⁄▲ indicates that the system is ready to operate.

If the vehicle exceeds a speed of 11 km/h, the front parking assist is deactivated. The front parking assist is always reactivated when vehicle speed drops below 11 km/h.

Indication

The system warns the driver with acoustic signals against potentially hazardous obstacles behind and in front of the vehicle. Depending on which side of the vehicle is closer to an obstacle, you will hear acoustic warning signals on the respective side of the vehicle. The interval between the sounds becomes shorter as the vehicle gets closer to that obstacle. When the distance is less than approx. 30 cm, the sound is continuous.

Additionally, the distance to obstacles is shown in the Driver Information Centre ⇨ 111.

The distance to a front and rear obstacle is indicated by changing distance lines around the vehicle.

Rear obstacles are indicated acoustically and visually at the same time.

Front obstacles are indicated visually first. At distances less than 80 cm an acoustic signal also sounds.

The distance indication in the Driver Information Centre can be inhibited by vehicle messages with a higher priority. After approving the message by pressing **SET/CLR** on the turn signal lever or ✔ on right steering wheel control, distance indication appears again.

Deactivation

The rear parking assist automatically switches off when reverse gear is disengaged.

The front parking assist is deactivated automatically at a speed above 11 km/h.

Manual deactivation is possible by pressing the parking assist button P briefly.

When the system is deactivated, the LED in the button extinguishes.

Additionally, **Park Assist Off** pops-up in the Driver Information Centre when the system is deactivated manually.

After a manual deactivation, the front parking assist is activated again if the parking assist button P is pressed or if reverse gear is engaged.

Fault

In the event of a fault in the system or if the system does not work due to temporary conditions, e.g. ice covered sensors, a message is displayed in the Driver Information Centre.

Vehicle messages ⇨ 120.

Advanced parking assist

⚠ Warning

The driver bears full responsibility for accepting the parking slot suggested by the system and the parking manoeuvre.

Always check the surrounding area in all directions when using advanced parking assist.

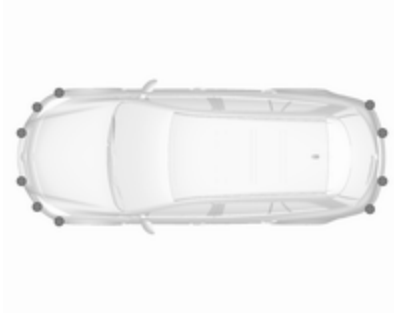

The advanced parking assist system manoeuvres the driver into a parking slot by giving instructions on the Driver Information Centre and acoustic signals. The driver must control acceleration, braking, steering and gear shifting.

The system uses the sensors of the parking assist system in combination with two additional sensors on both sides of the front and rear bumper.

Activation

When searching for a parking slot, the system is ready to operate by pressing button P.

The system can only be activated at a speed up to 30 km/h and the system searches for a parking slot at a speed up to 30 km/h.

The maximum allowed parallel distance between the vehicle and a row of parked cars is 1.8 metres.

Functionality

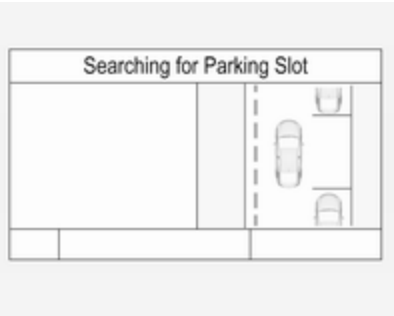

When the vehicle passes a row of cars and the system is activated, the advanced parking assist system begins looking for a suitable parking slot. When a suitable slot is detected, a visual feedback and acoustic signals are given in the Driver Information Centre.

If the driver does not stop the vehicle within 10 metres after a parking slot is proposed, the system starts to search for another suitable parking slot.

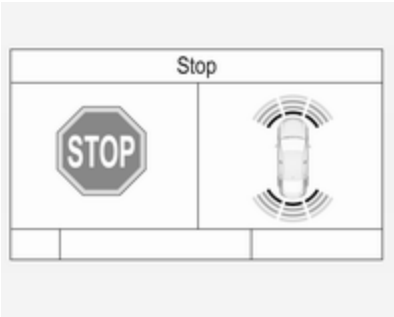

The parking slot suggestion of the system is accepted when the vehicle is stopped by the driver within 10 metres after the "Stop" message is given. The system calculates the optimal route into the parking slot. Then it manoeuvres the driver into the slot by giving detailed instructions.

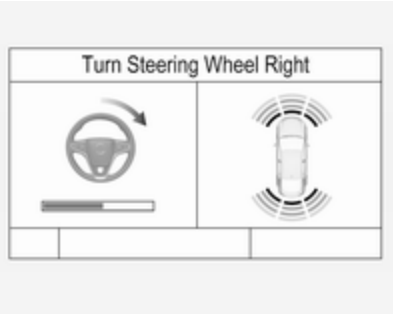

The instructions in the display show:

- A hint when driving faster than 30 km/h.
- The demand to stop the vehicle, when a parking slot is detected.
- The direction of driving during the parking manoeuvre.
- The steering wheel position during parking.
- For some of the instructions a progress bar is shown.

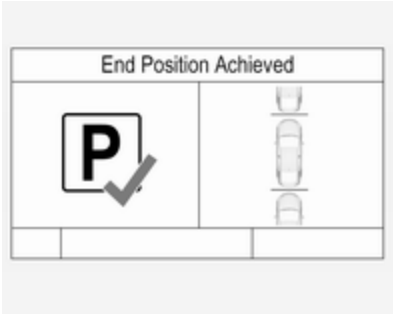

A successful parking manoeuvre is indicated by the End position message.

Always pay attention to the sound of the front-rear parking assist. Continuous sound means that the distance to an obstacle is less than approx. 30 cm.

Changing the parking side

The system is configured to detect parking slots on the passenger side. To detect parking slots on the driver side, press P⊡ for approx. 2 seconds.

Display priorities

After activating the advanced parking assist, a message appears in the Driver Information Centre. Advanced parking assist indication in the Driver Information Centre can be inhibited by vehicle messages with a higher priority. After approving the message by pressing **SET/CLR** on the turn signal lever or the ✔ button in the steering wheel controls, advanced parking assist instructions appear again and the parking manoeuvre can be continued.

Deactivation

The system is deactivated by:

- pressing P⊡
- parking manoeuvre successfully ended
- driving faster than 30 km/h
- switching off the ignition

Note

If advanced parking assist is deactivated manually or by the system (e.g. parking manoeuvre ended), the front and rear parking assist is also deactivated.

Reactivate front and rear parking assist by pressing parking assist button P or engaging reverse gear once.

Deactivation by the driver or by the system during manoeuvring will be indicated by **Parking Deactivated** in the Driver Information Centre.

Fault

A message appears in the Driver Information Centre when:

- There is a fault in the system.
- The driver did not successfully complete the parking manoeuvre.
- The system is not operational.

If an object is detected during parking instructions, **Stop** is indicated in the Driver Information Centre. Removing the object will resume the parking manoeuvre. If the object is not removed, the system will be deactivated. Press P to activate the system and search for a new parking slot.

Basic notes on using parking assist systems

⚠ Warning

Under certain circumstances, various reflective surfaces on objects or clothing as well as external noise sources may cause the system to fail to detect obstacles.

Special attention must be paid to low obstacles which can damage the lower part of the bumper.

Caution

Performance of the system can be reduced when sensors are covered, e.g. by ice or snow.

Performance of the parking assist system can be reduced due to heavy loading.

Special conditions apply if there are taller vehicles in the vicinity (e.g. off-road vehicles, mini vans, vans). Object identification and

correct distance indication in the upper part of these vehicles cannot be guaranteed.

Objects with a very small reflection cross-section, e.g. objects of narrow size or soft materials, may not be detected by the system.

Parking assist systems do not detect objects outside the detection range.

Note
The parking assist system can be activated and deactivated by changing the settings in the Info-Display.

Vehicle personalisation ⇨ 122.

Note
The parking assist system automatically detects factory-fitted towing equipment. It is deactivated when the connector is plugged in.

It is possible that the sensor detects a non-existing object (echo disturbance) caused by external acoustical or mechanic disturbances.

Advanced parking assist system may not respond to changes in the parking space after initiating a parallel parking manoeuvre.

Note
After production, the system requires a calibration. For optimal parking guidance, a driving distance of at least 35 km, including a number of bends, is required.

Side blind spot alert

The side blind spot alert system detects and reports objects on either side of the vehicle, within a specified "blind spot" zone. The system alerts visually in each exterior mirror, when detecting objects that may not be visible in the interior and exterior mirrors.

The system's sensors are located in the bumper on the left and right side of the vehicle.

⚠ Warning

Side blind spot alert does not replace driver vision.

The system does not detect:

- vehicles outside the side blind zones which may be rapidly approaching
- pedestrians, cyclists or animals

Before changing a lane, always check all mirrors, look over the shoulder and use the turn signal.

When the system detects a vehicle in the side blind zone while driving forwards, either while passing a vehicle or being passed, the yellow warning symbol will illuminate in the relevant exterior mirror. If the driver then activates the turn signal, the warning symbol starts flashing yellow as a warning not to change lanes.

Note
If the passing vehicle is at least 10 km/h faster than the passed vehicle, the warning symbol in the relevant exterior mirror may not illuminate.

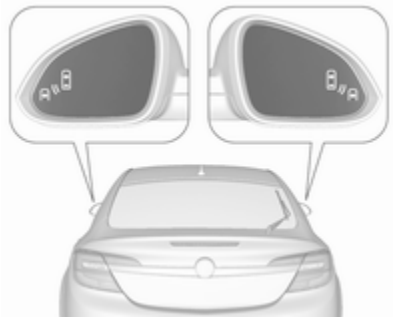

When the vehicle is started, both exterior mirror displays will briefly come on to indicate that the system is operating.

If the vehicle is equipped with lane change alert ⇨ 205, the symbol ★ is displayed in the mirrors.

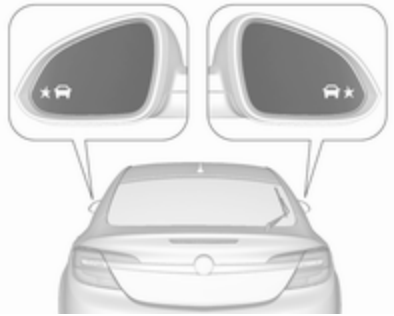

The system can be activated or deactivated in the vehicle personalisation.

Select the relevant setting in **Settings**, ➧ **Vehicle** in the Colour-Info-Display.

Colour-Info-Display ⇨ 118.

Vehicle personalisation ⇨ 122.

Deactivation is indicated by a message in the Driver Information Centre.

Detection zones

The system sensor covers a zone of approx. 3.5 metres on both sides of the vehicle. This zone starts at each exterior mirror and extends rearwards by approx. 3 metres. The height of the zone is between approx.0.5 metres and 2 metres off the ground.

The system is deactivated if the vehicle is towing a trailer.

Side blind spot alert is designed to ignore stationary objects such as guardrails, posts, curbs, walls and beams. Parked vehicles or oncoming vehicles are not detected.

Fault

Occasional missed alerts can occur under normal circumstances.

Side blind spot alert does not operate when the left or right corners of the rear bumper are covered with mud, dirt, snow, ice, slush, or in heavy rainstorms. Cleaning instructions ⇨ 270.

In the event of a fault in the system or if the system does not work due to temporary conditions, a message is displayed in the Driver Information Centre. Seek the assistance of a workshop.

Lane change alert

Additional to the side blind spot alert ⇨ 203, lane change alert recognizes rapidly approaching vehicles from behind on parallel lanes next to your vehicle.

If the vehicle is equipped with lane change alert, side blind spot alert is always included.

The system alerts visually in each exterior mirror when detecting rapidly approaching vehicles from behind.

The radar distance sensors are located in the rear bumper.

⚠ Warning

Lane change alert does not replace driver vision.

Before changing a lane, always check all mirrors, look over the shoulder and use the turn signal.

When the system detects an approaching vehicle from behind which drives considerably faster, the amber warning symbol ★🚗 will illuminate in the relevant exterior mirror. If the driver then activates the turn signal, the warning symbol ★🚗 starts flashing amber as a warning not to change lanes.

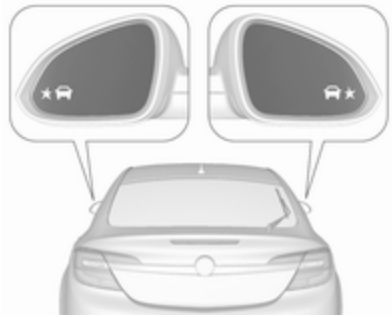

When the vehicle is started, both exterior mirror displays will briefly come on to indicate that the system is operating.

Detection zones

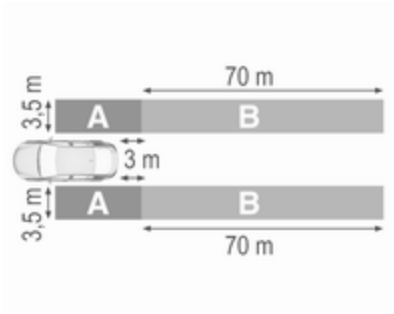

The system sensors cover a zone of approx. 3.5 metres parallel on both vehicle sides and approx. 3 metres rearwards on side blind zone alert **(A)** and approx. 70 metres rearwards on lane change alert **(B)** on parallel lanes. The zones start at each exterior mirror. The height of the zone is approx. between 0.5 metres and 2 metres off the ground.

Deactivation

Activation or deactivation of the lane change alert can be set in the vehicle personalisation menu in the Colour-Info-Display.

Select the relevant setting in **Settings**, ➧ **Vehicle** in the Colour-Info-Display.

Colour-Info-Display ⇨ 118.

Vehicle personalisation ⇨ 122.

The system is deactivated if the vehicle is towing a trailer.

Deactivation is indicated by a message in the Driver Information Centre.

Note
After production, the system requires a calibration. For optimal performance, drive as soon as possible on a straight highway road with roadside objects, e.g. guardrails and barriers for some distance.

Fault

Occasional missed alerts can occur under normal circumstances or in sharp curves. The system can temporarily alert of objects in the blind spot at specific weather conditions (rain, hail etc). Driving on a wet road or in the transitions from a dry area to a wet area can cause the system to light up, as water splash can be interpreted as an object. Otherwise the system may light up due to guardrails, signs, trees, shrubs or other immobile objects. This is normal operation and the system does not need to be serviced.

Lane change alert may not operate when the left or right corners of the rear bumper are covered with mud, dirt, snow, ice or slush. Cleaning instructions ⇨ 270.

In the event of a fault in the system or if the system does not work due to temporary conditions, a message is displayed in the Driver Information Centre. Seek the assistance of a workshop.

Rear view camera

The rear view camera assists the driver when reversing, by displaying a view of the area behind the vehicle.

The view of the camera is displayed in the Colour-Info-Display.

⚠ Warning

The rear view camera does not replace driver vision. Note that objects that are outside the camera's field of view and the advanced parking assist sensors, e.g. below the bumper or underneath the vehicle, are not displayed.

Do not reverse the vehicle by only looking at the Info-Display and check the surrounding area behind and around the vehicle before reversing.

Activation

Rear view camera is automatically activated when reverse gear is engaged.

Functionality

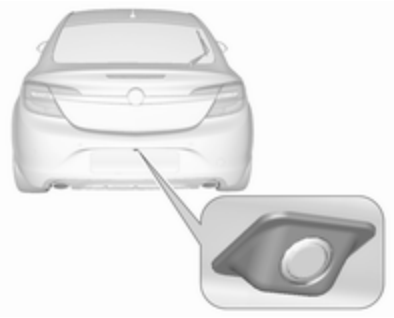

The camera is mounted between the number plate lights and has a viewing angle of 130°.

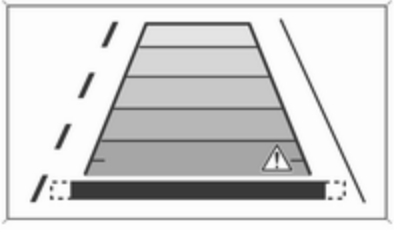

Due to the high position of the camera the rear bumper can be seen on the display as a guide to position.

The area displayed by the camera is limited. The distance of the image that appears on the display differs from the actual distance.

Guiding lines

Dynamic guiding lines are horizontal lines in 1 metre intervals projected on the picture to define the distance to shown objects.

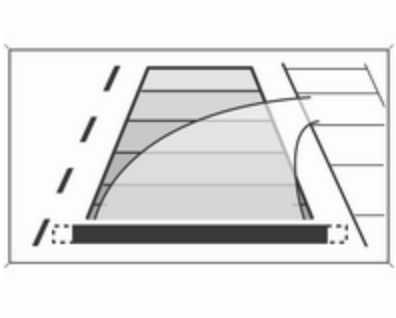

Trajectory lane of the vehicle is shown in accordance with the steering angle.

The function can be deactivated in the vehicle personalisation menu in the Colour-Info-Display.

Select the relevant setting in **Settings**, ➧ **Vehicle** in the Colour-Info-Display.

Colour-Info-Display ⇨ 118.

Vehicle personalisation ⇨ 122.

Warning symbols

Warning symbols are indicated as triangles ⚠on the picture which show obstacles detected by the rear sensors of the advanced parking assist.

Additionally ⚠appears on the top line of the Info-Display with the warning to check the vehicle surrounding.

Deactivation

The camera is deactivated when a certain forward speed is exceeded or if reverse gear is not engaged for approx. 10 seconds.

Activation or deactivation of the rear view camera can be set in the vehicle personalisation menu in the Colour-Info-Display.

Select the relevant setting in **Settings**, ➧ **Vehicle** in the Colour-Info-Display.

Colour-Info-Display ⇨ 118.

Vehicle personalisation ⇨ 122.

Fault

Fault messages are displayed with a ⚠on the top line of the Info-Display.

The rear view camera may not operate properly when:

- The surrounding is dark.
- The sun or the beam of headlights is shining directly into the camera lens.
- Ice, snow, mud, or anything else covers the camera lens. Clean the lens, rinse it with water, and wipe it with a soft cloth.
- The tailgate is not closed correctly.
- The vehicle is towing a trailer.
- The vehicle had a rear end accident.
- There are extreme temperature changes.

Rear cross traffic alert

Additional to the rear view camera ⇨ 206, rear cross traffic alert warns of cross traffic from left or right side when driving rearwards. When cross traffic is recognized and the rear view camera is activated, a warning triangle with a direction arrow ⚠➡ appears on the Colour-Info-Display, showing the direction of the traffic. Furthermore, three beeps will sound from the speaker on the respective side.

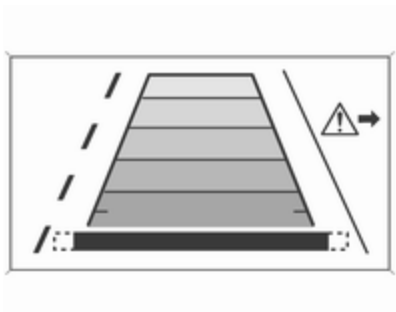

The radar distance sensors are located sideways in the rear bumper.

⚠Warning

The rear cross traffic alert does not replace driver vision. Note that objects that are outside sensors, e.g. below the bumper or underneath the vehicle, are not displayed.

Pedestrians, children or animals are not detected.

Do not reverse the vehicle by only looking at the Info-Display and check the surrounding behind and around the vehicle before reversing.

Activation

Rear cross traffic alert is automatically activated together with the rear view camera when reverse gear is engaged.

Detection zones

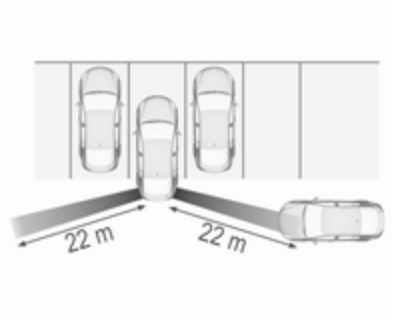

The system sensors cover a zone of approx. 20 metres to the left or right side behind the vehicle.

Deactivation

Rear cross traffic alert is deactivated together with the rear view camera when a certain forward speed is exceeded or if reverse gear is not engaged for approx. 10 seconds.

Activation or deactivation of the rear cross traffic alert can be set in the vehicle personalisation menu in the Colour-Info-Display.

Select the relevant setting in **Settings**, ➧ **Vehicle** in the Colour-Info-Display.

Colour-Info-Display ⇨ 118.

Vehicle personalisation ⇨ 122.

Fault

The system may not operate properly when:

- Ice, snow, mud, or anything else covers the sensors.
- The vehicle is towing a trailer.
- The vehicle had a rear end accident.
- There are extreme temperature changes.

Traffic sign assistant

Functionality

The traffic sign assistant system detects designated traffic signs via a front camera and displays them in the Driver Information Centre.

Traffic signs, which will be detected, are:

Limit- and no passing signs

- speed limit
- no passing
- end of speed limit
- end of no passing

Road signs

Beginning and end of:

- motorways
- A-roads
- play streets

Add on signs

- additional hints to traffic signs
- restriction of trailer towing
- tractor constraints
- wet warning
- ice warning
- direction arrows

Speed limit signs and no passing signs are displayed in the Driver Information Centre until the next speed limit sign or end of speed limit is detected or up to a defined sign timeout.

Indication of multiple signs on the display is possible.

An exclamation mark in a frame indicates that there is an additional sign detected which cannot be clearly identified by the system.

A positive sign in an orange box indicates that there is an additional information which is explained on the **Traffic sign detection** page in the Driver Information Centre, see "Display indication" below.

The system is active up to a speed of 200 km/h depending on the lighting conditions. At night the system is active up to a speed of 160 km/h.

As soon as the speed becomes slower than 55 km/h the display will be reset and the content of the traffic sign page will be cleared, e.g. when entering a city zone. The next recognized speed indication will be displayed.

Display indication

Traffic signs are displayed on the **Traffic sign detection** page in the Driver Information Centre.

On Baselevel display, select **Settings** by pressing **MENU** and select **Traffic sign detection** entry with the adjuster wheel on the turn signal lever ⇨ 111.

On Midlevel and Uplevel display select **Info** menu with the right steering wheel buttons and press ∨ to select **Traffic sign detection** ⇨ 111.

When another page on the Driver Information Centre menu was selected and then **Traffic sign detection** page is chosen again, the last recognised traffic sign will be displayed.

Alert function

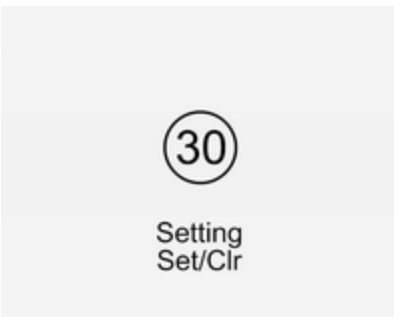

Once activated, speed limit and no passing signs are displayed as pop-up alerts in the Driver Information Centre.

The alert function can be activated or deactivated in the setting menu of the traffic sign assistant page by pressing **SET/CLR** on the turn signal lever or ✔ on the steering wheel.

Illustration shows baselevel Driver Information Centre.

Illustration shows midlevel or uplevel Driver Information Centre.

When the setting page is displayed, select **Off** or set alerts ☐ to deactivate alert function. Reactivate by selecting **On** or alerts ☑.

When switching on the ignition, alert function is deactivated.

Pop-up alert is displayed for approx. eight seconds in the Driver Information Centre.

System reset

The content of the traffic sign memory can be cleared in the setting menu of the traffic sign assistant page by selecting **Reset** and confirm by pressing **SET/CLR** on the turn signal lever or ✔ on right steering wheel control. Upon successful reset, a chime will sound and the following symbol is indicated until the next traffic sign is detected.

In some cases, traffic sign assistant is cleared up automatically by the system.

Fault

The traffic sign assistant system may not operate correctly when:

- The area of the windscreen, where the front camera is located, is not clean or affected by foreign items, e.g. stickers.
- Traffic signs are completely or partially covered or difficult to discern.
- There are adverse environmental conditions, e.g. heavy rain, snow, direct sunlight or shadows. In this event, **No Traffic Sign Detection due to Weather** is indicated on the display.
- Traffic signs are incorrectly mounted or damaged.
- Traffic signs do not comply with the Vienna Convention on traffic signs (Wiener Übereinkommen über Straßenverkehrszeichen).

Caution

The system is intended to help the driver within a defined speed range to recognise certain traffic signs. Do not ignore traffic signs which are not displayed by the system.

The system does not recognise any other than the conventional traffic signs that might give or end a speed limit.

Do not let this special feature tempt you into taking risks when driving.

Always adapt speed to the road conditions.

The driver assistance systems do not relieve the driver from full responsibility for vehicle operation.

Lane departure warning

The lane departure warning system observes the lane markings between which the vehicle is driving, via a front camera. The system detects lane

changes and warns the driver in the event of an unintended lane change by visual and acoustic signals.

Criteria for the detection of an unintended lane change are:

- No operation of turn signals.
- No brake pedal operation.
- No active accelerator operation or speeding-up.
- No active steering.

If the driver is active, no warning will be issued.

Activation

The lane departure warning system is activated by pressing . The illuminated LED in the button indicates that the system is switched on. When the control indicator in the instrument cluster illuminates green, the system is ready to operate.

The system is only operable at vehicle speeds above 56 km/h and if lane markings are available.

When the system recognises an unintended lane change, the control indicator changes to yellow and flashes. Simultaneously a chime sound is activated.

Deactivation

The system is deactivated by pressing ; the LED in the button extinguishes.

At speeds below 56 km/h the system is inoperable.

Fault

The lane departure warning system may not operate properly when:

- The windscreen is not clean or affected by foreign items, e.g. stickers.
- There are adverse environmental conditions, e.g. heavy rain, snow, direct sunlight or shadows.

The system cannot operate when no lane marking is detected.

Fuel

Fuel for petrol engines

Only use unleaded fuel that complies with European standard EN 228 or E DIN 51626-1 or equivalent.

The engine is capable of running with fuel that contains up to 10% ethanol (e.g. named E10).

Use fuel with the recommended octane rating. The engine-specific requirements are given in the engine data overview ⇨ 282. A country-specific label at the fuel filler flap can supersede the requirement.

Caution

Do not use fuel or fuel additives that contain metallic compounds such as manganese-based additives. This may cause engine damage.

Caution

Use of fuel that does not comply to EN 228 or E DIN 51626-1 or equivalent can lead to deposits or engine damage.

Caution

Use of fuel with too low an octane rating could lead to uncontrolled combustion and engine damage.

Fuel for diesel engines

Only use diesel fuel that complies with EN 590.

In countries outside the European Union use Euro-Diesel fuel with a sulfur concentration below 50 ppm.

Caution

Use of fuel that does not comply to EN 590 or similar can lead to engine powerloss, increased wear or engine damage.

Do not use marine diesel oils, heating oils, Aquazole and similar diesel-water emulsions. Diesel fuels must not be diluted with fuels for petrol engines.

Fuel for liquid gas operation

Liquid gas is known as LPG (Liquefied Petroleum Gas) or under its French name GPL (Gaz de Pétrole Liquéfié). LPG is also known as Autogas.

LPG consists mainly of propane and butane. The octane rating is between 105 and 115, depending on the butane proportion. LPG is stored as a liquid at a pressure of approximately five to ten bar.

The boiling point depends on the pressure and the mixing ratio. At ambient pressure, it is between -42 °C (pure propane) and -0.5 °C (pure butane).

Caution
The system works at an ambient temperature of approx. -8 °C to 100 °C.

Full functioning of the LPG system can only be guaranteed with liquid gas which complies with the minimum requirements of DIN EN 589.

Fuel selector

Press **LPG** to switch between petrol and liquid gas operation as soon as the required parameters (coolant temperature, gas temperature and minimum engine speed) have been reached. The requirements are usually fulfilled after approximately 60 seconds (depending on exterior temperature) and the first firm press on the accelerator. The status LED shows the current operating mode.

▬ off	:	petrol operation
▬ flashes	:	checking conditions for fuel transition to liquid gas operation. Illuminates if conditions are fulfilled.
▬ illuminates	:	liquid gas operation
▬ flashes five times and extinguishes	:	liquid gas tank is empty or failure in liquid gas system. A message is displayed in the Driver Information Centre.

If the fuel tank is empty, the engine will not start.

The selected fuel mode is stored and reactivated at the next ignition cycle if conditions allow.

As soon as the liquid gas tank is empty, petrol operation is automatically engaged until the ignition is switched off.

When switching automatically between petrol or gas operation, a brief delay of engine tractive power may be noticeable.

Every six months, run the petrol tank down until control indicator Insignia or ⛽ illuminates, then refuel. This helps maintain fuel quality and system function for petrol operation.

Fill the tank completely at regular intervals to prevent corrosion in the tank.

Faults and remedies

If gas mode is not possible, check the following:

- Is there enough liquid gas present?
- Is there enough petrol present for starting?

Due to extreme temperatures in combination with the gas composition, it may take slightly longer before the system switches from petrol to gas mode.

In extreme situations, the system may also switch back to petrol mode if the minimum requirements are not fulfilled. If conditions allow, it may be possible to manually switch back to liquid gas operation.

Seek the assistance of a workshop in the event of all other faults.

Caution

Repairs and adjustments may only be made by trained specialists in order to maintain the safety and warranty on the LPG system.

Liquid gas is given a particular odour (odorised) so that any leaks can be detected easily.

⚠ Warning

If you smell gas in the vehicle or in the immediate vicinity, switch to petrol mode immediately. No smoking. No naked flames or ignition sources.

If the gas odour persists, do not start the engine. If possible, close the manual shut-off valve on the multivalve. The multivalve is located on the liquid gas tank in the load compartment, underneath the rear floor storage cover ⇨ 75.

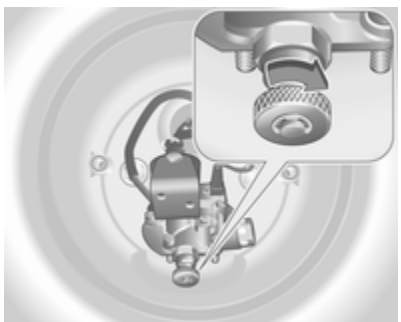

Turn the thumb wheel clockwise.

If no further gas odour is perceptible when the manual shut-off valve is closed, the vehicle can be used in petrol mode. If the gas odour persists, do not start the engine. Have the cause of the fault remedied by a workshop.

When using underground car parks, follow the instructions of the operator and local laws.

Note

In the event of an accident, switch off the ignition and lights. Close the manual shut-off valve on multivalve.

Refuelling

⚠ Danger

Before refuelling, switch off ignition and any external heaters with combustion chambers.

Follow the operating and safety instructions of the filling station when refuelling.

⚠ Danger

Fuel is flammable and explosive. No smoking. No naked flames or sparks.

If you can smell fuel in your vehicle, have the cause of this remedied immediately by a workshop.

Caution

In case of misfuelling, do not switch on ignition.

Fuel filler flap is located at right rear side of vehicle.

The fuel filler flap can only be opened if the vehicle is unlocked. Release the fuel filler flap by pushing the flap.

Petrol and Diesel refuelling

To open, turn the cap slowly anticlockwise.

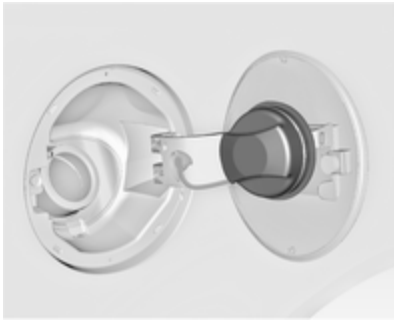

The fuel filler cap can be retained in the bracket on the fuel filler flap.

To refuel, fully insert the pump nozzle and switch it on.

After the automatic cut-off, the tank can be topped up by operating the pump nozzle a maximum of two more times.

Caution

Wipe off any overflowing fuel immediately.

To close, turn the fuel filler cap clockwise until it clicks.

Close the flap and allow it to engage.

Vehicles with misfuel inhibitor

⚠Warning

Do not try to open the flap of the fuel filler neck manually on vehicles with misfuel inhibitor.

Disregarding this could lead to trapping of the fingers.

Vehicles with a selective catalytic reduction system are equipped with a misfuel inhibitor.

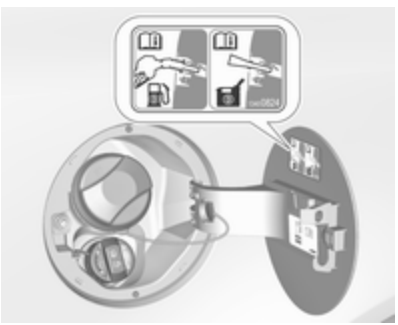

The misfuel inhibitor ensures that the flap of the fuel filler neck can only be opened by using a nozzle for diesel fuel or a funnel for emergency refilling.

Turn the fuel filler cap slowly anti-clockwise.

The cap can be retained in the bracket on the fuel filler flap.

Place the nozzle in straight position to the filler neck and press with slight force to insert.

In case of an emergency, refil with a canister. A funnel must be used to open the cap of the filler neck.

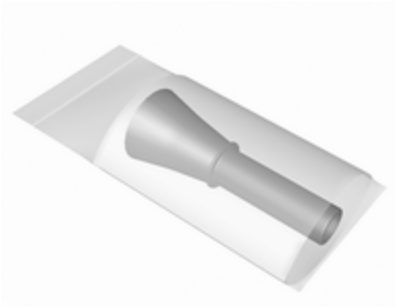

The funnel is located in the load compartment.

Place the funnel in straight position to the filler neck and press with slight force to insert.

Use the funnel to fill in the diesel fuel into the filler neck.

After topping-up, put the funnel into the plastic bag and stow it in the load compartment.

Selective catalytic reduction system ⇨ 165.

Liquid gas refuelling

Follow the operating and safety instructions of the filling station when refuelling.

The filling valve for the liquid gas is behind the fuel filler cap.

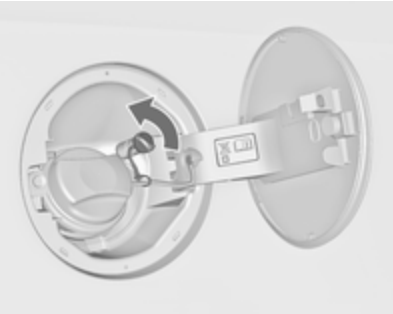

Unscrew protective cap from the filler neck.

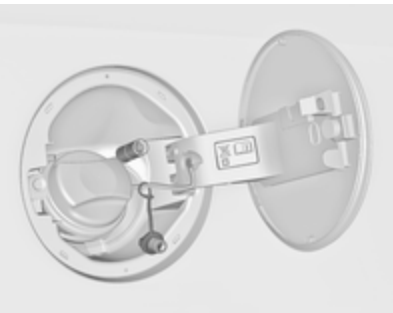

Screw the required adapter hand-tight onto the filler neck.

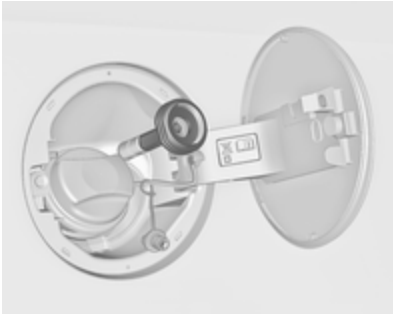

ACME Adapter: Screw the nut of the filling nozzle onto the adapter. Press locking lever on filler nozzle down.

DISH filler neck: Place the filler nozzle into the adapter. Press locking lever on filler nozzle down.

Bayonet filler neck: Place filler nozzle on the adapter and turn clockwise or anticlockwise through one quarter turn. Pull locking lever of filler nozzle fully.

EURO filler neck: Press the filler nozzle onto the adapter until it engages.

Press the button at the liquid gas supply point. The filling system stops or begins to run slowly when 80% of the tank volume is reached (maximum fill level).

Release button on filling system and the filling process stops. Release the locking lever and remove the filler nozzle. A small quantity of liquid gas may escape.

Remove adapter and stow in vehicle.

Fit protective cap to prevent the penetration of foreign bodies into the filler opening and the system.

⚠ Warning

Due to the system design, an escape of liquid gas after releasing the locking lever is unavoidable. Avoid inhaling.

⚠ Warning

The liquid gas tank should only be filled to 80% capacity, for safety reasons.

The multivalve on the liquid gas tank automatically limits the fill quantity. If a larger quantity is added, we recommend not exposing the vehicle to the sun until the excess amount has been used up.

Filling adapter

As filling systems are not standardised, different adapters are required which are available from Opel Distributors and from Opel Authorised Repairers.

ACME adapter: Belgium, Germany, Ireland, Luxembourg, Switzerland

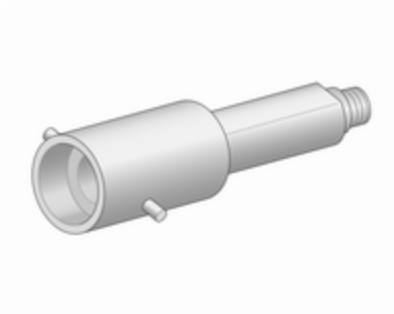

Bayonet adapter: Netherlands, Norway, Spain, United Kingdom

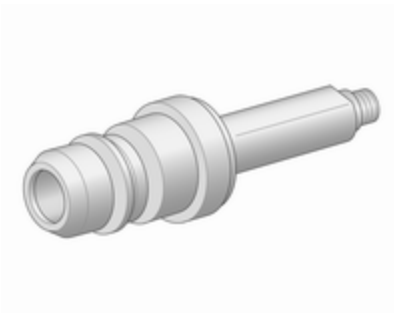

EURO adapter: Spain

DISH adapter: Austria, Bosnia-Herzegovina, Bulgaria, Croatia, Czech Republic, Denmark, Estonia, France, Greece, Hungary, Italy, Latvia, Lithuania, Macedonia, Poland, Portugal, Romania, Serbia, Slovakia, Slovenia, Sweden, Switzerland, Turkey, Ukraine

Fuel filler cap

Only use genuine fuel filler caps. Diesel-engined and Ethanol-engined vehicles have special fuel filler caps.

Fuel consumption - CO_2-Emissions

The fuel consumption (combined) of the model Opel Insignia is within a range of 10.9 to 3.8 l/100 km.

Depending on country, the fuel consumption is displayed in km/l. In this case the fuel consumption (combined) of the model Opel Insignia is within a range of 9.2 to 26.3 km/l.

The CO_2 emission (combined) is within a range of 252 to 99 g/km.

For the values specific for your vehicle, refer to the EEC Certificate of Conformity provided with your vehicle or other national registration documents.

General information

The official fuel consumption and specific CO_2 emission figures quoted relate to the EU base model with standard equipment.

Fuel consumption data and CO_2 emission data are determined according to regulation R (EC) No. 715/2007 (in the version respectively applicable), taking into consideration the vehicle weight in running order, as specified by the regulation.

The figures are provided only for the purpose of comparison between different vehicle variants and must not be taken as a guarantee for the actual fuel consumption of a particular vehicle. Additional equipment may result in slightly higher results than the stated consumption and CO_2 figures.

Furthermore, fuel consumption is dependent on personal driving style as well as road and traffic conditions.

Trailer hitch

General information

The factory-fitted towing equipment is folded up under the rear bumper fascia.

Entrust retrofitting of towing equipment to a workshop. It may be necessary to make changes that affect the cooling system, heat shields or other equipment. Only use towing equipment that has been approved for your vehicle.

To avoid vehicle damage, the power tailgate cannot be operated with the radio remote control when a trailer is electrically connected.

The bulb outage detection function for trailer brake light cannot detect a partial bulb outage, e.g. in case of four times five watt bulbs, the function only detects lamp outage when only a single five Watt lamp remains or none remain.

Fitting of towing equipment could cover the opening of the towing eye. If this is the case use the coupling ball bar for towing.

Driving characteristics and towing tips

Before attaching a trailer, lubricate the coupling ball. However, do not do so if a stabiliser, which acts on the coupling ball, is being used to reduce snaking movements.

For trailers with low driving stability and trailers with a permitted gross vehicle weight of more than 1400 kg (Front-wheel drive)/1600 kg (All-wheel drive) the use of a stabiliser is strongly recommended when driving above 80 km/h.

If the trailer starts snaking, drive more slowly, do not attempt to correct the steering and brake sharply if necessary.

When driving downhill, drive in the same gear as if driving uphill and drive at a similar speed.

Adjust tyre pressure to the value specified for full load ⇨ 293.

Trailer towing

Trailer loads

The permissible trailer loads are vehicle and engine-dependent maximum values which must not be exceeded. The actual trailer load is the difference between the actual gross weight of the trailer and the actual coupling socket load with the trailer coupled.

The permissible trailer loads are specified in the vehicle documents. In general, they are valid for gradients up to max. 12%.

The permitted trailer load applies up to the specified incline and up to an altitude of 1000 metres above sea level. Since engine power decreases as altitude increases due to the air becoming thinner, therefore reducing climbing ability, the permissible gross train weight also decreases by 10% for every 1000 metres of additional altitude. The gross train weight does not have to be reduced when driving on roads with slight inclines (less than 8%, e.g. motorways).

The permissible gross train weight must not be exceeded. This weight is specified on the identification plate ⇨ 277.

Vertical coupling load

The vertical coupling load is the load exerted by the trailer on the coupling ball. It can be varied by changing the weight distribution when loading the trailer.

The maximum permissible vertical coupling load (85 kg) is specified on the towing equipment identification plate and in the vehicle documents. Always aim for the maximum load, especially in the case of heavy trailers. The vertical coupling load should never fall below 25 kg.

Rear axle load

When the trailer is coupled and the towing vehicle fully loaded, the permissible rear axle load (see identification plate or vehicle documents) may be exceeded by 90 kg for the 5-door Hatchback/4-door Saloon and 85 kg for the Sports Tourer/Country Tourer, the gross vehicle weight rating may be exceeded by 65 kg for the 5-door Hatchback/4-door Saloon and 60 kg for the Sports Tourer/Country Tourer. If the permissible rear axle load is exceeded, a maximum speed of 100 km/h applies.

Towing equipment

Caution

The folding coupling ball bar cannot be removed from the vehicle. When driving without a trailer, fold in the coupling ball bar.

⚠Warning

Make sure that no one is in the pivot zone of the coupling ball bar. Risk of body injury.

When releasing the stowed coupling ball bar, make sure to stand left of the grip.

Release stowed coupling ball bar

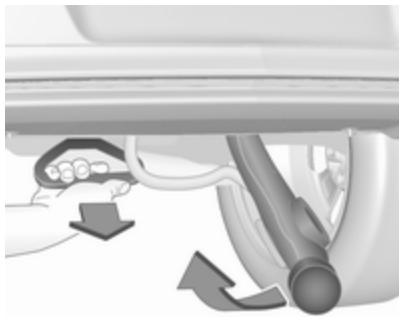

Pull the grip located left to the number plate under the rear bumper fascia at an angle of approx. 45° to the ground.

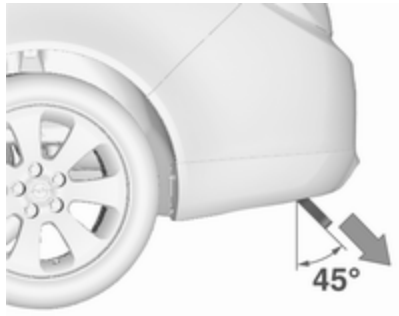

A buzzing tone sounds as a warning when the release handle is pulled out and the ball neck is disengaged.

Take the released coupling ball bar and raise it up until it engages.

Ensure the coupling ball bar is correctly engaged and the released handle is guided back to its hidden initial position, otherwise the buzzing tone will not stop.

Stow/hide coupling ball bar

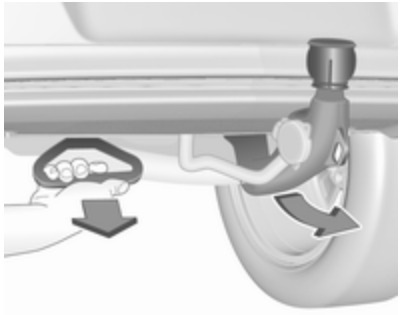

Pull the grip located left of the number plate under the rear bumper fascia at an angle of approx. 45° to the ground.

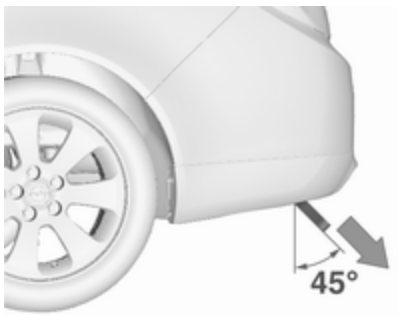

A buzzing tone sounds as a warning when the release handle is pulled out and the ball neck is disengaged.

With the flat of the hand, swivel the released coupling ball bar to the right until it engages under the floor. Make sure that the release handle is back in its hidden initial position, otherwise the buzzing tone will not stop.

⚠ Warning

Towing a trailer is permitted only when the coupling ball bar is fitted correctly. If the coupling ball bar does not engage correctly or if the release handle is impossible to guide to its hidden initial position in the housing or if the buzzing tone sounds after engaging the coupling ball bar, seek the assistance of a workshop.

Eye for break-away stopping cable

Attach break-away stopping cable to eye.

Trailer stability assist

If the system detects snaking movements, engine power is reduced and the vehicle/trailer combination is selectively braked until the snaking ceases. While system is working keep steering wheel as still as possible.

Trailer stability assistant is a function of the Electronic Stability Control ⇨ 177.

Vehicle care

General Information **226**
Accessories and vehicle modifications 226
Vehicle storage 226
End-of-life vehicle recovery 226
Vehicle checks **227**
Performing work 227
Bonnet 227
Engine oil 228
Automatic transmission fluid 229
Engine coolant 230
Power steering fluid 231
Washer fluid 231
Brakes 232
Brake fluid 232
Vehicle battery 232
Diesel fuel system bleeding 234
Wiper blade replacement 234
Bulb replacement **235**
Halogen headlights 235
Xenon headlights 238
Fog lights 240
Tail lights 240
Side turn signal lights 243
Number plate light 244
Interior lights 244
Instrument panel illumination ... 245
Electrical system **245**
Fuses 245
Engine compartment fuse box . 246
Instrument panel fuse box 249
Load compartment fuse box 250
Vehicle tools **252**
Tools 252
Wheels and tyres **252**
Winter tyres 252
Tyre designations 253
Tyre pressure 253
Tyre pressure monitoring system 254
Tread depth 256
Changing tyre and wheel size . 257
Wheel covers 257
Tyre chains 257
Tyre repair kit 258
Wheel changing 260
Spare wheel 263
Jump starting **265**
Towing **267**
Towing the vehicle 267
Towing another vehicle 269
Appearance care **270**
Exterior care 270
Interior care 272

General Information

Accessories and vehicle modifications

We recommend to use genuine parts and accessories and factory approved parts specific for your vehicle type. We cannot assess or guarantee reliability of other products - even if they have a regulatory or otherwise granted approval.

Do not make any modifications to the electrical system, e.g. changes of electronic control units (chip tuning).

Caution
When transporting the vehicle on a train or on a recovery vehicle, the mud flaps might be damaged.

Vehicle storage

Storage for a long period of time

If the vehicle is to be stored for several months:

- Wash and wax the vehicle.
- Have the wax in the engine compartment and underbody checked.
- Clean and preserve rubber seals.
- Fill up fuel tank completely.
- Change engine oil.
- Drain washer fluid reservoir.
- Check coolant antifreeze and corrosion protection.
- Adjust tyre pressure to the value specified for full load.
- Park vehicle in dry, well ventilated place. Engage first or reverse gear or set selector lever to **P**. Prevent the vehicle from rolling.
- Do not apply parking brake.
- Open bonnet, close all doors and lock the vehicle.
- Disconnect the clamp from the negative terminal of the vehicle battery. Beware that all systems are not functional, e.g. anti-theft alarm system.

Putting back into operation

When the vehicle is to be put back into operation:

- Connect the clamp to the negative terminal of the vehicle battery. Activate the electronics of the power windows.
- Check tyre pressure.
- Fill up the washer fluid reservoir.
- Check the engine oil level.
- Check the coolant level.
- Fit the number plate if necessary.

End-of-life vehicle recovery

Information on end-of-life vehicle recovery centres and the recycling of end-of-life vehicles is available on our

website, where legally required. Only entrust this work to an authorised recycling centre.

Gas vehicles must be recycled by a service centre authorised for gas vehicles.

Vehicle checks

Performing work

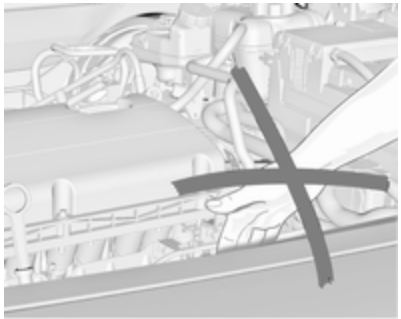

⚠ Warning

Only perform engine compartment checks when the ignition is off.

The cooling fan may start operating even if the ignition is off.

⚠ Danger

The ignition system and Xenon headlights use extremely high voltage. Do not touch.

Bonnet

Opening

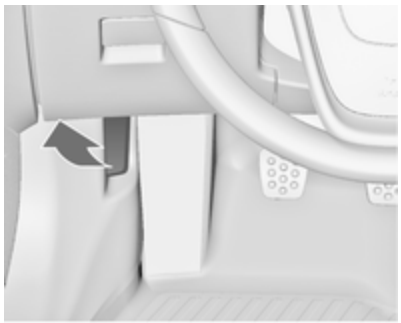

Pull the release lever and return it to its original position.

Move the safety catch sideways to the left vehicle side and open the bonnet.

The bonnet is held open automatically.

Air intake ⇨ 153.

If the bonnet is opened during an Autostop, the engine will be restarted automatically for safety reasons.

Stop-start system ⇨ 160.

Closing

Lower the bonnet and allow it to fall into the latch from a low height (20-25 cm). Check that the bonnet is engaged.

Caution
Do not press the bonnet into the latch, to avoid dents.

Engine oil

Check the engine oil manually on a regular basis to prevent damage to the engine. Ensure that the correct specification of oil is used. Recommended fluids and lubricants ⇨ 275.

The maximum engine oil consumption is 0.6 l per 1000 km.

Check with the vehicle on a level surface. The engine must be at operating temperature and switched off for at least five minutes.

Pull out the dipstick, wipe it clean, insert it to the stop on the handle, pull out and read the engine oil level.

Insert dipstick to the stop on the handle and make half a turn.

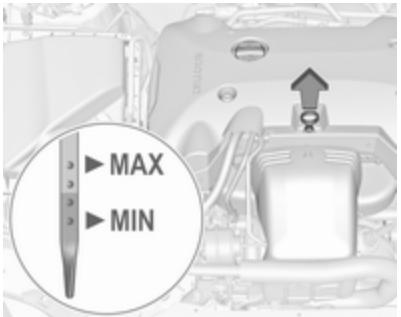

Different dipsticks are used depending on engine variant.

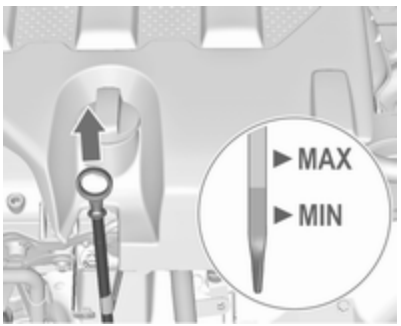

When the engine oil level has dropped to the **MIN** mark, top up engine oil.

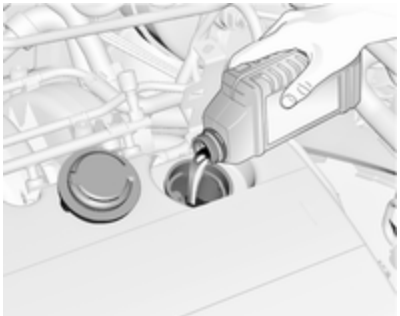

We recommend the use of the same grade of engine oil that was used at last change.

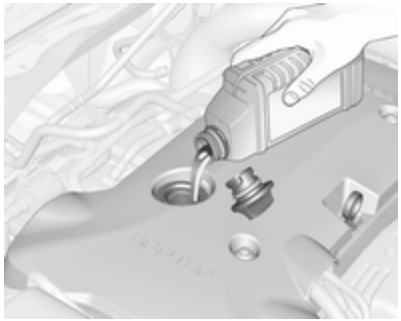

The engine oil level must not exceed the **MAX** mark on the dipstick.

Caution
Overfilled engine oil must be drained or suctioned out.

Capacities ⇨ 292, Engine oil quality/ viscosity ⇨ 275.

Fit the cap on straight and tighten it.

Automatic transmission fluid

Caution
Extremely small amounts of contamination can cause automatic transmission damage and cause it to not work properly. Do not allow contaminates to contact the fluid side of the reservoir cap or from entering the reservoir.

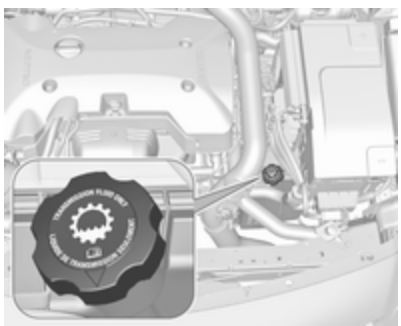

Automatic transmission fluid level normally does not have to be checked. To check the fluid level seek the assistance of a workshop.

Engine coolant

The coolant provides freeze protection down to approx. -28 °C. In northern countries with very low temperatures, the factory filled coolant provides frost protection down to approx. -37 °C.

Caution
Only use approved antifreeze.

Coolant level

Caution
Too low a coolant level can cause engine damage.

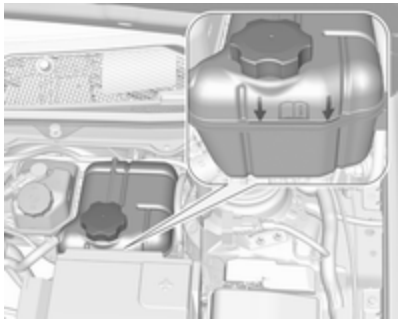

If the cooling system is cold, the coolant level should be above the filling line mark. Top up if the level is low.

On another version, the filling line mark is inside the filler opening. To check, open the cap.

Additional cooling circuit for Turbo engine

Coolant container is fixed at the air cleaner housing.

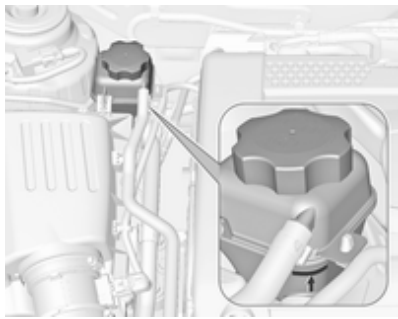

If the cooling system is cold, the coolant level should be above the filling line mark. Top up if the level is low.

General

⚠ Warning

Allow the engine to cool before opening the cap. Carefully open the cap, relieving the pressure slowly.

To top up, use a 1:1 mixture of released coolant concentrate mixed with clean tap water. If no coolant concentrate is available, use clean tap water. Install the cap tightly. Have the coolant concentration checked and have the cause of the coolant loss remedied by a workshop.

Power steering fluid

Caution

Extremely small amounts of contamination can cause steering system damage and cause it to not work properly. Do not allow contaminates to contact the fluid side of the reservoir cap/dipstick or from entering the reservoir.

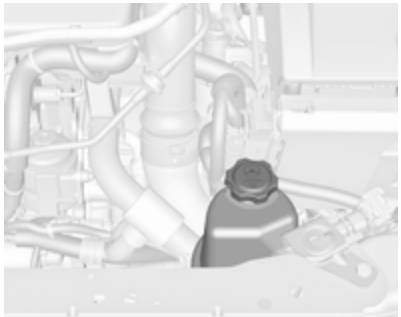

Power steering fluid level normally does not have to be checked. If an unusual noise sounds during steering or the power steering reacts conspicuous seek the assistance of a workshop.

Washer fluid

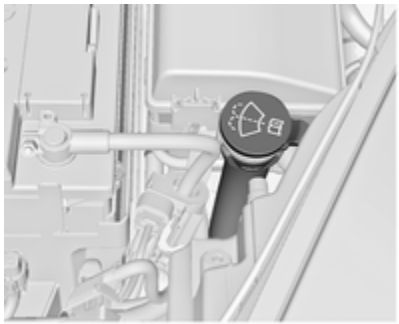

Fill with clean water mixed with a suitable quantity of approved windscreen washer fluid which contains antifreeze.

Caution

Only washer fluid with a sufficient antifreeze concentration provides protection at low temperatures or a sudden drop in temperature.

Use of washer fluid containing isopropanol can damage exterior lamps.

Brakes

In the event of minimum thickness of the brake lining, a squealing noise sounds during braking.

Continued driving is possible but have the brake lining replaced as soon as possible.

Once new brake linings are installed, do not brake unnecessarily hard for the first few journeys.

Brake fluid

⚠Warning

Brake fluid is poisonous and corrosive. Avoid contact with eyes, skin, fabrics and painted surfaces.

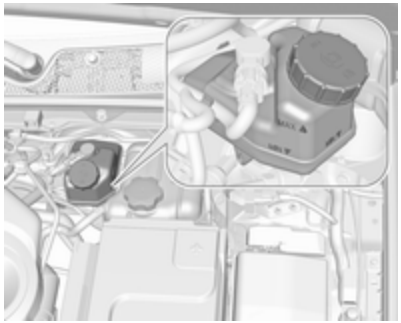

The brake fluid level must be between the **MIN** and the **MAX** marks.

If fluid level is below **MIN** seek the assistance of a workshop.

Brake and clutch fluid ⇨ 275.

Vehicle battery

The vehicle battery is maintenance-free provided that the driving profile allows sufficient charging of the battery. Short-distance-driving and frequent engine starts can discharge the battery. Avoid the use of unnecessary electrical consumers.

Batteries do not belong in household waste. They must be disposed of at an appropriate recycling collection point.

Laying up the vehicle for more than four weeks can lead to vehicle battery discharge. Disconnect the clamp from the negative terminal of the vehicle battery.

Ensure the ignition is switched off before connecting or disconnecting the vehicle battery.

Battery discharge protection ⇨ 140.

Replacing the vehicle battery

Note
Any deviation from the instructions given in this paragraph may lead to a temporary deactivation of the stop-start system.

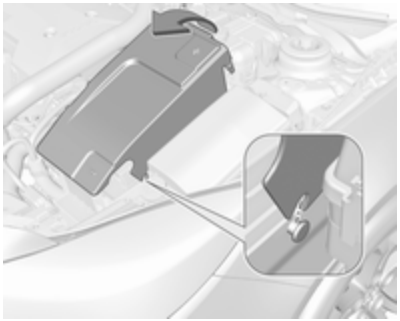

The vehicle battery is covered. Remove the cover to replace the battery. Lift up the cover at the rear and unlatch it at the front.

When the battery is being replaced, ensure that there are no open ventilation holes in the vicinity of the positive terminal. If a ventilation hole is open in this area, it must be closed off with a dummy cap, and the ventilation in the vicinity of the negative terminal must be opened.

Only use vehicle batteries that allow the fuse box to be mounted above the battery.

In vehicles with an AGM (Absorptive Glass Mat) battery, make sure to have the battery replaced with another AGM battery.

An AGM battery can be identified by the label on the battery. We recommend the use of an original Opel battery.

Note
Using an AGM vehicle battery different from the original Opel vehicle battery may result in a lower performance.

We recommend that you have the vehicle battery replaced by a workshop.

Stop-start system ⇨ 160.

Charging the vehicle battery

⚠ Warning

On vehicles with stop-start system, ensure that the charging potential does not exceed 14.6 volts when using a battery charger. Otherwise the battery might be damaged.

Jump starting ⇨ 265.

Warning label

Meaning of symbols:

- No sparks, naked flames or smoking.
- Always shield eyes. Explosive gases can cause blindness or injury.
- Keep the vehicle battery out of reach of children.
- The vehicle battery contains sulphuric acid which could cause blindness or serious burn injuries.
- See the Owner's Manual for further information.
- Explosive gas may be present in the vicinity of the vehicle battery.

Diesel fuel system bleeding

If the tank has been run dry, the diesel fuel system must be bled. Switch on the ignition three times for 15 seconds at a time. Then crank the engine for a maximum of 40 seconds. Repeat this process after no less than 5 seconds. If the engine fails to start, seek the assistance of a workshop.

Wiper blade replacement

Wiper blades on the windscreen

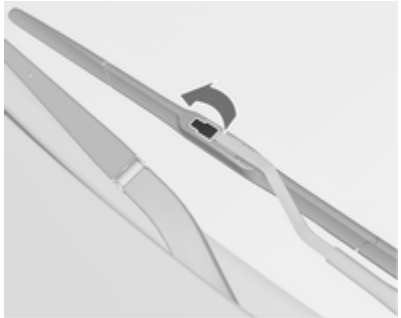

Lift the wiper arm and open the retaining clip.

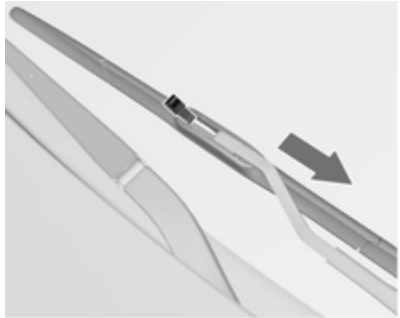

Disengage the wiper blade and remove.

Attach the wiper blade slightly angled to the wiper arm and push until it engages.

Lower wiper arm carefully.

Wiper blade on the rear window

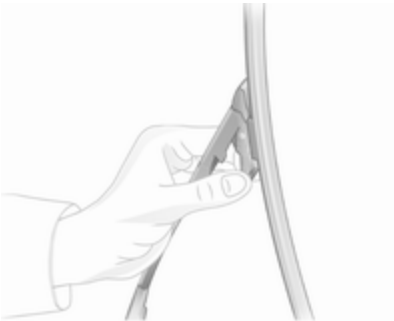

Lift the wiper arm. Press the two catches on the arm, disengage the wiper blade and remove.

Attach the wiper blade slightly angled to the wiper arm and push until it engages.

Lower wiper arm carefully.

Bulb replacement

Switch off the ignition and switch off the relevant switch or close the doors.

Only hold a new bulb at the base. Do not touch the bulb glass with bare hands.

Use only the same bulb type for replacement.

Replace headlight bulbs from within the engine compartment.

Bulb check

After a bulb replacement switch on the ignition, operate and check the lights.

Halogen headlights

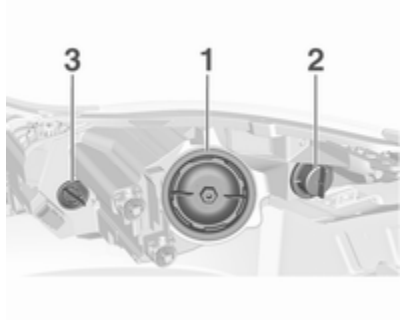

Bi-Halogen Headlight (1) with one bulb for low and high beam.

Sidelight/Daytime running light (2).

Front turn signal light (3)

Bi-Halogen Headlight (1)

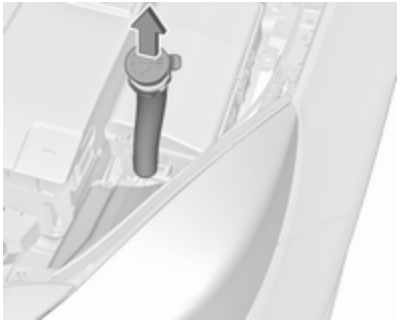

On left vehicle side, pull filling pipe out of the windscreen washer fluid container.

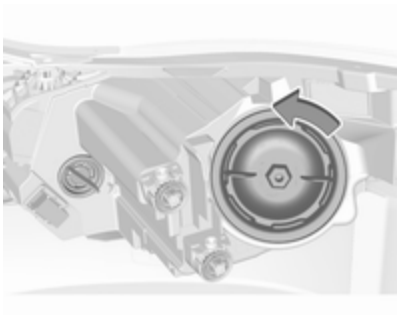

1. Rotate the cap anticlockwise and remove it.

2. Rotate the bulb holder anticlockwise to disengage. Withdraw the bulb holder from the reflector.

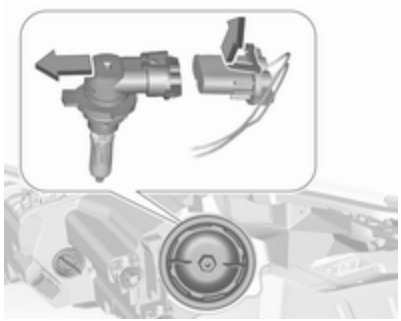

3. Disengage the bulb holder from the plug connector by slightly bending apart the retaining lug.
4. Replace the bulb and connect with the plug.
5. Insert the bulb holder, engaging the two lugs into the reflector and rotate clockwise to secure.
6. Fit the cap and rotate clockwise.

Sidelight/Daytime running light (2)

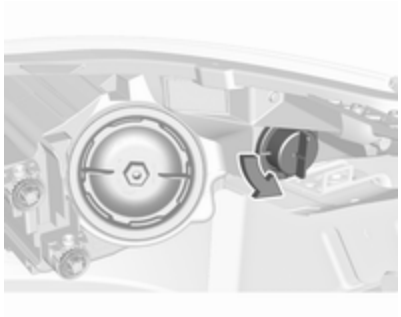

1. Rotate cap anticlockwise and withdraw from the reflector.

2. Press snap-in tongues together and move socket out of the housing.

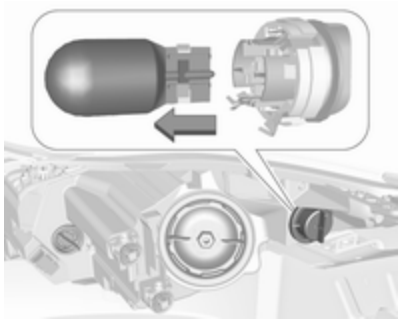

3. Remove the bulb from the socket by pulling.
4. Replace and insert new bulb into socket.
5. Insert the bulb socket into the housing and let engage.
6. Fit the cap and rotate clockwise.

Sidelight/Daytime running light with LEDs

On another version, sidelight and daytime running lights are designed as LEDs. In case of failure, have LEDs replaced by a workshop.

Front turn light (3)

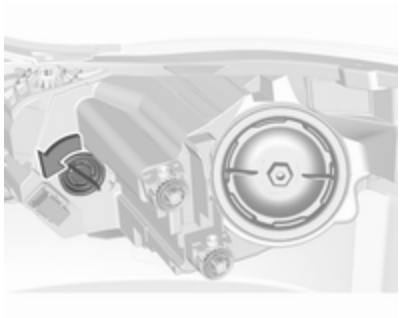

1. Rotate bulb socket anticlockwise to disengage. Withdraw the bulb socket from the housing.

2. Push bulb into socket slightly, rotate anti-clockwise and remove.
3. Replace and insert new bulb into socket by rotating clockwise.
4. Insert bulb socket in reflector, rotate clockwise to engage.

Xenon headlights

⚠ Danger

Adaptive forward lighting system uses Xenon headlights.

Xenon headlights work under extremely high electrical voltage. Do not touch. Have bulbs replaced by a workshop.

Bulbs for front turn signal and corner lighting can be changed.

Sidelight/Daytime running lights are designed as Light Emitting Diodes (LEDs) and cannot be replaced.

Corner lighting

1. Rotate the cap anticlockwise and remove it.

2. Rotate the bulb holder anticlockwise to disengage. Withdraw the bulb holder from the reflector.

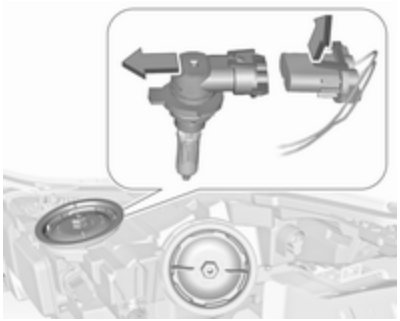

3. Disengage the bulb from the plug connector by unlatching and pulling.
4. Replace the bulb and connect bulb holder with the plug connector.
5. Insert the bulb holder, engaging the two lugs into the reflector and rotate clockwise to secure.
6. Fit the cap and rotate clockwise.

Front turn signal

1. Rotate the cap anticlockwise and remove it.

2. Rotate the bulb holder anticlockwise to disengage. Withdraw the bulb holder from the reflector.

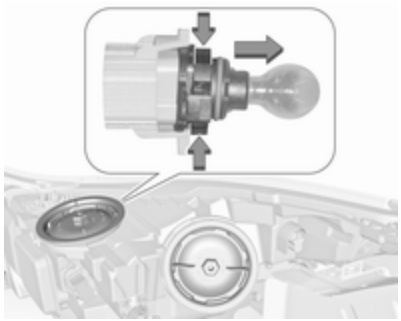

3. Disengage the bulb holder from the plug connector by unlatching and pulling.
4. Replace the bulb and connect bulb holder with the plug.
5. Insert the bulb holder, engaging the two lugs into the reflector and rotate clockwise to secure.

Sidelight/Daytime running light

Sidelight and daytime running lights are designed as LEDs. In case of failure, have LEDs replaced by a workshop.

Fog lights

The bulbs are accessible from the underside of the vehicle.

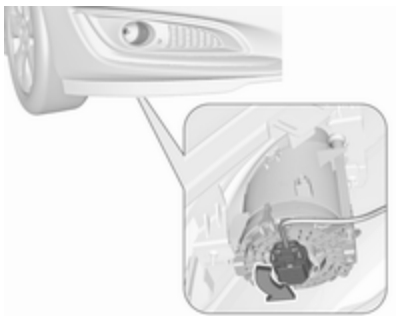

1. Turn the bulb holder anticlockwise and remove it from the reflector.

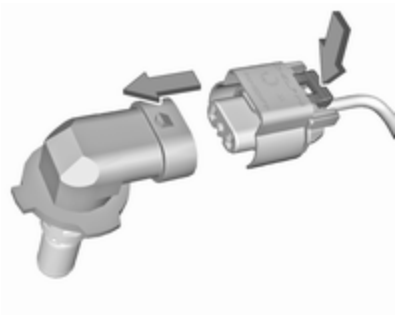

2. Disengage the bulb socket from the plug connector by pressing the retaining lug.
3. Remove and replace the bulb socket with bulb and attach the plug connector.
4. Insert the bulb socket into the reflector and turn clockwise to engage.

Tail lights

5-door Hatchback/4-door Saloon

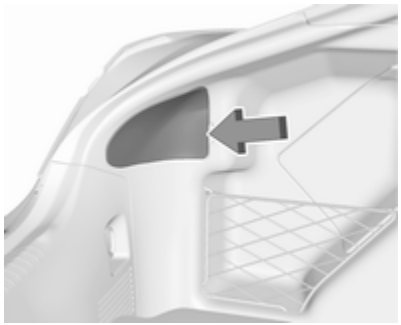

1. Remove cover from the inside of the load compartment.

2. Unscrew three plastic securing nuts from the inside by hand.

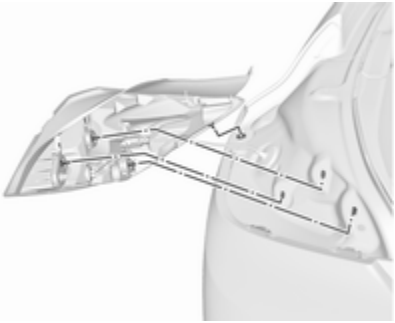

3. Carefully withdraw the light assembly from the recesses and remove.

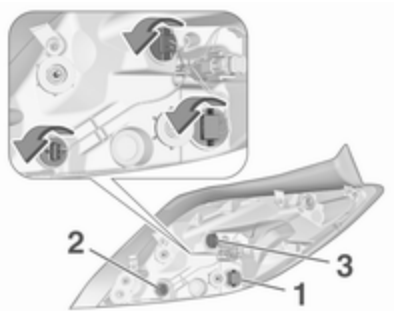

4. Turn bulb holder anticlockwise and remove. Replace bulb by withdrawing or turning:

   Turn signal light **1**

   Rear fog light **2**, only on driver side

   Reverse light **3**

   Tail light and brake light are designed as LEDs. In case of failure, have LEDs replaced by a workshop.

5. Insert bulb holder into the tail light assembly and turn clockwise. Fit light assembly with the retaining pins into the recesses of the vehicle body and tighten the plastic securing nuts from the inside of the load compartment. Close cover.

Sports Tourer/Country Tourer

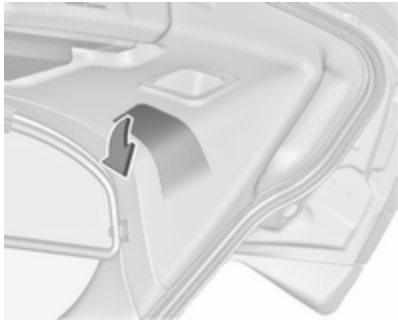

1. Release and open the cover in the tailgate.

2. Unscrew three plastic securing nuts by hand.

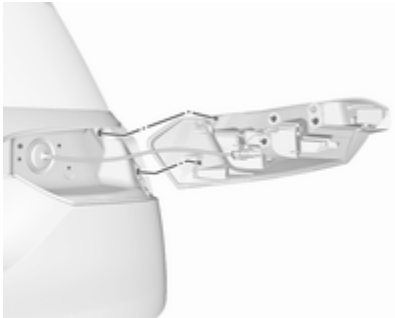

3. Carefully withdraw the light assembly from the recesses and remove.

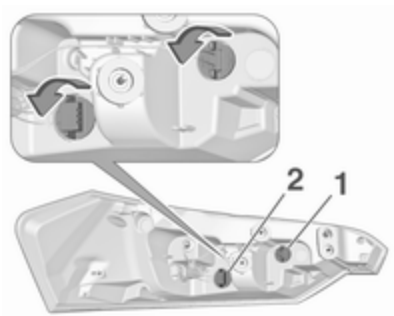

4. Turn bulb holder anticlockwise and remove. Replace bulb by withdrawing:

   Reverse light **1**

   Turn signal light **2**

   Tail light, brake light and rear fog light are designed as LEDs. In case of failure, have LEDs replaced by a workshop.

5. Insert bulb holder into the tail light assembly and turn clockwise. Fit light assembly with the retaining pins into the recesses of the tailgate and tighten the plastic securing nuts from the inside of the tailgate. Close cover.

Additional tail lights in the tailgate frame

1. Open tailgate.

2. Release cover in side trim panel and remove.

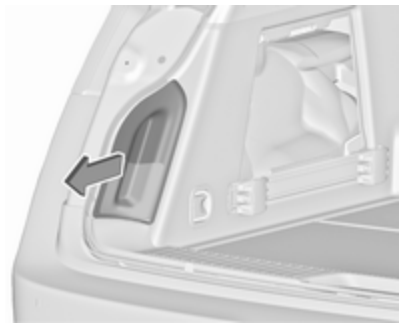

3. Press out lamp housing from the inside of the side trim panel.

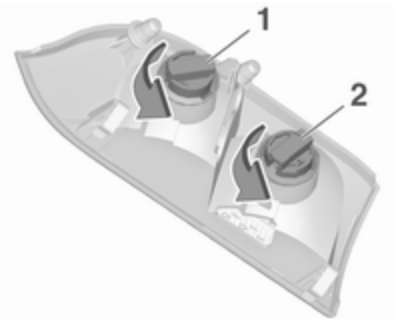

4. Rotate plastic nut anticlockwise and remove from the bulb holder.
5. Push bulb into socket slightly, rotate anticlockwise, remove and renew bulb. Insert plastic nut into bulb holder by rotating clockwise.

   Tail light (**1**)

   Turn signal light (**2**)
6. Insert bulb holder into the tailgate frame. Close cover in the side trim panel.

Side turn signal lights

To replace bulb, remove lamp housing:

1. Slide lamp to its left side and remove with its right end.

2. Turn bulb holder anticlockwise and remove from housing.

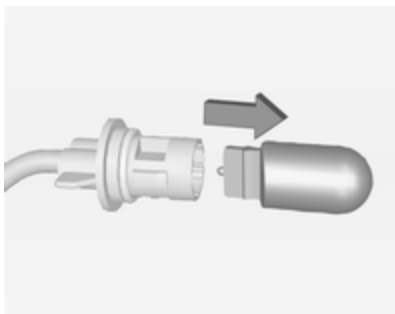

3. Pull bulb from bulb holder and replace it.

4. Insert bulb holder and turn clockwise.
5. Insert left end of the lamp, slide to the left and insert right end.

Number plate light

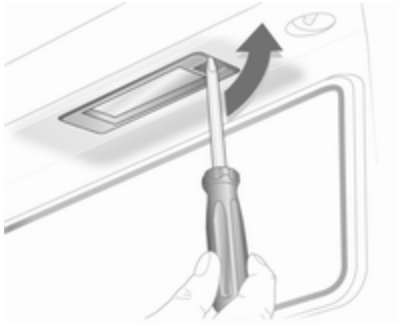

1. Insert screwdriver in bulb housing, press to the side and release spring.

2. Remove lamp downwards, taking care not to pull on the cable.

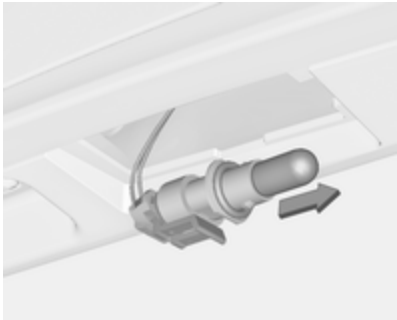

3. Remove bulb holder from lamp housing by turning anticlockwise.
4. Pull bulb from bulb holder and replace it.
5. Insert bulb holder into lamp housing and turn clockwise.
6. Insert lamp into bumper and let engage.

Interior lights

Courtesy light, reading lights

Have bulbs replaced by a workshop.

Load compartment light

1. Prise the lamp out with a screwdriver.

2. Press bulb slightly towards spring clip and remove.
3. Insert new bulb.
4. Install lamp.

Instrument panel illumination

Have bulbs replaced by a workshop.

Electrical system

Fuses

Data on the replacement fuse must match the data on the defective fuse.

There may be up to three fuse boxes in the vehicle:

- in the front left of the engine compartment
- on the left side of the instrument panel
- behind a cover on the left side of the load compartment

Depending on the vehicle equipment the configuration of fuses in the fuse boxes are different, indicated by type A and type B in the tables.

Type A means all 5-door hatchback and 4-door saloon variants, and also Sports Tourer or Country Tourer with power tailgate or trailer hitch or rear power outlets.

Type B means Sports Tourer or Country Tourer without power tailgate, without trailer hitch and without rear power outlets.

Before replacing a fuse, turn off the respective switch and the ignition.

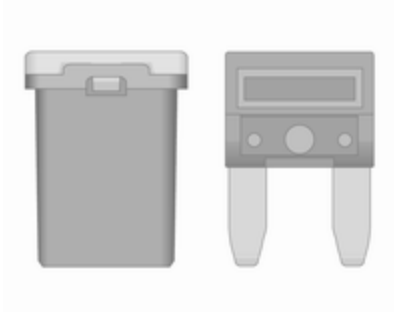

There are different kinds of fuses in the vehicle.

Depending on the type of fuse, a blown fuse can be recognized by its melted wire. Do not replace the fuse until the cause of the fault has been remedied.

Some functions are protected by several fuses.

Fuses may also be inserted without existence of a function.

Fuse extractor

A fuse extractor may be located in the fuse box in the engine compartment.

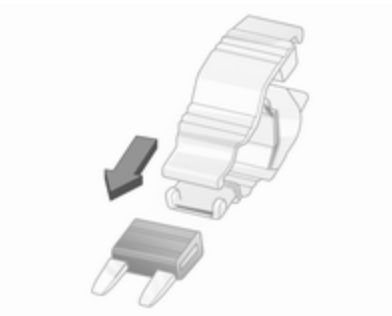

Place the fuse extractor on the various types of fuse from the top or side, and withdraw fuse.

Engine compartment fuse box

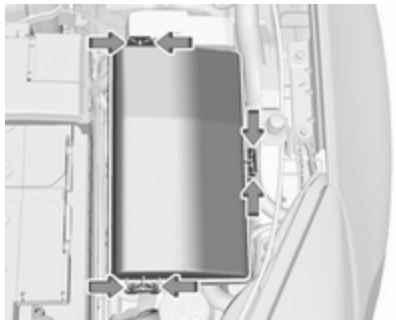

The fuse box is in the front left of the engine compartment.

Disengage the cover, lift it upwards and remove.

No.	Circuit
1	Transmission control module
2	Engine control module
3	–
4	–
5	Ignition/Transmission control module/Engine control module
6	Windscreen wiper
7	–
8	Fuel injection/Ignition system
9	Fuel injection/Ignition system
10	Engine control module
11	Lambda probe
12	Starter
13	Sensor throttle heating
14	Lighting
15	Rear window wiper

No.	Circuit
16	Vacuum pump/Mass air flow meter/Water in fuel sensor/DC transformer
17	Additional tail lights (type B)
18	Adaptive forward lighting
19	Adaptive forward lighting
20	Fuel pump
21	Rear power windows
22	ABS
23	Variable effort steering
24	Front power windows
25	Power outlets (type A) Additional tail lights (type B)
26	ABS
27	Electric parking brake
28	Heated rear window
29	Left power seat
30	Right power seat

No.	Circuit
31	Air conditioning system
32	Body control module
33	Heated front seats
34	Sunroof (type A) Tailgate locking (type B)
35	Infotainment system (type A) Tailgate locking (type B)
36	–
37	Right high beam
38	Left high beam
39	–
40	–
41	Vacuum pump
42	Radiator fan
43	Vehicle battery/DC transformer (only on vehicles with stop-start system)
44	Headlamp washer system
45	Radiator fan
46	Terminal 87/Main relay
47	Lambda probe
48	Fog lights
49	Right low beam
50	Left low beam
51	Horn
52	Ignition
53	Ignition/Ventilated front seats
54	Ignition
55	Power windows/Mirror folding
56	Windscreen washer
57	–
58	–
59	Diesel fuel heating/Emission control system
60	Mirror heating
61	Mirror heating
62	Heated steering wheel (only vehicles without load compartment fuse box)
63	Rear window sensor
64	Adaptive forward lighting
65	Auxiliary pump (only on vehicles with stop-start system)
66	Rear window washer system
67	Fuel system control module
68	–
69	Vehicle battery sensor
70	Rain sensor
71	Vehicle battery sensor

After changing of defective fuses, close the fuse box cover and press until it engages.

If the fuse box cover is not closed correctly, malfunctions may occur.

Instrument panel fuse box

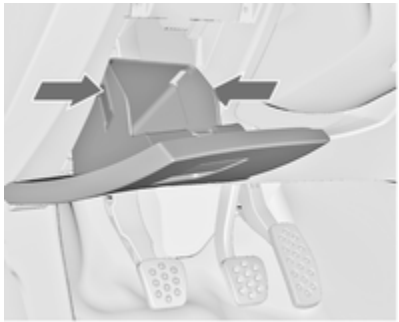

In left-hand drive vehicles, the fuse box is behind the storage compartment in the instrument panel.

Open compartment, compress the locking tabs, fold compartment down and remove.

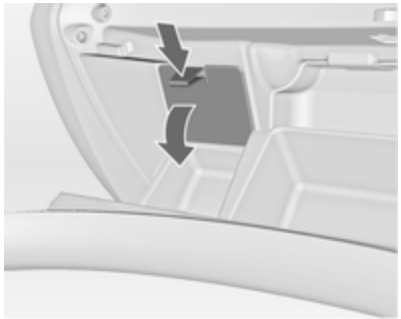

In right-hand drive vehicles, the fuse box is located behind a cover in the glovebox. Open the glovebox and remove the cover.

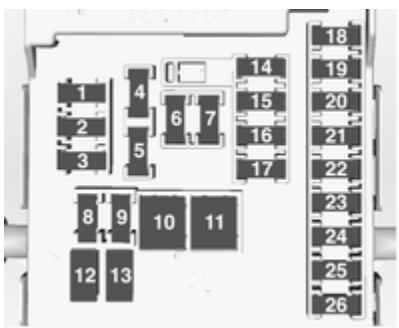

No.	Circuit
1	Infotainment system/Info display/Anti-theft alarm system
2	Body control unit
3	Body control unit
4	Infotainment system/Info display
5	Infotainment system/Info display/High beam assist
6	Cigarette lighter
7	Power outlet
8	Body control unit
9	Body control unit
10	Body control unit
11	Interior fan
12	–
13	–
14	Diagnostic connector
15	Airbag

No.	Circuit
16	Central locking system/Tailgate
17	Air conditioning system
18	Transportation fuse
19	Memory
20	–
21	Instrument
22	Ignition/Central locking system/ Electronic key system
23	Body control unit
24	Body control unit
25	Steering wheel control
26	Power outlet load compartment

Power seats, No's. 12 and 13, have an overload protection. The circuit will be closed again after cooling down.

Load compartment fuse box

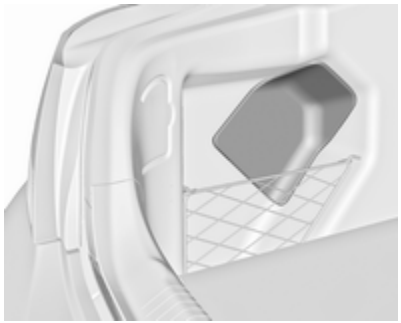

The fuse box is on the left side of the load compartment behind a cover. Remove the cover.

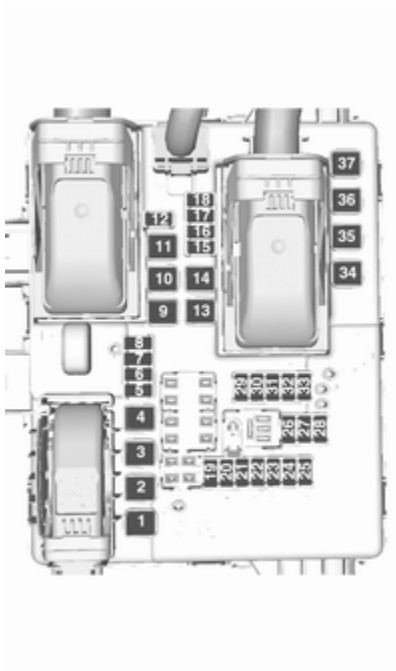

No.	Circuit
1	Central locking system/Electronic key system
2	Trailer module (type A) Infotainment system (type B)
3	–
4	–
5	Trailer socket
6	Heated steering wheel (only vehicles with load compartment fuse box)
7	Selective catalytic reduction system
8	Trailer socket
9	Sunroof
10	Central locking system/Tailgate (type A) Sunroof (type B)
11	–
12	Selective catalytic reduction system
13	–
14	–
15	Power tailgate lock
16	Air conditioning system
17	Selective catalytic reduction system
18	Selective catalytic reduction system
19	Side obstacle detector
20	Side obstacle detector/Ventilated front seats
21	Active damping system/Cruise control/Traffic sign assistant/Lane departure warning/Trailer module
22	–
23	All-wheel drive/Anti-theft alarm system
24	–
25	–
26	–
27	–
28	–
29	Trailer module/Transportation fuse (type A)
30	Side obstacle detector
31	–
32	–
33	–
34	Sunroof
35	–
36	–
37	–

Vehicle tools

Tools

Vehicles with tyre repair kit

The tools and the towing eye are located together with the tyre repair kit in a tool box below the floor cover in the load compartment.

Vehicles with spare wheel

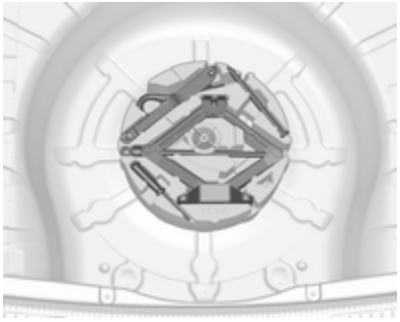

The jack with wheel wrench, the tools, an extension bolt for securing a damaged wheel and the towing eye are placed in the tool box below the spare wheel in the load compartment. Spare wheel ⇨ 263.

Wheels and tyres

Tyre condition, wheel condition

Drive over edges slowly and at right angles if possible. Driving over sharp edges can cause tyre and wheel damage. Do not trap tyres on the kerb when parking.

Regularly check the wheels for damage. Seek the assistance of a workshop in the event of damage or unusual wear.

Winter tyres

Winter tyres improve driving safety at temperatures below 7 °C and should therefore be fitted on all wheels.

In accordance with country-specific regulations, affix the speed sticker in the driver's field of view.

All tyre sizes are permitted as winter tyres ⇨ 293.

Tyre designations

E.g. **215/60 R 16 95 H**

215 : tyre width, mm
60 : cross-section ratio (tyre height to tyre width), %
R : belt type: Radial
RF : type: RunFlat
16 : wheel diameter, inches
95 : load index e.g. 95 is equivalent to 690 kg
H : speed code letter

Speed code letter:

Q : up to 160 km/h
S : up to 180 km/h
T : up to 190 km/h
H : up to 210 km/h
V : up to 240 km/h
W : up to 270 km/h

Choose a tyre appropiate for the maximum speed of your verhicle.

The maximum speed is achievable at kerb weight with driver (75 kg) plus 125 kg payload. Optional equipment could reduce the maximum speed of the vehicle.

Performance ⇨ 284.

Directional tyres

Directional tyres should be mounted so that they rotate in the correct direction. The proper rotation direction is indicated by a symbol (e.g. an arrow) on the sidewall.

Tyre pressure

Check the pressure of cold tyres at least every 14 days and before any long journey. Do not forget the spare wheel. This also applies to vehicles with tyre pressure monitoring system.

Unscrew the valve cap.

Tyre pressure ⇨ 293.

The tyre pressure information label on the left door frame indicates the original equipment tyres and the correspondent tyre pressures.

The tyre pressure data refers to cold tyres. It applies to summer and winter tyres.

Always inflate the spare tyre to the pressure specified for full load.

The ECO tyre pressure serves to achieve the smallest amount of fuel consumption possible.

Incorrect tyre pressures will impair safety, vehicle handling, comfort and fuel economy and will increase tyre wear.

Tyre pressures differ depending on various options. For the correct tyre pressure value, follow the procedure below:

1. Identify drive axle and body style.
2. Identify the engine identifier code. Engine data ⇨ 282.
3. Identify the respective tyre.

The tyre pressure tables show all possible tyre combinations ⇨ 293.

For the tyres approved for your vehicle, refer to the EEC Certificate of Conformity provided with your vehicle or other national registration documents.

The driver is responsible for correct adjustment of tyre pressure.

⚠Warning

If the pressure is too low, this can result in considerable tyre warm-up and internal damage, leading to tread separation and even to tyre blow-out at high speeds.

⚠Warning

For specific tyres the recommended tyre pressure as shown in the tyre pressure table may exceed the maximum tyre pressure as indicated on the tyre. Never exceed the maximum tyre pressure as indicated on the tyre.

If the tyre pressure shall be reduced or increased on a vehicle with tyre pressure monitoring system, switch off ignition. After adjusting tyre pressure switch on ignition and select the according setting on the page **Tyre load** in the Driver Information Centre, ⇨ 111.

Temperature dependency

The tyre pressure depends on the temperature of the tyre. During driving, tyre temperature and pressure increase. Tyre pressure values provided on the tyre information label and tyre pressure chart are valid for cold tyres, which means at 20 °C.

The pressure increases by nearly 10 kPa for a 10 °C temperature increase. This must be considered when warm tyres are checked.

The tyre pressure value displayed in the Driver Information Centre shows the real tyre pressure. A cooled down tyre will show a decreased value, which does not indicate an air leak.

Tyre pressure monitoring system

The tyre pressure monitoring system checks the pressure of all four wheels once a minute when vehicle speed exceeds a certain limit.

Caution

Tyre pressure monitoring system warns just about low tyre pressure condition and does not replace regular tyre maintenance by the driver.

All wheels must be equipped with pressure sensors and the tyres must have the prescribed pressure.

Note
In countries where the tyre pressure monitoring system is legally required, the use of wheels without pressure sensors will invalidate the vehicle type approval.

Select the **Tyre pressure monitoring** page under the **Info** Menu in the Driver Information Centre ⇨ 111.

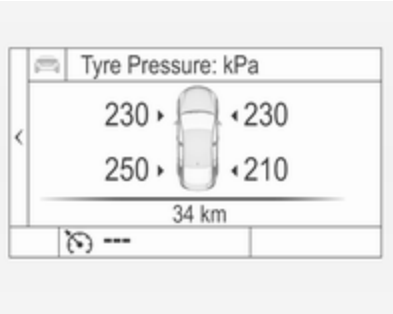

System status and pressure warnings are displayed by a message indicating the corresponding tyre in the Driver Information Centre.

The system considers the tyre temperature for the warnings.

Temperature dependency ⇨ 253.

A detected low tyre pressure condition is indicated by the control indicator (!) ⇨ 109.

If (!) illuminates, stop as soon as possible and inflate the tyres as recommended ⇨ 293.

After inflating, some driving may be required to update the tyre pressure values in the Driver Information Centre. During this time (!) may illuminate.

If (!) illuminates at lower temperatures and extinguishes after some driving, this could be an indicator for approaching a low tyre pressure condition. Check tyre pressure.

Vehicle messages ⇨ 120.

If the tyre pressure must be reduced or increased, switch off ignition.

Only mount wheels with pressure sensors, otherwise the tyre pressure will not be displayed and (!) illuminates continuously.

A spare wheel or temporary spare wheel is not equipped with pressure sensors. The tyre pressure monitoring system is not operational for these wheels. Control indicator (!) illuminates. For the further three wheels the system remains operational.

The use of commercially available liquid tyre repair kits can impair the function of the system. Factory-approved repair kits can be used.

Operating electronic devices or being close to facilities using similar wave frequencies could disrupt the tyre pressure monitoring system.

Each time the tyres are replaced tyre pressure monitoring system sensors must be dismounted and serviced. For the screwed sensor replace valve core and sealing ring, for clipped sensor replace complete valve stem.

Vehicle loading status

Adjust tyre pressure to load condition according tyre information label or tyre pressure chart ⇨ 293, and select the appropriate setting in the **Tyre loading** page under the **Settings** menu in the Driver Information Centre ⇨ 111. This setting is the reference for the tyre pressure warnings.

The menu **Tyre loading** only appears if the vehicle is in a standstill and the parking brake is applied. On vehicles with automatic transmission the selector lever has to be in **P**.

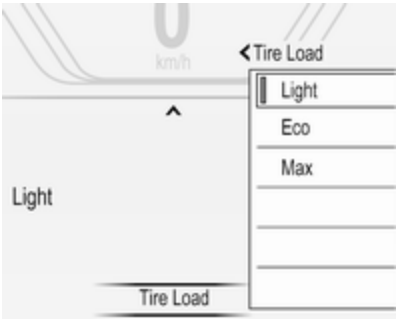

Select:

- **Light** for comfort pressure up to 3 people.
- **Eco** for Eco pressure up to 3 people.
- **Max** for full loading.

Auto learn function

After changing wheels the vehicle must be stationary for approx. 20 minutes, before the system recalculates. The following relearn process takes up to 10 minutes of driving with a minimum speed of 20 km/h. In this case – – can be displayed or pressure values can swap in the Driver Information Centre.

If problems occur during the relearn process, a warning message is displayed in the Driver Information Centre.

Tread depth

Check tread depth at regular intervals.

Tyres should be replaced for safety reasons at a tread depth of 2-3 mm (4 mm for winter tyres).

For safety reasons, it is recommended that the tread depth of the tyres on one axle should not vary by more than 2 mm.

The legally permissible minimum tread depth (1.6 mm) has been reached when the tread has worn down as far as one of the tread wear indicators (TWI). Their position is indicated by markings on the sidewall.

If there is more wear at the front than the rear, swap round front wheels and rear wheels periodically. Ensure that the direction of rotation of the wheels remains the same.

Tyres age, even if they are not used. We recommend tyre replacement every 6 years.

Changing tyre and wheel size

If tyres of a different size than those fitted at the factory are used, it may be necessary to reprogramme the speedometer as well as the nominal tyre pressure and make other vehicle modifications.

After converting to a different tyre size, have the label with tyre pressures replaced.

⚠ Warning

Use of unsuitable tyres or wheels may lead to accidents and will invalidate the vehicle type approval.

Wheel covers

Wheel covers and tyres that are factory approved for the respective vehicle and comply with all of the relevant wheel and tyre combination requirements must be used.

If the wheel covers and tyres used are not factory approved, the tyres must not have a rim protection ridge.

Wheel covers must not impair brake cooling.

⚠ Warning

Use of unsuitable tyres or wheel covers could lead to sudden pressure loss and thereby accidents.

Vehicles with steel wheels: When using locking wheel nuts, do not attach wheel covers.

Wheel caps

Tyres of size 245/35 R20 have a specific wheel cap. To remove the cap from the dismantled wheel, first disengage the arms one by one. Then press the cap in the middle area from behind and remove it.

To assemble, first adjust the wheel cap in order that the positioning leg fits into the recess.

Tyre chains

Tyre chains are only permitted on the front wheels.

Always use fine mesh chains that add no more than 10 mm to the tyre tread and the inboard sides (including chain lock).

⚠ Warning

Damage may lead to tyre blowout.

5-door Hatchback, 4-door Saloon, Sports Tourer

Tyre chains are only permitted on tyres of size 215/60 R16, 225/50 R17 and 235/45 R18.

Country Tourer

Tyre chains are only permitted on tyres of size 235/45 R18.

Temporary spare wheel

The use of tyre chains is not permitted on the temporary spare wheel.

Tyre repair kit

Minor damage to the tyre tread can be repaired with the tyre repair kit.

Do not remove foreign bodies from the tyres.

Tyre damage exceeding 4 mm or that is at tyre's side wall cannot be repaired with the tyre repair kit.

⚠ Warning

Do not drive faster than 80 km/h.

Do not use for a lengthy period.

Steering and handling may be affected.

If you have a flat tyre:

Apply the parking brake and engage first gear, reverse gear or **P**.

The tyre repair kit is in a compartment under the floor cover in the load compartment.

1. Take the tyre repair kit from the compartment.
2. Remove the compressor.

3. Remove the electrical connection cable and air hose from the stowage compartments on the underside of the compressor.

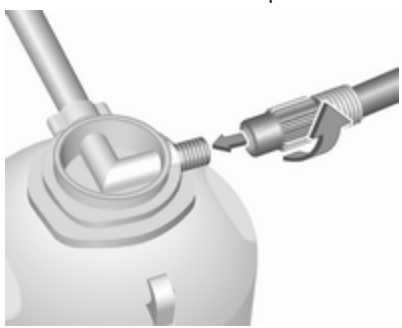

4. Screw the compressor air hose to the connection on the sealant bottle.
5. Fit the sealant bottle into the retainer on the compressor.

   Set the compressor near the tyre in such a way that the sealant bottle is upright.

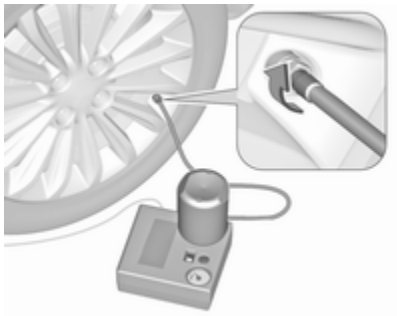

6. Unscrew valve cap from defective tyre.
7. Screw the filler hose to the tyre valve.
8. The switch on the compressor must be set to O.
9. Connect the compressor plug to the power outlet or cigarette lighter socket.

   To avoid discharging the battery, we recommend running the engine.

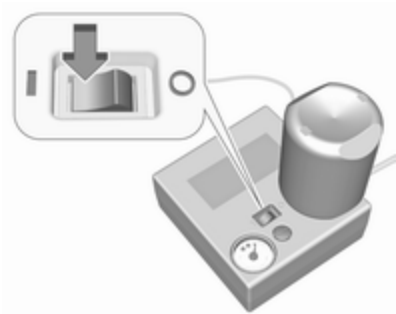

10. Set the rocker switch on the compressor to I. The tyre is filled with sealant.
11. The compressor pressure gauge briefly indicates up to 6 bar whilst the sealant bottle is emptying (approx. 30 seconds). Then the pressure starts to drop.
12. All of the sealant is pumped into the tyre. Then the tyre is inflated.
13. The prescribed tyre pressure should be obtained within 10 minutes. Tyre pressure ⇨ 293. When the correct pressure is obtained, switch off the compressor.

If the prescribed tyre pressure is not obtained within 10 minutes, remove the tyre repair kit. Move the vehicle one tyre rotation. Reattach the tyre repair kit and continue the filling procedure for 10 minutes. If the prescribed tyre pressure is still not obtained, the tyre is too badly damaged. Seek the assistance of a workshop.

Drain excess tyre pressure with the button over the pressure indicator.

Do not run the compressor longer than 10 minutes.

14. Detach the tyre repair kit. Push catch on bracket to remove sealant bottle from bracket. Screw tyre inflation hose to the free connection of sealant bottle. This prevents sealant from escaping. Stow tyre repair kit in load compartment.
15. Remove any excess sealant using a cloth.
16. Take the label indicating maximum permitted speed from the sealant bottle and affix in the driver's field of view.
17. Continue driving immediately so that sealant is evenly distributed in the tyre. After driving approx. 10 km (but no more than 10 minutes), stop and check tyre pressure. Screw compressor air hose directly onto tyre valve and compressor when doing this.

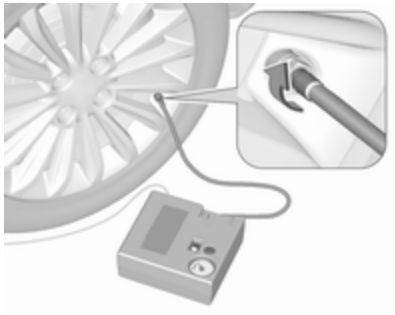

If tyre pressure is more than 1.3 bar, set it to the correct value. Repeat the procedure until there is no more loss of pressure.

If the tyre pressure has fallen below 1.3 bar, the vehicle must not be used. Seek the assistance of a workshop.

18. Stow away tyre repair kit in load compartment.

Note
The driving characteristics of the repaired tyre is severely affected, therefore have this tyre replaced.

If unusual noise is heard or the compressor becomes hot, turn compressor off for at least 30 minutes.

The built-in safety valve opens at a pressure of 7 bar.

Note the expiry date of the kit. After this date its sealing capability is no longer guaranteed. Pay attention to storage information on sealant bottle.

Replace the used sealant bottle. Dispose of the bottle as prescribed by applicable laws.

The compressor and sealant can be used from approx. -30 °C.

The adapters supplied can be used to pump up other items e.g. footballs, air mattresses, inflatable dinghies etc. They are located on the underside of the compressor. To remove, screw on compressor air hose and withdraw adapter.

Wheel changing

Some vehicles are equipped with a tyre repair kit instead of a spare wheel ⇨ 258.

Make the following preparations and observe the following information:

- Park the vehicle on a level, firm and non-skid surface. The front wheels must be in the straight-ahead position.
- Apply the parking brake and engage first gear, reverse gear or **P**.
- Remove the spare wheel ⇨ 263.
- Never change more than one wheel at once.
- Use the jack only to change wheels in case of puncture, not for seasonal winter or summer tyre change.
- The jack is maintenance-free.
- If the ground on which the vehicle is standing is soft, a solid board (max. 1 cm thick) should be placed under the jack.
- Take heavy objects out of the vehicle before jacking up.
- No people or animals may be in the vehicle when it is jacked-up.
- Never crawl under a jacked-up vehicle.
- Do not start the vehicle when it is raised on the jack.
- Clean wheel nuts and thread with a clean cloth before mounting the wheel.

⚠Warning

Do not grease wheel bolt, wheel nut and wheel nut cone.

1. Disengage wheel nut caps with a screwdriver and remove.

   Steel wheels with cover: Pull off the wheel cover.

   Alloy wheels: Disengage wheel nut caps with a screwdriver and remove. To protect the wheel, place a soft cloth between the screwdriver and the alloy wheel.

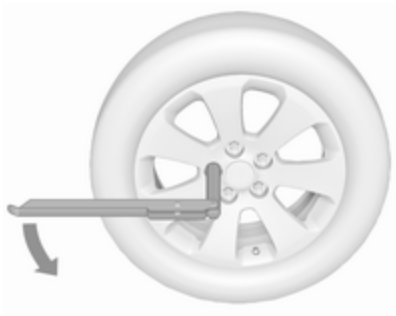

2. Fold out the wheel wrench and install ensuring that it locates securely and loosen each wheel nut by half a turn.

   The wheels might be protected by locking wheel nuts. To loosen these specific nuts, first attach the adapter for the locking wheel nuts onto the head of the nut before installing the wheel wrench. The adapter is located in the glovebox.

3. Some versions may have covered the vehicle jacking point. Pull out the cover sideways.

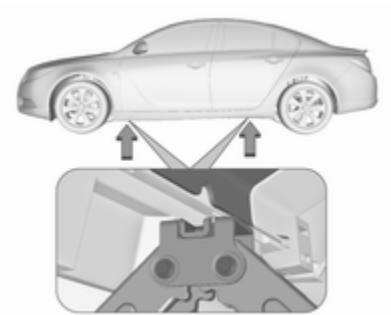

4. Ensure the jack is correctly positioned under the relevant vehicle jacking point.

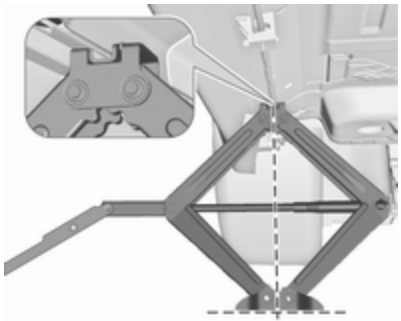

5. Set the jack to the necessary height. Position it directly below the jacking point in a manner that prevents it from slipping.

Attach wheel wrench and with the jack correctly aligned rotate wheel wrench until wheel is clear of the ground.

6. Unscrew the wheel nuts.
7. Change the wheel. Spare wheel ⇨ 263.
8. Screw on the wheel nuts.
9. Lower vehicle.
10. Install the wheel wrench ensuring that it locates securely and tighten each nut in a crosswise sequence. Tightening torque is 150 Nm.

11. Align the valve hole in the wheel cover with the tyre valve before installing.

    Install wheel nut caps.
12. Install vehicle jacking point cover.
13. Stow and secure the replaced wheel ⇨ 263, the vehicle tools ⇨ 252 and the adapter for the locking wheel nuts ⇨ 70.
14. Check the tyre pressure of the installed tyre and the wheel nut torque as soon as possible.

Have the defective tyre renewed or repaired as soon as possible.

Jacking position for lifting platform

Rear arm position of the lifting platform at the underbody.

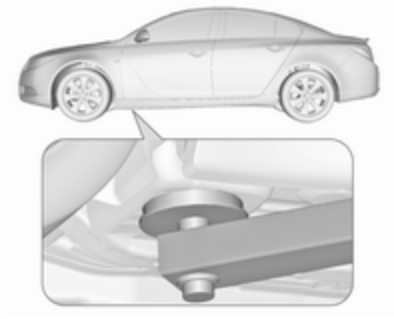

Front arm position of the lifting platform at the underbody.

Spare wheel

Some vehicles are equipped with a tyre repair kit instead of a spare wheel.

If mounting a spare wheel, which is different from the other wheels, this wheel might be classified as a temporary spare wheel and the corresponding speed limits apply, even though no label indicates this. Seek the assistance of a workshop to check the applicable speed limit.

The spare wheel has a steel rim.

Caution
The use of a spare wheel that is smaller than the other wheels or in combination with winter tyres could affect driveability. Have the defective tyre replaced as soon as possible.

The spare wheel is located in the load compartment beneath the floor covering.

To remove:

1. Open the floor cover.
2. The spare wheel is secured with a wing nut. Turn wing nut anticlockwise and remove the spare wheel.

   Under the spare wheel there is the box with vehicle tools.
3. When, after a wheel change, no wheel is placed in the spare wheel well, secure the tool box by turning right back the wing nut and close the floor cover.

Stowing the replaced full size wheel in the spare wheel well

The spare wheel well is not designed for all permitted tyre sizes. If a wheel wider than the spare must be stowed in the spare wheel well, the thread bolt for mounting the wheel must be replaced by an extension bolt, located in the tool box ⇨ 252. To replace the bolt:

- Remove tool box from the spare wheel well.

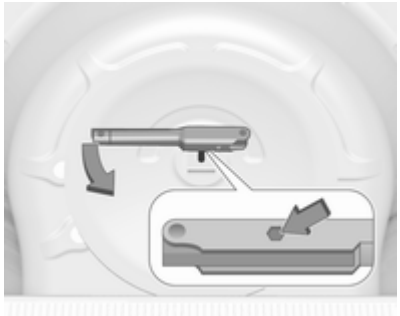

- Install the hexagon key of the wheel wrench ensuring that it locates securely on the bolt.
- Turn the wheel wrench anticlockwise to loosen the bolt. Remove the bolt.
- Take the extension bolt from the tool box ⇨ 252 and screw it in hand-tight using the hexagon key of the wheel wrench.

- Store the tool box and the damaged wheel outside up in the spare wheel well and secure it by turning the wing nut clockwise on the bolt.

The floor cover can be placed on the projecting wheel.

To fit the spare wheel in the well after renewing the defective wheel use the short thread bolt again. Exchange the bolt in the same way.

⚠Warning

Storing a jack, a wheel or other equipment in the load compartment could cause injury if they are not fixed properly. During a sudden stop or a collision, loose equipment could strike someone.

Store wheel, jack and tools always in the original storage location and secure them by fixing.

Temporary spare wheel

Caution

The use of a spare wheel that is smaller than the other wheels or in combination with winter tyres could affect driveability. Have the defective tyre replaced as soon as possible.

Only mount one temporary spare wheel. Do not drive faster than 80 km/h. Take curves slowly. Do not use for a long period of time.

If your vehicle gets a flat tyre on the rear while towing another vehicle, mount the temporary spare wheel in the front and the full tyre in the rear.

Tyre chains ⇨ 257.

Spare wheel with directional tyre

Fit directional tyres such that they roll in the direction of travel. The rolling direction is indicated by a symbol (e.g. an arrow) on the sidewall.

The following applies to tyres fitted opposing the rolling direction:

- Driveability may be affected. Have the defective tyre renewed or repaired as soon as possible and fit it instead of the spare wheel.
- Drive particularly carefully on wet and snow-covered road surfaces.

Jump starting

Do not start with quick charger.

A vehicle with a discharged vehicle battery can be started using jump leads and the vehicle battery of another vehicle.

⚠Warning

Be extremely careful when starting with jump leads. Any deviation from the following instructions can lead to injuries or damage caused by battery explosion or damage to the electrical systems of both vehicles.

⚠Warning

Avoid contact of the battery with eyes, skin, fabrics and painted surfaces. The fluid contains sulphuric acid which can cause injuries and damage in the event of direct contact.

- Never expose the vehicle battery to naked flames or sparks.

- A discharged vehicle battery can already freeze at a temperature of 0 °C. Defrost the frozen battery before connecting jump leads.
- Wear eye protection and protective clothing when handling a battery.
- Use a booster battery with the same voltage (12 Volts). Its capacity (Ah) must not be much less than that of the discharged vehicle battery.
- Use jump leads with insulated terminals and a cross section of at least 16 mm^2 (25 mm^2 for diesel engines).
- Do not disconnect the discharged vehicle battery from the vehicle.
- Switch off all unnecessary electrical consumers.
- Do not lean over the vehicle battery during jump starting.
- Do not allow the terminals of one lead to touch those of the other lead.
- The vehicles must not come into contact with each other during the jump starting process.
- Apply the parking brake, transmission in neutral, automatic transmission in **P**.

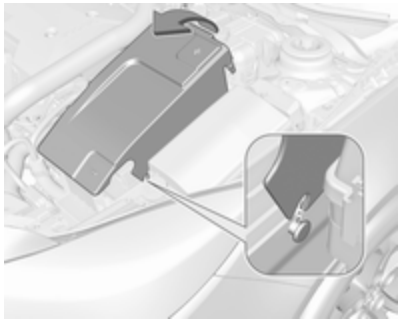

- If there is a cover over the vehicle battery, remove it to charge or jump start the vehicle battery. Lift up the cover at the rear and unlatch it at the front.
- Open the positive terminal protection caps of both vehicle batteries.

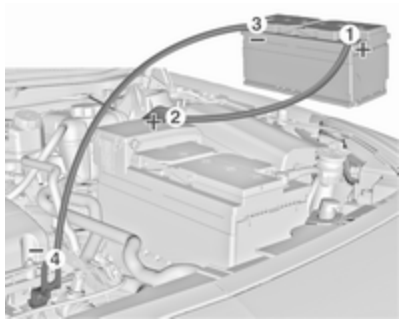

Lead connection order:

1. Connect the red lead to the positive terminal of the booster battery.
2. Connect the other end of the red lead to the positive terminal of the discharged battery.
3. Connect the black lead to the negative terminal of the booster battery.
4. Connect the other end of the black lead to a vehicle grounding point, such as the engine block or an engine mounting bolt. Connect as

far away from the discharged battery as possible, however at least 60 cm.

Route the leads so that they cannot catch on rotating parts in the engine compartment.

To start the engine:

1. Start the engine of the vehicle providing the jump.
2. After 5 minutes, start the other engine. Start attempts should be made for no longer than 15 seconds at an interval of 1 minute.
3. Allow both engines to idle for approx. 3 minutes with the leads connected.
4. Switch on electrical consumers (e.g. headlights, heated rear window) of the vehicle receiving the jump start.
5. Reverse above sequence exactly when removing leads.

Towing

Towing the vehicle

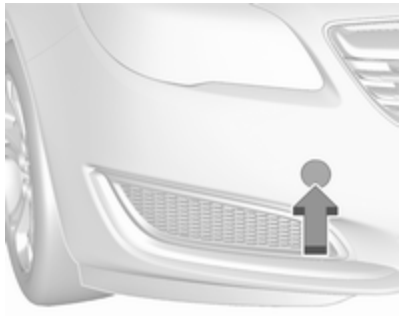

5-door Hatchback, 4-door Saloon, Sports Tourer: disengage cap at bottom and remove downwards.

Country Tourer: insert a screwdriver in the slot at the lower edge of the cap. Release the cap by carefully moving the screwdriver downwards. To prevent damage, it is recommended to place a cloth between the screwdriver and the frame.

OPC: insert screwdriver in the slot at the upper bend of the cap. Release the cap by carefully moving the screwdriver downwards. To prevent damage, it is recommended to place a cloth between the screwdriver and the frame.

The towing eye is stowed with the vehicle tools ⇨ 252.

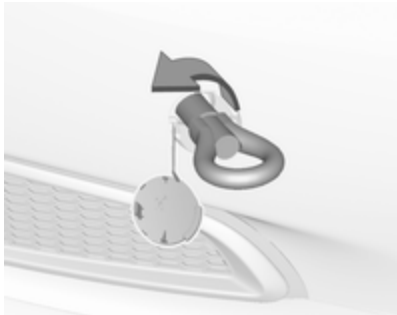

Screw in the towing eye as far as it will go until it stops in a horizontal position.

Attach a tow rope – or better still a tow rod – to the towing eye.

The towing eye must only be used for towing and not for recovering the vehicle.

Switch on ignition to release steering wheel lock and to permit operation of brake lights, horn and windscreen wiper.

Transmission in neutral.

Caution
Drive slowly. Do not drive jerkily. Excessive tractive force can damage the vehicle.

When the engine is not running, considerably more force is needed to brake and steer.

To prevent the entry of exhaust gases from the towing vehicle, switch on the air recirculation and close the windows.

Vehicles with manual transmission and All-wheel drive: If the vehicle is towed with all four wheels on the ground then there are no technical limitations for speed and distance. If only one axle has been raised, the maximum speed is 50 km/h. There is no distance limitation.

Vehicles with automatic transmission and Front-wheel drive: The vehicle must be towed facing forwards, not faster than 80 km/h nor further than 100 km. In all other cases and when the transmission is defective, the front axle must be raised off the ground.

Vehicles with automatic transmission and All-wheel drive: The vehicle must be towed facing forwards. If the vehicle is towed with all four wheels on the ground, the maximum speed is 50 km/h and for a maximum of 50 km. If the front axle has been raised, the maximum speed is 50 km/h. There is no distance limitation.

Seek the assistance of a workshop.

After towing, unscrew the towing eye.

5-door Hatchback, 4-door Saloon, Sports Tourer: insert cap at the bottom, turn slightly clockwise and close cap.

Country Tourer: insert cap with the upper flange into the recess and fix cap by pushing.

OPC: insert cap with the lower flange into the recess. Push the cap into the bumper.

Towing another vehicle

5-door Hatchback, 4-door Saloon, Sports Tourer, OPC: disengage cap at bottom and remove downwards.

Country Tourer: insert a screwdriver in the slot at the lower edge of the cap. Release the cap by carefully moving the screwdriver downwards. To prevent damage, it is recommended to place a cloth between the screwdriver and the frame.

The towing eye is stowed with the vehicle tools ⇨ 252.

Screw in the towing eye as far as it will go until it stops in a horizontal position.

The lashing eye at the rear underneath the vehicle must never be used as a towing eye.

Attach a tow rope – or better still a tow rod – to the towing eye.

The towing eye must only be used for towing and not for recovering a vehicle.

Caution
Drive slowly. Do not drive jerkily. Excessive tractive force can damage the vehicle.

After towing, unscrew the towing eye.

5-door Hatchback, 4-door Saloon, Sports Tourer, OPC: insert cap at the bottom, turn slightly clockwise and engage cap.

Country Tourer: insert cap with the upper flange into the recess and fix cap by pushing.

Appearance care

Exterior care

Locks

The locks are lubricated at the factory using a high quality lock cylinder grease. Use a de-icing agent only when absolutely necessary, as this has a degreasing effect and impairs lock function. After using a de-icing agent, have the locks regreased by a workshop.

Washing

The paintwork of your vehicle is exposed to environmental influences. Wash and wax your vehicle regularly. When using automatic vehicle washes, select a programme that includes waxing.

Bird droppings, dead insects, resin, pollen and the like should be cleaned off immediately, as they contain aggressive constituents which can cause paint damage.

If using a vehicle wash, comply with the vehicle wash manufacturer's instructions. The windscreen wiper and rear window wiper must be switched off. Remove antenna and external accessories such as roof racks etc.

If you wash your vehicle by hand, make sure that the insides of the wheel housings are also thoroughly rinsed out.

Wax painted parts of the vehicle regularly.

Clean edges and folds on opened doors and the bonnet as well as the areas they cover.

Clean bright metal mouldings with a cleaning solution approved for aluminium to avoid damages.

Caution
Always use a cleaning agent with a pH value of four to nine. Do not use cleaning agents on hot surfaces.

Do not clean the engine compartment with a steam-jet or high-pressure jet cleaner.

Thoroughly rinse and leather-off the vehicle. Rinse leather frequently. Use separate leathers for painted and glass surfaces: remnants of wax on the windows will impair vision.

Have the door hinges of all doors greased by a workshop.

Do not use hard objects to remove spots of tar. Use tar removal spray on painted surfaces.

Exterior lights

Headlight and other light covers are made of plastic. Do not use any abrasive or caustic agents, do not use an ice scraper, and do not clean them dry.

Polishing and waxing

Wax the vehicle regularly (at the latest when water no longer beads). Otherwise, the paintwork will dry out.

Polishing is necessary only if the paint has become dull or if solid deposits have become attached to it.

Paintwork polish with silicone forms a protective film, making waxing unnecessary.

Plastic body parts must not be treated with wax or polishing agents.

Windows and windscreen wiper blades

Use a soft lint-free cloth or chamois leather together with window cleaner and insect remover.

When cleaning the rear window from inside, always wipe in parallel to the heating element to prevent damage.

For mechanical removal of ice, use a sharp-edged ice scraper. Press the scraper firmly against the glass so that no dirt can get under it and scratch the glass.

Clean smearing wiper blades with a soft cloth and window cleaner.

Remove dirt residues from smearing wiper blades by using a soft cloth and window cleaner. Also make sure to remove any residues such as wax, insect residues and similar from the window.

Ice residues, pollution and continuous wiping on dry windows will damage or even destroy the wiper blades.

Sunroof

Never clean with solvents or abrasive agents, fuels, aggressive media (e.g. paint cleaner, acetone-containing solutions etc.), acidic or highly alkaline media or abrasive pads. Do not apply wax or polishing agents to the sunroof.

Wheels and tyres

Do not use high-pressure jet cleaners.

Clean rims with a pH-neutral wheel cleaner.

Rims are painted and can be treated with the same agents as the body.

Paintwork damage

Rectify minor paintwork damage with a touch-up pen before rust forms. Have more extensive damage or rust areas repaired by a workshop.

Underbody

Some areas of the vehicle underbody have a PVC undercoating while other critical areas have a durable protective wax coating.

After the underbody is washed, check the underbody and have it waxed if necessary.

Bitumen/rubber materials could damage the PVC coating. Have underbody work carried out by a workshop.

Before and after winter, wash the underbody and have the protective wax coating checked.

Liquid gas system

⚠ Danger

Liquid gas is heavier than air and can collect in sink points.

Take care when performing work at the underbody in a pit.

For painting work and when using a drying booth at a temperature above 60 °C, the liquid gas tank must be removed.

Do not make any modifications to the liquid gas system.

Towing equipment

Do not clean the coupling ball bar with a steam-jet or high-pressure jet cleaner.

Interior care

Interior and upholstery

Only clean the vehicle interior, including the instrument panel fascia and panelling, with a dry cloth or interior cleaner.

Clean the leather upholstery with clear water and a soft cloth. In case of heavy soiling, use leather care.

The instrument cluster and the displays should only be cleaned using a soft damp cloth. If necessary use a weak soap solution.

Clean fabric upholstery with a vacuum cleaner and brush. Remove stains with an upholstery cleaner.

Clothing fabrics may not be colourfast. This could cause visible discolourations, especially on light-coloured upholstery. Removable stains and discolourations should be cleaned as soon as possible.

Clean seat belts with lukewarm water or interior cleaner.

Caution

Close Velcro fasteners as open Velcro fasteners on clothing could damage seat upholstery.

The same applies to clothing with sharp-edged objects, like zips or belts or studded jeans.

Plastic and rubber parts

Plastic and rubber parts can be cleaned with the same cleaner as used to clean the body. Use interior cleaner if necessary. Do not use any other agent. Avoid solvents and petrol in particular. Do not use high-pressure jet cleaners.

Service and maintenance

General information **274**
Service information 274
Recommended fluids, lubricants and parts **275**
Recommended fluids and lubricants 275

General information

Service information

In order to ensure economical and safe vehicle operation and to maintain the value of your vehicle, it is of vital importance that all maintenance work is carried out at the proper intervals as specified.

The detailed, up-to-date service schedule for your vehicle is available at the workshop.

Service display ⇨ 102.

European service intervals

Maintenance of your vehicle is required every 30,000 km or after 1 year, whichever occurs first, unless otherwise indicated in the service display.

A shorter service interval can be valid for severe driving behaviour, e.g. for taxis and police vehicles.

The European service intervals are valid for the following countries:

Andorra, Austria, Belgium, Bosnia-Herzegovina, Bulgaria, Croatia, Cyprus, Czech Republic, Denmark, Estonia, Finland, France, Germany, Greece, Greenland, Hungary, Iceland, Ireland, Italy, Latvia, Liechtenstein, Lithuania, Luxembourg, Macedonia, Malta, Monaco, Montenegro, Netherlands, Norway, Poland, Portugal, Romania, San Marino, Serbia, Slovakia, Slovenia, Spain, Sweden, Switzerland, United Kingdom.

Service display ⇨ 102.

International service intervals

Maintenance of your vehicle is required every 15,000 km or after 1 year, whichever occurs first, unless otherwise indicated in the service display.

The international service intervals are valid for the countries which are not listed in the European service intervals.

Service display ⇨ 102.

Confirmations

Confirmation of service is recorded in the Service and Warranty Booklet. The date and mileage is completed with the stamp and signature of the servicing workshop.

Make sure that the Service and Warranty Booklet is completed correctly as continuous proof of service is essential if any warranty or goodwill claims are to be met, and is also a benefit when selling the vehicle.

Service interval with remaining engine oil life duration

The service interval is based on several parameters depending on usage.

The service display lets you know when to change the engine oil.

Service display ⇨ 102.

Recommended fluids, lubricants and parts

Recommended fluids and lubricants

Only use products that meet the recommended specifications.

⚠ Warning

Operating materials are hazardous and could be poisonous. Handle with care. Pay attention to information given on the containers.

Engine oil

Engine oil is identified by its quality and its viscosity. Quality is more important than viscosity when selecting which engine oil to use. The oil quality ensures e.g. engine cleanliness, wear protection and oil aging control, whereas viscosity grade gives information on the oil's thickness over a temperature range.

Dexos is the newest engine oil quality that provides optimum protection for gasoline and diesel engines. If it is unavailable, engine oils of other listed qualities have to be used. Recommendations for gasoline engines are also valid for Compressed Natural Gas (CNG), Liquified Petroleum Gas (LPG) and Ethanol (E85) fuelled engines.

Select the appropriate engine oil based on its quality and on the minimum ambient temperature ⇨ 279.

Topping up engine oil

Engine oils of different manufacturers and brands can be mixed as long as they comply with the required engine oil quality and viscosity.

Use of engine oil with only ACEA A1/B1 or only A5/B5 quality is prohibited, since it can cause long-term engine damage under certain operating conditions.

Select the appropriate engine oil based on its quality and on the minimum ambient temperature ⇨ 279.

Additional engine oil additives

The use of additional engine oil additives could cause damage and invalidate the warranty.

Engine oil viscosity grades

The SAE viscosity grade gives information of the thickness of the oil.

Multigrade oil is indicated by two figures, e.g. SAE 5W-30. The first figure, followed by a W, indicates the low temperature viscosity and the second figure the high temperature viscosity.

Select the appropriate viscosity grade depending on the minimum ambient temperature ⇨ 279.

All of the recommended viscosity grades are suitable for high ambient temperatures.

Coolant and antifreeze

Use only organic acid type-long life coolant (LLC) antifreeze approved for the vehicle. Consult a workshop.

The system is factory filled with coolant designed for excellent corrosion protection and frost protection down to approx. -28 °C. In northern countries with very low temperatures the factory filled coolant provides frost protection down to approx. -37 °C. This concentration should be maintained all year round. The use of additional coolant additives that intend to give additional corrosion protection or seal against minor leaks can cause function problems. Liability for consequences resulting from the use of additional coolant additives will be rejected.

Brake and clutch fluid

Over time, brake fluid absorbs moisture which will reduce braking effectiveness. The brake fluid should therefore be replaced at the specified interval.

AdBlue

Only use AdBlue to reduce the nitrogen oxides in the exhaust emission ⇨ 165.

Technical data

Vehicle identification **277**
Vehicle Identification Number .. 277
Identification plate 277
Engine identification 278
Vehicle data **279**
Recommended fluids and lubricants 279
Engine data 282
Performance 284
Vehicle weight 287
Vehicle dimensions 290
Capacities 292
Tyre pressures 293

Vehicle identification

Vehicle Identification Number

The Vehicle Identification Number is visible through the windscreen.

The Vehicle Identification Number may be stamped on the identification plate and on the floor pan, under the floor covering, visible under a cover, or in the engine compartment on the right body panel.

Identification plate

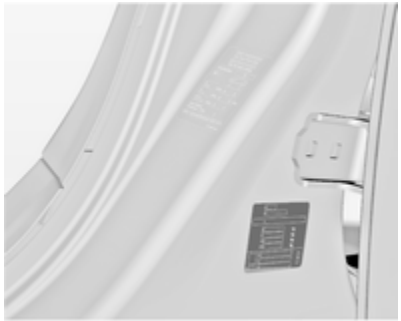

The identification label is located on the front left or right door frame.

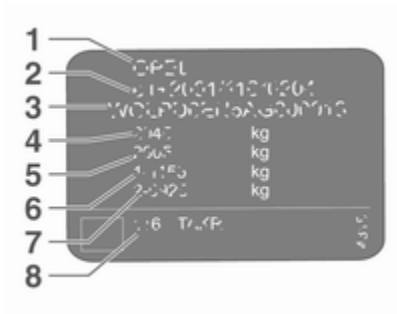

Information on identification plate:

1 : manufacturer
2 : type approval number
3 : vehicle identification number
4 : permissible gross vehicle weight rating in kg
5 : permissible gross train weight in kg
6 : maximum permissible front axle load in kg
7 : maximum permissible rear axle load in kg
8 : vehicle-specific or country-specific data, e.g. MY = model year

The combined total of front and rear axle loads must not exceed the permissible gross vehicle weight. For example, if the front axle is bearing its maximum permissible load, the rear axle can only bear a load that is equal to the gross vehicle weight minus the front axle load.

The technical data is determined in accordance with European Community standards. We reserve the right to make modifications.

Specifications in the vehicle documents always have priority over those given in this manual.

Engine identification

The technical data tables use the engine identifier code. The engine data table additionally shows the engineering code. Engine data ⇨ 282.

To identify the respective engine, refer to the EEC Certificate of Conformity provided with your vehicle or other national registration documents.

The Certificate of Conformity shows the engine identifier code, other national publications may show the engineering code. Check piston displacement and engine power to identify the respective engine.

Vehicle data

Recommended fluids and lubricants

European service schedule

Required engine oil quality

	All European countries with European service interval ⇨ 274	
Engine oil quality	Petrol engines (including CNG, LPG, E85)	Diesel engines
dexos 1	–	–
dexos 2	✓	✓

In case dexos quality is unavailable you may use max. 1 litre engine oil quality ACEA C3 once between each oil change.

Engine oil viscosity grades

	All European countries with European service interval ⇨ 274
Ambient temperature	Petrol and diesel engines
down to -25 °C	SAE 5W-30 or SAE 5W-40
below -25 °C	SAE 0W-30 or SAE 0W-40

International service schedule

Required engine oil quality

	All countries with international service interval ➪ 274	
Engine oil quality	Petrol engines (including CNG, LPG, E85)	Diesel engines
dexos 1 (if available)	✓	–
dexos 2	✓	✓

In case dexos quality is unavailable you may use the oil qualities listed below:

	All countries with international service interval ➪ 274	
Engine oil quality	Petrol engines (including CNG, LPG, E85)	Diesel engines
GM-LL-A-025	✓	–
GM-LL-B-025	–	✓

	All countries with international service interval ➪ 274	
Engine oil quality	Petrol engines (including CNG, LPG, E85)	Diesel engines
ACEA A3/B3	✓	–
ACEA A3/B4	✓	✓

	All countries with international service interval ⇨ 274	
ACEA C3	✓	✓
API SM	✓	–
API SN resource conserving	✓	–

Engine oil viscosity grades

	All countries with international service interval ⇨ 274
Ambient temperature	Petrol and diesel engines
down to -25 °C	SAE 5W-30 or SAE 5W-40
below -25 °C	SAE 0W-30 or SAE 0W-40
down to -20 °C	SAE 10W-30[1)] or SAE 10W-40[1)]

1) Permitted, but usage of SAE 5W-30 or SAE 5W-40 with dexos quality is recommended.

Engine data

Engine identifier code	B14NET	B14NET	B16SHL	B18XER	B20NHT	B28NER
Sales designation	1.4	1.4 LPG	1.6	1.8	2.0	OPC
Engineering code	B14NET	B14NET	B16SHT	B18XER	B20NHT	B28NET
Piston displacement [cm^3]	1364	1364	1598	1796	1998	2792
Engine power [kW]	103	103	125	103	184	239
at rpm	4900-6000	4900-6000	4750-6000	6300	5300	5250
Torque [Nm]	200	200	260	175	400	435
at rpm	1850-4900	1850-4900	1650-4500	3800	2500-4000	5250
Fuel type	Petrol	Petrol/Liquid gas	Petrol	Petrol	Petrol	Petrol
Octane rating RON[2)]						
recommended	95	95	98	95	95	98
possible	98	98	95	98	98	95
possible	91	91	91	91	91	91[3)]
Additional fuel type	–	Liquid gas (LPG)	–	–	–	–

2) A country-specific label at the fuel filler flap can supersede the engine-specific requirement.
3) Possible only if high engine load, full load or driving in mountainous terrain with a caravan/trailer or high payload is avoided.

Engine identifier code	B16DTJ	B16DTH	B20DTH
Sales designation	1.6 CDTI	1.6 CDTI	2.0 CDTI
Engineering code	B16DTH	B16DTH	B20DTH
Piston displacement [cm^3]	1598	1598	1956
Engine power [kW]	88	100	125
at rpm	4000	3500-4000	3750
Torque [Nm]	320	320	400
at rpm	2000	2000-2250	1750-2500
Fuel type	Diesel	Diesel	Diesel

Performance

5-door Hatchback/4-door Saloon

Engine	B14NET	B14NET LPG	B16SHL	B18XER	B20NHT	B20NHT AWD[4]	B28NER
Maximum speed [km/h]							
Manual transmission	205	195	220	205	250	250	250[5]/270
Automatic transmission	–	–	210	–	245	245	250[5]/270

4) All wheel drive.
5) Limited speed.

Engine	B16DTJ	B16DTH	B20DTH	B20DTH AWD[4]
Maximum speed [km/h]				
Manual transmission	195/200[6]	205/210[6]	225	215
Automatic transmission	–	200	220	210

4) All wheel drive.
6) CO2 reduced.

Sports Tourer

Engine	B14NET	B14NET LPG	B16SHL	B18XER	B20NHT	B20NHT AWD[4]	B28NER
Maximum speed [km/h]							
Manual transmission	200	190	215	200	245	240	250[5]/270
Automatic transmission	–	–	205	–	240	235	250[5]/270

4) All wheel drive.
5) Limited speed.

Engine	B16DTJ	B16DTH	B20DTH	B20DTH AWD[4]
Maximum speed [km/h]				
Manual transmission	190/195[7]	200/205[7]	220	210
Automatic transmission	–	195	215	205

4) All wheel drive.
7) CO2 reduced.

Country Tourer

Engine	B16SHL	B20NHT AWD[4]	B20DTH	B20DTH AWD[4]
Maximum speed [km/h]				
Manual transmission	215	235	220	205
Automatic transmission	205	230	215	200

4) All wheel drive.

Vehicle weight

Kerb weight, basic model without any optional equipment

4-door Saloon	Engine	Manual transmission	Automatic transmission
[kg]	B14NET	1513	–
	B14NET LPG	1581	–
	B16SHL	1571	1613
	B18XER	1513	–
	B20NHT	1614	1613
	B20NHT - All-wheel drive	1733	1788
	B28NER - All-wheel drive	1810	1835
[kg]	B16DTJ	1571	–
	B16DTH	1571	1623
	B20DTH	1613	1664
	B20DTH - All-wheel drive	1788	1788

Kerb weight, basic model without any optional equipment

5-door Hatchback	Engine	Manual transmission	Automatic transmission
[kg]	B14NET	1553	–
	B14NET LPG	1581	–
	B16SHL	1613	1613
	B18XER	1503	–
	B20NHT	1613	1664
	B20NHT - All-wheel drive	1788	1788
	B28NER - All-wheel drive	1825	1843
[kg]	B16DTJ	1613	–
	B16DTH	1613	1623
	B20DTH	1613	1664
	B20DTH - All-wheel drive	1788	1816

Kerb weight, basic model without any optional equipment

Sports Tourer	Engine	Manual transmission	Automatic transmission
[kg]	B14NET	1613	–
	B14NET LPG	1664	–
	B16SHL	1701	1701
	B18XER	1613	–
	B20NHT	1701	1733
	B20NHT - All-wheel drive	1843	1843
	B28NER - All-wheel drive	1940	1953
[kg]	B16DTJ	1664	–
	B16DTH	1664	1701
	B20DTH	1733	1743
	B20DTH - All-wheel drive	1865	1901

Kerb weight, basic model without any optional equipment

Country Tourer	Engine	Manual transmission	Automatic transmission
[kg]	B16SHL - Front-wheel-drive	1701	1701
	B20NHT - All-wheel drive	1843	1843
[kg]	B20DTH - Front-wheel-drive	1733	1733
	B20DTH - All-wheel drive	1865	1929

Optional equipment and accessories increase the kerb weight.

Loading information ⇨ 83.

Vehicle dimensions

	4-door Saloon	5-door Hatchback	Sports Tourer	Country Tourer
Length [mm]	4842	4842	4920	4920
Width without exterior mirrors [mm]	1856	1856	1856	1856
Width with two exterior mirrors [mm]	2084	2084	2084	2084
Height (without antenna) [mm]	1498	1498	1520	1530
Vehicle height - Rear compartment open [mm]	1830	2175	2184	2195
Length of load compartment floor [mm]	1003	1003	1086	1086
Length of load compartment with folded rear seats [mm]	1895	1895	1908	1908

	4-door Saloon	5-door Hatchback	Sports Tourer	Country Tourer
Load compartment width [mm]	1027	1027	1030	1030
Load compartment height [mm]	356	436	677	677
Wheelbase [mm]	2737	2737	2737	2737
Turning circle diameter [m]	11.3 - 12.05	11.3 - 12.05	11.3 - 12.05	11.3 - 12.05

Capacities

Engine oil

Engine	B14NET	B14NET LPG	B16SHL	B18XER	B20NHT FWD[8)]	B20NHT AWD[9)]	B28NER
including Filter [l]	4.0	4.0	5.5	4.5	4.7	5.7	6.3
between MIN and MAX [l]	1.0	1.0	1.0	1.0	1.0	1.0	1.0

8) Front wheel drive.
9) All wheel drive.

Engine	B16DTJ	B16DTH	B20DTH
including Filter [l]	5.0	5.0	5.25
between MIN and MAX [l]	1.0	1.0	1.0

Fuel tank

Petrol/diesel, refilling quantity [l]	70
LPG, refilling quantity [l]	41

AdBlue tank

AdBlue, refilling quantity [l]	7.5

Tyre pressures

Tyre pressures differ depending on the model variant. The order of the listed car models is as follows:

- Vehicles with Front-wheel drive: 5-door Hatchback/4-door Saloon.
- Vehicles with Front-wheel drive: Sports Tourer.
- Vehicles with Front-wheel drive: Country Tourer.
- Vehicles with All-wheel drive: 5-door Hatchback/4-door Saloon.
- Vehicles with All-wheel drive: Sports Tourer.
- Vehicles with All-wheel drive: Country Tourer.

Refer to the table header to find the correct tyre pressure for your model.

Tyre pressures for vehicles with Front-wheel drive

5-door Hatchback/4-door Saloon

Engine	Tyres	Comfort with up to 3 people		ECO with up to 3 people		With full load	
		front	rear	front	rear	front	rear
		[kPa/bar] ([psi])	[kPa/bar] ([psi])	[kPa/bar] ([psi])	[kPa/bar] ([psi])	[kPa/bar] ([psi])	[kPa/bar] ([psi])
B14NET, B14NET LPG, B18XER	215/60 R16,	220/2.2 (32)	200/2.0 (29)	270/2.7 (39)	260/2.6 (38)	220/2.2 (32)	270/2.7 (39)
	225/50 R17,						
	235/45 R18,						
	245/45 R18,						
	245/40 R19,						
	245/35 R20						
	225/55 R17	220/2.2 (32)	200/2.0 (29)	300/3.0 (43)	300/3.0 (43)	220/2.2 (32)	270/2.7 (39)

Engine	Tyres	Comfort with up to 3 people		ECO with up to 3 people		With full load	
		front	rear	front	rear	front	rear
		[kPa/bar] ([psi])	[kPa/bar] ([psi])	[kPa/bar] ([psi])	[kPa/bar] ([psi])	[kPa/bar] ([psi])	[kPa/bar] ([psi])
B16SHL	215/60 R16,	230/2.3 (33)	210/2.1 (30)	270/2.7 (39)	260/2.6 (38)	230/2.3 (33)	280/2.8 (41)
	225/55 R17,						
	225/50 R17,						
	235/45 R18,						
	245/45 R18,						
	245/40 R19,						
	245/35 R20						

Engine	Tyres	Comfort with up to 3 people		ECO with up to 3 people		With full load	
		front	rear	front	rear	front	rear
		[kPa/bar] ([psi])	[kPa/bar] ([psi])	[kPa/bar] ([psi])	[kPa/bar] ([psi])	[kPa/bar] ([psi])	[kPa/bar] ([psi])
B20NHT	225/50 R17, 225/55 R17	240/2.4 (35)	220/2.2 (32)	300/3.0 (43)	300/3.0 (43)	250/2.5 (36)	300/3.0 (43)
	235/45 R18, 245/45 R18, 245/40 R19, 245/35 R20	240/2.4 (35)	220/2.2 (32)	270/2.7 (39)	260/2.6 (38)	250/2.5 (36)	300/3.0 (43)
B20NHT with Sport chassis and Brembo brake 18"	245/40 R19	230/2.3 (33)	220/2.2 (32)	270/2.7 (39)	290/2.9 (42)	260/2.6 (38)	300/3.0 (43)
	235/45 R18, 245/35 R20	250/2.5 (36)	250/2.5 (36)	270/2.7 (39)	290/2.9 (42)	260/2.6 (38)	320/3.2 (46)

Engine	Tyres	Comfort with up to 3 people		ECO with up to 3 people		With full load	
		front	rear	front	rear	front	rear
		[kPa/bar] ([psi])	[kPa/bar] ([psi])	[kPa/bar] ([psi])	[kPa/bar] ([psi])	[kPa/bar] ([psi])	[kPa/bar] ([psi])
B16DTJ, B16DTH	215/60 R16,	230/2.3 (33)	210/2.1 (30)	270/2.7 (39)	260/2.6 (38)	230/2.3 (33)	280/2.8 (41)
	225/50 R17,						
	235/45 R18,						
	245/45 R18,						
	245/40 R19,						
	225/55 R17,						
	245/35 R20						

Engine	Tyres	Comfort with up to 3 people		ECO with up to 3 people		With full load	
		front	rear	front	rear	front	rear
		[kPa/bar] ([psi])	[kPa/bar] ([psi])	[kPa/bar] ([psi])	[kPa/bar] ([psi])	[kPa/bar] ([psi])	[kPa/bar] ([psi])
B20DTH	215/60 R16,	240/2.4 (35)	220/2.2 (32)	270/2.7 (39)	260/2.6 (38)	240/2.4 (35)	290/2.9 (42)
	225/50 R17						
	225/55 R17	220/2.2 (32)	200/2.0 (29)	250/2.5 (36)	240/2.4 (35)	240/2.4 (35)	290/2.9 (42)
	235/45 R18,	220/2.2 (32)	200/2.0 (29)	270/2.7 (39)	260/2.6 (38)	240/2.4 (35)	290/2.9 (42)
	245/45 R18,						
	245/40 R19,						
	245/35 R20						

Engine	Tyres	Comfort with up to 3 people		ECO with up to 3 people		With full load	
		front	rear	front	rear	front	rear
		[kPa/bar] ([psi])	[kPa/bar] ([psi])	[kPa/bar] ([psi])	[kPa/bar] ([psi])	[kPa/bar] ([psi])	[kPa/bar] ([psi])
B20DTH with Sport chassis and Brembo brake 18"	245/40 R19	230/2.3 (33)	220/2.2 (32)	270/2.7 (39)	290/2.9 (42)	260/2.6 (38)	300/3.0 (43)
	235/45 R18, 245/35 R20	250/2.5 (36)	250/2.5 (36)	270/2.7 (39)	290/2.9 (42)	260/2.6 (38)	320/3.2 (46)
All	Temporary spare wheel 125/80 R16 125/70 R17	420/4.2 (61)	420/4.2 (61)	–	–	420/4.2 (61)	420/4.2 (61)

Sports Tourer

Engine	Tyres	Comfort with up to 3 people		ECO with up to 3 people		With full load	
		front	rear	front	rear	front	rear
		[kPa/bar] ([psi])	[kPa/bar] ([psi])	[kPa/bar] ([psi])	[kPa/bar] ([psi])	[kPa/bar] ([psi])	[kPa/bar] ([psi])
B14NET, B14NET LPG, B18XER	215/60 R16,	220/2.2 (32)	240/2.4 (34)	270/2.7 (39)	290/2.9 (41)	220/2.2 (32)	290/2.9 (42)
	225/55 R17,						
	235/45 R18,						
	245/45 R18,						
	245/40 R19,						
	245/35 R20						
	225/50 R17	220/2.2 (32)	240/2.4 (34)	300/3.0 (43)	300/3.0 (43)	220/2.2 (32)	290/2.9 (42)

Engine	Tyres	Comfort with up to 3 people		ECO with up to 3 people		With full load	
		front	rear	front	rear	front	rear
		[kPa/bar] ([psi])	[kPa/bar] ([psi])	[kPa/bar] ([psi])	[kPa/bar] ([psi])	[kPa/bar] ([psi])	[kPa/bar] ([psi])
B20NHT	225/50 R17,	230/2.3 (33)	250/2.5 (36)	270/2.7 (39)	290/2.9 (42)	230/2.3 (33)	300/3.0 (43)
	235/45 R18,						
	245/35 R20,						
	225/55 R17,						
	245/40 R19,						
	245/45 R18						
B20NHT with Sport chassis and Brembo brake 18"	245/40R19	230/2.3 (33)	220/2.2 (32)	270/2.7 (39)	290/2.9 (42)	260/2.6 (38)	300/3.0 (43)
	235/45R18,	250/2.5 (36)	250/2.5 (36)	270/2.7 (39)	290/2.9 (42)	260/2.6 (38)	320/3.2 (46)
	245/35R20						

Engine	Tyres	Comfort with up to 3 people		ECO with up to 3 people		With full load	
		front	rear	front	rear	front	rear
		[kPa/bar] ([psi])	[kPa/bar] ([psi])	[kPa/bar] ([psi])	[kPa/bar] ([psi])	[kPa/bar] ([psi])	[kPa/bar] ([psi])
B16SHL, B16DTJ, B16DTH	215/60 R16,	220/2.2 (32)	240/2.4 (34)	270/2.7 (39)	290/2.9 (42)	230/2.3 (33)	300/3.0 (43)
	225/55 R17,						
	235/45 R18,						
	245/45 R18,						
	245/40 R19,						
	245/35 R20						
	225/50 R17	220/2.2 (32)	240/2.4 (34)	300/3.0 (43)	300/3.0 (43)	230/2.3 (33)	300/3.0 (43)
B20DTH	225/55 R17,	230/2.3 (33)	250/2.5 (36)	270/2.7 (39)	290/2.9 (42)	230/2.3 (33)	300/3.0 (43)
	235/45 R18,						
	245/45 R18,						
	245/40 R19,						
	245/35 R20						

Engine	Tyres	Comfort with up to 3 people		ECO with up to 3 people		With full load	
		front	rear	front	rear	front	rear
		[kPa/bar] ([psi])	[kPa/bar] ([psi])	[kPa/bar] ([psi])	[kPa/bar] ([psi])	[kPa/bar] ([psi])	[kPa/bar] ([psi])
	225/50 R17	230/2.3 (33)	250/2.5 (36)	300/3.0 (43)	300/3.0 (43)	230/2.3 (33)	300/3.0 (43)
B20DTH with Sport chassis and Brembo brake 18"	245/40R19	230/2.3 (33)	220/2.2 (32)	270/2.7 (39)	290/2.9 (42)	260/2.6 (38)	300/3.0 (43)
	235/45R18, 245/35R20	250/2.5 (36)	250/2.5 (36)	270/2.7 (39)	290/2.9 (42)	260/2.6 (38)	320/3.2 (46)
All	Temporary spare wheel 125/80 R16 125/70 R17	420/4.2 (61)	420/4.2 (61)	–	–	420/4.2 (61)	420/4.2 (61)

Country Tourer - Front wheel drive

Engine	Tyres	Comfort with up to 3 people		ECO with up to 3 people		With full load	
		front	rear	front	rear	front	rear
		[kPa/bar] ([psi])	[kPa/bar] ([psi])	[kPa/bar] ([psi])	[kPa/bar] ([psi])	[kPa/bar] ([psi])	[kPa/bar] ([psi])
B16SHL	225/55 R17, 235/45 R18, 245/45 R18, 245/40 R19, 245/35 R20	220/2.2 (32)	240/2.4 (34)	270/2.7 (39)	290/2.9 (42)	230/2.3 (33)	300/3.0 (43)
	225/50 R17	220/2.2 (32)	240/2.4 (34)	300/3.0 (43)	300/3.0 (43)	230/2.3 (33)	300/3.0 (43)
B20DTH	225/55 R17, 235/45 R18, 245/45 R18, 245/40 R19, 245/35 R20	230/2.3 (33)	250/2.5 (36)	270/2.7 (39)	290/2.9 (42)	230/2.3 (33)	300/3.0 (43)

Engine	Tyres	Comfort with up to 3 people		ECO with up to 3 people		With full load	
		front	rear	front	rear	front	rear
		[kPa/bar] ([psi])	[kPa/bar] ([psi])	[kPa/bar] ([psi])	[kPa/bar] ([psi])	[kPa/bar] ([psi])	[kPa/bar] ([psi])
	225/50 R17	230/2.3 (33)	250/2.5 (36)	300/3.0 (43)	300/3.0 (43)	230/2.3 (33)	300/3.0 (43)
All	Temporary spare wheel 125/80 R16 125/70 R17	420/4.2 (61)	420/4.2 (61)	–	–	420/4.2 (61)	420/4.2 (61)

Tyre pressures for vehicles with All-wheel drive

5-door Hatchback/4-door Saloon

Engine	Tyres	Comfort with up to 3 people		ECO with up to 3 people		With full load	
		front	rear	front	rear	front	rear
		[kPa/bar] ([psi])	[kPa/bar] ([psi])	[kPa/bar] ([psi])	[kPa/bar] ([psi])	[kPa/bar] ([psi])	[kPa/bar] ([psi])
B20NHT	225/50 R17, 245/35 R20	250/2.5 (36)	230/2.3 (33)	290/2.9 (42)	270/2.7 (39)	270/2.7 (39)	300/3.0 (43)
	225/55 R17, 235/45 R18, 245/45 R18, 245/40 R19	230/2.3 (33)	210/2.1 (30)	270/2.7 (39)	260/2.6 (38)	250/2.5 (36)	290/2.9 (42)
B20NHT with Sport chassis and Brembo brake 18"	245/40R19	230/2.3 (33)	220/2.2 (32)	270/2.7 (39)	290/2.9 (42)	260/2.6 (38)	300/3.0 (43)
	235/45R18, 245/35R20	250/2.5 (36)	250/2.5 (36)	270/2.7 (39)	290/2.9 (42)	260/2.6 (38)	320/3.2 (46)

Engine	Tyres	Comfort with up to 3 people		ECO with up to 3 people		With full load	
		front	rear	front	rear	front	rear
		[kPa/bar] ([psi])	[kPa/bar] ([psi])	[kPa/bar] ([psi])	[kPa/bar] ([psi])	[kPa/bar] ([psi])	[kPa/bar] ([psi])
B20DTH	225/55 R17	240/2.4 (35)	220/2.2 (32)	250/2.5 (36)	240/2.4 (35)	250/2.5 (36)	290/2.9 (42)
	235/45 R18, 225/50 R17, 245/45 R18, 245/40 R19, 245/35 R20	240/2.4 (35)	220/2.2 (32)	270/2.7 (39)	260/2.6 (38)	250/2.5 (36)	290/2.9 (42)
B20DTH with Sport chassis and Brembo brake 18"	245/40R19	230/2.3 (33)	220/2.2 (32)	270/2.7 (39)	290/2.9 (42)	260/2.6 (38)	300/3.0 (43)
	235/45R18, 245/35R20	250/2.5 (36)	250/2.5 (36)	270/2.7 (39)	290/2.9 (42)	260/2.6 (38)	320/3.2 (46)

Engine	Tyres	Comfort with up to 3 people		ECO with up to 3 people		With full load	
		front	rear	front	rear	front	rear
		[kPa/bar] ([psi])	[kPa/bar] ([psi])	[kPa/bar] ([psi])	[kPa/bar] ([psi])	[kPa/bar] ([psi])	[kPa/bar] ([psi])
B28NER	235/45 R18, 245/40 R19, 255/35 R20	270/2.7 (39)	250/2.5 (36)	310/3.1 (45)	300/3.0 (43)	280/2.8 (41)	300/3.0 (43)
All	Temporary spare wheel 125/80 R16 125/70 R17	420/4.2 (61)	420/4.2 (61)	–	–	420/4.2 (61)	420/4.2 (61)

Sports Tourer

Engine	Tyres	Comfort with up to 3 people		ECO with up to 3 people		With full load	
		front	rear	front	rear	front	rear
		[kPa/bar] ([psi])	[kPa/bar] ([psi])	[kPa/bar] ([psi])	[kPa/bar] ([psi])	[kPa/bar] ([psi])	[kPa/bar] ([psi])
B20NHT, B20DTH	225/55 R17, 245/45 R18, 245/40 R19	220/2.2 (32)	220/2.2 (32)	270/2.7 (39)	290/2.9 (42)	230/2.3 (33)	300/3.0 (43)
	225/50 R17, 235/45 R18, 245/35 R20	250/2.5 (36)	250/2.5 (36)	270/2.7 (39)	290/2.9 (42)	260/2.6 (38)	320/3.2 (46)

Engine	Tyres	Comfort with up to 3 people		ECO with up to 3 people		With full load	
		front	rear	front	rear	front	rear
		[kPa/bar] ([psi])	[kPa/bar] ([psi])	[kPa/bar] ([psi])	[kPa/bar] ([psi])	[kPa/bar] ([psi])	[kPa/bar] ([psi])
B20NHT, B20DTH	245/40R19	230/2.3 (33)	220/2.2 (32)	270/2.7 (39)	290/2.9 (42)	260/2.6 (38)	300/3.0 (43)
with Sport chassis and Brembo brake 18"	235/45R18, 245/35R20	250/2.5 (36)	250/2.5 (36)	270/2.7 (39)	290/2.9 (42)	260/2.6 (38)	320/3.2 (46)
All	Temporary spare wheel 125/80 R16 125/70 R17	420/4.2 (61)	420/4.2 (61)	–	–	420/4.2 (61)	420/4.2 (61)

Country Tourer - All wheel drive

Engine	Tyres	Comfort with up to 3 people		ECO with up to 3 people		With full load	
		front	rear	front	rear	front	rear
		[kPa/bar] ([psi])	[kPa/bar] ([psi])	[kPa/bar] ([psi])	[kPa/bar] ([psi])	[kPa/bar] ([psi])	[kPa/bar] ([psi])
B20NHT, B20DTH	225/55 R17,	220/2.2 (32)	220/2.2 (32)	270/2.7 (39)	290/2.9 (42)	220/2.2 (32)	290/2.9 (42)
	235/45 R18,						
	235/50 R18,						
	245/45 R19						
All	Temporary spare wheel	420/4.2 (61)	420/4.2 (61)	–	–	420/4.2 (61)	420/4.2 (61)
	125/80 R16						
	125/70 R17						

Customer information

Customer information **312**
Declaration of conformity 312
Collision damage repair 315
Software acknowledgement 315
Vehicle data recording and privacy **317**
Event data recorders 317
Radio Frequency Identification (RFID) 318

Customer information

Declaration of conformity

Radio transmission systems

This vehicle has systems that transmit and/or receive radio waves subject to Directive 1999/5/EC. These systems are in compliance with the essential requirements and other relevant provisions of Directive 1999/5/EC. Copies of the original Declarations of Conformity can be obtained on our website.

Radar systems

Country-specific Declarations of Conformity for radar systems are shown on the following page:

European Union
EC Directive: 1999/5/EC
Manufacturer: Delphi Electronics & Safety
Model / Type Designation: L2C0051TR
Description / Intended Use: Electronically Scanned Radar version 2.5 (ESR2.5), object detection radar utilized for vehicular safety and convenience applications
Applied RF Exposure Standard: EN 62311
Applied RF Emissions Standard:
EN 301 091
Applied EMC Standard:
EN 301 489: 2011-09
Applied Safety Standard:
IEC 60950-1: 2005/A1:2009 (2nd Edition) and/or EN 60950-1:2006/A1:2010

Hereby, Delphi Electronics & Safety declares that the product referenced above is in compliance with the essential requirements of Directive 1999/5/EC, on the approximation of the laws of the member states relating to Directive 1999/5/EC.

Brazil

Este equipamento opera em caráter secundário, isto é, não tem direito a proteção contra interferência prejudicial, mesmo de estações do mesmo tipo, e não pode causar interferência a sistemas operando em caráter primário

Indonesia
27260/SDPPI/2012
1982

Jordan
Type Approval No.: TRC/LPD/2012/191
Equipment Type: Low Power Device (LPD)

Malaysia

Approval #: E 008693

Morocco
AGREE PAR L'ANRT MAROC
Numéro d'agrément : MR 7677 ANRT 2012
Date d'agrément : 28/11/2012

Singapore
Complies with
IDA Standards
DA105753

South Africa

TA-2012/1278
APPROVED

South Korea

Taiwan
CCAB13LP0080T2

UAE
TRA
REGISTERED No:
ER0099791/12
DEALER No:
DA0047809/10

United States of America and Canada

Model / FCC ID: L2C0051TR IC: 3432A-0051TR

This device complies with Part 15 of the FCC Rules and with Industry Canada license-exempt RSS standard(s). Operation is subject to the following two conditions: (1) This device may not cause harmful interference, and (2) This device must accept any interference received, including interference that may cause undesired operation.

Le présent appareil est conforme aux CNR d'Industrie Canada applicables aux appareils radio exempts de licence. L'exploitation est autorisée aux deux conditions suivantes: (1) l'appareil ne doit pas produire de brouillage, et (2) l'utilisateur de l'appareil doit accepter tout brouillage radioélectrique subi, même si le brouillage est susceptible d'en compromettre le fonctionnement.

Note: Changes or modifications not expressively approved by the party responsible for compliance could void the user's authority to operate the equipment. The term "IC:" before the radio certification number only signifies that Industry Canada technical specifications were met.

Note: This equipment complies with radiation exposure limits set forth for an uncontrolled environment. This equipment should be installed and operated with minimum distance of 20 cm between the radiator and your body.

Wir leben Autos.

Konformitätserklärung

nach EG Richtlinie 2006/42/EG

Hiermit erklären wir, dass das Produkt:

Produktbezeichnung: Wagenheber

Typ/GM-Teilenummern: 13348505, 13504504

den Bestimmungen der Richtlinie 2006/42/EG entspricht.

Angewendete technische Normen:

GMN9737	Jacking
GM 14337	Standard Equipment Jack - Hardware Tests
GMN5127	Vehicle Integrity-Hoisting and Service Station Jacking
GMW15005	Standard Equipment Jack and Spare Tire, Vehicle Test
ISO TS 16949	Qualitätsmanagementsystem

Der Unterzeichner ist Bevollmächtigter für die Zusammenstellung der technischen Unterlagen.

Rüsselsheim, 31. Januar 2014

Hans-Peter Metzger
Engineering Group Manager Chassis & Structure
Adam Opel AG

Adam Opel AG
Bahnhofsplatz
65423 Rüsselsheim
T (0 61 42) 7-70, F (0 61 42) 7-7 88 00
www.opel.de

Vorstand:
Dr. Karl-Thomas Neumann (Vorsitzender),
Michael F. Ablessio, Holger Kimmes,
Michael Lohscheller, Dr. Thomas Sedran,
Peter Thom, Susanna Webber, Johan Willems

Aufsichtsrat:
Stephen J. Girsky (Vorsitzender)

Sitz der Gesellschaft: Rüsselsheim
Handelsregister:
Amtsgericht Darmstadt, HRB 89158

Ein Unternehmen der GM Gruppe

Translation of the original declaration of conformity

Declaration of conformity according to EC Directive 2006/42/EC

We declare that the product:

Product designation: Jack

Type/GM part number: 13348505, 13504504

is in compliance with the provisions of Directive 2006/42/EC.

Applied technical standards:

GMN9737	:	jacking
GM 14337	:	standard equipment jack – hardware tests
GMN5127	:	vehicle integrity – hoisting and service station jacking
GMW15005	:	standard equipment jack and spare tire, vehicle test
ISO TS 16949	:	quality management systems

The signatory is authorised to compile the technical documentation.

Rüsselsheim, 31st January 2014

signed by

Hans-Peter Metzger

Engineering Group Manager Chassis & Structure

Adam Opel AG

D-65423 Rüsselsheim

Collision damage repair

Paint thickness

Due to production techniques, the thickness of the paint can vary between 50 and 400 µm.

Therefore, different paint thickness is no indicator for a collision damage repair.

Software acknowledgement

Certain OnStar components include libcurl and unzip software and other third party software. Below are the notices and licenses associated with libcurl and unzip and for other third party software please see http://www.lg.com/global/support/opensource/index.

libcurl

Copyright and permission notice

Copyright (c) 1996 - 2010, Daniel Stenberg, <daniel@haxx.se>.

All rights reserved.

Permission to use, copy, modify, and distribute this software for any purpose with or without fee is hereby granted, provided that the above copyright notice and this permission notice appear in all copies.

The software is provided "as is", without warranty of any kind, express or implied, including but not limited to the warranties of merchantability, fitness for a particular purpose and noninfringement of third party rights. In no event shall the authors or

copyright holders be liable for any claim, damages or other liability, whether in an action of contract, tort or otherwise, arising from, out of or in connection with the software or the use or other dealings in the software.

Except as contained in this notice, the name of a copyright holder shall not be used in advertising or otherwise to promote the sale, use or other dealings in this Software without prior written authorization of the copyright holder.

unzip

This is version 2005-Feb-10 of the Info-ZIP copyright and license. The definitive version of this document should be available at ftp://ftp.info-zip.org/pub/infozip/license.html indefinitely.

Copyright (c) 1990-2005 Info-ZIP. All rights reserved.

For the purposes of this copyright and license, “Info-ZIP” is defined as the following set of individuals:

Mark Adler, John Bush, Karl Davis, Harald Denker, Jean-Michel Dubois, Jean-loup Gailly, Hunter Goatley, Ed Gordon, Ian Gorman, Chris Herborth, Dirk Haase, Greg Hartwig, Robert Heath, Jonathan Hudson, Paul Kienitz, David Kirschbaum, Johnny Lee, Onno van der Linden, Igor Mandrichenko, Steve P. Miller, Sergio Monesi, Keith Owens, George Petrov, Greg Roelofs, Kai Uwe Rommel, Steve Salisbury, Dave Smith, Steven M. Schweda, Christian Spieler, Cosmin Truta, Antoine Verheijen, Paul von Behren, Rich Wales, Mike White.

This software is provided “as is,” without warranty of any kind, express or implied. In no event shall Info-ZIP or its contributors be held liable for any direct, indirect, incidental, special or consequential damages arising out of the use of or inability to use this software.

Permission is granted to anyone to use this software for any purpose, including commercial applications, and to alter it and redistribute it freely, subject to the following restrictions:

1. Redistributions of source code must retain the above copyright notice, definition, disclaimer, and this list of conditions.
2. Redistributions in binary form (compiled executables) must reproduce the above copyright notice, definition, disclaimer, and this list of conditions in documentation and/or other materials provided with the distribution. The sole exception to this condition is redistribution of a standard UnZipSFX binary (including SFXWiz) as part of a self-extracting archive; that is permitted without inclusion of this license, as long as the normal SFX banner has not been removed from the binary or disabled.
3. Altered versions--including, but not limited to, ports to new operating systems, existing ports with new graphical interfaces, and dynamic, shared, or static library versions--must be plainly marked as such and must not be misrepresented as being the

original source. Such altered versions also must not be misrepresented as being Info-ZIP releases--including, but not limited to, labeling of the altered versions with the names “Info-ZIP” (or any variation thereof, including, but not limited to, different capitalizations), “Pocket UnZip,” “WiZ” or “MacZip” without the explicit permission of Info-ZIP. Such altered versions are further prohibited from misrepresentative use of the Zip-Bugs or Info-ZIP e-mail addresses or of the Info-ZIP URL(s).

4. Info-ZIP retains the right to use the names “Info-ZIP,” “Zip,” “UnZip,” “UnZipSFX,” “WiZ,” “Pocket UnZip,” “Pocket Zip,” and “MacZip” for its own source and binary releases.

Vehicle data recording and privacy

Event data recorders

Data storage modules in the vehicle

A large number of electronic components of your vehicle contain data storage modules temporarily or permanently storing technical data about the condition of the vehicle, events and errors. In general, this technical information documents the condition of parts, modules, systems or the environment:

- operating conditions of system components (e.g. filling levels)
- status messages of the vehicle and its single components (e.g. number of wheel revolutions / rotational speed, deceleration, lateral acceleration)
- dysfunctions and defects in important system components
- vehicle reactions in particular driving situations (e.g. inflation of an airbag, activation of the stability regulation system)
- environmental conditions (e.g. temperature)

These data are exclusively technical and help identifying and correcting errors as well as optimising vehicle functions.

Motion profiles indicating travelled routes cannot be created with these data.

If services are used (e.g. repair works, service processes, warranty cases, quality assurance), employees of the service network (manufacturer included) are able to read out this technical information from the event and error data storage modules applying special diagnostic devices. If required, you will receive further information at these workshops. After an error has been corrected, the data are deleted from the error storage module or they are constantly overwritten.

When using the vehicle, situations may occur in which these technical data related to other information (accident report, damages on the vehicle, witness statements etc.) may be associated with a specific person - possibly, with the assistance of an expert.

Additional functions contractually agreed upon with the client (e.g. vehicle location in emergency cases) allow the transmission of particular vehicle data from the vehicle.

Radio Frequency Identification (RFID)

RFID technology is used in some vehicles for functions such as tyre pressure monitoring and ignition system security. It is also used in connection with conveniences such as radio remote controls for door locking/unlocking and starting, and in-vehicle transmitters for garage door openers. RFID technology in Opel vehicles does not use or record personal information or link with any other Opel system containing personal information.

Index

A

Accessories and vehicle modifications 226
Active emergency braking..... 195
Active head restraints..... 47
Adaptive cruise control..... 110, 184
Adaptive forward lighting … 110, 133
AdBlue..... 108, 165
Adjustable air vents 152
Airbag and belt tensioners 105
Airbag deactivation 63, 105
Airbag label..... 58
Airbag system 58
Air conditioning regular operation 154
Air conditioning system 141
Air intake 153
Air vents..... 152
All-wheel drive 173
Antilock brake system 173
Antilock brake system (ABS) 107
Anti-theft alarm system 35
Anti-theft locking system 34
Appearance care..... 270
Armrest..... 53, 54
Armrest storage 71
Ashtrays 93
Automatic anti-dazzle 40
Automatic climate control system 143
Automatic dimming 39
Automatic light control 130
Automatic locking 28
Automatic transmission 168
Automatic transmission fluid..... 229
Autostop..... 110, 160
Auxiliary heater..... 152

B

Baselevel display..... 111
Battery discharge protection 140
Battery voltage 121
Belts..... 55
BlueInjection..... 165
Bonnet 227
Brake and clutch fluid..... 275
Brake and clutch system 106
Brake assist 176
Brake fluid 232
Brakes 173, 232
Breakdown..... 267
Bulb replacement 235

C

Capacities 292
Cargo management system 76
Car Pass 22
Catalytic converter 165
Central locking system 25
Centre console lighting 139
Changing tyre and wheel size … 257

Charging system 105
Child locks 29
Child restraint installation locations 66
Child restraints..... 64
Child restraint systems 64
Climate control 16
Climate control systems..... 141
Clock..... 90
Collision damage repair..... 315
Colour-Info-Display..... 118
Control indicators..... 104
Control of the vehicle 156
Controls..... 86
Convex shape 37
Coolant and antifreeze..... 275
Cruise control 110, 181
Cupholders 70
Curtain airbag system 62
Curve lighting..... 133

D

Danger, Warnings and Cautions ... 4
Daytime running lights 132
Declaration of conformity..... 312
DEF..... 165
Diesel exhaust fluid..... 165
Diesel fuel system bleeding 234
Diesel particle filter..... 108, 164
Door open 111
Doors..... 30
Driver assistance systems..... 181
Driver Information Centre..... 111
Driving characteristics and towing tips 222
Driving hints..... 156
Dual automatic climate control system..... 148

E

Electric adjustment 37
Electrical system..... 245
Electric parking brake..... 106, 174
Electric parking brake fault..... 106
Electronic driving programmes .. 171
Electronic key system..... 23
Electronic Stability Control..... 177
Electronic Stability Control and Traction Control system..... 108
Electronic Stability Control off..... 108
End-of-life vehicle recovery 226
Engine compartment fuse box ... 246
Engine coolant 230
Engine coolant temperature 108
Engine coolant temperature gauge 102
Engine data 282
Engine exhaust 164
Engine identification..... 278
Engine oil 228, 275, 279
Engine oil pressure 109
Entry lighting 139
Event data recorders..... 317
Exit lighting 139
Exterior care 270
Exterior light 110
Exterior lighting 13, 129
Exterior mirrors..... 37

F

Fault 171
First aid..... 81
First aid kit 81
Fixed air vents 153
Fog light 110
Fog lights 240
Folding mirrors 38
Following distance..... 107
Following distance indication..... 195
Forward collision alert..... 191
Front airbag system 61
Front fog lights 136
Front seats..... 48
Front storage..... 71
Front turn signal light..... 235
Fuel..... 214
Fuel consumption - CO_2-Emissions 221
Fuel for diesel engines 214
Fuel for liquid gas operation..... 214

Fuel for petrol engines 214
Fuel gauge 101
Fuel selector 102
Fuses 245

G
Gauges..... 100
General information 221
Glovebox 70

H
Halogen headlights 235
Hand brake..... 173, 174
Hazard warning flashers 135
Headlight flash 131
Headlight range adjustment 132
Headlights..... 129
Headlights when driving abroad 132
Head restraint adjustment 8
Head restraints 46
Heated mirrors 39
Heated rear window 43
Heated steering wheel 86
Heating 54
High beam 110, 130
High beam assist..... 110, 131
Hill start assist 176
Horn 14, 87

I
Identification plate 277
Ignition switch positions 156
Immobiliser 37, 109
Indicators..... 100
Information displays..... 111
Instrument cluster 94
Instrument panel fuse box 249
Instrument panel illumination 245
Instrument panel illumination control 137
Instrument panel overview 10
Interactive driving system..... 178
Interior care 272
Interior lighting..... 137
Interior lights 137, 244
Interior mirrors..... 39
Interruption of power supply 171
Introduction 3
ISOFIX child restraint systems 69

J
Jump starting 265

K
Key, memorised settings..... 24
Keys 21
Keys, locks..... 21

L
Lane change alert..... 205
Lane departure warning..... 107, 212
Lashing eyes 76
Lighting features..... 139
Light switch 129
Load compartment 30, 72
Load compartment cover 74
Load compartment fuse box 250
Loading information 83
Low fuel 109

M
Malfunction indicator light 106
Manual anti-dazzle 39
Manual mode 170
Manual seat adjustment..... 49
Manual transmission 172
Manual windows 40
Memorised settings..... 24
Midlevel display..... 111
Mirror adjustment 8
Misted light covers 137

N
New vehicle running-in 156
Number plate light 244

O
Object detection systems..... 197
Odometer 100

Oil, engine..... 275, 279
OnStar..... 125
Operate pedal..... 106
Outside temperature 90
Overrun cut-off 160

P

Parking 19, 163
Parking assist 39, 197
Parking brake 174
Parking lights 136
Performance 284
Performing work 227
Pollen filter 153
Power button..... 157
Power outlets 92
Power seat adjustment..... 51
Power steering fluid..... 231
Power windows 41
Preheating 108
Puncture..... 260

Q

Quickheat..... 152

R

Radio Frequency Identification (RFID)..... 318
Radio remote control 22
Reading lights 138
Rear cross traffic alert..... 208
Rear floor storage cover 75
Rear fog light 110
Rear fog lights 136
Rear seats..... 54
Rear view camera 206
Rear window wiper/washer 89
Recommended fluids and lubricants 275, 279
Refuelling 216
Retained power off..... 158
Reversing lights 137
Ride control systems..... 176
Roller blinds 43
Roof..... 43
Roof load..... 83
Roof rack 82

S

Safety belts..... 55
Safety net 78
Seat adjustment 6
Seat belt 8
Seat belt reminder 104
Seat belts 55
Seat heating..... 54
Seat position 48
Selective catalytic reduction..... 165
Selector lever 169
Service 154, 274
Service display 102
Service information 274
Side airbag system 62
Side blind spot alert..... 203
Sidelights..... 129
Side turn signal lights 243
Smartphone controller..... 119
Software acknowledgement..... 315
Spare wheel 263
Speed limiter..... 111, 183
Speedometer 100
Starting and operating..... 156
Starting off 17
Starting the engine 159
Steering..... 156
Steering wheel adjustment 9, 86
Steering wheel controls 86
Stop-start system..... 160
Storage..... 70
Storage compartments..... 70
Sunroof 43
Sunvisor lights 138
Sun visors 43
Symbols 4

T

Tachometer 101
Tail lights 240
Three-point seat belt 56
Tools 252
Top-tether fastening eyes 69

Tow bar..... 221
Towing..... 221, 267
Towing another vehicle 269
Towing equipment 223
Towing the vehicle 267
Traction Control system 176
Traction Control system off..... 108
Traffic sign assistant..... 111, 209
Trailer coupling..... 221
Trailer stability assist 224
Trailer towing 222
Transmission 17
Transmission display 168
Tread depth 256
Trip odometer 100
Turn and lane-change signals ... 135
Turn signal 104
Tyre chains 257
Tyre designations 253
Tyre pressure 253
Tyre pressure monitoring system..... 109, 254
Tyre pressures 293
Tyre repair kit 258

U

Ultrasonic parking assist ... 107, 197
Upholstery..... 272
Uplevel display..... 111
Upshift..... 107
Using this manual 3

V

Valet mode..... 118
Variable effort steering..... 107
Vehicle battery 232
Vehicle checks..... 227
Vehicle data..... 279
Vehicle data recording and privacy..... 317
Vehicle detected ahead..... 110
Vehicle dimensions 290
Vehicle Identification Number 277
Vehicle jack..... 252
Vehicle messages 120
Vehicle personalisation 122
Vehicle security..... 34
Vehicle specific data 3
Vehicle storage..... 226
Vehicle tools..... 252
Vehicle unlocking 6
Vehicle weight 287
Ventilating..... 54
Ventilation..... 141

W

Warning chimes 121
Warning lights..... 100
Warning triangle 81
Washer and wiper systems 14
Washer fluid 231
Wheel changing 260
Wheel covers 257
Wheels and tyres 252
Windows..... 40
Windscreen..... 40
Windscreen wiper/washer 87
Winter tyres 252
Wiper blade replacement 234

X

Xenon headlights 238

www.opel.com

Copyright by ADAM OPEL AG, Rüsselsheim, Germany.

The information contained in this publication is effective as of the date indicated below. Adam Opel AG reserves the right to make changes to the technical specifications, features and design of the vehicles relative to the information in this publication as well as changes to the publication itself.

Edition: January 2016, ADAM OPEL AG, Rüsselsheim.

Printed on chlorine-free bleached paper.

KTA-2675/16-en 01/2016