MANUAL TRANSMISSION

SECTION MT

CONTENTS

PREPARATION 3
Special Service Tools 3
Commercial Service Tools 5
NOISE, VIBRATION AND HARSHNESS (NVH) TROUBLESHOOTING 6
NVH Troubleshooting Chart 6
MANUAL TRANSMISSION 6
M/T OIL 7
Checking M/T Oil 7
Changing M/T Oil 7
ON-VEHICLE SERVICE 8
Replacing Rear Oil Seal 8
REMOVAL 8
INSTALLATION 8
Position Switch Check 8
DESCRIPTION 9
Cross-sectional View 9
Triple Cone Synchronizer 10
SHIFT CONTROL 11
Components 11
REMOVAL AND INSTALLATION 12
Removal 12
Installation 13
Air Breather Hose 14
OVERHAUL 15
Transmission Components 15
REPAIR FOR COMPONENT PARTS 16
Rear Extension 16
COMPONENTS 16
REMOVAL 16
INSTALLATION 16
DISASSEMBLY 17
ASSEMBLY 17
Transmission Case 18
COMPONENTS 18
REMOVAL 19
INSTALLATION 20
Counter Gear Bearing 23
DISASSEMBLY AND ASSEMBLY 23
6th Coupling Sleeve and Synchronizer Hub 24
DISASSEMBLY AND ASSEMBLY 24
INSPECTION 24
Mainshaft Bearing Retainer 24
DISASSEMBLY AND ASSEMBLY 24
6th Counter Gear and Baulk Ring 25
INSPECTION 25
Clutch Housing 25
COMPONENTS 25
REMOVAL 25
INSTALLATION 27
Front Cover 28
REMOVAL AND INSTALLATION 28
DISASSEMBLY 28
ASSEMBLY 29
Reverse Idler Gear 29
INSPECTION 29
Main Drive Gear 29
REMOVAL AND INSTALLATION 29
DISASSEMBLY 29
INSPECTION 30
ASSEMBLY 30
Mainshaft 31
REMOVAL AND INSTALLATION 31
INSPECTION BEFORE DISASSEMBLY 31
DISASSEMBLY 32
INSPECTION 32
ASSEMBLY 34
Counter Gear 36
REMOVAL AND INSTALLATION 36
INSPECTION BEFORE DISASSEMBLY 36
DISASSEMBLY 37
INSPECTION 38
ASSEMBLY 39
Shift Fork and Fork Rod 40
REMOVAL AND INSTALLATION 40
DISASSEMBLY AND ASSEMBLY 41
INSPECTION 41
SERVICE DATA AND SPECIFICATIONS (SDS) 42
General Specifications 42
Gear End Play and Oil Clearance 42
Clearance Between Baulk Ring and Gear 43

CONTENTS (Cont'd)

Available Snap Ring 43
MAIN DRIVE GEAR SNAP RING 43
COUNTER FRONT BEARING SNAP RING.....43
4TH COUNTER GEAR FRONT SNAP RING.....43
COUNTER DRIVE GEAR SNAP RING 43
5TH & REVERSE SYNCHRONIZER HUB SNAP RING 44
6TH MAIN GEAR REAR SNAP RING 44
6TH SYNCHRONIZER HUB SNAP RING.....44

Special Service Tools

NMMT0001

Tool number Tool name	Description	
ST23540000 Pin punch	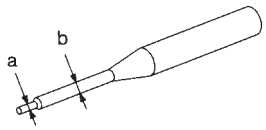 NT442	Removing and installing retaining pin **a: 2.3 mm (0.091 in) dia.** **b: 4 mm (0.16 in) dia.**
KV32103100 Spring pressure	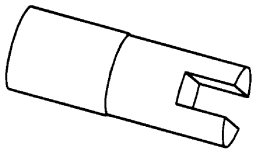 SMT066E	Removing and installing bearing retainer spring
KV381054S0 Puller	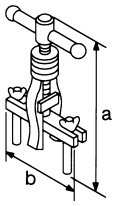 NT414	Removing rear extension oil seal **a: 250 mm (9.84 in)** **b: 160 mm (6.30 in)**
ST33230000 Drift	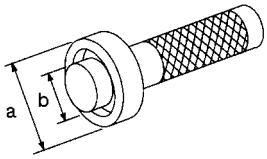 NT084	Removing and installing counter gear bearing **a: 51 mm (2.01 in) dia.** **b: 28.5 mm (1.122 in) dia.**
ST23860000 Drift	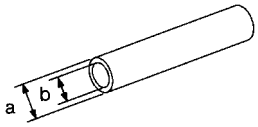 NT065	Installing 6th clutch hub **a: 38 mm (1.50 in) dia.** **b: 33 mm (1.30 in) dia.**
KV32102700 Drift	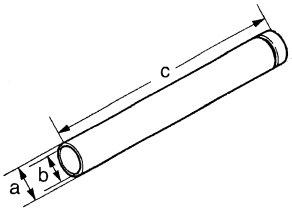 SMT067E	Installing the following: ● Main drive gear bearing ● 5th & reverse coupling sleeve, synchronizer hub, or reverse main gear ● Mainshaft bearing ● 6th main gear **a: 54 mm (2.13 in) dia.** **b: 32 mm (1.26 in) dia.** **c: 410 mm (16.14 in)**
ST30032000 Drift	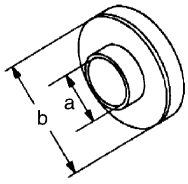 SMT068E	Installing the following: ● Main drive gear bearing ● 5th & reverse coupling sleeve, synchronizer hub, or reverse main gear ● Mainshaft bearing ● 6th main gear **a: 38 mm (1.50 in) dia.** **b: 80 mm (3.15 in) dia.**

Special Service Tools (Cont'd)

Tool number Tool name	Description	
ST37830000 Drift	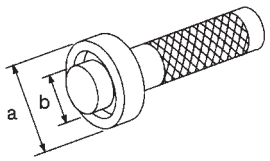 NT084	Installing rear extension oil seal **a: 62 mm (2.44 in) dia.** **b: 39 mm (1.54 in) dia.**
ST30621000 Drift	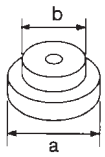 NT073	Installing main drive gear bearing (Use with ST35325000) **a: 79 mm (3.11 in) dia.** **b: 59 mm (2.32 in) dia.**
ST35325000 Drift handle	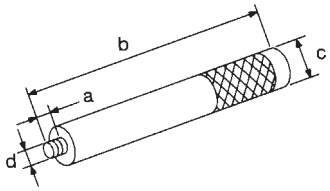 NT416	Use with ST30621000 **a: 15 mm (0.59 in)** **b: 215 mm (8.46 in)** **c: 25 mm (0.98 in) dia.** **d: M12 × 1.5P**
ST33061000 Drift	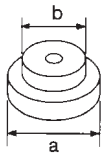 NT073	Front cover oil seal **a: 38 mm (1.496 in) dia.** **b: 28.5 mm (1.122 in) dia.**
KV40100621 Drift	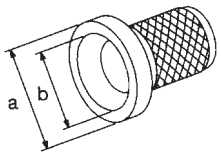 NT086	Installing counter gear **a: 76 mm (2.99 in) dia.** **b: 69 mm (2.72 in) dia.**
ST20630000 Drift	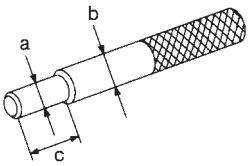 NT405	Removing counter gear bearing Removing counter gear **a: 15.8 mm (0.622 in) dia.** **b: 22.9 mm (0.902 in) dia.** **c: 45 mm (1.77 in)**
KV38102510 Drift	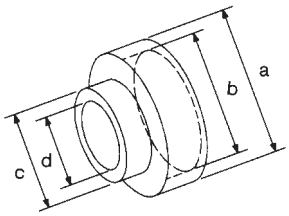 NT476	Installing reverse coupling sleeve and synchronizer hub **a: 71 mm (2.80 in) dia.** **b: 65 mm (2.56 in) dia.** **c: 55 mm (2.17 in) dia.** **d: 45 mm (1.77 in) dia.**
ST22360002 Drift	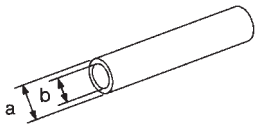 NT065	Removing reverse coupling sleeve, synchronizer hub and reverse main gear **a: 29 mm (1.14 in) dia.** **b: 23 mm (0.91 in) dia.**

Commercial Service Tools

NMMT0002

Tool name	Description
Slide hammer puller	Removing 6th coupling sleeve & synchronizer hub assembly (Use with quick steering puller) 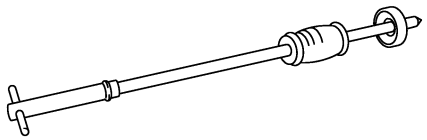 SMT054E
Quick steering puller	Use with slide hammer puller 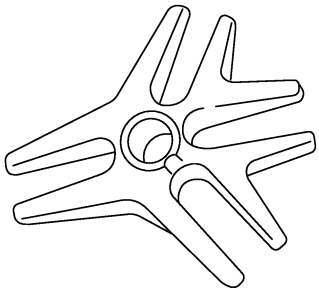 SMT055E

NVH Troubleshooting Chart

NMMT0023S01

Use the chart below to help you find the cause of the problem. The numbers indicate the order of the inspection. If necessary, repair or replace these parts.

MANUAL TRANSMISSION

NMMT0023S0101

Reference page		Refer to MT-7, "Checking M/T Oil".			MT-15	MT-15	MT-15	MT-15	MT-15	MT-31	MT-31	MT-31
SUSPECTED PARTS (Possible cause)		OIL (Level low)	OIL (Wrong)	OIL (Level too high)	GASKET (Damaged)	OIL SEAL (Worn or damaged)	CHECK PLUG RETURN SPRING AND CHECK BALL (Worn or damaged)	SHIFT FORK (Worn)	GEAR (Worn or damaged)	BEARING (Worn or damaged)	BAULK RING (Worn or damaged)	INSERT SPRING (Damaged)
Symptom	Noise	1	2						3	3		
	Oil leakage		3	1	2	2						
	Hard to shift or will not shift		1	1							2	2
	Jumps out of gear						1	2	2			

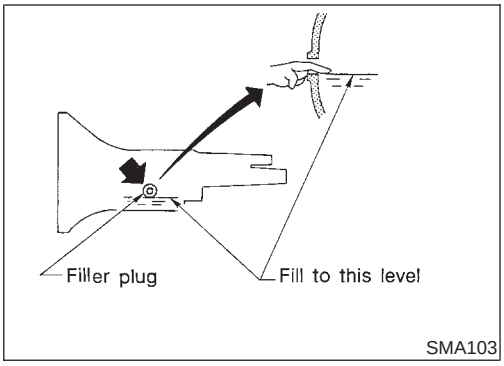

Checking M/T Oil

NMMT0061

Never start engine while checking oil level.

1. Check manual transmission for leakage.
2. Check oil level.

Filler plug:

: 27 - 48 N·m (2.7 - 4.9 kg-m, 20 - 35 ft-lb)

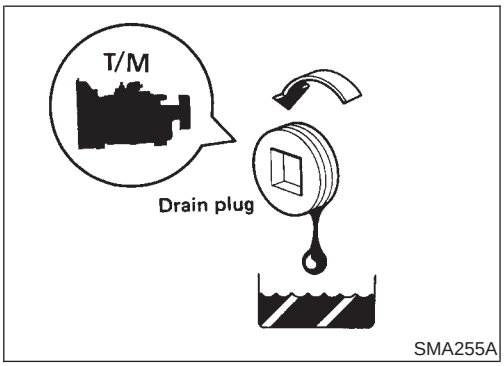

Changing M/T Oil

NMMT0062

Oil grade and viscosity:

Refer to "RECOMMENDED FLUIDS AND LUBRICANTS", MA-8.

Oil capacity:

FS6R92A 1.8 liters (3-7/8 US pt, 3-1/8 Imp pt)

Drain plug:

: 27 - 48 N·m (2.7 - 4.9 kg-m, 20 - 35 ft-lb)

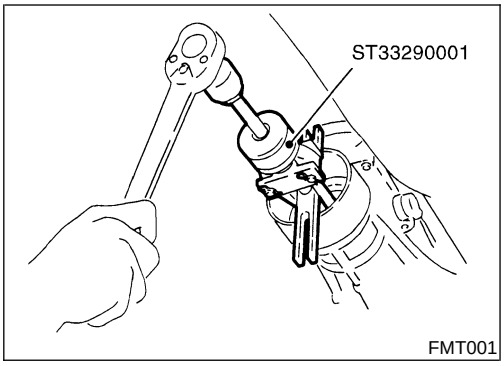

Replacing Rear Oil Seal

NMMT0003

REMOVAL

NMMT0003S01

1. Remove the propeller shaft.
2. Using a oil seal puller (SST), remove the oil seal.

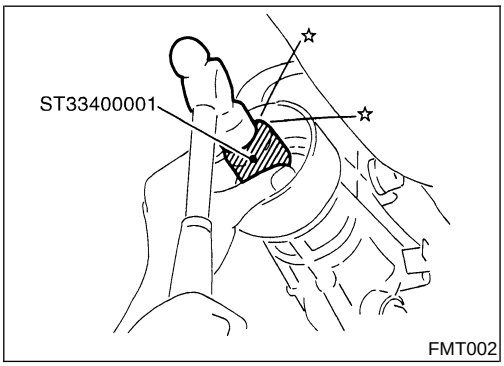

INSTALLATION

NMMT0003S02

1. Apply multi-purpose grease to the oil seal lips. Then, drive the oil seal with a drift (SST) until the oil seal is flush with the end surface of the case.

CAUTION:

- **Do not reuse the removed oil seal. Always use a new oil seal.**
- **Install the oil seal so that it is fit level without inclination.**

2. Install the propeller shaft.

CAUTION:

If oil has leaked during this operation, check the oil level after completing the operation.

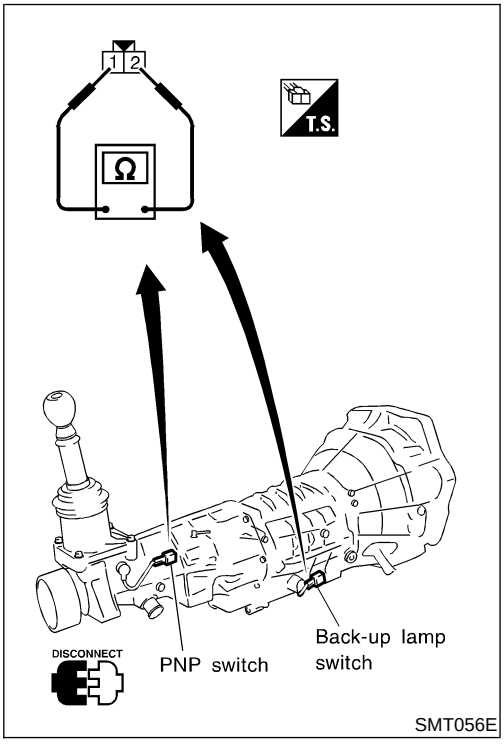

Position Switch Check

NMMT0004

Switch	Gear position	Continuity
Back-up lamp switch	Reverse	Yes
	Except reverse	No
PNP switch	Neutral	Yes
	Except neutral	No

Cross-sectional View

NMMT0005S01

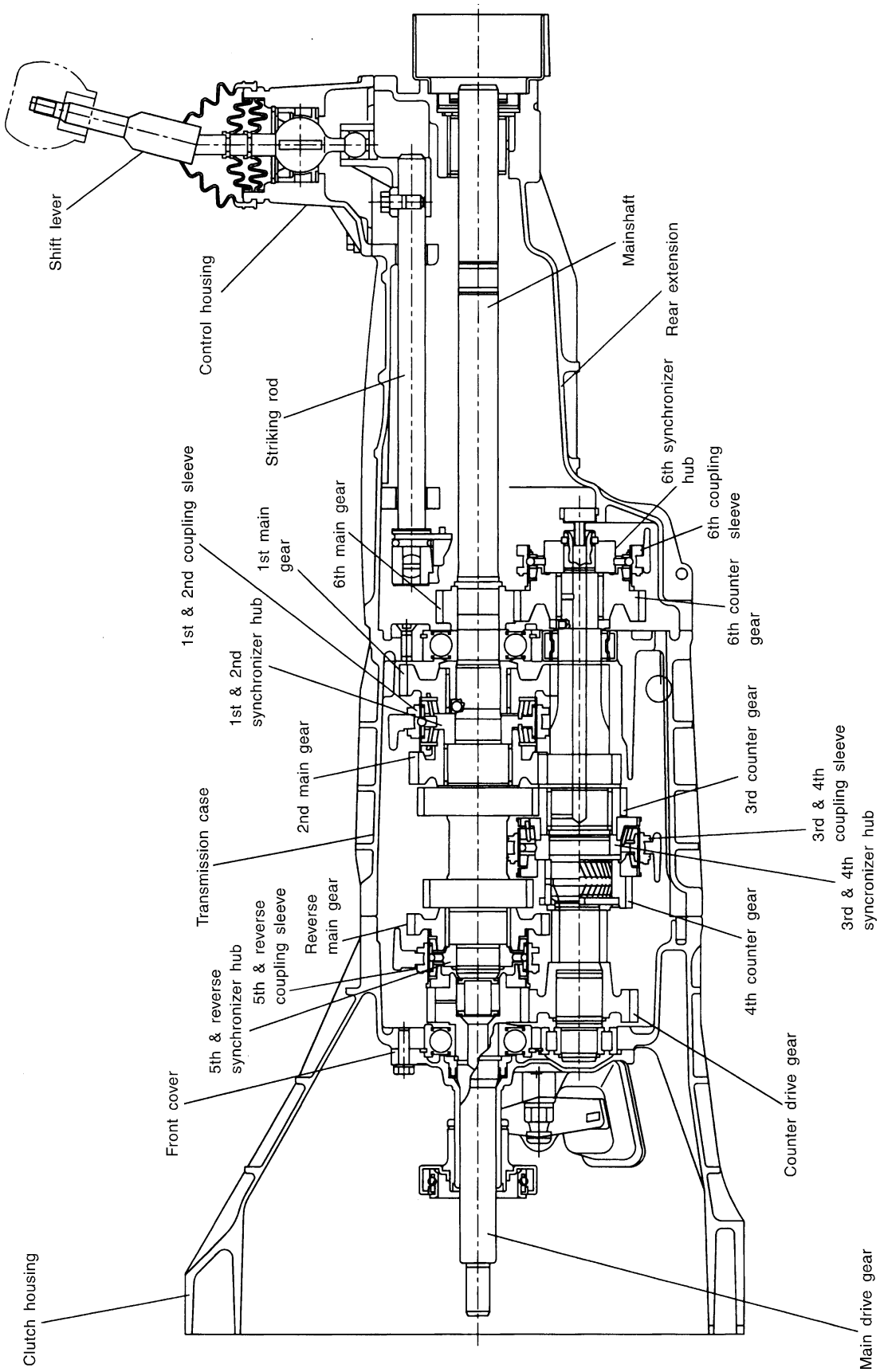

FMT003

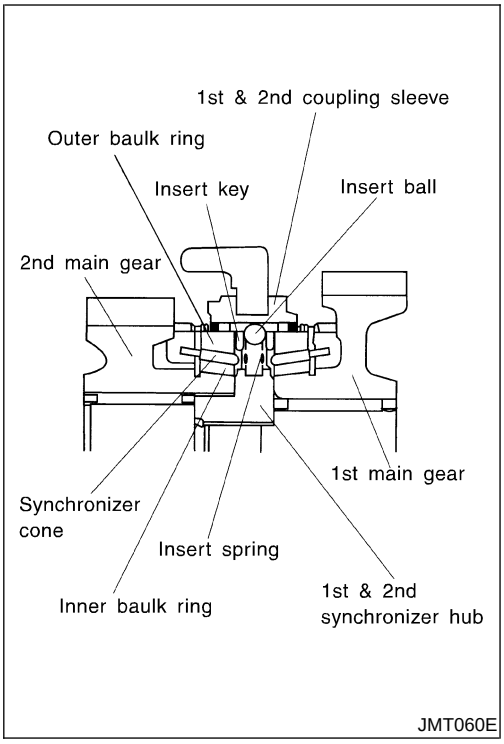

Triple Cone Synchronizer

NMMT0005S03

The triple cone synchronizer is used for the 1st, 2nd, and 3rd gears. Made up mainly of the outer baulk rings, inner baulk rings and synchronizer cones, the triple cone synchronizer is designed to provide smoother shifting operations, by obtaining higher synchronization through the three co-axial cone-shaped surfaces where friction is borne.

This triple cone synchronizer, using the inner surface of the inner baulk ring and the cone-shaped area of the gear as friction surfaces, in addition to the two friction surfaces of the existing double cone synchronizer mechanism, generates higher synchronization.

Components

NMMT0063

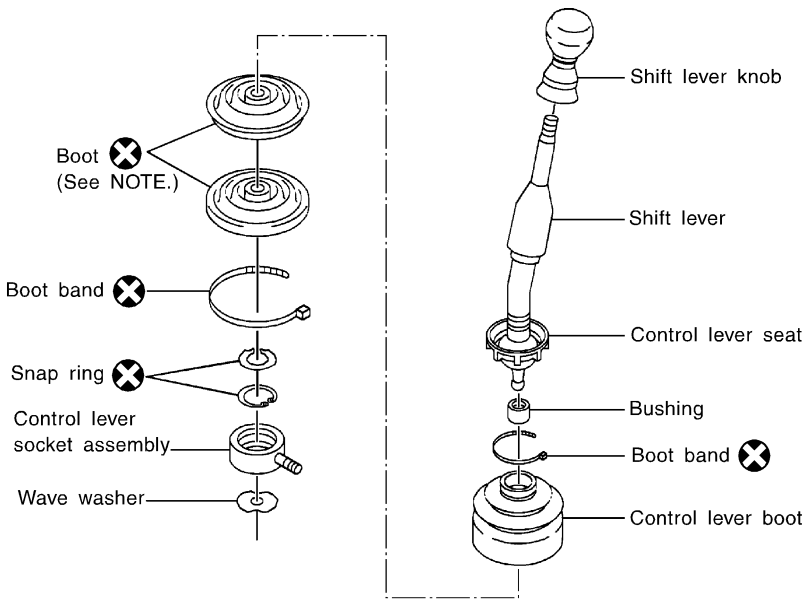

NOTE:
- When the shift lever is disassembled, this boot should be cut off. Or when it is assembled, it is press-fitted lightly.
- Because this boot is a shift lever assembly accessory part, it cannot be installed as a single unit.

JMT069E

Removal

NMMT0006S01

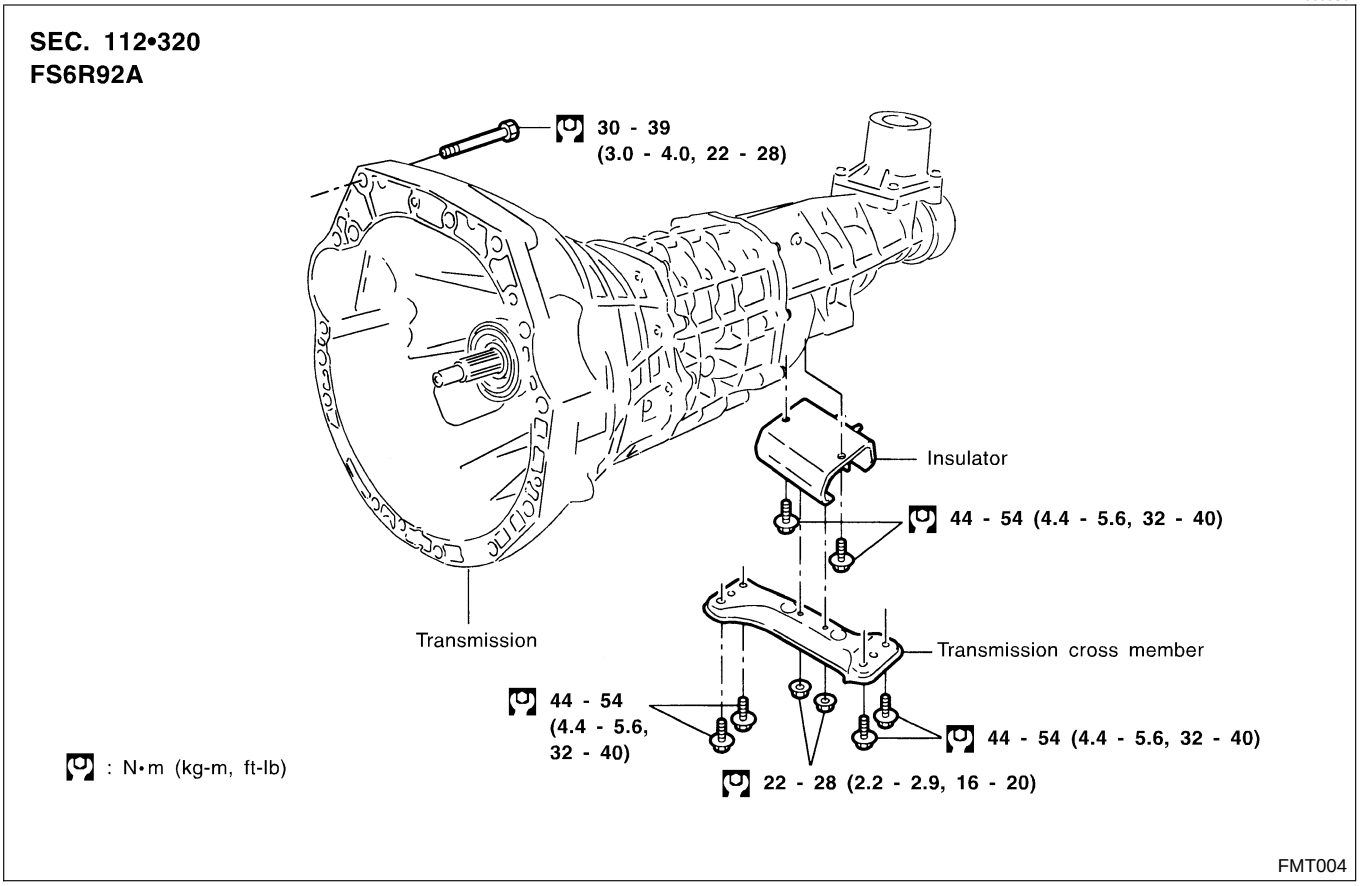

1. Remove battery negative terminal.
2. Remove shift lever with control housing from transmission.
3. Remove clutch operating cylinder from transmission. Tighten clutch operating cylinder to the specified torque. Refer to CL-5, “CLUTCH SYSTEM”.

CAUTION:
Never depress the clutch pedal during removal.

4. Disconnect speed sensor, back-up lamp switch, rear heated oxygen sensor and PNP switch harness connectors.
5. Remove starter motor from transmission.
   : 41 - 52 N·m (4.2 - 5.3 kg-m, 30 - 38 ft-lb)
6. Remove propeller shaft. Refer to PD-5, “Remova and Installation”.

- **Insert plug into rear oil seal after removing propeller shaft.**
- **Be careful not to damage spline, sleeve yoke and rear oil seal when removing propeller shaft.**

7. Remove exhaust tube mounting bracket from transmission. Refer to FE-11, “EXHAUST SYSTEM”.
8. Support manual transmission with a jack.
9. Remove engine rear member.
10. Lower manual transmission as much as possible.

WARNING:
Support manual transmission while removing it.

Installation

NMMT0006S02

- Install in the reverse order of removal.

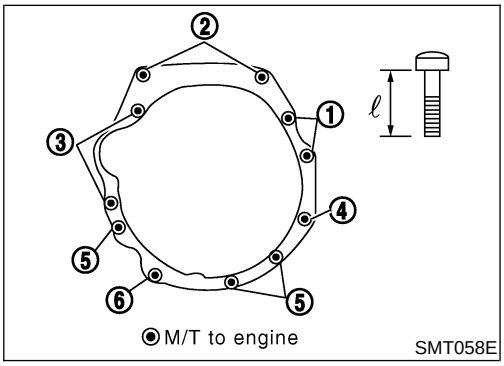

- Tighten bolt securing transmission.

CAUTION:
When installing the transmission, perform carefully so that the main drive shaft of the transmission does not contact the clutch cover.

Bolt No.	PCS	Tightening torque N·m (kg-m, ft-lb)	ℓ mm (in)
1	2	70 - 79 (7.1 - 8.1, 52 - 58)	86 (3.39)
2	2		63 (2.48)
3	2		113 (4.45)
4	1		98 (3.86)
5	3	30 - 39 (3.0 - 4.0, 22 - 28)	95 (3.74)
6	1		95 (3.74)

Air Breather Hose

NMMT0006S03

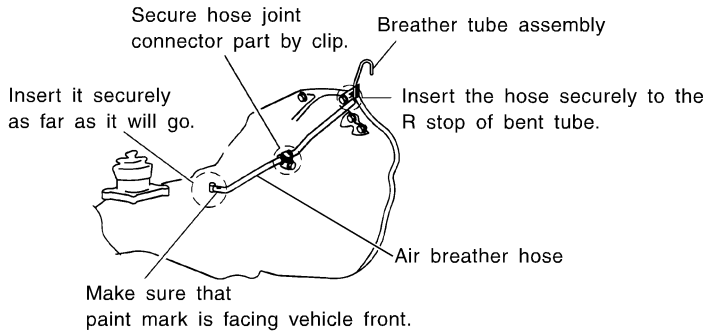

Refer to the figure above when removing or installing the air breather hose.

CAUTION:

Make sure there are no pinched or blocked areas in the air breather hose caused by bending or winding when installing it.

Transmission Components

NMMT0007S01

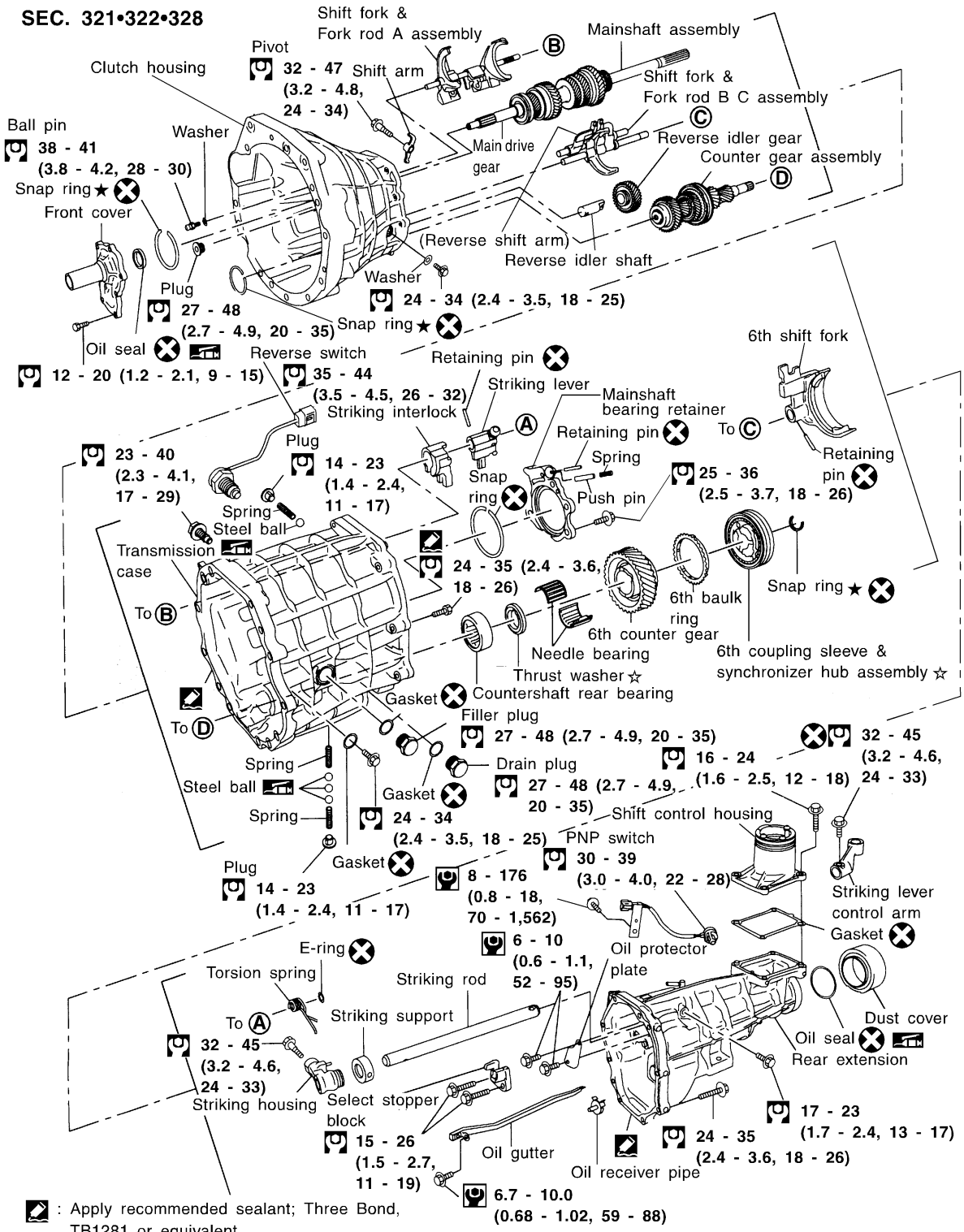

: Apply recommended sealant; Three Bond, TB1281 or equivalent.
: N•m (kg-m, ft-lb)
: N•m (kg-m, in-lb)
: Apply Multi-Purpose Greese.
★ : Select with proper thickness.
☆ : Pay attention to its direction.
NOTE : Apply Transmission Oil, API GL-4 viscosity SAE 75W-90 to each gear, shaft, bearing & synchronizer item when installing.

FMT005

Rear Extension

COMPONENTS

NMMT0025

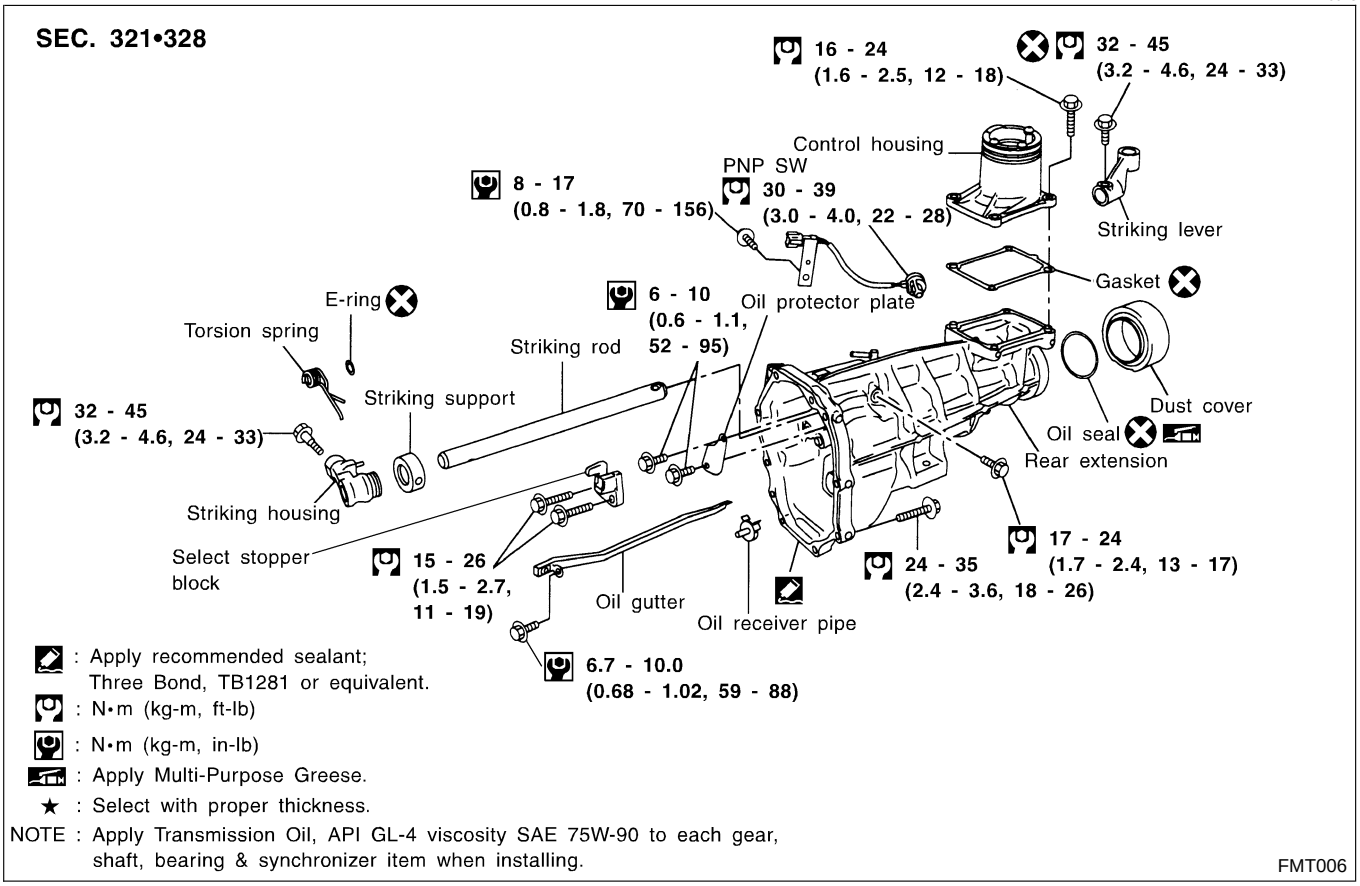

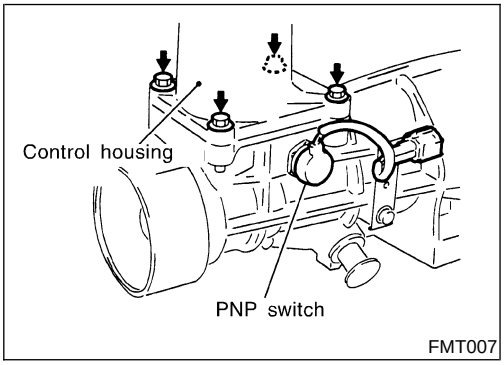

REMOVAL

NMMT0026

1. Remove the filler plug and drain plug from the transmission case to drain transmission oil.
2. Remove the PNP switch.
3. Remove the mounting bolts to remove the control housing from the extension case.

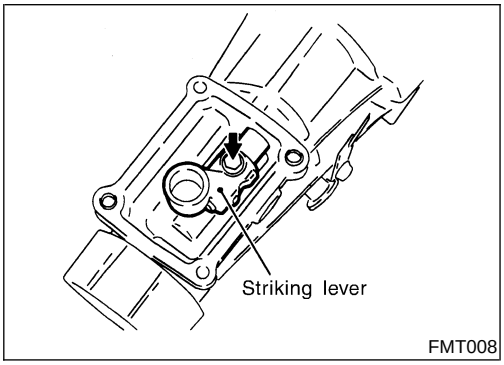

4. Remove the mounting bolts to remove the striking lever from the striking rod.
5. Remove the mounting bolts to remove the extension assembly from the transmission case assembly.

INSTALLATION

NMMT0027

- Install in the reverse order of removal.
- Apply Three Bond, TB1281 or the equivalent onto the entire circumferential mating surface of the rear extension with the transmission case. Then, install the rear extension to the transmission case assembly.

CAUTION:

- **Remove all the old sealant, moisture, grease and foreign substances on the surface, before applying the sealant.**
- **Do not reuse the removed gasket for the control housing. Always use a new gasket.**
- **Do not reuse the mounting bolts for the striking lever. Always use new mounting bolts.**

DISASSEMBLY

NMMT0028

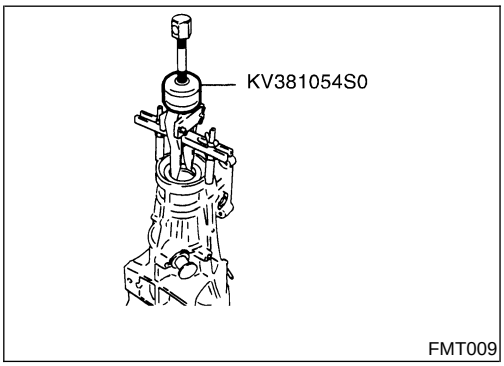

FMT009

1. Remove the dust cover from the rear extension.
2. Using an outer race puller (SST), remove the oil seal from the rear extension.

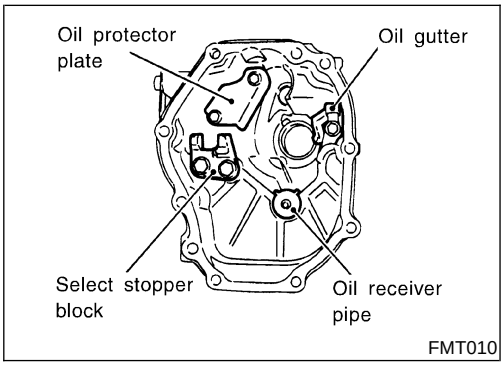

FMT010

3. Remove the mounting bolts to remove the oil protector plate, selecting stopper block and oil garter from the rear extension.
4. Remove the oil receiver pipe from the rear extension.

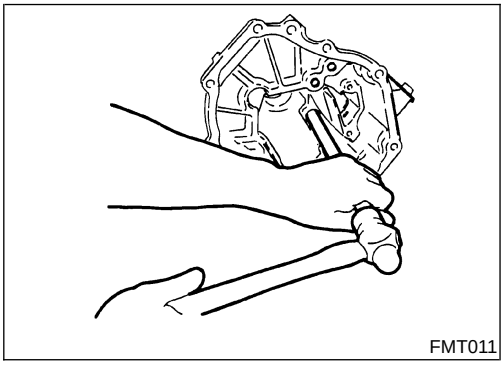
FMT011

5. Using a brass rod or similar tool, remove the striking rod bushing from the rear extension.

ASSEMBLY

NMMT0029

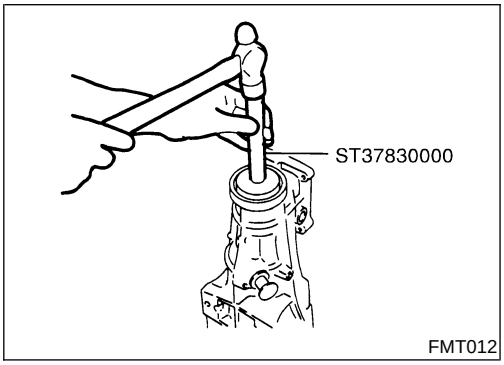

FMT012

1. Using a drift (SST), install the oil seal to the rear extension.

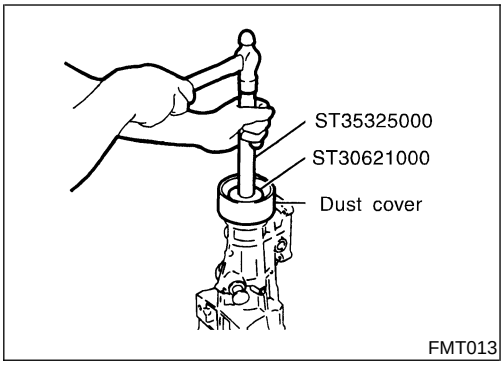

2. Using a drift (SST), install the dust cover onto the rear extension.

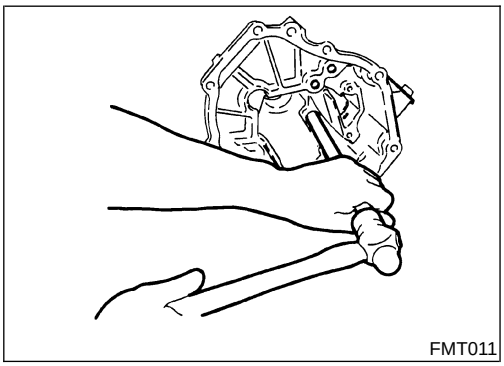

3. With a brass rod or similar tool, install the striking rod bushing onto the rear extension.
4. Install the oil protector plate, selecting stopper block and oil garter to the rear extension and tighten the mounting bolts to the specified torque.
5. Install the oil receiver pipe to the rear extension.

Transmission Case

COMPONENTS

NMMT0030

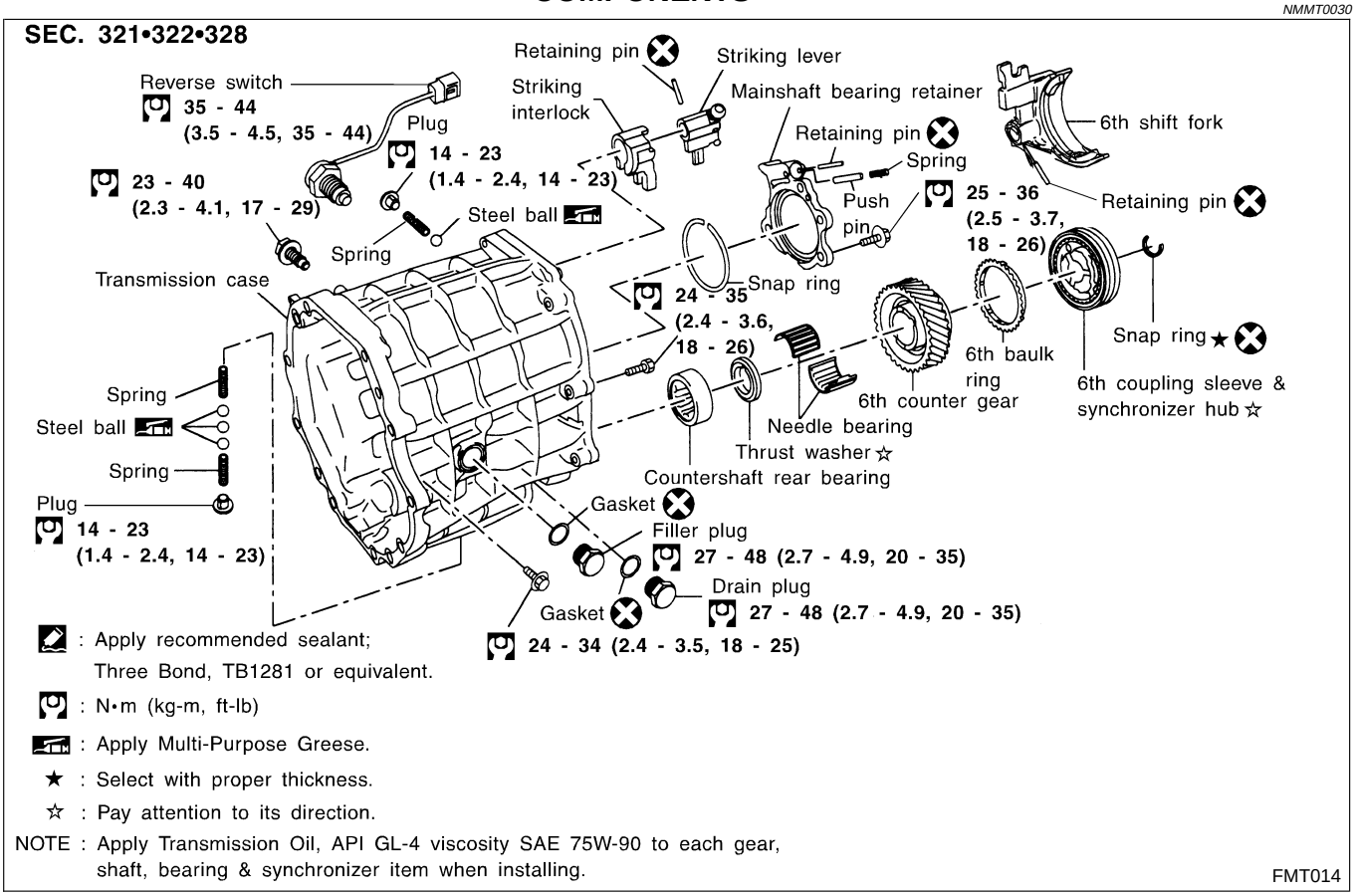

REMOVAL

NMMT0031

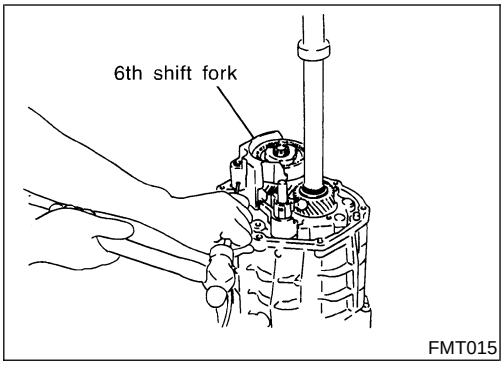

FMT015

1. Remove the filler plug and drain plug from the transmission case to drain transmission oil.
2. Remove the extension case assembly from the transmission case assembly. Refer to "REMOVAL", "Rear Extension", MT-16.
3. Remove the E-ring from the shift fork & fork rod A assembly to remove the torsion spring.
4. Using a pin punch, remove the 6th shift fork retaining pin.
5. Remove the retaining pin from the striking lever.
6. Remove the striking lever and striking interlock.
7. Using two flat-bladed screwdrivers, remove the counter shaft snap ring.

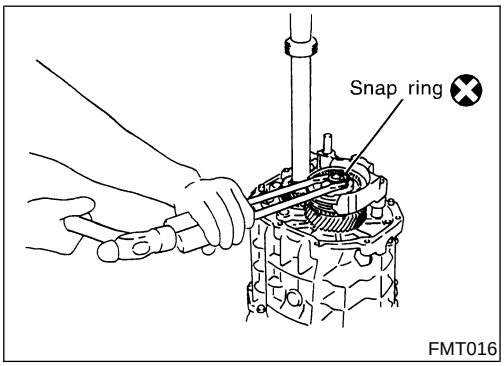

FMT016

8. Using a multi-purpose tool, remove the coupling sleeve, synchronizer hub and 6th shift fork from the counter shaft assembly.

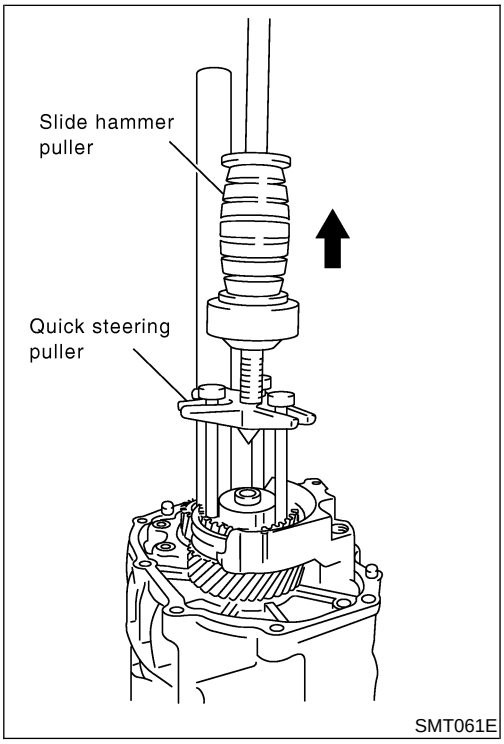

SMT061E

9. Remove the 6th baulk ring, counter gear, needle bearings, thrust washer and steel ball from the counter shaft assembly.

CAUTION:
Be careful not to lose the steel ball.

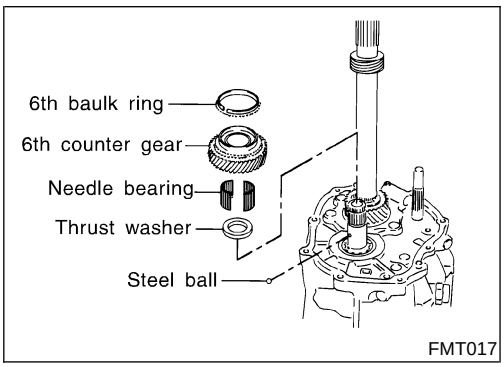

FMT017

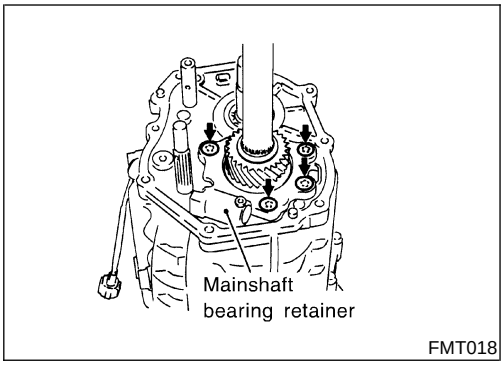

10. Remove the mounting bolts to remove the mainshaft bearing retainer from the transmission case.

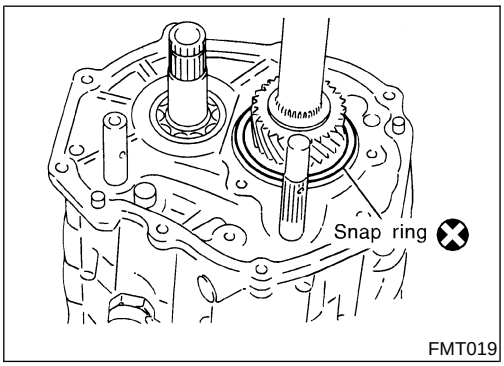

11. Remove the snap ring from the mainshaft main bearing.

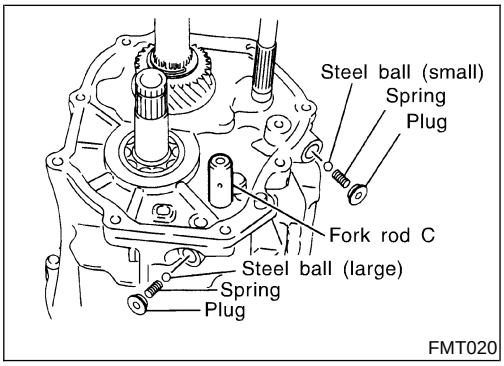

12. Remove the plug to remove the spring and steel ball from the transmission case.
13. Remove the fork rod C from the transmission case.

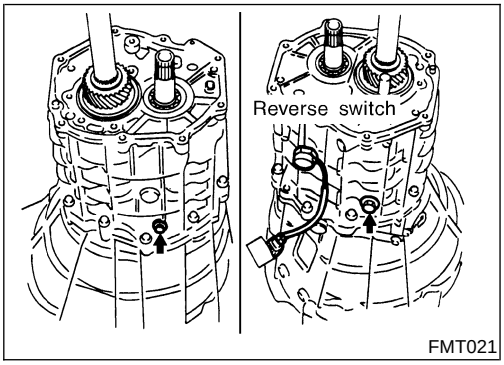

14. Remove the reverse switch and the bolts shown in the figure.
15. Remove mounting bolts from the transmission case and lightly tap the case to remove it from the clutch housing.

CAUTION:
Be careful not to lose the steel ball for fork rod C when removing the transmission case.

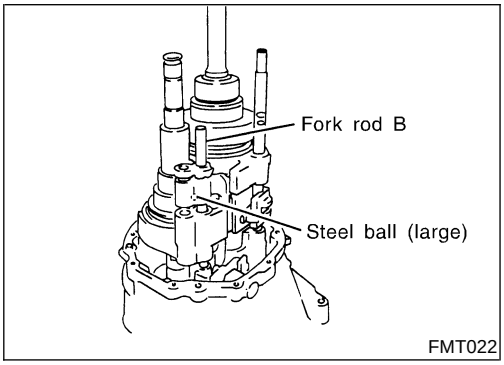

INSTALLATION

NMMT0032

Snap Ring

NMMT0032S01

1. Apply multi-purpose grease onto the steel ball to install it to the 5th shift bracket.
2. Apply Three Bond, TB1281 or the equivalent onto the entire circumferential mating surface on the transmission case with the clutch housing. Then, install it to the transmission case.

CAUTION:
Remove all the old sealant, moisture, grease and foreign substances on the surface, before applying the sealant.

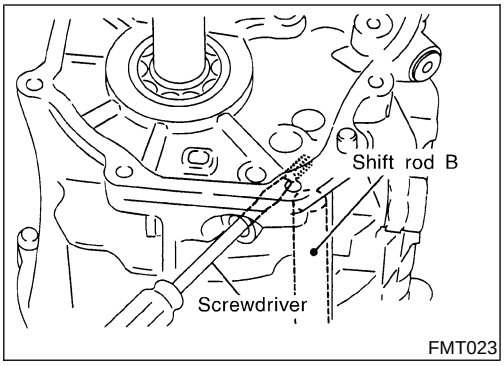

FMT023

3. While pushing spring and steel ball (large) into the transmission case with a screwdriver or similar tool, install the transmission case to the clutch housing.
4. Apply Three Bond, TB1281 or the equivalent onto the mounting bolts and tighten them to the specified torque.

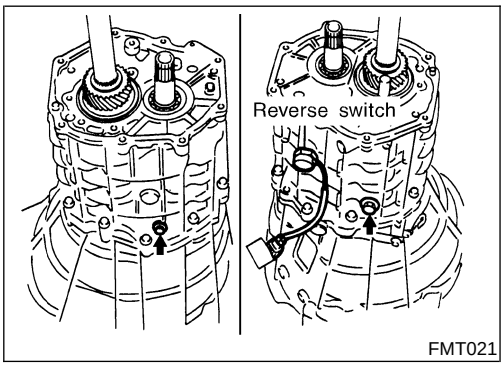

FMT021

5. Install the bolts as shown at left to tighten to the specified torque.

CAUTION:
Do not reuse the removed gasket. Always use a new gasket.

6. Install the reverse switch to the transmission case.

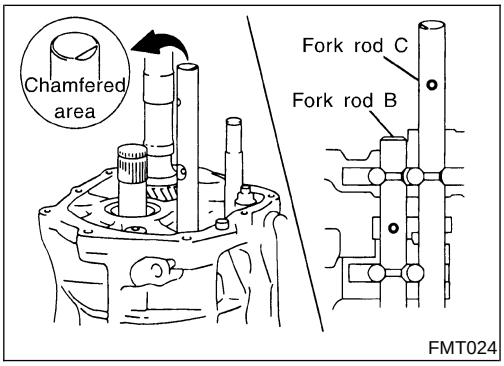

FMT024

7. Apply Nissan MP special grease onto the steel ball to install it to the transmission case with a flat-bladed screwdriver.
8. Install the fork rod C to the transmission case. At this time, the cutouts on the rod shall face in the direction of the fork rod B.

CAUTION:
Do not drop the steel ball when installing the fork rod.

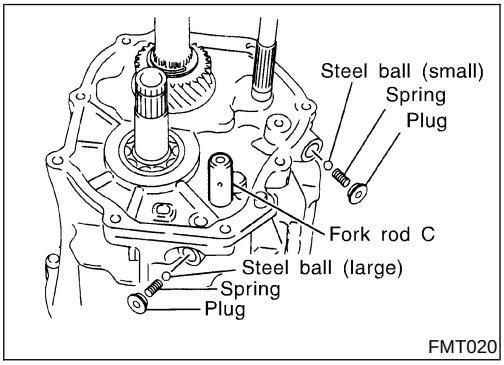

FMT020

9. Install the steel balls and springs to the transmission case.
10. Apply Three Bond, TB1281 or the equivalent to the plugs. Tighten them to the specified torque.

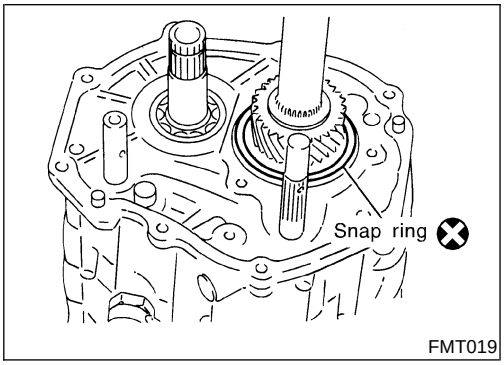

FMT019

11. Install the snap ring to the mainshaft main bearing.

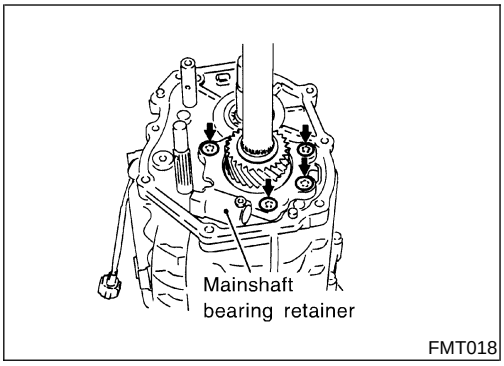

12. Install the mainshaft bearing retainer to the transmission case. Tighten the mounting bolts to the specified torque.

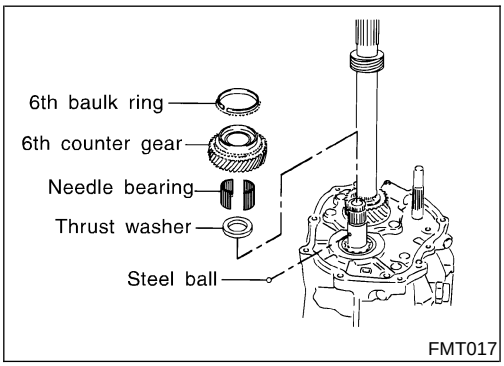

13. Install the steel ball to the counter shaft assembly.
14. Install the thrust washer, needle bearing, counter gear and 6th baulk ring to the counter shaft assembly.

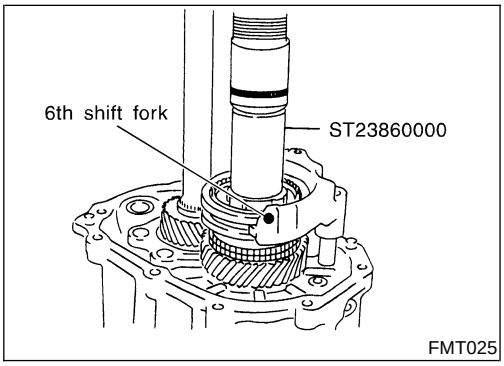

15. Using a drift (SST) and a press, install the 6th clutch hub with the 6th shift fork into the counter shaft.
- Take care to install the 6th coupling sleeve in the correct direction.

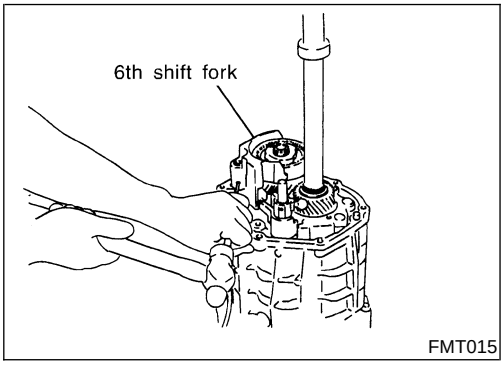

16. Using a pin punch, install the 6th shift fork retaining pin.

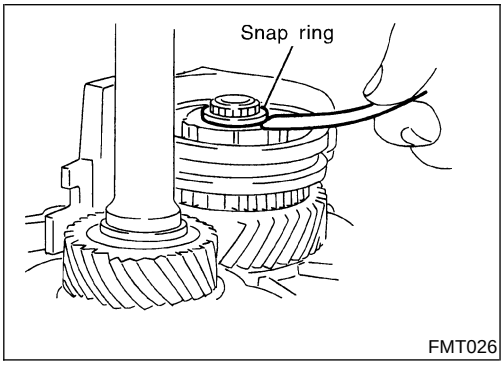

17. Select a snap ring from those shown in the table to allow the clearance specified below.

Allowable clearance: 0 - 0.1 mm (0 - 0.004 in)

6th synchronizer hub snap ring

Unit: mm (in)

Thickness	Part No.	Discriminated mark
2.80 (0.1102)	32236 - 89F01	A
2.85 (0.1122)	32236 - 89F02	B
2.90 (0.1142)	32236 - 89F03	C

Thickness	Part No.	Discriminated mark
2.95 (0.1161)	32236 - 89F04	D
3.00 (0.1181)	32236 - 89F05	E
3.05 (0.1201)	32236 - 89F06	F

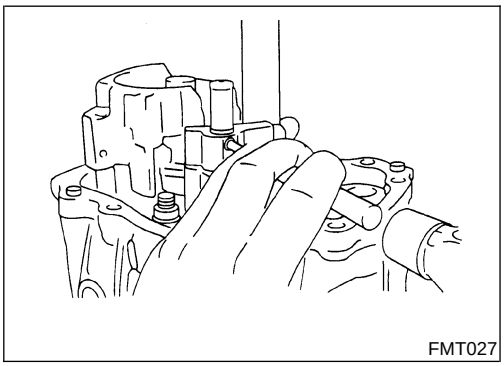
FMT027

18. Install the striking lever, striking lever interlock to the shift fork & fork rod A assembly. Then, secure with the retaining pin.

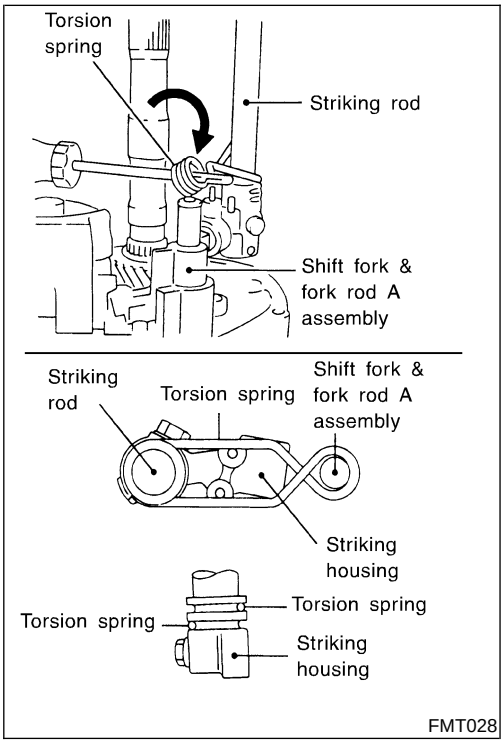

FMT028

19. Using a flat-bladed screwdriver, install the torsion spring to the striking rod and shift fork & fork rod A assembly. Secure with the E-ring.
20. While supporting the striking rod, install the rear extension assembly to the transmission case assembly.
    Refer to "INSTALLATION", "Rear Extension", MT-16.

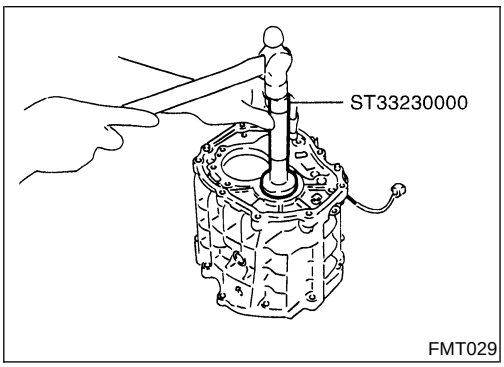

FMT029

Counter Gear Bearing

DISASSEMBLY AND ASSEMBLY

NMMT0033

Using a drift (SST), remove/install the roller bearing of the counter gear from/to the transmission case.

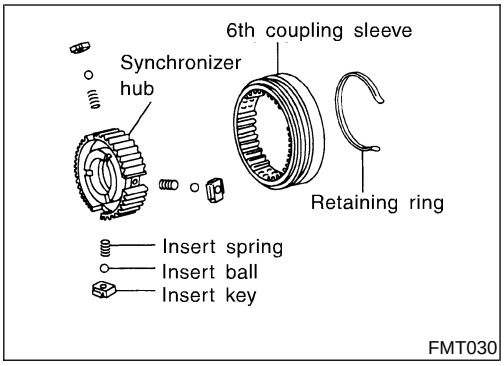

FMT030

6th Coupling Sleeve and Synchronizer Hub

DISASSEMBLY AND ASSEMBLY

NMMT0034

Remove/install the synchronizer hub from/to the coupling sleeve.

CAUTION:

- **Use a sheet of paper or cloth to cover the insert balls and insert springs to avoid losing them during work.**
- **Be careful not to deform the insert springs.**

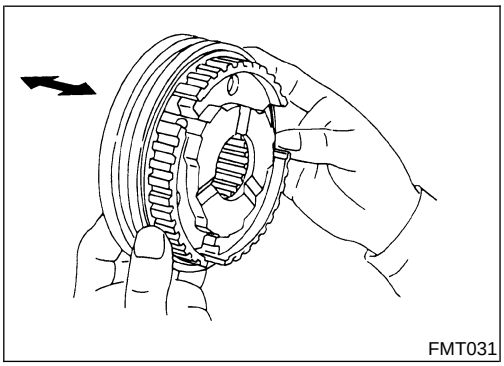
FMT031

INSPECTION

NMMT0035

- Check the synchronizer hub and coupling sleeve for worn out splines at the tip.
- Install the coupling sleeve to the synchronizer hub to check for smooth sliding.

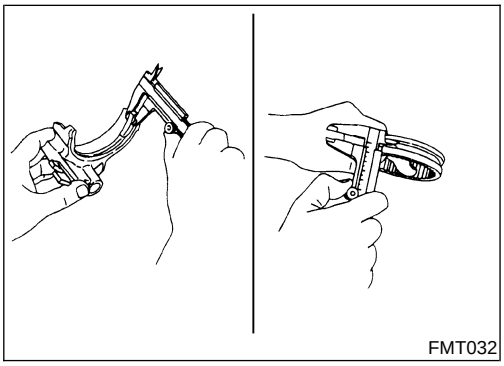
FMT032

- Measure the thickness of the claw of the shift fork and the width of the coupling sleeve groove to calculate the clearance to the shift fork. Check the clearance.

Calculation formula:
Width of coupling sleeve groove [mm (in)] – Thickness of claw of shift fork [mm (in)]

Standard: 0.15 - 0.35 mm (0.0059 - 0.0138 in)

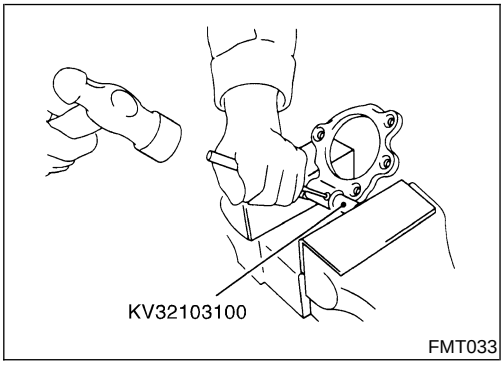

FMT033

Mainshaft Bearing Retainer

DISASSEMBLY AND ASSEMBLY

NMMT0036

- Set the spring pressure (SST) to the mainshaft bearing retainer. Fix the retainer on a vice bench.
- Using a pin punch, remove the retaining pin. Then, remove the spring and push pin from the mainshaft bearing retainer.

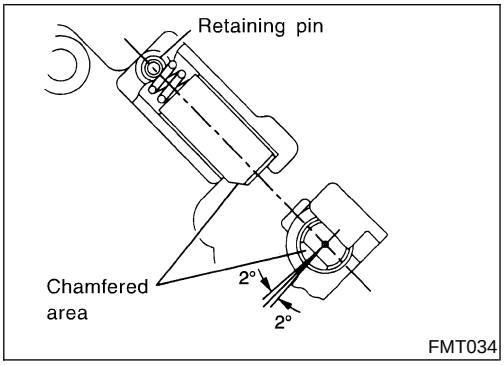

FMT034

- Assemble in the reverse order of disassembly.
- Install the push pin with its cutouts facing in the direction as shown in the figure at the left.

CAUTION:

Do not reuse the removed retaining pin. Always use a new retaining pin.

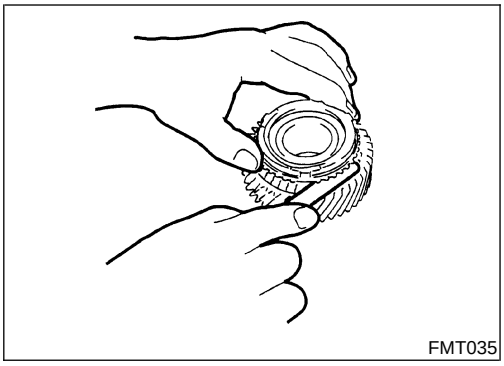
FMT035

6th Counter Gear and Baulk Ring

INSPECTION

NMMT0037

- Check the gears for any damage, wear, or flaking.
- Press the 6th baulk ring closely to the 6th counter gear to measure the clearance.

Clearance: 0.88 - 1.52 mm (0.0346 - 0.0598 in)

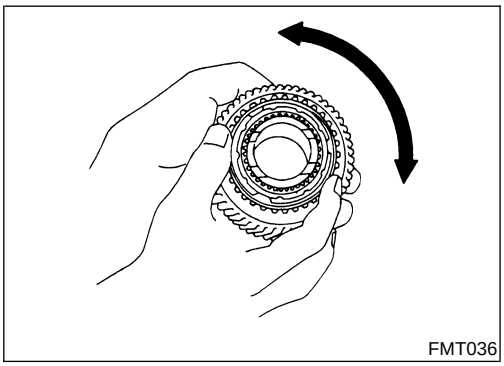
FMT036

- Make sure that, when trying to rotate the 6th baulk ring pressed closely to the 6th counter gear, the baulk ring does not slip.

Clutch Housing

COMPONENTS

NMMT0038

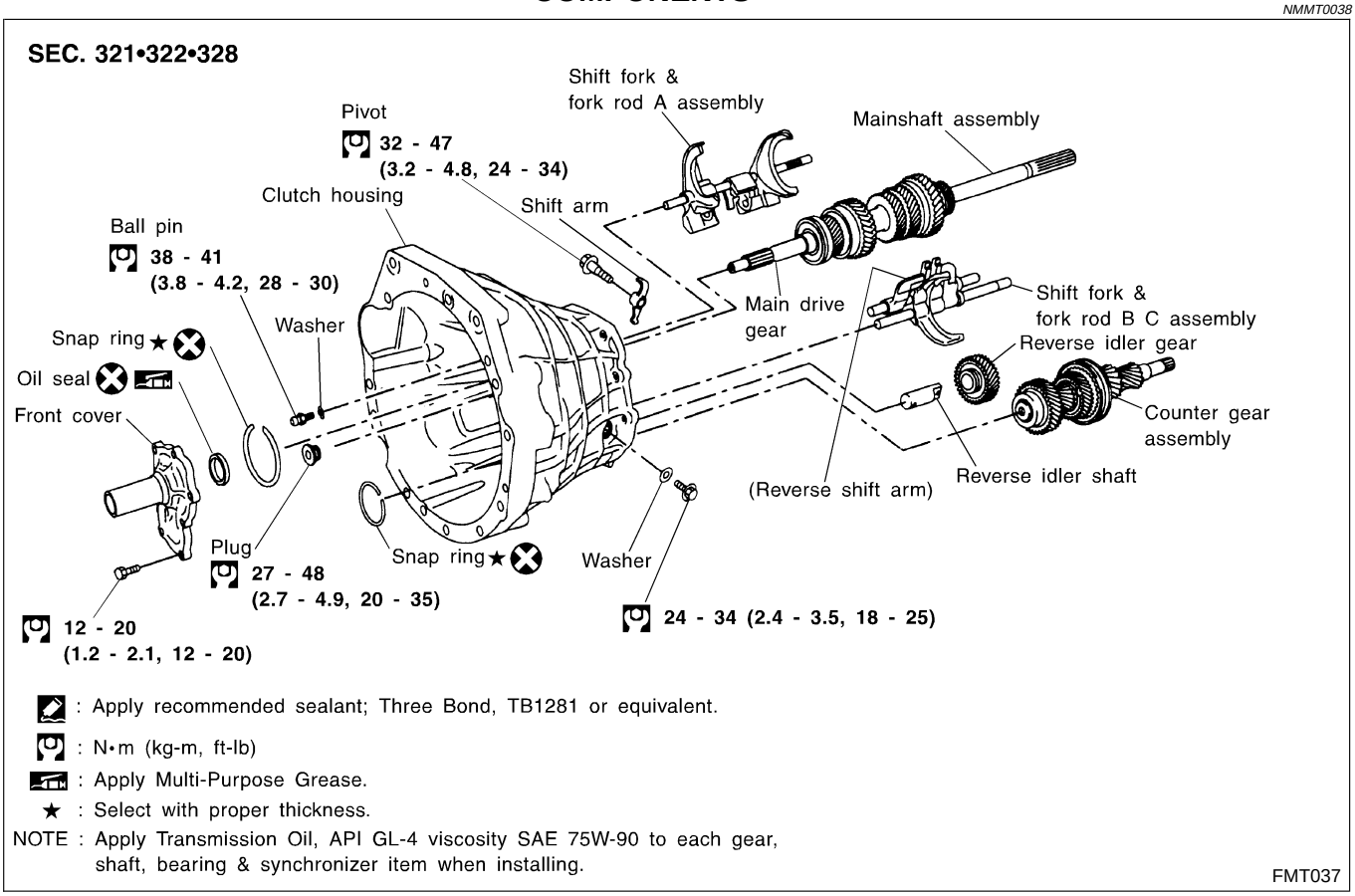

FMT037

REMOVAL

NMMT0039

1. Remove the filler plug and drain plug from the transmission case to drain transmission oil.

2. Remove the extension case assembly from the transmission case assembly.
   Refer to "Rear Extension", MT-16.
3. Remove the transmission case assembly from the clutch housing assembly.
   Refer to "Transmission Case", MT-18.

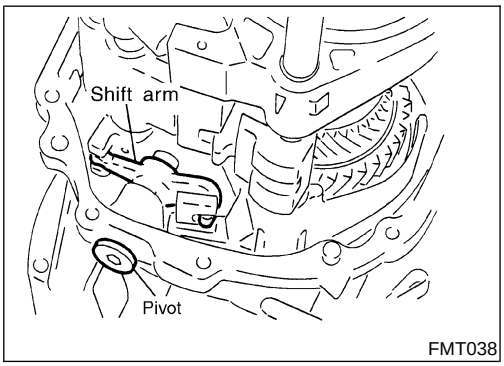

4. Remove the pivot and the shift arm.

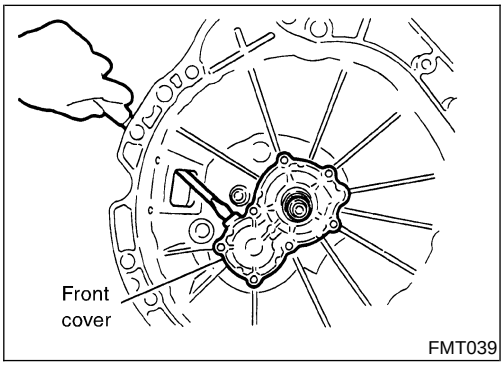

5. Remove the mounting bolts. Remove the front cover from the clutch housing with a flat-bladed screwdriver or similar tool as shown in the figure at the left.
6. Remove sealant remaining on the mating surface of the front cover.

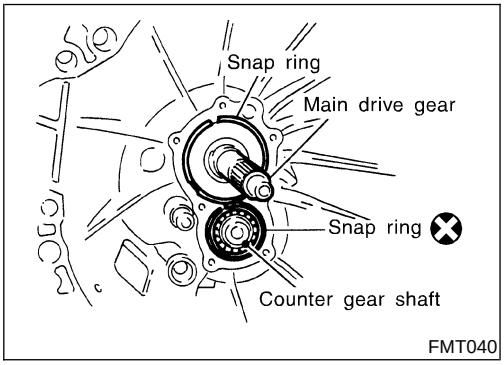

7. Remove the snap rings for the main drive gear and the counter shaft assembly respectively.

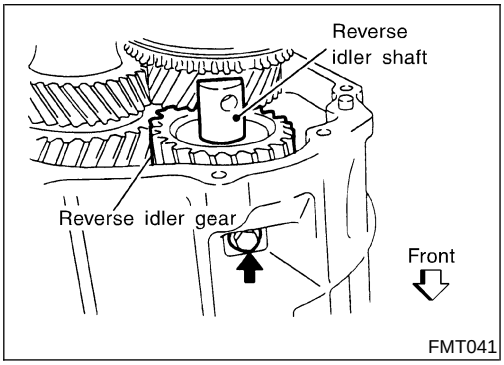

8. Remove the mounting bolts and the gasket of the reverse idler shaft from the clutch housing.
9. From the clutch housing side, lightly tap the main drive gear and counter shaft assembly with a plastic hammer to remove the main drive gear, mainshaft assembly, counter shaft assembly, reverse idler gear, shaft and shift fork & fork rod assemblies (A, B and C) at the same time.

INSTALLATION

NMMT0040

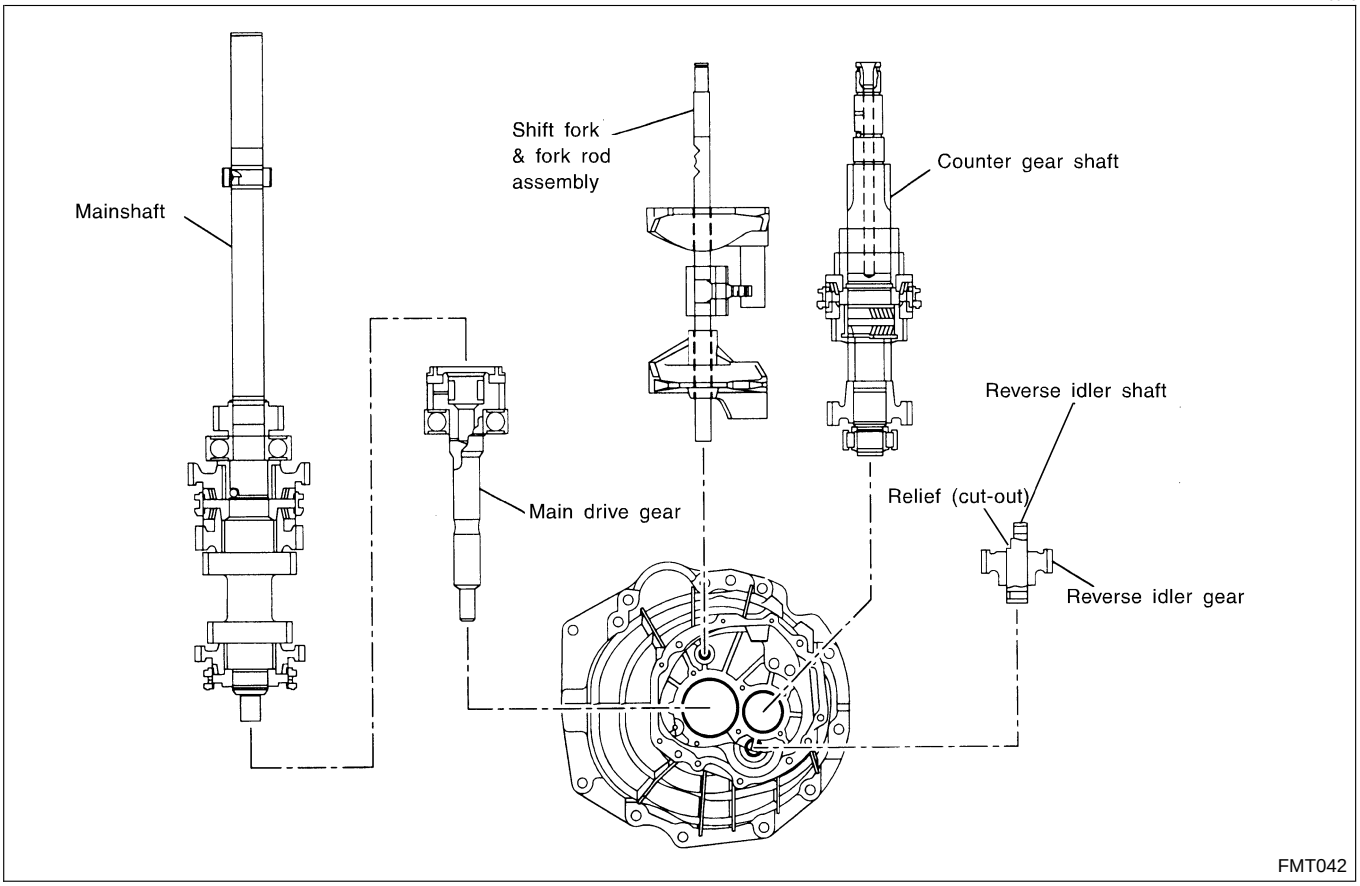

1. Apply transmission oil, API GL-4 viscosity SAE 75W-90 onto the needle bearing of the main drive gear and the reverse idler gear shaft.
2. Install the needle bearing to the main drive gear.
3. Install the main drive gear to the mainshaft assembly.
4. Install the reverse idler gear, reverse idler shaft, mainshaft assembly, main drive gear shift fork & fork rod A assembly and counter shaft assembly as one incorporated unit to the clutch housing.

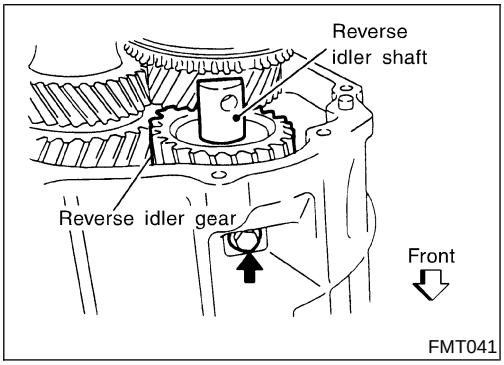

5. Install the reverse idler shaft to the clutch housing and temporarily tighten.

CAUTION:
Do not reuse the removed gasket. Always use a new gasket.

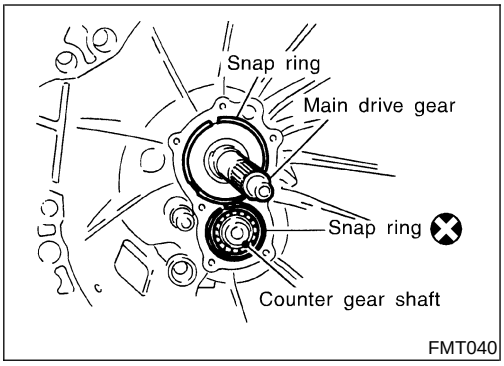

6. Install the respective snap ring to the main drive gear assembly and to the counter shaft assembly and secure them.

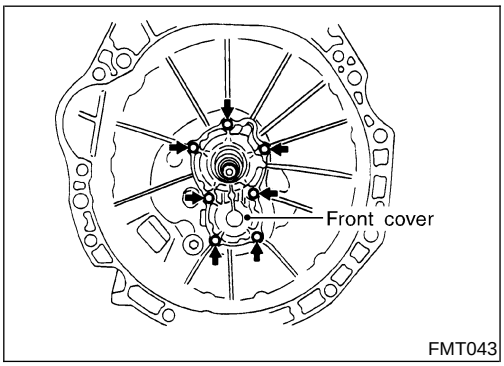

7. Apply Three Bond, TB1281 or the equivalent onto the entire circumferential mating surface of the front cover with the clutch housing assembly. Then, tighten the mounting bolts to the specified torque.

CAUTION:
Apply Three Bond, TB1281 or the equivalent carefully, avoiding the entry of sealant inside the transmission case.

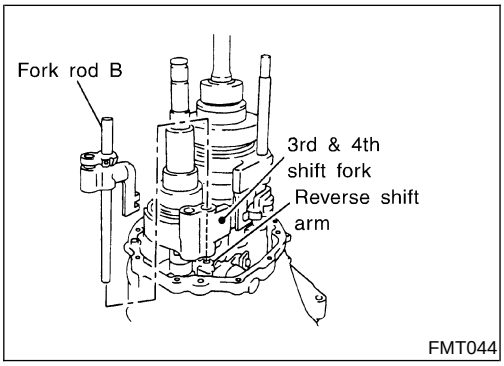

8. Install the 3rd & 4th shift fork to the coupling sleeve.
9. Temporarily install the reverse shift arm to the clutch housing assembly and install the fork rod B to the 3rd & 4th shift fork.
10. Fix the reverse shift arm to the fork rod B with the retaining pin.

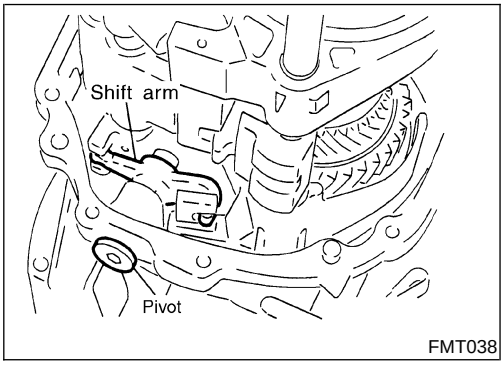

11. Apply Three Bond, TB1281 or the equivalent to the threaded section of the pivot to install the shift arm to the clutch housing assembly with it.
12. Apply multi-purpose grease onto the steel ball and install it to the 5th shift bracket.
13. Install the transmission case to the clutch housing.
    Refer to "Transmission Case", MT-18.
14. Install the rear extension assembly onto the transmission assembly.
    Refer to "Rear Extension", MT-16.

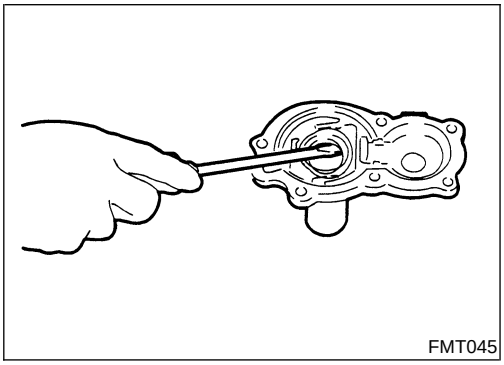

Front Cover

REMOVAL AND INSTALLATION

NMMT0041

Refer to "Clutch Housing", MT-25.

DISASSEMBLY

NMMT0042

Using a flat-bladed screwdriver, remove the oil seal from the front cover.

CAUTION:
Avoid any damage to the front cover when removing the oil seal.

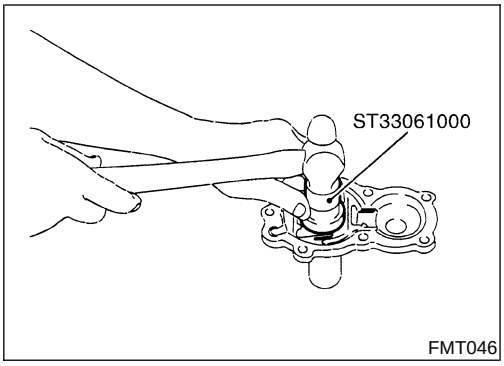

FMT046

ASSEMBLY

NMMT0043

Apply multi-purpose grease onto oil seal lips. Using a drift (SST), install the oil seal to the front cover.

CAUTION:

Do not reuse the removed oil seal. Always use a new oil seal.

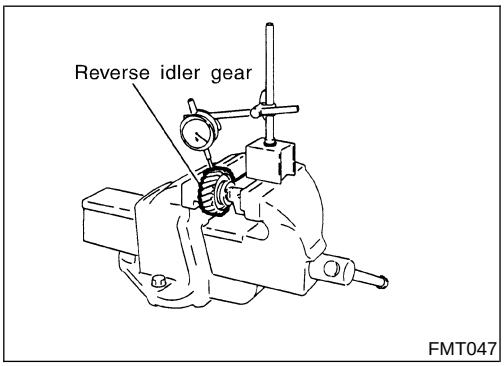

FMT047

Reverse Idler Gear

INSPECTION

NMMT0044

Install the reverse idler gear to the reverse idler shaft and set the gear in a vice to measure the oil clearance.

Oil clearance: 0.040 - 0.082 mm (0.0016 - 0.0032 in)

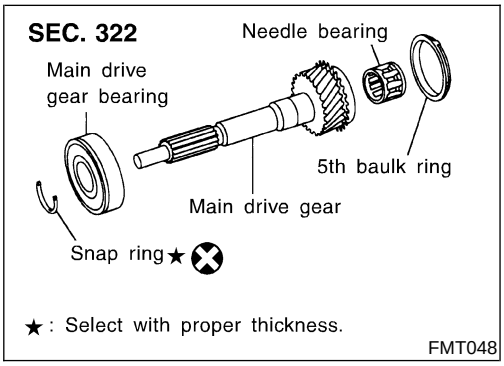

FMT048

Main Drive Gear

REMOVAL AND INSTALLATION

NMMT0045

Remove/install the mainshaft assembly for this operation. Refer to "Clutch Housing", MT-25.

DISASSEMBLY

NMMT0046

1. Remove the needle bearing from the main drive shaft.

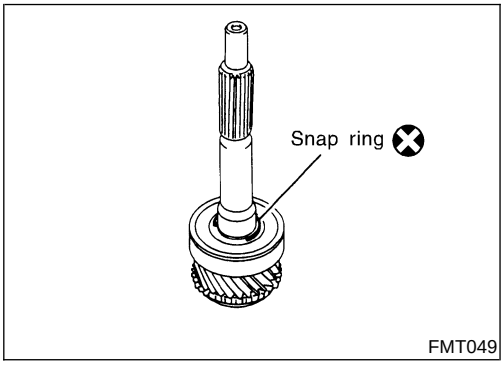

FMT049

2. Remove the snap ring from the main drive gear.

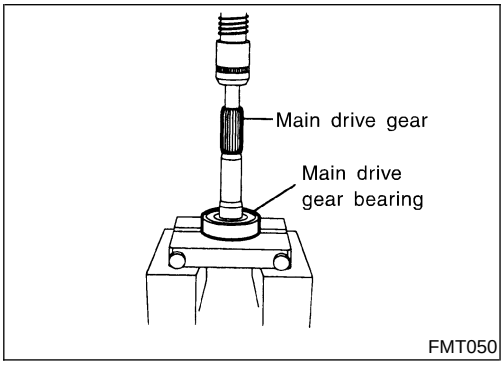

FMT050

3. Using a bearing replacer (multi-purpose tool), remove the main drive gear bearing with a press.

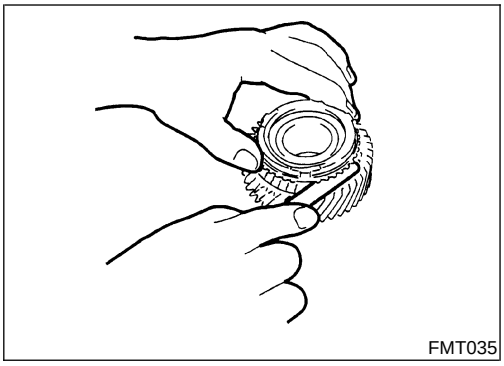
FMT035

INSPECTION

NMMT0064

- Check the gears for any damage, wear, or flaking.
- Press the 5th baulk ring closely to the main drive gear to measure the clearance.

  Clearance: 0.80 - 1.60 mm (0.0315 - 0.0630 in)

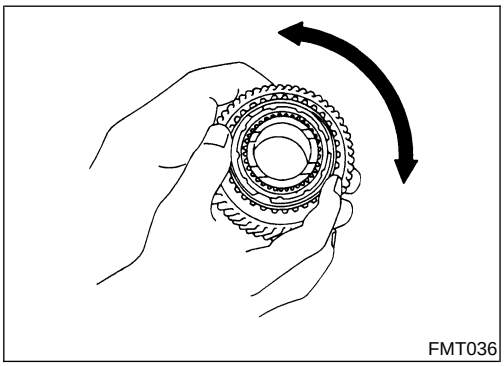
FMT036

- Make sure that, when trying to rotate the 5th baulk ring pressed closely to the main drive gear, the baulk ring does not slip.

ASSEMBLY

NMMT0047

1. Using a drift (SST), install the main drive gear bearing with a press.

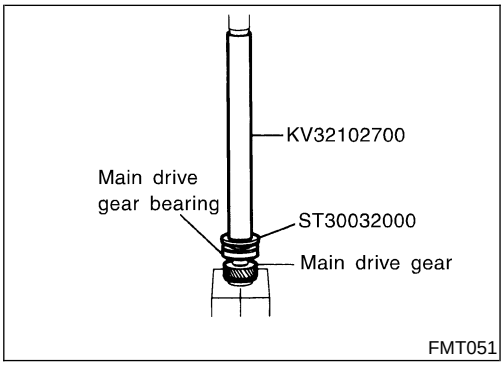

FMT051

2. Select a snap ring from those shown in the table to allow the clearance specified below.

   Allowable clearance: 0 - 0.1 mm (0 - 0.004 in)

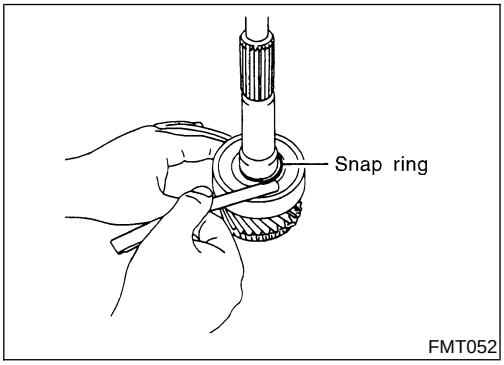

FMT052

Main drive gear snap ring

Unit: mm (in)

Thickness	Part No.	Discriminated mark
1.95 (0.0768)	32204 - 89F01	0
2.00 (0.0787)	32204 - 89F02	1
2.05 (0.0807)	32204 - 89F03	2
2.10 (0.0827)	32204 - 89F04	3
2.15 (0.0846)	32204 - 89F05	4
2.20 (0.0866)	32204 - 89F06	5

Mainshaft

REMOVAL AND INSTALLATION

NMMT0048

Refer to “Clutch Housing”, MT-25.

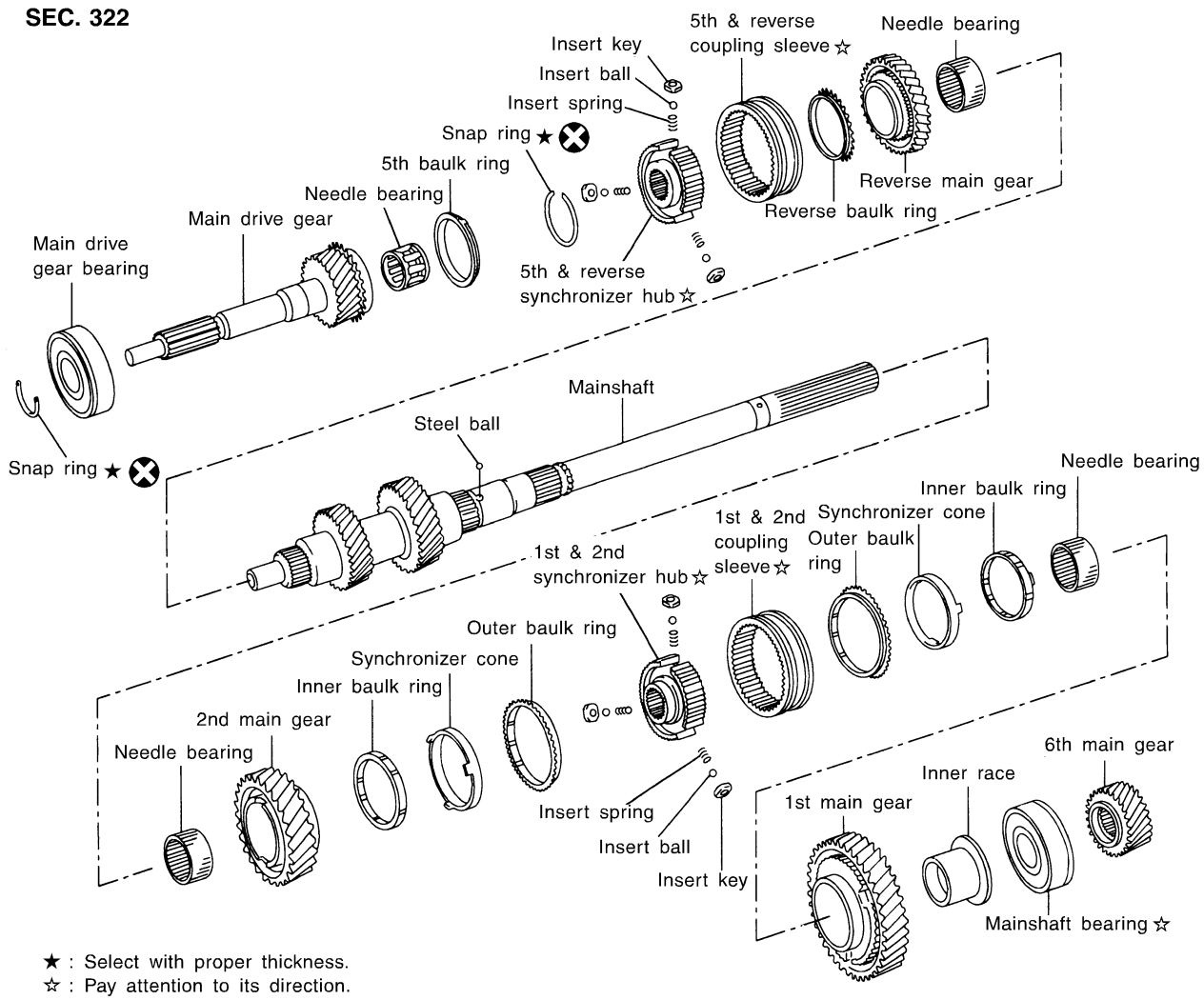

★ : Select with proper thickness.
☆ : Pay attention to its direction.
NOTE : Apply Transmission Oil, API GL-4 viscosity SAE 75W-90 to each gear, shaft, bearing & synchronizer item when installing.

FMT053

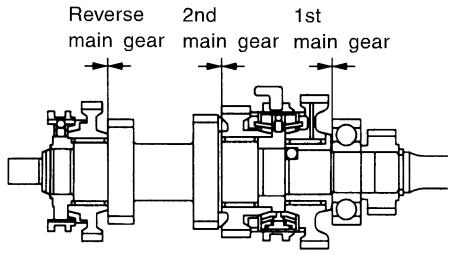

FMT054

INSPECTION BEFORE DISASSEMBLY

NMMT0049

1. Measure the end play of each gear. Replace the snap ring if the measurement is out of the specified range.

Unit: mm (in)

Gear	End play
1st main gear	0.15 - 0.40 (0.0059 - 0.0157)
2nd main gear	0.10 - 0.45 (0.0039 - 0.0177)
Reverse main gear	0.10 - 0.45 (0.0039 - 0.0177)

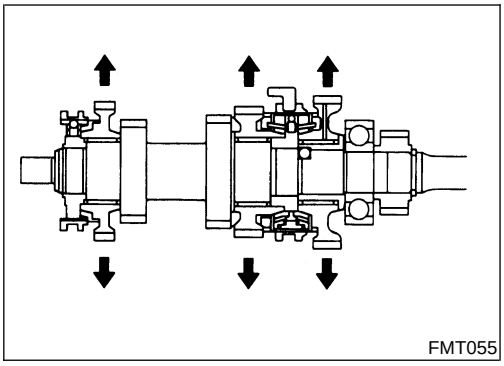
FMT055

2. Measure the oil clearance for each gear with a dial gauge. If the clearance is out of the specified range, check the gear, needle bearing and shaft.

Unit: mm (in)

Gear	Oil clearance
1st main gear 2nd main gear Reverse main gear	0.015 - 0.066 (0.0006 - 0.0026)

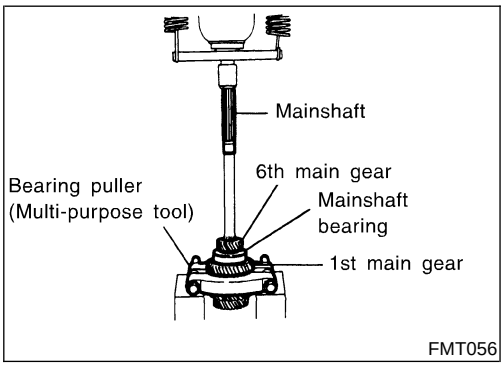

FMT056

DISASSEMBLY

NMMT0050

1. Remove the snap ring on the side of the 6th main gear.
2. Set a bearing replacer (Multi-purpose tool) on the 1st main gear, remove the 6th main gear, mainshaft bearing, inner race, needle bearing, steel ball and 1st main gear with a press.

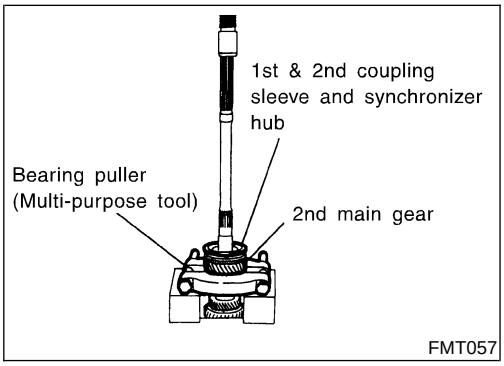

FMT057

3. Remove the inner baulk ring, synchronizer cone and outer baulk ring.
4. Set a bearing replacer (Multi-purpose tool) onto the 2nd main gear, remove the 1st & 2nd coupling sleeve & synchronizer hub, 2nd main gear and needle bearing with a press.
5. Remove the 1st & 2nd coupling sleeve from the synchronizer hub.

CAUTION:

- **Use a sheet of paper or cloth to cover the insert balls and insert springs to avoid losing them during work.**
- **Be careful not to deform the insert springs.**

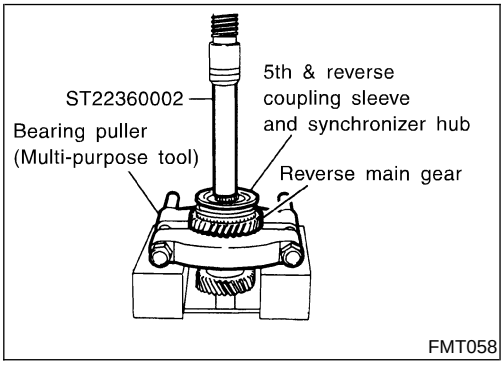

FMT058

6. Remove the snap ring on the side of the reverse gear.
7. Place a bearing replacer (Multi-purpose tool) and a drift (SST) onto the reverse main gear, remove the 5th & reverse coupling sleeve & synchronizer hub, reverse main gear and needle bearing with a press.
8. Remove the 5th & reverse coupling sleeve from the synchronizer hub.

CAUTION:

- **Use a sheet of paper or cloth to cover the insert balls and insert springs to avoid losing them during work.**
- **Be careful not to deform the insert springs.**

INSPECTION

NMMT0051

Mainshaft

NMMT0051S01

- Check the gears for any damage, wear or flaking.
- Support the mainshaft with a V-block to check for runout by measuring at each position shown in the figure. If the measured value exceeds the limit, replace the shaft.

  Limit: Less than 0.03 mm (0.0012 in)

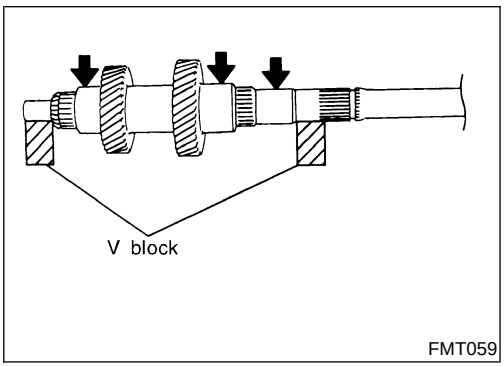

FMT059

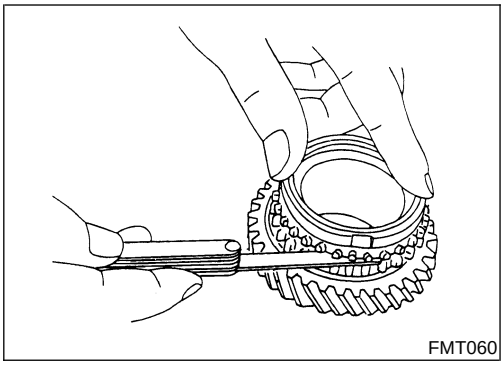
FMT060

Gears

NMMT0051S02

- Check each gear for damage, wear, or flaking.
- Install the inner baulk ring, synchronizer cone and outer baulk ring to the main gear.
  Press the outer baulk ring closely to the main gear and check if each clearance is within the specified value given below.

Unit: mm (in)

Application		Clearance
1st or 2nd main gear	Inner baulk ring	0.98 - 1.62 (0.0386 - 0.0638)
	Synchronizer cone	0.68 - 1.92 (0.0268 - 0.0756)
	Outer baulk ring	0.88 - 1.72 (0.0346 - 0.0677)
Reverse main gear	Baulk ring	0.88 - 1.52 (0.0346 - 0.0598)

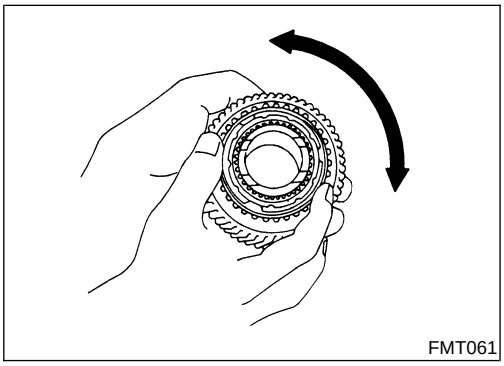
FMT061

- Install the inner baulk ring, synchronizer cone and outer baulk ring to the main gear. Make sure that, when trying to rotate the outer baulk ring pressed closely to the main gear, the baulk ring does not slip.

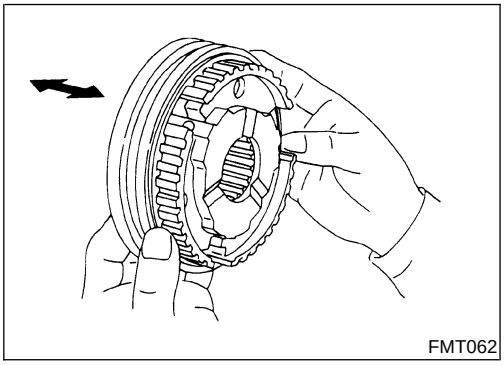
FMT062

Coupling Sleeve and Synchronizer Hub

NMMT0051S03

- Check the synchronizer hub and coupling sleeve for worn out splines at the tip.
- Install the coupling sleeve to the synchronizer hub to check for smooth sliding.

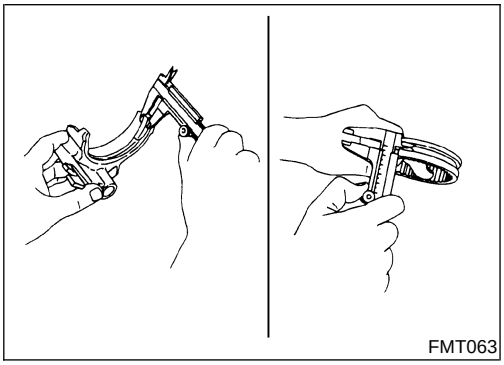
FMT063

- Measure the thickness of the claw of the shift fork and the width of the coupling sleeve groove to calculate the clearance to the shift fork. Check the clearance.

Calculation formula:
Width of coupling sleeve groove [mm (in)] – Thickness of claw of shift fork [mm (in)]

Standard: 0.15 - 0.35 mm (0.0059 - 0.0138 in)

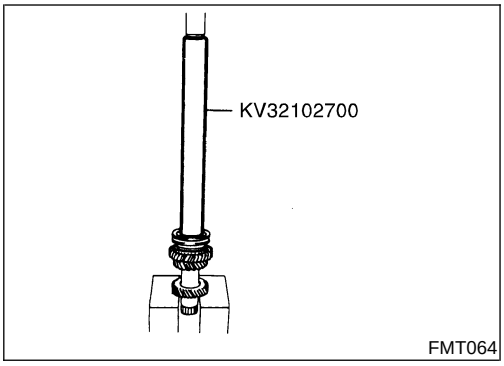

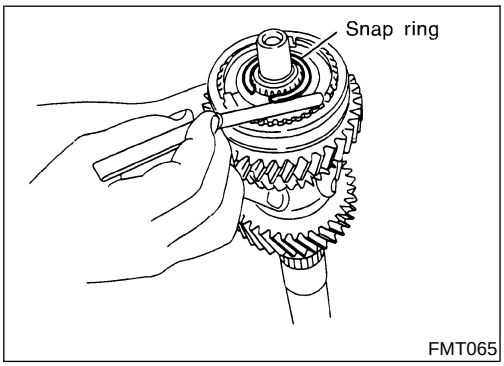

ASSEMBLY

NMMT0052

1. Install the needle bearing, reverse main gear and reverse baulk ring to the mainshaft.
2. Install the 5th & reverse synchronizer hub, insert key and insert spring to the 5th & reverse coupling sleeve. Then install the insert ball.
3. Fit the assembled 5th & reverse coupling sleeve and 5th & reverse synchronizer hub to the mainshaft, and install them with a drift (SST) and a press.
4. After installation, make sure the baulk rings move co-axially.
5. Select a snap ring from those shown in the table to allow the clearance specified below.

Allowable clearance:

0 - 0.1 mm (0 - 0.004 in)

5th & reverse synchronizer hub snap ring

Unit: mm (in)

Snap ring thickness	Part number	Discriminated mark
1.80 (0.0709)	32115 - 89F06	A
1.85 (0.0728)	32115 - 89F07	B
1.90 (0.0748)	32115 - 89F08	C
1.95 (0.0768)	32115 - 89F09	D
2.00 (0.0787)	32115 - 89F10	E
2.05 (0.0807)	32115 - 89F11	F

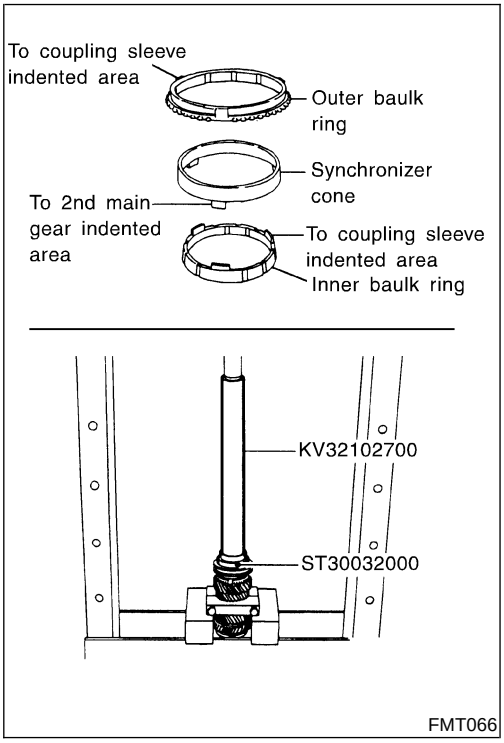

6. Install the needle bearing and 2nd main gear to the mainshaft.
7. Install the 1st & 2nd synchronizer hub, insert key and insert spring to the 1st & 2nd coupling sleeve. Then install the insert ball.
8. Aligning the projecting tabs of the inner baulk ring, synchronizer cone and the outer baulk ring with the indented area of the 2nd main gear and of the 1st & 2nd synchronizer hub. Install them to the mainshaft with a drift (SST) and a press.
9. After installation, make sure the baulk rings move co-axially.

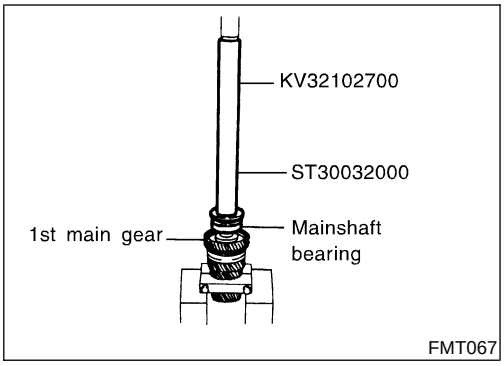

10. Install the outer baulk ring, synchronizer cone, inner baulk ring, steel ball, 1st main gear and inner race to the mainshaft. At this time, align the projecting tabs of the inner baulk ring, synchronizer cone and of the outer baulk ring with the cutouts of the 1st main gear and of the 1st & 2nd synchronizer hub.
11. Place a drift (SST) onto the inner lace of the mainshaft bearing, and install the mainshaft bearing to the mainshaft with a press.

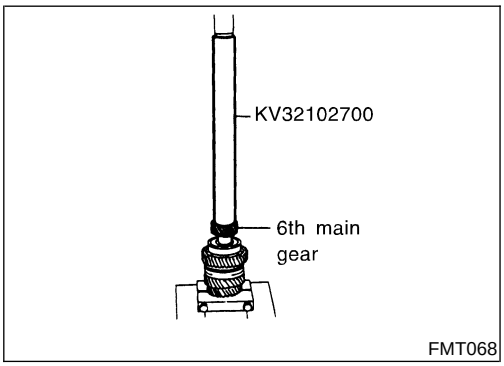

12. Place a drift (SST) onto the 6th main gear, and install it to the mainshaft with a press.

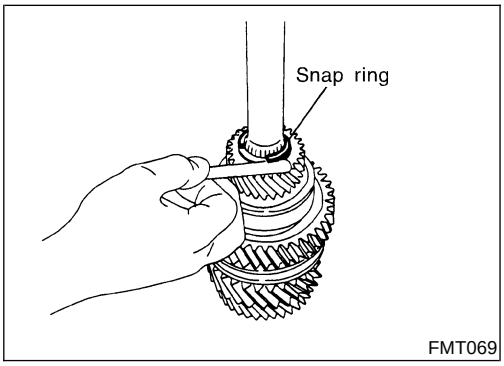

13. Select a snap ring from the table to allow the clearance specified below.

Allowable clearance:
0 - 0.1 mm (0 - 0.004 in)

6th main gear rear snap ring

Unit: mm (in)

Snap ring thickness	Part No.	Discriminated mark
2.67 (0.1051)	32204 - 89F11	A
2.73 (0.1075)	32204 - 89F12	B
2.79 (0.1098)	32204 - 89F13	C
2.85 (0.1122)	32204 - 89F14	D
2.91 (0.1146)	32204 - 89F15	E
2.97 (0.1169)	32204 - 89F16	F
3.03 (0.1193)	32204 - 89F17	G
3.09 (0.1217)	32204 - 89F18	H
3.15 (0.1240)	32204 - 89F19	J
3.21 (0.1264)	32204 - 89F20	K
3.27 (0.1287)	32204 - 89F21	L

Counter Gear

REMOVAL AND INSTALLATION

NMMT0053

Refer to “Clutch Housing”, MT-25.

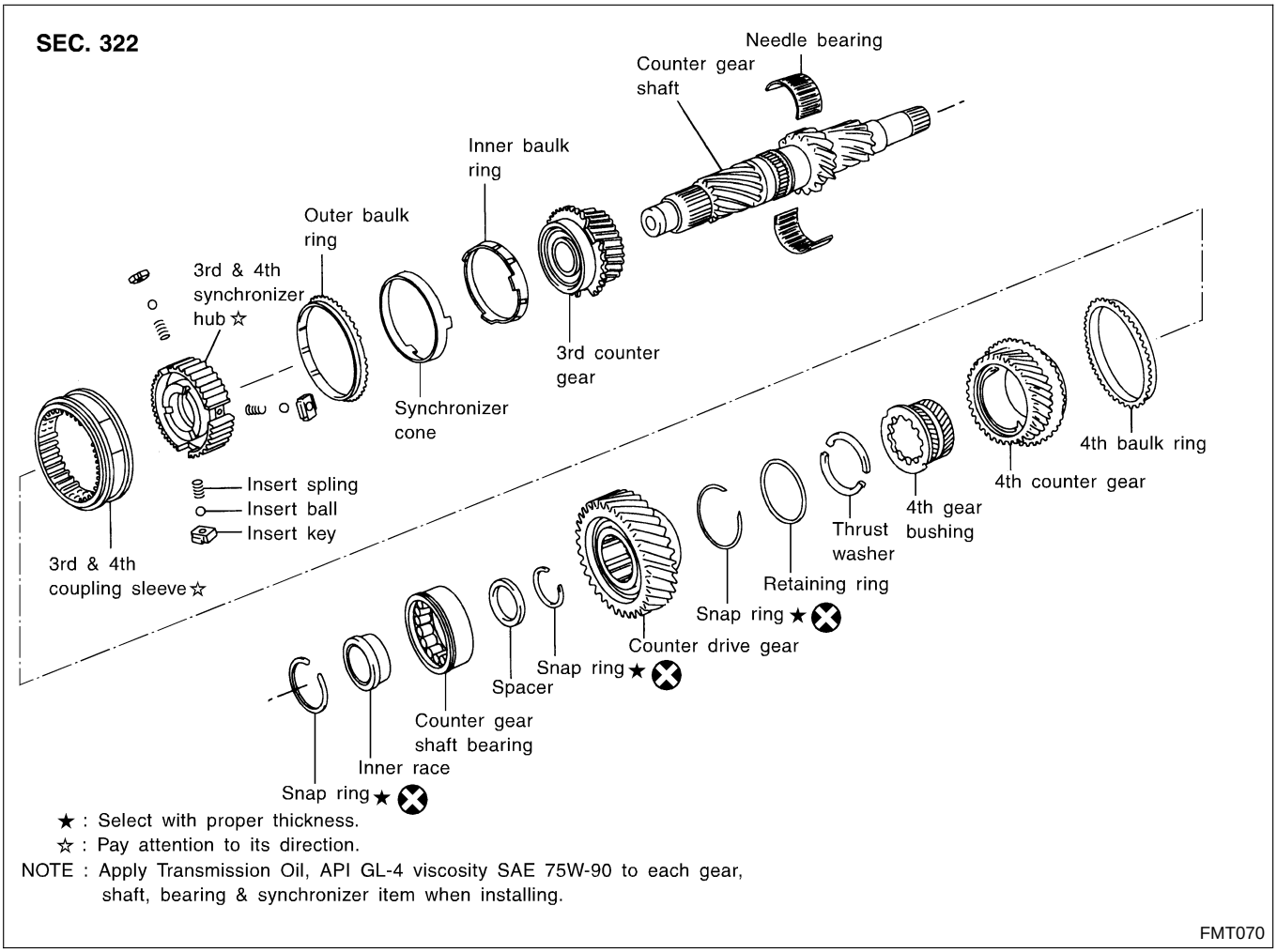

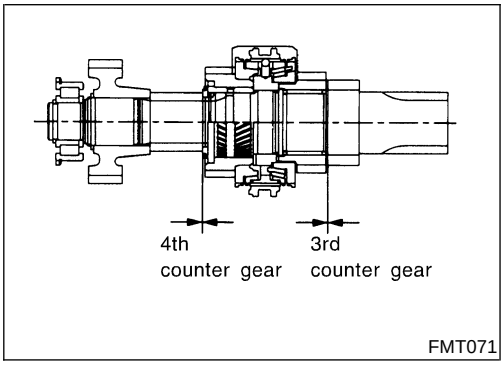

INSPECTION BEFORE DISASSEMBLY

NMMT0054

1. Measure the end play of each gear. Replace the snap ring if the measurement is out of the specified range.

Unit: mm (in)

Gear	End play
3rd counter gear 4th counter gear	0.10 - 0.35 (0.0039 - 0.0138)

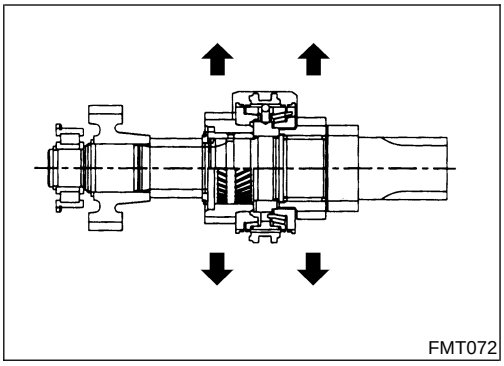
FMT072

2. Measure the oil clearance for each gear with a dial gauge. If the clearance is out of the specified range, check the gear, needle bearing and shaft.

Unit: mm (in)

Gear	Oil clearance
3rd counter gear	0.015 - 0.068 (0.0006 - 0.0027)
4th counter gear	0.065 - 0.115 (0.0026 - 0.0045)

DISASSEMBLY

NMMT0055

1. Remove the snap ring of the counter gear shaft bearing.
2. Using a bearing replacer (Multi-purpose tool) and a drift (SST), remove the counter gear shaft bearing from the counter gear shaft with a press.

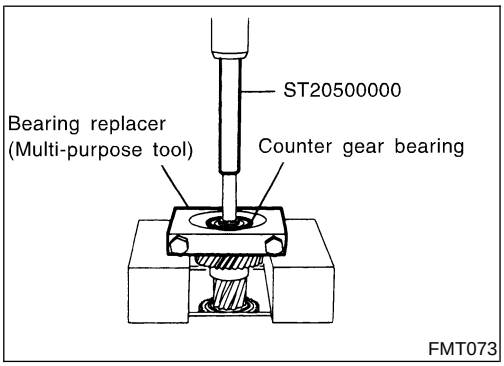

FMT073

3. Remove the snap ring of the counter drive gear.
4. Using a bearing replacer (Multi-purpose tool) and a drift (SST), remove the counter drive gear from the counter drive shaft with a press.
5. Remove the snap ring, retainer ring, thrust washer, 4th gear bushing, 4th counter gear and 4th baulk ring from the counter gear shaft.

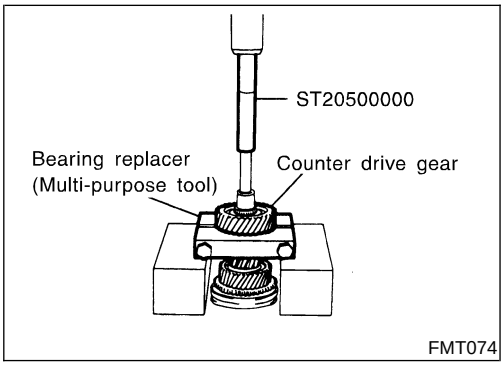

FMT074

6. Set a bearing replacer (Multi-purpose tool) onto the 3rd counter gear, and remove the 3rd & 4th coupling sleeve & synchronizer hub and the 3rd counter gear from the counter gear shaft with a press.
7. Remove the 3rd & 4th coupling sleeve from the 3rd & 4th synchronizer hub.

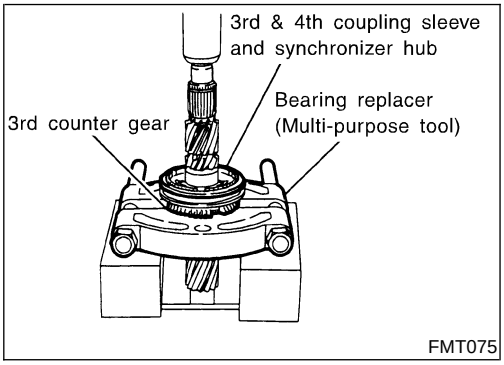

FMT075

CAUTION:

- **Use a sheet of paper or cloth to cover the insert balls and insert springs to avoid losing them during work.**
- **Be careful not to deform insert springs.**

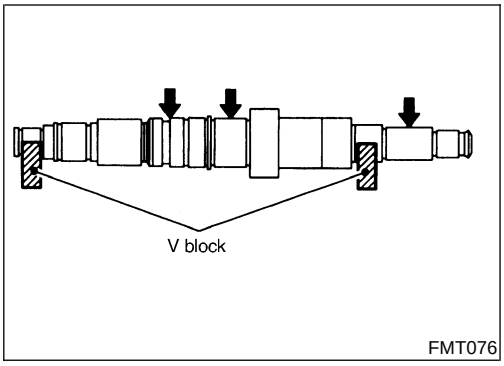

FMT076

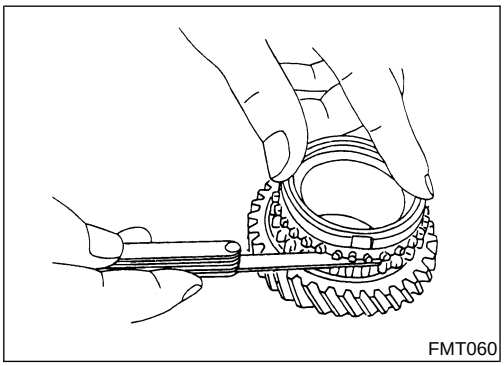
FMT060

INSPECTION

NMMT0056

Counter Gear Shaft

NMMT0056S01

- Check the gears for any damage, wear, or flaking.
- Support the counter gear shaft with a V-block to check for runout by measuring at each position shown in the figure. If the measured value exceeds the limit, replace the shaft.

  Limit: Less than 0.03 mm (0.0012 in)

Gears

NMMT0056S02

- Check each gear for damage, wear, or flaking.
- Install the 3rd outer baulk ring, synchronizer cone and outer baulk ring to the 3rd counter gear. Press the outer baulk ring closely to the 3rd counter gear and check if the clearance is within the specified range given below.
- Press the 4th outer baulk ring closely to the 4th counter gear and check if each clearance is within the specified range given below.

Unit: mm (in)

Application		Clearance
3rd counter gear	Inner baulk ring	0.98 - 1.62 (0.0386 - 0.0638)
	Synchronizer cone	0.68 - 1.92 (0.0268 - 0.0756)
	Outer baulk ring	0.88 - 1.72 (0.0346 - 0.0677)
4th counter gear	Baulk ring	0.8 - 1.6 (0.031 - 0.063)

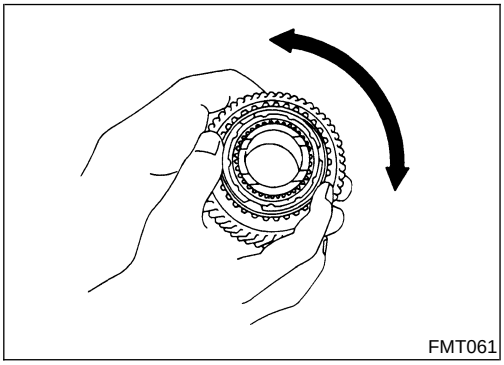
FMT061

- Install the 3rd outer baulk ring, synchronizer cone and outer baulk ring to the 3rd counter gear. Make sure that, when trying to rotate the outer baulk ring pressed closely to the 3rd counter gear, the baulk ring does not slip.
- Make sure that, when trying to rotate the 4th baulk ring pressed closely to the 4th counter gear, the baulk ring does not slip.

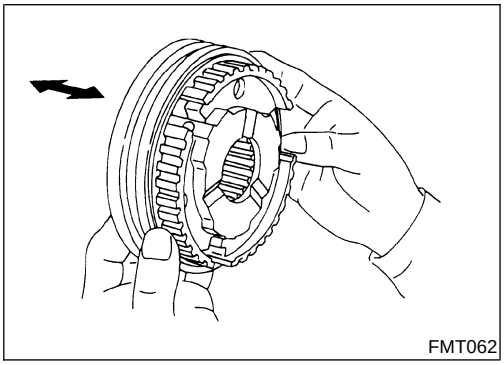
FMT062

Coupling Sleeve and Synchronizer Hub

NMMT0056S03

- Check the synchronizer hub and coupling sleeve for worn out splines at the tip.
- Install the coupling sleeve to the synchronizer hub to check for smooth sliding.

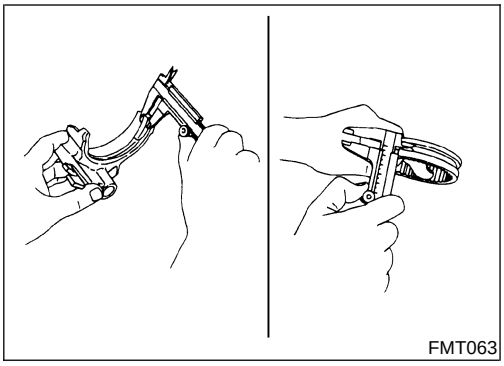
FMT063

- Measure the thickness of the claw of the shift fork and the width of the coupling sleeve groove to calculate the clearance to the shift fork. Check the clearance.

Calculation formula:
Width of coupling sleeve groove [mm (in)] – Thickness of claw of shift fork [mm (in)]

Standard: 0.15 - 0.35 mm (0.0059 - 0.0138 in)

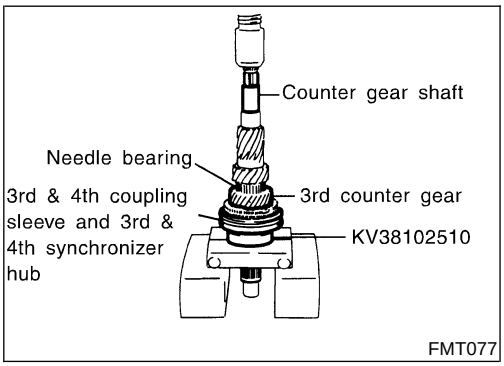

FMT077

ASSEMBLY

NMMT0057

1. Install the 3rd & 4th synchronizer hub, insert key and insert spring to coupling sleeve. Then, install the insert ball.
2. Set the assembled 3rd & 4th coupling sleeve and the 3rd & 4th synchronizer hub onto a drift (SST). Aligning the projecting tabs of the inner baulk ring, synchronizer cone and of the outer baulk ring with the cutouts of the 3rd counter gear and the 3rd & 4th synchronizer hub. Install the counter shaft to the 3rd & 4th synchronizer hub with a press.
3. After installation, make sure the baulk rings move co-axially.
4. Install the 4th outer baulk ring, 4th counter gear and 4th gear bushing to the counter gear shaft.
5. Assemble the thrust washer, retaining ring and snap rings that were removed during disassembling. Measure the clearance and select a thrust washer to obtain the specified value.

   Allowable clearance:
   0 - 0.1 mm (0 - 0.004 in)

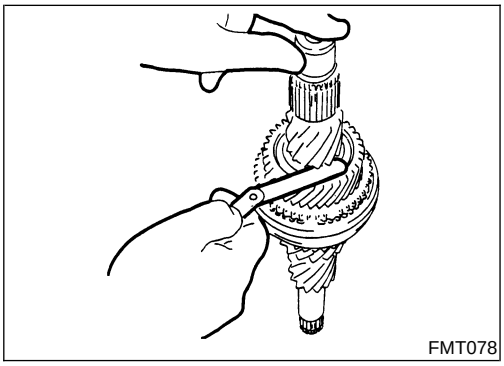
FMT078

4th counter gear front snap ring

Unit: mm (in)

Thickness	Part No.	Discriminated mark
3.75 (0.1476)	32414 - 89F00	A
3.80 (0.1496)	32414 - 89F01	B
3.85 (0.1516)	32414 - 89F02	C
3.90 (0.1535)	32414 - 89F03	D
3.95 (0.1555)	32414 - 89F04	E
4.00 (0.1575)	32414 - 89F05	F
4.05 (0.1594)	32414 - 89F06	G
4.10 (0.1614)	32414 - 89F07	H

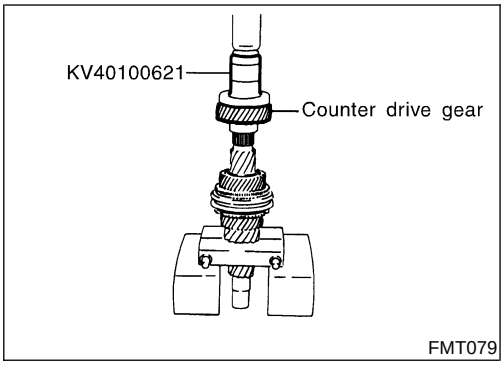

6. Using a drift (SST), install the counter drive gear to the counter gear shaft with a press.
7. Select a snap ring from the table to allow the clearance specified below.

Allowable clearance:
0 - 0.1 mm (0 - 0.004 in)

Counter drive gear snap ring

Unit: mm (in)

Thickness	Part No.	Discriminated mark
1.80 (0.0709)	32215 - 89F06	A
1.85 (0.0728)	32215 - 89F07	B
1.90 (0.0748)	32215 - 89F08	C
1.95 (0.0768)	32215 - 89F09	D
2.00 (0.0787)	32215 - 89F10	E
2.05 (0.0807)	32215 - 89F11	F

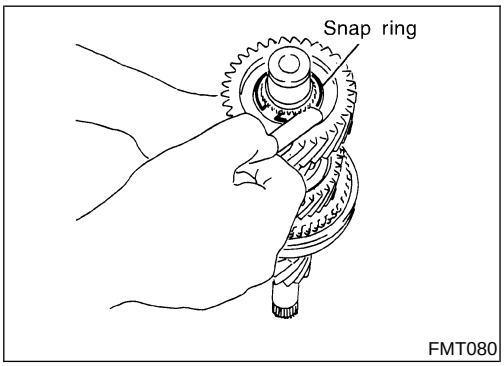

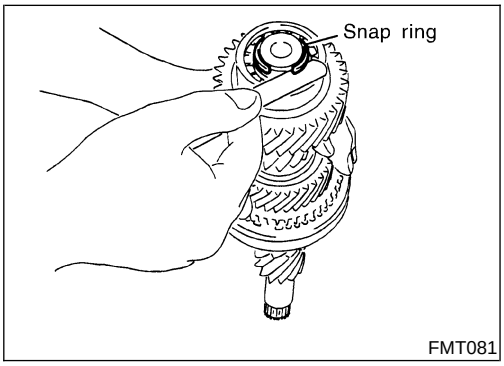

8. Install the spacer, counter gear shaft bearing and inner race to the counter gear shaft. Select a snap ring from the table to allow the clearance specified below.

Allowable clearance:
0 - 0.1 mm (0 - 0.004 in)

Counter front bearing snap ring

Unit: mm (in)

Thickness	Part No.	Discriminated mark
2.05 (0.0807)	32215 89F00	1
2.10 (0.0827)	32215 89F01	2
2.15 (0.0846)	32215 89F02	3
2.20 (0.0866)	32215 89F03	4
2.25 (0.0886)	32215 89F04	5
2.30 (0.0906)	32215 89F05	6

Shift Fork and Fork Rod

REMOVAL AND INSTALLATION

NMMT0058

Refer to "Clutch Housing", MT-25.

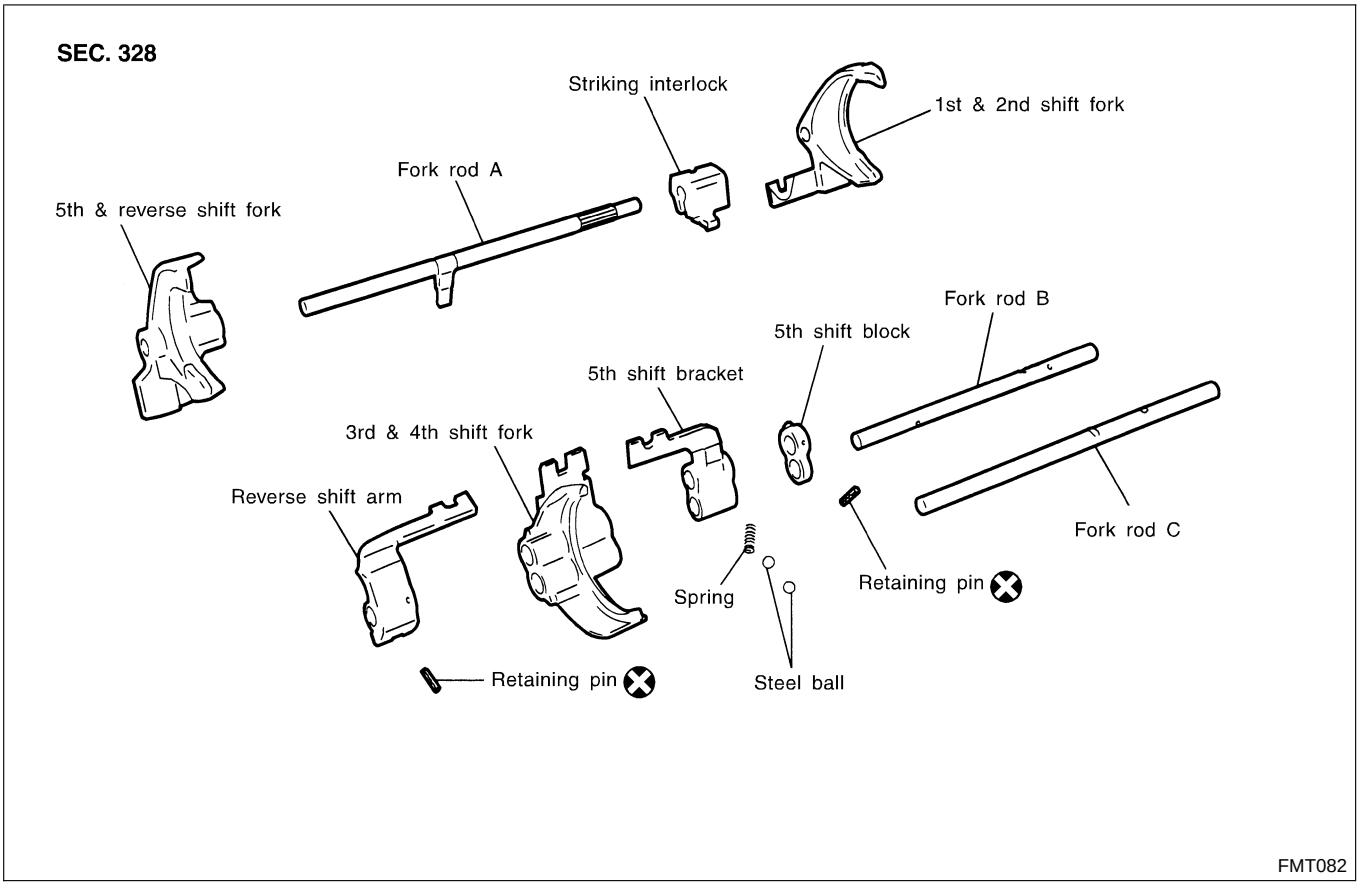

DISASSEMBLY AND ASSEMBLY

NMMT0059

Remove/install the retaining pins for this operation.

INSPECTION

NMMT0060

Check the working surfaces of each shift fork and fork rod for excessive wear, abrasion, bend or any other damage. Also check the spring for permanent set. When such abnormality is found, replace the faulty part.

General Specifications

NMMT0016

Applied model	SR20DET		
	2WD		
Transmission	FS6R92A		
Number of speed	6		
Shift pattern	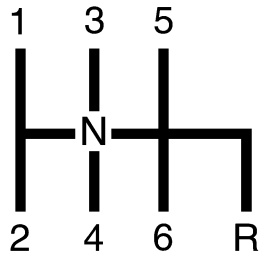 JMT062E		
Synchromesh type	Warner		
	Gear ratio	Number of teeth	
		Mainshaft	Counter shaft
Drive	—	28	33
1st	3.626	40	13
2nd	2.200	28	15
3rd	1.541	34	26
4th	1.213	35	34
5th	1.000	—	—
6th	0.767	28	43
Reverse	3.437	35	12
Reverse idler gear	23		
Oil capacity ℓ (US pt, Imp pt)	1.8 (3-7/8, 3-1/8)		
Remarks	1st, 2nd & 3rd triple cone type synchronizer		

Gear End Play and Oil Clearance

NMMT0017

Unit: mm (in)

Gear	End play	Oil clearance
1st main gear	0.15 - 0.40 (0.0059 - 0.0157)	0.015 - 0.066 (0.0006 - 0.0026)
2nd main gear	0.10 - 0.45 (0.0039 - 0.0177)	0.015 - 0.066 (0.0006 - 0.0026)
3rd counter gear	0.10 - 0.35 (0.0039 - 0.0138)	0.015 - 0.068 (0.0006 - 0.0027)
4th counter gear	0.10 - 0.35 (0.0039 - 0.0138)	0.065 - 0.115 (0.0026 - 0.0045)
6th counter gear	0.10 - 0.40 (0.0039 - 0.0157)	0.015 - 0.068 (0.0006 - 0.0027)
Reverse main gear	0.10 - 0.45 (0.0039 - 0.0177)	0.015 - 0.066 (0.0006 - 0.0026)
Reverse idler gear	0.20 - 0.45 (0.0079 - 0.0177)	0.040 - 0.082 (0.0016 - 0.0032)

Clearance Between Baulk Ring and Gear

NMMT0018

Unit: mm (in)

Gear	Standard
1st, 2nd & 3rd (triple)	0.88 - 1.72 (0.0346 - 0.0677)
4th & 5th (single)	0.80 - 1.60 (0.0315 - 0.0630)
6th & Rev (single)	0.88 - 1.52 (0.0346 - 0.0598)

Available Snap Ring

NMMT0020

MAIN DRIVE GEAR SNAP RING

NMMT0020S01

Unit: mm (in)

Allowable clearance 0 - 0.1 (0 - 0.004)

Thickness	Part number*	Discrimination mark	Thickness	Part number*	Discrimination mark
1.95 (0.0768)	32204-89F01	0	2.10 (0.0827)	32204-89F04	3
2.00 (0.0787)	32204-89F02	1	2.15 (0.0846)	32204-89F05	4
2.05 (0.0807)	32204-89F03	2	2.20 (0.0866)	32204-89F06	5

*: Always check with the Parts Department for the latest parts information.

COUNTER FRONT BEARING SNAP RING

NMMT0020S02

Unit: mm (in)

Allowable clearance 0 - 0.1 (0 - 0.004)

Thickness	Part number*	Discrimination mark	Thickness	Part number*	Discrimination mark
2.05 (0.0807)	32215-89F00	1	2.20 (0.0866)	32215-89F03	4
2.10 (0.0827)	32215-89F01	2	2.25 (0.0886)	32215-89F04	5
2.15 (0.0846)	32215-89F02	3	2.30 (0.0906)	32215-89F05	6

*: Always check with the Parts Department for the latest parts information.

4TH COUNTER GEAR FRONT SNAP RING

NMMT0020S03

Unit: mm (in)

Allowable clearance 0 - 0.1 (0 - 0.004)

Thickness	Part number*	Discrimination mark	Thickness	Part number*	Discrimination mark
3.75 (0.1476)	32414-89F00	A	3.95 (0.1555)	32414-89F04	E
3.80 (0.1496)	32414-89F01	B	4.00 (0.1575)	32414-89F05	F
3.85 (0.1516)	32414-89F02	C	4.05 (0.1594)	32414-89F06	G
3.90 (0.1535)	32414-89F03	D	4.10 (0.1614)	32414-89F07	H

*: Always check with the Parts Department for the latest parts information.

COUNTER DRIVE GEAR SNAP RING

NMMT0020S04

Unit: mm (in)

Allowable clearance 0 - 0.1 (0 - 0.004)

Thickness	Part number*	Discrimination mark	Thickness	Part number*	Discrimination mark
1.80 (0.0709)	32215-89F06	A	1.95 (0.0768)	32215-89F09	D
1.85 (0.0728)	32215-89F07	B	2.00 (0.0787)	32215-89F10	E
1.90 (0.0748)	32215-89F08	C	2.05 (0.0807)	32215-89F11	F

*: Always check with the Parts Department for the latest parts information.

5TH & REVERSE SYNCHRONIZER HUB SNAP RING

NMMT0020S05
Unit: mm (in)

Allowable clearance	0 - 0.1 (0 - 0.004)				
Thickness	Part number*	Discrimination mark	Thickness	Part number*	Discrimination mark
1.80 (0.0709)	32215-89F06	A	1.95 (0.0768)	32215-89F09	D
1.85 (0.0728)	32215-89F07	B	2.00 (0.0787)	32215-89F10	E
1.90 (0.0748)	32215-89F08	C	2.05 (0.0807)	32215-89F11	F

*: Always check with the Parts Department for the latest parts information.

6TH MAIN GEAR REAR SNAP RING

NMMT0020S06
Unit: mm (in)

Allowable clearance	0 - 0.1 (0 - 0.004)				
Thickness	Part number*	Discrimination mark	Thickness	Part number*	Discrimination mark
2.67 (0.1051)	32204-89F11	A	3.03 (0.1193)	32204-89F17	G
2.73 (0.1075)	32204-89F12	B	3.09 (0.1217)	32204-89F18	H
2.79 (0.1098)	32204-89F13	C	3.15 (0.1240)	32204-89F19	J
2.85 (0.1122)	32204-89F14	D	3.21 (0.1264)	32204-89F20	K
2.91 (0.1146)	32204-89F15	E	3.27 (0.1287)	32204-89F21	L
2.97 (0.1169)	32204-89F16	F	—		—

*: Always check with the Parts Department for the latest parts information.

6TH SYNCHRONIZER HUB SNAP RING

NMMT0020S07
Unit: mm (in)

Allowable clearance	0 - 0.1 (0 - 0.004)				
Thickness	Part number*	Discrimination mark	Thickness	Part number*	Discrimination mark
2.80 (0.1102)	32236-89F01	A	2.95 (0.1161)	32236-89F04	D
2.85 (0.1122)	32236-89F02	B	3.00 (0.1181)	32236-89F05	E
2.90 (0.1142)	32236-89F03	C	3.05 (0.1201)	32236-89F06	F

*: Always check with the Parts Department for the latest parts information.