FOREWORD

Welcome to the growing family of new NISSAN owners. This vehicle is delivered to you with confidence. It was produced using the latest techniques and strict quality control.

This manual was prepared to help you understand the operation and maintenance of your vehicle so that you may enjoy many miles (kilometers) of driving pleasure. Please read through this manual before operating your vehicle.

A separate Warranty Information Booklet explains details about the warranties covering your vehicle. The "NISSAN Service and Maintenance Guide" explains details about maintaining and servicing your vehicle. Additionally, a separate Customer Care/Lemon Law Booklet (U.S. only) will explain how to resolve any concerns you may have with your vehicle, as well as clarify your rights under your state's lemon law.

Your NISSAN dealership knows your vehicle best. When you require any service or have any questions, they will be glad to assist you with the extensive resources available to them.

READ FIRST—THEN DRIVE SAFELY

Before driving your vehicle please read this Owner's Manual carefully. This will ensure familiarity with controls and maintenance requirements, assisting you in the safe operation of your vehicle.

⚠ WARNING

IMPORTANT SAFETY INFORMATION REMINDERS FOR SAFETY!

Follow these important driving rules to help ensure a safe and complete trip for you and your passengers!

- **NEVER drive under the influence of alcohol or drugs.**
- **ALWAYS observe posted speed limits and never drive too fast for conditions.**
- **ALWAYS use your seat belts and appropriate child restraint systems. Preteen children should be seated in the rear seat.**
- **ALWAYS provide information about the proper use of vehicle safety features to all occupants of the vehicle.**
- **ALWAYS review this owner's manual for important safety information.**

MODIFICATION OF YOUR VEHICLE

This vehicle should not be modified. Modification could affect its performance, safety or durability, and may even violate governmental regulations. In addition, damage or performance problems resulting from modifications may not be covered under NISSAN warranties.

This manual includes information for all options available on this model. Therefore, you may find some information that does not apply to your vehicle.

All information, specifications and illustrations in this manual are those in effect at the time of printing. NISSAN reserves the right to change specifications or design without notice and without obligation.

IMPORTANT INFORMATION ABOUT THIS MANUAL

You will see various symbols in this manual. They are used in the following ways:

⚠ WARNING

This is used to indicate the presence of a hazard that could cause death or serious personal injury. To avoid or reduce the risk, the procedures must be followed precisely.

⚠ CAUTION

This is used to indicate the presence of a hazard that could cause minor or moderate personal injury or damage to your vehicle. To avoid or reduce the risk, the procedures must be followed carefully.

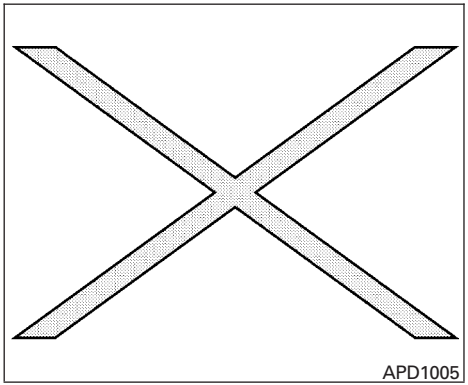

If you see this symbol, it means **"Do not do this"** or **"Do not let this happen."**

If you see a symbol similar to these in an illustration, it means the arrow points to the front of the vehicle.

Arrows in an illustration that are similar to these indicate movement or action.

Arrows in an illustration that are similar to these call attention to an item in the illustration.

CALIFORNIA PROPOSITION 65 WARNING

⚠ WARNING

Engine exhaust, some of its constituents, and certain vehicle components contain or emit chemicals known to the State of California to cause cancer and birth defects or other reproductive harm. In addition, certain fluids contained in vehicles and certain products of component wear contain or emit chemicals known to the State of California to cause cancer and birth defects or other reproductive harm.

© 2005 NISSAN NORTH AMERICA, INC.
GARDENA, CALIFORNIA

All rights reserved. No part of this Owner's Manual may be reproduced or stored in a retrieval system, or transmitted in any form, or by any means, electronic, mechanical, photocopying, recording or otherwise, without the prior written permission of Nissan North America, Inc., Gardena, California.

WELCOME TO THE WORLD OF NISSAN

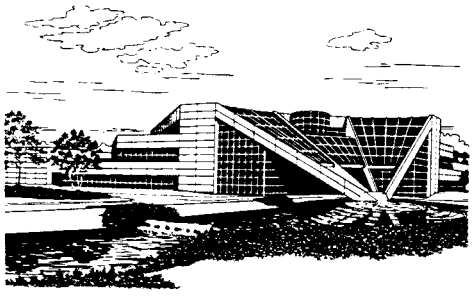

NISSAN TECHNICAL CENTER NORTH AMERICA, INC.
in Farmington Hills, Michigan

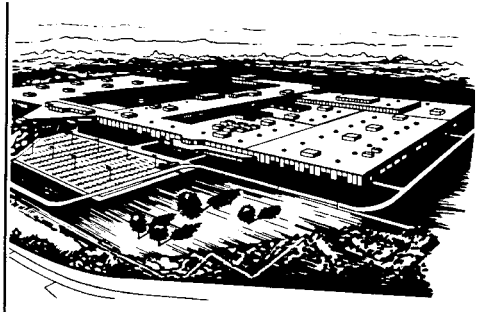

NISSAN MANUFACTURING FACILITY
in Smyrna, Tennessee

WFW0002

Your new NISSAN is the result of our dedication to produce the finest in safe, reliable and economical transportation. Your vehicle is the product of a successful worldwide company that manufactures cars and trucks in over 17 countries and distributes them in 170 nations.

NISSAN vehicles are designed and manufactured by NISSAN Motor Co., Ltd. which was founded in Tokyo, Japan in 1933, and NISSAN affiliates worldwide, collectively growing to become the fifth largest automaker in the world. In addition to cars and trucks, NISSAN also makes forklift trucks, marine engines, boats and other diversified products.

NISSAN has made a substantial and growing investment in North America. NISSAN's commitment is over $6 billion dollars in capital investments in facilities across the continent. Some of the facilities include the NISSAN Manufacturing facilities in Canton, Mississippi and in Smyrna, Tennessee, vehicle styling design at NISSAN Design America, Inc. in San Diego, California, and engineering at NISSAN Technical Center North America in Farmington Hills, Michigan. Additionally, NISSAN employs more than 21,000 people throughout the United States, Canada, and Mexico. An additional 60,000 people work for the 1,250 NISSAN and INFINITI dealers across North America.

NISSAN is also a substantial contributor to the Canadian economy. NISSAN Canada Inc., its suppliers and over 150 dealers employ approximately 4,500 people. These include company employees and the staffs of NISSAN dealers all across Canada. In addition, many Canadians work for companies that supply NISSAN and NISSAN dealers with materials and services ranging from the operation of port facilities and transportation services, to the supply of lubricants, parts and accessories.

NISSAN pioneered the use of electronics and computers in automobiles, and has led the industry in improving both performance and fuel efficiency through new engine designs and the use of synthetic materials to reduce vehicle weight. The company has also developed ways to build quality into its vehicles at each stage of the production process, both through extensive use of automation and — most importantly — through an awareness that **people** are the central element in quality control.

From the time the parts arrived from our suppliers until you took delivery of your new NISSAN, dozens of checks were made to ensure that only the best job was being done in producing and delivering your vehicle. NISSAN also takes great care to ensure that when you take your NISSAN to your dealer for maintenance, the service technician will perform his work according to the quality standards that have been established by NISSAN.

Safety has also been built into your NISSAN. As you know, seat belts are an integral part of the safety systems that will help protect you and your passengers in the event of a sudden stop or an accident. We urge you to use the seat belts every time you drive the vehicle.

The NISSAN story of growth and achievement reflects our major goal: to provide you, our customer, with a vehicle that is built with quality and craftsmanship — a product that we can be proud to build and you can be proud to own.

NISSAN CUSTOMER CARE PROGRAM

NISSAN CARES . . .

Both NISSAN and your NISSAN dealer are dedicated to serving all your automotive needs. Your satisfaction with your vehicle and your NISSAN dealer are our primary concerns. Your NISSAN dealer is always available to assist you with all your automobile sales and service needs.

However, if there is something that your NISSAN dealer cannot assist you with or you would like to provide NISSAN directly with comments or questions, please contact the NISSAN Consumer Affairs Department using our toll-free number:

For U.S. customers
1-800-NISSAN-1
(1-800-647-7261)

For Canadian customers
1-800-387-0122

The Consumer Affairs Department will ask for the following information:

- Your name, address, and telephone number
- Vehicle identification number (attached to the top of the instrument panel on the driver's side)
- Date of purchase
- Current odometer reading
- Your NISSAN dealer's name
- Your comments or questions

OR

You can write to NISSAN with the information at:

For U.S. customers
Nissan North America, Inc.
Consumer Affairs Department
P.O. Box 191
Gardena, California 90248-0191

For Canadian customers
Nissan Canada Inc.
5290 Orbitor Drive
Mississauga, Ontario L4W 4Z5

We appreciate your interest in NISSAN and thank you for buying a quality NISSAN vehicle.

Table of Contents

Illustrated table of contents	0
Safety—Seats, seat belts and supplemental restraint system	1
Instruments and controls	2
Pre-driving checks and adjustments	3
Display screen, heater, air conditioner and audio systems	4
Starting and driving	5
In case of emergency	6
Appearance and care	7
Maintenance and do-it-yourself	8
Technical and consumer information	9
Index	10

0 Illustrated table of contents

Airbags, seat belts and child restraints 0-2
Exterior front 0-3
Exterior rear. 0-4
Passenger compartment 0-5
Instrument panel. 0-6
Engine compartment check locations 0-8
Warning/indicator lights 0-10

AIRBAGS, SEAT BELTS AND CHILD RESTRAINTS

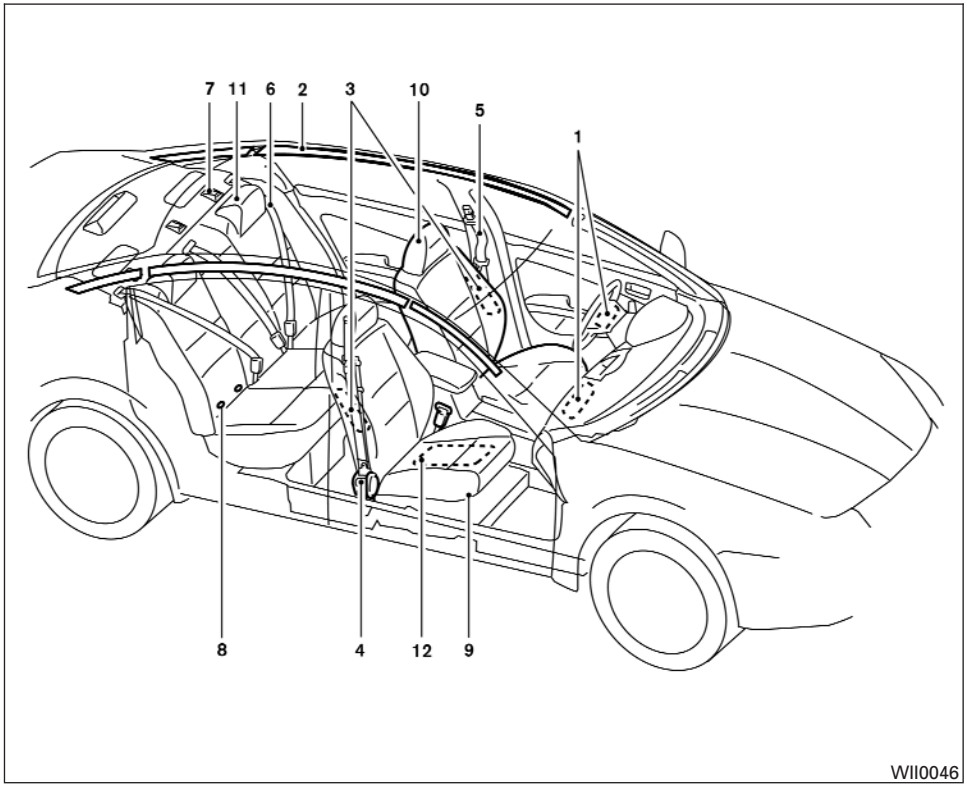

1. Supplemental front impact air bags (P. 1-33)
2. Supplemental curtain side-impact air bag (if so equipped) (P. 1-33)
3. Supplemental side impact air bag (if so equipped) (P. 1-33)
4. Seat belt pretensioners (P. 1-47)
5. Front seat belts (P. 1-9)
6. Rear seat belts (P. 1-9)
7. Top tether anchor point (P. 1-25)
8. LATCH (Lower Anchors and Tethers for CHildren) (P. 1-24)
9. Seats (P. 1-2)
10. Front head restraint (P. 1-7)
11. Rear head restraint (P. 1-7)
12. Occupant classification sensor (weight sensor) (P.1-41)

See the page number indicated in parentheses for operating details.

EXTERIOR FRONT

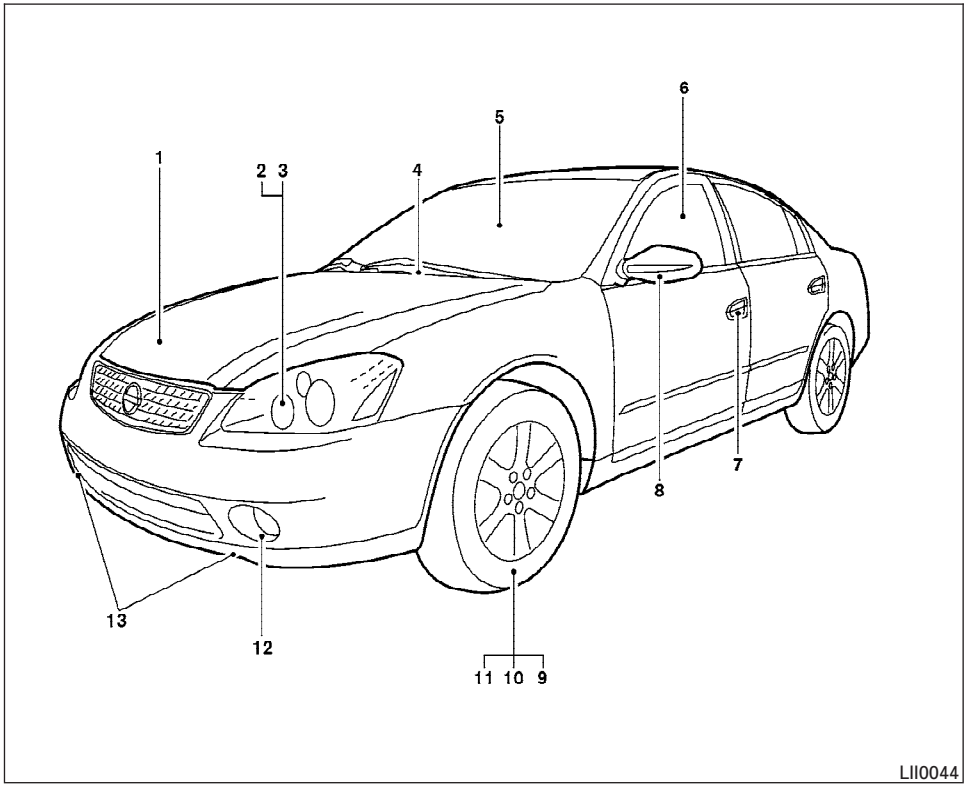

1. Engine hood (P. 3-9)
2. Headlight and turn signal switch (P. 2-21)
3. Replacing bulbs (P. 8-30)
4. Windshield wiper and washer switch (P. 2-19)
5. Windshield (P. 8-24)
6. Power windows (P. 2-37)
7. Door locks, keyfob, keys (P. 3-3, 3-5, 3-2)
8. Mirrors (P. 3-15)
9. Tire pressure (P. 8-39)
10. Flat tire (P. 6-2)
11. Tire chains (P. 8-46)
12. Fog light switch (if so equipped) (P. 2-25)
13. Tie down/towing hooks (P. 6-11)

See the page number indicated in parentheses for operating details.

EXTERIOR REAR

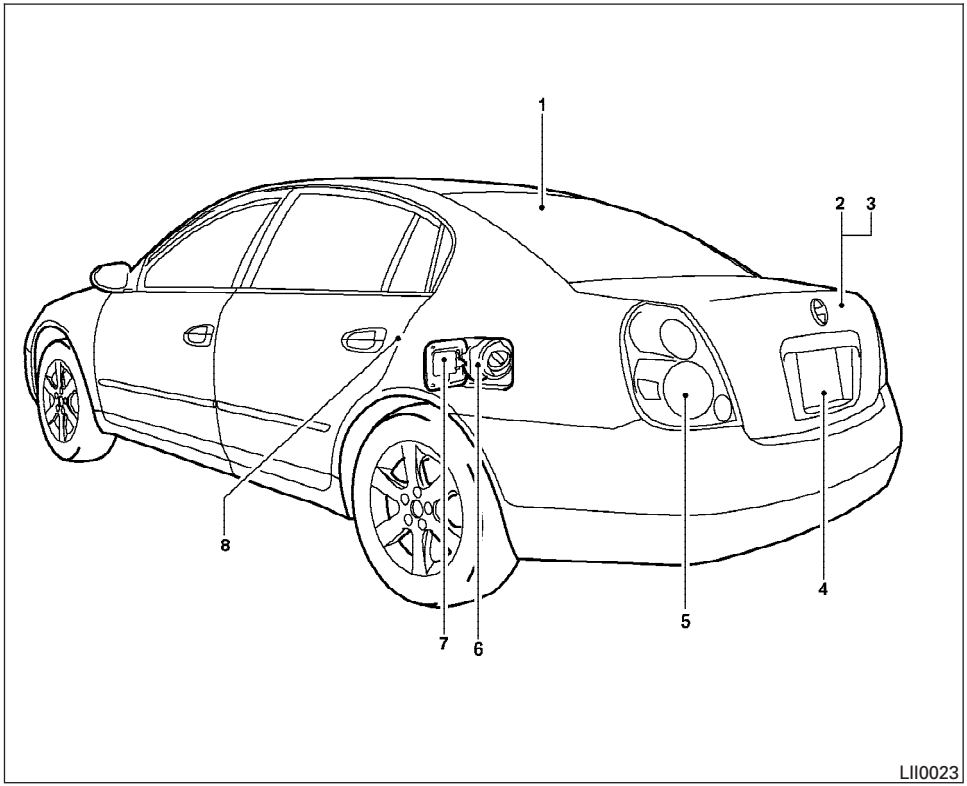

1. Rear window defroster switch (P. 2-20)
2. Trunk lid (P. 3-10)
3. Vehicle loading (P.9-13)
4. Interior trunk lid release (P. 3-11)
5. Replacing bulbs (P. 8-30)
6. Fuel filler cap, fuel recommendation (P. 3-12, P. 10-9)
7. Fuel filler lid (P. 3-12)
8. Child safety locks (P. 3-5)

PASSENGER COMPARTMENT

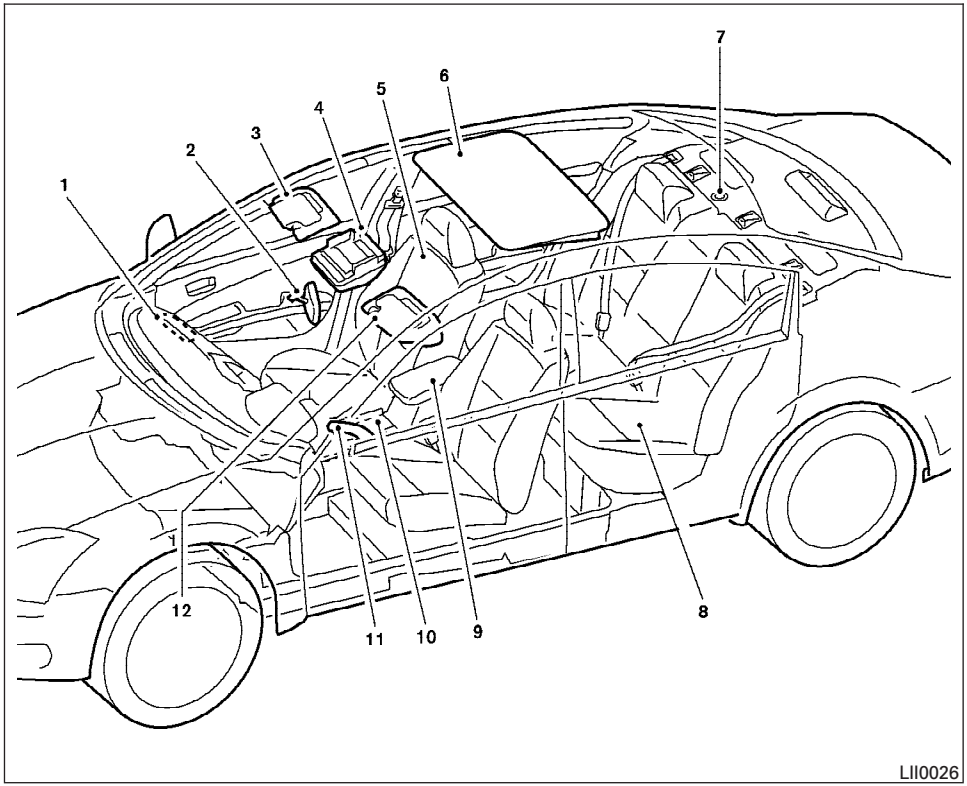

1. Glove box (P. 2-32)
2. Automatic anti-glare inside mirror (if so equipped) (P. 3-15)
3. Sun visors (P. 3-14)
4. Interior lights, illuminated entry (P. 2-40)
5. Front seat (P. 1-2)
6. Sunroof (if so equipped) (P. 2-39)
7. Interior trunk access (P. 1-6)
8. Rear seat (P. 1-6)
9. Front console (P. 2-33)
10. Front cup holders (P. 2-31)
11. Park brake, parking on hills (P. 5-14, P. 5-18)
12. HomeLink® (if so equipped) (P. 2-42)

See the page number indicated in parentheses for operating details.

INSTRUMENT PANEL

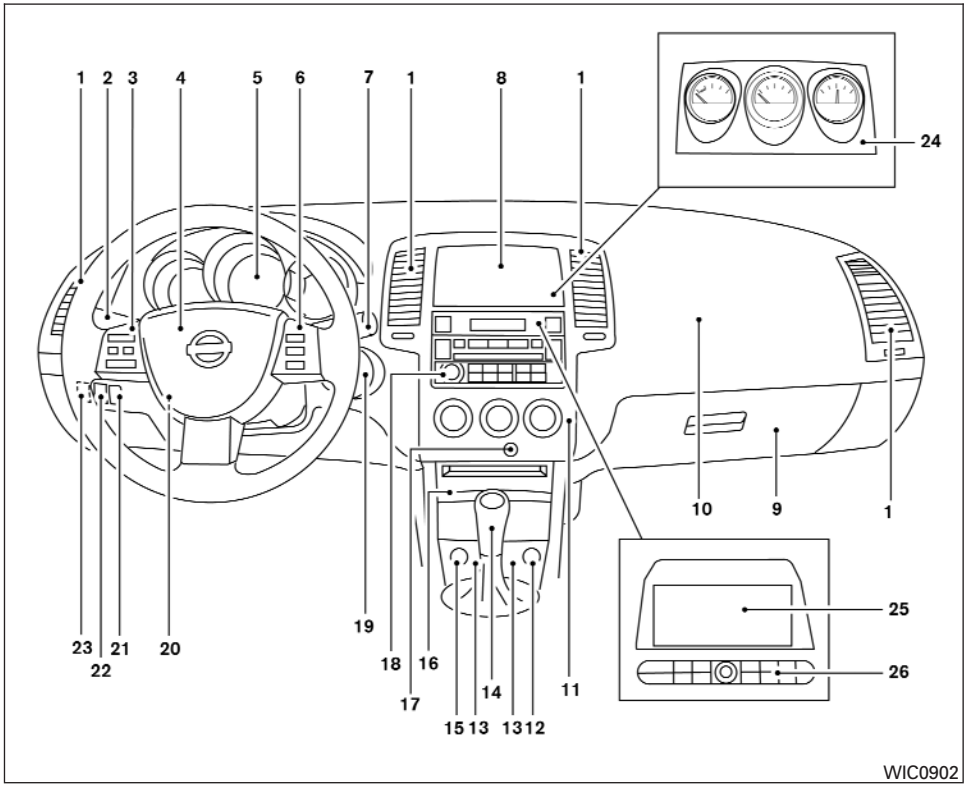

1. Driver, center and passenger ventilators (P. 4-11)
2. Headlight/fog light (if so equipped)/ turn signal switch (P. 2-21)
3. Steering wheel switch for audio control (if so equipped) (P. 4-41)
4. Driver supplemental air bag/horn (P. 1-33, 2-26)
5. Meters and gauges (P. 2-3)
6. Cruise control main/set switch (if so equipped) (P. 5-15)
7. Windshield wiper/washer switch (P. 2-19)
8. Storage (if so equipped) (P. 2-30)
9. Glove box (P. 2-32)
10. Front passenger supplemental air bag (P. 1-33)
11. Heater and air conditioner (manual or automatic) (P. 4-12, P. 4-20)
12. Power outlet or cigarette lighter (if so equipped) (P. 2-28, P. 2-29)
13. Heated seat switch (if so equipped) (P. 2-26)
14. Shift selector lever (P. 5-7)
15. Hazard warning flasher switch (P. 2-25)
16. Storage or ashtray (if so equipped) (P. 2-30, P. 2-29)

17 Front passenger air bag status light (P. 1-43)
18. Audio system controls (if so equipped) (P. 4-23)
19. Ignition switch (P. 5-4)
20. Tilt/telescopic steering wheel controls (P. 3-13)
21. Traction control system (TCS) off switch (if so equipped) (P. 2-27)
22. Instrument brightness control (P. 2-24)
23. Trunk opener (P. 3-10)
24. Meters and guages (if so equipped) (P. 2-3)
25. Navigation system* (if so equipped) (P. 4-2)
26. Navigation system* controls (if so equipped) (P. 4-2)

*: Refer to the separate Navigation System Owner's Manual.

See the page number indicated in parentheses for operating details.

ENGINE COMPARTMENT CHECK LOCATIONS

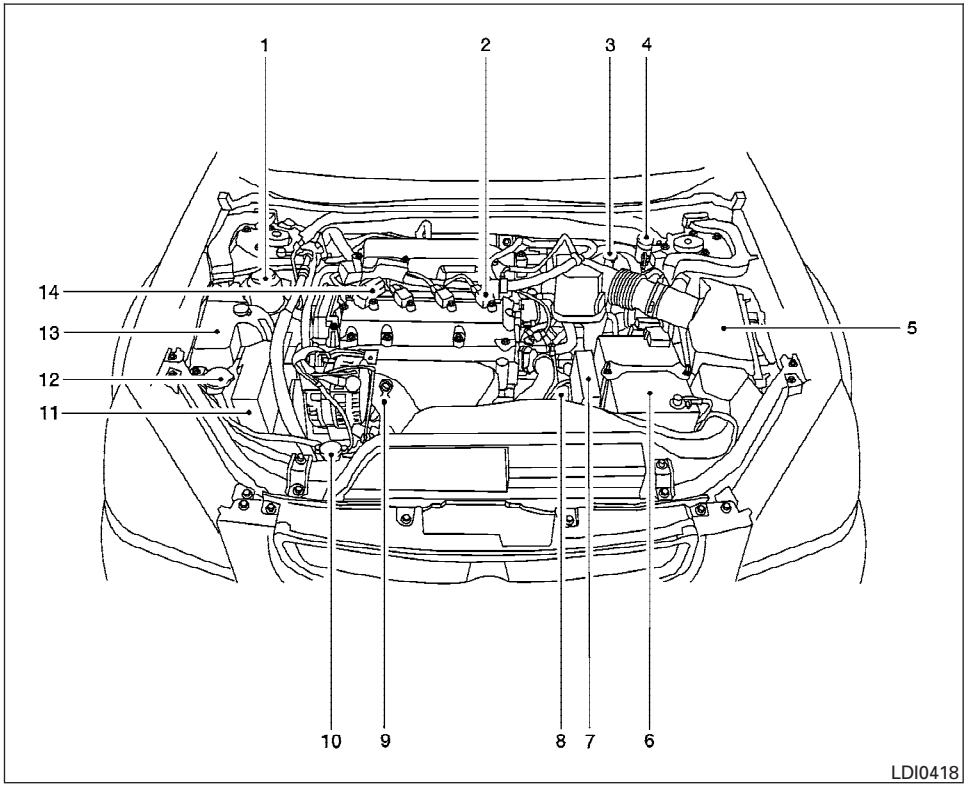

QR25DE engine

1. Power steering fluid reservoir (P. 8-15)
2. Spark plug caps (P. 8-20)
3. Brake fluid reservoir (P. 8-16)
4. Clutch fluid reservoir (M/T model) (P. 8-16)
5. Air cleaner (P. 8-21)
6. Battery (P. 8-17)
7. Fuse/fusible link box (P. 8-26)
8. Transmission dipstick (A/T models) (P. 8-13)
9. Engine oil dipstick (P. 8-9)
10. Radiator cap (P. 8-8)
11. Fuse block (P. 8-26)
12. Windshield washer fluid reservoir (P. 8-16)
13. Engine coolant reservoir (P. 8-8)
14. Engine oil filler cap (P. 8-9)

NOTE:

Engine cover removed for clarity.

See the page number indicated in parentheses for operating details.

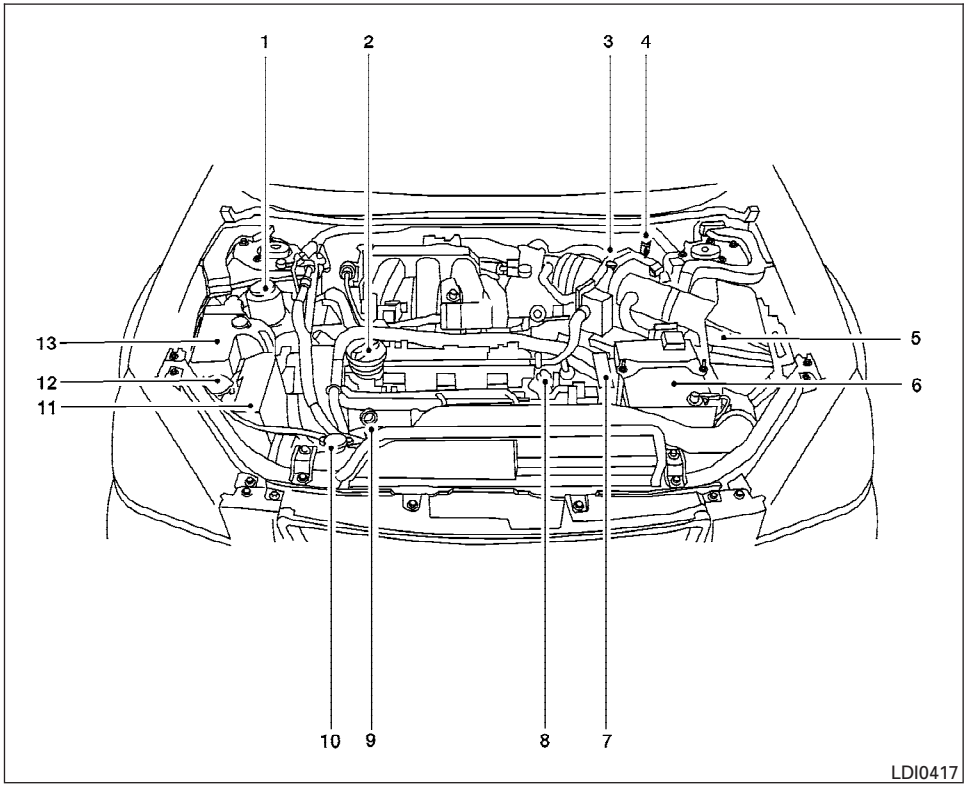

VQ35DE engine

1. Power steering fluid reservoir (P. 8-15)
2. Engine oil filler cap (P. 8-9)
3. Brake fluid reservoir (P. 8-16)
4. Clutch fluid reservoir (M/T model) (P. 8-16)
5. Air cleaner (P. 8-21)
6. Battery (P. 8-17)
7. Fuse/fusible link box (P. 8-26)
8. Transmission dipstick (A/T models) (P. 8-15)
9. Engine oil dipstick (P. 8-9)
10. Radiator cap (P. 8-8)
11. Fuse block (P. 8-26)
12. Windshield washer fluid reservoir (P. 8-16)
13. Engine coolant reservoir (P. 8-8)

NOTE:

Engine cover removed for clarity.

See the page number indicated in parentheses for operating details.

WARNING/INDICATOR LIGHTS

Warning light	Name	Page
ABS or	Anti-lock brake warning light (if so equipped)	2-11
AT CHECK	Automatic transmission check warning light (if so equipped)	2-12
BRAKE or	Brake warning light	2-12
	Charge warning light	2-12
	Door open warning light	2-12

Warning light	Name	Page
	Engine oil pressure warning light	2-12
or	Low fuel warning light	2-13
	Low windshield washer fluid warning light	2-13
	Seat belt warning light and chime	2-13
	Supplemental air bag warning light	1-49
	Trunk lid open warning light	2-13

Indicator light	Name	Page
P	Automatic transmission position indicator light (A/T models)	5-4
CRUISE	CRUISE main switch indicator light (if so equipped)	5-15
SET	Cruise SET switch indicator light (if so equipped)	5-15
OFF or 2	Front passenger air bag status light	2-14

Indicator light	Name	Page
	High beam indicator light (blue)	2-14
SERVICE ENGINE SOON	Malfunction indicator lamp (MIL)	2-14
SLIP	Slip indicator light (if so equipped)	2-15
TCS OFF	Traction control system off indicator light (if so equipped)	2-15
	Turn signal/hazard indicator lights	2-15

MEMO

1 Safety—Seats, seat belts and supplemental restraint system

Seats 1-2
Front manual seat adjustment 1-2
Front power seat adjustment (if so equipped for driver's seat) 1-4
Folding rear seat 1-6
Head restraint adjustment 1-7
Active head restraint (front seats). 1-8
Seat belts 1-9
Precautions on seat belt usage. 1-9
Child safety 1-11
Pregnant women 1-13
Injured persons. 1-13
Three-point type seat belt with retractor 1-13
Seat belt extenders 1-16
Seat belt maintenance 1-16
Child restraints 1-16
Precautions on child restraints 1-16
Child restraint installation on rear seat center or outboard positions 1-18
LATCH (Lower Anchors and Tethers for CHildren) system 1-24
Top tether strap child restraint 1-25
Child restraint installation on front passenger seat 1-26
Booster seats 1-29
Precautions on booster seats 1-29
Booster seat installation on rear seat center or outboard positions 1-31
Booster seat installation on front passenger seat 1-32
Supplemental restraint system 1-33
Precautions on supplemental restraint system 1-33
Supplemental air bag warning labels 1-48
Supplemental air bag warning light 1-49

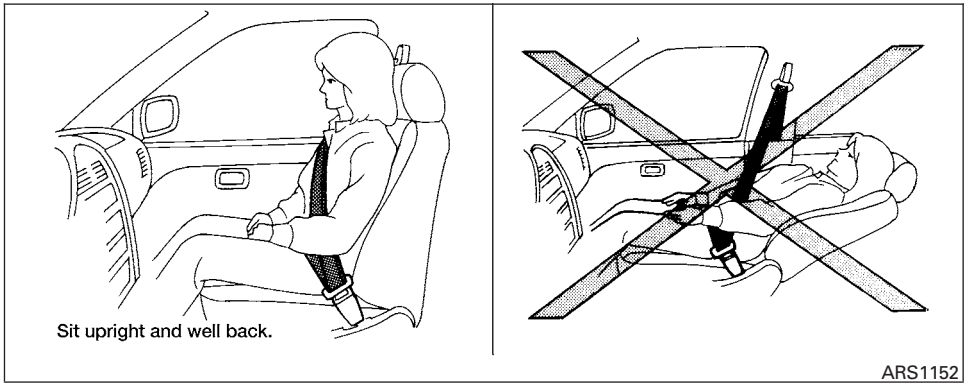

WARNING

- **Do not ride in a moving vehicle when the seatback is reclined. This can be dangerous. The shoulder belt will not be against your body. In an accident, you could be thrown into it and receive neck or other serious injuries. You could also slide under the lap belt and receive serious internal injuries.**

- **For the most effective protection when the vehicle is in motion, the seat should be upright. Always sit well back in the seat and adjust the seat properly. See "Precautions on Seat Belt Usage" later in this section.**

FRONT MANUAL SEAT ADJUSTMENT

WARNING

- **Do not adjust the driver's seat while driving so full attention may be given to vehicle operation. The seat may move suddenly and could cause loss of control of the vehicle.**
- **After adjustment, gently rock in the seat to make sure it is securely locked.**

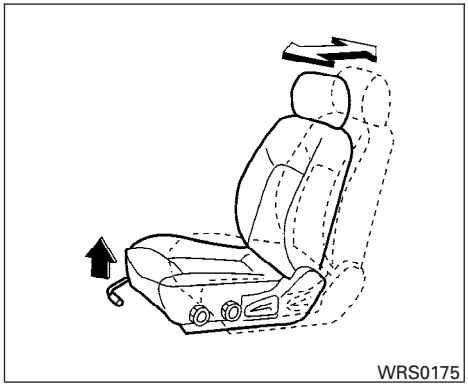

Forward and backward

Pull the lever up and hold it while you slide the seat forward or backward to the desired position. Release the lever to lock the seat in position.

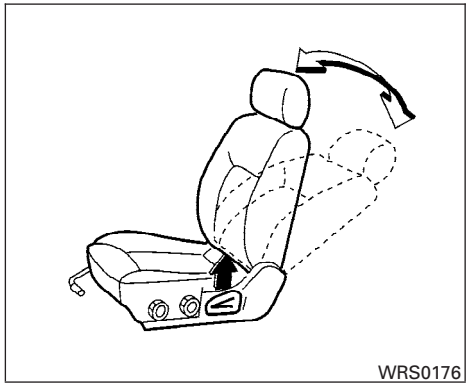

Reclining

To recline the seatback, pull the lever up and lean back. To bring the seatback forward, pull the lever up and lean your body forward. Release the lever to lock the seatback in position.

The reclining feature allows adjustment of the seatback for occupants of different sizes for added comfort and to help obtain proper seat belt fit. See “Precautions on seat belt usage” later in this section. Also, the seatback can be reclined to allow occupants to rest when the vehicle is stopped.

⚠ WARNING

After adjustment, gently rock in the seat to make sure it is securely locked.

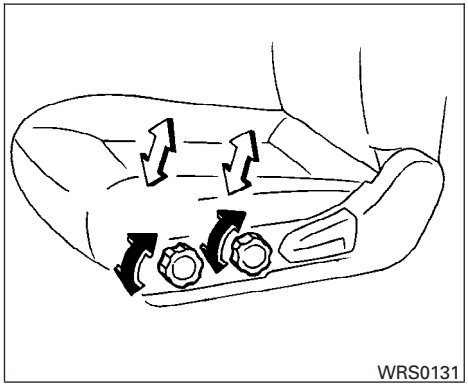

Seat lifter (if so equipped for driver's seat)

Turn either dial to adjust the angle and height of the seat cushion to the desired position.

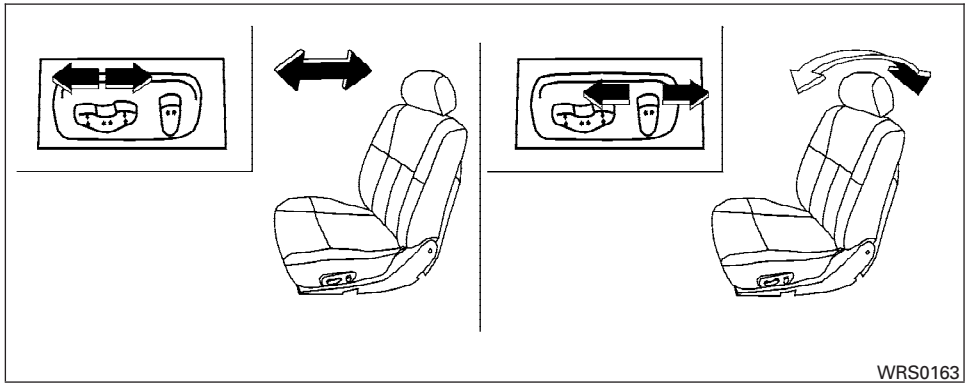

FRONT POWER SEAT ADJUSTMENT (if so equipped for driver's seat)

⚠ WARNING

- **Do not adjust the driver's seat while driving so full attention may be given to vehicle operation. The seat may move suddenly and could cause loss of control of the vehicle.**
- **Do not leave children unattended inside the vehicle. They could unknowingly activate switches or controls. Unattended children could become involved in serious accidents.**

Operating tips

- The power seat motor has an auto-reset overload protection circuit. If the motor stops during operation, wait 30 seconds, then reactivate the switch.
- Do not operate the power seat switch for a long period of time when the engine is off. This will discharge the battery.

Forward and backward

Moving the switch forward or backward will slide the seat forward or backward to the desired position.

Reclining

Move the recline switch backward until the desired angle is obtained. To bring the seatback forward again, move the switch forward and move your body forward. The seatback will move forward.

The reclining feature allows adjustment of the seatback for occupants of different sizes for added comfort and to help obtain proper seat belt fit (see “Precautions on seat belt usage” later in this section). Also, the seatback can be reclined to allow occupants to rest when the vehicle is stopped.

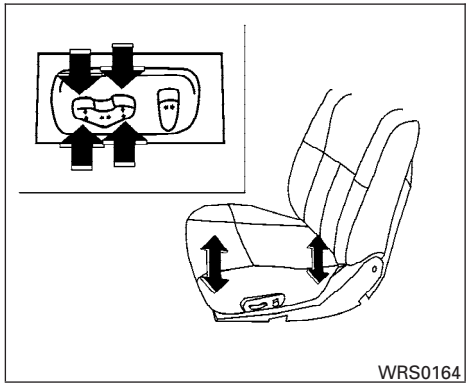

Seat lifter (if so equipped for driver’s seat)

Push the front or rear end of the switch up or down to adjust the angle and height of the seat cushion.

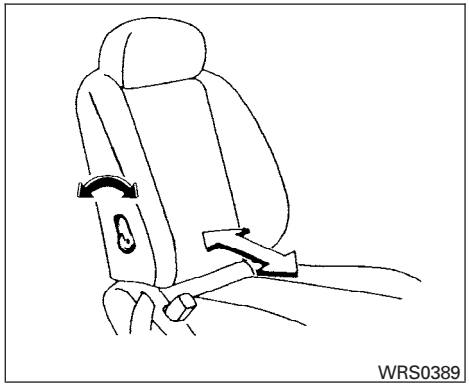

Lumbar support (if so equipped for driver’s seat)

The lumbar support feature provides lower back support to the driver. Move the lever forward or backward to adjust the seat lumbar area.

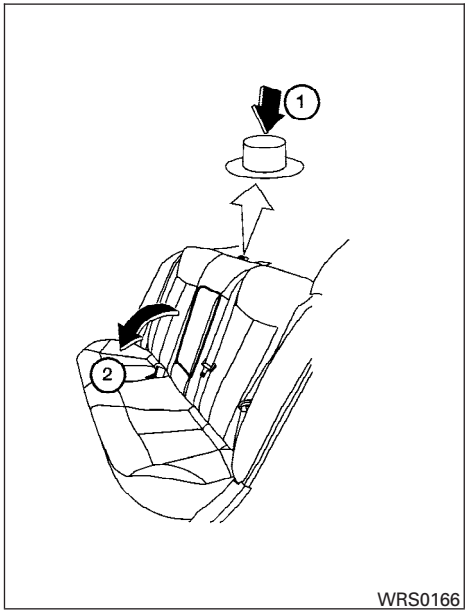

FOLDING REAR SEAT

Interior trunk access

The trunk can be accessed from the passenger side of the rear seat for loading and unloading, as shown.

① Push down on the button on the rear parcel shelf.

② Fold down the passenger side seatback.

⚠ WARNING

- **Never allow anyone to ride in the cargo area or on the rear seat when it is in the fold-down position. Use of these areas by passengers without proper restraints could result in serious injury in an accident or sudden stop.**
- **Properly secure all cargo with ropes or straps to help prevent it from sliding or shifting. Do not place cargo higher than the seatbacks. In a sudden stop or collision, unsecured cargo could cause personal injury.**
- **When returning the seatbacks to the upright position, be certain they are completely secured in the latched position. If they are not completely secured, passengers may be injured in an accident or sudden stop.**
- **Closely supervise children when they are around cars to prevent them from playing and becoming locked in the trunk where they could be seriously injured. Keep the car locked, with the rear seatback and trunk lid securely latched when not in use, and prevent children's access to car keys.**

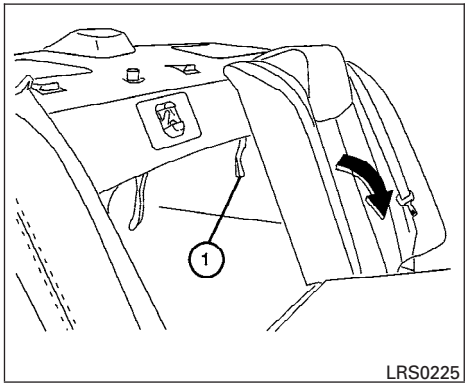

To fold down the driver side of the rear seat, reach through the opening and pull on the strap ① located behind the seat.

The rear seats can be locked using the master key to prevent unauthorized access. The valet key cannot be used to lock or unlock the release button. For more information on keys, refer to “Keys” in the “Pre-driving checks and adjustments” section of this manual.

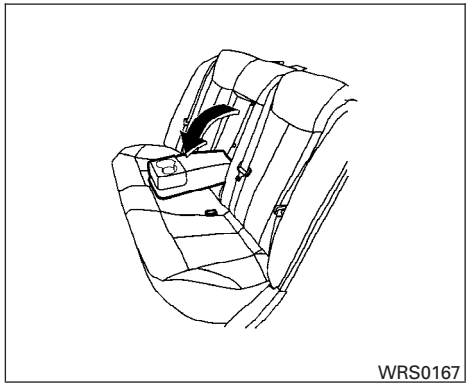

Center armrest

Pull the armrest forward until it is horizontal.

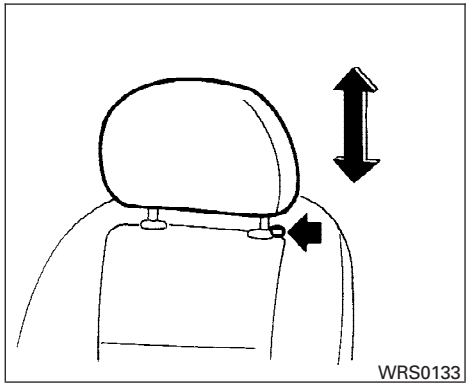

HEAD RESTRAINT ADJUSTMENT

To raise the head restraint, pull it up. To lower, push and hold the lock knob and push the head restraint down.

⚠ WARNING

Head restraints should be adjusted properly as they may provide significant protection against injury in an accident. Do not remove them. Check the adjustment after someone else uses the seat.

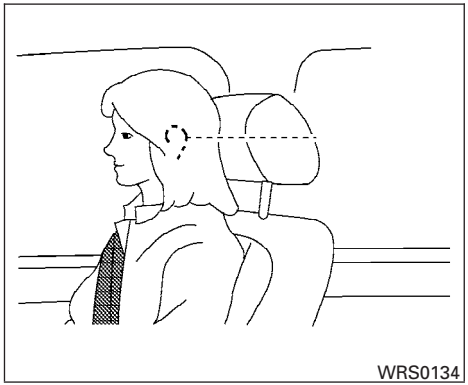

Adjust the head restraint so the center is level with the center of your ears.

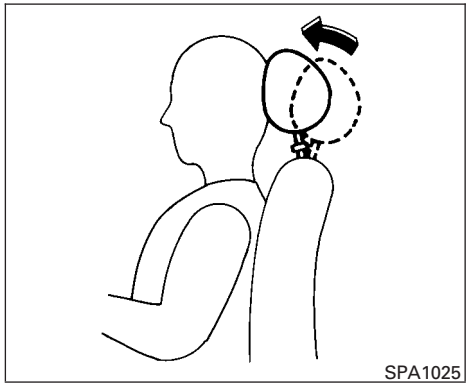

ACTIVE HEAD RESTRAINT (front seats)

⚠ WARNING

- **Always adjust the head restraints properly as specified in the previous section. Failure to do so can reduce the effectiveness of the active head restraint.**
- **Active head restraints are designed to supplement other safety systems. Always wear seat belts. No system can prevent all injuries in any accident.**
- **Do not attach anything to the head restraint stalks. Doing so could impair active head restraint function.**

The head restraint moves forward utilizing the force that the seatback receives from the occupant in a rear-end collision. The movement of the head restraint helps support the occupant's head by reducing its backward movement and helping absorb some of the forces that may lead to whiplash type injuries.

Active head restraints are effective for collisions at low to medium speeds in which it is said that whiplash injury occurs most.

Active head restraints operate only in certain rear-end collisions. After the collision, the head restraints return to their original positions.

Properly adjust the active head restraints as described earlier in this section.

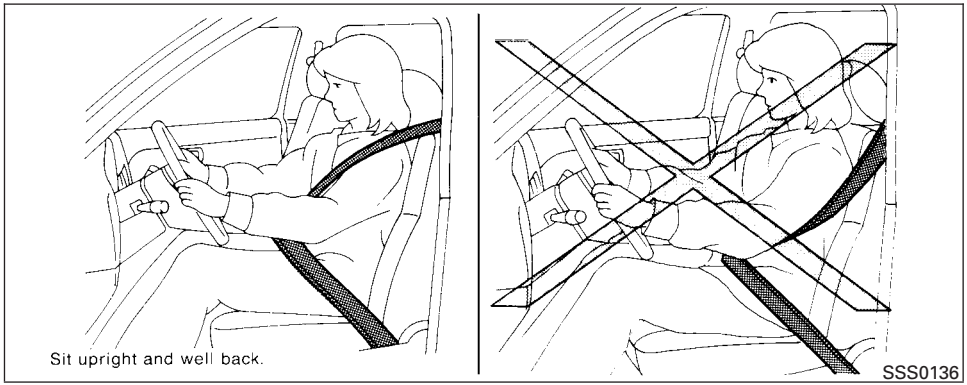

PRECAUTIONS ON SEAT BELT USAGE

If you are wearing your seat belt properly adjusted and you are sitting upright and well back in your seat, your chances of being injured or killed in an accident and/or the severity of injury may be greatly reduced. NISSAN strongly encourages you and all of your passengers to buckle up every time you drive, even if your seating position includes a supplemental air bag.

Most U.S. states and Canadian provinces or territories specify that seat belts be worn at all times when a vehicle is being driven.

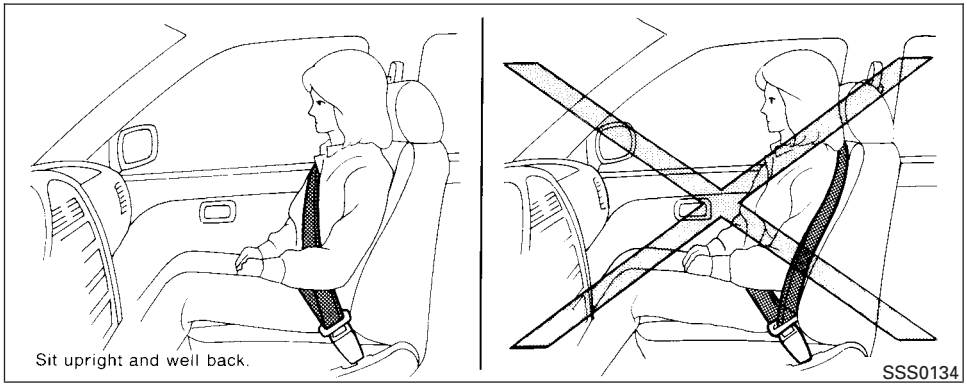

⚠ WARNING

- **Every person who drives or rides in this vehicle should use a seat belt at all times. Children should be properly restrained in the rear seat and, if appropriate, in a child restraint.**

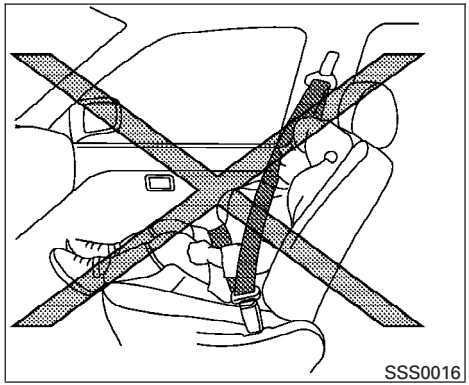

⚠ WARNING

- **The seat belt should be properly adjusted to a snug fit. Failure to do so may reduce the effectiveness of the entire restraint system and increase the chance or severity of injury in an accident. Serious injury or death can occur if the seat belt is not worn properly.**

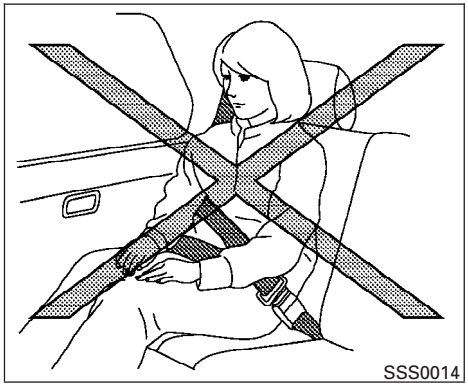

⚠ WARNING

- **Always route the shoulder belt over your shoulder and across your chest. Never run the belt behind your back, under your arm or across your neck. The belt should be away from your face and neck, but not falling off your shoulder.**
- **Position the lap belt as low and snug as possible AROUND THE HIPS, NOT THE WAIST. A lap belt worn too high could increase the risk of internal injuries in an accident.**
- **Be sure the seat belt tongue is securely fastened to the proper buckle.**
- **Do not wear the seat belt inside out or twisted. Doing so may reduce its effectiveness.**
- **Do not allow more than one person to use the same seat belt.**
- **Never carry more people in the vehicle than there are seat belts.**
- **If the seat belt warning light glows continuously while the ignition is turned ON with all doors closed and all seat belts fastened, it may indicate a malfunction in the system. Have the system checked by a NISSAN dealer.**
- **Once the pre-tensioner seat belt has activated, it cannot be reused and must be replaced together with the retractor. See your NISSAN dealer.**
- **Removal and installation of the pre-tensioner seat belt system components should be done by a NISSAN dealer.**
- **All seat belt assemblies, including retractors and attaching hardware, should be inspected after any collision by a NISSAN dealer. NISSAN recommends that all seat belt assemblies in use during a collision be replaced unless the collision was minor and the belts show no damage and continue to operate properly. Seat belt assemblies not in use during a collision should also be inspected and replaced if either damage or improper operation is noted.**
- **All child restraints and attaching hardware should be inspected after any collision. Always follow the restraint manufacturer's inspection instructions and replacement recommendations. The child restraints should be replaced if they are damaged.**

CHILD SAFETY

Children need adults to help protect them. They need to be properly restrained.

In addition to the general information in this manual, child safety information is available from many other sources, including doctors, teachers, government traffic safety offices, and community organizations. Every child is different, so be sure to learn the best way to transport your child.

There are three basic types of child restraint systems:

- Rear facing child restraint
- Front facing child restraint
- Booster seat

The proper restraint depends on the child's size. Generally, infants up to about 1 year and less than 20 pounds (9 kg) should be placed in rear facing child restraints. Front facing child restraints are available for children who outgrow rear facing child restraints and are at least 1 year old. Booster seats are used to help position a vehicle lap/shoulder belt on a child who can no longer use a front facing child restraint.

⚠ WARNING

Infants and children need special protection. The vehicle's seat belts may not fit them properly. The shoulder belt may come too close to the face or neck. The lap belt may not fit over their small hip bones. In an accident, an improperly fitting seat belt could cause serious or fatal injury. Always use appropriate child restraints.

All U.S. states and Canadian provinces or territories require the use of approved child restraints for infants and small children. See "Child Restraints" later in this section.

Also, there are other types of child restraints available for larger children for additional protection.

NISSAN recommends that all pre-teens and children be restrained in the rear seat. According to accident statistics, children are safer when properly restrained in the rear seat than in the front seat.

This is especially important because your vehicle has a supplemental restraint system (Air bag system) for the front passenger. See "Supplemental restraint system" later in this section.

Infants

Infants up to at least 1 year old should be placed in a rear facing child restraint. NISSAN recommends that infants be placed in child restraints that comply with Federal Motor Vehicle Safety Standards or Canadian Motor Vehicle Safety Standards. You should choose a child restraint that fits your vehicle and always follow the manufacturer's instructions for installation and use.

Small Children

Children that are over one year old and weigh between 20 lbs (9 kg) and 40 lbs (18 kgs) can be placed in a forward facing child restraint. Refer to the manufacturer's instructions for minimum and maximum weight and height recommendations. NISSAN recommends that small children be placed in child restraints that comply with Federal Motor Vehicle Safety Standards or Canadian Motor Vehicle Safety Standards. You should choose a child restraint that fits your vehicle and always follow the manufacturer's instructions for installation and use.

Larger children

Children who are too large for child restraints should be seated and restrained by the seat belts which are provided. The seat belt may not fit properly if the child is less than 4 feet 9 inches (142.5 cm) tall and weighs between 40 lbs (18 kg) and 80 lbs (36 kg). A booster seat should be used to obtain proper seat belt fit.

NISSAN recommends that a child be placed in a commercially available booster seat if the shoulder belt in the child's seating position fits close to the face or neck or if the lap portion of the seat belt goes across the abdomen. The booster seat should raise the child so that the shoulder belt is properly positioned across the top, middle portion of the shoulder and the lap belt is low on the hips. A booster seat can only be used in seating positions that have a three-point type seat belt. The booster seat should fit the vehicle seat and

have a label certifying that it complies with Federal Motor Vehicle Safety Standards or Canadian Motor Vehicle Safety Standards. Once the child has grown so the shoulder belt is no longer on or near the face and neck, use the shoulder belt without the booster seat.

⚠ WARNING

Never let a child stand or kneel on any seat and do not allow a child in the cargo areas while the vehicle is moving. The child could be seriously injured or killed in an accident or sudden stop.

PREGNANT WOMEN

NISSAN recommends that pregnant women use seat belts. The seat belt should be worn snug, and always position the lap belt as low as possible around the hips, not the waist. Place the shoulder belt over your shoulder and across your chest. Never run the lap/shoulder belt over your abdominal area. Contact your doctor for specific recommendations.

INJURED PERSONS

NISSAN recommends that injured persons use seat belts. Check with your doctor for specific recommendations.

THREE-POINT TYPE SEAT BELT WITH RETRACTOR

⚠ WARNING

- **Every person who drives or rides in this vehicle should use a seat belt at all times.**
- **Do not ride in a moving vehicle when the seatback is reclined. This can be dangerous. The shoulder belt will not be against your body. In an accident, you could be thrown into it and receive neck or other serious injuries. You could also slide under the lap belt and receive serious internal injuries.**
- **For the most effective protection when the vehicle is in motion, the seat should be upright. Always sit well back in the seat and adjust the seat belt properly.**

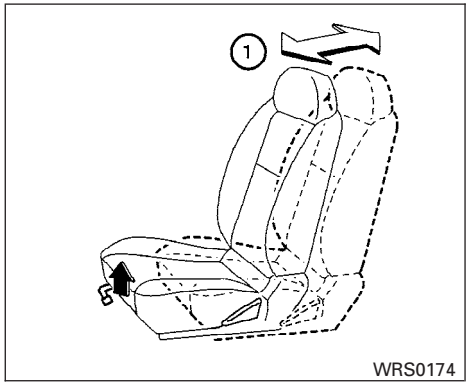

Manual front seat shown

Fastening the seat belts

① Adjust the seat. See “Seats” earlier in this section.

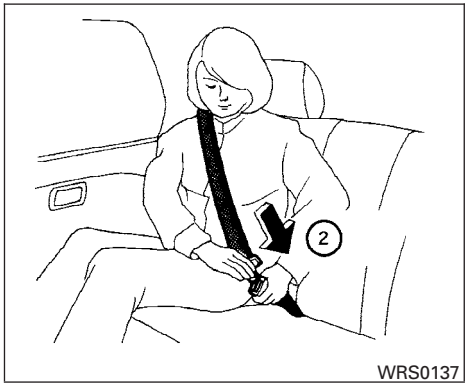

② Slowly pull the seat belt out of the retractor and insert the tongue into the buckle until you hear and feel the latch engage.

- **The retractor is designed to lock during a sudden stop or on impact. A slow pulling motion permits the seat belt to move, and allows you some freedom of movement in the seat.**
- **If the seat belt cannot be pulled from its fully retracted position, firmly pull the belt and release it. Then smoothly pull the belt out of the retractor.**

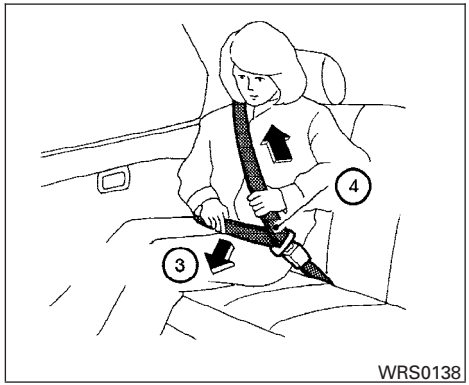

③ Position the lap belt portion **low and snug on the hips** as shown.

④ Pull the shoulder belt portion toward the retractor to take up extra slack. Be sure the shoulder belt is routed over your shoulder and across your chest.

The front passenger seat and the rear seating positions three-point seat belts have a locking mechanism for child restraint installation. It is referred to as the automatic locking mode or child restraint mode.

When automatic locking mechanism is activated the seat belt cannot be extended again until the seat belt tongue is detached from the buckle and fully retracted. Once retracted, the seat belt is in the emergency locking mode. See “Child restraints” later in this section for more information.

The automatic locking mode should be used only for child restraint installation. During normal seat belt use by a passenger, the locking mode should not be activated. If it is activated it may cause uncomfortable seat belt tension. It can also change the operation of the front passenger air bag. See “Front passenger air bag and status light” later in this section.

⚠ WARNING

When fastening the seat belts, be certain that the seatbacks are completely secured in the latched position. If they are not completely secured, passengers may be injured in an accident or sudden stop.

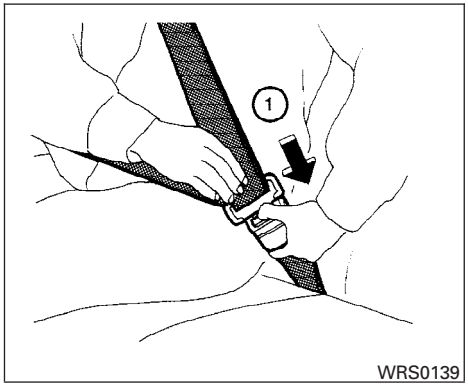

Unfastening the seat belts

① To unfasten the seat belt, press the button on the buckle. The seat belt automatically retracts.

Checking seat belt operation

Seat belt retractors are designed to lock seat belt movement by two separate methods:

- When the seat belt is pulled quickly from the retractor.
- When the vehicle slows down rapidly.

To increase your confidence in the seat belts, check the operation as follows.

- Grasp the shoulder belt and pull forward quickly. The retractor should lock and restrict further belt movement.

If the retractor does not lock during this check or if you have any questions about seat belt operation, see a NISSAN dealer.

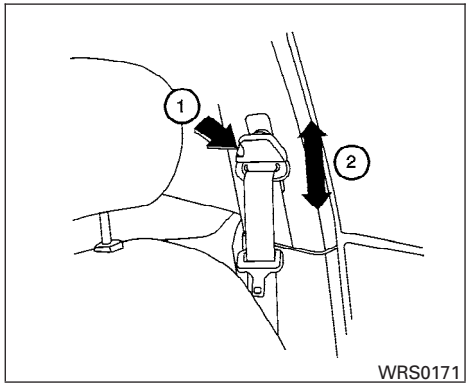

Shoulder belt height adjustment (Front seats)

The shoulder belt anchor height should be adjusted to the position best for you. (See “Precautions on seat belt usage” earlier in this section.) The belt should be away from your face and neck, but not falling off your shoulder.

To adjust the shoulder belt anchor height:

① Push in the adjustment button.

② Move the shoulder belt anchor to the desired position so the belt passes over the center of the shoulder. Release the adjustment button to lock the shoulder belt anchor into position.

⚠ WARNING

- **After adjustment, release the adjustment button and try to move the shoulder belt anchor up and down to make sure it is securely fixed in position.**
- **The shoulder belt anchor height should be adjusted to the position best for you. Failure to do so may reduce the effectiveness of the entire restraint system and increase the chance or severity of injury in an accident.**

SEAT BELT EXTENDERS

If, because of body size or driving position, it is not possible to properly fit the lap-shoulder belt and fasten it, an extender is available which is compatible with the installed seat belts. The extender adds approximately 8 inches (200 mm) of length and may be used for either the driver or front passenger seating position. See a NISSAN dealer for assistance if an extender is required.

⚠ WARNING

- **Only NISSAN seat belt extenders, made by the same company which made the original equipment seat belts, should be used with NISSAN seat belts.**
- **Adults and children who can use the standard seat belt should not use an extender. Such unnecessary use could result in serious personal injury in the event of an accident.**
- **Never use seat belt extenders to install child restraints. If the child restraint is not secured properly, the child could be seriously injured in a collision or a sudden stop.**

SEAT BELT MAINTENANCE

- **To clean the seat belt webbing,** apply a mild soap solution or any solution recommended for cleaning upholstery or carpet. Then wipe with a cloth and allow the seat belts to dry in the shade. Do not allow the seat belts to retract until they are completely dry.
- **If dirt builds up in the shoulder belt guide** of the seat belt anchors, the seat belts may retract slowly. Wipe the shoulder belt guide with a clean, dry cloth.
- **Periodically check to see that the seat belt and the metal components,** such as buckles, tongues, retractors, flexible wires and anchors, work properly. If loose parts, deterioration, cuts or other damage on the webbing is found, the entire seat belt assembly should be replaced.

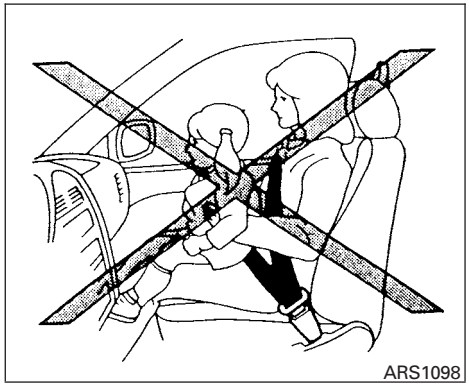

PRECAUTIONS ON CHILD RESTRAINTS

⚠ WARNING

- **Infants and small children should always be placed in an appropriate child restraint while riding in the vehicle. Failure to use a child restraint can result in serious injury or death.**

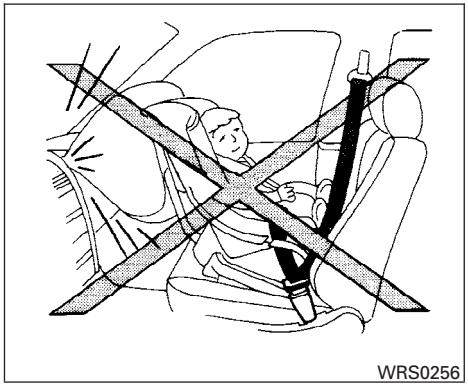

⚠WARNING

- **Infants and small children should never be carried on your lap. It is not possible for even the strongest adult to resist the forces of a severe accident. The child could be crushed between the adult and parts of the vehicle. Also, do not put the same seat belt around both your child and yourself.**

- **Even with the NISSAN Advanced Air Bag System, never install a rear-facing child restraint in the front seat. An inflating supplemental front air bag could seriously injure or kill your child. A rear-facing child restraint must only be used in the rear seat.**
- **NISSAN recommends that the child restraint be installed in the rear seat. According to accident statistics, children are safer when properly restrained in the rear seat than in the front seat.**
- **An improperly installed child restraint could lead to serious injury or death in an accident.**

In general, child restraints are designed to be installed with the lap portion of a lap/shoulder seat belt. In addition, this vehicle is equipped with a universal child restraint lower anchor system, referred to as the LATCH (Lower Anchors and Tethers for CHildren) system. Some child restraints include two rigid or webbing-mounted attachments that can be connected to these lower anchors. For details, see the “LATCH (Lower Anchors and Tethers for CHildren) system” later in this section.

Child restraints for infants and small children of various sizes are offered by several manufacturers. When selecting any child restraint, keep the following points in mind:

- Choose only a restraint with a label certifying that it complies with Federal Motor Vehicle Safety Standard 213 or Canadian Motor Vehicle Safety Standard 213.
- Check the child restraint in your vehicle to be sure it is compatible with the vehicle’s seat and seat belt system.
- If the child restraint is compatible with your vehicle, place your child in the child restraint and check the various adjustments to be sure the child restraint is compatible with your child. Choose a child restraint that is designed for your child’s height and weight. Always follow all recommended procedures.

All U.S. states and Canadian provinces or territories require that infants and small children be restrained in an approved child restraint at all times while the vehicle is being operated.

⚠WARNING

- **Improper use of a child restraint can increase the risk or severity of injury for both the child and other occupants of the vehicle.**

- **Follow all of the child restraint manufacturer's instructions for installation and use. When purchasing a child restraint, be sure to select one which will fit your child and vehicle. It may not be possible to properly install some types of child restraints in your vehicle.**
- **If the child restraint is not anchored properly, the risk of a child being injured in a collision or a sudden stop greatly increases.**
- **Adjustable seatbacks should be positioned to fit the child restraint, but as upright as possible.**
- **After attaching the child restraint, test it before you place the child in it. Push it from side to side. Try to tug it forward and check to see if the belt holds the restraint in place. The child restraint should not move more than 1 inch (25 mm). If the restraint is not secure, tighten the belt as necessary, or put the restraint in another seat and test it again. You may need to try a different child restraint. Not all child restraints fit in all types of vehicles.**
- **If you must install a front facing child restraint in the front seat, see "Child restraint installation on front passenger seat" later in this section.**
- **When your child restraint is not in use, keep it secured with a seat belt to prevent it from being thrown around in case of a sudden stop or accident.**

⚠ CAUTION

Remember that a child restraint left in a closed vehicle can become very hot. Check the seating surface and buckles before placing your child in the child restraint.

CHILD RESTRAINT INSTALLATION ON REAR SEAT CENTER OR OUTBOARD POSITIONS

⚠ WARNING

- **The three-point seat belt in your vehicle is equipped with an automatic locking mode retractor which must be used when installing a child restraint.**
- **Failure to use the retractor's locking mode will result in the child restraint not being properly secured. The restraint could tip over or otherwise be unsecured and cause injury to the child in a sudden stop or collision.**
- **When installing a child restraint system in the rear center position, both the center seat belt connector tongue and buckle tongue must be secured.**

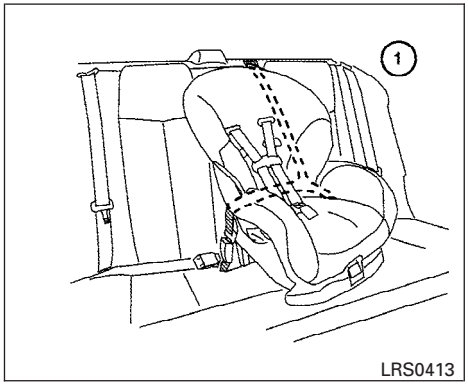

Front Facing (center) — step 1

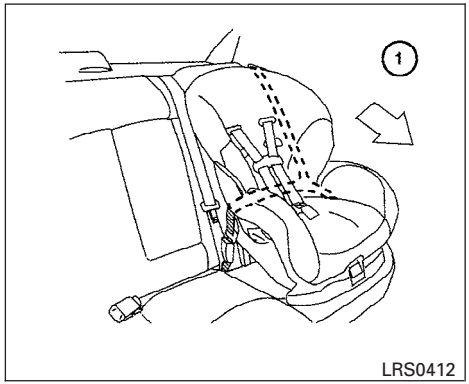

Front Facing (outboard) — step 1

Front facing

When you install a child restraint in the rear seat, follow these steps:

1. Position the child restraint on the seat. Always follow the restraint manufacturer's instructions. The back of the child restraint should be secured against the vehicle seat back. If necessary, adjust or remove the head restraint to obtain the correct child restraint fit. See "Head restraint adjustment" earlier in this section. If the head restraint is removed, store it in a secure place. Be sure to install the head restraint when the child restraint is removed. If the seating position does not have an adjustable head restraint and it is interfering with the proper child restraint fit, try another seating position or a different child restraint.

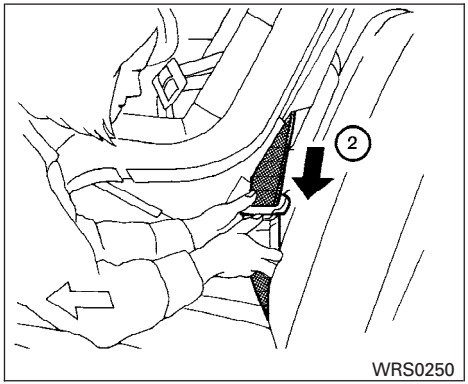

Front Facing — step 2

② Route the seat belt tongue through the child restraint and insert it into the buckle until you hear and feel the latch engage.

Be sure to follow the child restraint manufacturer's instructions for belt routing.

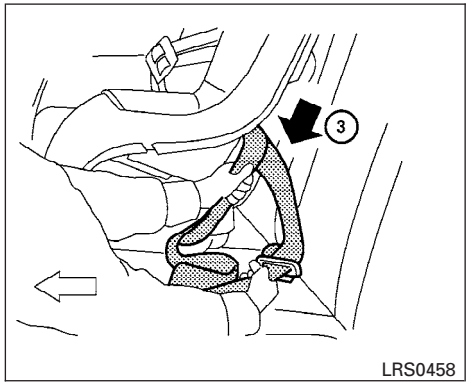

Front Facing — step 3

③ Pull on the shoulder belt until all of the belt is fully extended. At this time, the seat belt retractor is in the automatic locking mode (child restraint mode). It reverts back to emergency locking mode when the seat belt is fully retracted.

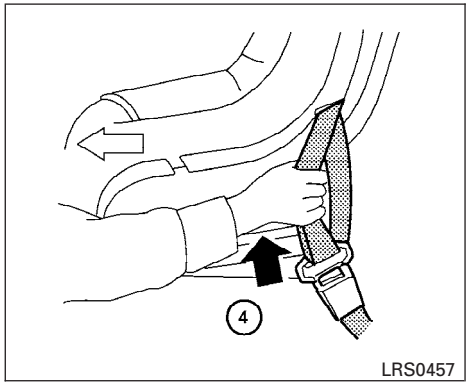

Front Facing — step 4

④ Allow the seat belt to retract. Pull up on the shoulder belt to remove any slack in the belt.

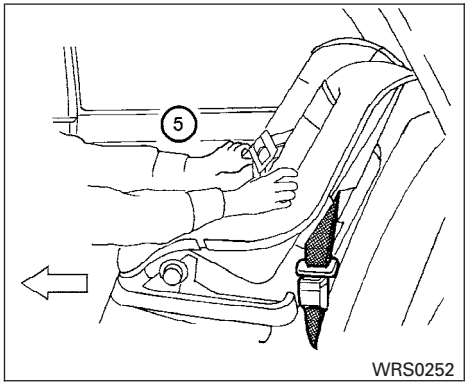

Front Facing — step 5

⑤ Before placing the child in the child restraint, use force to push the child restraint from side to side, and tug it forward to make sure that it is securely held in place. It should not move more than 1 inch (25 mm). If it does move more than 1 inch (25 mm), pull again on the shoulder belt to further tighten the child restraint. If unable to properly secure the restraint move the restraint to another rear seating position and try again , or try a different child restraint. Not all child restraints fit in all types of vehicles.

6. Check that the retractor is in the automatic locking mode by trying to pull more seat belt out of the retractor. If you cannot pull any more belt webbing out of the retractor, the retractor is in the automatic locking mode.
7. Check to make sure that the child restraint is properly secured prior to each use. If the seat belt is not locked, repeat steps 3 through 6.

After the child restraint is removed and the seat belt is fully retracted, the automatic locking mode (child restraint mode) is canceled.

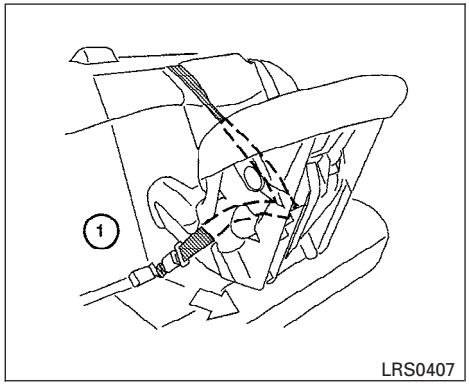

Rear Facing (center) — step 1

Rear facing

When you install a child restraint in the rear seat, follow these steps:

① Position the child restraint on the seat. Always follow the restraint manufacturer's instructions.

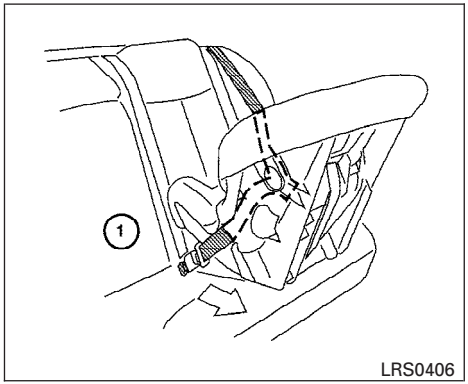

Rear Facing (outboard) — step 1

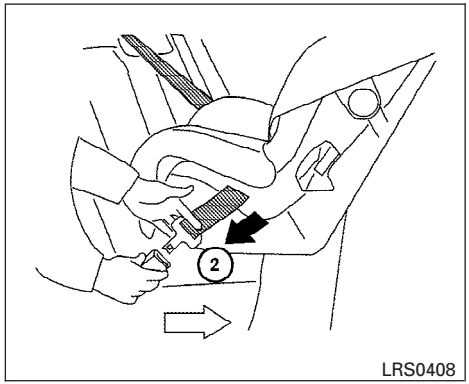

Rear Facing — step 2

② Route the seat belt tongue through the child restraint and insert it into the buckle until you hear and feel the latch engage.

Be sure to follow the child restraint manufacturer's instructions for belt routing.

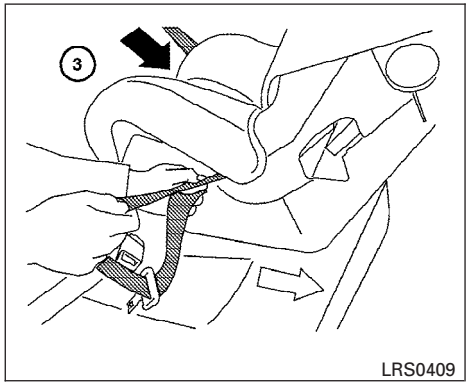

Rear Facing — step 3

③ Pull on the shoulder belt until all of the belt is fully extended. At this time, the seat belt retractor is in the automatic locking mode (child restraint mode). It reverts to emergency locking mode when the seat belt is fully retracted.

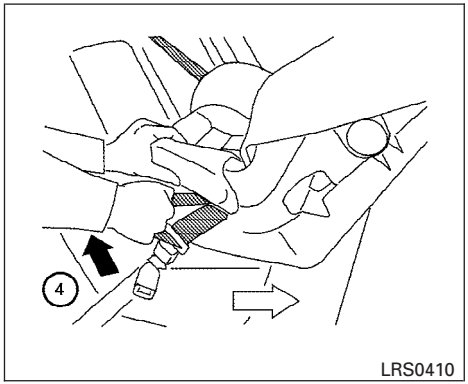

Rear Facing — step 4

④ Allow the seat belt to retract. Pull up on the shoulder belt to remove any slack in the belt.

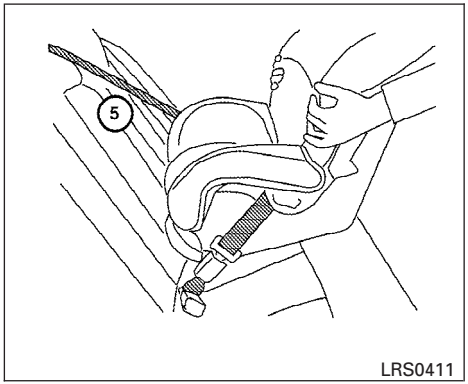

Rear Facing — step 5

⑤ Before placing the child in the child restraint, use force to push the child restraint from side to side, and tug it forward to make sure that it is securely held in place. It should not move more than 1 inch (25 mm). If it does move more than 1 inch (25 mm), pull again on the shoulder belt to further tighten the child restraint. If unable to properly secure the restraint move the restraint to another rear seating position and try again , or try a different child restraint. Not all child restraints fit in all types of vehicles.

6. Check that the retractor is in the automatic locking mode by trying to pull more seat belt out of the retractor. If you cannot pull any more seat belt webbing out of the retractor, the retractor is in the automatic locking mode.
7. Check to make sure that the child restraint is properly secured prior to each use. If the belt is not locked, repeat steps 3 through 6.

After the child restraint is removed and the seat belt fully retracted, the automatic locking mode (child restraint mode) is canceled.

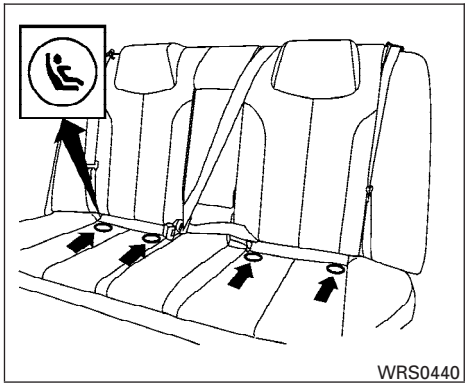

LATCH (Lower Anchors and Tethers for CHildren) SYSTEM

⚠ WARNING

- **Attach LATCH system compatible child restraints only at the locations shown. If a child restraint is not secured properly, your child could be seriously injured or killed in an accident.**
- **Do not secure a child restraint in the center rear seating position using the LATCH system anchors. The child restraint will not be secured properly.**
- **The LATCH system anchors are designed to withstand only those loads imposed by correctly fitted child restraints. Under no circumstance are they to be used for adult seat belts or harnesses.**

Some child restraints include two rigid or webbing-mounted attachments that can be connected to two anchors located at certain seating positions in your vehicle. This system is known as the LATCH (Lower Anchors and Tethers for CHildren) system. This system may also be referred to as the ISOFIX or ISOFIX compatible system. With this system, you do not have to use a vehicle seat belt to secure the child restraint. Your vehicle is equipped with special anchor points that are used with LATCH system compatible child restraints. Check your child restraint for a label stating that it is compatible with the LATCH system. This information may also be in the child restraint owner's manual. If you have such a child restraint, refer to the illustration for the seating positions equipped with LATCH system anchors which can be used to secure the child restraint.

The LATCH system anchors are located at the rear of the seat cushion near the seatback. A label is attached to the seatback to help you locate the LATCH system anchors.

LATCH child restraints generally require the use of a top tether strap. See "Top tether strap child restraint" later in this section for installation instructions.

When installing a child restraint, carefully read and follow the instructions in this manual and those supplied with the child restraint.

When you install a LATCH system compatible child restraint to the lower anchor attachments, follow these steps:

⚠ WARNING

Inspect the lower anchors by inserting your fingers into the lower anchor area and feeling to make sure there are no obstructions over the LATCH system anchors, such as seat belt webbing or seat cushion material. The child restraint will not be secured properly if the LATCH system anchors are obstructed.

1. To install the LATCH system compatible child restraint, insert the child restraint LATCH system anchor attachments into the anchor points on the seat. If the child restraint is equipped with a top tether, see "Top tether strap child restraint" later in this section for installation instructions.

2. After attaching the child restraint and before placing the child in it, use force to push the child restraint from side to side and tug it forward to make sure that the child restraint is securely held in place. It should not move more than 1 inch (25 mm).
3. Check to make sure that the child restraint is properly secured prior to each use.

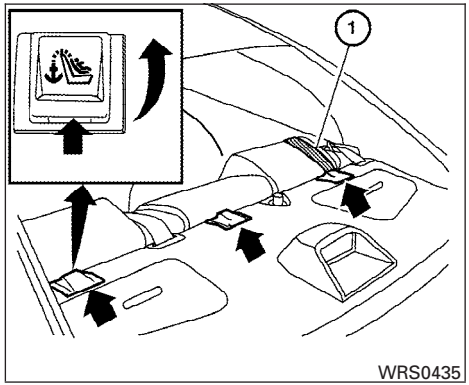

TOP TETHER STRAP CHILD RESTRAINT

If your child restraint has a top tether strap, it must be secured to the provided anchor point. First, secure the child restraint with the rear seat belt.

Flip up the anchor cover from the anchor point which is located directly behind the child seat. Position the top tether strap over the top of the seat back ① and secure it to the tether anchor bracket that provides the straightest installation.

Tighten the strap according to the manufacturer's instructions to remove any slack.

⚠ WARNING

Child restraint anchor points are designed to withstand only those loads imposed by correctly fitted child restraints. Under no circumstances are they to be used for adult seat belts or harnesses.

Anchor point locations

Anchor points are located on the rear parcel shelf finisher.

If you have any questions when installing a top strap child restraint on the rear seat, consult your NISSAN dealer for details.

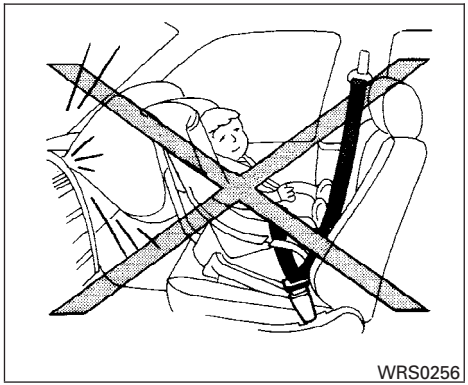

CHILD RESTRAINT INSTALLATION ON FRONT PASSENGER SEAT

⚠ WARNING

- **Even with the NISSAN Advanced Air Bag System, never install a rear-facing child restraint in the front passenger seat. Supplemental front air bags inflate with great force. A rear-facing child restraint could be struck by the supplemental front air bag in a crash and could seriously injure or kill your child.**

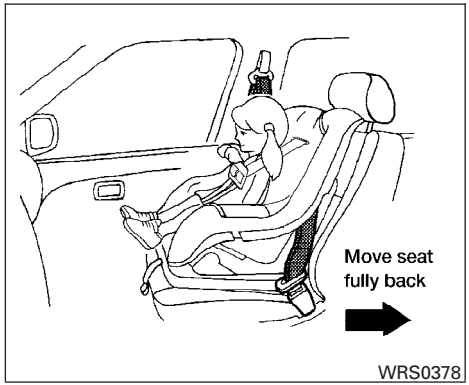

- **NISSAN recommends that child restraints be installed in the rear seat. However, if you must install a forward facing child restraint in the front passenger seat, move the passenger seat to the rearmost position. Also, be sure the front passenger air bag status light is illuminated to indicate the passenger air bag is OFF. See "Front passenger air bag and status light" later in this section for details.**
- **A child restraint with a top tether strap should not be used in the front passenger seat.**
- **The three-point seat belt in your vehicle is equipped with an automatic locking mode retractor which must be used when installing a child restraint.**
- **Failure to use the retractor's locking mode will result in the child restraint not being properly secured. The restraint could tip over or otherwise be unsecured and cause injury to the child in a sudden stop or collision. Also, it can change the operation of the front passenger air bag. See "Front passenger air bag and status light" later in this section.**

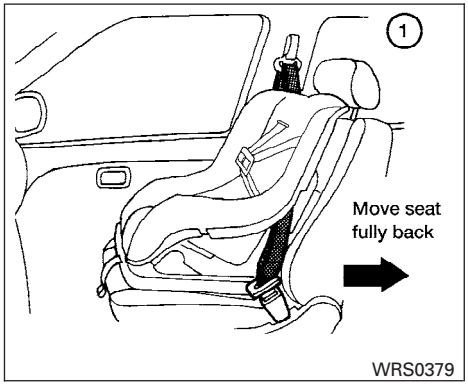

Front Facing — step 1

If you must install a child restraint in the front seat, follow these steps:

① Position the child restraint on the front passenger seat. **It should be placed in a front-facing direction only. Move the seat to the rearmost position.** Adjust the head restraint to its highest position. Always follow the child restraint manufacturer's instructions. **Child restraints for infants must be used in the rear-facing direction and therefore must not be used in the front seat.**

The back of the child restraint should be secured against the vehicle seat back. If necessary, adjust or remove the head restraint to obtain the correct child restraint fit. See "Head restraint adjustment" earlier in this section. If the head restraint is removed, store it in a secure place. Be sure to install the head restraint when the child restraint is removed. If the seating position does not have an adjustable head restraint and it is interfering with the proper child restraint fit, try another seating position or a different child restraint.

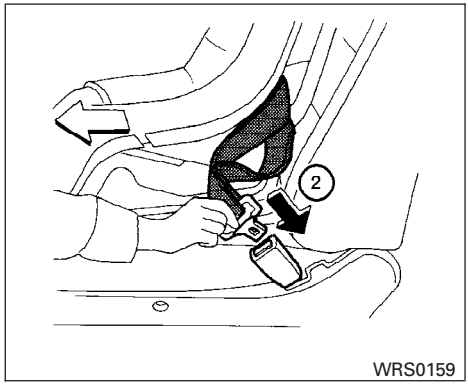

Front Facing — step 2

② Route the seat belt tongue through the child restraint and insert it into the buckle until you hear and feel the latch engage.

Be sure to follow the child restraint manufacturer's instructions for belt routing.

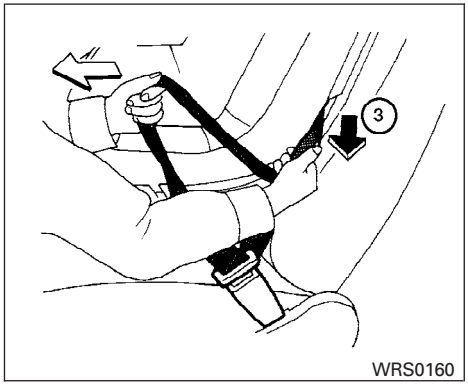

Front Facing — step 3

③ Pull on the shoulder belt until all of the belt is fully extended. At this time, the seat belt retractor is in the automatic locking mode (child restraint mode). It reverts to emergency locking mode when the seat belt is fully retracted.

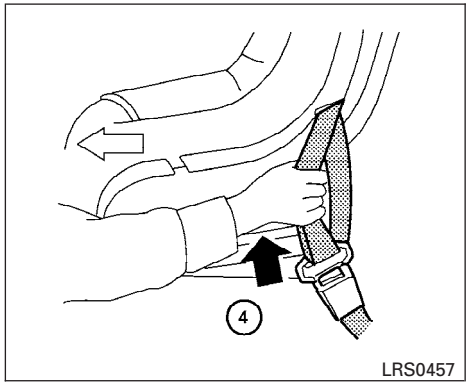

Front Facing — step 4

④ Allow the seat belt to retract slightly. Pull up on the shoulder belt to remove any slack in the belt.

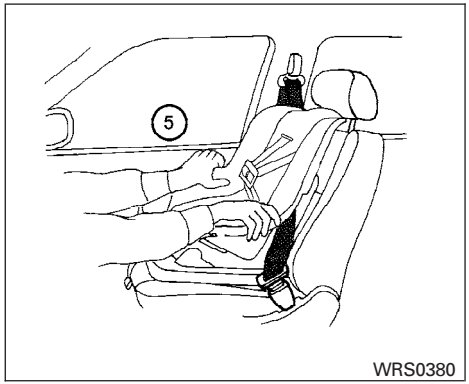

Front Facing — step 5

⑤ Before placing the child in the child restraint, use force to push the child restraint from side to side, and tug it forward to make sure that it is securely held in place. It should not move more than 1 inch (25 mm). If it does move more than 1 inch (25 mm), pull again on the shoulder belt to further tighten the child restraint. If unable to properly secure the restraint move the restraint to another seating position and try again , or try a different child restraint. Not all child restraints fit in all types of vehicles.

6. Check that the retractor is in the automatic locking mode by trying to pull more seat belt out of the retractor. If you cannot pull any more belt webbing out of the retractor, the retractor is in the automatic locking mode.
7. Check to make sure the child restraint is properly secured prior to each use. If the seat belt is not locked, repeat steps 3 through 6.
8. Turn the ignition to the ON position. The passenger air bag status light should say "OFF" OFF or . If this light is not illuminated it may indicate a malfunction. **Move the child restraint to another seating position.** Have the system checked by a NISSAN dealer.

After the child restraint is removed and the seat belt is fully retracted, the automatic locking mode (child restraint mode) is canceled.

PRECAUTIONS ON BOOSTER SEATS

WARNING

- **Infants and small children should always be placed in an appropriate child restraint while riding in the vehicle. Failure to use a child restraint or booster seat can result in serious injury or death.**
- **Infants and small children should never be carried on your lap. It is not possible for even the strongest adult to resist the forces of a severe accident. The child could be crushed between the adult and parts of the vehicle. Also, do not put the same seat belt around both your child and yourself.**
- **NISSAN recommends that the booster seat be installed in the rear seat. According to accident statistics, children are safer when properly restrained in the rear seat than in the front seat.**
- **A booster seat must only be installed in a seating position that has a lap/shoulder belt. Failure to use a three-point type seat belt with a booster seat can result in a serious injury in sudden stop or collision.**
- **An improperly installed booster seat could lead to serious injury or death in an accident.**

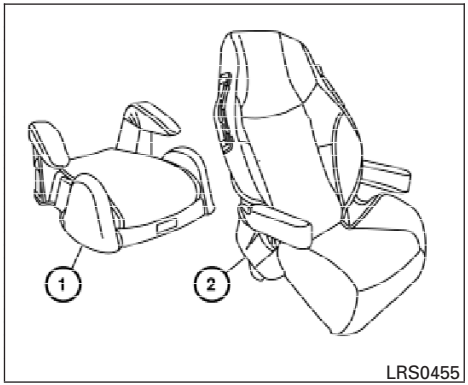

LRS0455

⚠WARNING

- **Do not use towels, books, pillows or other items in place of a booster seat. Items such as these may move during normal driving or a collision and result in serious injury or death. Booster seats are designed to be used with a lap/shoulder belt. Booster seats are designed to properly route the lap and shoulder portions of the seat belt over the strongest portions of a child's body to provide the maximum protection during a collision.**

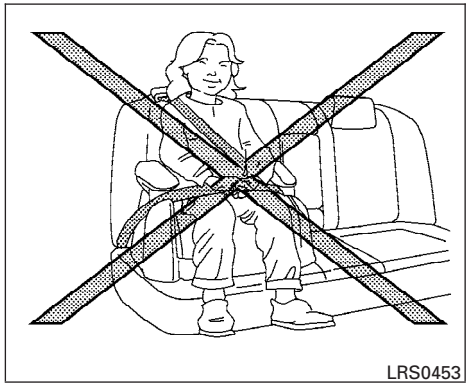
LRS0453

Booster seats of various sizes are offered by several manufacturers. When selecting any booster seat, keep the following points in mind:

- Choose only a booster seat with a label certifying that it complies with Federal Motor Vehicle Safety Standard 213 or Canadian Motor Vehicle Safety Standard 213.
- Check the booster seat in your vehicle to be sure it is compatible with the vehicle's seat and seat belt system.
- Make sure the child's head will be properly supported by the booster seat or vehicle seat. The seat back must be at or above the center of the child's ears. For example, if a low back booster seat ① is chosen, the vehicle seat back must be at or above the center of the child's ears. If the seat back is lower than the center of the child's ears, a high back booster seat ② should be used.

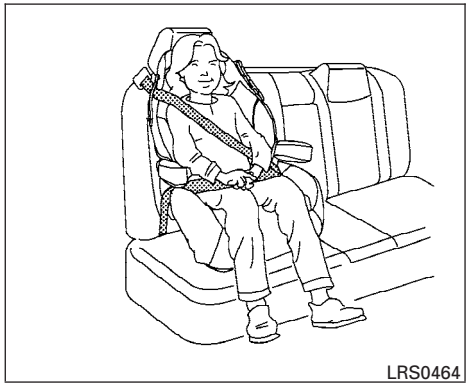
LRS0464

- If the booster seat is compatible with your vehicle, place your child in the booster seat and check the various adjustments to be sure the booster seat is compatible with your child. Always follow all recommended procedures.

All U.S. states and Canadian provinces or territories require that infants and small

children be restrained in an approved child restraint at all times while the vehicle is being operated.

⚠ WARNING

- Improper use of a booster seat can increase the risk or severity of injury for both the child and other occupants of the vehicle.
- Follow all of the booster seat manufacturer's instructions for installation and use. When purchasing a booster seat, be sure to select one which will fit your child and vehicle. It may not be possible to properly install some types of booster seats in your vehicle.
- If the booster seat and seat belt is not used properly, the risk of a child being injured in a collision or a sudden stop greatly increases.
- Adjustable seatbacks should be positioned to fit the booster seat, but as upright as possible.
- After placing the child in the booster seat and fastening the seat belt, make sure the shoulder portion of the belt is away from the child's face and neck and the lap portion of the belt does not cross the abdomen.
- Do not put the shoulder belt behind the child or under the child's arm. If you must install a booster seat in the front seat, see "Booster seat installation on front passenger seat" later in this section.
- When your booster seat is not in use, keep it secured with a seat belt to prevent it from being thrown around in case of a sudden stop or accident.

⚠ CAUTION

Remember that a booster seat left in a closed vehicle can become very hot. Check the seating surface and buckles before placing your child in the booster seat.

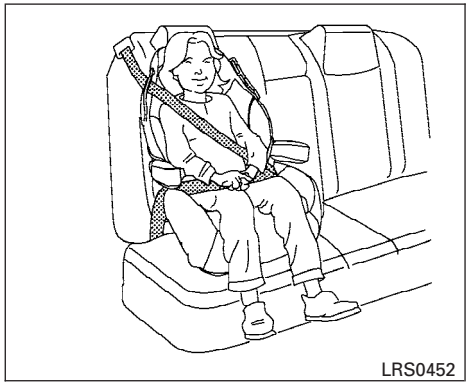

Outboard position

BOOSTER SEAT INSTALLATION ON REAR SEAT CENTER OR OUTBOARD POSITIONS

⚠ CAUTION

Do not use a lap/shoulder belt automatic locking mode when using a booster seat with the seat belts. When you install a booster seat in the rear seat follow these steps:

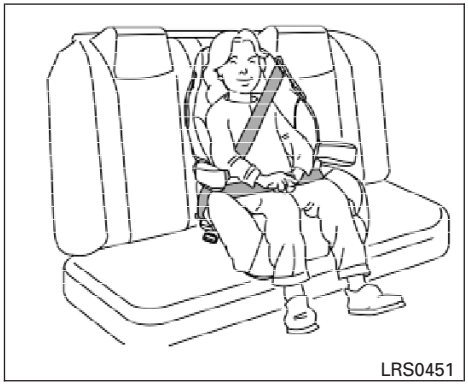

Center position

1. Position the booster seat on the seat. Only place it in a front facing direction. Always follow the booster seat manufacturer's instructions.
2. The booster seat should be positioned on the vehicle seat so that it is stable. If necessary, adjust or remove the head restraint to obtain the correct booster seat fit. See "Head restraint adjustment" earlier in this section. If the head restraint is removed, store it in a secure place. Be sure to install the head restraint when the booster seat is removed. If the seating position does not have an adjustable head restraint and it is interfering with the proper booster seat fit, try another seating position or a different booster seat.
3. Position the lap portion of the seat belt low and snug on the child's hips. Be sure to follow the booster seat manufacturer's instructions for adjusting the belt routing.
4. Pull the shoulder belt portion of the seat belt toward the retractor to take up extra slack. Be sure the shoulder belt is positioned across the top, middle portion of the child's shoulder. Be sure to follow the booster seat manufacturer's instructions for adjusting the belt routing.
5. Follow the warnings, cautions and instructions for properly fastening a seat belt shown in the "Three-point seat belt with retractor" earlier in this section.

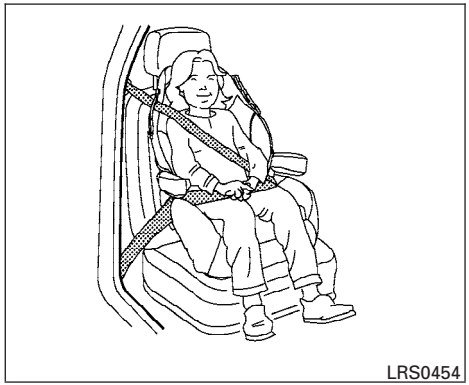

BOOSTER SEAT INSTALLATION ON FRONT PASSENGER SEAT

⚠ WARNING

NISSAN recommends that child restraints be installed in the rear seat. However, if you must install a booster seat in the front passenger seat, move the passenger's seat to the rearmost position.

If you must install a booster seat in the front seat, follow these steps:

1. Move the seat to the rear-most position.

2. Position the booster seat on the seat. Only place it in a front facing direction. Always follow the booster seat manufacturer's instructions.
3. The booster seat should be positioned on the vehicle seat so that it is stable. If necessary, adjust or remove the head restraint to obtain the correct booster seat fit. See "Head restraint adjustment" earlier in this section. If the head restraint is removed, store it in a secure place. Be sure to install the head restraint when the booster seat is removed. If the seating position does not have an adjustable head restraint and it is interfering with the proper booster seat fit, try another seating position or a different booster seat.
4. Position the lap portion of the seat belt low and snug on the child's hips. Be sure to follow the booster seat manufacturer's instructions for adjusting the belt routing.
5. Pull the shoulder belt portion of the seat belt toward the retractor to take up extra slack. Be sure the shoulder belt is positioned across the top, middle portion of the child's shoulder. Be sure to follow the booster seat manufacturer's instructions for adjusting the belt routing.
6. Follow the warnings, cautions and instructions for properly fastening a seat belt shown in the "Three-point seat belt with retractor" earlier in this section.
7. When the ignition is turned to the ON position, the passenger air bag status light may or may not be illuminated, depending on the size of the child and the type of booster seat being used. See "NISSAN advanced air bag system" later in this section.

SUPPLEMENTAL RESTRAINT SYSTEM

PRECAUTIONS ON SUPPLEMENTAL RESTRAINT SYSTEM

This Supplemental Restraint System (SRS) section contains important information concerning the driver and passenger supplemental front air bags (NISSAN Advanced Air Bag System), supplemental side air bags, curtain side-impact air bags and pre-tensioner seat belts.

Supplemental front impact air bag system: The NISSAN advanced air bag system can help cushion the impact force to the head and chest of the driver and front passenger in certain frontal collisions.

Supplemental side-impact air bag system (if so equipped): This system can help cushion the impact force to the chest and pelvic area of the driver and front passenger in certain side impact collisions. The supplemental side air bag is designed to inflate on the side where the vehicle is impacted.

Supplemental curtain side-impact air bag system (if so equipped): This system can help cushion the impact force to the head of occupants in front and rear outboard seating positions in certain side impact collisions. The curtain side-impact air bags are designed to inflate on the side where the vehicle is impacted.

These supplemental restraint systems are designed to **supplement** the crash protection provided by the driver and front passenger seat belts and are **not a substitute** for them. Seat belts should always be correctly worn and the occupant seated a suitable distance away from the steering wheel, instrument panel and door finishers. (See “Seat belts” earlier in this section for instructions and precautions on seat belt usage.)

The supplemental air bags operate only when the ignition switch is in the ON or START position.

After turning the ignition key to the ON position, the supplemental air bag warning light illuminates. The supplemental air bag warning light will turn off after about 7 seconds if the system is operational.

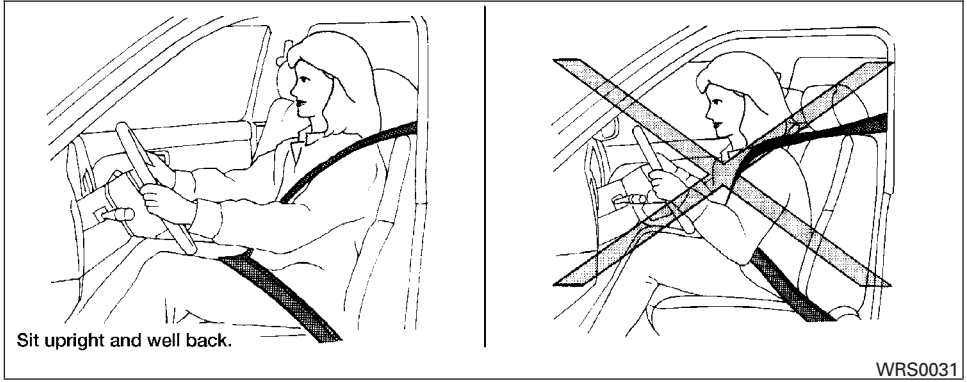

⚠ WARNING

- **The supplemental front air bags ordinarily will not inflate in the event of a side impact, rear impact, rollover, or lower severity frontal collision. Also, the front passenger air bag will not inflate if the passenger air bag status light is lit. See “Front passenger air bag and status light” later in this section. Always wear your seat belts to help reduce the risk or severity of injury in various kinds of accidents.**

- **The seat belts and the supplemental front air bags are most effective when you are sitting well back and upright in the seat. The front air bags inflate with great force. Even with the NISSAN Advanced Air Bag System, if you are unrestrained, leaning forward, sitting sideways or out of position in any way, you are at greater risk of injury or death in a crash. You may also receive serious or fatal injuries from the supplemental front air bag if you are up against it when it inflates. Always sit back against the seatback and as far away as practical from the steering wheel or instrument panel. Always use the seat belts.**
- **The driver and front passenger seat belt buckles are equipped with sensors that detect if the seat belts are fastened. The advanced air bag system monitors the severity of a collision and seat belt usage then inflates the air bags. Failure to properly wear seat belts can increase the risk or severity of injury in an accident.**
- **The front passenger seat is equipped with an occupant classification sensor (weight sensor) that turns the front passenger air bag OFF under some conditions. This sensor is only used in this seat. Failure to be properly seated and wearing the seat belt can increase the risk or severity of injury in an accident. See "Front Passenger air bag and status light" later in this section.**
- **Keep hands on the outside of the steering wheel. Placing them inside the steering wheel rim could increase the risk that they are injured when the supplemental front air bag inflates.**

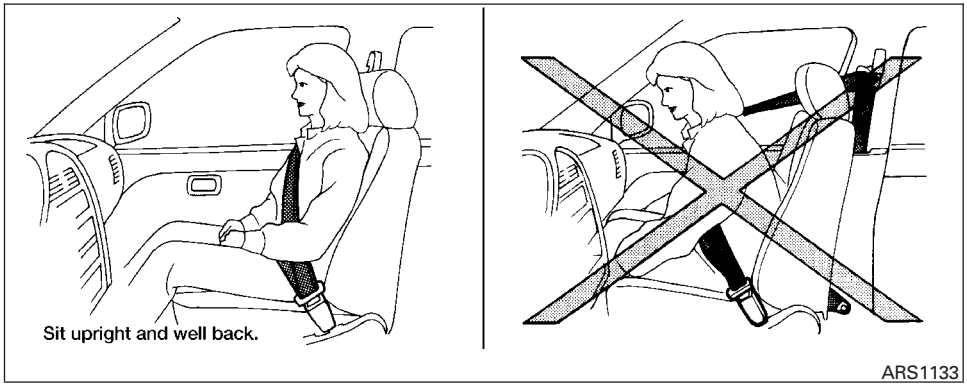

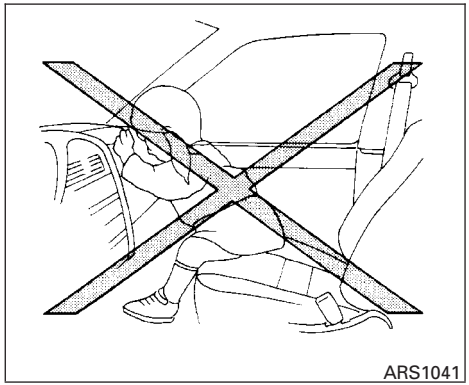

⚠ WARNING

- **Never let children ride unrestrained or extend their hands or face out of the window. Do not attempt to hold them in your lap or arms. Some examples of dangerous riding positions are shown in the illustrations.**

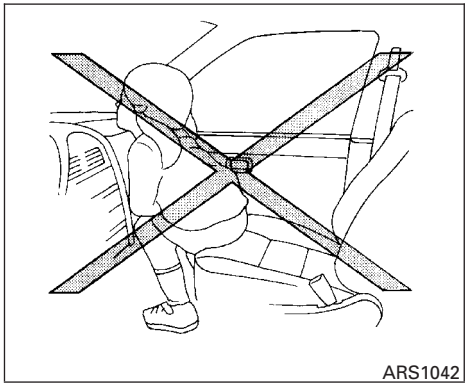
ARS1042

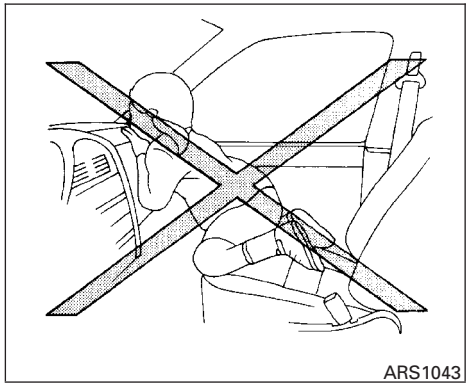
ARS1043

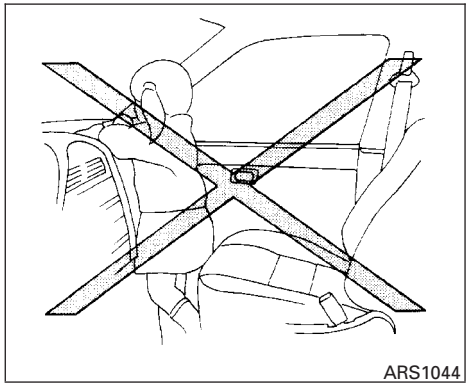
ARS1044

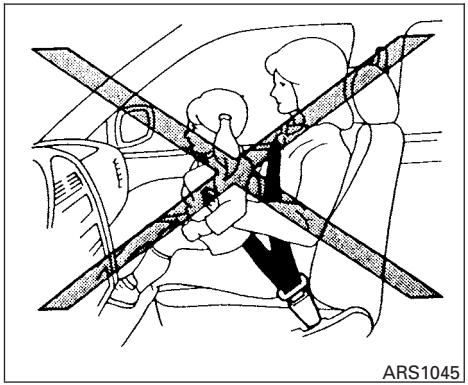
ARS1045

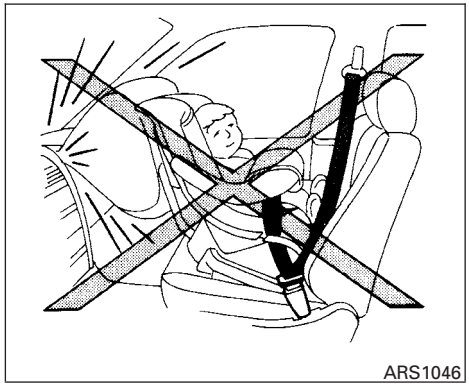
ARS1046

⚠ WARNING

- **Children may be severely injured or killed when the supplemental front air bags, side air bags or curtain side-impact air bags inflate if they are not properly restrained. Pre-teens and children should be properly restrained in the rear seat, if possible.**

- **Even with the NISSAN Advanced Air Bag System, never install a rear-facing child restraint in the front seat. An inflating supplemental front air bag could seriously injure or kill your child. See "Child restraints" earlier in this section for details.**

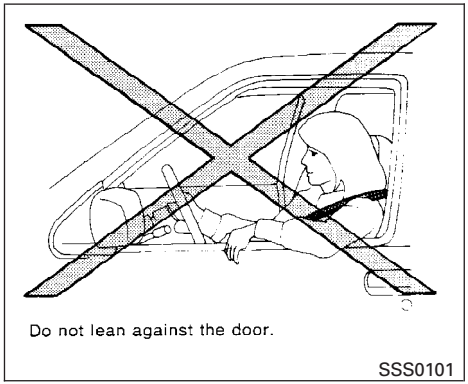

Do not lean against the door.

⚠ WARNING

Supplemental side air bag and curtain side-impact air bag (if so equipped):

- **The supplemental side air bag and curtain side-impact air bag ordinarily will not inflate in the event of a frontal impact, rear impact, rollover or lower severity side collision. Always wear your seat belts to help reduce the risk or severity of injury in various kinds of accidents.**

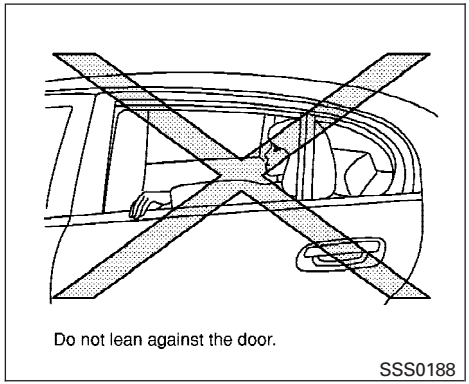

Do not lean against the door.

⚠ WARNING

- **The seat belts, the supplemental side air bags and curtain side-impact air bags are most effective when you are sitting well back and upright in the seat. The side air bag and curtain side-impact air bag inflate with great force. Do not allow anyone to place their hand, leg or face near the side air bag on the side of the seatback of the front seat or near the side roof rails. Do not allow anyone sitting in the front seats or rear outboard seats to extend their hand out of the window or lean against the door. Some examples of dangerous riding positions are shown in the previous illustrations.**

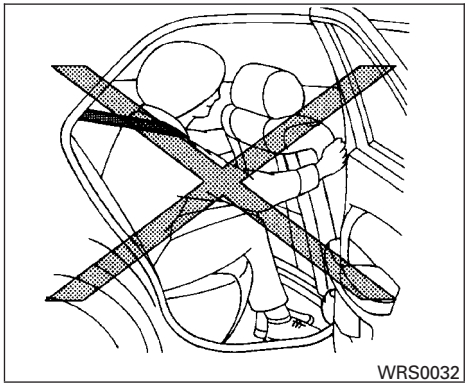
WRS0032

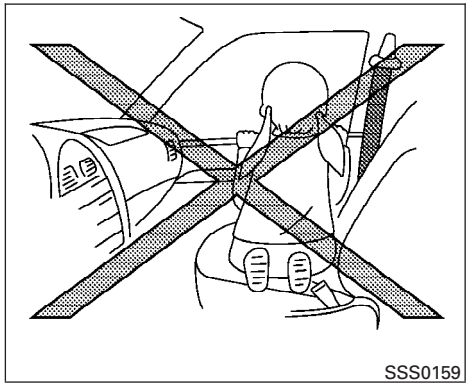
SSS0159

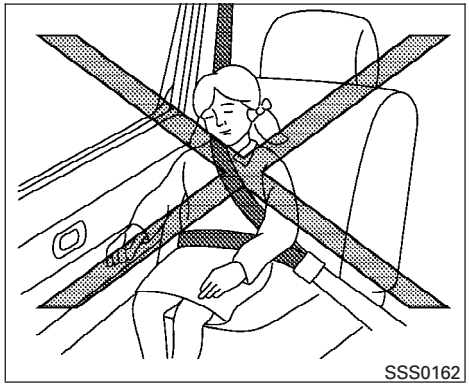
SSS0162

⚠ WARNING

- **When sitting in the rear seat, do not hold onto the seatback of the front seat. If the side air bag inflates, you may be seriously injured. Be especially careful with children, who should always be properly restrained. Some examples of dangerous riding positions are shown in the illustrations.**
- **Do not use seat covers on the front seatbacks. They may interfere with supplemental side air bag inflation.**

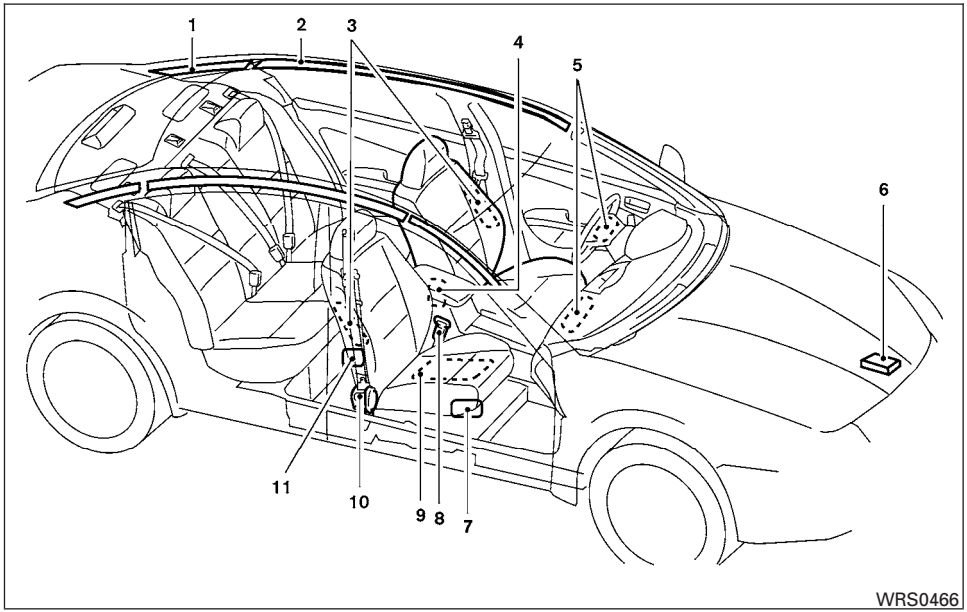

1. SRS curtain side-impact air bag modules (if so equipped)
2. SRS curtain side-impact air bags (if so equipped)
3. Supplemental side air bag modules (if so equipped)
4. Diagnosis sensor unit
5. Supplemental front air bag modules
6. Crash zone sensor
7. Occupant classification system control unit
8. Seat belt buckle switches on driver's and passenger's side
9. Occupant classification sensor
10. Seat belt pre-tensioner retractor
11. Side satellite sensor

NISSAN Advanced Air Bag System (front seats)

This vehicle is equipped with the NISSAN advanced air bag system for the driver and front passenger seats. This system is designed to meet certification requirements under U.S. regulations. It is also permitted in Canada. **However, all of the information, cautions and warnings in this manual still apply and must be followed.**

The driver supplemental front air bag is located in the center of the steering wheel. The passenger supplemental front air bag is mounted in the dashboard above the glove box. The supplemental front air bags are designed to inflate in higher severity frontal collisions, although they may inflate if the forces in another type of collision are similar to those of a higher severity frontal impact. They may not inflate in certain frontal collisions. Vehicle damage (or lack of it) is not always an indication of proper supplemental front air bag system operation.

The NISSAN advanced air bag system has dual stage inflators. It also monitors information from the crash zone sensor, the diagnosis sensor unit, seat belt buckle sensors, occupant classification sensor (weight sensor) and passenger seat belt tension sensor. Inflator operation is based on the severity of a collision and seat belt usage for the driver. For the front passenger, it additionally monitors the weight of an occupant or object on the seat and seat belt tension. Based on information from the sensors, only one front air bag may inflate in a crash, depending on the crash severity and whether the front occupants are belted or unbelted. Additionally, the front passenger air bag may be automatically turned OFF under some conditions, depending on the weight detected on the passenger seat and how the seat belt is used. If the front passenger air bag is OFF, the passenger air bag status light will be illuminated. See “Front passenger air bag and status light” later in this section for further details. One front air bag inflating does not indicate improper performance of the system.

If you have any questions about your air bag system, please contact NISSAN or your NISSAN dealer. If you are considering modification of your vehicle due to a disability, you may also contact NISSAN. Contact information is contained in the front of this Owner’s Manual.

When a supplemental front air bag inflates, a fairly loud noise may be heard, followed by the release of smoke. This smoke is not harmful and does not indicate a fire. Care should be taken to not inhale it, as it may cause irritation and choking. Those with a history of a breathing condition should get fresh air promptly.

Supplemental front air bags, along with the use of seat belts, help to cushion the impact force on the face and chest of the front occupants. They can help save lives and reduce serious injuries. However, an inflating front air bag may cause facial abrasions or other injuries. Front air bags do not provide restraint to the lower body.

Even with NISSAN advanced air bags, seat belts should be correctly worn and the driver and passenger seated upright as far as practical away from the steering wheel or instrument panel. The supplemental front air bags inflate quickly in order to help protect the front occupants. Because of this, the force of the front air bag inflating can increase the risk of injury if the occupant is too close to, or is against, the front air bag module during inflation.

The front air bags deflate quickly after a collision.

The supplemental front air bags operate only when the ignition switch is in the ON or START position.

After turning the ignition key to the ON position, the supplemental air bag warning light illuminates. The supplemental air bag warning light will turn off after about 7 seconds if the system is operational.

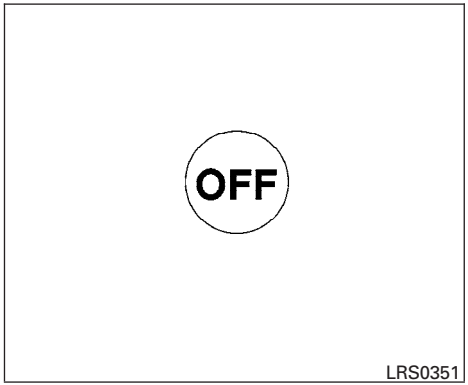

Front passenger air bag and status light

⚠WARNING

The front passenger air bag is designed to automatically turn OFF under some conditions. Read this section carefully to learn how it operates. Proper use of the seat, seat belt and child restraints is necessary for most effective protection. Failure to follow all instructions in this manual concerning the use of seats, seat belts and child restraints can increase the risk or severity of injury in an accident.

Status light

The front passenger air bag status light (OFF) or 2 is located under the climate controls. The light operates as follows:

- Unoccupied passenger seat or when other conditions are met as outlined in this section: The (OFF) or 2 illuminates to indicate that the front passenger air bag is OFF and will not inflate in a crash.
- Occupied passenger seat and the passenger meets the conditions outlined in this section: The light (OFF) or 2 is OFF to indicate that the front passenger air bag is operational.

Front passenger air bag

The front passenger air bag is designed to automatically turn OFF when the vehicle is operated under some conditions as described below in accordance with U.S. regulations. If the front passenger air bag is OFF, it will not inflate in a crash. The driver air bag and other air bags in your vehicle are not part of this system.

The purpose of the regulation is to help reduce the risk of injury or death from an inflating air bag to certain front passenger seat occupants, such as children, by requiring the air bag to be automatically turned OFF. Certain sensors are used to meet the requirements.

One sensor used is the occupant classification sensor (weight sensor). It is in the bottom of the front passenger seat cushion and is designed to detect an occupant and objects on the seat by weight. It works together with seat belt sensors described later. For example, if a child is in the front passenger seat, the advanced air bag system is designed to turn the passenger air bag OFF in accordance with the regulations. Also, if a child restraint of the type specified in the regulations is on the seat, its weight and the child's weight can be detected and cause the air bag to turn OFF. Weight sensor operation can vary depending on the front passenger seat belt sensors.

The front passenger seat belt sensors are designed to detect if the seat belt is buckled and the amount of tension on the seat belt, such as when it is in the automatic locking mode (child restraint mode). Based on the weight on the seat detected by the weight sensor and the belt tension detected on the seat belt, the advanced air bag system determines whether the front passenger air bag should be automatically turned OFF as required by the regulations.

Front passenger seat adult occupants who are properly seated and using the seat belt as outlined in this manual should not cause the passenger air bag to be automatically turned OFF. For small adults it may be turned OFF. Also, if the occupant takes his/her weight off the seat cushion (for example, by not sitting upright, by sitting on an edge of the seat, or by otherwise being out of position), this could cause the sensor to turn the air bag OFF. In addition, if the occupant improperly uses the seat belt in the automatic locking mode (child restraint mode), this could cause the air bag to be turned OFF. Always be sure to be seated and wearing the seat belt properly for the most effective protection by the seat belt and supplemental air bag.

NISSAN recommends that pre-teens and children be properly restrained in a rear seat. NISSAN also recommends that appropriate child restraints and booster seats be properly installed in a rear seat. If this is not possible, the weight sensor and seat belt sensors are designed to operate as described above to turn the front passenger air bag OFF for specified child restraints as required by the regulations. Failing to properly secure child restraints and to use the automatic locking mode (child restraint mode) may allow the restraint to tip or move in an accident or sudden stop. This can also result in the passenger air bag inflating in a crash instead of being OFF. See “Child restraints” earlier in this section for proper use and installation.

If the front passenger seat is not occupied and the seat belt is not buckled, the passenger air bag is designed not to inflate in a crash. However, heavy objects placed on the seat could result in air bag inflation, because of the object’s weight detected by the weight sensor. Other conditions could also result in air bag inflation, such as if a child is standing on the seat, or if two children are on the seat, contrary to the instructions in this manual. Always be sure that you and all vehicle occupants are seated and restrained properly.

Using the passenger air bag status light, you can monitor when the front passenger air bag is automatically turned OFF. The light will illuminate (indicating the air bag is OFF and will not inflate) when the front passenger seat is not occupied.

If an adult occupant is in the seat and the passenger air bag status light is illuminated (indicating that the air bag is OFF), it could be that the person is a small adult, or is not sitting on the seat or not using the seat belt properly. If a child restraint must be used in the front seat, but the status light is not lit (indicating that the air bag might inflate in a crash), it could be that the child restraint or seat belt is not being used properly. If such situations happen, properly position and restrain the occupant or child restraint. Otherwise reposition the occupant or child restraint in a rear seat.

If a malfunction occurs in the front passenger air bag system, the supplemental air bag warning light , located in the meter and gauges area in the center of the instrument panel, will blink. Have the system checked by a NISSAN dealer.

Other supplemental front air bag precautions

⚠ WARNING

- **Do not place any objects on the steering wheel pad or on the instrument panel. Also, do not place any objects between any occupant and the steering wheel or instrument panel. Such objects may become dangerous projectiles and cause injury if the supplemental front air bag inflates.**
- **Immediately after inflation, several front air bag system components will be hot. Do not touch them; you may severely burn yourself.**
- **No unauthorized changes should be made to any components or wiring of the supplemental air bag system. This is to prevent accidental inflation of the supplemental air bag or damage to the supplemental air bag system.**
- **Do not make unauthorized changes to your vehicle's electrical system, suspension system or front end structure. This could affect proper operation of the supplemental front air bag system.**
- **Tampering with the supplemental front air bag system may result in serious personal injury. Tampering includes changes to the steering wheel and the instrument panel assembly by placing material over the steering wheel pad and above the instrument panel or by installing additional trim material around the air bag system.**
- **Modifying or tampering with the front passenger seat may result in serious personal injury. For example, do not change the front seats by placing material on the seat cushion or by installing additional trim material, such as seat covers, on the seat that are not specifically designed to assure proper air bag operation. Additionally, do not stow any objects under the front passenger seat or the seat cushion and seatback. Such objects may interfere with the proper operation of the occupant classification system (weight sensor).**
- **No unauthorized changes should be made to any components or wiring of the seat belt system. This may affect the supplemental front air bag system. Tampering with the seat belt system may result in serious personal injury.**
- **Work on and around the supplemental front air bag system should be done by a NISSAN dealer. Installation of electrical equipment should also be done by a NISSAN dealer. The Supplemental Restraint System (SRS) wiring should not be modified or disconnected. Unauthorized electrical test equipment and probing devices should not be used on the air bag system.**
- **A cracked windshield should be replaced immediately by a qualified repair facility. A cracked windshield could affect the function of the supplemental air bag system.**
- **The SRS wiring harness connectors are yellow and orange for easy identification.**

When selling your vehicle, we request that you inform the buyer about the supplemental front air bag system and guide the buyer to the appropriate sections in this Owner's Manual.

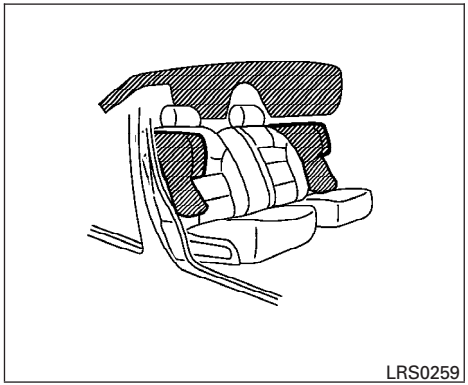

Supplemental side-impact air bag and curtain side-impact air bags system (if so equipped)

The supplemental side-impact air bags are located in the outside of the seatback of the front seats. The supplemental curtain side-impact air bags are located in the side roof rails. These systems are designed to meet voluntary guidelines to help reduce the risk of injury to out-of-position occupants. **However, all of the information, cautions and warnings in this manual still apply and must be followed.** The supplemental side air bags and curtain side-impact air bags are designed to inflate in higher severity side collisions, although they may inflate if the forces in another type of collision are similar to those of a higher severity side impact. They are designed to inflate on the side where the vehicle is impacted. They may not inflate in certain side collisions.

Vehicle damage (or lack of it) is not always an indication of proper supplemental side air bag and curtain side-impact air bag operation.

When the supplemental side air bag and curtain side-impact air bag inflate, a fairly loud noise may be heard, followed by release of smoke. This smoke is not harmful and does not indicate a fire. Care should be taken not to inhale it, as it may cause irritation and choking. Those with a history of a breathing condition should get fresh air promptly.

Supplemental side air bags, along with the use of seat belts, help to cushion the impact force on the chest and pelvic area of the front occupants. Curtain side-impact air bags help to cushion the impact force to the head of occupants in the front and rear outboard seating positions. They can help save lives and reduce serious injuries. However, an inflating side air bag and curtain side-impact air bag may cause abrasions or other injuries. Supplemental side air bags and curtain side-impact air bags do not provide restraint to the lower body.

The seat belts should be correctly worn and the driver and passenger seated upright as far as practical away from the supplemental side air bag. Rear seat passengers should be seated as far away as practical from the door finishers and side roof rails. The side air bags and curtain side-impact air bag inflate quickly in order to help protect the front occupants. Because of this, the force of the side air bag and curtain side-impact air bag inflating can increase the risk of injury if the occupant is too close to, or is against, these air bag modules during inflation. The side air bag and curtain side-impact air bag will deflate quickly after the collision is over.

The supplemental side air bags and curtain side-impact air bags operate only when the ignition switch is in the ON or START positions.

After turning the ignition key to the ON position, the supplemental air bag warning light illuminates. The supplemental air bag warning light will turn off after about 7 seconds if the system is operational.

⚠ WARNING

- **Do not place any objects near the seatback of the front seats. Also, do not place any objects (an umbrella, bag, etc.) between the front door finisher and the front seat. Such objects may become dangerous projectiles and cause injury if the supplemental side air bag inflates.**
- **Right after inflation, several side air bag and curtain side-impact air bag system components will be hot. Do not touch them; you may severely burn yourself.**
- **No unauthorized changes should be made to any components or wiring of the side air bag and curtain side-impact air bag system. This is to prevent accidental inflation of the side air bag and curtain side-impact air bag or damage to the side air bag and curtain side-impact air bag system.**
- **Do not make unauthorized changes to your vehicle's electrical system, suspension system or side panel. This could affect proper operation of the supplemental side air bag and curtain side-impact air bag system.**
- **Tampering with the supplemental side air bag system may result in serious personal injury. For example, do not change the front seats by placing material near the seatbacks or by installing additional trim material, such as seat covers, around the side air bag.**
- **Work around and on the curtain air bag system should be done by a NISSAN dealer. Installation of electrical equipment should also be done by a NISSAN dealer. The SRS wiring harnesses* should not be modified or disconnected. Unauthorized electrical test equipment and probing devices should not be used on the side air bag or curtain air bag system.**

*** The SRS wiring harness connectors are yellow and orange for easy identification.**

When selling your vehicle, we request that you inform the buyer about the supplemental side air bag and curtain side-impact air bag system and guide the buyer to the appropriate sections in this Owner's Manual.

Pre-tensioner seat belt system (Front seats)

⚠ WARNING

- **The pre-tensioner seat belt cannot be reused after activation. It must be replaced together with the retractor and buckle as a unit.**
- **If the vehicle becomes involved in a frontal collision but the pre-tensioner is not activated, be sure to have the pre-tensioner system checked and, if necessary, replaced by your NISSAN dealer.**
- **No unauthorized changes should be made to any components or wiring of the pre-tensioner seat belt system. This is to prevent accidental activation of the pre-tensioner seat belt or damage to the pre-tensioner seat belt operation. Tampering with the pre-tensioner seat belt system may result in serious personal injury.**

- **Work around and on the pre-tensioner system should be done by a NISSAN dealer. Installation of electrical equipment should also be done by a NISSAN dealer. Unauthorized electrical test equipment and probing devices should not be used on the pre-tensioner seat belt system.**
- **If you need to dispose of the pre-tensioner or scrap the vehicle, contact a NISSAN dealer. Correct pre-tensioner disposal procedures are set forth in the appropriate NISSAN Service Manual. Incorrect disposal procedures could cause personal injury.**

The front seat pre-tensioner seat belt system activates in conjunction with the supplemental air bag systems. Working with the seat belt retractor, it helps tighten the seat belt when the vehicle becomes involved in certain types of collisions, helping to restrain front seat occupants.

The pre-tensioner is encased with the seat belt's retractor. These seat belts are used the same as conventional seat belts.

When the pre-tensioner seat belt activates, smoke is released and a loud noise may be heard. This smoke is not harmful and does not indicate a fire. Care should be taken not to inhale it, as it may cause irritation and choking. Those with a history of a breathing condition should get fresh air promptly.

After the pre-tensioner seat belts have activated, load limiters allow the seat belt to release webbing (if necessary) to reduce forces against the chest.

If any abnormality occurs in the pre-tensioner system, the supplemental air bag warning light will not come on, will flash intermittently or will turn on for 7 seconds and remain on after the ignition key has been turned to the ON or START position. In this case, the pre-tensioner seat belt may not function properly. They must be checked and repaired. Take your vehicle to the nearest NISSAN dealer.

When selling your vehicle, we request that you inform the buyer about the pre-tensioner seat belt system and guide the buyer to the appropriate sections in this Owner's Manual.

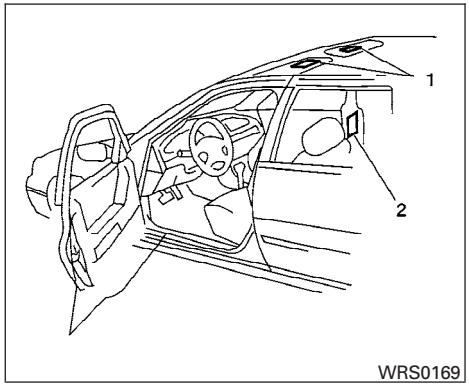

1. SRS air bag warning labels
2. SRS side air bag warning label (if so equipped)

SUPPLEMENTAL AIR BAG WARNING LABELS

Warning labels about the supplemental front air bag systems are placed in the vehicle as shown in the illustration.

SUPPLEMENTAL AIR BAG WARNING LIGHT

The supplemental air bag warning light, displaying in the instrument panel, monitors the circuits of the supplemental front air bag, supplemental side air bag and curtain side-impact air bag (if so equipped) and pre-tensioner seat belt systems. The circuits monitored by the supplemental air bag warning light are the diagnosis sensor unit, crash zone sensor, satellite sensors, front air bag modules, side air bag modules, curtain side-impact air bag modules, pre-tensioner seat belts and all related wiring.

When the ignition key is in the ON or START position, the supplemental air bag warning light illuminates for about 7 seconds and then turns off. This means the system is operational.

If any of the following conditions occur, the supplemental front air bag, supplemental side air bag and curtain side-impact air bag (if so equipped) and pre-tensioner seat belt systems need servicing:

- The supplemental air bag warning light remains on after approximately 7 seconds.
- The supplemental air bag warning light flashes intermittently.
- The supplemental air bag warning light does not come on at all.

Under these conditions, the supplemental front air bag, supplemental side air bags and curtain side-impact air bag (if so equipped) or pre-tensioner seat belt systems may not operate properly. It must be checked and repaired. Take your vehicle to the nearest NISSAN dealer.

⚠ WARNING

If the supplemental air bag warning light is on, it could mean that the supplemental front air bag, supplemental side air bag, curtain side-impact air bag systems (if so equipped) and/or pre-tensioner seat belt systems will not operate in an accident. To help avoid injury to yourself or others, have your vehicle checked by a NISSAN dealer as soon as possible.

Repair and replacement procedure

The supplemental front air bags, supplemental side air bags, curtain side-impact air bags (if so equipped) and pre-tensioner seat belts are designed to inflate on a one-time-only basis. As a reminder, unless it is damaged, the supplemental air bag warning light remains illuminated after inflation has occurred. Repair and replacement of these supplemental air bag systems should be done only by a NISSAN dealer.

When maintenance work is required on the vehicle, the supplemental front air bags, supplemental side air bags, curtain side-impact air bags (if so equipped), pre-tensioner seat belts and related parts should be pointed out to the person performing the maintenance. The ignition key should always be in the LOCK position when working under the hood or inside the vehicle.

⚠ WARNING

- **Once a supplemental front air bag, supplemental side air bag or curtain side-impact air bag has inflated, the air bag module will not function again and must be replaced. Additionally, if any of the supplemental front air bags inflate, the activated pre-tensioner seat belts must also be replaced. The air bag module and pre-tensioner seat belt system should be replaced by a NISSAN dealer. The air bag module and pre-tensioner seat belt system cannot be repaired.**
- **The supplemental front air bag, side air bag and curtain side-impact air bag systems, and the pre-tensioner seat belt system should be inspected by a NISSAN dealer if there is any damage to the front end or side portion of the vehicle.**
- **If you need to dispose of the supplemental air bag, pre-tensioner seat belt system or scrap the vehicle, contact a NISSAN dealer. Correct supplemental air bag and pre-tensioner seat belt system disposal procedures are set forth in the appropriate NISSAN Service Manual. Incorrect disposal procedures could cause personal injury.**

MEMO

2 Instruments and controls

Instrument panel 2-2
Meters and gauges 2-3
Speedometer and odometer 2-4
Trip computer (if so equipped) 2-5
Tachometer 2-7
Engine coolant temperature gauge 2-8
Fuel gauge 2-8
Engine oil pressure gauge (if so equipped) 2-9
Voltmeter (if so equipped) 2-10
Fuel consumption gauge (if so equipped) 2-10
Warning/indicator lights and audible reminders 2-11
Checking bulbs 2-11
Warning lights 2-11
Indicator lights 2-14
Audible reminders 2-15
Security systems 2-16
Vehicle security system (if so equipped) 2-16
Nissan vehicle immobilizer system (NVIS) 2-17
Windshield wiper and washer switch 2-19
Switch operation 2-19
Rear window and outside mirror (if so equipped) defroster switch 2-20
Headlight and turn signal switch 2-21
Xenon headlights (if so equipped) 2-21
Headlight control switch 2-21
Daytime running light system (Canada only) 2-24
Instrument brightness control 2-24
Turn signal switch 2-25
Fog light switch (if so equipped) 2-25
Hazard warning flasher switch 2-25
Horn 2-26
Heated seat (if so equipped) 2-26
Traction control system (TCS) off switch (if so equipped) 2-27
Power outlet 2-28
Cigarette lighter and ashtray (if so equipped) 2-29
Storage 2-30
Map pockets 2-30
Seatback pockets (if so equipped) 2-30
Sunglasses holder 2-31
Cup holders 2-31
Glove box 2-32
Console box 2-33
Instrument panel storage (if so equipped) 2-34
Covered storage box (if so equipped) 2-35
Grocery hooks (if so equipped) 2-35

Cargo net (if so equipped) 2-36
Windows 2-37
Power windows 2-37
Sunroof (if so equipped) 2-39
Automatic sunroof 2-39
Interior light 2-40
Map lights 2-41
Trunk light 2-42
HomeLink® universal transceiver (if so equipped) 2-42
Programming HomeLink® 2-43
Programming HomeLink® for Canadian customers 2-43
Operating the HomeLink® universal transceiver 2-43
Programming trouble-diagnosis 2-44
Clearing the programmed information 2-44
Rolling code programming 2-44
Reprogramming a single HomeLink® button 2-45
If your vehicle is stolen 2-45

INSTRUMENT PANEL

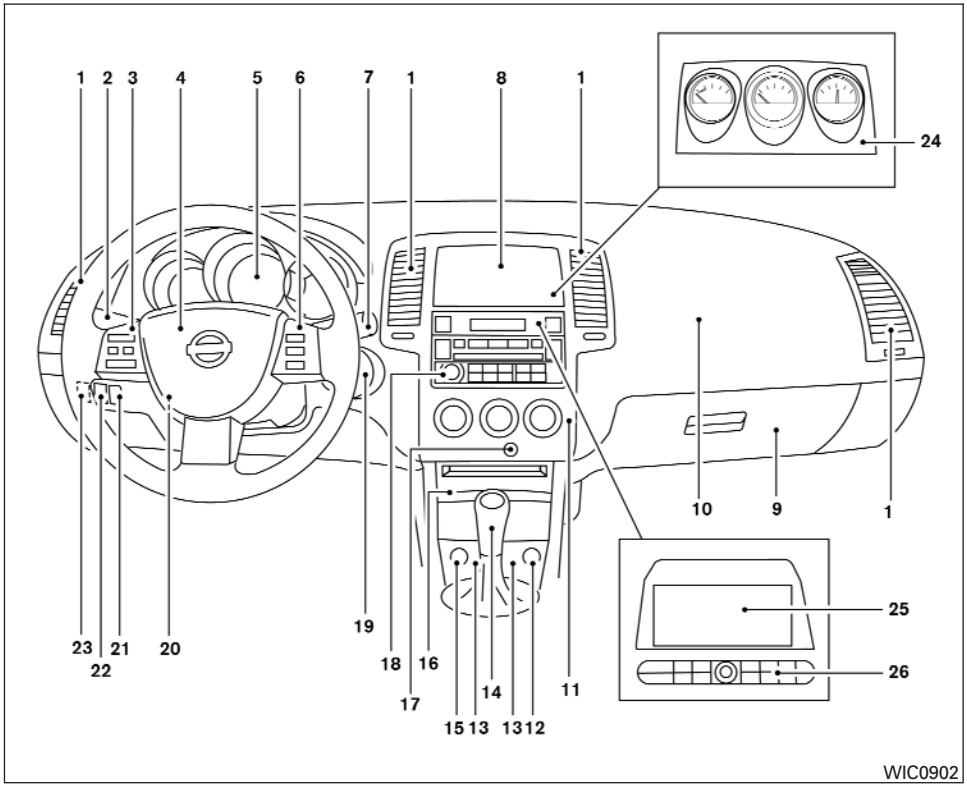

1. Driver, center and passenger ventilators (P. 4-11)
2. Headlight/fog light (if so equipped)/ turn signal switch (P. 2-21)
3. Steering wheel switch for audio control (if so equipped) (P. 4-41)
4. Driver supplemental air bag/horn (P. 1-33, 2-26)
5. Meters and gauges (P. 2-3)
6. Cruise control main/set switch (if so equipped) (P. 5-15)
7. Windshield wiper/washer switch (P. 2-19)
8. Storage (if so equipped) (P. 2-30)
9. Glove box (P. 2-32)
10. Front passenger supplemental air bag (P. 1-33)
11. Heater and air conditioner (manual or automatic) (P. 4-12, P. 4-20)
12. Power outlet or cigarette lighter (if so equipped) (P. 2-28, P. 2-29)
13. Heated seat switch (if so equipped) (P. 2-26)
14. Shift selector lever (P. 5-7)
15. Hazard warning flasher switch (P. 2-25)
16. Storage or ashtray (if so equipped) (P. 2-30, P .2-29)

17. Front passenger air bag status light (P. 1-43)
18. Audio system controls (if so equipped) (P. 4-23)
19. Ignition switch (P. 5-4)
20. Tilt/telescopic steering wheel controls (P. 3-13)
21. Traction control system (TCS) off switch (if so equipped) (P. 2-27)
22. Instrument brightness control (P. 2-24)
23. Trunk opener (P. 3-10)
24. Meters and gauges (if so equipped) (P. 2-3)
25. Navigation system* (if so equipped) (P. 4-2)
26. Navigation system* controls (if so equipped) (P. 4-2)

*: Refer to the separate Navigation System Owner's Manual.

See the page number indicated in parentheses for operating details.

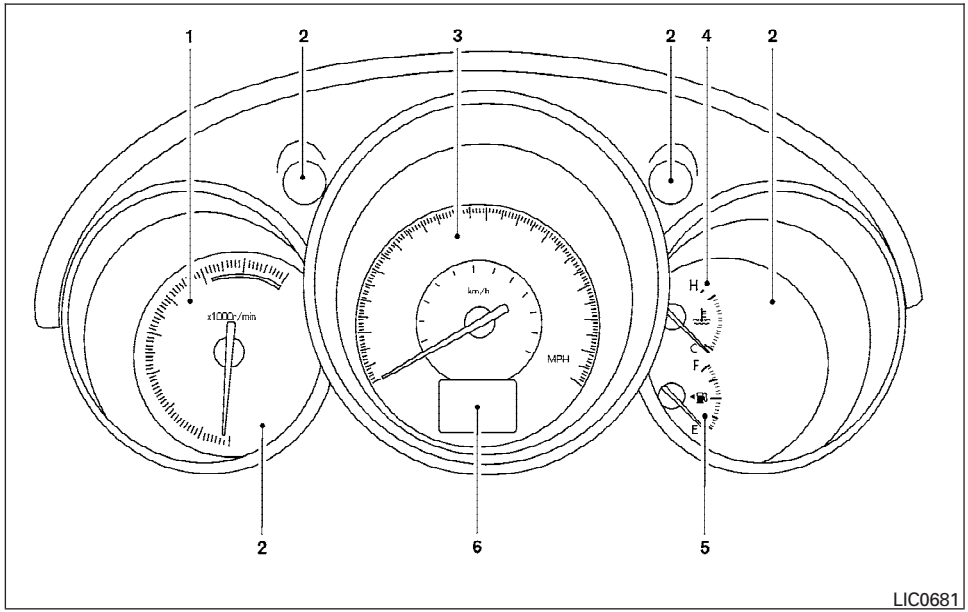

1. Tachometer
2. Warning/indicator lights
3. Speedometer
4. Engine coolant temperature gauge
5. Fuel gauge
6. Odometer/twin trip odometer/trip computer (if so equipped)

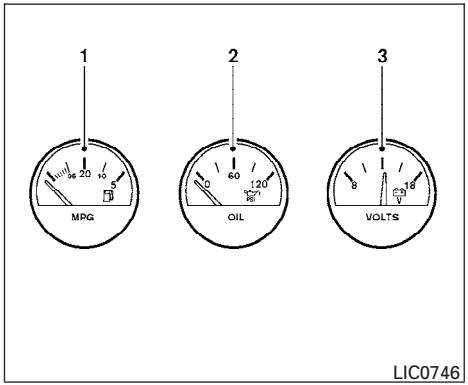

Triple meter (if so equipped):
1. Fuel consumption gauge
2. Engine oil pressure gauge
3. Voltmeter

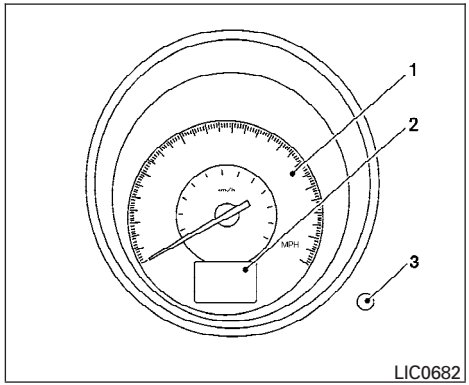

1. Speedometer
2. Odometer/twin trip display
3. Change button

SPEEDOMETER AND ODOMETER

Speedometer

The speedometer indicates vehicle speed in miles per hour (MPH) and kilometers per hour (km/h).

Odometer/Twin trip odometer (if so equipped)

The odometer/twin trip odometer (if so equipped) is displayed when the ignition key is in the ON position.

The odometer records the total distance the vehicle has been driven.

The twin trip odometer (if so equipped) records the distance of individual trips.

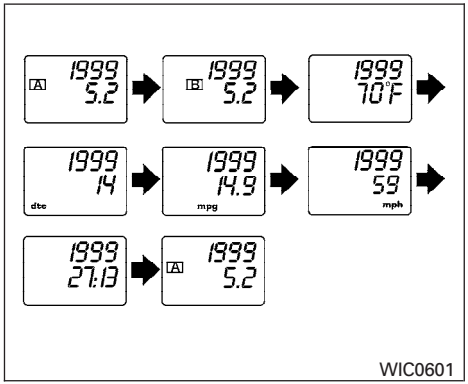

Display without navigation system

Changing the display:

For vehicles equipped with trip computer and without navigation system, pushing the change button changes the display as follows:

Trip **A** → Trip **B** → Outside temperature → Distance to Empty → Average economy → Average speed → Elapsed time → Trip **A**

For additional information, refer to “Trip computer” later in this section.

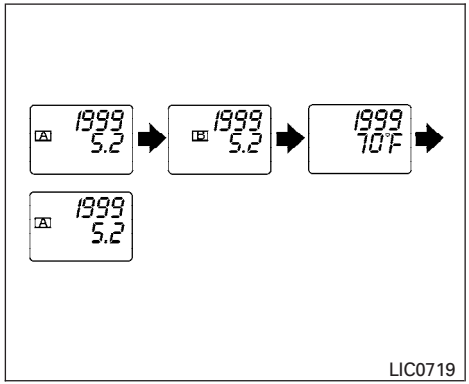

Display with navigation system

For vehicles equipped with trip computer and navigation system, pushing the change button changes the display as follows:

Trip **A** → Trip **B** → Outside temperature → Trip **A**

For vehicles with navigation system, refer to “How to use the ’trip’ button” in the “Display screen, heater, air conditioner and audio systems” section later in this manual.

Resetting the trip odometer:

Pushing the change button for more than 1 second resets the trip odometer to zero.

TRIP COMPUTER (if so equipped)

The display of the trip computer is situated in the speedometer display. When the ignition is turned to ON, the display scrolls all the modes of the trip computer and then shows the mode chosen before the ignition switch is turned OFF.

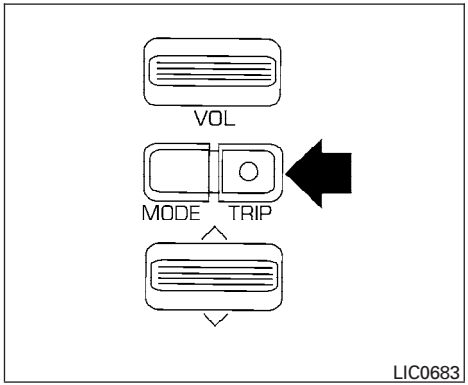

When the ignition switch is turned to ON, modes of the trip computer can be selected by pushing the trip button on the steering wheel switch for audio controls or by the trip computer change button located near the speedometer. The following modes can be selected:

Outside air temperature (ICY-°F or °C)

The outside air temperature is displayed in °F or °C.

The outside air temperature mode includes a low temperature warning feature: below 37°F (3°C), the outside air temperature mode is automatically selected and ICY will illuminate in order to draw the driver's attention. Press the trip or change button to toggle to the next mode, if desired. The ICY indicator will remain illuminated as long as the temperature remains below 39°F (4°C).

The ambient temperature sensor is located in front of the radiator. The sensor may be affected by road or engine heat, wind directions and other driving conditions. The display may differ from the actual ambient temperature or the temperature displayed on various signs or billboards.

Distance to empty (dte—mile or km)

The distance to empty (dte) mode provides you with an estimation of the distance that can be driven before refueling. The dte is constantly being calculated, based on the amount of fuel in the fuel tank and the actual fuel consumption.

The display is updated every 30 seconds.

The dte mode includes a low range warning feature: when the fuel level is low, the dte mode is automatically selected and the digits blink in order to draw the driver's attention. Press the trip or change button if you wish to return to the mode that was selected before the warning occurred. The dte mark (dte) will remain blinking until the vehicle is refueled.

When the fuel level drops even lower, the dte display will change to (----).

NOTE:

- **If the amount of fuel added while the ignition switch is OFF is small, the display just before the ignition switch is turned OFF may continue to be displayed.**
- **When driving uphill or rounding curves, the fuel in the tank shifts, which may momentarily change the display.**

Average fuel consumption (mpg or l/100km)

The average fuel consumption mode shows the average fuel consumption since the last reset. Resetting is done by pressing the trip or change button for more than approximately 1 second. The display is updated every 30 seconds. At about the first 1/3 miles (500 m) after a reset, the display shows (----).

Average speed (mph or km/h)

The average speed mode shows the average vehicle speed since last reset. Resetting is done by pressing the trip or change button for more than approximately 1 second. The display is updated every 30 seconds. The first 30 seconds after a reset, the display shows (----).

Journey time

The journey time mode shows the time since the last reset. The displayed time can be reset by pressing the trip or change button for more than approximately 1 second.

NOTE:

If a low temperature warning and low range warning occur simultaneously, other display modes switch automatically to the outside temperature display.

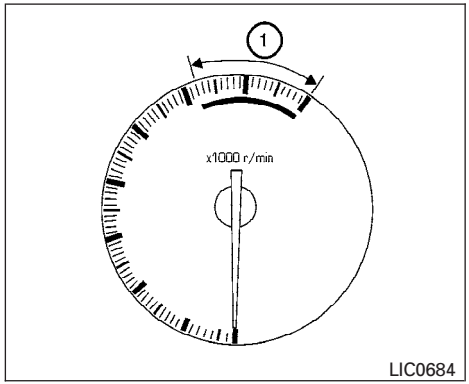

Type A

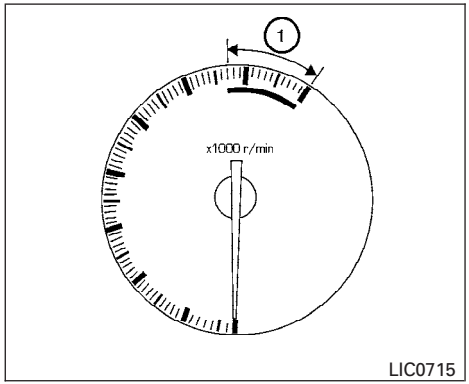

Type B

TACHOMETER

The tachometer indicates engine speed in revolutions per minute (rpm). Do not rev engine into the red zone ①.

⚠ CAUTION

When engine speed approaches the red zone, shift to a higher gear. Operating the engine in the red zone may cause serious engine damage.

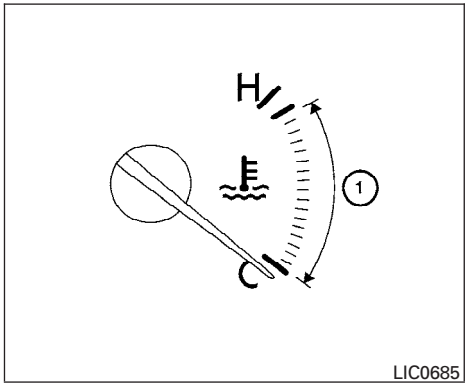

ENGINE COOLANT TEMPERATURE GAUGE

The gauge indicates the engine coolant temperature. The engine coolant temperature is within the normal range ① when the gauge needle points within the zone shown in the illustration.

The engine coolant temperature varies with the outside air temperature and driving conditions.

⚠ CAUTION

If the gauge indicates coolant temperature near the hot (H) end of the normal range, reduce vehicle speed to decrease temperature. If the gauge is over the normal range, stop the vehicle as soon as safely possible. If the engine is overheated, continued operation of the vehicle may seriously damage the engine. See "If your vehicle overheats" in the "In case of emergency" section for immediate action required.

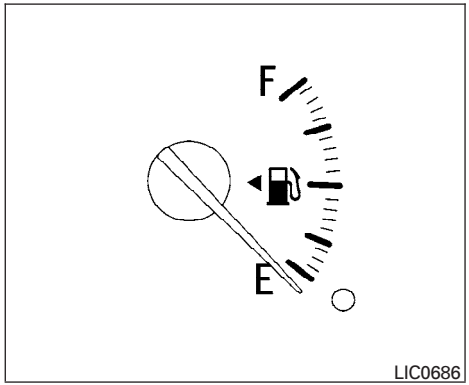

FUEL GAUGE

The gauge indicates the **approximate** fuel level in the tank.

The gauge may move slightly during braking, turning, acceleration, or going up or down hills.

The gauge needle returns to E (Empty) after the ignition key is turned to OFF.

The low fuel warning light comes on when the amount of fuel in the tank is getting low.

Refill the fuel tank before the gauge registers E (Empty).

The ◀⛽ indicates that the fuel filler lid is located on the driver's side of the vehicle.

⚠ CAUTION

- **If the vehicle runs out of fuel, the SERVICE ENGINE SOON malfunction indicator lamp (MIL) may come on. Refuel as soon as possible. After a few driving trips, the SERVICE ENGINE SOON lamp should turn off. If the lamp remains on after a few driving trips, have the vehicle inspected by a NISSAN dealer.**
- **For additional information, see "Malfunction indicator lamp (MIL)" later in this section.**

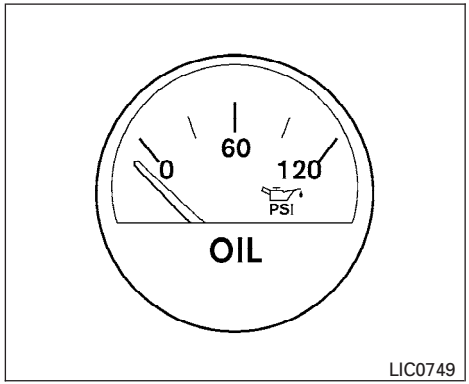

Type A

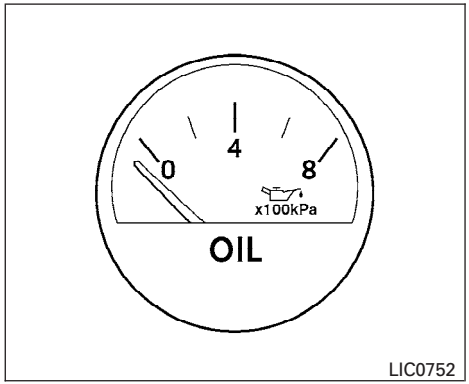

Type B

ENGINE OIL PRESSURE GAUGE (if so equipped)

The gauge indicates the engine lubrication system oil pressure while the engine is running. When the engine speed is high, the engine oil pressure is also high. When it is low, the gauge indicates the low oil pressure.

⚠ CAUTION

- **This gauge is not designed to indicate low engine oil level. Use the dipstick to check the oil level. (See "Engine oil" in the "Maintenance and do-it-yourself" section.)**
- **If the gauge needle does not move with the proper amount of engine oil, have the vehicle checked by a NISSAN dealer. Continued vehicle operation in such a condition could cause serious damage to the engine.**

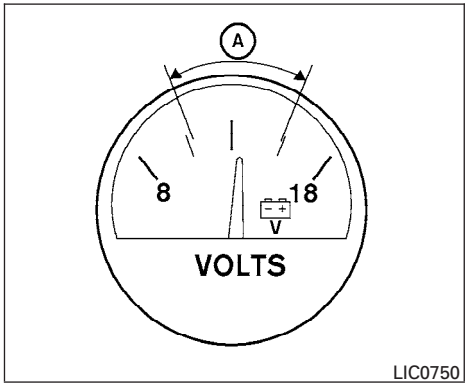

VOLTMETER (if so equipped)

When the ignition key is turned to the ON position, the voltmeter indicates the battery voltage. When the engine is running, it indicates the generator voltage.

While cranking the engine, the volts drop below the normal range. If the needle is not in the normal range (12 - 14.5 volts) ① while the engine is running, it may indicate that the charging system is not functioning properly. Have the system checked by a NISSAN dealer.

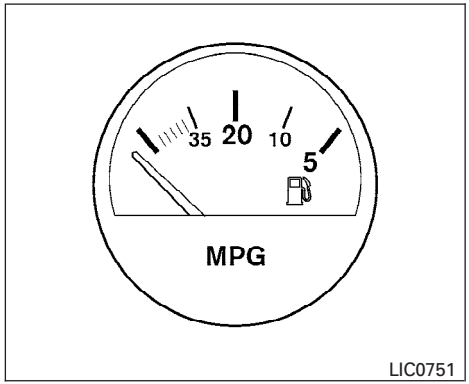

Type A

FUEL CONSUMPTION GAUGE (if so equipped)

This gauge shows the APPROXIMATE fuel consumption while you are driving.

The vehicle speed must be 7 mph (11.2 km/h) or greater for the gauge to give a reading.

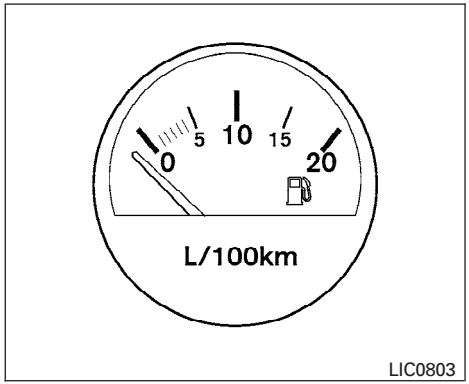

Type B

ABS or (ABS) Anti-lock brake warning light (if so equipped)	Low windshield washer fluid warning light	OFF or 2 Front passenger air bag status light
AT CHECK Automatic transmission check warning light (if so equipped)	Seat belt warning light and chime	High beam indicator light (Blue)
BRAKE or (!) Brake warning light	Supplemental air bag warning light	SERVICE ENGINE SOON Malfunction indicator lamp(MIL)
Charge warning light	Trunk lid open warning light	SLIP Slip indicator light (if so equipped)
Door open warning light	P Automatic transmission position indicator light (A/T models)	TCS OFF Traction control system off indicator light (if so equipped)
Engine oil pressure warning light	CRUISE CRUISE main switch indicator light (if so equipped)	Turn signal/hazard indicator lights
or Low fuel warning light	SET Cruise SET switch indicator light (if so equipped)	

CHECKING BULBS

With all doors closed, apply the parking brake and turn the ignition key to the ON position without starting the engine. The following lights will come on:

, BRAKE or (!) , , SERVICE ENGINE SOON ,

The following lights come on briefly and then go off:

ABS or (ABS) , , TCS OFF , SLIP , AT CHECK

If any light fails to come on, it may indicate a burned-out bulb or an open circuit in the electrical system. Have the system repaired promptly.

WARNING LIGHTS

ABS or (ABS) Anti-lock brake warning light (if so equipped)

If the light comes on while the engine is running, it may indicate the anti-lock brake system is not functioning properly. Have the system checked by a NISSAN dealer.

If an abnormality occurs in the system, the anti-lock function ceases, but the regular braking system continues to operate.

If the light comes on while you are driving, contact a NISSAN dealer for repair.

AT CHECK

Automatic transmission check warning light (if so equipped)

When the ignition switch is turned ON, the light comes on for about 2 seconds. If the light comes on at any other time, it may indicate the automatic transmission system is not functioning properly. Have the system checked by a NISSAN dealer.

BRAKE or

Brake warning light

This light functions for both the parking brake and the foot brake systems.

When the ignition key is in the ON position, the light comes on when the parking brake is applied, and also warns of a low brake fluid level. If the light comes on while the engine is running with the parking brake not applied, stop the vehicle and perform the following:

1. Check the brake fluid level. Add brake fluid as necessary. See “Brake and clutch fluid” in the “Maintenance and do-it-yourself” section of this manual.
2. If the brake fluid level is correct, have the brake system checked by a NISSAN dealer.

WARNING

- **Your brake system may not be working properly if the warning light is on. Driving could be dangerous. If you judge it to be safe, drive carefully to the nearest service station for repairs. Otherwise, have your vehicle towed because driving it could be dangerous.**
- **Pressing the brake pedal with the engine stopped and/or a low brake fluid level may increase your stopping distance and braking will require greater pedal effort as well as pedal travel.**
- **If the brake fluid level is below the MINIMUM or MIN mark on the brake fluid reservoir, do not drive until the brake system has been checked at a NISSAN dealer.**

Charge warning light

If this light comes on while the engine is running, it may indicate the charging system is not functioning properly. Turn the engine off and check the generator belt. If the belt is loose, broken, missing, or if the light remains on, see a NISSAN dealer immediately.

CAUTION

Do not continue driving if the generator belt is loose, broken or missing.

Door open warning light

This light comes on when any of the doors are not closed securely while the ignition key is in the ON position.

Engine oil pressure warning light

This light warns of low engine oil pressure. If the light flickers or comes on during normal driving, pull off the road in a safe area, stop the engine **immediately** and call a NISSAN dealer or other authorized repair shop.

The engine oil pressure warning light is not designed to indicate a low oil level. Use the dipstick to check the oil level. See “Engine oil” in the “Maintenance and do-it-yourself” section of this manual.

⚠CAUTION

Running the engine with the engine oil pressure warning light on could cause serious damage to the engine almost immediately. Such damage is not covered by warranty. Turn off the engine as soon as it is safe to do so.

or

Low fuel warning light

This light comes on when the fuel level in the fuel tank is getting low. Refuel as soon as it is convenient, preferably before the fuel gauge reaches E (Empty). **There will be a small reserve of fuel in the tank when the fuel gauge needle reaches E (Empty).**

Low windshield washer fluid warning light

This light comes on when the windshield washer fluid is at a low level. Add windshield washer fluid as necessary. See “Window washer fluid” in the “Maintenance and do-it-yourself” section of this manual.

Seat belt warning light and chime

The light and chime remind you to fasten your seat belts. The light illuminates whenever the ignition key is turned to the ON or START position and remains illuminated until the driver’s seat belt is fastened. At the same time, the chime sounds for about 6 seconds unless the driver’s seat belt is securely fastened.

Refer to “Seat belts” in the “Safety—Seats, seat belts and supplemental restraint system” section for precautions on seat belt usage.

Supplemental air bag warning light

When the ignition key is in the ON or START position, the supplemental air bag warning light illuminates for about 7 seconds and then turns off. This means the system is operational.

If any of the following conditions occur, the supplemental front air bag, supplemental side air bag (if so equipped), curtain side-impact air bags (if so equipped), and pre-tensioner seat belt systems need servicing and your vehicle must be taken to a NISSAN dealer:

- The supplemental air bag warning light remains on after approximately 7 seconds.
- The supplemental air bag warning light flashes intermittently.
- The supplemental air bag warning light does not come on at all.

Unless checked and repaired, the supplemental restraint system (air bag system) and/or the pre-tensioner seat belts may not function properly. For additional details see “Supplemental restraint system” in the “Safety—Seats, seat belts and supplemental restraint system” section of this manual.

⚠WARNING

If the supplemental air bag warning light is on, it could mean that the supplemental front air bag, supplemental side air bag (if so equipped), curtain side-impact air bag systems (if so equipped) and/or pre-tensioner seat belt systems will not operate in an accident. To help avoid injury to yourself or others, have your vehicle checked by a NISSAN dealer as soon as possible.

Trunk lid open warning light

This light comes on when the trunk lid is not securely closed while the ignition key is in the ON position.

INDICATOR LIGHTS

P Automatic transmission position indicator light (A/T models)

When the ignition key is turned to the ON position, this indicator light shows the automatic transmission selector lever position. See “Driving the vehicle” in the “Starting and driving” section of this manual.

CRUISE Cruise main switch indicator light (if so equipped)

The light comes on when the cruise control main switch is pushed. The light goes out when the main switch is pushed again. When the cruise main switch indicator light comes on, the cruise control system is operational.

SET Cruise set switch indicator light (if so equipped)

The light comes on while the vehicle speed is controlled by the cruise control system. If the light blinks while the engine is running, it may indicate the cruise control system is not functioning properly. Have the system checked by a NISSAN dealer.

OFF or 2 Front passenger air bag status light

The front passenger air bag status light (OFF or 2) will be lit and the passenger front air bag will be OFF depending on how the front passenger seat is being used.

For front passenger air bag status light operation, see “Front passenger air bag and status light” in the “Safety — Seats, seat belts and supplemental restraint system” section of this manual.

High beam indicator light (Blue)

This blue light comes on when the headlight high beams are on and goes out when the low beams are selected.

The high beam indicator light also comes on when the passing signal is activated.

SERVICE ENGINE SOON Malfunction indicator lamp (MIL)

If this indicator lamp comes on steady or blinks while the engine is running, it may indicate a potential emission control malfunction.

The malfunction indicator lamp may also come on steady if the fuel filler cap is loose or missing, or if the vehicle runs out of fuel. Check to make sure the fuel filler cap is installed and closed tightly, and that the vehicle has at least 3 gallons (11.4 liters) of fuel in the fuel tank.

After a few driving trips, the SERVICE ENGINE SOON lamp should turn off if no other potential emission control system malfunction exists.

If this indicator lamp comes on steady for 20 seconds and then blinks for 10 seconds when the engine is not running, it indicates that the vehicle is not ready for an emission control system inspection/maintenance test. See “Readiness for inspection/maintenance (I/M) test” in the “Technical and consumer information” section of this manual.

Operation

The malfunction indicator lamp will come on in one of two ways:

- Malfunction indicator lamp on steady — An emission control system malfunction has been detected. Check the fuel filler cap. If the fuel filler cap is loose or missing, tighten or install the cap and continue to drive the vehicle. The SERVICE ENGINE SOON lamp should turn off after a few driving trips. If the SERVICE ENGINE SOON lamp does not turn off after a few driving trips, have the vehicle inspected by a NISSAN dealer. You do not need to have your vehicle towed to the dealer.

- Malfunction indicator lamp blinking — An engine misfire has been detected which may damage the emission control system. To reduce or avoid emission control system damage:
  - do not drive at speeds above 45 MPH (72 km/h).
  - avoid hard acceleration or deceleration.
  - avoid steep uphill grades.
  - if possible, reduce the amount of cargo being hauled or towed.

The malfunction indicator lamp may stop blinking and come on steady. Have the vehicle inspected by a NISSAN dealer. You do not need to have your vehicle towed to the dealer.

⚠ CAUTION

Continued vehicle operation without having the emission control system checked and repaired as necessary could lead to poor driveability, reduced fuel economy, and possible damage to the emission control system.

SLIP Slip indicator light (if so equipped)

This indicator light will blink when the traction control system is limiting wheel spin. Slippery road conditions may exist if the slip indicator blinks on. If this happens, adjust your driving accordingly.

The slip indicator light also comes on when you turn the ignition key to the ON position. The light will turn off after about 2 seconds if the system is operational. If the light does not come on or does not go off, have the traction control system checked by a NISSAN dealer.

TCS OFF Traction control system off indicator light (if so equipped)

This indicator light comes on when the traction control off switch is pushed to OFF. This indicates the traction control system is not operating.

Push the traction control off switch again or restart the engine and the system will operate normally. See “Traction control system (TCS)” in the “Starting and driving” section of this manual.

The traction control light also comes on when you turn the ignition key to the ON position. The light will turn off after about 2 seconds if the traction control system (TCS) is operational. If the light stays on or comes on along with the SLIP indicator light while you are driving, have the traction control system checked by a NISSAN dealer.

While the traction control system is operating, you might feel slight vibration or hear the system working when starting the vehicle or accelerating, but this is normal.

Turn signal/hazard indicator lights

The appropriate light flashes when the turn signal switch is activated.

Both lights flash when the hazard switch is turned on.

AUDIBLE REMINDERS

Brake pad wear warning

The disc brake pads have audible wear warnings. When a brake pad requires replacement, it makes a high pitched scraping sound when the vehicle is in motion, whether or not the brake pedal is depressed. Have the brakes checked as soon as possible if the warning sound is heard.

Key reminder chime

A chime sounds if the driver’s door is opened while the key is left in the ignition switch. Remove the key and take it with you when leaving the vehicle.

Light reminder chime

With the ignition switch in the OFF position, a chime sounds when the driver's door is opened if the headlights or parking lights are on.

Turn the headlight control switch off before leaving the vehicle.

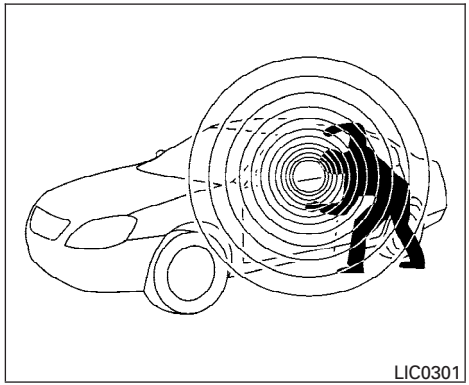

Your vehicle may have two types of security systems:

- Vehicle security system (if so equipped)
- NISSAN Vehicle Immobilizer System—NVIS

VEHICLE SECURITY SYSTEM (if so equipped)

The vehicle security system provides visual and audible alarm signals if someone opens the doors or trunk lid when the system is armed. It is not, however, a motion detection type system that activates when a vehicle is moved or when a vibration occurs.

The system helps deter vehicle theft but cannot prevent it, nor can it prevent the theft of interior or exterior vehicle components in all situations. Always secure your vehicle even if parking for a brief period. Never leave your keys in the ignition, and always lock the vehicle when unattended. Be aware of your surroundings, and park in secure, well-lit areas whenever possible.

Many devices offering additional protection, such as component locks, identification markers, and tracking systems, are available at auto supply stores and specialty shops. Your NISSAN dealer may also offer such equipment. Check with your insurance company to see if you may be eligible for discounts for various theft protection features.

How to arm the vehicle security system

1. Close all windows. **(The system can be armed even if the windows are open.)**
2. Remove the key from the ignition switch.
3. Close the trunk lid and all doors. Lock all doors. The doors can be locked with the key, power door lock switch (if the door is opened, locked, and then closed) or with the keyfob.

Keyfob operation:

- Push the button on the keyfob. All doors lock. The hazard lights flash twice and the horn beeps once to indicate all doors are locked.
- When the button is pushed with all doors locked, the hazard lights flash twice and the horn beeps once as a reminder that the doors are already locked.

For vehicles with navigation system, see "Vehicle electronic systems" in the "Display screen, heater, air conditioner and audio systems" section later in this manual. For vehicles without navigation system, see "Silencing the horn beep feature" in the "Predriving checks and adjustments" section later in this manual.

4. Confirm that the security indicator light comes on. The security light stays on for about 30 seconds. The vehicle security system is now pre-armed. After about 30 seconds the vehicle security system automatically shifts into the armed phase. The security light begins to flash once every 3 seconds. If, during the 30-second pre-arm time period, the door is unlocked by the key or the keyfob, or the ignition key is turned to ACC or ON, the system will not arm.

- **If the key is turned slowly when locking the door, the system may not arm. Furthermore, if the key is turned beyond the vertical position toward the unlock position to remove the key, the system may be disarmed when the key is removed. If the indicator light fails to glow for 30 seconds, unlock the door once and lock it again.**
- **Even when the driver and/or passengers are in the vehicle, the system will arm with all doors and trunk lid closed and locked with the ignition key in the OFF position.**

Vehicle security system activation

The vehicle security system will give the following alarm:

- The headlights blink and the horn sounds intermittently.
- The alarm automatically turns off after approximately 50 seconds. However, the alarm reactivates if the vehicle is tampered with again. The alarm can be shut off by unlocking a door or trunk lid with the key, or by pressing the button on the keyfob.

The alarm is activated by:

- opening the door or trunk lid without using the key or keyfob (even if the door is unlocked by releasing the door inside lock switch).

How to stop an activated alarm

The alarm stops only by unlocking a door or the trunk lid with the key, or by pressing the button on the keyfob.

NISSAN VEHICLE IMMOBILIZER SYSTEM (NVIS)

The NISSAN Vehicle Immobilizer System (NVIS) will not allow the engine to start without the use of a registered NVIS key.

If the engine fails to start using a registered NVIS key (for example, when interference is caused by another NVIS key, an automated toll road device or automatic payment device on the key ring), restart the engine using the following procedures:

1. Leave the ignition switch in the ON position for approximately 5 seconds.
2. Turn the ignition switch to the OFF or LOCK position, and wait approximately 10 seconds.
3. Repeat steps 1 and 2.

4. Restart the engine while holding the device (which may have caused the interference) separate from the registered NVIS key.

If the no start condition re-occurs, NISSAN recommends placing the registered NVIS key on a separate key ring to avoid interference from other devices.

Statement related to Section 15 of FCC Rules for NISSAN Vehicle Immobilizer System (CONT ASSY — IMMOBILIZER, ANT ASSY — IMMOBILIZER)

This device complies with part 15 of the FCC Rules and RSS-210 of Industry Canada. Operation is subject to the following two conditions;

(1) This device may not cause harmful interference, and (2) this device must accept any interference received, including interference that may cause undesired operation of the device.

CHANGES OR MODIFICATIONS NOT EXPRESSLY APPROVED BY THE MANUFACTURER FOR COMPLIANCE COULD VOID THE USER'S AUTHORITY TO OPERATE THE EQUIPMENT.

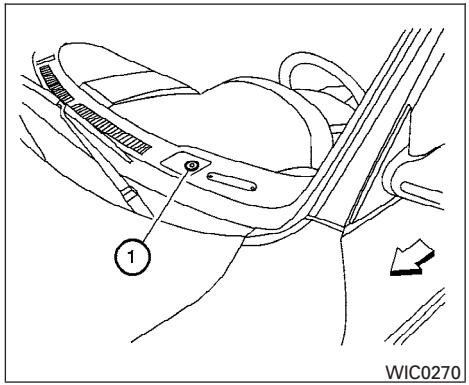

Security indicator light (NISSAN Vehicle Immobilizer System)

The security indicator light ① is located on the instrument panel near the windshield.

The security indicator light blinks every 3 seconds whenever the ignition switch is in the LOCK, OFF or ACC position. This function indicates the NISSAN Vehicle Immobilizer System (NVIS) is operational.

If the NVIS is malfunctioning, the light will remain on while the ignition key is in the ON position.

If the light still remains on and/or the engine will not start, see a NISSAN dealer for NVIS service as soon as possible. Please bring all NVIS keys that you have when visiting your NISSAN dealer for service.

WINDSHIELD WIPER AND WASHER SWITCH

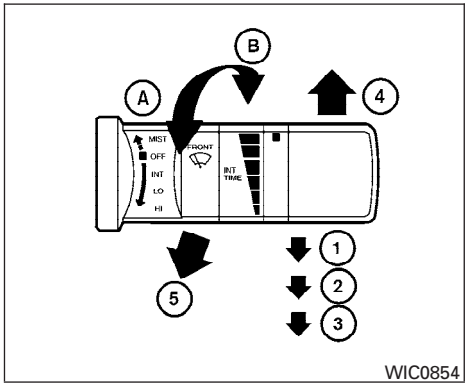

SWITCH OPERATION

The windshield wiper and washer switch operates when the ignition key is in the ON position.

Push the lever down to operate the wiper at the following speed:

① Intermittent — intermittent operation can be adjusted by turning the knob toward Ⓐ (Slower) or Ⓑ (Faster). Also, for vehicles equipped with speed dependent wipers, the intermittent operation speed varies in accordance with the vehicle speed. (For example, when the vehicle speed is high, the intermittent operation speed will be faster.)

NOTE:

You can turn on or turn off the speed dependent wiper function (if so equipped). Refer to "Vehicle electronic systems" (vehicles with navigation system) in the "Display screen, heater, air conditioner and audio systems" section later in this manual.

② Low — continuous low speed operation

③ High — continuous high speed operation

Push the lever up ④ to have one sweep operation of the wiper.

Pull the lever toward you ⑤ to operate the washer. The wiper will also operate several times.

⚠ WARNING

In freezing temperatures the washer solution may freeze on the windshield and obscure your vision which may lead to an accident. Warm the windshield with the defroster before you wash the windshield.

⚠ CAUTION

- **Do not operate the washer continuously for more than 30 seconds.**
- **Do not operate the washer if the reservoir tank is empty.**
- **Do not fill the window washer reservoir tank with washer fluid concentrates at full strength. Some methyl alcohol based washer fluid concentrates may permanently stain the grille if spilled while filling the window washer reservoir tank.**
- **Pre-mix washer fluid concentrates with water to the manufacturer's recommended levels before pouring the fluid into the window washer reservoir tank. Do not use the window washer reservoir tank to mix the washer fluid concentrate and water.**

REAR WINDOW AND OUTSIDE MIRROR (if so equipped) DEFROSTER SWITCH

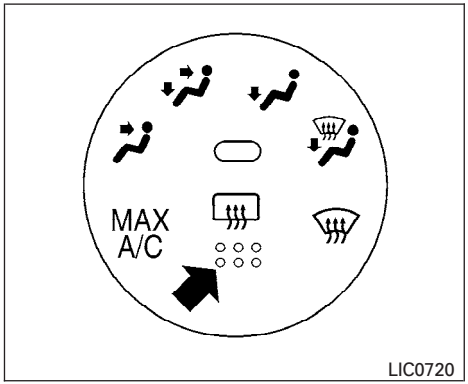

Type A

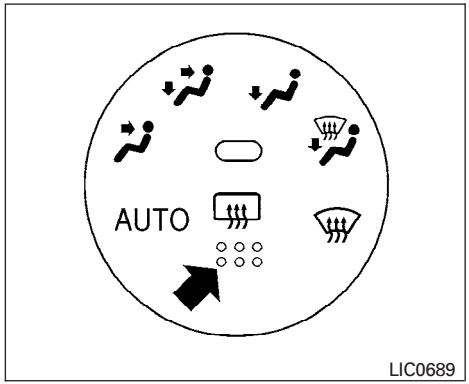

Type B

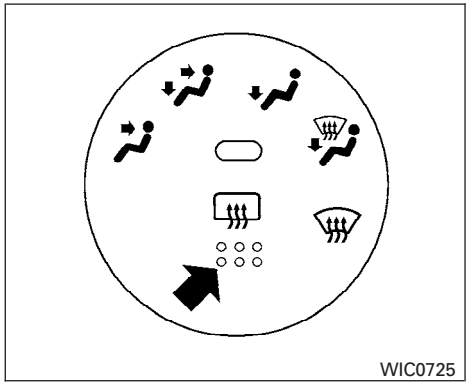

Type C

To defrost the rear window glass and outside mirrors (if so equipped), start the engine and push the rear window defroster switch on. The rear window defroster indicator light on the switch comes on. Push the switch again to turn the defroster off.

The rear window defroster automatically turns off after approximately 15 minutes.

⚠ CAUTION

When cleaning the inner side of the rear window, be careful not to scratch or damage the rear window defroster.

NOTE:

The top few rows of wires on the rear window are not part of the rear window defroster system. These wires make up the antenna for the audio system.

XENON HEADLIGHTS (if so equipped)

WARNING

HIGH VOLTAGE

- **When xenon headlights are on, they produce a high voltage. To prevent an electric shock, never attempt to modify or disassemble. Always have your xenon headlights replaced at a NISSAN dealer.**
- **Xenon headlights provide considerably more light than conventional headlights. If they are not correctly aimed, they might temporarily blind an oncoming driver or the driver ahead of you and cause a serious accident. If headlights are not aimed correctly, immediately take your vehicle to a NISSAN dealer and have the headlights adjusted correctly.**

When the xenon headlight is initially turned on, its brightness or color varies slightly. However, the color and brightness will soon stabilize.

- **The life of xenon headlights will be shortened by frequent on-off operation. It is generally desirable not to turn off the headlights for short intervals (for example, when the vehicle stops at a traffic signal). Even when the daytime running lights are active (Canada only), the xenon headlights do not turn on. This way the life of the xenon headlights is not reduced.**
- **If the xenon headlight bulb is close to burning out, the brightness will drastically decrease, the light will start blinking, or the color of the light will become reddish. If one or more of the above signs appear, contact a NISSAN dealer.**

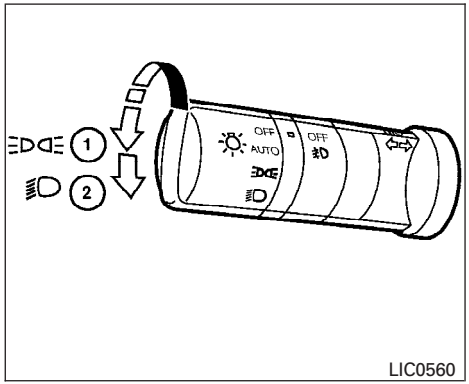

Type A

HEADLIGHT CONTROL SWITCH

Lighting

① When turning the switch to the position, the front parking, tail, license plate and instrument panel lights come on.

② When turning the switch to the position, the headlights come on and all the other lights remain on.

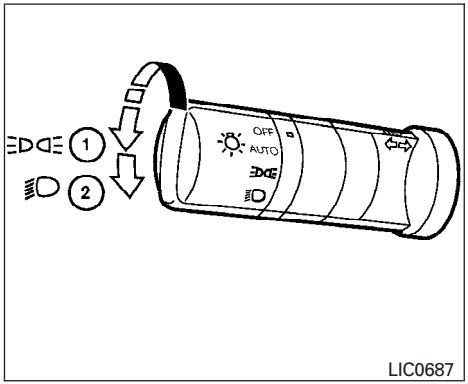

Type B

CAUTION

Use the headlights with the engine running to avoid discharging the vehicle battery.

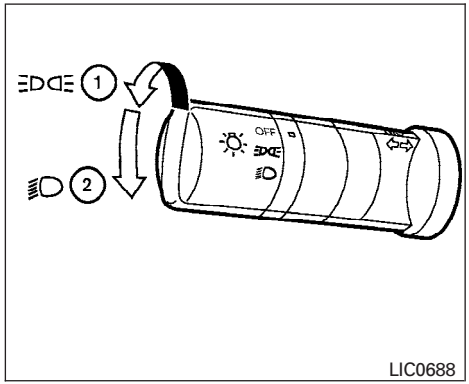

Type C

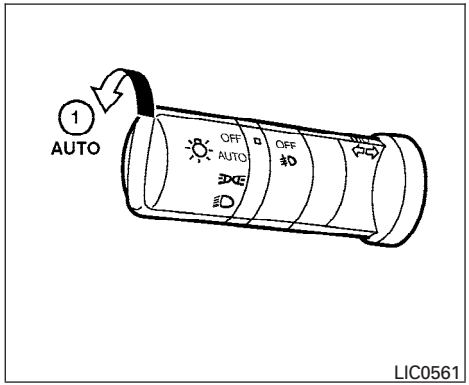

Autolight system (if so equipped)

The autolight system allows the headlights to be set so they turn on and off automatically. The autolight system can:

- Turn on the headlights, front parking, tail, license plate and instrument panel lights automatically when it is dark.
- Turn off all the lights when it is light.
- Keep all the lights on for 45 seconds after you turn the key to OFF and all doors are closed.

NOTE:

Autolight activation sensitivity and the time delay for autolight shutoff is adjustable for vehicles with navigation system. See "Vehicle electronic systems" in the "Display screen, heater, air conditioner and audio systems" section later in this manual.

To turn on the autolight system:

1. Turn the headlight switch to the AUTO position ①.
2. Turn the ignition key to ON.
3. The autolight system automatically turns the headlights on and off.

Initially, if the ignition switch is turned OFF and a door is opened and left open, the headlights remain ON for 5 minutes. If another door is opened during the 5 minutes, then the 5 minute timer is reset.

To turn the autolight system off, turn the switch to the OFF, , or position.

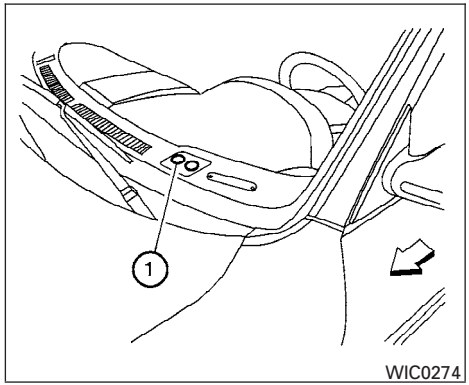

Be sure you do not put anything on top of the autolight sensor ① located on the top side of the instrument panel. The autolight sensor controls the autolight; if it is covered, the autolight sensor reacts as if it is dark out and the headlights will illuminate. If this occurs while parked with the engine off and the key in the ON position, your vehicle's battery could become discharged.

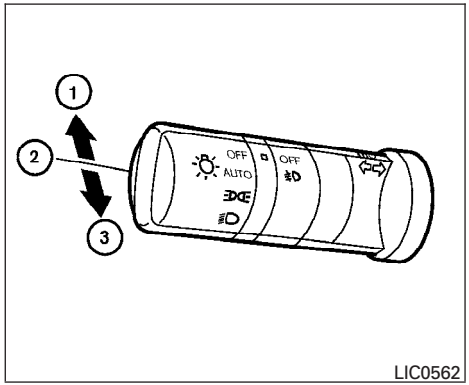

Headlight beam select

① To select the high beam function, push the lever forward. The high beam lights come on and the light illuminates.

② Pull the lever back to select the low beam.

③ Pulling and releasing the lever flashes the headlight high beams on and off.

Battery saver system

If the ignition switch is turned OFF while the headlight switch is in the or position, the headlights will turn off after 5 minutes.

⚠ CAUTION

Even though the battery saver feature automatically turns off the headlights after a period of time, you should turn the headlight switch to the OFF position when the engine is not running to avoid discharging the vehicle battery.

DAYTIME RUNNING LIGHT SYSTEM (Canada only)

The headlights automatically illuminate at a reduced intensity when the engine is started with the parking brake released. The daytime running lights operate with the headlight switch in the OFF position or in the position. Turn the headlight switch to the position for full illumination when driving at night.

If the parking brake is applied before the engine is started, the daytime running lights do not illuminate. The daytime running lights illuminate when the parking brake is released. The daytime running lights will remain on until the ignition switch is turned off.

⚠ WARNING

When the daytime running light system is active, tail lights on your vehicle are not on. It is necessary at dusk to turn on your headlights. Failure to do so could cause an accident injuring yourself and others.

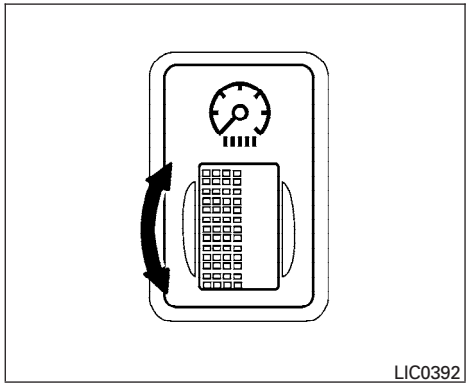

INSTRUMENT BRIGHTNESS CONTROL

The instrument cluster illuminates when the ignition switch is in ON position.

The instrument brightness control operates when the headlight control switch is in the AUTO, or position.

Turn the control to adjust the brightness of instrument panel lights when driving at night.

The instrument brightness control will not adjust the brightness when the headlights or parking lights are off.

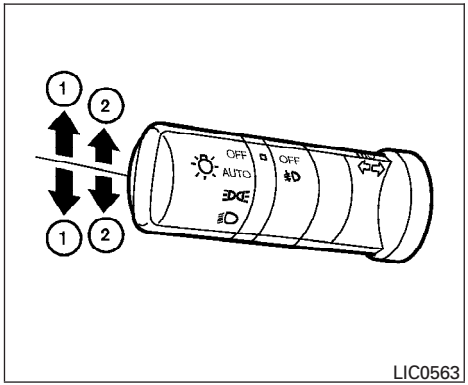

LIC0563

TURN SIGNAL SWITCH

Turn signal

① Move the lever up or down to signal the turning direction. When the turn is completed, the turn signals cancel automatically.

Lane change signal

② To signal a lane change, move the lever up or down to the point where the indicator light begins to flash, but the lever does not latch.

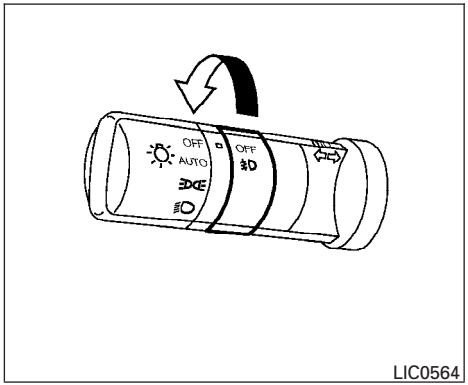

LIC0564

FOG LIGHT SWITCH (if so equipped)

To turn the fog lights on, turn the headlight switch to the position, then turn the fog light switch to the position. To turn them off, turn the fog light switch to the OFF position.

The headlights must be on and the low beams selected for the fog lights to operate. The fog lights automatically turn off when the high beam headlights are selected.

HAZARD WARNING FLASHER SWITCH

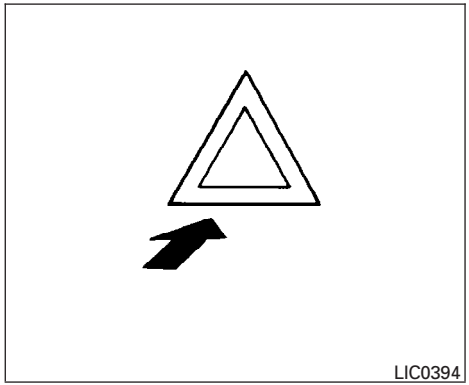
LIC0394

Push the switch on to warn other drivers when you must stop or park under emergency conditions. All turn signal lights flash.

⚠ WARNING

- **If stopping for an emergency, be sure to move the vehicle well off the road.**
- **Do not use the hazard warning flashers while moving on the highway unless unusual circumstances force you to drive so slowly that your vehicle might become a hazard to other traffic.**

- **Turn signals do not work when the hazard warning flasher lights are on.**

The flashers will operate with the ignition switch in any position.

Some state laws may prohibit the use of the hazard warning flasher switch while driving.

HORN

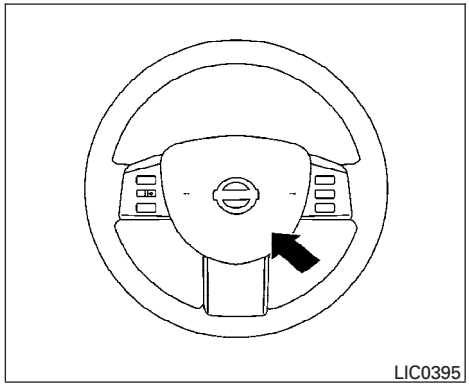
LIC0395

To sound the horn, push the center pad area of the steering wheel.

⚠ WARNING

Do not disassemble the horn. Doing so could affect proper operation of the supplemental front air bag system. Tampering with the supplemental front air bag system may result in serious personal injury.

HEATED SEAT (if so equipped)

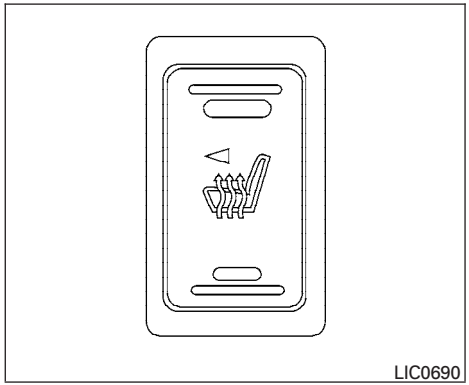
LIC0690

The front seats are warmed by built-in heaters (if so equipped). The switches are located on the center console.

1. Start the engine.
2. Push the low or high position of the switch, as desired, depending on the temperature. The indicator light in the switch will illuminate.

   The heater is controlled by a thermostat, automatically turning the heater on and off. The indicator light will remain on as long as the switch is on.

3. When the seat is warmed or before you leave the vehicle, be sure to turn the switch off.

⚠ CAUTION

- **Do not use the seat heater for extended periods or when no one is using the seat.**
- **Do not put anything on the seat which insulates heat, such as a blanket, cushion, seat cover, etc. Otherwise, the seat may become overheated.**
- **Do not place anything hard or heavy on the seat or pierce it with a pin or similar object. This may result in damage to the heater.**
- **Any liquid spilled on the heated seat should be removed immediately with a dry cloth.**
- **When cleaning the seat, never use gasoline, benzine, thinner, or any similar materials.**
- **If any abnormalities are found or the heated seat does not operate, turn the switch off and have the system checked by your NISSAN dealer.**
- **The battery could run down if the seat heater is operated while the engine is not running.**

TRACTION CONTROL SYSTEM (TCS) OFF SWITCH (if so equipped)

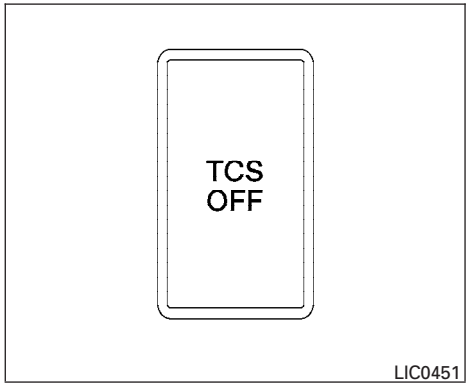

The vehicle should be driven with the Traction Control System (TCS) on for most driving conditions.

If the vehicle is stuck in mud or snow, the TCS reduces the engine output to reduce wheel spin. The engine speed will be reduced even if the accelerator is depressed to the floor. If maximum engine power is needed to free a stuck vehicle, turn the TCS off.

To turn off the TCS, push the TCS OFF switch. The TCS OFF indicator will come on.

Push the “TCS OFF” switch again or restart the engine to turn ON the system. See “Traction control system (TCS)” in the “Starting and driving” section.

POWER OUTLET

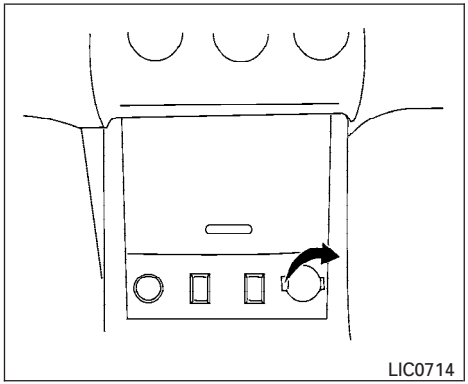

Instrument panel (if so equipped)

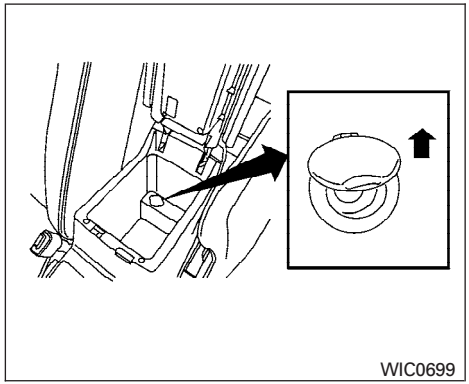

Console

The power outlets are for powering electrical accessories such as cellular telephones. They are rated at 12 volt, 120W (10A) maximum.

⚠ CAUTION

- **The outlet and plug may be hot during or immediately after use.**
- **Only certain power outlets are designed for use with a cigarette lighter unit. Do not use any other power outlet for an accessory lighter. See your NISSAN dealer for additional information.**
- **Do not use with accessories that exceed a 12 volt, 120W (10A) power draw. Do not use double adapters or more than one electrical accessory.**
- **Use power outlets with the engine running to avoid discharging the vehicle battery.**
- **Avoid using power outlets when the air conditioner, headlights or rear window defroster is on.**
- **Before inserting or disconnecting a plug, be sure the electrical accessory being used is turned OFF.**
- **Push the plug in as far as it will go. If good contact is not made, the plug may overheat or the internal temperature fuse may open.**
- **When not in use, be sure to close the cap. Do not allow water to contact the outlet.**

CIGARETTE LIGHTER AND ASHTRAY (if so equipped)

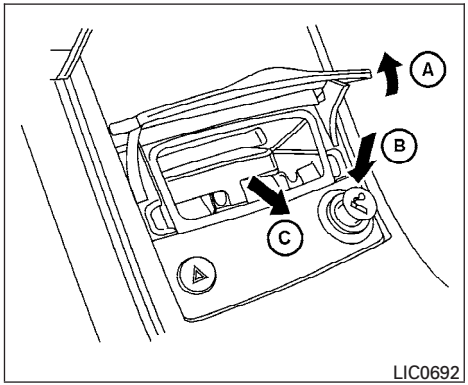

The cigarette lighter operates when the ignition switch is in the ACC or ON position.

Lift the lid Ⓐ to open.

Push the lighter Ⓑ in all the way. When the lighter is heated, it will spring out. Return the lighter to its original position after use.

Pull out the ashtray Ⓒ to remove it.

This power outlet can also be used for powering electrical accessories such as cellular telephones.

⚠ CAUTION

- **The cigarette lighter should not be used while driving so full attention may be given to vehicle operation.**
- **The outlet and plug may be hot during or immediately after use.**
- **Do not use any other power outlet for an accessory lighter.**
- **Do not use with accessories that exceed a 12 volt, 120W (10A) power draw. Do not use double adapters or more than one electrical accessory.**
- **Use power outlets with the engine running to avoid discharging the vehicle battery.**
- **Avoid using power outlets when the air conditioner, headlights or rear window defroster is on.**
- **Before inserting or disconnecting a plug, be sure the electrical accessory being used is turned OFF.**
- **Push the plug in as far as it will go. If good contact is not made, the plug may overheat or the internal temperature fuse may open.**
- **When not in use, be sure to close the cap. Do not allow water to contact the outlet.**

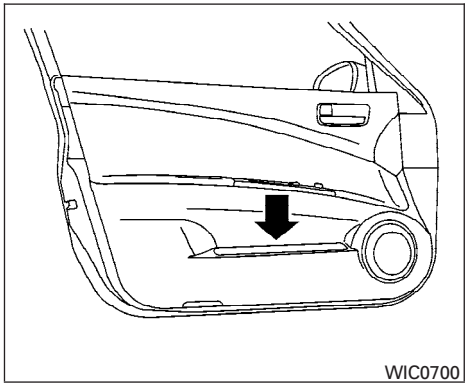

MAP POCKETS

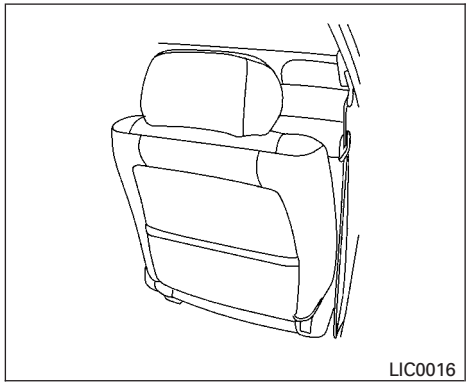

Type A

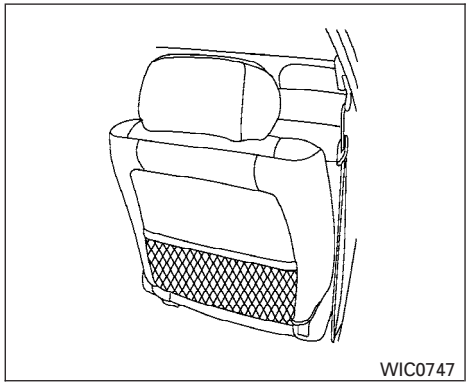

Type B

SEATBACK POCKETS (if so equipped)

The seatback pockets are located on the back of the driver's and passenger's seats. The pockets can be used to store maps.

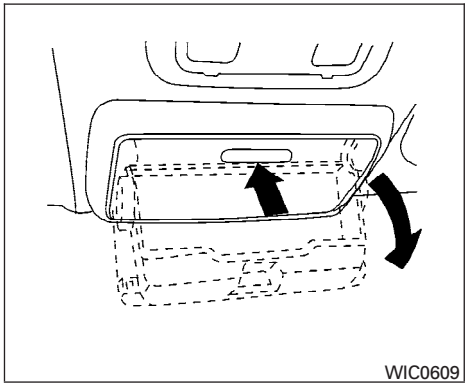

SUNGLASSES HOLDER

To open the sunglasses holder, push and release.

⚠ WARNING

- **The sunglasses holder should not be used while driving so full attention may be given to vehicle operation.**
- **Keep the sunglasses holder closed while driving to prevent an accident.**

⚠ CAUTION

- **Do not use for anything other than sunglasses.**
- **Do not leave sunglasses in the sunglasses holder while parking in direct sunlight. The heat may damage the sunglasses.**

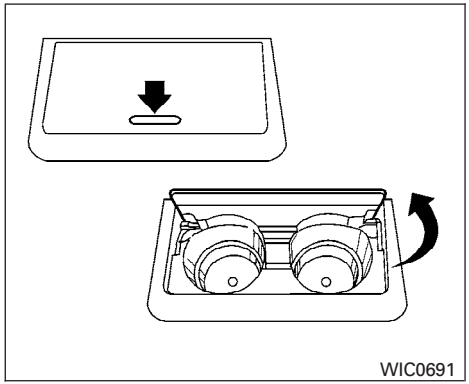

Front

CUP HOLDERS

To open the front cup holders, push the cup holder lid. To close, lower the cup holder lid and push down until it clicks in place.

The plastic insert may be removed for cleaning.

The rear cup holders are located in the fold-down armrest in the rear seat back.

The rubber insert may be removed for cleaning.

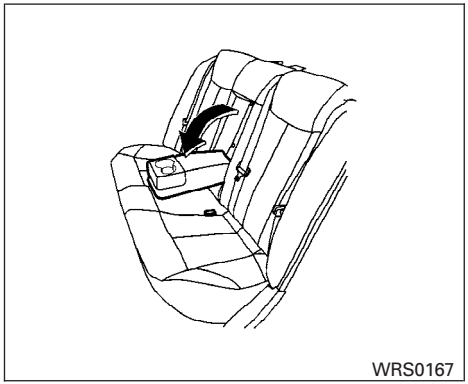

Rear

⚠ WARNING

The cup holder should not be used while driving so full attention may be given to vehicle operation.

⚠ CAUTION

- **Avoid abrupt starting and braking when the cup holder is being used to prevent spilling the drink. If the liquid is hot, it can scald you or your passenger.**
- **Use only soft cups in the cup holder. Hard objects can injure you in an accident.**

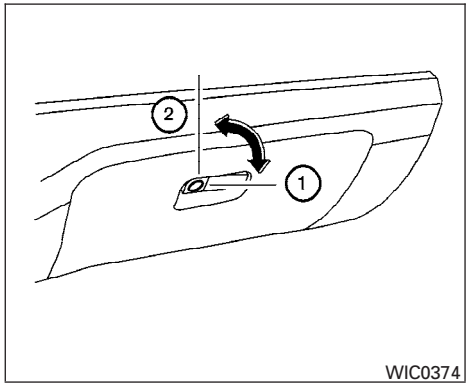

GLOVE BOX

Open the glove box by pulling the handle. Use the master key when locking ① or unlocking ② the glove box. The valet key cannot be used to lock or unlock the glove box.

⚠ WARNING

Keep glove box lid closed while driving to help prevent injury in an accident or a sudden stop.

CONSOLE BOX

⚠ WARNING

The center console box should not be used while driving so full attention may be given to vehicle operation.

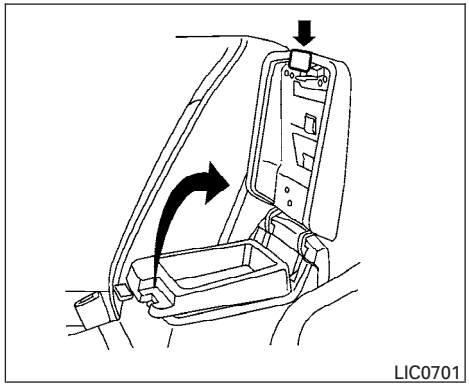

Upper half

Pull up on the driver's side latch to open the upper half of the console box. The felt mat may be removed for cleaning.

The upper half of the console box may be used for storage of cellular phones. An access hole is provided at the rear of the upper half of the console box for phone cord routing to the power outlet.

To route a phone cord to the power outlet:

1. Open the upper half of the console box.
2. Remove the felt mat, and then remove the cutout area from the mat.
3. Remove the access hole cover.
4. Install the felt mat.
5. Route the phone cord through the access hole and plug into the power outlet.

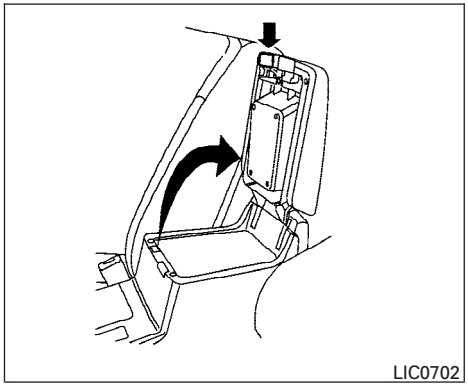

Lower half

Pull up on the passenger's side latch to open the lower half of the console box. A power outlet is located inside the console box and there is storage for compact discs.

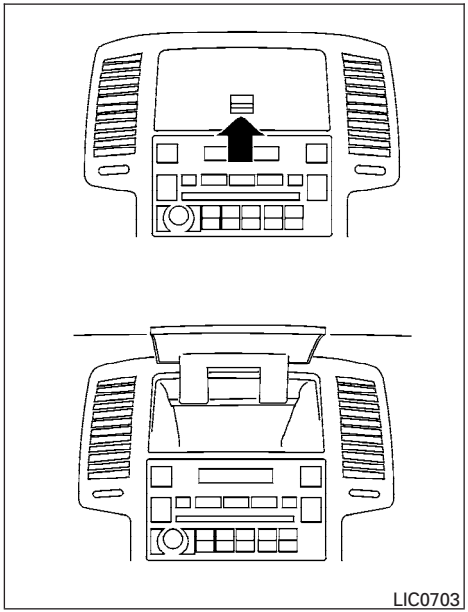

INSTRUMENT PANEL STORAGE (if so equipped)

To open the storage tray, push upward and release. The storage tray will automatically move to the open position.

- The inside of the storage tray can get hot. Do not place objects inside which can melt or be easily deformed.

⚠ WARNING

- **The storage tray should not be used while driving so full attention may be given to vehicle operation.**
- **Keep the tray lid closed while driving to help prevent contents from becoming projectiles causing injury in an accident or during a sudden stop.**

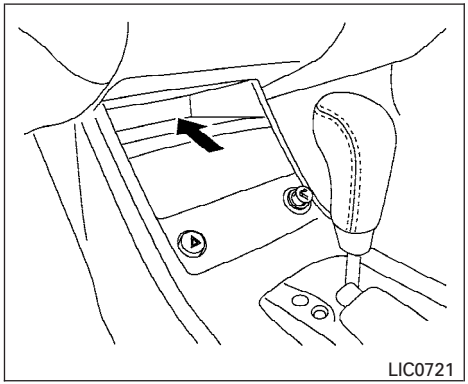

If so equipped

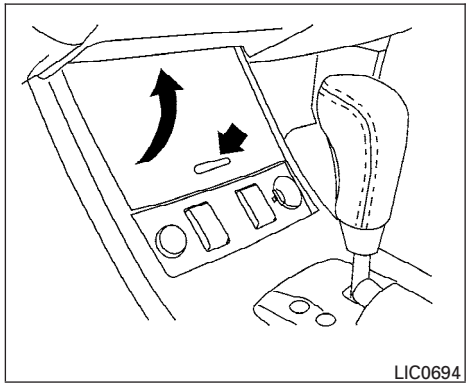

COVERED STORAGE BOX (if so equipped)

Push the bottom center of the lid to open.

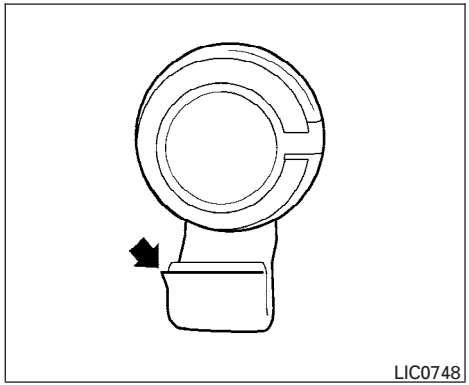

GROCERY HOOKS (if so equipped)

The grocery hooks are located in the trunk and can be used to hang a standard size plastic grocery bag.

⚠ CAUTION

Do not apply a total load of more than 20 lbs (9 kg) to a single grocery hook.

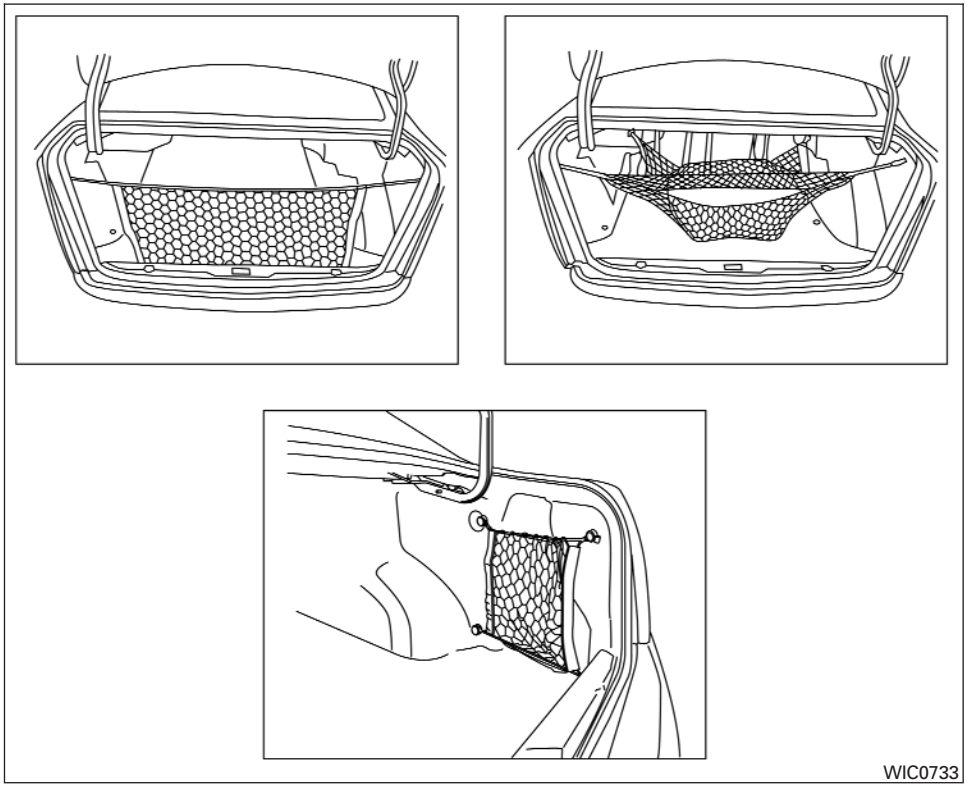

CARGO NET (if so equipped)

WARNING

- **Properly secure all cargo with ropes or straps to help prevent it from sliding or shifting. In a sudden stop or collision, unsecured cargo could cause personal injury.**
- **Be sure to secure all four hooks into the retainers. The cargo restrained in the net must not exceed 30 lbs. (13.6 kg) or the net may not stay secured.**

CAUTION

Do not strike the navigation system map DVD-ROM player (if so equipped) while loading the trunk and do not place heavy objects on the player. Doing so could cause improper operation or damage the system.

The cargo net helps keep packages in the cargo area from moving around while the vehicle is in motion.

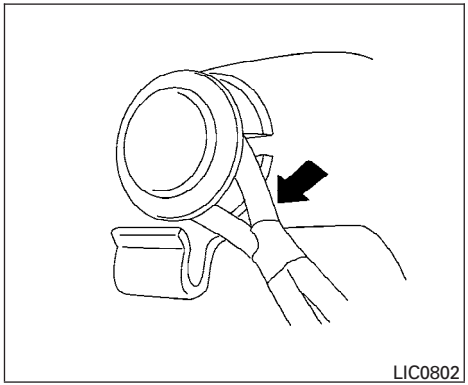

To install the cargo net, attach the net to the retainers.

To remove the cargo net, detach the net from the cargo net retainers.

POWER WINDOWS

⚠ WARNING

- **Make sure that all passengers have their hands, etc. inside the vehicle while it is in motion and before closing the windows. Use the window lock switch to prevent unexpected use of the power windows.**
- **Do not leave children unattended inside the vehicle. They could unknowingly activate switches or controls and become trapped in a window. Unattended children could become involved in serious accidents.**

The power windows operate when the ignition switch is in the ON position, or for about 45 seconds after the ignition switch is turned to the OFF position. If the driver's or passenger's door is opened during this period of about 45 seconds, power to the windows is canceled.

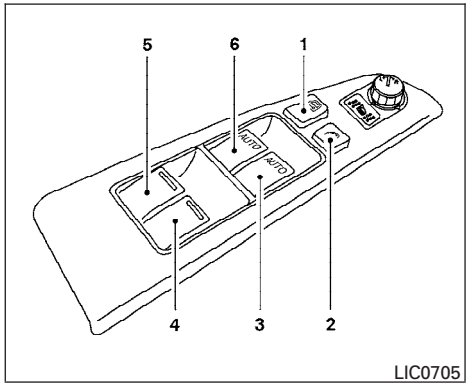

1. Power door lock switch
2. Window lock button
3. Front passenger side (automatic switch, if so equipped)
4. Right rear passenger side
5. Left rear passenger side
6. Driver side automatic switch

Driver's side power window switch

The driver's side control panel is equipped with switches to open or close all of the windows.

To open a window, push the switch and hold it down. To close a window, pull the switch up. To stop the opening or closing function at any time, simply release the switch.

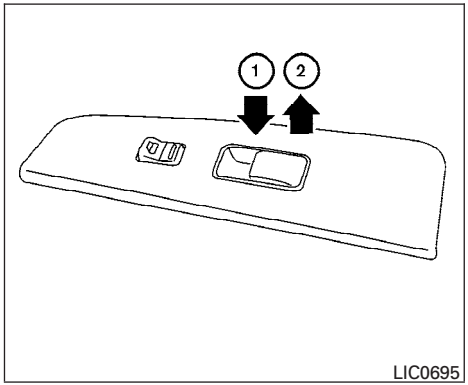

Front passenger power window switch

The passenger window switch operates only the corresponding passenger window. To open the window, push the switch and hold it down ①. To close the window, pull the switch up ②.

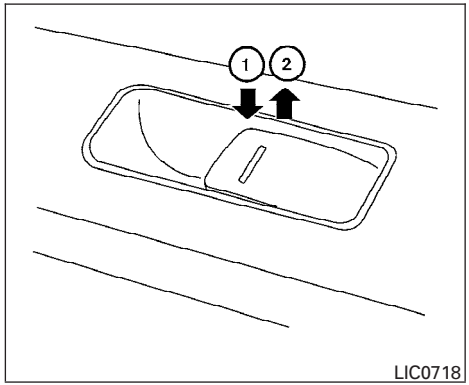

Rear power window switch

The rear passenger window switches open or close only the corresponding passenger window. To open the window, push the switch and hold it down ①. To close the window, pull the switch up ②.

Locking passengers' windows

When the window lock button is depressed, only the driver side window can be opened or closed. Push it again to cancel the window lock function.

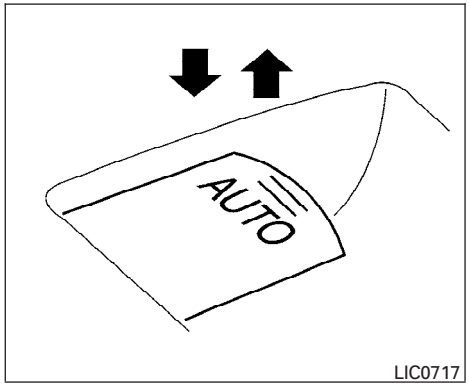

Automatic operation

To fully open a window equipped with automatic operation, press the window switch down (only driver's side shown) to the second detent and release it; it need not be held. The window automatically opens all the way. To stop the window, lift the switch up while the window is opening.

To fully close a window equipped with automatic operation, pull the switch up to the second detent and release it; it need not be held.

Auto-reverse function

If the control unit detects something caught in the window as it is closing, the window will be immediately lowered.

The auto-reverse function can be activated when the window is closed by automatic operation when the ignition key is in the ON position or for 45 seconds after the ignition key is turned to the OFF position.

Depending on the environment or driving conditions, the auto-reverse function may be activated if an impact or load similar to something being caught in the window occurs.

⚠ WARNING

There are some small distances immediately before the closed position which cannot be detected. Make sure that all passengers have their hands, etc., inside the vehicle before closing the window.

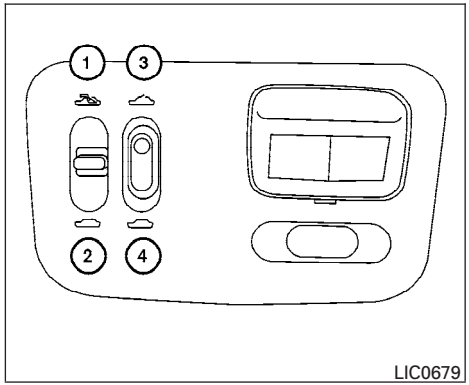

AUTOMATIC SUNROOF

The sunroof will only operate when the ignition key is in the ON position. The automatic sunroof is operational for about 45 seconds, even if the ignition key is turned to the ACC or OFF position. If the driver's door or the front passenger's door is opened during this period of about 45 seconds, power to the sunroof is canceled.

Sliding the sunroof

To fully open the sunroof, push the switch toward the position ①.

To fully close the sunroof, push and hold the switch toward the position ②.

To open the sunroof part way, push the switch in any direction while the sunroof is sliding open to stop it in the desired position.

To close the sunroof part way, push and hold the switch until the sunroof is in the desired position.

Tilting the sunroof

To tilt the sunroof up, push the tilt switch to the position ③.

To tilt the sunroof down, push and hold the tilt switch to the position ④.

Restarting the sunroof sliding switch

The sliding switch will become inoperable after the battery terminal is disconnected, the electrical supply interrupted and/or some abnormality detected. Use the following reset procedure to return sunroof operation to normal.

1. From any sunroof position (fully open, partially open, closed, partially vented or vented), push and hold the tilt switch toward the position ③ until the sunroof vents in the full-up position.

   The sunroof should now operate normally.

⚠ WARNING

- **In an accident you could be thrown from the vehicle through an open sunroof. Always use seat belts and child restraints.**
- **Do not allow anyone to stand up or extend any portion of their body out of the sunroof opening while the vehicle is in motion or while the sunroof is closing.**

⚠ CAUTION

- **Remove water drops, snow, ice or sand from the sunroof before opening.**
- **Do not place heavy objects on the sunroof or surrounding area.**

Sunshade

Open and close the sunshade by sliding it forward or backward.

If the sunroof does not close

Have your NISSAN dealer check and repair the sunroof.

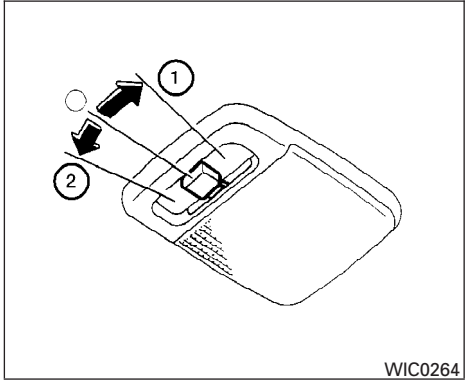

The interior light has a three-position switch and operates regardless of ignition switch position.

When the switch is in the ON position ①, the interior lights illuminate, regardless of door position. The lights will go off after about 30 minutes unless the ignition key is in the ACC or ON position.

When the switch is in the center O position, the interior lights will stay on for about 30 seconds when:

- The doors are unlocked by the keyfob (if so equipped), a key or the power door lock switch while all doors are closed and the ignition switch is in the OFF position.
- The driver's door is opened and then closed while the key is removed from the ignition switch.
- The key is removed from the ignition switch while all doors are closed.

The lights will turn off while the 30 second timer is activated when:

- The driver's door is locked by the keyfob (if so equipped), a key, or the power door lock switch.
- The ignition switch is turned ON.

When the switch is in the OFF position ②, the interior lights do not illuminate, regardless of door position.

The lights will turn off automatically after 30 minutes while doors are open to prevent the battery from becoming discharged.

MAP LIGHTS

NOTE:

The door step lights illuminate when the driver and passenger doors are open regardless of the interior light switch position. These lights will turn off automatically after about 30 minutes while doors are open to prevent the battery from becoming discharged.

⚠ CAUTION

Do not use for extended periods of time with the engine stopped. This could result in a discharged battery.

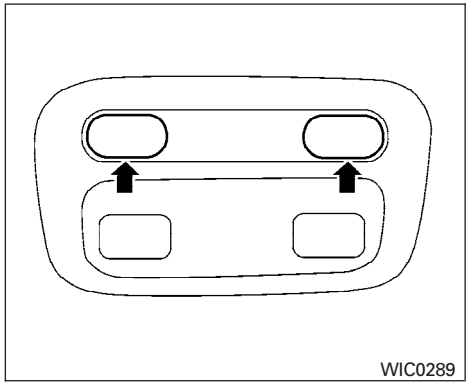

Models without sunroof

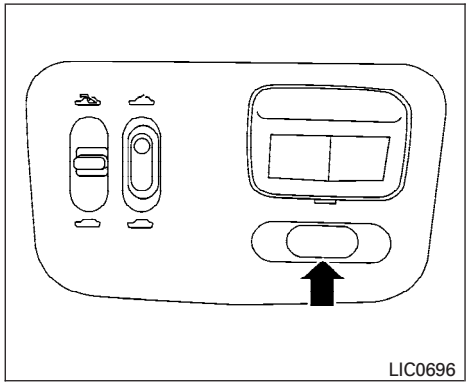

Models with sunroof

To turn the map lights on, press the switches. To turn them off, press the switches again.

⚠ CAUTION

Do not use for extended periods of time with the engine stopped. This could result in a discharged battery.

TRUNK LIGHT

The light illuminates when the trunk lid is opened. When the trunk lid is closed, the light goes off.

The light will go off after about 30 minutes if the trunk lid is left open, unless the ignition key is in the ACC or ON position.

For bulb replacement procedures, refer to “Exterior and interior lights” in the “Maintenance and do-it-yourself” section of this manual.

HOMELINK® UNIVERSAL TRANSCEIVER (if so equipped)

The HomeLink® Universal Transceiver provides a convenient way to consolidate the functions of up to three individual hand-held transmitters into one built-in device.

HomeLink® Universal Transceiver:

- Will operate most Radio Frequency (RF) devices such as garage doors, gates, home and office lighting, entry door locks and security systems.
- Is powered by your vehicle’s battery. No separate batteries are required. If the vehicle’s battery is discharged or is disconnected, HomeLink® will retain all programming.

Once the HomeLink® Universal Transceiver is programmed, retain the original transmitter for future programming procedures (Example: new vehicle purchases). Upon sale of the vehicle, the programmed HomeLink® Universal Transceiver buttons should be erased for security purposes. For additional information refer to “Programming HomeLink®” later in this section.

⚠ WARNING

- **Do not use the HomeLink® Universal Transceiver with any garage door opener that lacks safety stop and reverse features as required by federal safety standards. (These standards became effective for opener models manufactured after April 1, 1982). A garage door opener which cannot detect an object in the path of a closing garage door and then automatically stop and reverse, does not meet current federal safety standards. Using a garage door opener without these features increases the risk of serious injury or death.**
- **During the programming procedure your garage door or security gate will open and close (if the transmitter is within range). Make sure that people or objects are clear of the garage door, gate, etc. that you are programming.**
- **Your vehicle’s engine should be turned off while programming the HomeLink® Universal Transceiver.**

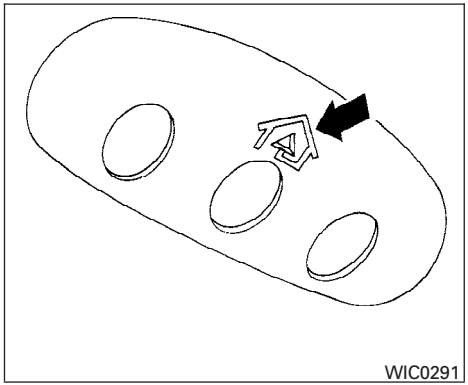

PROGRAMMING HOMELINK®

1. With the ignition key in the OFF position, press and hold the two outside buttons, and release when the indicator light begins to flash (after 20 seconds). This procedure erases the factory set default codes and does not have to be followed when programming additional hand-held transmitters.
2. Hold the end of the hand-held transmitter (from the device you wish to train) approximately 1 - 3 inches (26 - 76 mm) away from the surface of HomeLink® keeping the indicator light in view.
3. Using both hands, simultaneously push the hand-held transmitter button and the desired HomeLink® button. Do not release the buttons until step 4 has been completed.

NOTE:

Some garage door openers may require the procedures noted under "Canadian Programming."

4. The HomeLink® indicator will flash, first slowly and then rapidly. When the indicator light flashes rapidly, both buttons may be released. The rapid flashing light indicates the HomeLink® Universal Transceiver has been successfully programmed.

To program the remaining two buttons, follow steps 2 through 4.

If , after repeated attempts, you do not successfully program the HomeLink® Universal Transceiver to learn the signal of the hand-held transmitter, refer to "Rolling Code Programming" later in this section.

If you have any questions or are having difficulty programming your HomeLink® buttons, refer to the HomeLink® web site at: www.homelink.com or call 1-800-355-3515.

PROGRAMMING HOMELINK® FOR CANADIAN CUSTOMERS

Prior to 1992, D.O.C. regulations required hand-held transmitters to stop transmitting after 2 seconds. To program your hand-held transmitter to HomeLink®, continue to press and hold the HomeLink® button (note steps 2 - 4 under "Programming HomeLink®") while you press and repress ("cycle") your hand-held transmitters every 2 seconds until the indicator light flashes rapidly (indicating successful programming).

NOTE:

When programming a garage door opener, etc., it is advised to unplug the device during the "cycling" process to prevent possible damage to the garage door opener components.

OPERATING THE HOMELINK® UNIVERSAL TRANSCEIVER

The HomeLink® Universal Transceiver (once programmed) may now be used to activate the garage door, etc. To operate, simply press the appropriate programmed HomeLink® Universal Transceiver button. The red indicator light will illuminate while the signal is being transmitted.

PROGRAMMING TROUBLE-DIAGNOSIS

If the HomeLink® does not quickly learn the hand-held transmitter information:

- replace the hand-held transmitter batteries with new batteries.
- position the hand-held transmitter with its battery area facing away from the HomeLink® surface.
- press and hold both the HomeLink® and hand-held transmitter buttons without interruption.
- position the hand-held transmitter 1 - 3 inches (26 - 76 mm) away from the HomeLink® surface. Hold the transmitter in that position for up to 15 seconds. If HomeLink® is not programmed within that time, try holding the transmitter in another position – keeping the indicator light in view at all times.

If you continue to have programming difficulties, please contact the NISSAN Consumer Affairs Department. The phone numbers are located in the Foreword of this manual.

CLEARING THE PROGRAMMED INFORMATION

Individual buttons cannot be cleared. However, to clear all programming, press and hold the two outside buttons and release when the indicator light begins to flash (approximately 20 seconds).

ROLLING CODE PROGRAMMING

Rolling code garage door openers (or other rolling code devices) which are “code protected” and manufactured after 1996, may be determined by the following:

- Reference the garage door opener Owner’s Manual for verification.
- The hand-held transmitter appears to program the HomeLink® Universal Transceiver but does not activate the garage door.
- Press and hold the trained HomeLink® button. If the garage door opener has the rolling code feature, the HomeLink® indicator light will flash rapidly, then remains on after 2 seconds.

To program the HomeLink® Universal Transceiver to a garage door opener with the rolling code feature, follow these instructions after completing the “Programming HomeLink” (the aid of a second person may make the following procedures quicker and easier).

1. Locate the training button on the garage door opener motor unit. Exact location and color of the button may vary by garage door opener brand. If there is difficulty locating the training button, reference the garage door opener Owner’s Manual.
2. Press the training button on the garage door opener motor unit (which may activate a training light).

NOTE:

Following step 2, there are 30 seconds in which to initiate step 3.

3. Firmly press and release the programmed HomeLink® button a second time to complete the training process. (Some garage door openers may require you to do this procedure a third time to complete the training.)

The garage door opener should now recognize the HomeLink® Universal Transceiver and activate when the HomeLink® button is pressed. The remaining two buttons may now be programmed (if not yet programmed, follow steps 2 through 4 in the “Programming HomeLink®” procedures earlier in this section).

REPROGRAMMING A SINGLE HOMELINK® BUTTON

To reprogram a HomeLink® Universal Transceiver button, complete the following.

1. Press and hold the desired HomeLink® button. **Do not** release the button until step 4 has been completed.
2. When the indicator light begins to flash slowly (after 20 seconds), position the hand-held transmitter 1 - 3 inches (26 - 76 mm) away from the HomeLink® surface.
3. Press and hold the hand-held transmitter button.
4. The HomeLink® indicator light will flash, first slowly and then rapidly. When the indicator light begins to flash rapidly, release both buttons.

The HomeLink® Universal Transceiver button has now been reprogrammed. The new device can be activated by pushing the HomeLink® button that was just programmed. This procedure will not affect any other programmed HomeLink® buttons.

IF YOUR VEHICLE IS STOLEN

If your vehicle is stolen, you should change the codes of any non-rolling code device that has been programmed into HomeLink®. Consult the Owner's Manual of each device or call the manufacturer or dealer of those devices for additional information.

When your vehicle is recovered, you will need to reprogram the HomeLink® Universal Transceiver with your new transmitter information.

FCC Notice:

This device complies with FCC rules part 15. Operation is subject to the following two conditions: (1) This device may not cause harmful interference and (2) This device must accept any interference that may be received, including interference that may cause undesired operation.

This transmitter has been tested and complies with FCC and DOC/MDC rules. Changes or modifications not expressly approved by the party responsible for compliance could void the user's authority to operate the device.

DOC: ISTC 1763K1313

FCC I.D. CV2V67690

MEMO

3 Pre-driving checks and adjustments

Keys 3-2
Nissan vehicle immobilizer system (NVIS) keys 3-2
Doors 3-3
Locking with key. 3-3
Locking with inside lock knob 3-4
Locking with power door lock switch 3-4
Child safety rear door lock. 3-5
Remote keyless entry system (if so equipped). 3-5
How to use remote keyless entry system 3-6
Hood 3-9
Trunk lid 3-10
Opener operation. 3-10
Key operation (if so equipped) 3-11
Interior trunk lid release 3-11
Fuel filler lid 3-12
Opener operation. 3-12
Fuel filler cap. 3-12
Tilting telescopic steering column 3-13
Tilt operation 3-13
Telescopic operation 3-14
Sun visors 3-14
Vanity mirrors 3-14
Mirrors 3-15
Inside mirror 3-15
Automatic anti-glare inside mirror (if so equipped) 3-15
Outside mirrors 3-15

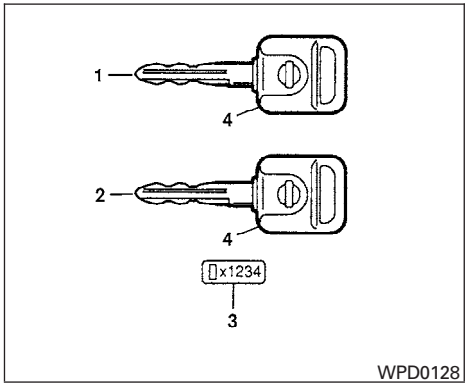

1. Two master keys (black) with transponder chip and chrome NISSAN brand symbol on one side
2. Valet key (black) with transponder chip (if so equipped)
3. Key number plate
4. Transponder chip

A key number plate is supplied with your keys. Record the key number and keep it in a safe place (such as your wallet), not in the vehicle. If you lose your keys, see a NISSAN dealer for duplicates by using the key number. NISSAN does not record key numbers so it is very important to keep track of your key number plate.

A key number is only necessary when you have lost all keys and do not have one to duplicate from. If you still have a key, your NISSAN dealer can duplicate it.

NISSAN VEHICLE IMMOBILIZER SYSTEM (NVIS) KEYS

You can only drive your vehicle using the master or valet keys which are registered to the NISSAN Vehicle Immobilizer System components in your vehicle. These keys have a transponder chip in the key head.

The master key can be used for all the locks.

The valet key cannot be used for the trunk lid, glove box lock or rear seatback lock.

To protect belongings when you leave a key with someone, give them the valet key only.

Never leave these keys in the vehicle.

Additional or replacement keys:

If you still have a key, the key number is not necessary when you need extra NISSAN Vehicle Immobilizer System keys. Your dealer can duplicate your existing key. As many as five NVIS keys can be used with one vehicle. You should bring all NVIS keys that you have to your NISSAN dealer for registration. This is because the registration process will erase the memory of all key codes previously registered into the NISSAN Vehicle Immobilizer System. After the registration process, these components will only recognize keys coded into the NISSAN Vehicle Immobilizer System (NVIS) during registration. Any key that is not given to your dealer at the time of registration will no longer be able to start your vehicle.

Do not allow the immobilizer system key, which contains an electrical transponder, to come into contact with salt water. This could affect system function.

⚠ WARNING

- **Always have the doors locked while driving. Along with the use of seat belts, this provides greater safety in the event of an accident by helping to prevent persons from being thrown from the vehicle. This also helps keep children and others from unintentionally opening the doors, and will help keep out intruders.**
- **Before opening any door, always look for and avoid oncoming traffic.**
- **Do not leave children unattended inside the vehicle. They could unknowingly activate switches or controls. Unattended children could become involved in serious accidents.**

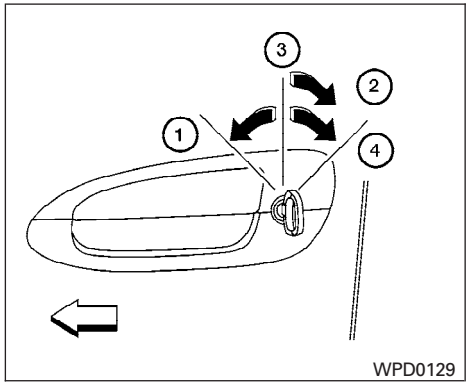

Driver's side

LOCKING WITH KEY

The power door lock system allows you to lock or unlock all doors at the same time.

Turning the key toward the front ① of the vehicle locks all doors.

Turning the key one time toward the rear ② of the vehicle unlocks that door. From that position, returning the key to neutral ③ (where the key can only be removed and inserted) and turning it toward the rear again within 5 seconds unlocks all doors ④.

Opening and closing windows (if so equipped)

The driver's door key operation allows you to open and close windows equipped with automatic operation at the same time.

- To open the windows, turn the driver's door key toward the rear of the vehicle for **longer than 1 second** after the door is unlocked.
- To close the windows, turn the driver's door key toward the front of the vehicle for **longer than 1 second** after the door is locked.

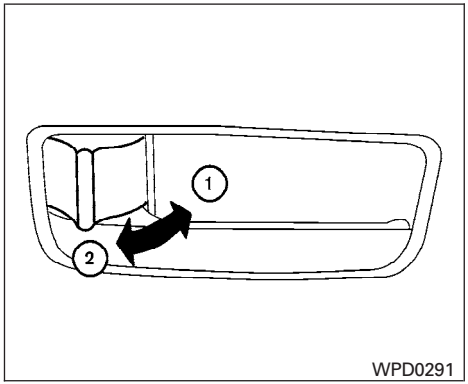

Inside lock

LOCKING WITH INSIDE LOCK KNOB

To lock the door without the key, move the inside lock to the lock position ①, then close the door.

To unlock the door without the key, move the inside lock knob to the unlock position ②.

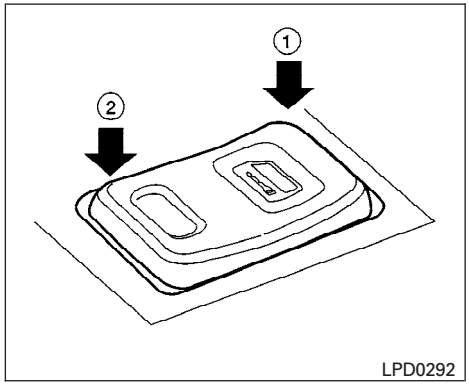

Door lock switch

LOCKING WITH POWER DOOR LOCK SWITCH

To lock all the doors without a key, push the door lock switch (driver or front passenger side), to the lock position ①. When locking the door this way, be certain not to leave the key inside the vehicle.

To unlock all the doors without a key, push the door lock switch (driver or front passenger side) to the unlock position ②.

Lockout protection

When the power door lock switch (driver's or front passenger's side) is moved to the lock position with the key in the ignition and any door open, all doors will lock and unlock automatically. This helps to prevent the keys from being accidently locked inside the vehicle.

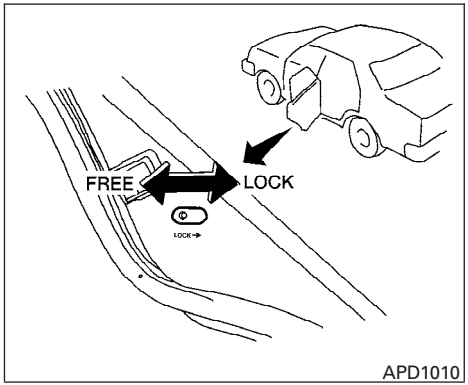

CHILD SAFETY REAR DOOR LOCK

Child safety locks help prevent the rear doors from being opened accidentally, especially when small children are in the vehicle.

The child safety lock levers are located on the edge of the rear doors.

When the lever is in the lock position, the door can be opened only from the outside.

REMOTE KEYLESS ENTRY SYSTEM (if so equipped)

It is possible to lock/unlock all doors, turn the interior light on, and activate the panic alarm by using the keyfob from outside the vehicle.

Some settings for the keyfob, such as horn beep, can be adjusted. For vehicles without navigation system, refer to “Silencing the horn beep feature” later in this section. For vehicles with navigation system, refer to “Vehicle electronic systems” in the “Display screen, heater, air conditioner and audio systems” section later in this manual.

Be sure to remove the key from the vehicle before locking the doors.

The keyfob can operate at a distance of approximately 33 ft (10 m) from the vehicle. The effective distance depends upon the conditions around the vehicle.

As many as 5 keyfobs can be used with one vehicle. For information concerning the purchase and use of additional keyfobs, contact a NISSAN dealer.

The keyfob will not function when:

- the battery is discharged
- the distance between the vehicle and the keyfob is over 33 ft (10 m)

The panic alarm will not activate when the key is in the ignition switch.

⚠ CAUTION

Listed below are conditions or occurrences which will damage the keyfob:

- **Do not allow the keyfob to become wet.**
- **Do not drop the keyfob.**
- **Do not strike the keyfob sharply against another object.**
- **Do not place the keyfob for an extended period in an area where temperatures exceed 140°F (60°C).**

If a keyfob is lost or stolen, NISSAN recommends erasing the ID code of that keyfob. This will prevent the keyfob from unauthorized use to unlock the vehicle. For information regarding the erasing procedure, please contact a NISSAN dealer.

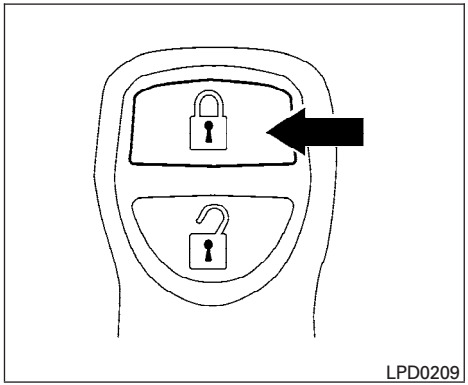

HOW TO USE REMOTE KEYLESS ENTRY SYSTEM

Locking doors

1. Close all windows.
2. Remove the key from the ignition switch.
3. Close the hood, trunk lid, and all doors.
4. Push the button on the keyfob. All the doors lock. The hazard lights flash twice and the horn beeps once to indicate all doors are locked.

- When the button is pushed with all doors locked, the hazard lights flash twice and the horn beeps once as a reminder that the doors are already locked.
- If a door is open and you push the button, the doors will lock but the horn will not beep and the hazard lights will not flash.

The horn may or may not beep once. Refer to “Silencing the horn beep feature” later in this section for details.

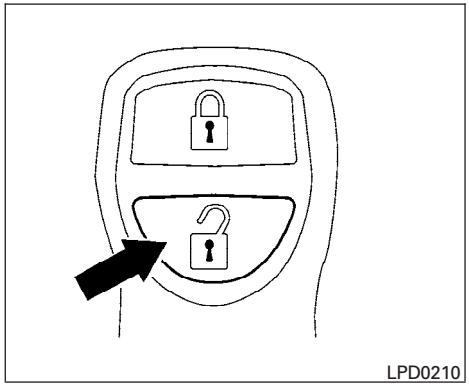

Unlocking doors

Push the button on the keyfob once.

- Only the driver’s door unlocks.
- The hazard indicator flashes once if all doors are completely closed with the ignition key in any position except the ON position.
- The interior light turns on and the light timer activates for 30 seconds when the switch is in the center O position with the ignition key in any position except the ON position.

Push the button on the keyfob again within 5 seconds.

- All doors unlock.
- The hazard indicator flashes once if all doors are completely closed.

The interior lights can be turned off without waiting 30 seconds by inserting the key into the ignition and turning to the ON or START position, locking the doors with the keyfob or pushing the interior light switch to the OFF position.

Auto relock

When the button on the keyfob is pushed, all doors will lock automatically within 1 minute unless one of the following operations is performed:

- Any door is opened.
- A key is inserted into the ignition switch and the key is turned from OFF to ON.

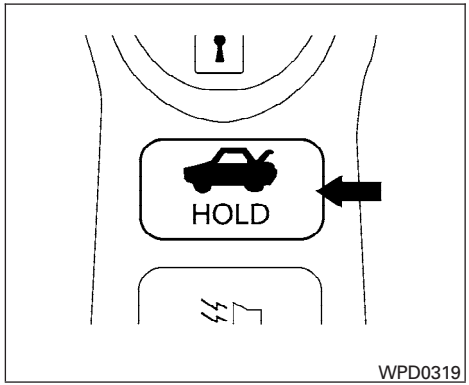

WPD0319

Releasing the trunk lid

Push the button on the keyfob for longer than 0.5 second to open the trunk lid. The trunk release button on the keyfob will not operate when the ignition switch is in the ON position.

The trunk lid will open when using the keyfob even if the trunk lid release cancel switch is turned to OFF. See "Trunk lid" later in this section for cancel switch information.

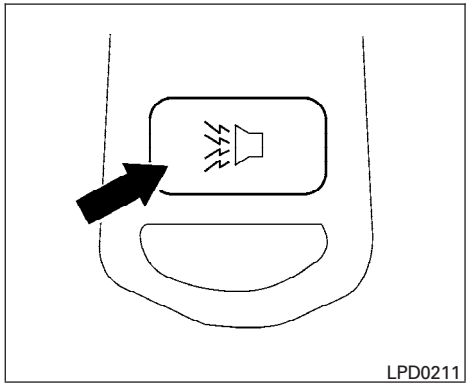
LPD0211

Using the panic alarm

If you are near your vehicle and feel threatened, you may activate the panic alarm to call attention by pushing and holding the button on the keyfob for **longer than 0.5 second.**

The panic alarm and headlights will stay on for 25 seconds.

The panic alarm stops when:

- it has run for 25 seconds, or
- any button is pushed on the keyfob.

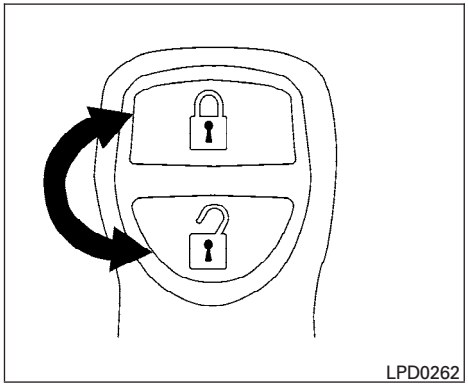

Silencing the horn beep feature

If desired, the horn beep feature can be deactivated using the keyfob.

NOTE:

If you change the horn beep and lamp flash feature with the keyfob, the display screen (if so equipped) will not show the current mode and cannot be used to change the mode. Use the keyfob to return to the previous mode and re-enable the display screen control.

To deactivate: Press and hold the and buttons **for at least 2 seconds.**

The hazard warning lights will flash three times to confirm that the horn beep feature has been deactivated.

To activate: Press and hold the and buttons **for at least 2 seconds once more.**

The hazard warning lights will flash once and the horn will sound once to confirm that the horn beep feature has been reactivated.

Deactivating the horn beep feature does not silence the horn if the alarm is triggered.

Using the interior lights

Push the button on the keyfob once to turn on the interior lights.

For additional information, refer to “Interior lights” in the “Instruments and controls” section earlier in this manual.

Opening windows (if so equipped)

The keyfob allows you to open the front windows simultaneously.

- To open the front windows, press the button on the keyfob for **longer than 3 seconds** after all doors are unlocked.

The door windows will open while pressing the button on the keyfob.

The door windows cannot be closed by using the keyfob.

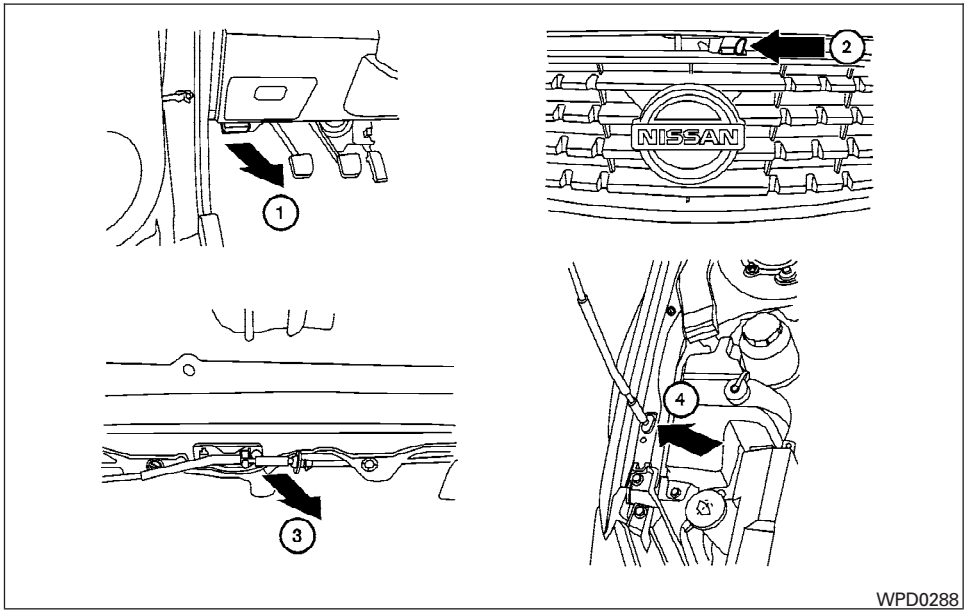

① Pull the hood lock release handle located below the driver side instrument panel; the hood springs up slightly.

② Lift the lever at the front of the hood with your fingertips and raise the hood.

③ Remove the support rod from the clamp.

④ Insert the support rod into the slot on the passenger side fender ledge.

5. When closing the hood, return the support rod to its original position, lower the hood to approximately 12 inches above the latch and release it. This allows proper engagement of the hood latch.

⚠ WARNING

- **Make sure the hood is completely closed and latched before driving. Failure to do so could cause the hood to fly open and result in an accident.**
- **If you see steam or smoke coming from the engine compartment, to avoid injury do not open the hood.**

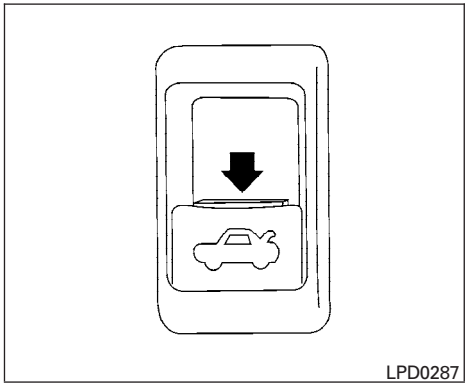

OPENER OPERATION

⚠ WARNING

- **Do not drive with the trunk lid open. This could allow dangerous exhaust gases to be drawn into the vehicle. See "Exhaust gas" in the "Starting and driving" section of this manual.**
- **Closely supervise children when they are around cars to prevent them from playing and becoming locked in the trunk where they could be seriously injured. Keep the car locked, with the rear seatback and trunk lid securely latched when not in use, and prevent children's access to car keys.**

To open the trunk lid, push the opener lever down.

To close the trunk lid, lower and push the trunk lid down securely.

NOTE:

You cannot open the trunk lid with the trunk lid opener lever if the vehicle security system (if so equipped) is armed.

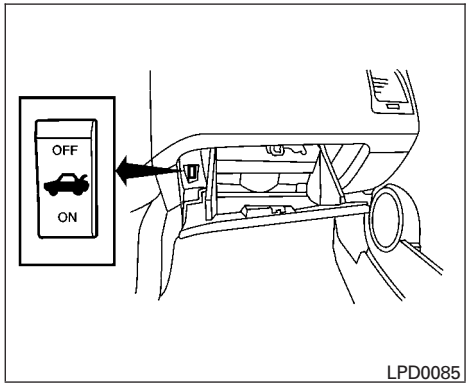

Cancel switch (if so equipped)

When the cancel switch located inside the glove box is OFF, the trunk lid cannot be opened with the trunk lid release switch. It can be opened with the master key or keyfob.

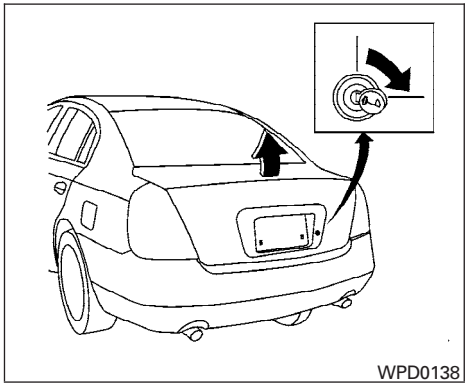

KEY OPERATION (if so equipped)

To open the trunk lid, turn the key clockwise. To close the trunk lid, lower and push the trunk lid down securely.

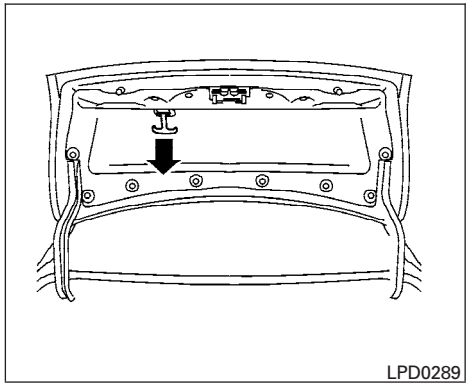

INTERIOR TRUNK LID RELEASE

⚠ WARNING

Closely supervise children when they are around cars to prevent them from playing and becoming locked in the trunk where they could be seriously injured. Keep the car locked, with the rear seatback and trunk lid securely latched when not in use, and prevent children's access to car keys.

The interior trunk lid release mechanism provides a means of escape for children and adults in the event they become locked inside the trunk.

To open the trunk from the inside, pull the illuminated release handle until the lock releases and push up on the trunk lid. The release handle is made of a material that glows in the dark after a brief exposure to ambient light.

The handle is located inside the trunk compartment on the interior of the trunk lid.

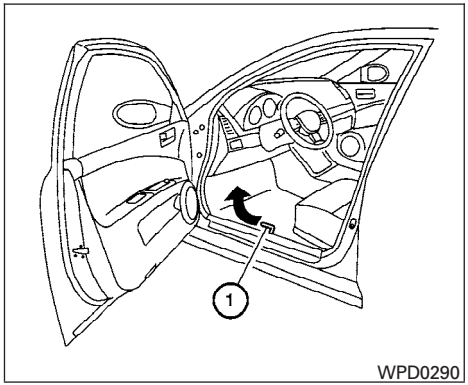

OPENER OPERATION

The fuel filler opener lever is located on the outside of the driver's seat ①. To open the fuel filler lid, pull the opener lever up. To lock, close the fuel filler lid securely.

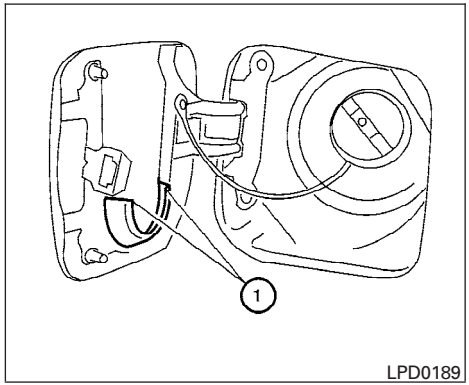

FUEL FILLER CAP

The fuel filler cap is a ratcheting type. Turn the cap counterclockwise to remove. To tighten, turn the cap clockwise until ratcheting clicks are heard.

Put the fuel filler cap on the cap holder ① while refueling.

⚠ WARNING

- **Gasoline is extremely flammable and highly explosive under certain conditions. You could be burned or seriously injured if it is misused or mishandled. Always stop the engine and do not smoke or allow open flames or sparks near the vehicle when refueling.**
- **Fuel may be under pressure. Turn the cap a third of a turn, and wait for any "hissing" sound to stop to prevent fuel from spraying out and possibly causing personal injury. Then remove the cap.**
- **Do not attempt to top off the fuel tank after the fuel pump nozzle shuts off automatically. Continued refueling may cause fuel overflow, resulting in fuel spray and possibly a fire.**
- **Use only an original equipment type fuel filler cap as a replacement. It has a built-in safety valve needed for proper operation of the fuel system and emission control system. An incorrect cap can result in a serious malfunction and possible injury. It could also cause the malfunction indicator lamp to come on.**
- **Never pour fuel into the throttle body to attempt to start your vehicle.**

- **Do not fill a portable fuel container in the vehicle or trailer. Static electricity can cause an explosion of flammable liquid, vapor or gas in any vehicle or trailer. To reduce the risk of serious injury or death when filling portable fuel containers:**
  - **Always place the container on the ground when filling.**
  - **Do not use electronic devices when filling.**
  - **Keep the pump nozzle in contact with the container while you are filling it.**
  - **Use only approved portable fuel containers for flammable liquid.**

⚠CAUTION

- **If fuel is spilled on the vehicle body, flush it away with water to avoid paint damage.**
- **Tighten until the fuel filler cap clicks. Failure to tighten the fuel filler cap properly may cause the SERVICE ENGINE SOON malfunction indicator lamp (MIL) to illuminate. If the SERVICE ENGINE SOON lamp illuminates because the fuel filler cap is loose or missing, tighten or install the cap and continue to drive the vehicle. The SERVICE ENGINE SOON lamp should turn off after a few driving trips. If the SERVICE ENGINE SOON lamp does not turn off after a few driving trips, have the vehicle inspected by a NISSAN dealer.**
- **For additional information, see the "Malfunction indicator lamp (MIL)" in the "Instruments and Controls" section earlier in this manual.**

TILTING TELESCOPIC STEERING COLUMN

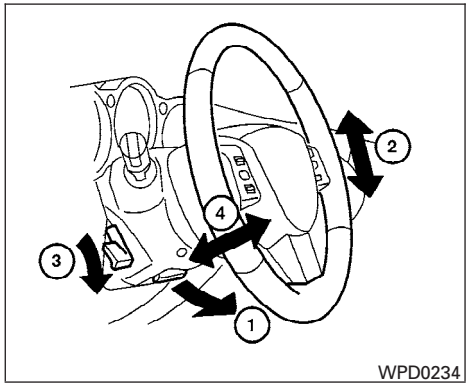

TILT OPERATION

Pull the lock lever ① forward and adjust the steering wheel up or down ② to the desired position.

Release the lock lever to lock the steering wheel in place.

⚠WARNING

Do not adjust the steering wheel while driving. You could lose control of your vehicle and cause an accident.

TELESCOPIC OPERATION

Push the lock lever ③ down and adjust the steering wheel forward or backward ④ to the desired position.

Pull the lock lever up firmly to lock the steering wheel in place.

⚠WARNING

Do not adjust the steering wheel any closer to you than is necessary for proper steering operation and comfort. The driver's air bag inflates with great force. If you are unrestrained, leaning forward, sitting sideways or out of position in any way, you are at greater risk of injury or death in a crash. You may also receive serious or fatal injuries from the air bag if you are up against it when it inflates. Always sit back against the seatback and as far away as practical from the steering wheel. Always use the seat belts.

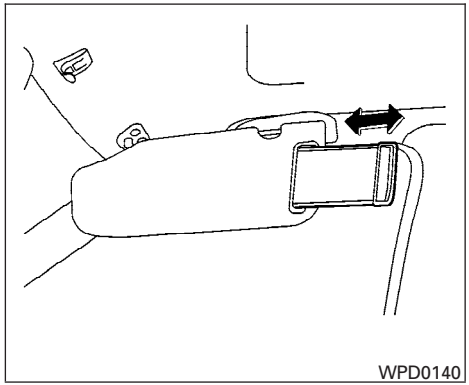

WPD0140

Slide the sun visor extension (if so equipped) in or out as needed.

⚠CAUTION

Do not store the sun visor before returning the extension to its original position.

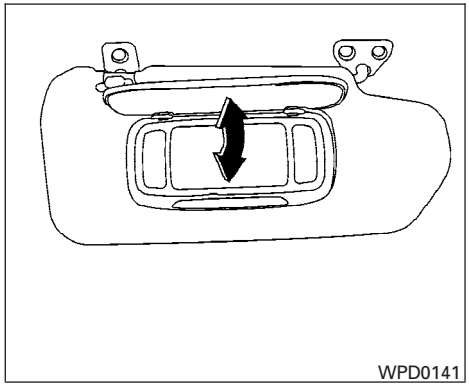

WPD0141

VANITY MIRRORS

To access the vanity mirror, pull the sun visor down and flip open the mirror cover. Some vanity mirrors are illuminated and turn on when the mirror cover is open.

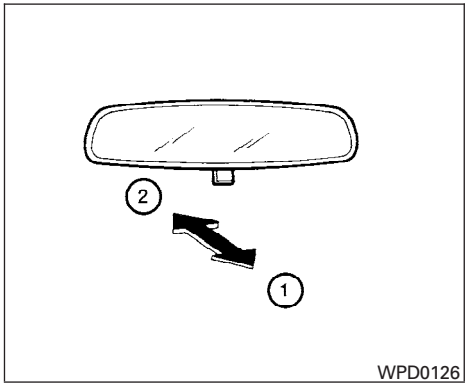

INSIDE MIRROR

The night position ① reduces glare from the headlights of vehicles behind you at night.

Use the day position ② when driving in daylight hours.

⚠ WARNING

Use the night position only when necessary, because it reduces rear view clarity.

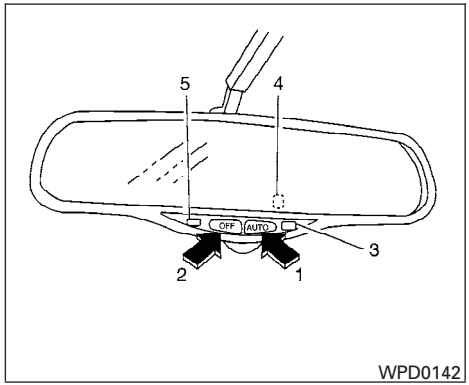

1. AUTO position
2. OFF position
3. AUTO indicator light
4. Sensor (on back of mirror)
5. Sensor

AUTOMATIC ANTI-GLARE INSIDE MIRROR (if so equipped)

The inside mirror is designed so that it automatically changes reflection according to the intensity of the headlights of the vehicle following you.

When the inside mirror switch is in the AUTO position, excessive glare from the headlights of the vehicle behind you will be reduced. The AUTO indicator light will be on. When the switch on the inside mirror is in the OFF position, the inside mirror will operate normally.

Do not hang any object on the sensor or apply glass cleaner. Doing so will reduce the sensitivity of the sensor, resulting in improper operation.

OUTSIDE MIRRORS

⚠ WARNING

- **Objects viewed in the outside mirror on the passenger side are closer than they appear. Be careful when moving to the right. Using only this mirror could cause an accident. Use the inside mirror or glance over your shoulder to properly judge distances to other objects.**
- **Do not adjust the mirrors while driving. You could lose control of your vehicle and cause an accident.**

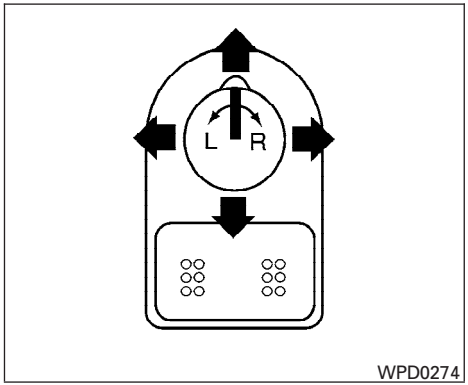

Electric control type (if so equipped)

The outside mirror remote control only operates when the ignition switch is in the ACC or ON position.

Rotate the control lever to select the right or left mirror. Adjust the mirror to the desired position by moving the control lever.

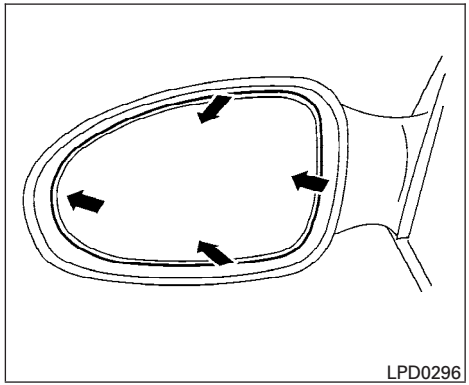

Manual control type

The outside mirror can be moved in any direction for a better rear view.

Heated mirrors (if so equipped)

Some outside mirrors can be heated to defrost, defog, or de-ice for improved visibility. For additional information, see “Rear window and outside mirror (if so equipped) defroster switch” in the “Instrument and controls” section of this manual.

4 Display screen, heater, air conditioner and audio systems

Control panel buttons — with navigation system. 4-2
Names of the components. 4-3
How to use joystick and “ENTER” button 4-3
How to use “PREV” button 4-3
Setting up the start-up screen 4-3
How to use the “TRIP” button 4-4
How to use the “SETTING” button. 4-6
☼/☽ button. 4-10
Ventilators 4-11
Heater and air conditioner (manual). 4-12
Controls. 4-13
Heater operation 4-14
Air conditioner operation (if so equipped) 4-15
Air flow charts. 4-16
Heater and air conditioner (automatic) (if so equipped) 4-20
Automatic operation 4-20
Manual operation 4-21
Operating tips. 4-22
Servicing air conditioner. 4-22
Audio system 4-23
Radio 4-23
FM radio reception 4-23
AM radio reception 4-23
Satellite radio reception (if so equipped) 4-23
Audio operation precautions 4-24
FM-AM radio with compact disc (CD) player (if so equipped) 4-26
FM-AM SAT radio with compact disc (CD) changer (if so equipped) 4-30
FM-AM-SAT radio with compact disc (CD) changer (if so equipped) 4-36
CD care and cleaning. 4-41
Steering wheel switch for audio control (if so equipped) 4-41
Antenna 4-42
Car phone or CB radio. 4-43

CONTROL PANEL BUTTONS — WITH NAVIGATION SYSTEM

⚠ WARNING

- **Positioning of the heating or air conditioning controls and display controls should not be done while driving in order that full attention may be given to the driving operation.**
- **Do not disassemble or modify this system. If you do, it may result in accidents, fire, or electrical shock.**
- **Do not use this system if you notice any abnormality, such as a frozen screen or lack of sound. Continued use of the system may result in accident, fire or electric shock.**
- **In case you notice any foreign object in the system hardware, spill liquid on it, or notice smoke or smell coming from it, stop using the system immediately and contact your nearest NISSAN dealer. Ignoring such conditions may lead to accidents, fire or electrical shock.**

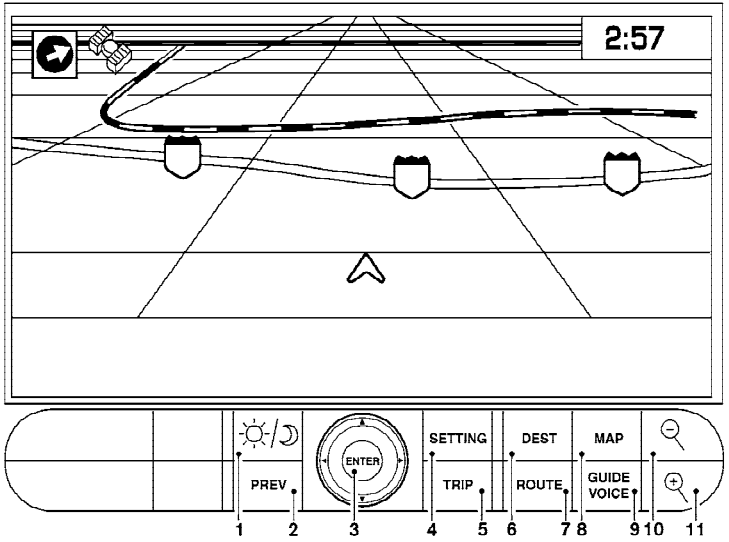

LHA0458

When you use this system, make sure the engine is running.

If you use the system with the engine not running (ignition ON or ACC) for a long time, it will use up all the battery power, and the engine will not start.

Reference symbols:

"ENTER" button — This is a button on the control panel.

“Display” key — This is a select key on the screen. By selecting this key you can proceed to the next function.

NAMES OF THE COMPONENTS

1. ☼/☽ brightness control button (P. 4-10)
2. PREV (previous) button (P. 4-3)
3. Joystick and ENTER push button (P. 4-3)
4. SETTING button (P. 4-6)
5. TRIP drive computer button (P. 4-4)
6. DEST button*
7. ROUTE button*
8. MAP button*
9. GUIDE VOICE button*
10. zoom out button*
11. zoom in button*

*For Navigation system control buttons, refer to the separate Navigation System Owner’s Manual.

HOW TO USE JOYSTICK AND “ENTER” BUTTON

Choose an item on the display using the joystick and push the **“ENTER”** button for operation.

HOW TO USE “PREV” BUTTON

This button has two functions.

- Go back to the previous display (cancel).

If you touch **“PREV”** button during setup, the setup will be canceled and/or the display will return to the previous screen.

- Finish setup.

If you touch this button after the setup is completed, the setup will start over, and the display will return to the climate control or audio mode and Navigation screen.

SETTING UP THE START-UP SCREEN

When you turn the ignition key to ACC or ON, the SYSTEM START-UP warning is displayed on the screen. Read the warning and select the “I AGREE” (English) or “ENTER” (Français) key then push the **“ENTER”** button.

If you do not push the **“ENTER”** button, the Navigation system will not proceed to the next step display.

If you do not touch the button or screen key for more than 1 minute on the TRIP, SETTING or START-UP screen, the screen will change to TRIP screen automatically.

To proceed to the next step, refer to the separate Navigation System Owner’s Manual.

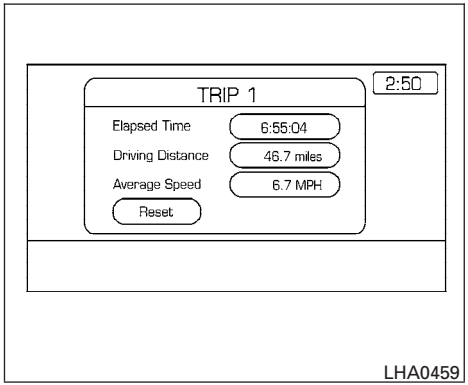

HOW TO USE THE “TRIP” BUTTON

When the **“TRIP”** button is pushed, the following modes will display on the screen.

Warning message (if there are any) → TRIP 1 (Elapsed Time, Driving Distance, Average Speed) → TRIP 2 → FUEL ECONOMY (Average Fuel Economy, Distance to Empty) → MAINTENANCE (Engine Oil, Tire Rotation and Tire Pressure — if so equipped) → OFF.

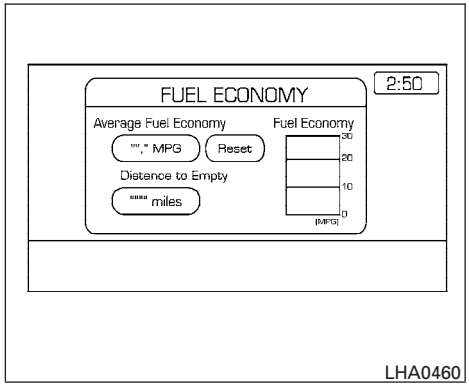

Trip 1, trip 2 and fuel economy items

To reset the TRIP 1, TRIP 2 and FUEL ECONOMY, select the **“RESET”** key using the joystick and push the **“ENTER”** button or push the **“TRIP”** button for more than approximately 1.5 seconds.

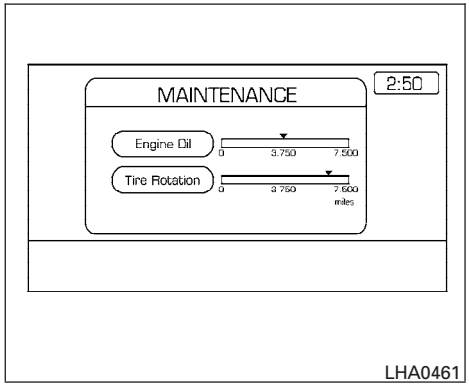

Maintenance items

You can set the engine oil and the tire rotation interval.

To display the setting of the maintenance interval, select the **“Engine Oil”** or **“Tire Rotation”** key using the joystick and push the **“ENTER”** button.

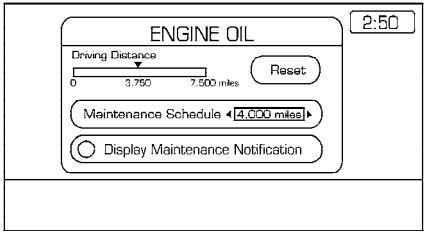

LHA0462

To set the maintenance interval, select the **“Maintenance Schedule”** key by using the joystick and push the joystick to right or left.

To reset the maintenance interval, select the **“Reset”** key using the joystick and push the **“ENTER”** button.

To display the MAINTENANCE INFORMATION automatically when set trip distance is reached, select the **“Display Maintenance Notification”** key and push the **“ENTER”** button.

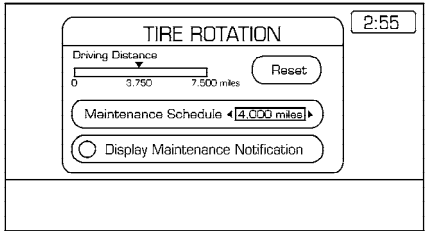

LHA0463

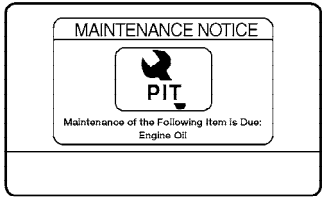

LHA0483

The “MAINTENANCE NOTICE” screen (“ENGINE OIL” and “TIRE ROTATION”) will be automatically displayed as shown when both of the following conditions are met:

- the vehicle is driven the set distance and the ignition key is turned OFF.
- the ignition key is turned ON the next time the vehicle will be driving.

To return to the previous display after the “MAINTENANCE NOTICE” screen is displayed, press the PREV button.

The “MAINTENANCE NOTICE” screen displays each time the key is turned ON until one of the following conditions are met:

- “RESET” is selected.
- “Display Maintenance and Notification” is set OFF.
- the maintenance interval is set again.

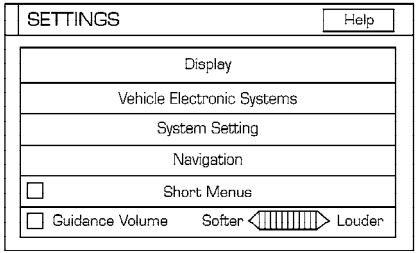

LHA0268

HOW TO USE THE “SETTING” BUTTON

To adjust the various settings within the display screen press the**“SETTING”** button.

After pressing the SETTING button a menu will be shown on the display screen which will allow you to program several functions such as the display screen appearance, programmable features for your vehicles electronics system and other system settings such as your clock. To make a selection from this mode use the joystick and press the “ENTER” button.

Brightness/Contrast/Map Background:

To adjust the brightness and contrast of the screen, select the **“Brightness/contrast”** key and push the **“ENTER”** button. You can then use the joystick to adjust the brightness to Darker or Brighter and the contrast to Lower or Higher. For information on Map Background, please refer to the separate Navigation System Owner’s Manual.

Display Off:

To turn off the screen, push the **“SETTING”** button and select the **“Display”** key and **“Display Off”** key. The indicator of the **“Display Off”** will turn to amber. When any mode button is pushed with the screen off, the screen turns on for further operation. The screen will turn off automatically 5 seconds after the operation is finished on the map display in the Audio, HVAC (Heater and air conditioner), SETTING or VEHICLE INFO modes.

To turn on the screen, push the **“SETTING”** button and select the **“Display”** key and **“Display Off”** key, then set the screen to on by pushing the **“ENTER”** button.

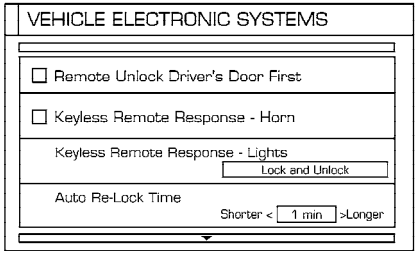

LHA0464

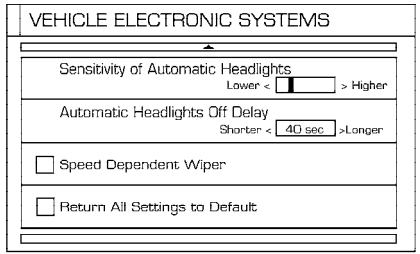

WRS0443

Vehicle electronic systems

The VEHICLE ELECTRONIC SYSTEMS screen will appear when selecting the **"Vehicle Electronic Systems"** key with the joystick and pushing the **"ENTER"** button.

To set the various electronic systems operating conditions, select the applicable item using the joystick, and push the **"ENTER"** button. The indicator light, box at left of selected item, alternately turns on and off each time the **"ENTER"** button is pressed.

Indicator light is illuminated — ON

Indicator light is not illuminated — OFF

Remote unlock driver's door first:

This option allows you to select which doors will unlock first during an unlocking operation:

Only the driver's door ⟷ All the doors

Keyless remote response — horn:

This key allows you to change the horn chirp mode that occurs when pressing the LOCK or UNLOCK button on the keyfob.

NOTE:

If you change the horn beep or the lamp flash feature with the keyfob, the display screen will not show the current mode. Use the keyfob to return to the previous mode and re-enable the display screen control.

Keyless remote response — lights:

This key allows you to change the hazard indicator flash mode that occurs when pressing the LOCK or UNLOCK button on the keyfob.

NOTE:

If you change the horn beep or the lamp flash feature with the keyfob, the mode will not be changed with the display. Use the keyfob to return to the previous mode and re-enable the display control.

Auto re-lock time:

This key allows you to set the length of time before doors auto re-lock.

Sensitivity of automatic headlights:

This key allows you to set the sensitivity of the automatic headlights:

- Lower- less sensitive, automatic headlights will take longer to come on when the headlight sensor senses less ambient light.
- Higher- more sensitive, automatic headlights will come on quicker when the headlight sensor senses less ambient light.

Automatic headlights off delay:

This key allows you to set the length of time before the automatic headlights turn off after exiting the vehicle.

Speed dependent wiper:

This key allows you to turn on or turn off the driving speed dependent intermittent wiper function.

Return all settings to default:

When this key is selected and turned on using the **"ENTER"** button, all settings made by VEHICLE ELECTRONICS will return to the default settings.

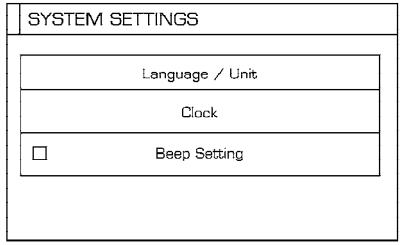

LHA0262

System settings

Language/Unit

The LANGUAGE/UNIT screen will appear when selecting the **"Language/Unit"** key and pushing the **"ENTER"** button.

Language: English or French

Unit: US — mile, °F, MPG
Metric — km, °C, L/100 km

You can select the language and unit using the joystick and **"ENTER"** button.

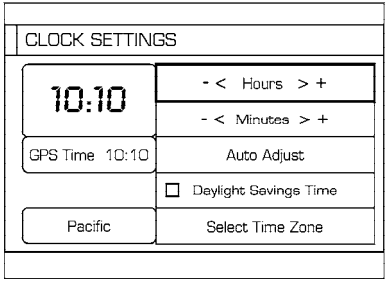

LHA0270

Clock

Adjusting the time:

Select the **"Hours"** or **"Minutes"** key and move the joystick to the right or left to adjust the time.

The time will change step by step.

After completion of the setting, press the **"PREV"** button.

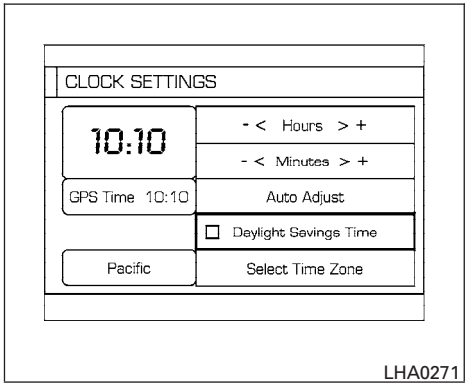

Setting daylight savings time:

Use the **“Daylight Saving Time”** key to adjust the clock to daylight savings time.

ON: The displayed time advances by 1 hour.

OFF: The current time is displayed.

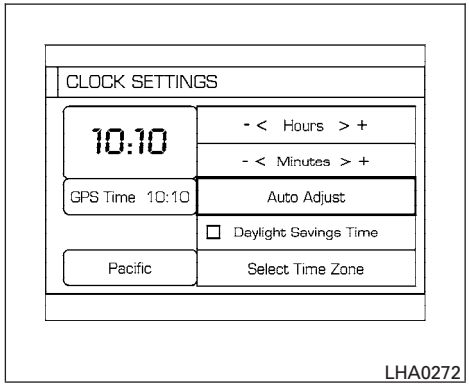

Adjusting the time to the GPS:

Select the **“Auto Adjust”** key.

The time will be reset to the GPS time.

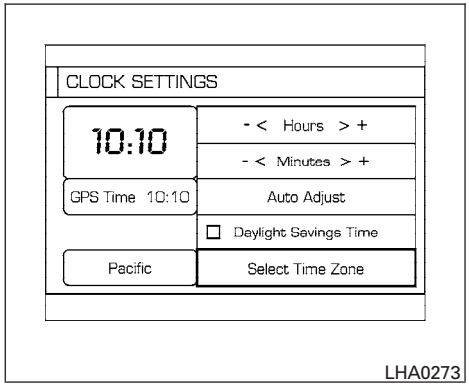

Selecting the time zone:

1. Select the **“Select Time Zone”** key.

The [TIME ZONE] screen will appear.

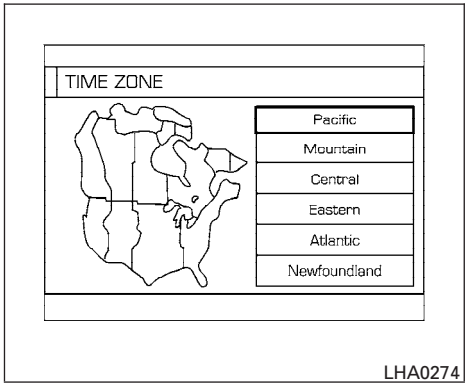

2. Select one of the following zones depending on the current location.
   - Pacific zone
   - Mountain zone
   - Central zone
   - Eastern zone
   - Atlantic zone
   - Newfoundland zone

After selection, the [CLOCK SETTINGS] screen will appear.

The GPS time (manual time) corresponding to the selected zone will be displayed. Pacific zone has been set as the initial (default) setting.

Beep setting

With this option ON, a beep will sound if any audio button is pushed.

☼/☽ BUTTON

To change the display brightness, push the ☼/☽ button. Pushing the button again will change the display to DAY or NIGHT display. Then, adjust the brightness moving the joystick right or left.

If no operation is done within 10 seconds, or if the **"PREV"** button is pushed, the display will return to the previous display.

VENTILATORS

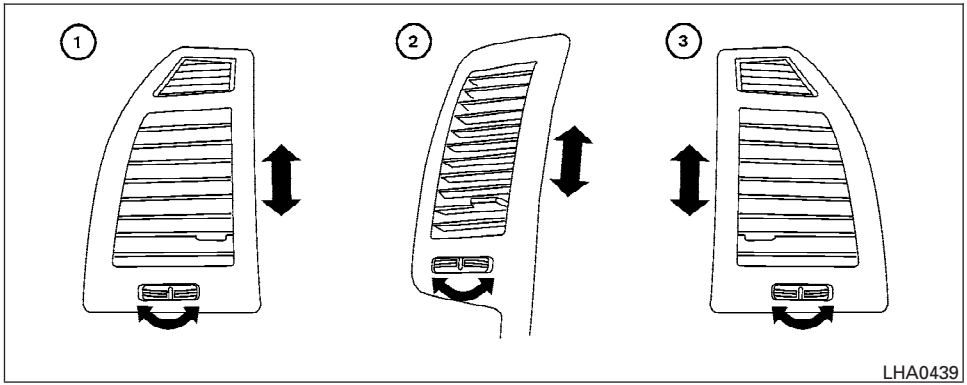

Adjust air flow direction for the driver side ①, center ②, and passenger side ③ ventilators by moving the ventilator slide and/or ventilator assemblies.

HEATER AND AIR CONDITIONER (manual)

⚠ WARNING

- **The air conditioner cooling function operates only when the engine is running.**
- **Do not leave children or adults who would normally require the assistance of others alone in your vehicle. Pets should also not be left alone. They could accidentally injure themselves or others through inadvertent operation of the vehicle. Also, on hot, sunny days, temperatures in a closed vehicle could quickly become high enough to cause severe or possibly fatal injuries to people or animals.**
- **Do not use the recirculation mode for long periods as it may cause the interior air to become stale and the windows to fog up.**
- **Positioning of the heater and/or air conditioner controls should not be done while driving so full attention may be given to vehicle operation.**

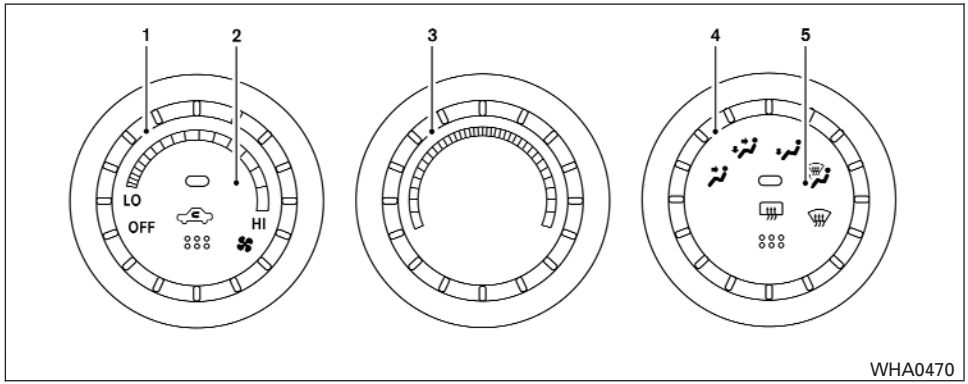

Type A

1. Fan control dial
2. Air recirculation button
3. Temperature control dial
4. Air flow control dial
5. Rear window defroster

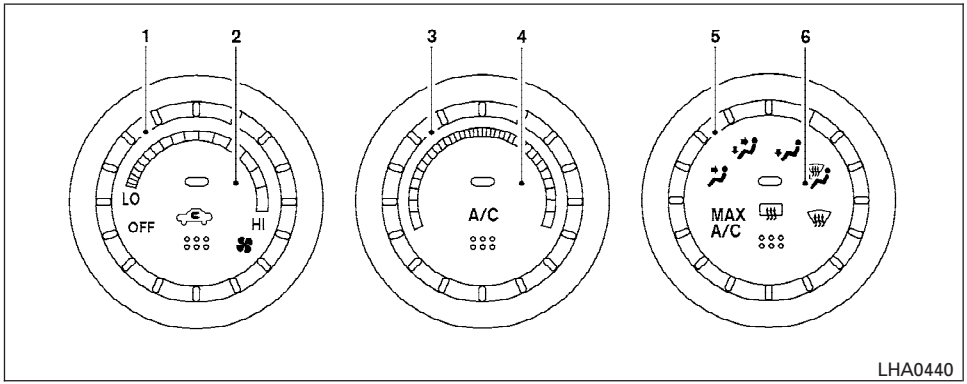

Type B

1. Fan control dial
2. Air recirculation button
3. Temperature control dial
4. Air conditioner button (if so equipped)
5. Air flow control dial
6. Rear window defroster

CONTROLS

Fan control dial

The fan control dial turns the fan on and off, and controls fan speed.

Air flow control dial

The air flow control dial allows you to select the air flow outlets.

MAX A/C — Air flows from center and side vents with maximum cooling (air conditioning if so equipped).

— Air flows from center and side ventilators.

— Air flows from center and side ventilators and foot outlets.

— Air flows mainly from foot outlets.

— Air flows from defroster outlets and foot outlets.

— Air flows mainly from defroster outlets.

Temperature control dial

The temperature control dial allows you to adjust the temperature of the outlet air. To lower the temperature, turn the dial to the left. To increase the temperature, turn the dial to the right.

Air recirculation button

NOTE:

The air recirculation feature is available only on those vehicles equipped with air conditioning.

ON position (Indicator light on):
Interior air is recirculated inside the vehicle.

Push the button to the on position when:

- driving on a dusty road.
- to prevent traffic fumes from entering passenger compartment.
- for maximum cooling when using the air conditioner.

OFF position (Indicator light off):
Outside air is drawn into the passenger compartment and distributed through the selected outlet.

Use the off position for normal heater or air conditioner operation.

A/C Air conditioner button (if so equipped)

The button is provided only on vehicles equipped with an air conditioner.

Start the engine, turn the fan control dial to the desired position and push the A/C button to turn on the air conditioner. The indicator light comes on when the air conditioner is operating. To turn off the air conditioner, push the A/C button again.

The air conditioner cooling function operates only when the engine is running.

Rear window defroster switch

For more information about the rear window defroster switch, see “Rear window and outside mirror (if so equipped) defroster switch” in the “Instruments and controls” section of this manual.

HEATER OPERATION

Heating

This mode is used to direct heated air to the foot outlets. Some air also flows from the defrost outlets.

1. Push the button to the off position for normal heating.
2. Turn the air flow control dial to the position.
3. Turn the fan control dial to the desired position.
4. Turn the temperature control dial to the desired position between the middle and the hot position.

Ventilation

This mode directs outside air to the side and center ventilators.

1. Push the button to the off position.
2. Turn the air flow control dial to the position.
3. Turn the fan control dial to the desired position.
4. Turn the temperature control dial to the desired position.

Defrosting or defogging

This mode directs the air to the defrost outlets to defrost/defog the windows.

1. Turn the air flow control dial to the position.
2. Turn the fan control dial to the desired position.
3. Turn the temperature control dial to the desired position between the middle and the hot position.

- To quickly remove ice or fog from the windows, turn the fan control dial to HI and the temperature control lever to the full HOT position.
- When the position is selected, the air conditioner automatically turns on (however, the indicator light will not illuminate) if the outside temperature is more than 36°F (2°C). The air conditioning system will continue to operate until the vehicle is restarted, even if the air flow control dial is turned to a position other than the position. This dehumidifies the air which helps defog the windshield. The mode automatically turns off, allowing outside air to be drawn

into the passenger compartment to further improve the defogging performance.

Bi-level heating

This mode directs air from the side, center and the foot outlets.

1. Push the button to the off position.
2. Turn the air flow control dial to the position.
3. Turn the fan control dial to the desired position.
4. Turn the temperature control dial to the desired position.

Heating and defogging

This mode heats the interior and defogs the windshield.

1. Turn the air flow control dial to the position.
2. Turn the fan control dial to the desired position.
3. Turn the temperature control dial to the desired position between the middle and the hot position.

- When the position is selected, the air conditioner automatically turns on (however, the indicator light will not illuminate) if the outside temperature is more than 36°F (2°C). The air conditioning system will continue to operate until the vehicle is restarted, even if the air flow control dial is turned to a position other than the position. This dehumidifies the air which helps defog the windshield. The mode automatically turns off, allowing outside air to be drawn into the passenger compartment to further improve the defogging performance.

Operating tips

Clear snow and ice from the wiper blades and air inlet in front of the windshield. This improves heater operation.

AIR CONDITIONER OPERATION (if so equipped)

Start the engine, turn the fan control dial to the desired position, and push in the A/C button to activate the air conditioner. When the air conditioner is on, cooling and dehumidifying functions are added to the heater operation.

The air conditioner cooling function operates only when the engine is running.

Cooling

This mode is used to cool and dehumidify the air.

1. Push the button to the off position.
2. Turn the air flow control dial to the MAX A/C or position.
3. Turn the fan control dial to the desired position.
4. Push the A/C button. The indicator light comes on.
5. Turn the temperature control dial to the desired position.

- For quick cooling when the outside temperature is high, push the button to the on position (indicator light on). Be sure to return the button to the off position for normal cooling. MAX A/C may be used for quick cooling.

Dehumidified heating

This mode is used to heat and dehumidify the air.

1. Push the button to the off position.
2. Turn the air flow control dial to the position.
3. Turn the fan control dial to the desired position.

4. Push the A/C button. The indicator light comes on.
5. Turn the temperature control dial to the desired position.

Dehumidified defogging

This mode is used to defog the windows and dehumidify the air.

1. Turn the air flow control dial to the position.
2. Turn the fan control dial to the desired position.
3. Push the A/C button. The indicator light comes on.

When the , or positions in between are selected, the air conditioner automatically turns on (however, the indicator light will not illuminate) if the outside temperature is more than 36°F (2°C). The air conditioning system will continue to operate until the vehicle is restarted, even if the air flow control dial is turned to a position other than the position. This dehumidifies the air which helps defog the windshield. The mode automatically turns off, allowing outside air to be drawn into the passenger compartment to further improve the defogging performance.

4. Turn the temperature control dial to the desired position.

Operating tips

- Keep the windows and sunroof closed while the air conditioner is in operation.
- After parking in the sun, drive for 2 or 3 minutes with the windows open to vent hot air from the passenger compartment. Then, close the windows. This allows the air conditioner to cool the interior more quickly.
- **The air conditioning system should be operated for approximately 10 minutes at least once a month. This helps prevent damage to the system due to lack of lubrication.**
- **If the engine coolant temperature gauge indicates engine coolant temperature over the normal range, turn the air conditioner off. See "If your vehicle overheats" in the "In case of emergency" section of this manual.**

AIR FLOW CHARTS

The following charts show the button and dial positions for **MAXIMUM AND QUICK** heating, cooling or defrosting. **The air recirculation button should always be in the OFF position for heating and defrosting.**

Defrosting/ Defogging

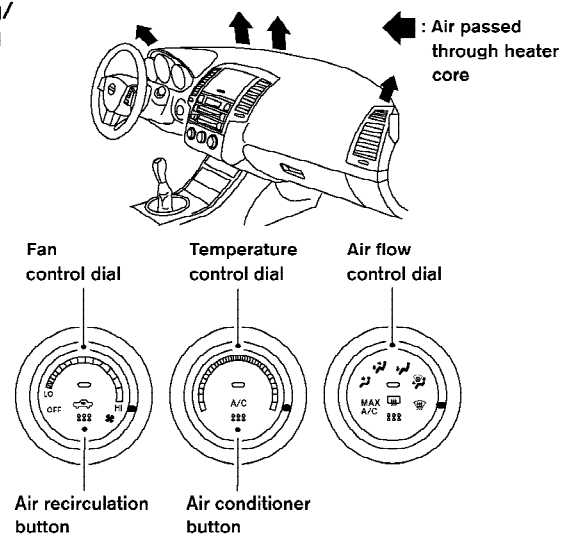

Fan control	Air recirculation button	A/C button	Temp. control	Air flow control
HI	OFF	ON	HOT (RIGHT)	

LHA0442

Bi-level Heating

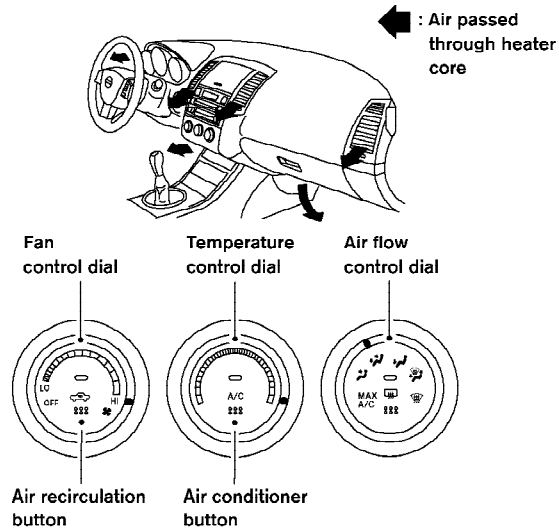

Fan control	Air recirculation button	A/C button	Temp. control	Air flow control
HI	OFF	OFF	HOT (RIGHT)	

LHA0443

Heating

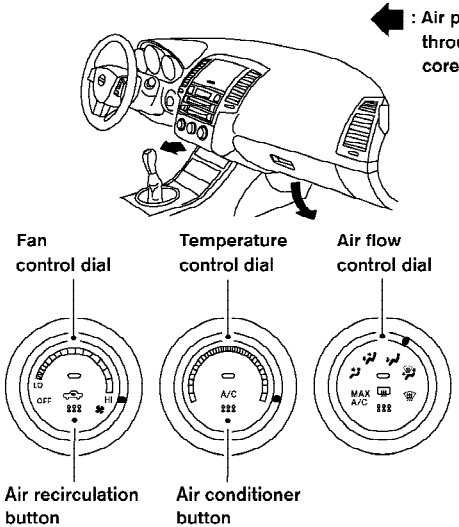

Fan control	Air recirculation button	A/C button	Temp. control	Air flow control
HI	OFF	OFF	HOT (RIGHT)	

LHA0444

Heating & Defrosting/ Defogging

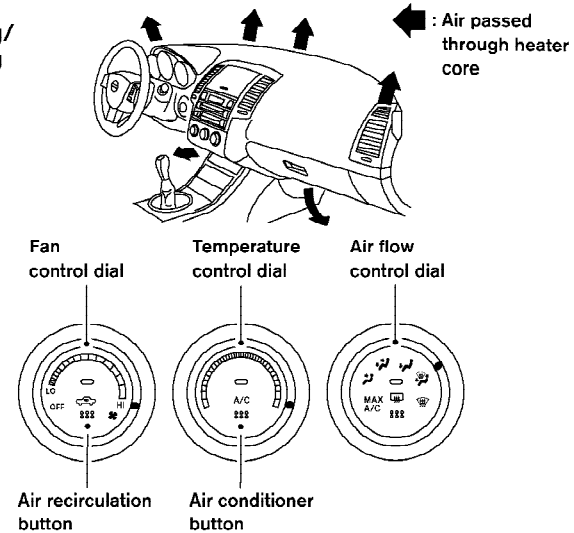

Fan control	Air recirculation button	A/C button	Temp. control	Air flow control
HI	OFF	OFF	HOT (RIGHT)	

LHA0445

Cooling (if so equipped)

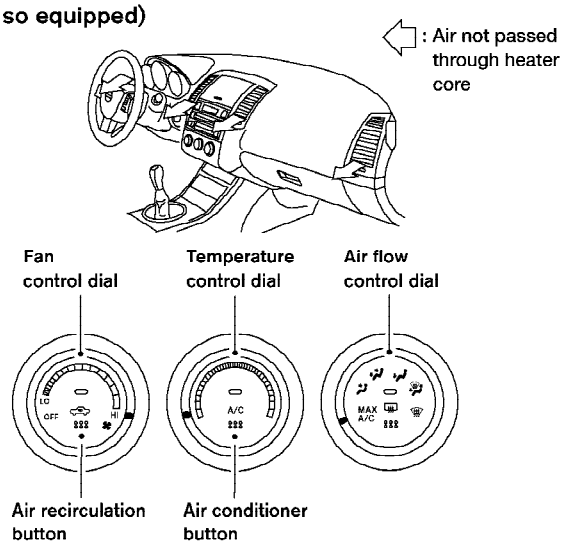

Fan control	Air recirculation button	A/C button	Temp. control	Air flow control
HI	ON	ON	COLD (LEFT)	MAX A/C

WHA0469

HEATER AND AIR CONDITIONER (automatic) (if so equipped)

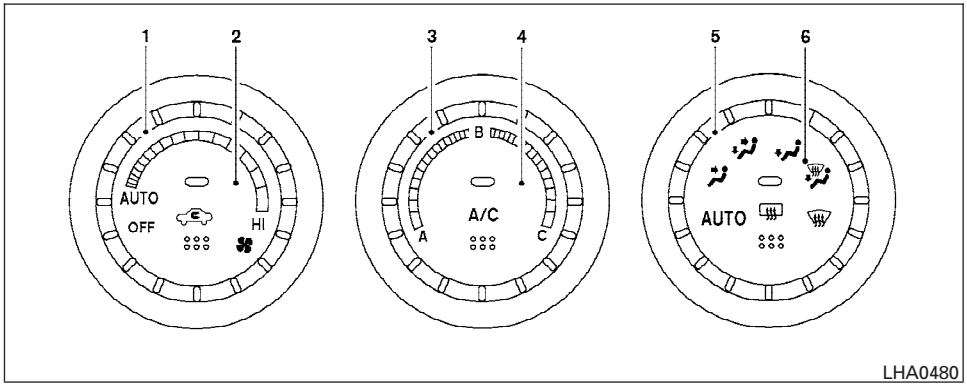

1. Fan control dial
2. Air recirculation button
3. Temperature dial
   A. 60° F (18° C)
   B. 75° F (25° C)
   C. 90° F (32° C)
4. A/C ON/OFF button
5. Air flow control dial
6. Rear defrost button

⚠WARNING

- **The air conditioner cooling function operates only when the engine is running.**
- **Do not leave children or adults who would normally require the assistance of others alone in your vehicle. Pets should also not be left alone. They could accidentally injure themselves or others through inadvertent operation of the vehicle. Also, on hot, sunny days, temperatures in a closed vehicle could quickly become high enough to cause severe or possibly fatal injuries to people or animals.**
- **Do not use the recirculation mode for long periods as it may cause the interior air to become stale and the windows to fog up.**
- **Positioning of the heater and/or air conditioner controls should not be done while driving so full attention may be given to vehicle operation.**

Start the engine and operate the controls to activate the air conditioner.

AUTOMATIC OPERATION

Cooling and/or dehumidified heating (auto)

This mode may be normally used all year round as the system automatically works to keep a constant temperature. Air flow distribution and fan speed are also controlled automatically.

1. Turn the fan control dial to the AUTO position.
2. Turn the temperature dial to the left or right to set the desired temperature.
   - Adjust the temperature dial to about 75°F (25°C) for normal operation.
3. Turn the air flow control dial to AUTO.

- The temperature of the passenger compartment will be maintained automatically.
- Air flow distribution and fan speed are also controlled automatically.

Heating (A/C OFF)

The air conditioner does not activate. When you need to heat only, use this mode.

① Turn the fan control dial to the AUTO position.

② Push the A/C button to turn off the air conditioner. The light will not be illuminated in the dial.

③ Turn the temperature dial to the left or right to set the desired temperature.

- The temperature of the passenger compartment will be maintained automatically. Air flow distribution and fan speed are also controlled automatically.
- Do not set the temperature lower than the outside air temperature. Otherwise the system may not work properly.
- Not recommended if windows fog up.

Dehumidified defogging

1. Turn the air flow control dial to the DEF position to turn it on. The indicator light on the button will come on.
2. Turn the temperature dial to the left or right to set the desired temperature.

- To quickly remove ice from the outside of the windows, turn the manual fan control dial to HI.
- As soon as possible after the windshield is clean, turn the air flow control dial to the AUTO position to return to the auto mode.
- When the control dial is turned to the DEF position, the air conditioner will automatically be turned on at outside temperatures above 36°F (2°C). The air conditioning system will continue to operate until the vehicle is restarted, even if the air flow control dial is turned to a position other than the position. This dehumidifies the air which helps defog the windshield. The air recirculate mode automatically turns off, allowing outside air to be drawn into the passenger compartment to further improve the defogging performance.

MANUAL OPERATION

Fan speed control

Turn the fan control dial left or right to manually control the fan speed.

Turn the control dial to the AUTO position to return to automatic control of the fan speed.

Air recirculation

Push the air recirculation button to recirculate interior air inside the vehicle. The indicator light on the switch will come on.

The air recirculation button will not be activated when the air conditioner is in DEF mode.

Air flow control

Turning the air flow control dial away from AUTO selects the air outlet to:

— Air flows from center and side ventilators.

— Air flows from center and side ventilators and foot outlets.

— Air flows mainly from foot outlets.

— Air flows from defroster and foot outlets.

— Air flows mainly from defroster outlets.

To turn system off

Turn the fan control dial to the OFF position.

OPERATING TIPS

- When the engine coolant temperature and outside air temperature are low, the air flow from the foot outlets may not operate for a maximum of 150 seconds. However, this is not a malfunction. After the coolant temperature warms up, air flow from the foot outlets will operate normally.

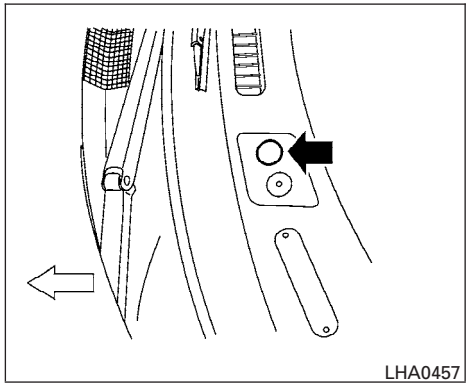

The sunload sensor, located on the top driver's side of the instrument panel, helps the system maintain a constant temperature. Do not put anything on or around this sensor.

The air conditioner system in your NISSAN vehicle is charged with a refrigerant designed with the environment in mind.

This refrigerant does not harm the earth's ozone layer.

Special charging equipment and lubricant is required when servicing your NISSAN air conditioner. Using improper refrigerants or lubricants will cause severe damage to your air conditioner system. See "Air conditioner system refrigerant and lubricant recommendations" in the "Technical and consumer information" section of this manual.

A NISSAN dealer is able to service your "environmentally friendly" air conditioning system.

⚠ WARNING

The air conditioner system contains refrigerant under high pressure. To avoid personal injury, any air conditioner service should be done only by an experienced technician with proper equipment.

RADIO

Turn the ignition key to the ACC or ON position and press the PWR (power)/VOL (volume) knob to turn the radio on. If you listen to the radio with the engine not running, the key should be turned to the ACC position.

Radio reception is affected by station signal strength, distance from radio transmitter, buildings, bridges, mountains and other external influences. Intermittent changes in reception quality normally are caused by these external influences.

Using a cellular phone in or near the vehicle may influence radio reception quality.

Radio reception

Your NISSAN radio system is equipped with state-of-the-art electronic circuits to enhance radio reception. These circuits are designed to extend reception range, and to enhance the quality of that reception.

However there are some general characteristics of both FM and AM radio signals that can affect radio reception quality in a moving vehicle, even when the finest equipment is used. These characteristics are completely normal in a given reception area, and do not indicate any malfunction in your NISSAN radio system.

Reception conditions will constantly change because of vehicle movement. Buildings, terrain, signal distance and interference from other vehicles can work against ideal reception. Described below are some of the factors that can affect your radio reception.

FM RADIO RECEPTION

Range: FM range is normally limited to 25 – 30 miles (40 – 48 km), with monaural (single channel) FM having slightly more range than stereo FM. External influences may sometimes interfere with FM station reception even if the FM station is within 25 miles (40 km). The strength of the FM signal is directly related to the distance between the transmitter and receiver. FM signals follow a line-of-sight path, exhibiting many of the same characteristics as light. For example they will reflect off objects.

Fade and drift: As your vehicle moves away from a station transmitter, the signals will tend to fade and/or drift.

Static and flutter: During signal interference from buildings, large hills or due to antenna position (usually in conjunction with increased distance from the station transmitter) static or flutter can be heard. This can be reduced by adjusting the treble control to reduce treble response.

Multipath reception: Because of the reflective characteristics of FM signals, direct and reflected signals reach the receiver at the same time. The signals may cancel each other, resulting in momentary flutter or loss of sound.

AM RADIO RECEPTION

AM signals, because of their low frequency, can bend around objects and skip along the ground. In addition, the signals can be bounced off the ionosphere and bent back to earth. Because of these characteristics, AM signals are also subject to interference as they travel from transmitter to receiver.

Fading: Occurs while the vehicle is passing through freeway underpasses or in areas with many tall buildings. It can also occur for several seconds during ionospheric turbulence even in areas where no obstacles exist.

Static: Caused by thunderstorms, electrical power lines, electric signs and even traffic lights.

SATELLITE RADIO RECEPTION (if so equipped)

When the satellite radio is first installed or the battery has been replaced, the satellite radio may not work properly. This is not a malfunction. Wait more than 10 minutes with satellite radio ON and

the vehicle outside of any metal or large building for satellite radio to receive all of the necessary data.

No satellite radio reception is available and “NO SAT” is displayed when the SAT band option is selected unless optional satellite receiver and antenna are installed and an XM® or SIRIUS™ satellite radio service subscription is active.

Satellite radio performance may be affected if cargo carried on the roof blocks the satellite radio signal.

If possible, do not put cargo over the satellite antenna.

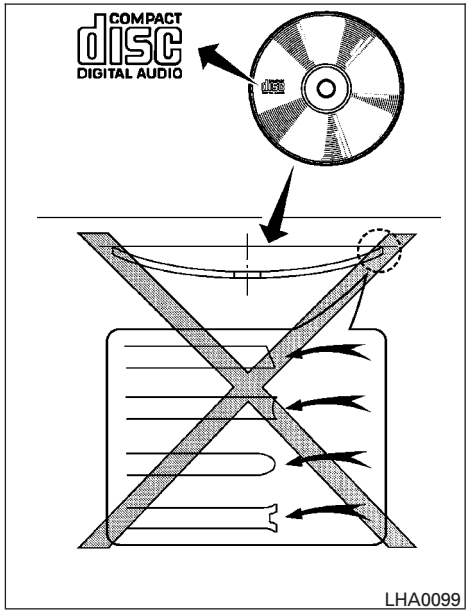

AUDIO OPERATION PRECAUTIONS

Compact disc (CD) player

- **Only use high quality 4.7 inches (12 cm) round discs that have the “COMPACT disc DIGITAL AUDIO” logo on the disc or packaging.**
- **During cold weather or rainy days, the player may malfunction due to the humidity. If this occurs, remove the CD and dehumidify or ventilate the player completely.**
- **The player may skip while driving on rough roads.**
- **The CD player sometimes cannot function when the compartment temperature is extremely high. Decrease the temperature before use.**
- **Do not expose the CD to direct sunlight.**
- **CDs that are in poor condition or are dirty, scratched or covered with fingerprints may not work properly.**
- **The following CDs may not work properly:**
  - **Copy control compact discs (CCCD)**
  - **Recordable compact discs (CD-R)**
  - **Rewritable compact discs (CD-RW)**
- **Do not use the following CDs as they may cause the CD player to malfunction:**
  - **3.1 in (8 cm) discs with an adapter**
  - **CDs that are not round**
  - **CDs with a paper label**
  - **CDs that are warped, scratched, or have abnormal edges**

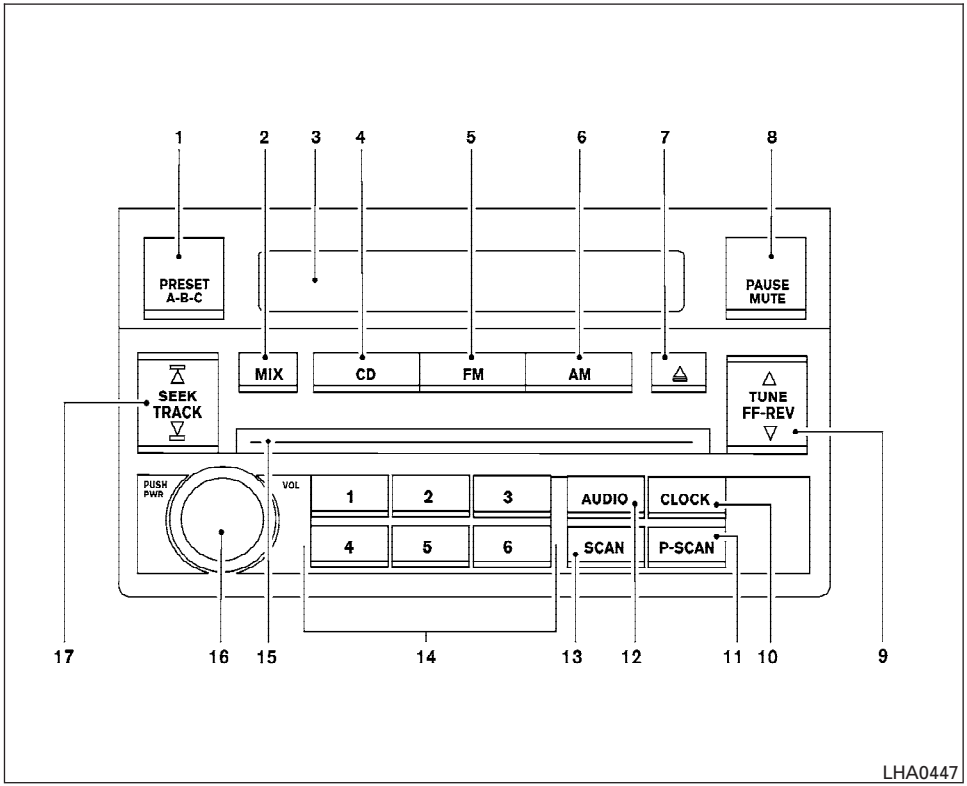

Type A

1. PRESET ABC button
2. MIX button
3. Display
4. CD select button
5. FM band select button
6. AM band select button
7. CD eject button
8. PAUSE/MUTE button
9. TUNE/FF-REV button
10. CLOCK button
11. Preset scan (P-SCAN) button
12. AUDIO button
13. SCAN button
14. Station preset buttons
15. CD insert slot
16. PWR/VOL control knob
17. SEEK/TRACK button

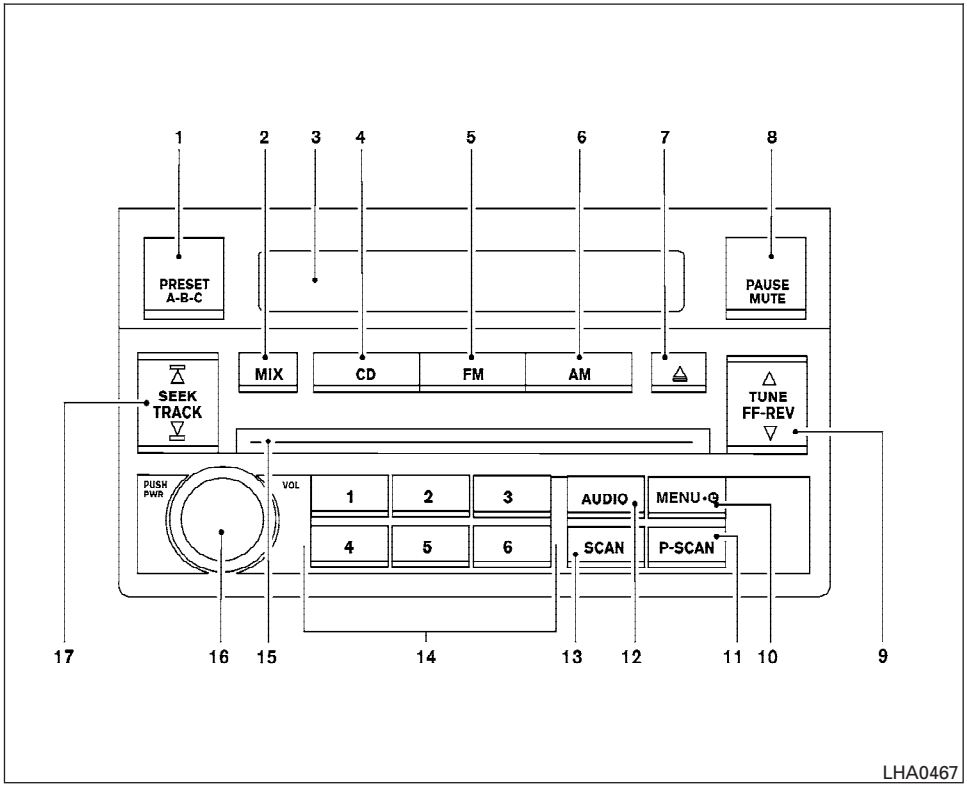

Type B

1. PRESET ABC button
2. MIX button
3. Display
4. CD select button
5. FM band select button
6. AM band select button
7. CD eject button
8. PAUSE/MUTE button
9. TUNE/FF-REV button
10. MENU/CLOCK button for radios with SSV
11. Preset scan (P-SCAN) button
12. AUDIO button
13. SCAN button
14. Station preset buttons
15. CD insert slot
16. PWR/VOL control knob
17. SEEK/TRACK button

FM-AM RADIO WITH COMPACT DISC (CD) PLAYER (if so equipped)

PWR/VOL control knob

Turn the ignition key to the ACC or ON position, then push the PWR/VOL control knob. If you listen to the radio with the engine not running, turn the key to the ACC position. The mode (radio

or CD) that was playing immediately before the system was turned off resumes playing.

When no CD is loaded, the radio comes on. Pushing the PWR/VOL control knob again turns the system off.

Turn the PWR/VOL control knob to the right to increase volume or to the left to decrease volume.

Adjusting tone quality and speaker balance

Press the AUDIO button to enter the audio adjust mode:

Bass→Mid→Treb→Fade→Bal

Press the TUNE/FF-REV (▲ or ▼) or SEEK/TRACK (▲ or ▼) to adjust to the desired levels. The display will return to the regular radio display after 10 seconds, or you may press the AUDIO button again to return to the regular radio display.

Clock operation

Pressing the MENU or CLOCK button displays the clock with the radio on or off. Press the MENU or CLOCK button again to turn off the clock display.

Clock set

1. Press and hold the MENU or CLOCK button until it beeps (longer than 2 seconds).
2. The hours will start flashing. Press TUNE/FF-REV (▲ or ▼) or SEEK/TRACK (▲ or ▼) to adjust the hours.
3. Press the MENU or CLOCK button to switch to the minute adjustment.
4. Press TUNE/FF-REV (▲ or ▼) or SEEK/TRACK (▲ or ▼) to adjust the minutes.
5. Press the MENU or CLOCK button again to exit the clock set mode.

The display will return to the regular clock display after 10 seconds, or you may press the MENU or CLOCK button again to return to the regular clock display.

FM-AM radio operation

FM-AM band select

Push the AM or the FM button to change from AM to FM reception.

The FM stereo indicator, ST, illuminates during FM stereo reception. When the stereo broadcast signal is weak, the radio automatically changes from stereo to monaural reception.

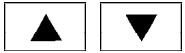

TUNE/FF—REV

⚠ WARNING

The radio should not be tuned while driving so full attention may be given to vehicle operation.

Use the ▲ and ▼ buttons for manual tuning. To move quickly through the channels, hold the tuning buttons down.

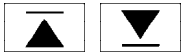

SEEK tuning

Push SEEK/TRACK (▲ or ▼). SEEK tuning begins from low to high frequencies or high to low frequencies, depending on which button is pressed, and stops at the next broadcasting station. If using the up button, once the highest broadcasting station is reached, the radio continues in the SEEK mode at the lowest broadcasting station. If using the down button, once the lowest broadcasting station is reached, the radio continues in the SEEK mode at the highest broadcasting station.

SCAN tuning

Push the SCAN button. SCAN illuminates in the display window. SCAN tuning begins from low to high frequencies. SCAN tuning stops for 5 seconds at each broadcasting station that has sufficient signal strength. When scanning, SCAN

blinks in the display. Pushing the SCAN button again during this 5 second period stops SCAN tuning and the radio remains tuned to that station.

Station memory operation

Each preset mode (A, B or C) has 6 presets, capable of storing any combination of AM, FM, SAT (if so equipped) and FM RDS stations.

Press the PRESET ABC button to change between the presets:

A→B→C

The radio displays icon A, B or C to indicate which set of presets is active.

To store a radio station in a preset:

1. Select the desired preset by pressing PRESET ABC.
2. Select the desired AM, FM or SAT (if so equipped) station band.
3. Tune to the desired station.
4. Press the desired station select button (>1.5 seconds).
5. A beep will sound indicating memorization is complete.
6. Other station select buttons can be set in the same manner.

If the battery cable is disconnected, or if the radio fuse opens, the radio memory is canceled. In that case, reset the desired stations.

Preset Scan

Pressing the Preset Scan button (<1.5 seconds) scans the permanent preset memory that is selected (A, B or C) from 1 - 6 for 5 seconds.

All Preset Scan

Pressing the Preset Scan button (>1.5 seconds) scans all the permanent preset memory banks (A, B or C) from 1 - 6 for 5 seconds.

Canceling Preset Scan mode

Pressing the Preset Scan (P.SCAN) button again will cancel the Preset Scan mode.

Speed Sensitive Control Volume (SSV) (if so equipped)

Your vehicle has Speed Sensitive Control Volume (SSV) for audio. The audio volume changes as the driving speed changes.

Press and hold the MENU button (>2 seconds) until the radio beeps to start the editing mode. Press the MENU button until the display shows **"SSV".** This display will last 2 seconds and then change to **"OFF"** . Press TUNE/FF-REV (▲ or ▼) to change between:

Off→Low→Mid→High

Compact disc (CD) player operation

Turn the ignition key to the ACC or ON position.

⚠ CAUTION

- **Do not force a compact disc into the CD insert slot. This could damage the CD and/or CD changer/player.**
- **Trying to load a CD with the CD door closed could damage the CD and/or CD changer.**

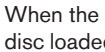

CD button

When the CD button is pressed with a compact disc loaded and the radio playing, the radio turns off and the last used compact disc starts to play.

FF (Fast Forward), REW (Rewind) buttons

When the TUNE/FF-REV (▲ or ▼) button is pressed while the compact disc is playing, the compact disc plays at an increased speed while fast forwarding or rewinding. When the button is released, the compact disc returns to normal play speed.

SEEK/TRACK buttons

When ▲ is pressed while the compact disc is playing, the selection following the present one

starts to play from the beginning. Press ▲ several times to skip several selections. Each time the button is pressed, the CD advances 1 additional selection. The track number appears in the display window. (When the last selection on the compact disc is skipped, the first selection is played.)

When ▼ is pressed, the selection being played returns to the beginning. Press ▼ several times to skip back several selections. Each time the button is pressed the CD moves back 1 selection. If the play pattern is in MIX mode when the button is pressed, the next random selection will be played.

MIX button

Press the MIX button to change CD play patterns:

Repeat→Mix→Normal Play

Repeat

Press the MIX button (<1.5 seconds) once to repeat the current track. The "1" icon is turned on.

Mix

Press the MIX button (<1.5 seconds) again to start shuffle play of the current disc. The "MIX" icon is turned on.

Normal play

Press the MIX button (<1.5 seconds) again to return to normal play mode. The "MIX" icon is turned off.

CD scan

Press the SCAN button (<1.5 seconds) to scan all tracks of the current disc for 10 seconds per track. The SCAN icon is flashed during Scan mode.

The Scan mode is canceled once it scans through all tracks on the disc, or if the SCAN button is pressed during Scan mode.

Eject CD

1. Press the ⏏ button.
2. The disc ejects. Remove the disc. (If the disc is not removed within 15 seconds, the disc will reload.)
3. The indicator and symbol for the disc are turned off.

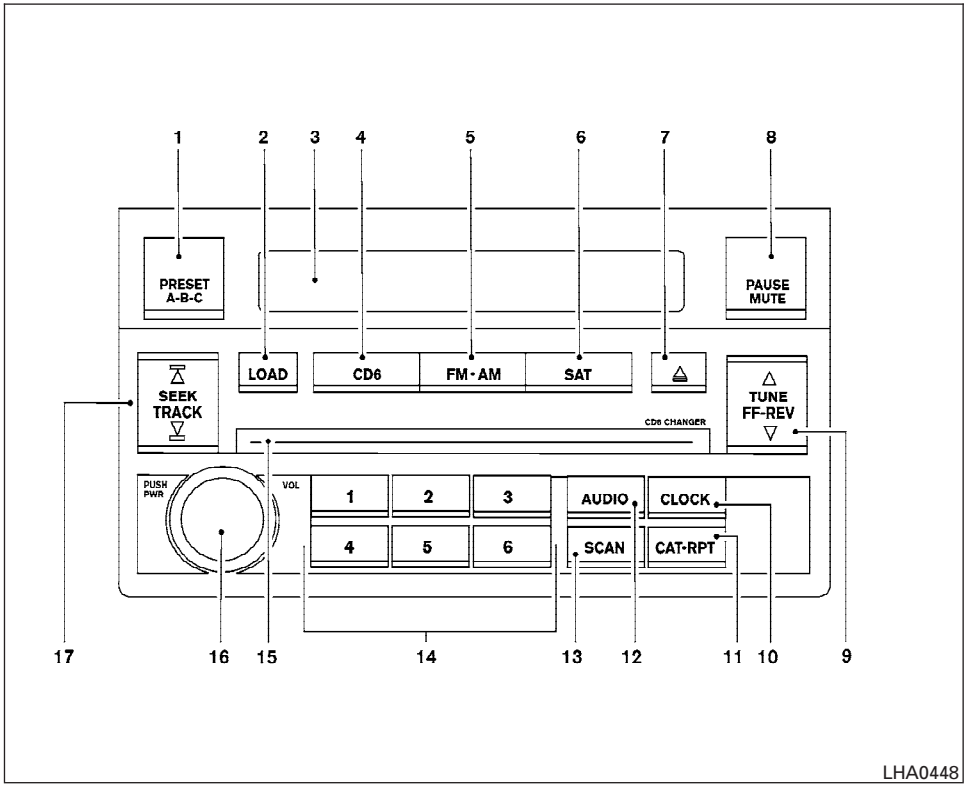

1. PRESET ABC button
2. LOAD button
3. Display
4. CD select button
5. FM/AM band select button
6. SAT (satellite) radio select button*
7. CD eject button
8. PAUSE/MUTE button
9. TUNE FF-REV button
10. MENU/CLOCK button
11. CAT/RPT button
12. AUDIO button
13. SCAN button
14. Station preset buttons
15. CD insert slot
16. POWER/VOL control knob
17. SEEK/TRACK button

FM-AM SAT RADIO WITH COMPACT DISC (CD) CHANGER (if so equipped)

PWR/VOL control knob

Turn the ignition key to the ACC or ON position, then push the PWR/VOL control knob. If you listen to the radio with the engine not running, turn the key to the ACC position. The mode (radio or CD) that was playing immediately before the system was turned off resumes playing.

When no CD is loaded, the radio comes on. Pushing the PWR/VOL control knob again turns the system off.

Turn the PWR/VOL control knob to the right to increase volume or to the left to decrease volume.

Adjusting tone quality and speaker balance

Press the AUDIO button to enter the audio adjust mode:

Bass→Treb→Fade→Bal

Press the TUNE/FF-REV (▲ or ▼) or SEEK/TRACK (▲ or ▼) to adjust to the desired levels. The display will return to the regular radio display after 10 seconds, or you may press the AUDIO button again to return to the regular radio display.

Clock operation

Pressing the CLOCK button displays the clock with the radio on or off. Press the CLOCK button again to turn off the clock display.

Clock set

1. Press and hold the CLOCK button until it beeps (>1.5 seconds).
2. The hours will start flashing. Press TUNE/FF-REV (▲ or ▼) or SEEK/TRACK (▲ or ▼) to adjust the hours.
3. Press the CLOCK button to switch to the minute adjustment.
4. Press TUNE/FF-REV (▲ or ▼) or SEEK/TRACK (▲ or ▼) to adjust the minutes.
5. Press the CLOCK button again to exit the clock set mode.

The display will return to the regular clock display after 7 seconds, or you may press the CLOCK button again to return to the regular clock display.

FM/AM/SAT radio operation

FM/AM/SAT band select:

Pushing the FM, AM or SAT radio select button will change the band to either FM, AM or SAT (satellite-if so equipped) radio stations.

When the FM, AM or SAT radio select button is pushed while the ignition switch is in the ACC or ON, the radio will come on at the station last played.

The last station played will also come on when the Power/Volume control knob is depressed to ON.

No satellite radio reception is available and “NO SAT” is displayed when the SAT button is pressed unless optional satellite receiver and antenna are installed and an XM® or SIRIUS™ satellite radio service subscription is active.

If a compact disc is playing when the FM, AM or SAT radio select button is pushed, the compact disc will automatically be turned off and the last radio station played will come on.

The FM stereo indicator ST will glow during FM stereo reception. When the stereo broadcast signal is weak, the radio will automatically change from stereo to monaural reception.

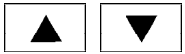

TUNE/FF—REV

⚠WARNING

The radio should not be tuned while driving so full attention may be given to vehicle operation.

Use the ▲ and ▼ buttons for manual tuning. To move quickly through the channels, hold the tuning buttons down.

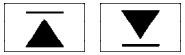

SEEK tuning

Push SEEK/TRACK (▲ or ▼). SEEK tuning begins from low to high frequencies or high to low frequencies, depending on which button is pressed, and stops at the next broadcasting station. If using the up button, once the highest broadcasting station is reached, the ra-

dio continues in the SEEK mode at the lowest broadcasting station. If using the down button, once the lowest broadcasting station is reached, the radio continues in the SEEK mode at the highest broadcasting station.

SCAN tuning

Push the SCAN button. SCAN illuminates in the display window. SCAN tuning begins from low to high frequencies. SCAN tuning stops for 5 seconds at each broadcasting station that has sufficient signal strength. When scanning, SCAN blinks in the display. Pushing the SCAN button again during this 5 second period stops SCAN tuning and the radio remains tuned to that station.

Station memory operation

Each preset mode (A, B or C) has 6 presets, capable of storing any combination of AM, FM, SAT (if so equipped) and FM RDS stations.

Press the PRESET ABC button to change between the presets:

A→B→C

The radio displays icon A, B or C to indicate which set of presets is active.

To store a radio station in a preset:

1. Select the desired preset by pressing PRESET ABC.
2. Select the desired AM, FM or SAT (if so equipped) station band.
3. Tune to the desired station.
4. Press the desired station select button (>1.5 seconds).
5. A beep will sound indicating memorization is complete.
6. Other station select buttons can be set in the same manner.

If the battery cable is disconnected, or if the radio fuse opens, the radio memory is canceled. In that case, reset the desired stations.

Radio data system (RDS):

RDS stands for Radio Data System, and is a data information service transmitted by some radio stations on the FM band (not AM band) and/or SAT radio encoded within a regular radio broadcast. Currently, most RDS stations are in large cities, but many stations are now considering broadcasting RDS data.

RDS can display:

- Station call sign, such as “WHFR 98.3”.
- Station name, such as “The Groove”.
- Music or programming type such as “Classical”, “Country”, or “Rock”.
- Traffic reports about delays or construction.

If the station broadcasts RDS information, the RDS icon is displayed.

Program type (PTY):

PTY can be used to search for a certain program type. Certain areas have a limited number of stations that transmit RDS. Many stations transmit call letters and frequencies only.

Searching or scanning by program type may yield a limited number of selections.

When CAT/RPT button is pressed for more than 1.5 seconds during FM or SAT (if so equipped) mode, the PTY name of the current tuned station is displayed. During this time if the PTY data code is zero or the data is unreadable, the display will show NONE.

To change the PTY:

1. Press the CAT/RPT button.
2. Press the TUNE/FF-REV (▲ or ▼) up/down button to chose a specific program type.

   ROCK, CLASSIC ROCK, SOFT ROCK, TOP 40, COUNTRY, JAZZ, CLASSICAL, OLDIES, NEWS, SPORTS, TALK, ANY

SEEK tuning:

3. After selecting a program type, push the SEEK/TRACK button (▲ or ▼) for less than 1.5 seconds within 10 seconds. Tuning to the PTY station will start. If you do not push the SEEK button within the 10 second period, the PTY mode will be canceled.

SCAN tuning:

4. Push the SCAN button for more than 1.5 seconds to scan the PTY name stations and stop at each broadcasting station for 5 seconds. Pushing the button again during this 5 second period will stop SCAN tuning and the radio will remain tuned to that station. If the SCAN button is not pushed within 5 seconds, SCAN tuning moves to the next station.

Speed Sensitive Control Volume (SSV) (if so equipped)

Your vehicle has Speed Sensitive Control Volume (SSV) for audio. The audio volume changes as the driving speed changes.

Press and hold the AUDIO button until the radio beeps to start the editing mode. Press the AUDIO button until the display shows **"SSV OFF".** Press TUNE/FF-REV (▲ or ▼) to change between:

Off→Low→Mid→High

Compact disc (CD) player operation

Turn the ignition key to the ACC or ON position.

⚠ CAUTION

- **Do not force a compact disc into the CD insert slot. This could damage the CD and/or CD changer/player.**
- **Trying to load a CD with the CD door closed could damage the CD and/or CD changer.**

CD6 button

When the CD6 button is pressed with a compact disc loaded and the radio playing, the radio turns off and the last used compact disc starts to play.

CD loading

Press the LOAD button to start CD loading mode.

The following sequence will occur:

1. If other discs are already loaded, the disc number indicator on the lowest available disc select button will start blinking. The display shows **"Select Disc"** .
2. The display changes to **"Insert Disc"** for a maximum of 15 seconds.
3. During the 15 second interval, insert the disc. The display changes to **"Loading Disc"** .
4. The CD will play after the disc is set to a play position.
5. The indicator changes from **blinking disc number indicator** to **solid disc number indicator** and the display changes to show the Disc number icon, Disc number, Track number and Elapsed time.

All disc loading

1. Press and hold the LOAD button until the radio beeps (>1.5 seconds).
2. The **numbered disc** indicator on the lowest available disc select button will start blinking. The display shows **"All Loading".**
3. The display changes to **"Insert Disc"** for a maximum of 15 seconds.
4. During the 15 second interval, insert the disc. The display changes to **"Loading Disc".**
5. The indicator changes from **blinking numbered disc** to **solid numbered disc.**
6. The disc number icon is turned on.

7. Repeat steps 2–5 until all discs are loaded, then the last loaded disc will begin to play. The display shows the Disc number, Track number and Elapsed Time.

Selected disc loading

1. Press an available disc select button whose indicator is off. The display shows **"Please Wait".**
2. The **numbered disc** indicator starts blinking and the display shows **"Insert Disc"** for 15 seconds.
3. Insert the CD. The display shows **"Loading Disc".**
4. The CD will play after the disc is set to a play position.
5. The indicator changes from **blinking numbered disc** to **solid numbered disc** and the display shows the Disc icon, Disc number, Track number and Elapsed Time.

If a disc is not inserted within 15 seconds or if the load button is pressed during load sequence, the entire disc load sequence will be canceled.

Disc play

Press the CD6 button. If a CD is loaded and the radio is playing, the radio turns off and the last loaded disc starts to play.

Selected disc play

1. Press the disc select button whose disc icon is displayed.
2. The indicator blinks during the change.
3. The CD plays after the disc is set to a play position.
4. The indicator changes from **blinking numbered disc** to **solid numbered disc** and the display shows the Disc number, Track number and Elapsed Time.

CAT/RPT :

When the CAT/RPT button is pushed while the compact disc is being played, the play pattern can be changed as follows:

ALL DISC RPT → 1 DISC RPT → 1 TRACK RPT → ALL DISC RDM → 1 DISC RDM → ALL DISC RPT

ALL DISC RPT: All discs loaded will be repeated.
1 DISC RPT: The disc that is currently playing will be repeated.
1 TRACK RPT: The current track will be repeated
ALL DISC RDM: Tracks from all discs will be played randomly.
1 DISC RDM: Tracks from the disc that is currently playing will be played randomly.

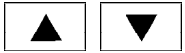

FF (fast forward) REW (rewind) buttons

When the TUNE/FF-REV (▲ or ▼) button is pressed while the compact disc is playing, the compact disc plays at an increased speed while fast forwarding or rewinding. When the button is released, the CD returns to normal play speed.

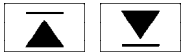

SEEK/TRACK buttons

When ▲ is pressed while the compact disc is playing, the selection following the present one starts to play from the beginning. Press ▲ several times to skip several selections. Each time the button is pressed, the CD advances 1 additional selection. The track number appears in the display window. (When the last selection on the compact disc is skipped, the first selection is played.)

When ▼ is pressed, the selection being played returns to the beginning. Press ▼ several times to skip back several selections. Each time the button is pressed, the CD moves back 1 selection. If the play pattern is in CAT/RPT mode when the button is pressed the next random selection will be played.

CD scan

1 Disc All Tracks

Press the SCAN button (<1.5 seconds) to scan all tracks of the current disc for 10 seconds per track. The display shows the track number and elapsed time as normal. The disc track number is flashed during Scan mode.

The Scan mode is canceled once it scans through all tracks on the disc, or if the SCAN button is pressed during Scan mode.

All Discs, 1 Track

Press and hold the SCAN button (>1.5 seconds) to scan the first track of all the loaded discs for 10 seconds per track. The display shows the track number and elapsed time as normal. The disc track number is flashed during Scan mode.

The Scan mode is canceled once it scans through all the loaded discs, or if the SCAN button is pressed during Scan mode.

⏏ Eject CD

Current disc

1. Press the ⏏ button.
2. The numbered disc indicator starts to blink and the display shows **"Select Disc"** for 2 seconds. The display then changes to **"Disc Eject"** .
3. The disc ejects. Remove the disc. (If the disc is not removed within 15 seconds, the disc will reload.)
4. The indicator and symbol for the disc are turned off.

Select a disc

1. Press the desired disc, then press the ⏏ button.
2. The numbered disc indicator starts blinking and the display shows **"Select Disc"** for 2 seconds. The display then changes to **"Disc Eject"** .
3. The disc ejects. Remove the disc (If the disc is not removed within 15 seconds, the disc will reload.)
4. The indicator and symbol for the disc are turned off.

All discs

1. Press and hold the ⏏ button until it beeps (>1.5 seconds).
2. The display then shows **"All Disc Eject"** .
3. When a disc is removed, the indicator and disc icon will be turned off, and then the next disc will emerge, and so on.
4. The display will be turned off after all discs are ejected and removed.

If a disc is not removed within 15 seconds, or if the ⏏ button is pressed again during the Eject sequence, the entire disc Eject sequence will be canceled.

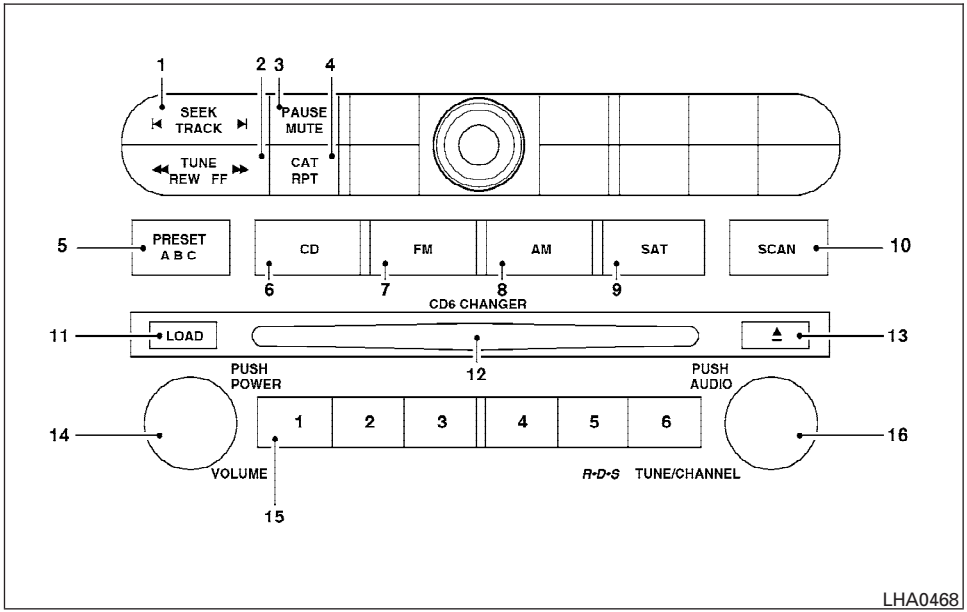

1. SEEK/TRACK change button
2. TUNE/REW/FF button
3. PAUSE/MUTE button
4. CAT/RPT button
5. PRESET A-B-C select button
6. CD play button
7. FM band select button
8. AM band select button
9. SAT (satellite) radio select button*
10. SCAN button
11. LOAD button
12. CD insert slot
13. CD eject button
14. POWER/VOLUME control knob
15. Station and CD select buttons (1 - 6)
16. Tuning and AUDIO control knob (BASS, MID, TREBLE, FADE and BALANCE)

*No satellite radio reception is available and “NO SAT” is displayed when the SAT button is pressed unless optional satellite receiver and antenna are installed and an XM® or SIRIUS™ satellite radio service subscription is active.

FM-AM-SAT RADIO WITH COMPACT DISC (CD) CHANGER (if so equipped)

No satellite radio reception is available and “NO SAT” is displayed when the SAT button is pressed to select satellite radio stations unless optional satellite receiver and antenna are installed and an XM® or SIRIUS™ satellite radio service subscription is active.

Audio main operation

POWER/VOLUME control:

Turn the ignition key to ACC or ON, and then push the POWER/VOLUME control knob while

the system is off to call up the mode (radio or CD) which was playing immediately before the system was turned off.

To turn the system off, press the POWER/VOLUME control knob.

Turn the POWER/VOLUME control knob to adjust the volume.

This vehicle has speed sensitive control volume (SSV) for audio. The audio volume changes as the driving speed changes.

AUDIO knob (BASS, MIDRANGE, TREBLE, FADE, BALANCE and SSV if so equipped):

Press the AUDIO knob to change the mode as follows:

BASS → MID → TREBLE → FADE → BALANCE → SSV (if so equipped)

To adjust Bass, Mid (Midrange), Treble, Fade and Balance, press the AUDIO knob until the desired mode appears in the display. Turn the Tuning knob to adjust Bass and Treble to the desired level. You can also use the Tuning knob to adjust Fader and Balance modes. Fader adjusts the sound level between the front and rear speakers and Balance adjusts the sound between the right and left speakers.

To change the SSV mode to OFF, LOW, MID or HIGH, turn the Tuning knob to the right or left.

Once you have adjusted the sound quality to the desired level, press the AUDIO knob repeatedly until the radio or CD display reappears. Otherwise, the radio or CD display will automatically reappear after about 10 seconds.

Clock set

For setting the clock see “Adjusting the time” on page 4-8.

Display CD text:

To change the text displayed while playing a CD, press the AUDIO knob until “Display Mode” appears.

Turn the Audio knob within 2 seconds. The text will change as follows:

Track number ⟷ Track title ⟷ Disc title ⟷ Track number

Display satellite radio text (if so equipped):

To change the text displayed while listening to satellite radio, press the AUDIO knob until “Display Mode” appears.

Turn the Tuning knob within 2 seconds. The text will change as follows:

Channel number ⟷ Channel name ⟷ Artist ⟷ Title ⟷ Channel number

Pause/mute button:

To mute or pause the audio sound, push the PAUSE/MUTE button. Radio mute will flash in the display screen.

To release the mute or pause, push the button again.

FM/AM/SAT radio operation

FM/AM/SAT band select:

Pushing the FM, AM or SAT radio select button will change the band to either FM, AM or SAT (satellite-if so equipped) radio stations.

When the FM, AM or SAT radio select button is pushed while the ignition switch is in the ACC or ON, the radio will come on at the station last played.

The last station played will also come on when the Power/Volume control knob is depressed to ON.

No satellite radio reception is available and “NO SAT” is displayed when the SAT button is pressed unless optional satellite receiver and antenna are installed and an XM® or SIRIUS™ satellite radio service subscription is active.

If a compact disc is playing when the FM, AM or SAT radio select button is pushed, the compact

disc will automatically be turned off and the last radio station played will come on.

The FM stereo indicator ST will glow during FM stereo reception. When the stereo broadcast signal is weak, the radio will automatically change from stereo to monaural reception.

TUNE (Tuning):

WARNING

The radio should not be tuned while driving so full attention may be given to vehicle operation.

To manually tune the radio, push the TUNE button (◀◀ or ▶▶) or turn the tuning knob to right or left.

To move quickly through the channels, hold either the ◀◀ or ▶▶ button down for more than 1.5 seconds.

SEEK tuning:

Push the SEEK/TRACK button (|◀ or ▶|) for less than 1.5 seconds to tune from high to low or low to high frequencies and stop at the next broadcasting station.

SCAN tuning

Push the SCAN button. SCAN illuminates in the display window. SCAN tuning begins from low to high frequencies. SCAN tuning stops for 5 seconds at each broadcasting station that has sufficient signal strength. When scanning, SCAN blinks in the display. Pushing the SCAN button again during this 5 second period stops SCAN tuning and the radio remains tuned to that station.

Station memory operations:

18 stations can be set for the FM, AM and SAT (Satellite-if so equipped) radio to the A, B and C preset button in any combination of FM, AM or SAT stations.

1. Choose preset channel A, B or C using the preset select button.
2. Select the desired FM, AM or SAT station band.
3. Tune to the desired station using manual, SEEK or SCAN tuning. Push and hold any of the desired station memory buttons (1 – 6) until a beep sound is heard.
4. The channel indicator will then come on and the sound will resume. Memorizing is now complete.
5. Other buttons can be set in the same manner.

If the battery cable is disconnected, or if the fuse blows, the radio memory will be canceled. In that case, reset the desired stations.

Radio data system (RDS):

RDS stands for Radio Data System, and is a data information service transmitted by some radio stations on the FM band (not AM band) and/or SAT radio encoded within a regular radio broadcast. Currently, most RDS stations are in large cities, but many stations are now considering broadcasting RDS data.

RDS can display:

- Station call sign, such as “WHFR 98.3”.
- Station name, such as “The Groove”.
- Music or programming type such as “Classical”, “Country”, or “Rock”.
- Traffic reports about delays or construction.

If the station broadcasts RDS information, the RDS icon is displayed.

Program type (PTY):

PTY can be used to search for a certain program type. Certain areas have a limited number of stations that transmit RDS. Many stations transmit call letters and frequencies only.

Searching or scanning by program type may yield a limited number of selections.

When CAT/RPT button is pressed for more than 1.5 seconds during FM or SAT (if so equipped) mode, the PTY name of the current tuned station is displayed. During this time if the PTY data code is zero or the data is unreadable, the display will show NONE.

To change the PTY:

1. Press the CAT/RPT button.
2. Press the TUNE/FF-REV (▲ or ▼) up/down button to chose a specific program type.

   ROCK, CLASSIC ROCK, SOFT ROCK, TOP 40, COUNTRY, JAZZ, CLASSICAL, OLDIES, NEWS, SPORTS, TALK, ANY

SEEK tuning:

3. After selecting a program type, push the SEEK/TRACK button (▲ or ▼) for less than 1.5 seconds within 10 seconds. Tuning to the PTY station will start. If you do not push the SEEK button within the 10 second period, the PTY mode will be canceled.

SCAN tuning:

4. Push the SCAN button for more than 1.5 seconds to scan the PTY name stations and stop at each broadcasting station for 5 seconds. Pushing the button again during this 5 second period will stop SCAN tuning and the radio will remain tuned to that station. If the SCAN button is not pushed within 5 seconds, SCAN tuning moves to the next station.

Compact disc (CD) changer operation

⚠ CAUTION

- **Do not force a compact disc into the CD insert slot. This could damage the CD and/or CD changer/player.**
- **Trying to load a CD with the CD door closed could damage the CD and/or CD changer.**

Turn the ignition key to the ACC or ON position and insert the compact disc into the slot with the label side facing up. The compact disc will be guided automatically into the slot and start playing. To insert the disc, first push the LOAD button.

If the radio is already operating, it will automatically turn off and the compact disc will play.

If the system has been turned off while the compact disc was playing, pushing the POWER/VOLUME control knob will start the compact disc.

LOAD button:

To insert a CD in the CD changer, push the LOAD button for less than 1.5 seconds. Select the loading slot by pushing the CD insert select button (1 – 6), then insert the CD.

To insert 6 CDs to the CD changer, push the LOAD button for more than 1.5 seconds.

The slot numbers (1 – 6) will illuminate on the display when CDs are loaded into the changer.

CD button:

When the CD button is pushed with the system off and the compact disc loaded, the system will turn on and the compact disc will start to play.

When the CD button is pushed with the compact disc loaded with the radio playing, the radio will automatically be turned off and the compact disc will start to play.

REW (Rewind), FF (Fast Forward):

When the ◀◀ (rewind) or ▶▶ (fast forward) button is pushed while a compact disc is playing, the compact disc will play while rewinding or fast forwarding . When the button is released, the compact disc will return to normal play speed.

When the CD button is pushed with the system off and the compact disc loaded, the system will turn on and the compact disc will start to play.

When the CD button is pushed with the compact disc loaded with the tape or the radio playing, the tape or radio will automatically be turned off and the compact disc will start to play.

SEEK/TRACK:

When the |◀ button is pushed for less than 1.5 seconds while a compact disc is playing, the track being played returns to its beginning. Push several times to skip back through tracks. The compact disc will go back the number of times the button is pushed.

When the ▶| button is pushed for less than 1.5 seconds while the compact disc is playing, the next track will start to play from its beginning. Push several times to skip through tracks. The compact disc will advance the number of times the button is pushed. (When the last track on the compact disc is skipped through, the first track will be played.)

When pushing the |◀ or ▶| button for more than 1.5 seconds, each track will play for about 10 seconds. To stop playing, push the ▶| button again.

CD select buttons:

To play another CD that has been loaded, push a CD select button (1 – 6).

CAT/RPT:

When the CAT/RPT play button is pushed while the compact disc is played, the play pattern can be changed as follows:

ALL DISC RPT → 1 DISC RPT→ 1 TRACK RPT → ALL DISC RDM → 1 DISC RDM → ALL DISC RPT

ALL DISC RPT: All discs loaded will be repeated.
1 DISC RPT: The disc that is currently playing will be repeated.
1 TRACK RPT: The track that is currently playing will be repeated
ALL DISC RDM: Tracks from all discs will be played randomly
1 DISC RDM: Tracks from the disc that is currently playing will be played randomly

CD EJECT:

Current disc:

- Press the slot number (1 – 6) for the desired disc, then press the ⏏ button. The compact disc will be ejected. If the disc is not removed within 15 seconds, the disc will reload (except 3.1 in [8 cm] diameter compact discs).

All discs:

- Press and hold the ⏏ button for more than 1.5 seconds. The compact discs will be ejected one by one. If a disc is not removed within 15 seconds, or the ⏏ button is pressed again during the eject sequence, the entire disc eject sequence will be canceled.

When this button is pushed while the compact disc is being played, the compact disc will eject and the last source will be played.

CD IN indicator:

The slot numbers (1 – 6) will illuminate if CDs have been loaded into the changer.

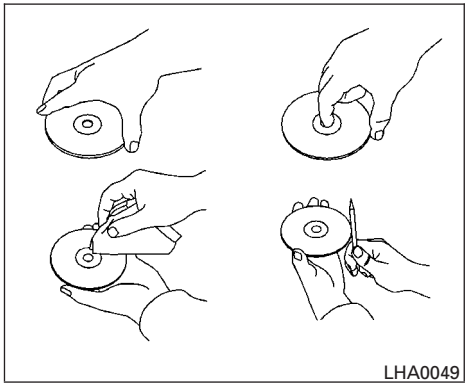

CD CARE AND CLEANING

- Handle a CD by its edges. Do not bend the disc. Never touch the surface of the disc.
- Always place the discs in the storage case when they are not being used.
- To clean a disc, wipe the surface from the center to the outer edge using a clean, soft cloth. Do not wipe the disc using a circular motion.
- Do not use a conventional record cleaner or alcohol intended for industrial use.
- A new disc may be rough on the inner and outer edges. Remove the rough edges by rubbing the inner and outer edges with the side of a pen or pencil as illustrated.

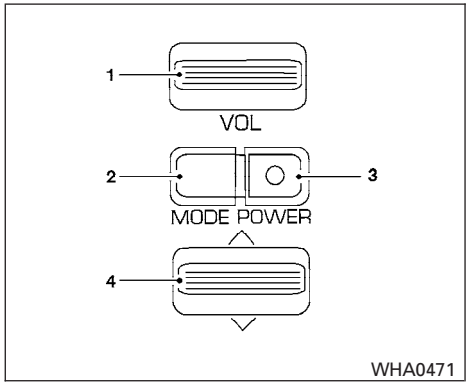

Type A

1. Volume control switch
2. Mode select switch
3. Audio power on/off switch
4. Audio tuning Up/Down

STEERING WHEEL SWITCH FOR AUDIO CONTROL (if so equipped)

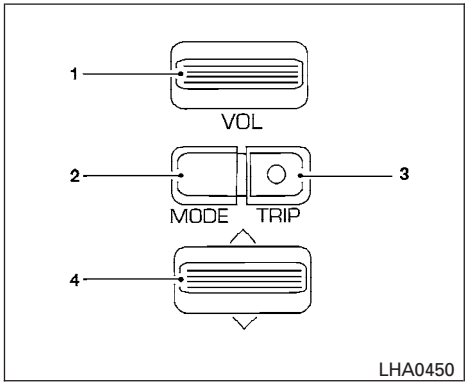

Type B

1. Volume control switch
2. Mode select switch
3. Trip
4. Audio tuning Up/Down

POWER on/off switch (Type A)

With the ignition key turned to the ACC or ON position, push the POWER switch to turn the audio system on or off.

Trip set (Type B)

For information on using the trip computer see "Trip computer" in the "Instrument and controls" section of this owner's manual.

"MODE" select switch

Push the mode select switch to change the modes:

PRESET A → PRESET B → PRESET C → CD→ SAT (if so equipped)

Volume control switch

Push the volume control switch up or down to increase or decrease the volume.

∨ ∧ Tuning

Memory change (radio):

Push the tuning switch ∨ or ∧ for less than 1.5 seconds to change to the next preset station in memory.

Seek tuning (radio):

Push the tuning switch ∨ or ∧ for more than 1.5 seconds to seek the next or previous radio station.

Next/Previous track (CD):

Push the tuning switch ∨ or ∧ for less than 1.5 seconds to return to the beginning of the present track or skip to the next track. Push several times to skip back or skip through tracks.

This system searches for the blank intervals between selections. If there is a blank interval within 1 program or there is no interval between programs, the system may not stop in the desired or expected location.

Change disc (CD) (if so equipped):

Push the tuning switch ∨ or ∧ for more than 1.5 seconds to change the playing disc up or down.

ANTENNA

Window antenna

The antenna pattern is printed inside the rear window.

⚠ CAUTION

- **Do not place metalized film near the rear window glass or attach any metal parts to it. This may cause poor reception or noise.**
- **When cleaning the inside of the rear window, be careful not to scratch or damage the rear window antenna. Lightly wipe along the antenna with a dampened soft cloth.**

CAR PHONE OR CB RADIO

When installing a CB, ham radio or car phone in your NISSAN, be sure to observe the following cautions, otherwise the new equipment may adversely affect the engine control system and other electronic parts.

⚠ WARNING

- **A cellular telephone should not be used while driving so full attention may be given to vehicle operation. Some jurisdictions prohibit the use of cellular telephones while driving.**
- **If you must make a call while your vehicle is in motion, the hands free cellular phone operational mode (if so equipped) is highly recommended. Exercise extreme caution at all times so full attention may be given to vehicle operation.**
- **If a conversation in a moving vehicle requires you to take notes, pull off the road to a safe location and stop your vehicle before doing so.**

⚠ CAUTION

- **Keep the antenna as far away as possible from the electronic control modules.**
- **Keep the antenna wire more than 8 in (20 cm) away from the electronic control system harnesses. Do not route the antenna wire next to any harness.**
- **Adjust the antenna standing-wave ratio as recommended by the manufacturer.**
- **Connect the ground wire from the CB radio chassis to the body.**
- **For details, consult a NISSAN dealer.**

MEMO

5 Starting and driving

Precautions when starting and driving 5-2
Exhaust gas (carbon monoxide) 5-2
Three-way catalyst 5-2
Avoiding collision and rollover 5-3
Drinking alcohol/drugs and driving 5-3
Ignition switch 5-4
Automatic transmission 5-4
Manual transmission 5-5
Key positions 5-5
Nissan vehicle immobilizer system (NVIS) 5-5
Before starting the engine 5-6
Starting the engine 5-6
Driving the vehicle 5-7
Automatic transmission (if so equipped) 5-7
Manual transmission 5-12
Parking brake 5-14
Cruise control (if so equipped) 5-15
Precautions on cruise control 5-15
Cruise control operations 5-15
Break-in schedule 5-16
Increasing fuel economy 5-17
Parking/parking on hills 5-18
Power steering 5-19
Brake system 5-19
Brake precautions 5-19
Anti-lock brake system (ABS) (if so equipped) 5-20
Traction control system (TCS) (if so equipped) 5-21
Cold weather driving 5-22
Freeing a frozen door lock 5-22
Anti-freeze 5-22
Battery 5-22
Draining of coolant water 5-22
Tire equipment 5-22
Special winter equipment 5-23
Driving on snow or ice 5-23
Engine block heater (if so equipped) 5-24

⚠ WARNING

- **Do not leave children or adults who would normally require the assistance of others alone in your vehicle. Pets should also not be left alone. They could accidentally injure themselves or others through inadvertent operation of the vehicle. Also, on hot, sunny days, temperatures in a closed vehicle could quickly become high enough to cause severe or possibly fatal injuries to people or animals.**
- **Closely supervise children when they are around cars to prevent them from playing and becoming locked in the trunk where they could be seriously injured. Keep the car locked, with the rear seatback and trunk lid securely latched when not in use, and prevent children's access to car keys.**

EXHAUST GAS (carbon monoxide)

⚠ WARNING

- **Do not breathe exhaust gases; they contain colorless and odorless carbon monoxide. Carbon monoxide is dangerous. It can cause unconsciousness or death.**
- **If you suspect that exhaust fumes are entering the vehicle, drive with all windows fully open, and have the vehicle inspected immediately.**
- **Do not run the engine in closed spaces such as a garage.**
- **Do not park the vehicle with the engine running for any extended length of time.**
- **Keep the trunk lid closed while driving, otherwise exhaust gases could be drawn into the passenger compartment. If you must drive with the trunk lid open, follow these precautions:**
  1. **Open all the windows.**
  2. **Set the air recirculation button to off and the fan control dial to high to circulate the air.**
- **If electrical wiring or other cable connections must pass to a trailer through the seal on the trunk lid or the body, follow the manufacturer's recommendation to prevent carbon monoxide entry into the vehicle.**
- **The exhaust system and body should be inspected by a qualified mechanic whenever:**
  a. **The vehicle is raised for service.**
  b. **You suspect that exhaust fumes are entering into the passenger compartment.**
  c. **You notice a change in the sound of the exhaust system.**
  d. **You have had an accident involving damage to the exhaust system, underbody, or rear of the vehicle.**

THREE-WAY CATALYST

The three-way catalyst is an emission control device installed in the exhaust system. Exhaust gases in the three-way catalyst are burned at high temperatures to help reduce pollutants.

⚠ WARNING

- **The exhaust gas and the exhaust system are very hot. Keep people, animals or flammable materials away from the exhaust system components.**
- **Do not stop or park the vehicle over flammable materials such as dry grass, waste paper or rags. They may ignite and cause a fire.**

⚠ CAUTION

- **Do not use leaded gasoline. Deposits from leaded gasoline will seriously reduce the three-way catalyst's ability to help reduce exhaust pollutants.**
- **Keep your engine tuned up. Malfunctions in the ignition, fuel injection, or electrical systems can cause overrich fuel flow into the three-way catalyst, causing it to overheat. Do not keep driving if the engine misfires, or if noticeable loss of performance or other unusual operating conditions are detected. Have the vehicle inspected promptly by a NISSAN dealer.**
- **Avoid driving with an extremely low fuel level. Running out of fuel could cause the engine to misfire, damaging the three-way catalyst.**
- **Do not race the engine while warming it up.**
- **Do not push or tow your vehicle to start the engine.**

AVOIDING COLLISION AND ROLLOVER

⚠ WARNING

Failure to operate this vehicle in a safe and prudent manner may result in loss of control or an accident.

Be alert and drive defensively at all times. Obey all traffic regulations. Avoid excessive speed, high speed cornering, or sudden steering maneuvers, because these driving practices could cause you to lose control of your vehicle. **As with any vehicle, loss of control could result in a collision with other vehicles or objects, or cause the vehicle to roll over, particularly if the loss of control causes the vehicle to slide sideways.** Be attentive at all times, and avoid driving when tired. Never drive when under the influence of alcohol or drugs (including prescription or over-the-counter drugs which may cause drowsiness). Always wear your seat belt as outlined in the "Safety – Seats, seat belts and supplemental restraint system" section of this manual, and also instruct your passengers to do so.

Seat belts help reduce the risk of injury in collisions and rollovers. **In a rollover crash, an unbelted or improperly belted person is significantly more likely to be injured or killed than a person properly wearing a seat belt.**

DRINKING ALCOHOL/DRUGS AND DRIVING

⚠ WARNING

Never drive under the influence of alcohol or drugs. Alcohol in the bloodstream reduces coordination, delays reaction time and impairs judgement. Driving after drinking alcohol increases the likelihood of being involved in an accident injuring yourself and others. Additionally, if you are injured in an accident, alcohol can increase the severity of the injury.

NISSAN is committed to safe driving. However, you must choose not to drive under the influence of alcohol. Every year thousands of people are injured or killed in alcohol-related accidents. Although the local laws vary on what is considered to be legally intoxicated, the fact is that alcohol affects all people differently and most people underestimate the effects of alcohol.

Remember, drinking and driving don't mix! And that is true for drugs, too (over-the-counter, prescription, and illegal drugs). Don't drive if your ability to operate your vehicle is impaired by alcohol, drugs, or some other physical condition.

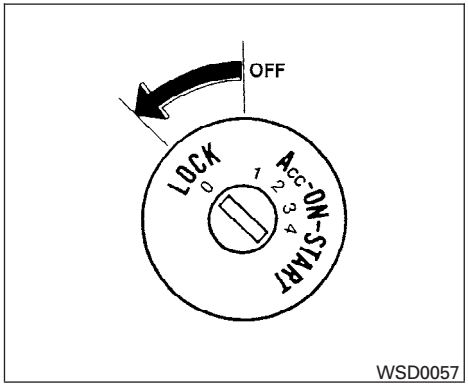

WSD0057

AUTOMATIC TRANSMISSION

The ignition lock is designed so the key cannot be turned to the LOCK position and removed until the shift selector lever is moved to the P (Park) position.

When removing the key from the ignition, make sure the shift selector lever is in the P (Park) position.

If the selector lever is not returned to P (Park) position, the key cannot be moved to the LOCK position.

To remove the key from the ignition switch:

1. Shift the selector lever to the P (Park) position with the key in the ON position.
2. Turn the key to the LOCK position.
3. Remove the key from the ignition.

If the selector lever is shifted to the P (Park) position after the key is turned to the OFF position or when the key cannot be turned to the LOCK position, proceed as follows to remove the key.

1. Move the shift selector lever into the P (Park) position.
2. Turn the ignition key slightly toward the ON position.
3. Turn the key to the LOCK position.
4. Remove the key.

The shift selector lever is designed so it cannot moved out of P (Park) and into any of the other gear positions if the ignition key is turned to OFF position or if the key is removed from the switch.

The shift selector lever can be moved if the ignition switch is in the ON position and the foot brake pedal is depressed.

There is an OFF position between the LOCK and ACC positions. The OFF position is indicated by a "1" on the key cylinder. When the ignition is in the OFF position, the steering wheel is not locked.

In order for the steering wheel to be locked, it must be turned about 1/8 of a turn clockwise from the straight up position.

To lock the steering wheel, turn the key to the LOCK position. Remove the key. To unlock the steering wheel, insert the key and turn it gently while rotating the steering wheel slightly right and left.

If the key will not turn from the LOCK position, turn the steering wheel to the left or right while turning the key to unlock the key cylinder.

⚠ WARNING

Never remove or turn the key to the LOCK position while driving. The steering wheel will lock. This may cause the driver to lose control of the vehicle and could result in serious vehicle damage or personal injury.

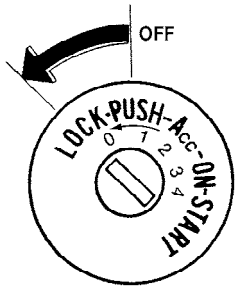

WSD0058

MANUAL TRANSMISSION

The ignition switch includes a device that helps prevent accidental removal of the key while driving.

The key can only be removed when the ignition switch is in the LOCK position.

On manual transmission models, to turn the ignition key to LOCK position from ACC or ON position, turn the key to OFF, push the key in, then turn the key to LOCK.

In order for the steering wheel to be locked, it must be turned about 1/8 of a turn clockwise from the straight up position.

To lock the steering wheel, turn the key to the LOCK position. Remove the key. To unlock the steering wheel, insert the key and turn it gently while rotating the steering wheel slightly right and left.

⚠ WARNING

Never remove or turn the key to the LOCK position while driving. The steering wheel will lock. This may cause the driver to lose control of the vehicle and could result in serious vehicle damage or personal injury.

KEY POSITIONS

LOCK: Normal parking position (0)

OFF: (Manual transmission model) (1)

The engine can be turned off without locking the steering wheel.

ACC: (Accessories) (2)

This position activates electrical accessories such as the radio when the engine is not running.

ON: Normal operating position (3)

This position turns on the ignition system and the electrical accessories.

START: (4)

This position starts the engine. As soon as the engine has started, release the key. It automatically returns to the ON position.

NISSAN VEHICLE IMMOBILIZER SYSTEM (NVIS)

The NISSAN Vehicle Immobilizer System (NVIS) will not allow the engine to start without the use of the registered NVIS key.

If the engine fails to start using a registered NVIS key (for example, when interference is caused by another NVIS key, an automated toll road device or automatic payment device on the key ring), restart the engine using the following procedures:

1. Leave the ignition switch in the ON position for approximately 5 seconds.
2. Turn the ignition switch to the OFF or LOCK position, and wait approximately 10 seconds.
3. Repeat steps 1 and 2.
4. Restart the engine while holding the device (which may have caused the interference) separate from the registered NVIS key.

If the no start condition re-occurs, NISSAN recommends placing the registered NVIS key on a separate key ring to avoid interference from other devices.

BEFORE STARTING THE ENGINE

- Make sure the area around the vehicle is clear.
- Check fluid levels such as engine oil, coolant, brake and clutch fluid, and window washer fluid as frequently as possible, or at least whenever you refuel.
- Check that all windows and lights are clean.
- Visually inspect tires for their appearance and condition. Also check tires for proper inflation.
- Lock all doors.
- Position seat and adjust head restraints.
- Adjust inside and outside mirrors.
- Fasten seat belts and ask all passengers to do likewise.
- Check the operation of warning lights when the key is turned to the ON (3) position. See "Warning/indicator lights and audible reminders" in the "Instruments and controls" section of this manual.

STARTING THE ENGINE

1. Apply the parking brake.
2. **Automatic transmission:**

   Move the shift selector lever to P (Park) or N (Neutral). P (Park) is recommended.

   The shift selector lever cannot be moved out of P (Park) and into any of the other gear positions if the ignition key is turned to the OFF position or if the key is removed from the ignition switch.

   The starter is designed not to operate if the shift selector lever is in any of the driving positions.

   Manual transmission:

   Move the shift lever to N (Neutral). Depress the clutch pedal to the floor while cranking the engine.

   The starter is designed not to operate unless the clutch pedal is fully depressed.
3. Crank the engine **with your foot off the accelerator pedal** by turning the ignition key to START. Release the key when the engine starts. If the engine starts, but fails to run, repeat the above procedure.

- If the engine is very hard to start in extremely cold weather or when restarting, depress the accelerator pedal a little (approximately 1/3 to the floor) and hold it and then crank the engine. Release the key and the accelerator pedal when the engine starts.
- If the engine is very hard to start because it is flooded, depress the accelerator pedal all the way to the floor and hold it. Crank the engine for 5-6 seconds. After cranking the engine, release the accelerator pedal. Crank the engine **with your foot off the accelerator pedal** by turning the ignition key to START. Release the key when the engine starts. If the engine starts, but fails to run, repeat the above procedure.

⚠ CAUTION

Do not operate the starter for more than 15 seconds at a time. If the engine does not start, turn the key off and wait 10 seconds before cranking again, otherwise the starter could be damaged.

4. Allow the engine to idle for at least 30 seconds after starting. Do not race the engine while warming it up. Drive at moderate speed for a short distance first, especially in cold weather.

AUTOMATIC TRANSMISSION (if so equipped)

WARNING

- **Do not depress the accelerator pedal while shifting from P (Park) or N (Neutral) to R (Reverse), D (Drive) or manual shift mode. Always depress the brake pedal until shifting is completed. Failure to do so could cause you to lose control and have an accident.**
- **Cold engine idle speed is high, so use caution when shifting into a forward or reverse gear before the engine has warmed up.**
- **Never shift to P (Park) or R (Reverse) while the vehicle is moving. This could cause an accident.**

CAUTION

- **When stopping the vehicle on an uphill grade, do not hold the vehicle by depressing the accelerator pedal. The foot brake should be used for this purpose.**
- **Do not downshift abruptly on slippery roads. This may cause a loss of control.**

The automatic transmission in your vehicle is electronically controlled to produce maximum power and smooth operation.

The recommended operating procedures for this transmission are shown on the following pages. Follow these procedures for maximum vehicle performance and driving enjoyment.

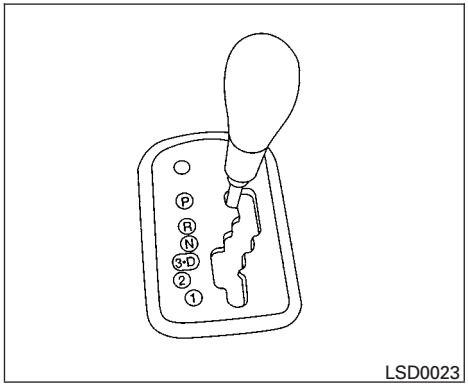

Gate type shift

The automatic transmission in your vehicle is electronically controlled to produce maximum power and smooth operation.

The recommended operating procedures for this transmission are shown on the following pages. Follow these procedures for maximum vehicle performance and driving enjoyment.

Starting the vehicle

1. After starting the engine, fully depress the foot brake pedal before attempting to move the shift selector lever out of the P (Park) position.
2. Keep the foot brake pedal depressed and move the shift selector lever into a driving gear.
3. Release the foot brake, then gradually start the vehicle in motion.

The automatic transmission is designed so the foot brake pedal MUST be depressed before shifting from P (Park) to any drive position while the ignition switch is in the ON position.

The shift selector lever cannot be moved out of P (Park) and into any of the other gear positions if the ignition key is turned to the LOCK, OFF or ACC position or if the key is removed.

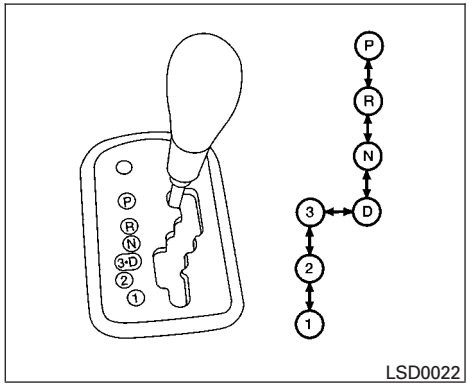

Shifting

After starting the engine, fully depress the brake pedal and move the shift selector lever out of the P (Park) position.

⚠ WARNING

Apply the parking brake if the selector lever is in any position while the engine is not running. Failure to do so could cause the vehicle to move unexpectedly or roll away and result in serious personal injury or property damage.

If the key is turned to the OFF or ACC position for any reason while the vehicle is in N (Neutral), or any D (Drive) position, the shift selector lever cannot be moved to P (Park). Additionally, the key cannot be turned to the LOCK position and be removed from the ignition switch. If this occurs, perform the following steps:

1. Apply the parking brake when the vehicle is stopped.
2. Turn the key to the ON position.
3. Depress the foot brake pedal.
4. Move the shift selector lever to P (Park) or N (Neutral) to restart the vehicle (P is preferred). Move the shift selector lever to P (Park) to park the vehicle and turn the ignition key to the LOCK position to remove the key.

P (Park):

Use this selector position when the vehicle is parked or when starting the engine. Make sure the vehicle is completely stopped. **The brake pedal must be depressed to move the selector lever from N (Neutral) or any drive position to P (Park).** Apply the parking brake. When parking on a hill, apply the parking brake first, then move the shift selector lever into the P (Park) position.

R (Reverse):

⚠ CAUTION

Use this position only when the vehicle is completely stopped.

Use this position to back up. Make sure the vehicle is completely stopped before selecting the R (Reverse) position. **The brake pedal must be depressed to move the selector lever from P (Park), N (Neutral) or any drive position to R (Reverse).**

N (Neutral):

Neither forward nor reverse gear is engaged. The engine can be started in this position. You may shift to N (Neutral) and restart a stalled engine while the vehicle is moving.

D (Drive):

Use this position for all normal forward driving.

3 (Third gear):

Use this position for driving up and down long slopes where engine braking would be advantageous.

2 (Second gear):

Use this position for hill climbing or engine braking on downhill grades.

Do not shift into the 2 position at speeds above 62 MPH (100 km/h). Do not exceed 62 MPH (100 km/h) in the 2 position.

1 (Low gear):

Use this position when climbing steep hills slowly or slow driving through deep snow, sand or mud, or for maximum engine braking on steep downhill grades.

Do not shift into the 1 position at speeds above 34 MPH (55 km/h). Do not exceed 34 MPH (55 km/h) in the 1 position.

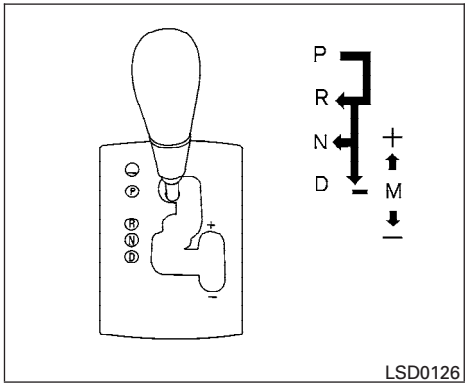

Manual shift mode

When the selector lever is shifted from D to the manual shift gate with the vehicle stopped or while driving, the transmission enters the manual shift mode. Shift ranges can be selected manually.

In the manual shift mode, the shift range is displayed on the position indicator in the meter. When shifting the shift lever to the manual shift gate, the position indicator displays 1 (first) up to 5 (fifth) depending on vehicle speed.

Shift ranges up or down one by one as follows:

1⇔ 2 ⇔ 3 ⇔ 4 ⇔ 5

5 (Fifth):

Use this position for all normal forward driving at highway speeds.

4 (Fourth):

For driving up or down long slopes where engine braking would be advantageous.

3 (Third) and 2 (Second):

Use for hill climbing or engine braking on downhill grades.

M1 (First):

Use this position when climbing steep hills slowly or driving slowly through deep snow, sand or mud, or for maximum engine braking on steep downhill grades.

- Remember not to drive at high speeds for extended periods of time in lower than 4 range. This reduces fuel economy.

When shifting up:

Move the selector lever to the + (up) side. (Shifts to higher range.)

When shifting down:

Move the selector lever to the – (down) side. (Shifts to lower range.)

- The transmission will automatically downshift the gears. (For example, if you select the 3rd range, the transmission will shift down between the 3rd and 1st gears.)
- Moving the selector lever rapidly to the same side twice will shift the ranges in succession.

When canceling the manual shift mode:

Return the selector lever to the D position to return the transmission to the normal driving mode.

- **In the manual shift mode, the transmission may not shift to the selected gear. This helps maintain driving performance and reduces the chance of vehicle damage or loss of control.**
- **In the manual shift mode, the transmission may shift up automatically to a higher range than selected if the engine speed is too high. When the vehicle speed decreases, the transmission automatically shifts down and shifts to 1st gear before the vehicle comes to a stop.**

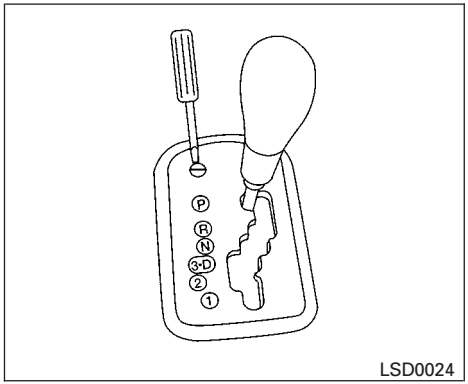

Type A

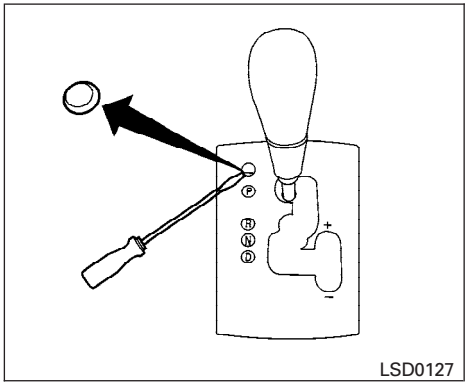

Type B

Shift lock release

If the battery is discharged, the shift selector lever may not be moved from the P (Park) position even with the brake pedal depressed.

To move the shift selector lever, release the shift lock. The shift selector lever can be moved to N (Neutral). However, the steering wheel will be locked unless the ignition switch is turned to the ON position. This allows the vehicle to be moved if the battery is discharged.

To push the shift lock release, complete the following procedure:

1. Turn the ignition key to the LOCK position and remove the key
2. Apply the parking brake.
3. Remove the shift lock release cover as shown.
4. Insert a small screwdriver in the shift lock release slot and push down.
5. Move the shift selector lever to the N (Neutral) position while holding down the shift lock release.
6. Turn the key to the ON position to unlock the steering wheel. Now the vehicle may be moved to the desired location.

If the shift selector lever cannot be moved out of P (Park), have a NISSAN dealer check the automatic transmission system as soon as possible.

⚠ WARNING

If the selector lever cannot be moved from the P (Park) position while the engine is running and the brake pedal is depressed, the stop lights may not work. Malfunctioning stop lights could cause an accident injuring yourself and others.

Accelerator downshift — in D position —

For passing or hill climbing, depress the accelerator pedal to the floor. This shifts the transmission down into a lower gear, depending on the vehicle speed.

Fail-safe

When the fail-safe operation occurs, please note that the transmission will be locked in any of the forward gears according to the condition.

If the vehicle is driven under extreme conditions, such as excessive wheel spinning and subsequent hard braking, the fail-safe system may be activated. This will occur even if all electrical circuits are functioning properly. In this case, turn the ignition key OFF and wait for 3 seconds. Then turn the key back to the ON position. The vehicle should return to its normal operating condition. If it does not return to its normal operating condition, have a NISSAN dealer check the transmission and repair it if necessary.

MANUAL TRANSMISSION

⚠ WARNING

- **Do not downshift abruptly on slippery roads. This may cause a loss of control.**
- **Do not over-rev the engine when shifting to a lower gear. This may cause a loss of control or engine damage.**

⚠ CAUTION

- **Do not rest your foot on the clutch pedal while driving. This may cause clutch damage.**
- **Fully depress the clutch pedal before shifting to help prevent transmission damage.**
- **Stop your vehicle completely before shifting into R (Reverse).**
- **When the vehicle is stopped with the engine running (for example, at a stop light), shift to N (Neutral) and release the clutch pedal with the foot brake applied.**

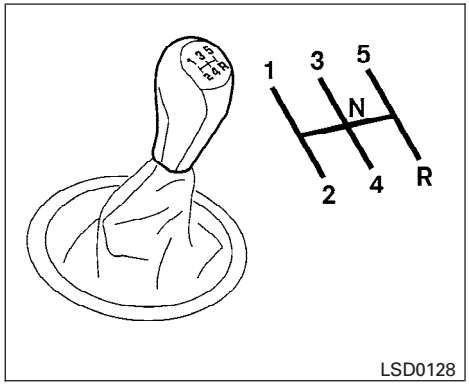

5 - speed

Shifting

To change gears, or when upshifting or downshifting, depress the clutch pedal fully, shift into the appropriate gear, then release the clutch slowly and smoothly.

To ensure smooth gear changes, fully depress the clutch pedal before operating the shift lever. If the clutch pedal is not fully depressed before the transmission is shifted, a gear noise may be heard. Transmission damage could occur.

On the 5-speed manual transmission, you cannot shift directly from 5th gear into R (Reverse). First shift into N (Neutral), then into R (Reverse).

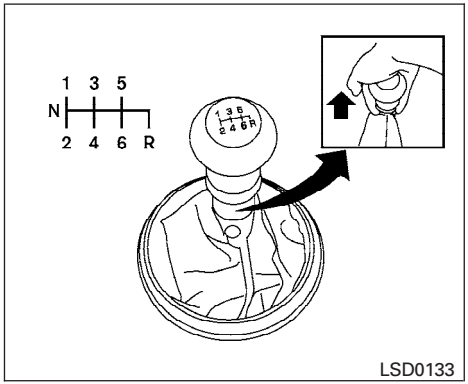

6 - speed

On the 6–speed manual transmission to back up, lift up on the collar just below the shift lever and then move it to the R (Reverse) position after stopping the vehicle completely.

If it is difficult to move the shift lever into R (Reverse) or 1 (1st), shift into N (Neutral), then release the clutch pedal. Depress the clutch pedal again and shift into R (Reverse) or 1 (1st).

Suggested upshift speeds

The following are suggested vehicle speeds for shifting into a higher gear. These suggestions relate to fuel economy and vehicle performance. Actual upshift speeds will vary according to road conditions, the weather and individual driving habits.

For normal acceleration in low altitude areas (less than 4,000 ft [1219 m]):

For QR25DE:

GEAR CHANGE	ACCEL shift point MPH (km/h)	CRUISE shift point MPH (km/h)
1st to 2nd	15 (24)	15 (24)
2nd to 3rd	25 (40)	18 (29)
3rd to 4th	36 (58)	30 (48)
4th to 5th	40 (64)	39 (62)

For VQ35DE:

GEAR CHANGE	ACCEL shift point MPH (km/h)	CRUISE shift point MPH (km/h)
1st to 2nd	13 (21)	13 (21)
2nd to 3rd	23 (37)	16 (26)
3rd to 4th	33 (53)	27 (44)
4th to 5th	39 (63)	36 (58)

For VQ35DE SE-R:

GEAR CHANGE	ACCEL shift point MPH (km/h)	CRUISE shift point MPH (km/h)
1st to 2nd	13 (21)	13 (21)
2nd to 3rd	23 (37)	16 (26)
3rd to 4th	33 (53)	27 (44)
4th to 5th	39 (63)	36 (58)
5th to 6th		

For quick acceleration in low altitude areas and high altitude areas (over 4,000 ft [1219 m]):

Gear change	MPH (km/h)
1st to 2nd	15 (24)
2nd to 3rd	25 (40)
3rd to 4th	40 (64)
4th to 5th	45 (72)
5th to 6th*	

*6 Speed available on SE-R models only.

Suggested maximum speed in each gear

Downshift to a lower gear if the engine is not running smoothly, or if you need to accelerate.

Do not exceed the maximum suggested speed (shown below) in any gear. For level road driving,

use the highest gear suggested for that speed. Always observe posted speed limits, and drive according to the road conditions, which will ensure safe operation. Do not over-rev the engine when shifting to a lower gear as it may cause engine damage or loss of vehicle control.

GEAR	QR25DE MPH (km/h)	VQ35DE MPH (km/h)
1st	32 (51)	35 (56)
2nd	56 (90)	60 (97)
3rd	87 (140)	88 (141)
4th	—	—
5th	—	—

For VQ35DE SE-R:

GEAR	VQ35DE MPH (km/h)
1st	34 (54)
2nd	56 (90)
3rd	78 (125)
4th	—
5th	—
6th	—

⚠ WARNING

- **Be sure the parking brake is fully released before driving. Failure to do so can cause brake failure and lead to an accident.**
- **Do not release the parking brake from outside the vehicle.**
- **Do not use the gear shift in place of the parking brake. When parking, be sure the parking brake is fully engaged.**
- **Do not leave children unattended in a vehicle. They could release the parking brake and cause an accident.**

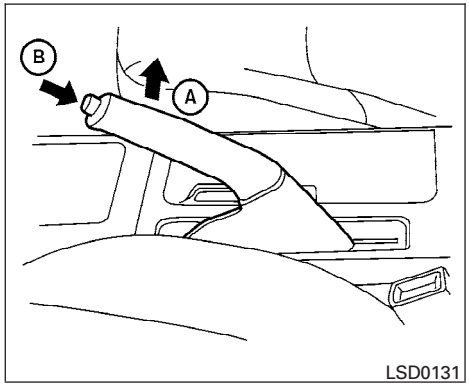

To engage: Pull the lever up Ⓐ.

To release:

1. Firmly apply the foot brake.
2. **Manual transmission models:**
   Place the shift lever in the N (Neutral) position.
   Automatic transmission models:
   Move the shift selector lever to the P (Park) position.
3. While pulling up on the parking brake lever slightly, push the button and lower completely Ⓑ.
4. Before driving, be sure the brake warning light goes out.

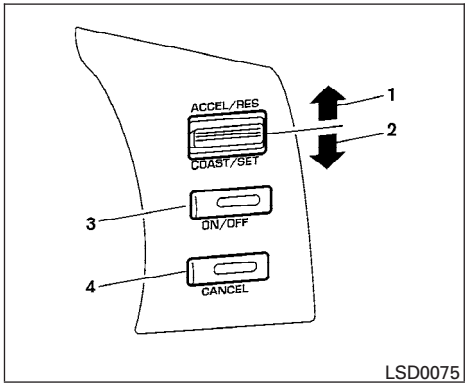

1. ACCEL/RES switch
2. COAST/SET switch
3. ON/OFF switch
4. CANCEL switch

PRECAUTIONS ON CRUISE CONTROL

- If the cruise control system malfunctions, it cancels automatically. The SET indicator light in the instrument panel then blinks to warn the driver.
- If the SET indicator light blinks, turn the cruise control main switch off and have the system checked by a NISSAN dealer.
- The SET indicator light may blink when the cruise control main switch is turned ON while pushing the ACCEL/RES, COAST/SET, or CANCEL switch (located on the steering wheel). To properly set the cruise control system, use the following procedures.

⚠ WARNING

Do not use the cruise control when driving under the following conditions:

- **When it is not possible to keep the vehicle at a set speed.**
- **In heavy traffic or in traffic that varies in speed.**
- **On winding or hilly roads.**
- **On slippery roads (rain, snow, ice, etc.).**
- **In very windy areas.**

Doing so could cause a loss of vehicle control and result in an accident.

⚠ CAUTION

On manual transmission models, do not shift into N (Neutral) without depressing the clutch pedal when the cruise control is set. Should this occur, depress the clutch pedal and turn the main switch off immediately. Failure to do so may cause engine damage.

CRUISE CONTROL OPERATIONS

The cruise control allows driving at a speed between 25 - 89 MPH (40 - 144 km/h) without keeping your foot on the accelerator pedal.

To turn on the cruise control, push the main switch. The CRUISE indicator light in the instrument panel comes on.

To set cruising speed, accelerate the vehicle to the desired speed, push the COAST/SET switch and release it. The SET indicator light in the instrument panel comes on. Take your foot off the accelerator pedal. Your vehicle maintains the set speed.

- **To pass another vehicle,** depress the accelerator pedal. When you release the pedal, the vehicle returns to the previously set speed.

- The vehicle may not maintain the set speed when going up or down steep hills. If this happens, drive without the cruise control.

To cancel the preset speed, use one of the following three methods.

- Push the CANCEL button; the SET indicator light in the instrument panel goes out.
- Tap the brake pedal; the SET indicator light goes out.
- Turn the main switch off. Both the CRUISE indicator light and SET indicator light in the instrument panel go out.

The cruise control is automatically canceled and the SET light in the instrument panel goes out if:

- you depress the brake or clutch pedal while pushing the ACCEL/RES or SET/COAST switch. The preset speed is deleted from memory.
- the vehicle slows down more than 8 MPH (13 km/h) below the set speed.
- you depress the clutch pedal (manual transmission), or move the shift selector lever to N (Neutral) (automatic transmission).

To reset at a faster cruising speed, use one of the following three methods.

- Depress the accelerator pedal. When the vehicle attains the desired speed, push and release the COAST/SET switch.
- Push and hold the ACCEL/RES switch. When the vehicle attains the speed you desire, release the switch.
- Push and release the ACCEL/RES switch. Each time you do this, the set speed increases by about 1 MPH (1.6 km/h).

To reset at a slower cruising speed, use one of the following three methods.

- Lightly tap the brake pedal. When the vehicle attains the desired speed, push the COAST/SET switch and release it.
- Push and hold the COAST/SET switch. Release the switch when the vehicle slows to the desired speed.
- Push and release the COAST/SET switch. Each time you do this, the set speed decreases by about 1 MPH (1.6 km/h).

To resume the preset speed, push and release the ACCEL/RES switch. The vehicle returns to the last set cruising speed when the vehicle speed is over 25 MPH (40 km/h).

⚠ CAUTION

During the first 1,200 miles (2,000 km), follow these recommendations to obtain maximum engine performance and ensure the future reliability and economy of your new vehicle. Failure to follow these recommendations may result in shortened engine life and reduced engine performance.

- Avoid driving for long periods at constant speed, either fast or slow, and do not run the engine over 4,000 rpm.
- Do not accelerate at full throttle in any gear.
- Avoid quick starts.
- Avoid hard braking as much as possible.
- Do not tow a trailer for the first 500 miles (800 km). Your engine, axle or other parts could be damaged.

INCREASING FUEL ECONOMY

- Accelerate slowly and smoothly. Maintain cruising speeds with a constant accelerator position.
- Drive at moderate speeds on the highway. Driving at high speed lowers fuel economy.
- Avoid unnecessary stopping and braking. Maintain a safe distance behind other vehicles.
- Use a proper gear range which suits road conditions. On level roads, shift into high gear as soon as possible.
- Avoid unnecessary engine idling.
- Keep your engine tuned up.
- Follow the recommended periodic maintenance schedule.
- Keep the tires inflated to the correct pressure. Low tire pressure increases tire wear and lowers fuel economy.
- Keep the wheels in correct alignment. Improper alignment increases tire wear and lowers fuel economy.
- Air conditioner operation lowers fuel economy. Use the air conditioner only when necessary.
- When cruising at highway speeds, it is more economical to use the air conditioner and leave the windows closed to reduce drag.
- Use the recommended viscosity engine oil. See “Engine oil and oil filter recommendation” in “Technical and consumer information” later in this manual.

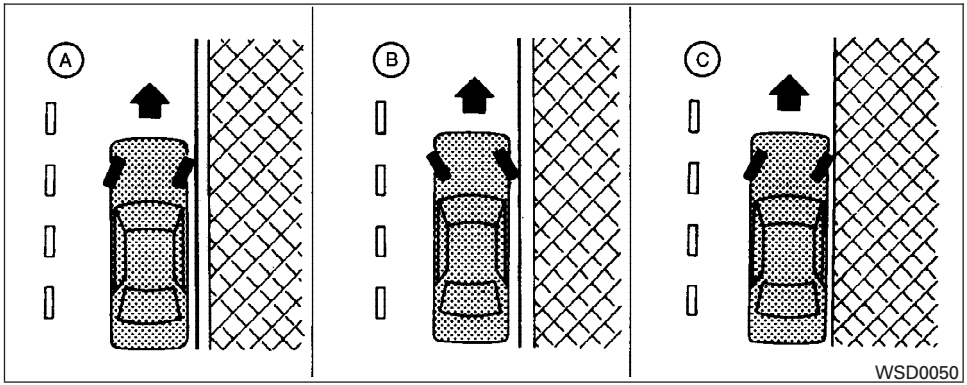

⚠WARNING

- **Do not stop or park the vehicle over flammable materials such as dry grass, waste paper or rags. They may ignite and cause a fire.**
- **Safe parking procedures require that both the parking brake be set and the transmission placed into P (Park) for automatic transmission models or in an appropriate gear for manual transmission models. Failure to do so could cause the vehicle to move unexpectedly or roll away and result in an accident. Make sure the shift lever has been pushed as far forward as it can go and cannot be moved without depressing the foot brake pedal.**
- **Never leave the engine running while the vehicle is unattended.**
- **Do not leave children unattended inside the vehicle. They could unknowingly activate switches or controls. Unattended children could become involved in serious accidents.**

1. Firmly apply the parking brake.
2. **Manual transmission models:**

   Place the shift lever in the R (Reverse) position. When parking on an uphill grade, place the shift lever in 1st gear.

   Automatic transmission models:

   Move the shift selector lever to the P (Park) position.
3. To help prevent the vehicle from rolling into traffic when parked on an incline, it is a good practice to turn the wheels as illustrated.

- HEADED DOWNHILL WITH CURB: Ⓐ

  Turn the wheels into the curb and move the vehicle forward until the curb side wheel gently touches the curb.
- HEADED UPHILL WITH CURB: Ⓑ

  Turn the wheels away from the curb and move the vehicle back until the curb side wheel gently touches the curb.
- HEADED UPHILL OR DOWNHILL, NO CURB: Ⓒ

  Turn the wheels toward the side of the road so the vehicle will move away from the center of the road if it moves.

4. Turn the ignition key to the LOCK position and remove the key.

POWER STEERING

The power assisted steering uses a hydraulic pump, driven by the engine, to assist steering.

If the engine stops or the drive belt breaks, you will still have control of the vehicle. However, much greater steering effort is needed, especially in sharp turns and at low speeds.

⚠ WARNING

If the engine is not running or is turned off while driving, the power assist for the steering will not work. Steering will be much harder to operate.

BRAKE SYSTEM

The brake system has two separate hydraulic circuits. If one circuit malfunctions, you will still have braking at two wheels.

BRAKE PRECAUTIONS

Vacuum assisted brakes

The brake booster aids braking by using engine vacuum. If the engine stops, you can stop the vehicle by depressing the brake pedal. However, greater foot pressure on the brake pedal will be required to stop the vehicle and stopping distance will be longer.

Using the brakes

Avoid resting your foot on the brake pedal while driving. This will overheat the brakes, wear out the brakes and pads faster, and reduce gas mileage.

To help reduce brake wear and to prevent the brakes from overheating, reduce speed and downshift to a lower gear before going down a slope or long grade. Overheated brakes may reduce braking performance and could result in loss of vehicle control.

⚠ WARNING

- **While driving on a slippery surface, be careful when braking, accelerating or downshifting. Abrupt braking or accelerating could cause the wheels to skid and result in an accident.**
- **If the engine is not running or is turned off while driving, the power assist for the brakes will not work. Braking will be harder.**

Parking brake break-in

Break-in the parking brake shoes whenever the stopping effect of the parking brake is weakened or whenever the parking brake shoes and/or drum/rotors are replaced, in order to assure the best brake performance.

This procedure is described in the vehicle service manual and can be performed by a NISSAN dealer.

Wet brakes

When the vehicle is washed or driven through water, the brakes may get wet. As a result, your braking distance will be longer and the vehicle may pull to one side during braking.

To dry the brakes, drive the vehicle at a safe speed while lightly pressing the brake pedal to

heat up the brakes. Do this until the brakes return to normal. Avoid driving the vehicle at high speeds until the brakes function correctly.

ANTI-LOCK BRAKE SYSTEM (ABS) (if so equipped)

The anti-lock brake system controls the brakes so the wheels do not lock when braking abruptly or when braking on slippery surfaces. The system detects the rotation speed at each wheel and varies the brake fluid pressure to prevent each wheel from locking and sliding. By preventing wheel lockup, the system helps the driver maintain steering control and helps to minimize swerving and spinning on slippery surfaces.

Using the system

Depress the brake pedal and hold it down.

⚠ WARNING

Do not pump the brake pedal. Doing so may result in increased stopping distances.

Normal operation

The anti-lock brake system does not operate at speeds below 3 - 6 MPH (5 - 10 km/h). (The speeds vary according to road conditions.)

When driving, the anti-lock brake system controls the wheels so they will not lock when braking abruptly or when braking on a slippery road. Thus, difficult steering and swerving of the vehicle due to locked wheels is minimized. The system detects the wheel rotation rate and electronically controls the pressure applied to each brake. Slight vibration on the brake pedal accompanied by noise usually occurs while the ABS system is operating. Such vibration and noise encountered during abrupt braking is not a problem, but indicates that the system is functioning properly. However, the pulsation may indicate that road conditions are hazardous and extra care is required while driving.

Self-test feature

The anti-lock brake system consists of electronic sensors and hydraulic solenoids controlled by a computer. The computer has a built-in diagnostic feature that tests the system each time you start the engine and move the vehicle at a low speed in forward or reverse. When the self-test occurs, you may hear a ‘‘clunk’’ noise and/or feel a pulsation in the brake pedal. This is normal and is not an indication of any malfunction. If the computer senses any malfunction, it switches the anti-lock brake system off and turns on the ABS brake warning light on the instrument panel. The brake system then operates normally, but without anti-lock assistance.

If the light comes on during the self-test or while driving, take the vehicle to a NISSAN dealer for repair.

⚠ WARNING

- **The anti-lock brake system is a sophisticated device, but it cannot prevent accidents resulting from careless or dangerous driving techniques. It can help maintain vehicle control during braking on slippery surfaces, but remember that the stopping distance on slippery surfaces will be longer than on normal surfaces even with the anti-lock brake system. Stopping distances may also be longer on rough, gravel or snow covered roads, or if you are using tire chains. Tire type and condition may also affect braking effectiveness. Always maintain a safe distance from the vehicle in front of you. Ultimately, the responsibility for safety of self and others rests in the hands of the driver.**
- **Tire type and condition of tires may also affect braking effectiveness.**
- **When replacing tires, install the specified size of tires on all four wheels.**

- **When installing a spare tire, make sure it is the proper size and type as specified on the tire placard. For tire placard location information, refer to "Tire placard" in the "Technical and consumer information" section of this manual.**
- **Refer to "Wheels and tires" in the "Maintenance and do-it-yourself" section of this manual.**

TRACTION CONTROL SYSTEM (TCS) (if so equipped)

When accelerating on slippery surfaces the tire may spin or slip. With the vehicle traction control system (TCS), sensors detect these movements and control the braking and engine output to help improve vehicle stability while accelerating.

- When the traction control system is operating, the slip indicator in the instrument panel blinks.
- If the slip indicator blinks, the vehicle is under slippery conditions. Be sure to drive carefully. See "Slip indicator light" and "Traction control system (TCS) off indicator light" in the "Instruments and controls" section of this manual.
- If a malfunction occurs in the system, the **SLIP** and TCS OFF indicator lights come on in the meter panel.

As long as these lights are on, the traction control function is canceled. The vehicle will behave like a vehicle without the system.

⚠ WARNING

- **The traction control system is designed to help improve driving stability but does not prevent accidents due to abrupt steering operation at high speeds or by careless or dangerous driving techniques. Reduce vehicle speed and be especially careful when driving and cornering on slippery surfaces and always drive carefully.**
- **If brake related parts such as brake pads, rotors and calipers are not standard equipment or are extremely deteriorated, the traction control system may not operate properly and the TCS OFF indicator light may come on.**
- **Do not modify the vehicle's suspension. If suspension parts such as shock absorbers, struts, springs and bushings are not standard equipment or are extremely deteriorated, the traction control system may not operate properly and the TCS OFF indicator light may come on.**

- **When driving on extremely inclined surfaces such as higher banked corners, the traction control system may not operate properly and the TCS OFF indicator light may come on. Do not drive on these types of roads.**
- **If wheels or tires other than the recommended ones are used, the traction control system may not operate properly and the TCS OFF indicator light may come on.**
- **The traction control system is not a substitute for winter tires or tire chains on a snow covered road.**

FREEING A FROZEN DOOR LOCK

To prevent a door lock from freezing, apply deicer through the key hole. If the lock becomes frozen, heat the key before inserting it into the key hole.

ANTI-FREEZE

In the winter when it is anticipated that the temperature will drop below 32°F (0°C), check the anti-freeze to assure proper winter protection. For details, see ''Engine cooling system'' in the ''Maintenance and do-it-yourself'' section of this manual.

BATTERY

If the battery is not fully charged during extremely cold weather conditions, the battery fluid may freeze and damage the battery. To maintain maximum efficiency, the battery should be checked regularly. For details, see ''Battery'' in the ''Maintenance and do-it-yourself'' section of this manual.

DRAINING OF COOLANT WATER

If the vehicle is to be left outside without anti-freeze, drain the cooling system, including the engine block. Refill before operating the vehicle. For details, see ''Changing engine coolant'' in the ''Maintenance and do-it-yourself'' section of this manual.

TIRE EQUIPMENT

1. SUMMER tires have a tread designed to provide superior performance on dry pavement. However, the performance of these tires will be substantially reduced in snowy and icy conditions. If you operate your vehicle on snowy or icy roads, NISSAN recommends the use of MUD & SNOW or ALL SEASON TIRES on all four wheels. Please consult a NISSAN dealer for the tire type, size, speed rating and availability information.
2. For additional traction on icy roads, studded tires may be used. However, some U.S. states and Canadian provinces prohibit their use. Check local, state and provincial laws before installing studded tires.

Skid and traction capabilities of studded snow tires on wet or dry surfaces may be poorer than that of non-studded snow tires.

3. Tire chains may be used.

⚠ CAUTION

Tire chains/cables cannot be installed on P225/45R18 size tires. Installation of the tire chains/cables on P225/45R18 size tires will cause damage to the vehicle. If you plan to use tire chains/cables, you should install P215/55R17 size tires on your vehicle.

Use of tire chains may be prohibited according to location. Check the local laws before installing tire chains. When installing tire chains, make sure they are the proper size for the tires on your vehicle and are installed according to the chain manufacturer's suggestions. **Use only SAE Class "S" chains.** Class "S" chains are used on vehicles with restricted tire to vehicle clearance. Vehicles that can use Class "S" chains are designed to meet the minimum clearances between the tire and the closest vehicle suspension or body component required to accommodate the use of a winter traction device (tire chains or cables). The minimum clearances are determined using the factory equipped tire size. Other types may damage your vehicle. Use chain tensioners when recommended by the tire chain manufacturer to ensure a tight fit. Loose end links of the tire chain must be secured or removed to prevent the possibility of whipping action damage to the fenders or underbody. If possible, avoid fully loading your vehicle when using tire chains. In addition, drive at a reduced speed. Otherwise, your vehicle may be damaged and/or vehicle handling and performance may be adversely affected.

Never install tire chains on spare tires. Do not use tire chains on dry roads.

SPECIAL WINTER EQUIPMENT

It is recommended that the following items be carried in the vehicle during winter:

- A scraper and stiff-bristled brush to remove ice and snow from the windows and wiper blades.
- A sturdy, flat board to be placed under the jack to give it firm support.
- A shovel to dig the vehicle out of snowdrifts.
- Extra window washer fluid to refill the reservoir tank.

DRIVING ON SNOW OR ICE

⚠ WARNING

- **Wet ice (32°F, 0°C and freezing rain), very cold snow or ice can be slick and very hard to drive on. The vehicle will have much less traction or "grip" under these conditions. Try to avoid driving on wet ice until the road is salted or sanded.**
- **Whatever the condition, drive with caution. Accelerate and slow down with care. If accelerating or downshifting too fast, the drive wheels will lose even more traction.**
- **Allow more stopping distance under these conditions. Braking should be started sooner than on dry pavement.**
- **Allow greater following distances on slippery roads.**
- **Watch for slippery spots (glare ice). These may appear on an otherwise clear road in shaded areas. If a patch of ice is seen ahead, brake before reaching it. Try not to brake while on the ice, and avoid any sudden steering maneuvers.**

- **Do not use the cruise control on slippery roads.**
- **Snow can trap dangerous exhaust gases under your vehicle. Keep snow clear of the exhaust pipe and from around your vehicle.**

ENGINE BLOCK HEATER (if so equipped)

An engine block heater to assist in extreme cold temperature starting is available through a NISSAN dealer.

⚠ WARNING

Do not use your heater with an ungrounded electrical system or two-pronged (cheater) adapters. You can be injured by an electrical shock if you use an ungrounded connection.

6 In case of emergency

Flat tire 6-2
Changing a flat tire 6-2
Jump starting 6-6
Push starting 6-8
If your vehicle overheats 6-8
Towing your vehicle 6-9
Towing recommended by NISSAN 6-10
Vehicle recovery (freeing a stuck vehicle) 6-11

CHANGING A FLAT TIRE

If you have a flat tire, follow the instructions below.

Stopping the vehicle

1. Safely move the vehicle off the road and away from traffic.
2. Turn on the hazard warning flashers.
3. Park on a level surface and apply the parking brake. Shift the manual transmission into R (Reverse), or the automatic transmission into P (Park).
4. Turn off the engine.
5. Raise the hood to warn other traffic and to signal professional road assistance personnel that you need assistance.
6. Have all passengers get out of the vehicle and stand in a safe place, away from traffic and clear of the vehicle.

⚠ WARNING

- **Make sure the parking brake is securely applied and the manual transmission is shifted into R (Reverse), or the automatic transmission into P (Park).**
- **Never change tires when the vehicle is on a slope, ice or slippery areas. This is hazardous.**
- **Never change tires if oncoming traffic is close to your vehicle. Wait for professional road assistance.**

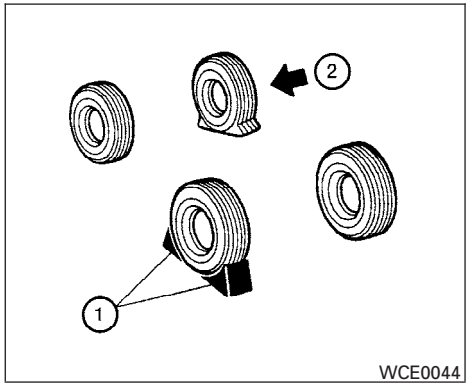

Blocking wheels

Place suitable blocks ① at both the front and back of the wheel diagonally opposite the flat tire ② to prevent the vehicle from moving when it is jacked up.

⚠ WARNING

Be sure to block the wheel as the vehicle may move and result in personal injury.

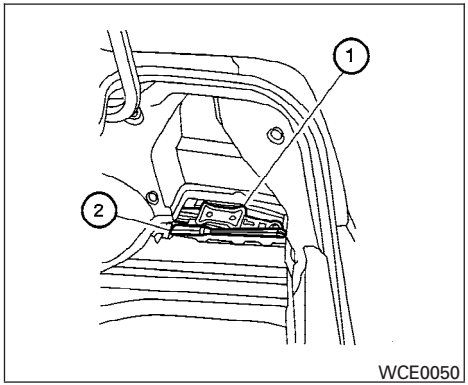

Getting the spare tire and tools

Open the trunk. Lift the trunk floor carpeting and spare tire cover. Remove the jack ① and wheel nut wrench ② from the tool box. Remove the spare tire.

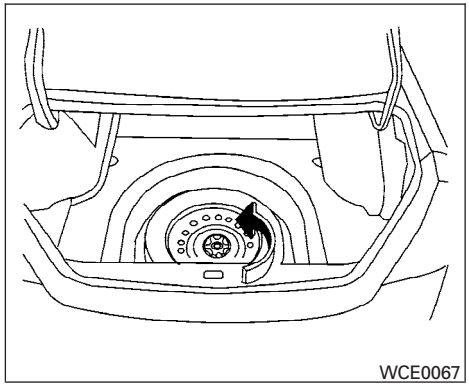

Removing the bolt-on wheel cover (if so equipped)

⚠ CAUTION

Do not use your hands to pry off wheel caps or wheel covers. Doing so could result in personal injury.

The wheel covers are held on by the wheel nuts. The wheel cover will be removed along with the wheel when the nuts are removed.

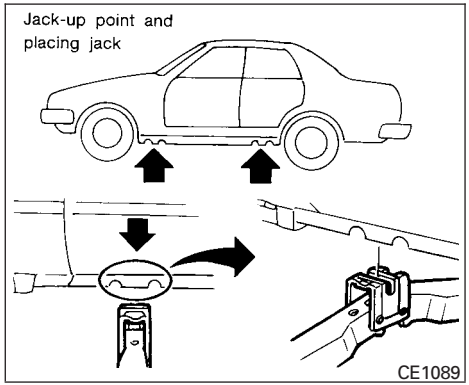

Jacking up vehicle and removing the damaged tire

⚠ WARNING

- **Never get under the vehicle while it is supported only by the jack. If it is necessary to work under the vehicle, support it with safety stands.**
- **Use only the jack provided with your vehicle to lift the vehicle. Do not use the jack provided with your vehicle on other vehicles. The jack is designed for lifting only your vehicle during a tire change.**

- **Use the correct jack-up points. Never use any other part of the vehicle for jack support.**
- **Never jack up the vehicle more than necessary.**
- **Never use blocks on or under the jack.**
- **Do not start or run the engine while vehicle is on the jack. It may cause the vehicle to move. This is especially true for vehicles with limited slip differentials.**
- **Do not allow passengers to stay in the vehicle while it is on the jack.**
- **Never run the engine with a wheel(s) off the ground. It may cause the vehicle to move.**

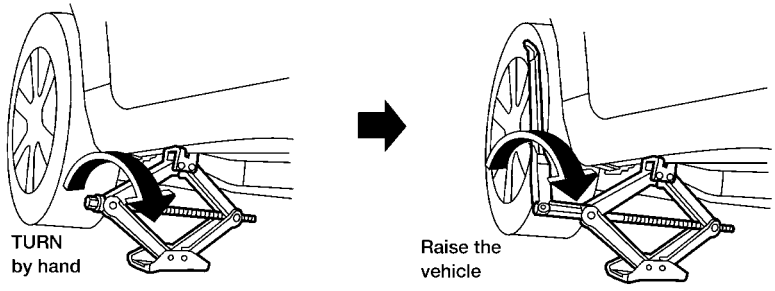

LCE0020

Always refer to the proper illustrations for the correct placement and jack-up points for your specific vehicle model and jack type.

Carefully read the caution label attached to the jack body and the following instructions.

1. Loosen each wheel nut one or two turns by turning counterclockwise with the wheel nut wrench. **Do not remove the wheel nuts until the tire is off the ground.**
2. Place the jack directly under the jack-up point as illustrated so the top of the jack contacts the vehicle at the jack-up point. Align the jack head between the two notches in the front or the rear as shown. Also fit the groove of the jack head between the notches as shown.

   The jack should be used on firm and level ground.
3. To lift the vehicle, securely hold the jack lever and rod with both hands. Carefully raise the vehicle until the tire clears the ground. Remove the wheel nuts, and then remove the tire.

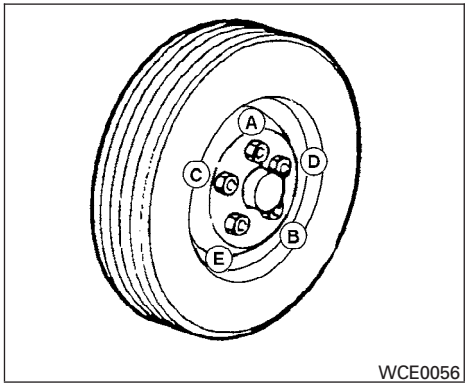

Installing the spare tire

The spare tire is designed for emergency use. See specific instructions under the heading "Wheels and tires" in the "Maintenance and do-it-yourself" section of this manual.

1. Clean any mud or dirt from the surface between the wheel and hub.
2. Carefully put the spare tire on and tighten the wheel nuts finger tight.
3. With the wheel nut wrench, tighten wheel nuts alternately and evenly as illustrated until they are tight.
4. Lower the vehicle slowly until the tire touches the ground. Then, with the wheel nut wrench, tighten the wheel nuts securely in the sequence illustrated (Ⓐ, Ⓑ, Ⓒ, Ⓓ, Ⓔ). Lower the vehicle completely.

⚠WARNING

- **Incorrect wheel nuts or improperly tightened wheel nuts can cause the wheel to become loose or come off. This could cause an accident.**
- **Do not use oil or grease on the wheel studs or nuts. This could cause the nuts to become loose.**
- **Retighten the wheel nuts when the vehicle has been driven for 600 miles (1,000 km) (also in cases of a flat tire, etc.).**

As soon as possible, tighten the wheel nuts to the specified torque with a torque wrench.

Wheel nut tightening torque:

80 ft-lb (108 N·m)

The wheel nuts must be kept tightened to specification at all times. It is recommended that wheel nuts be tightened to specifications at each lubrication interval.

Adjust tire pressure to the COLD pressure.

COLD pressure: After vehicle has been parked for three hours or more or driven less than 1 mile (1.6 km).

COLD tire pressures are shown on the tire placard affixed to the center console.

5. Securely store the flat tire and jacking equipment in the vehicle.
6. Place the spare tire cover and the trunk floor carpeting over the damaged tire.
7. Close the trunk.

⚠WARNING

- **Always make sure that the spare tire and jacking equipment are properly secured after use. Such items can become dangerous projectiles in an accident or sudden stop.**
- **The spare tire is designed for emergency use. See specific instructions under the heading "Wheels and tires" in the "Maintenance and do-it-yourself" section of this manual.**

JUMP STARTING

To start your engine with a booster battery, the instructions and precautions below must be followed.

⚠ WARNING

- **If done incorrectly, jump starting can lead to a battery explosion, resulting in severe injury or death. It could also damage your vehicle.**
- **Explosive hydrogen gas is always present in the vicinity of the battery. Keep all sparks and flames away from the battery.**
- **Do not allow battery fluid to come into contact with eyes, skin, clothing or painted surfaces. Battery fluid is a corrosive sulfuric acid solution which can cause severe burns. If the fluid should come into contact with anything, immediately flush the contacted area with water.**
- **Keep battery out of the reach of children.**
- **The booster battery must be rated at 12 volts. Use of an improperly rated battery can damage your vehicle.**
- **Whenever working on or near a battery, always wear suitable eye protectors (for example, goggles or industrial safety spectacles) and remove rings, metal bands, or any other jewelry. Do not lean over the battery when jump starting.**
- **Do not attempt to jump start a frozen battery. It could explode and cause serious injury.**
- **Your vehicle has an automatic engine cooling fan. It could come on at any time. Keep hands and other objects away from it.**

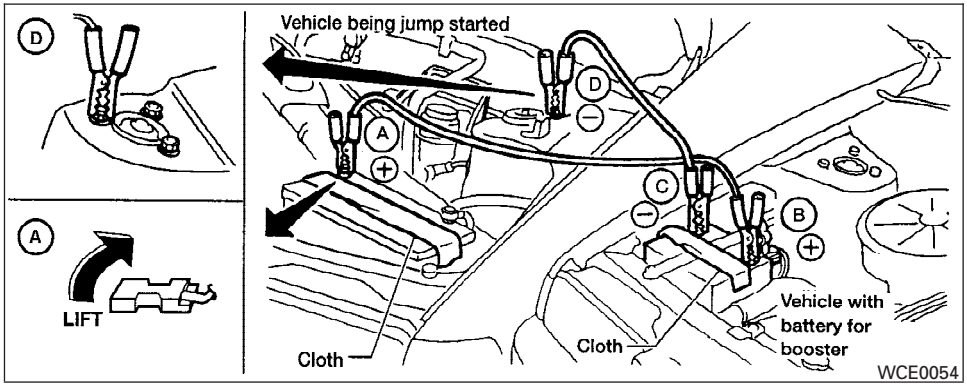

WARNING

Always follow the instructions below. Failure to do so could result in damage to the charging system and cause personal injury.

1. If the booster battery is in another vehicle, position the two vehicles to bring their batteries near each other.

   Do not allow the two vehicles to touch.

2. Apply the parking brake. Move the shift lever to N (Neutral) (manual transmission) or to P (Park) (automatic transmission). Switch off all unnecessary electrical systems (lights, heater, air conditioner, etc.).

3. Remove vent caps on the battery (if so equipped). Cover the battery with an old cloth to reduce explosion hazard.

4. Connect jumper cables in the sequence illustrated (Ⓐ, Ⓑ, Ⓒ, Ⓓ).

CAUTION

- **Always connect positive (+) to positive (+) and negative (−) to body ground (for example, strut mounting bolt, engine lift bracket, etc.) — not to the battery.**
- **Make sure the jumper cables do not touch moving parts in the engine compartment and that the cable clamps do not contact any other metal.**

5. Start the engine of the booster vehicle and let it run for a few minutes.

6. Keep the engine speed of the booster vehicle at about 2,000 rpm, and start the engine of the vehicle being jump started.

CAUTION

Do not keep the starter motor engaged for more than 10 seconds. If the engine does not start right away, turn the key off and wait 3 to 4 seconds before trying again.

7. After starting the engine, carefully disconnect the negative cable and then the positive cable.

8. Replace the vent caps (if so equipped). Be sure to dispose of the cloth used to cover the vent holes as it may be contaminated with corrosive acid.

PUSH STARTING

⚠ CAUTION

- **Automatic transmission models cannot be push-started or tow-started. Attempting to do so may cause transmission damage.**
- **Three-way catalyst equipped models should not be started by pushing. The three-way catalyst may be damaged.**
- **Never try to start the vehicle by towing it. When the engine starts, the forward surge could cause the vehicle to collide with the tow vehicle.**

IF YOUR VEHICLE OVERHEATS

If your vehicle is overheating (indicated by an extremely high temperature gauge reading), or if you feel a lack of engine power, detect abnormal noise, etc. take the following steps.

⚠ WARNING

- **Do not continue to drive if your vehicle overheats. Doing so could cause engine damage or a vehicle fire.**
- **To avoid the danger of being scalded, never remove the radiator cap while the engine is still hot. When the radiator cap is removed, pressurized hot water will spurt out, possibly causing serious injury.**
- **Do not open the hood if steam is coming out.**

1. Move the vehicle safely off the road, apply the parking brake and move the shift lever to N (Neutral) (manual transmission) or to P (Park) (automatic transmission).

   Do not stop the engine.

2. Turn off the air conditioner (if so equipped). Open all the windows, move the heater or air conditioner temperature control to maximum hot and fan control to high speed.
3. Get out of the vehicle. Look and listen for steam or coolant escaping from the radiator before opening the hood. (If steam or coolant is escaping, turn off the engine.) Do not open the hood further until no steam or coolant can be seen.
4. Open the engine hood.

⚠ WARNING

If steam or water is coming from the engine, stand clear to prevent getting burned.

5. Visually check drive belts for damage or looseness. Also check if the cooling fan is running. The radiator hoses and radiator should not leak water. If coolant is leaking, the water pump belt is missing or loose, or the cooling fan does not run, stop the engine.

⚠ WARNING

Be careful not to allow your hands, hair, jewelry or clothing to come into contact with, or get caught in, engine belts or the engine cooling fan. The engine cooling fan can start at any time when the coolant temperature is high.

6. After the engine cools down, check the coolant level in the engine coolant reservoir tank with the engine running. Add coolant to the engine coolant reservoir tank if necessary. Have your vehicle repaired at a NISSAN dealer.

When towing your vehicle, all State (Provincial in Canada) and local regulations for towing must be followed. Incorrect towing equipment could damage your vehicle. Towing instructions are available from a NISSAN dealer. Local service operators are generally familiar with the applicable laws and procedures for towing. To assure proper towing and to prevent accidental damage to your vehicle, NISSAN recommends having a service operator tow your vehicle. It is advisable to have the service operator carefully read the following precautions:

⚠ WARNING

- **Never ride in a vehicle that is being towed.**
- **Never get under your vehicle after it has been lifted by a tow truck.**

⚠ CAUTION

- **When towing, make sure that the transmission, axles, steering system and powertrain are in working condition. If any unit is damaged, dollies must be used.**
- **Always attach safety chains before towing.**

For information about towing your vehicle behind a recreational vehicle (RV), refer to “Flat towing” in the “Technical and consumer information” section of this manual.

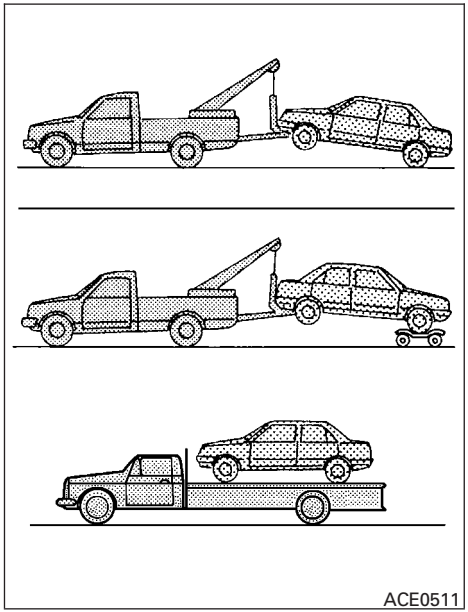

TOWING RECOMMENDED BY NISSAN

NISSAN recommends that your vehicle be towed with the driving (front) wheels off the ground or place the vehicle on a flat bed truck as illustrated.

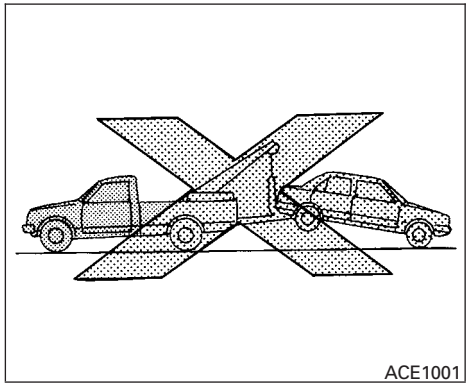

⚠ CAUTION

- **Never tow automatic transmission models with the front wheels on the ground or four wheels on the ground (forward or backward), as this may cause serious and expensive damage to the transmission. If it is necessary to tow the vehicle with the rear wheels raised always use towing dollies under the front wheels.**
- **When towing automatic transmission models with the front wheels on towing dollies, or when towing manual transmission models with the front wheels on the ground:**
  - **Turn the ignition key to the OFF position, and secure the steering wheel in a straight-ahead position with a rope or similar device. Never secure the steering wheel by turning the ignition key to the LOCK position. This may damage the steering lock mechanism.**
  - **Move the gearshift lever to the N (Neutral) position.**
- **When towing automatic or manual transmission models with the rear wheels on the ground (if you do not use towing dollies): Always release the parking brake.**

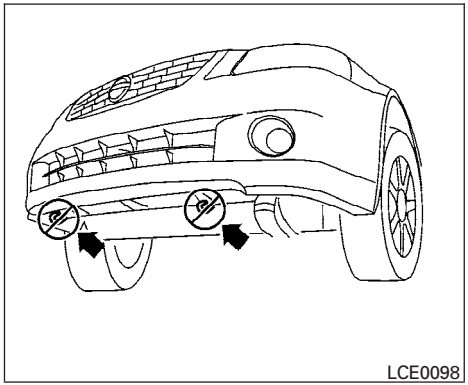

VEHICLE RECOVERY (freeing a stuck vehicle)

Front

⚠ WARNING

- **Stand clear of a stuck vehicle.**
- **Do not spin your tires at high speed. This could cause them to explode and result in serious injury. Parts of your vehicle could also overheat and be damaged.**

⚠ CAUTION

- **Tow chains or cables must be attached only to the main structural members of the vehicle or the towing hooks (if so equipped). Otherwise, the vehicle body will be damaged.**
- **Do not use the vehicle tie downs to free a vehicle stuck in sand, snow, mud, etc. Never tow the vehicle using the vehicle tie downs or recovery hooks.**
- **Always pull the cable straight out from the front or rear of the vehicle. Never pull the vehicle at an angle.**
- **Pulling devices should be routed so they do not touch any part of the suspension, steering, brake or cooling systems.**
- **Pulling devices such as ropes or canvas straps are not recommended for use in vehicle towing or recovery.**

If your vehicle is stuck in sand, snow, mud, etc., use the following procedure:

1. Turn off the Vehicle Dynamic Control System (if so equipped).
2. Make sure the area in front and behind the vehicle is clear of obstructions.
3. Turn the steering wheel right and left to clear an area around the front tires.
4. Slowly rock the vehicle forward and backward.
   - Shift back and forth between R (Reverse) and D (Drive).
   - Apply the accelerator as little as possible to maintain the rocking motion.
   - Release the accelerator pedal before shifting between R and D.
   - Do not spin the tires above 35 mph (55 km/h).
5. If the vehicle can not be freed after a few tries, contact a professional towing service to remove the vehicle.

Rear

⚠ WARNING

- **Stand clear of a stuck vehicle.**
- **Do not spin your tires at high speed. This could cause them to explode and result in serious injury. Parts of your vehicle could also overheat and be damaged.**

⚠ CAUTION

- **Tow chains or cables must be attached only to the main structural members of the vehicle.**
- **Pulling devices should be routed so they do not touch any part of the suspension, steering, brake or cooling systems.**
- **Always pull the cable straight out from the front or rear of the vehicle. Never pull the vehicle at an angle.**
- **Pulling devices such as ropes or canvas straps are not recommended for use in vehicle towing or recovery.**

If your vehicle is stuck in sand, snow, mud, etc., use the following procedure:

1. Turn off the Vehicle Dynamic Control System (if so equipped).
2. Make sure the area in front and behind the vehicle is clear of obstructions.
3. Turn the steering wheel right and left to clear an area around the front tires.
4. Slowly rock the vehicle forward and backward.
   - Shift back and forth between R (Reverse) and D (Drive).
   - Apply the accelerator as little as possible to maintain the rocking motion.
   - Release the accelerator pedal before shifting between R and D.
   - Do not spin the tires above 35 mph (55 km/h).
5. If the vehicle can not be freed after a few tries, contact a professional towing service to remove the vehicle.

7 Appearance and care

Cleaning exterior 7-2
Washing 7-2
Waxing 7-2
Removing spots 7-2
Underbody 7-3
Glass 7-3
Aluminum alloy wheels 7-3
Chrome parts 7-3
Cleaning interior 7-4
Floor mats 7-4
Seat belts 7-5
Corrosion protection 7-5
Most common factors contributing to vehicle corrosion 7-5
Environmental factors influence the rate of corrosion 7-5
To protect your vehicle from corrosion 7-5

CLEANING EXTERIOR

In order to maintain the appearance of your vehicle, it is important to take proper care of it.

To protect the paint surfaces, please wash your vehicle as soon as you can:

- after a rainfall to prevent possible damage from acid rain.
- after driving on coastal roads.
- when contaminants such as soot, bird droppings, tree sap, metal particles or bugs get on the paint surface.
- when dust or mud builds up on the surface.

Whenever possible, store or park your vehicle inside a garage or in a covered area.

When it is necessary to park outside, park in a shady area or protect the vehicle with a body cover.

Be careful not to scratch the paint surface when putting on or removing the body cover.

WASHING

Wash dirt off with a wet sponge and plenty of water. Clean the vehicle thoroughly using a mild soap, a special vehicle soap or general purpose dishwashing liquid mixed with clean, lukewarm (never hot) water.

⚠ CAUTION

- **Do not wash the vehicle with strong household soap, strong chemical detergents, gasoline or solvents.**
- **Do not wash the vehicle in direct sunlight or while the vehicle body is hot, as the surface may become water-spotted.**
- **Avoid using tight-napped or rough cloths, such as washing mitts. Care must be taken when removing caked-on dirt or other foreign substances so the paint surface is not scratched or damaged.**

Rinse the vehicle thoroughly with plenty of clean water.

Inside flanges, seams and folds on the doors, hatches and hood are particularly vulnerable to the effects of road salt. Therefore, these areas must be cleaned regularly. Take care that the drain holes in the lower edge of the door are open. Spray water under the body and in the wheel wells to loosen the dirt and wash away road salt.

A damp chamois can be used to dry the vehicle to avoid water spots.

WAXING

Regular waxing protects the paint surface and helps retain new vehicle appearance. Polishing is recommended to remove built-up wax residue and to avoid a weathered appearance before re-applying wax.

A NISSAN dealer can assist you in choosing the proper product.

- Wax your vehicle only after a thorough washing. Follow the instructions supplied with the wax.
- Do not use a wax containing any abrasives, cutting compounds or cleaners that may damage the vehicle finish.
- If the surface does not polish easily, use a “road tar” remover and wax again.

Machine compounding or aggressive polishing on a base coat/clear coat paint finish may dull the finish or leave swirl marks.

REMOVING SPOTS

Remove tar and oil spots, industrial dust, insects, and tree sap as quickly as possible from the surface of the paint to avoid lasting damage or staining. Special cleaning products are available at a NISSAN dealer or any automotive accessory store.

UNDERBODY

In areas where road salt is used in winter, it is necessary to clean the underbody regularly in order to prevent dirt and salt from building up and causing the acceleration of corrosion on the underbody and suspension. Before the winter period and again in the spring, the underseal must be checked and, if necessary, retreated.

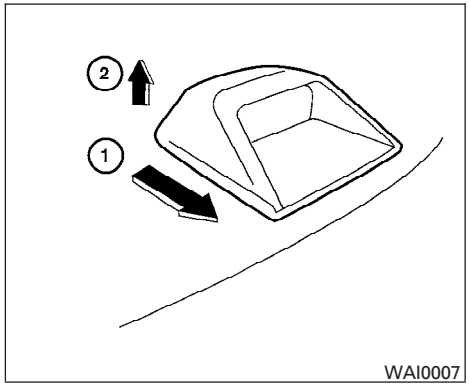

GLASS

When cleaning the rear window, it may be easier to clean if the high-mounted stop light is removed first.

Be careful when removing the high-mounted stop light to reduce the risk of damaging the high-mounted stop light wires.

To remove the high-mounted stop light:

① Push toward rear of vehicle.

② Lift to remove.

The high-mounted stop light must be properly reinstalled before driving your vehicle.

Use glass cleaner to remove smoke and dust film from the glass surfaces. It is normal for glass to become coated with a film after the vehicle is parked in the hot sun. Glass cleaner and a soft cloth will easily remove this film.

⚠ CAUTION

When cleaning the inside of the windows, do not use sharp-edged tools, abrasive cleaners or chlorine-based disinfectant cleaners. They could damage the electrical conductors, radio antenna elements or rear window defroster elements.

ALUMINUM ALLOY WHEELS

Wash the wheels regularly, especially during winter months in areas where road salt is used. If not removed, road salt can discolor the wheels.

CHROME PARTS

Clean all chrome parts regularly with a non-abrasive chrome polish to maintain the finish.

Occasionally remove loose dust from the interior trim, plastic parts and seats using a vacuum cleaner or soft brush. Wipe the vinyl and leather surfaces with a clean, soft cloth dampened in mild soap solution, then wipe clean with a dry, soft cloth. Before using any fabric protector, read the manufacturer's recommendations. Some fabric protectors contain chemicals that may stain or bleach the seat material.

Use a cloth dampened only with water to clean the meter and gauge lens.

⚠ CAUTION

- **Never use benzine, thinner or any similar material.**
- **Small dirt particles can be abrasive and damaging to leather surfaces and should be removed promptly. Do not use saddle soap, polishes, oils, cleaning fluids, solvents, detergents or ammonia-based cleaners as they may damage the leather's natural finish.**
- **Never use fabric protectors unless recommended by the manufacturer.**
- **Do not use glass or plastic cleaner on meter or gauge lens covers. It may damage the lens cover.**

FLOOR MATS

The use of genuine NISSAN floor mats can extend the life of your vehicle carpet and make it easier to clean the interior. **No matter what mats are used, be sure they are fitted for your vehicle and are properly positioned in the footwell to prevent interference with pedal operation.** Mats should be maintained with regular cleaning and replaced if they become excessively worn.

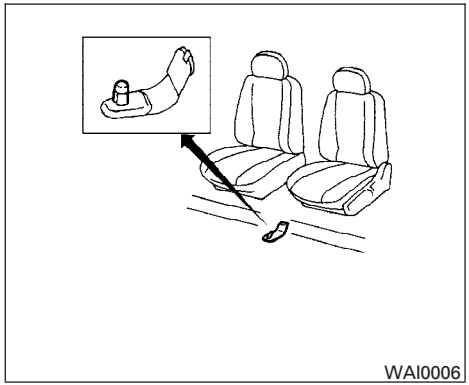

Floor mat positioning aid (driver's side only)

This vehicle includes a front floor mat bracket to act as a floor mat positioning aid. NISSAN floor mats have been specially designed for your vehicle model. The driver's side floor mat has a grommet hole incorporated in it. Position the mat by placing the floor mat bracket hook through the floor mat grommet hole while centering the mat in the footwell.

Periodically check to make certain the mats are properly positioned.

SEAT BELTS

The seat belts can be cleaned by wiping them with a sponge dampened in a mild soap solution. Allow the belts to dry completely in the shade before using them. See “Seat belt maintenance” in the “Safety – Seats, seat belts and supplemental restraint system” section of this manual.

⚠ WARNING

Do not allow wet seat belts to roll up in the retractor. NEVER use bleach, dye or chemical solvents to clean the seat belts, since these materials may severely weaken the seat belt webbing.

MOST COMMON FACTORS CONTRIBUTING TO VEHICLE CORROSION

- The accumulation of moisture-retaining dirt and debris in body panel sections, cavities, and other areas.
- Damage to paint and other protective coatings caused by gravel and stone chips or minor traffic accidents.

ENVIRONMENTAL FACTORS INFLUENCE THE RATE OF CORROSION

Moisture

Accumulation of sand, dirt and water on the vehicle body underside can accelerate corrosion. Wet floor coverings will not dry completely inside the vehicle, and should be removed for drying to avoid floor panel corrosion.

Relative humidity

Corrosion will be accelerated in areas of high relative humidity, especially those areas where the temperatures stay above freezing and where atmospheric pollution exists and road salt is used.

Temperature

High temperatures accelerate the rate of corrosion to those parts which are not well ventilated.

Air pollution

Industrial pollution, the presence of salt in the air in coastal areas, or heavy road salt use accelerates the corrosion process. Road salt also accelerates the disintegration of paint surfaces.

TO PROTECT YOUR VEHICLE FROM CORROSION

- Wash and wax your vehicle often to keep the vehicle clean.
- Always check for minor damage to the paint and repair it as soon as possible.
- Keep drain holes at the bottom of the doors open to avoid water accumulation.
- Check the underbody for accumulation of sand, dirt or salt. If present, wash with water as soon as possible.

⚠ CAUTION

- **NEVER remove dirt, sand or other debris from the passenger compartment by washing it out with a hose. Remove dirt with a vacuum cleaner or broom.**

- **Never allow water or other liquids to come in contact with electronic components inside the vehicle as this may damage them.**

Chemicals used for road surface de-icing are extremely corrosive. They accelerate corrosion and deterioration of underbody components such as the exhaust system, fuel and brake lines, brake cables, floor pan and fenders.

In winter, the underbody must be cleaned periodically.

For additional protection against rust and corrosion, which may be required in some areas, consult a NISSAN dealer.

MEMO

8 Maintenance and do-it-yourself

Maintenance requirements 8-2
General maintenance 8-2
Explanation of general maintenance items 8-2
Maintenance precautions 8-5
Engine compartment check locations 8-6
Engine cooling system 8-8
Checking engine coolant level 8-8
Changing engine coolant 8-9
Engine oil 8-9
Checking engine oil level 8-9
Changing engine oil 8-10
Changing engine oil filter 8-12
4-speed automatic transmission fluid 8-13
Temperature conditions for checking 8-13
5-speed automatic transmission fluid 8-15
Power steering fluid 8-15
Brake and clutch fluid 8-15
Brake fluid 8-16
Clutch fluid 8-16
Window washer fluid 8-16
Window washer fluid reservoir 8-16
Battery 8-17
Jump starting 8-18
Drive belts 8-19
Spark plugs 8-20
Replacing spark plugs 8-20
Air cleaner 8-21
In-cabin microfilter (if so equipped) 8-21
Windshield wiper blades 8-24
Cleaning 8-24
Replacing 8-24
Parking brake and brake pedal 8-25
Checking parking brake 8-25
Checking brake pedal 8-25
Brake booster 8-26
Fuses 8-26
Engine compartment 8-26
Passenger compartment 8-28
Keyfob battery replacement 8-30
Lights 8-30
Headlights 8-30
Front park/turn/sidemarker light 8-31
Fog lights (if so equipped) 8-31
Exterior and interior lights 8-32
Wheels and tires 8-39
Tire pressure 8-39

Tire labeling. 8-43
Types of tires. 8-46
Tire chains. 8-46
Changing wheels and tires 8-47

MAINTENANCE REQUIREMENTS

Your new NISSAN has been designed to have minimum maintenance requirements with longer service intervals to save you both time and money. However, some day-to-day and regular maintenance is essential to maintain your NISSAN's good mechanical condition, as well as its emission and engine performance.

It is the owner's responsibility to make sure that the scheduled maintenance, as well as general maintenance, is performed.

As the vehicle owner, you are the only one who can ensure that your vehicle receives proper maintenance. You are a vital link in the maintenance chain.

Scheduled maintenance

For your convenience, both required and optional scheduled maintenance items are described and listed in your "NISSAN Service and Maintenance Guide." You must refer to that guide to ensure that necessary maintenance is performed on your NISSAN at regular intervals.

General maintenance

General maintenance includes those items which should be checked during normal day-to-day operation. They are essential for proper vehicle operation. It is your responsibility to perform these maintenance procedures regularly as prescribed.

Performing general maintenance checks requires minimal mechanical skill and only a few general automotive tools.

These checks or inspections can be done by you, a qualified technician, or, if you prefer, a NISSAN dealer.

Where to go for service

If maintenance service is required or your vehicle appears to malfunction, have the systems checked and corrected by a NISSAN dealer.

NISSAN technicians are well-trained specialists who are kept up-to-date with the latest service information through technical bulletins, service tips, and in-dealership training programs. They are completely qualified to work on NISSAN vehicles **before** they work on your vehicle, rather than after they have worked on it.

You can be confident that a NISSAN dealer's service department performs the best job to meet the maintenance requirements on your vehicle — in a reliable and economic way.

GENERAL MAINTENANCE

During the normal day-to-day operation of the vehicle, general maintenance should be performed regularly as prescribed in this section. If you detect any unusual sounds, vibrations or smells, be sure to check for the cause or have a NISSAN dealer do it promptly. In addition, you should notify a NISSAN dealer if you think that repairs are required.

When performing any checks or maintenance work, closely observe the "Maintenance precautions" later in this section.

EXPLANATION OF GENERAL MAINTENANCE ITEMS

Additional information on the following items with "*" is found later in this section.

Outside the vehicle

The maintenance items listed here should be performed from time to time, unless otherwise specified.

Doors and engine hood Check that the doors and engine hood operate properly. Also ensure that all latches lock securely. Lubricate hinges, latches, latch pins, rollers and links as necessary. Make sure that the secondary latch keeps the hood from opening when the primary latch is released.

When driving in areas using road salt or other corrosive materials, check lubrication frequently.

Lights* Clean the headlights on a regular basis. Make sure that the headlights, stop lights, tail lights, turn signal lights, and other lights are all operating properly and installed securely. Also check headlight aim.

Road wheel nuts* When checking the tires, make sure no wheel nuts are missing, and check for any loose wheel nuts. Tighten if necessary.

Tire rotation* Tires should be rotated every 7,500 miles (12,000 km).

Tires* Check the pressure with a gauge often and always prior to long distance trips. If necessary, adjust the pressure in all tires, including the spare, to the pressure specified. Check carefully for damage, cuts or excessive wear.

Wheel alignment and balance If the vehicle should pull to either side while driving on a straight and level road, or if you detect uneven or abnormal tire wear, there may be a need for wheel alignment. If the steering wheel or seat vibrates at normal highway speeds, wheel balancing may be needed.

- For additional information regarding tires, refer to “Important Tire Safety Information” (US) or “Tire Safety Information” (Canada) in the Warranty Information Booklet .

Windshield Clean the windshield on a regular basis. Check the windshield at least every six months for cracks or other damage. Have a damaged windshield repaired by a qualified repair facility.

Windshield wiper blades* Check for cracks or wear if they do not wipe properly.

Inside the vehicle

The maintenance items listed here should be checked on a regular basis, such as when performing periodic maintenance, cleaning the vehicle, etc.

Additional information on the following items with an “*” is found later in this section.

Accelerator pedal Check the pedal for smooth operation and make sure the pedal does not bind or require uneven effort. Keep the floor mat away from the pedal.

Automatic transmission P (Park) position mechanism On a fairly steep hill check that your vehicle is held securely with the selector lever in the P (Park) position without applying any brakes.

Brake pedal and booster* Check the pedal for smooth operation and make sure it has the proper distance under it when depressed fully. Check the brake booster function. Be certain to keep the floor mat away from the pedal.

Brakes Check that the brakes do not pull the vehicle to one side when applied.

Clutch pedal* Make sure the pedal operates smoothly and check that it has the proper free travel.

Parking brake* Check that the lever has the proper travel and confirm that your vehicle is held securely on a fairly steep hill with only the parking brake applied.

Seats Check seat position controls such as seat adjusters, seatback recliner, etc. to ensure they operate smoothly and all latches lock securely in every position. Check that the head restraints move up and down smoothly and the locks (if so equipped) hold securely in all latched positions.

Seat belts Check that all parts of the seat belt system (for example, buckles, anchors, adjusters and retractors) operate properly and smoothly, and are installed securely. Check the belt webbing for cuts, fraying, wear or damage.

Steering wheel Check for changes in the steering system, such as excessive freeplay, hard steering or strange noises.

Warning lights and chimes Make sure all warning lights and chimes are operating properly.

Windshield wiper and washer* Check that the wipers and washer operate properly and that the wipers do not streak.

Windshield defroster Check that the air comes out of the defroster outlets properly and in sufficient quantity when operating the heater or air conditioner.

Under the hood and vehicle

The maintenance items listed here should be checked periodically (for example, each time you check the engine oil or refuel).

Automatic transmission fluid level* Check the level after putting the selector lever in P with the engine idling at operating temperature.

Battery* Check the fluid level in each cell. It should be between the MAX and MIN lines. Vehicles operated in high temperatures or under severe conditions require frequent checks of the battery fluid level.

Brake and clutch fluid levels* Make sure that the brake and clutch fluid level is between the MIN and MAX lines on the reservoir.

Engine coolant level* Check the coolant level when the engine is cold.

Engine drive belts* Make sure the drive belts are not frayed, worn, cracked or oily.

Engine oil level* Check the level after parking the vehicle on a level surface with the engine off. Wait more than 10 minutes for the oil to drain back into the oil pan.

Exhaust system Make sure there are no loose supports, cracks or holes. If the sound of the exhaust seems unusual or there is a smell of exhaust fumes, immediately have the exhaust system inspected by a NISSAN dealer. See the carbon monoxide warning in the “Starting and driving” section of this manual.

Fluid leaks Check under the vehicle for fuel, oil, water or other fluid leaks after the vehicle has been parked for a while. Water dripping from the air conditioner after use is normal. If you should notice any leaks or if gasoline fumes are evident, check for the cause and have it corrected immediately.

Power steering fluid level* and lines Check the level when the fluid is cold, with the engine off. Check the lines for proper attachment, leaks, cracks, etc.

Radiator and hoses Check the front of the radiator and clean off any dirt, insects, leaves, etc., that may have accumulated. Make sure the hoses have no cracks, deformation, rot or loose connections.

Underbody The underbody is frequently exposed to corrosive substances such as those used on icy roads or to control dust. It is very important to remove these substances from the underbody, otherwise rust may form on the floor pan, frame, fuel lines and exhaust system. At the end of winter, the underbody should be thoroughly flushed with plain water, in those areas where mud and dirt may have accumulated. See the “Appearance and care” section of this manual.

Windshield washer fluid* Check that there is adequate fluid in the reservoir.

MAINTENANCE PRECAUTIONS

When performing any inspection or maintenance work on your vehicle, always take care to prevent serious accidental injury to yourself or damage to the vehicle. The following are general precautions which should be closely observed.

⚠ WARNING

- **Park the vehicle on a level surface, apply the parking brake securely and block the wheels to prevent the vehicle from moving. For manual transmission models, move the shift lever to N (Neutral). For automatic transmission models, move the selector lever to P (Park).**
- **Be sure the ignition key is in the OFF or LOCK position when performing any parts replacement or repairs.**
- **Never leave the engine or automatic transmission related component harnesses disconnected while the ignition switch is in the ON position.**
- **Never connect or disconnect the battery or any transistorized component while the ignition switch is in the ON position.**
- **Your vehicle is equipped with an automatic engine cooling fan. It may come on at any time without warning, even if the ignition key is in the OFF position and the engine is not running. To avoid injury, always disconnect the negative battery cable before working near the fan.**
- **If you must work with the engine running, keep your hands, clothing, hair and tools away from moving fans, belts and any other moving parts.**
- **It is advisable to secure or remove any loose clothing and remove any jewelry, such as rings, watches, etc. before working on your vehicle.**
- **Always wear eye protection whenever you work on your vehicle.**
- **If you must run the engine in an enclosed space such as a garage, be sure there is proper ventilation for exhaust gases to escape.**
- **Never get under the vehicle while it is supported only by a jack. If it is necessary to work under the vehicle, support it with safety stands.**
- **Keep smoking materials, flame and sparks away from the fuel tank and battery.**
- **On gasoline engine models with the multiport fuel injection (MFI) system, the fuel filter or fuel lines should be serviced by a NISSAN dealer because the fuel lines are under high pressure even when the engine is off.**

⚠ CAUTION

- **Do not work under the hood while the engine is hot. Turn the engine off and wait until it cools down.**
- **Avoid contact with used engine oil and coolant. Improperly disposed engine oil, engine coolant and/or other vehicle fluids can damage the environment. Always conform to local regulations for disposal of vehicle fluid.**

This “Maintenance and do-it-yourself” section gives instructions regarding only those items which are relatively easy for an owner to perform.

A genuine NISSAN service manual is also available. See “Owner’s Manual/Service Manual order information” in the “Technical and consumer information” section of this manual.

You should be aware that incomplete or improper servicing may result in operating difficulties or excessive emissions, and could affect warranty coverage. **If in doubt about any servicing, have it done by a NISSAN dealer.**

ENGINE COMPARTMENT CHECK LOCATIONS

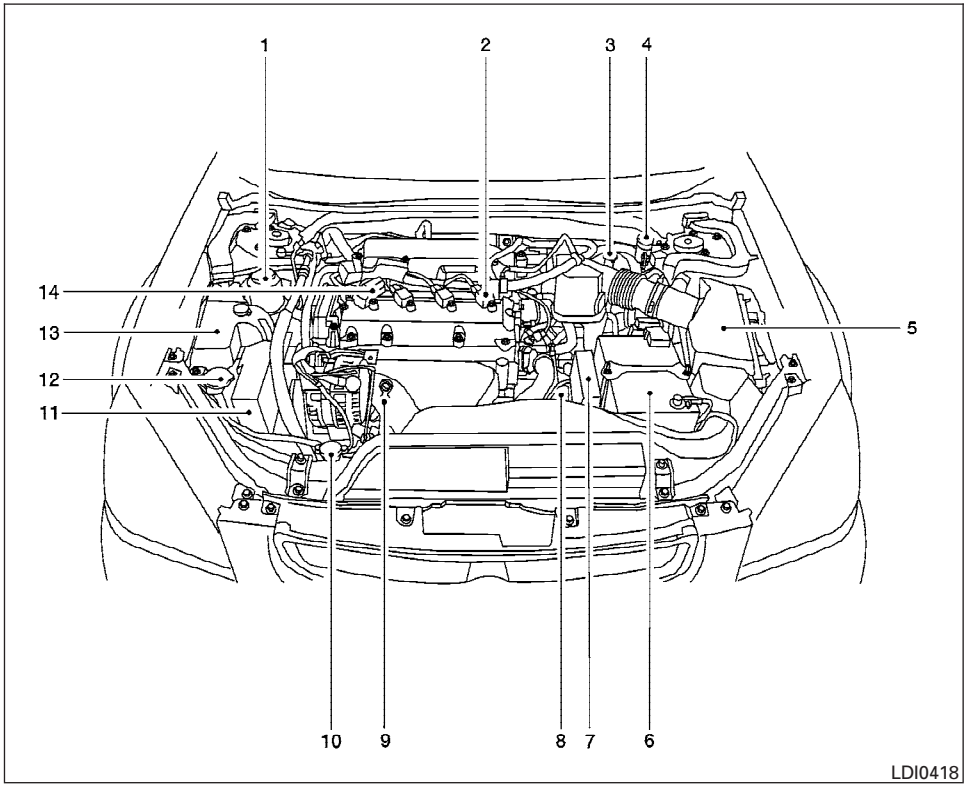

QR25DE engine

1. Power steering fluid reservoir
2. Spark plug coils
3. Brake fluid reservoir
4. Clutch fluid reservoir (M/T model)
5. Air cleaner
6. Battery
7. Fuse/Fusible link box
8. Transmission dipstick (A/T models)
9. Engine oil dipstick
10. Radiator cap
11. Fuse block
12. Windshield washer fluid reservoir
13. Engine coolant reservoir
14. Engine oil filler cap

NOTE:

Engine cover removed for clarity.

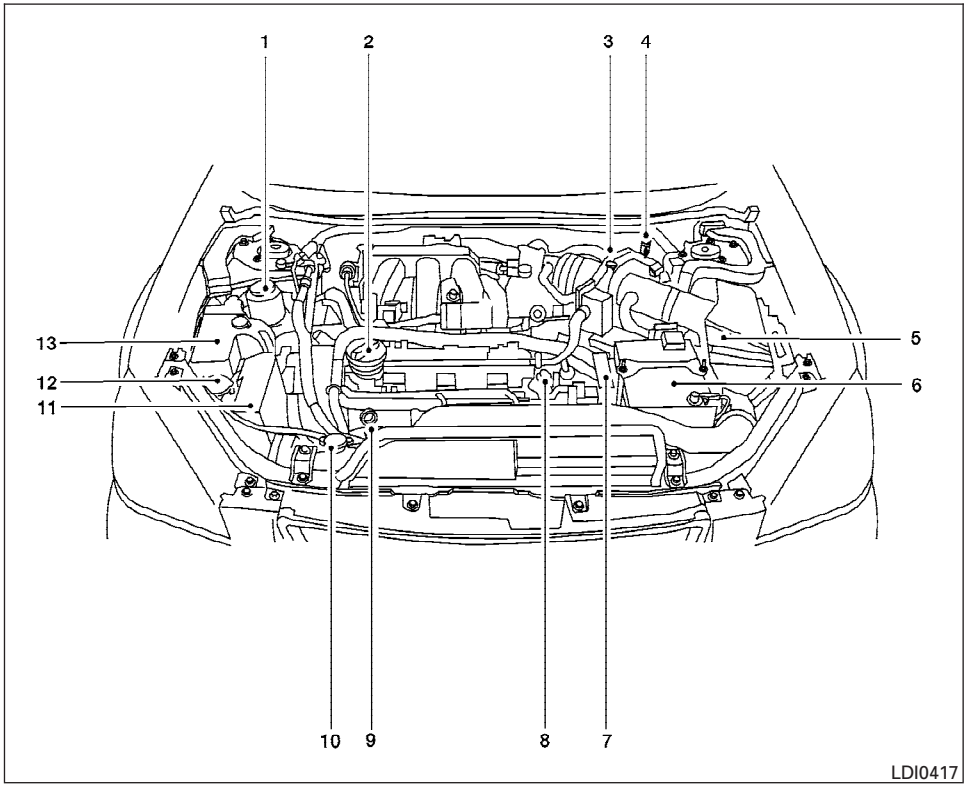

VQ35DE engine

1. Power steering fluid reservoir
2. Engine oil filler cap
3. Brake fluid reservoir
4. Clutch fluid reservoir (M/T model)
5. Air cleaner
6. Battery
7. Fuse/Fusible link box
8. Transmission dipstick (A/T models)
9. Engine oil dipstick
10. Radiator cap
11. Fuse block
12. Windshield washer fluid reservoir
13. Engine coolant reservoir

NOTE:

Engine cover removed for clarity.

The engine cooling system is filled at the factory with Genuine NISSAN Long Life Antifreeze/Coolant to provide year-round anti-freeze and coolant protection. The anti-freeze solution contains rust and corrosion inhibitors. Additional engine cooling system additives are not necessary.

⚠ WARNING

- **Never remove the radiator or coolant reservoir cap when the engine is hot. Wait until the engine and radiator cool down. Serious burns could be caused by high pressure fluid escaping from the radiator. See precautions in "If your vehicle overheats" found in the "In case of emergency" section of this manual.**
- **The radiator is equipped with a pressure type radiator cap. To prevent engine damage, use only a genuine NISSAN radiator cap.**

Outside temperature down to		Genuine NISSAN Long Life Antifreeze/ Coolant or equivalent	Demineralized or distilled water
°C	°F		
-35	-30	50%	50%

⚠ CAUTION

When adding or replacing coolant, be sure to use only a Genuine NISSAN Long Life Antifreeze/Coolant (green) or equivalent with the proper mixture ratio of 50% anti-freeze and 50% demineralized or distilled water. The use of other types of coolant solutions or coolant colors, such as orange, may damage the engine cooling system.

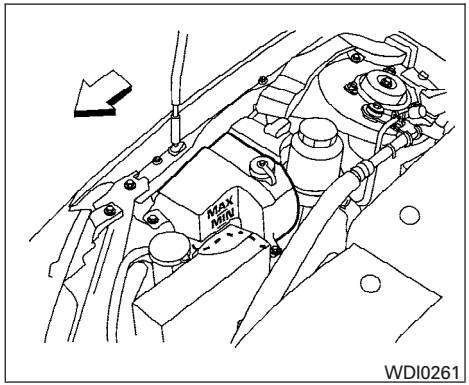

WDI0261

CHECKING ENGINE COOLANT LEVEL

Check the coolant level **in the reservoir when the engine is cold.** If the coolant level is below the MIN level, add coolant to the MAX level. If the reservoir is empty, check the coolant level in the radiator **when the engine is cold.** If there is insufficient coolant in the radiator, fill the radiator with coolant up to the filler opening and also add it to the reservoir up to the MAX level.

If the cooling system frequently requires coolant, have it checked by a NISSAN dealer.

CHANGING ENGINE COOLANT

A NISSAN dealer can change the engine coolant. The service procedure can be found in the NISSAN Service Manual.

Improper servicing can result in reduced heater performance and engine overheating.

⚠ WARNING

- **To avoid the danger of being scalded, never change the coolant when the engine is hot.**
- **Never remove the radiator cap when the engine is hot. Serious burns could be caused by high pressure fluid escaping from the radiator.**
- **Avoid direct skin contact with used coolant. If skin contact is made, wash thoroughly with soap or hand cleaner as soon as possible.**
- **Keep coolant out of the reach of children and pets.**

Engine coolant must be disposed of properly. Check your local regulations.

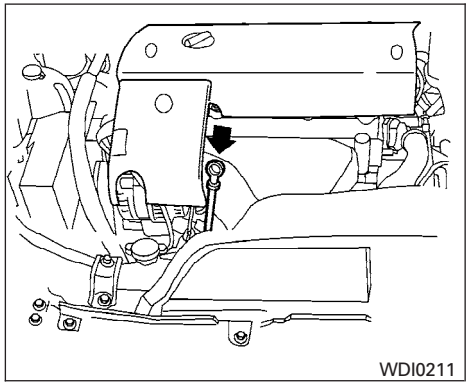

QR25DE

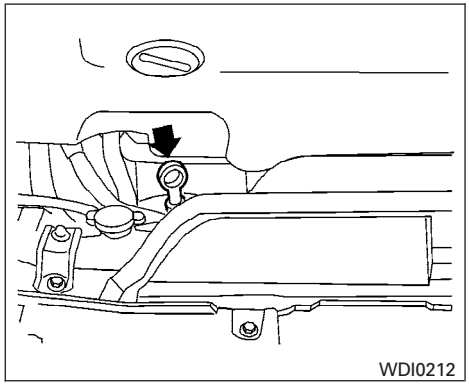

VQ35DE

CHECKING ENGINE OIL LEVEL

1. Park the vehicle on a level surface and apply the parking brake.
2. Start the engine and let it idle until it reaches operating temperature.
3. Turn off the engine. **Wait more than 10 minutes for the oil to drain back into the oil pan.**
4. Remove the dipstick and wipe it clean. Reinsert it all the way.

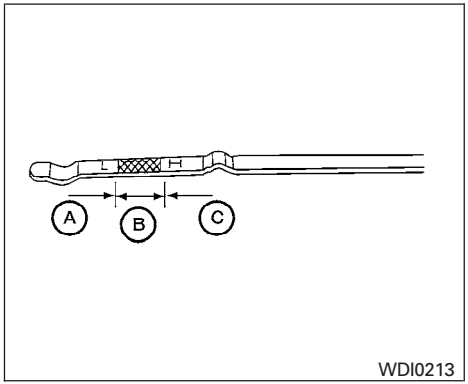

Type A

5. Remove the dipstick again and check the oil level. It should be between the H (High) and L (Low) marks Ⓑ. This is the normal operating oil level range. If the oil level is below the L (Low) mark Ⓐ, remove the oil filler cap and pour recommended oil through the opening. **Do not overfill Ⓒ.**

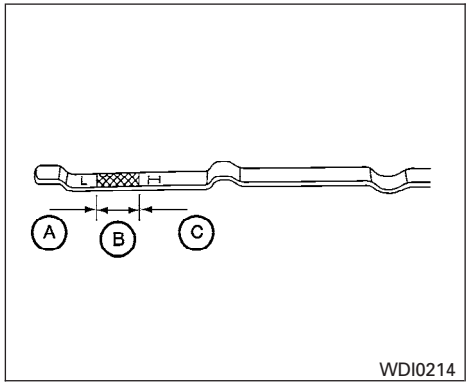

Type B

6. Recheck oil level with the dipstick.

It is normal to add some oil between oil maintenance intervals or during the break-in period, depending on the severity of operating conditions.

⚠ CAUTION

Oil level should be checked regularly. Operating the engine with an insufficient amount of oil can damage the engine, and such damage is not covered by warranty.

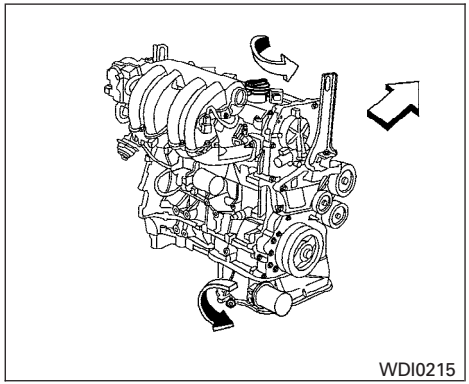

QR25DE

CHANGING ENGINE OIL

1. Park the vehicle on a level surface and apply the parking brake.
2. Start the engine and let it idle until it reaches operating temperature, then turn it off.
3. Remove the oil filler cap by turning it counterclockwise.
4. Place a large drain pan under the drain plug.

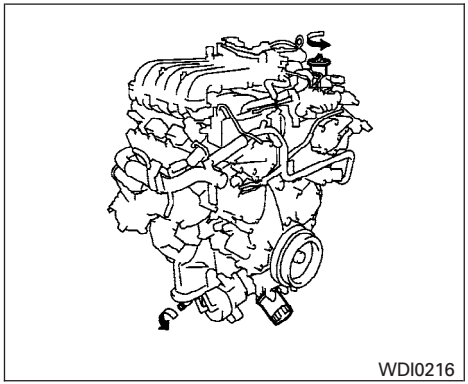

VQ35DE

5. Remove the drain plug with a wrench by turning it counterclockwise and completely drain the oil.

   If the oil filter is to be changed, remove and replace it at this time. See "Changing engine oil filter" later in this section.

⚠ WARNING

- **Prolonged and repeated contact with used engine oil may cause skin cancer.**
- **Try to avoid direct skin contact with used oil. If skin contact is made, wash thoroughly with soap or hand cleaner as soon as possible.**
- **Keep used engine oil out of reach of children.**

⚠ CAUTION

Be careful not to burn yourself. The engine oil may be hot.

- **Waste oil must be disposed of properly.**
- **Check your local regulations.**

6. Clean and reinstall the drain plug and a new washer. Securely tighten the drain plug with a wrench. Do not use excessive force.

   Drain plug tightening torque:
   22 - 29 ft-lb (29 - 39 N·m)

7. Refill engine with recommended oil through the oil filler opening, then install the oil filler cap securely.

   See "Capacities and recommended fuel/lubricants" in the "Technical and consumer information" section of this manual for drain and refill capacity.

   The drain and refill capacity depends on the oil temperature and drain time. Use these specifications for reference only. Always use the dipstick to determine when the proper amount of oil is in the engine.

8. Start the engine. Check for leakage around the drain plug and oil filter. Correct as required.
9. Turn the engine off and wait more than 10 minutes. Check the oil level with the dipstick. Add engine oil if necessary.

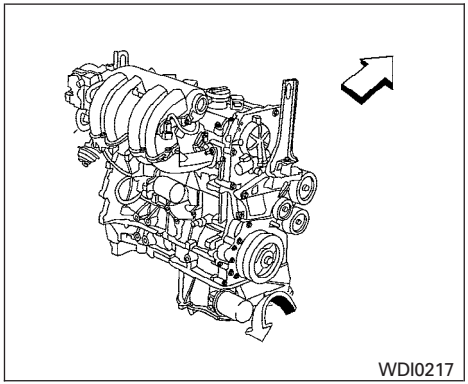

QR25DE

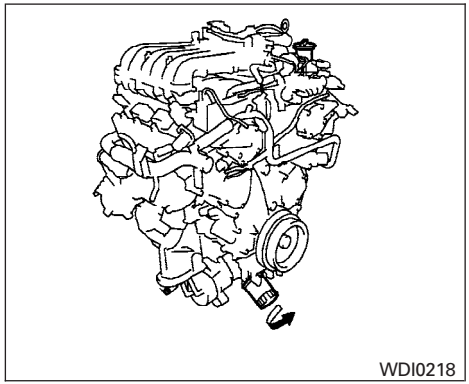

VQ35DE

CHANGING ENGINE OIL FILTER

1. Park the vehicle on a level surface and apply the parking brake.
2. Turn the engine off.
3. Place a large drain pan under the oil filter.
4. Loosen the oil filter with an oil filter wrench by turning it counterclockwise. Then remove the oil filter by turning it by hand.

⚠ CAUTION

Be careful not to burn yourself. The engine oil may be hot.

5. Wipe the engine oil filter mounting surface with a clean rag.

   Be sure to remove any old gasket material remaining on the mounting surface of the engine.
6. Coat the gasket on the new filter with clean engine oil.
7. Screw on the oil filter until a slight resistance is felt, then tighten an additional 2/3 turn.
8. Start the engine and check for leakage around the oil filter. Correct as required.
9. Turn the engine off and wait more than 10 minutes. Check the oil level. Add engine oil if necessary.

⚠ WARNING

- **When the engine is running, keep hands, jewelry and clothing away from any moving parts such as the cooling fan and drive belts.**
- **Automatic transmission fluid is poisonous and should be stored carefully in marked containers out of the reach of children.**

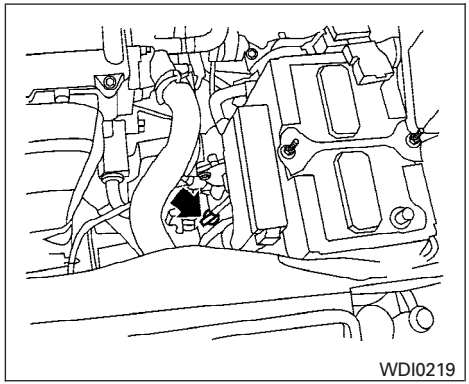

QR25DE engine

TEMPERATURE CONDITIONS FOR CHECKING

- The fluid level should be checked using the HOT range on the dipstick after the following conditions have been met:
  - The engine should be warmed up to operating temperature.
  - The vehicle should be driven at least 5 minutes.
  - The automatic transmission fluid should be warmed to 122 - 176°F (50 - 80°C).
- The fluid can be checked at fluid temperatures of 86 - 122°F (30 - 50°C) using the COLD range on the dipstick after the engine is warmed up and before driving. However, the fluid should be re-checked using the HOT range.

1. Park the vehicle on a level surface and set the parking brake.
2. Start the engine and then move the shift selector lever through each gear range, ending in P (Park).
3. Check the fluid level with the engine idling.

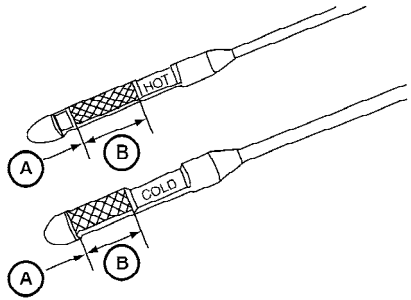

WDI0221

4. Remove the dipstick and wipe it clean with lint-free paper.
5. Reinsert the dipstick into the dipstick tube as far as it will go.
6. Remove the dipstick and note the reading. If the automatic transmission fluid level is within the normal operating range Ⓑ, no additional fluid is required. If the fluid level is low Ⓐ add fluid through the dipstick tube.

⚠ CAUTION

DO NOT OVERFILL. Use ONLY Genuine Nissan Matic D ATF (Continental U.S. and Alaska) or Canada NISSAN Automatic Transmission Fluid. DEXRON™ III/MERCON™ or equivalent may also be used. Outside the continental United States and Alaska contact a NISSAN dealership for more information regarding suitable fluids, including recommended brand(s) of DEXRON™ III/MERCON™ automatic transmission fluid.

NOTE:

If the vehicle has been driven for a long time at high speeds, or in city traffic in hot weather, or if it is being used to pull a trailer, the fluid level cannot be read accurately. You should wait until the fluid has cooled down (about 30 minutes) before checking fluid level.

5-SPEED AUTOMATIC TRANSMISSION FLUID

When checking or replacement is required, we recommend your NISSAN dealer for servicing.

⚠ WARNING

- **Use only Genuine Matic K ATF. Do not mix with other fluids.**
- **Using automatic transmission fluid other than Genuine Matic K ATF will cause deterioration in driveability and automatic transmission durability, and may damage the automatic transmission, which is not covered by the NISSAN new vehicle limited warranty.**

The specified automatic transmission fluid is also described on caution labels located in the engine compartment.

POWER STEERING FLUID

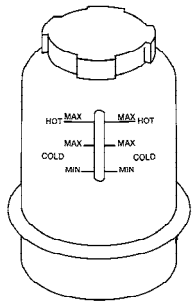

WDI0256

The fluid level should be checked using the HOT MAX range on the power steering fluid reservoir at fluid temperatures of 122° - 176°F (50° - 80°C) or using the COLD MAX range on the power steering fluid reservoir at fluid temperatures of 32° - 86°F (0° - 30°C).

If the fluid is below the MIN line, add Genuine NISSAN PSF. Remove the cap and fill through the opening.

⚠ CAUTION

- **DO NOT OVERFILL.**
- **Recommended fluid is Genuine NISSAN PSF or equivalent.**

BRAKE AND CLUTCH FLUID

For further brake and clutch fluid specification information, refer to “Capacities and recommended fuel/lubricants” in the “Technical and consumer information” section of this manual.

⚠ WARNING

Use only new fluid from a sealed container. Old, inferior or contaminated fluid may damage the brake and clutch systems. The use of improper fluids can damage the brake system and affect the vehicle’s stopping ability.

⚠ CAUTION

Do not spill the fluid on any painted surfaces. This will damage the paint. If fluid is spilled, immediately wash the surface with water.

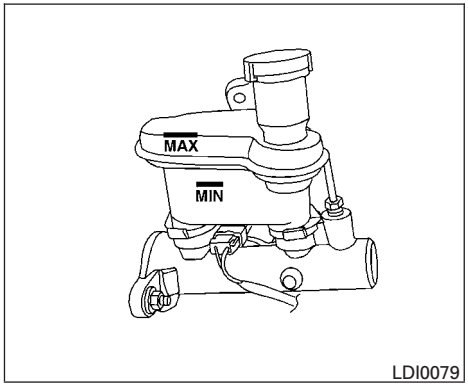

BRAKE FLUID

Check the brake fluid level in the reservoir. If the fluid level is below the MIN line or the brake warning light comes on, add Genuine NISSAN Super Heavy Duty Brake Fluid or equivalent **DOT 3** fluid up to the MAX line. If fluid must be added frequently, the system should be checked by a NISSAN dealer.

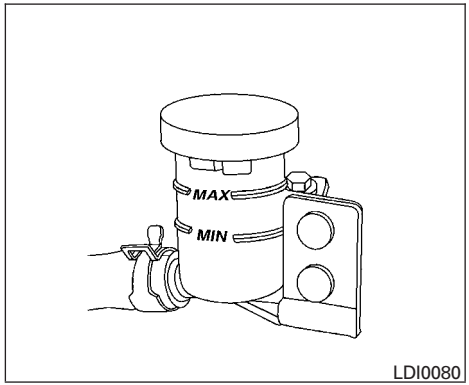

CLUTCH FLUID

Check the clutch fluid level in the reservoir (manual transmissions only). If the fluid level is below the MIN line, add Genuine NISSAN Super Heavy Duty Brake Fluid or equivalent **DOT 3** fluid up to the MAX line. If fluid must be added frequently, the system should be checked by a NISSAN dealer.

For further brake and clutch fluid specification information, refer to “Capacities and recommended fuel/lubricants” in the “Technical and consumer information” section of this manual.

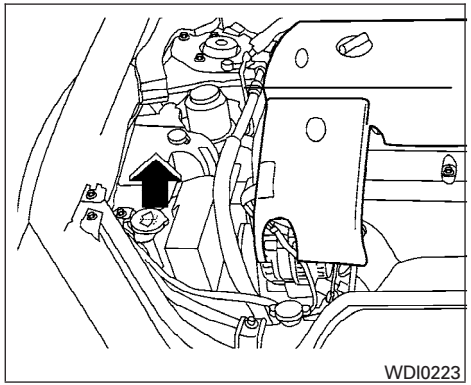

WINDOW WASHER FLUID RESERVOIR

Fill the window washer fluid reservoir periodically. Add window washer fluid when the low window washer fluid warning light comes on (if so equipped).

To fill the window washer fluid reservoir, lift the cap off the reservoir tank and pour the window washer fluid into the tank opening.

Add a washer solvent to the washer for better cleaning. In the winter season, add a windshield washer antifreeze. Follow the manufacturer’s instructions for the mixture ratio.

Refill the reservoir more frequently when driving conditions require an increased amount of window washer fluid.

Recommended fluid is Genuine NISSAN Windshield Washer Concentrate Cleaner & Anti-freeze or equivalent.

⚠ CAUTION

- **Do not substitute engine anti-freeze coolant for window washer solution. This may result in damage to the paint.**
- **Do not fill the window washer reservoir tank with washer fluid concentrates at full strength. Some methyl alcohol based washer fluid concentrates may permanently stain the grille if spilled while filling the window washer reservoir tank.**
- **Pre-mix washer fluid concentrates with water to the manufacturer's recommended levels before pouring the fluid into the window washer reservoir tank. Do not use the window washer reservoir tank to mix the washer fluid concentrate and water.**

- Keep the battery surface clean and dry. Any corrosion should be washed off with a solution of baking soda and water.
- Make certain the terminal connections are clean and securely tightened.
- If the vehicle is not to be used for 30 days or longer, disconnect the negative (-) battery terminal cable to prevent discharge.

⚠ WARNING

- **Do not expose the battery to flames or electrical sparks. Hydrogen gas generated by the battery is explosive. Do not allow battery fluid to contact your skin, eyes, fabrics or painted surfaces. After touching a battery or battery cap, do not touch or rub your eyes. Thoroughly wash your hands. If the acid contacts your eyes, skin or clothing, immediately flush with water for at least 15 minutes and seek medical attention.**
- **Do not operate the vehicle if the fluid in the battery is low. Low battery fluid can cause a higher load on the battery which can generate heat, reduce battery life, and in some cases lead to an explosion.**
- **When working on or near a battery, always wear suitable eye protection and remove all jewelry.**
- **Battery posts, terminals and related accessories contain lead and lead compounds. Wash hands after handling.**
- **Keep battery out of the reach of children.**

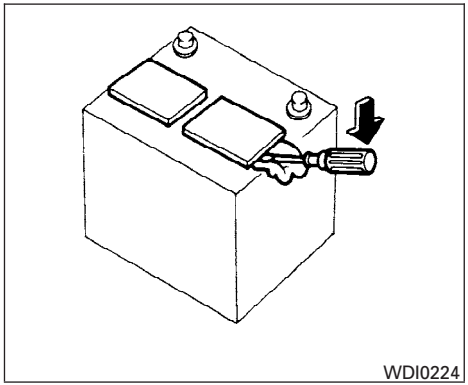

1. Remove the battery caps with a screwdriver as shown. Use a cloth to protect the battery case.

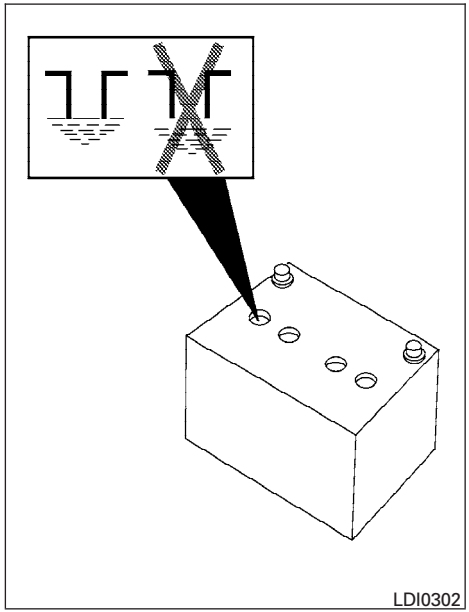

2. Check the fluid level in each cell If it is necessary to add fluid, add only distilled water to bring the level up to the bottom of the filler opening. **Do not overfill.**

Vehicles operated in high temperatures or under severe conditions require frequent checks of the battery fluid level.

JUMP STARTING

If jump starting is necessary, see “Jump starting” in the “In case of emergency” section of this manual. If the engine does not start by jump starting, the battery may have to be replaced. Contact a NISSAN dealer.

DRIVE BELTS

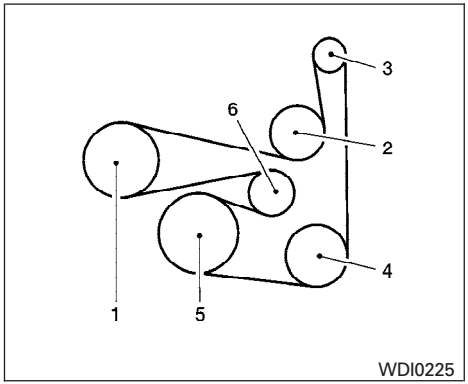

QR25DE engine

1. Power steering fluid pump
2. Water pump
3. Generator
4. Air conditioner (if so equipped)
5. Crank pulley
6. Auto tensioner pulley

⚠ WARNING

Be sure the ignition key is in the OFF or LOCK position. The engine could rotate unexpectedly.

1. Visually inspect each belt for signs of unusual wear, cuts, fraying or looseness. If the belt is in poor condition or is loose, have it replaced or adjusted by a NISSAN dealer.
2. Have the belts checked regularly for condition and tension in accordance with the maintenance schedule found in the “NISSAN Service and Maintenance Guide”.

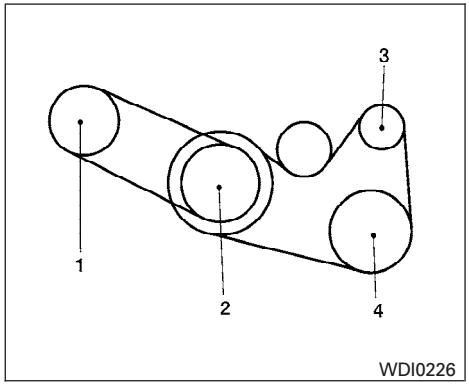

VQ35DE engine

1. Power steering fluid pump
2. Crank pulley
3. Generator
4. Air conditioner

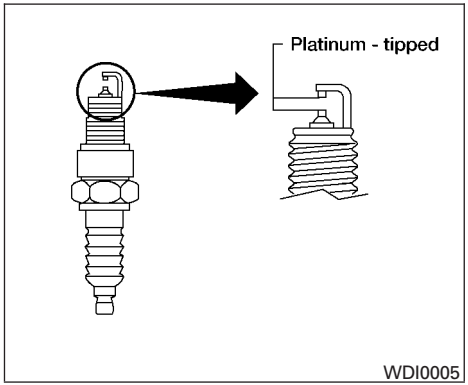

REPLACING SPARK PLUGS

Platinum-tipped spark plugs

It is not necessary to replace platinum-tipped spark plugs as frequently as conventional type spark plugs because they last much longer. Follow the maintenance log shown in the "NISSAN Service and Maintenance Guide". Do not service platinum-tipped spark plugs by cleaning or regapping.

- **Always replace spark plugs with recommended or equivalent ones.**

⚠ WARNING

Be sure the engine and ignition switch are off and that the parking brake is engaged securely.

⚠ CAUTION

Be sure to use the correct socket to remove the spark plugs. An incorrect socket can damage the spark plugs.

QR25DE

1. Disconnect the negative battery cable.
2. Remove the engine cover.
3. Remove the coil pack bolt.
4. Remove the coil pack/spark plug boot from the spark plug.
5. Remove the spark plugs with a spark plug socket.

   The plug socket has a rubber seal that holds the spark plug so it does not fall when it is pulled out. Make sure each spark plug is snugly fitted into the spark plug socket.
6. Fit the new plugs, one at a time, into the spark plug socket and install them. **Use only the specified spark plugs.** Turn each plug several full turns by hand, then tighten with the spark plug socket to the correct torque. Do not overtighten.

   Spark plug tightening torque:

   14 - 22 ft-lb (20 - 29 N·m)
7. Install the coil pack/spark plug boot on the spark plug by pushing it on until you feel a snap.
8. Install the coil pack bolt.

   Coil pack tightening torque:

   48 - 65 in-lb (5.4 - 7.3 N·m)
9. Install the engine cover.
10. Connect the negative battery cable.

VQ35DE

If replacement is required, please see your NISSAN dealer for assistance.

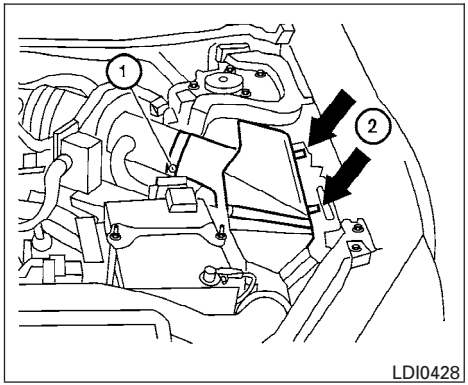

The air cleaner filter should not be cleaned and reused. Replace it according to the maintenance log shown in the "NISSAN Service and Maintenance Guide." When replacing the filter, wipe the inside of the air cleaner filter housing and the cover with a damp cloth.

To remove the air cleaner filter:

① Loosen the screw clamp.

② Push down on the clips.

3. Remove the air cleaner housing.

⚠ WARNING

- **Operating the engine with the air cleaner removed can cause you or others to be burned. The air cleaner not only cleans the air, it stops the flame if the engine backfires. If it isn't there, and the engine backfires, you could be burned. Do not drive with the air cleaner removed, and be careful when working on the engine with the air cleaner removed.**
- **Never pour fuel into the throttle body or attempt to start the engine with the air cleaner removed. Doing so could result in serious injury.**

IN-CABIN MICROFILTER (if so equipped)

The in-cabin microfilter restricts the entry of airborne dust and pollen particles and reduces some objectionable outside odors. The filter is located behind the glove box. Refer to the "NISSAN Service and Maintenance Guide" for change intervals.

To replace the filter, perform the following procedure:

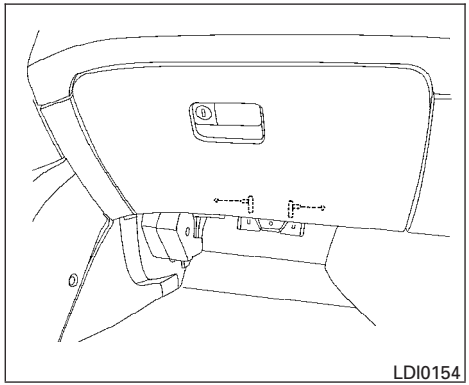

1. Remove the 2 lower glove box hinge pins. Remove the glove box from the opening and let it hang by the cord.

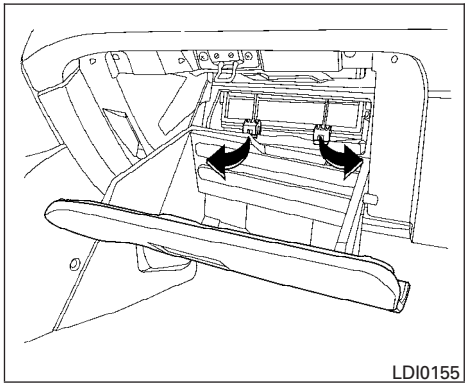

2. Remove the filter cover from the intake unit by disengaging the 2 hook tabs at the bottom of the cover.

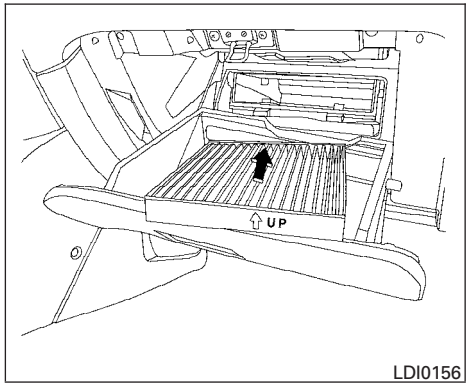

NOTE:

The filter is marked "UP" with an arrow. The end of the filter with the arrow should face the rear of the vehicle.

3. Slide the filter into the housing.

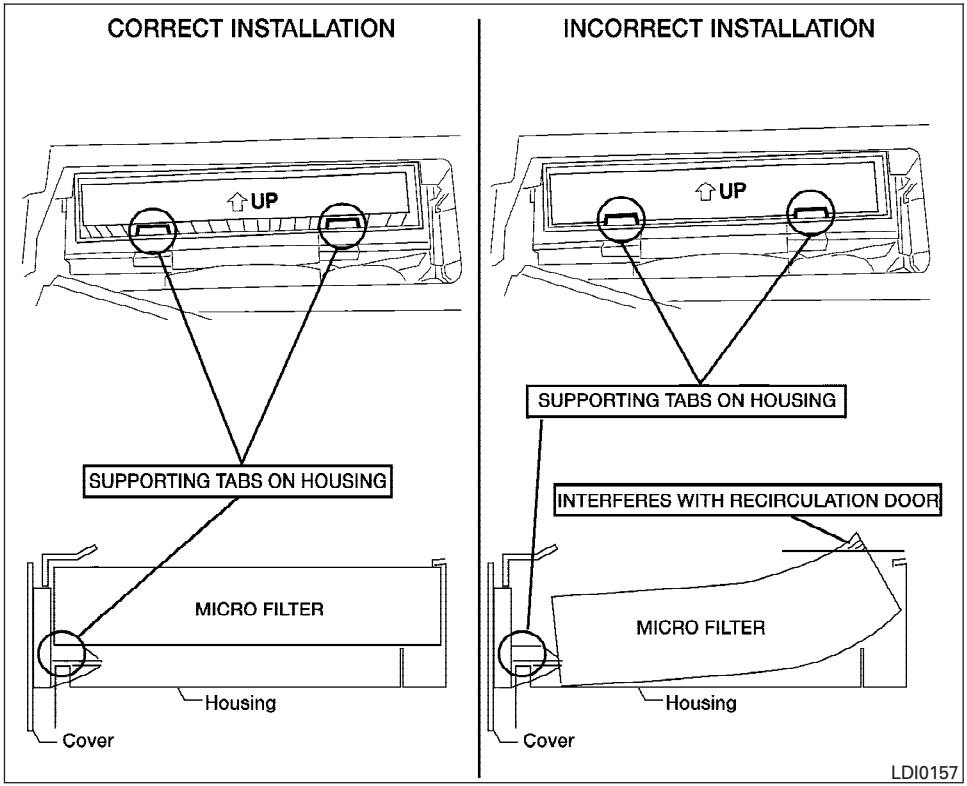

NOTE:

Make sure the filter sits on top of the 2 supporting tabs on the housing.

4. Replace the cover by inserting the upper tabs inside the housing slot and pushing the hook tabs until they snap on to the housing lip.
5. Install the glove box door.
6. Fill out the date information on the small replacement label and attach it to the glove box lid.

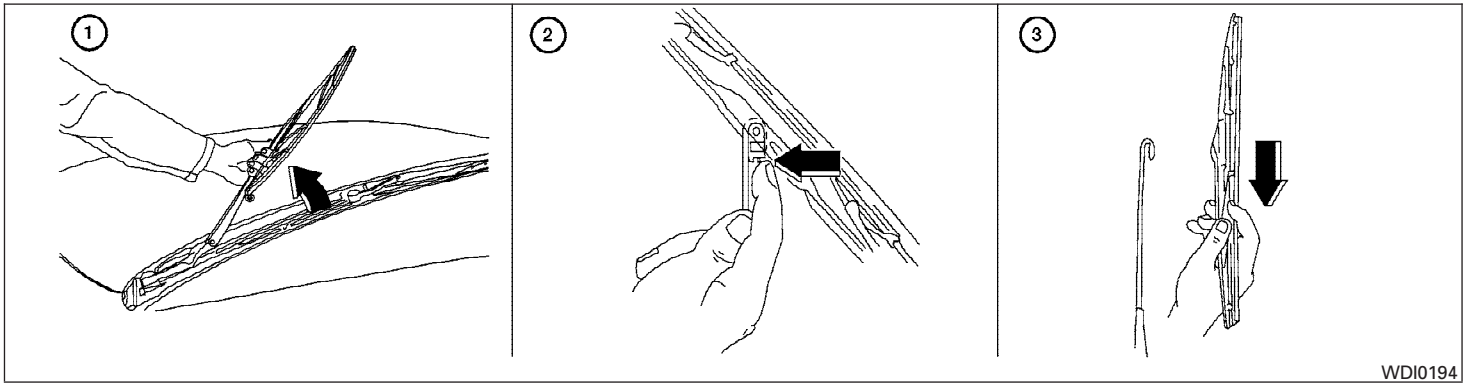

CLEANING

If your windshield is not clear after using the windshield washer or if a wiper blade chatters when running, wax or other material may be on the blade or windshield.

Clean the outside of the windshield with a washer solution or a mild detergent. Your windshield is clean if beads do not form when rinsing with clear water.

Clean each blade by wiping it with a cloth soaked in a washer solution or a mild detergent. Then rinse the blades with clear water. If your windshield is still not clear after cleaning the blades and using the wiper, replace the blades.

⚠ CAUTION

Worn windshield wiper blades can damage the windshield and impair driver vision.

REPLACING

Replace the wiper blades if they are worn.

① Lift the wiper arm away from the windshield.

② Push the release tab, then move the wiper blade down the wiper arm to remove.

③ Remove the wiper blade.

4. Insert the new wiper blade onto the wiper arm until it clicks into place.

⚠ CAUTION

- **After wiper blade replacement, return the wiper arm to its original position; otherwise it may be damaged when the hood is opened.**
- **Make sure the wiper blades contact the glass; otherwise the arms may be damaged from wind pressure.**

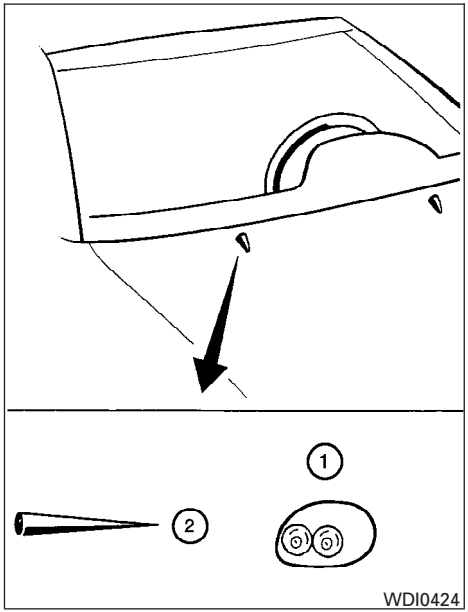

If you wax the surface of the hood, be careful not to let wax get into the washer nozzle ①. This may cause clogging or improper windshield washer operation. If wax gets into the nozzle, remove it with a needle or small pin ②.

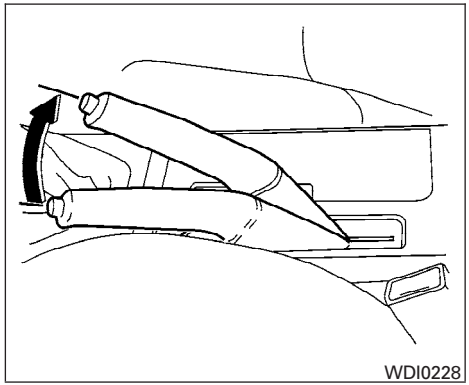

CHECKING PARKING BRAKE

From the released position, pull the parking brake lever up slowly and firmly. If the number of clicks is out of the range listed, see a NISSAN dealer.

- 7 - 8 clicks under pulling force of 44 lb (196 N).

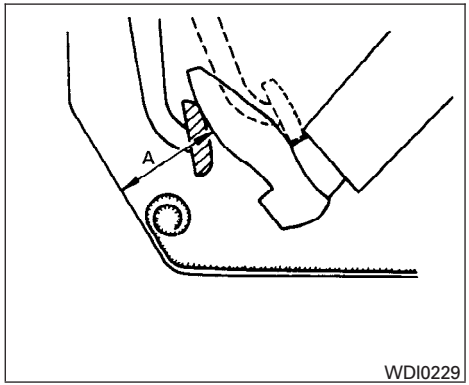

CHECKING BRAKE PEDAL

With the engine running, check the distance **A** between the upper surface of the pedal and the metal floor. If it is out of the range shown, see a NISSAN dealer.

Distance A: Under depression force of 110 lb (490 N)

Automatic Transmission	Manual Transmission
3.55 in (90.3 mm) or more	3.31 in (84 mm) or more

Self-adjusting brakes

Your vehicle is equipped with self-adjusting brakes.

The front and rear disc-type brakes self-adjust every time the brake pedal is applied.

⚠ WARNING

See a NISSAN dealer for a brake system check if the brake pedal height does not return to normal.

Brake pad wear indicators

The disc brake pads on your vehicle have audible wear indicators. When a brake pad requires replacement, a high pitched scraping or screeching sound will be heard when the vehicle is in motion. The noise will be heard whether or not the brake pedal is depressed. Have the brakes checked as soon as possible if the wear indicator sound is heard.

Under some driving or climate conditions, occasional brake squeak, squeal or other noise may be heard. Occasional brake noise during light to moderate stops is normal and does not affect the function or performance of the brake system.

Proper brake inspection intervals should be followed. For more information regarding brake inspections, see the appropriate maintenance schedule information in the “NISSAN Service and Maintenance Guide”.

BRAKE BOOSTER

Check the brake booster function as follows:

1. With the engine off, press and release the brake pedal several times. When brake pedal movement (distance of travel) remains the same from one pedal application to the next, continue on to the next step.
2. While depressing the brake pedal, start the engine. The pedal height should drop a little.
3. With the brake pedal depressed, stop the engine. Keep the pedal depressed for about 30 seconds. The pedal height should not change.
4. Run the engine for one minute without depressing the brake pedal, then turn it off. Depress the brake pedal several times. The pedal travel distance will decrease gradually with each depression as the vacuum is released from the booster.

If the brakes do not operate properly, have the brakes checked by a NISSAN dealer.

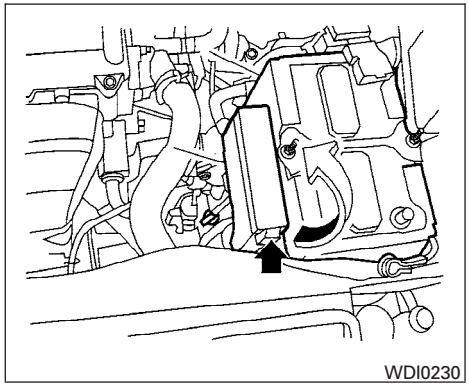

ENGINE COMPARTMENT

⚠ CAUTION

Never use a fuse of a higher or lower amperage rating than specified on the fuse box cover. This could damage the electrical system or cause a fire.

If any electrical equipment does not come on, check for an open fuse.

1. Be sure the ignition switch and the headlight switch are OFF.
2. Open the engine hood.

3. Remove the fuse box cover by pushing the tab and lifting the cover up.
4. Remove the fuse with the fuse puller. The fuse puller is located in the center of the fuse block in the passenger compartment.

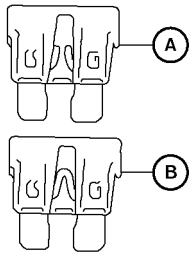

WDI0452

5. If the fuse is open Ⓐ, replace it with a new fuse Ⓑ.
6. If a new fuse also opens, have the electrical system checked and repaired by a NISSAN dealer.

Fusible links

If the electrical equipment does not operate and fuses are in good condition, check the fusible links. If any of these fusible links are melted, replace with only genuine NISSAN parts.

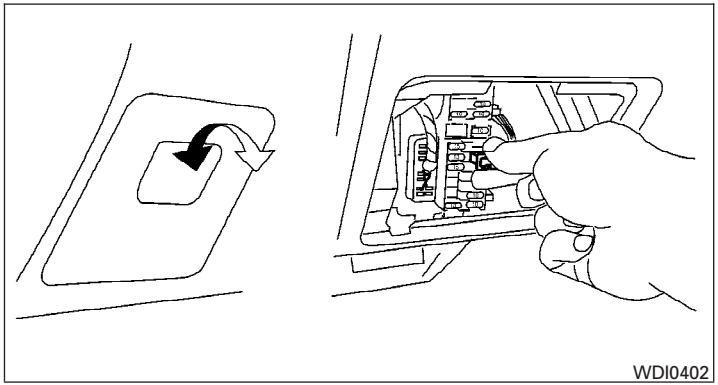

PASSENGER COMPARTMENT

⚠ CAUTION

Never use a fuse of a higher or lower amperage rating than specified on the fuse box cover. This could damage the electrical system or cause a fire.

If any electrical equipment does not operate, check for an open fuse.

1. Be sure the ignition switch and the headlight switch are OFF.
2. Pull the fuse box cover to remove.
3. Remove the fuse with the fuse puller.

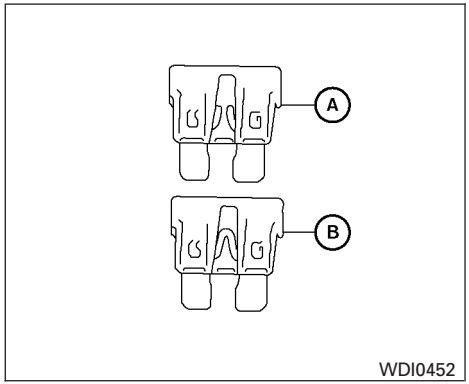

Type A

4. If the fuse is open Ⓐ, replace it with a known good fuse Ⓑ.
5. Push the fuse box cover to install.
6. If a new fuse also opens, have the electrical system checked and repaired by a NISSAN dealer.

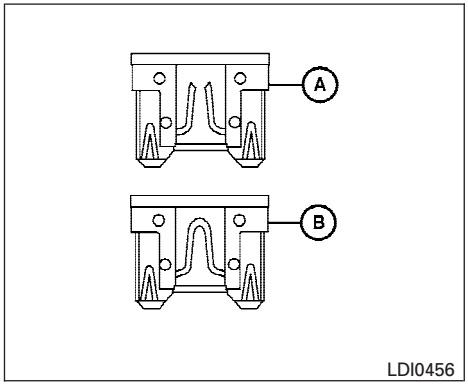

Type B

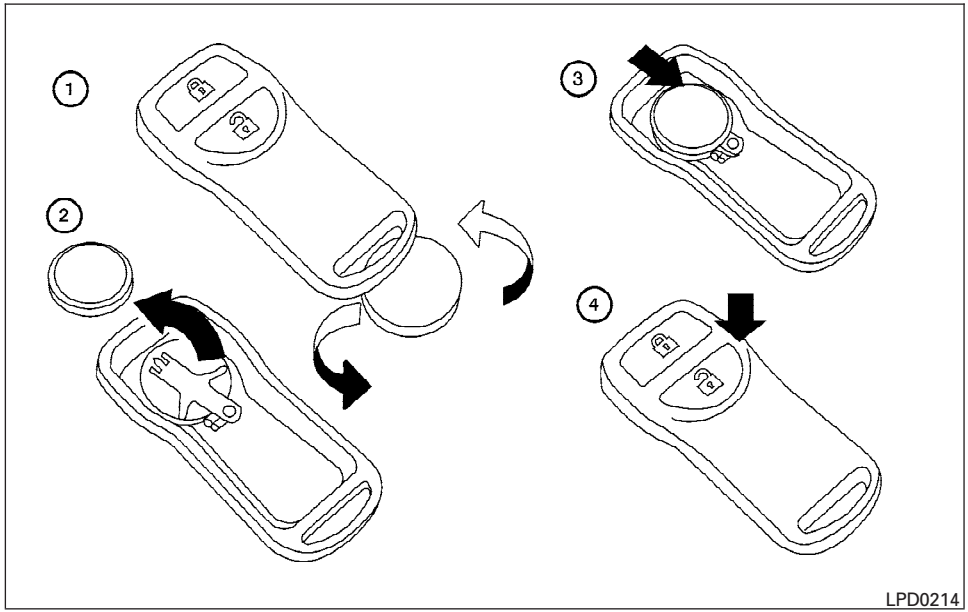

KEYFOB BATTERY REPLACEMENT

Replace the battery in the keyfob as follows:

① Open the lid using a coin.

② Remove the battery.

③ Install a new battery with the "+" facing down.

Recommended battery: CR2025 or equivalent.

④ Close the lid securely.

5. Press the button, then the button two or three times to check the keyfob operation.

If the battery is removed for any reason other than replacement, perform step 5.

- **An improperly disposed battery can hurt the environment. Always confirm local regulations for battery disposal.**
- **The keyfob is water-resistant; however, if it does get wet, immediately wipe completely dry.**
- **The operational range of the keyfob extends to approximately 33 ft (10 m) from the vehicle. This range may vary with conditions.**

FCC Notice:
Changes or modifications not expressly approved by the manufacturer for compliance could void the user's authority to operate the equipment.

This device complies with Part 15 of the FCC Rules and RSS-210 of Industry Canada.

Operation is subject to the following two conditions: (1) This device may not cause harmful interference, and (2) this device must accept any interference received, including interference that may cause undesired operation of the device.

LIGHTS

HEADLIGHTS

Replacing the xenon headlight bulb

WARNING

HIGH VOLTAGE

When xenon headlights are on, they produce a high voltage. To prevent an electric shock, never attempt to modify or disassemble. Always have your xenon headlights replaced at a NISSAN dealer. For additional information, see "Headlight and turn signal switch" in the "Instruments and controls" section.

Replacing the halogen headlight bulb

The headlight is a semi-sealed beam type which uses a replaceable headlight (halogen) bulb. Because the headlight assembly must be removed from the vehicle for bulb replacement, see your NISSAN dealer.

CAUTION

- **Aiming is not necessary after replacing the bulb. When aiming adjustment is necessary, contact a NISSAN dealer.**

- **Do not leave the headlight assembly open without a bulb installed for a long period of time. Dust, moisture, smoke, etc. entering the headlight body may affect bulb performance. Remove the bulb from the headlight assembly just before a replacement bulb is installed.**
- **Only touch the plastic base when handling the bulb. Never touch the glass envelope. Touching the glass could significantly affect bulb life and/or headlight performance.**
- **High pressure halogen gas is sealed inside the halogen bulb. The bulb may break if the glass envelope is scratched or the bulb is dropped.**
- **Use the same number and wattage as originally installed:**

  Low beam:
  Wattage: 55
  Bulb no.: H1*

  High beam:
  Wattage: 60
  Bulb no.: HB3 (9005)*

  ***: Always check with the Parts Department at a NISSAN dealer for the latest parts information.**

FRONT PARK/TURN/SIDEMARKER LIGHT

Bulb replacement requires the removal of the headlight assembly. If replacement is required, see your NISSAN dealer.

FOG LIGHTS (if so equipped)

Replacing the fog light bulb

⚠ CAUTION

- **High pressure halogen gas is sealed inside the halogen bulb. The bulb may break if the glass envelope is scratched or the bulb is dropped.**
- **When handling the bulb, do not touch the glass envelope.**

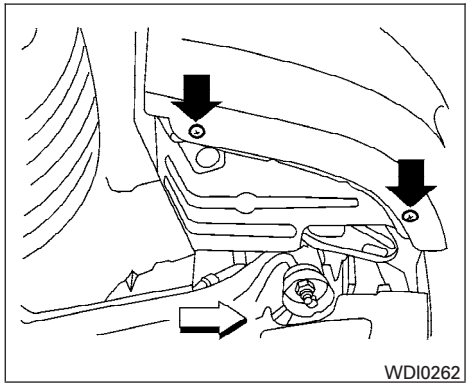

1. Disconnect the negative (-) battery cable.
2. Remove the two splash shield screws (see illustration).
3. Position the splash shield aside to allow access to the fog light bulb.

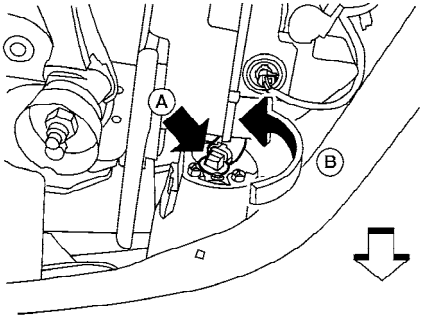

WDI0232

- Disconnect the fog light electrical connector Ⓐ.
- Rotate the fog light bulb counterclockwise and pull it out of the fog light assembly Ⓑ.
- Follow the instructions in reverse order to install a new bulb.

EXTERIOR AND INTERIOR LIGHTS

Item	Wattage (W)	Bulb No.*
Headlight assembly		
Low (Halogen)	55	H1
Low (Xenon)	(special)	D2R
High	60	HB3 (9005)
Park/Turn	27/8	1157NA
Front fog light	55	H11
Step light	—	158
Rear combination light		
Tail/Stop	8/27	3157
Turn	27	3156
Backup (reversing)	13	912
Sidemarker	5	168
License plate light	5	W5W
High-mounted stop light		
Inside	18	921
Spoiler (if so equipped)	See a NISSAN dealer for assistance.	
Interior light	8	68
Map light	10	578
Trunk light	3.4	158
Glove box light	3.4	658

* Always check with the Parts Department at a NISSAN dealer for the latest parts information.

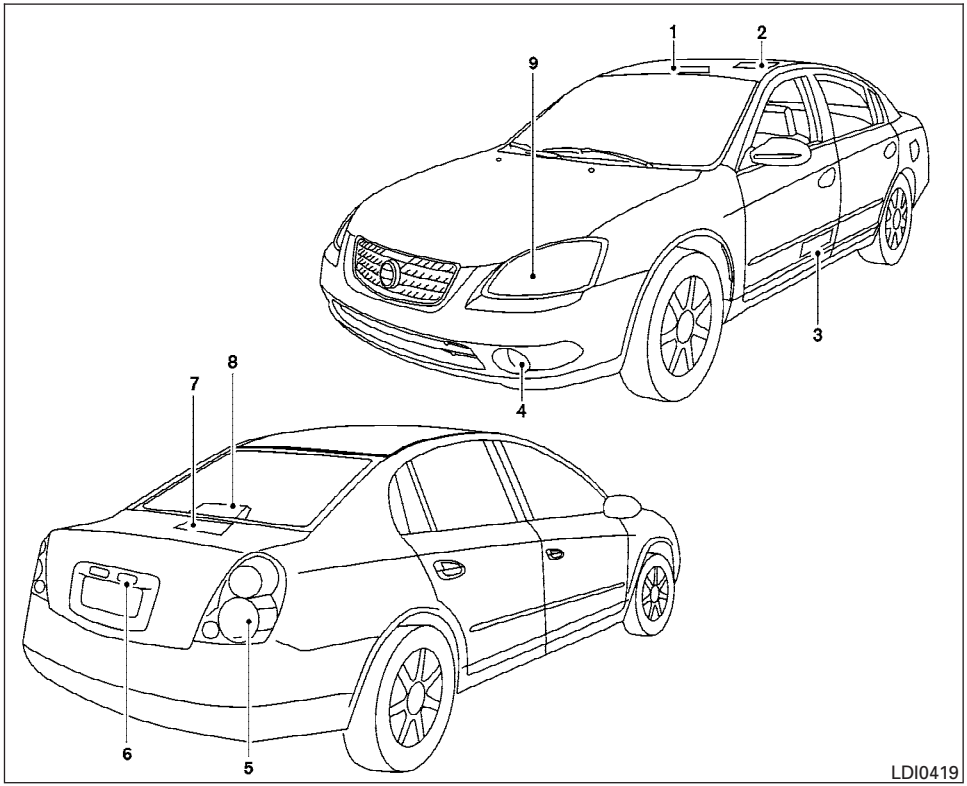

1. Map light
2. Interior light
3. Step light
4. Fog light (if so equipped)
5. Rear combination light
6. License plate light
7. Trunk light
8. High-mount stoplight (if so equipped)
9. Headlamp assembly

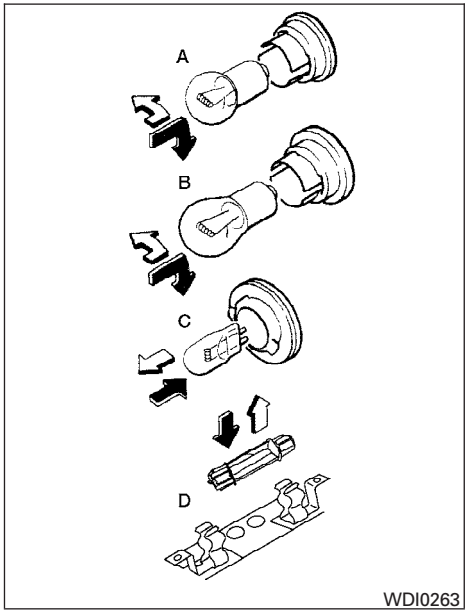

Replacement procedures

All other lights are either type A, B, C or D. When replacing a bulb, first remove the lens, lamp and/or cover.

⇧ Indicates bulb removal

⬆ Indicates bulb installation

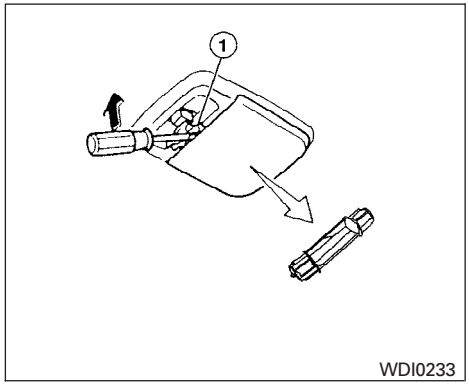

Interior light

Use a cloth ① to protect the interior light housing.

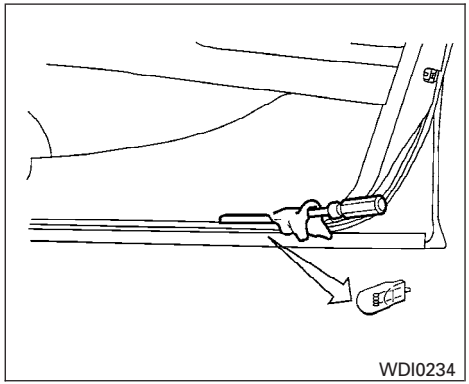

Step light

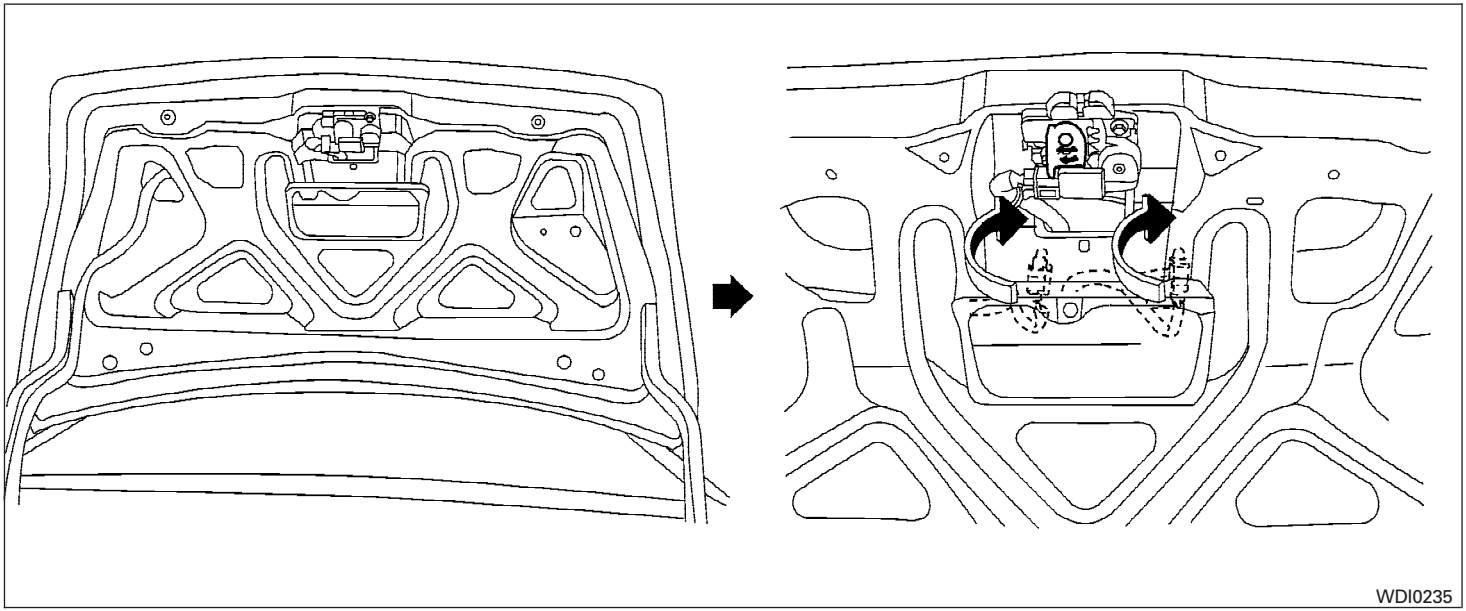

License plate light

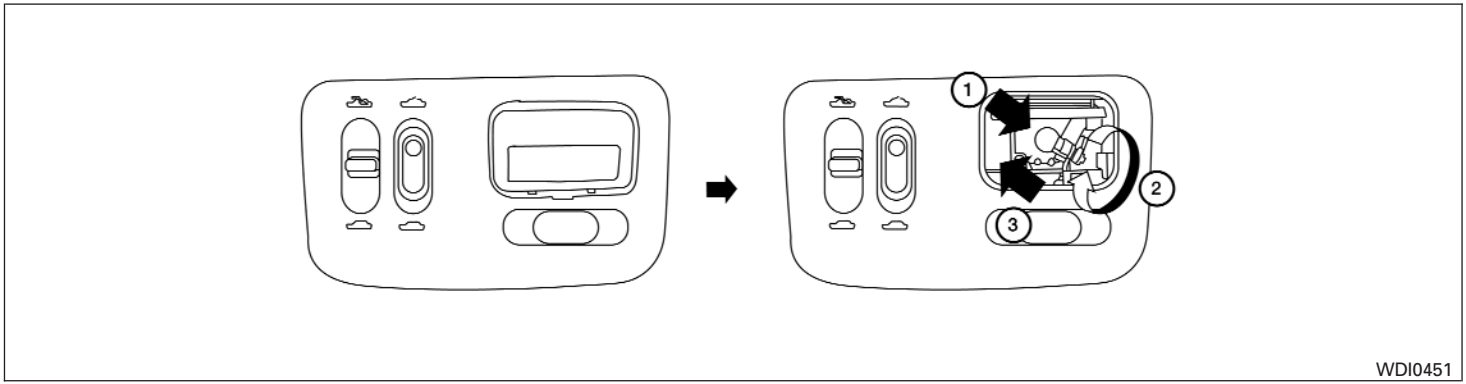

Map light - Models with sunroof

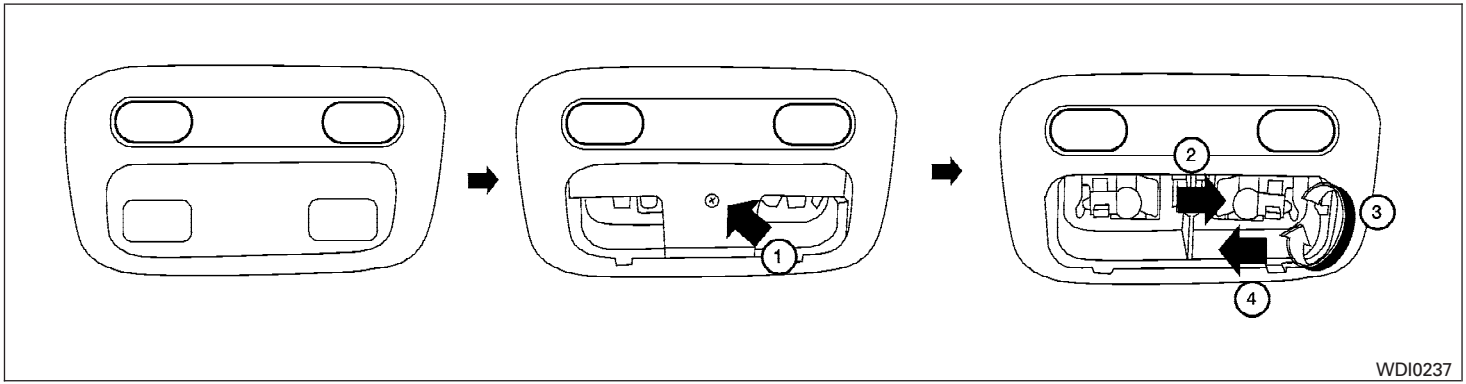

Map light - Models without sunroof

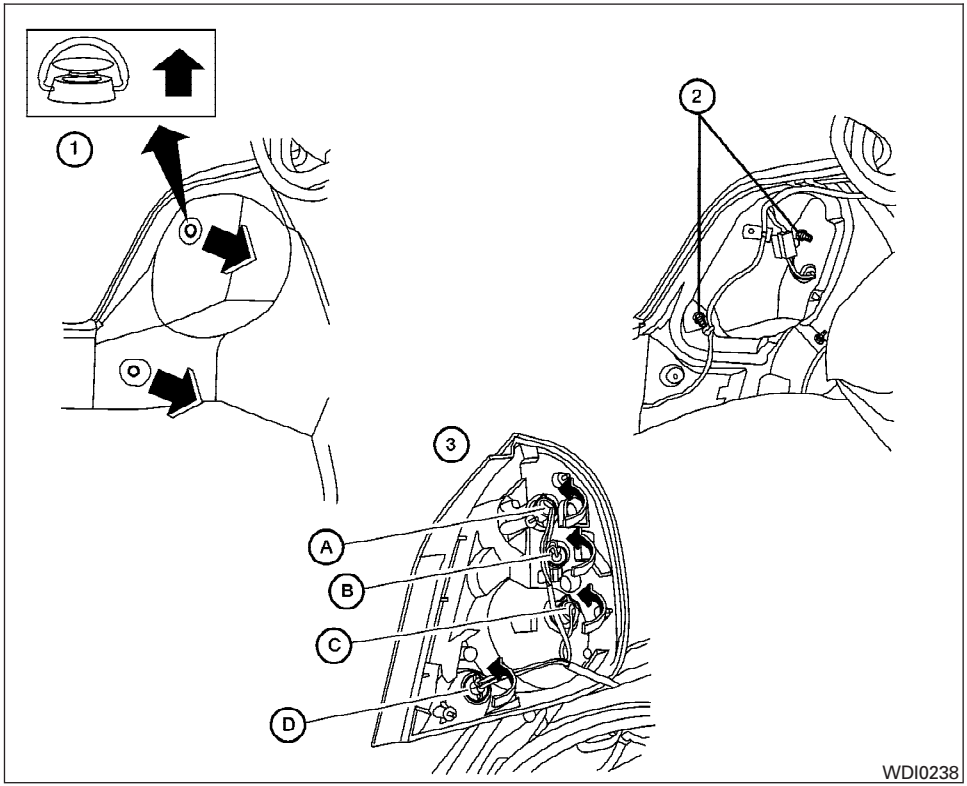

Rear combination light

To access the bulbs in the rear combination light:

1. Remove the 2 fasteners. Carefully push back the carpet.
2. Remove the 2 nuts and pull out the rear combination light.
3. Rotate the bulb(s) counterclockwise and pull out to remove:
   - A Turn signal light
   - B Sidemarker light
   - C Tail/stop light
   - D Backup light

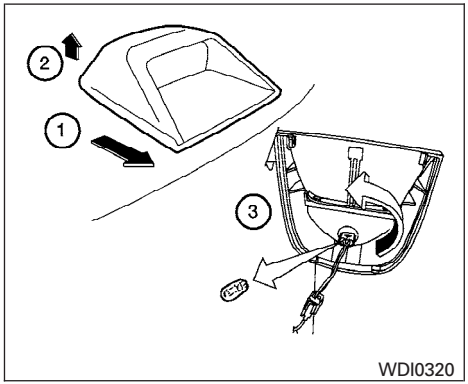

High-mounted stop light (Rear window)

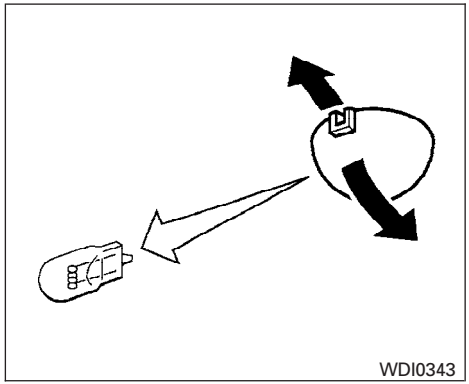

Trunk light

If you have a flat tire, see the "In case of emergency" section of this manual.

TIRE PRESSURE

Tire inflation pressure

Check the tire pressures (including the spare) often and always prior to long distance trips. The recommended tire pressure specifications are shown on the Tire and Loading Information label under the "Recommended Cold Tire Inflation Pressure" heading. The Tire and Loading Information label is affixed to the driver side center pillar. Tire pressures should be checked regularly because:

- Most tires naturally lose air over time.
- Tires can lose air suddenly when driven over potholes or other objects or if the vehicle strikes a curb while parking.

The tire pressures should be checked when the tires are cold. The tires are considered COLD after the vehicle has been parked for 3 or more hours, or driven less than 1 mile (1.6 km) at moderate speeds.

If the tires are used at speeds above 100 mph (162 km/h) where it is legal to do so (on a race track for example), the cold tire inflation pressure must be increased. Refer to "Checking tire pressure" later in this section.

Set the tire pressure to the normal cold tire inflation pressure when the vehicle speed or load is reduced.

Incorrect tire pressure, including under inflation, may adversely affect tire life and vehicle handling.

⚠ WARNING

- **Improperly inflated tires can fail suddenly and cause an accident.**
- **The vehicle weight capacity is indicated on the Tire and Loading Information label. Do not load your vehicle beyond this capacity. Overloading your vehicle may result in reduced tire life, unsafe operating conditions due to premature tire failure, or unfavorable handling characteristics and could also lead to a serious accident. Loading beyond the specified capacity may also result in failure of other vehicle components.**
- **Before taking a long trip, or whenever you heavily load your vehicle, use a tire pressure gauge to ensure that the tire pressures are at the specified level.**
- **Increase the cold tire inflation pressure as indicated in "Checking tire pressure" later in this section when using the tires specified by NISSAN above 100 MPH (162 km/h) where it is legal to do so (on a race track for example). Failure to increase the cold tire inflation pressure may result in tire failure, loss of control and possible injury. After such use, readjust tire pressure.**
- **Do not drive your vehicle over 85 MPH (137 km/h) unless it is equipped with high speed rated tires. Driving faster than 85 MPH (137 km/h) may result in tire failure, loss of control and possible injury.**
- **For additional information regarding tires, refer to "Important Tire Safety Information" (US) or "Tire Safety Information" (Canada) in the Warranty Information Booklet.**

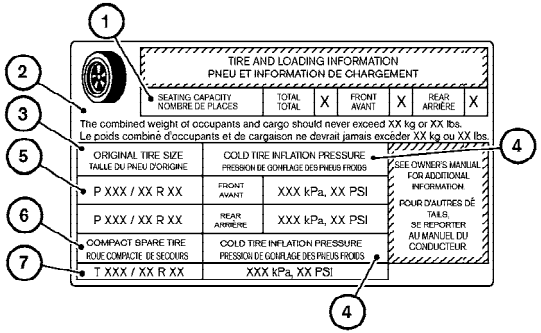

Type A

Tire and loading information label (for US) (if so equipped)

① Seating capacity: The maximum number of occupants that should be seated in the vehicle.

② Vehicle load limit: See loading information in the Technical and consumer information section.

③ Original tire size: The size of the tires originally installed on the vehicle at the factory.

④ Recommended cold tire inflation pressure: Inflate the tires to this pressure when the tires are cold. Tires are considered COLD after the vehicle has been parked for 3 or more hours, or driven less than 1 mile (1.6 km) at moderate speeds. The recommended cold tire inflation is set by the manufacturer to provide the best balance of tire wear and vehicle handling characteristics based on the vehicles GVWR.

⑤ Tire size – refer to “Tire labeling” later in this section.

⑥ and ⑦ Spare tire size or compact spare tire size (if so equipped).

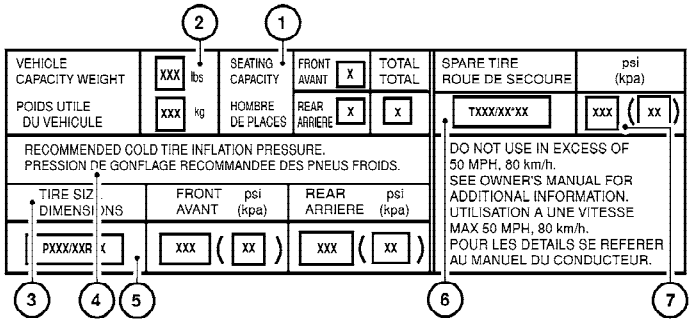

Type B

Tire and loading information label (for US)

① Seating capacity: The maximum number of occupants that should be seated in the vehicle.

② Vehicle load limit: See loading information in the Technical and consumer information section.

③ Original tire size: The size of the tires originally installed on the vehicle at the factory.

④ Recommended cold tire inflation pressure: Inflate the tires to this pressure when the tires are cold. Tires are considered COLD after the vehicle has been parked for 3 or more hours, or driven less than 1 mile (1.6 km) at moderate speeds. The recommended cold tire inflation is set by the manufacturer to provide the best balance of tire wear and vehicle handling characteristics based on the vehicles GVWR.

⑤ Tire size – refer to “Tire labeling” later in this section.

⑥ and ⑦ Spare tire size or compact spare tire size (if so equipped).

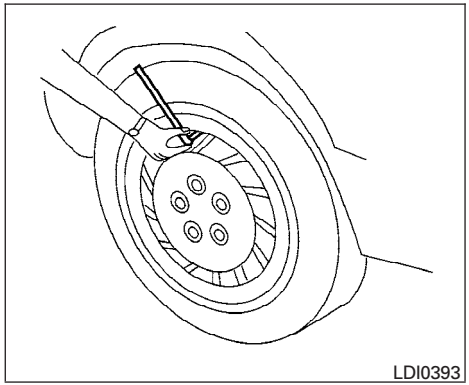

Checking tire pressure

1. Remove the valve stem cap from the tire.
2. Press the pressure gauge squarely onto the valve stem. Do not press too hard or force the valve stem sideways, or air will escape. If the hissing of air escaping from the tire is heard while checking the pressure, reposition the gauge to eliminate this leakage.
3. Remove the gauge.
4. Read the tire pressure on the gauge stem and compare to the specification shown on the Tire and Loading Information label.

5. Add air to the tire as needed. If too much air is added, press the core of the valve stem briefly with the tip of the gauge stem to release pressure. Recheck the pressure and add or release air as needed.
6. Install the valve stem cap.
7. Check the pressure of all other tires, including the spare.

	Size	Cold Tire Inflation Pressure	High Speed/ Maximum Load Cold Tire Inflation Pressure
Front Original Tire	P215/60/R16 94T	200 kPa, 29 PSI	240 kPa, 35 PSI
	P215/55R17 93H P215/55R17 93V	230 kPa, 33 PSI	240 kPa, 35 PSI
	P225/45R18 91Y	240 kPa, 35 PSI	260 kPa, 38 PSI
Rear Original Tire	P215/60R16 94T	200 kPa, 29 PSI	240 kPa, 35 PSI
	P215/55R17 93H P215/55R17 93V	210 kPa, 30 PSI	240 kPa, 35 PSI
	P225/45R18 91Y	240 kPa, 35 PSI	260 kPa, 38 PSI
Spare Tire	T135/70R16 T135/90R16 T155/80R17	420 kPa, 60 PSI	N/A

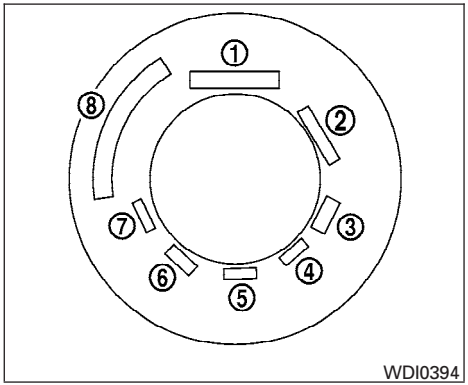

TIRE LABELING

Federal law requires tire manufacturers to place standardized information on the sidewall of all tires. This information identifies and describes the fundamental characteristics of the tire and also provides the tire identification number (TIN) for safety standard certification. The TIN can be used to identify the tire in case of a recall.

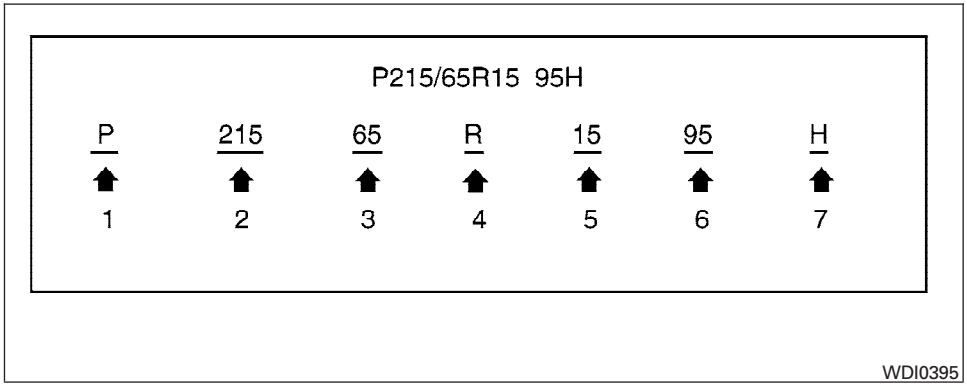

① Tire size (example: P215/65R15 95H)

1. P: The ″P″ indicates the tire is designed for passenger vehicles.
2. Three-digit number: This number gives the width in millimeters of the tire from sidewall edge to sidewall edge.
3. Two-digit number: This number, known as the aspect ratio, gives the tire's ratio of height to width.
4. R: The ″R″ stands for radial.
5. Two-digit number: This number is the wheel or rim diameter in inches.
6. Two- or three-digit number: This number is the tire's load index. It is a measurement of how much weight each tire can support. You may not find this information on all tires because it is not required by law.
7. Tire speed rating. You should not drive the vehicle faster than the tire speed rating.

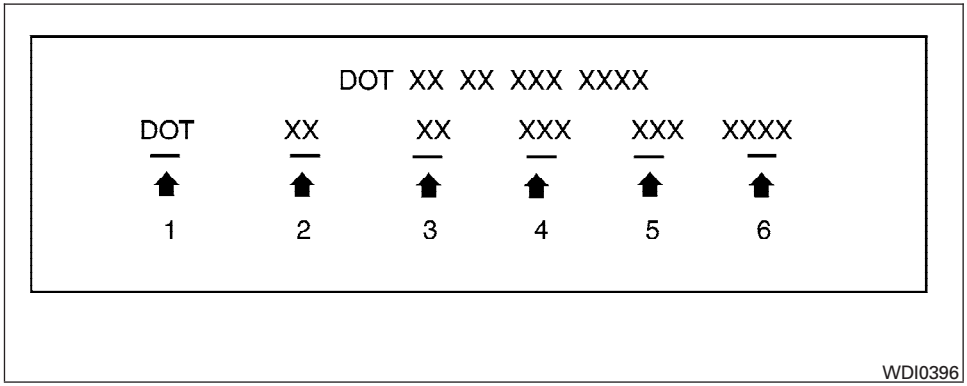

② TIN (Tire Identification Number) for a new tire (example: DOT XX XX XXX XXXX)

1. DOT: Abbreviation for the "Department Of Transportation." The symbol can be placed above, below or to the left or right of Tire Identification Number.
2. Two-digit code: Manufacturer's identification mark
3. Two-digit code: Tire size
4. Three-digit code: Tire type code (Optional)
5. Three-digit code: Date of Manufacture
6. Four numbers represent the week and year the tire was built. For example, the numbers 3103 means the 31st week of 2003. If these numbers are missing, then look on the other sidewall of the tire.

③ Tire ply composition and material

The number of layers or plies of rubber-coated fabric in the tire. Tire manufacturers also must indicate the materials in the tire, which include steel, nylon, polyester, and others.

④ Maximum permissible inflation pressure

This number is the greatest amount of air pressure that should be put in the tire. Do not exceed the maximum permissible inflation pressure.

⑤ Maximum load rating

This number indicates the maximum load in kilograms and pounds that can be carried by the tire. When replacing the tires on the vehicle, always use a tire that has the same load rating as the factory installed tire.

⑥ Term of "tubeless" or "tube type"

Indicates whether the tire requires an inner tube ("tube type") or not ("tubeless").

⑦ The word "radial"

The word "radial" is shown if the tire has radial structure.

⑧ Manufacturer or brand name

Manufacturer or brand name is shown.

Other Tire-related Terminology

In addition to the many terms that are defined throughout this section, Intended Outboard Sidewall is (1) the sidewall that contains a whitewall, bears white lettering or bears manufacturer, brand, and/or model name molding that is higher or deeper than the same molding on the other sidewall of the tire, or (2) the outward facing sidewall of an asymmetrical tire that has a particular side that must always face outward when mounted on a vehicle.

TYPES OF TIRES

⚠ WARNING

- **When changing or replacing tires, be sure all four tires are of the same type (i.e., Summer, All Season or Snow) and construction. A NISSAN dealer may be able to help you with information about tire type, size, speed rating and availability.**
- **Replacement tires may have a lower speed rating than the factory equipped tires, and may not match the potential maximum vehicle speed. Never exceed the maximum speed rating of the tire.**
- **For additional information regarding tires, refer to "Important Tire Safety Information" (US) or "Tire Safety Information" (Canada) in the Warranty Information Booklet.**

All season tires

NISSAN specifies All Season tires on some models to provide good performance all year, including snowy and icy road conditions. All Season tires are identified by ALL SEASON and/or M&S on the tire sidewall. Snow tires have better snow traction than All Season tires and may be more appropriate in some areas.

Summer tires

NISSAN specifies summer tires on some models to provide superior performance on dry roads. Summer tire performance is substantially reduced in snow and ice. Summer tires do not have the tire traction rating "M&S" on the tire sidewall.

If you plan to operate your vehicle in snowy or icy conditions, NISSAN recommends the use of SNOW tires or ALL SEASON tires on all four wheels.

Snow tires

If snow tires are needed, it is necessary to select tires equivalent in size and load rating to the original equipment tires. If you do not, it can adversely affect the safety and handling of your vehicle.

Generally, snow tires have lower speed ratings than factory equipped tires and may not match the potential maximum vehicle speed. Never exceed the maximum speed rating of the tire.

If you install snow tires, they must be the same size, brand, construction and tread pattern on all four wheels.

For additional traction on icy roads, studded tires may be used. However, some U.S. states and Canadian provinces prohibit their use. Check local, state and provincial laws before installing studded tires. Skid and traction capabilities of studded snow tires on wet or dry surfaces may be poorer than that of non-studded snow tires.

TIRE CHAINS

⚠ CAUTION

Tire chains/cables cannot be installed on P225/45R18 size tires. Installation of the tire chains/cables on P225/45R18 size tires will cause damage to the vehicle. If you plan to use tire chains/cables, you should install P215/55R17 size tires on your vehicle.

Use of tire chains may be prohibited according to location. Check the local laws before installing tire chains. When installing tire chains, make sure they are the proper size for the tires on your vehicle and are installed according to the chain manufacturer's suggestions. **Use only SAE class "S" chains.** Class "S" chains are used on vehicles with restricted tire to vehicle clearance. Vehicles that can use Class "S" chains are designed to meet the minimum clearances between the tire and the closest vehicle suspension or body component required to accommodate the use of a winter traction device (tire chains or cables). The minimum clearances are determined using the factory equipped tires. Other types may damage your vehicle. Use chain tensioners when

recommended by the tire chain manufacturer to ensure a tight fit. Loose end links of the tire chain must be secured or removed to prevent the possibility of whipping action damage to the fenders or underbody. If possible, avoid fully loading your vehicle when using tire chains. In addition, drive at a reduced speed. Otherwise, your vehicle may be damaged and/or vehicle handling and performance may be adversely affected.

Tire chains must be installed only on the front wheels and not on the rear wheels.

Never install tire chains on a TEMPORARY USE ONLY spare tire.

Do not use tire chains on dry roads. Driving with chains in such conditions can cause damage to the various mechanisms of the vehicle due to some overstress.

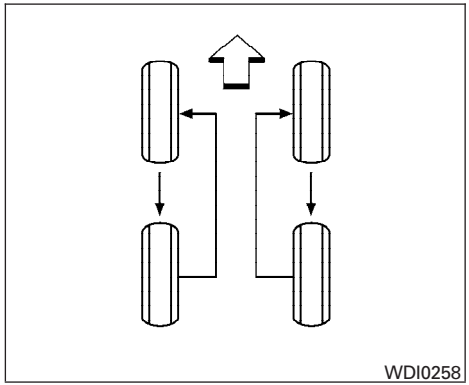

CHANGING WHEELS AND TIRES

Tire rotation

NISSAN recommends rotating the tires every 7,500 miles (12,000 km).

See “Flat tire” in the “In case of emergency” section of this manual for tire replacing procedures.

As soon as possible, tighten the wheel nuts to the specified torque with a torque wrench.

Wheel nut tightening torque:
80 ft-lb (108 N·m)

The wheel nuts must be kept tightened to specifications at all times. It is recommended that wheel nuts be tightened to specification at each tire rotation interval.

⚠ WARNING

- **After rotating the tires, check and adjust the tire pressure.**
- **Retighten the wheel nuts when the vehicle has been driven for 600 miles (1,000 km) (also in cases of a flat tire, etc.).**
- **Do not include the spare tire in the tire rotation.**
- **For additional information regarding tires, refer to “Important Tire Safety Information” (US) or “Tire Safety Information” (Canada) in the Warranty Information Booklet.**

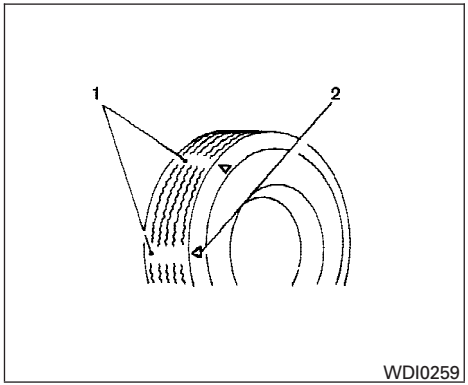

1. Wear indicator
2. Location mark

Tire wear and damage

WARNING

- **Tires should be periodically inspected for wear, cracking, bulging or objects caught in the tread. If excessive wear, cracks, bulging or deep cuts are found, the tire(s) should be replaced.**
- **The original tires have built-in tread wear indicators. When the wear indicators are visible, the tire(s) should be replaced.**
- **Improper service of the spare tire may result in serious personal injury. If it is necessary to repair the spare tire, contact a NISSAN dealer.**
- **For additional information regarding tires, refer to "Important Tire Safety Information" (US) or "Tire Safety Information" (Canada) in the Warranty Information Booklet.**

Replacing wheels and tires

When replacing a tire, use the same size, tread design, speed rating and load carrying capacity as originally equipped. Recommended types and sizes are shown in "Wheels and tires" in the "Technical and consumer information" section of this manual.

WARNING

- **The use of tires other than those recommended or the mixed use of tires of different brands, construction (bias, bias-belted or radial), or tread patterns can adversely affect the ride, braking, handling, ground clearance, body-to-tire clearance, tire chain clearance, speedometer calibration, headlight aim and bumper height. Some of these effects may lead to accidents and could result in serious personal injury.**
- **If the wheels are changed for any reason, always replace with wheels which have the same off-set dimension. Wheels of a different off-set could cause premature tire wear, degrade vehicle handling characteristics and/or interference with the brake discs/drums. Such interference can lead to decreased braking efficiency and/or early brake pad/shoe wear. Refer to "Wheels and tires" in the "Technical and consumer information" section of this manual for wheel off-set dimensions.**

- **Do not install a deformed wheel or tire even if it has been repaired. Such wheels or tires could have structural damage and could fail without warning.**
- **The use of retread tires is not recommended.**
- **For additional information regarding tires, refer to "Important Tire Safety Information" (US) or "Tire Safety Information" (Canada) in the Warranty Information Booklet.**

Wheel balance

Unbalanced wheels may affect vehicle handling and tire life. Even with regular use, wheels can get out of balance. Therefore, they should be balanced as required.

Wheel balance service should be performed with the wheels off the vehicle. Spin balancing the wheels on the vehicle could lead to mechanical damage.

- **For additional information regarding tires, refer to "Important Tire Safety Information" (US) or "Tire Safety Information" (Canada) in the Warranty Information Booklet .**

Care of wheels

- Wash the wheels when washing the vehicle to maintain their appearance.
- Clean the inner side of the wheels when the wheel is changed or the underside of the vehicle is washed.
- Do not use abrasive cleaners when washing the wheels.
- Inspect wheel rims regularly for dents or corrosion. Such damage may cause loss of pressure or poor seal at the tire bead.
- NISSAN recommends waxing the road wheels to protect against road salt in areas where it is used during winter.

Spare tire (TEMPORARY USE ONLY spare tire)

Observe the following precautions if the TEMPORARY USE ONLY spare tire must be used. Otherwise, your vehicle could be damaged or involved in an accident:

⚠ WARNING

- **The spare tire should be used for emergency use only. It should be replaced with the standard tire at the first opportunity to avoid possible tire or differential damage.**
- **Drive carefully while the TEMPORARY USE ONLY spare tire is installed. Avoid sharp turns and abrupt braking while driving.**
- **Periodically check spare tire inflation pressure. Always keep the pressure of the TEMPORARY USE ONLY spare tire at 60 psi (420 kPa, 4.2 bar).**
- **With the TEMPORARY USE ONLY spare tire installed do not drive the vehicle at speeds faster than 50 MPH (80 km/h).**
- **When driving on roads covered with snow or ice, the TEMPORARY USE ONLY spare tire should be used on the rear wheels and the original tire used on the front wheels (drive wheels). Use tire chains only on the front (original) tires.**

- **Tire tread of the TEMPORARY USE ONLY spare tire will wear at a faster rate than the standard tire. Replace the spare tire as soon as the tread wear indicators appear.**
- **Do not use the spare tire on other vehicles.**
- **Do not use more than one spare tire at the same time.**
- **Do not tow a trailer when the TEMPORARY USE ONLY spare tire is installed.**

⚠ CAUTION

- **Do not use tire chains on a TEMPORARY USE ONLY spare tire. Tire chains will not fit properly and may cause damage to the vehicle.**
- **Because the TEMPORARY USE ONLY spare tire is smaller than the original tire, ground clearance is reduced. To avoid damage to the vehicle, do not drive over obstacles. Also, do not drive the vehicle through an automatic car wash since it may get caught.**

9 Technical and consumer information

Capacities and recommended fuel/lubricants 9-2
Fuel recommendation 9-3
Engine oil and oil filter recommendation 9-5
Recommended SAE viscosity number 9-6
Air conditioner system refrigerant and lubricant recommendations 9-6
Specifications 9-7
Engine 9-7
Wheels and tires 9-8
Dimensions and weights 9-8
When traveling or registering your vehicle in another country 9-9
Vehicle identification 9-9
Vehicle identification number (VIN) plate 9-9
Vehicle identification number (chassis number) 9-9
Engine serial number 9-10
F.M.V.S.S. certification label 9-10
Emission control information label 9-11
Tire placard 9-11
Air conditioner specification label 9-12
Installing front license plate 9-12
Vehicle loading information 9-13
Terms 9-13
Determining vehicle load capacity 9-13
Loading tips 9-14
Towing a trailer 9-14
Maximum load limits 9-15
Towing load/specification 9-16
Towing safety 9-16
Flat towing 9-19
Uniform tire quality grading 9-20
Emission control system warranty 9-21
Reporting safety defects (US only) 9-21
Readiness for inspection/maintenance (I/M) test 9-21
Event data recorders 9-22
Owner's Manual/Service Manual order information . . . 9-23
In the event of a collision 9-24

CAPACITIES AND RECOMMENDED FUEL/LUBRICANTS

The following are approximate capacities. The actual refill capacities may be a little different. When refilling, follow the procedure described in the "Maintenance and do-it-yourself" section to determine the proper refill capacity.

		Capacity (Approximate)			Recommended Fluids and Lubricants
		US measure	Imp measure	Liter	
Fuel		20 gal	16-5/8 gal	75.6	Unleaded gasoline with an octane rating of at least 87 AKI (RON 91)*1
Engine oil *9					
Drain and Refill					
With oil filter change	QR25DE	4-1/2 qt	3-3/4 qt	4.2	▪ API Certification Mark *2 *3 ▪ API grade SG/SH, Energy Conserving I & II or API grade SJ or SL, Energy Conserving *2 *3 ▪ ILSAC grade GF-I, GF-II, or GF-III*2 *3
	VQ35DE	4-1/2 qt	3-3/4 qt	4.2	
Without oil filter change	QR25DE	4-1/4 qt	3-1/2 qt	4.0	
	VQ35DE	4-1/4 qt	3-1/2 qt	4.0	
Cooling system					
With reservoir					
	QR25DE	2 gal	1-5/8 gal	7.6	50% Genuine NISSAN Long Life Antifreeze/Coolant or equivalent 50% Demineralized or distilled water
	VQ35DE	2-1/8 gal	1-3/4 gal	8.2	
Manual transmission gear oil		2-3/8 qt	2 qt	2.2	Genuine NISSAN Manual Transmission Fluid (MTF) HQ Multi 75W-85 or API GL-4, Viscosity SAE 75W-85
Automatic transmission fluid		Refill to the proper level according to the instructions in the "Maintenance and do-it-yourself" section.			
4 Speed					Genuine NISSAN Matic D ATF (Continental U.S. and Alaska) or Canada NISSAN Automatic Transmission Fluid.*4
5 Speed					Genuine NISSAN Matic K ATF *5
Power steering fluid (PSF)					Genuine NISSAN PSF or equivalent.*6
Brake and clutch fluid					Genuine NISSAN Super Heavy Duty Brake Fluid*7 or equivalent DOT 3
Multi-purpose grease		—	—	—	NLGI No. 2 (Lithium Soap base)
Air conditioning system refrigerant		—	—	—	HFC-134a (R-134a)*8
Air conditioning system lubricants		—	—	—	NISSAN A/C System Lubricant Type S (DH-PS) or equivalent*8
Windshield washer fluid		—	—	—	Genuine NISSAN Windshield Washer Concentrate Cleaner & Antifreeze or equivalent

*1: For further details, see "Fuel recommendation."
*2: For further details, see "Engine oil and oil filter recommendations."
*3: For further details, see "Recommended SAE engine oil viscosity."
*4: DEXRON™ III/MERCON™ or equivalent may also be used. Outside the Continental United States and Alaska contact a NISSAN dealership for more information regarding suitable fluids, including recommended brand(s) of DEXRON™ III/MERCON™ Automatic Transmission Fluid.
*5: Using automatic transmission fluid other than Genuine NISSAN Matic K ATF will cause deterioration in driveability and automatic transmission durability, and may damage the automatic transmission, which is not covered by the NISSAN new vehicle warranty.
*6: For Canada, NISSAN Automatic Transmission Fluid (ATF), DEXRON™ III/MERCON™, or equivalent ATF may also be used.
*7: Available in mainland USA through your NISSAN dealer.
*8: For further details, see "Air conditioner specification label."
*9: For further details, see "Changing engine oil."

FUEL RECOMMENDATION

For 2.5L engine

Use unleaded regular gasoline with an octane rating of at least 87 AKI (Anti-Knock Index) number (Research octane number 91).

For 3.5L

Use unleaded regular gasoline with an octane rating of at least 87 AKI (Anti-Knock Index) number (Research octane number 91).

For improved vehicle performance, NISSAN recommends the use of unleaded premium gasoline with an octane rating of at least 91 AKI number (Research octane number 96).

⚠ CAUTION

- **Using a fuel other than that specified could adversely affect the emission control system, and may also affect the warranty coverage.**
- **Under no circumstances should a leaded gasoline be used, because this will damage the three-way catalyst.**

Gasoline specifications

NISSAN recommends using gasoline that meets the World-Wide Fuel Charter specifications where it is available. Many of the automobile manufacturers developed this specification to improve emission system and vehicle performance. Ask your service station manager if the gasoline meets the World-Wide Fuel Charter specifications.

Reformulated gasoline

Some fuel suppliers are now producing reformulated gasolines. These gasolines are specially designed to reduce vehicle emissions. NISSAN supports efforts towards cleaner air and suggests that you use reformulated gasoline when available.

Gasoline containing oxygenates

Some fuel suppliers sell gasoline containing oxygenates such as ethanol, MTBE and methanol with or without advertising their presence. NISSAN does not recommend the use of fuels of which the oxygenate content and the fuel compatibility for your NISSAN cannot be readily determined. If in doubt, ask your service station manager.

If you use oxygenate-blend gasoline, please take the following precautions as the usage of such fuels may cause vehicle performance problems and/or fuel system damage.

- **The fuel should be unleaded and have an octane rating no lower than that recommended for unleaded gasoline.**
- **If an oxygenate-blend other than methanol blend is used, it should contain no more than 10% oxygenate. (MTBE may, however, be added up to 15%.)**
- **If a methanol blend is used, it should contain no more than 5% methanol (methyl alcohol, wood alcohol). It should also contain a suitable amount of appropriate cosolvents and corrosion inhibitors. If not properly formulated with appropriate cosolvents and corrosion inhibitors, such methanol blends may cause fuel system damage and/or vehicle performance problems. At this time, sufficient data is not available to ensure that all methanol blends are suitable for use in NISSAN vehicles.**

If any driveability problems such as engine stalling and difficult hot-starting are experienced after using oxygenate-blend fuels, immediately change to a non-oxygenate fuel or a fuel with a low blend of MTBE.

Take care not to spill gasoline during refueling. Gasoline containing oxygenates can cause paint damage.

Aftermarket fuel additives

NISSAN does not recommend the use of any aftermarket fuel additives (for example, fuel injector cleaner, octane booster, intake valve deposit removers, etc.) which are sold commercially. Many of these additives intended for gum, varnish or deposit removal may contain active solvents or similar ingredients that can be harmful to the fuel system and engine.

Octane rating tips

Using unleaded gasoline with an octane rating lower than recommended can cause persistent, heavy "spark knock." ("Spark knock" is a metallic rapping noise.) If severe, this can lead to engine damage. If you detect a persistent heavy spark knock even when using gasoline of the stated octane rating, or if you hear steady spark knock while holding a steady speed on level roads, have a NISSAN dealer correct the condition. Failure to correct the condition is misuse of the vehicle, for which NISSAN is not responsible.

Incorrect ignition timing may result in spark knock, after-run and/or overheating, which may cause excessive fuel consumption or engine damage. If any of the above symptoms are encountered, have your vehicle checked at a NISSAN dealer.

However, now and then you may notice light spark knock for a short time while accelerating or driving up hills. This is not a cause for concern, because you get the greatest fuel benefit when there is light spark knock for a short time under heavy engine load.

API certification mark

API service symbol

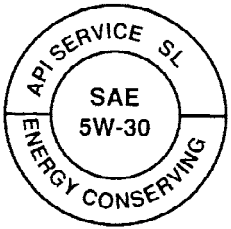

WTI0082

ENGINE OIL AND OIL FILTER RECOMMENDATION

Selecting the correct oil

It is essential to choose engine oil with the correct quality and viscosity to ensure satisfactory engine life and performance. NISSAN recommends the use of a low friction oil (energy conserving oil) in order to improve fuel economy and conserve energy. Oils which do not have the specified quality label should not be used as they could cause engine damage.

Only those engine oils with the American Petroleum Institute (API) CERTIFICATION MARK on the front of the container should be used. This type of oil supersedes the existing API SG, SH, or SJ and Energy Conserving II categories.

If you cannot find engine oil with the API CERTIFICATION MARK, use API grade SL Energy Conserving oil. An oil with a single designation SL, or in combination with other categories (for example, SL/CF) may also be used if one with the API CERTIFICATION MARK cannot be found. An ILSAC grade GF-III oil can also be used.

NISSAN recommends mineral based oils. These oils must, however, meet the API quality and SAE viscosity ratings specified for your vehicle.

Oil additives

NISSAN does not recommend the use of oil additives. The use of an oil additive is not necessary when the proper oil type is used and maintenance intervals are followed.

Oil which may contain foreign matter or has been previously used should not be used.

Oil viscosity

The engine oil viscosity or thickness changes with temperature. Because of this, it is important to select the engine oil viscosity based on the temperatures at which the vehicle will be operated before the next oil change. The chart “Recommended SAE viscosity number” shows the recommended oil viscosities for the expected ambient temperatures. Choosing an oil viscosity other than that recommended could cause serious engine damage.

Selecting the correct oil filter

Your new NISSAN vehicle is equipped with a high-quality genuine NISSAN oil filter. When replacing, use a genuine NISSAN oil filter or its equivalent for the reason described in “Change intervals”.

Change intervals

The oil and oil filter change intervals for your engine are based on the use of the specified quality oils and filters. Using engine oil and filters that are not of the specified quality, or exceeding recommended oil and filter change intervals could reduce engine life. Damage to the engine caused by improper maintenance or use of incorrect oil and filter quality and/or viscosity is not covered by the NISSAN new vehicle warranty.

Your engine was filled with a high-quality engine oil when it was built. You do not have to change the oil before the first recommended change interval. Oil and filter change intervals depend upon how you use your vehicle.

Operation under the following conditions may require more frequent oil and filter changes:

- repeated short distance driving at cold outside temperatures
- driving in dusty conditions
- extensive idling
- towing a trailer

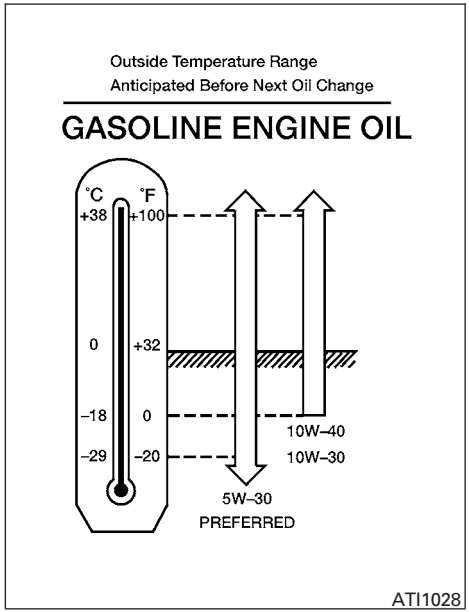

RECOMMENDED SAE VISCOSITY NUMBER

- **SAE 5W-30 viscosity oil is preferred for all temperatures. SAE 10W-30 or SAE 10W-40 viscosity oils may be used if the ambient temperature is above 0°F (-18°C).**

AIR CONDITIONER SYSTEM REFRIGERANT AND LUBRICANT RECOMMENDATIONS

The air conditioner system in your NISSAN vehicle must be charged with the refrigerant HFC-134a (R-134a) and the lubricant, NISSAN A/C system oil DH-PS or the exact equivalents.

⚠ CAUTION

The use of any other refrigerant or lubricant will cause severe damage to the air conditioning system and will require the replacement of all air conditioner system components.

The refrigerant HFC-134a (R-134a) in your NISSAN vehicle does not harm the earth's ozone layer. Although this refrigerant does not affect the earth's atmosphere, certain government regulations require the recovery and recycling of any refrigerant during automotive air conditioner system service. A NISSAN dealer has the trained technicians and equipment needed to recover and recycle your air conditioner system refrigerant.

Contact a NISSAN dealer when servicing your air conditioner system.

SPECIFICATIONS

ENGINE

Model		QR25DE	VQ35DE
Type		Gasoline, 4-cycle, DOHC	Gasoline, 4-cycle, DOHC
Cylinder arrangement		4-cylinder in-line	6-cylinder, V-block, Slanted at 60°
Bore x Stroke	in (mm)	3.5 x 3.9 (89.0 x 100.0)	3.760 x 3.205 (95.5 x 81.4)
Displacement	cu in (cm^3)	151.82 (2,488)	213.45 (3,498)
Firing order		1–3–4–2	1–2–3–4–5–6
Idle speed			
M/T			
A/T (in “N” position)		See the “Emission Control Information label” on the underside of the hood.	
Ignition timing (degree B.T.D.C. at idle speed)			
CO % at idle			
Spark plug	Standard	PLFR5A-11	PLFR5A-11
	Hot	PLFR4A-11	PLFR4A-11
	Cold	PLFR6A-11	PLFR6A-11
Spark plug gap (Nominal)	in (mm)	0.043 (1.1)	0.043 (1.1)
Camshaft operation		Timing chain	Timing chain

The spark ignition system of this vehicle meets all requirements of the Canadian Interference-Causing Equipment Regulations.

WHEELS AND TIRES

Wheel type	Size	Offset in (mm)
Steel	16 x 6.5JJ	1.57 (40)
Aluminum	16 x 6.5JJ	1.57 (40)
Aluminum	17 x 7JJ	1.77 (45)
Aluminum	18 x 8JJ	1.77 (45)
T type (Spare)	16 x 4T	1.57 (40)
Tire size		P215/60R16 94T
		P215/55R17 93H
		P215/55R17 93V
		P225/45R18 91Y
Spare tire		T135/70R16
		T135/90R16
		T155/80R17

DIMENSIONS AND WEIGHTS

Overall length	in (mm)	192.3(4,884)
		192.5(4,889)SE-R
Overall width	in (mm)	70.4(1,788)
Overall height	in (mm)	57.9(1,471)
		57.4(1,459)SE-R
Front tread	in (mm)	61.0(1,549)
Rear tread	in (mm)	61.2(1,554)
Wheelbase	in (mm)	110.2(2,799)
Gross vehicle weight rating	lb (kg)	See the “F.M.V.S.S.certification label” on the center pillar between the driver’s side front and rear doors.
Gross axle weight rating		
Front	lb (kg)	
Rear	lb (kg)	

WHEN TRAVELING OR REGISTERING YOUR VEHICLE IN ANOTHER COUNTRY

When planning to drive your NISSAN vehicle in another country, you should first find out if the fuel available is suitable for your vehicle's engine.

Using fuel with an octane rating that is too low may cause engine damage. All gasoline vehicles must be operated with unleaded gasoline. Therefore, avoid taking your vehicle to areas where appropriate fuel is not available.

When transferring the registration of your vehicle to another country, state, province or district, it may be necessary to modify the vehicle to meet local laws and regulations.

The laws and regulations for motor vehicle emission control and safety standards vary according to the country, state, province or district; therefore, vehicle specifications may differ.

When any vehicle is to be taken into another country, state, province or district and registered, its modifications, transportation, and registration are the responsibility of the user. NISSAN is not responsible for any inconvenience that may result.

VEHICLE IDENTIFICATION

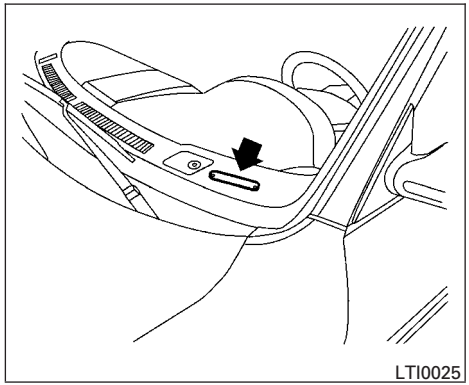

VEHICLE IDENTIFICATION NUMBER (VIN) PLATE

The vehicle identification number (VIN) plate is attached as shown. This number is the identification for your vehicle and is used in the vehicle registration.

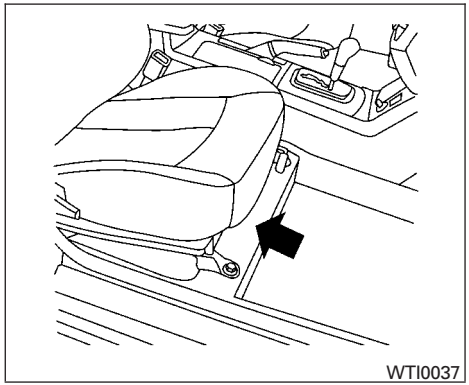

VEHICLE IDENTIFICATION NUMBER (chassis number)

The vehicle identification number is located as shown.

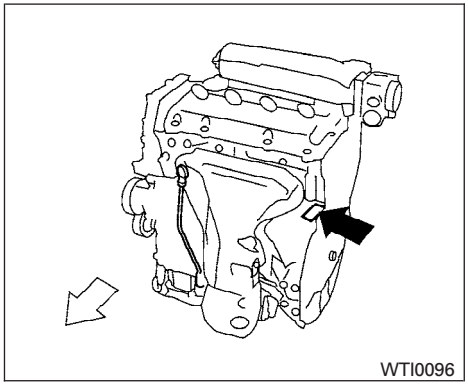

QR25DE engine

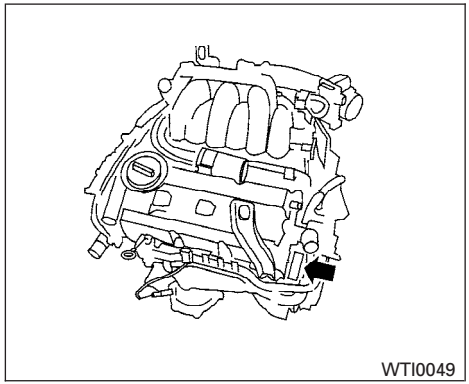

VQ35DE engine

ENGINE SERIAL NUMBER

The number is stamped on the engine as shown.

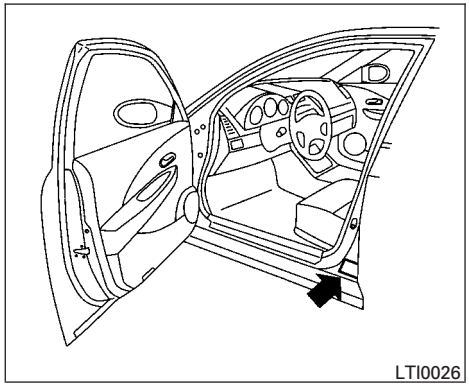

F.M.V.S.S. CERTIFICATION LABEL

The Federal Motor Vehicle Safety Standard (F.M-.V.S.S.) certification label is affixed as shown. This label contains valuable vehicle information, such as: Gross Vehicle Weight Ratings (GVWR), Gross Axle Weight Rating (GAWR), month and year of manufacture, Vehicle Identification Number (VIN), etc. Review it carefully.

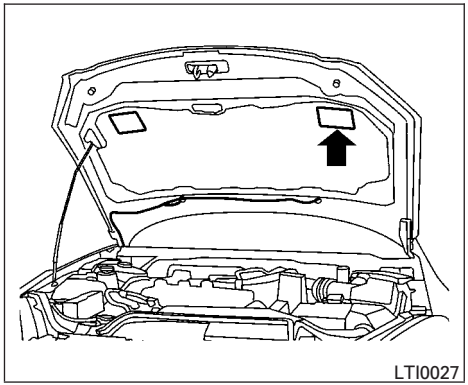

EMISSION CONTROL INFORMATION LABEL

The emission control information label is attached as shown.

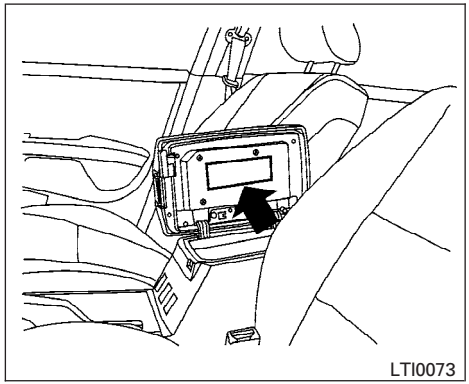

Type A

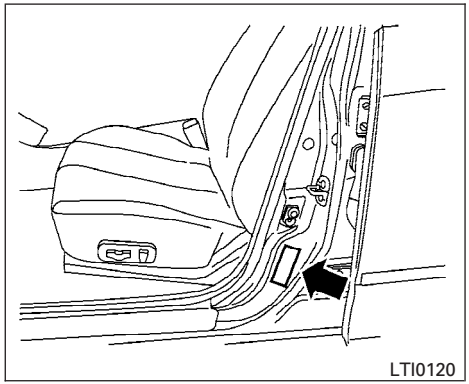

Type B

TIRE PLACARD

The cold tire pressure is shown on the tire placard. The tire placard is located as shown.

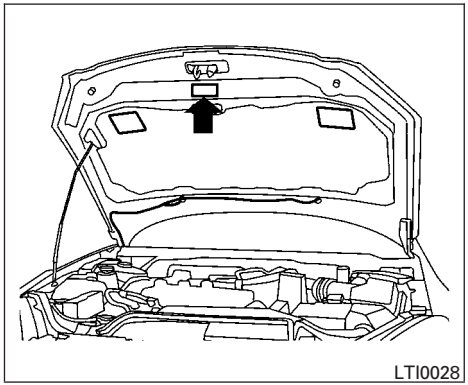

AIR CONDITIONER SPECIFICATION LABEL

The air conditioner specification label is affixed as shown.

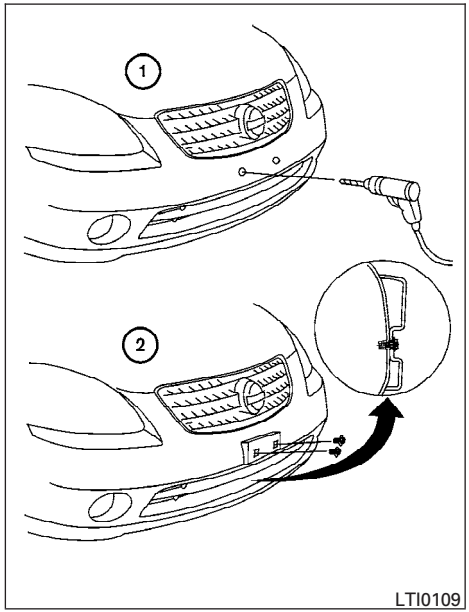

Use the following steps to mount the front license plate:

① Make a shallow hole in each plastic finisher at the location mark (small dimple) using a 0.31 in (8 mm) drill. To avoid damaging the threads behind the finisher, apply only light pressure to the drill.

② Mount the license plate bracket using two of the four **8 mm slotted hex head screws.**

3. Use the remaining two **8 mm slotted hex head screws** to mount the license plate to the license plate bracket.

⚠ WARNING

- **It is extremely dangerous to ride in a cargo area inside a vehicle. In a collision, people riding in these areas are more likely to be seriously injured or killed.**
- **Do not allow people to ride in any area of your vehicle that is not equipped with seats and seat belts.**
- **Be sure everyone in your vehicle is in a seat and using a seat belt properly.**

TERMS

It is important to familiarize yourself with the following terms before loading your vehicle:

- Curb Weight (actual weight of your vehicle) - vehicle weight including: standard and optional equipment, fluids, emergency tools, and spare tire assembly. This weight **does not** include passengers and cargo.
- GVW (Gross Vehicle Weight) - curb weight plus the combined weight of passengers and cargo.
- GVWR (Gross Vehicle Weight Rating) - maximum total combined weight of the unloaded vehicle, passengers, luggage, hitch, trailer tongue load and any other optional equipment. This information is located on the F.M.V.S.S. label.
- GAWR (Gross Axle Weight Rating) - maximum weight (load) limit specified for the front or rear axle. This information is located on the F.M.V.S.S. label.
- GCWR (Gross Combined Weight rating) - The maximum total weight rating of the vehicle, passengers, cargo, and trailer.
- Vehicle Capacity Weight, Load limit, Total load capacity - maximum total weight limit specified of the load (passengers and cargo) for the vehicle. This is the maximum combined weight of occupants and cargo that can be loaded into the vehicle. If the vehicle is used to tow a trailer, the trailer tongue weight must be included as part of the cargo load. This information is located on the Tire and Loading Information label (if so equipped).
- Cargo capacity - permissible weight of cargo, the subtracted weight of occupants from the load limit.

DETERMINING VEHICLE LOAD CAPACITY

The load capacity of this vehicle is determined by weight, not by available cargo space. For example, a luggage rack, bike carrier, cartop carrier or similar equipment does not increase load carrying capacity of your vehicle.

To determine vehicle load capacity:

Vehicle weight can be determined by using a commercial-grade scale, found at places such as a truck stop, gravel quarry, grain elevator, or a scrap metal recycling facility.

1. Determine the curb weight of your vehicle.
2. Compare the curb weight amount to the GVWR specified for your vehicle to determine how much more weight your vehicle can carry.
3. After loading (cargo and passengers), reweigh your vehicle to determine if either GVWR or GAWR for your vehicle is exceeded. If GVWR is exceeded, remove cargo as necessary. If either the front or rear GAWR is exceeded, shift the load or remove cargo as necessary.

LOADING TIPS

- The GVW must not exceed GVWR or GAWR as specified on the F.M.V.S.S. certification label.
- Do not load the front and rear axle to the GAWR. Doing so will exceed the GVWR.

⚠ WARNING

- **Properly secure all cargo with ropes or straps to help prevent it from sliding or shifting. Do not place cargo higher than the seatbacks. In a sudden stop or collision, unsecured cargo could cause personal injury.**
- **Do not load your vehicle any heavier than the GVWR or the maximum front and rear GAWRs. If you do, parts of your vehicle can break, tire damage could occur, or it can change the way your vehicle handles. This could result in loss of control and cause personal injury.**
- **Overloading not only can shorten the life of your vehicle and the tire, but can also cause unsafe vehicle handling and longer braking distances. This may cause a premature tire failure which could result in a serious accident and personal injury. Failures caused by overloading are not covered by the vehicle's warranty.**

⚠ WARNING

Overloading or improper loading of a trailer and its cargo can adversely affect vehicle handling, braking and performance and may lead to accidents.

⚠ CAUTION

- **Do not tow a trailer or haul a heavy load for the first 500 miles (800 km). Your engine, axle or other parts could be damaged.**
- **For the first 500 miles (800 km) that you tow a trailer, do not drive over 50 mph (80 km/h) and do not make starts at full throttle. This helps the engine and other parts of your vehicle wear in at the heavier loads.**

Your new vehicle was designed to be used primarily to carry passengers and cargo. Remember that towing a trailer places additional loads on your vehicle's engine, drive train, steering, braking and other systems.

MAXIMUM LOAD LIMITS

Maximum trailer loads

Never allow the total trailer load to exceed the value specified in the Towing Load/Specification Chart found later in this section. The total trailer load equals trailer weight plus its cargo weight.

Towing loads greater than specified or using improper towing equipment could adversely affect vehicle handling, braking and performance. The ability of your vehicle to tow a trailer is not only related to the maximum trailer loads, but also the places you plan to tow. Tow weights appropriate for level highway driving may have to be reduced on very steep grades or in low traction situations (for example, on slippery boat ramps).

⚠ CAUTION

Vehicle damage resulting from improper towing procedures are not covered by NISSAN warranties.

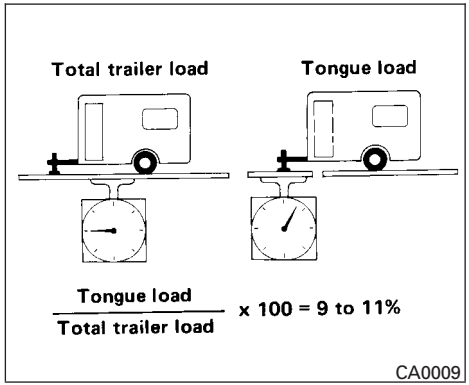

Tongue load

Keep the tongue load between 9 - 11 percent of the total trailer load within the maximum tongue load limits shown in the following Towing Load/Specification Chart. If the tongue load becomes excessive, rearrange cargo to allow for proper tongue load.

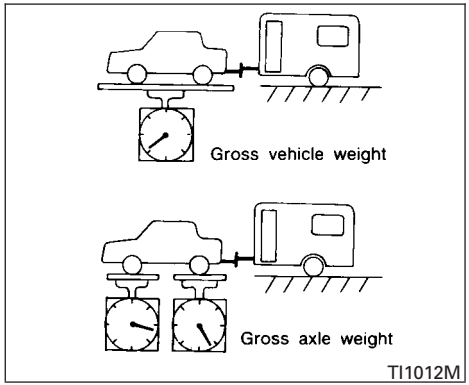

Maximum gross vehicle weight/ maximum gross axle weight

The gross vehicle weight of the towing vehicle must not exceed the gross vehicle weight rating (GVWR) shown on the F. M. V. S. S. certification label. The gross vehicle weight equals the combined weight of the unloaded vehicle, passengers, luggage, hitch, trailer tongue load and any other optional equipment. In addition, front or rear gross axle weight must not exceed the gross axle weight rating (GAWR) shown on the F. M. V. S. S. certification label.

TOWING LOAD/SPECIFICATION

TOWING LOAD / SPECIFICATION	
	UNIT: lb (kg)
MAXIMUM TOWING LOAD	1,000 (454)
MAXIMUM TONGUE LOAD	100 (45)

TOWING SAFETY

Trailer hitch

Choose a proper hitch for your vehicle and trailer. A genuine NISSAN trailer hitch is available from your NISSAN dealer (Canada only). Make sure the trailer hitch is securely attached to the vehicle, to help avoid personal injury or property damage due to sway caused by crosswinds, rough road surfaces or passing trucks.

Hitch ball

Choose a hitch ball of the proper size and weight rating for your trailer:

- The required hitch ball size is stamped on most trailer couplers. Most hitch balls also have the size printed on the top of the ball.
- Choose the proper class hitch ball based on the trailer weight.
- The diameter of the threaded shank of the hitch ball must be matched to the ball mount hole diameter. The hitch ball shank should be no more than 1/16” smaller than the hole in the ball mount.
- The threaded shank of the hitch ball must be long enough to be properly secured to the ball mount. There should be at least 2 threads showing beyond the lock washer and nut.

Sway control device

Sway control devices are used to help control the effects of sudden maneuvers, wind gusts, and buffeting caused by other vehicles. Make sure the sway control device is compatible with the trailer’s brake system.

Class I hitch

Class I trailer hitch equipment (receiver, ball mount and hitch ball) can be used to tow trailers of a maximum weight of 2,000 lb (909 kg).

You may add Class I trailer hitch equipment to the vehicle that has a 2,000 lb (909 kg) maximum weight rating, but your vehicle is only capable of towing the maximum trailer weights shown in the Towing Load/Specification Chart earlier in this section.

⚠ CAUTION

- **Do not use axle-mounted hitches.**
- **The hitch should not be attached to or affect the operation of the impact-absorbing bumper.**
- **Do not modify the vehicle exhaust system, brake system, etc. to install a trailer hitch.**
- **To reduce the possibility of additional damage if your vehicle is struck from the rear, where practical, remove the hitch and/or receiver when not in use.**
- **After the hitch is removed, seal the bolt holes to prevent exhaust fumes, water or dust from entering the passenger compartment.**
- **Regularly check that all trailer hitch mounting bolts are securely mounted.**

Tire pressures

- When towing a trailer, inflate the vehicle tires to the recommended cold tire pressure indicated on the Tire and Loading Information label.

- Trailer tire condition, size, load rating and proper inflation pressure should be in accordance with the trailer and tire manufacturer's specifications.

Safety chains

Always use suitable safety chains between your vehicle and the trailer. The safety chains should be crossed and should be attached to the hitch, not to the vehicle bumper or axle. Be sure to leave enough slack in the chains to permit turning corners.

Trailer lights

⚠ CAUTION

When splicing into the vehicle electrical system, a commercially available power-type module/converter must be used to provide power for all trailer lighting. This unit uses the vehicle battery as a direct power source for all trailer lights while using the vehicle tail light, stoplight and turn signal circuits as a signal source. The module/converter must draw no more that 15 milliamps from the stop and tail lamp circuits. Using a module/converter that exceeds these power requirements may damage the vehicle's electrical system. See a reputable trailer dealer to obtain the proper equipment and to have it installed.

Trailer lights should comply with federal and/or local regulations. For assistance in hooking up trailer lights, contact a NISSAN dealer or reputable trailer dealer.

Trailer brakes

If your trailer is equipped with a braking system, make sure it conforms to federal and/or local regulations and that it is properly installed.

⚠ WARNING

Never connect a trailer brake system directly to the vehicle brake system.

Pre-towing tips

- Be certain your vehicle maintains a level position when a loaded and/or unloaded trailer is hitched. Do not drive the vehicle if it has an abnormal nose-up or nose-down condition; check for improper tongue load, overload, worn suspension or other possible causes of either condition.
- Always secure items in the trailer to prevent load shift while driving.
- Load the trailer so approximately 60% of the trailer load is in the front half and 40% is in the back half.
- Check your hitch, trailer tire pressure, vehicle tire pressure, trailer light operation, and trailer wheel lug nuts every time you attach a trailer to the vehicle.
- Be certain your rearview mirrors conform to all federal, state or local regulations. If not, install any mirrors required for towing before driving the vehicle.

Trailer towing tips

In order to gain skill and an understanding of the vehicle's behavior, you should practice turning, stopping and backing up in an area which is free from traffic. Steering stability and braking performance will be somewhat different than under normal driving conditions.

- Always secure items in the trailer to prevent load shift while driving.
- Avoid abrupt starts, acceleration or stops.
- Avoid sharp turns or lane changes.
- Always drive your vehicle at a moderate speed. Some states or provinces have specific speed limits for vehicles that are towing trailers. Obey the local speed limits.
- When backing up, hold the bottom of the steering wheel with one hand. Move your hand in the direction in which you want the trailer to go. Make small corrections and back up slowly. If possible, have someone guide you when you are backing up.
- Always block the wheels on both vehicle and trailer when parking. Parking on a slope is not recommended; however, if you must do so, and if your vehicle is equipped with an automatic transmission, first block the wheels and apply the parking brake, and then move the transmission shift selector lever into the P (Park) position. If you move the shift selector lever to the P (Park) position before blocking the wheels and applying the parking brake, transmission damage could occur.
- When going down a hill, shift into a lower gear and use the engine braking effect. When going up a long grade, downshift the transmission to a lower gear and reduce speed to reduce chances of engine overloading and/or overheating.
- If the engine coolant rises to an extremely high temperature when the air conditioner system is on, turn off the air conditioner. Coolant heat can be additionally vented by opening the windows, switching the fan control to high and setting the temperature control to the HOT position.
- Trailer towing requires more fuel than normal circumstances.
- Avoid towing a trailer for your vehicle's first 500 miles (805 km).
- For the first 500 miles that you do tow, do not drive over 50 MPH (80 km/h).
- Have your vehicle serviced more often than at intervals specified in the recommended Maintenance Schedule in the "NISSAN Service and Maintenance Guide".
- When making a turn, your trailer wheels will be closer to the inside of the turn than your vehicle wheels. To compensate for this, make a larger than normal turning radius during the turn.
- Crosswinds and rough roads will adversely affect vehicle/trailer handling, possibly causing vehicle sway. When being passed by larger vehicles, be prepared for possible changes in crosswinds that could affect vehicle handling. If swaying does occur, firmly grip the steering wheel, steer straight ahead, and immediately (but gradually) reduce vehicle speed. This combination will help stabilize the vehicle. Never increase speed.
- Be careful when passing other vehicles. Passing while towing a trailer requires considerably more distance than normal passing. Remember, the length of the trailer must also pass the other vehicle before you can safely change lanes.
- To maintain engine braking efficiency and electrical charging performance, do not use 5th gear (manual transmission) or overdrive (automatic transmission).

- Avoid holding the brake pedal down too long or too frequently. This could cause the brakes to overheat, resulting in reduced braking efficiency.
- Increase your following distance to allow for greater stopping distances while towing a trailer. Anticipate stops and brake gradually.
- Do not use cruise control while towing a trailer.
- Check your hitch, trailer wiring harness connections, and trailer wheel lug nuts after 50 miles (80 km) of travel and at every break.
- When stopped in traffic for long periods of time in hot weather, put the vehicle in the P (Park) position.

When towing a trailer, transmission oil/fluid should be changed more frequently. For additional information, see the "Maintenance and do-it-yourself" section earlier in this manual.

FLAT TOWING

Towing your vehicle with all four wheels on the ground is sometimes called flat towing. This method is sometimes used when towing a vehicle behind a recreational vehicle, such as a motor home.

⚠ CAUTION

- **Failure to follow these guidelines can result in severe transmission damage.**
- **Whenever flat towing your vehicle, always tow forward, never backward.**
- **DO NOT tow any automatic transmission vehicle with all four wheels on the ground (flat towing). Doing so WILL DAMAGE internal transmission parts due to lack of transmission lubrication.**
- **For emergency towing procedures refer to "Towing recommended by NISSAN" in the "In case of emergency" section of this manual.**

Automatic Transmission

To tow a vehicle equipped with an automatic transmission, an appropriate vehicle dolly **MUST** be placed under the towed vehicle's drive wheels. **Always** follow the dolly manufacturer's recommendations when using their product.

Manual Transmission

- Always tow with the manual transmission in Neutral.
- After towing 500 miles (805 km), start and idle the engine with the transmission in Neutral for two minutes. Failure to idle the engine after every 500 miles (805 km) of towing may cause damage to internal transmission parts.

UNIFORM TIRE QUALITY GRADING

DOT (Department of Transportation) Quality Grades: All passenger car tires must conform to federal safety requirements in addition to these grades.

Quality grades can be found where applicable on the tire sidewall between tread shoulder and maximum section width. For example:

Treadwear 200 Traction AA Temperature A

Treadwear

Treadwear grade is a comparative rating based on tire wear rate when tested under controlled conditions on specified government test courses. For example, a tire graded 150 would wear one and a half (1-1/2) times as well on the government course as a tire graded 100. However, relative tire performance depends on actual driving conditions, and may vary significantly due to variations in driving habits, service practices and differences in road characteristics and climate.

Traction AA, A, B and C

The traction grades, from highest to lowest, are AA, A, B, and C. Those grades represent the tire's ability to stop on wet pavement as measured under controlled conditions on specified government test surfaces of asphalt and concrete. A tire marked C may have poor traction performance.

⚠ WARNING

The traction grade assigned to your vehicle tires is based on straight-ahead braking traction tests and does not include acceleration, cornering, hydroplaning or peak traction characteristics.

Temperature A, B and C

Temperature grades are A (the highest), B, and C. They represent a tire's resistance to heat build-up, and its ability to dissipate heat when tested under controlled conditions on a specified indoor laboratory test wheel. Sustained high temperature can cause tire material to degenerate, reducing tire life. Excessive temperatures can lead to sudden tire failure. Grade C corresponds to a performance level which all passenger car tires must meet under the Federal Motor Vehicle Safety Standard No. 109. Grades A and B represent higher levels of performance on laboratory test wheels than the minimum required by law.

⚠ WARNING

The temperature grade for this tire is established for a tire that is properly inflated and not overloaded. Excessive speed, under-inflation, or excessive loading, either separately or in combination, can cause heat build-up and possible tire failure.

EMISSION CONTROL SYSTEM WARRANTY

Your NISSAN vehicle is covered by the following emission warranties:

For USA

1. Emission Defects Warranty
2. Emissions Performance Warranty

Details of these warranties may be found with other vehicle warranties in your Warranty Information Booklet which comes with your NISSAN vehicle. If you did not receive a Warranty Information Booklet, or it is lost, you may obtain a replacement by writing to:

- Nissan North America, Inc.
  Consumer Affairs Department
  P.O. Box 191
  Gardena, CA 90248-0191

For Canada

Emission Control System Warranty

Details of these warranties may be found with other vehicle warranties in your Warranty Information Booklet which comes with your NISSAN vehicle. If you did not receive a Warranty Information Booklet, or it is lost, you may obtain a replacement by writing to:

- Nissan Canada Inc.
  5290 Orbitor Drive
  Mississauga, Ontario, L4W 4Z5

REPORTING SAFETY DEFECTS (US only)

If you believe that your vehicle has a defect which could cause a crash or could cause injury or death, you should immediately inform the National Highway Traffic Safety Administration (NHTSA) in addition to notifying NISSAN.

If NHTSA receives similar complaints, it may open an investigation, and if it finds that a safety defect exists in a group of vehicles, it may order a recall and remedy campaign. However, NHTSA cannot become involved in individual problems between you, your dealer, or NISSAN.

To contact NHTSA, you may call the Auto Safety Hotline toll-free at 1-888-327-4236. You may also write to: NHTSA, U.S. Department of Transportation, Washington, D.C. 20590. You can also obtain other information about motor vehicle safety from the Hotline.

You may notify NISSAN by contacting our Consumer Affairs Department, toll-free, at 1-800-NISSAN-1.

READINESS FOR INSPECTION/ MAINTENANCE (I/M) TEST

Due to legal requirements in some states and Canadian Provinces, your vehicle may be required to be in what is called the “ready condition” for an Inspection/Maintenance (I/M) test of the emission control system.

The vehicle is set to the “ready condition” when it is driven through certain driving patterns. Usually, the ready condition can be obtained by ordinary usage of the vehicle.

If a powertrain system component is repaired or the battery is disconnected, the vehicle may be reset to a “not ready” condition. Before taking the I/M test, check the vehicle’s inspection/maintenance test readiness condition. Turn the ignition switch ON without starting the engine. If the Malfunction Indicator Lamp (MIL) comes on steady for 20 seconds and then blinks for 10 seconds , the I/M test condition is ″not ready″. If the MIL does not blink after 20 seconds, the I/M test condition is ″ready.″ If the MIL indicates the vehicle is in a ″not ready″ condition, drive the vehicle through the following pattern to set the vehicle to the ready condition. If you cannot or do not want to perform the driving pattern, a NISSAN dealer can conduct it for you.

⚠ WARNING

Always drive the vehicle in a safe and prudent manner according to traffic conditions and obey all traffic laws.

1. Start the engine when the engine coolant temperature gauge needle points to C. Allow the engine to idle until the gauge needle points between the C and H (normal operating temperature).
2. Accelerate the vehicle to 55 MPH (88 km/h), then quickly release the accelerator pedal completely and keep it released for at least 10 seconds.
3. Quickly depress the accelerator pedal for a moment, then drive the vehicle at a speed of 53 - 60 MPH (86 - 96 km/h) for at least 9 minutes.
4. Stop the vehicle.
5. Accelerate the vehicle to 35 MPH (55 km/h) and maintain the speed for 20 seconds.
6. Repeat steps 4 through 5 at least 10 times.
7. Accelerate the vehicle to 55 MPH (88 km/h) and maintain the speed for at least 3 minutes.
8. Stop the vehicle. Place the transmission selector lever in the P (Park) or N (Neutral) position.
9. Turn the engine off.
10. Repeat steps 1 - 8 at least one more time.

If steps 1 through 7 are interrupted, repeat the preceding step. Any safe driving mode is acceptable between steps. Do not stop the engine until step 7 is completed.

EVENT DATA RECORDERS

Your vehicle is equipped with a variety of computers that monitor and control a number of systems to optimize performance and help service technicians with diagnosis and repair. Depending on the equipment on your vehicle, some of the computers monitor emission control systems, braking systems and air bag systems, just to name a few. Some data about vehicle operation may be stored in the computers for use during servicing. Other data may be stored if a crash event occurs. For example, air bag readiness, air bag performance, and seat belt use by the driver or passenger may be recorded, depending on vehicle equipment. These types of systems are sometimes called Event Data Recorders.

Special equipment can be used to access the electronic data that may be stored in the vehicle's computers (sounds are not recorded). NISSAN and NISSAN dealers have equipment to access some of this data; others may also have this equipment. The data may be retrieved during routine vehicle servicing or for special research. It might also be accessed with the consent of the vehicle owner or lessee, in response to a request by law enforcement, or as otherwise required or permitted by law.

Genuine Nissan Service Manuals

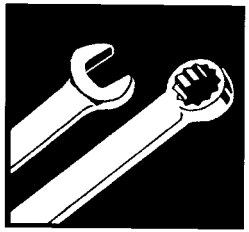

GET THE INSIDE STORY

OWNER'S MANUAL/SERVICE MANUAL ORDER INFORMATION

A genuine NISSAN Service Manual is the best source of service and repair information for your vehicle. Filled with wiring diagrams, illustrations and step-by-step diagnostic and adjustment procedures, this manual is the same one used by the factory trained technicians working at NISSAN dealerships. Also available are genuine NISSAN Owner's Manuals, and genuine NISSAN Service and Owner's Manuals for older NISSAN models.

For USA

For current pricing and availability of genuine **NISSAN Service Manuals** for the 2000 model year and later contact:

Tweddle Litho Company
1-800-450-9491
www.nissan-techinfo.com

For current pricing and availability of genuine **NISSAN Service Manuals** for the 1999 model year and prior, see a NISSAN dealer, or contact:

Resolve Corporation
20770 Westwood Road
Strongsville, OH 44136
1-800-247-5321

For current pricing and availability of genuine **NISSAN Owner's Manuals** for the 2005 model year and prior, see a NISSAN dealer, or contact:

Resolve Corporation
20770 Westwood Road
Strongsville, OH 44136
1-800-247-5321

For Canada

To purchase a copy of a genuine NISSAN Service Manual or Owner's Manual please contact your nearest NISSAN dealer. For the phone number and location of a NISSAN dealer in your area call the NISSAN Information Center at 1-800-387-0122 and a bilingual NISSAN representative will assist you.

Also available are genuine NISSAN Service and Owner's Manuals for older NISSAN models.

IN THE EVENT OF A COLLISION

Unfortunately, accidents do occur. In this unlikely event, there is some important information you should know.

Many insurance companies routinely authorize the use of non-genuine collision parts in order to cut costs, among other reasons.

Insist on the use of genuine NISSAN collision parts!

If you want your vehicle to be restored using parts made to NISSAN's original exacting specifications – if you want to help it to last and hold its resale value, the solution is simple. **Tell your insurance agent and your repair shop to only use Genuine NISSAN Collision Parts.** NISSAN does not warrant non-NISSAN parts, nor does NISSAN's warranty apply to damage caused by a non-genuine part.

Using Genuine NISSAN Parts can help protect your personal safety, preserve your warranty protection and maintain the resale value of your vehicle. And if your vehicle was leased, using Genuine NISSAN Parts may prevent or limit unnecessary excess wear and tear expenses at the end of your lease.

NISSAN designs its hoods with crumple zones to minimize the risk that the hood will penetrate the windshield of your vehicle in an accident. Non-genuine (imitation) parts may not provide such built in safeguards. Also, non-genuine parts often show premature wear, rust and corrosion.

Why should you take a chance?

In over 40 states, the law says you must be advised if non-genuine parts are used to repair your vehicle. And some states have enacted laws that restrict insurance companies from authorizing the use of non-genuine collision parts during the new vehicle warranty. These laws help protect you, so you can take action to protect yourself.

It's your right!

If you should need further information visit us at: www.nissanusa.com.

10 Index

A

Active head restraint 1-8
Air bag (See supplemental restraint system) 1-33
Air bag system
Front (See supplemental front impact air bag system) 1-41
Air bag warning light. 1-49, 2-13
Air cleaner housing filter 8-21
Air conditioner
Air conditioner operation 4-15
Air conditioner service 4-22
Air conditioner specification label 9-12
Air conditioner system refrigerant and lubrication recommendations 9-6
Heater and air conditioner controls. 4-12, 4-20
Servicing air conditioner 4-22
Air flow charts. 4-16
Alarm system
(See vehicle security system) 2-16
Anchor point locations 1-25
Antenna 4-42
Anti-lock brake system (ABS) 5-20
Anti-lock brake warning light. 2-11
Armrests 1-7
Audible reminders. 2-15
Audio system 4-23
AM-FM-SAT radio with compact disc (CD) changer 4-36
Compact Disc (CD) changer 4-39
FM-AM radio with compact disc (CD) changer 4-30
FM-AM radio with compact disc (CD)
player 4-26
Radio 4-23
Autolight switch. 2-22
Automatic
Automatic power window switch 2-38
Automatic transmission fluid (ATF) 8-13
Automatic transmission position indicator light 2-14
Driving with automatic transmission. 5-7
Transmission selector lever lock release. 5-11
Automatic anti-glare inside mirror 3-15

B

Battery. 8-17
Charge warning light 2-12
Before starting the engine 5-6
Belts (See drive belts) 8-19
Booster seats 1-29
Brake
Anti-lock brake system (ABS) 5-20
Brake booster. 8-26
Brake fluid. 8-15
Brake light (See stop light). 8-32
Brake pedal 8-25
Brake system 5-19
Brake warning light 2-12
Brake wear indicators 2-15, 8-26
Parking brake check 8-25
Parking brake operation 5-14
Self-adjusting brakes. 8-26
Break-in schedule. 5-16
Brightness control
Instrument panel 2-24
Brightness/Contrast button 4-10
Control panel buttons 4-10
Bulb check/instrument panel. 2-11
Bulb replacement 8-32

C

Capacities and recommended fuel/lubricants. 9-2
Car phone or CB radio 4-43
Cargo (See vehicle loading information) . . .9-13
CD care and cleaning 4-41
CD changer (See audio system). 4-39
Check engine indicator light
(See malfunction indicator lamp) 2-14
Child restraint with top tether strap 1-25
Child restraints. 1-11, 1-12, 1-16, 1-24
Precautions on child restraints . . .1-16, 1-29
Top tether strap anchor point locations . .1-25
Child safety rear door lock. 3-5
Chimes, audible reminders. 2-15
Cigarette lighter and ashtray. 2-29

Cleaning exterior and interior 7-2
Clock 4-27, 4-31, 4-37, 4-42
(models with navigation system) 4-8
Clock set
Control panel buttons 4-8
Clutch
Clutch fluid 8-16
Cold weather driving 5-22
Console box. 2-33
Control panel buttons
With navigation system 4-2
Controls
Heater and air conditioner
controls. 4-12, 4-20
Coolant
Capacities and recommended
fuel/lubricants. 9-2
Changing engine coolant 8-9
Checking engine coolant level. 8-8
Engine coolant temperature gauge 2-8
Corrosion protection 7-5
Cruise control 5-15
Cup holders 2-31

D

Daytime running light system
(Canada only) 2-24
Defroster switch
Rear window and outside mirror
defroster switch. 2-20
Dimensions and weights. 9-8
Display controls
(see control panel buttons) 4-2
Door locks 3-3
Door open warning light 2-12
Drive belts. 8-19
Driving
Cold weather driving 5-22
Driving with automatic transmission. 5-7
Driving with manual transmission 5-12
Precautions when starting and driving . . .5-2

E

Economy - fuel 5-17
Emission control information label 9-11
Emission control system warranty 9-21
Engine
Before starting the engine 5-6
Capacities and recommended
fuel/lubricants. 9-2
Changing engine coolant 8-9
Changing engine oil 8-10
Changing engine oil filter. 8-12
Checking engine coolant level. 8-8
Checking engine oil level 8-9
Engine compartment check locations. . . .8-8
Engine coolant temperature gauge 2-8
Engine cooling system 8-8
Engine oil 8-9
Engine oil and oil filter recommendation . .9-5
Engine oil pressure warning light 2-12
Engine oil viscosity 9-5
Engine serial number 9-10
Engine specifications. 9-7
Starting the engine 5-6
Engine oil pressure gauge 2-9
English/Metric button 4-8
Control panel buttons 4-8
ENTER button 4-2
Enter button
Control panel buttons 4-2
Event data recorders 9-22
Exhaust gas (Carbon monoxide) 5-2
Eyeglass case. 2-31

F

Flashers (See hazard warning
flasher switch). 2-25
Flat tire 6-2
Floor mat positioning aid. 7-4
Fluid
Automatic transmission fluid (ATF) 8-13
Brake fluid 8-15
Capacities and recommended
fuel/lubricants. 9-2
Clutch fluid 8-16
Engine coolant 8-8
Engine oil 8-9
Power steering fluid. 8-15
Window washer fluid 8-16
F.M.V.S.S. certification label 9-10
Fog light switch 2-25
Front air bag system
(See supplemental restraint system) 1-41
Front seats 1-2
Fuel
Capacities and recommended
fuel/lubricants. 9-2
Fuel economy 5-17
Fuel filler cap 3-12
Fuel filler lid 3-12
Fuel filler lid and cap 3-12

Fuel filler lid lock opener lever 3-12
Fuel gauge 2-8
Fuel octane rating 9-4
Fuel recommendation 9-3
Fuel consumption gauge 2-10
FUEL ECON button 4-4
Fuel Econ button
Control panel buttons 4-4
Fuses 8-26
Fusible links 8-27

G

Garage door opener, HomeLink®
Universal Transceiver 2-42
Gas cap 3-12
Gauge
Engine coolant temperature gauge 2-8
Engine oil pressure gauge 2-9
Fuel consumption gauge 2-10
Fuel gauge 2-8
Odometer 2-4
Speedometer 2-4
Tachometer 2-7
Trip computer 2-5
Trip odometer 2-4
Voltmeter 2-10
General maintenance 8-2
Glove box 2-32
Glove box lock 2-32
Grocery hooks 2-35

H

Hazard warning flasher switch 2-25
Head restraints 1-7
Active head restraint 1-8
Headlight and turn signal switch. 2-21
Headlight control switch 2-21
Heated seats 2-26
Heater
Heater and air conditioner
controls 4-12, 4-20
Heater operation 4-14, 4-21
HomeLink® Universal Transceiver 2-42
Hood release 3-9
Horn 2-26

I

Ignition switch 5-4
Immobilizer system 2-17, 3-2, 5-5
Important vehicle information label. 9-10
In-cabin microfilter 8-21
Increasing fuel economy 5-17
Indicator lights and audible reminders
(See warning/indicator lights and audible
reminders) 2-11
Inside automatic anti-glare mirror 3-15
Inside mirror 3-15
Instrument brightness control 2-24
Instrument panel 2-2
Interior light 2-40
Interior trunk lid release. 3-11
ISOFIX child restraints 1-24

J

Jump starting 6-6

K

Key 3-2
Keyfob battery replacement 8-30
Keyless entry system
(See remote keyless entry system) 3-5

L

Labels
Air conditioner specification label 9-12
Emission control information label 9-11
Engine serial number 9-10
F.M.V.S.S. certification label 9-10
Vehicle identification number
(VIN) plate. 9-9
Warning labels (for SRS). 1-48
LATCH (Lower Anchors and Tethers
for CHildren) System 1-24
License plate
Installing the license plate 9-12
Light
Air bag warning light. 1-49, 2-13
Brake light (See stop light). 8-32
Bulb check/instrument panel. 2-11
Bulb replacement 8-32
Charge warning light 2-12
Fog light switch 2-25
Headlight and turn signal switch. 2-21

Headlight control switch 2-21
Interior light 2-40
Light bulbs. 8-30
Low washer fluid warning light. 2-13
Passenger air bag and status light. 1-43
Spotlights (See map light) 2-41
Trunk light 2-42
Warning/indicator lights and audible reminders 2-11
Lights
Map lights 2-41
Lock
Child safety rear door lock. 3-5
Door locks 3-3
Fuel filler lid lock opener lever 3-12
Glove box lock 2-32
Power door locks. 3-4
Trunk lid lock opener lever 3-10
Low fuel warning light 2-13
Low washer fluid warning light. 2-13
Luggage (See vehicle loading information) . .9-13

M

Maint (maintenance) button
Control panel buttons 4-4
Maint (Maintenance) button, control panel display. 4-4
Maintenance
General maintenance 8-2
Inside the vehicle 8-3
Maintenance precautions 8-5
Outside the vehicle. 8-2
Seat belt maintenance 1-16
Under the hood and vehicle 8-4
Malfunction indicator lamp (MIL). 2-14
Manual front seat adjustment 1-2
Map lights 2-41
Map pocket 2-30
Meters and gauges. 2-3
Instrument brightness control 2-24
Mirror
Automatic anti-glare inside mirror 3-15
Inside mirror 3-15
Outside mirrors 3-15
Vanity mirror 3-14
Multi-remote control system (See remote keyless entry system) 3-5

N

NISSAN vehicle immobilizer system 2-17, 3-2, 5-5

O

Octane rating (See fuel octane rating) 9-4
Odometer 2-4
Oil
Capacities and recommended fuel/lubricants. 9-2
Changing engine oil 8-10
Changing engine oil filter. 8-12
Checking engine oil level 8-9
Engine oil 8-9
Engine oil and oil filter recommendation . .9-5
Engine oil viscosity 9-5
Outside mirrors 3-15
Overheat
If your vehicle overheats 6-8
Owner's manual order form 9-23
Owner's manual/service manual order information 9-23

P

Parking
Parking brake check 8-25
Parking brake operation 5-14
Parking/parking on hills. 5-18
Power
Power door locks. 3-4
Power outlet. 2-28
Power rear windows 2-38
Power steering fluid. 8-15
Power steering system 5-19
Power windows 2-37
Rear power windows 2-38
Precautions
Maintenance precautions 8-5
Precautions on child restraints . . .1-16, 1-29
Precautions on seat belt usage 1-9
Precautions on supplemental restraint system 1-33
Precautions when starting and driving . . .5-2
PREV button 4-3
Prev button
Control panel buttons 4-3
Programmable features. 4-3, 4-6
Push starting 6-8

R

Radio
- Car phone or CB radio 4-43
- Compact Disc (CD) changer 4-39
- FM-AM radio with compact disc (CD) changer 4-30
- FM-AM radio with compact disc (CD) player 4-26

Readiness for inspection maintenance (I/M) test. 9-21
Rear power windows 2-38
Rear seat 1-6
Rear window and outside mirror defroster switch. 2-20
Recorders
- Event data 9-22

Refrigerant recommendation 9-6
Registering your vehicle in another country. . .9-9
Remote keyless entry system 3-5
Reporting safety defects (US only) 9-21

S

Safety
- Child safety rear door lock. 3-5
- Child seat belts 1-16, 1-29
- Reporting safety defects (US only) 9-21

Seat adjustment
- Front manual seat adjustment 1-2
- Front power seat adjustment 1-4
- Rear seat adjustment. 1-6

Seat belt
- Child safety 1-11
- Infants and small children 1-12
- Injured Person. 1-13
- Larger children 1-12
- Precautions on seat belt usage 1-9
- Pregnant women 1-13
- Seat belt extenders 1-16
- Seat belt maintenance 1-16
- Seat belts 1-9
- Shoulder belt height adjustment. 1-15
- Three-point type with retractor. 1-13

Seat belt warning light 2-13
Seatback pockets. 2-30
Seats
- Adjustment 1-2
- Front seats 1-2
- Heated seats 2-26
- Manual front seat adjustment 1-2
- Rear seat 1-6

Security system (NISSAN vehicle immobilizer system), engine start. 2-17, 3-2, 5-5
Self-adjusting brakes 8-26
Service manual order form 9-23
Servicing air conditioner 4-22
Setting button
- SETTING button 4-6

Shift lock release 5-11
Shifting
- Automatic transmission 5-8
- Manual transmission 5-12

Shoulder belt height adjustment. 1-15
Spark plug replacement 8-20
Speedometer 2-4
Spotlights (See map light) 2-41
SRS warning label 1-48
Starting
- Before starting the engine 5-6
- Jump starting 6-6
- Precautions when starting and driving . . .5-2
- Push starting 6-8
- Starting the engine 5-6

Startup Screen
- Control panel buttons 4-3

Startup screen display 4-3
Steering
- Power steering fluid. 8-15
- Power steering system 5-19

Stop light 8-32
Storage 2-30
Storage tray 2-34
Sunglasses case 2-31
Sunglasses holder 2-31
Sunroof 2-39
Supplemental air bag warning light. . .1-49, 2-13
Supplemental front impact air bag system . .1-41
Supplemental restraint system
- Information and warning labels. 1-48
- Precautions on supplemental restraint system 1-33

Supplemental restraint system (Supplemental air bag system). 1-33
Switch
- Autolight switch. 2-22
- Automatic power window switch 2-38
- Fog light switch 2-25
- Hazard warning flasher switch 2-25
- Headlight and turn signal switch. 2-21
- Headlight control switch 2-21
- Ignition switch 5-4
- Power door lock switch 3-4
- Rear window and outside mirror defroster switch. 2-20
- Traction control system (TCS) off switch 2-27

Turn signal switch 2-25
Windshield wiper and washer switch . . .2-19

T

Tachometer 2-7
Temperature gauge
Engine coolant temperature gauge 2-8
Theft (NISSAN vehicle immobilizer system), engine start 2-17, 3-2, 5-5
Three-way catalyst 5-2
Tire
Flat tire 6-2
Spare tire. 6-3, 8-49
Tire chains. 8-46
Tire placard 9-11
Tire pressure 8-39
Tire rotation 8-47
Types of tires 8-46
Uniform tire quality grading. 9-20
Wheels and tires 8-39
Wheel/tire size 9-8
Top tether strap child restraint 1-25
Towing
Flat towing. 9-19
Tow truck towing 6-9
Towing load/specification 9-16
Trailer towing 9-14
Traction control system (TCS) off switch . . .2-27
Transceiver
HomeLink® Universal Transceiver 2-42
Transmission
Automatic transmission fluid (ATF) 8-13
Driving with automatic transmission. 5-7
Driving with manual transmission 5-12
Selector lever lock release 5-11
Travel (See registering your vehicle in another country) 9-9
TRIP button 4-4
Trip button
Control panel buttons 4-4
Trip computer. 2-5
Trip odometer. 2-4
Trunk access through the rear seat 1-6
Trunk lid lock opener lever 3-10
Trunk light 2-42
Turn signal switch. 2-25

U

Uniform tire quality grading. 9-20

V

Vanity mirror 3-14
Vehicle dimensions and weights 9-8
Vehicle electronic system 4-7
Vehicle identification 9-9
Vehicle identification number (VIN) (Chassis number). 9-9
Vehicle identification number (VIN) plate 9-9
Vehicle loading information. 9-13
Vehicle recovery 6-11, 6-11
Vehicle security system. 2-16
Vehicle security system (NISSAN vehicle immobilizer system), engine start . .2-17, 3-2, 5-5
Ventilators 4-11
Voltmeter 2-10

W

Warning
Air bag warning light. 1-49, 2-13
Anti-lock brake warning light. 2-11
Battery charge warning light 2-12
Brake warning light 2-12
Door open warning light 2-12
Engine oil pressure warning light 2-12
Hazard warning flasher switch 2-25
Low fuel warning light 2-13
Low washer fluid warning light. 2-13
Passenger air bag and status light. 1-43
Seat belt warning light 2-13
Vehicle security system. 2-16
Warning labels (for SRS). 1-48
Warning/indicator lights and audible reminders 2-11
Warning lights. 2-11
Washer switch
Windshield wiper and washer switch . . .2-19
Weights (See dimensions and weights) 9-8
Wheels and tires 8-39
Wheel/tire size 9-8
When traveling or registering your vehicle in another country 9-9
Window washer fluid 8-16
Windows
Locking passengers' windows. 2-38
Power rear windows 2-38
Power windows 2-37
Rear power windows 2-38
Windshield wiper and washer switch 2-19
Wiper
Windshield wiper and washer switch . . .2-19
Wiper blades 8-24

MEMO

MEMO

GAS STATION INFORMATION

RECOMMENDED FUEL:

For 2.5L engine

Use unleaded regular gasoline with an octane rating of at least 87 AKI (Anti-Knock Index) number (Research octane number 91).

For 3.5L engine

Use unleaded regular gasoline with an octane rating of at least 87 AKI (Anti-Knock Index) number (Research octane number 91).

For improved performance, NISSAN recommends the use of unleaded premium gasoline with an octane rating of at least 91 AKI number (Research octane number 96).

⚠ CAUTION

- **Using a fuel other than that specified could adversely affect the emission control system, and may also affect the warranty coverage.**
- **Under no circumstances should a leaded gasoline be used, because this will damage the three-way catalyst.**

For additional information, see “Capacities and recommended fuel/lubricants in the “Technical and consumer information” section.

RECOMMENDED ENGINE OIL:

- API Certification Mark
- API grade SG/SH Energy Conserving I & II or API grade SJ or SL Energy Conserving
- ILSAC grade GF-I, GF-II & GF-III
- 5W-30 Viscosity preferred

See “Engine oil and oil filter recommendation” in the “Technical and consumer information” section of this manual.

TIRE COLD PRESSURE:

See tire placard.

RECOMMENDED NEW VEHICLE BREAK-IN PROCEDURE:

During the first 1,200 miles (2,000 km) of vehicle use, follow the recommendations outlined in the “BREAK-IN SCHEDULE” information found in the “Starting and driving” section of this manual. Follow these recommendations for the future reliability and economy of your new vehicle. Failure to follow these recommendations may result in vehicle damage or shortened engine life.

QUICK REFERENCE

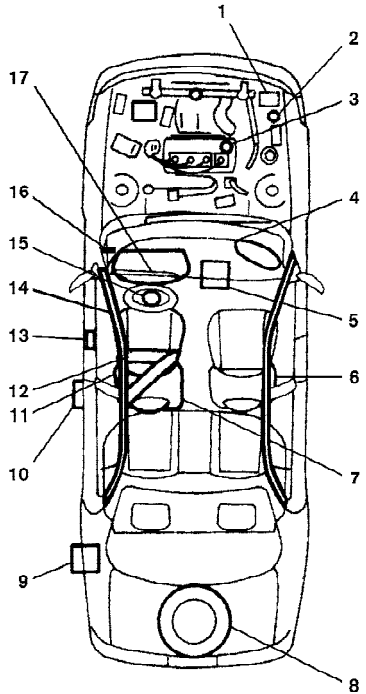

WGS0016

1. Engine coolant 8-8
2. Window washer fluid 8-16
3. Engine oil 8-9
4. Passenger supplemental front impact air bag 1-33
5. Audio system 4-23, 4-26, 4-30; Air conditioner 4-12, 4-20
6. Supplemental side-impact air bag (if so equipped) 1-33
7. Front seats 1-2
8. Spare tire 6-2
9. Fuel filler lid release 3-12; Fuel recommendation 9-3
10. Keys 3-2
11. Supplemental side-impact air bag (if so equipped) 1-33
12. Seat belts 1-9
13. Trunk release 3-10
14. Supplemental curtain side-impact air bag (if so equipped) 1-33
15. Driver supplemental front impact air bag 1-33
16. Hood release 3-9
17. Meters and gauges 2-3