# Repair Manual

## Golf 2015 ➤
## Golf Variant 2015 ➤

## Manual Transmission

Edition 02.2016

Protected by copyright. Copying for private or commercial purposes, in part or in whole is not permitted unless authorised by Volkswagen AG. Volkswagen AG does not guarantee or accept any liability with respect to the correctness of information in this document. Copyright by Volkswagen AG.

# List of Workshop Manual Repair Groups

Protected by copyright. Copying for private or commercial purposes, in part or in whole, is not permitted unless authorised by Volkswagen AG. Volkswagen AG does not guarantee or accept any liability with respect to the correctness of information in this document. Copyright by Volkswagen AG.

## Repair Group

00 - General, Technical Data
30 - Clutch
34 - Controls, Housing
35 - Gears, Shafts
39 - Final Drive, Differential

Technical information should always be available to the foremen and mechanics, because their careful and constant adherence to the instructions is essential to ensure vehicle road-worthiness and safety. In addition, the normal basic safety precautions for working on motor vehicles must, as a matter of course, be observed.

All rights reserved.
No reproduction without prior agreement from publisher.

Copyright © 2016 Volkswagen AG, Wolfsburg

D4B804111B5

# Contents


## 00 - General, Technical Data . . . 1

1 **Identification** . . . 1
1.1 Transmission Identification . . . 1
2 **Safety Precautions** . . . 2
2.1 Road Test with Testing Equipment Safety Precautions . . . 2
2.2 Start/Stop System Safety Precautions . . . 2
3 **Repair Information** . . . 3
3.1 General Repair Information . . . 3
3.2 Contact Corrosion . . . 6
4 **Technical Data** . . . 7
4.1 Transmission/Engine Allocation . . . 7
4.2 Capacities . . . 8
4.3 Gear Ratio Calculation . . . 8
5 **Overview - Powertrain** . . . 9
5.1 Overview - Powertrain, Front Wheel Drive . . . 9
6 **Electrical Components** . . . 11
6.1 Overview - Electrical Components Location . . . 11
7 **Special Tools** . . . 12

## 30 - Clutch . . . 13

1 **Clutch Mechanism** . . . 13
1.1 Overview - Component Location, Clutch Mechanism . . . 13
1.2 Overview - Pedal Assembly . . . 15
1.3 Overview - Clutch Hydraulics . . . 17
1.4 Overview - Clutch Release Mechanism . . . 21
1.5 Over-Center Spring, Removing and Installing . . . 22
1.6 Return Spring, Removing and Installing . . . 24
1.7 Clutch Pedal, Removing and Installing . . . 27
1.8 Mounting Bracket, Removing and Installing . . . 28
1.9 Bearing Bushing, Removing and Installing . . . 32
1.10 Clutch Master Cylinder, Removing and Installing . . . 32
1.11 Clutch Slave Cylinder with Release Bearing, Removing and Installing . . . 33
1.12 Clutch Mechanism Lines, Removing and Installing . . . 34
1.13 Bleeder, Removing and Installing . . . 36
1.14 Clutch Master and Clutch Slave Cylinder, Checking . . . 36
1.15 Clutch Position Sensor G476 , Removing and Installing . . . 37
1.16 Clutch Mechanism, Bleeding . . . 37
1.17 Clutch Release Mechanism, Servicing . . . 38
2 **Clutch** . . . 40
2.1 Clutch Manufacturers, Differentiating . . . 40
2.2 Overview - Clutch . . . 41
2.3 Clutch, Removing and Installing . . . 45
3 **Special Tools** . . . 56

## 34 - Controls, Housing . . . 59

1 **Selector Mechanism** . . . 59
1.1 Selector Mechanism Installation Position . . . 59
1.2 Overview - Selector Mechanism . . . 60
1.3 Overview - Shift Lever Knob and Cover . . . 62
1.4 Gearshift Knob, Removing and Installingg . . . 62
1.5 Selector Mechanism, Removing and Installing . . . 63
1.6 Selector Mechanism, Adjusting . . . 71


Protected by copyright. Copying or publication in whole or in part is not permitted unless authorised by Volkswagen AG. Volkswagen AG does not guarantee or accept any liability with respect to the correctness of information in this document. Copyright by Volkswagen AG.

1.7 Gearshift Mechanism, Checking . . . 74
1.8 Selector Shaft Seal, Replacing . . . 74
**2 Transmission, Removing and Installing . . . 76**
2.1 Transmission, Removing . . . 76
2.2 Transmission, Installing . . . 92
2.3 Transmission Tightening Specifications . . . 104
**3 Subframe Mount . . . 105**
3.1 Overview - Subframe Mount . . . 105
**4 Transmission, Transporting . . . 108**
4.1 Transmission, Transporting . . . 108
**5 Transmission, Disassembling and Assembling . . . 109**
5.1 Overview - Schematic, Transmission . . . 109
5.2 Overview - Transmission . . . 110
5.3 Overview - Transmission Housing and Selector Mechanism . . . 111
5.4 Overview - Shift Unit . . . 113
5.5 Overview - Input Shaft, Output Shafts, Differential, Shift Lever Rods . . . 114
5.6 Overview - Shift Forks . . . 116
5.7 Transmission, Disassembling and Assembling . . . 116
**6 Transmission Housing and Clutch Housing . . . 130**
6.1 Overview - Transmission Housing . . . 130
6.2 Overview - Clutch Housing . . . 132
6.3 Transmission Housing, Servicing . . . 134
6.4 Clutch Housing, Servicing . . . 139
**7 Securing on Engine and Transmission Holder . . . 141**
7.1 Securing on Engine and Transmission Holder . . . 141
**8 Transmission Fluid . . . 142**
8.1 Transmission Fluid Level, Checking . . . 142
**9 Special Tools . . . 143**

## 35 - Gears, Shafts . . . 157

**1 Input Shaft . . . 157**
1.1 Overview - Input Shaft . . . 157
1.2 Input Shaft, Disassembling and Assembling . . . 158
1.3 Input Shaft Seal, Replacing . . . 161
**2 Output Shaft . . . 163**
2.1 Overview - Output Shaft . . . 163
2.2 Output Shaft, Disassembling and Assembling . . . 172
2.3 Output Shaft, Adjusting . . . 187
**3 Special Tools . . . 194**

## 39 - Final Drive, Differential . . . 207

**1 Seals . . . 207**
1.1 Overview - Component Location, Seals . . . 207
1.2 Left Seal, Replacing . . . 207
1.3 Right Seal, Replacing . . . 209
**2 Differential . . . 212**
2.1 Overview - Differential . . . 212
2.2 Differential, Disassembling and Assembling . . . 214
2.3 Differential, Adjusting . . . 218
**3 Adjustment Overview . . . 221**
3.1 Overview - Adjustment . . . 221
**4 Special Tools . . . 222**
**5 Revision History . . . 227**

Protected by copyright. Copyright by Volkswagen AG. Volkswagen AG does not guarantee or accept any liability with respect to the correctness of information in this document. Copyright by Volkswagen AG.

# 00 – General, Technical Data

## 1 Identification

(Edition 02.2016)

⇒ “1.1 Transmission Identification”, page 1

### 1.1 Transmission Identification

Code Letters and Production Date -arrow 1-, Manual Transmission “02Q” -arrow 2-

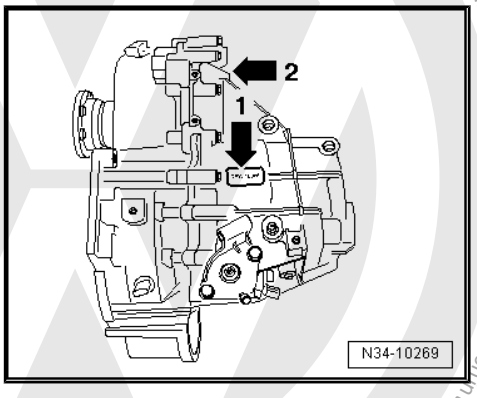


Manual Transmission 02Q: “02Q” -arrow 2-

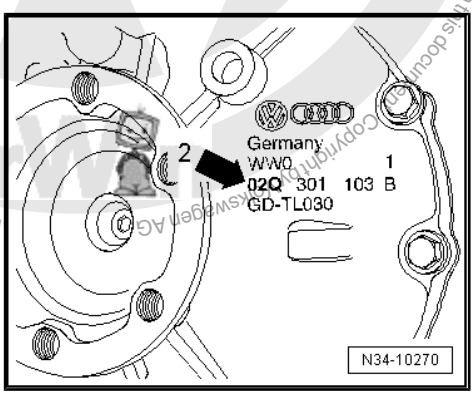


Transmission Codes and Production Date -arrow-

| Example: | NYG | 11 | 01 | 2 |
|---|---|---|---|---|
| | I | I | I | I |
| | I | I | I | I |
| | Code letters | Day | Month | Year (2012) of manufacture |

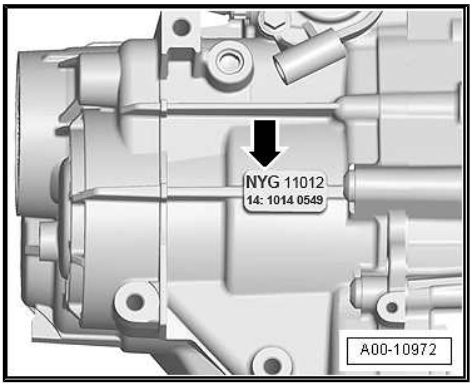


For additional data and information contact the factory.

**Note**

- *The transmission code is also listed in the vehicle data plates.*
- *The manual transmission 0FB has reinforcement measures near the output shaft for 1st to 4th gear and is designed for a tightening specification up to 380 Nm.*
- *The manual transmission 0FB can only be identified using the transmission code.*

Protected by copyright. Copying for private or commercial purposes, in part or in whole is not permitted unless authorised by Volkswagen AG. This document does not guarantee or accept any liability with respect to the correctness of information.

# 2 Safety Precautions

⇒ “2.1 Road Test with Testing Equipment Safety Precautions”, page 2

⇒ “2.2 Start/Stop System Safety Precautions”, page 2

## 2.1 Road Test with Testing Equipment Safety Precautions

**If testing equipment must be used during a road test, note the following:**

> **WARNING**
>
> *Distraction and testing equipment that is not secured properly can cause accidents.*
>
> *The passenger airbag could pose a risk if it deploys in a collision.*
>
> - *Operating testing equipment while driving causes it to shift position.*
> - *There is an increased risk of injury due to unsecured testing equipment.*
>
> ♦ *Always secure testing equipment on the rear seat using a strap and have a second person in the rear seat operate it.*

> **Caution**
>
> *Risk of damaging electronic components when disconnecting the battery.*
>
> ♦ *Complete the steps for disconnecting the battery.*
>
> ♦ *Always turn off the ignition before disconnecting the battery.*

**To prevent personal injury and damage to electrical and electronic components, observe the following:**

♦ Connect and disconnect test equipment only when the ignition is off.

– Disconnect the battery. Refer to ⇒ Electrical Equipment; Rep. Gr. 27 ; Battery; Battery, Disconnecting and Connecting .

## 2.2 Start/Stop System Safety Precautions

> **WARNING**
>
> *Danger of injury through automatic motor starting with vehicles with the Start/Stop System.*
>
> ♦ *Deactivate the Start-Stop system when working on the vehicle. Turn off the ignition.*
>
> ♦ *Only switch the ignition on briefly when necessary.*

Protected by copyright. Copying for private or commercial purposes, in part or in whole, is not permitted unless authorised by Volkswagen AG. Volkswagen AG does not guarantee or accept any liability with respect to the correctness of information in this document. Copyright by Volkswagen AG.

# 3 Repair Information

⇒ “3.1 General Repair Information”, page 3

⇒ “3.2 Contact Corrosion”, page 6

## 3.1 General Repair Information

### Special tools and workshop equipment required

- Inductive Heater - VAS6414-

Carefulness, cleanliness and the correct tools are required for transmission repairs to be successful. The usual basic safety precautions apply when making vehicle repairs.

Some general repair information that applies to several procedures throughout this manual is summarized. They apply to this repair manual.

### Special Tools and Equipment

For a complete list of special tools used in the Repair Manual refer to Workshop Equipment and Special Tools.

### Transmission

- Make sure that the alignment sleeves between the engine and transmission are positioned correctly when installing the transmission.
- Clean the contact surfaces when installing brackets as well as parts that have been waxed. Contact surfaces must be free of grease and wax.
- For the correct bolts and other components. Refer to the Parts Catalog.
- Fill with transmission fluid when repairing the manual transmission.

### Seals, Sealing Rings

- Always thoroughly clean the separating surfaces on the housing before applying the sealant.
- Flange shaft, input shaft and gearshift shaft seals are also illustrated as radial shaft seals.
- Once a shaft seal or gasket has been removed, check the contact surface on the housing or shaft for burrs and damage caused by the removal. Repair as necessary.
- Before installing the shaft seals, lightly oil the outer circumference and fill the space between the sealing lips -arrow- halfway with Grease - G 052 128 A1- .
- The open side of the gaskets point toward the fluid to be sealed in.
- Lightly lubricate the O-rings before inserting to prevent the rings from being crushed during assembly.

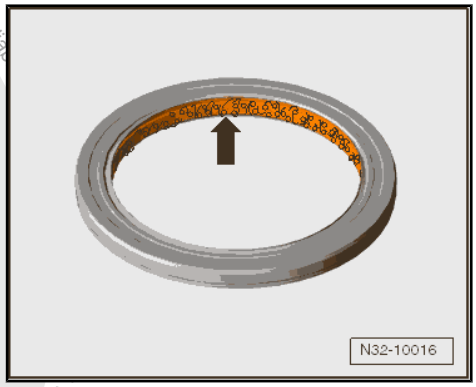


### Sealant

- Always thoroughly clean the separating surfaces on the housing before applying the Sealant .
- Apply the Sealing Compound - AMV 188 200 03- evenly and not too thick.
- Do not allow any Sealing Compound to get into the ventilation holes.

Protected by copyright. Copying for private or commercial purposes, in part or in whole, is not permitted unless authorised by Volkswagen AG. Volkswagen AG does not guarantee or accept any liability for the information in this document. Copyright by Volkswagen AG.

## Fasteners

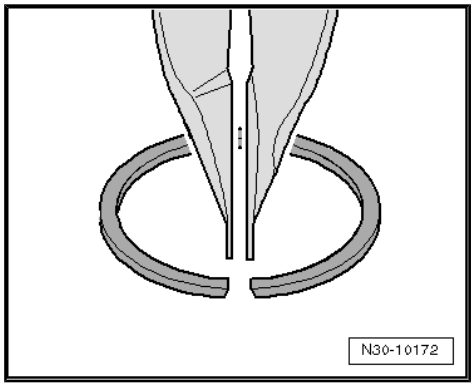


- Do not stretch the circlips.
- Installation position for some of the circlips: The circlip is »narrower at the top« and so is its installation position. This makes it easier for the pliers to grab the circlip when removing and installing it.
- Replace damaged or overstretched locking ring after removing.
- The circlips must rest at the bottom of the groove.
- Replace the adapter sleeves. Installation position: the slot -A- should align with the line of force -arrow-.

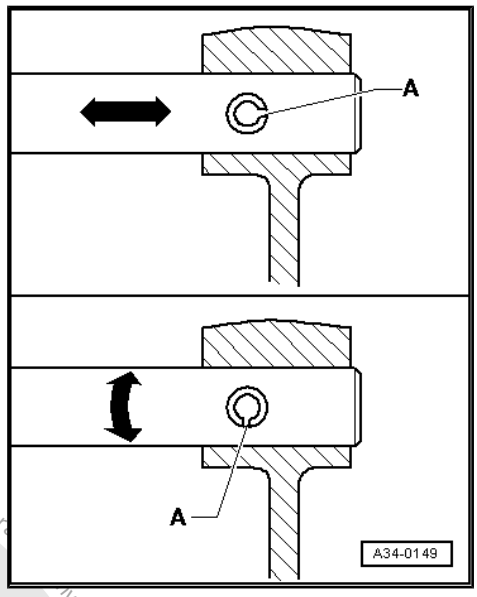


Protected by copyright. Copying for private or commercial purposes, in part or in whole, is not permitted unless authorised by Volkswagen AG. Volkswagen AG does not guarantee or assume any liability with respect to the correctness of information in this document. Copyright by Volkswagen AG.

### Bolts and Nuts

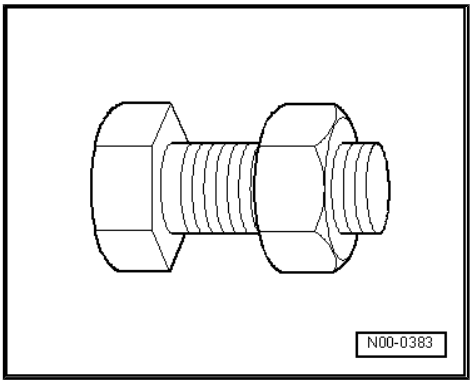


- Always loosen or tighten bolts and nuts on covers and housings diagonally with a tightening sequence.
- Especially delicate parts, such as clutch pressure plates, must not be distorted. Loosen and tighten bolts and nuts in stages in a diagonal sequence.
- The tightening specifications stated apply to non-oiled nuts and bolts.
- Replace self-locking nuts and bolts after removing them.
- Make sure the contact surfaces and visible surfaces on the nuts and bolts are waxed after assembling.
- Use a wire brush to clean the threads of the bolts that were installed with locking fluid. Then insert the bolts with Locking Fluid - AMV 185 101 A1- .
- If self-locking bolts were installed or if regular bolts were installed with locking fluid, then the threaded holes must be cleaned, for example with a thread tap. Otherwise the bolts could shear the next time they are removed.
- Please make sure that the thread pitch is correct so that the proper thread cutter is used during cleaning, and the thread does not get damaged.

### Bearings

- Insert the bearings with transmission fluid.
- Install the new tapered roller bearings. It is not necessary to oil them.
- Install needle bearings with lettered side (thicker metal) racing the fitting tool.
- Replace all the tapered roller bearings that are on the same shaft. Use tapered roller bearings from the same manufacturer.
- To install, warm the inner races/tapered roller bearing to approximately 100 °C (212 °F) with -VAS6414- .
- Do not interchange outer and inner bearing races with those from other bearing of the same size. The bearings are paired.

### Adjusting Shims

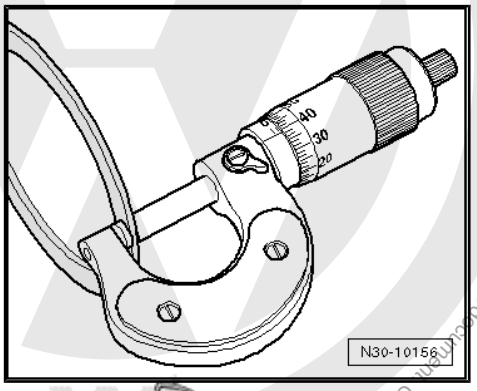


- Measure the shims at several locations with a micrometer caliper. It is possible to measure the necessary shim thickness by the different tolerances.
- Check for burrs and damage.
- Only install perfect shims.

### Synchronizer Rings

Protected by copyright. Copying for private or commercial purposes, in part or in whole, is not permitted unless authorised by Volkswagen AG. Volkswagen AG does not guarantee or accept any liability with respect to the correctness of information in this document. Copyright by Volkswagen AG.

- Do not interchange them. When reusing synchronizer rings, always install to the same gear wheel.
- Check for wear and replace if necessary.
- Check the grooves -arrow 1- on the synchronizer ring -A- and the inner race for flat areas (grooves are worn).
- The coating on the synchronizer rings must not be damaged.
- If an intermediate ring -B- is installed, check the intermediate ring on the outer contact surface -arrow 2- and inner contact surface -arrow 3- for grooves, scoring and blue coloring (from overheating).
- Check taper of drive gear for grooves and scoring.
- Coat the synchronizing with transmission fluid and then install.

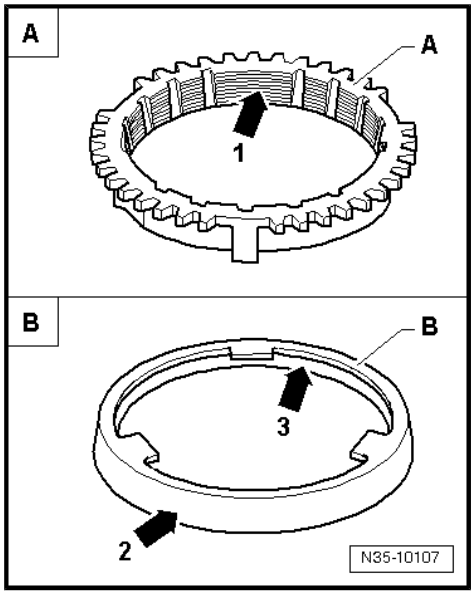


**Toothed Gears, Synchronizer Hubs**

- Clean before installing. Warm using the -VAS6414- to a maximum 100 °C (212 °F).
- Pay attention to the installed location.

**Selector Gears**

- After assembling, check the selector gears for minimum axial clearance and ease of movement.

**Clutch**

- Do not tilt the clutch pressure plate. Loosen and tighten it diagonally and in small steps.
- To reduce odor caused by a burnt clutch, thoroughly clean the clutch housing and the flywheel running surface with a clean cloth.

## 3.2 Contact Corrosion

- The transmission housing and clutch housing consist of a magnesium alloy.
- Bolts and other components, which come into direct contact with the transmission, have a surface coating adapted for this.
- Contact corrosion occurs when incorrect components (bolts, nuts, washers, etc.) are used. The transmission housing and clutch housing are damaged.
- Only install components provided in the Parts Catalog.

Protected by copyright. Copying for private or commercial purposes, in part or in whole, is not permitted unless authorised by Volkswagen AG. Volkswagen AG does not guarantee or accept any liability with respect to the correctness of information in this document. Copyright by Volkswagen AG.

# 4 Technical Data

⇒ "4.1 Transmission/Engine Allocation", page 7

⇒ "4.2 Capacities", page 8

⇒ "4.3 Gear Ratio Calculation", page 8

## 4.1 Transmission/Engine Allocation

⇒ "4.1.1 Transmission/Engine Allocation, Golf", page 7

⇒ "4.1.2 Transmission/Engine Allocation, Golf Wagon", page 7

### 4.1.1 Transmission/Engine Allocation, Golf

| Manual Transmission | | 6-Speed 02Q | |
|---|---|---|---|
| **Codes** | | **NBL** | **PFN** |
| Manufactured | from<br>through | 06/2014 | 03/2014 |
| Allocation | Engine | 2.0L - 155 KW | 2.0L - 110 KW<br>Turbo diesel |
| Ratio<br>Z1 : Z2 | Final drive I [1] | 68 : 21 = 3.238 | 69 : 20 = 3.450 |
| | Final drive II [2] | 68 : 26 = 2.615 | 69 : 25 = 2.760 |
| Driveshaft Flange Diameter | | 107 mm | 107 mm |

[1] Final drive for 1st through 4th gear
[2] Final drive for 5th gear, 6th gear and reverse gear
- Refer to the Parts Catalog for the following information:

♦ The individual gear ratios

♦ Transmission fluid specification

♦ Clutch plate and pressure plate allocation

### 4.1.2 Transmission/Engine Allocation, Golf Wagon

| Manual Transmission | | 6-Speed 02Q | |
|---|---|---|---|
| **Codes** | | **PFN** | |
| Manufactured | from<br>through | 03/2014 | |
| Allocation | Engine | 2.0L - 110 KW<br>Turbo diesel | |
| Ratio<br>Z1 : Z2 | Final drive I [1] | 69 : 20 = 3.450 | |
| | Final drive II [2] | 69 : 25 = 2.760 | |
| Driveshaft Flange Diameter | | 107 mm | |

[1] Final drive for 1st through 4th gear
[2] Final drive for 5th gear, 6th gear and reverse gear
- Refer to the Parts Catalog for the following information:

♦ The individual gear ratios

♦ Transmission fluid specification

♦ Clutch plate and pressure plate allocation

Protected by copyright. Copying or private or commercial purposes in part or in whole is not permitted unless authorised by Volkswagen AG. Volkswagen AG does not guarantee or accept any liability with respect to the correctness of information in this document. Copyright by Volkswagen AG.

Protected by copyright. Copyright by Volkswagen AG. Volkswagen AG does not guarantee or accept any liability with respect to the correctness of information in this document. Copyright by Volkswagen AG.

## 4.2 Capacities

| | |
|---|---|
| Manual Transmission Capacity | Refer to ⇒ Fluid Capacity Tables; Rep. Gr. 03 |

## 4.3 Gear Ratio Calculation

**Example**

| | 6. Gear | Final drive |
|---|---|---|
| Drive gear | $ZG_1 = 46$ | $ZA_1 = 24$ |
| Driven gear | $ZG_2 = 33$ | $ZA_2 = 70$ |

$i = Z_2 : Z_1$ ($Z_1$ = number of teeth on the drive gear, $Z_2$ = number of teeth on the driven gear)

$i_G$ = gear ratio = $ZG_2 : ZG_1 = 33 : 46 = 0.717$

$i_A$ = axle ratio = $ZA_2 : ZA_1 = 70 : 24 = 2.917$

$i_{total}$ = total ratio = $i_G \times i_A = 0.717 \times 2.917 = 2.091$

# 5 Overview - Powertrain

⇒ “5.1 Overview - Powertrain, Front Wheel Drive”, page 9

## 5.1 Overview - Powertrain, Front Wheel Drive

### Name

The -arrows- point in the direction of travel.

1 - Engine

2 - Clutch

3 - Manual Transmission

4 - Input Shaft

5 - 5th, 6th and Reverse Gear Output Shaft

6 - 1st through 4th Gear Output Shaft

7 - Differential

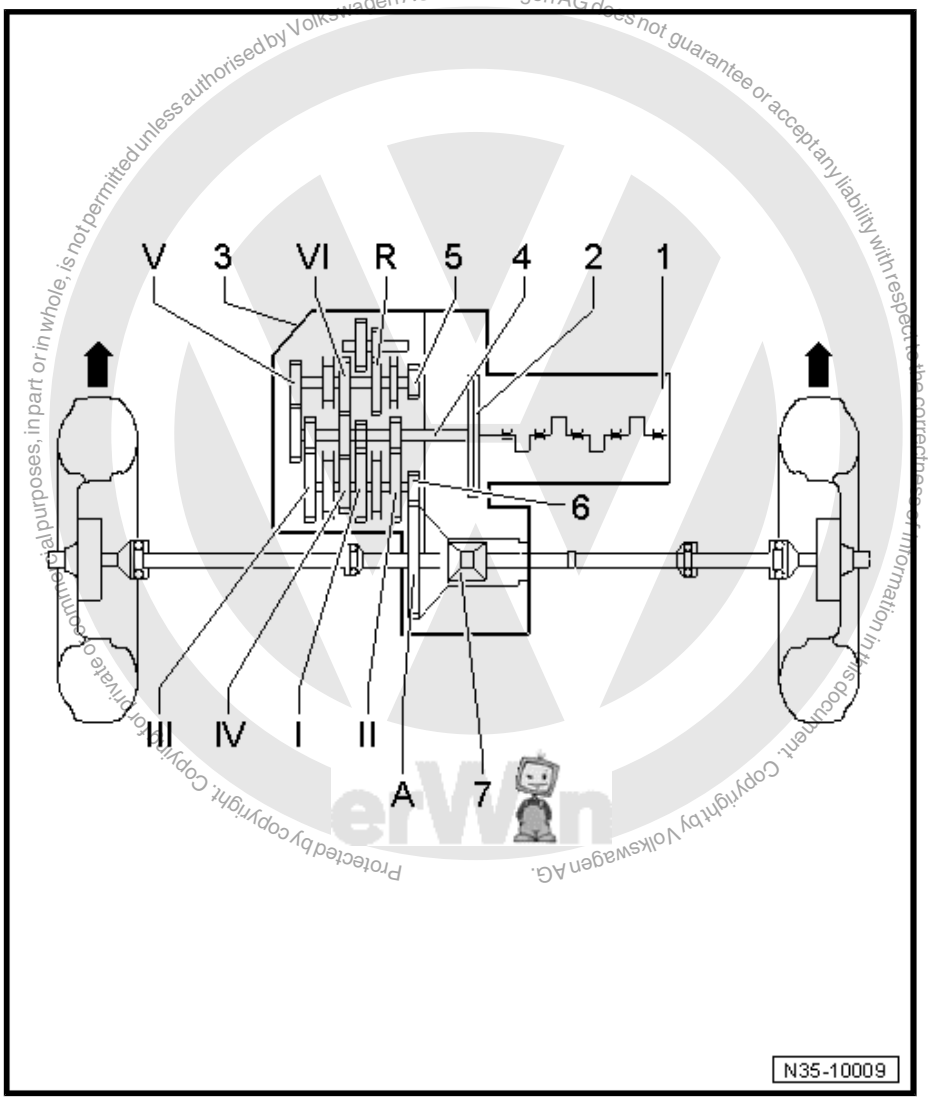


### Ratio

The -arrows- point in the direction of travel.

I - 1st Gear

II - 2nd Gear

III - 3rd Gear

IV - 4th Gear

V - 5th Gear

VI - 6th Gear

R - Reverse Gear

A - Final Drive

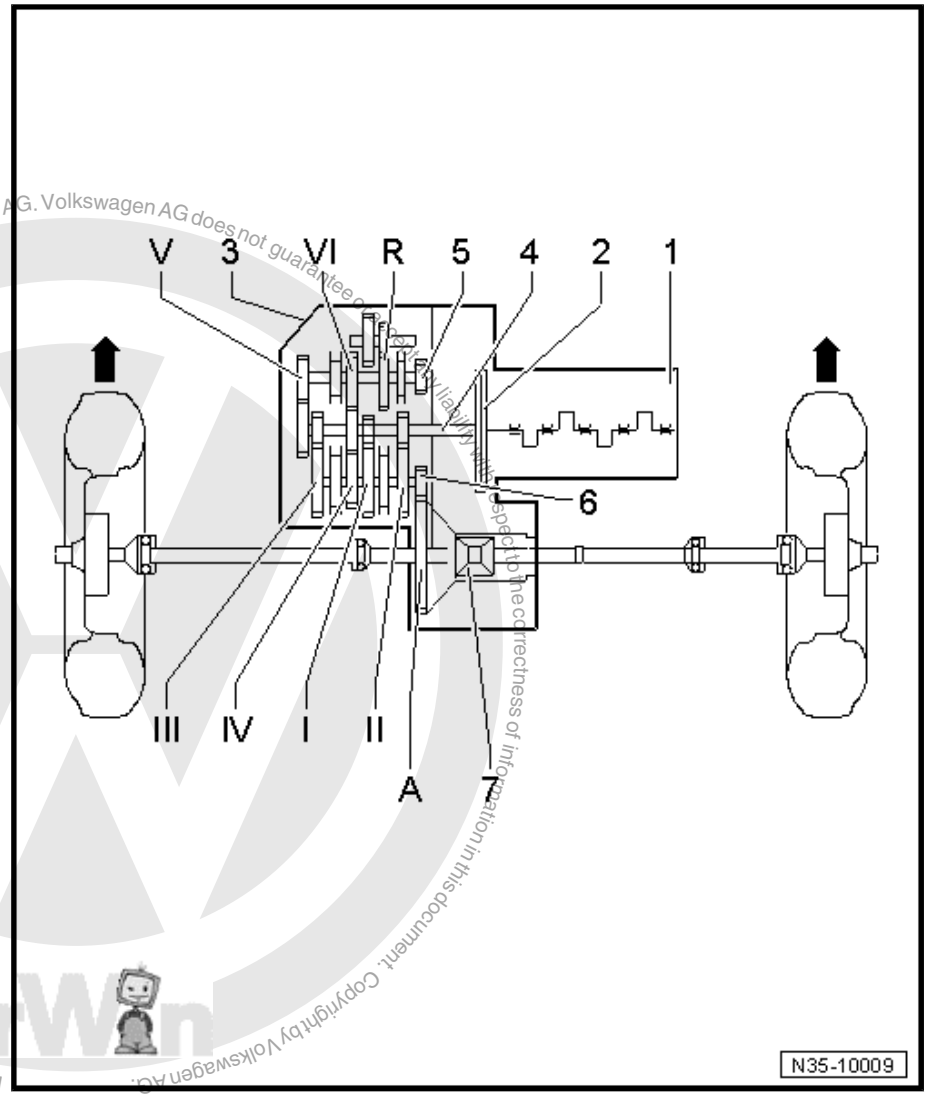


Protected by copyright. Copying for private or commercial purposes, in part or in whole, is not permitted unless authorised by Volkswagen AG. Volkswagen AG does not guarantee or assume any liability with respect to the correctness of information in this document. Copyright by Volkswagen AG.

Volkswagen AG. Volkswagen AG does not guarantee or accept any liability with respect to the corre
ivate or commercial purposes, in part or in whole, is not permitted unless authorised by

# 6 Electrical Components

⇒ “6.1 Overview - Electrical Components Location”, page 11

## 6.1 Overview - Electrical Components Location

⇒ “6.1.1 Overview - Electrical Components Location, Manual Transmission”, page 11

⇒ “6.1.2 Overview - Electrical Components Location, Clutch Mechanism”, page 11

### 6.1.1 Overview - Electrical Components Location, Manual Transmission

**1 - Transmission Neutral Position Sensor - G701-**

- ❑ Installed location: in the area of the shift unit under the selector shaft bracket.
- ❑ Removing and installing. Refer to ⇒ “5.3 Overview - Transmission Housing and Selector Mechanism”, page 111 .

**2 - Back-Up Lamp Switch - F4-**

- ❑ Installed location: In the area of the shift unit under the selector shaft bracket.
- ❑ Removing and installing. Refer to ⇒ “5.3 Overview - Transmission Housing and Selector Mechanism”, page 111 .

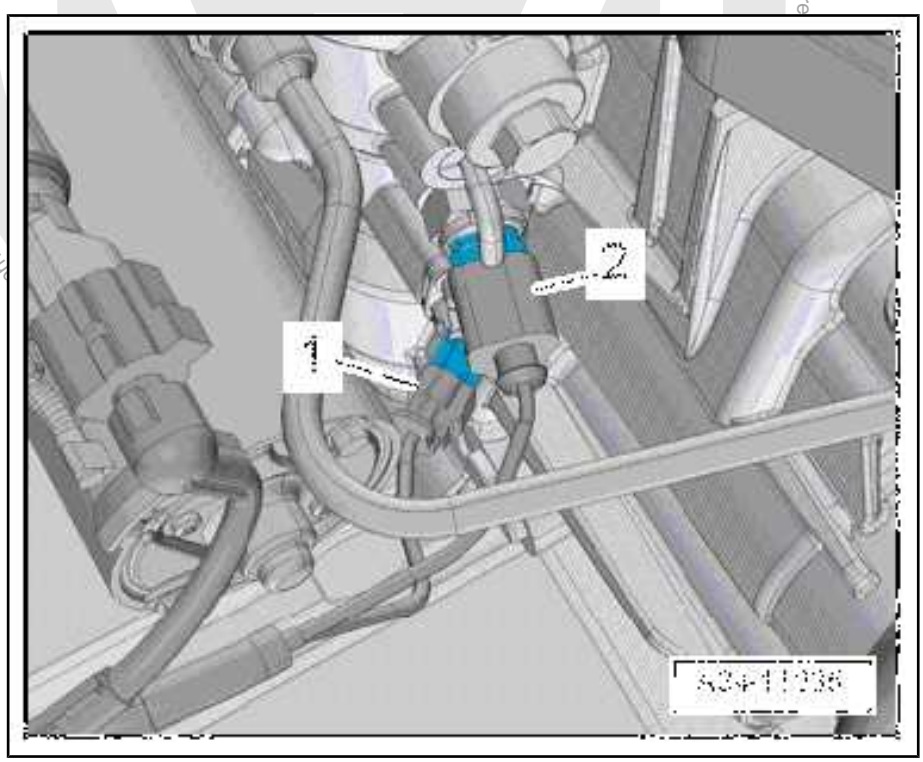


### 6.1.2 Overview - Electrical Components Location, Clutch Mechanism

**Clutch Position Sensor - G476- -arrow-**

Installed location: in the passenger compartment on the clutch master cylinder.

Clutch Position Sensor - G476- , removing and installing. Refer to ⇒ “1.15 Clutch Position Sensor G476 , Removing and Installing”, page 37 .

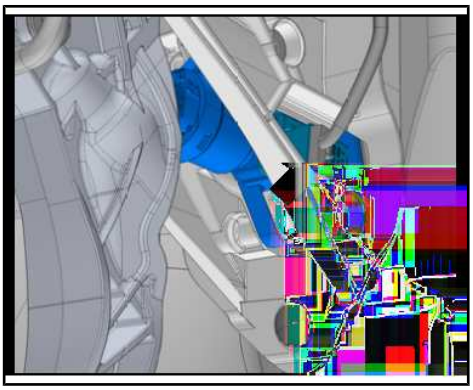

# 7 Special Tools

**Special tools and workshop equipment required**

- Inductive Heater - VAS6414-

Protected by copyright. Copying for private or commercial purposes, in part or in whole, is not permitted unless authorised by Volkswagen AG. Volkswagen AG does not guarantee or accept any liability with respect to the correctness of information in this document. Copyright by Volkswagen AG.

# 30 – Clutch

## 1 Clutch Mechanism

⇒ “1.1 Overview - Component Location, Clutch Mechanism”, page 13

⇒ “1.2 Overview - Pedal Assembly”, page 15

⇒ “1.3 Overview - Clutch Hydraulics”, page 17

⇒ “1.4 Overview - Clutch Release Mechanism”, page 21

⇒ “1.5 Over-Center Spring, Removing and Installing”, page 22

⇒ “1.6 Return Spring, Removing and Installing”, page 24

⇒ “1.7 Clutch Pedal, Removing and Installing”, page 27

⇒ “1.8 Mounting Bracket, Removing and Installing”, page 28

⇒ “1.9 Bearing Bushing, Removing and Installing”, page 32

⇒ “1.10 Clutch Master Cylinder, Removing and Installing”, page 32

⇒ “1.11 Clutch Slave Cylinder with Release Bearing, Removing and Installing”, page 33

⇒ “1.12 Clutch Mechanism Lines, Removing and Installing”, page 34

⇒ “1.13 Bleeder, Removing and Installing”, page 36

⇒ “1.14 Clutch Master and Clutch Slave Cylinder, Checking”, page 36

⇒ “1.15 Clutch Position Sensor G476 , Removing and Installing”, page 37

⇒ “1.16 Clutch Mechanism, Bleeding”, page 37

⇒ “1.17 Clutch Release Mechanism, Servicing”, page 38

### 1.1 Overview - Component Location, Clutch Mechanism

Protected by copyright. Copyright by Volkswagen AG. Volkswagen AG does not guarantee or accept any liability with respect to the correctness of information in this document. Copyright by Volkswagen AG. Copying for private or commercial purposes, in part or in whole, is not permitted unless authorised by Volkswagen AG.

I - Refer to
⇒ “1.2 Overview - Pedal Assembly”, page 15

II - Refer to
⇒ “1.3.1 Overview - Clutch Hydraulics”, page 17

III - Refer to
⇒ “1.3.2 Overview - Clutch Hydraulics, RHD”, page 19

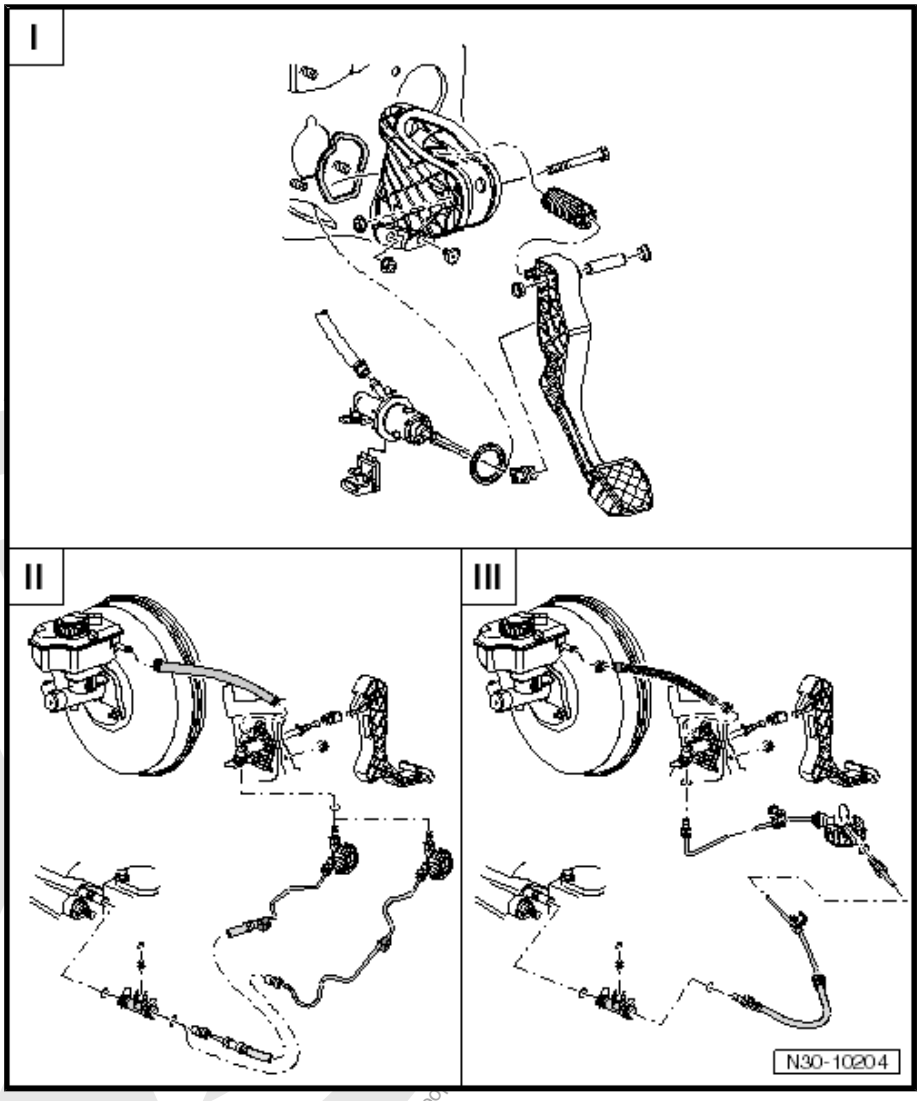


Protected by copyright. Copying for private or commercial purposes, in part or in whole, is not permitted unless authorised by Volkswagen AG. Copyright by Volkswagen AG.

## 1.2 Overview - Pedal Assembly

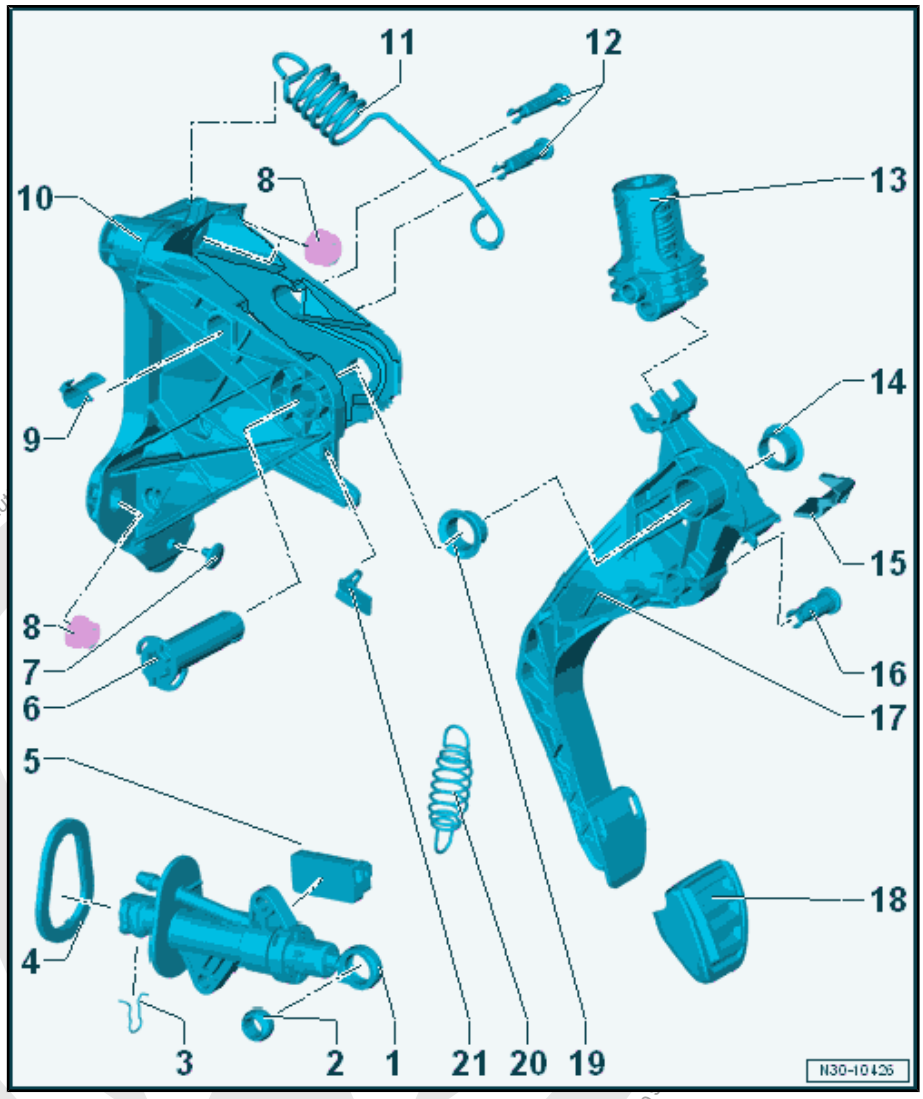


**1 - Clutch Master Cylinder**

- ❑ Removing and installing. Refer to ⇒ "1.10 Clutch Master Cylinder, Removing and Installing", page 32 .

**2 - Bearing Bushing**

- ❑ Removing and installing. Refer to ⇒ "1.9 Bearing Bushing, Removing and Installing", page 32 .
- ❑ Do not lubricate

**3 - Clamp**

- ❑ The clamp must be removed in order to remove/install the hose/line assembly

**4 - Seal**

- ❑ Self-adhesive
- ❑ Replace after removing the clutch master cylinder
- ❑ Glue to clutch master cylinder

**5 - Clutch Position Sensor - G476-**

- ❑ Can be checked in `Guided Fault Finding` using Vehicle Diagnosis Tester
- ❑ Allocation. Refer to the Parts Catalog.
- ❑ Removing and installing. Refer to ⇒ "1.15 Clutch Position Sensor G476 , Removing and Installing", page 37 .

**6 - Bearing Axle**

- ❑ Replace after removing
- ❑ Do not lubricate

**7 - Rubber Stop**

**8 - Nut**

- ❑ 25 Nm
- ❑ Replace after removing
- ❑ Quantity: 3
- ❑ Self-locking
- ❑ For the mounting bracket to the bulkhead

**9 - Bearing Shell**

- ❑ Quantity: 2
- ❑ Installed on both sides
- ❑ Installed in connection with over-center spring only
- ❑ Do not lubricate

Protected by copyright. Copying for private or commercial purposes, in part or in whole, is not permitted unless authorized. Copyright by Volkswagen AG.

10 - Bracket

- ❑ For the clutch pedal
- ❑ Removing and installing. Refer to ⇒ “1.8 Mounting Bracket, Removing and Installing”, page 28 .
- ❑ Use a Piston Pin Drift - VW207- to drive the bushings into the holes for the mounting bracket pins on the bulkhead.

11 - Return Spring

- ❑ Installed depending on the date of manufacture
- ❑ Removing and installing. Refer to ⇒ “1.6 Return Spring, Removing and Installing”, page 24 .
- ❑ Do not grease the mount on the bracket.

12 - Mounting Pin

- ❑ For the clutch master cylinder
- ❑ Replace after removing
- ❑ Do not lubricate

13 - Over-Center Spring

- ❑ Installed depending on the date of manufacture
- ❑ There are different versions. For the correct allocation. Refer to the Parts Catalog.
- ❑ Removing and installing. Refer to ⇒ “1.5 Over-Center Spring, Removing and Installing”, page 22 .
- ❑ Do not lubricate

14 - Bearing Bushing

- ❑ Do not lubricate

15 - Slide Bushing

- ❑ Installed depending on the date of manufacture
- ❑ For return spring mounting
- ❑ Install on clutch pedal
- ❑ Lubricate to the return spring mount
- ❑ Grease. Refer to the Parts Catalog.

16 - Mounting Pin

- ❑ For plunger/clutch master cylinder
- ❑ Replace after removing
- ❑ Do not lubricate

17 - Clutch Pedal

- ❑ Removing and installing. Refer to ⇒ “1.7 Clutch Pedal, Removing and Installing”, page 27 .
- ❑ Do not lubricate

18 - Pedal Rubber

19 - Bearing Bushing

- ❑ Do not lubricate

20 - Tension Spring

- ❑ For the clutch pedal
- ❑ Installed depending on the date of manufacture
- ❑ Removing and installing over-center spring. Refer to ⇒ “1.5 Over-Center Spring, Removing and Installing”, page 22 .

21 - Damping Element

- ❑ Installed in connection with tension spring only
- ❑ Do not lubricate

Protected by copyright. Copying for private or commercial purposes, in part or in whole, is not permitted unless authorised by Volkswagen AG. Volkswagen AG does not guarantee or accept any liability with respect to the correctness of information in this document. Copyright by Volkswagen AG.

## 1.3 Overview - Clutch Hydraulics

⇒ “1.3.1 Overview - Clutch Hydraulics”, page 17

⇒ “1.3.2 Overview - Clutch Hydraulics, RHD”, page 19

### 1.3.1 Overview - Clutch Hydraulics

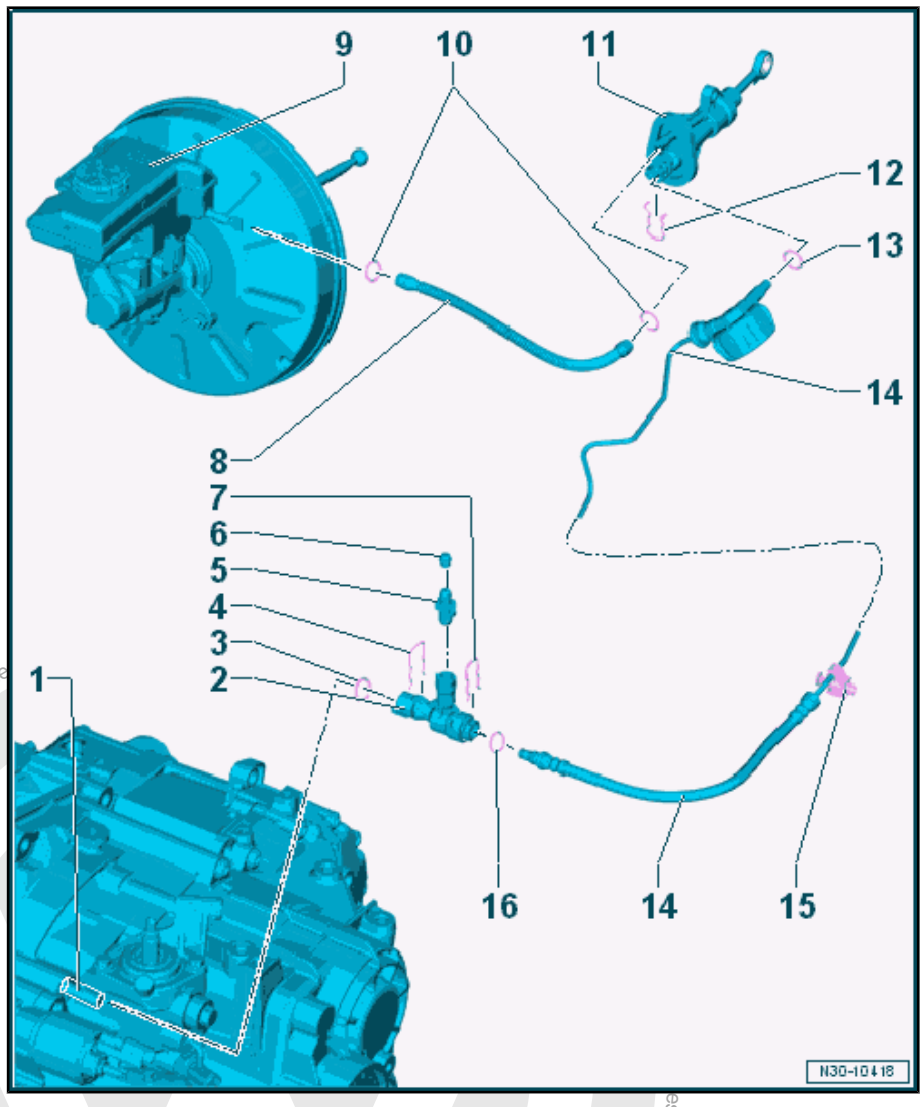


**1 - Clutch Slave Cylinder**

- ❑ The gasket can only be replaced when the transmission is removed.
- ❑ Removing and installing. Refer to ⇒ “1.11 Clutch Slave Cylinder with Release Bearing, Removing and Installing”, page 33 .

**2 - Bleeder**

**3 - Seal/O-Ring**

- ❑ Replace if damaged
- ❑ Install on the line connection
- ❑ Install with brake fluid
- ❑ Seals/O-rings suitable for the line connection material. Refer to ⇒ Fig. ““Sealing Rings/ O-Rings for Hose/Line Assembly or Pipe”“, page 19
- ❑ Allocation. Refer to the Parts Catalog.

**4 - Clamp**

- ❑ The clamp must be removed in order to remove/install the bleeder

**5 - Breather Valve**

- ❑ With hex fitting: 4.5 Nm
- ❑ Bleed clutch mechanism. Refer to ⇒ “1.16 Clutch Mechanism, Bleeding”, page 37 .
- ❑ Flat on both sides: Seal off to stop

**6 - Dust Cap**

**7 - Clamp**

- ❑ The clamp must be removed in order to remove/install the hose/line assembly

**8 - Supply Hose**

**9 - Brake Fluid Reservoir**

**10 - Seals**

- ❑ Must be located inside the supply hose.

**11 - Clutch Master Cylinder**

- ❑ Removing and installing. Refer to ⇒ “1.10 Clutch Master Cylinder, Removing and Installing”, page 32 .

Protected by copyright. Copying for private or commercial purposes, in part or in whole, is not permitted unless authorised by Volkswagen AG. Copyright by Volkswagen AG.

**12 - Clamp**

- ❑ The clamp must be removed in order to remove/install the hose/line assembly

**13 - Seal/O-Ring**

- ❑ Replace if damaged
- ❑ Install on the line connection
- ❑ Install with brake fluid
- ❑ Seals/O-rings suitable for the line connection material. Refer to
  ⇒ Fig. ""Sealing Rings/O-Rings for Hose/Line Assembly or Pipe"" , page 19
- ❑ Allocation. Refer to the Parts Catalog.

**14 - Hose/Line Assembly**

- ❑ With frequency modulator
- ❑ Not on all vehicles
- ❑ Allocation. Refer to the Parts Catalog.
- ❑ Removing and installing. Refer to
  ⇒ "1.12 Clutch Mechanism Lines, Removing and Installing", page 34

**15 - Bracket**

- ❑ For hose/line assembly

**16 - Seal/O-Ring**

- ❑ Replace if damaged
- ❑ Install on the line connection
- ❑ Install with brake fluid
- ❑ Seals/O-rings suitable for the line connection material. Refer to
  ⇒ Fig. ""Sealing Rings/O-Rings for Hose/Line Assembly or Pipe"" , page 19
- ❑ Allocation. Refer to the Parts Catalog.

Protected by copyright. Copyright by Volkswagen AG. Volkswagen AG does not guarantee or accept any liability with respect to the correctness of information in this document. Copying for private or commercial purposes, in part or in whole, is not permitted unless authorised by Volkswagen AG.

## Disconnect and Connect Clutch Mechanism Wires

### Separating

– Open the clip -3- with a screwdriver and remove the hose/line assembly -1- from the connection -4-.

### Connecting

**Note**

- ♦ *An O-ring can also be installed instead of a seal -2-. Refer to ⇒ Fig. ""Sealing Rings/O-Rings for Hose/Line Assembly or Pipe"" , page 19 .*
- ♦ *Replace the damaged seal -2-.*

– Press in the hose/line assembly -1- at the connection -4- until the clip -3- engages audibly.

– Pull on the hose/line assembly to make sure it is secure.

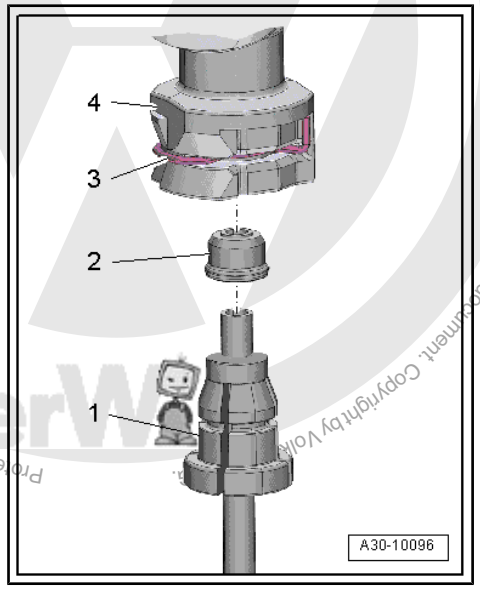

**Sealing Rings/O-Rings for Hose/Line Assembly or Pipe**

| Item | Line Connection Version |
|---|---|
| 1 | Line connection with a groove all the way around -arrow 1- |
| 2 | Line connection with a shoulder -arrow 2- |
| 3 | Line connection with a shoulder -arrow 2- and with a groove all the way around -arrow 3- |

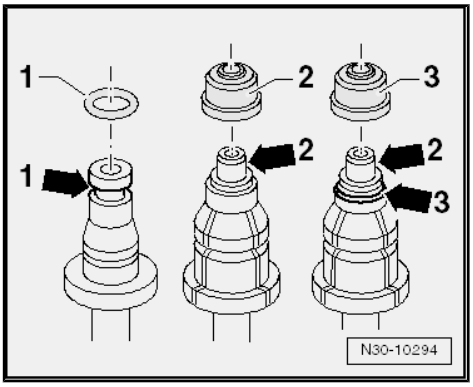


- The seal/O-ring must be installed in the groove -arrow 1- and -arrow 3-.

## 1.3.2 Overview - Clutch Hydraulics, RHD

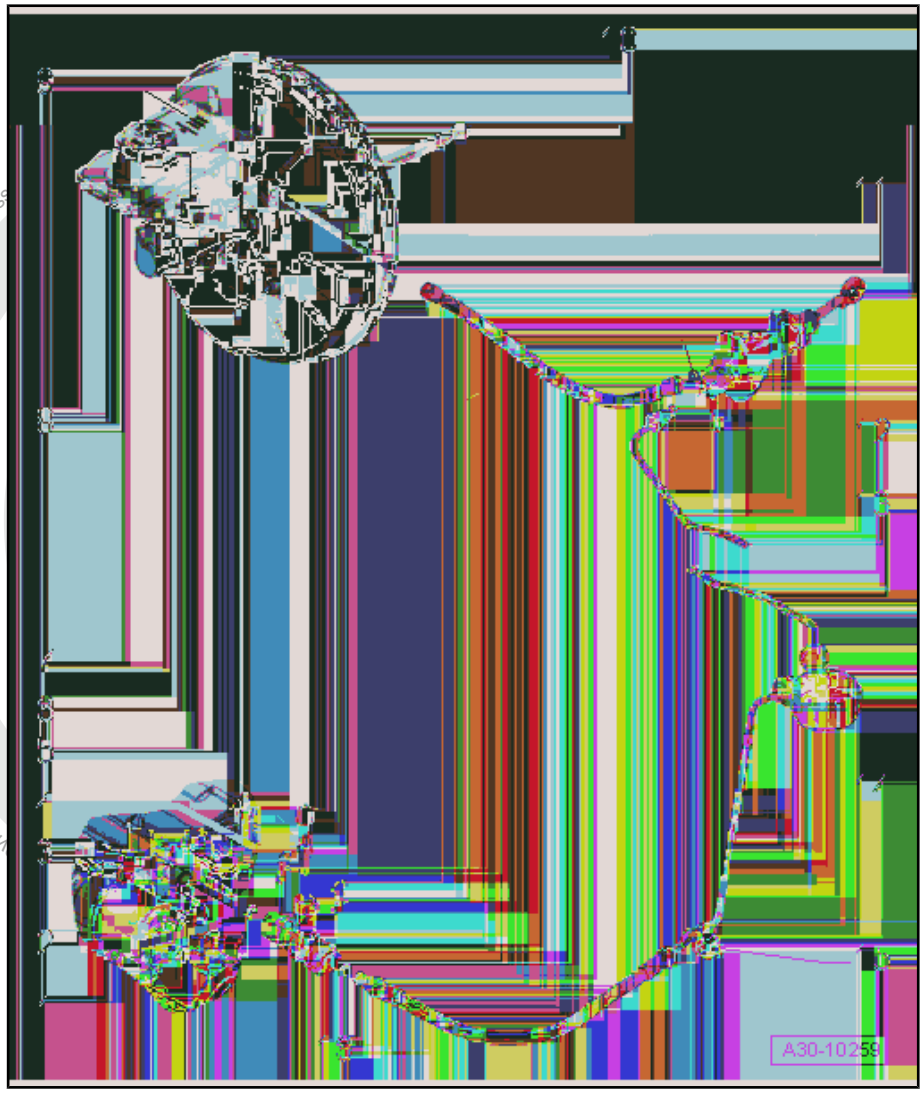


**1 - Bleeder**

**2 - Seal/O-Ring**

- ❑ Replace if damaged
- ❑ Install on the line connection
- ❑ Install with brake fluid
- ❑ Seals/O-rings suitable for the line connection material. Refer to ⇒ Fig. ""Sealing Rings/O-Rings for Hose/Line Assembly or Pipe"", page 19
- ❑ Allocation. Refer to the Parts Catalog.

**3 - Clutch Slave Cylinder**

- ❑ The gasket can only be replaced when the transmission is removed.
- ❑ Removing and installing. Refer to ⇒ "1.11 Clutch Slave Cylinder with Release Bearing, Removing and Installing", page 33 .

**4 - Clamp**

- ❑ The clamp must be removed in order to remove/install the hose/line assembly

**5 - Bleed Valve**

- ❑ Bleed clutch mechanism. Refer to ⇒ "1.16 Clutch Mechanism, Bleeding", page 37 .
- ❑ seal off. Refer to ⇒ "1.3.1 Overview - Clutch Hydraulics", page 17 .

**6 - Dust Cap**

**7 - Clamp**

- ❑ The clamp must be removed in order to remove/install the hose/line assembly

**8 - Supply Hose**

**9 - Brake Fluid Reservoir**

**10 - Seals**

- ❑ Must be located inside the supply hose.

**11 - Clutch Master Cylinder**

- ❑ Removing and installing. Refer to
  ⇒ “1.10 Clutch Master Cylinder, Removing and Installing”, page 32 .

**12 - Clamp**

- ❑ The clamp must be removed in order to remove/install the hose/line assembly

**13 - Seal/O-Ring**

- ❑ Replace if damaged
- ❑ Install on the line connection
- ❑ Install with brake fluid
- ❑ Seals/O-rings suitable for the line connection material. Refer to
  ⇒ Fig. ““Sealing Rings/O-Rings for Hose/Line Assembly or Pipe”“ , page 19
- ❑ Allocation. Refer to the Parts Catalog.

**14 - Hose/Line Assembly**

- ❑ With frequency modulator
- ❑ Not on all vehicles
- ❑ Allocation. Refer to the Parts Catalog.

**15 - Bracket**

- ❑ For hose/line assembly

**16 - Seal/O-Ring**

- ❑ Replace if damaged
- ❑ Install on the line connection
- ❑ Install with brake fluid
- ❑ Seals/O-rings suitable for the line connection material. Refer to
  ⇒ Fig. ““Sealing Rings/O-Rings for Hose/Line Assembly or Pipe”“ , page 19
- ❑ Allocation. Refer to the Parts Catalog.

Protected by copyright. Copying for private or commercial purposes, in part or in whole, is not permitted unless authorised by Volkswagen AG. Volkswagen AG does not guarantee or accept any liability with respect to the correctness of information in this document. Copyright by Volkswagen AG.

## 1.4 Overview - Clutch Release Mechanism

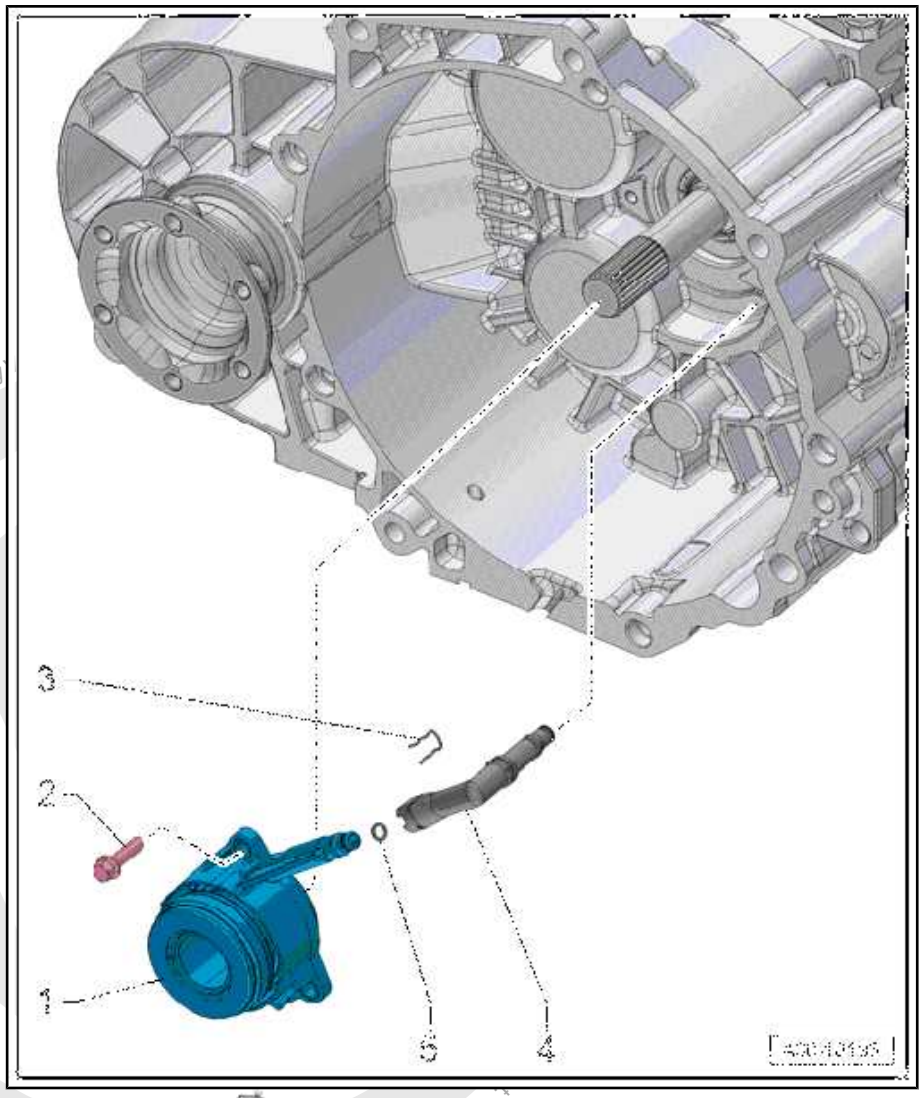


**1 - Clutch Slave Cylinder with Release Bearing**

- ❑ Must be replaced together because they are a single unit
- ❑ Do not wash the bearing, just wipe it off.
- ❑ Replace a loud bearing together with the clutch slave cylinder
- ❑ Removing and installing. Refer to ⇒ "1.11 Clutch Slave Cylinder with Release Bearing, Removing and Installing", page 33 .
- ❑ For release bearing with additional plastic washer. Refer to ⇒ Fig. ""Release Bearing with Additional Plastic Washer"", page 22 , pressure plate allocation. Refer to ⇒ Fig. ""Only for Release Bearings with Additional Plastic Washer; Where the Pressure Plate Diaphragm Springs -arrows- have a Slightly Lower Installation Height."", page 22
- ❑ Allocation. Refer to the Parts Catalog.

**2 - Bolt**

- ❑ For metal clutch slave cylinder (without locking fluid): 12 Nm
- ❑ For plastic clutch slave cylinder (with locking fluid): 15 Nm
- ❑ Replace after removing
- ❑ Quantity: 3
- ❑ Pay attention to the thread pitch on the bolt when cleaning the threaded hole in the clutch housing.
- ❑ Carefully tighten diagonally and in step so that the tabs on the clutch slave cylinder do not break

**3 - Clamp**

- ❑ To remove and install the line, remove the clip up to the stop
- ❑ Install until the clip engages audibly

**4 - Line**

- ❑ To the clutch master cylinder

**5 - O-Ring**

- ❑ Replace if damaged
- ❑ Install on the line connection
- ❑ Install with brake fluid
- ❑ Allocation. Refer to the Parts Catalog.

Protected by copyright. Copyright by Volkswagen AG.

**Release Bearing with Additional Plastic Washer**

Identified by the tabs -arrow- on the plastic washer.

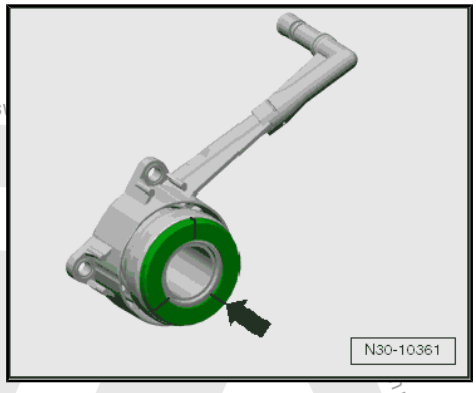


**Only for Release Bearings with Additional Plastic Washer; Where the Pressure Plate Diaphragm Springs -arrows- have a Slightly Lower Installation Height.**

- Install the release bearing with additional plastic washer and the pressure plate diaphragm spring with a slightly lower installation height.

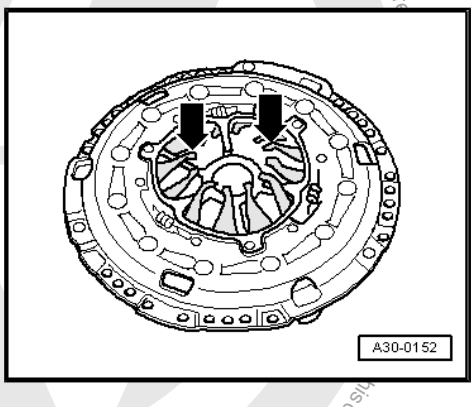


## 1.5 Over-Center Spring, Removing and Installing

**Removing**

– Move the driver seat as far back as possible.

– Move the steering wheel upward as far as possible. Use the entire steering column adjustment range.

**Vehicles with a Knee Airbag**

– Remove the driver side knee airbag -1-. Refer to ⇒ Body Interior; Rep. Gr. 69 ; Knee Airbags; Overview - Knee Airbag .

**Vehicles without Knee Airbag**

Disconnect the battery ground cable. Refer to ⇒ Electrical Equipment; Rep. Gr. 27 ; Battery; Battery, Disconnecting and Connecting .

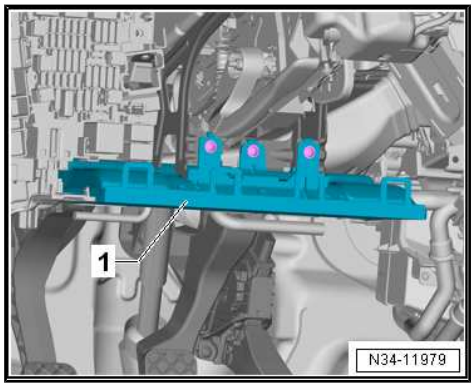


Protected by copyright. Copying for private or commercial purposes, in part or in whole, is not permitted unless authorised by Volkswagen AG. Volks
his document. Copyright by Volkswagen AG.

Continuation for All

– Remove driver side footwell vent -1-. Refer to ⇒ Heating, Ventilation and Air Conditioning; Rep. Gr. 87 ; Air Routing; Overview - Air Routing and Air Distribution in Passenger Compartment .

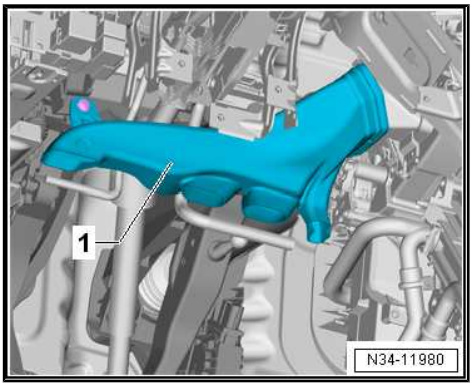


– Remove the Data Bus on Board Diagnostic Interface - J533- -1- from the bracket. Refer to ⇒ Electrical Equipment; Rep. Gr. 97 ; Control Modules; Component Location Overview - Control Modules and push it aside.

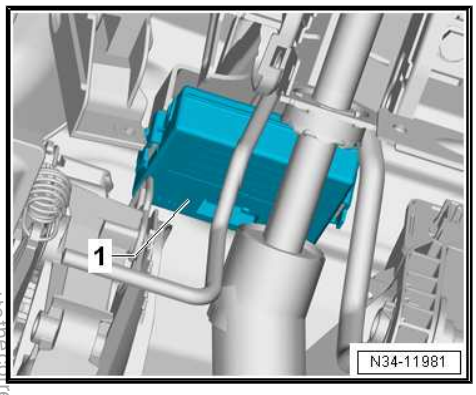


– Remove bolt -2-, unclip the crash bolster -1- and push aside.

– Press the retainers together in the direction of -arrows- and remove the mounting pin -1- for the valve lifter/clutch master cylinder to the right.

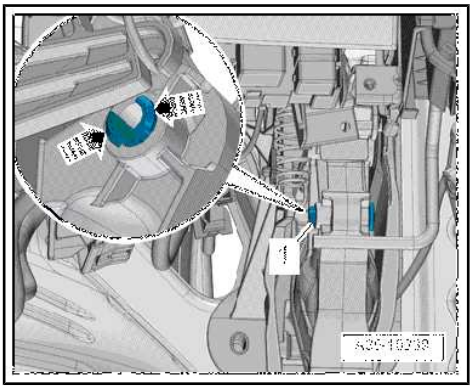


Copyrighted by Volkswagen AG. Volkswagen AG does not guarantee or accept any liability with respect to the correctness of information in this document. Copyright by Volkswagen AG. Copyrighted by copyright. Copying for private or commercial purposes, in part or in whole, is not permitted unless authorised by Volkswagen AG.

– If present, push the clutch pedal in the direction of -arrow B- to disengage and remove the tension spring -1-.

– Bring clutch pedal to the rest position.

– Pull the clutch pedal in the direction of -arrow A- and disengage and remove the over-center spring -2-.

**Installing**

Install in reverse order of removal. Note the following:

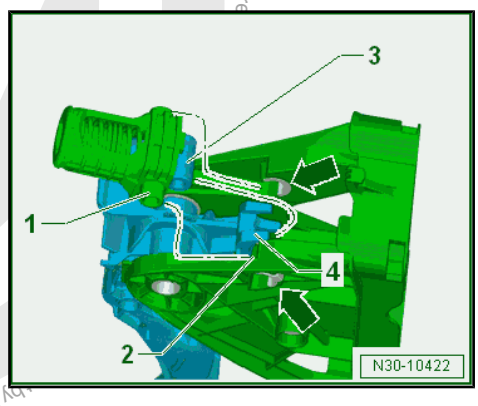


• The bearing shells -arrows- for the pins -1- are installed.

– Pull the clutch pedal into the passenger compartment in the direction of -arrow A- (refer to the previous illustration).

– Fit the pins -1- into the bracket mounts -2-.

– Fit the mounting -3- into the clutch pedal mount -4-.

• If the clutch pedal is pushed in the direction of -arrow B- (refer to the previous illustration), the over-center spring will fold in the direction of the bracket.

– Use a new mounting pin to connect the valve fitter/clutch master cylinder to the clutch pedal.

– Insert the crash bolster -1- and tighten the bolt -2-. Refer to ⇒ Body Interior; Rep. Gr. 70 ; Instrument Panel; Overview - Instrument Panel .

– Install the Data Bus on Board Diagnostic Interface - J533- . Refer to ⇒ Electrical Equipment; Rep. Gr. 97 ; Control Modules; Component Location Overview - Control Modules .

– Install the driver side footwell vent. Refer to ⇒ Heating, Ventilation and Air Conditioning; Rep. Gr. 87 ; Air Routing; Driver Side Footwell Vent, Removing and Installing .

**Vehicles with a Knee Airbag**

– Install the driver side knee airbag. Refer to ⇒ Body Interior; Rep. Gr. 69 ; Knee Airbags; Overview - Knee Airbag .

**Vehicles without Knee Airbag**

– Connect the battery. Refer to ⇒ Electrical Equipment; Rep. Gr. 27 ; Battery; Battery, Disconnecting and Connecting .

## 1.6 Return Spring, Removing and Installing

**Removing**

– Move the driver seat as far back as possible.

– Move the steering wheel upward as far as possible. Use the entire steering column adjustment range.

Protected by copyright. Copying for private or commercial purposes, in part or in whole, is not permitted unless authorised by Volkswagen AG. Volkswagen AG does not guarantee the

### Vehicles with a Knee Airbag

– Remove the driver side knee airbag -1-. Refer to ⇒ Body Interior; Rep. Gr. 69 ; Knee Airbags; Overview - Knee Airbag .

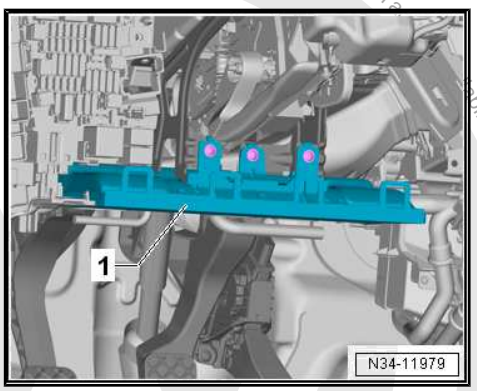


### Vehicles without Knee Airbag

Disconnect the battery ground cable. Refer to ⇒ Electrical Equipment; Rep. Gr. 27 ; Battery; Battery, Disconnecting and Connecting .

### Continuation for All

– Remove driver side footwell vent -1-. Refer to ⇒ Heating, Ventilation and Air Conditioning; Rep. Gr. 87 ; Air Routing; Overview - Air Routing and Air Distribution in Passenger Compartment .

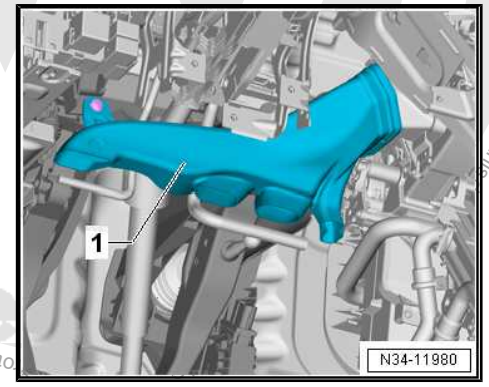


– Remove the Data Bus on Board Diagnostic Interface - J533- -1- from the bracket. Refer to ⇒ Electrical Equipment; Rep. Gr. 97 ; Control Modules; Component Location Overview - Control Modules and push it aside.

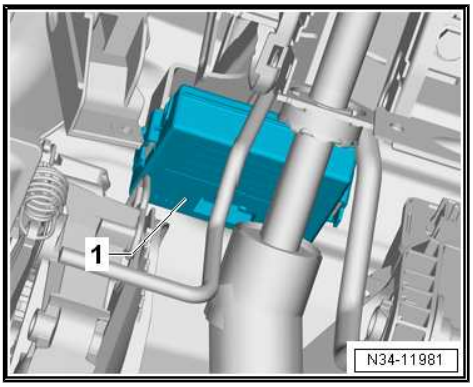


– Remove bolt -2-, unclip the crash bolster -1- and push aside.

Protected by copyright. Copying for private or commercial purposes, in part or in whole, is not permitted unless authorised by Volkswagen AG. Volkswagen AG does not guarantee or assume any liability with respect to the correctness of information in this

– Press the retainers together in the direction of -arrows- and remove the mounting pin -1- for the valve lifter/clutch master cylinder to the right.

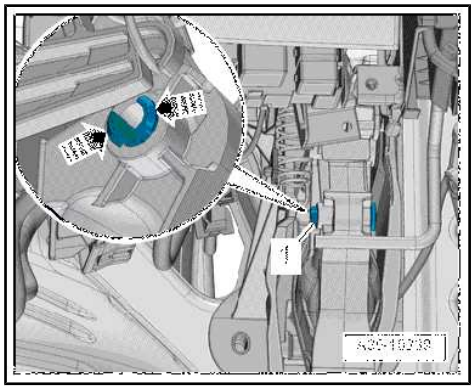


– Move the clutch pedal in the direction of -arrow-, unclip the return spring -1- and remove.

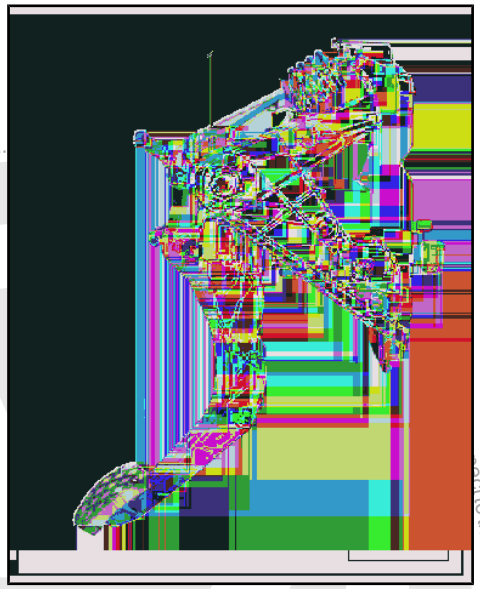

**Installing**

Install in reverse order of removal. Note the following:

- For the return spring -1- (refer to the previous illustration), slightly grease the following areas on the clutch pedal:
- Slide bushing on the return spring mounting area -A-:
- Ridge -B-
- Ridge -C-
- Grease specification. Refer to the Parts Catalog.

– Move the clutch pedal in the direction of -arrow- and engage the return spring -1- (refer to the previous illustration).

– Use a new mounting pin to connect the valve fitter/clutch master cylinder to the clutch pedal.

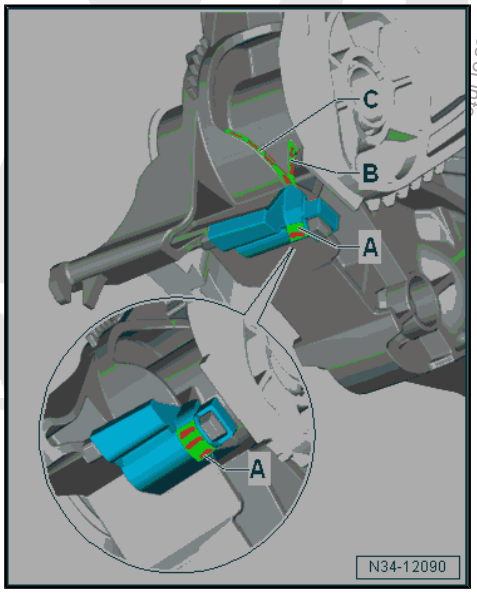


Protected by copyright. Copying for private or commercial purposes, in part or in whole, is not permitted unless authorised by Volkswagen AG.

– Insert the crash bolster -1- and tighten the bolt -2-. Refer to ⇒ Body Interior; Rep. Gr. 70 ; Instrument Panel; Overview - Instrument Panel .

– Install the Data Bus on Board Diagnostic Interface - J533- . Refer to ⇒ Electrical Equipment; Rep. Gr. 97 ; Control Modules; Component Location Overview - Control Modules .

– Install the driver side footwell vent. Refer to ⇒ Heating, Ventilation and Air Conditioning; Rep. Gr. 87 ; Air Routing; Overview - Air Routing and Air Distribution in Passenger Compartment .

**Vehicles with a Knee Airbag**

– Install the driver side knee airbag. Refer to ⇒ Body Interior; Rep. Gr. 69 ; Knee Airbags; Overview - Knee Airbag .

**Vehicles without Knee Airbag**

– Connect the battery. Refer to ⇒ Electrical Equipment; Rep. Gr. 27 ; Battery; Battery, Disconnecting and Connecting .

## 1.7 Clutch Pedal, Removing and Installing

**Removing**

– Move the driver seat as far back as possible.

– Move the steering wheel upward as far as possible. Use the entire steering column adjustment range.

– Remove the driver side footwell cover, if equipped. Refer to ⇒ Body Interior; Rep. Gr. 68 ; Storage Compartments/Covers .

– If installed near bracket: Remove the bracket -arrow- with the Parking Aid Control Module - J446- . Refer to ⇒ Electrical Equipment; Rep. Gr. 94 ; Parking Aid; Overview - Parking Aid and push aside.

– Remove return spring from bracket. Refer to ⇒ “1.6 Return Spring, Removing and Installing”, page 24 or over-center spring from bracket. Refer to ⇒ “1.5 Over-Center Spring, Removing and Installing”, page 22 .

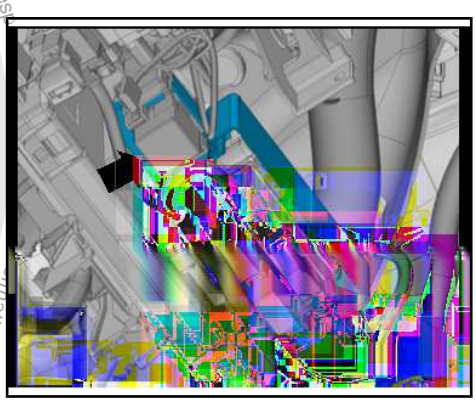

**Remove the Clutch Pedal Bearing Axle as Follows:**

Item -1- is a 14 mm internal socket wrench

A 14 mm hex socket wrench can also be used instead of a 14 mm internal socket wrench.

- The clutch pedal bearing axle needs to be turned all the way to the left, direction of -arrow-.

**The brackets -A- will be damaged.**

– Move the clutch pedal a little so that the bearing axle can be removed.

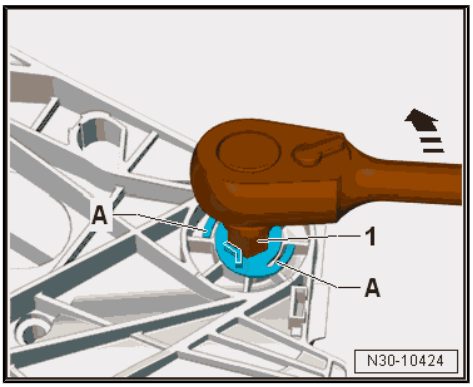


Volkswagen AG. Volkswagen AG does not guarantee or accept any liability with respect to the information in this document. Copying for private or commercial purposes, in part or in whole, is not permitted unless authorised by Volkswagen AG. Protected by copyright.

### Installing

Install in reverse order of removal. Note the following:

Item -1- is a 14 mm internal socket wrench

A 14 mm hex socket wrench can also be used instead of a 14 mm internal socket wrench.

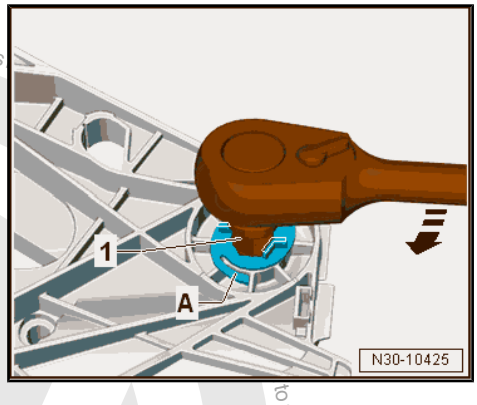


- Replace bearing axle after removing.

– Press on the clutch pedal a little and push the new bearing axle through all the way.

– Turn the bearing axle all the way to the right, in the direction of -arrow-.

- The retainers -A- must engage audibly.

– Install return spring in bracket. Refer to ⇒ “1.6 Return Spring, Removing and Installing”, page 24 , or over-center spring in bracket. Refer to ⇒ “1.5 Over-Center Spring, Removing and Installing”, page 22 .

– If removed: Install the bracket -arrow- with Parking Aid Control Module - J446- . Refer to ⇒ Electrical Equipment; Rep. Gr. 94 ; Parking Aid; Overview - Parking Aid .

– Install the driver side footwell cover, if removed. Refer to ⇒ Body Interior; Rep. Gr. 68 ; Storage Compartments/Covers .

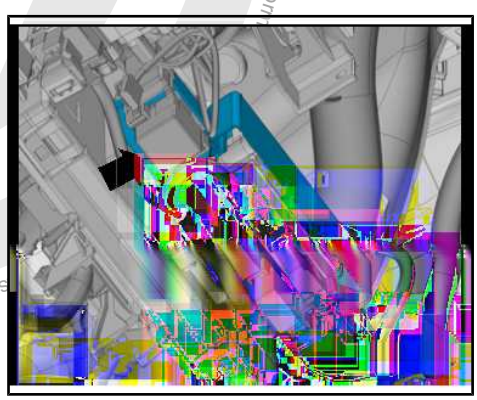

## 1.8 Mounting Bracket, Removing and Installing

### Special tools and workshop equipment required

- ♦ Sealing Tool - T10249-
- ♦ -T10249/1-
- ♦ Torque Wrench 1331 5-50Nm - VAG1331-
- ♦ Hose Clamps - Up To 25mm - 3094-

### Removing

– Move the driver seat as far back as possible.

– Move the steering wheel upward as far as possible. Use the entire steering column adjustment range.

Protected by copyright. Copying for private or commercial purposes, in part or in whole, is not permitted unless authorised by Volkswagen AG. Volkswagen AG does not guarantee or accept any liability with respect to the correctness of information in this document. Copyright by Volkswagen AG.

Protected by copyright. Copying for private or commercial purposes, in part or in whole, is not permitted unless authorised by Volkswagen AG. Volkswagen AG does not guarantee or accept any liability with respect to the correctness and completeness of this document.

### Vehicles with a Knee Airbag

– Remove the driver side knee airbag -1-. Refer to ⇒ Body Interior; Rep. Gr. 69 ; Knee Airbags; Overview - Knee Airbag .

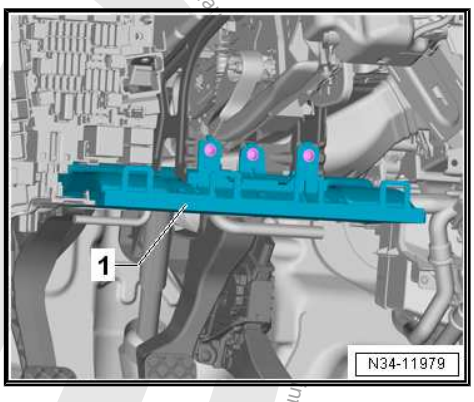


### Vehicles without Knee Airbag

Disconnect the battery ground cable. Refer to ⇒ Electrical Equipment; Rep. Gr. 27 ; Battery; Battery, Disconnecting and Connecting .

### Continuation for All

– Remove driver side footwell vent -1-. Refer to ⇒ Heating, Ventilation and Air Conditioning; Rep. Gr. 87 ; Air Routing; Overview - Air Routing and Air Distribution in Passenger Compartment .

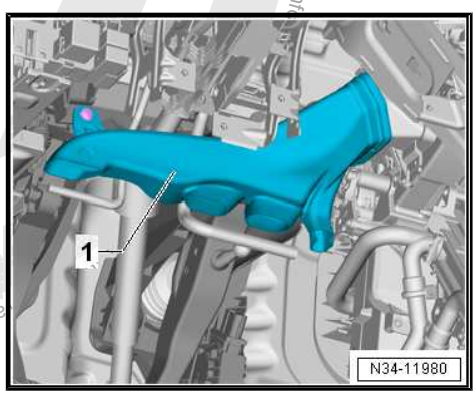


– Remove the Data Bus on Board Diagnostic Interface - J533- -1- from the bracket. Refer to ⇒ Electrical Equipment; Rep. Gr. 97 ; Control Modules; Component Location Overview - Control Modules and push it aside.

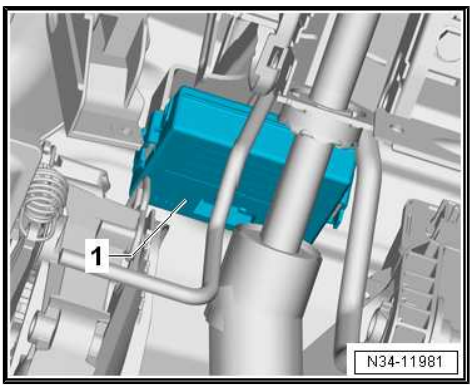

– Remove bolt -2-, unclip the crash bolster -1- and push aside.

– Remove the entire air filter housing if the clutch mechanism lines are not accessible.

**Vehicles with a Turbo Diesel Engine**

– Refer to ⇒ Engine Mechanical, Fuel Injection and Glow Plug; Rep. Gr. 23 ; Air Filter; Air Filter Housing, Removing and Installing .

**Vehicles with a Gasoline Engine**

– Refer to ⇒ Engine Mechanical, Fuel Injection and Ignition; Rep. Gr. 24 ; Air Filter; Air Filter Housing, Removing and Installing .

– Remove the battery. Refer to ⇒ Electrical Equipment; Rep. Gr. 27 ; Battery; Battery, Disconnecting and Connecting .

**Caution**

*Danger of leaking brake fluid.*

- *Be careful not to get any brake fluid on the longitudinal member or on the transmission when performing the following work. If it does, clean the area thoroughly.*
- *Place a lint-free cloth under the clutch master cylinder.*

– Unclamp the supply hose -2- to the clutch master cylinder with a -3094- .

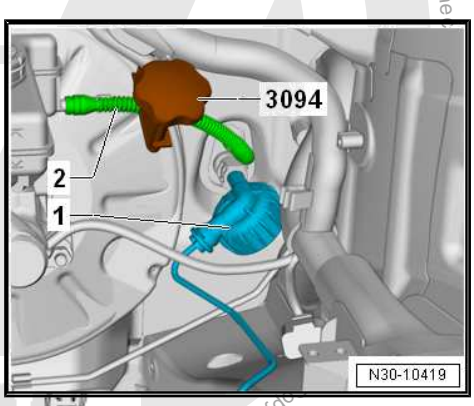


**Note**

- *A slight deformation of the supply hose remains after the -3094- have been unclamped.*
- *The supply hose is therefore not defective.*
- *After removing the -3094- , the supply hose must be formed back into its original shape.*

– Remove clip for hose/line assembly -1- all the way and remove hose/line assembly.

– Seal off openings.

– Remove the clutch master cylinder return hose and seal with the -T10249/1- .

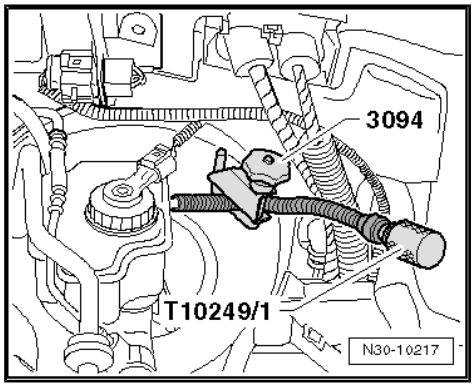


Protected by copyright. Copying for private or commercial purposes, in part or in whole, is not permitted unless authorised by Volkswagen AG. Volkswagen AG does not guarantee or accept any liability with respect to the
Copyright by Volkswagen AG.

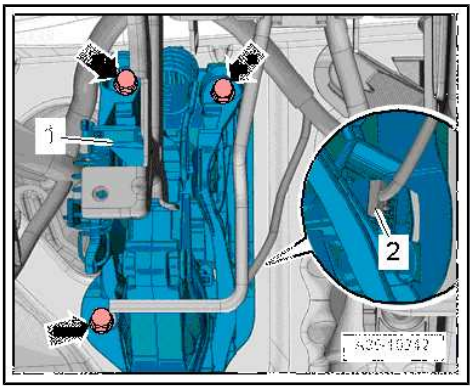


**Note**

*When working inside the footwell, cover the carpet with cloths to protect it from leaking brake fluid.*

– Disconnect the connector -2- from the Clutch Position Sensor - G476- .

– Remove nuts -arrows- and bracket -1-.

### Installing

Install in reverse order of removal. Note the following:

– Replace self-locking nuts and clutch master cylinder seals after removing them.

– Insert the crash bolster -1- and tighten the bolt -2-. Refer to ⇒ Body Interior; Rep. Gr. 70 ; Instrument Panel; Overview - Instrument Panel .

– Install the Data Bus on Board Diagnostic Interface - J533- . Refer to ⇒ Electrical Equipment; Rep. Gr. 97 ; Control Modules; Component Location Overview - Control Modules .

– Install the driver side footwell vent. Refer to ⇒ Heating, Ventilation and Air Conditioning; Rep. Gr. 87 ; Air Routing; Overview - Air Routing and Air Distribution in Passenger Compartment .

### Vehicles with a Knee Airbag

– Install the driver side knee airbag. Refer to ⇒ Body Interior; Rep. Gr. 69 ; Knee Airbags; Overview - Knee Airbag .

**Note**

*The battery will be installed and connected later.*

### Continuation for All

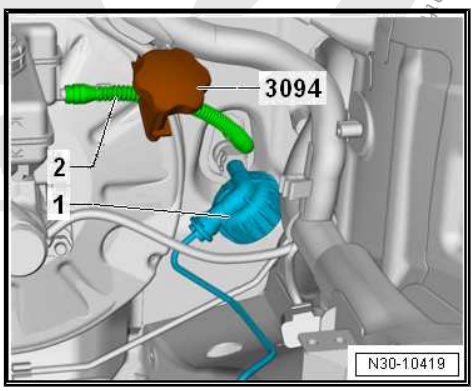


– Connect hose/line assembly -1- with connection. Refer to ⇒ Fig. ""Disconnect and Connect Clutch Mechanism Wires"" , page 18 .

– Connect the supply hose -2- to the clutch master cylinder.

• After removing the -3094- , the supply hose must be formed back into its original shape.

– Bleed the clutch mechanism. Refer to ⇒ "1.16 Clutch Mechanism, Bleeding", page 37 .

### Vehicles with a Knee Airbag

– Install and connect the battery. Refer to ⇒ Body Interior; Rep. Gr. 69 ; Knee Airbags; Overview - Knee Airbag and ⇒ Electrical Equipment; Rep. Gr. 27 ; Battery; Battery, Disconnecting and Connecting .

### Vehicles without Knee Airbag

– Install and connect the battery. Refer to ⇒ Electrical Equipment; Rep. Gr. 27 ; Battery; Battery, Disconnecting and Connecting .

### Tightening Specifications

♦ Refer to ⇒ "1.2 Overview - Pedal Assembly", page 15 .

Protected by copyright. Copyright for private or commercial purposes, in part or in whole, is not permitted unless authorised by Volkswagen AG. Volkswagen AG does not ... respect to the correctness of information in ...

## 1.9 Bearing Bushing, Removing and Installing

### Removing

Disconnect the battery ground cable. Refer to ⇒ Electrical Equipment; Rep. Gr. 27 ; Battery; Battery, Disconnecting and Connecting .

– Press together the retainers in the direction of -arrows- and remove the studs -1- to the right side.

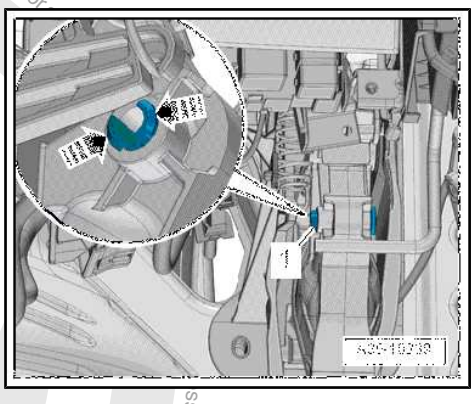


– Turn the valve fitter such that the openings -1- or pin -2- are visible.

The openings -1- and the pin -2- face in the same direction.

– Remove the bearing bushing -A- from the openings -1-.

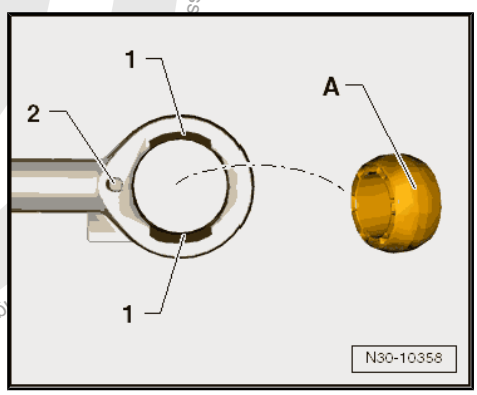


### Installing

– Turn the valve fitter such that the openings -1- or pin -2- are visible.

The openings -1- and the pin -2- face in the same direction.

– Fit the bearing bushing -A- in the openings -1- and rotate into place.

– Use a new mounting pin to connect the valve fitter/clutch master cylinder to the clutch pedal.

– Connect the battery. Refer to ⇒ Electrical Equipment; Rep. Gr. 27 ; Battery; Battery, Disconnecting and Connecting .

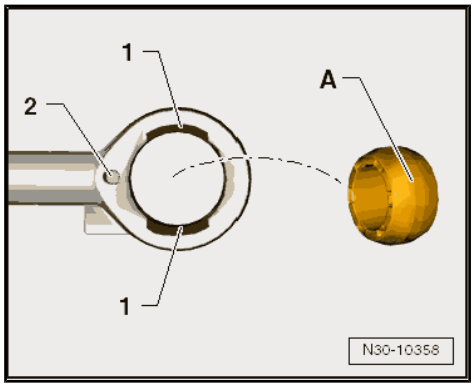


## 1.10 Clutch Master Cylinder, Removing and Installing

### Removing

**Note**

- *Before replacing the clutch master cylinder due to an assumed defect, perform the* `Guided Fault Finding` *Vehicle Diagnosis Tester first.*
- *When working inside the footwell, cover the carpet with cloths to protect it from leaking brake fluid.*

Protected by copyright. Copying for private or commercial purposes, in part or in whole, is not permitted unless authorised by Volkswagen AG. Volkswagen AG does not guarantee or

– Remove the bracket. Refer to
⇒ “1.8 Mounting Bracket, Removing and Installing”, page 28 .

– Remove the Clutch Position Sensor - G476- . Refer to
⇒ “1.15 Clutch Position Sensor G476 , Removing and Installing”, page 37 .

– Release retainers in the direction of -arrows- and remove mounting pin -2-.

– Remove clutch master cylinder -1-.

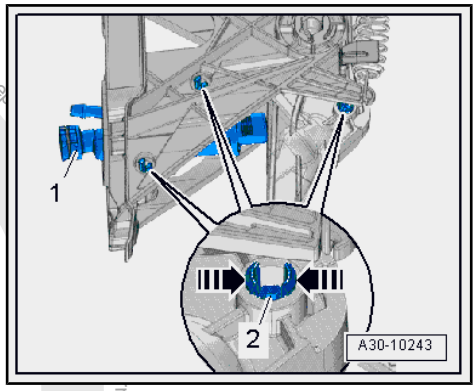


### Installing

Install in reverse order of removal. Note the following:

Replace mounting pin after removing.

– Install the bracket. Refer to
⇒ “1.8 Mounting Bracket, Removing and Installing”, page 28 .

– Install the Clutch Position Sensor - G476- . Refer to
⇒ “1.15 Clutch Position Sensor G476 , Removing and Installing”, page 37 .

## 1.11 Clutch Slave Cylinder with Release Bearing, Removing and Installing

### Special tools and workshop equipment required

♦ Torque Wrench 1331 5-50Nm - VAG1331-

**Note**

♦ *The clutch slave cylinder and the release bearing are a single unit and are replaced together.*

♦ *Pay attention to the thread pitch on the bolts when cleaning the threaded hole in the clutch housing.*

### Removing

• Transmission is removed.

– Open the clip -2- with a screwdriver or a pointed tool and remove bleeder -4- from clutch slave cylinder -1-.

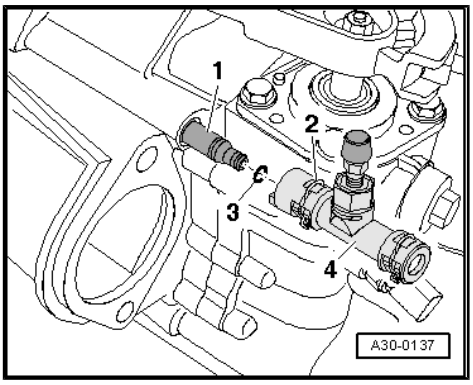


Protected by copyright. Copyright by Volkswagen AG. Volkswagen AG does not guarantee or accept any liability with respect to the correctness of information in this document. Copyright by Volkswagen AG.

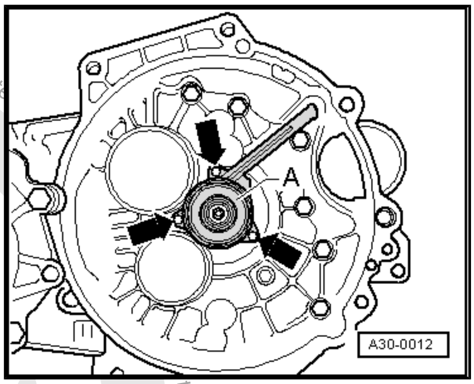


– Remove the bolts -arrows-.
– Remove the clutch slave cylinder together with the release bearing -A-.

Installing

Install in the reverse order of removal while noting the following:

• Tighten the slave cylinder bolts in small increments only.

Otherwise, there is the danger that the tabs with the fastening holes could break off.

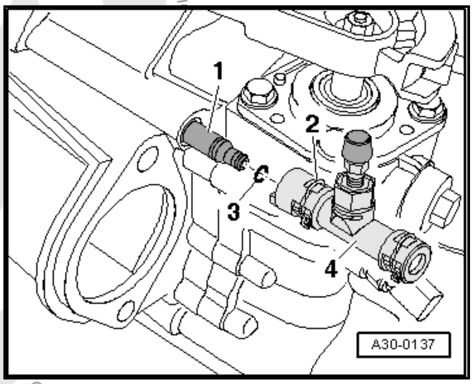


– Check the O-ring -3- on the clutch slave cylinder for damage.
– Push the bleeder -4- onto the clutch slave cylinder connection -1- until the clip -2- clicks into place.
– To check, pull on the bleeder.
– Install the transmission. Refer to ⇒ “2.2 Transmission, Installing”, page 92 .
– Bleed the clutch mechanism. Refer to ⇒ “1.16 Clutch Mechanism, Bleeding”, page 37 .

Tightening Specifications

♦ Clutch slave cylinder with release bearing to transmission. Refer to ⇒ “1.4 Overview - Clutch Release Mechanism”, page 21 .

## 1.12 Clutch Mechanism Lines, Removing and Installing

Special tools and workshop equipment required

♦ Hose Clamps - Up To 25mm - 3094-

Removing

– Disconnect the battery ground cable. Refer to ⇒ Electrical Equipment; Rep. Gr. 27 ; Battery; Battery, Disconnecting and Connecting .
– Remove the air filter housing if the lines are not accessible.

Vehicles with a Turbo Diesel Engine

– Refer to ⇒ Engine Mechanical, Fuel Injection and Glow Plug; Rep. Gr. 23 ; Air Filter; Air Filter Housing, Removing and Installing .

Vehicles with a Gasoline Engine

– Refer to ⇒ Engine Mechanical, Fuel Injection and Ignition; Rep. Gr. 24 ; Air Filter; Air Filter Housing, Removing and Installing .

Continuation for All

– Remove the battery and the battery tray. Refer to ⇒ Electrical Equipment; Rep. Gr. 27 ; Battery; Battery, Disconnecting and Connecting .

**Caution**

*Danger of leaking brake fluid.*

- *Be careful not to get any brake fluid on the longitudinal member or on the transmission when performing the following work. If it does, clean the area thoroughly.*
- *Place a lint-free cloth under the clutch master cylinder.*

– Unclamp the supply hose -2- to the clutch master cylinder with a -3094- .

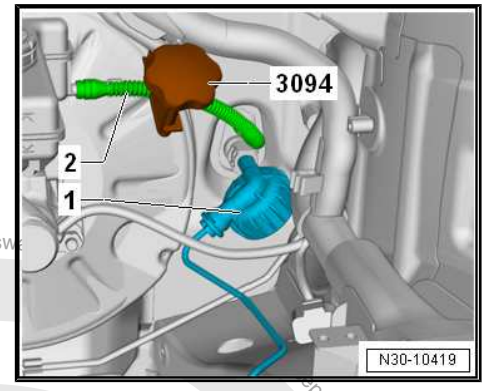


**Note**

- *A slight deformation of the supply hose remains after the -3094- have been unclamped.*
- *The supply hose is therefore not defective.*
- *After removing the -3094- , the supply hose must be formed back into its original shape.*

– Remove clip for hose/line assembly -1- all the way and remove hose/line assembly.

– Seal off openings.

– Remove the clip -arrow- all the way and then remove the hose/line assembly -A- from the bleeder.

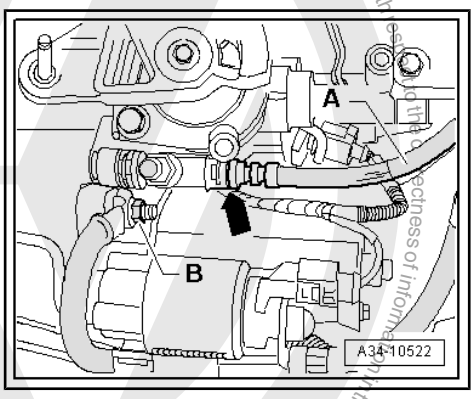


Ignore item -B-.

– Seal the open lines and connections with clean plugs if necessary from the -VAS6122- .

– Free up the hose/line assembly and remove it.

**Installing**

Install in reverse order of removal. Note the following:

– Connect hose/line assembly -1- with clutch master cylinder.

– Pull on the line to make sure it is secure.

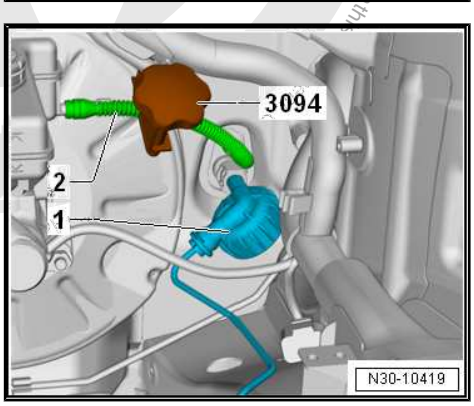


Protected by copyright. Copying for private or commercial purposes, in part or in whole, is not permitted unless authorised by Volkswagen AG. Volksw
ept any liability with respect to the correctness of information

– Push the hose/line assembly -4- with the O-ring -3- onto the bleeder connection -1- until the clip -2- audibly locks into place.

– Pull on the line to make sure it is secure.

• After removing the -3094- , the return hose -2- (⇒ previous illustration) must be formed back into its original shape.

– Bleed the clutch mechanism. Refer to ⇒ “1.16 Clutch Mechanism, Bleeding”, page 37 .

– Install the air filter housing.

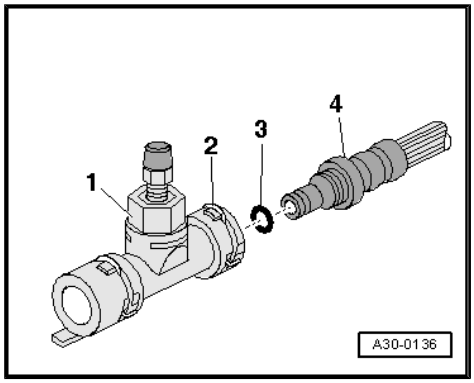


### Vehicles with a Turbo Diesel Engine

– Refer to ⇒ Engine Mechanical, Fuel Injection and Glow Plug; Rep. Gr. 23 ; Air Filter; Air Filter Housing, Removing and Installing .

### Vehicles with a Gasoline Engine

– Refer to ⇒ Engine Mechanical, Fuel Injection and Ignition; Rep. Gr. 24 ; Air Filter; Air Filter Housing, Removing and Installing .

### Continuation for All

– Install the battery tray, battery and the battery cover. Refer to ⇒ Electrical Equipment; Rep. Gr. 27 ; Battery; Battery, Disconnecting and Connecting .

## 1.13 Bleeder, Removing and Installing

### Hose/Line Assembly or Pipe -4- on Bleeder -1-, Removing and Installing

– To remove, release the clip -2- with a screwdriver or a pointed tool and pull off hose/line assembly or pipe -4- from the bleeder -1-.

– To install, press hose/line assembly or pipe with new O-ring -3- onto the bleeder connection, until clip audibly engages.

– Pull on the line to make sure it is secure.

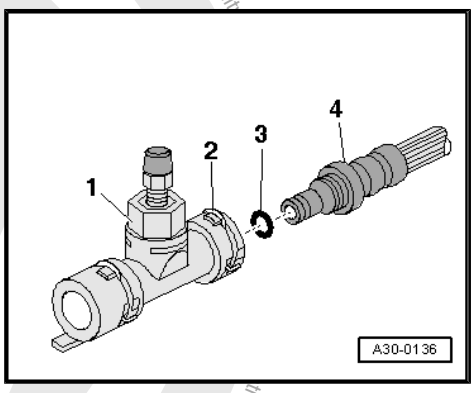


### Removing and Installing the Bleeder -4- from the Clutch Slave Cylinder

– To remove, release the clip -2- with a screwdriver or a pointed tool and remove the bleeder -4- from the clutch slave cylinder -1-.

– To install, check the O-ring -3- on the clutch slave cylinder. Press in the bleeder at the clutch slave cylinder connector until the clip -2- engages audibly.

– To check, pull on the bleeder.

– Bleed the clutch mechanism. Refer to ⇒ “1.16 Clutch Mechanism, Bleeding”, page 37 .

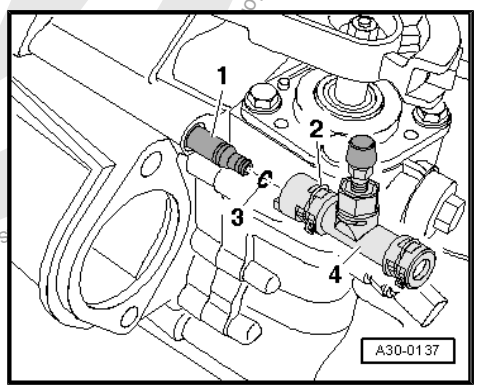


## 1.14 Clutch Master and Clutch Slave Cylinder, Checking

Before replacing the clutch master cylinder due to an assumed defect, perform the `Guided Fault Finding` with the Vehicle Diagnosis Tester first.

Protected by copyright. Copyright owner: Volkswagen AG. Copyright of this document, in part or in whole, is not permitted unless authorised by Volkswagen AG. Volkswagen AG does not guarantee or accept any liability

## 1.15 Clutch Position Sensor - G476- , Removing and Installing

**Removing**

– Move the driver seat as far back as possible.

– Disconnect the connector -arrow- from the Clutch Position Sensor - G476- .

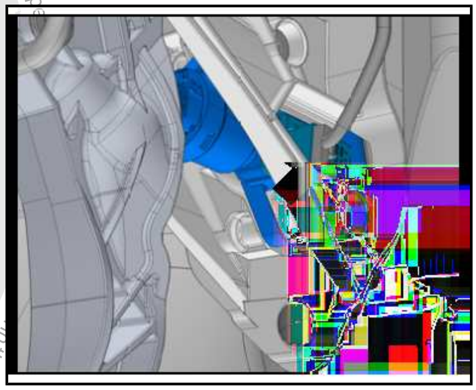

– Release the Clutch Position Sensor - G476- -2- tab on the clutch master cylinder -1- in the direction of -arrow- and remove it.

**Installing**

Install in reverse order of removal. Note the following:

- The tab -arrow- on the Clutch Position Sensor - G476- must remain intact.
- The Clutch Position Sensor - G476- must engage audibly.

## 1.16 Clutch Mechanism, Bleeding

**Special tools and workshop equipment required**

♦ Brake Charger/Bleeder Unit - VAS5234-

♦ Bleeder Hose (670 mm) - VAG1238/B3-

**Note**

♦ *The system must be bled after working on the hydraulic clutch mechanism.*

♦ *Make sure no brake fluid gets on the transmission when performing the following work.*

♦ *It is not necessary to pre-fill the system.*

♦ *Before bleeding, fill the brake fluid reservoir to the “Max” marking with brake fluid.*

♦ *The clutch pedal is in the neutral position and is not pressed.*

♦ *Brake fluid: Allocation. Refer to the Parts Catalog.*

– Remove the air filter housing if it makes the bleeder inaccessible.

**Vehicles with a Turbo Diesel Engine**

Refer to ⇒ Engine Mechanical, Fuel Injection and Glow Plug; Rep. Gr. 23 ; Air Filter; Air Filter Housing, Removing and Installing .

**Vehicles with a Gasoline Engine**

Refer to ⇒ Engine Mechanical, Fuel Injection and Ignition; Rep. Gr. 24 ; Air Filter; Air Filter Housing, Removing and Installing .

**Continuation for All**

– Return clutch pedal to the rest position.

– Remove cap from the bleed valve -arrow-.

– Connect the -VAS5234- .

If necessary use the -VAG1238/B3- .

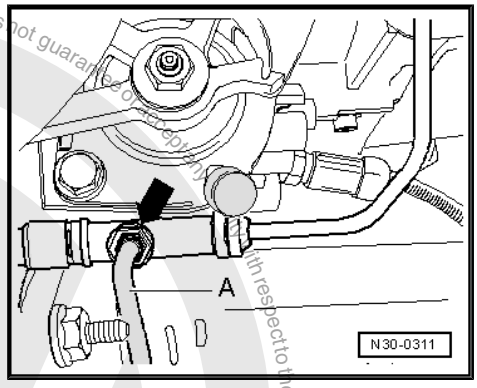


– Connect the bleed hose -A- with the collector bottle pressure hose.

– Turn on the -VAS5234- .

• Working pressure 2.0 bar (29 psi).

– Open the bleed valve approximately 1/4 turn.

– Move the clutch pedal manually 15 to 20 time very quickly from stop to stop.

– Close the bleed valve and turn off the bleed unit.

– After completing the bleeding procedure, and the pressure has dropped from 2 bar (29 psi), operate the clutch pedal an additional 10 times by foot.

– Install the air filter housing.

**Vehicles with a Turbo Diesel Engine**

– Refer to ⇒ Engine Mechanical, Fuel Injection and Glow Plug; Rep. Gr. 23 ; Air Filter; Air Filter Housing, Removing and Installing .

**Vehicles with a Gasoline Engine**

– Refer to ⇒ Engine Mechanical, Fuel Injection and Ignition; Rep. Gr. 24 ; Air Filter; Air Filter Housing, Removing and Installing .

**Continuation for All**

♦ Close the bleed valve. Refer to ⇒ “1.3 Overview - Clutch Hydraulics”, page 17 .

## 1.17 Clutch Release Mechanism, Servicing

**Special tools and workshop equipment required**

♦ Torque Wrench 5-50Nm - VAG1331-

♦ Clutch Disc Shaft Spline Lubricant - G 000 100-

• The transmission is removed.

Protected by copyright. Copyright by Volkswagen AG. Volkswagen AG does not guarantee or accept any liability with respect to the correctness of information in this document. Copyright by Volkswagen AG. Copying for private or commercial purposes, in whole or in part, is not permitted unless authorised by Volkswagen AG.

– Remove and attach the clutch slave cylinder with the release bearing -arrows-.

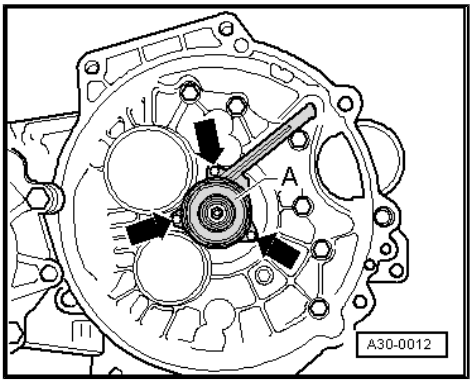


### Clutch Slave Cylinder -A- with Divided Supply Line

The supply line is divided in area with -arrows- on some clutch slave cylinders

Allocation. Refer to the Parts Catalog.

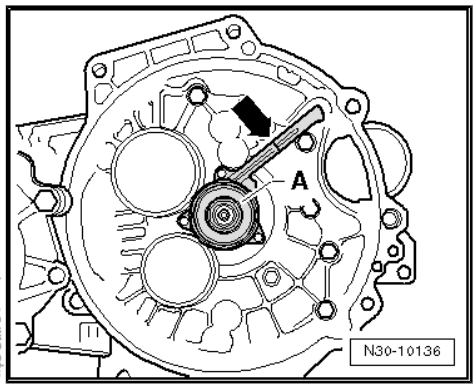


### Release Bearing with Additional Plastic Washer

How to recognize: Tabs -arrow- on the plastic washer.

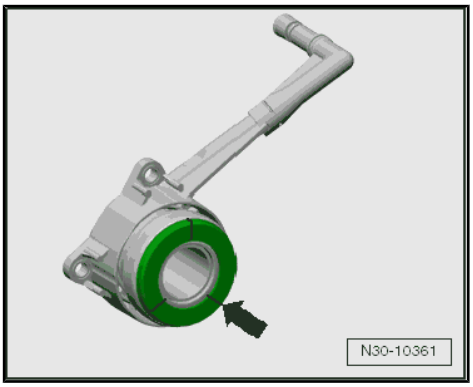


Protected by copyright. Copying for private or commercial purposes, in part or in whole, is not permitted unless authorised by Volkswagen AG. Volkswagen AG does not guarantee or accept any liability with respect to the correctness of information in this document. Copyright by Volkswagen AG.

### Only for Release Bearings with Additional Plastic Washer; Where the Pressure Plate Diaphragm Spring -arrows- are a Slightly Lower Installation Height

- Install the release bearing with additional plastic washer and the pressure plate diaphragm spring with a slightly lower installation height.

Allocation. Refer to the Parts Catalog.

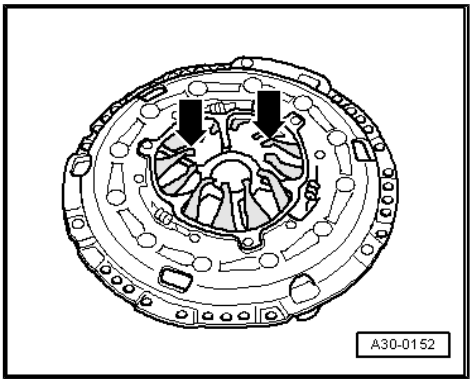


– Install the transmission. Refer to ⇒ “2.2 Transmission, Installing”, page 92 .

– Bleed the clutch mechanism. Refer to ⇒ “1.16 Clutch Mechanism, Bleeding”, page 37 .

### Tightening Specifications

♦ Refer to ⇒ “1.4 Overview - Clutch Release Mechanism”, page 21 .

# 2 Clutch

**Only for Vehicles with 2.0L Turbo Diesel Engine**

⇒ “2.1 Clutch Manufacturers, Differentiating”, page 40

⇒ “2.2 Overview - Clutch”, page 41

⇒ “2.3 Clutch, Removing and Installing”, page 45

## 2.1 Clutch Manufacturers, Differentiating

**Only for Vehicles with 2.0L Turbo Diesel Engine.**

Either a “Sachs” or a “LuK” clutch may be installed.

It is possible to tell which clutch the vehicle has with the transmission installed:

– Remove the noise insulation. Refer to ⇒ Body Exterior; Rep. Gr. 66 ; Noise Insulation; Overview - Noise Insulation .

– Remove the noise insulation from the oil pan, if necessary.

There are some openings -arrows- between the engine -A- and the transmission -B- near the bottom of the oil pan.

– Check the outer contour of the flywheel through these openings.

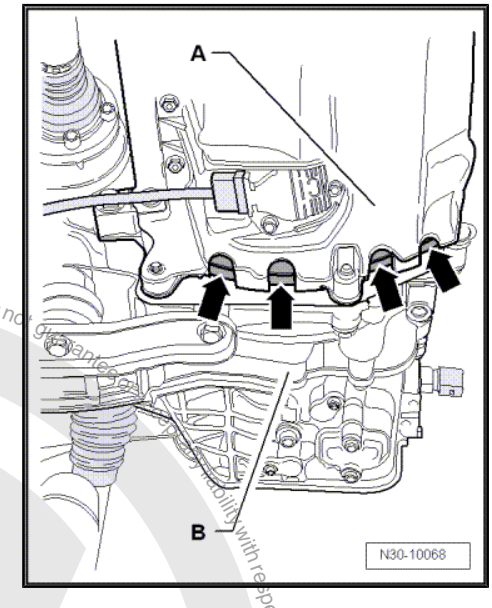


– The outer contour of the flywheel can also be inspected by removing -arrows- the small cover plate -A-, if equipped.

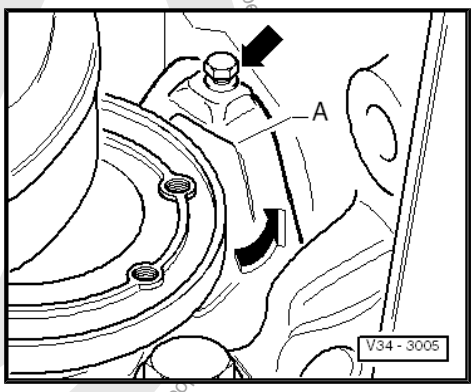


Protected by copyright. Copying for private or commercial purposes, in part or in whole, is not permitted unless authorised by Volkswagen AG. Volkswagen AG does not guarantee or accept any liability with respect to the correctness of information in this document. Copyright by Volkswagen AG.

**Round Outer Contour -arrows- is a Clutch Made By “Sachs” = -A-**

– Remove and install clutch “Sachs”. Refer to ⇒ “2.3.1 Clutch, Removing and Installing, with Dual Mass Flywheel, Sachs”, page 45 .

– Clutch assembly overview “Sachs”. Refer to ⇒ “2.2.1 Overview - Clutch, with Dual Mass Flywheel, Sachs”, page 41 .

**Squared Outer Contour -arrows 1- and a Circulated Depression -arrow 2- is A Clutch Made by “LuK” -B-.**

or

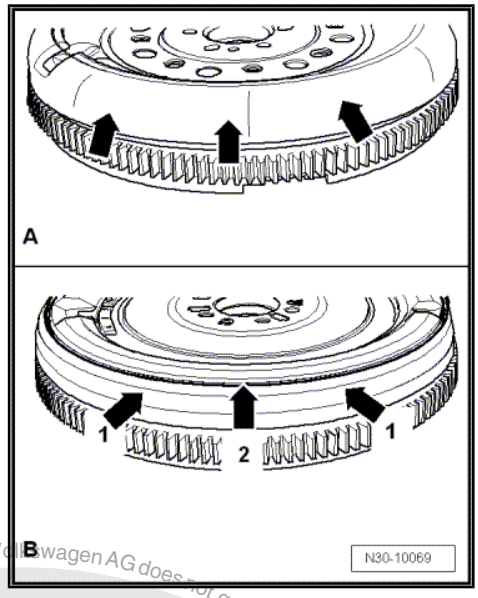


**Round Outer Contour -arrows 1- and a Circulated Depression -arrow 2- is A Clutch Made By “LuK” -B-**

– Clutch, removing and installing, “LuK”. Refer to ⇒ “2.3.2 Clutch, Removing and Installing, with Dual Mass Flywheel, LuK”, page 48 .

– Clutch assembly overview, “LuK”. Refer to ⇒ “2.2.2 Overview - Clutch, with Dual Mass Flywheel, LuK”, page 43 .

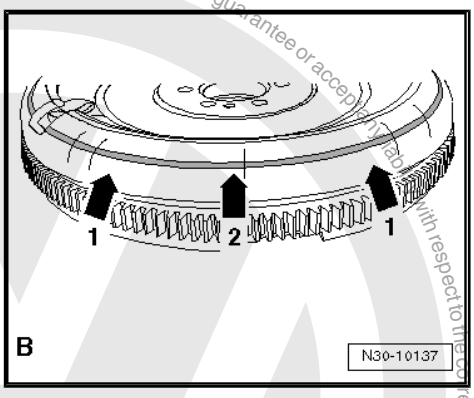


## 2.2 Overview - Clutch

⇒ “2.2.1 Overview - Clutch, with Dual Mass Flywheel, Sachs”, page 41

⇒ “2.2.2 Overview - Clutch, with Dual Mass Flywheel, LuK”, page 43

⇒ “2.2.3 Overview - Clutch, with Single Flywheel”, page 44

### 2.2.1 Overview - Clutch, with Dual Mass Flywheel, Sachs

Protected by copyright. Copying for private or commercial purposes, in part or in whole, is not permitted unless authorised by Volkswagen AG. Volkswagen AG does not guarantee or accept any liability with respect to the correctness of information in this document. Copyright by Volkswagen AG.

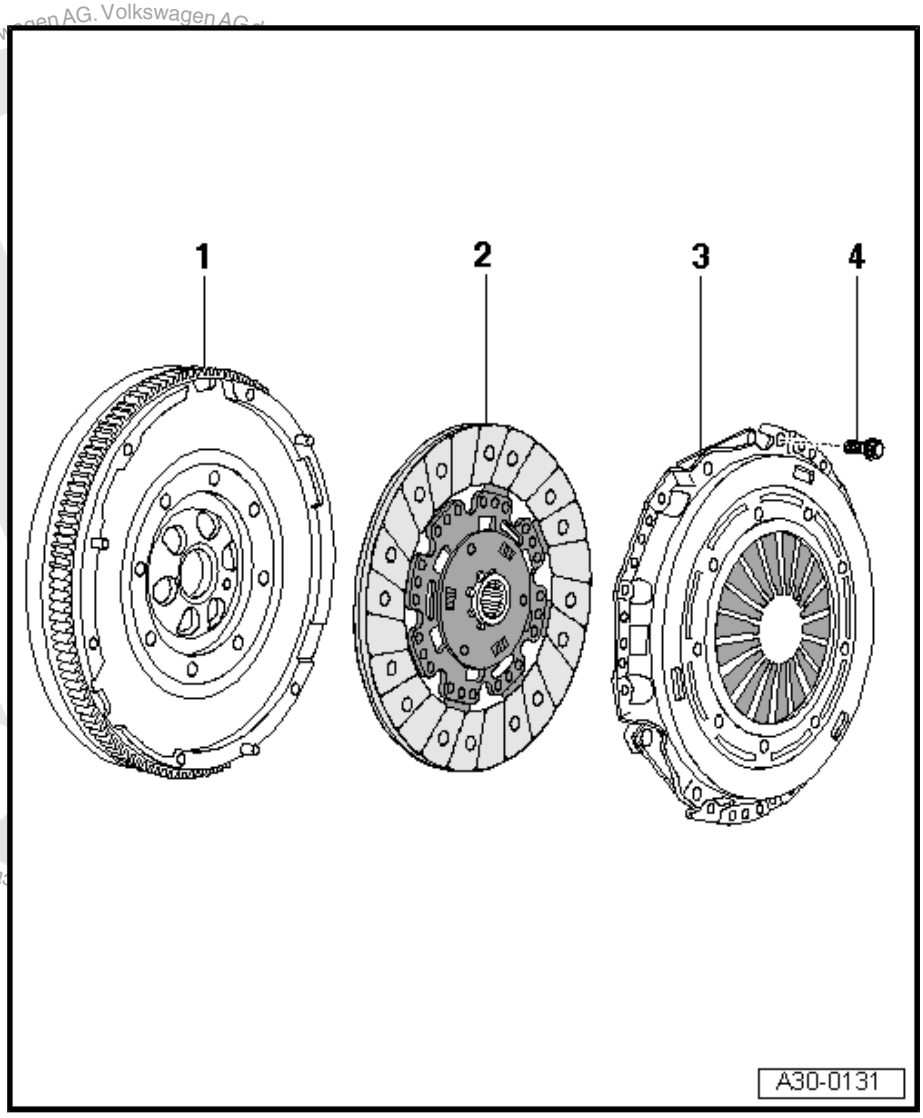


**1 - Dual Mass Flywheel**

- ❑ Make sure it fits securely on the centering pins
- ❑ Keep the clutch lining contact surface free of grooves, oil and grease.
- ❑ Removing and installing. Refer to ⇒ Engine Mechanical, Fuel Injection and Ignition; Rep. Gr. 13 ; Cylinder Block, Transmission Side; Flywheel, Removing and Installing .

**2 - Clutch Plate**

- ❑ Only replace together with the pressure plate
- ❑ Allocation. Refer to the Parts Catalog.
- ❑ Removing and installing. Refer to ⇒ "2.3.1 Clutch, Removing and Installing, with Dual Mass Flywheel, Sachs", page 45 .
- ❑ Installed position. Refer to ⇒ Fig. ""Clutch Plate Installed Position"" , page 46 .

**3 - Pressure Plate**

- ❑ With adjustment mechanism
- ❑ Only replace together with the clutch plate
- ❑ Allocation. Refer to the Parts Catalog.
- ❑ Removing and installing. Refer to ⇒ "2.3.1 Clutch, Removing and Installing, with Dual Mass Flywheel, Sachs", page 45 .
- ❑ Check the ends of the diaphragm spring. Refer to ⇒ Fig. ""Check the Ends of the Diaphragm Spring"" , page 47
- ❑ Checking the spring connections and rivet connections. Refer to ⇒ Fig. ""Checking the Pull-Springs and Rivet Connection"" , page 47
- ❑ Release bearing with additional plastic washer. Refer to ⇒ Fig. ""Release Bearing with Additional Plastic Washer"" , page 22 , adapted pressure plate. Refer to ⇒ Fig. ""Only for Release Bearings with Additional Plastic Washer; Where the Pressure Plate Diaphragm Springs -arrows- have a Slightly Lower Installation Height."" , page 22

**4 - Bolt**

- ❑ M6: 13 Nm
- ❑ M7: 20 Nm
- ❑ Loosen and tighten in small steps and in a diagonal pattern.
- ❑ Allocation. Refer to the Parts Catalog.

## 2.2.2 Overview - Clutch, with Dual Mass Flywheel, LuK

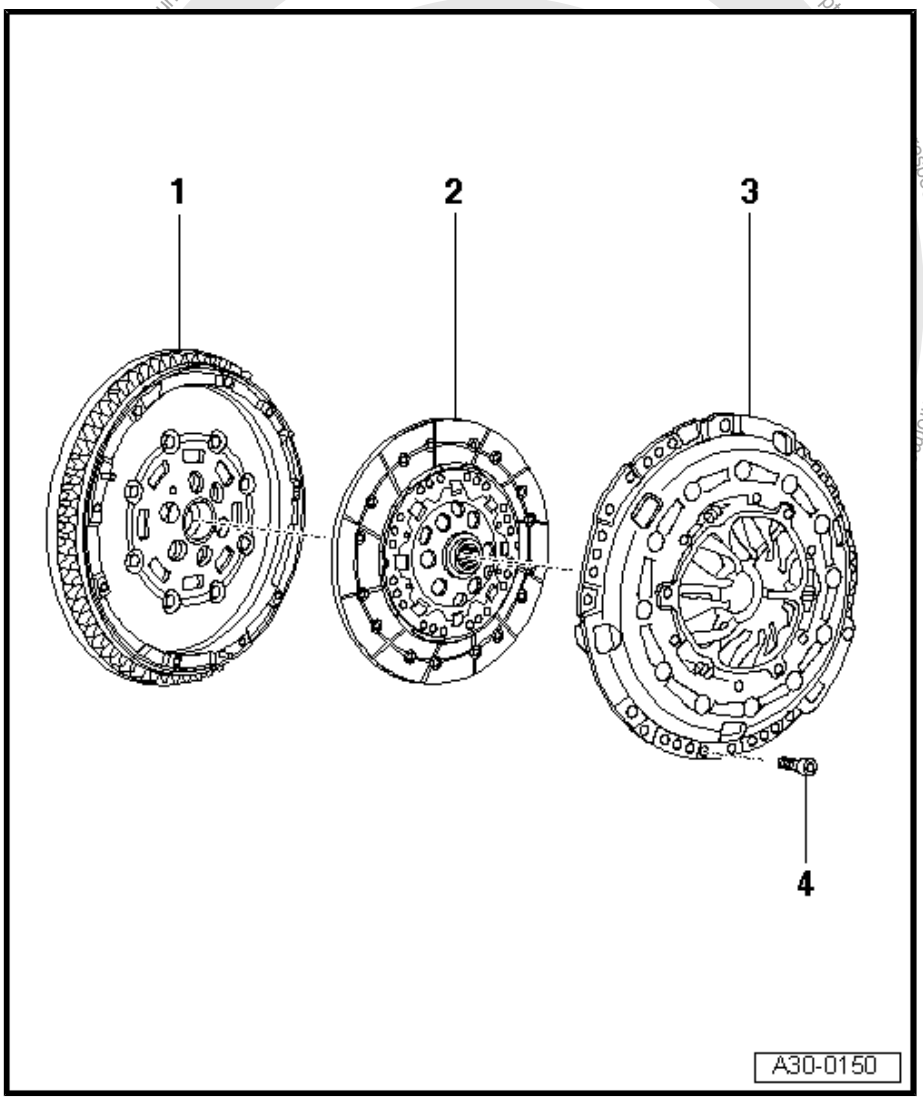


**1 - Dual Mass Flywheel**

- ❑ Make sure it fits securely on the centering pins
- ❑ Keep the clutch lining contact surface free of grooves, oil and grease.
- ❑ Removing and installing. Refer to ⇒ Engine Mechanical, Fuel Injection and Ignition; Rep. Gr. 13 ; Cylinder Block, Transmission Side; Flywheel, Removing and Installing .

**2 - Clutch Plate**

- ❑ Only replace together with the SAC pressure plate
- ❑ Allocation. Refer to the Parts Catalog.
- ❑ Removing and installing. Refer to ⇒ "2.3.2 Clutch, Removing and Installing, with Dual Mass Flywheel, LuK", page 48 .
- ❑ Installed position. Refer to ⇒ Fig. ""Clutch Plate Installed Position"" , page 49

**3 - SAC Pressure Plate**

- ❑ Only replace together with the clutch plate
- ❑ SAC = "Self Adjusting Clutch"
- ❑ Allocation. Refer to the Parts Catalog.
- ❑ Removing and installing. Refer to ⇒ "2.3.2 Clutch, Removing and Installing, with Dual Mass Flywheel, LuK", page 48 .
- ❑ Check the ends of the diaphragm spring. Refer to ⇒ Fig. ""Check the Ends of the Diaphragm Spring"" , page 50
- ❑ Checking the spring connections and rivet connections. Refer to ⇒ Fig. ""Checking the Spring Connections and Rivet Connections"" , page 50
- ❑ Release bearing with additional plastic washer. Refer to ⇒ Fig. ""Release Bearing with Additional Plastic Washer"" , page 22 , adapted pressure plate. Refer to ⇒ Fig. ""Only for Release Bearings with Additional Plastic Washer; Where the Pressure Plate Diaphragm Springs -arrows- have a Slightly Lower Installation Height."" , page 22

**4 - Bolt**

- ❑ M 6: 13 Nm
- ❑ M 7: 20 Nm
- ❑ Loosen and tighten in small steps and in diagonal sequence.
- ❑ Allocation. Refer to the Parts Catalog.

## 2.2.3 Overview - Clutch, with Single Flywheel

Protected by copyright. Copying for private or commercial purposes, in part or in whole, is not permitted unless authorised by Volkswagen AG. Volkswagen AG does not

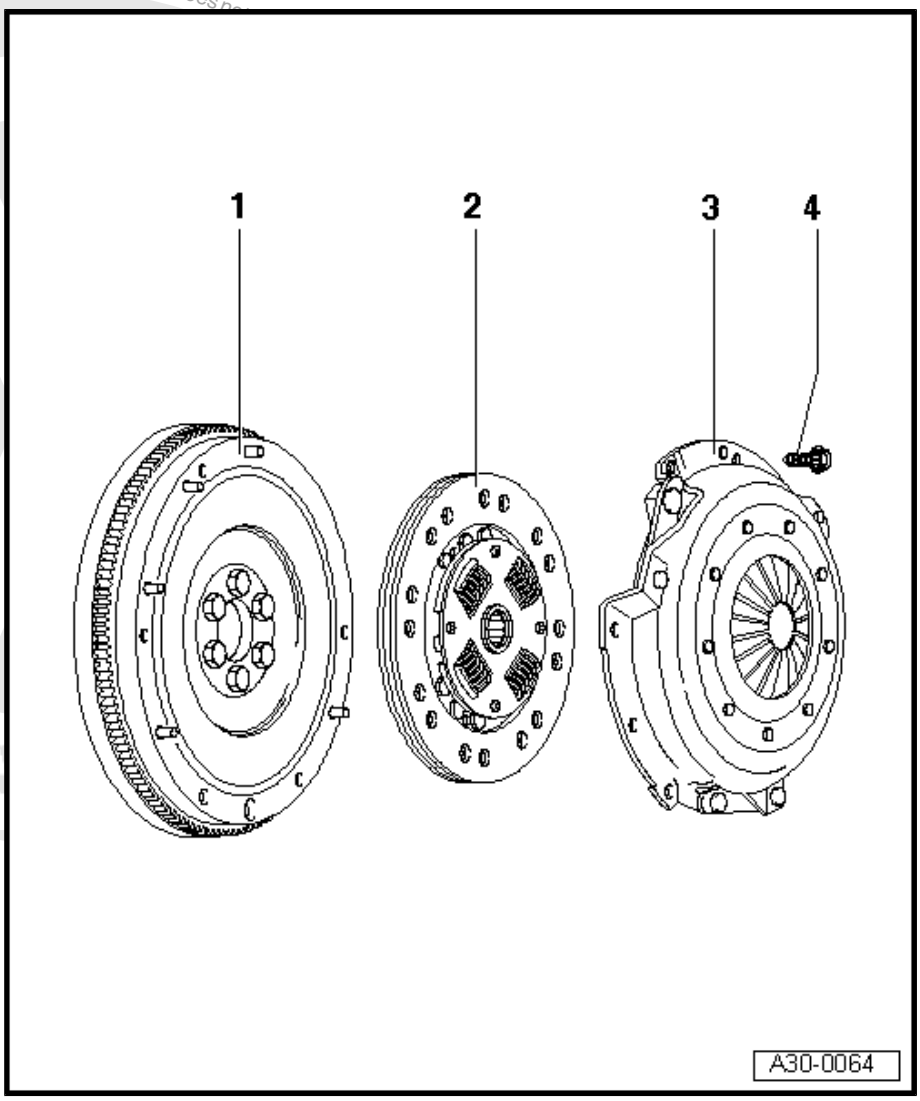


**1 - Flywheel**

- ❑ Make sure it fits securely on the centering pins
- ❑ Keep the clutch lining contact surface free of grooves, oil and grease
- ❑ Removing and installing. Refer to ⇒ Engine Mechanical, Fuel Injection and Ignition; Rep. Gr. 13 ; Cylinder Block, Transmission Side; Flywheel, Removing and Installing .

**2 - Clutch Plate**

- ❑ Allocation. Refer to the Parts Catalog.
- ❑ Centering. Refer to ⇒ "2.3.3 Clutch, Removing and Installing, with Single Flywheel", page 52

**3 - Pressure Plate**

- ❑ Check the ends of the diaphragm spring. Refer to ⇒ Fig. ""Check the Ends of the Diaphragm Spring"" , page 53
- ❑ Checking the spring connections and rivet connections. Refer to ⇒ Fig. ""Check the Spring Connection and Rivet Connections"" , page 54
- ❑ Removing and installing. Refer to ⇒ "2.3.3 Clutch, Removing and Installing, with Single Flywheel", page 52 .

**4 - Bolt**

- ❑ M6: 13 Nm
- ❑ M7: 20 Nm
- ❑ Loosen and tighten in small steps and in diagonal sequence.
- ❑ Allocation. Refer to the Parts Catalog.

## 2.3 Clutch, Removing and Installing

⇒ "2.3.1 Clutch, Removing and Installing, with Dual Mass Flywheel, Sachs", page 45

⇒ "2.3.2 Clutch, Removing and Installing, with Dual Mass Flywheel, LuK", page 48

⇒ "2.3.3 Clutch, Removing and Installing, with Single Flywheel", page 52

### 2.3.1 Clutch, Removing and Installing, with Dual Mass Flywheel, Sachs

**Special tools and workshop equipment required**

- Flywheel Retainer - 3067-
- Centering Pin - 3176-
- Alignment Tool - Clutch Plate - T10097-
- Torque Wrench 5-50Nm - VAG1331-
- Clutch Disc Shaft Spline Lubricant - G 000 100-
- On engines which have a crankshaft with a smaller diameter, or engines with a needle bearing in the crankshaft. Refer to ⇒ Fig. ""Centering the Clutch Disc, Removing and Installing the Pressure Plate On Engines with a Crankshaft with a Smaller Diameter, or Engines with a Needle Bearing in the Crankshaft."" , page 48 -3176- .

**Removing**

- Transmission removed.

– Insert the -3067- to loosen the bolts.

**When Removing, Loosen the Bolts as Follows so that the Clutch Pressure Plate Does Not Distort (Causing Shuddering On Acceleration):**

– Loosen the bolt diagonally in small steps.

Protected by copyright. Copying for private or commercial purposes, in part or in whole, is not permitted unless authorised by Volkswagen AG. Volkswagen AG does not guarantee or accept any liability with respect to the correctness of information in this document. Copyright by Volkswagen AG.

- When loosening, the stop -2- and the bolt -1- must loosen up together.

– If the stop does not loosen: Push the bolt toward the dual mass flywheel.

– Remove the pressure plate and the clutch plate.

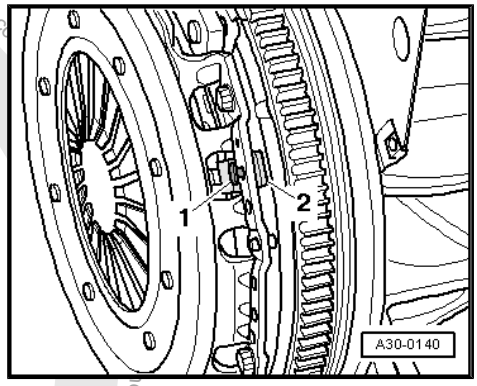


### Installing

Install in reverse order of removal. Note the following:

**Note**

- *Allocate clutch pressure plate and clutch plate according to the engine code. Refer to the Parts Catalog.*
- *Clean the input shaft splines and (on used clutch plates) the hub splines. Remove any corrosion and then apply a very thin coat of Grease - G 000 100- for clutch disc shaft splines on the splines. Then move the clutch plate back and forth on the input shaft until the hub moves freely on the shaft. Remove any excess grease.*
- *The clutch pressure plates are corrosion-protected and greased. With the exception of the friction surface on the clutch plate, do not clean the clutch pressure plate. This will shorten the service life of the clutch considerably.*
- *The friction surfaces on the clutch pressure plate and on the flywheel must be cleaned thoroughly (degreased).*
- *To reduce odor caused by a burnt clutch, thoroughly clean the transmission housing around the clutch as well as the engine on the transmission side.*
- *Only use compressed air to clean the dual mass flywheel.*
- *The clutch plate linings must sit completely on the flywheel and on the clutch pressure plate friction surface. Install the bolts.*
- *Tighten the bolts diagonally in small steps so as to not damage the centering holes in the pressure plate and the centering pins on the flywheel.*
- *Make sure the alignment sleeves for centering the engine/ transmission are installed inside the cylinder block. Install them if necessary.*
- *If the alignment sleeves are missing, it will be difficult to shift, there will be clutch problems and the transmission may make noises (loose rattling).*

### Clutch Plate Installed Position

- “Getriebeseite” (transmission side) and the spring cage face the transmission.

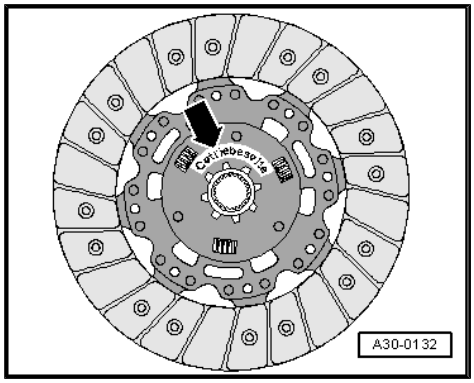

### Check the Ends of the Diaphragm Spring

- Wear up to half the thickness of the diaphragm spring -arrows- is permitted.

### Checking the Pull-Springs and Rivet Connection

I - Pull-spring OK

- Slight offset in the outer area -arrows A-.

II - Pull-springs damaged

- The clutch pressure plates must be replaced if the pull-spring is bent or broken off -arrow B-.

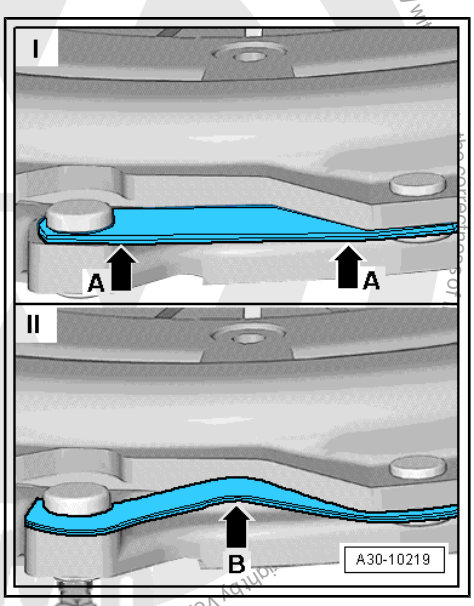


### Checking the Spring Connections and Rivet Connections

– Check the spring connections between the pressure plate and the cover for cracks and make sure the rivet connections are tight.

- Replace the pressure plate if the spring connections are damaged or if the rivet connections -arrows- are loose.

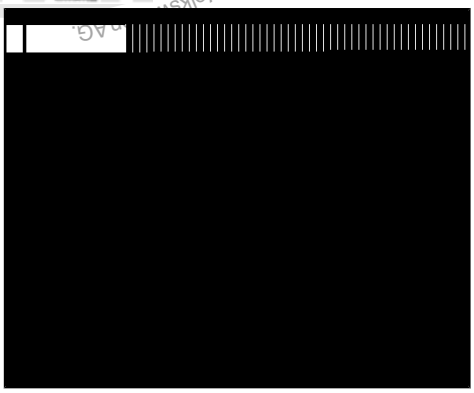

– Use the -3067- when installing.

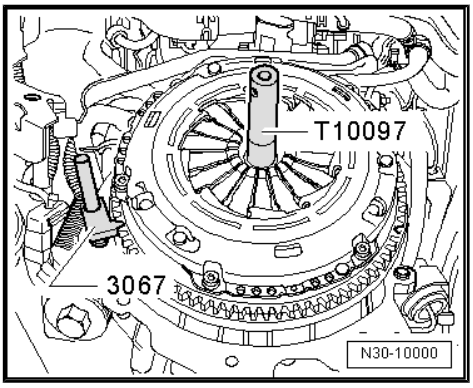


Protected by copyright. Copying for private or commercial purposes, in part or in whole, is not permitted unless authorised by Volkswagen AG. Volkswagen AG

**Engines Having a Crankshaft with A Smaller Diameter -arrow-, or Engines Having A Needle Bearing -arrow- in the Crankshaft**

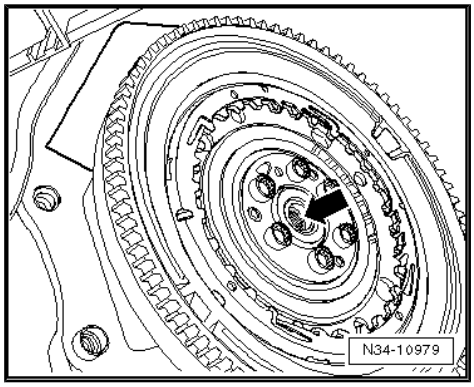


**Centering the Clutch Disc, Removing and Installing the Pressure Plate On Engines with a Crankshaft with a Smaller Diameter, or Engines with a Needle Bearing in the Crankshaft.**

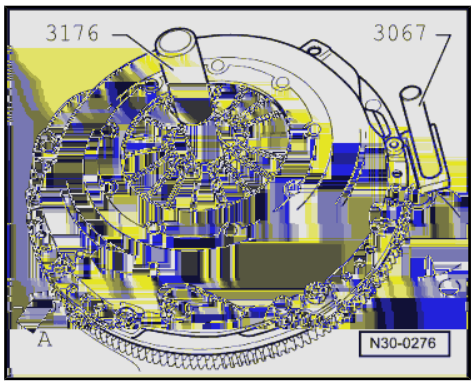


**Note**

*Ignore arrows -A and B-.*

**Continuation for All**

**When Installing, Tighten Bolts as Follows So Pressure Plate Does Not Distort (Causing Shuddering on Acceleration):**

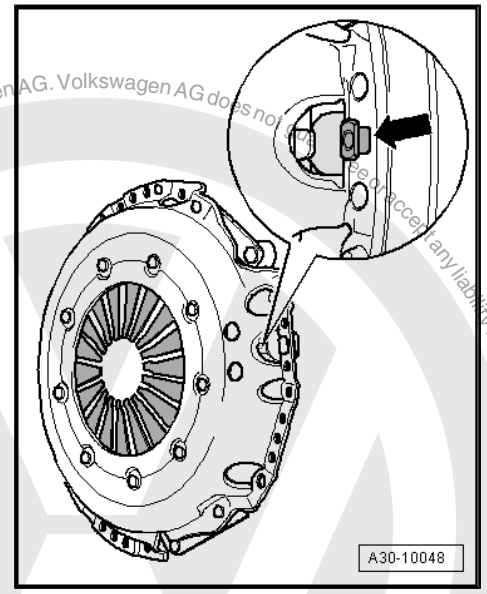


– Make sure the stop pin (position sensor) -arrow- moves easily.
– Install the pressure plate on the centering pins.
– Install all bolts evenly, by hand, until the bolt heads touch the pressure plate.
– Tighten the bolt diagonally in small steps.
• When doing this, the stop pin -arrow- must lift off from the pressure plate.
– Install the transmission. Refer to ⇒ “2.2 Transmission, Installing”, page 92 .

**Tightening Specifications**

♦ Refer to ⇒ “2.2.1 Overview - Clutch, with Dual Mass Flywheel, Sachs”, page 41 .

## 2.3.2 Clutch, Removing and Installing, with Dual Mass Flywheel, LuK

**Special tools and workshop equipment required**

♦ Flywheel Retainer - 3067-
♦ Alignment Tool - Clutch Plate - T10097-
♦ Torque Wrench 5-50Nm - VAG1331-
♦ Clutch Disc Shaft Spline Lubricant - G 000 100-

♦ On engines which have a crankshaft with a smaller diameter, or engines with a needle bearing in the crankshaft. Refer to ⇒ Fig. ““Centering the Clutch Disc, Removing and Installing the Pressure Plate On Engines with a Crankshaft with a Small-

Protected by copyright. Copying for private or commercial purposes, part or in whole, is not permitted unless authorised by Volkswagen AG. Volkswagen AG does not give any guarantee or accept any liability with respect to the correctness of information in this document. Copyright by Volkswagen AG.

er Diameter, or Engines with a Needle Bearing in the Crankshaft.”“, page 48 -3176- .

Removing

Transmission removed.

– Insert the -3067- to loosen the bolts.

– Loosen the bolt diagonally in small steps.

– Remove the pressure plate and the clutch plate.

Installing

Install in reverse order of removal. Note the following:

Note

- *Allocate clutch pressure plate and clutch plate according to the engine code. Refer to the Parts Catalog.*
- *Clean the input shaft splines and (on used clutch plates) the hub splines. Remove any corrosion and then apply a very thin coat of Grease for Clutch Disc Shaft Splines - G 000 100- on the splines. Then move the clutch plate back and forth on the input shaft until the hub moves freely on the shaft. Remove any excess grease.*
- *The clutch pressure plates are corrosion-protected and greased. With the exception of the friction surface on the clutch plate, do not clean the clutch pressure plate. This will shorten the service life of the clutch considerably.*
- *The friction surfaces on the clutch pressure plate and on the flywheel must be cleaned thoroughly (degreased).*
- *To reduce odor caused by a burnt clutch, thoroughly clean the transmission housing around the clutch as well as the engine on the transmission side.*
- *Only use compressed air to clean the dual mass flywheel.*
- *The clutch plate linings must sit completely on the flywheel and on the clutch pressure plate friction surface. Install the bolts.*
- *Tighten the bolts diagonally in small steps so as to not damage the centering holes in the pressure plate and the centering pins on the flywheel.*
- *Make sure the alignment sleeves for centering the engine/ transmission are installed inside the cylinder block. Install them if necessary.*
- *If the alignment sleeves are missing, it will be difficult to shift, there will be clutch problems and the transmission may make noises (loose rattling).*

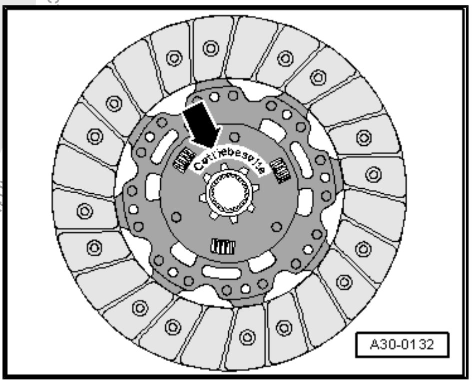


Clutch Plate Installed Position

- “Getriebeseite” (transmission side) faces the transmission.

Protected by copyright. Copying for private or commercial purposes, in part or in whole, is not permitted unless authorised by Volkswagen AG. Volkswagen AG does not guarantee or accept any liability with respect to the correctness of information in this document. Copyright by Volkswagen AG.

### Check the Ends of the Diaphragm Spring

- Wear up to half the thickness of the diaphragm spring -arrows- is permitted.

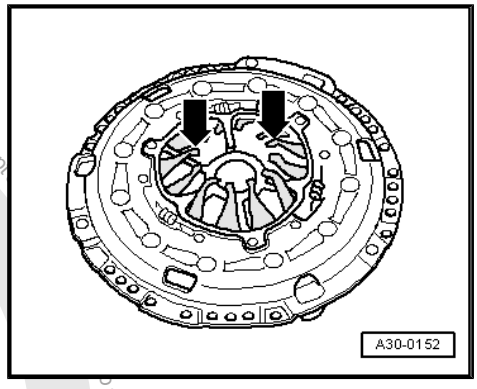


### Checking the Pull-Springs and Rivet Connection

I - Pull-spring OK

- Slight offset in the outer area -arrows A-.

II - Pull-springs damaged

- The clutch pressure plates must be replaced if the pull-spring is bent or broken off -arrow B-.

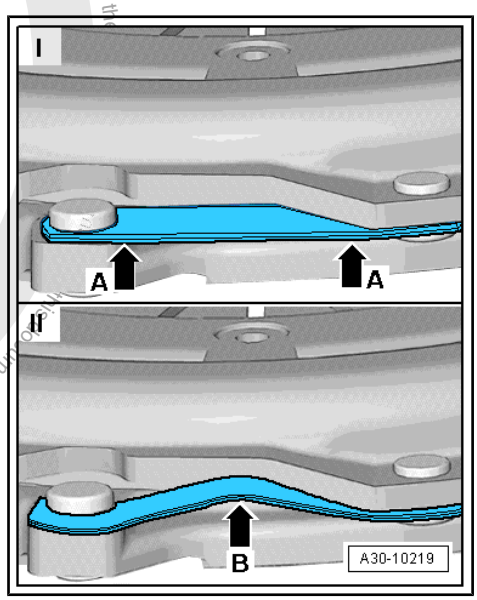


### Checking the Spring Connections and Rivet Connections

– Make sure the rivet connections -arrows B- fit correctly on all pull-springs -arrows A-.

- Replace any clutch pressure plates that have loose rivet connections -arrows B-.

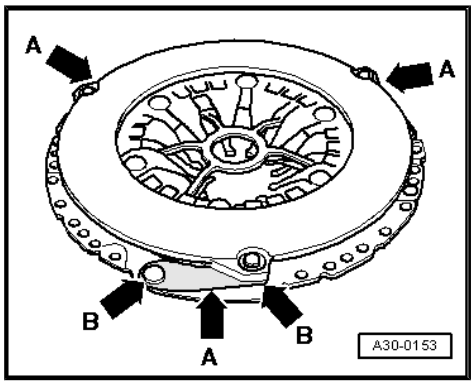


Protected by copyright. Copying for private or commercial purposes in part or in whole, is not permitted unless authorised by Volkswagen AG. Volkswagen AG does not guarantee or accept any liability for the correctness of the information. Copyright by Volkswagen AG.

**Only Check Position of Adjustment Mechanism with New Pressure Plates**

- Both edges -A- of the adjusting ring must be located between both notches -arrows B-.
- If the adjusting ring takes on a different position with new pressure plates, pressure plate and clutch plate must not be installed.
- With used clutches, the adjusting ring may take on a position outside of the notches.

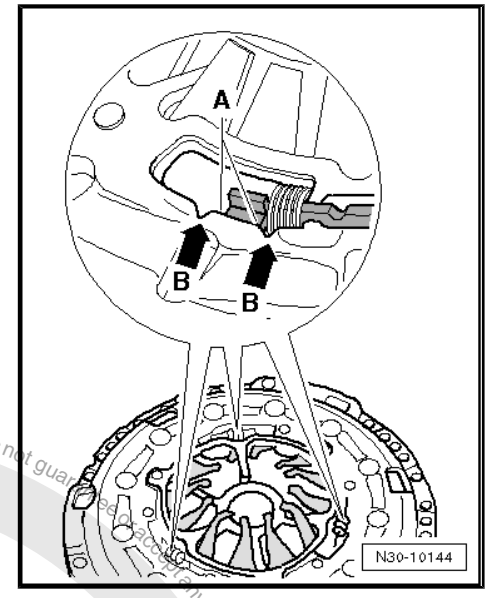


– Use the -3067- when installing.

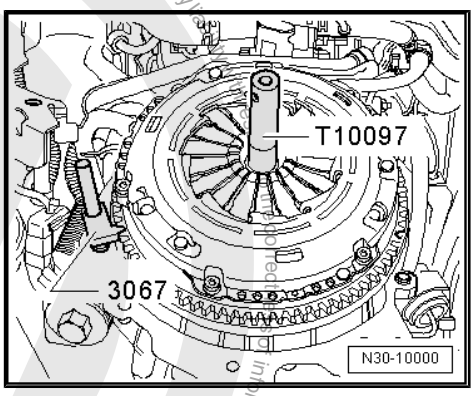


**Engines Having a Crankshaft with a Smaller Diameter -arrow-, or Engines Having a Needle Bearing -arrow- in the Crankshaft**

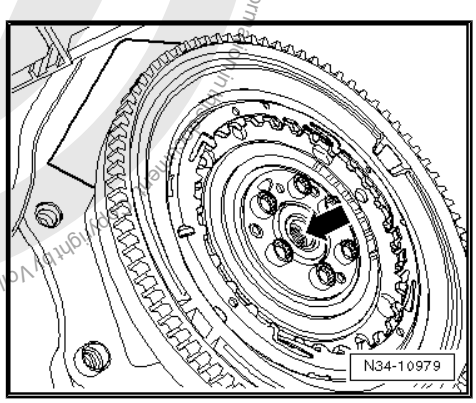


Protected by copyright. Copying for private or commercial purposes, in part or in whole, is not permitted unless authorised by Volkswagen AG. Volkswagen AG does not guarantee or accept any liability for the information in this document. Copyright by Volkswagen AG.

**Centering the Clutch Disc, Removing And Installing the Pressure Plate on Engines with a Crankshaft with a Smaller Diameter, or Engines with a Needle Bearing in the Crankshaft.**

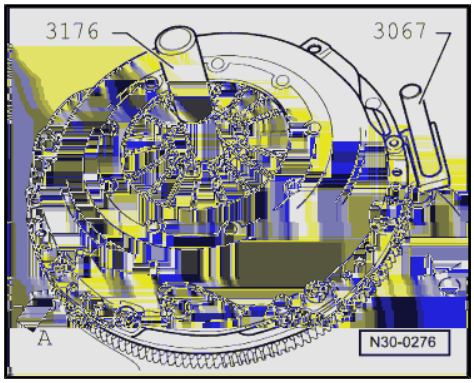


**Note**

*Ignore arrows -A and B-.*

**Continuation for All**

**When Installing, Tighten Bolts as Follows So Pressure Plate Does Not Distort (Causing Shuddering on Acceleration):**

– Install the pressure plate on the centering pins.

– Install all bolts evenly, by hand, until the bolt heads touch the clutch pressure plate.

– Tighten the bolt diagonally in small steps.

– Install the transmission. Refer to ⇒ “2.2 Transmission, Installing”, page 92 .

**Tightening Specifications**

♦ Pressure plate on the flywheel. Refer to ⇒ “2.2.2 Overview - Clutch, with Dual Mass Flywheel, LuK”, page 43 .

## 2.3.3 Clutch, Removing and Installing, with Single Flywheel

**Special tools and workshop equipment required**

♦ Flywheel Retainer - 3067-

♦ Alignment Tool - Clutch Plate - T10097-

♦ Torque Wrench 5-50Nm - VAG1331-

♦ Clutch Disc Shaft Spline Lubricant - G 000 100-

**Removing**

• Transmission is removed.

– Insert the -3067- to loosen the bolts.

**When Removing, Loosen the Bolts as Follows so that the Clutch Pressure Plate Does Not Distort (Causing Shuddering on Acceleration):**

– Loosen all bolts clockwise one after the other in stages of 90° until clutch pressure plate is free.

– Remove the pressure plate and the clutch plate.

Protected by copyright. Copying for private or commercial purposes, in part or in whole, is not permitted unless authorised by Volkswagen AG. Volkswagen AG does not guarantee or accept any liability with respect to the correctness of information in this document. Copyright by Volkswagen AG.

## Installing

### Note

- *Allocate clutch pressure plate and clutch plate according to the engine code. Refer to the Parts Catalog.*
- *Clean the input shaft splines and (on used clutch plates) the hub splines. Remove any corrosion and then apply a very thin coat of Grease for Clutch Disc Shaft Splines - G 000 100- on the splines. Then move the clutch plate back and forth on the input shaft until the hub moves freely on the shaft. Remove any excess grease.*
- *The clutch pressure plates are corrosion-protected and greased. With the exception of the friction surface on the clutch plate, do not clean the clutch pressure plate. This will shorten the service life of the clutch considerably.*
- *The friction surfaces on the clutch pressure plate and on the flywheel must be cleaned thoroughly (degreased).*
- *To reduce odor caused by a burnt clutch, thoroughly clean the transmission housing around the clutch as well as the engine on the transmission side.*
- *The clutch plate linings must sit completely on the flywheel and on the clutch pressure plate friction surface. Install the bolts.*
- *Tighten the bolts diagonally in small steps so as to not damage the centering holes in the pressure plate and the centering pins on the flywheel.*
- *Make sure the alignment sleeves for centering the engine/ transmission are installed inside the cylinder block. Install them if necessary.*
- *If the alignment sleeves are missing, it will be difficult to shift, there will be clutch problems and the transmission may make noises (loose rattling).*

Volkswagen AG. Volkswagen AG does not guarantee or accept any liability with respect to the correctness of information in this document. Copyright by Volkswagen AG.

- Clutch plate installed location: The labeling “Getriebeseite” (transmission side) or the shorter end of the hub with the spring cage faces the pressure plate.

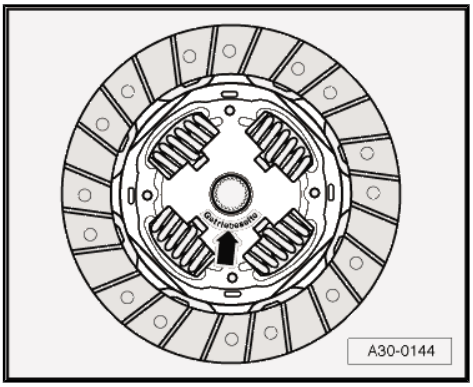


### Check the Ends of the Diaphragm Spring

- Wear up to half the thickness of the diaphragm spring -arrows- is permitted.

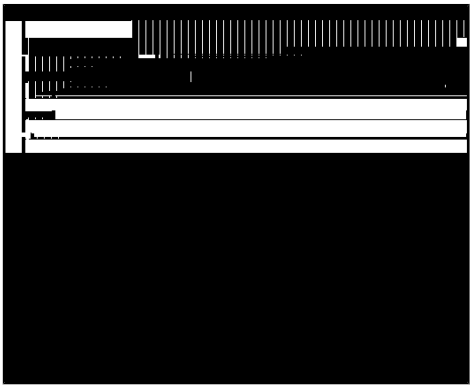

### Check the Spring Connection and Rivet Connections

– Check the spring connection between the pressure plate and the cover for cracks and make sure the rivet connections are tight.

– Replace the pressure plate if the springs are damaged or if the rivet connections -arrows- are loose.

### Checking the Pull-Springs and Rivet Connection

I - Pull-spring OK

- Slight offset in the outer area -arrows A-.

II - Pull-springs damaged

- The clutch pressure plates must be replaced if the pull-spring is bent or broken off -arrow B-.

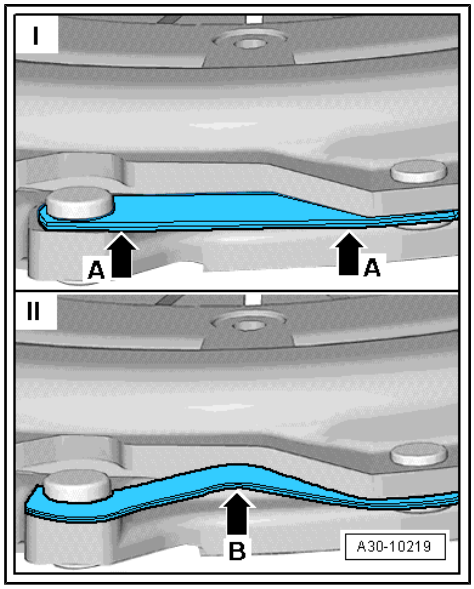


– Check the spring connections -arrows A- for damage and make sure the rivet connections -arrows B- are tight.

- Replace a clutch pressure plate with severely kinked or broken spring connections and loose rivet connections.

– Make sure the rivet connections -arrows B- fit correctly on all pull-springs -arrows A-.

– Tighten all bolts clockwise to the final tightening specification.

- Replace any clutch pressure plates that have loose rivet connections -arrow B-.

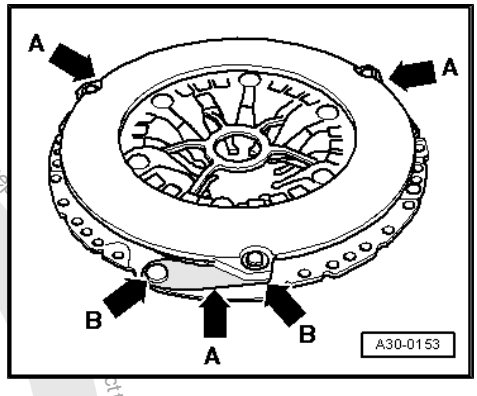


### Checking the Metal Ring

– Check the metal ring in the clutch pressure plate -arrow- for damage.

- Replace any clutch pressure plates that have a broken metal ring.

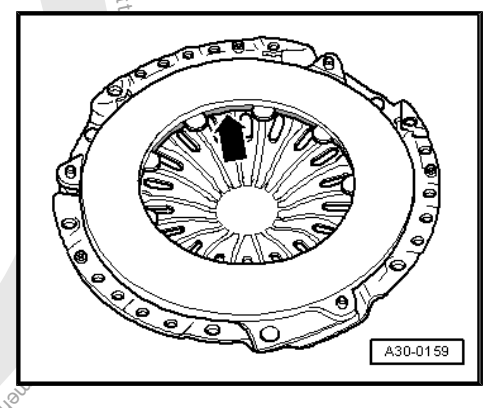


Protected by copyright. Copying for private or commercial purposes, in whole or in part, is not permitted unless authorised by Volkswagen AG. Volkswagen AG does not guarantee or accept any liability with respect to the correctness and completeness of this document. Copyright by Volkswagen AG.

– Use the -3067- when installing.
– Tighten the bolt diagonally in small steps.
– Install the transmission. Refer to
⇒ “2.2 Transmission, Installing”, page 92 .

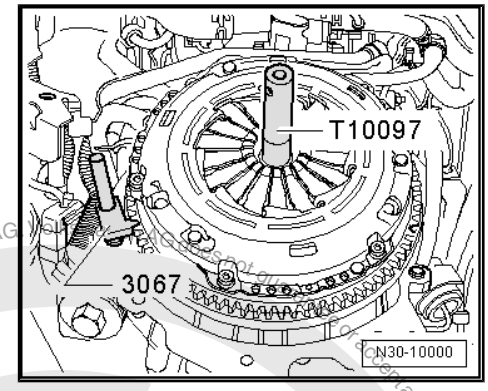


**Tightening Specifications**

◆ Pressure plate on the flywheel. Refer to
⇒ “2.2.3 Overview - Clutch, with Single Flywheel”, page 44 .

Protected by copyright. Copying for private or commercial purposes, in part or in whole, is not permitted unless authorised by Volkswagen AG. Copyright by Volkswagen AG. No liability with respect to the correctness of information in this document.

# 3 Special Tools

Copyright. Copying for private or commercial purposes, in part or in whole, is not permitted unless authorised by Volkswagen AG. Volkswagen AG does not gua

**Special tools and workshop equipment required**

- Flywheel Retainer - 3067-
- Alignment Tool - Clutch Plate - T10097-
- Torque Wrench 1331 5-50Nm - VAG1331-

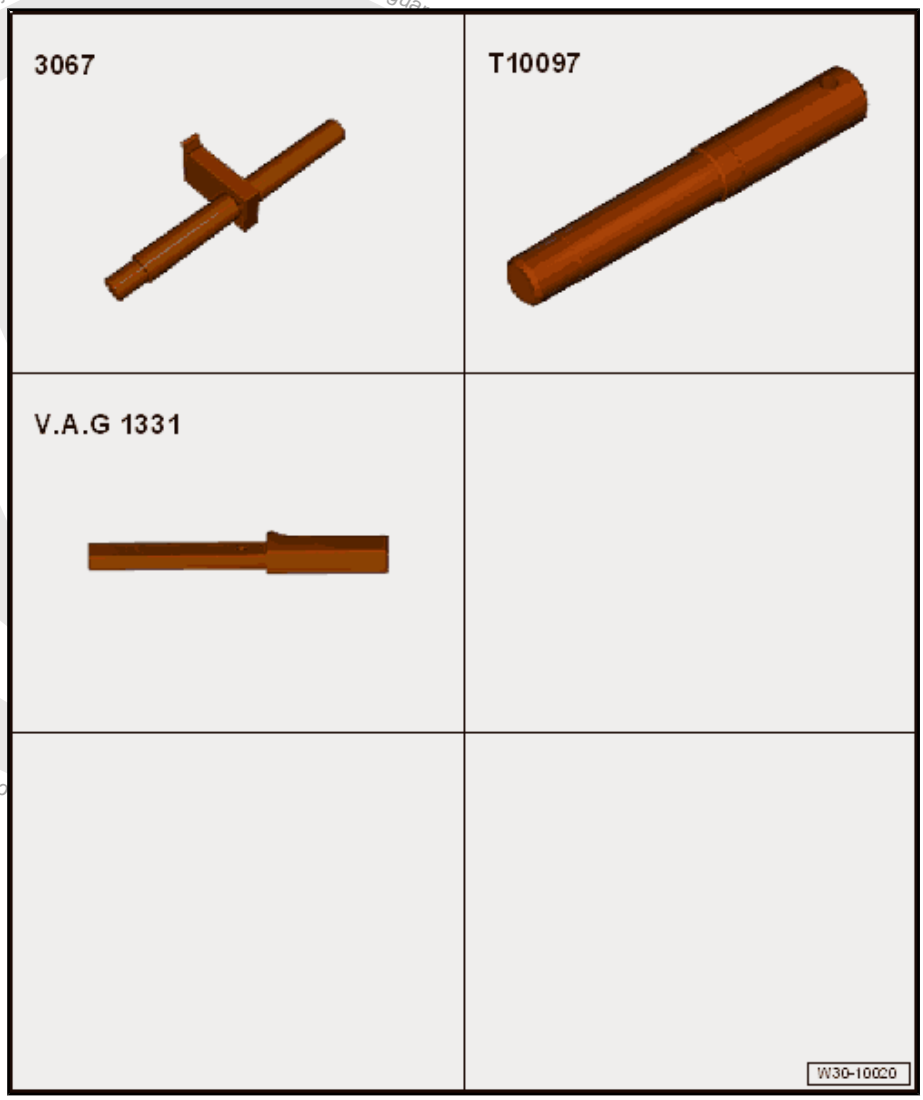


- Sealing Tool - T10249-

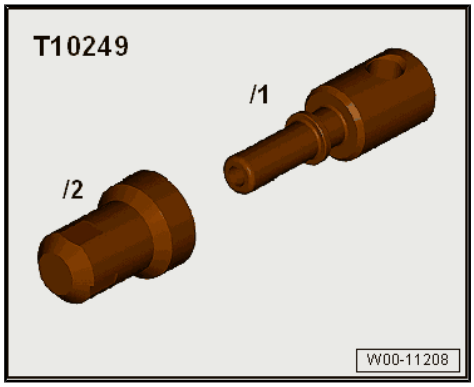

- Torque Wrench 1331 5-50Nm - VAG1331-

- Brake Charger/Bleeder Unit - VAG1869-

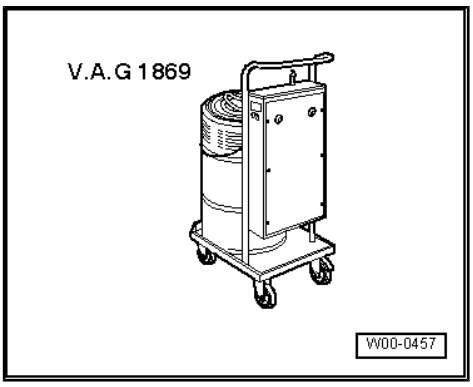


- Brake Charger/Bleeder Unit - VAS5234- or

- Hose Clamps - Up To 25mm - 3094-

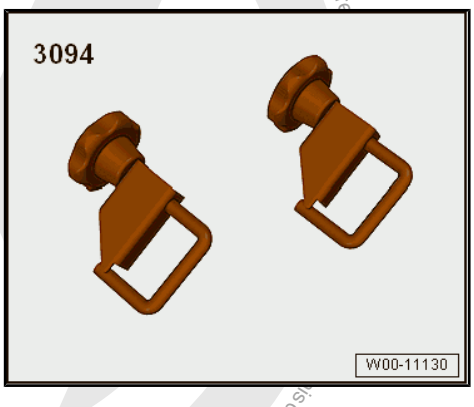


Protected by copyright. Copying for private or commercial purposes, in part or in whole, is not permitted unless authorised by Volkswagen AG. Volkswagen
This document. Copyright by Volkswagen AG.

Protected by copyright. Copying for private or commercial purposes, in part or in whole, is not permitted unless authorised by Volkswagen AG. Volkswagen AG does not guarantee or accept any information in this document. Copyright by Volkswagen AG.

- Centering Pin - 3176- .

# 34 – Controls, Housing

## 1 Selector Mechanism

⇒ "1.1 Selector Mechanism Installation Position", page 59
⇒ "1.2 Overview - Selector Mechanism", page 60
⇒ "1.3 Overview - Shift Lever Knob and Cover", page 62
⇒ "1.4 Gearshift Knob, Removing and Installingg", page 62
⇒ "1.5 Selector Mechanism, Removing and Installing", page 63
⇒ "1.6 Selector Mechanism, Adjusting", page 71
⇒ "1.7 Gearshift Mechanism, Checking", page 74
⇒ "1.8 Selector Shaft Seal, Replacing", page 74

### 1.1 Selector Mechanism Installation Position

-Arrow A- Shift Lever Movement

-Arrow B- Selector Lever Movement

A - Shift Lever Cable

B - Selector Cable

C - Heat Shield

- ❑ Remove the shift lever mechanism before removal

1 - Selector Lever

2 - Selector Relay Lever

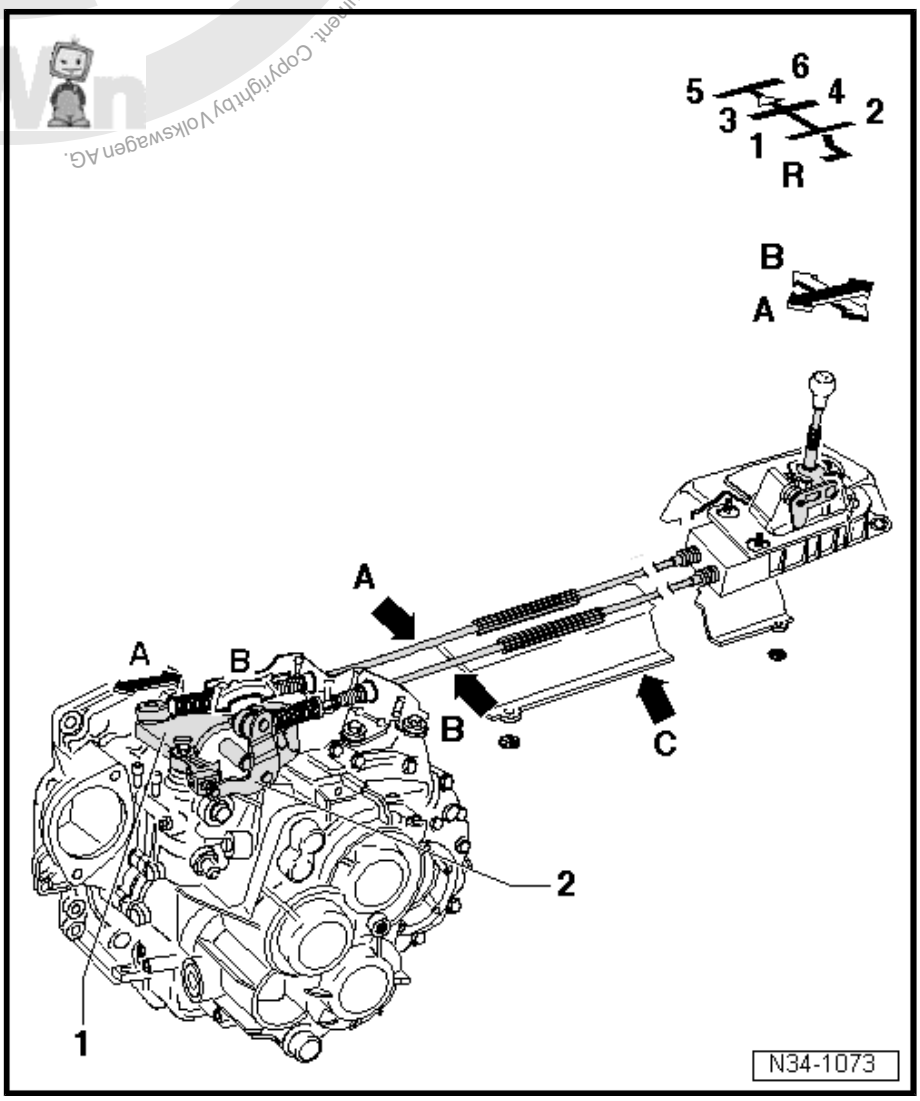

Copyright © Volkswagen AG. Volkswagen AG does not guarantee or accept any liability with respect to the correctness of information in this document. Copying for private or commercial purposes, in part or in whole, is not permitted unless authorised by Volkswagen AG.

## 1.2 Overview - Selector Mechanism

**Note**

- *Lubricate the bearing areas and the sliding surfaces.*
- *Grease allocation. Refer to the Parts Catalog.*

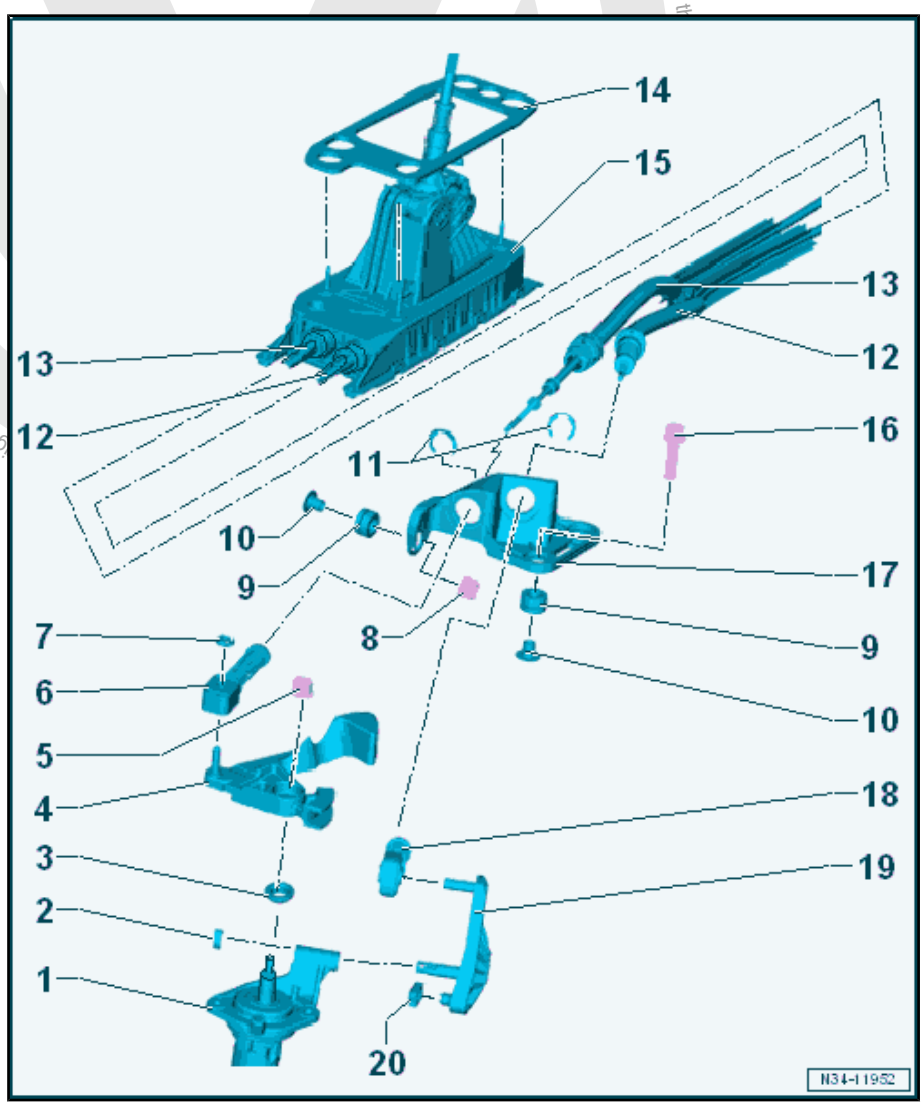


**1 - Shift Lever Shaft with Shift Lever Cover**

**2 - Clip**

- ❑ For the relay lever

**3 - Selector Shaft Seal**

- ❑ For the selector shaft
- ❑ Replacing. Refer to ⇒ “1.8 Selector Shaft Seal, Replacing”, page 74 .

**4 - Selector Lever**

- ❑ Insert so that master spline aligns with shift rod. Refer to ⇒ Fig. ““Installing the Transmission Shift Lever”“ , page 68
- ❑ To install, lubricate. Refer to ⇒ Fig. ““Relay Lever: Lubricate the Following Areas Very Carefully when Installing.”“ , page 69
- ❑ Adjust the shift lever mechanism after installing. Refer to ⇒ “1.6 Selector Mechanism, Adjusting”, page 71 .
- ❑ Installed position. Refer to ⇒ Fig. ““Selector Lever/ Relay Lever Installed Position”“ , page 68 .

**5 - Nut**

- ❑ 25 Nm
- ❑ Replace after removing
- ❑ Self-locking

**6 - Cable Retainer**

- ❑ For attaching the shift cable to the transmission shift lever
- ❑ Adjust the shift lever mechanism after installing. Refer to ⇒ “1.6 Selector Mechanism, Adjusting”, page 71 .
- ❑ Do not interchange, cable locking mechanisms for selector cable on linkage lever and for shift cable on transmission shift lever are different
- ❑ Allocation. Refer to ⇒ Fig. ““Cable Retainer Allocation”“ , page 68

**7 - Lock Washer**

- ❑ Replace after removing

**8 - Nut**

- ❑ 20 Nm
- ❑ For the cable bracket

**9 - Grommet**

- ❑ Quantity: 3
- ❑ Cable mounting bracket to transmission

**10 - Spacer**

- ❑ Quantity: 3

**11 - Lock Washer**

- ❑ Replace after removing
- ❑ Be careful not to damage the cables when removing them

**12 - Selector Cable**

- ❑ Attach to the cable retainer
- ❑ Installed position. Refer to ⇒ “1.1 Selector Mechanism Installation Position”, page 59 .

**13 - Shift Lever Cable**

- ❑ Attach to the cable retainer
- ❑ Installed position. Refer to ⇒ “1.1 Selector Mechanism Installation Position”, page 59 .

**14 - Seal**

- ❑ Between the shift lever housing and the underbody
- ❑ Replace after removing the shift lever housing
- ❑ Self-adhesive
- ❑ Affix to the shift lever housing

**15 - Selector Housing**

**16 - Hex Bolt**

- ❑ 20 Nm
- ❑ Quantity: 2
- ❑ For the cable bracket

**17 - Cable Mounting Bracket**

- ❑ Adjust after installing the selector mechanism. Refer to ⇒ “1.6 Selector Mechanism, Adjusting”, page 71 .

**18 - Cable Retainer**

- ❑ For attaching the selector cable to the relay lever
- ❑ Adjust the shift lever mechanism after installing. Refer to ⇒ “1.6 Selector Mechanism, Adjusting”, page 71 .
- ❑ Do not interchange, cable locking mechanisms for selector cable on linkage lever and for shift cable on transmission shift lever are different
- ❑ Allocation. Refer to ⇒ Fig. ““Cable Retainer Allocation”“ , page 68
- ❑ Remove from the relay lever. Refer to ⇒ Fig. ““With the Selector Relay Lever Removed: Pry the Selector Cable Retainer Out of the Selector Relay Lever.”“ , page 67
- ❑ Press onto relay lever. Refer to ⇒ Fig. ““Installing the Selector Cable Retainer on the Relay Lever”“ , page 67

**19 - Selector Relay Lever**

- ❑ Allocation. Refer to the Parts Catalog.
- ❑ Lubricating. Refer to ⇒ Fig. ““Relay Lever: Lubricate the Following Areas Very Carefully when Installing.”“ , page 69
- ❑ Installed position. Refer to ⇒ Fig. ““Selector Lever/ Relay Lever Installed Position”“ , page 68 .
- ❑ Adjust the shift lever mechanism after installing. Refer to ⇒ “1.6 Selector Mechanism, Adjusting”, page 71 .

Protected by copyright. Copying for private or commercial purposes, in part or in whole, is not permitted unless authorised by Volkswagen AG. Volkswagen AG does not guarantee or accept any liability with respect to the correctness of information in this document. Copyright by Volkswagen AG.

- ❑ Relay lever and cable retainer, removing and installing. Refer to
  ⇒ Fig. ""Relay Lever with Cable Retainer, Removing and Installing"" , page 66

**20 - Sliding Shoe**

## 1.3 Overview - Shift Lever Knob and Cover

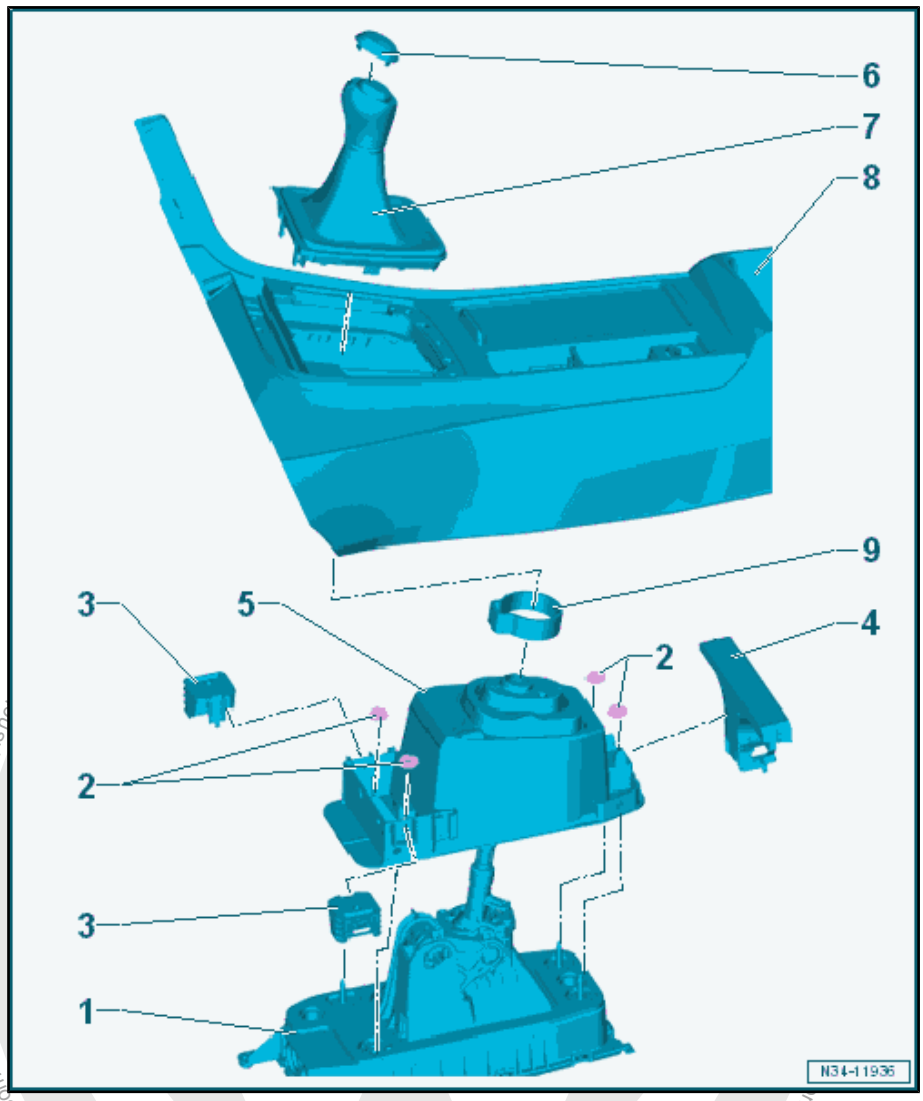


**1 - Shift Lever Housing with Shift Lever**

**2 - Nut**

- ❑ M6: 8 Nm
- ❑ M8: 25 Nm

**3 - Bracket**

- ❑ For the center console
- ❑ Overview. Refer to ⇒ Body Interior; Rep. Gr. 68 ; Center Console; Overview - Center Console .

**4 - Bracket**

- ❑ For the center console
- ❑ Overview. Refer to ⇒ Body Interior; Rep. Gr. 68 ; Center Console; Overview - Center Console .

**5 - Noise Insulation**

**6 - Badge**

- ❑ Can be carefully pried off the plastic or leather shift lever knob using Trim Removal Wedge -3409- .

**7 - Gearshift Knob**

- ❑ With boot
- ❑ Always replace together
- ❑ The shift knob and boot cannot be separated from each other.
- ❑ Removing and installing. Refer to ⇒ "1.4 Gearshift Knob, Removing and Installingg", page 62 .

**8 - Center Console**

- ❑ Overview. Refer to ⇒ Body Interior; Rep. Gr. 68 ; Center Console; Overview - Center Console .

**9 - Clamp**

- ❑ For securing the shift knob to the shift lever
- ❑ Replace after removing
- ❑ Secure on the shift lever knob using Hose Clamp Pliers - VAG1275- .

## 1.4 Gearshift Knob, Removing and Installingg

**Special tools and workshop equipment required**

Protected by copyright. Copyright by Volkswagen AG.

Protected by copyright. Copying for private or commercial purposes, in part or in whole, is not permitted unless authorised by Volkswagen AG. Volkswagen AG does not guarantee or accept any liability with

- Hose Clip Pliers - VAG1275A-
- Wedge Set - T10383-
- -T10383/1-
- or the equivalent equipment, Backrest Panel Tool - 3370-

**Removing**

– Use the -T10383/1- to carefully pry out the selector lever boot from the center console insert in direction of -arrows-.

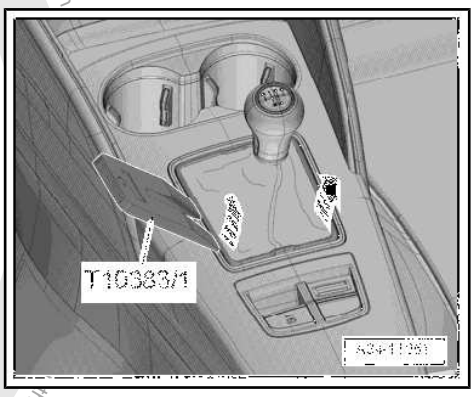


or

– Open the ashtray.

– Push the -3370- as illustrated, under the plastic frame for the boot in the direction of -arrow 1- until stop.

– Remove boot with plastic frame from center console frame -A- in the direction of -arrow 2-

– Roll the selector lever boot up over the shift lever knob.

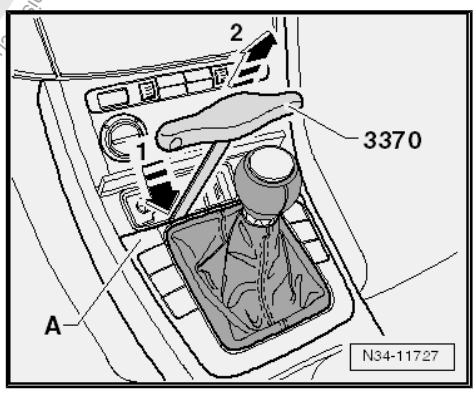


– Open the clamp -arrow- and remove the shift lever knob with the shift lever boot.

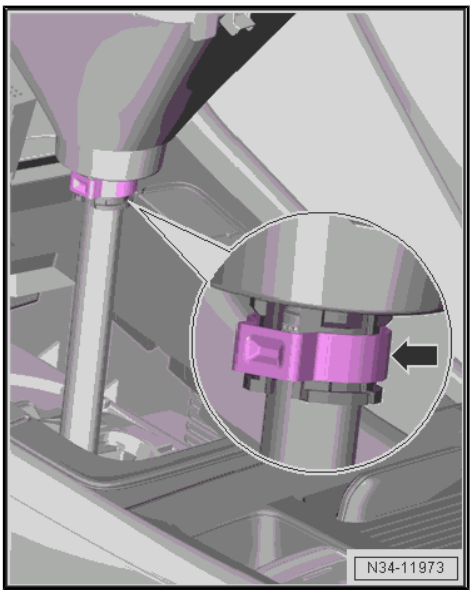


**Installing**

Install in reverse order of removal. Note the following:

– Press the shift lever knob and the selector lever boot all the way up on the shift lever.

– Secure the gearshift knob on the gearshift lever with the clamp -arrow-. Use the -VAG1275A- to do this.

## 1.5 Selector Mechanism, Removing and Installing

**Special tools and workshop equipment required**

- Torque Wrench 1331 5-50Nm - VAG1331-

**Caution**

*This procedure contains mandatory replaceable parts. Refer to component overview prior to starting procedure.*

### Mandatory Replacement Parts

- Nut - Selector Lever to Shift Lever Shaft with Shift Lever Cover
- Lock Washer - Cable Retainer to Selector Lever
- Lock Washer - Cable Mounting Bracket to Cable Retainer

### Removing

– Disconnect the battery ground cable. Refer to ⇒ Electrical Equipment; Rep. Gr. 27 ; Battery; Battery, Disconnecting and Connecting .

– Remove the boot with the shift lever knob and, if necessary, remove the noise insulation from the center console frame as well. Refer to
⇒ “1.4 Gearshift Knob, Removing and Installingg”, page 62 .

### The Footwell Rear Channel is Located Above the Nut for the Center Console on Some Vehicles:

– Remove the center console. Refer to ⇒ Body Interior; Rep. Gr. 68 ; Center Console; Overview - Center Console .

– Remove rear channel footwell. Refer to ⇒ Heating, Ventilation and Air Conditioning; Rep. Gr. 87 ; Air Routing; Overview - Air Routing and Air Distribution in Passenger Compartment .

– Remove the center console mounting bracket nuts. Refer to ⇒ Body Interior; Rep. Gr. 68 ; Center Console; Center Console, Removing and Installing .

– Remove the nuts from the shift lever housing. Refer to
⇒ Fig. ““Installed Position of Gearshift Housing Nuts -arrow-““ , page 65 .

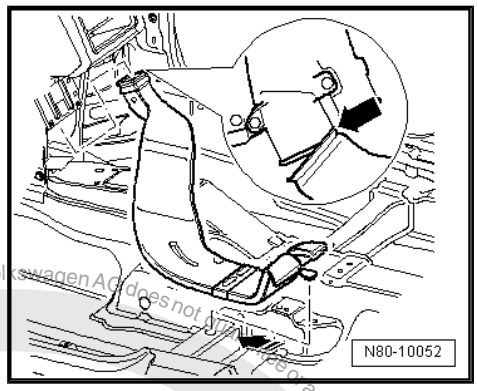


– Lower the shift lever housing.

- If it is not possible to lower the shift lever housing, then the nuts on the shift lever housing are located under the bracket on the center console.
- Remove the center console mounting bracket. Refer to ⇒ Body Interior; Rep. Gr. 68 ; Center Console; Center Console, Removing and Installing .

### If the Center Console Bracket Cannot Be Removed Separately:

– Remove the center console. Refer to ⇒ Body Interior; Rep. Gr. 68 ; Center Console; Center Console, Removing and Installing .

Protected by copyright. Copying for private or commercial purposes, in part or entirely, is not permitted unless authorised by Volkswagen AG. Volkswagen AG does not guarantee or accept any liability with respect to the correctness of information in this document. Copyright by Volkswagen AG.

### Installed Position of Gearshift Housing Nuts -arrow-

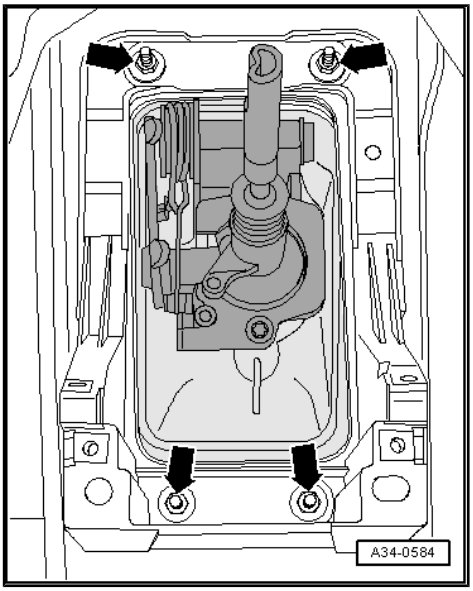


– Remove the shift lever housing nuts -arrows-.

– Remove center console and center console mounting bracket. Refer to ⇒ Body Interior; Rep. Gr. 68 ; Center Console; Overview - Center Console .

– Remove rear channel footwell. Refer to ⇒ Heating, Ventilation and Air Conditioning; Rep. Gr. 87 ; Air Routing; Overview - Air Routing and Air Distribution in Passenger Compartment .

### Installed Position of Noise Insulation and Gearshift Housing Nuts -arrows-.

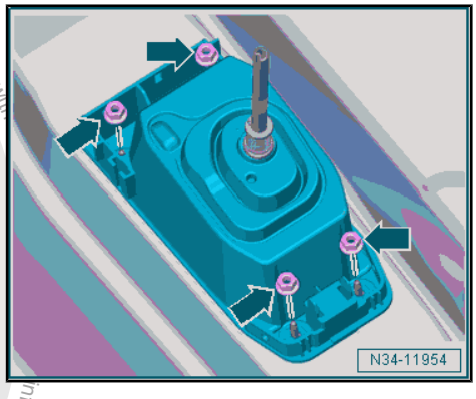


– Remove noise insulation and shift lever housing nuts -arrows-.

– Remove noise insulation from the shift lever housing. Refer to ⇒ Body Interior; Rep. Gr. 68 ; Center Console; Overview - Center Console .

– Remove the entire air filter housing if it is located above the shift lever mechanism.

### Vehicles with a Turbo Diesel Engine

– Refer to ⇒ Engine Mechanical, Fuel Injection and Glow Plug; Rep. Gr. 23 ; Air Filter; Air Filter Housing, Removing and Installing .

### Vehicles with a Gasoline Engine

– Refer to ⇒ Engine Mechanical, Fuel Injection and Ignition; Rep. Gr. 24 ; Air Filter; Air Filter Housing, Removing and Installing .

### Continuation for All

### Remove Shift Cable from Transmission Shift Lever

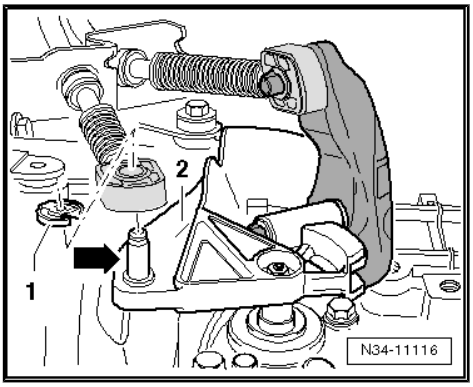


– Lift the clamp and remove the lock washer -1- for the shift cable from the shift lever -2-.

– Remove the shift cable from the pin -arrow- from the shift lever -2-.

Protected by copyright. Copying for private or commercial purposes, in part or in whole, is not permitted unless authorised by Volkswagen AG. Volkswagen AG does not guarantee or accept any liability with
information in this document. Copyright by Volkswagen AG.

### Disconnecting the Cable Retainer from the Selector Cable

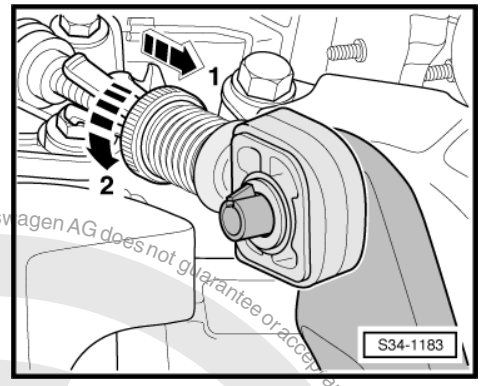


– Pull the securing mechanism all the way forward in direction of -arrow 1- and then unlock to the left in direction of -arrow 2-.

– Push the relay lever forward and guide the selector cable out of the cable retainer.

**Note**

*The cable retainer may be removed only when the relay lever is removed. Refer to*
*⇒ Fig. ""With the Selector Relay Lever Removed: Pry the Selector Cable Retainer Out of the Selector Relay Lever."" , page 67 .*

– Remove cable bracket from transmission, remove the nut -1- and bolts -2-.

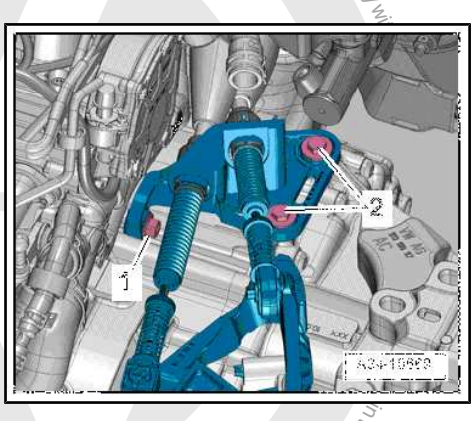


**Caution**

***There is a danger of causing damage to the decoupling element on the exhaust pipe.***

- ***Pay attention to ⇒ Engine Mechanical, Fuel Injection and Ignition; Rep. Gr. 26 ; Emissions Control; Overview - Emissions Control .***

– Remove the exhaust pipe under the shift lever mechanism. Refer to ⇒ Engine Mechanical, Fuel Injection and Ignition; Rep. Gr. 26 ; Exhaust Pipes/Mufflers; Overview - Muffler .

– Remove the heat shield under the shift lever mechanism.

Removing the heat shield. Refer to ⇒ Body Exterior; Rep. Gr. 66 ; Molding/Trim/Extensions/Trim Panels; Floor Heat Shield, Removing and Installing .

– Pivot shift housing downward and remove with cables.

### Relay Lever with Cable Retainer, Removing and Installing

#### Removing

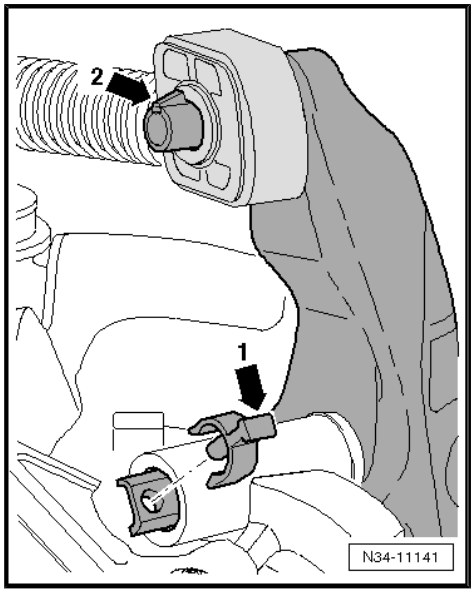


– Remove the clip -arrow 1- and then remove the relay lever together with the cable retainer -arrow 2-.

#### Installing

**Note**

*Lubricate the bearing areas and the sliding surfaces. Grease allocation. Refer to the Parts Catalog.*

– Install the relay lever and cable retainer -arrow 2- all the way into the gearshift cover.

– Install the clip -arrow 1- and make sure it is locked into place.

Protected by copyright. Copyright by Volkswagen AG. Volkswagen AG does not guarantee or accept any liability with respect to the correctness and completeness of this document. Copyright by Volkswagen AG.

**With the Selector Relay Lever Removed: Pry the Selector Cable Retainer Out of the Selector Relay Lever.**

- The relay lever is removed.

– Insert a screwdriver -A- between the bushing -B- and the relay lever.

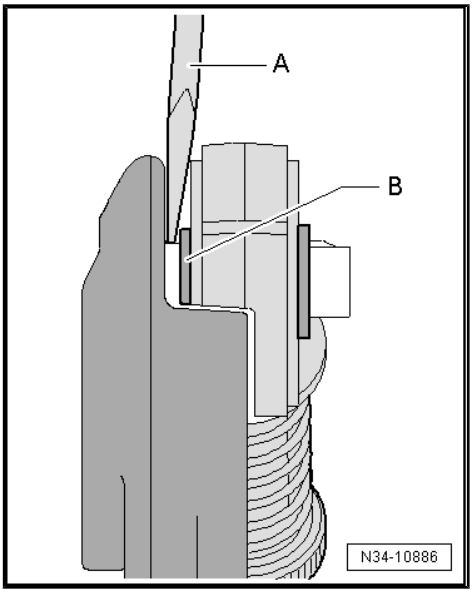


**Installing the Selector Cable Retainer on the Relay Lever**

- The relay lever is removed.
- Lubricate cable retainer locating bore
- Grease allocation. Refer to the Parts Catalog.
- The cable retainer may only be installed at the bushing in the direction of -arrow-
- The cable retainer must move freely on the relay lever.
- The cable retainer must be behind the tab.
- Make sure it engages securely.

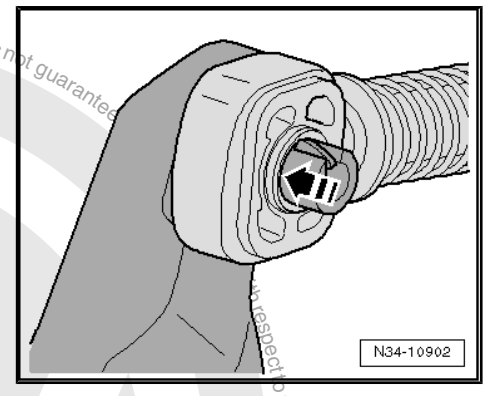


**Removing the Cable Retainer from the Shift Lever Cable and Selector Cable**

– Pull the safety mechanism all the way forward in the direction of -arrow 1- and lock it in direction of -arrow 2-.

– Remove the cable -B- from the cable retainer -A-.

**Shift Mechanism, Installing**

Install in reverse order of removal. Note the following:

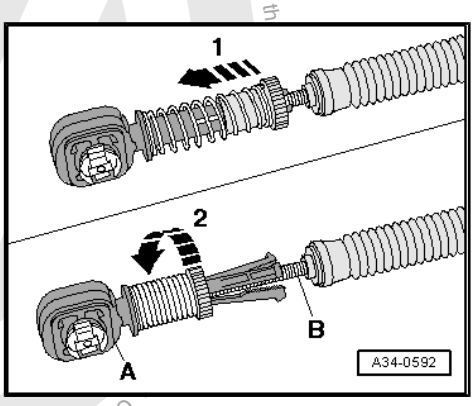


Protected by copyright. Copying for private or commercial purposes, in part or in whole, is not permitted unless authorised by Volkswagen AG. Volkswagen AG does not guarantee or accept any liability with respect to the correctness of information in this document. Copyright by Volkswagen AG.

### Cable Retainer Allocation

These holes have different diameters.

| Cable Retainer for: | Dimension “a” |
|---|---|
| -1-: Shift cable to shift lever | 8.5 mm |
| -2-: Selector cable to relay lever | 10 mm |

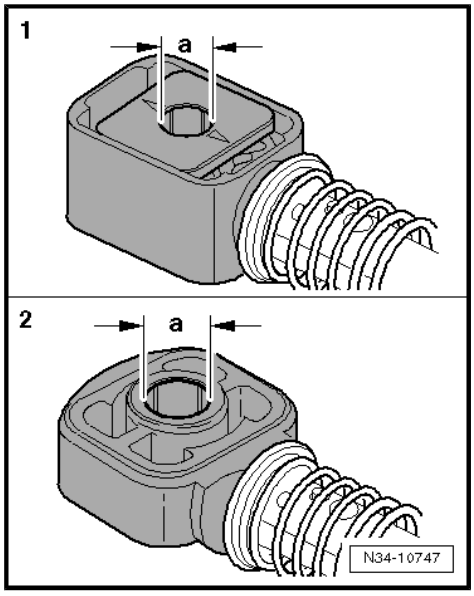


### Selector Lever/ Relay Lever Installed Position

1 - Selector Lever

2 - Clip

3 - The relay lever grips into the sliding rail on the gearshift lever via the sliding shoe -arrow-.

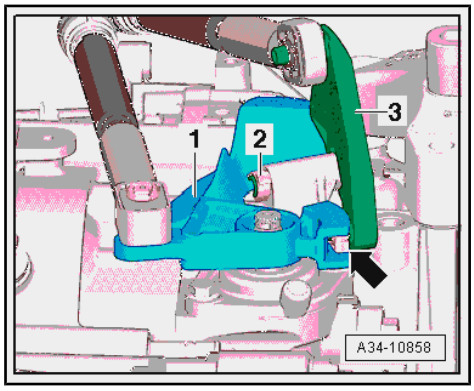


### Installing the Transmission Shift Lever

– When positioning the transmission shift lever, make sure the tooth gap -arrow A- is placed over the missing selector shaft teeth -arrow B-.

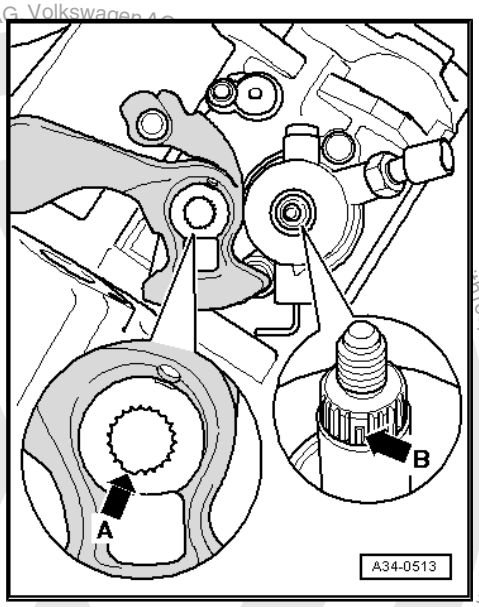


Protected by copyright. Copying for private or commercial purposes, in part or in whole, is not permitted unless authorized by Volkswagen AG. Volkswagen AG
...respect to the correctness of information in this document. Copyright by Volkswagen AG.

**Relay Lever: Lubricate the Following Areas Very Carefully when Installing.**

- Shaft -A- on the relay lever in the direction of -arrows-; quantity of grease: 0.2 grams
- Refer to the Parts Catalog for the grease allocation.

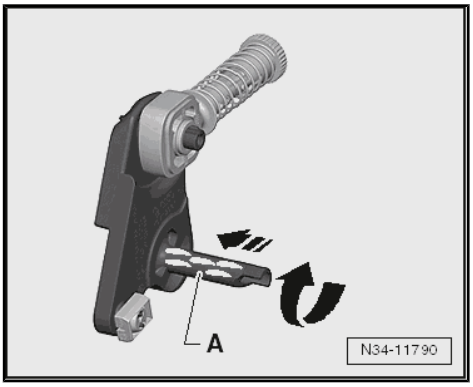


**Gearshift Lever: Lubricate the Following Areas Very Carefully when Installing.**

- Gearshift lever glide track -B-, fits into the relay lever.
- Cable retainer locating bore.
- Refer to the Parts Catalog for the grease allocation.
- The relay lever and gearshift lever in the illustration may differ from the original part.

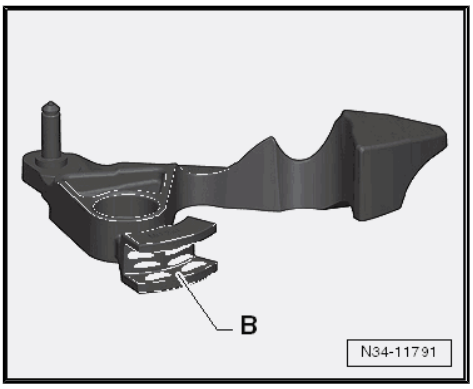


– Replace the gasket on the shift lever housing.
– Align the shift housing so that is it parallel to the body.
- The distance on both sides to the body must be equal.
– Install the shift lever housing.

– Route the cables -1- from the shift lever mechanism -2- to the transmission as follows:
- The cables must run parallel to each other and must not cross each other.
- The cables must be routed inside the depression in the heat shield -3-.

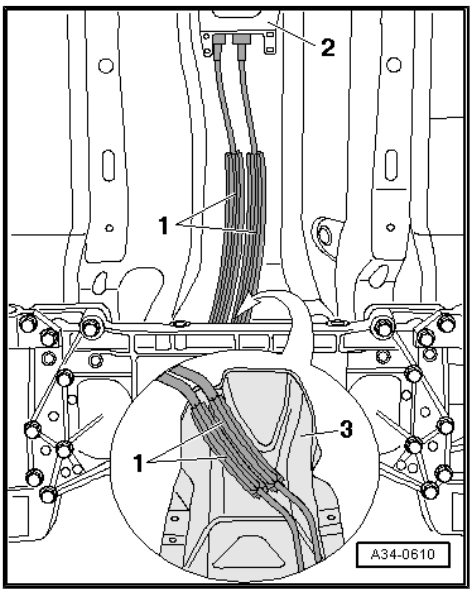


**Note**

*The heat shield from above is shown in the magnified view.*

Protected by copyright. Copying for private or commercial purposes, in part or in whole, is not permitted unless authorised by Volkswagen AG. Volkswagen AG does not guarantee or accept any liability with respect to the correctness of information in this document. Copyright by Volkswagen AG.

A clip -A- holds the cables and heat shield to each other in place.

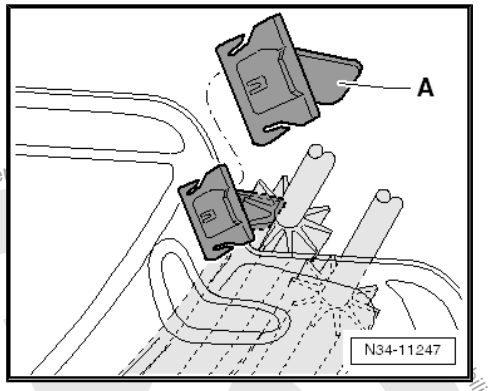


– Mount the cable bracket on the transmission and tighten the bolts -2- and nuts -1-.

The holes in the cable retainers have different diameters. Refer to ⇒ Fig. ""Cable Retainer Allocation"" , page 68 .

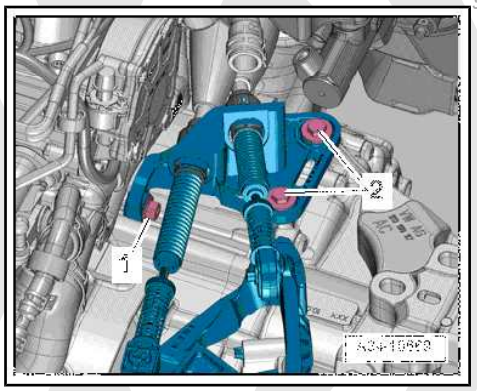


– Apply a small amount of Grease on the pin -arrow- on the shift lever -1-.

• Grease allocation. Refer to the Parts Catalog.

– Secure the shift cable with new lock washers -1- to the shift lever -2-.

– Install the selector cable into the cable retainer on the relay lever.

– Install the center console bracket and the center console. Refer to ⇒ Body Interior; Rep. Gr. 68 ; Center Console; Center Console, Removing and Installing .

– Adjust the shift lever mechanism. Refer to ⇒ "1.6 Selector Mechanism, Adjusting", page 71 .

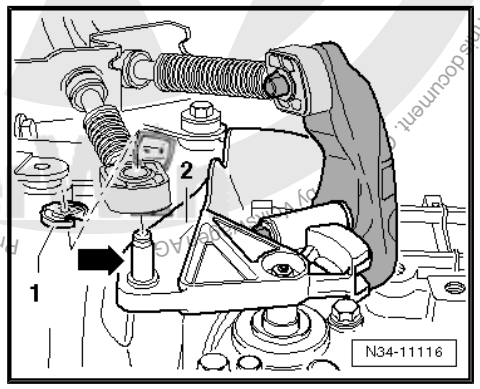


Protected by copyright. Copying for private or commercial purposes, in part or whole, is not permitted unless authorised by Volkswagen AG. We accept no liability with respect to the correctness of information in this document.

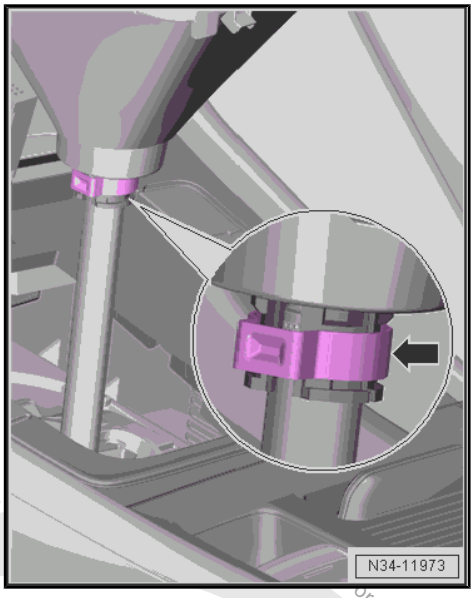


– Install the boot with the selector knob and, if necessary, the noise insulation. Refer to
⇒ “1.4 Gearshift Knob, Removing and Installingg”, page 62 .

– Replace the clamp -arrow-.

– Install the heat shield under the shift lever mechanism. Refer to ⇒ Body Exterior; Rep. Gr. 66 ; Molding/Trim/Extensions/ Trim Panels; Floor Heat Shield, Removing and Installing .

– Assemble the exhaust system free of tension. Refer to ⇒ Engine Mechanical, Fuel Injection and Ignition; Rep. Gr. 26 ; Exhaust Pipes/Mufflers; Overview - Muffler .

– Install the air filter housing.

### Vehicles with a Turbo Diesel Engine

– Refer to ⇒ Engine Mechanical, Fuel Injection and Glow Plug; Rep. Gr. 23 ; Air Filter; Air Filter Housing, Removing and Installing .

### Vehicles with a Gasoline Engine

– Refer to ⇒ Engine Mechanical, Fuel Injection and Ignition; Rep. Gr. 24 ; Air Filter; Air Filter Housing, Removing and Installing .

### Continuation for All

– Install the battery tray, battery and the battery cover. Refer to ⇒ Electrical Equipment; Rep. Gr. 27 ; Battery; Battery, Disconnecting and Connecting .

### Tightening Specifications

♦ Refer to
⇒ “1.3 Overview - Shift Lever Knob and Cover”, page 62

♦ Refer to ⇒ “1.2 Overview - Selector Mechanism”, page 60 .

## 1.6 Selector Mechanism, Adjusting

### Special tools and workshop equipment required

♦ Connecting Pin - T10027A-

### Adjusting Requirements

• Operating and transfer elements of shift mechanism must be in proper condition.

• Shift mechanism must move freely.

• The transmission, clutch and clutch mechanism must also be in proper condition.

• Transmission in neutral.

– Remove the air filter housing if the bracket -A- for the selector shaft and the securing mechanism for the shift and selector cables are not accessible.

### Vehicles with a Turbo Diesel Engine

– Refer to ⇒ Engine Mechanical, Fuel Injection and Glow Plug; Rep. Gr. 23 ; Air Filter; Air Filter Housing, Removing and Installing .

Protected by copyright. Copying for private or commercial purposes, in part or in whole, is not permitted unless authorised by Volkswagen AG. Copyright by Volkswagen AG. or accept any liability with respect to the correctness of information in this document.

Protected by copyright. Copying for private or commercial purposes, in part or in whole, is not permitted unless authorised by Volkswagen AG. Volkswagen AG does not guarantee or accept any liability with respect to the correctness of information in this document. Copyright by Volkswagen AG.

### Vehicles with a Gasoline Engine

– Refer to ⇒ Engine Mechanical, Fuel Injection and Ignition; Rep. Gr. 24 ; Air Filter; Air Filter Housing, Removing and Installing .

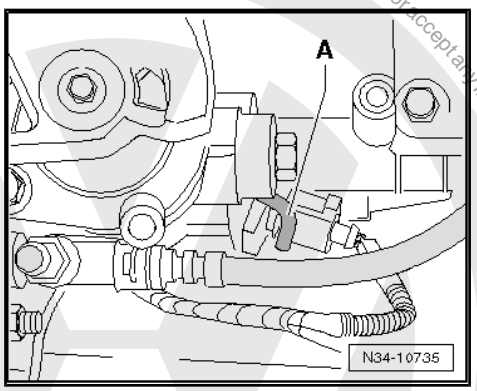


### Continuation for All

– Pull the safety mechanism on the cable retainer for the shift cable and the selector cable all the way forward in direction of -arrow 1- and then lock it to the left in direction of -arrow 2-.

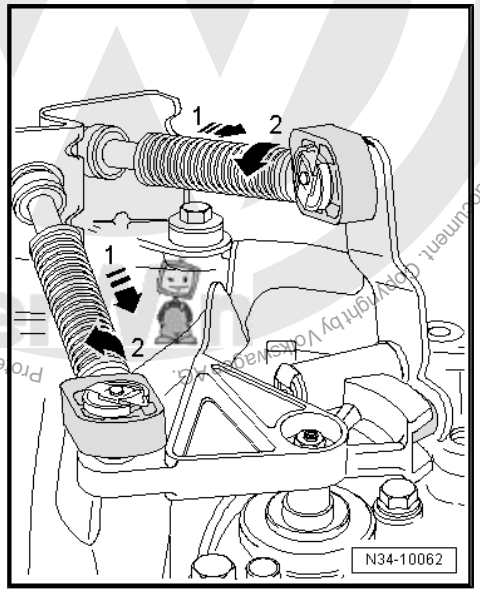


Secure the shift lever shaft as follows:

– Push the shift lever shaft down in the direction of -arrow 1-.

– While press the shift lever shaft down, rotate the bracket -A- in direction of -arrow 3- upward and simultaneously in direction of -arrow 2- press it in until it engages in the shift lever shaft.

– Remove the boot and , if possible, the noise insulation from the center console. Refer to
⇒ “1.4 Gearshift Knob, Removing and Installingg”, page 62 .

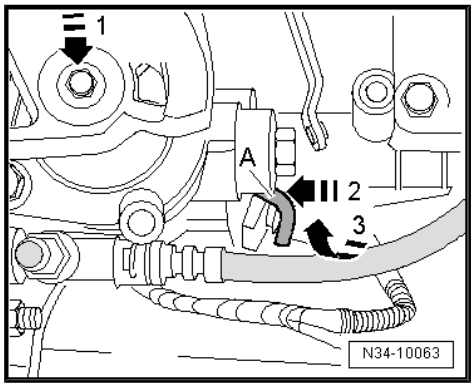

Secure the shift lever shaft as follows:

– Install the shift lever in neutral and, if necessary, press the shift lever to the left and hold.

– Guide the -T10027A- through the noise insulation -A-, hole -B- and into hole -C-.

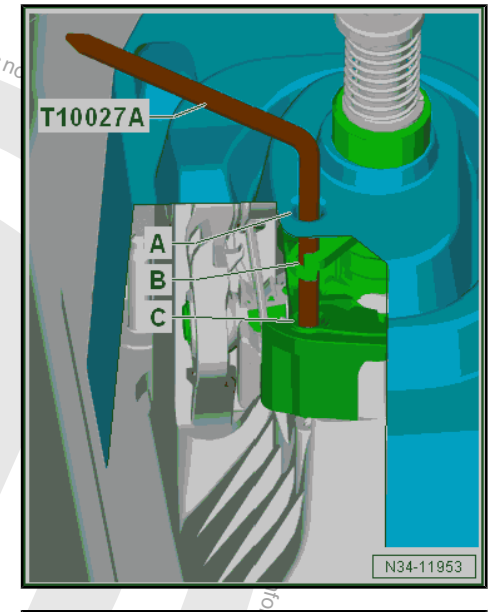


• It must be possible to move the selector and shift cable -B- in the cable retainers -A-.

– Turn the safety mechanism on the cable retainer for the shift cable and selector cable all the way to the right in direction of -arrow 1-.

The spring will push the safety mechanism into the starting position in direction of -arrow 2-.

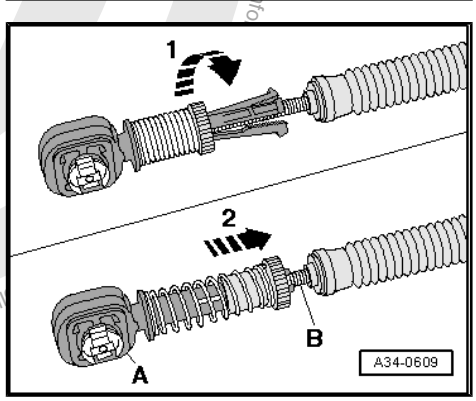


– Then turn the bracket -A- in the direction of -arrow 2- back into it starting position.

• The bracket -A- must get pushed out of the transmission in direction of -arrow 1-.

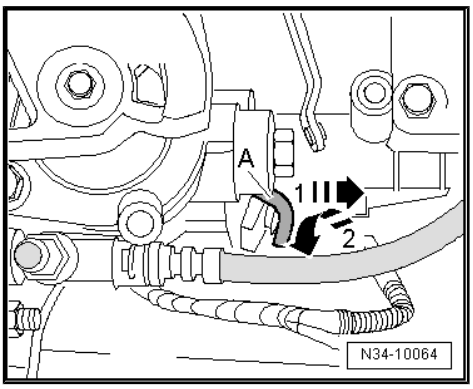


Protected by copyright. Copying for private or commercial purposes, in part or in whole, is not permitted unless authorised by Volkswagen AG. Volkswagen AG does not

– Remove the -T10027A- from the noise insulation -A- and the holes -B and C-.

– Install the boot and the noise insulation (if equipped). Refer to ⇒ “1.3 Overview - Shift Lever Knob and Cover”, page 62 .

– Make sure the shift lever shaft moves easily.

– Install the air filter housing.

**Vehicles with a Turbo Diesel Engine**

– Refer to ⇒ Engine Mechanical, Fuel Injection and Glow Plug; Rep. Gr. 23 ; Air Filter; Air Filter Housing, Removing and Installing .

**Vehicles with a Gasoline Engine**

– Refer to ⇒ Engine Mechanical, Fuel Injection and Ignition; Rep. Gr. 24 ; Air Filter; Air Filter Housing, Removing and Installing .

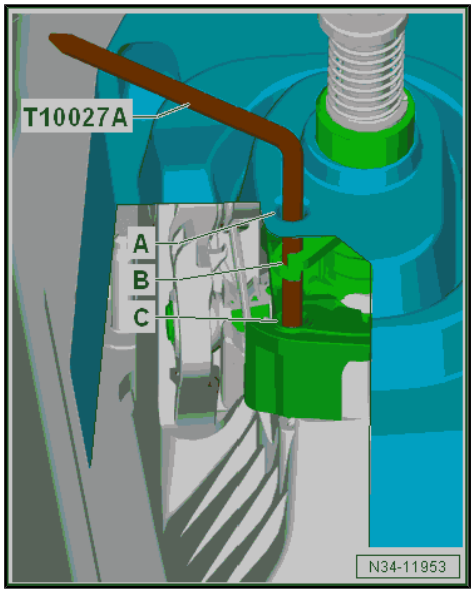


## 1.7 Gearshift Mechanism, Checking

- The shift lever must rest in the 3rd/4th gear selector lever gate when the transmission is in neutral.

– Operate the clutch.

– Move the shift lever (selector lever) several times through all the gears. Make sure the reverse gear lock is working correctly.

– It will be necessary to adjust the gearshift mechanism again if gear catching still occurs each time a gear is engaged. . Refer to ⇒ “1.6 Selector Mechanism, Adjusting”, page 71 .

## 1.8 Selector Shaft Seal, Replacing

**Special tools and workshop equipment required**

♦ Puller - Crankshaft/Power Steering Seal - T20143/1-

♦ Press Piece - Shift Rod/Alternator - VW423-

♦ Sealing Grease - G 052 128 A1-

– Remove transmission shift lever and relay lever. Refer to ⇒ “1.2 Overview - Selector Mechanism”, page 60 .

**Note**

*If it is not possible to remove the relay lever through the transmission bracket, then remove the sliding shoe from the gearshift lever.*

– Remove the shift lever from the shift lever shaft.

Protected by copyright. Copying for private or commercial purposes, in part or in whole, is not permitted unless authorised by Volkswagen AG. Volkswagen AG does not guarantee or accept any liability with respect to the correctness of information in this document. Copyright by Volkswagen AG.

– Remove the seal using the -T20143/1-

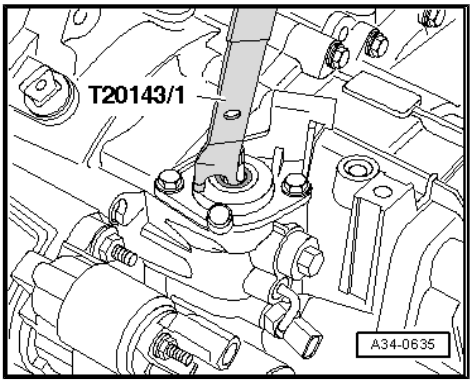


– Lightly oil new seal on outer circumference.
– Fill the space between the sealing and dust lip -arrow- halfway with Sealing Grease - G 052 128 A1- .

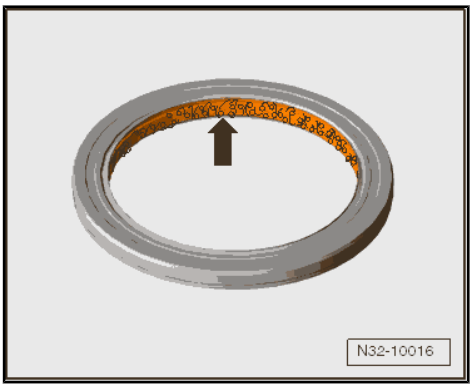


– Drive in the seal using the -VW423- .
– Install the gearshift lever and relay lever.. Refer to ⇒ “1.2 Overview - Selector Mechanism”, page 60 .

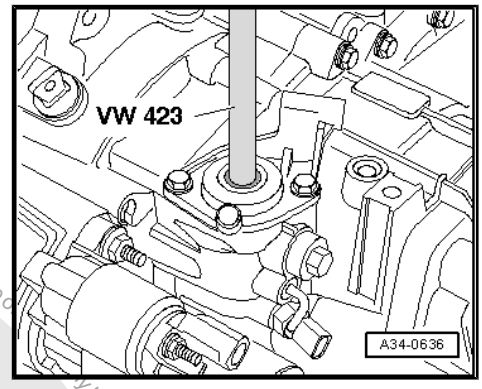


Protected by copyright. Copying for private or commercial purposes, in part or in whole, is not permitted unless authorised by Volkswagen AG. Volkswagen AG does not guarantee or accept any liability with respect to the correctness of information in this document. Copyright by Volkswagen AG.

# 2 Transmission, Removing and Installing

⇒ “2.1 Transmission, Removing”, page 76

⇒ “2.2 Transmission, Installing”, page 92

⇒ “2.3 Transmission Tightening Specifications”, page 104

## 2.1 Transmission, Removing

⇒ “2.1.1 Transmission, Removing, Vehicles with Turbo Diesel Engine”, page 76

⇒ “2.1.2 Transmission, Removing, Vehicles with Gasoline Engine”, page 83

### 2.1.1 Transmission, Removing, Vehicles with Turbo Diesel Engine

Protected by copyright. Copyright by Volkswagen AG. Volkswagen AG does not guarantee or accept any liability with respect to the correctness of information in this document. Copyright by Volkswagen AG.

**Special tools and workshop equipment required**

- Engine Support Bridge - 10-222A-
- Engine/Gearbox Support Shackle (2 pc.) - 10-222A/12-
- Engine Support Bridge - Engine Support 31 - Adapter 1 - 10-222A/31-1-
- Engine Support Bridge - Engine Support 31 - Adapter 2 - 10-222A/31-2-
- Engine Support Bridge - Engine Support 29 - 10-222A/29-
- Engine Support - Basic Set - Square Pipe - T40091/1-
- Engine Support - Basic Set - Movable Joint - T40091/3-
- Engine Support Brackets - T40093/3- from Engine Support - Supplement Kit - T40093A-
- Engine Support Brackets - T40093/3-6-
- Transmission Support - 3282-
- Transmission Support - Mounting Plate 33 - 3282/33-
- Transmission Support Jig - 3336- to transport the transmission.
- Torque Wrench 1331 5-50Nm - VAG1331-
- Torque Wrench 1332 40-200Nm - VAG1332-
- Engine and Gearbox Jack - VAS6931-

**Caution**

*This procedure contains mandatory replaceable parts. Refer to component overview prior to starting procedure.*

**Mandatory Replacement Parts**

- Nut - Selector Lever to Shift Lever Shaft with Shift Lever Cover
- Lock Washer - Cable Retainer to Selector Lever
- Lock Washer - Cable Mounting Bracket to Cable Retainer
- Bolt - Pendulum Support to Transmission
- Bolt - Transmission Bracket to Transmission

– If the -10-222A- does not yet have a hole with an -arrow- marked on it, do so now.

• Dimension -a- = 225mm

• Hole diameter = 12.5 mm

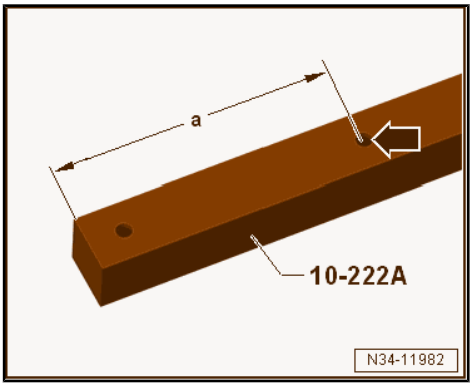


– Disconnect the battery ground cable. Refer to ⇒ Electrical Equipment; Rep. Gr. 27 ; Battery; Battery, Disconnecting and Connecting .

– Remove the engine cover. Refer to ⇒ Rep. Gr. 10 ; Engine Cover; Engine Cover, Removing and Installing .

– Remove the air filter housing. Refer to ⇒ Engine Mechanical, Fuel Injection and Ignition; Rep. Gr. 24 ; Air Filter; Air Filter Housing, Removing and Installing .

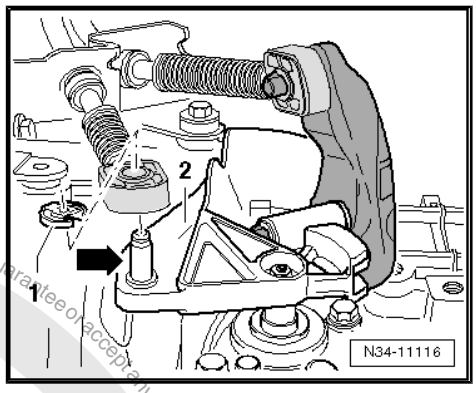


– Remove the battery and the battery tray -1- -arrows-. Refer to ⇒ Electrical Equipment; Rep. Gr. 27 ; Battery; Battery, Disconnecting and Connecting .

– Remove the shift cable lock washer -1- from the transmission selector lever -2-. Remove the cable from the pin -arrow-.

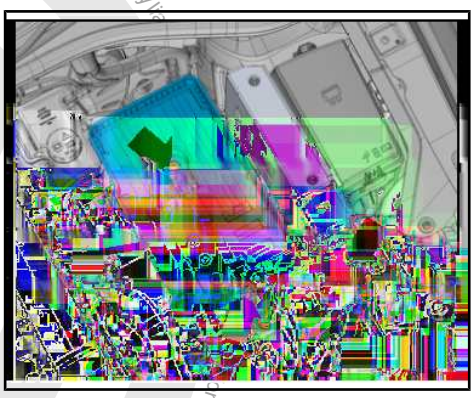

– Remove the cable retainer from the selector cable.

• To avoid damage to the selector cable, the cable retainer must be disconnected from the selector lever before removal.

– Pull the safety mechanism all the way forward in the direction of -arrow 1-. Then lock it to the left in the direction of -arrow 2-.

– Push the relay lever forward (in the direction of -arrow 3-).

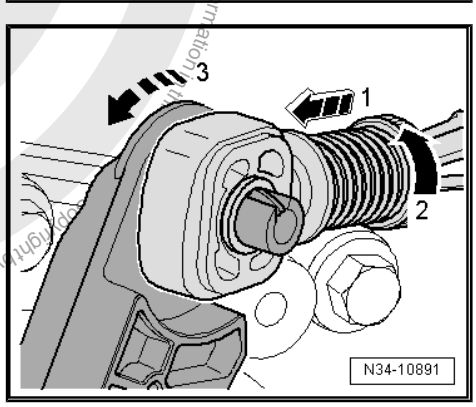


**Note**

*Only remove the cable retainer when the relay lever is removed. Refer to*
*⇒ Fig. ""With the Selector Relay Lever Removed: Pry the Selector Cable Retainer Out of the Selector Relay Lever."" , page 67* .

Protected by copyright. Copyright privileged and commercial purposes, in part or in whole, is not permitted unless authorised by Volkswagen AG. Volkswagen AG does not guarantee or accept any liability for any information.
Copyright by Volkswagen AG.

– Remove nut -1- and bolts -2- and set the cable bracket and cables off to the side.

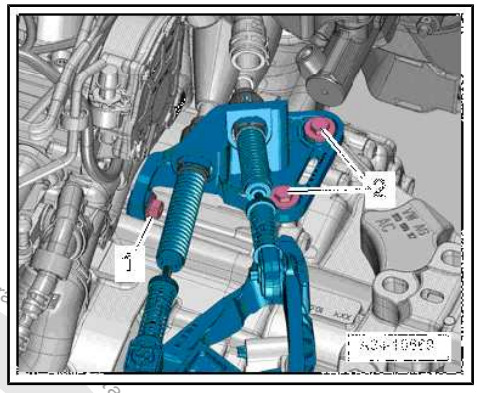


**Note**

*Brake fluid must not come into contact with the longitudinal member or transmission. If it does, clean the area thoroughly.*

– Unclamp the supply hose to the clutch master cylinder with a -3094- .

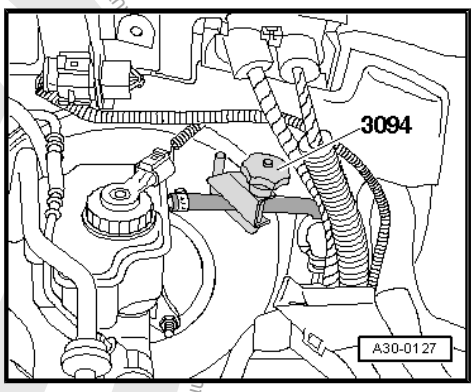


**Note**

- *A slight deformation of the supply hose remains after the -3094- has been unclamped.*
- *The supply hose is therefore not defective.*
- *After removing the -3094- , the supply hose must be formed back into its original shape.*

– Place a lint-free cloth under the bleeder.

– Remove the clip -arrow- all the way and then remove the hose/line assembly -A- from the bleeder.

– Tie up wire.

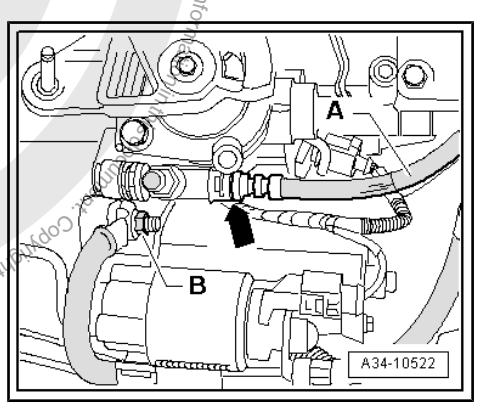


The ground cable -B-, if present, is installed later in the procedure.

– Seal the open lines and connections with clean plugs from the -VAS6122- .

**Caution**

***There is a risk of contamination from the leaking brake fluid.***

- ***Do not use the clutch pedal if the hose/line assembly from the clutch slave cylinder bleeder is disconnected.***

– Remove the upper engine/transmission connecting bolts -arrows-.

– Remove windshield wiper arms. Refer to ⇒ Electrical Equipment; Rep. Gr. 92 ; Windshield Wiper System; Windshield Wiper Arms, Removing and Installing .

– Remove the plenum chamber cover. Refer to ⇒ Body Exterior; Rep. Gr. 50 ; Bulkhead; Plenum Chamber Cover, Removing and Installing .

– Disconnect any hoses and cables in the area of the -10-222A- lifting eyes on the engine.

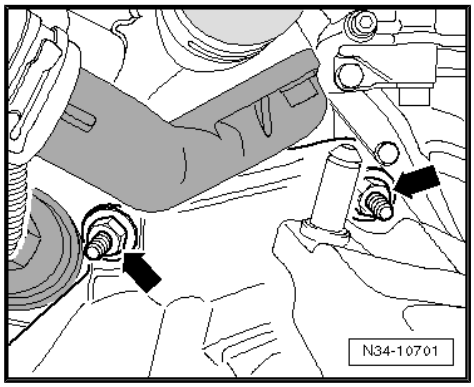


Protected by copyright. Copyright by Volkswagen AG. Volkswagen AG does not guarantee the accuracy and completeness of this publication nor shall it be liable for any damages resulting from its use. The reproduction, distribution and display of this publication is permitted for private, non-commercial purposes only. The information contained in this publication is protected by intellectual property rights and other laws. This information may only be used to the extent that you have acquired it from Volkswagen AG. Any other use of this publication or any part thereof is not permitted unless authorised by Volkswagen AG.

– Attach the -10-222A- as follows:

The following are needed:

- -10-222A/31-1-
- -10-222A/31-2-
- -10-222A/12-
- -T40091/1-
- -T40091/3-
- -T40093A/3-
- -T40093/3-6-

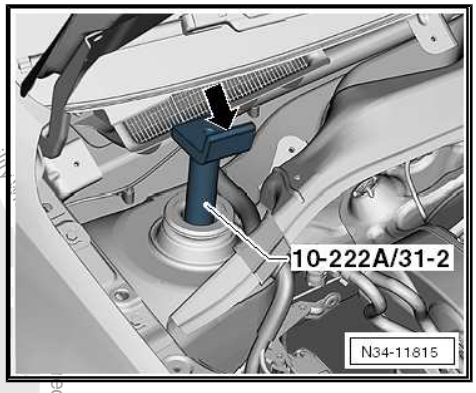


– Remove caps above the front suspension strut bolted connections.

– Place the -10-222A/31-1- and -10-222A/31-2- on the suspension strut mounts.

The tabs -arrow- face the engine compartment.

– Slide the -T40091/3- onto the -10-222A- .

– Fasten the -10-222A- on the -10-222A/31-1- and on the -10-22 /31-2- .

-A- is the -T40093/3-6- (refer to the next illustration)

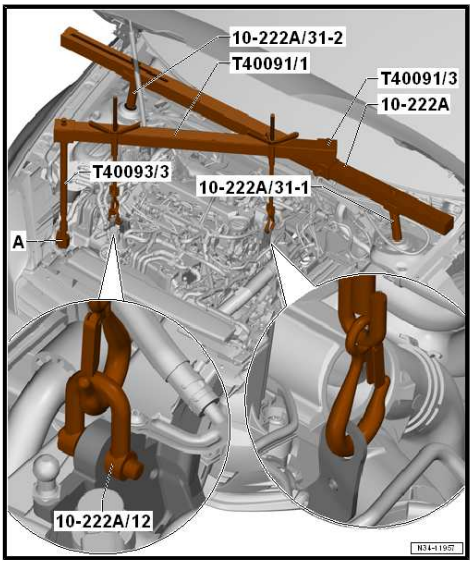


Protected by copyright. Copyright for private or commercial purposes, in part or in whole, is not permitted unless authorised by Volkswagen AG. Volkswagen AG does not guarantee or accept any liability with respect to the correctness of information in this document. Copyright by Volkswagen AG.

– Remove fuel filter and set off to the side. Do not open the line system. Refer to ⇒ Fuel Supply System; Rep. Gr. 20 ; Fuel Delivery Unit/Fuel Level Sensor; Overview - Fuel Delivery Unit/Fuel Level Sensor .

– If present, remove wires from the front area of the tab on the longitudinal member -arrow-. Do not disconnect line system.

– Position the -T40093/3-6- on the right longitudinal member.

– If necessary, carefully unclip the A/C system pipe in the front area. Do not disconnect the line system. Refer to ⇒ Heating, Ventilation and Air Conditioning; Rep. Gr. 87 ; Refrigerant Circuit; System Overview - Refrigerant Circuit .

• The -T40093/3-6- locks with the pins -A- behind the tab on the longitudinal member -arrow-.

– Install the -T40093/3- .

– Connect the -T40093/3- over the -T40091/1- with the -10-222A- and tension it (refer to the previous illustration).

• The -T40091/1- must be flush with the -T40091/3- and the -T40093/3- (refer to the previous illustration).

– Then engage the -T40093/3- in the lifting eyes, as shown.

– Pretension the engine/transmission assembly and -10-222A- via the -T40093/3- .

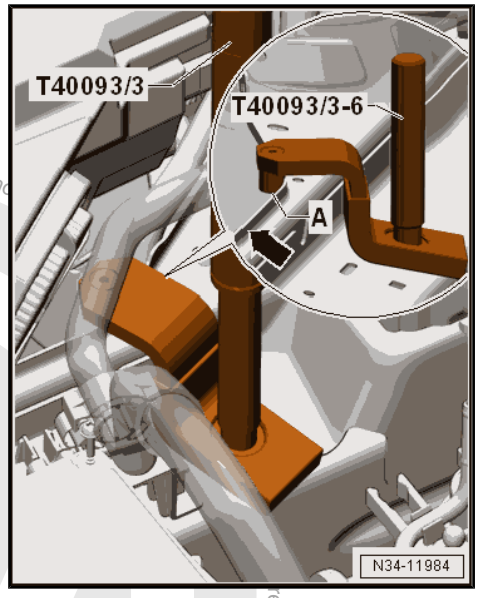


– Disconnect the front left connectors from the transmission:

1 - Transmission for vehicles with start/stop system: Transmission Neutral Position Sensor - G701-

2 - Back-Up Lamp Switch - F4-

– Remove the noise insulation. Refer to ⇒ Body Exterior; Rep. Gr. 66 ; Noise Insulation; Overview - Noise Insulation .

– Remove the lower section of the left front wheel housing liner. Refer to ⇒ Body Exterior; Rep. Gr. 66 ; Wheel Housing Liner; Front Wheel Housing Liner, Removing and Installing .

– Remove the starter. Refer to ⇒ Electrical Equipment; Rep. Gr. 27 ; Starter; Starter, Removing and Installing .

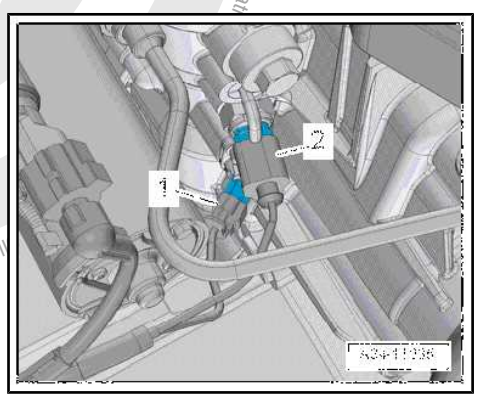


– Disconnect the connector -1- from the Oil Level Thermal Sensor - G266- .

– Remove the subframe and steering gear. Refer to ⇒ Suspension, Wheels, Steering; Rep. Gr. 40 ; Subframe; Subframe with Steering Gear, Removing and Installing .

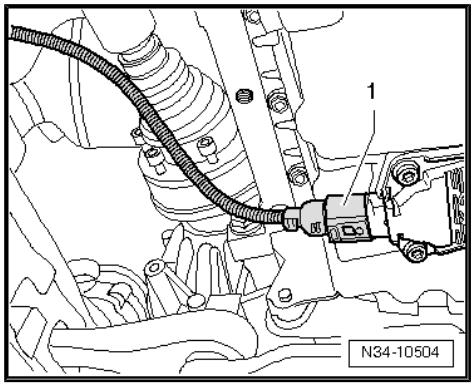

– Remove the drive axle heat shield -arrows- (if equipped). Refer to ⇒ Suspension, Wheels, Steering; Rep. Gr. 40 ; Drive Axle; Drive Axle, Removing and Installing .

– Remove the drive axles from the flange shafts and tie them up as high as possible. Be careful not to damage the surface protection. Refer to ⇒ Suspension, Wheels, Steering; Rep. Gr. 40 ; Drive Axle; Drive Axle, Removing and Installing .

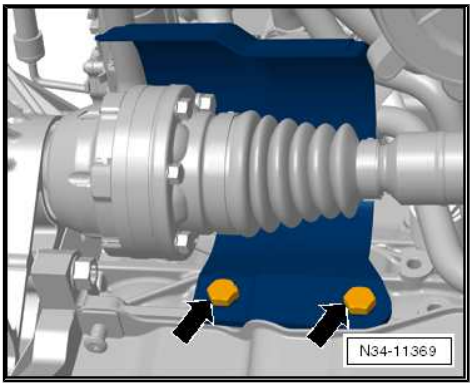


**Caution**

***There is a danger of causing damage to the decoupling element.***

- ***Pay attention to ⇒ Engine Mechanical, Fuel Injection and Ignition; Rep. Gr. 26 ; Emissions Control; Overview - Emissions Control .***

– Disconnect the exhaust system behind the particulate filter. Refer to ⇒ Engine Mechanical, Fuel Injection and Ignition; Rep. Gr. 26 ; Exhaust Pipes/Mufflers; Overview - Muffler .

– If present, remove nut -arrow- and ground cable.

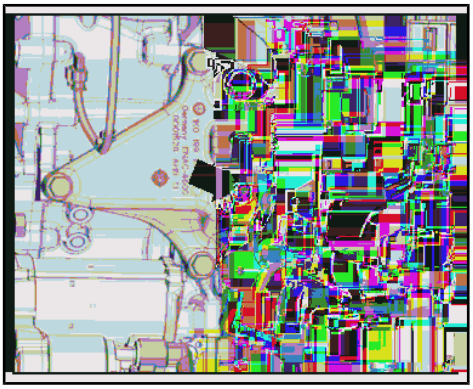

– Remove the bolts -arrows- from the transmission mount.

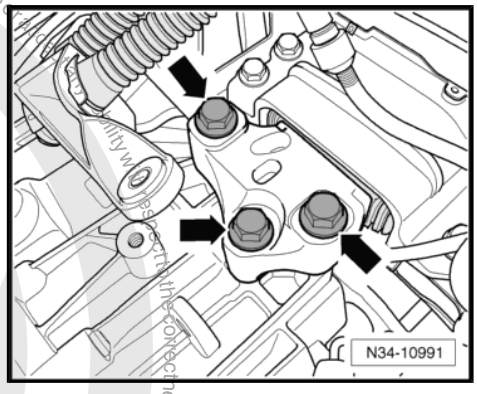


– Turn the spindles on the -10-222A- and lower the transmission to dimension -a-.

• Dimension -a- = 60 mm

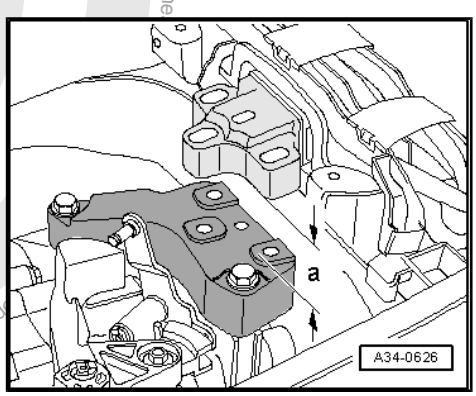


Protected by copyright. Copying for private or commercial purposes, in part or in whole, is not permitted unless authorised by Volkswagen AG. Volkswagen AG does not guarantee the accuracy of the copyright by Volkswagen AG.

– Remove the bolts -arrows- and then remove the transmission bracket from the transmission.

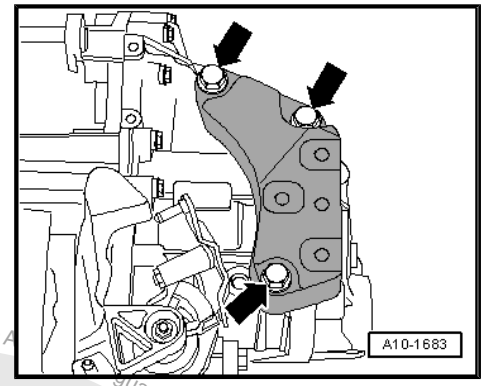


– Remove the bolts -2- from the transmission/engine connection.

The transmission to engine connection bolts -1 and 3- will be removed later in the procedure.

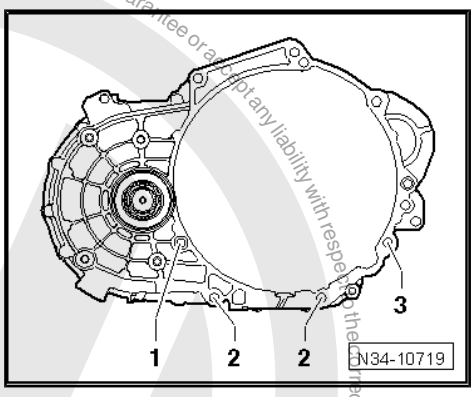


Align the -3282- with the -3282/33- in order to remove the transmission.

– Align the arms of the -3282- so that they match up with the holes in the Adjustment Plate .

– Install the Support Elements -A- as illustrated on the -3282/33- .

– Install the Mounting Element -C- instead of the -3282/29- .

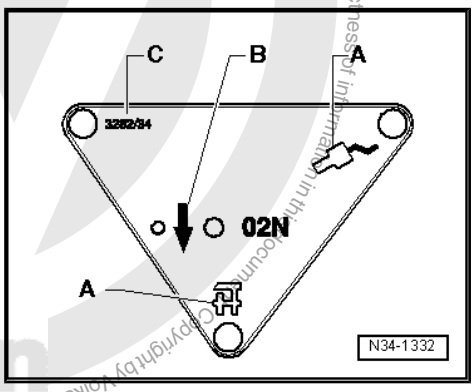


– Align the -3282/33- so that it is parallel to the transmission.

– Install the -10-222A/29- into the rear hole in the transmission for the pendulum support bolt.

– Secure the -VW771/40- inside the threaded hole in the transmission housing as illustrated.

– Secure the transmission on the -3282- using the bolt (M10×20) -A-.

The drift -B- must be flush at the bottom with the guide on the -3282- -arrow-.

– Position the -VAS6931- under the vehicle. The arrow on the adjusting plate points in direction of travel.

– Remove the engine/transmission connecting bolt -C-.

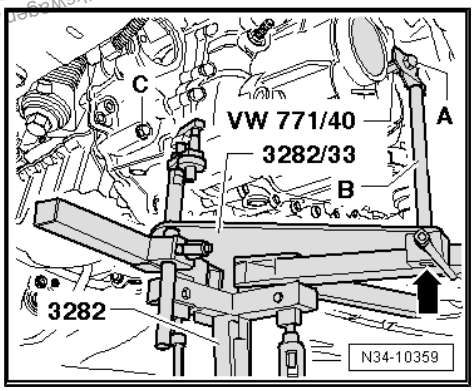


Protected by copyright. Copying for private or commercial purposes, in part or in whole, is not permitted unless authorised by Volkswagen AG. Volkswagen AG does not guarantee or accept any liability with respect to the correctness of information in this document. Copyright by Volkswagen AG.

– Remove the last transmission to engine connecting bolt -arrow-.
– Separate the transmission from the engine (alignment sleeves).

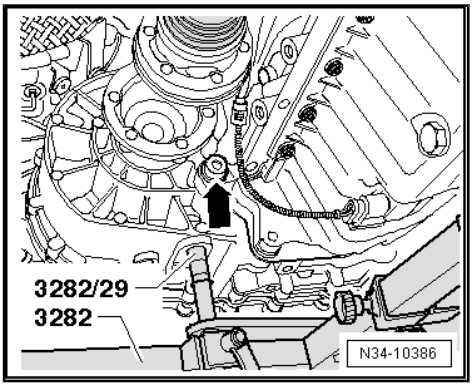


– Carefully lower the transmission while guiding the right flange shaft past the hole -arrow 1- on the intermediate plate and the flywheel -arrow 2-.

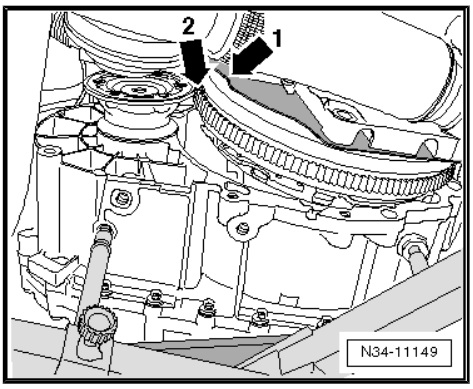


**Note**

*Pay attention to the lines when lowering the transmission.*

**Install the transmission. Refer to**
⇒ "2.2.1 Transmission, Installing, Vehicles with Turbo Diesel Engine", page 92

## 2.1.2 Transmission, Removing, Vehicles with Gasoline Engine

**Special tools and workshop equipment required**

- Engine Support Bridge - 10-222A-
- Engine Support Bridge - Engine Support 29 - 10-222A/29-
- Engine Support Bridge - Engine Support 18 - 10-222A/18-
- If necessary Engine/Gearbox Support Shackle (2 pc.) - 10-222A/12-
- Transmission Support - 3282-
- Transmission Support - Pins 29 - 3282/29-
- Transmission Support - Mounting Plate 33 - 3282/33-
- Transmission Support Jig - 3336- to transport the transmission.
- Torque Wrench 1331 5-50Nm - VAG1331-
- Torque Wrench 1332 40-200Nm - VAG1332-
- Engine and Gearbox Jack - VAS6931-
- Slide Hammer Set - Adapter 40 - VW771/40-
- Engine Support Brackets - T40093/3-6- (quantity 2)
- Engine Support Bridge - Special Hook (2 pc.) - 10-222A/20-
- Engine Support - Basic Set - Square Pipe - T40091/1- (quantity 2)
- Engine Support - Basic Set - Movable Joint - T40091/3- (quantity 2)
- Engine Support - Supplement Kit - Spindle - T40093/3- (quantity 2) from the Engine Support - Supplement Kit - T40093A-

Protected by copyright. Copying for private or commercial purposes, in part or in whole, is not permitted unless authorised by Volkswagen AG. Volkswagen AG does not guarantee or accept any liability with respect to the correctness of information in this document. Copyright by Volkswagen AG.

Protected by copyright. Copying for private or commercial purposes, in part or in whole, is not permitted unless authorised by Volkswagen AG. Volkswagen AG does not guarantee or accept any liability with respect to the correctness of information in this document. Copyright by Volkswagen AG.

- Engine Sling - Engine Bracket - 2024A/1- from Engine Sling - 2024A-
- Grease for Clutch Plate Shaft Splines - G 000 100-
- Allocate the grease for gearshift mechanism. Refer to the Parts Catalog.
- M10 x 20 hex bolt

**Caution**

*This procedure contains mandatory replaceable parts. Refer to component overview prior to starting procedure.*

**Mandatory Replacement Parts**

- Nut - Selector Lever to Shift Lever Shaft with Shift Lever Cover
- Lock Washer - Cable Retainer to Selector Lever
- Lock Washer - Cable Mounting Bracket to Cable Retainer
- Bolt - Pendulum Support to Transmission
- Bolt - Transmission Bracket to Transmission

– Disconnect the battery ground cable. Refer to ⇒ Electrical Equipment; Rep. Gr. 27 ; Battery; Battery, Disconnecting and Connecting .

– Remove the engine cover. Refer to ⇒ Rep. Gr. 10 ; Engine Cover; Engine Cover, Removing and Installing .

– Remove the air filter housing. Refer to ⇒ Engine Mechanical, Fuel Injection and Ignition; Rep. Gr. 24 ; Air Filter; Air Filter Housing, Removing and Installing .

– Remove the battery and the battery tray -1- -arrows-. Refer to ⇒ Electrical Equipment; Rep. Gr. 27 ; Battery; Battery, Disconnecting and Connecting .

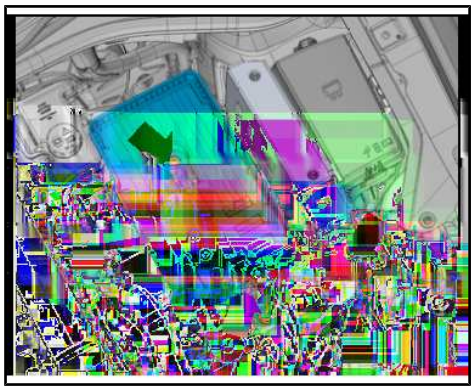

– Remove the shift cable lock washer -1- from the transmission selector lever -2-. Remove the cable from the pin -arrow-.

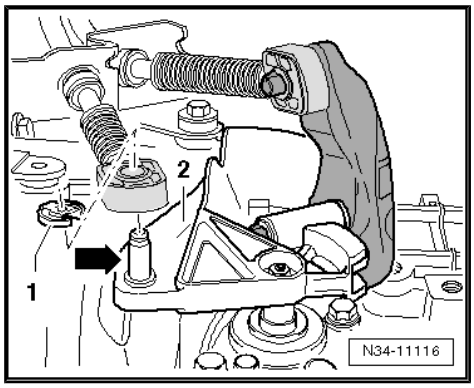

– Remove the cable retainer from the selector cable.

• To avoid damage to the selector cable, the cable retainer must be disconnected from the selector lever before removal.

– Pull the safety mechanism all the way forward in the direction of -arrow 1-. Then lock it to the left in the direction of -arrow 2-.

– Push the relay lever forward (in the direction of -arrow 3-).

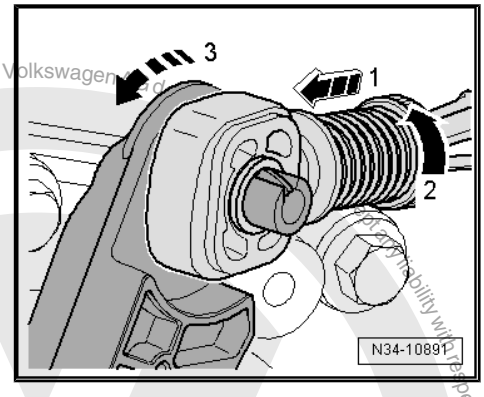


**Note**

*Only remove the cable retainer when the relay lever is removed. Refer to*
*⇒ Fig. ""With the Selector Relay Lever Removed: Pry the Selector Cable Retainer Out of the Selector Relay Lever."", page 67* .

– Remove nut -1- and bolts -2- and set the cable bracket and cables off to the side.

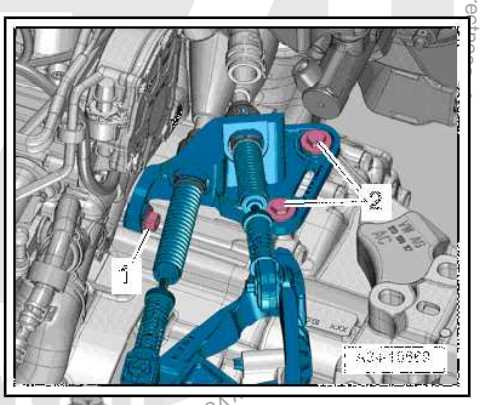


**Note**

*Brake fluid must not come into contact with the longitudinal member or transmission. If it does, clean the area thoroughly.*

– Unclamp the supply hose to the clutch master cylinder with a -3094- .

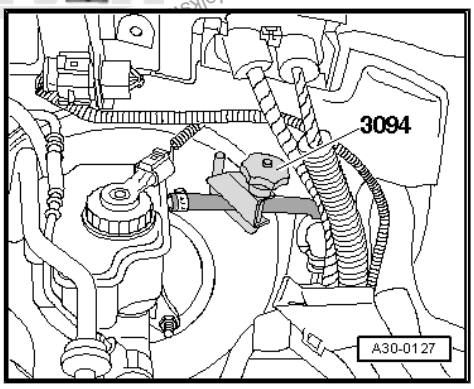


**Note**

♦ *A slight deformation of the supply hose remains after the -3094- has been unclamped.*

♦ *The supply hose is therefore not defective.*

♦ *After removing the -3094- , the supply hose must be formed back into its original shape.*

– Place a lint-free cloth under the bleeder.

– Remove the clip -arrow- all the way and then remove the hose/line assembly -A- from the bleeder.

– Tie up wire.

The ground cable -B-, if present, is installed later in the procedure.

– Seal the open lines and connections with clean plugs from the -VAS6122- .

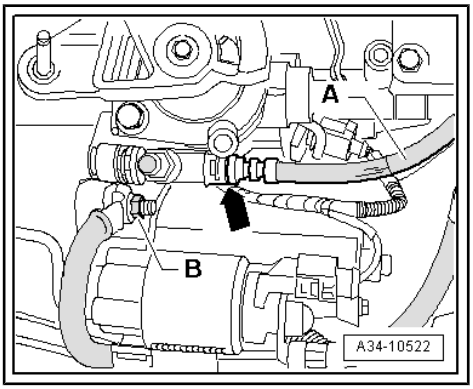


**Caution**

***There is a risk of contamination from the leaking brake fluid.***

♦ ***Do not use the clutch pedal if the hose/line assembly from the clutch slave cylinder bleeder is disconnected.***

Protected by copyright. Copying for private or commercial purposes, in part or in whole, is not permitted unless authorized by Volkswagen AG. Volkswagen AG does not guarantee or accept any liability with respect to the correctness

– Remove the upper engine/transmission connecting bolts -arrows-.

– Disconnect any hoses and cables in the area of the -10-222A- lifting eyes on the engine.

– Attach the -10-222A- as follows:

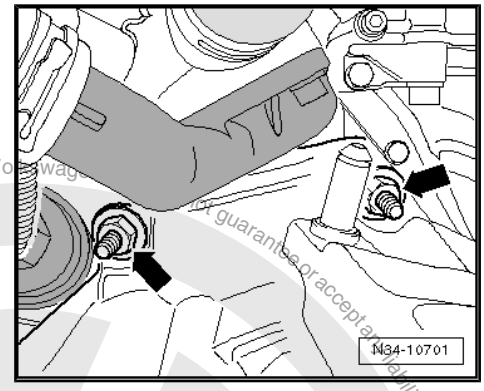


The following are needed:

- ♦ -10-222A/18-
- ♦ -10-222A/12- (is needed if the Spindle from the -10–222A- cannot be engaged in the engine lifting eye).
- ♦ -10-222A/29- (quantity 2)
- ♦ -T40091/1- (quantity 2)
- ♦ -T40091/3- (quantity 2)
- ♦ -T40093/3- (quantity 2)
- ♦ -T40093/3-6- (quantity 2)
- ♦ -10-222A/20-

– Insert the -10-222A/29- between the fender bolting edge and the fender bolting plate underneath it on both sides of the vehicle.

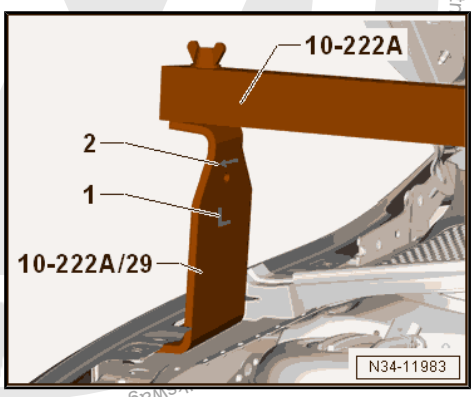


- ♦ Installed position:

**“L” = -1- Adapter is inserted on the “right” side of the vehicle ( Adapter locks in place in the fender opening).**

**“R” (not illustrated here), Adapter is installed on the “left” side of the vehicle.**

The arrow -2- always points in driving direction.

– Slide the -10-222A/18- and two -T40091/3- onto the -10-222A- .

– Tighten the -10-222A- on the -10-222A/29- .

-A- is the -T40093/3-6- (refer to the next illustration)

– Remove the filler tube for the windshield washer system washer fluid reservoir. Refer to ⇒ Electrical Equipment; Rep. Gr. 92 ; Windshield Washer System; Washer Fluid Reservoir, Removing and Installing .

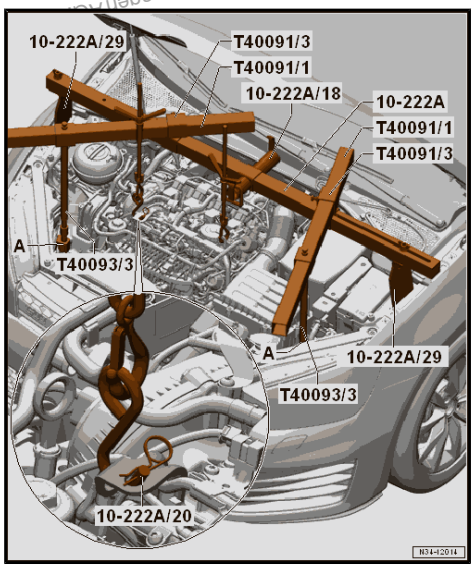


Protected by copyright. Copying for private or commercial purposes, in part or in whole, is not permitted unless authorised by Volkswagen AG. Volkswagen AG does not guarantee or accept any liability with respect to the correctness

– If present, remove wires from the front area of both longitudinal members -arrow-. Do not disconnect line system.

– Place the -T40093/3-6- on both longitudinal members (the right longitudinal member is illustrated here).

– If necessary, carefully unclip the A/C system pipe in the front area. Do not disconnect the line system. Refer to ⇒ Heating, Ventilation and Air Conditioning; Rep. Gr. 87 ; Refrigerant Circuit; System Overview - Refrigerant Circuit .

• The -T40093/3-6- locks respectively with the pins -A- behind the tab on the longitudinal member -arrow-.

– Install the -T40093/3- .

– Connect the -T40093/3- over the -T40091/1- with the -10-222A- and tension it (⇒ previous illustration).

– Engage the -T40093/3- into the engine lifting eyes as illustrated in the previous illustration. If necessary, use -10-222A/12- .

– Pretension the engine/transmission assembly and -10–222A- via the -T40093/3- .

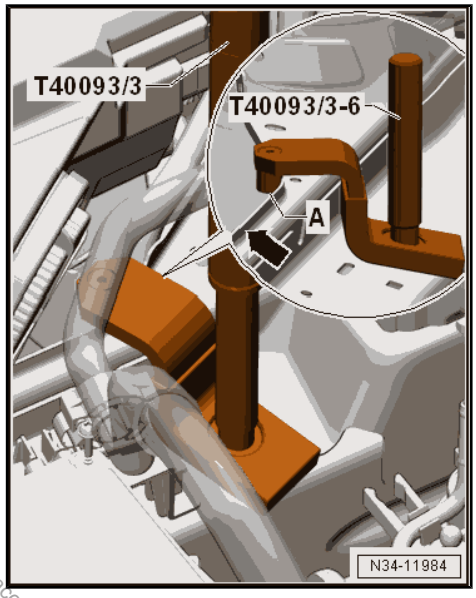


– Disconnect the front left connectors from the transmission:

1 - Transmission for vehicles with start/stop system: Transmission Neutral Position Sensor - G701-

2 - Back-Up Lamp Switch - F4-

– Remove the noise insulation. Refer to ⇒ Body Exterior; Rep. Gr. 66 ; Noise Insulation; Overview - Noise Insulation .

– Remove the lower section of the left front wheel housing liner. Refer to ⇒ Body Exterior; Rep. Gr. 66 ; Wheel Housing Liner; Front Wheel Housing Liner, Removing and Installing .

– Remove the starter. Refer to ⇒ Electrical Equipment; Rep. Gr. 27 ; Starter; Starter, Removing and Installing .

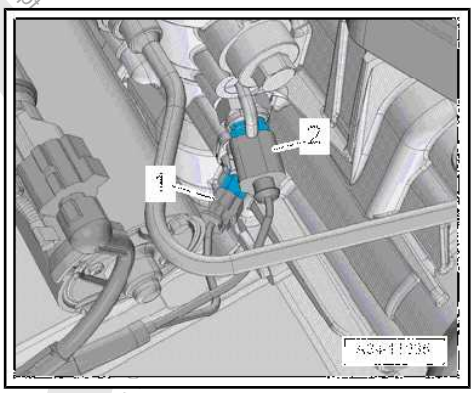


– Disconnect the connector -1- from the Oil Level Thermal Sensor - G266- .

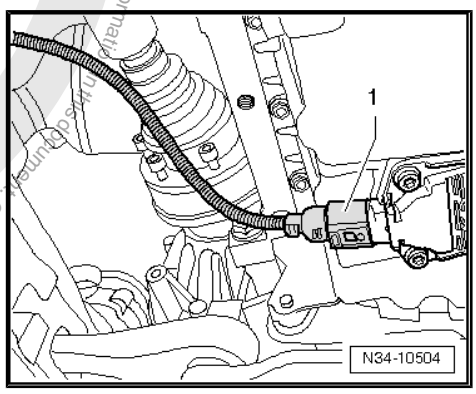


– Remove the left charge air hose -1-. Refer to ⇒ Engine Mechanical, Fuel Injection and Ignition; Rep. Gr. 21 ; Charge Air System; Overview - Charge Air System .

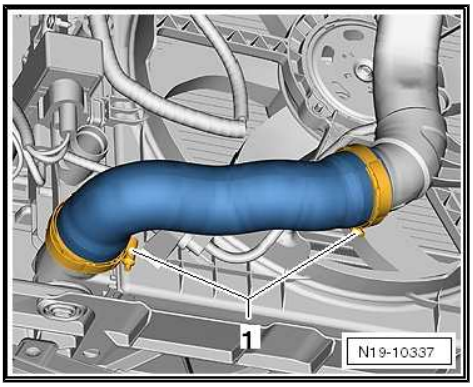


Protected by copyright. Copying for private or commercial purposes, in part or in whole, is not permitted unless authorised by Volkswagen AG. Volkswagen AG does not guarantee or accept any liability with respect to the correctness of information in this document. Copyright by Volkswagen AG.

– Remove the fan shroud with the coolant fan -arrow-. Refer to ⇒ Engine Mechanical, Fuel Injection and Ignition; Rep. Gr. 19 ; Radiator/Coolant Fan; Fan Shroud, Removing and Installing .

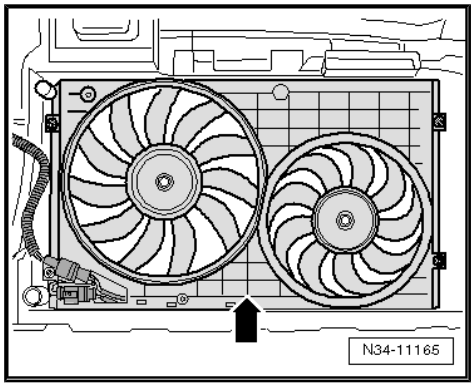


– If equipped, remove the Left Front Level Control System Sensor - G78- from the lower control arm. Refer to ⇒ Suspension, Wheels, Steering; Rep. Gr. 43 ; Level Control System Sensor; Overview - Front Level Control System Sensor .

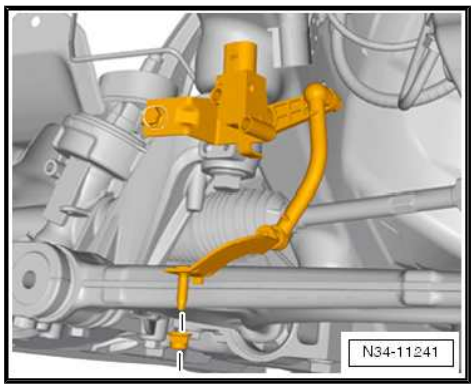


– Remove the drive axle heat shield -arrows- (if equipped). Refer to ⇒ Suspension, Wheels, Steering; Rep. Gr. 40 ; Drive Axle; Drive Axle Heat Shield, Removing and Installing .

– Remove the right drive axle from the flange shaft and tie them up as high as possible. Be careful not to damage the surface protection. Refer to ⇒ Suspension, Wheels, Steering; Rep. Gr. 40 ; Drive Axle; Drive Axle, Removing and Installing .

– Remove the left drive axle from the flange shaft. Refer to ⇒ Suspension, Wheels, Steering; Rep. Gr. 40 ; Drive Axle; Drive Axle, Removing and Installing .

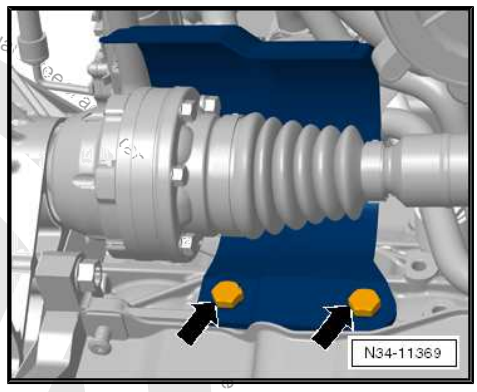


Protected by copyright. Copyright by Volkswagen AG. Volkswagen AG does not guarantee the correctness of information in this document. Copying for private or commercial purposes, in part or in whole, is not permitted without the express authorisation of Volkswagen AG.

– Move the left suspension strut to the outside and support it with the hook -2024A/1- as illustrated.

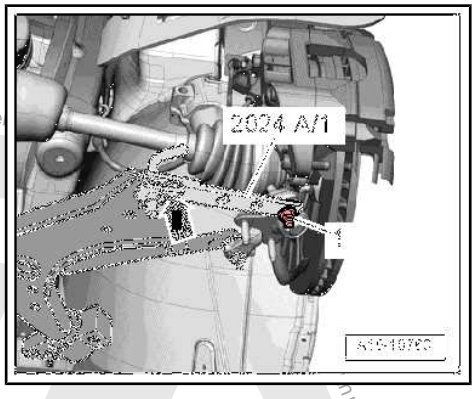


**WARNING**

*There is the risk of an accident due to loose support parts.*

- *Secure the securing pin and ball joint with the plug connector -arrow- and nut -1-.*

– Tie left drive axle up as much as possible while not damaging the protective coating. Refer to ⇒ Suspension, Wheels, Steering; Rep. Gr. 40 ; Drive Axle; Drive Axle, Removing and Installing .

– Remove exhaust system from engine and tie up. Refer to ⇒ Engine Mechanical, Fuel Injection and Ignition; Rep. Gr. 26 ; Exhaust Pipes/Mufflers; Overview - Muffler .

**Caution**

*There is a danger of causing damage to the decoupling element.*

- *Pay attention to ⇒ Engine Mechanical, Fuel Injection and Ignition; Rep. Gr. 26 ; Emissions Control; Overview - Emissions Control .*

– Remove the pendulum support.

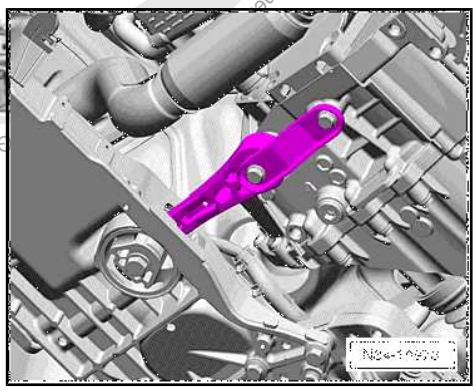

– If present, remove nut -arrow- and ground cable.

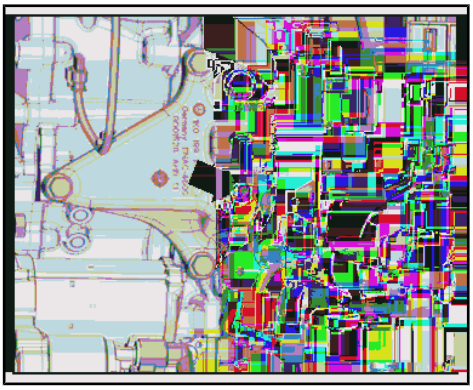

Protected by copyright. Copying for private or commercial purposes, in part or in whole, is not permitted unless authorised by Volkswagen AG. Volkswagen AG does not guarantee or accept any liability with respect to the correctness of information in this document.

– Remove the bolts -arrows- from the transmission mount.

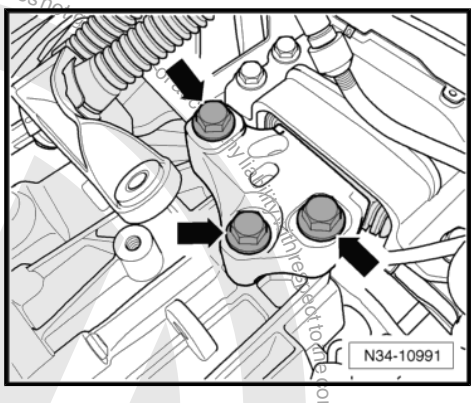


– Turn the spindles on the -10-222A- and lower the transmission to dimension -a-.

• Dimension -a- = approximately 60 mm

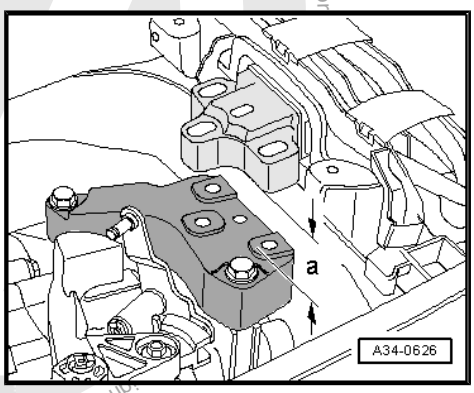


– Remove the bolts -arrows- and then remove the transmission bracket from the transmission.

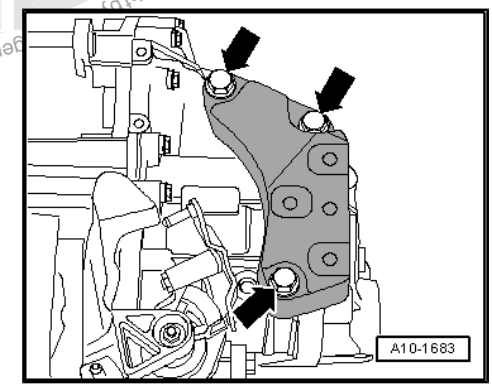


– Remove the bolts -2- from the transmission/engine connection.

The transmission to engine connection bolts -1 and 3- will be removed later in the procedure.

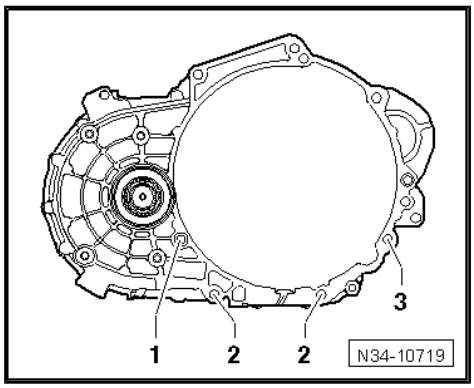


Protected by copyright. Copying for private or commercial purposes, in part or in whole, is not permitted unless authorised by Volkswagen AG. Volkswagen AG does not

Align the -3282- with the -3282/33- in order to install the transmission.

– Align the arms of the -3282- so that they match up with the holes in the Adjustment Plate .

– Install the Support Elements -A- as illustrated on the -3282/33- .

– Install the Mounting Element -C- instead of the -3282/29- .

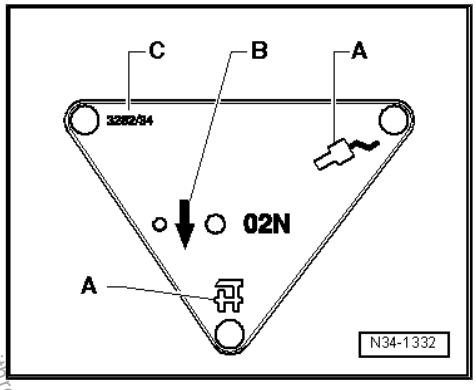


– Align the -3282/33- so that it is parallel to the transmission.

– Install the -3282/29- into the rear hole in the transmission for the pendulum support bolt.

– Secure the -VW771/40- in the threaded hole of the transmission housing as illustrated.

– Secure the transmission on the -3282- using the bolt (M10×20) -A-.

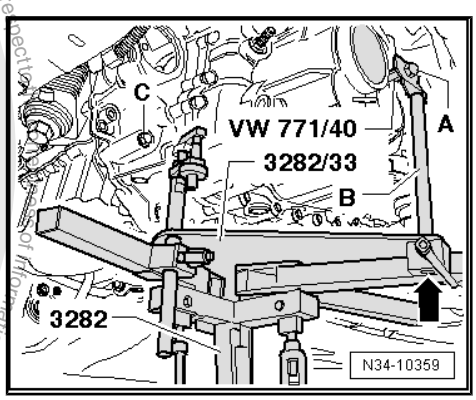


The drift -B- must be flush at the bottom with the guide on the -3282- -arrow-.

– Position the -VAS6931- under the vehicle. The arrow on the adjusting plate points in direction of travel.

– Remove the engine/transmission connecting bolt -C-.

– Remove the remaining engine/transmission bolts.

– Separate the transmission from the engine (alignment sleeves).

– Push the engine toward the front a little bit (a second technician is needed).

– Guide the right flange shaft -1- over the bolting eyelet of the engine -2-.

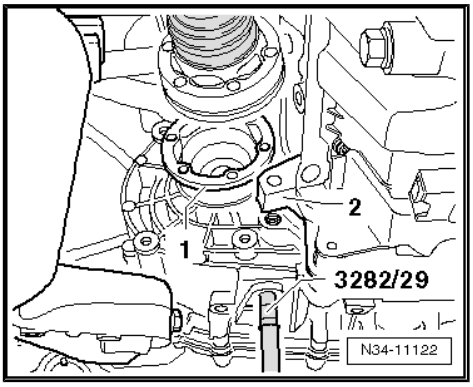


Then guide the right flange shaft -1- past the flywheel and the opening -arrow- in the intermediate plate.

– Move the transmission in the area of the differential with the spindles of the -3282- into an angled position.

• The differential must face upward.

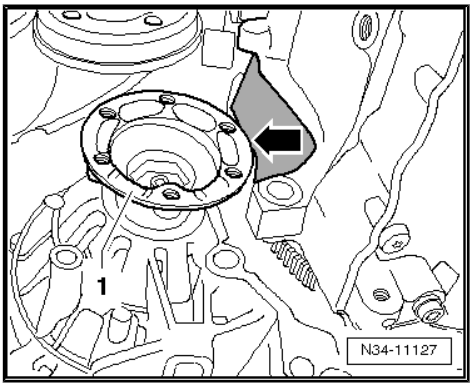


Copyright by Volkswagen AG, Wolfsburg. Volkswagen AG does not guarantee or accept any liability with respect to the correctness of information in this document. Copying for private or commercial purposes, in part or in whole, is not permitted unless authorised by Volkswagen AG. Protected by copyright.

– Guide the transmission and the differential over the subframe and swing them out.
– Be careful of the longitudinal member -arrow 1- and of the subframe -arrow 2-.
– Move the transmission higher than the differential if necessary.

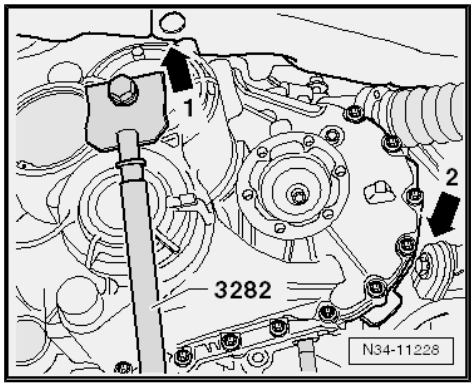


– Carefully lower the transmission.

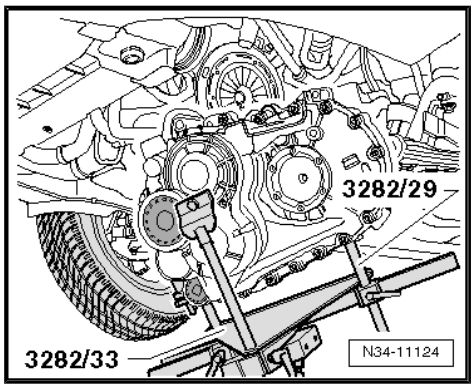


**Note**

*Pay attention to the lines when lowering the transmission.*

**Install the transmission. Refer to**
⇒ "2.2.2 Transmission, Installing, Vehicles with Gasoline Engine", page 97

## 2.2 Transmission, Installing

⇒ "2.2.1 Transmission, Installing, Vehicles with Turbo Diesel Engine", page 92
⇒ "2.2.2 Transmission, Installing, Vehicles with Gasoline Engine", page 97

### 2.2.1 Transmission, Installing, Vehicles with Turbo Diesel Engine

**Special tools and workshop equipment required**

- Transmission Support - 3282-
- Transmission Support - Pins 29 - 3282/29-
- Transmission Support - Mounting Plate 33 - 3282/33-
- Engine and Gearbox Jack - VAS6931-
- Slide Hammer Set - Adapter 40 - VW771/40-
- Engine Support Bridge - 10-222A-
- Hose Clamp up to 25mm - 3094-

**Caution**

*This procedure contains mandatory replaceable parts. Refer to component overview prior to starting procedure.*

**Mandatory Replacement Parts**

- Nut - Selector Lever to Shift Lever Shaft with Shift Lever Cover
- Lock Washer - Cable Retainer to Selector Lever
- Lock Washer - Cable Mounting Bracket to Cable Retainer

Protected by copyright. Copyright by Volkswagen AG. Volkswagen AG does not guarantee or accept any liability with respect to the correctness of information in this document. Copying for private or commercial purposes, in part or in whole, is not permitted unless authorised by Volkswagen AG.

- Bolt - Pendulum Support to Transmission
- Bolt - Transmission Bracket to Transmission

**Note**

- *Refer to "Transmission, Removing" to get a list of the special tools needed. Refer to* *⇒ "2.1.1 Transmission, Removing, Vehicles with Turbo Diesel Engine", page 76*.
- *Replace self-locking nuts and bolts after removing them.*
- *Replace bolts that were tightened with an additional turn after removing them.*
- *Clean input shaft splines and the hub splines on a used clutch plate. Remove any corrosion and then apply a very thin coat of Grease for Clutch Plate Shaft Splines - G 000 100- on the splines. Then move the clutch plate back and forth on the input shaft until the hub moves freely on the shaft. Excess grease must be removed.*

– If the transmission is replaced, replace the gearshift lever and the relay lever.

– Use a thread cutter to carefully clean all threaded holes containing self-locking bolts to remove any locking compound residue.

– The alignment sleeves for centering the engine/transmission must be present inside the cylinder block. Install them if they are missing.

If the alignment sleeves are missing, it will be difficult to shift, there will be clutch problems and the transmission may make noises (loose rattling).

Engage the intermediate plate on the sealing flange and push it onto the alignment sleeves -arrows-.

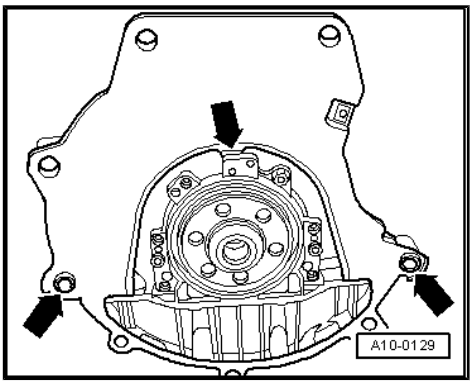


– Check the release bearing for wear. Replace the clutch slave cylinder with release bearing if necessary. Refer to ⇒ "1.11 Clutch Slave Cylinder with Release Bearing, Removing and Installing", page 33 .

Align the -3282- with the -3282/33- in order to install the transmission.

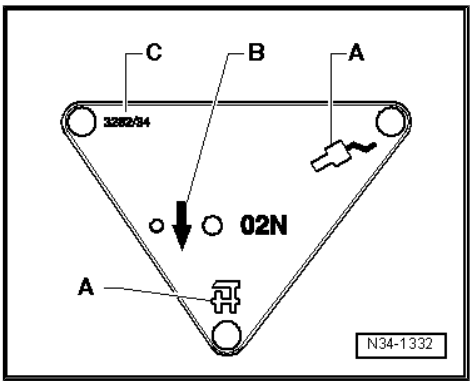


– Align the arms of the Transmission Support so that they match up with the holes in the Adjustment Plate .

– Install the Support Elements -A- as illustrated on the Adjustment Plate .

– Install the Mounting Element -C- instead of the -3282/29- .

– Place the transmission on the -VAS6931- .

– Align the Adjustment Plate so that it is parallel to the transmission.

Protected by Copyright. Copying for private or commercial purposes, in part or in whole, is not permitted unless authorised by Volkswagen AG. Volkswagen AG does not guarantee or accept any liability with respect to the correctness of information in this document. Copyright by Volkswagen AG.

– Install the -3282/29- into the rear hole in the transmission for the pendulum support bolt.

– Secure the -VW771/40- inside the threaded hole in the transmission housing as illustrated.

– Secure the transmission on the Transmission Support - 3282- using the bolt (M10×20) -A-.

The drift -B- must be flush at the bottom with the guide on the -3282- -arrow-.

– Position the -VAS6931- under the vehicle. The arrow on the adjusting plate points in direction of travel.

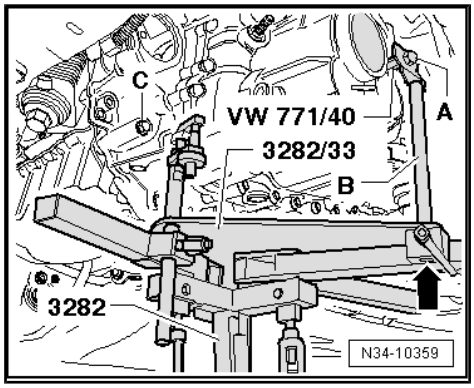


**Note**

*Pay attention to the lines when installing the transmission.*

– Lift the transmission carefully.

– Turn the transmission into it installed position using the spindles on the -3282- .

– Line up the transmission and the engine and install it.

**Caution**

- ***Brake fluid can escape from the bleeder on the transmission.***

– Install the engine/transmission connecting bolt -C- (⇒ illustration above) and tighten. Refer to
⇒ “2.3 Transmission Tightening Specifications”, page 104 .

– Install engine/transmission connecting bolt -arrow- and tighten. Refer to
⇒ “2.3 Transmission Tightening Specifications”, page 104 .

– Install all lower engine/transmission connecting bolts and tighten. Refer to
⇒ “2.3 Transmission Tightening Specifications”, page 104 .

– After transmission is bolted to engine at bottom, remove the -3282- from transmission.

– Install all upper engine/transmission connecting bolts and tighten. Refer to
⇒ “2.3 Transmission Tightening Specifications”, page 104 .

– Attach the shift lever to the transmission shift lever shaft. Refer to ⇒ Fig. ““Installing the Transmission Shift Lever”“ , page 68 and tighten the nut. Refer to
⇒ “1.2 Overview - Selector Mechanism”, page 60 .

– Install the relay lever together with the cable retainer. Refer to
⇒ Fig. ““Relay Lever with Cable Retainer, Removing and Installing”“ , page 66 .

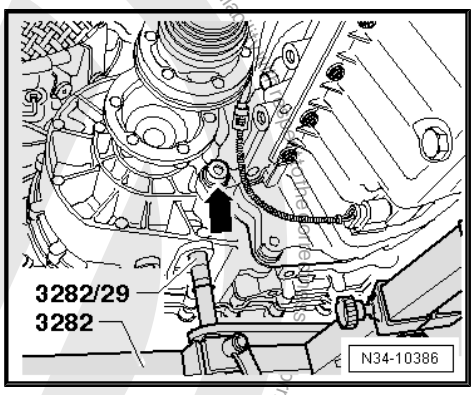


Protected by copyright. Copyright by Volkswagen AG. Volkswagen AG does not guarantee or accept any liability with respect to the correctness and completeness of the information in this document. Copyright by Volkswagen AG.

– Install transmission bracket -1- with new bolts -arrows-. Refer to ⇒ “3.1 Overview - Subframe Mount”, page 105 .

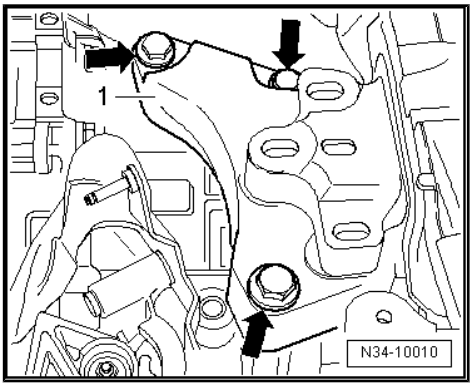


**Caution**

*Risk of damaging threads in transmission bracket by inserting bolts crooked.*

- *The transmission mount and transmission bracket must be parallel to each other in order to prevent the transmission bracket thread from becoming damaged.*

– Tighten the -10-222A- spindles until the transmission bracket -1- touches the transmission mount -2- to align the engine/transmission assembly in its installed position.

– Install new bolts -arrows- and tighten. Refer to ⇒ “3.1 Overview - Subframe Mount”, page 105 .

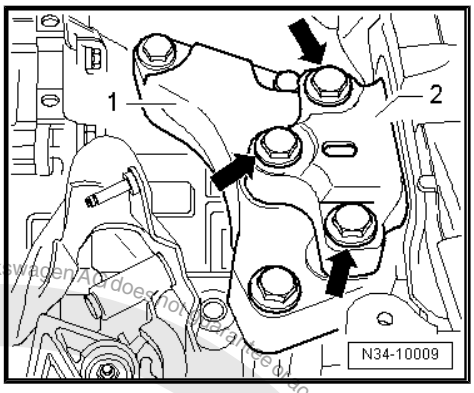


**Note**

*Install the engine/transmission mount free of tension. Refer to ⇒ Engine Mechanical, Fuel Injection and Ignition; Rep. Gr. 10 ; Subframe Mount; Subframe Mount, Adjusting .*

– If present, connect ground cable -arrow-.

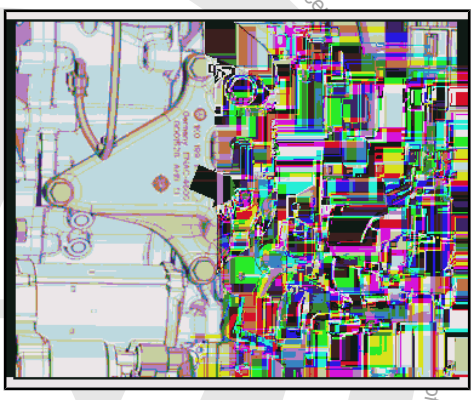

**Caution**

*Risk of accident!*

- *Only remove -10-222A- when all subframe mount bolts are tightened to the tightening specification.*

– Connect hose/line assembly with bleeder. Refer to ⇒ Fig. ““Disconnect and Connect Clutch Mechanism Wires”“ , page 18 .

– After removing the -3094- , the supply hose must be formed back into its original shape.

– Bleed the clutch system. Refer to ⇒ “1.16 Clutch Mechanism, Bleeding”, page 37 .

– Make sure the vacuum hose for the brake system is installed correctly. Install a vacuum hose, if necessary. Refer to ⇒ Brake System; Rep. Gr. 47 ; Brake Booster/Brake Master Cylinder; Overview - Brake Booster/Brake Master Cylinder.

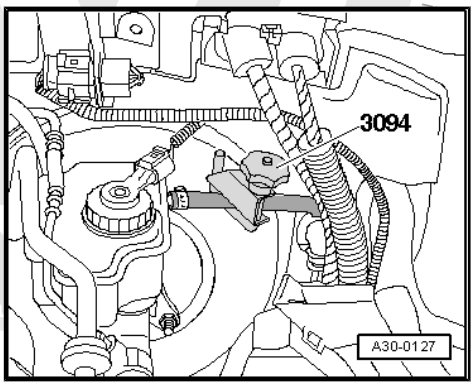


Volkswagen AG. Volkswagen AG does not guarantee or accept any liability with respect to the correctness of information in this document. Copyright by Volkswagen AG. For private and commercial purposes, in part or in whole, is not permitted unless authorised by Volkswagen AG.

– Mount the cable bracket on the transmission and tighten the bolts and nuts -arrows-. Refer to ⇒ “1.2 Overview - Selector Mechanism”, page 60 .

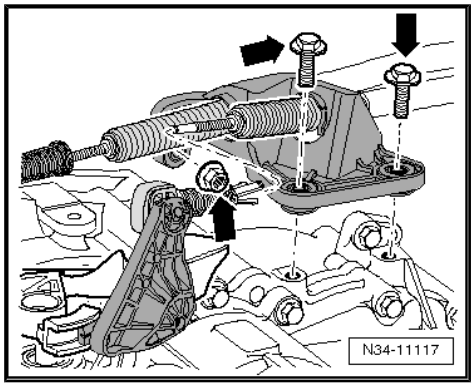


– Install the selector cable in the cable retainer.

– Apply a small amount of grease on the pins -arrow- for the shift lever -2-.

Grease allocation. Refer to the Parts Catalog.

– Replace the lock washer -1- each time it is removed.

– Adjust the shift lever mechanism. Refer to ⇒ “1.6 Selector Mechanism, Adjusting”, page 71 .

– Install the starter. Refer to ⇒ Electrical Equipment; Rep. Gr. 27 ; Starter; Starter, Removing and Installing .

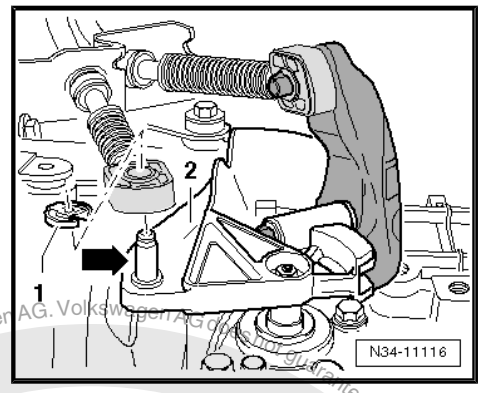


– Connect the front left connectors to the transmission:

1 - Transmission for vehicles with start/stop system: Transmission Neutral Position Sensor - G701-

2 - Back-Up Lamp Switch - F4-

– Install the drive axles. Refer to ⇒ Suspension, Wheels, Steering; Rep. Gr. 40 ; Drive Axle; Drive Axle, Removing and Installing .

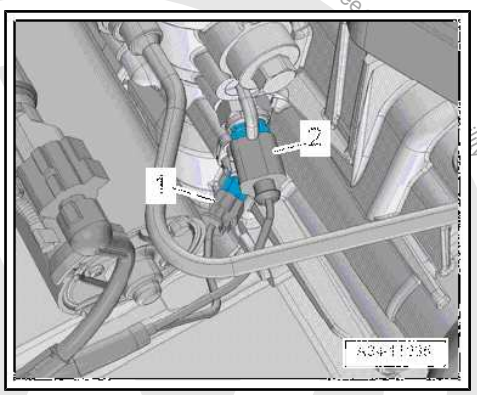


– Install the drive axle heat shield (if equipped). Refer to ⇒ Suspension, Wheels, Steering; Rep. Gr. 40 ; Drive Axle; Drive Axle Heat Shield, Removing and Installing .

– Assemble the exhaust system. Refer to ⇒ Engine Mechanical, Fuel Injection and Ignition; Rep. Gr. 26 ; Exhaust Pipes/Mufflers; Overview - Muffler .

– Install the subframe together with pendulum support. Refer to ⇒ Engine Mechanical, Fuel Injection and Ignition; Rep. Gr. 10 ; Subframe Mount; Overview - Subframe Mount .

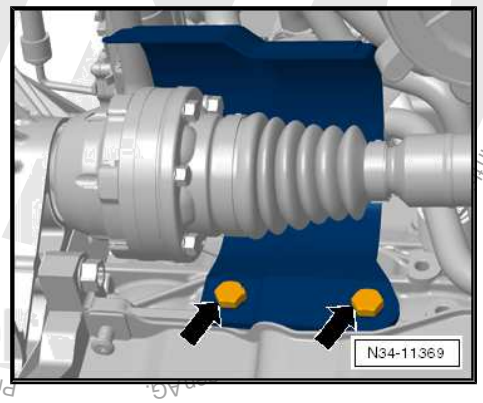


Protected by copyright. Copyright of private or commercial purposes, in part or in whole, is not permitted unless authorised by Volkswagen AG. Volkswagen AG does not guarantee ... with respect to the correctness of information in ...

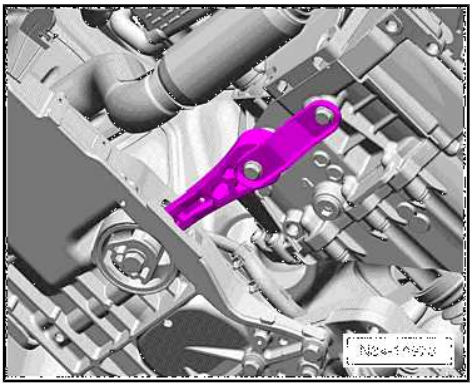

**Note**

*Threaded inserts (for example, "Heli Coil") are found in the pendulum support fastening holes on some transmissions. Refer to ⇒ Fig. ""Transmission with Threaded Insert (for example Heli Coil) for Attaching the Pendulum Support"", page 107 .*

– Install pendulum support with new bolts. Refer to ⇒ Engine Mechanical, Fuel Injection and Ignition; Rep. Gr. 10 ; Subframe Mount; Overview - Subframe Mount .

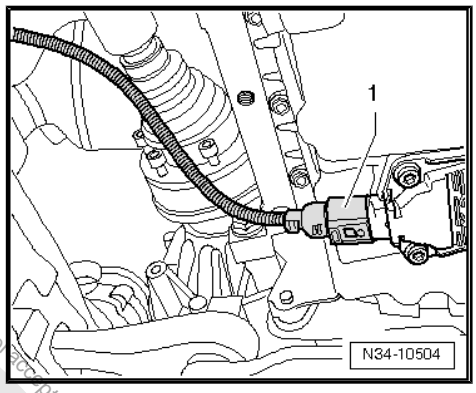


– Connect the connector -1- to the Oil Level Thermal Sensor - G266- .

– Gear oil level in manual transmission, checking. Refer to ⇒ "8.1 Transmission Fluid Level, Checking", page 142 .

– If unclipped, carefully clip in the A/C system pipe and do not disconnect the line system. Refer to ⇒ Heating, Ventilation and Air Conditioning; Rep. Gr. 87 ; Refrigerant Circuit; System Overview - Refrigerant Circuit .

– Install fuel filter. Do not open the line system. Refer to ⇒ Fuel Supply System; Rep. Gr. 20 ; Fuel Delivery Unit/Fuel Level Sensor; Overview - Fuel Delivery Unit/Fuel Level Sensor .

– Install the battery tray, battery and the battery cover. Refer to ⇒ Electrical Equipment; Rep. Gr. 27 ; Battery; Battery Tray, Removing and Installing .

– Install the air filter housing. Refer to ⇒ Engine Mechanical, Fuel Injection and Ignition; Rep. Gr. 24 ; Air Filter; Air Filter Housing, Removing and Installing .

– Install the engine cover. Refer to ⇒ Rep. Gr. 10 ; Engine Cover; Engine Cover, Removing and Installing .

– Install the plenum chamber cover. Refer to ⇒ Body Exterior; Rep. Gr. 50 ; Bulkhead; Plenum Chamber Cover, Removing and Installing .

– Install the windshield wiper arms. Refer to ⇒ Electrical Equipment; Rep. Gr. 92 ; Windshield Wiper System; Windshield Wiper Arms, Removing and Installing .

– Install the lower section of the left front wheel housing liner. Refer to ⇒ Body Exterior; Rep. Gr. 66 ; Wheel Housing Liner; Front Wheel Housing Liner, Removing and Installing .

– Install the noise insulation. Refer to ⇒ Body Exterior; Rep. Gr. 66 ; Noise Insulation; Overview - Noise Insulation .

## 2.2.2 Transmission, Installing, Vehicles with Gasoline Engine

**Special tools and workshop equipment required**

- Transmission Support - 3282-
- Transmission Support - Mounting Plate 33 - 3282/33-
- Transmission Support - Pins 29 - 3282/29- .
- Engine and Gearbox Jack - VAS6931- .
- Slide Hammer Set - Adapter 40 - VW771/40-
- Engine Support Bridge - 10-222A-

Protected by copyright. Copyright by Volkswagen AG. Volkswagen AG does not guarantee or accept any liability with respect to the correctness of information in this document. Copyright by Volkswagen AG.

- Hose Clamp up to 25mm - 3094-

**Caution**

***This procedure contains mandatory replaceable parts. Refer to component overview prior to starting procedure.***

**Mandatory Replacement Parts**

- Nut - Selector Lever to Shift Lever Shaft with Shift Lever Cover
- Lock Washer - Cable Retainer to Selector Lever
- Lock Washer - Cable Mounting Bracket to Cable Retainer
- Bolt - Pendulum Support to Transmission
- Bolt - Transmission Bracket to Transmission

**Note**

- *Refer to "Transmission, Removing" to get a list of the special tools needed. Refer to* *⇒ "2.1.2 Transmission, Removing, Vehicles with Gasoline Engine", page 83* .
- *Replace self-locking nuts and bolts after removing them.*
- *Replace bolts that were tightened with an additional turn after removing them.*
- *Reinstall all cable ties that were loosened or cut off during removal at the same locations during installation.*
- *Clean the input shaft splines and (on used clutch plates) the hub splines. Remove any corrosion and then apply a very thin coat of Grease for Clutch Disc Shaft Splines - G 000 100- on the splines. Then move the clutch plate back and forth on the input shaft until the hub moves freely on the shaft. Excess grease must be removed.*

– If the transmission is replaced, replace the gearshift lever and the relay lever.

– Use a thread cutter to carefully clean all threaded holes containing self-locking bolts to remove any locking compound residue.

– The alignment sleeves for centering the engine/transmission must be present inside the cylinder block. Install them if they are missing.

If the alignment sleeves are missing, it will be difficult to shift, there will be clutch problems and the transmission may make noises (loose rattling).

Reproduced by copying for private or commercial purposes is not permitted unless authorised by Volkswagen AG. Volkswagen AG does not guarantee or accept any liability with respect to the correctness of information in this document. Copyright by Volkswagen AG.

Engage the intermediate plate on the sealing flange and push it onto the alignment sleeves -arrows-.

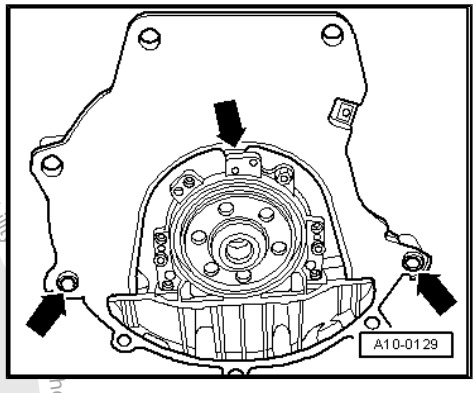


– Check the release bearing for wear. Replace the clutch slave cylinder with release bearing if necessary. Refer to ⇒ “1.11 Clutch Slave Cylinder with Release Bearing, Removing and Installing”, page 33 .

Align the -3282- with the -3282/33- in order to install the transmission.

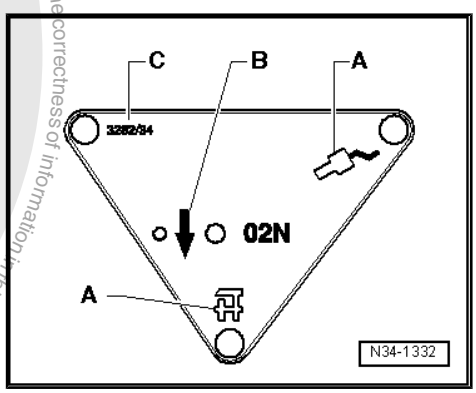


– Align the arms of the Transmission Support so that they match up with the holes in the Adjustment Plate .
– Install the Support Elements -A- as illustrated on the Adjustment Plate .
– Install the Mounting Element -C- instead of the -3282/29- .
– Place the transmission on the -VAS6931- .
– Align the Adjustment Plate so that it is parallel to the transmission.
– Install the -3282/29- into the rear hole in the transmission for the pendulum support bolt.
– Secure the -VW771/40- in the threaded hole of the transmission housing as illustrated.
– Secure the transmission on the -3282- using the bolt (M10×20) -A-.

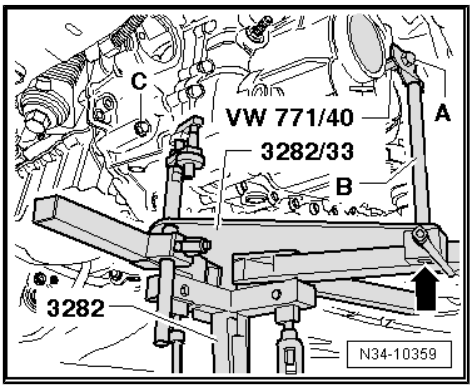


The drift -B- must be flush at the bottom with the guide on the -3282- -arrow-.

– Position the -VAS6931- under the vehicle. The arrow on the adjusting plate points in direction of travel.

**Note**

*Pay attention to the lines when installing the transmission.*

– Turn the transmission in direction of -arrow- near the differential via the spindles on the -3282- .
– Lift the transmission carefully.
– Move the transmission using the spindles of the -3282- into an angled position.
– Push the engine toward the front a little bit (a second technician is needed).

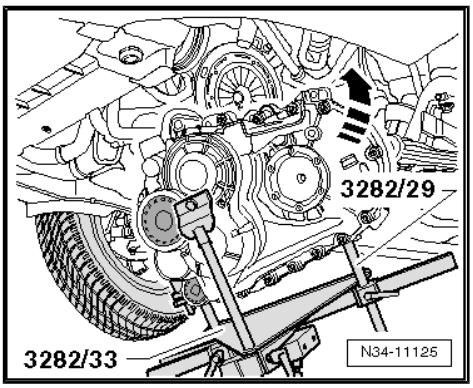


Volkswagen AG. Volkswagen AG does not guarantee or accept any liability with respect to the correctness of information in this document. Copyright by Volkswagen AG. Copyright protected. Reproduction, in whole or in part, is not permitted without authorisation. Copyright protected. For commercial purposes, in part or in whole, is not permitted without authorisation.

– Guide the transmission with the differential -arrow 2- over the subframe.

– Pay attention to the longitudinal member -arrow 1-.

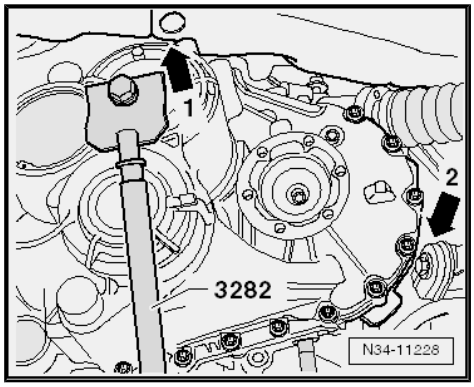


• After that, the right flange shaft -1- must be guided past the flywheel and the opening -arrow- in the intermediate plate.

– Turn the transmission into it installed position using the spindles on the -3282- .

– Line up the transmission and the engine and install it.

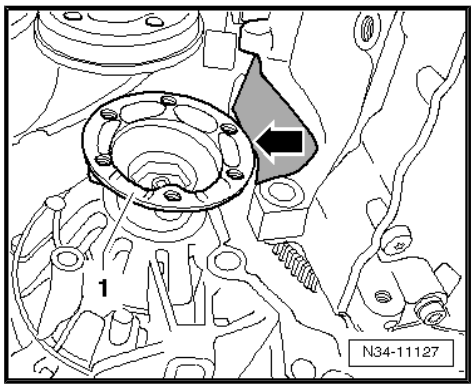


**Caution**

♦ *Brake fluid can escape from the bleeder on the transmission.*

– Install the engine/transmission connecting bolts -1 to 3- and tighten them. Refer to
⇒ “2.3 Transmission Tightening Specifications”, page 104 .

– After transmission is bolted to engine at bottom, remove the -3282- from transmission.

– Install all upper engine/transmission connecting bolts and tighten. Refer to
⇒ “2.3 Transmission Tightening Specifications”, page 104 .

– Attach the shift lever to the transmission shift lever shaft. Refer to ⇒ Fig. ““Installing the Transmission Shift Lever”“ , page 68 and tighten the nut. Refer to
⇒ “1.2 Overview - Selector Mechanism”, page 60 .

– Install the selector relay lever together with the cable retainer. Refer to
⇒ Fig. ““Relay Lever with Cable Retainer, Removing and Installing”“ , page 66 .

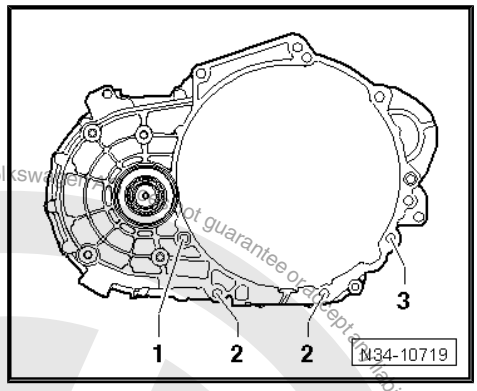


– Install transmission bracket -1- with new bolts -arrows-. Refer to ⇒ “3.1 Overview - Subframe Mount”, page 105 .

**Caution**

*Risk of damaging threads in transmission bracket by inserting bolts crooked.*

♦ *The transmission mount and transmission bracket must be parallel to each other in order to prevent the transmission bracket thread from becoming damaged.*

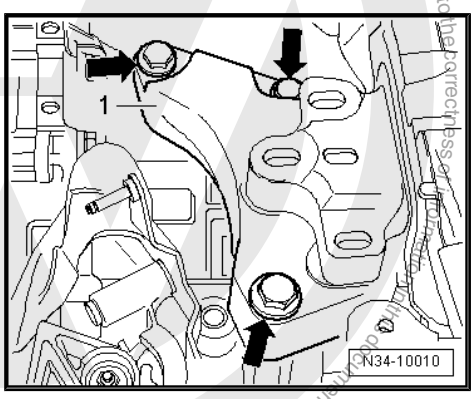


Protected by copyright. Copyright by Volkswagen AG.

– Tighten the -10-222A- spindles until the transmission bracket -1- touches the transmission mount -2- to align the engine/ transmission assembly in its installed position.

– Install new bolts -arrows- and tighten. Refer to ⇒ “3.1 Overview - Subframe Mount”, page 105 .

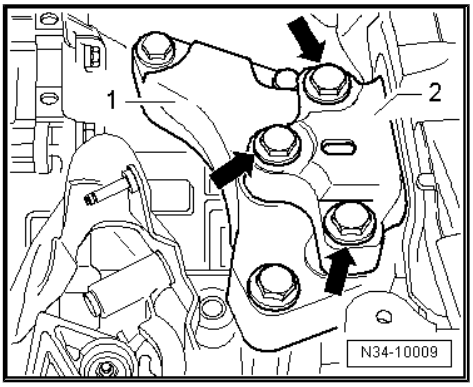


**Note**

*Install the engine/transmission mount free of tension. Refer to ⇒ Engine Mechanical, Fuel Injection and Ignition; Rep. Gr. 10 ; Subframe Mount; Subframe Mount, Adjusting .*

– If present, connect ground cable -arrow-.

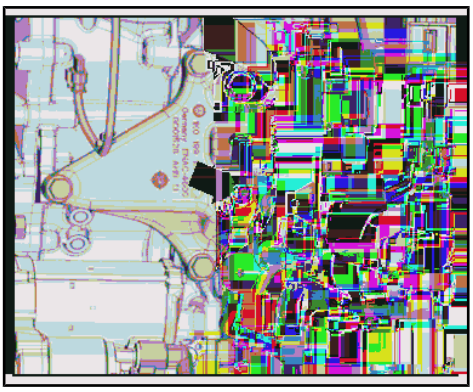

**Caution**

***Risk of accident!***

- ***Only remove -10-222A- when all subframe mount bolts are tightened to the tightening specification.***

– Connect hose/line assembly with bleeder. Refer to ⇒ Fig. ““Disconnect and Connect Clutch Mechanism Wires““ , page 18 .

– After removing the -3094- , the supply hose must be formed back into its original shape.

– Bleed the clutch system. Refer to ⇒ “1.16 Clutch Mechanism, Bleeding”, page 37 .

– Make sure the vacuum hose for the brake system is installed correctly. Install a vacuum hose, if necessary. Refer to ⇒ Brake System; Rep. Gr. 47 ; Brake Booster/Brake Master Cylinder; Overview - Brake Booster/Brake Master Cylinder .

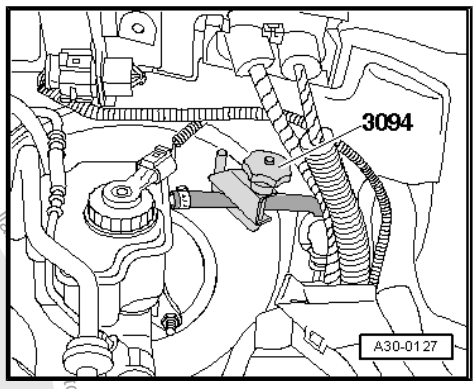


Mount the cable bracket on the transmission and tighten the bolts and nuts -arrows-. Refer to ⇒ “1.2 Overview - Selector Mechanism”, page 60 .

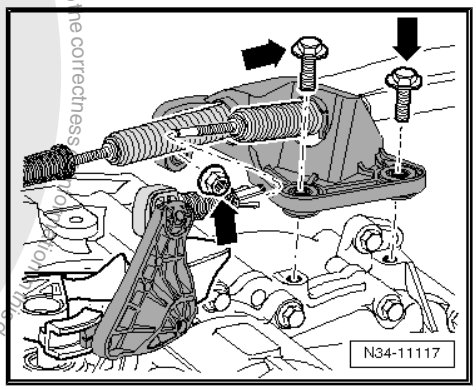


Protected by copyright. Copying for private or commercial purposes, in part or in whole, is not permitted unless authorised by Volkswagen AG. Volkswagen AG does not guarantee or accept any liability with respect to the correctness and completeness of this document. Copyright by Volkswagen AG.

– Install the selector cable in the cable retainer.

– Apply a small amount of grease on the pins -arrow- for the shift lever -2-.

Grease allocation. Refer to the Parts Catalog.

– Replace the lock washer -1- each time it is removed.

– Adjust the shift lever mechanism. Refer to
⇒ “1.6 Selector Mechanism, Adjusting”, page 71 .

– Install the starter. Refer to ⇒ Electrical Equipment; Rep. Gr. 27 ; Starter; Overview - Starter .

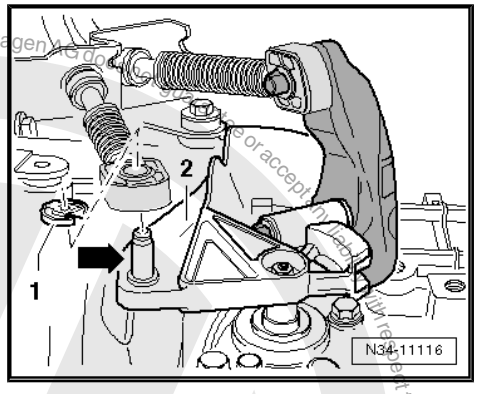


– Connect the left front connectors to the transmission:

1 - Transmission for vehicles with start/stop system: Transmission Neutral Position Sensor - G701-

2 - Back-Up Lamp Switch - F4-

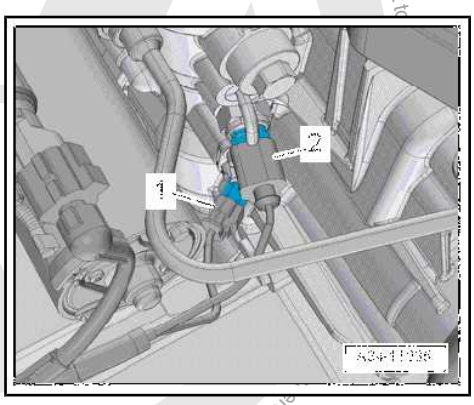


– Install the fan shroud with the coolant fan -arrow-. Refer to ⇒ Engine Mechanical, Fuel Injection and Ignition; Rep. Gr. 19 ; Radiator/Coolant Fan; Fan Shroud, Removing and Installing .

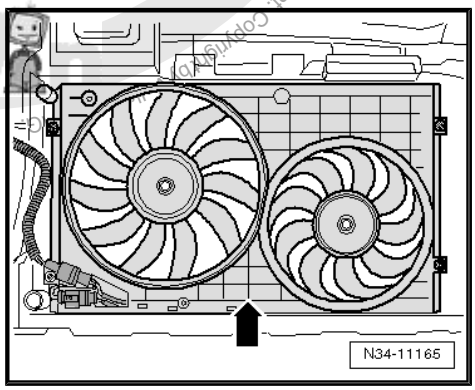


– Install the charge air hose -1-. Refer to ⇒ Engine Mechanical, Fuel Injection and Ignition; Rep. Gr. 21 ; Charge Air System; Overview - Charge Air System .

– Assemble the exhaust system. Refer to ⇒ Engine Mechanical, Fuel Injection and Ignition; Rep. Gr. 26 ; Exhaust Pipes/Mufflers; Overview - Muffler .

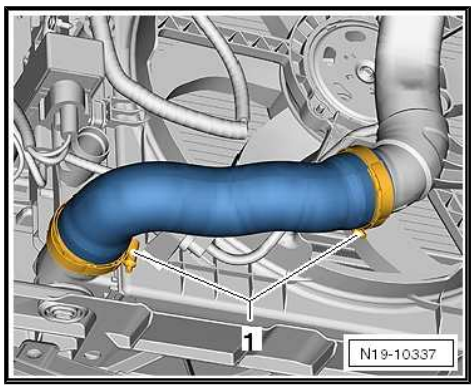


Protected by copyright. Copyright by Volkswagen AG. Volkswagen AG does not guarantee or accept any liability with respect to the correctness and completeness of this document. Reproduction, distribution or storage in whole or in part not permitted unless authorised by Volkswagen AG. For commercial purposes only or for private or commercial purposes in partnership with Volkswagen AG.

– Install pendulum support with new bolts. Refer to ⇒ Engine Mechanical, Fuel Injection and Ignition; Rep. Gr. 10 ; Subframe Mount; Overview - Subframe Mount .

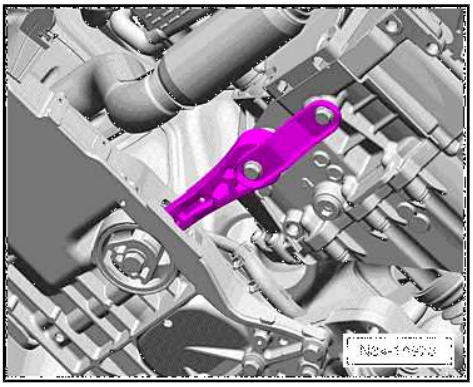

**Note**

*Threaded inserts (for example, "Heli Coil") are found in the pendulum support fastening holes on some transmissions. Refer to ⇒ Fig. ""Transmission with Threaded Insert (for example Heli Coil) for Attaching the Pendulum Support"", page 107 .*

– Install the drive axles. Refer to ⇒ Suspension, Wheels, Steering; Rep. Gr. 40 ; Drive Axle; Drive Axle, Removing and Installing .

– Assemble the lower control arm. Refer to ⇒ Suspension, Wheels, Steering; Rep. Gr. 40 ; Lower Control Arm and Ball Joint; Overview - Lower Control Arm and Ball Joint .

– Install the drive axle heat shield (if equipped). Refer to ⇒ Suspension, Wheels, Steering; Rep. Gr. 40 ; Drive Axle; Drive Axle Heat Shield, Removing and Installing .

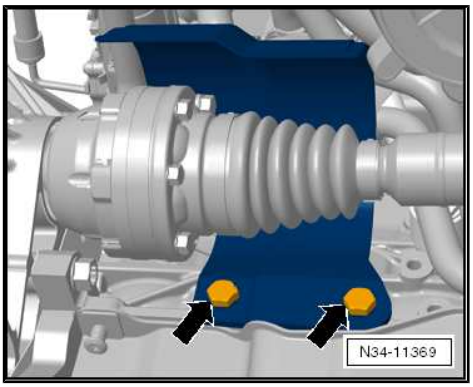


– If removed, install the Left Front Level Control System Sensor - G78- on the lower control arm. Refer to ⇒ Suspension, Wheels, Steering; Rep. Gr. 43 ; Level Control System Sensor; Overview - Front Level Control System Sensor .

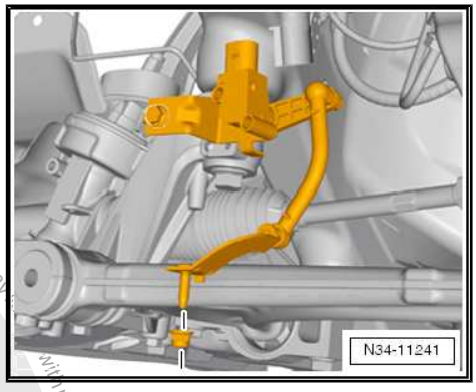


Protected by copyright. Copying for private or commercial purposes, in part or in whole, is not permitted unless authorised by Volkswagen AG. Volkswagen AG does not guarantee or accept any liability with respect to the correctness of information in this document. Copyright by Volkswagen AG.

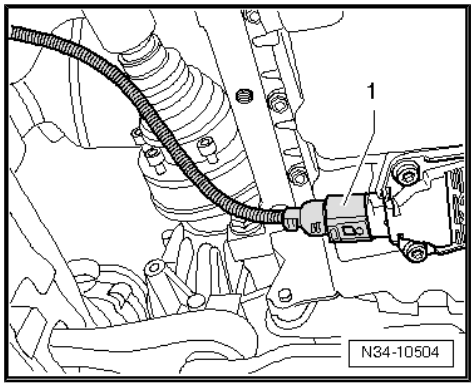


- Connect the connector -1- to the Oil Level Thermal Sensor - G266- .
- Gear oil level in manual transmission, checking. Refer to ⇒ “8.1 Transmission Fluid Level, Checking”, page 142 .
- If unclipped, carefully clip in the A/C system pipe and do not disconnect the line system. Refer to ⇒ Heating, Ventilation and Air Conditioning; Rep. Gr. 87 ; Refrigerant Circuit; System Overview - Refrigerant Circuit .
- Install the battery tray, battery and the battery cover. Refer to ⇒ Electrical Equipment; Rep. Gr. 27 ; Battery; Battery Tray, Removing and Installing .
- Install the air filter housing. Refer to ⇒ Engine Mechanical, Fuel Injection and Ignition; Rep. Gr. 24 ; Air Filter; Air Filter Housing, Removing and Installing .
- Install the engine cover. Refer to ⇒ Rep. Gr. 10 ; Engine Cover; Engine Cover, Removing and Installing .
- Install the lower section of the left front wheel housing liner. Refer to ⇒ Body Exterior; Rep. Gr. 66 ; Wheel Housing Liner; Front Wheel Housing Liner, Removing and Installing .
- Install the noise insulation. Refer to ⇒ Body Exterior; Rep. Gr. 66 ; Noise Insulation; Overview - Noise Insulation .

## 2.3 Transmission Tightening Specifications

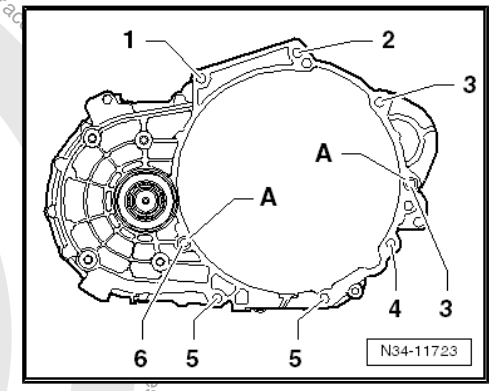


| Item | Bolt | Quantity | Nm |
|---|---|---|---|
| 1 | M12 x 55<br>♦ With a long M8 threaded pin | 1 | 80 |
| 2 | M12 x 55<br>♦ With a short M8 threaded pin or<br>M12 x 50<br>♦ Without threaded pin | 1 | 80 |
| 3 | M12 x 165<br>♦ With an M8 threaded pin<br>♦ Also starter to transmission | 2 | 80 |
| 4 | M10 x 105 | 1 | 40 |
| 5 | M10 x 50 | 2 | 40 |
| 6 | M12 x 70<br>or M12 x 65 | 1 | 80 |
| - | M6 x 8<br>♦ Small flywheel cover plate (not present on all engines) | 1 | 10 |

-A- Alignment sleeves for centering

Volkswagen AG. Volkswagen AG does not guarantee or accept any liability with respect to the correctness of information in this document. Copyright by Volkswagen AG. Protected by copyright. Copying for private or commercial purposes, in part or in whole, is not permitted unless authorised by Volkswagen AG.

# 3 Subframe Mount

⇒ “3.1 Overview - Subframe Mount”, page 105

## 3.1 Overview - Subframe Mount

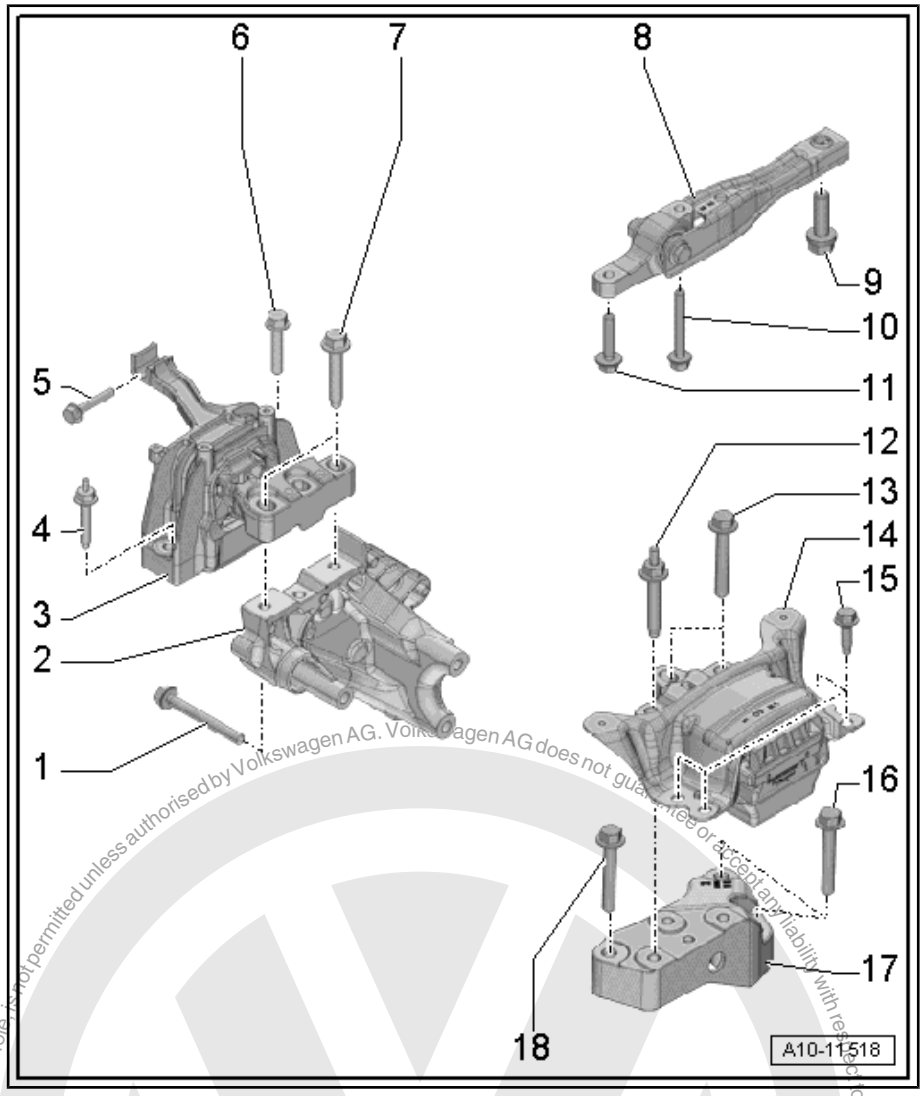


**1 - Bolt**

- ❑ Ttightening specification. Refer to ⇒ Engine Mechanical, Fuel Injection and Ignition; Rep. Gr. 10 ; Subframe Mount; Overview - Subframe Mount .

**2 - Engine Support**

- ❑ Refer to ⇒ Engine Mechanical, Fuel Injection and Ignition; Rep. Gr. 10 ; Subframe Mount; Overview - Subframe Mount .

**3 - Engine Mount**

- ❑ Refer to ⇒ Engine Mechanical, Fuel Injection and Ignition; Rep. Gr. 10 ; Subframe Mount; Overview - Subframe Mount .

**4 - Bolt**

- ❑ Tightening specification. Refer to ⇒ Engine Mechanical, Fuel Injection and Ignition; Rep. Gr. 10 ; Subframe Mount; Overview - Subframe Mount .

**5 - Bolt**

- ❑ Tightening specification. Refer to ⇒ Engine Mechanical, Fuel Injection and Ignition; Rep. Gr. 10 ; Subframe Mount; Overview - Subframe Mount .

**6 - Bolt**

- ❑ Tightening specification. Refer to ⇒ Engine Mechanical, Fuel Injection and Ignition; Rep. Gr. 10 ; Subframe Mount; Overview - Subframe Mount .

**7 - Bolt**

- ❑ Tightening specification. Refer to ⇒ Engine Mechanical, Fuel Injection and Ignition; Rep. Gr. 10 ; Subframe Mount; Overview - Subframe Mount .

**8 - Pendulum Support**

- ❑ Refer to ⇒ Engine Mechanical, Fuel Injection and Ignition; Rep. Gr. 10 ; Subframe Mount; Overview - Subframe Mount .

**9 - Bolt**

- ❑ For pendulum support to subframe
- ❑ Refer to ⇒ Engine Mechanical, Fuel Injection and Ignition; Rep. Gr. 10 ; Subframe Mount; Overview - Subframe Mount .

Protected by copyright. Copying for private or commercial purposes, in part or in whole, is not permitted unless authorised by Volkswagen AG. Volkswagen AG does not guarantee or accept any liability with respect to the correctness of information in this document. Copyright by Volkswagen AG.

**10 - Bolt**

- ❑ For pendulum support to transmission
- ❑ Refer to ⇒ Engine Mechanical, Fuel Injection and Ignition; Rep. Gr. 10 ; Subframe Mount; Overview - Subframe Mount .
- ❑ Transmission with threaded insert. Refer to
⇒ Fig. ""Transmission with Threaded Insert (for example Heli Coil) for Attaching the Pendulum Support"" , page 107

**11 - Bolt**

- ❑ For pendulum support to transmission
- ❑ Refer to ⇒ Engine Mechanical, Fuel Injection and Ignition; Rep. Gr. 10 ; Subframe Mount; Overview - Subframe Mount .
- ❑ Transmission with threaded insert. Refer to
⇒ Fig. ""Transmission with Threaded Insert (for example Heli Coil) for Attaching the Pendulum Support"" , page 107

**12 - Bolt**

- ❑ 60 Nm + 90°
- ❑ Replace after removing
- ❑ For transmission mount to transmission bracket
- ❑ Tightening sequence. Refer to
⇒ Fig. ""Attaching the Transmission Mount -2- to the Transmission Bracket -1- "" , page 107 .

**13 - Bolt**

- ❑ 60 Nm + 90°
- ❑ Replace after removing
- ❑ For transmission mount to transmission bracket
- ❑ Tightening sequence. Refer to
⇒ Fig. ""Attaching the Transmission Mount -2- to the Transmission Bracket -1- "" , page 107 .

**14 - Transmission Mount**

- ❑ Check the adjustment. Refer to ⇒ Engine Mechanical, Fuel Injection and Ignition; Rep. Gr. 10 ; Subframe Mount; Subframe Mount, Checking Adjustment
- ❑ Adjusting. Refer to ⇒ Engine Mechanical, Fuel Injection and Ignition; Rep. Gr. 10 ; Subframe Mount; Subframe Mount, Adjusting

**15 - Bolt**

- ❑ Transmission mount to chassis
- ❑ Refer to ⇒ Engine Mechanical, Fuel Injection and Ignition; Rep. Gr. 10 ; Subframe Mount; Subframe Mount, Adjusting .

**16 - Bolt**

- ❑ 60 Nm +90°
- ❑ Replace after removing
- ❑ For transmission bracket to transmission
- ❑ Tightening sequence. Refer to ⇒ Fig. ""Transmission Bracket -1- to Transmission."" , page 107 .

**17 - Transmission Bracket**

**18 - Bolt**

- ❑ 60 Nm +90°
- ❑ Replace after removing
- ❑ For transmission bracket to transmission
- ❑ Tightening sequence. Refer to ⇒ Fig. ""Transmission Bracket -1- to Transmission."" , page 107 .

Protected by copyright. Copyright by Volkswagen AG.
Copyright by Volkswagen AG. Volkswagen AG does not guarantee or accept any liability with respect to the correctness of information in this document.
Copying for private or commercial purposes, in part or in whole, is not permitted unless authorised by Volkswagen AG.

Protected by copyright. Copying for private or commercial purposes, in part or in whole, is not permitted unless authorised by Volkswagen AG. Volkswagen AG does not guarantee or accept any liability with respect to the correctness of information in this document. © Copyright by Volkswagen AG.

### Transmission with Threaded Insert (for example “Heli Coil”) for Attaching the Pendulum Support

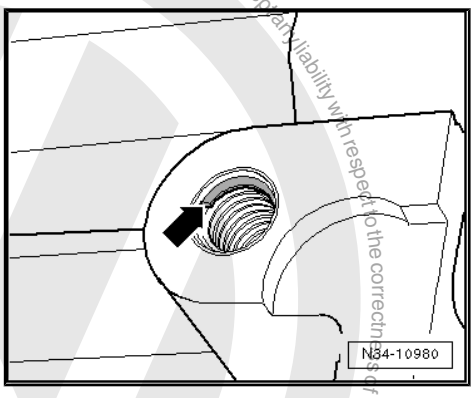


**Note**

- *There are threaded inserts (for example “Heli Coil”) in the pendulum support fastening holes.*
- *How to recognize: Shoulder on the first thread -arrow-.*
- *Make sure to use the appropriate bolts and observe the tightening specification. Refer to ⇒ Engine Mechanical, Fuel Injection and Ignition; Rep. Gr. 10 ; Subframe Mount; Overview - Subframe Mount ..*

### Transmission Bracket -1- to Transmission.

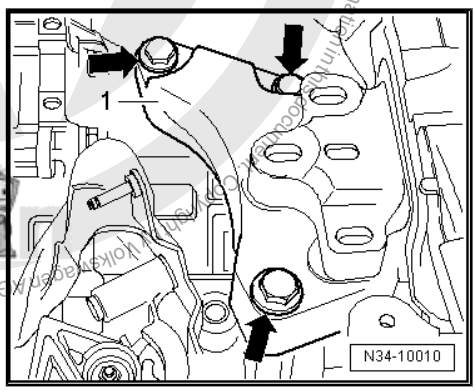


– Replace the bolts -arrows-.
– Tighten the bolts -arrows- hand-tight.
– Tighten the bolts -arrows-.

### Attaching the Transmission Mount -2- to the Transmission Bracket -1-

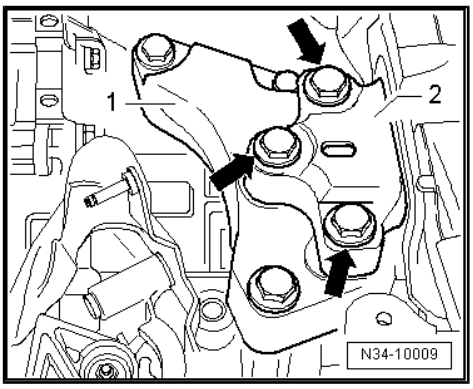


– Replace the bolts -arrows-.
– Tighten the bolts -arrows- hand-tight.
– Tighten the bolts -arrows-.

# 4 Transmission, Transporting

⇒ “4.1 Transmission, Transporting”, page 108

## 4.1 Transmission, Transporting

**Special tools and workshop equipment required**

- ♦ Transmission Support Jig - 3336-
- ♦ Shop Crane - VAS6100-

– Attach the -3336- to the clutch housing.

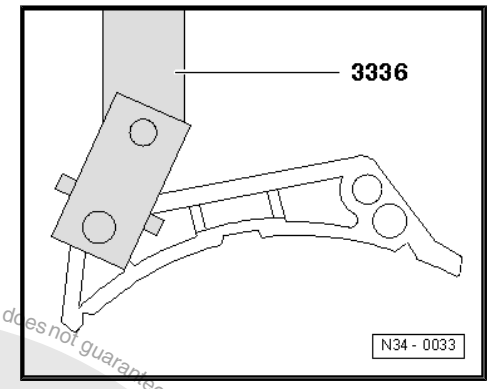


– Move the support arm on the sliding bar using the locking bolt -arrow-.

Number of visible holes are six.

– Lift the transmission using the -VAS6100- and the Transmission Support Jig .

– Set the transmission down, for example, into the transport container.

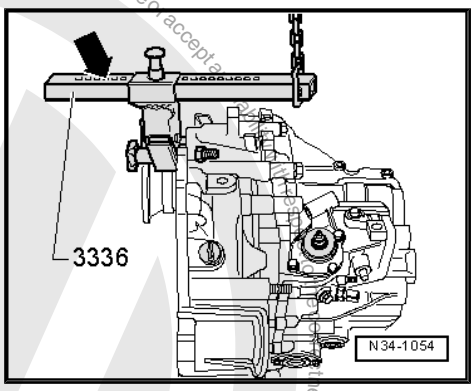


Protected by copyright. Copying for private or commercial purposes, in part or in whole, is not permitted unless authorised by Volkswagen AG. Volkswagen AG does not guarantee or accept any liability with respect to the correctness of information in this document. Copyright by Volkswagen AG.

# 5 Transmission, Disassembling and Assembling

⇒ “5.1 Overview - Schematic, Transmission”, page 109

⇒ “5.2 Overview - Transmission”, page 110

⇒ “5.3 Overview - Transmission Housing and Selector Mechanism”, page 111

⇒ “5.4 Overview - Shift Unit”, page 113

⇒ “5.5 Overview - Input Shaft, Output Shafts, Differential, Shift Lever Rods”, page 114

⇒ “5.6 Overview - Shift Forks”, page 116

⇒ “5.7 Transmission, Disassembling and Assembling”, page 116

## 5.1 Overview - Schematic, Transmission

1 - Clutch Housing

2 - Reverse Shaft

3 - Output Shaft, 5th/6th and Reverse Gears

4 - Clutch Slave Cylinder with Release Bearing

5 - Input Shaft

6 - Output Shaft, 1st to 4th Gears

7 - Differential

8 - Right Flange Shaft

9 - Left Flange Shaft

10 - 2nd Gear Wheel

11 - 1st Gear Wheel

12 - 4th Gear Wheel

13 - 3rd Gear Wheel

14 - 5th Gear Wheel

15 - 6th Gear Wheel

16 - Reverse Gear Wheel

17 - Transmission Housing

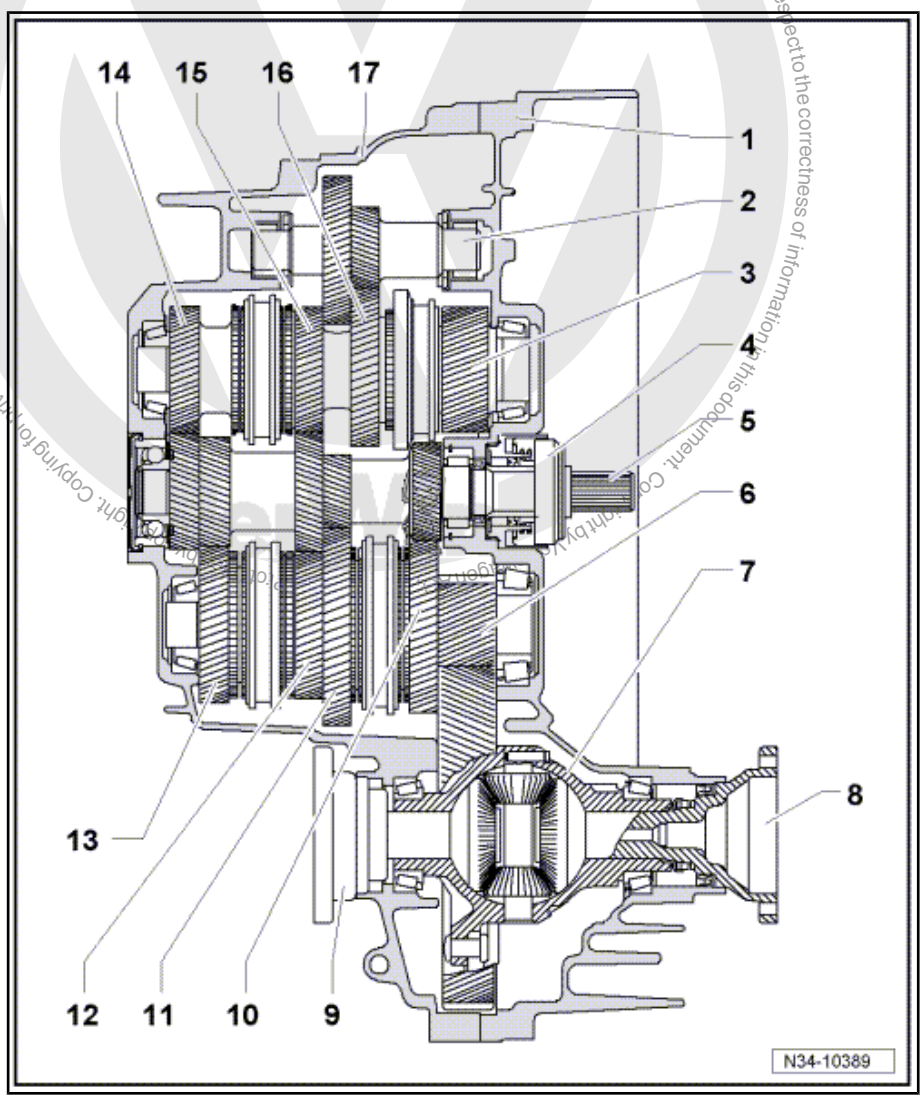


Copyright. Copying for private or commercial purposes, in part or in whole, is not permitted unless authorised by Volkswagen AG. Volkswagen AG does not guarantee or accept any liability with respect to the correctness of information in this document.

## 5.2 Overview - Transmission

I - Refer to
⇒ “5.3 Overview - Transmission Housing and Selector Mechanism”, page 111

I - Refer to
⇒ “5.4 Overview - Shift Unit”, page 113

II - Refer to
⇒ “5.5 Overview - Input Shaft, Output Shafts, Differential, Shift Lever Rods”, page 114

II - Refer to
⇒ “5.6 Overview - Shift Forks”, page 116

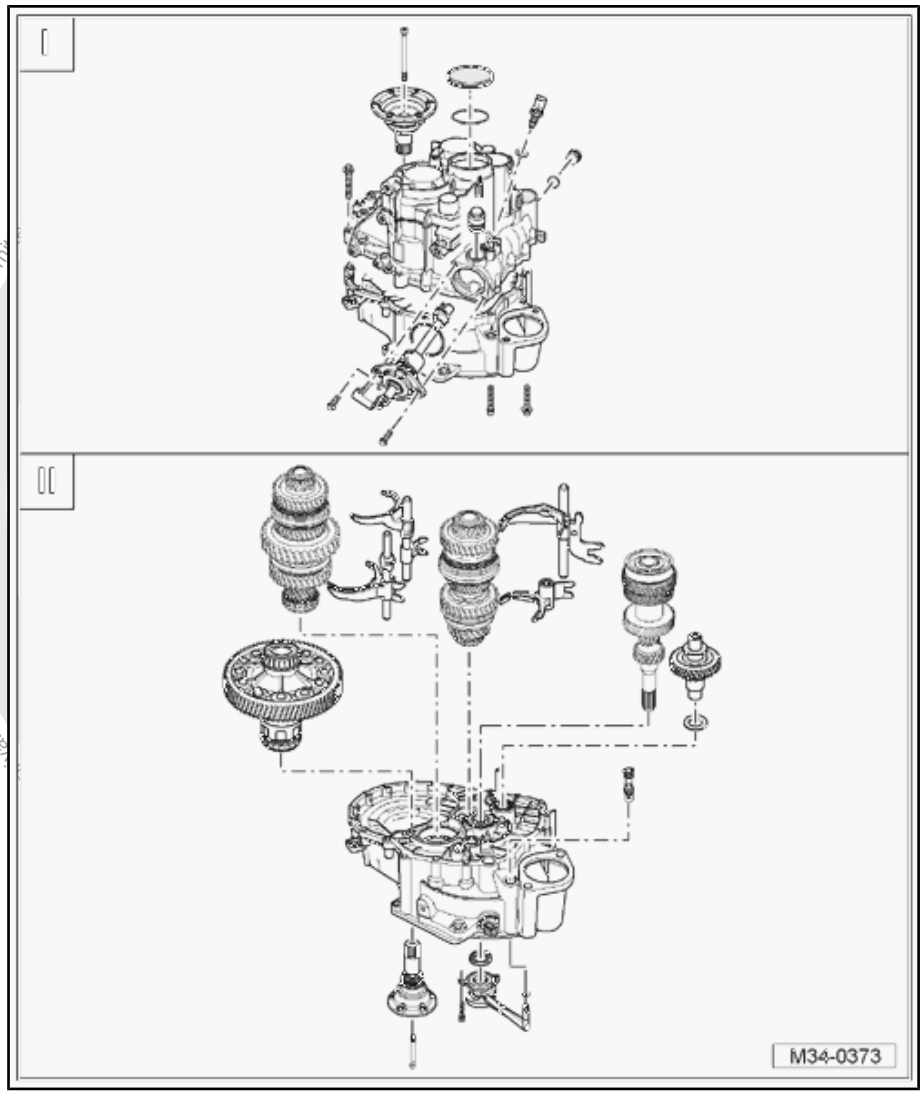


...ate or commercial purposes, in part or in whole, is not permi...

## 5.3 Overview - Transmission Housing and Selector Mechanism

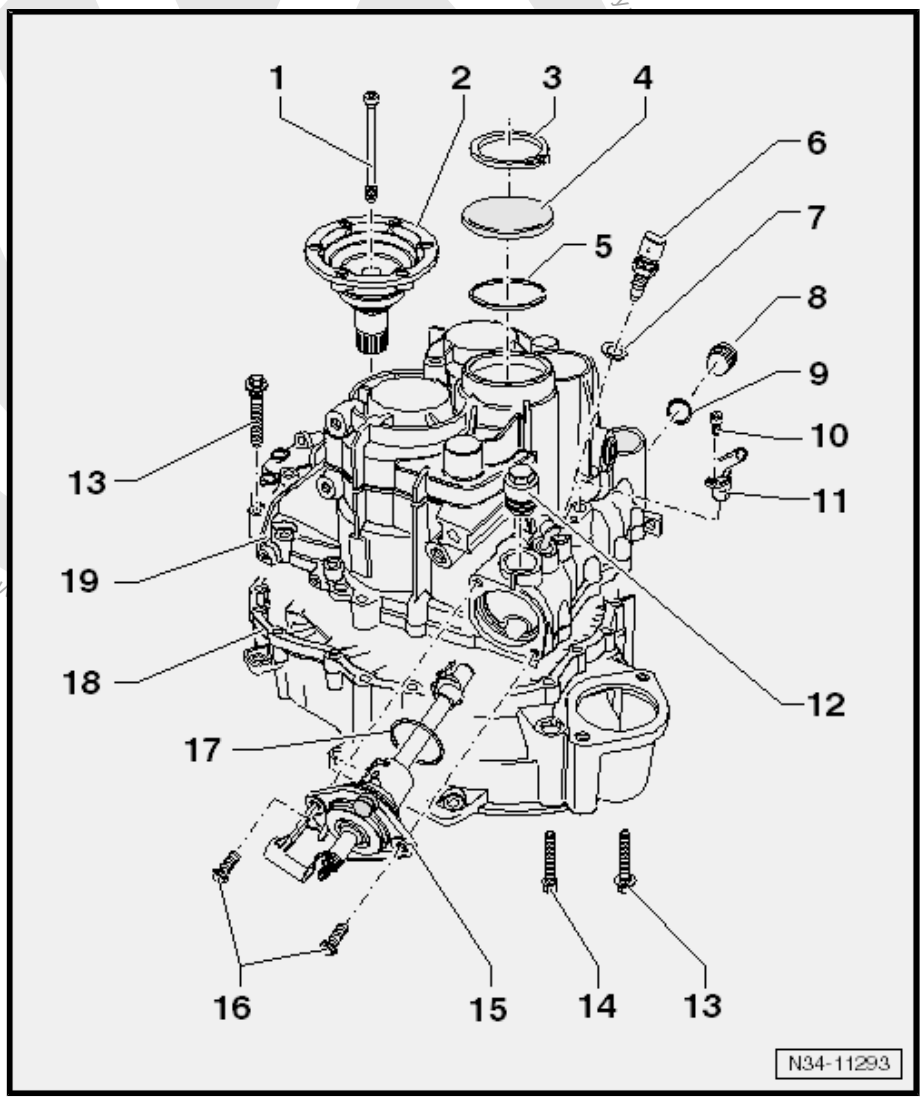


**1 - Bolt**

- ❑ Removing and installing. Refer to ⇒ "2.1 Overview - Differential", page 212 .

**2 - Left Flange Shaft**

- ❑ With pressure spring and tapered ring
- ❑ Removing and installing. Refer to ⇒ "1.2 Left Seal, Replacing", page 207 .
- ❑ Assembling. Refer to ⇒ "2.1 Overview - Differential", page 212 .

**3 - Locking Ring**

- ❑ For the metal cover
- ❑ Not used in plastic covers

**4 - Cover**

- ❑ Secured with metal locking ring
- ❑ Without plastic locking ring
- ❑ Allocate the components using the Parts Catalog.
- ❑ Made of metal or plastic. Refer to ⇒ page 120

**5 - Locking Ring**

- ❑ For the grooved ball bearing/input shaft. Refer to ⇒ "1.1 Overview - Input Shaft", page 157 .
- ❑ The thickness must be determined again on transmissions with reinforcements (manual transmission 0FB). Refer to ⇒ page 125 .

**6 - Back-Up Lamp Switch - F4-**

- ❑ 20 Nm
- ❑ With permanent seal

**7 - Seal**

- ❑ If present, replace after removing
- ❑ Not installed on all transmissions

**8 - Oil Drain Plug**

- ❑ Tightening specification. Refer to ⇒ Fig. ""Different Versions of Fluid Fill and Drain Plugs"" , page 142

**9 - Seal**

- ❑ Replace after removing

**10 - Bolt**

- ❑ 6 Nm

**11 - Transmission Neutral Position Sensor - G701-**

- ❑ For vehicles with the Start/Stop System

Copyright by Volkswagen AG. Volkswagen AG does not guarantee or accept any liability with respect to the correctness of information in this document. Copying for private or commercial purposes, in part or in whole, is not permitted unless authorised by Volkswagen AG.

**12 - Locking Bolt**

- ❑ Metal locking bolt: 45 Nm
- ❑ Plastic locking bolt: 30 Nm
- ❑ Replace locking bolt after removing
- ❑ For the selector shaft
- ❑ Metal or plastic locking bolt

**13 - Bolt**

- ❑ 15 Nm +180°
- ❑ Replace after removing
- ❑ M9 aluminum bolt

**14 - Bolt**

- ❑ 15 Nm +180°
- ❑ Replace after removing
- ❑ M9 aluminum bolt

**15 - Shift Lever Unit**

- ❑ (Shift lever shaft with shift lever cover). Refer to ⇒ “5.4 Overview - Shift Unit”, page 113 .
- ❑ Removing and installing with the transmission installed:

- ♦ For vehicles with a turbo diesel engine, remove the entire air filter housing. Refer to ⇒ Engine Mechanical, Fuel Injection and Glow Plug; Rep. Gr. 24 ; Air Filter; Air Filter Housing, Removing and Installing .
- ♦ For vehicles with a gasoline engine, remove the entire air filter housing. Refer to ⇒ Engine Mechanical, Fuel Injection and Ignition; Rep. Gr. 24 ; Air Filter; Air Filter Housing, Removing and Installing .
- ♦ Remove the battery and the battery tray if necessary. Refer to ⇒ Electrical Equipment; Rep. Gr. 27 ; Battery; Battery Tray, Removing and Installing .
- ♦ The lock elbow -Item 6- ⇒ Item 6 (page 130) , for adjusting the shift mechanism must not be engaged
- ♦ Remove the cables and shift lever.
- ♦ Remove the locking screw.
- ♦ If equipped, remove the Transmission Neutral Position Sensor - G701- .
- ♦ Remove the bolts and shift unit.
- ♦ Install in reverse order of removal. Replace the O-ring and bolts.

**16 - Bolt**

- ❑ 20 Nm
- ❑ Replace after removing

**17 - O-Ring**

- ❑ Replace after removing

**18 - Clutch Housing**

- ❑ Servicing. Refer to ⇒ “6 Transmission Housing and Clutch Housing”, page 130 .

**19 - Transmission Housing**

- ❑ Servicing. Refer to ⇒ “6 Transmission Housing and Clutch Housing”, page 130 .

## 5.4 Overview - Shift Unit

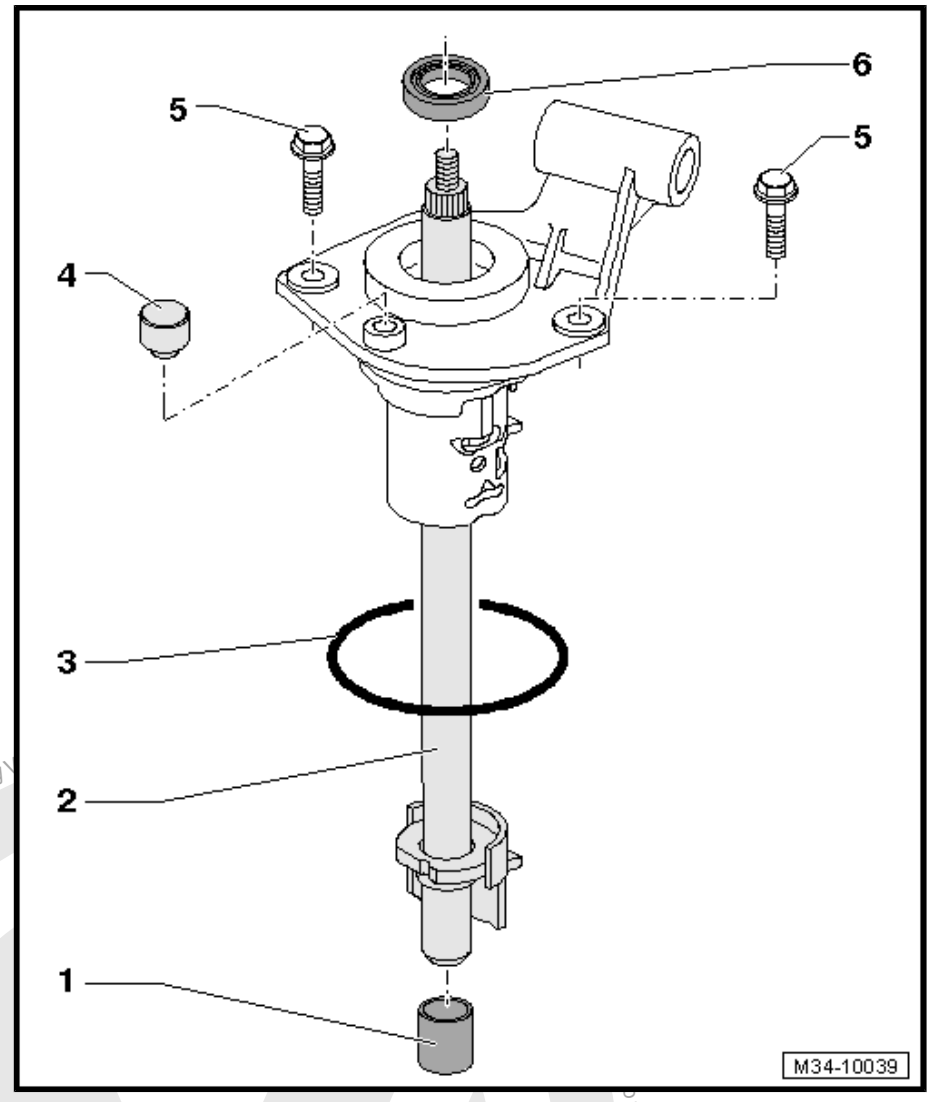


**1 - Bearing Bushing**

- ❑ For the selector shaft
- ❑ Removing and installing. Refer to ⇒ “6.1 Overview - Transmission Housing”, page 130 .

**2 - Shift Lever Unit**

- ❑ Consisting of the shift lever shaft and the shift lever cover
- ❑ The components cannot be separated from each other
- ❑ Can be removed and installed with the transmission installed. Refer to ⇒ “5.3 Overview - Transmission Housing and Selector Mechanism”, page 111

**3 - O-Ring**

- ❑ Insert in the groove in the shift cover
- ❑ Install with transmission fluid
- ❑ Replace after removing

**4 - Cap**

- ❑ For the transmission ventilation

**5 - Bolt**

- ❑ For the shift unit to the transmission housing
- ❑ Tightening specification. Refer to ⇒ “5.3 Overview - Transmission Housing and Selector Mechanism”, page 111.
- ❑ Replace after removing

**6 - Shift Lever Shaft Seal**

- ❑ Replacing. Refer to ⇒ “1.8 Selector Shaft Seal, Replacing”, page 74 .

Protected by copyright. Copying for private or commercial purposes, in part or in whole, is not permitted unless authorised by Volkswagen AG. Copyright by Volkswagen AG. No the correctness of information in this document.

## 5.5 Overview - Input Shaft, Output Shafts, Differential, Shift Lever Rods

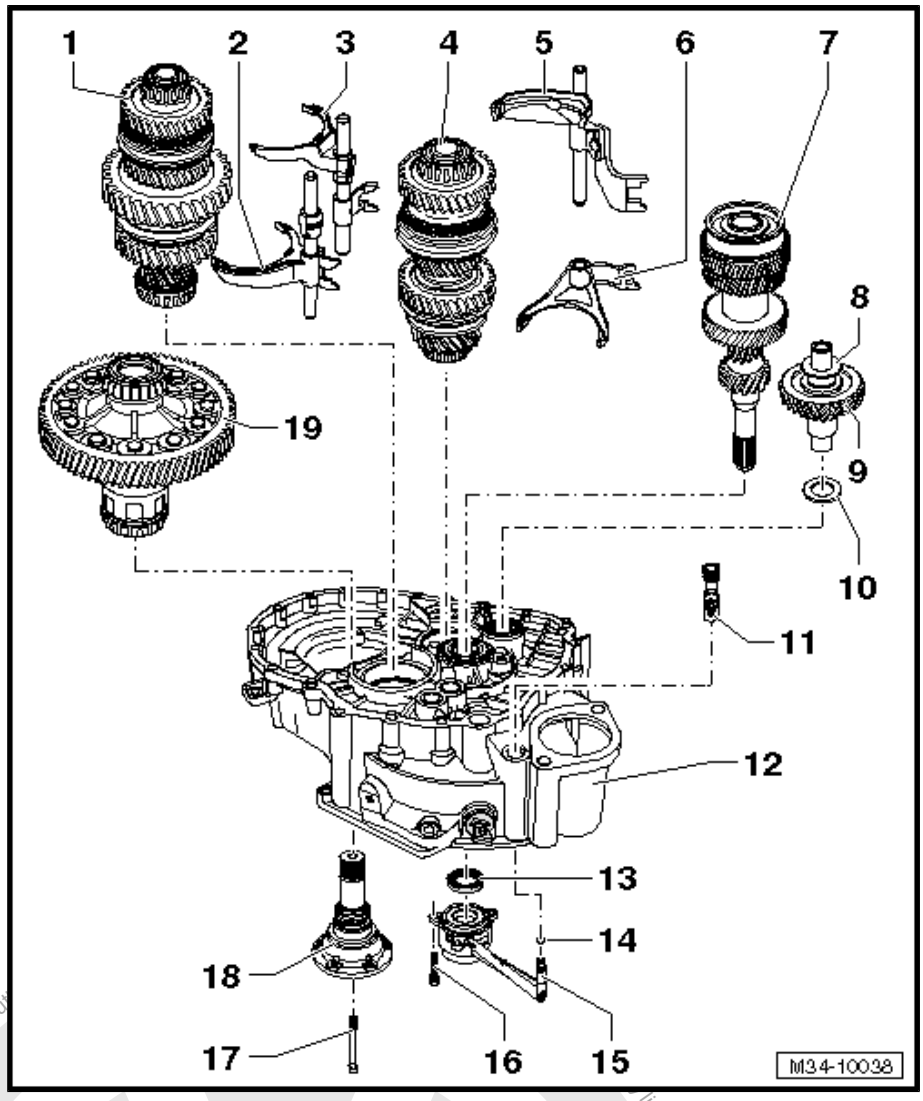


**1 - Output Shaft, 1st to 4th Gears**

- ❑ Disassembling and assembling. Refer to ⇒ “2.1 Overview - Output Shaft”, page 163 .
- ❑ Installed position. Refer to ⇒ Fig. ““Installation Location of Shafts and Shift Lever Rods in Transmission”“ , page 115 .

**2 - Shift Lever Rod with Shift Fork for 1st Gear and 2nd Gear**

- ❑ Installed position. Refer to ⇒ Fig. ““Installation Location of Shafts and Shift Lever Rods in Transmission”“ , page 115 .

**3 - Shift Lever Rod with Shift Fork for 3rd Gear and 4th Gear**

- ❑ Installed position. Refer to ⇒ Fig. ““Installation Location of Shafts and Shift Lever Rods in Transmission”“ , page 115 .

**4 - Output Shaft, 5th/6th and Reverse Gears**

- ❑ Disassembling and assembling. Refer to ⇒ “2.2.2 Output Shaft, 5th, 6th and Reverse Gears, Disassembling and Assembling”, page 182 .
- ❑ Installed position. Refer to ⇒ Fig. ““Installation Location of Shafts and Shift Lever Rods in Transmission”“ , page 115 .

**5 - Shift Lever Rod with Shift Fork for 5th Gear and 6th Gear**

- ❑ Installed position. Refer to ⇒ Fig. ““Installation Location of Shafts and Shift Lever Rods in Transmission”“ , page 115 .

**6 - Reverse Gear Shift Fork**

- ❑ Installed position. Refer to ⇒ Fig. ““Installation Location of Shafts and Shift Lever Rods in Transmission”“ , page 115 .

**7 - Input Shaft**

- ❑ Installed position. Refer to ⇒ Fig. ““Installation Location of Shafts and Shift Lever Rods in Transmission”“ , page 115 .
- ❑ Disassembling and assembling. Refer to ⇒ “1.1 Overview - Input Shaft”, page 157 .
- ❑ Replace grooved ball bearing on drive axle after removing. Refer to ⇒ “1.1 Overview - Input Shaft”, page 157 .

**8 - Thrust Washer**

- ❑ Place on the reverse shaft

Protected by copyright. Copying for private or commercial purposes, in part or in whole, is not permitted unless authorized by Volkswagen AG. Volkswagen AG does not guarantee or assume any liability with respect to the correctness of information in this document. Copyright by Volkswagen AG.

**9 - Reverse Shaft**

**10 - Thrust Washer**

**11 - Bleeder**

- ❑ Connect with clutch slave cylinder

**12 - Clutch Housing**

- ❑ Servicing. Refer to ⇒ “6 Transmission Housing and Clutch Housing”, page 130 .

**13 - Input Shaft Seal**

- ❑ Replacing. Refer to ⇒ “1.3 Input Shaft Seal, Replacing”, page 161 .

**14 - O-Ring**

- ❑ Install on the line connection
- ❑ Coat with brake fluid before installing

**15 - Clutch Slave Cylinder with Release Bearing**

**16 - Bolt**

- ❑ Replace after removing
- ❑ Quantity: 3
- ❑ Removing and installing. Refer to ⇒ “1.4 Overview - Clutch Release Mechanism”, page 21 .

**17 - Bolt**

- ❑ Tightening specification. Refer to ⇒ “2.1 Overview - Differential”, page 212 .

**18 - Right Flange Shaft**

- ❑ With pressure spring and tapered ring
- ❑ Removing and installing. Refer to ⇒ “1.3 Right Seal, Replacing”, page 209 .
- ❑ Assembling. Refer to ⇒ “2.1 Overview - Differential”, page 212 .

**19 - Differential**

- ❑ Disassembling and assembling. Refer to ⇒ “2.1 Overview - Differential”, page 212 .

**Installation Location of Shafts and Shift Lever Rods in Transmission**

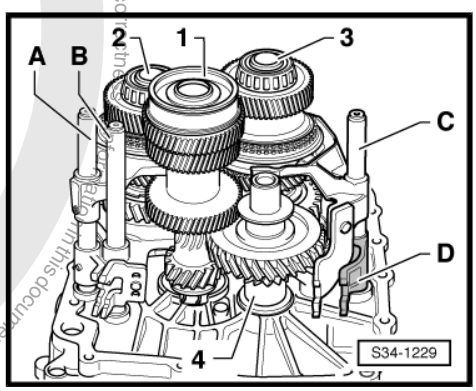


1 - Input Shaft

2 - Output Shaft, 1st to 4th Gears

3 - Output Shaft, 5th/6th and Reverse Gears

4 - Reverse Shaft

A - 3rd and 4th Gear Shift Lever Rod

B - 1st and 2nd Gear Shift Lever Rod

C - 5th and 6th Gear Shift Lever Rod

D - Reverse Gear Shift Fork

**The Reverse Gear Shift Fork -D- is Mounted on the 5th and 6th Gear Gearshift Rod -C-.**

Copyright by Volkswagen AG. Volkswagen AG does not guarantee or accept any liability with respect to the correctness of information in this document. Copyright by Volkswagen AG. Protected by copyright. Copying for private or commercial purposes in part or in whole, is not permitted unless authorised by Volkswagen AG.

## 5.6 Overview - Shift Forks

**1 - Insulation Mat**

- ❑ Remove from the shift lever rod by hand and install.

**2 - Shift Lever Rod with Shift Fork for 1st Gear and 2nd Gear**

**3 - Shift Lever Rod with Shift Fork for 3rd Gear and 4th Gear**

**4 - Shift Lever Rod with Shift Fork for 5th Gear and 6th Gear**

**5 - Reverse Gear Shift Fork**

- ❑ Is secured on the shift lever rod with 5th and 6th gear shift fork. Refer to ⇒ Fig. ""Installation Location of Shafts and Shift Lever Rods in Transmission"", page 115

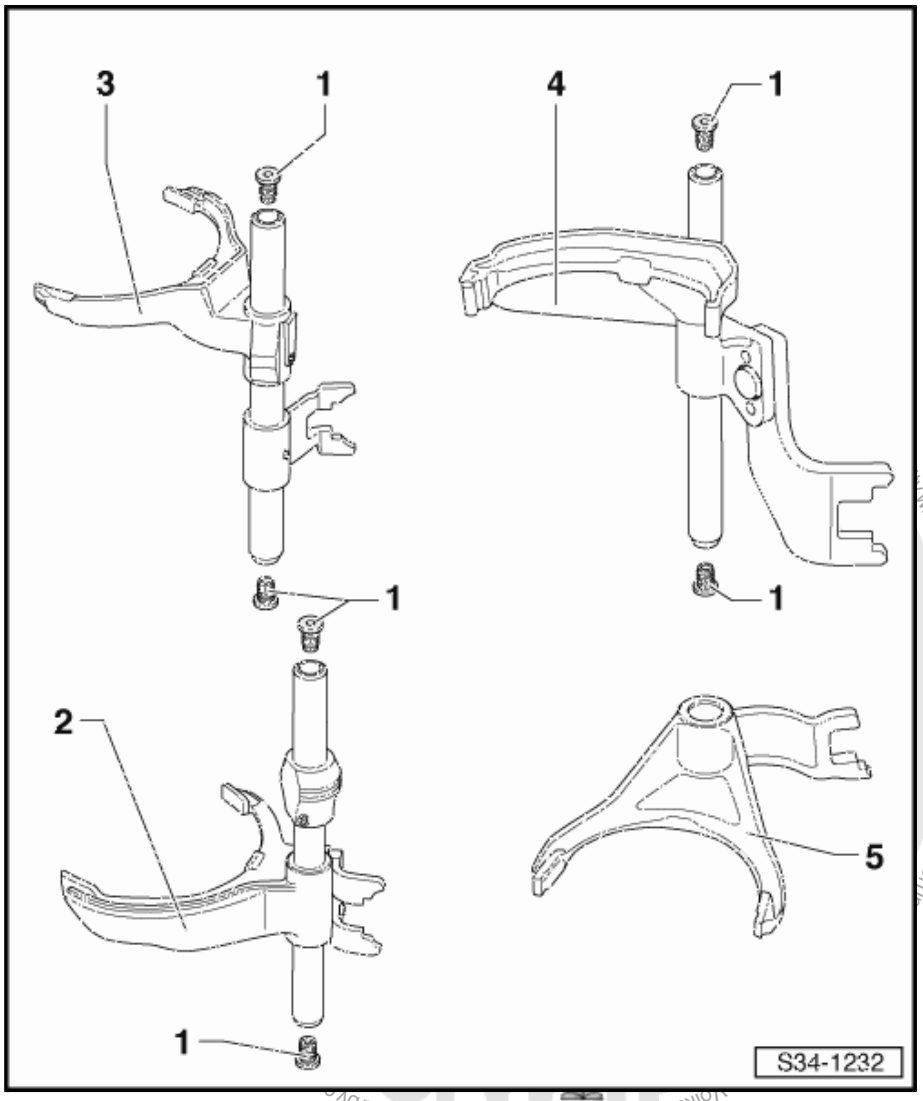


Protected by Volkswagen AG. ... with respect to the correctness of information ...

## 5.7 Transmission, Disassembling and Assembling

**Special tools and workshop equipment required**

- Holding Plate - VW309A-
- or Holding Plate - VW309A-
- Holding Fixture - VW313-
- Transmission Support - VW353-
- Press Piece - Multiple Use - VW455- or Press Piece - Front Wishbone - 3160-
- Slide Hammer Set - VW771-
- Puller - Kukko Internal - 12-16mm - 21/1-
- Puller - Kukko Quick Action Separating Tool - 5-60mm - 17/0-
- -4- Counter Support - VAS251621-
- Puller - Kukko Counterstay - 22/1-

- Bracket - Multiple Use - 30-211A-
- Seal Installer - Drive Flange - T10143- or Seal Installer - Output Shaft Oil Seal - T10180-
- Locking Sleeve Drift - T10169-
- or Locking Sleeve Drift - T10362- . Refer to ⇒ Fig. ""Lock Sleeve Differentiation"" , page 136
- Seal Installer - Driveshaft - T40008-
- Torque Wrench 1331 5-50Nm - VAG1331-
- Hot Air Blower - VAG1416-
- Pry Lever - 80-200-
- Shop Crane - Drip Tray - VAS6208-
- Sealing Compound - AMV 188 200 03-

**Caution**

*This procedure contains mandatory replaceable parts. Refer to component overview prior to starting procedure.*

**Mandatory Replacement Parts**

- Seal - Back-Up Lamp Switch
- Seal - Oil Drain Plug
- Locking Bolt - Transmission Housing
- Bolt - Transmission Housing
- Bolt - Shift Lever Unit
- O-ring - Shift Lever Unit
- Bolt - Clutch Slave Cylinder with Release Bearing

**Transmission Housing, Shift Mechanism, Input Shaft, Output Shafts, Differential and Gearshift Rods, Removing and Installing.**

**Disassemble Transmission**

– Secure the transmission on the -VW353- -arrows-.

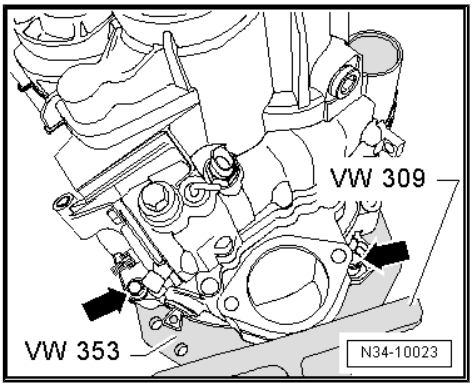


**Note**

*If one of the fastening holes does not touch the -VW353- , place washers between the fastening hole and the -VW353- .*

– Turn the transmission the assembly stand with the oil drain plug facing down.

– Place the -VAS6208- underneath.

– Drain the transmission fluid.

Protected by copyright. Copyright by Volkswagen AG. Copying for private and commercial purposes, in part or in whole, is not permitted unless authorised by Volkswagen AG. Volkswagen AG does not guarantee or accept any liability with respect to the correctness of information in this document.

– Remove the right flange shaft (the illustration shows the left flange shaft).
– Remove the flange shaft and the pressure spring.

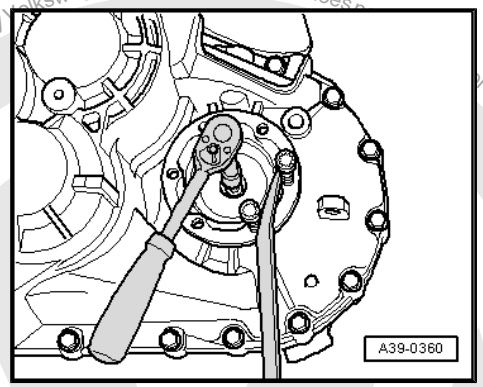


– Remove the clutch slave cylinder with the release bearing -arrows-.

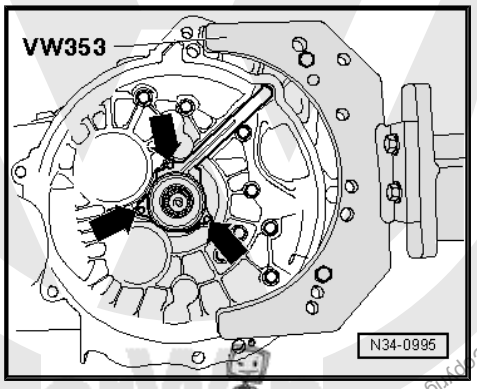


– Transmission for vehicles with start/stop system: Remove the Transmission Neutral Position Sensor - G701- -arrow-.

**Make Sure the Shift Lever Shaft is Not Blocked By the Lock Elbow -arrow-.**

– Move the shift lever shaft into neutral.
– Remove the Back-Up Lamp Switch - F4- -1-.
– Remove the locking bolt -2-.
– Then remove the bolts -3-.
– Remove selector shaft with shift cover -4- from transmission housing.

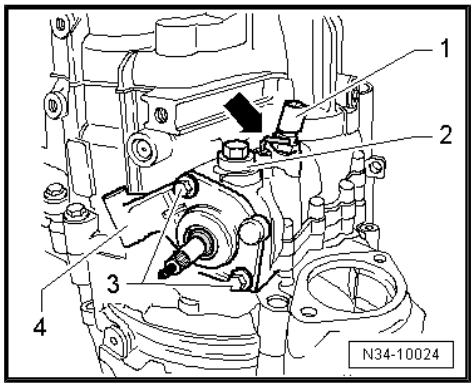


Copyright. Copying for private or commercial purposes, in part or in whole, is not permitted unless authorised by Volkswagen AG. Volkswagen AG does not accept any liability with respect to the correctness of information in this document.

**Note**

*Use the -80-200- to press against the spring force of the securing bushing direction of -arrow- so that the shift lever shaft -1- does not touch the securing bushing -2- when removing.*

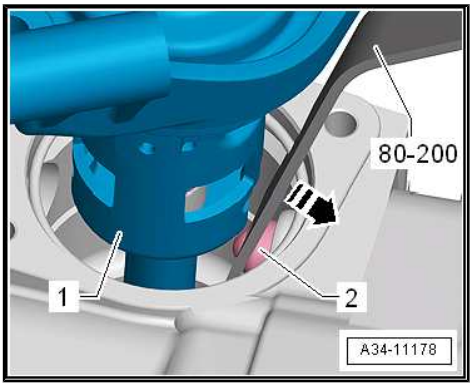


– Remove the left flange shaft bolt. To do this, install two bolts in the flange and counterhold it using a pry bar.

– Remove the flange shaft and the pressure spring.

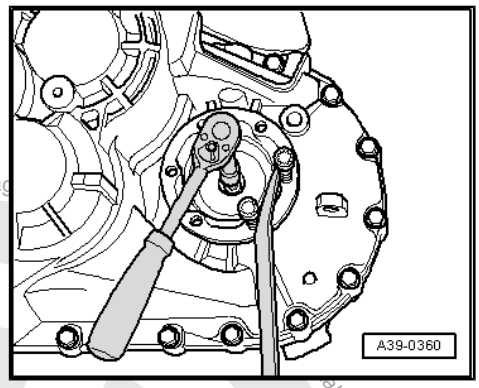


– Remove the bolts -B- that connect the clutch housing to the transmission housing.

**Note**

*One bolt -arrow- is located outside of the bolting flange.*

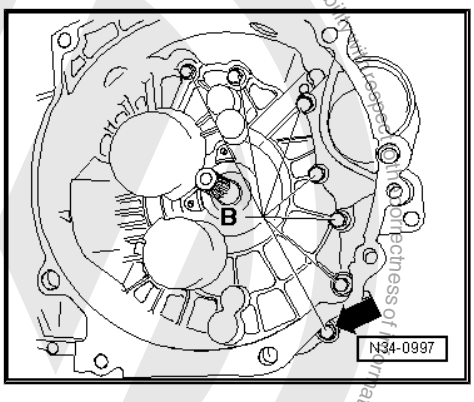


– Lock the input shaft as follows:

**The Stub Shaft Splines on the Input Shaft Has Different Lengths on the Transmission.**

– Either place the -VW455- over the input shaft on the clutch housing.

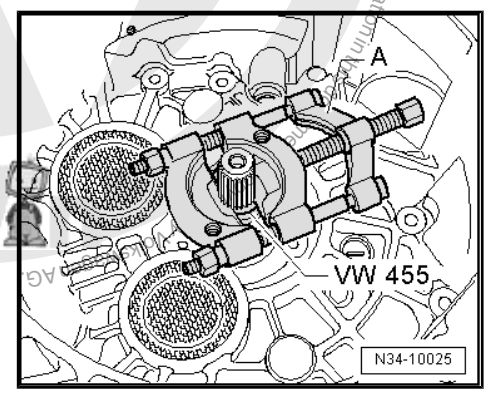


Protected by copyright. Copying for private or commercial purposes, in part or in whole, is not permitted unless authorised by Volkswagen AG. Volkswagen AG does not guarantee or accept any liability with respect to the correctness of information in this document.

– Or place the -3160- over the input shaft on the clutch housing.

– Tension the Separating Tool - 5-60mm -A-, for example -17/0- , tightly behind the splines on the input shaft.

The back of the Separating Tool - 5-60mm must touch the -VW455- or the -3160- free-of-play.

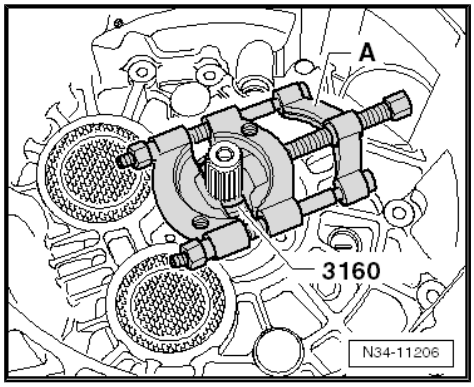


**Note**

*Metal and plastic covers are installed for the input shaft.*

The locking ring -A- has been discontinued together with the plastic cover for the input shaft.

- -I- = Steel cover for the input shaft with locking ring -A-
- -II- = Plastic cover for the input shaft without locking ring

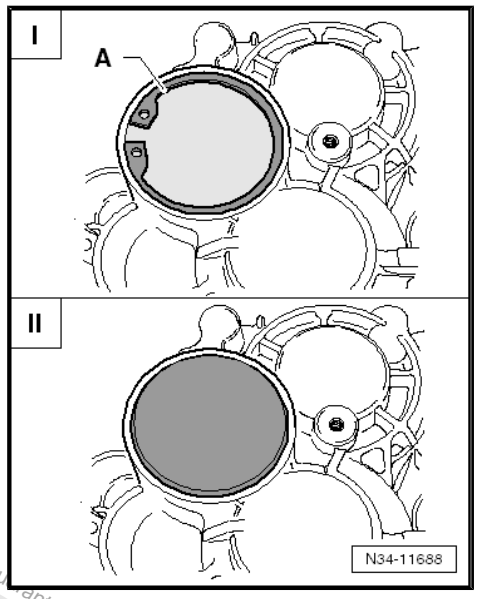


**Metal Cover**

– Remove the cap/input shaft circlip -A-.

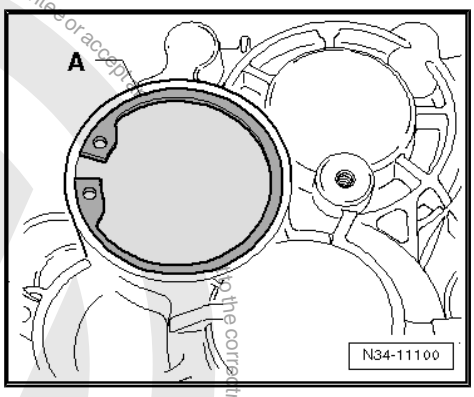


– Pierce the rubber piece into the center of the cover -C- using a Screwdriver .

**Caution**

***There is a risk of damaging the components underneath the cover.***

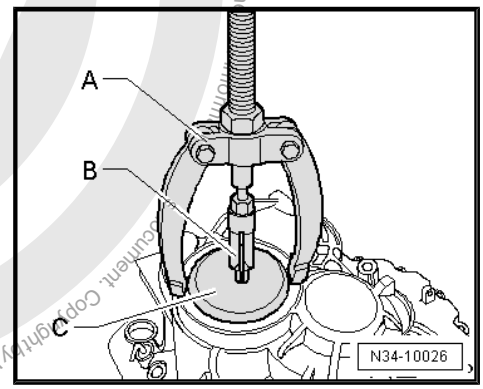


– Remove the cover from the transmission housing.

A - Counter Support , for example -22/1-

B - Internal Puller 8 to 12 mm , for example -21/1-

Protected by copyright. Copying for private or commercial purposes, in part or in whole, is not permitted unless authorised by Volkswagen AG. Volkswagen AG does not guarantee or accept any liability with respect to the correctness of information in this document. Copyright by Volkswagen AG.

Protected by copyright. Copying for private or commercial purposes, in part or in whole, is not permitted unless authorised by Volkswagen AG. Volkswagen AG does not guarantee or accept any liability with respect to the correctness and completeness of this documentation.

Note

*Pry the cap -1- off with a screwdriver -2-.*

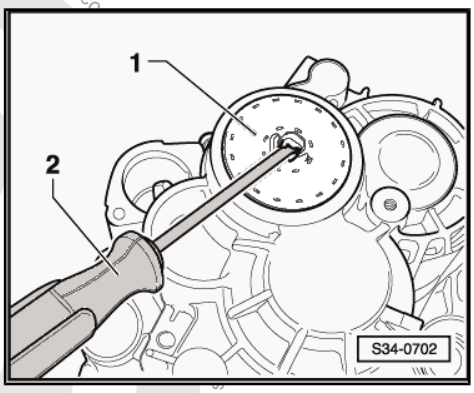


Plastic Cover

Carefully remove all tabs -A-. Do not damage the transmission housing when doing so.

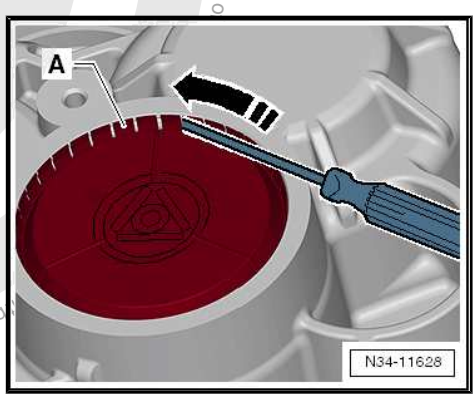


– Remove the cap -A-.

• Make sure the individual parts of the cover are removed, if necessary.

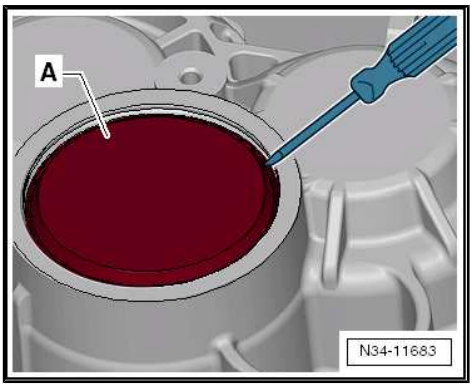


Continuation for All

Remove the locking ring -C- from the grooved ball bearing on the input shaft/transmission housing as follows:

– Hold one end of the locking ring secure with the Screwdriver -A-.

– Pry the other end out of the groove in the grooved ball bearing in direction of -arrow- using the Screwdriver -B-.

– Pry out the rest of the locking ring using the screwdriver -B-.

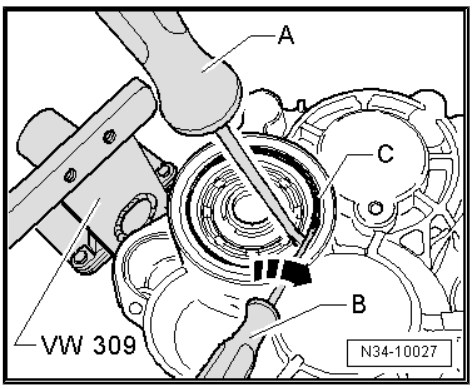

– Remove the bolts -A- that attach the transmission housing to the clutch housing.

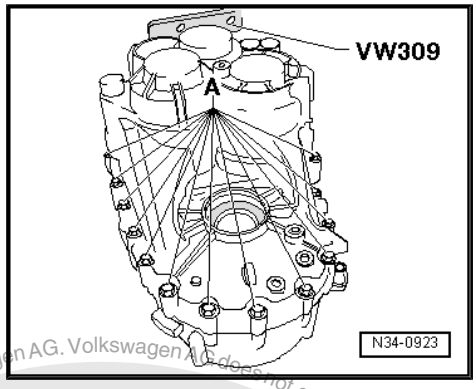


– Install -VW771/40- into the threaded hole in the transmission housing.

– Heat the transmission housing in the area near the bearing seat for the grooved ball bearing/input shaft to approximately 100 °C (212 °F) for approximately 10 minutes using a Hot Air Blower , for example, -VAG1416- .

– Remove the transmission housing from the clutch housing in direction of -arrow- using -VW771/40-

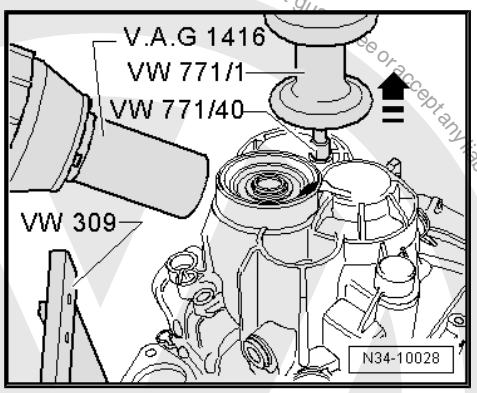


**Note**

*Pry off the transmission housing carefully at the protruding braces using a pry lever and alternating from side to side. Do not damage sealing surface.*

– Remove the Separating Tool -A- and the Press Piece - Multiple Use VW455 or the -3160- from the input shaft.

A second technician is needed to help remove the shafts from the clutch housing.

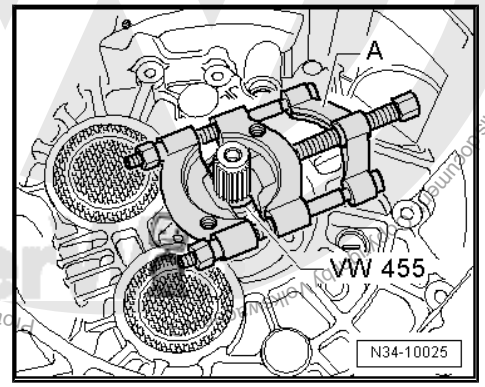


Protected by copyright. Copying for private or commercial purposes, in part or in whole, is not permitted unless authorised by Volkswagen AG. Volkswagen AG does not guarantee or accept any liability with respect to the correctness of information in this document.

Protected by copyright. Copyright. Copying for private or commercial purposes, in part or in whole, is not permitted unless authorised by Volkswagen AG. Volkswagen AG does not guarantee or accept any liability with respect to the correctness of information in this document. Copyright by

– Lift the differential -1- with the left hand. With the right hand, lift the output shaft for 1st to 4th gear together with the shift lever rods -2- -arrow A-.

– At the same time, the second technician lifts the input-, reverse- and output shafts for 5th/6th gear and reverse gear -3- together with the shift lever rod out of the clutch housing -arrow B-.

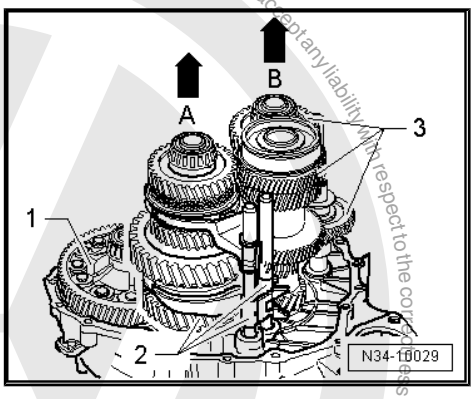


**Note**

*If necessary, differential can be shifted again in clutch housing after lifting shafts.*

– Remove the input shaft seal.

**Note**

*Replace grooved ball bearing on drive axle after removing. Refer to ⇒ "1.1 Overview - Input Shaft", page 157 .*

### Assembling the Transmission

- A new grooved ball bearing is pressed onto the input shaft. Refer to ⇒ "1.1 Overview - Input Shaft", page 157 .
- The reverse gear shift fork -1- is placed on the 5th and 6th gear shift lever rod -2-. Refer to ⇒ page 123 .

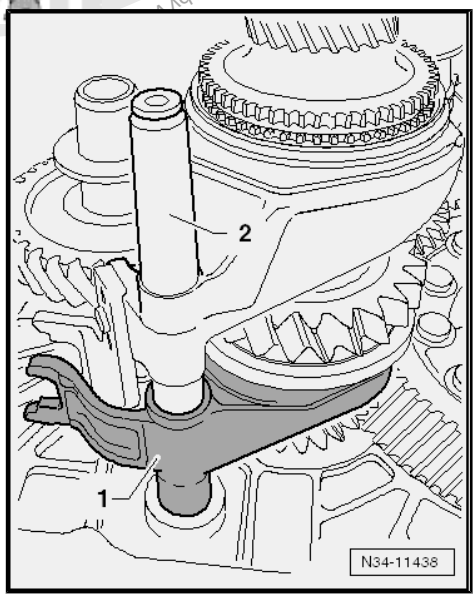


– Install the input shaft -1-, the 5th/6th gear output shaft -2- and the 5th/6th gear shift lever rod -3-, the reverse gear shift fork -4- and reverse shaft -5-.

- The shift jaw -arrow A- on the reverse gear shift fork faces the outside of the transmission. The shift jaw -arrow B- on the 5th/6th gear shift lever rod must face toward the inside of the transmission.

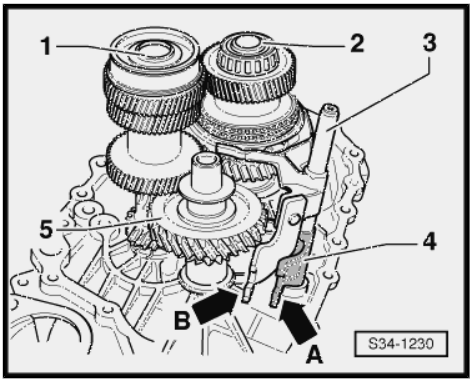

– Then install the differential -1-.

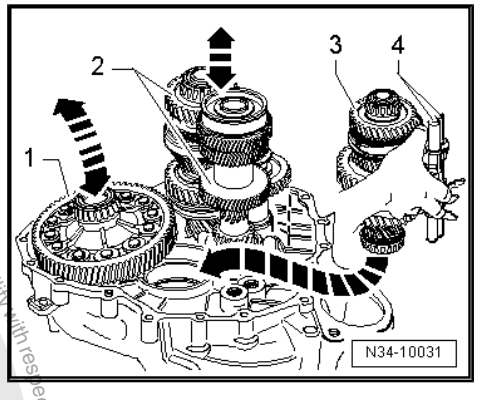


**Note**

*A second technician is needed to help install the shafts into the clutch housing.*

– Hold 1st through 4th gear output shaft -3- with the shift lever rods -4- in the right hand as illustrated.

– Lift the differential slightly with your left hand.

– Have the second technician lift the input shaft, the 5th/6th gear output shaft -2- together with the reverse shaft slightly at the same time.

– Install the 1st through 4th gear output shaft in direction of -arrow-.

• Places of input shaft, output shafts and final drive gear/differential must engage.

– Place the shafts and the differential in their bearing seats with a second technician.

– Secure the -30-211A- for the input shaft to the clutch housing.

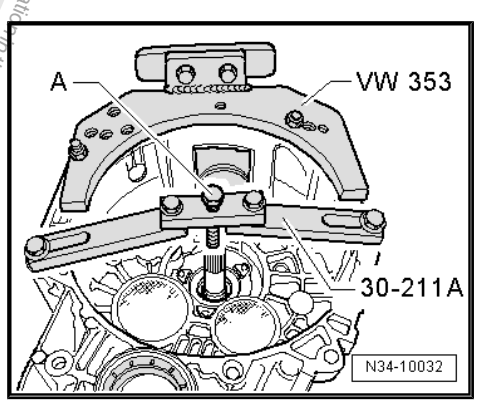


**Note**

*The clutch housing is shown in the illustration rotated 180°.*

– Install the bolt -A- just far enough until the input shaft starts to lift.

**The Grooved Ball Bearing/Input Shaft Only Fits In One Position In the Transmission Housing.**

There is a flattened area on the grooved ball bearing and the bearing mount.

• The flattened sides -A- on the grooved ball bearing and on the bearing mount -B- must align in the transmission housing.

– Mark this flat side with color.

– Transfer the markings to the upper area of the grooved ball bearing and to the upper area of the transmission housing bearing mount (⇒ next figure).

– Heat the transmission housing in the area near the bearing seat for the grooved ball bearing/input shaft to approximately 100 °C (212 °F) for approximately 10 minutes using a Hot Air Blower , for example, -VAG1416- .

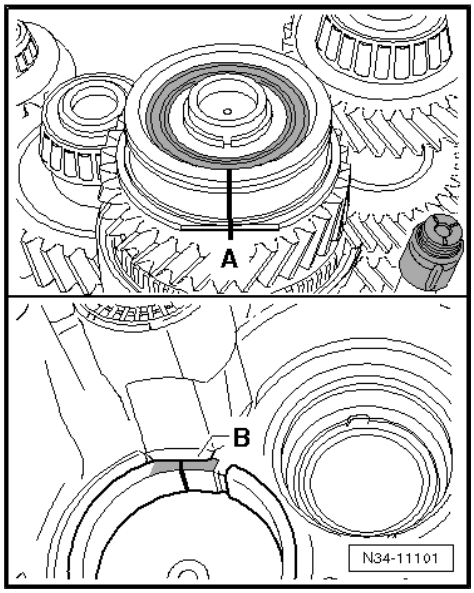


Protected by copyright. Copyright by Volkswagen AG. Volkswagen AG does not guarantee or accept any liability with respect to the correctness of information in this document. Copying for private or commercial purposes, in part or in whole, is not permitted unless authorised by Volkswagen AG.

Protected by copyright. Copying for private or commercial purposes, in part or in whole, is not permitted unless authorised by Volkswagen AG. Volkswagen AG does not guarantee or accept any liability with respect to the correctness of information. Copyright by Volkswagen AG.

**Note**

- *It is necessary to heat the transmission housing so that the grooved ball bearing is not damaged when the housing is being installed.*
- *Apply Sealing Paste - AMV 188 200 03- evenly onto the sealing surface of the clutch housing.*
- *Align the marking on the grooved ball bearing -A- with the marking on the transmission housing -B- and mount the transmission housing.*

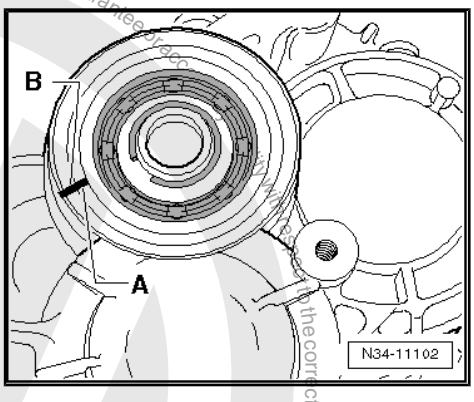


– Install the transmission housing and tighten the new bolts -A, B and C-.

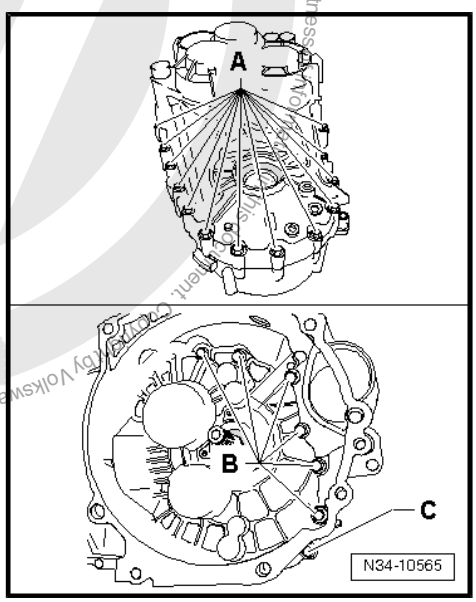


**The Circlip -1- for the Grooved Ball Bearing/Input Shaft -2- Must Be Re-Examined on Transmissions with Reinforcements (manual transmission 0FB):**

- Check that the input shaft with the -30-211A- is pressed up against the transmission housing.
- Identify the thickest circlip for the grooved ball bearing/input shaft that has not yet been used and install it, starting with the thickest circlip.

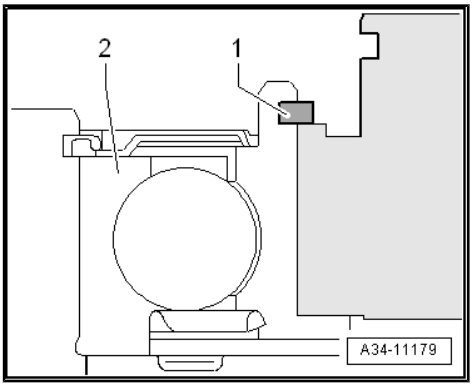


The following circlips are available. Refer to the Parts Catalog for the part number.

| Circlip Thickness (mm) | | |
|---|---|---|
| 2.03 | 2.09 | 2.15 |
| 2.21 | 2.27 | |

**Continuation for All**

– Install the grooved ball bearing/input shaft locking ring -1-.

– Remove the -30-211A- for the input shaft.

– If the retaining sleeve for the shift lever shaft was removed, then install it now all the way onto the tool. Refer to ⇒ Fig. ""Lock Sleeve Differentiation"" , page 136 .

– Turn the transmission so that the opening for the shift lever shaft faces up in the assembly stand.

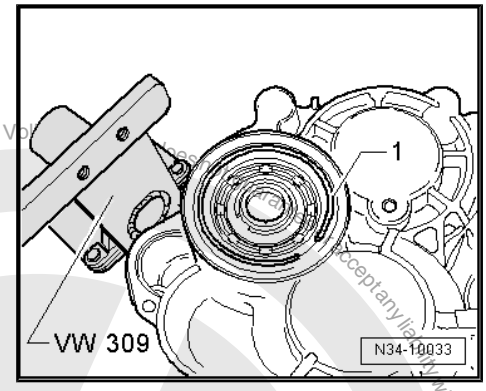


**Note**

*Use the -80-200- to press against the spring force of the securing bushing direction of -arrow- when installing so that the shift lever shaft -1- does not touch the securing bushing -2- when removing.*

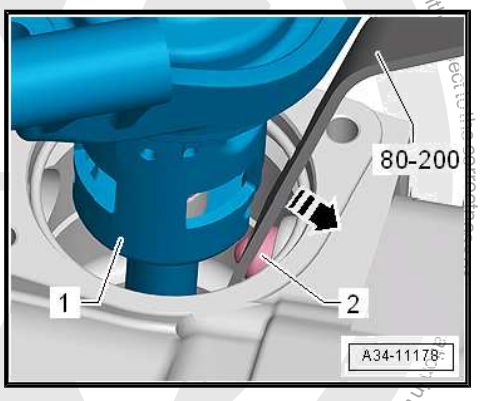


– Install the shift lever shaft -1- into the lower bearing -2- and into the shift forks -3-.

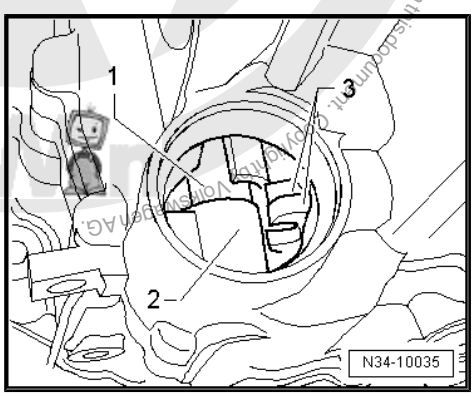


**Note**

*The cover is not shown in the illustration. Refer to ⇒ "6.1 Overview - Transmission Housing", page 130 .*

– Push the shift lever shaft -1- against the retaining sleeve -2- in direction of -arrow- and guide is through the shift fork all the way down using the shift finger -3-.

- The shift lever cover -4- must stand parallel to the bolting surface on the transmission housing.
- It must be possible to move the shift lever shaft easily (forward and backward).

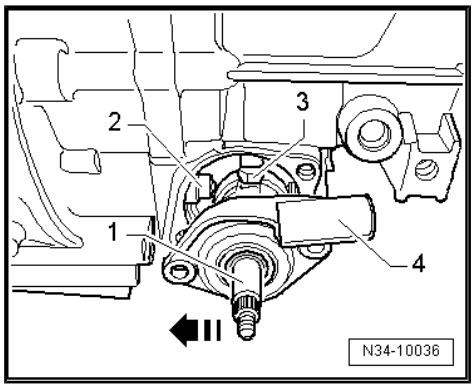


**Note**

*If the gearshift cover is at an angle to the bolting surface, then the gearshift shaft is not installed in the lower bearing.*

Protected by copyright. Copying for private or commercial purposes, in part or in whole, is not permitted unless authorised by Volkswagen AG. Volkswagen AG does not guarantee or accept any liability with respect to the correctness and completeness of this document. Copyright by Volkswagen AG.

Protected by copyright. Copying for private or commercial purposes, in part or in whole, is not permitted unless authorised by Volkswagen AG. Volkswagen AG does not guarantee or accept any liability in respect to the correct

– Tighten the bolts -3- for the shift lever cover -4-.
– Install the locking bolt -2-, lock elbow -arrow- must not be installed when doing so.
– Install the Back-Up Lamp Switch - F4- -1-.

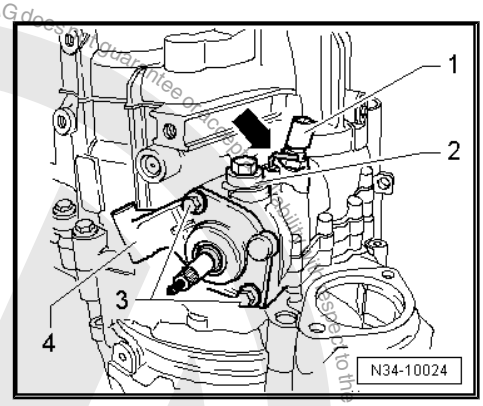


– Transmission for vehicles with start/stop system: Insert the Transmission Neutral Position Sensor - G701- -arrow- and tighten the bolt.

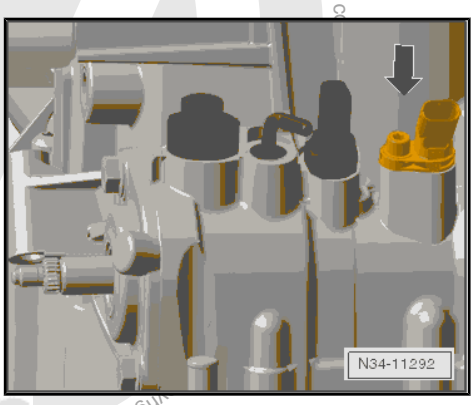


– Install the input shaft seal so that it is flush.
– Install the clutch slave cylinder with release bearing. Refer to ⇒ “1.11 Clutch Slave Cylinder with Release Bearing, Removing and Installing”, page 33 .
– Move the shift lever (selector lever) through all the gears.
– Install the cover as follows:

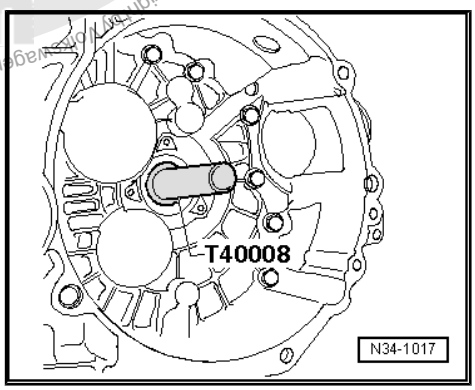


**Cover Differentiation**

-I- is a metal cover; secured with securing ring -A-.

-II- is a plastic cover; without securing ring.

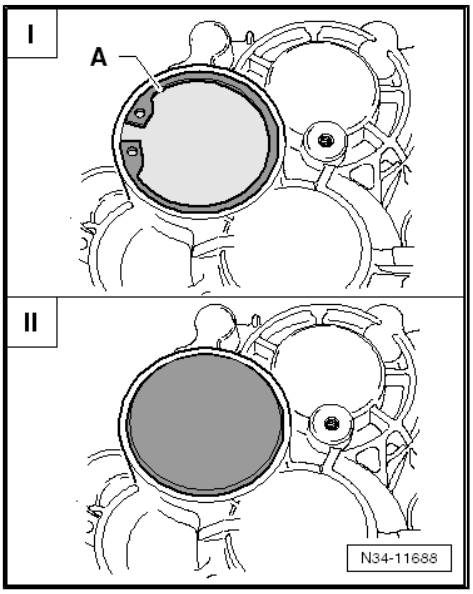

### Allocation

| Mounting Area for the Cover | Cover | Installation |
|---|---|---|
| -Arrow A- is at vertical | Made of metal | Refer to ⇒ Fig. ""Metal Cover"" , page 128 |
| -Arrow B- is at an angle | Plastic | Refer to ⇒ Fig. ""Plastic Cover"" , page 128 |

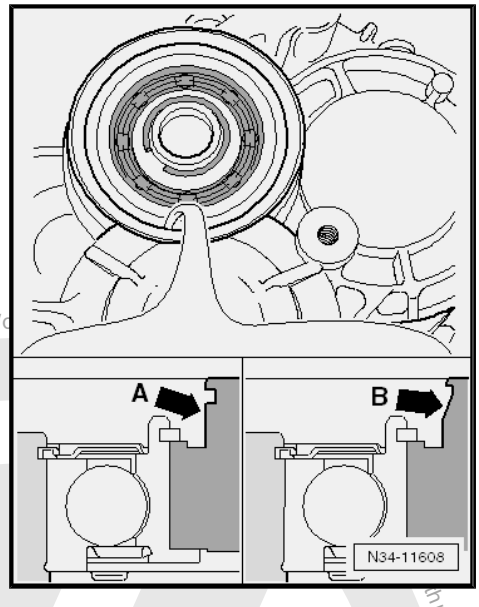


### Metal Cover

– Install the cap all the way into the transmission housing.

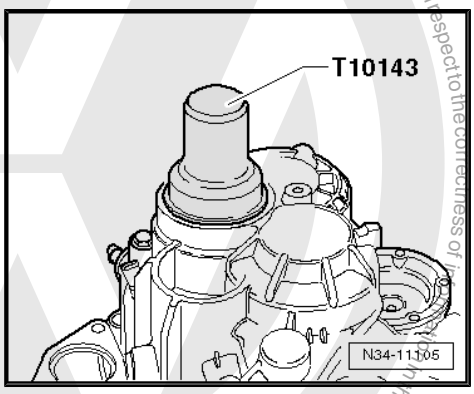


– Secure the cap with the locking ring -A-.

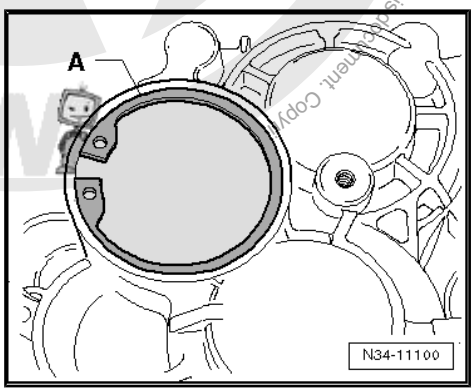


### Plastic Cover

– Install the cap all the way into the transmission housing.

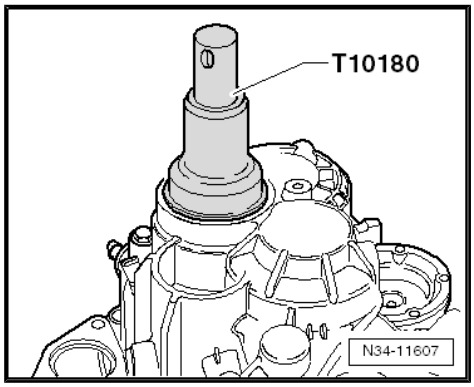


### Continuation for All

- Always pay attention to the cover allocation. Refer to ⇒ Fig. ""Allocation"" , page 128 .
- Leaks in the case of incorrect installation.
- For the correct cap. Refer to the Parts Catalog.

Protected by copyright. Copying for private or commercial purposes, in part or in whole, is not permitted unless authorised by Volkswagen AG. Volkswagen AG does not guarantee or accept any liability with respect to the correctness of information.

– Install the flange shafts with the springs, thrust washers and tapered rings.

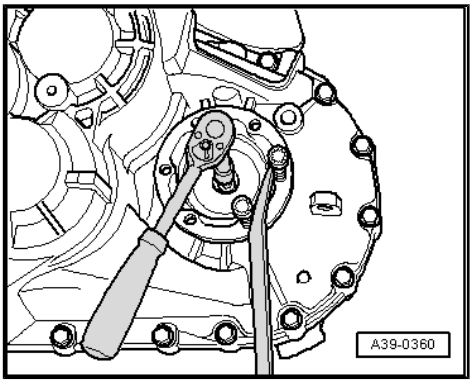


### Tightening Specifications

- Refer to ⇒ “1.4 Overview - Clutch Release Mechanism”, page 21 .
- Refer to ⇒ “5.3 Overview - Transmission Housing and Selector Mechanism”, page 111
- Refer to ⇒ “2.1 Overview - Differential”, page 212 .

Protected by copyright. Copying for private or commercial purposes, in part or in whole, is not permitted unless authorised by Volkswagen AG. Volkswagen AG does not guarantee or accept any liability with respect to the correctness of information in this document. Copyright by Volkswagen AG.

Volkswagen AG does not guarantee or accept any liability with respect to the correctness of information in this document. Copyright by Volkswagen AG. Protected by copyright. Copying in part or whole, not permitted unless authorised by Volkswagen AG.

# 6 Transmission Housing and Clutch Housing

⇒ “6.1 Overview - Transmission Housing”, page 130
⇒ “6.2 Overview - Clutch Housing”, page 132
⇒ “6.3 Transmission Housing, Servicing”, page 134
⇒ “6.4 Clutch Housing, Servicing”, page 139

## 6.1 Overview - Transmission Housing

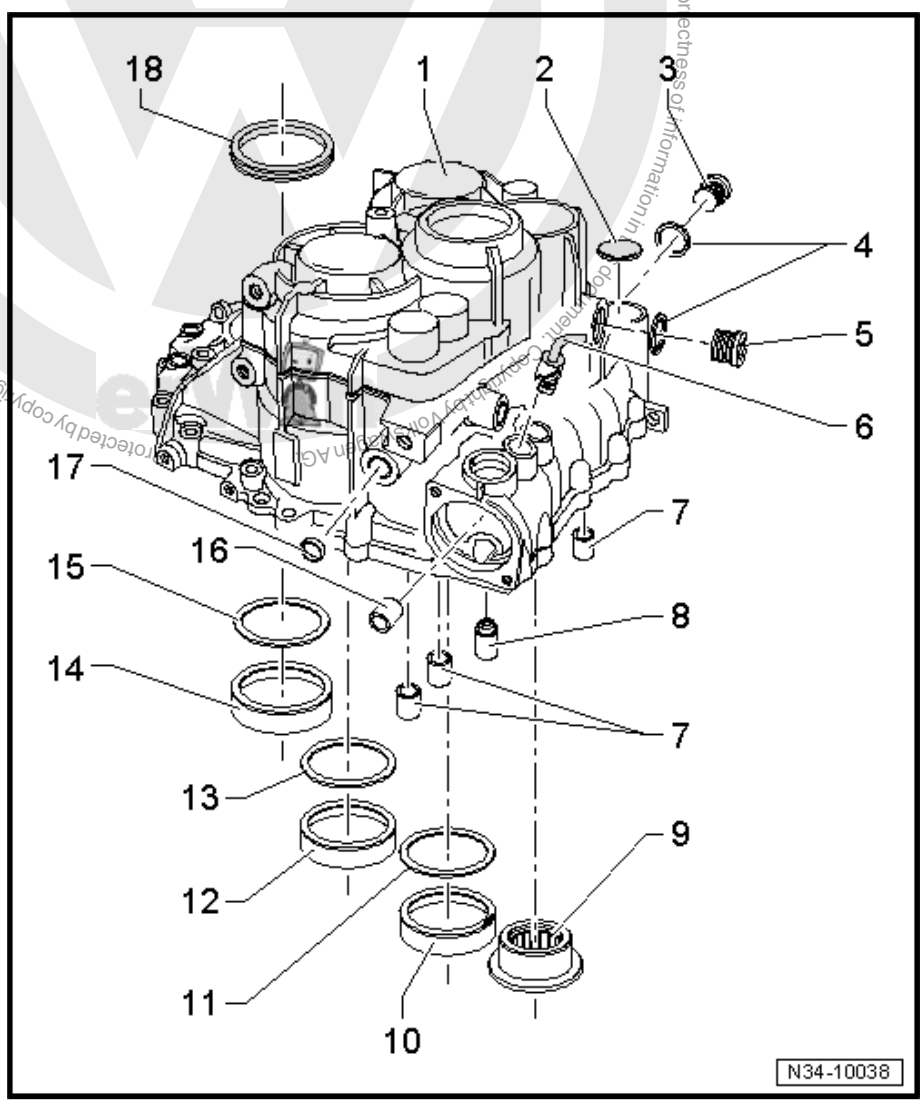


**1 - Transmission Housing**

- ❑ When replacing: Adjust output shafts and differential. Refer to ⇒ “3 Adjustment Overview”, page 221 .
- ❑ Changes near the mount for the cover/input shaft. Refer to ⇒ “5.3 Overview - Transmission Housing and Selector Mechanism”, page 111 .
- ❑ Refer to the Parts Catalog

**2 - Cover**

- ❑ Removing. Refer to ⇒ Fig. ““Removing the Cover -A- ”“ , page 134 .
- ❑ Installing. Refer to ⇒ Fig. ““Installing the Cover”“ , page 134

**3 - Oil Drain Plug**

- ❑ Tightening specification. Refer to ⇒ Fig. ““Different Versions of Fluid Fill and Drain Plugs”“ , page 142

**4 - Seal**

- ❑ If present, replace after removing

**5 - Transmission Fluid Filler Plug**

- ❑ Tightening specification. Refer to ⇒ Fig. ““Different Versions of Fluid Fill and Drain Plugs”“ , page 142

**6 - Locking Elbow**

- ❑ For adjusting the shift mechanism. Refer to ⇒ “1.6 Selector Mechanism, Adjusting”, page 71 .
- ❑ Can be replaced with transmission not disassembled
- ❑ Removing. Refer to ⇒ Fig. ““Removing the Locking Elbow for the Shift Lever Shaft”“ , page 135 .
- ❑ Installed position. Refer to ⇒ Fig. ““Installed Position: Locking Elbow”“ , page 135 .
- ❑ Installing. Refer to ⇒ Fig. ““Drive Lock Elbow -arrow- for Selector Shaft in Up to Tool Stop.”“ , page 135

**7 - Bearing Bushing**

- ❑ For the selector rods

- ❑ Removing. Refer to ⇒ Fig. ""Removing the Shift Rod Bearing Bushing"" , page 135
- ❑ Installing. Refer to
  ⇒ Fig. ""Installing the Shift Rod Bearing Bushing all the way onto the Tool"" , page 136

**8 - Retaining Sleeve**

- ❑ For shift unit
- ❑ Removing when the transmission is disassembled. Refer to
  ⇒ Fig. ""Removing the Retaining Sleeve -A- from the Transmission Housing"" , page 136
- ❑ Removing when the transmission is not disassembled. Refer to
  ⇒ Fig. ""Removing the Retaining Sleeve on a Transmission Not Disassembled Using the - 10-15- ."" , page 136
- ❑ Different retaining sleeves. Refer to ⇒ Fig. ""Lock Sleeve Differentiation"" , page 136
- ❑ Installing a retaining sleeve with a shoulder. Refer to
  ⇒ Fig. ""Drive in Lock Sleeve with Shoulder as Far as Stop on Tool"" , page 137
- ❑ Installing the retaining sleeve without a shoulder. Refer to
  ⇒ Fig. ""Drive in Lock Sleeve without Shoulder as far as Stop on Tool"" , page 137

**9 - Needle Sleeve**

- ❑ For the reverse shaft
- ❑ Replace after removing
- ❑ Removing. Refer to
  ⇒ Fig. ""Removing the Reverse Shaft Needle Sleeve from the Transmission Housing"" , page 137
- ❑ Installing. Refer to
  ⇒ Fig. ""Installing the Needle Sleeve -A- into the Transmission Housing"" , page 137

**10 - Outer Race/Tapered Roller Bearing**

- ❑ Output shaft, 5th/6th and reverse gears
- ❑ Removing and installing. Refer to
  ⇒ "2.2.2 Output Shaft, 5th, 6th and Reverse Gears, Disassembling and Assembling", page 182 .
- ❑ When replacing: Adjust the output shaft for 5th/6th and reverse gear. Refer to
  ⇒ "2.3.2 Output Shaft, 5th, 6th and Reverse Gears, Adjusting", page 190 .

**11 - Shim**

- ❑ Output shaft, 5th/6th and reverse gears
- ❑ Adjustment overview. Refer to ⇒ "3 Adjustment Overview", page 221 .

**12 - Outer Race/Tapered Roller Bearing**

- ❑ Output shaft, 1st to 4th gears
- ❑ Removing and installing. Refer to ⇒ "2.1 Overview - Output Shaft", page 163 .
- ❑ Adjust, if output shaft for 1st to 4th gear is replaced. Refer to
  ⇒ "2.3 Output Shaft, Adjusting", page 187 .

**13 - Shim**

- ❑ Output shaft, 1st to 4th gears
- ❑ Adjustment overview. Refer to ⇒ "3 Adjustment Overview", page 221 .

**14 - Outer Race/Tapered Roller Bearing**

- ❑ For the differential
- ❑ Removing and installing. Refer to ⇒ "2.1 Overview - Differential", page 212 .
- ❑ When replacing: Adjusting the differential. Refer to ⇒ "2.3 Differential, Adjusting", page 218 .

**15 - Shim**

- ❑ For the differential
- ❑ Adjustment overview. Refer to ⇒ "3 Adjustment Overview", page 221 .

**16 - Bearing Bushing**

- ❑ For the selector shaft
- ❑ Removing. Refer to ⇒ Fig. ""Removing the Selector Shaft Bearing Bushing"" , page 138
- ❑ Installing. Refer to
  ⇒ Fig. ""Installing the Shift Lever Shaft Bearing Bushing -A- All the Way onto the Tool"" , page 138

Copyright by Volkswagen AG. Volkswagen AG does not guarantee or accept any liability with respect to the correctness of information in this document. Copyright by Volkswagen AG. Generated by VerWin. Unauthorised printed copies or duplicates are not permitted.

**17 - Plugs**

- ❑ Removing. Refer to ⇒ Fig. ""Removing the Plug -1- "" , page 138
- ❑ Installing. Refer to ⇒ Fig. ""Installing the Plug -1- "" , page 139

**18 - Seal**

- ❑ For the left flange shaft
- ❑ Replacing. Refer to ⇒ "1.2 Left Seal, Replacing", page 207 .

## 6.2 Overview - Clutch Housing

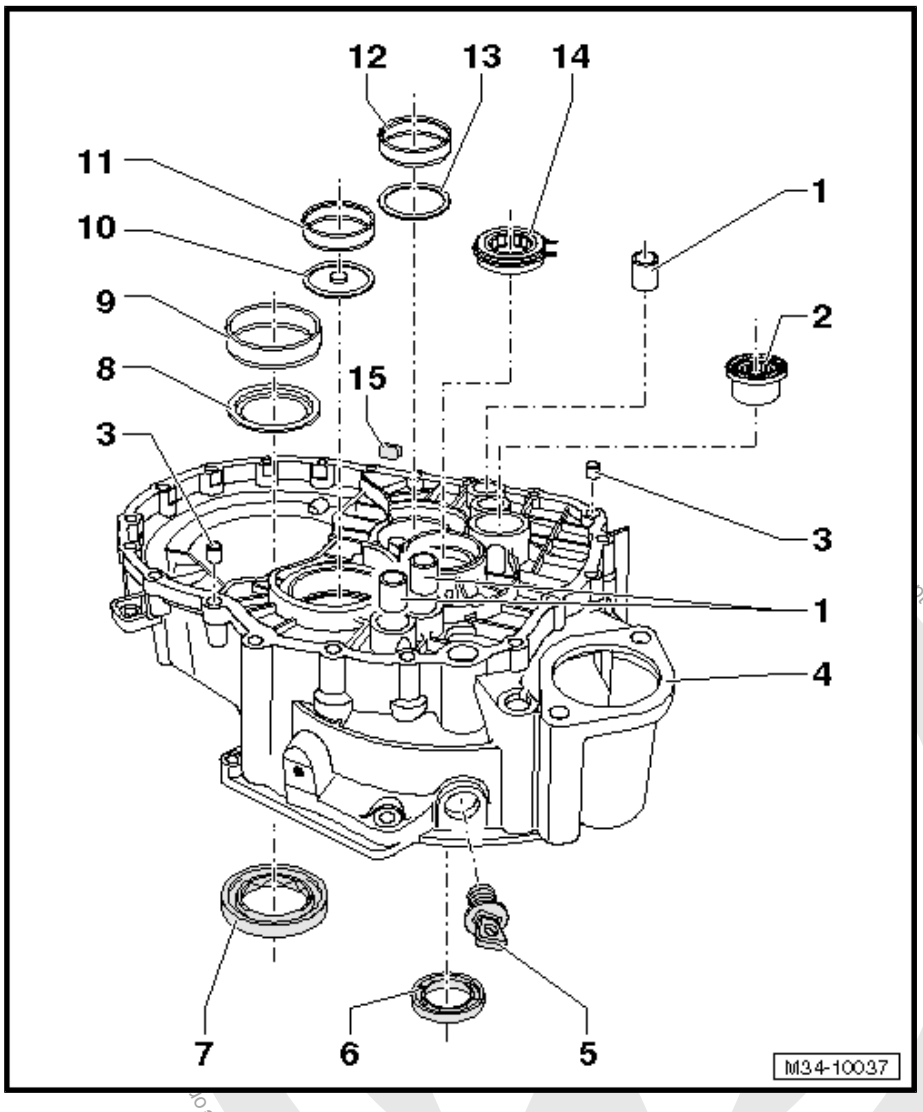


**1 - Bearing Bushing**

- ❑ For the selector rods
- ❑ Replace after removing
- ❑ Removing. Refer to ⇒ Fig. ""Removing the Shift Rod Bearing Bushing"" , page 139
- ❑ Installing. Refer to ⇒ Fig. ""Installing the Shift Rod Bearing Bushing all the Way onto the Tool"" , page 139

**2 - Needle Sleeve**

- ❑ For the reverse shaft
- ❑ Replace after removing
- ❑ Removing. Refer to ⇒ Fig. ""Removing the Needle Sleeve from the Clutch Housing"" , page 140
- ❑ Installing. Refer to ⇒ Fig. ""Installing the Needle Sleeve -A- into the Clutch Housing"" , page 140

**3 - Alignment Sleeve**

- ❑ Quantity: 2

**4 - Clutch Housing**

- ❑ When replacing: Adjust output shafts and differential. Refer to ⇒ "3 Adjustment Overview", page 221 .

**5 - Cap**

- ❑ Not on all clutch housings

**6 - Input Shaft Seal**

- ❑ Replacing. Refer to ⇒ "1.3 Input Shaft Seal, Replacing", page 161 .

**7 - Seal**

- ❑ For the right flange shaft
- ❑ Replacing. Refer to ⇒ "1.3 Right Seal, Replacing", page 209 .

**8 - Washer**

- ❑ For the differential
- ❑ Installed position: the shoulder on the inner diameter faces the seal -Item 7- ⇒ Item 7 (page 132) .

Protected by copyright. Copyright by Volkswagen AG. Copyright for private or any liability with respect to the correctness of information in this document.

**9 - Outer Race/Tapered Roller Bearing**

- ❑ For the differential
- ❑ Removing and installing. Refer to ⇒ “2.2 Differential, Disassembling and Assembling”, page 214 .
- ❑ When replacing: Adjusting the differential. Refer to ⇒ “2.3 Differential, Adjusting”, page 218 .

**10 - Oil Deflector Ring**

- ❑ Installed position: The shoulder on the hole faces the output shaft

**11 - Outer Race/Tapered Roller Bearing**

- ❑ Output shaft, 1st to 4th gears
- ❑ Removing and installing. Refer to ⇒ “2.2.1 Output Shaft, Disassembling and Assembling, 1st to 4th Gears”, page 172 .
- ❑ Adjust, if output shaft for 1st to 4th gear is replaced. Refer to ⇒ “2.3 Output Shaft, Adjusting”, page 187 .

**12 - Outer Race/Tapered Roller Bearing**

- ❑ Output shaft, 5th, 6th and reverse gears
- ❑ Removing and installing. Refer to ⇒ “2.2.2 Output Shaft, 5th, 6th and Reverse Gears, Disassembling and Assembling”, page 182 .
- ❑ When replacing: Adjust the output shaft for 5th/6th and reverse gear. Refer to ⇒ “2.3.2 Output Shaft, 5th, 6th and Reverse Gears, Adjusting”, page 190 .

**13 - Washer**

- ❑ Output shaft, 5th/6th and reverse gears
- ❑ Always 0.65 mm thick

**14 - Cylindrical Roller Bearing**

- ❑ For the drive axle
- ❑ Removing and installing. Refer to ⇒ “1.2 Input Shaft, Disassembling and Assembling”, page 158 .

**15 - Magnet**

- ❑ Held in place by housing joint surface

Protected by copyright. Copying for private or commercial purposes, in part or in whole, is not permitted unless authorised by Volkswagen AG. Volkswagen AG does not guarantee or accept any liability with respect to the correctness of information in this document. Copyright by Volkswagen AG.

## 6.3 Transmission Housing, Servicing

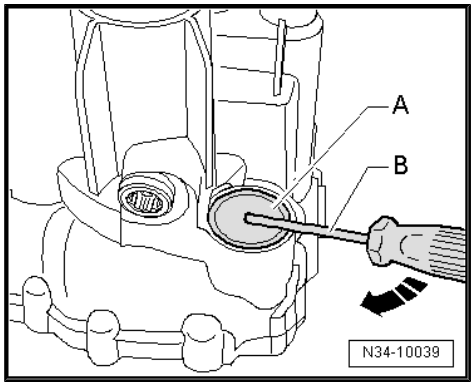


### Special tools and workshop equipment required

- Bearing Driver - Multiple Use - VW244B-
- Transmission Support - VW353-
- Press Plate - VW401-
- Press Plate - VW402-
- Press Piece - Rod - VW407-
- Press Piece - 37mm - VW416B-
- Guide Pin - VW436A-
- Press Piece - Guide Pin - VW439-
- Slide Hammer Set - VW771-
- Crankshaft Holding Fixture - VW801-
- Guide Pins - 10 - 15-
- Press Piece - Pivot Mount Bushing - 3124-
- Bearing Installer - Crankshaft Pilot Bearing - 3264-
- Subframe Support Tool - 3290-
- Torque Wrench 5-50Nm - VAG1331-
- Bushing Driver - Selector Shaft - T10168-
- Locking Sleeve Drift - T10169- or Locking Sleeve Drift - T10362- . Refer to
  ⇒ Fig. ""Lock Sleeve Differentiation"" , page 136
- Breather Tube Tool - T10203-
- Puller - Kukko Internal - 12-16mm - 21/1-
- Puller - Kukko Internal - 20-30mm - 21/4-
- Puller - Kukko Counterstay - 22/2-
- Thread adaptor from the Puller - Kukko Counterstay - 22/1-
- Counter Support - VAS251623-

### Removing the Cover -A-

– Pierce the rubber in the center of the cover with a screwdriver -B- and pry it out of the cover in the direction of -arrow-.

### Installing the Cover

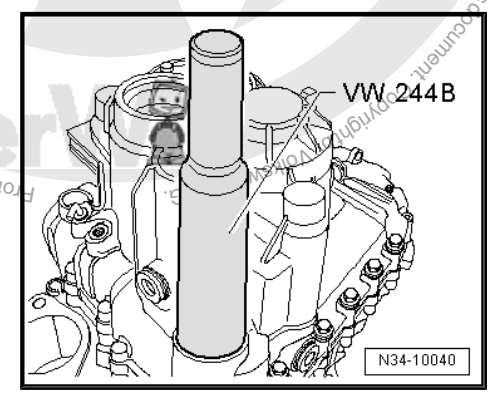


Protected by copyright. Copying for private or commercial purposes, in part or whole, is not permitted unless authorised by Volkswagen AG. Volkswagen AG does not guarantee or accept any liability with respect to the correctness of information in this document.

### Removing the Locking Elbow for the Shift Lever Shaft

– Break off the bracket in its unlocked position.

– Insert a screwdriver -A- into the hole in the locking bracket -B-.

– Pry out the locking elbow in direction of-arrow-.

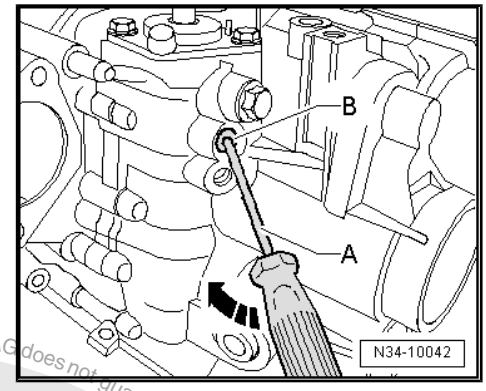


### Installed Position: Locking Elbow

- The mark on the locking elbow -arrow- must point toward the connection on the clutch slave cylinder -1-.
- Dimension -a- must be approximately 45°.

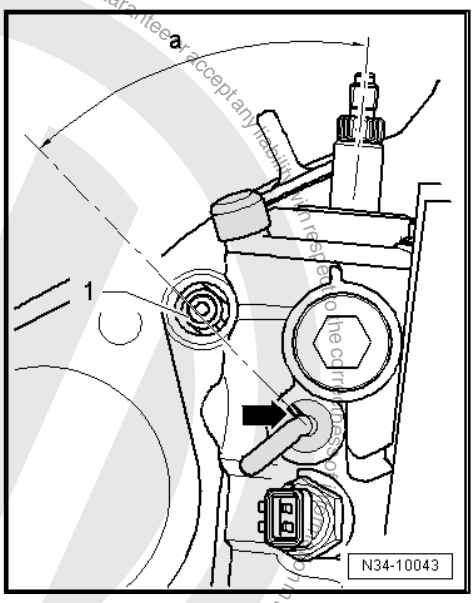


### Drive Lock Elbow -arrow- for Selector Shaft in Up to Tool Stop.

**Note**

*The locking elbow must be unlocked when being installed.*

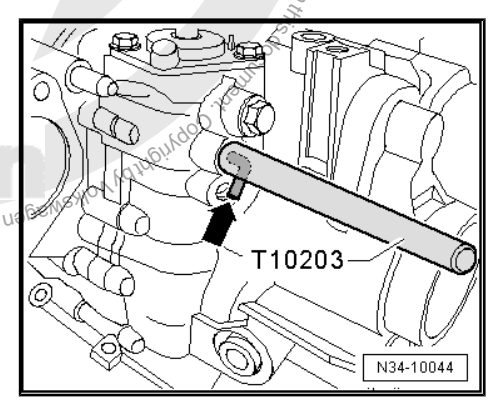


### Removing the Shift Rod Bearing Bushing

A - Internal Puller 14.5 to 18.5 mm , for example -21/2-

B - Counter Support , for example, -22/2-

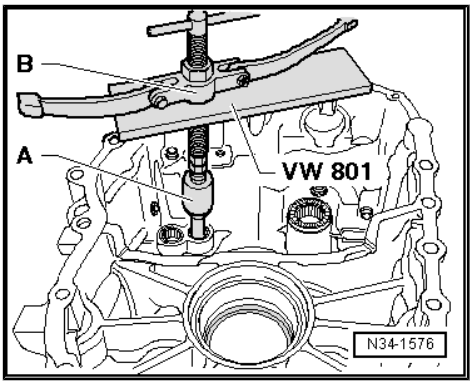


Protected by copyright. Copying for private or commercial purposes, in part or in whole, is not permitted unless authorised by Volkswagen AG. Volkswagen AG does not guarantee or accept any liability with respect to the correctness of information in this repair manual. Copyright by Volkswagen AG.

### Installing the Shift Rod Bearing Bushing all the way onto the Tool

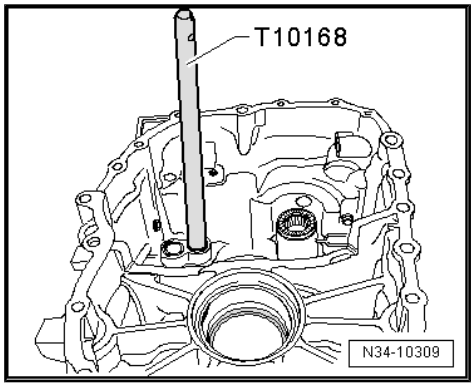


### Removing the Retaining Sleeve -A- from the Transmission Housing

– Place transmission housing on Press Plate - VW401- and press plate -VW402- in such a way so that the alignment sleeves inside the transmission housing do not get damaged.

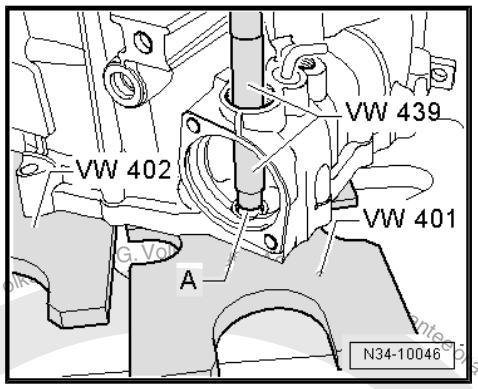


### Removing the Retaining Sleeve on a Transmission Not Disassembled Using the - 10-15- .

- Locking bolt and selector shaft removed.

– Turn the transmission so that the retaining sleeve cannot fall into the transmission.

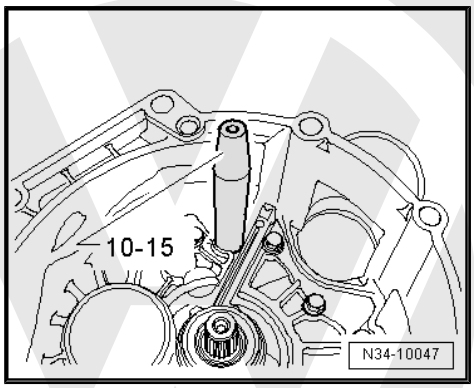


### Lock Sleeve Differentiation

The following lock sleeves may be installed:

Lock sleeve with a shoulder -arrow 1-. Refer to ⇒ Fig. ""Drive in Lock Sleeve with Shoulder as Far as Stop on Tool"" , page 137 .

Lock sleeve without a shoulder -arrow 2-. Refer to ⇒ Fig. ""Drive in Lock Sleeve without Shoulder as far as Stop on Tool"" , page 137 .

Allocate the components using the Parts Catalog.

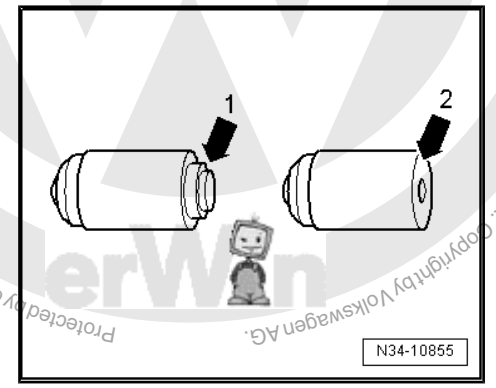


Protected by copyright. Copying for private or commercial purposes, in part or in whole is not permitted unless authorised by Volkswagen AG. Copyright by Volkswagen AG. We do not accept any liability with respect to the correctness of information in this document.

### Drive in Lock Sleeve with Shoulder as Far as Stop on Tool

- The transmission housing is bolted to the clutch housing.

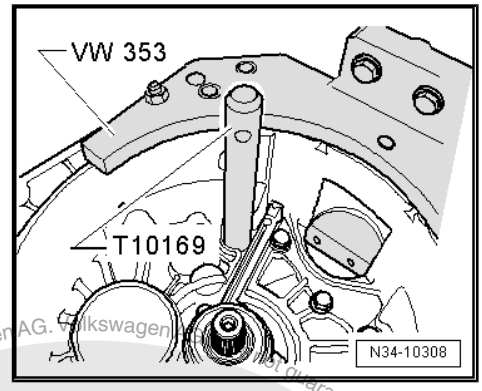


### Drive in Lock Sleeve without Shoulder as far as Stop on Tool

- The transmission housing is bolted to the clutch housing.

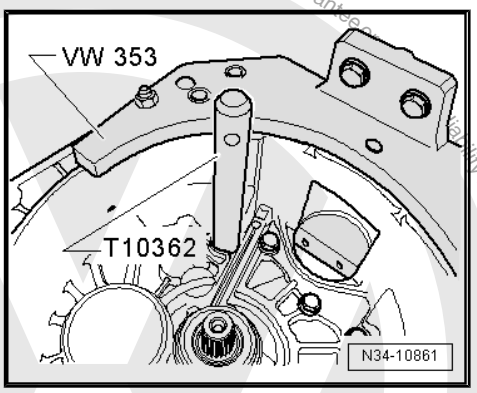


### Removing the Reverse Shaft Needle Sleeve from the Transmission Housing

A - Internal Puller 23.5 to 30 mm , for example -21/4-

B - Counter Support , for example, -22/2-

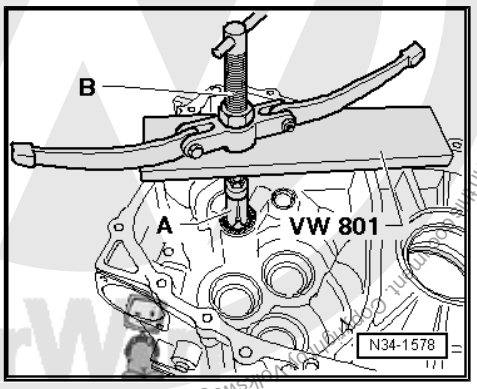


**Note**

*The needle sleeve will get damaged when it is removed and must be replaced.*

### Installing the Needle Sleeve -A- into the Transmission Housing

– Lay the reverse shaft thrust washer -B- on the needle sleeve while pressing it in.

– Support the transmission housing with the -VW416B- directly under the bearing mount.

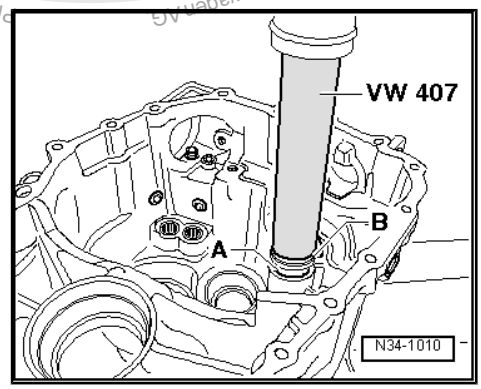


Protected by copyright. Copying for private or commercial purposes, in part or in whole, is not permitted unless authorised by Volkswagen AG. Volkswagen AG does not guarantee or accept any liability with respect to the correctness of information in this repair manual.

### Removing the Selector Shaft Bearing Bushing

– Use the thread adapter from -Kukko 22/1- -arrow-.

– Hold the spindle on the -3290- steady and turn the nut -B-.

A - Internal Puller 14.5 to 18.5 mm , for example -Kukko 21/2-

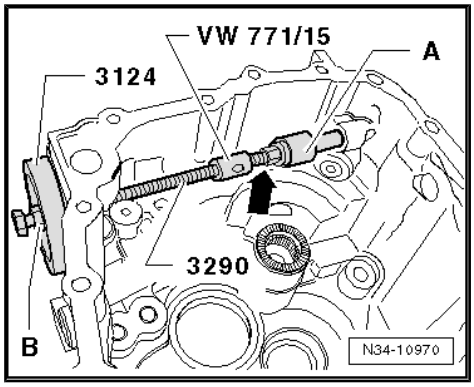


### Installing the Shift Lever Shaft Bearing Bushing -A- All the Way onto the Tool

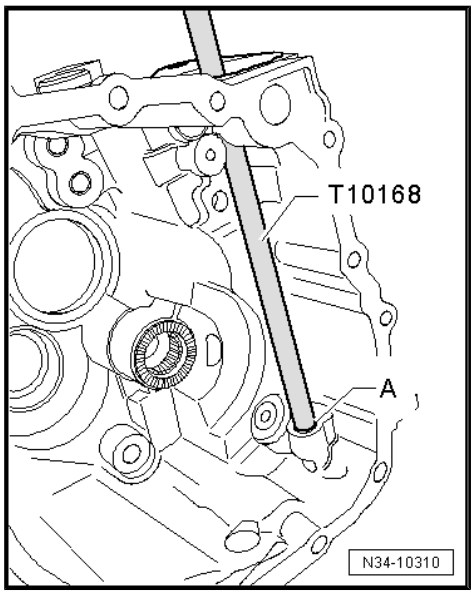


### Removing the Plug -1-

– Remove the plug -1- from the inside of the transmission housing to the outside.

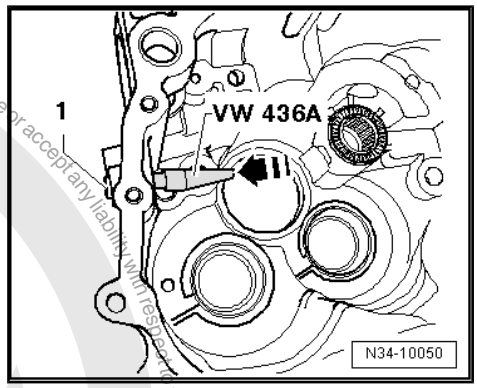


Protected by copyright. Copying for private or commercial purposes, in part or in whole, is not permitted unless authorised by Volkswagen AG. Volkswagen AG does not guarantee or accept any liability with respect to the correctness of information in this document. Copyright by Volkswagen AG.

**Installing the Plug -1-**

– Using the -3264- , drive in the sealing plugs to dimension -a- approximately 3 mm below the upper edge of the housing.

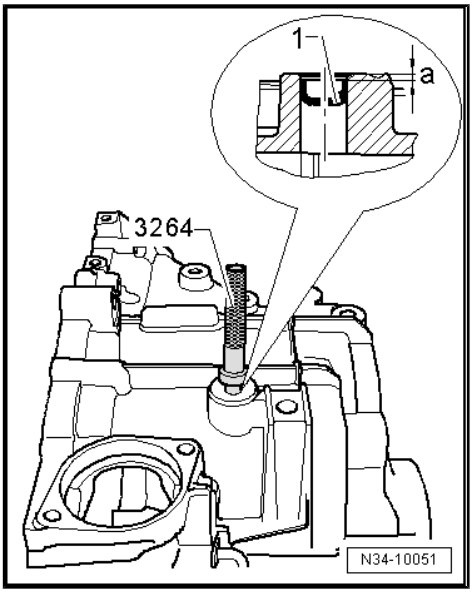


## 6.4 Clutch Housing, Servicing

**Special tools and workshop equipment required**

- Bushing Driver - Selector Shaft - T10168-
- Puller - Crankshaft/Power Steering Seal - T20143-
- Seal Installer - Driveshaft - T40008-
- Press Piece - Rod - VW407-
- Puller - Kukko Internal - 14-19mm - 21/2-
- Puller - Kukko Internal - 20-30mm - 21/4-
- Puller - Kukko Counterstay - 22/1-
- Puller - Kukko Counterstay - 22/2-

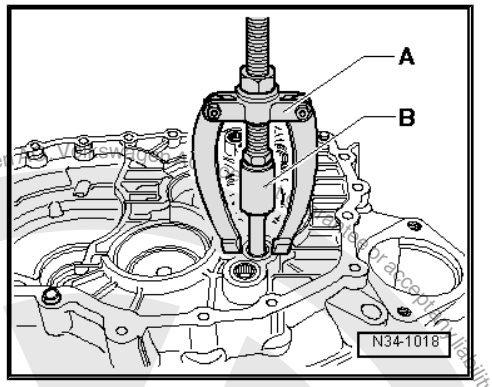


**Removing the Shift Rod Bearing Bushing**

A - Counter Support , for example -22/1-

B - Internal Puller 14.5 to 18.5 mm , for example -21/2-

**Installing the Shift Rod Bearing Bushing all the Way onto the Tool**

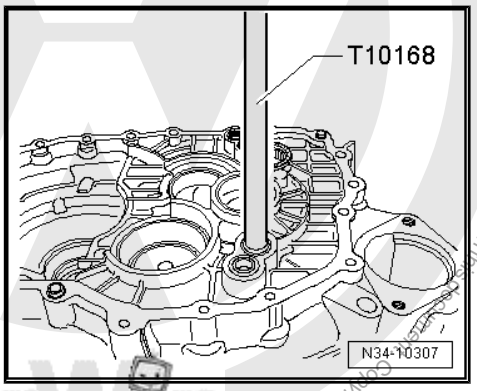


Protected by copyright. Copying for private or commercial purposes, in part or in whole, is not permitted unless authorised by Volkswagen AG. Volkswagen AG does not guarantee or accept any liability with respect to the correctness of information in this document. Copyright by Volkswagen AG.

### Removing the Needle Sleeve from the Clutch Housing

A - Counter Support , for example, -22/2-

B - Internal Puller 23.5 to 30 mm , for example -21/4-

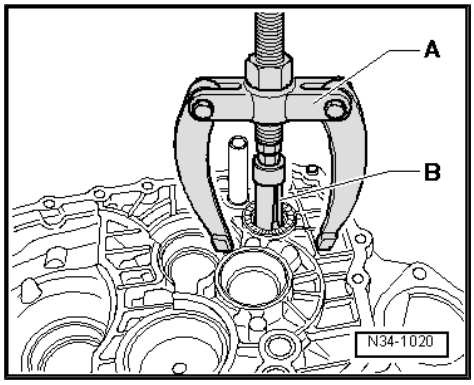


**Note**

*The needle sleeve will get damaged when it is removed and must be replaced.*

### Installing the Needle Sleeve -A- into the Clutch Housing

– Lay the reverse shaft thrust washer -B- on the needle sleeve while pressing it in.

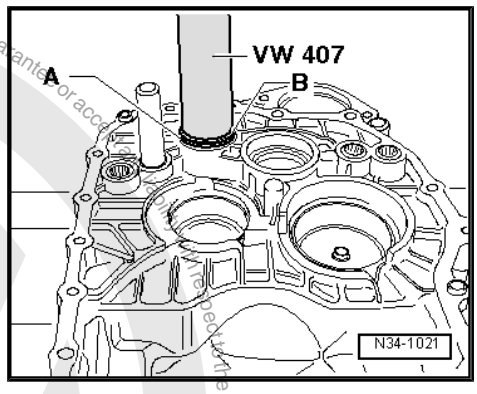


Protected by copyright. Copying for private or commercial purposes, in part or in whole, is not permitted unless authorised by Volkswagen AG. Volkswagen AG does not guarantee or accept any liability with respect to the correctness of information in this document. Copyright by Volkswagen AG.

# 7 Securing on Engine and Transmission Holder

⇒ "7.1 Securing on Engine and Transmission Holder", page 141

## 7.1 Securing on Engine and Transmission Holder

**Special tools and workshop equipment required**

- Holding Plate - VW309A-
- Transmission Support - VW353-
- Drip Tray for VAG1202A - VAG1306-

**Procedure**

– Secure the transmission with the -VW353- to the -VW309- -arrows-.

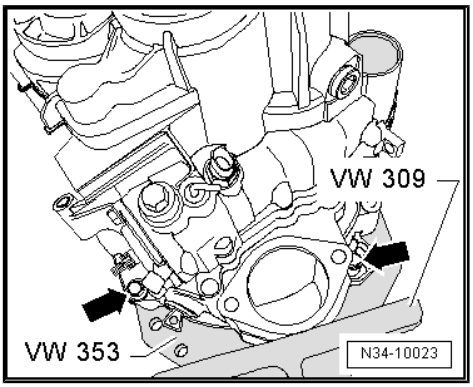


**Note**

*If one of the fastening holes does not touch the Transmission Support , place washers between the fastening hole and the Transmission Support .*

– Insert the - VW309- in the -VAS6095A- .

Protected by copyright. Copying for private or commercial purposes, in part or in whole, is not permitted unless authorised by Volkswagen AG. Volkswagen AG does not guarantee or accept any liability with respect to the correctness of information in this document. Copyright by Volkswagen AG.

# 8 Transmission Fluid

⇒ “8.1 Transmission Fluid Level, Checking”, page 142

## 8.1 Transmission Fluid Level, Checking

**Special tools and workshop equipment required**

- For oil filler plug with multi-point fitting Triple Square Socket Driver - 3357- .
- Torque Wrench 1331 5-50Nm - VAG1331-
- Used Oil Collection and Extraction Unit - SMN372500-

Transmission fluid specification: Refer to the Parts Catalog.

– Remove the noise insulation. Refer to ⇒ Body Exterior; Rep. Gr. 66 ; Noise Insulation; Overview - Noise Insulation .

– Place the -SMN372500- under the transmission.

– Remove the plug for checking the transmission fluid level -arrow-.

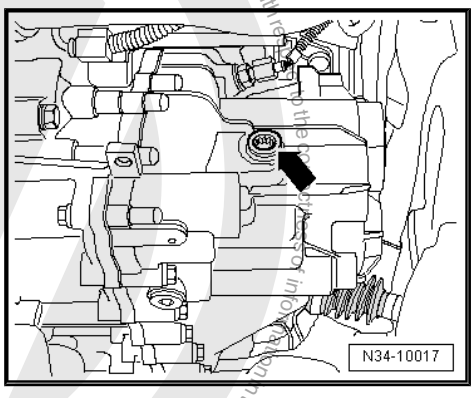


**The level is correct when the transmission fluid comes up to the bottom edge of oil filler hole.**

– Add transmission fluid, if necessary, until it reaches the lower edge of the filler hole.

– If present with new seal, install bolt -arrow-.

– Tighten the bolt -arrow-
⇒ Fig. ““Different Versions of Fluid Fill and Drain Plugs““ , page 142 .

**Different Versions of Fluid Fill and Drain Plugs**

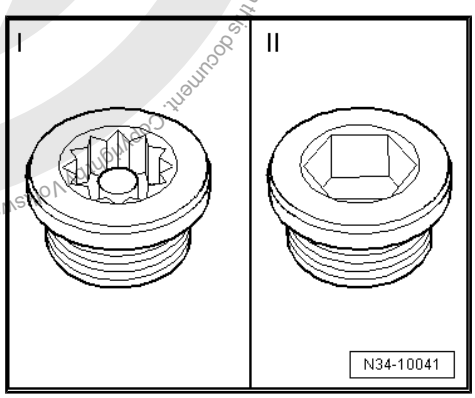


I - Fluid fill or drain plug with internal multi-point: 45 Nm

II - Fluid fill or drain plug with inner hex socket: 30 Nm

– Install the noise insulation. Refer to ⇒ Body Exterior; Rep. Gr. 66 ; Noise Insulation; Overview - Noise Insulation .

Protected by copyright. Copying for private or commercial purposes, in whole or in part, is not permitted unless authorised by Volkswagen AG. Volkswagen AG does not guarantee or accept any liability with respect to the correctness of information in this document. Copyright by Volkswagen AG.

# 9 Special Tools

- Slide Hammer Set - Adapter 40 - VW771/40-
- Engine Support Brackets - T40093/3-6- (quantity 2)
- Engine Support Bridge - Special Hook (2 pc.) - 10-222A/20-
- Engine Support - Basic Set - Square Pipe - T40091/1- (quantity 2)
- Engine Support - Basic Set - Movable Joint - T40091/3- (quantity 2)
- Engine Support - Supplement Kit - Spindle - T40093/3- (quantity 2) from the Engine Support - Supplement Kit - T40093A-
- Engine Sling - Engine Bracket - 2024A/1- from Engine Sling - 2024A-

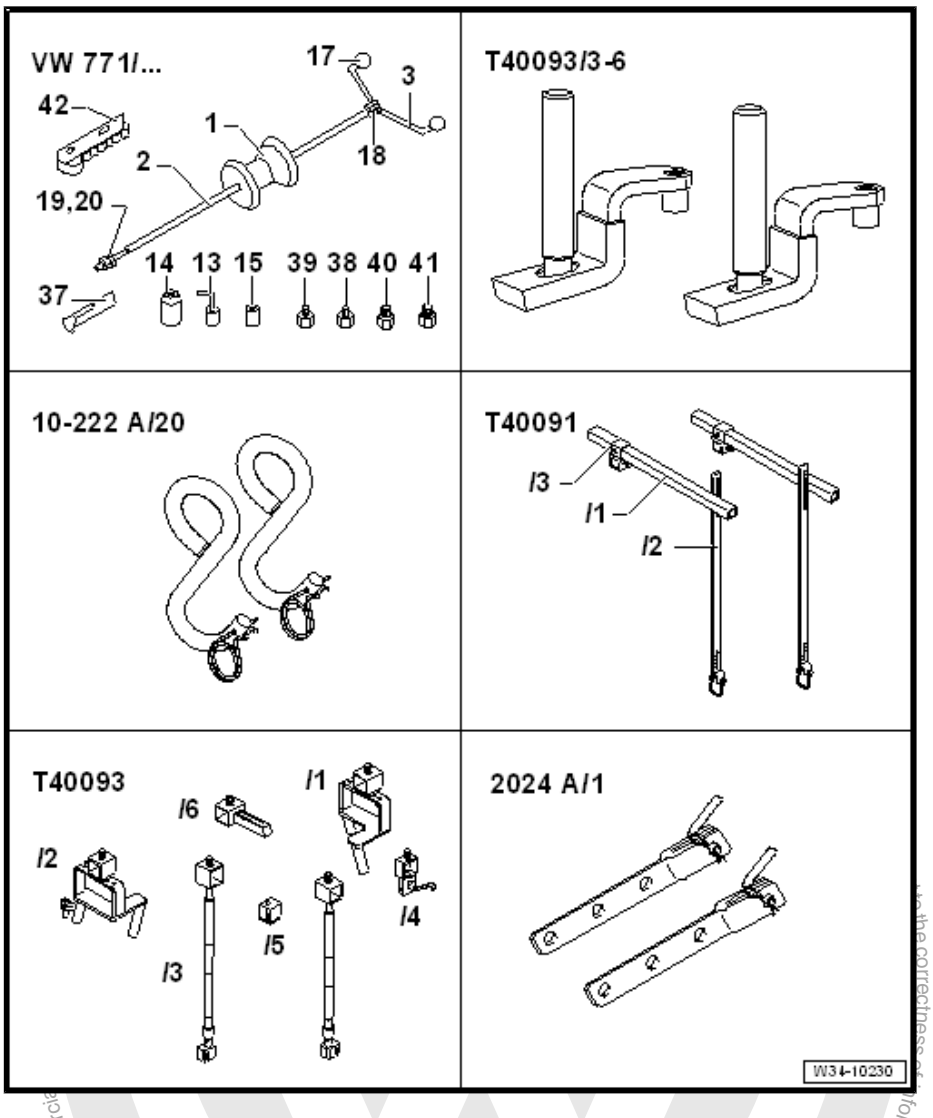


Protected by copyright. Copyright for private or commercial use in the correctness of information in this document. Copyright by Volkswagen AG.

**Special tools and workshop equipment required**

- Bearing Driver - Multiple Use - VW244B-
- Transmission Support - VW353-
- Press Plate - VW401-
- Press Plate - VW402-
- Press Piece - Rod - VW407-
- Press Piece - 37mm - VW416B-

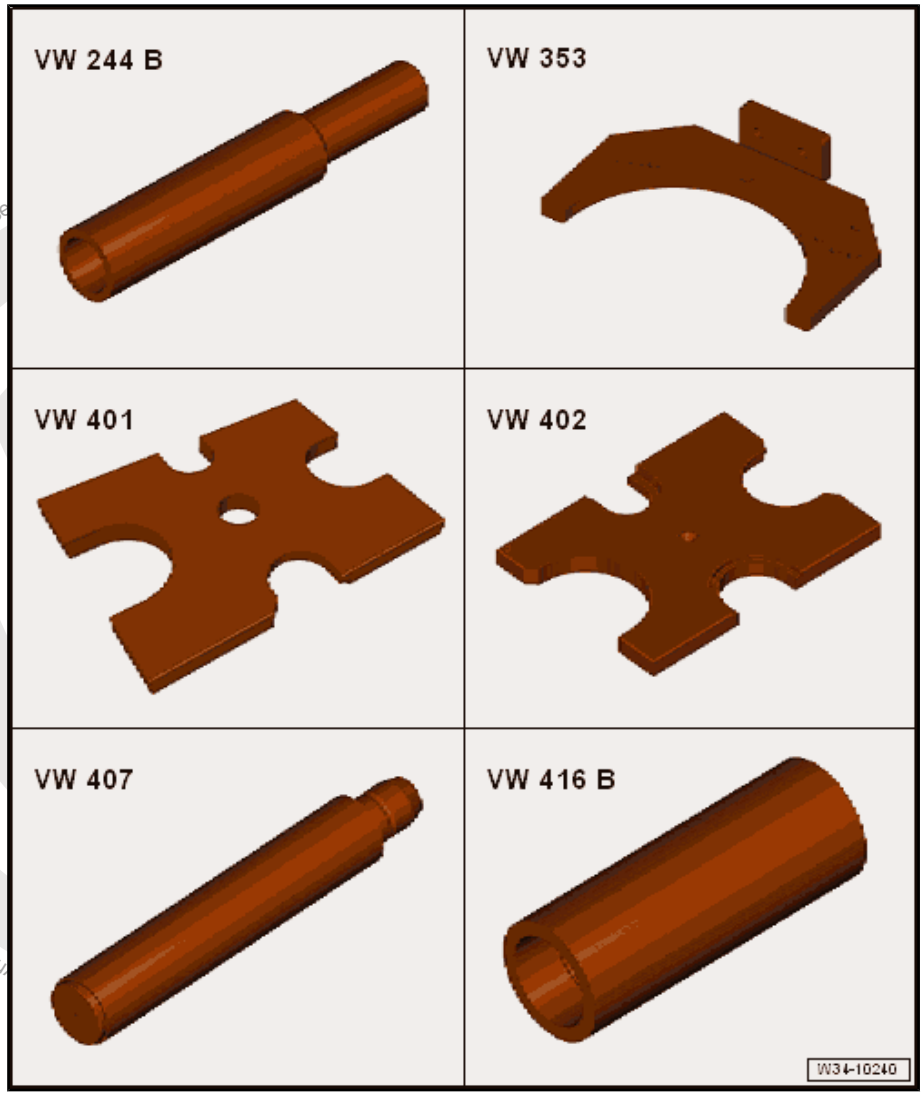


Copyright. Copying for private or commercial purposes, in part or in whole, is not permitted unless authorised

- Guide Pin - VW436A-
- Press Piece - Guide Pin - VW439-
- Slide Hammer Set - VW771-
- Crankshaft Holding Fixture - VW801-
- Guide Pins - 10 - 15-
- Press Piece - Pivot Mount Bushing - 3124-

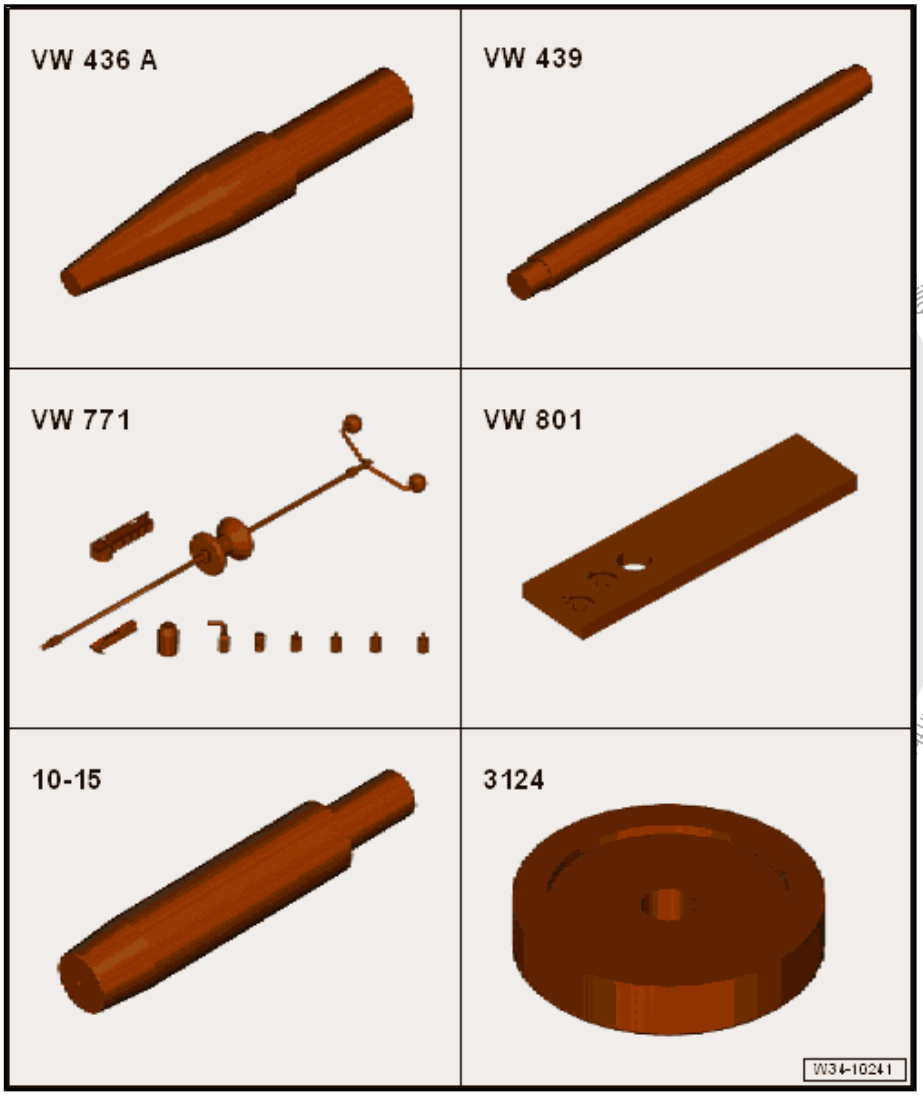


ility with respect to the correctness of information in

- Bearing Installer - Crankshaft Pilot Bearing - 3264-
- Subframe Support Tool - 3290-
- Torque Wrench 5-50Nm - VAG1331-
- Bushing Driver - Selector Shaft - T10168-
- Locking Sleeve Drift - T10169- or Locking Sleeve Drift - T10362- . Refer to ⇒ Fig. ""Lock Sleeve Differentiation"" , page 136
- Breather Tube Tool - T10203-

Protected by copyright. Copying for private or commercial purposes, in part or in whole, is not permitted unless authorised by
Copyright by Volkswagen AG. ept any liability with respect to the correctness of information in this document.

Protected by copyright. Copying for private or commercial purposes, in part or in whole, is not permitted unless authorised by Volkswagen AG. Volkswagen AG does not guarantee or

- Holding Plate - VW309A-
- or Holding Plate - VW 309A-
- Holding Fixture - VW 313-
- Transmission Support - VW353-
- Press Piece - Multiple Use - VW455- or Press Piece - Front Wishbone - 3160-
- Slide Hammer Set - VW771-
- -1- Puller - Kukko Internal - 12-16mm - 21/1-
- -3- Puller - Kukko Quick Action Separating Tool - 5-60mm - 17/0-
- -4- Puller - Kukko Counterstay - 22/1-
- -4- Counter Support - VAS251621-

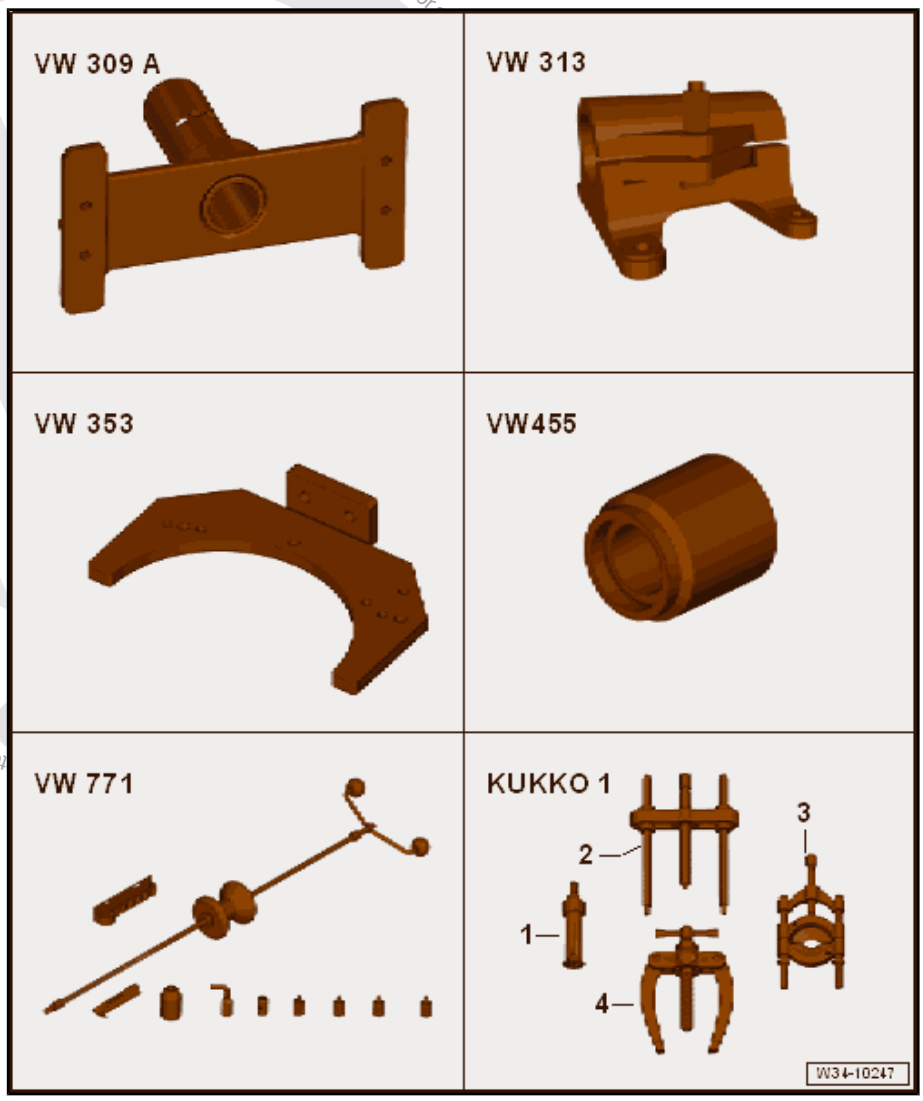

**Special tools and workshop equipment required**

- Press Piece - Rod - VW407-
- Bushing Driver - Selector Shaft - T10168-
- Seal Installer - Driveshaft - T40008-
- -1- Puller - Kukko Internal - 14-19mm - 21/2-
- -1- Puller - Kukko Internal - 20-30mm - 21/4-
- -4- Puller - Kukko Counter-stay - 22/1-
- -4- Puller - Kukko Counter-stay - 22/2-
- -4- Counter Support - VAS 251 623-

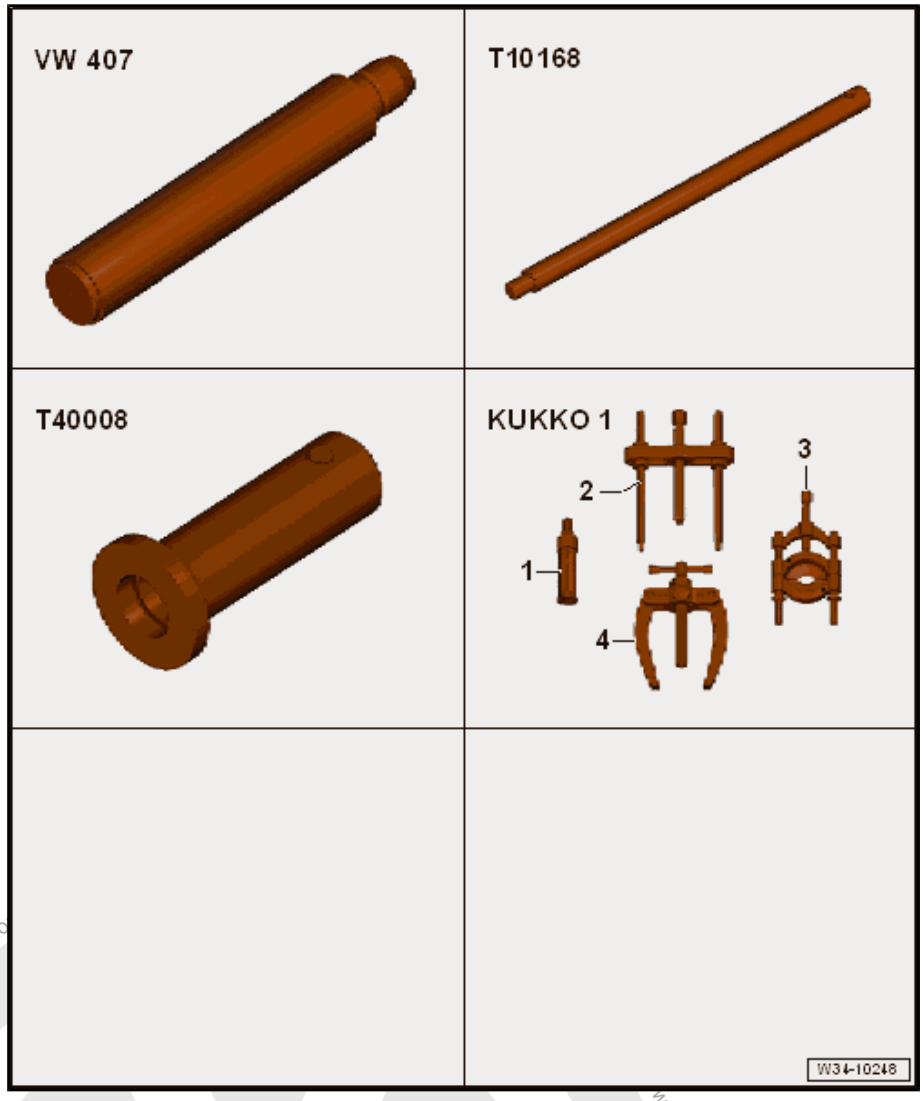


Protected by copyright. Copying for private or commercial purposes, in part or in whole, is not permitted unless autho
with respect to the correctness of information in this document. Copyright by Volkswagen AG.

- Transmission Support - Mounting Plate 33 - 3282/33-
- Support Elements for transmission (determine when mounting the Mounting Plate on the Transmission Support )
- Transmission Support Jig - 3336- to transport the transmission.
- Torque Wrench 1331 5-50Nm - VAG1331-
- Torque Wrench 1332 40-200Nm - VAG1332-
- Engine and Gearbox Jack - VAS6931-

Protected by copyright. Copying for private or commercial purposes, in part or in whole, is not permitted. Information in this document. Copyright by Volkswagen AG.

- Bracket - Multiple Use - 30-211A-
- Seal Installer - Drive Flange - T10143- or Seal Installer - Output Shaft Oil Seal - T10180-
- Locking Sleeve Drift - T10169-
- or Locking Sleeve Drift - T10362- . Refer to ⇒ Fig. ""Lock Sleeve Differentiation"" , page 136
- Seal Installer - Driveshaft - T40008-
- Torque Wrench 1331 5-50Nm - VAG1331-
- Hot Air Blower - VAG1416-

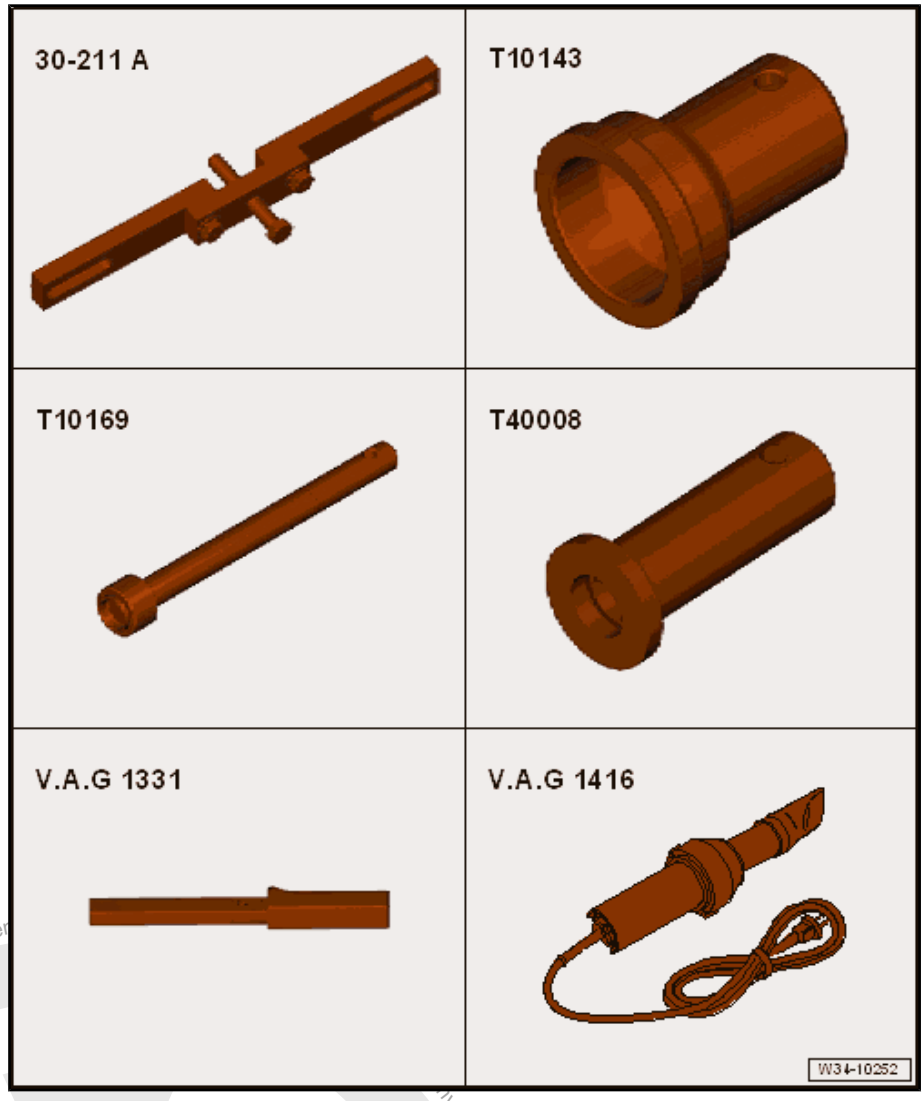


Protected by copyright. Copying for private or commercial purposes, in part or in whole, is not permitted unless authorised by Volkswagen AG. Copyright by Volkswagen AG. No liability with respect to the correctness of information in this document.

Copyright for private and commercial purposes, support or in whole is not permitted unless authorised by Volkswagen AG. Volkswagen AG does not guarant

- Engine Support Bridge - 10-222A-
- Engine/Gearbox Support Shackle (2 pc.) - 10-222A/12-
- Engine Support Bridge - Engine Support 31 - Adapter 1 - 10-222A/31-1-
- Engine Support Bridge - Engine Support 31 - Adapter 2 - 10-222A/31-2-
- Engine Support - Basic Set - Square Pipe - T40091/1-
- Engine Support - Basic Set - Movable Joint - T40091/3-
- Engine Support Brackets - T40093/3- from Engine Support - Supplement Kit - T40093A-
- Engine Support Brackets - T40093/3-6-
- Transmission Support - 3282-

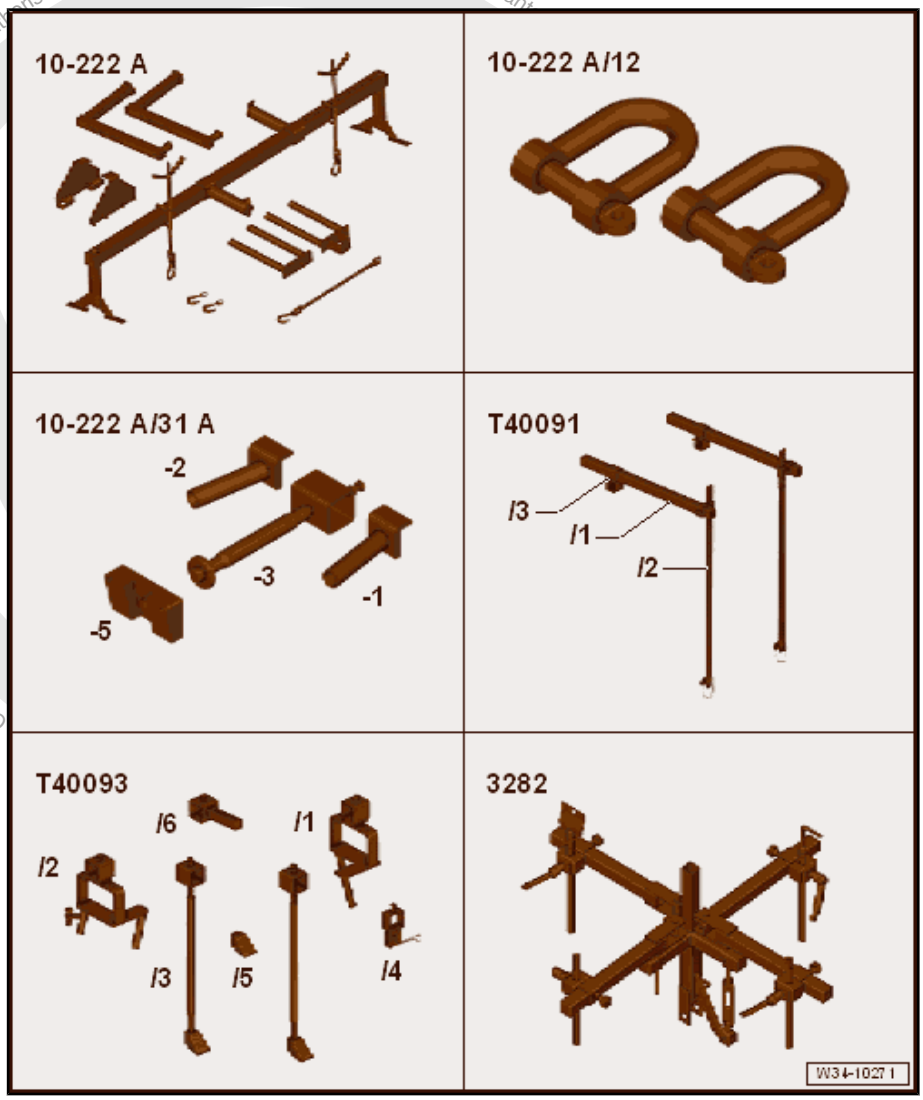

**Special tools and workshop equipment required**

- Engine Support Bridge - 10-222A-
- Engine Support Bridge - Engine Support 29 - 10-222A/29-
- Engine Support Bridge - Engine Support 18 - 10-222A/18-
- If necessary Engine/Gearbox Support Shackle (2 pc.) - 10-222A/12-
- Transmission Support - 3282-
- Transmission Support - Pins 29 - 3282/29-

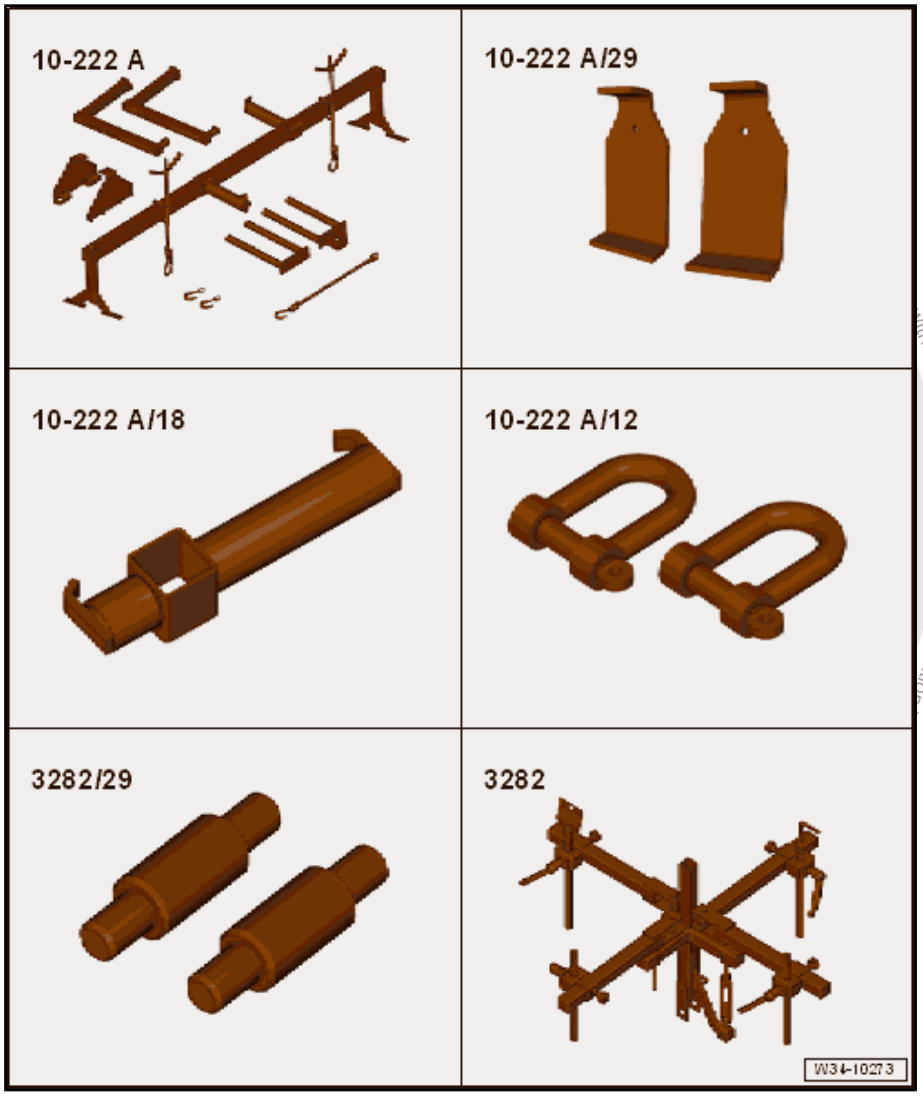


- Used Oil Collection and Extraction Unit - SMN372500-

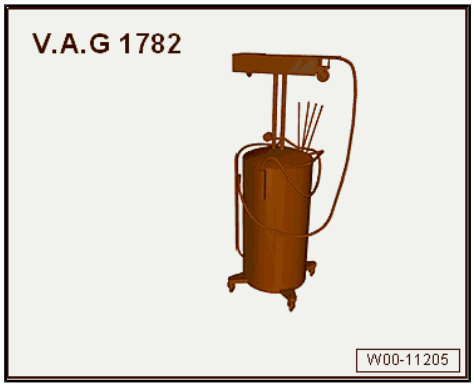


with respect to the correctness of information

- Connecting Pin - T10027A-

- Wedge Set - T10383-

- Puller - Crankshaft/Power Steering Seal 1 - T20143/1-

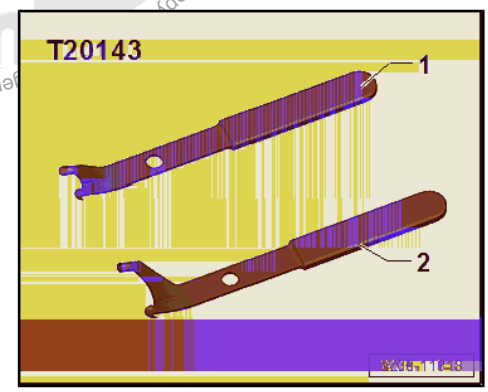


- Hose Clip Pliers - VAG1275A-

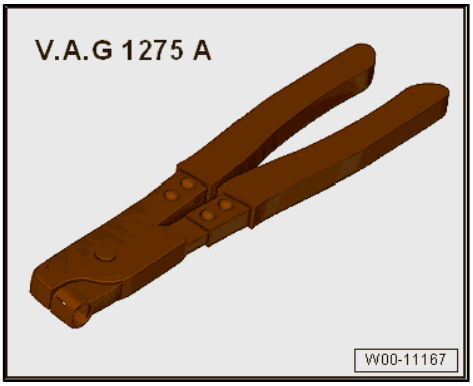


Protected by copyright. Copying for private or commercial purposes, in part or in whole, is not permitted unless authorised by Volkswagen AG. Volkswagen AG

- Engine and Gearbox Bracket - VAS6095A-

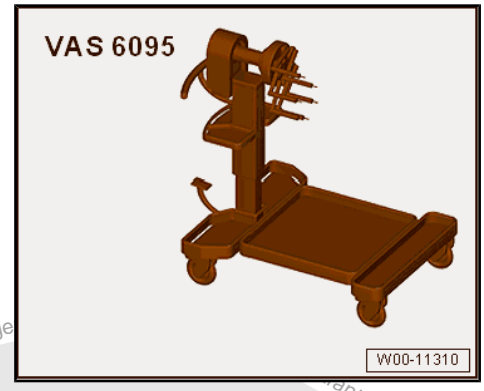


- Shop Crane - VAS6100-

- Engine Bung Set - VA 6122-

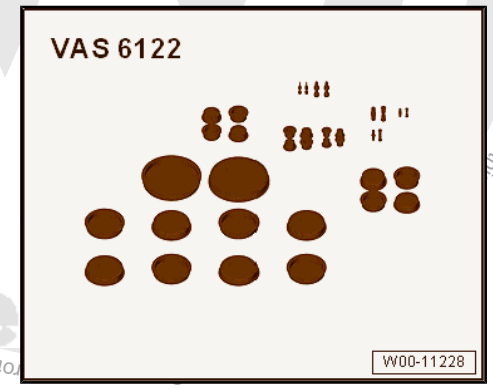


- Shop Crane - Drip Tray - VAS6208-

rotected by copyright. Copying for private or commercial purposes, in part or in whole, is not permitted unless authorised by Volkswage
ility with respect to the correctness of information in th

- Press Piece - Shift Rod/Alternator - VW423-

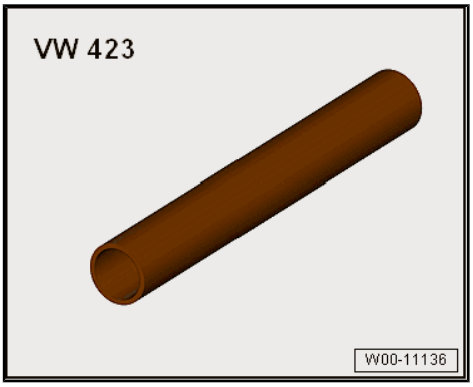


- -1- Puller - Kukko Internal - 14-19mm - 21/2-

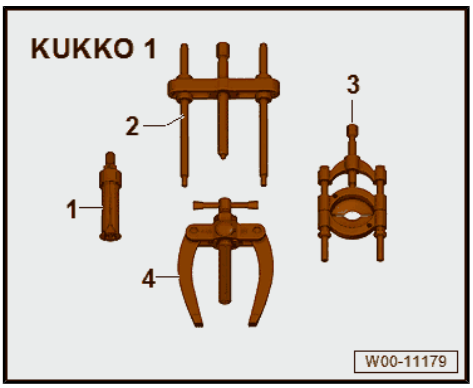


- -1- Puller - Kukko Internal - 20-30mm - 21/4-
- -4- Counter Support - VAS251623-
- Thread adaptor from Puller - Kukko Counterstay - Kukko 22/1-
- Pry Lever - 80-200-

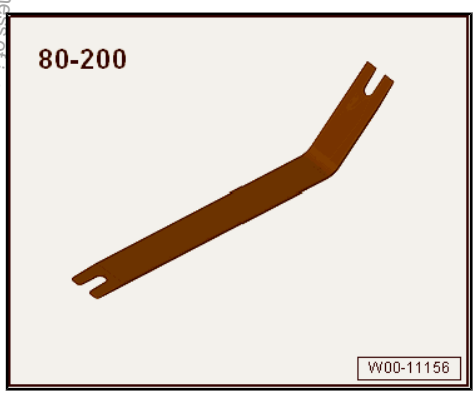


- Hose Clamps - Up To 25mm - 3094-

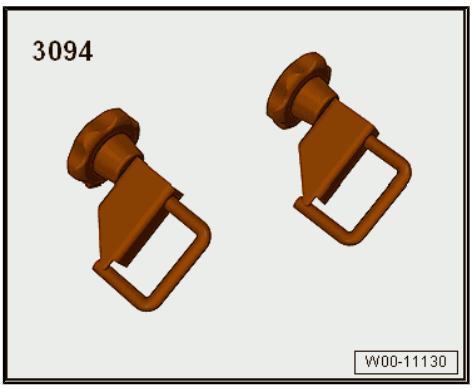


Protected by copyright. Copying for private or commercial purposes, in part or in whole, is not permitted unless authorised by Volkswagen AG. Volkswagen AG does not guarantee or accept any liability with respect to the correctness of information in this document. Copyright by Volkswagen AG.

- Transmission Support Jig - 3336-

- Triple Square Socket Driver - 3357- .

- Backrest Panel Tool - 3370-

Protected by copyright. Copying for private or commercial purposes, in part or in whole, is not permitted unless authorised by Volkswagen AG. Volkswagen AG does not any liability with respect to the correctness of information in this document.

# 35 – Gears, Shafts

## 1 Input Shaft

⇒ "1.1 Overview - Input Shaft", page 157
⇒ "1.2 Input Shaft, Disassembling and Assembling", page 158
⇒ "1.3 Input Shaft Seal, Replacing", page 161

### 1.1 Overview - Input Shaft

**Note**

- *Secure the transmission on the assembly stand. Refer to ⇒ "7 Securing on Engine and Transmission Holder", page 141 .*
- *Warm the toothed gear to approximately 100 °C (212 °F) using Inductive Heater - VAS6414- . Wear protective gloves.*
- *Install all input shaft bearings with transmission fluid.*
- *Replace grooved ball bearing -Item 4- ⇒ Item 4 (page 157) after removing.*

**1 - Locking Ring**

- ❑ For grooved ball bearing/input shaft
- ❑ Removing and installing. Refer to ⇒ "5.7 Transmission, Disassembling and Assembling", page 116 .
- ❑ The thickness must be determined again on transmissions with reinforcements (manual transmission 0FB). Refer to ⇒ page 125 .

**2 - Transmission Housing**

**3 - Locking Ring**

- ❑ Select when replacing the grooved ball bearing and the input shaft. Refer to ⇒ Fig. ""Selecting the Locking Ring"" , page 160

**4 - Grooved Ball Bearing**

- ❑ Replace after removing
- ❑ Removing. Refer to ⇒ Fig. ""Removing the Grooved Ball Bearing"" , page 159
- ❑ Installed position. Refer to ⇒ Fig. ""Grooved Ball Bearing Installation Location and Installing the Grooved Ball Bearing"" , page 160 .

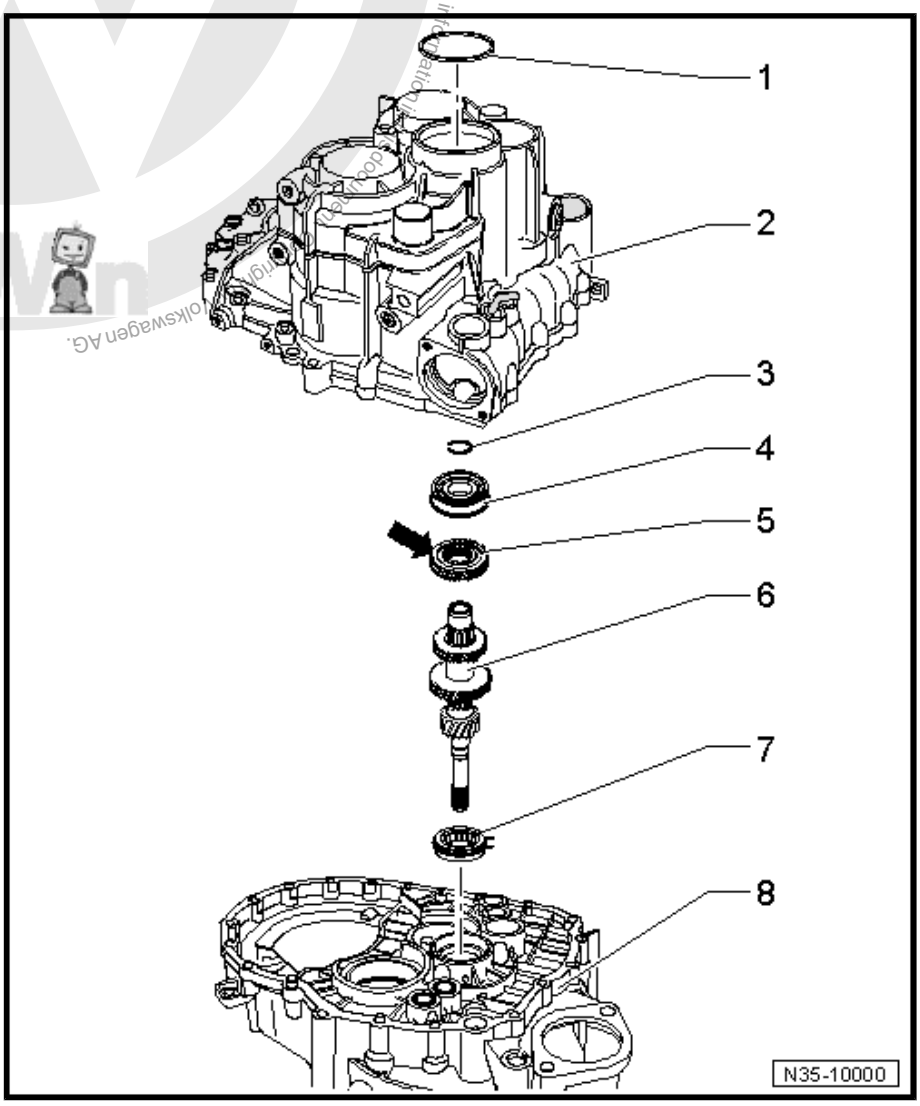


Protected by copyright. Copying for private or commercial purposes, in part or in whole, is not permitted unless authorised by Volkswagen AG. Volkswagen AG does not guarantee or accept any liability with respect to the correctness of information in this document. Copyright by Volkswagen AG.

- ❑ Installing. Refer to
  ⇒ Fig. ""Grooved Ball Bearing Installation Location and Installing the Grooved Ball Bearing"" , page 160

**5 - 5th Gear Wheel**

- ❑ Available as a replacement part together with the input shaft
- ❑ Installed position: the surrounding groove -arrow- points toward grooved ball bearing
- ❑ Removing. Refer to ⇒ Fig. ""Removing the 5th Gear Wheel"" , page 159
- ❑ Installing. Refer to ⇒ Fig. ""Warm the 5th Gear Wheel and install it."" , page 159

**6 - Input Shaft**

- ❑ With 3rd/4th and 6th gear wheel

**7 - Cylindrical Roller Bearing**

- ❑ With locking ring
- ❑ Removing. Refer to
  ⇒ Fig. ""Removing the Cylindrical Roller Bearing from the Clutch Housing"" , page 160
- ❑ Installing. Refer to ⇒ Fig. ""Pressing Cylindrical Roller Bearing into Clutch Housing."" , page 161
- ❑ Installed position: The circlip in bearing points to input shaft

**8 - Clutch Housing**

## 1.2 Input Shaft, Disassembling and Assembling

**Special tools and workshop equipment required**

- ♦ Inductive Heater - VAS6414-
- ♦ Press Plate - VW401-
- ♦ Press Plate - VW402-
- ♦ Press Piece - Rod - VW407-
- ♦ Press Piece - Rod - VW408A-
- ♦ Press Piece - Multiple Use - VW412-
- ♦ Press Piece - Bushing - 50mm Diameter - VW432-
- ♦ Press Piece - Multiple Use - VW454-
- ♦ Puller - Kukko Internal - 28-37mm - 21/5-
- ♦ Puller - Kukko Quick Action Separating Tool - 22-115mm - 17/2-
- ♦ Puller - Kukko Counterstay - 22/2-
- ♦ Bearing Installer - Multiple Use - 32-111-
- ♦ Feeler Gauge

**Caution**

*This procedure contains mandatory replaceable parts. Refer to component overview prior to starting procedure.*

**Mandatory Replacement Parts**

- ♦ Grooved Ball Bearing - Input Shaft

Protected by copyright. Copyright by Volkswagen AG. Volkswagen AG does not guarantee or accept any liability with respect to the correctness of information in this document. Copyright by Volkswagen AG.

### Input Shaft, Disassembling

– Remove the grooved ball bearing locking ring.

### Removing the Grooved Ball Bearing

– Mount the Separating Tool 22-115mm -A- into the groove in the ball bearing for the locking ring.

A - Separating Tool 22-115mm , for example, -17/2-

– The grooved ball bearing and 5th gear wheel can also be removed together. To do this, place the Separating Tool 22-115mm -A- as shown in the following illustration under the 5th gear wheel.

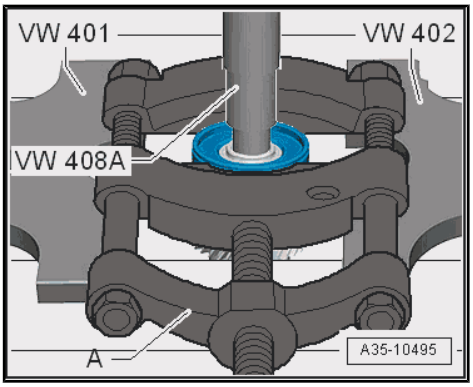


### Removing the 5th Gear Wheel

A - Separating Tool 22-115mm , for example, -17/2-

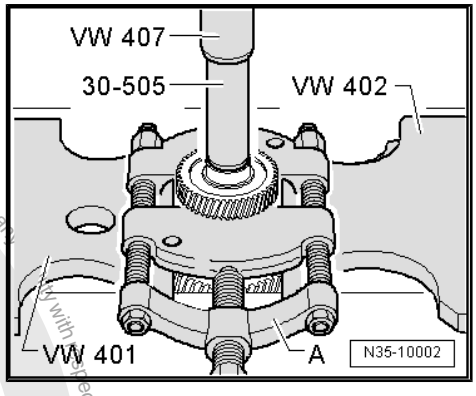


### Input Shaft, Assembling

### Warm the 5th Gear Wheel and install it.

• The groove -arrow- on the gear wheel must face up.

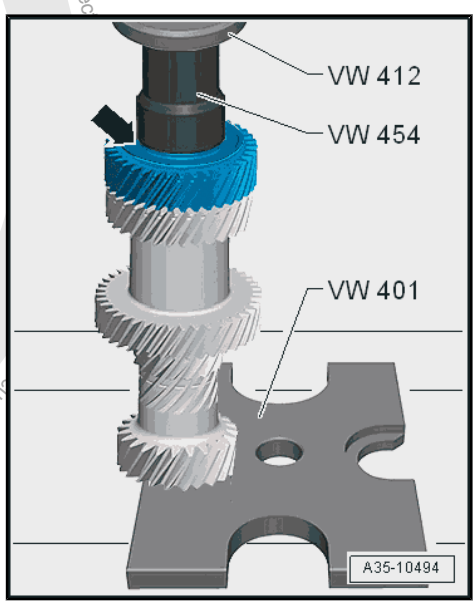


Protected by copyright. Copyright for private or commercial purposes, in part or whole, is not permitted unless authorised by Volkswagen AG. Volkswagen AG does not guarantee or accept any liability with respect to the correctness of information. Copyright by Volkswagen AG.

### Grooved Ball Bearing Installation Location and Installing the Grooved Ball Bearing

- Grooved ball bearing installed position: The groove for the locking ring faces up -arrow A- and the collar -arrow B- must face the 5th gear wheel.

– Then select the grooved ball bearing locking ring and install it on the input shaft. Refer to
⇒ Fig. ""Selecting the Locking Ring"" , page 160 .

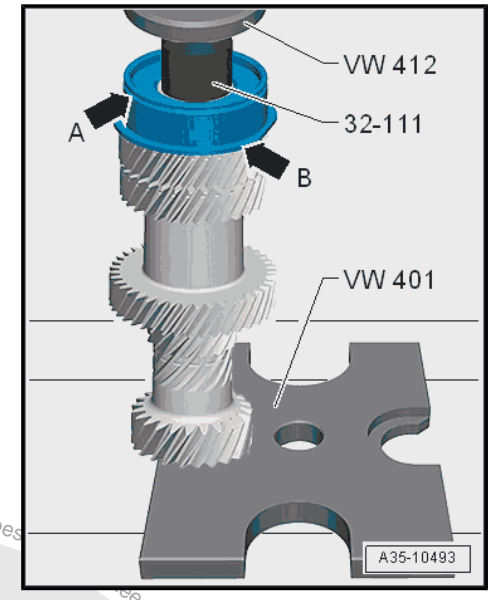


### Selecting the Locking Ring

– Insert a 1.86 mm locking ring -A- into groove in the input shaft and press it upward.

– Measure the gap between the grooved ball bearing -B- and the installed locking ring -A- with a feeler gauge -C-.

– Remove the locking ring used for the measurement.

– Select the locking ring according to the Table.

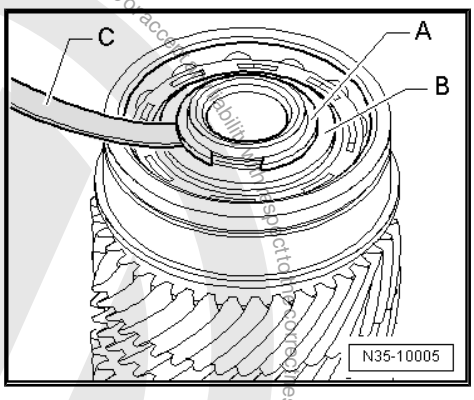


**Note**

*For the correct locking rings. Refer to the Parts Catalog.*

The following circlips are available:

| Measured Value (mm) | Circlip Ring Thickness (mm) | Axial Play (mm) |
|---|---|---|
| 0.01 to 0.05 | 1.86 | 0.01 to 0.05 |
| 0.05 to 0.07 | 1.89 | 0.01 to 0.05 |
| 0.07 to 0.10 | 1.92 | 0.01 to 0.05 |
| 0.10 to 0.13 | 1.95 | 0.01 to 0.05 |
| 0.13 to 0.16 | 1.98 | 0.01 to 0.05 |

### Removing the Cylindrical Roller Bearing from the Clutch Housing

– Compress the cylindrical roller bearing locking ring -arrow- with pliers -C- and remove it.

A - Counter Support , for example, -22/2-

B - Internal Puller 30 to 37 mm , for example, -21/5-

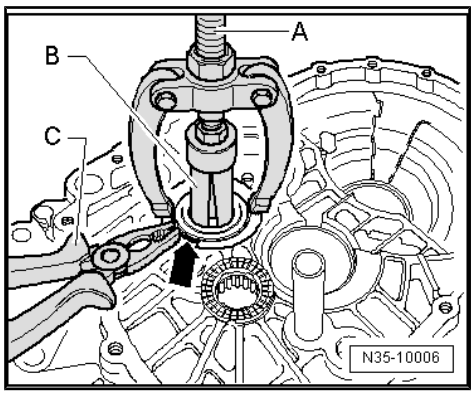


Protected by copyright. Copying for private or commercial purposes, in part or in whole, is not permitted unless authorised by Volkswagen AG. Volkswagen AG does not guarantee or accept any liability with respect to the correctness of information in this document. Copyright by Volkswagen AG.

**Pressing Cylindrical Roller Bearing into Clutch Housing.**

– Compress the cylindrical roller bearing locking ring -arrow- with pliers -C- and install it.

– Remove the pliers before the cylindrical roller bearing gets into its installed position. The locking ring must lock into the groove on the clutch housing.

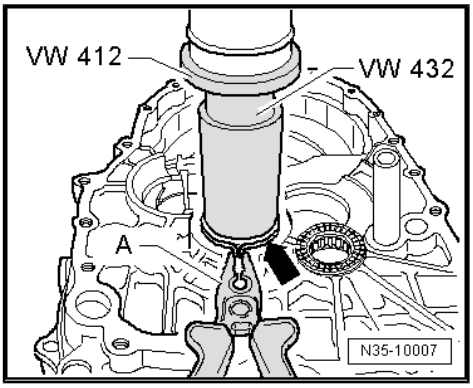


## 1.3 Input Shaft Seal, Replacing

**Special tools and workshop equipment required**

- Puller - Crankshaft/Power Steering Seal - T20143/1-
- Seal Installer - Driveshaft - T40008-
- Sealing Grease - G 052 128 A1-

**Caution**

*This procedure contains mandatory replaceable parts. Refer to component overview prior to starting procedure.*

**Mandatory Replacement Parts**

- Grooved Ball Bearing - Input Shaft

– Remove manual transmission.

– Remove the clutch slave cylinder with release bearing. Refer to
⇒ "1.11 Clutch Slave Cylinder with Release Bearing, Removing and Installing", page 33 .

– Pry the input shaft seal out.

**Note**

*Be careful not to damage the contact surface for the seal on the input shaft.*

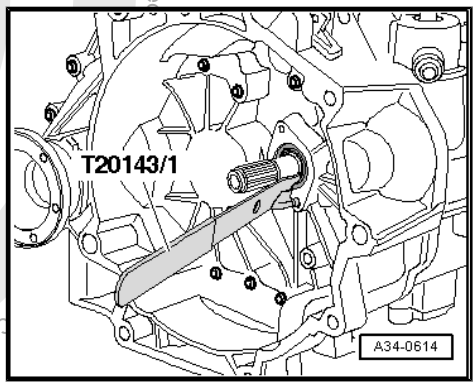


Protected by copyright. Copying for private or commercial purposes, in part or in whole, is not permitted unless authorised by Volkswagen AG. Volkswagen AG does not guarantee or accept any liability with respect to the correc
Copyright by Volkswagen AG.

– Fill the space with the new seal between the sealing and dust lip halfway with Sealing Grease - G 052 128 A1- .
– Coat the outer circumference of the seal lightly with transmission fluid.

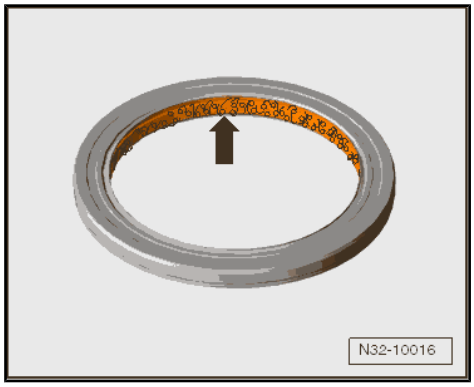


– Install the input shaft seal so that it is flush.
– Install the clutch slave cylinder with release bearing. Refer to ⇒ “1.11 Clutch Slave Cylinder with Release Bearing, Removing and Installing”, page 33 .
– Install manual transmission.

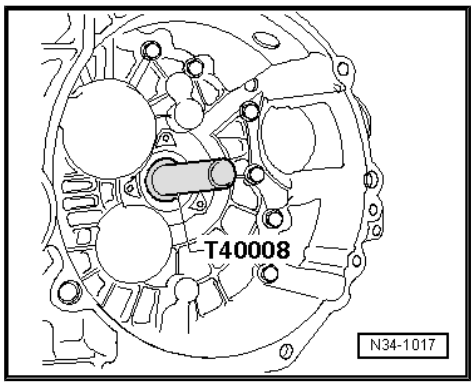


Protected by copyright. Copying for private or commercial purposes, in part or in whole, is not permitted unless authorised by Volkswagen AG. Volkswagen AG does not guarantee or accept any liability with respect to the correctness of information in this document. Copyright by Volkswagen AG.

# 2 Output Shaft

⇒ “2.1 Overview - Output Shaft”, page 163

⇒ “2.2 Output Shaft, Disassembling and Assembling”, page 172

⇒ “2.3 Output Shaft, Adjusting”, page 187

## 2.1 Overview - Output Shaft

⇒ “2.1.1 Overview - Output Shaft, 1st to 4th Gears”, page 163

⇒ “2.1.2 Overview - Output Shaft, 5th/6th and Reverse Gears”, page 168

### 2.1.1 Overview - Output Shaft, 1st to 4th Gears

Note

- *Secure the transmission on the assembly stand. Refer to ⇒ “7 Securing on Engine and Transmission Holder”, page 141 .*
- *To install, warm the inner races/tapered roller bearing and synchronizer hub to approximately 100 °C (212 °F) using Inductive Heater - VAS6414- . Wear protective gloves.*
- *Install a collar bushing instead of thrust washers -19- ⇒ Item 19 (page 165) , and retaining ring -20- ⇒ Item 20 (page 165) on transmissions with reinforcement measures (manual transmission 0FB). The output shaft components, 1st through 4th gear, 4th gear wheel and the needle bearing for the 4th gear wheel were adapted Refer to ⇒ Fig. ““Reinforcement Measures on Manual Transmission 0FB near 4th Gear Wheel““ , page 167 . Refer to the Parts Catalog.*
- *Adjust the output shaft if it or the tapered roller bearing are being replaced. Refer to ⇒ “2.3 Output Shaft, Adjusting”, page 187 .*
- *Replace both tapered roller bearings together.*

Protected by copyright. Copying for private or commercial purposes, in part or in whole, is not permitted unless authorised by Volkswagen AG. Volkswagen AG does not guarantee or accept any liability with respect to the correctness of information in this document. Copyright by Volkswagen AG.

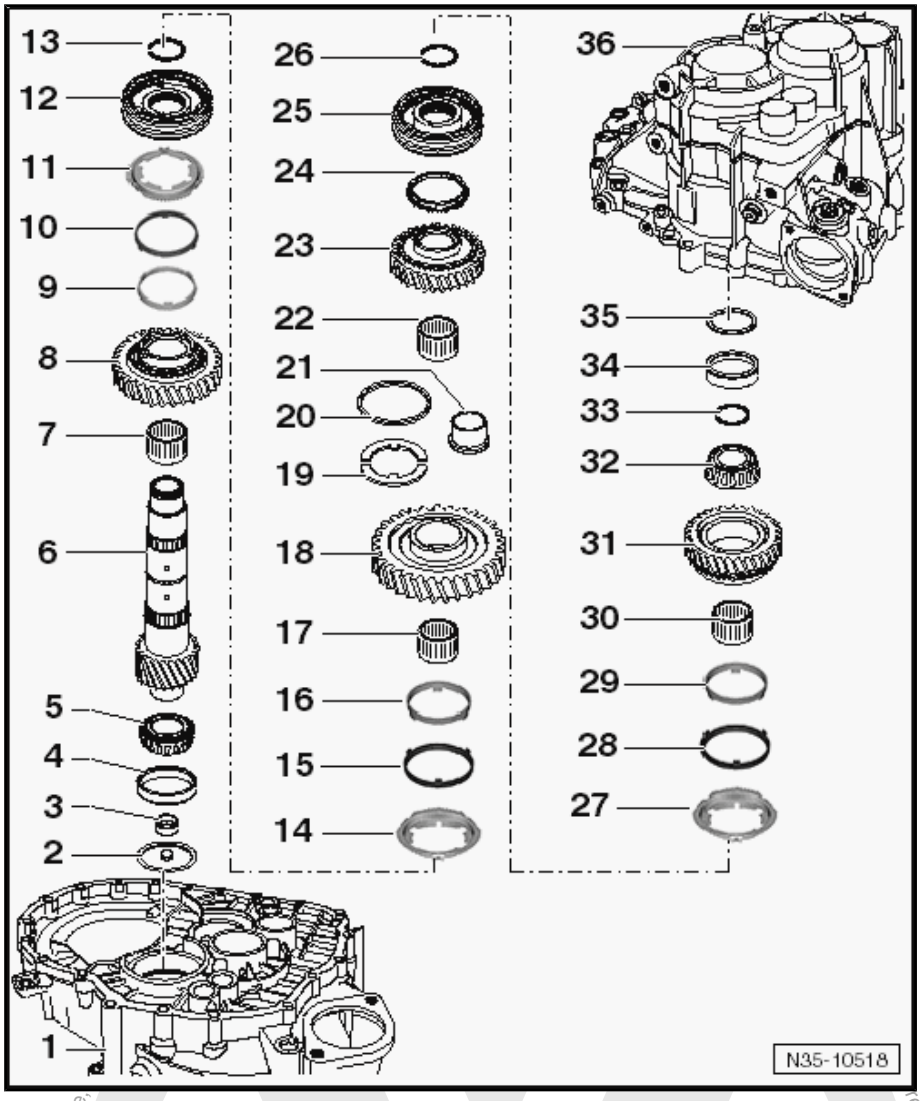


**1 - Clutch Housing**

**2 - Oil Deflector Ring**

**3 - Dished Washer**

- ❑ Removing. Refer to ⇒ Fig. ""Removing the Dished Washer -A- from the Output Shaft"" , page 172
- ❑ Installing. Refer to ⇒ Fig. ""Installing the Dished Washer into the Output Shaft"" , page 173

**4 - Outer Race/Tapered Roller Bearing**

- ❑ Removing. Refer to ⇒ Fig. ""Removing the Outer Race / Tapered Roller Bearing from the Clutch Housing"" , page 173
- ❑ Installing. Refer to ⇒ Fig. ""Installing the Outer Race/Tapered Roller Bearing in the Clutch Housing"" , page 174

**5 - Inner Race / Tapered Roller Bearing**

- ❑ Removing. Refer to ⇒ Fig. ""Removing the Inner Race/Tapered Roller Bearing on the side of the Clutch Housing"" , page 173
- ❑ Installing. Refer to ⇒ Fig. ""Installing the Inner Race/Tapered Roller Bearing on the Side of the Clutch Housing"" , page 173

**6 - Output Shaft**

- ❑ For 1st through 4th gear
- ❑ There are different versions. Refer to ⇒ Fig. ""Differentiation of Output Shafts"" , page 168
- ❑ Allocate according to the transmission code letters. Refer to the Parts Catalog.
- ❑ Adjusting. Refer to ⇒ "2.3 Output Shaft, Adjusting", page 187 .

**7 - Needle Bearing**

- ❑ For 2nd gear

**8 - 2nd Gear Wheel**

**9 - 2nd Gear Inner Race**

- ❑ Replace if there are wear grooves
- ❑ Installed position. Refer to ⇒ Fig. ""Installing 2nd Gear Outer Race, Inner Race and Synchronizer Ring"" , page 177 .

**10 - 2nd Gear Outer Race**

- ❑ Check the inner friction surface for wear. Refer to ⇒ Fig. ""Checking the Inner Contact Surface for Wear on the 1st Gear Outer Ring, the 2nd Gear Outer Ring, and the 3rd Gear Outer Ring "" , page 176
- ❑ Check the outer friction surface for wear. Refer to ⇒ Fig. ""Checking the Outer Contact Surface for Wear on the 1st Gear Outer Ring, the 2nd Gear Outer Ring, and the 3rd Gear Outer Ring"" , page 176

Protected by copyright. Copying for private or commercial purposes, in part or in whole, is not permitted unless authorised by Volkswagen AG. Volkswagen AG does not guarantee or assume any liability with respect to the correctness of information in this document. Copyright by Volkswagen AG.

- ❑ Installed position. Refer to
  ⇒ Fig. ""Installing 2nd Gear Outer Race, Inner Race and Synchronizer Ring"" , page 177 .

**11 - 2nd Gear Synchronizer Ring**

- ❑ Check the inner running surface for grooves and radial wear
- ❑ Installed position. Refer to
  ⇒ Fig. ""Installing 2nd Gear Outer Race, Inner Race and Synchronizer Ring"" , page 177 .

**12 - Locking Collar with Synchronizer Hub for 1st and 2nd Gears**

- ❑ After removing the circlip, remove with the 2nd gear wheel. Refer to
  ⇒ Fig. ""Removing the Locking Collar and the Synchronizer Hub for 1st and 2nd Gear"" , page 176 .
- ❑ Disassembling. Refer to
  ⇒ Fig. ""Disassembling and Assembling the Locking Collar and the Synchronizer Hub for 1st, 2nd, 3rd and 4th Gears"" , page 177 .
- ❑ Assembling the locking collar/synchronizer hub. Refer to
  ⇒ Fig. ""Disassembling and Assembling the Locking Collar and the Synchronizer Hub for 1st, 2nd, 3rd and 4th Gears"" , page 177 and
  ⇒ Fig. ""Assembling: Locking Collar/Synchronizer Hub for 1st, 2nd, 3rd and 4th Gears"" , page 177
- ❑ Installed position. Refer to
  ⇒ Fig. ""Installed Position: Locking Collar/Synchronizer Hub for 1st and 2nd Gears"" , page 177 .
- ❑ Installing. Refer to
  ⇒ Fig. ""Warming and Installing the Locking Collar/Synchronizer Hub for 1st and 2nd Gears."" , page 178

**13 - Locking Ring**

**14 - 1st Gear Synchronizer Ring**

- ❑ Check the inner running surface for grooves and radial wear
- ❑ Installed position. Refer to
  ⇒ Fig. ""Installing the Synchronizer Ring for 1st Gear Outer Race and Inner Race"" , page 178 .

**15 - 1st Gear Outer Race**

- ❑ Check the inner friction surface for wear. Refer to
  ⇒ Fig. ""Checking the Inner Contact Surface for Wear on the 1st Gear Outer Ring, the 2nd Gear Outer Ring, and the 3rd Gear Outer Ring "" , page 176
- ❑ Check the outer friction surface for wear. Refer to
  ⇒ Fig. ""Checking the Outer Contact Surface for Wear on the 1st Gear Outer Ring, the 2nd Gear Outer Ring, and the 3rd Gear Outer Ring"" , page 176
- ❑ Installed position. Refer to
  ⇒ Fig. ""Installing the Synchronizer Ring for 1st Gear Outer Race and Inner Race"" , page 178 .

**16 - 1st Gear Inner Race**

- ❑ Replace if there are wear grooves
- ❑ Installed position. Refer to
  ⇒ Fig. ""Installing the Synchronizer Ring for 1st Gear Outer Race and Inner Race"" , page 178 .

**17 - Needle Bearing**

- ❑ For 1st gear

**18 - 1st Gear Wheel**

- ❑ Mount on the output shaft. Refer to
  ⇒ Fig. ""Install 1st Gear Wheel with Needle Roller Bearing"" , page 178

**19 - Thrust Washer**

- ❑ Quantity: 2
- ❑ For 1st and 4th gears
- ❑ The tab on the thrust washer must fit into the hole in the output shaft.
- ❑ Not installed on transmissions with reinforcement measures

**20 - Retaining Ring**

- ❑ Holds the thrust washers for the 1st and 4th gear in place on the output shaft
- ❑ Not installed on transmissions with reinforcement measures

Protected by copyright. Copying for private or commercial purposes, in part or in whole, is not permitted unless authorised by Volkswagen AG. Volkswagen AG does not guarantee or accept any liability with respect to the correctness of information in this document. Copyright by Volkswagen AG.

**21 - Collar Bushing**

- ❑ For the 4th gear needle bearing
- ❑ Only installed on transmissions with reinforcement measures. Refer to
  ⇒ Fig. ""Reinforcement Measures on Manual Transmission 0FB near 4th Gear Wheel"" , page 167
- ❑ Allocate according to the transmission code letters. Refer to the Parts Catalog.

**22 - Needle Bearing**

- ❑ For 4th gear
- ❑ There are different versions. Refer to
  ⇒ Fig. ""Variations of the Needle Bearing and Gear Wheels for 4th Gear"" , page 168
- ❑ Allocate according to the transmission code letters. Refer to the Parts Catalog.

**23 - 4th Gear Wheel**

- ❑ There are different versions. Refer to
  ⇒ Fig. ""Variations of the Needle Bearing and Gear Wheels for 4th Gear"" , page 168
- ❑ Allocate according to the transmission code letters. Refer to the Parts Catalog.

**24 - 4th Gear Synchronizer Ring**

- ❑ Brass or steel
- ❑ Checking for wear. Refer to ⇒ Fig. ""Checking the 4th Gear Synchronizer Ring for Wear"" , page 179

**25 - Locking Collar with Synchronizer Hub for 3rd and 4th Gears**

- ❑ After removing the locking ring, remove the 4th gear wheel. Refer to
  ⇒ Fig. ""Removing the 3rd and 4th Gear Synchronizer Hub/Locking Collar with the 4th Gear Wheel"" , page 175
- ❑ Disassembling. Refer to
  ⇒ Fig. ""Disassembling and Assembling the Locking Collar and the Synchronizer Hub for 1st, 2nd, 3rd and 4th Gears"" , page 177 .
- ❑ Assembling the locking collar/synchronizer hub. Refer to
  ⇒ Fig. ""Disassembling and Assembling the Locking Collar and the Synchronizer Hub for 1st, 2nd, 3rd and 4th Gears"" , page 177 and
  ⇒ Fig. ""Assembling: Locking Collar/Synchronizer Hub for 1st, 2nd, 3rd and 4th Gears"" , page 177
- ❑ Installed position: locking collar/synchronizer hub. Refer to
  ⇒ Fig. ""Installed Position: Locking Collar/Synchronizer Hub for 3rd and 4th Gears"" , page 180
- ❑ Installing. Refer to
  ⇒ Fig. ""Warming and Installing the Synchronizer Hub with Locking Collar for 3rd and 4th Gears"" , page 180

**26 - Locking Ring**

**27 - 3rd Gear Synchronizer Ring**

- ❑ Check the inner running surface for grooves and radial wear
- ❑ Installed position. Refer to
  ⇒ Fig. ""Installing the 3rd Gear Synchronizer Ring, Outer Ring and Inner Ring"" , page 180 .

**28 - 3rd Gear Outer Race**

- ❑ Check the inner friction surface for wear. Refer to
  ⇒ Fig. ""Checking the Inner Contact Surface for Wear on the 1st Gear Outer Ring, the 2nd Gear Outer Ring, and the 3rd Gear Outer Ring "" , page 176
- ❑ Check the outer friction surface for wear. Refer to
  ⇒ Fig. ""Checking the Outer Contact Surface for Wear on the 1st Gear Outer Ring, the 2nd Gear Outer Ring, and the 3rd Gear Outer Ring"" , page 176
- ❑ Installed position. Refer to
  ⇒ Fig. ""Installing the 3rd Gear Synchronizer Ring, Outer Ring and Inner Ring"" , page 180 .

**29 - 3rd Gear Inner Race**

- ❑ Replace if there are wear grooves
- ❑ Installed position. Refer to
  ⇒ Fig. ""Installing the 3rd Gear Synchronizer Ring, Outer Ring and Inner Ring"" , page 180 .

**30 - Needle Bearing**

- ❑ For 3rd gear

Protected by copyright. Copyright by Volkswagen AG. Volkswagen AG does not guarantee or accept any liability with respect to the correctness of information in this document. Copyright by Volkswagen AG. Any use for commercial purposes, in part or in whole, is not permitted without the express authorisation of Volkswagen AG.

**31 - 3rd Gear Wheel**

- ❑ Mount on the output shaft. Refer to
  ⇒ Fig. ""Installing the 3rd Gear Wheel with Needle Bearing"" , page 181

**32 - Inner Race / Tapered Roller Bearing**

- ❑ Removing. Refer to
  ⇒ Fig. ""Remove the Inner Race/Tapered Roller Bearing on the side of the Transmission Housing"" , page 174
- ❑ Installing. Refer to
  ⇒ Fig. ""Installing the Inner Race/Tapered Roller Bearing on the side of the Transmission Housing"" , page 174

**33 - Locking Ring**

- ❑ Determine again when replacing inner race/tapered roller bearing and output shaft. Refer to
  ⇒ Fig. ""Selecting the Locking Ring"" , page 174

**34 - Outer Race/Tapered Roller Bearing**

- ❑ Removing. Refer to
  ⇒ Fig. ""Removing the Outer Race/Tapered Roller Bearing from the Transmission Housing"" , page 175
- ❑ Installing. Refer to
  ⇒ Fig. ""Installing the Outer Race/Tapered Roller Bearing into the Transmission Housing"" , page 175

**35 - Shim**

- ❑ Selecting thickness. Refer to ⇒ "2.3 Output Shaft, Adjusting", page 187 .

**36 - Transmission Housing**

### Reinforcement Measures on Manual Transmission 0FB near 4th Gear Wheel

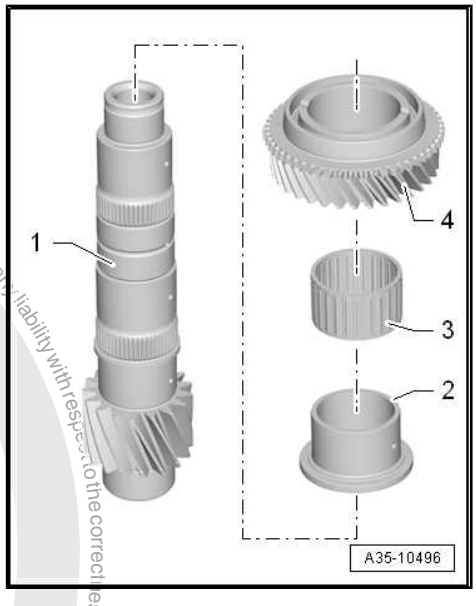


The following components are affected.

1 - Output Shaft

Characteristics. Refer to
⇒ Fig. ""Differentiation of Output Shafts"" , page 168

2 - Collar Bushing

Characteristics. Refer to
⇒ Fig. ""Variations of the Needle Bearing and Gear Wheels for 4th Gear"" , page 168

3 - Needle Bearing for 4th Gear

Characteristics. Refer to
⇒ Fig. ""Variations of the Needle Bearing and Gear Wheels for 4th Gear"" , page 168

4 - 4th Gear Wheel

Characteristics. Refer to
⇒ Fig. ""Variations of the Needle Bearing and Gear Wheels for 4th Gear"" , page 168

**Note**

- *Never mix parts for reinforced 4th gear transmissions and 4th gear transmissions without reinforcement. Refer to the Parts Catalog.*
- *To remove and install modified components, follow instructions in repair manual. Refer to*
  *⇒ "2.2.1 Output Shaft, Disassembling and Assembling, 1st to 4th Gears", page 172*.

Protected by Volkswagen AG. Volkswagen AG does not guarantee or accept any liability with respect to the correctness of information in this document. Copyright by Volkswagen AG.

Differentiation of Output Shafts

| Output Shaft | -1- with Reinforcement Measures | -2- without Reinforcement Measures |
|---|---|---|
| Dimension -a- | 40.1 mm | 42.0 mm |
| -Arrow A- | Groove for collar bushing position -21- ⇒ Item 21 (page 166) | - |
| -Arrow B- | - | 2 opposite holes and circular groove for the thrust washer mounts -19- ⇒ Item 19 (page 165) |

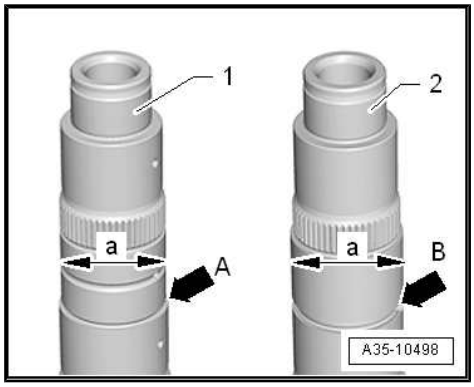


Variations of the Needle Bearing and Gear Wheels for 4th Gear

| 4th Gear Wheel | -1- with Reinforcement Measures | -2- without Reinforcement Measures |
|---|---|---|
| Dimension -a- | 52.0 mm | 48.0 mm |

| 4th Gear Wheel Needle Bearing | -3- with Reinforcement Measures | -4- without Reinforcement Measures |
|---|---|---|
| Dimension -b- | 52.0 mm | 48.0 mm |
| • The needle bearing -3- is fitted on the collar bushing -5- on transmissions with reinforcement measures. | | |

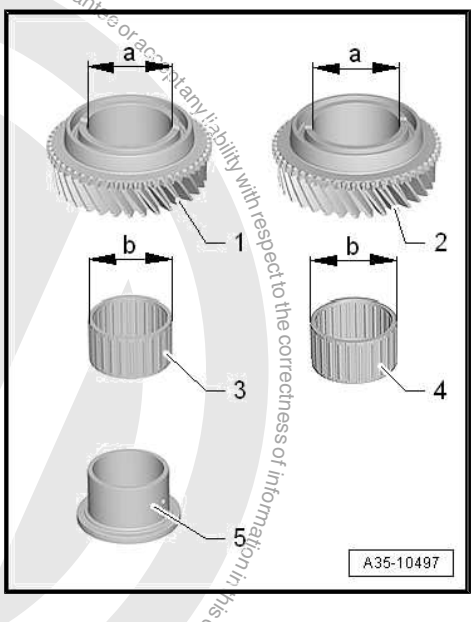


## 2.1.2 Overview - Output Shaft, 5th/6th and Reverse Gears

**Note**

- *Secure the transmission on the assembly stand. Refer to ⇒ "7 Securing on Engine and Transmission Holder", page 141 .*
- *To install, warm the inner races/tapered roller bearing and synchronizer hub to approximately 100 °C (212 °F) using Inductive Heater - VAS6414- . Wear protective gloves.*
- *Adjust the output shaft if it or the tapered roller bearing are being replaced. Refer to ⇒ "2.3.2 Output Shaft, 5th, 6th and Reverse Gears, Adjusting", page 190 .*
- *Replace both tapered roller bearings together.*

Copyright by Volkswagen AG. Copying for private or commercial purposes, in part or in whole, is not permitted unless authorised by Volkswagen AG. Volkswagen AG does not guarantee or accept any liability with respect to the correctness of information in this document.

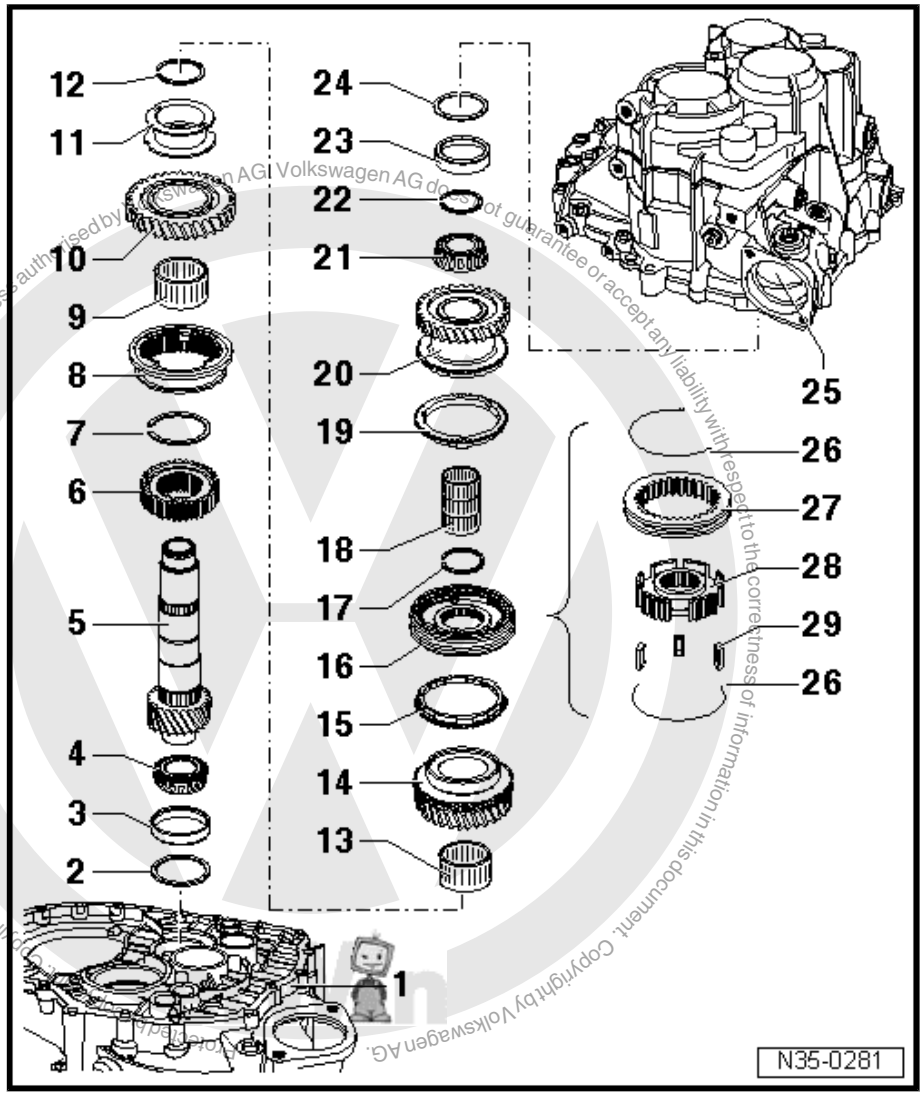


1 - Clutch Housing

2 - Washer

- ❑ Always 0.65 mm thick

3 - Outer Race/Tapered Roller Bearing

- ❑ Removing. Refer to ⇒ Fig. ""Removing the Outer Race/Tapered Roller Bearing from the Clutch Housing"" , page 182
- ❑ Installing. Refer to ⇒ Fig. ""Installing the Outer Race/Tapered Roller Bearing in the Clutch Housing"" , page 183

4 - Inner Race / Tapered Roller Bearing

- ❑ Removing. Refer to ⇒ Fig. ""Removing the Inner Race/Tapered Roller Bearing on the Side of the Clutch Housing."" , page 184
- ❑ Installing. Refer to ⇒ Fig. ""Installing the Inner Race/Tapered Roller Bearing on the side of the Clutch Housing"" , page 187

5 - Output Shaft

- ❑ For 5th, 6th and reverse gears
- ❑ Adjusting. Refer to ⇒ "2.3.2 Output Shaft, 5th, 6th and Reverse Gears, Adjusting", page 190 .

6 - Reverse Gear Synchronizer Hub

- ❑ Removing. Refer to ⇒ Fig. ""Removing the Reverse Gear Synchronizer Hub"" , page 184
- ❑ Installed position. Refer to ⇒ Fig. ""Installed Position: Reverse Gear Synchronizer Hub"" , page 185 .
- ❑ Installing. Refer to ⇒ Fig. ""Warming and Installing the Reverse Gear Synchronizer Hub"" , page 185

7 - Locking Ring

8 - Reverse Gear Locking Collar

- ❑ With synchronizer ring

9 - Needle Bearing

- ❑ For reverse gear wheel

10 - Reverse Gear Wheel

11 - Sleeve

- ❑ Remove with the reverse gear wheel. Refer to ⇒ Fig. ""Removing the Sleeve -A- together with the Reverse Gear Wheel"" , page 184
- ❑ Installed position: The wider sleeve collar faces the reverse gear wheel
- ❑ Installing. Refer to ⇒ Fig. ""Installing the Sleeve -A- "" , page 185

12 - Locking Ring

13 - Needle Bearing

- ❑ For 6th gear

Volkswagen AG Volkswagen AG do not guarantee or accept any liability with respect to the correctness of information in this document. Copyright by Volkswagen AG.

**14 - 6th Gear Wheel**

**15 - Synchronizer Ring for 6th Gear**

- ❑ Brass or steel
- ❑ Checking for wear. Refer to
  ⇒ Fig. ""Checking 5th and 6th Gear Synchronizer Ring for Wear"" , page 185

**16 - Locking Collar with Synchronizer Hub for 5th and 6th Gears**

- ❑ After removing the securing ring, remove with the 6th gear wheel. Refer to
  ⇒ Fig. ""Removing the 5th and 6th Gear Synchronizer Hub/Locking Collar with the 6th Gear Wheel"" , page 184
- ❑ Disassembling. Refer to
  ⇒ Fig. ""Disassembling and Assembling Locking Collar and Synchronizer Hub for 5th and 6th Gears"" , page 186 .
- ❑ Assembling the locking collar/synchronizer hub. Refer to
  ⇒ Fig. ""Disassembling and Assembling Locking Collar and Synchronizer Hub for 5th and 6th Gears"" , page 186 and
  ⇒ Fig. ""Assembling Locking Collar/Synchronizer Hub for 5th and 6th Gears"" , page 186
- ❑ Installing. Refer to
  ⇒ Fig. ""Installing the Locking Collar/Synchronizer Hub for 5th and 6th Gears"" , page 186

**17 - Locking Ring**

**18 - Needle Bearing**

- ❑ For 5th gear

**19 - Synchronizer Ring for 5th Gear**

- ❑ Brass or steel
- ❑ Checking for wear. Refer to
  ⇒ Fig. ""Checking 5th and 6th Gear Synchronizer Ring for Wear"" , page 185

**20 - 5th Gear Wheel**

**21 - Inner Race / Tapered Roller Bearing**

- ❑ Removing. Refer to
  ⇒ Fig. ""Remove the Inner Race/Tapered Roller Bearing on the side of the Transmission Housing"" , page 183
- ❑ Installing. Refer to
  ⇒ Fig. ""Installing the Inner Race/Tapered Roller Bearing on the side of the Transmission Housing"" , page 187

**22 - Locking Ring**

- ❑ Determine again when replacing inner race/tapered roller bearing and output shaft. Refer to
  ⇒ Fig. ""Selecting the Locking Ring"" , page 187

**23 - Outer Race/Tapered Roller Bearing**

- ❑ Removing. Refer to
  ⇒ Fig. ""Removing the Outer Race/Tapered Roller Bearing from the Transmission Housing"" , page 183
- ❑ Installing. Refer to
  ⇒ Fig. ""Installing the Outer Race/Tapered Roller Bearing into the Transmission Housing."" , page 183

**24 - Shim**

- ❑ Selecting thickness. Refer to
  ⇒ "2.3.2 Output Shaft, 5th, 6th and Reverse Gears, Adjusting", page 190 .

**25 - Transmission Housing**

**26 - Spring**

- ❑ Installed position. Refer to
  ⇒ Fig. ""Assembling Locking Collar/Synchronizer Hub for 5th and 6th Gears"" , page 186 .

Protected by copyright. Copying for private or commercial purposes, in part or in whole, is not permitted unless authorised by Volkswagen AG. Volkswagen AG does not guarantee or accept any liability with respect to the correctness of information in this document. Copyright by Volkswagen AG.

**27 - Locking Collar**

**28 - Synchronizer Hub**

**29 - Locking Piece**

- ❑ Quantity: 3
- ❑ Installed position. Refer to
  ⇒ Fig. ""Disassembling and Assembling Locking Collar and Synchronizer Hub for 5th and 6th Gears"" , page 186 .

Protected by copyright. Copying for private or commercial purposes, in part or in whole, is not permitted unless authorised by Volkswagen AG. Volkswagen AG does not guarantee or accept any liability with respect to the correctness of information in this document. Copyright by Volkswagen AG.

## 2.2 Output Shaft, Disassembling and Assembling

⇒ "2.2.1 Output Shaft, Disassembling and Assembling, 1st to 4th Gears", page 172

⇒ "2.2.2 Output Shaft, 5th, 6th and Reverse Gears, Disassembling and Assembling", page 182

### 2.2.1 Output Shaft, Disassembling and Assembling, 1st to 4th Gears

**Special tools and workshop equipment required**

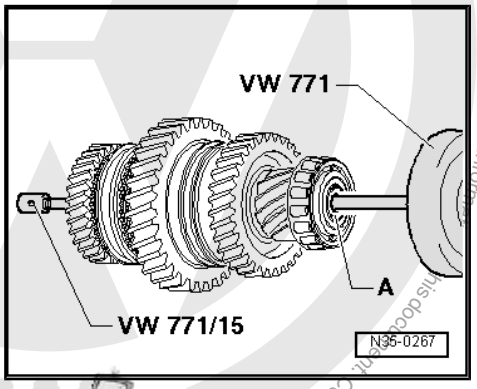


- Press Plate - VW401-
- Press Plate - VW402-
- Press Piece - Rod - VW407-
- Press Piece - Rod - VW408A-
- Press Piece - Multiple Use - VW412-
- Press Piece - 60mm - VW415A-
- Holding Plate - VW309A-
- Holding Fixture - VW313-
- Transmission Support - VW353-
- Press Piece - Multiple Use - VW431-
- Press Piece - Multiple Use - VW433-
- Press Piece - Multiple Use - VW454-
- Press Piece - Multiple Use - VW512-
- Press Piece - 42mm - VW516-
- Press Piece - Multiple Use - VW519-
- Slide Hammer Set - VW771-
- Crankshaft Holding Fixture - VW801-
- Press Piece - Multiple Use - 40-105-
- Bearing Installer - Multiple Use - 40-20-
- Bearing Installer - Differential Bearing - 40-21-
- Press Piece - Multiple Use - 2050-
- Holding Fixture - Spacers - VW540/1B-
- Puller - Taper Roller Bearing - VAG1582-
- Puller - Taper Roller Bearing - Adapter 7 - VAG1582/7-
- Inductive Heater - VAS6414-
- Puller - Kukko Internal - 46-56mm - 21/7-
- Puller - Kukko Internal - 56-70mm - 21/8-
- Puller - Kukko Puller - 60-200mm Width, 250mm Length - 18/2-
- Puller - Kukko Quick Action Separating Tool - 22-115mm - 17/2-
- Puller - Kukko Counterstay - 22/2-

**Removing the Dished Washer -A- from the Output Shaft**

Protected by copyright. Copying for private or commercial purposes, in part or in whole, is not permitted unless authorised by Volkswagen AG. Volkswagen AG does not guarantee or accept any liability with respect to the correctness of information in this document. Copyright by Volkswagen AG.

### Installing the Dished Washer into the Output Shaft

Dimension “a” = 2 mm

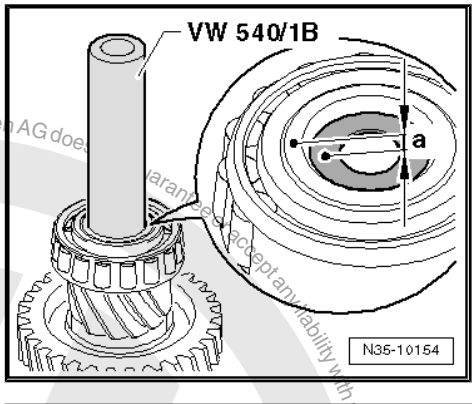


### Removing the Inner Race/Tapered Roller Bearing on the side of the Clutch Housing

A - Separating Tool 22-115mm , for example, -17/2-

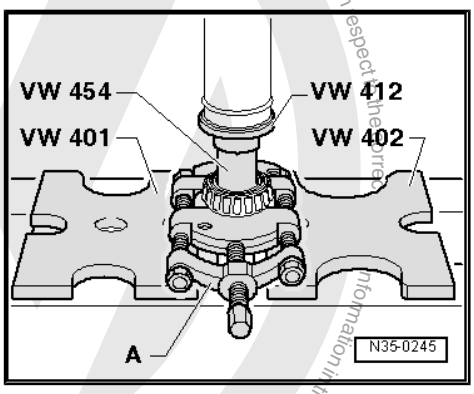


### Installing the Inner Race/Tapered Roller Bearing on the Side of the Clutch Housing

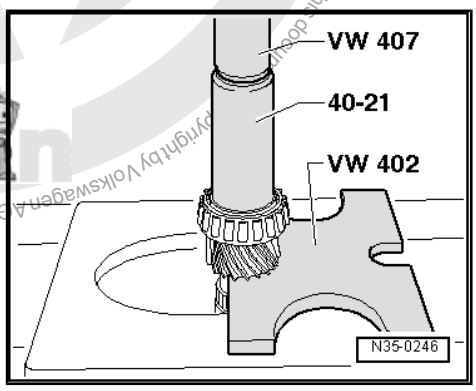


### Removing the Outer Race / Tapered Roller Bearing from the Clutch Housing

A - Counter Support , for example, -22/2-

B - Internal Puller 56 to 70 mm , for example, -21/8-

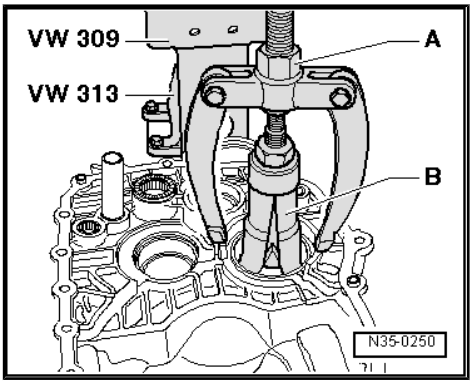


Protected by copyright. Copying for private or commercial purposes, in part or in whole, is not permitted unless authorised by Volkswagen AG. Volkswagen AG does not guarantee or accept any liability with respect to the correctness of information in this document. Copyright by Volkswagen AG.

### Installing the Outer Race/Tapered Roller Bearing in the Clutch Housing

– Support the clutch housing with the -40-20- directly under the bearing mount.

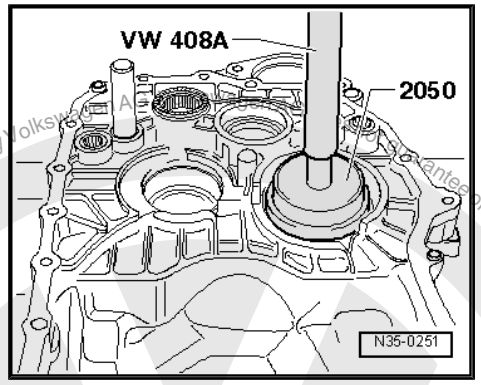


### Remove the Inner Race/Tapered Roller Bearing on the side of the Transmission Housing

Note the following before installing the -VAG1582- :

– Remove the inner race/tapered roller bearing locking ring on the side facing the transmission housing.

– Place the -VW431- in the output shaft and lay the -40-105- on top.

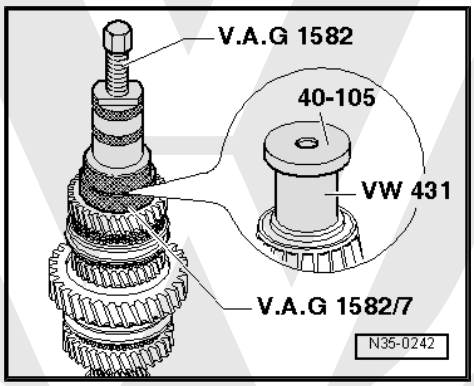


### Installing the Inner Race/Tapered Roller Bearing on the side of the Transmission Housing

– Choose the correct locking ring. Refer to ⇒ Fig. ""Selecting the Locking Ring"" , page 174 , and install.

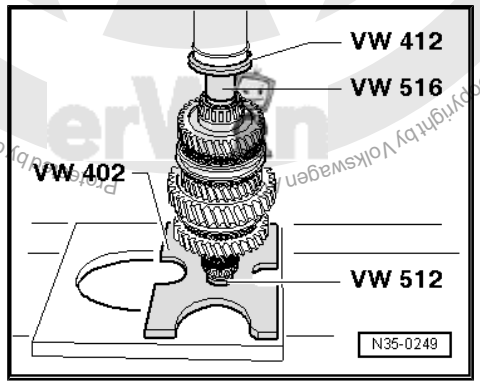


### Selecting the Locking Ring

– Choose and install the thickest locking ring that will fit.

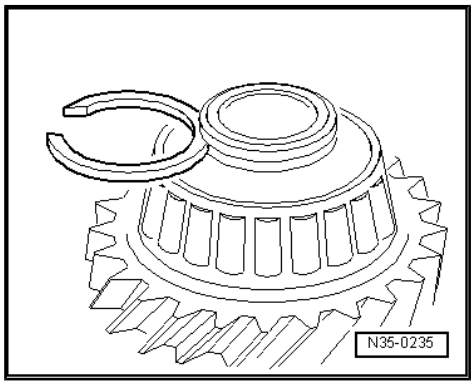


**Note**

*For the correct locking rings. Refer to the Parts Catalog.*

The following circlips are available:

| Thickness (mm) | | | |
|---|---|---|---|
| 1.79 | 1.83 | 1.86 | 1.89 |
| 1.92 | 1.95 | 1.98 | |

Protected by copyright. Copying for private or commercial purposes, partly or in whole, is not permitted unless authorised by Volkswagen AG. Volkswagen AG does not guarantee or accept any liability with respect to the correctness of information in this document. Copyright by Volkswagen AG.

### Removing the Outer Race/Tapered Roller Bearing from the Transmission Housing

A - Counter Support , for example, -22/2-

B - Internal Puller 46 to 58 mm , for example, -21/7-

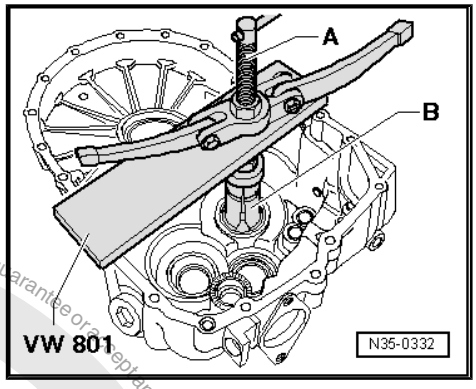


### Installing the Outer Race/Tapered Roller Bearing into the Transmission Housing

– Install the adjusting shim under the outer race.

– Support the transmission housing under the bearing mount using the -2050- .

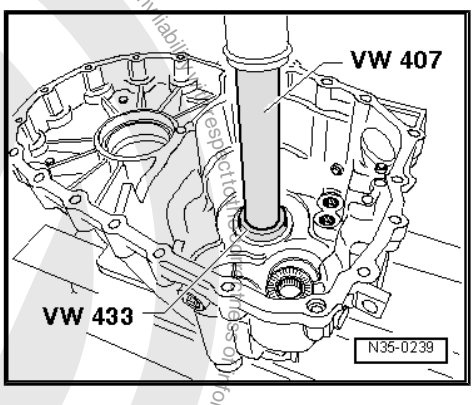


### Disassembling the Output Shaft

**Note**

*Remove the inner race/tapered roller bearing on the side of the transmission housing. Refer to*
*⇒ Fig. ""Remove the Inner Race/Tapered Roller Bearing on the side of the Transmission Housing"" , page 174* .

– Remove the locking ring.

### Removing the 3rd and 4th Gear Synchronizer Hub/Locking Collar with the 4th Gear Wheel

– Remove the locking ring beforehand.

– Then remove the retaining ring -Item 20-
⇒ Item 20 (page 165) and thrust washers -Item 19-
⇒ Item 19 (page 165) .

– Then remove the 1st gear wheel with synchronizer ring.

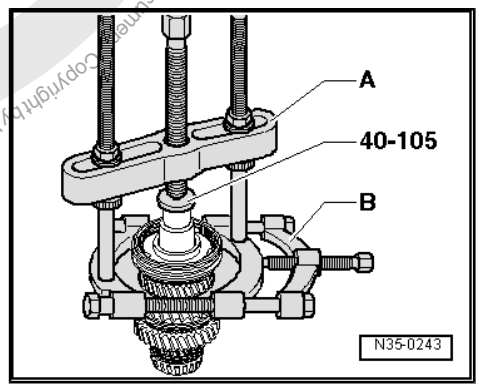


### On Transmissions with Reinforcement Measures, Remove the Collar Bushing -B- Together with the 1st Gear Wheel -C-.

**Note**

*Allocate transmission via code letters:*

A - Puller - Quick Action Separating Tool - 22-115mm , for example -Kukko 17/2-

– Install the Separating Tool -A- underneath the helical-cut gear teeth on the 1st gear wheel.

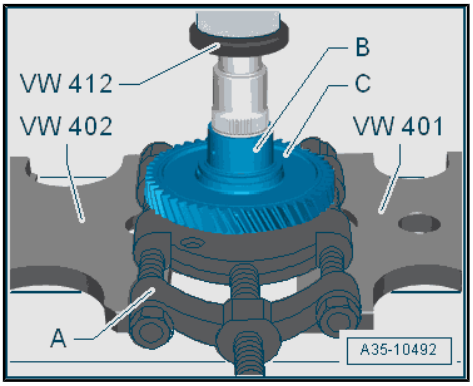


Protected by copyright. Copyright for private or commercial purposes, in part or in whole, is not permitted unless authorised by Volkswagen AG. Volkswagen AG does not guarantee or accept any liability with respect to the correctness of information in this document. Copyright by Volkswagen AG.

### Removing the Locking Collar and the Synchronizer Hub for 1st and 2nd Gear

After removing the circlip, press off the gear wheel for 2nd gear and locking collar/synchronizer hub together.

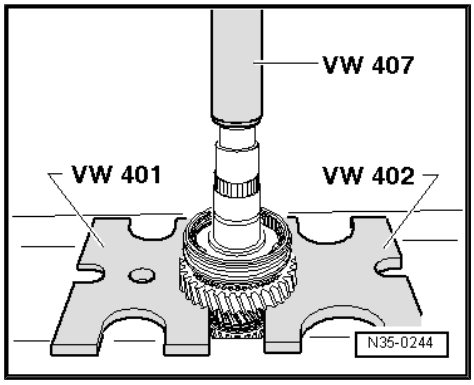


### Assemble the Output Shaft

**Note**

*Heat the inner races of the tapered roller bearing and synchronizer hub to approximately 100 °C (212 °F) with the -VAS6414- before installing. Press on as far as the stop so there is no axial play.*

### Checking the Inner Contact Surface for Wear on the 1st Gear Outer Ring, the 2nd Gear Outer Ring, and the 3rd Gear Outer Ring

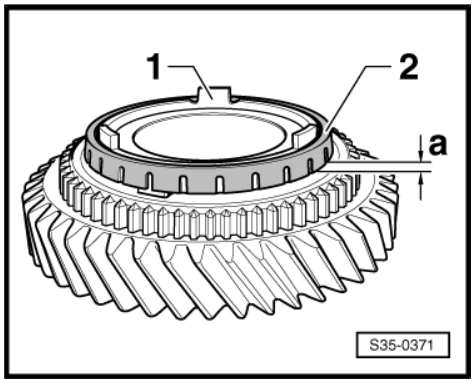


- Install the inner race -1- on the cone on the gear wheel.
- Install the outer race -2- on the cone on the inner race. Measure the gap -a- with a feeler gauge at 3 locations at 120°.
- Note the average value.

| Wear Limit Dimension -a- | |
|---|---|
| 1st gear, 2nd gear, and 3rd gear | 0.4 mm |

### Checking the Outer Contact Surface for Wear on the 1st Gear Outer Ring, the 2nd Gear Outer Ring, and the 3rd Gear Outer Ring

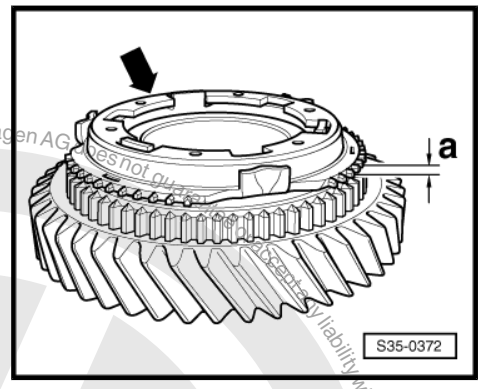


- Check the synchronizer ring -arrow- on the inner running surface for grooves and radial wear, and replace if necessary.
- Install the inner race, the outer race and the synchronizer ring on the cone on the inner race.
- Press on the synchronizer ring with the outer race and turn it evenly so that the synchronizer ring settles in.
- Measure the gap -a- with a feeler gauge at 3 locations at 120°.
- Note the average value.

| Wear Limit Dimension -a- | |
|---|---|
| 1st gear, 2nd gear, and 3rd gear | 0.8 mm |

- Install the 2nd gear wheel with the needle bearing.

Protected by copyright. Copying for private or commercial purposes, in part or in whole, is not permitted unless authorised by Volkswagen AG. Volkswagen AG does not guarantee or accept any liability with respect to the correctness of information in this document. Copyright by Volkswagen AG.

### Installing 2nd Gear Outer Race, Inner Race and Synchronizer Ring

– Place inner race -A- on drive gear for 2nd gear.

The tabs -1- face away from the gear wheel.

– Install the outer race -B-.

The tabs -2- engage in grooves -3- on the gear wheel.

– Install the synchronizer ring -C-.

The larger openings -4- lock in the tabs -1- on the inner race -A-.

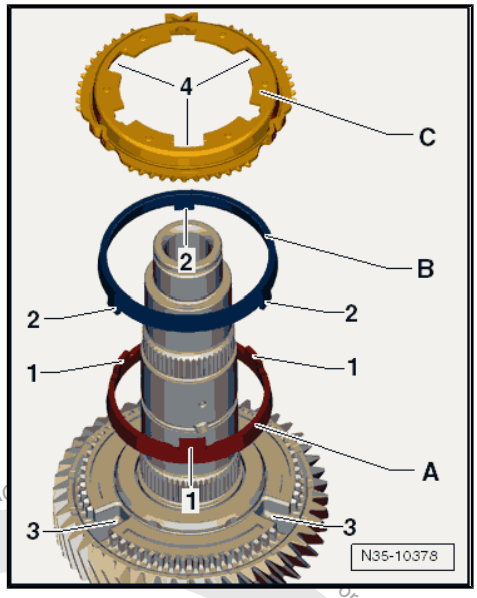


### Disassembling and Assembling the Locking Collar and the Synchronizer Hub for 1st, 2nd, 3rd and 4th Gears

1 - Spring

2 - Locking piece

3 - Locking collar

4 - Synchronizer hub

– Slide the locking collar over the synchronizer hub.

In 3rd and 4th gear, the wide collar on the synchronizer hub and the locking collar face in one direction.

The notches for the locking pieces on the synchronizer hub and locking collar must line up with each other.

### Assembling: Locking Collar/Synchronizer Hub for 1st, 2nd, 3rd and 4th Gears

The locking collar is pushed over the synchronizer hub.

– Install the locking pieces and springs offset by 120°. The angled end of the spring must engage into the hollow locking piece.

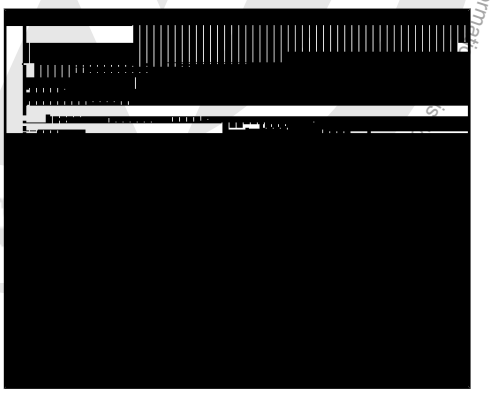

### Installed Position: Locking Collar/Synchronizer Hub for 1st and 2nd Gears

The identification groove -arrow 1- and the narrow collar -arrow 2- on the synchronizer hub face 1st gear.

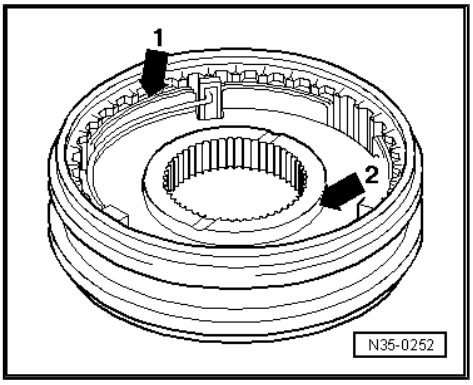


Protected by copyright. Copying for private or commercial purposes, in part or in whole, is not permitted unless authorised by Volkswagen AG. No liability is accepted with respect to the correctness of information.

**Warming and Installing the Locking Collar/Synchronizer Hub for 1st and 2nd Gears.**

The pins -A- on the synchronizer ring lock into the recesses -B- in the synchronizer hub.

– Install the locking ring.

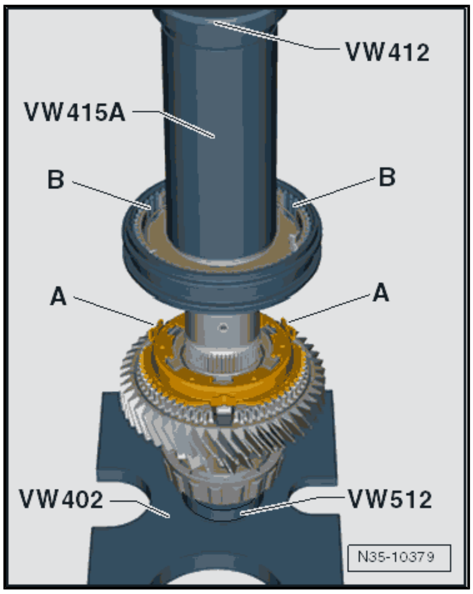


**Installing the Synchronizer Ring for 1st Gear Outer Race and Inner Race**

– Install the synchronizer ring -A- into the 1st and 2nd gear synchronizer hub.

The tabs -1- lock in the openings -2- in the synchronizer hub.

– Install the outer race -B- in the synchronizer ring.

The tabs -3- face away from the synchronizer ring.

– Install the inner race -C- in the outer race.

The tabs -4- lock in the larger openings -5- in the synchronizer ring -A-.

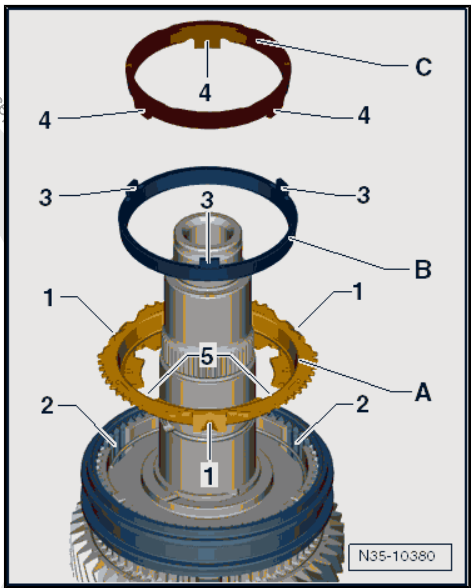


**Install 1st Gear Wheel with Needle Roller Bearing**

• The synchronizer ring -1- and the tabs -arrow A- are inside the openings in the synchronizer hub -2-.

The pins -arrows B- in the outer race lock in the recesses -arrows C- in the gear wheel -3-.

– Install the 1st and 4th gear thrust washers in the output shaft -Item 19- ⇒ Item 19 (page 165) and -Item 20- ⇒ Item 20 (page 165) .

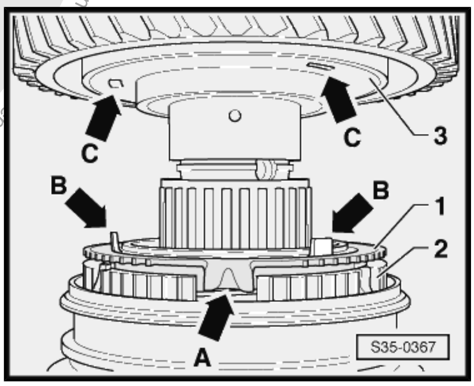


Protected by copyright. Copying for private or commercial purposes, in part or in whole, is not permitted unless authorised by Volkswagen AG. Volkswagen AG does not guarantee or accept any liability with respect to the correctness of information in this document. Copyright by Volkswagen AG.

Protected by copyright. Copying for private or commercial purposes, in part or in whole, is not permitted unless authorised by Volkswagen AG. Volkswagen AG does not guarantee or accept any

**On Transmissions with Reinforcement Measures, Install Collar Bushing -A- to Stop.**

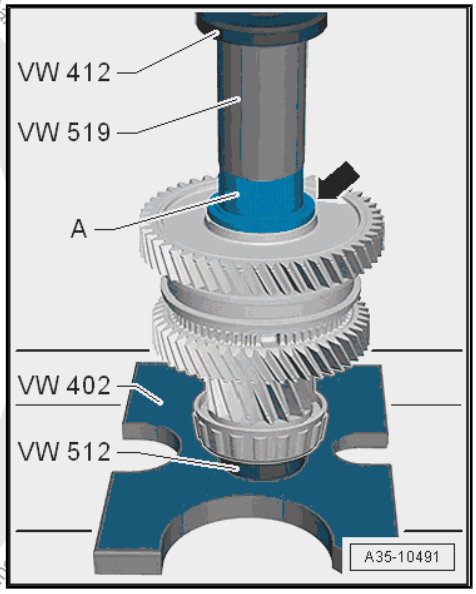


**Note**

*Allocate transmission via code letters:*

- Installation position of the collared sleeve -A-: The collar -arrow- points to the 1st gear wheel.

– Then install the 4th gear wheel with needle bearing.

**Checking the 4th Gear Synchronizer Ring for Wear**

| -A- = Brass Synchronizer Ring | | |
|---|---|---|
| **Gap Dimension -a-** | **Installation Dimension** | **Wear Limit** |
| 4th Gear | 1.0 to 1.7 mm | 0.5 mm |

| -B- = Steel Synchronizer Ring | | |
|---|---|---|
| **Gap Dimension -a-** | **Installation Dimension** | **Wear Limit** |
| 4th Gear | 1.3 to 2.4 mm | 0.8 mm |

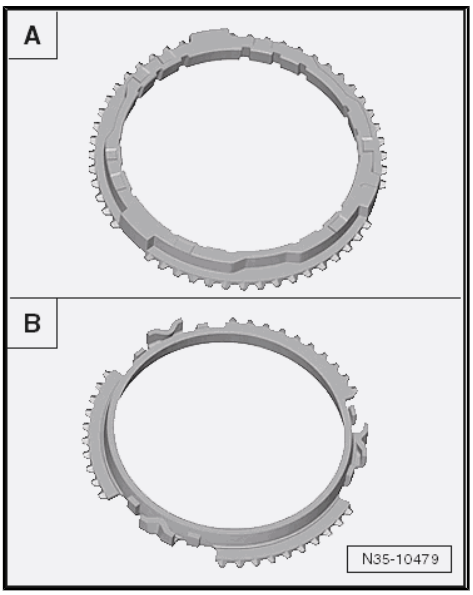


– Press synchronizer ring onto taper of the gear wheel and measure gap dimension -a- using a feeler gauge.

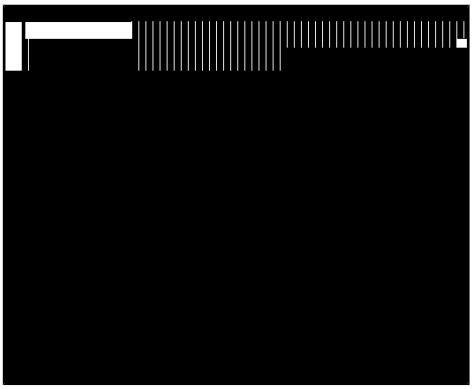

### Installed Position: Locking Collar/Synchronizer Hub for 3rd and 4th Gears

The wider collar on the synchronizer hub -arrow- faces 3rd gear.

– Place the synchronizer ring for 4th gear on the 4th gear wheel.

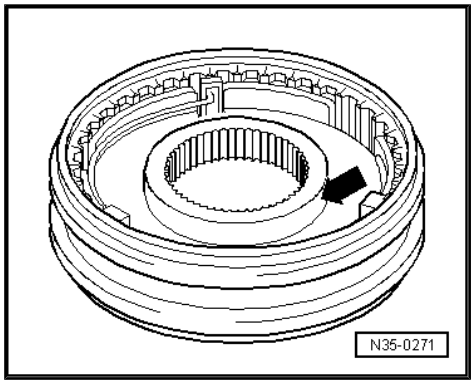


### Warming and Installing the Synchronizer Hub with Locking Collar for 3rd and 4th Gears

– Turn the 4th gear synchronizer ring so that the grooves line up with the locking pieces.

– Install the locking ring.

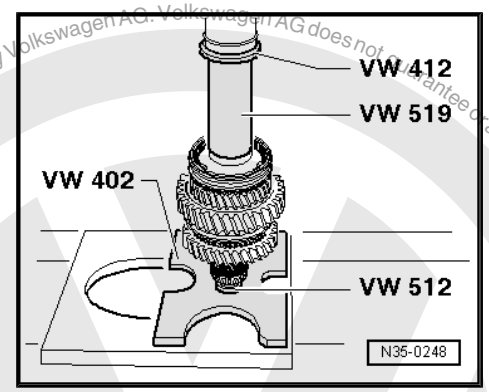


### Installing the 3rd Gear Synchronizer Ring, Outer Ring and Inner Ring

– Install the synchronizer ring -A- into the 3rd and 4th gear synchronizer hub.

The tabs -1- lock in the openings -2- in the synchronizer hub.

– Install the outer race -B- in the synchronizer ring.

The tabs -3- face away from the synchronizer ring.

– Install the inner race -C- in the outer race.

The tabs -4- lock in the larger openings -5- in the synchronizer ring -A-.

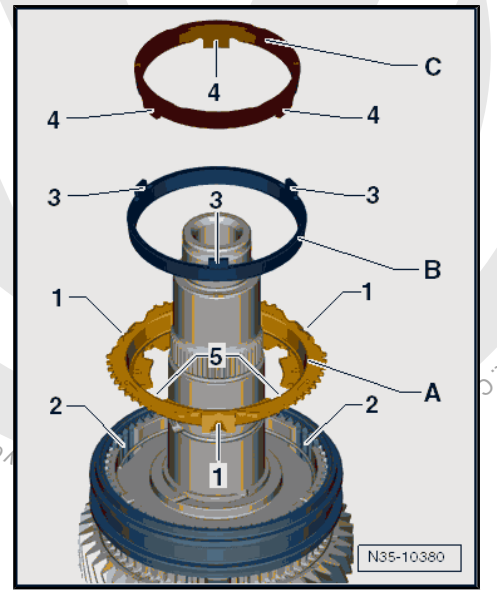


Copyright. Copying for private or commercial purposes, in part or in whole, is not permitted unless authorised by Volkswagen AG. Volkswagen AG does not guarantee or accept any liability with respect to the correctness of information in this document.

### Installing the 3rd Gear Wheel with Needle Bearing

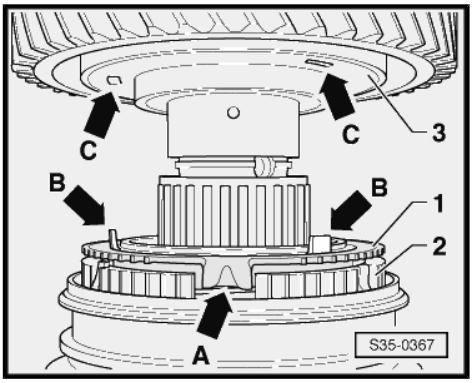


- The synchronizer ring -1- and the tabs -arrow A- are inside the openings in the synchronizer hub -2-.

The pins -arrows B- in the outer race lock in the recesses -arrows C- in the gear wheel -3-.

**Note**

- *Pressing on inner race/tapered roller bearing. Refer to* *⇒ Fig. ""Installing the Inner Race/Tapered Roller Bearing on the side of the Transmission Housing"", page 174* .
- *Selecting the locking ring for the inner race/tapered roller bearing. Refer to* *⇒ Fig. ""Selecting the Locking Ring"", page 174* .

Protected by copyright. Copying for private or commercial purposes, in part or in whole, is not permitted unless authorised by Volkswagen AG. Volkswagen AG does not guarantee or accept any liability with respect to the correctness of information in this document. Copyright by Volkswagen AG.

## 2.2.2 Output Shaft, 5th, 6th and Reverse Gears, Disassembling and Assembling

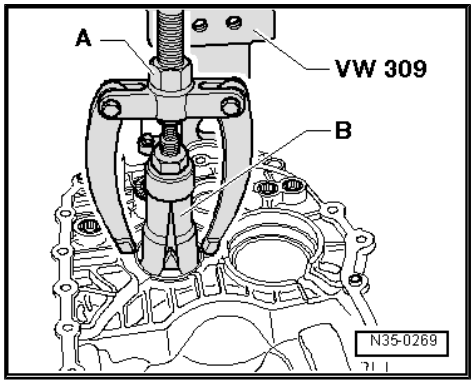


**Special tools and workshop equipment required**

- Press Plate - VW401-
- Press Plate - VW402-
- Press Piece - Rod - VW407-
- Press Piece - Rod - VW408A-
- Press Piece - Multiple Use - VW412-
- Press Piece - 60mm - VW415A-
- Holding Plate - VW309A-
- Transmission Support - VW353-
- Press Piece - Multiple Use - VW433-
- Press Piece - Multiple Use - VW454-
- Support Channels - VW457-
- Crankshaft Holding Fixture - VW801-
- Press Piece - Multiple Use - VW431-
- Press Piece - Multiple Use - VW455-
- Press Piece - Multiple Use - VW510-
- Press Piece - 42mm - VW516-
- Press Piece - Multiple Use - VW519-
- Press Piece - Multiple Use - 30-11-
- Press Piece - Multiple Use - 40-105-
- Bearing Installer - Multiple Use - 40-20-
- Slide Hammer - Press Plate - 2050-
- Press Piece - Reverse Gear Syncro - 3296-
- Puller - Taper Roller Bearing - VAG1582-
- Puller - Taper Roller Bearing - Adapter 4 - VAG1582/4-
- Puller - Taper Roller Bearing - Adapter 7 - VAG1582/7-
- Inductive Heater - VAS6414-
- -1- Puller - Kukko Internal - 46-56mm - 21/7-
- -3- Puller - Kukko Quick Action Separating Tool - 22-115mm - 17/2-
- -4- Puller - Kukko Counterstay - 22/2-

**Removing the Outer Race/Tapered Roller Bearing from the Clutch Housing**

A - Counter Support , for example, -22/2-

B - Internal Puller 46 to 58 mm , for example, -21/7-

**Note**

*Check the washer for damage after removing it and replace if necessary.*

Protected by copyright. Copying for private or commercial purposes, in part or in whole is not permitted unless authorised by Volkswagen AG. Volkswagen AG does not guarantee or accept any liability with respect to the correctness of information in this document. Copyright by Volkswagen AG.

### Installing the Outer Race/Tapered Roller Bearing in the Clutch Housing

– Place the washer under the outer race.

– Support the clutch housing with the -40-20- directly under the bearing mount.

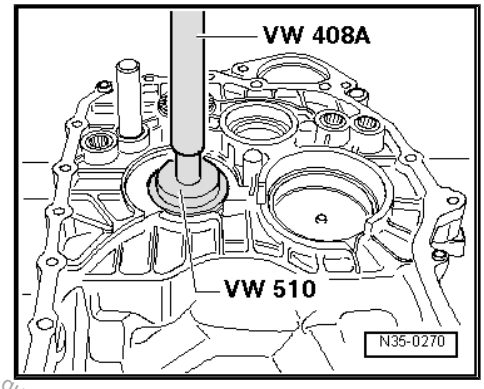


### Removing the Outer Race/Tapered Roller Bearing from the Transmission Housing

A - Counter Support , for example, -22/2-

B - Internal Puller 46 to 58 mm , for example, -Kukko 21/7-

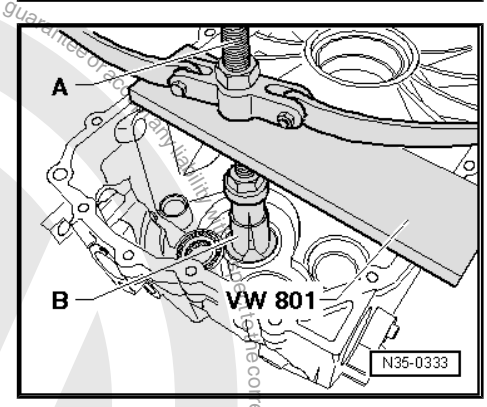


### Installing the Outer Race/Tapered Roller Bearing into the Transmission Housing.

– Support the transmission housing under the bearing mount using the -2050- .

### Disassembling the Output Shaft

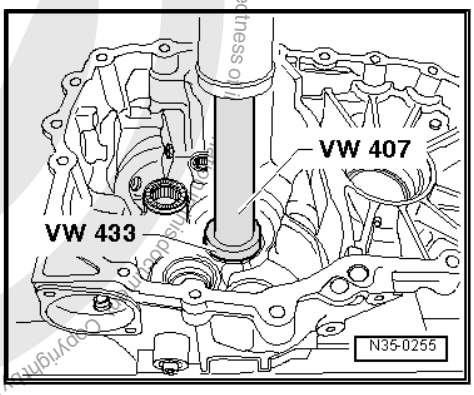


### Remove the Inner Race/Tapered Roller Bearing on the side of the Transmission Housing

Note the following before installing the -VAG1582- :

– Remove the inner race/tapered roller bearing locking ring on the side facing the transmission housing.

– Place the - VW431- and - 40-105- on the output shaft.

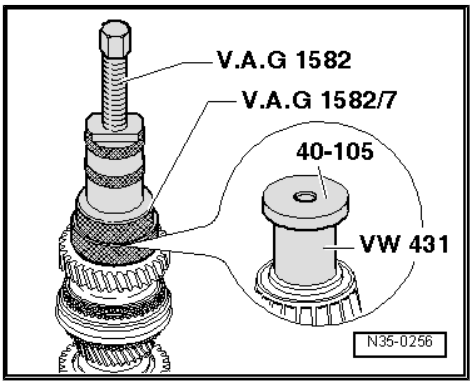


Copyright by Volkswagen AG. Volkswagen AG does not guarantee or accept any liability with respect to the correctness of information in this document. Copyright by Volkswagen AG. Distribution, in part or in whole, is not permitted unless authorised by Volkswagen AG. Volkswagen AG does not guarantee or accept any liability with respect to the correctness of information in this document. Copyright by Volkswagen AG.

### Removing the 5th and 6th Gear Synchronizer Hub/Locking Collar with the 6th Gear Wheel

– Remove the locking ring beforehand.

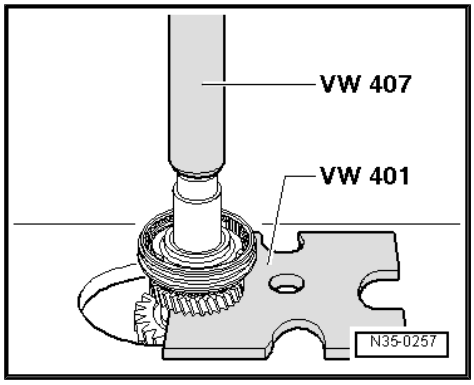


### Removing the Sleeve -A- together with the Reverse Gear Wheel

– Remove the locking ring beforehand.

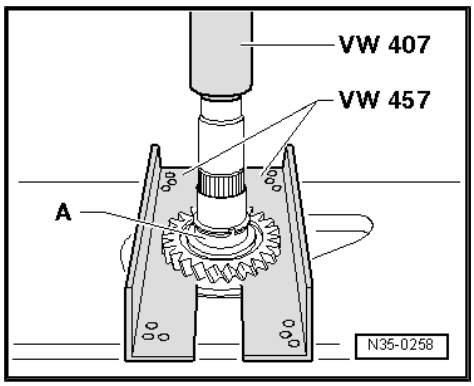


### Removing the Reverse Gear Synchronizer Hub

– Remove the locking ring beforehand.

A - Separating Tool 22-115mm , for example, -17/2-

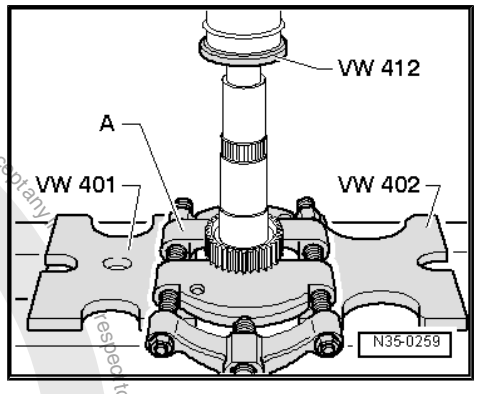


### Removing the Inner Race/Tapered Roller Bearing on the Side of the Clutch Housing.

– Mount the -30-11- on the output shaft before removing the puller.

### Assemble the Output Shaft

**Note**

*Heat the inner races of the tapered roller bearing and synchronizer hub to approximately 100 °C (212 °F) with the -VAS6414- before installing. Press on as far as the stop so there is no axial play.*

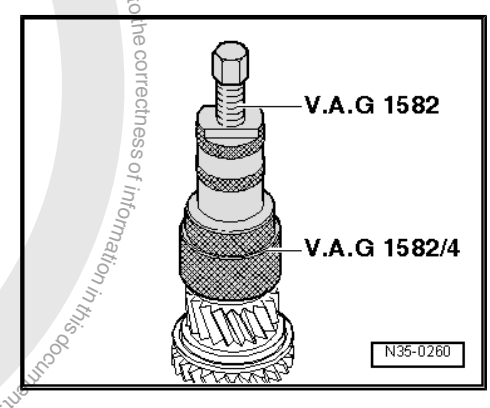


Protected by copyright. Copyright by Volkswagen AG.

### Installed Position: Reverse Gear Synchronizer Hub

- The stop -arrow A- on the reverse gear locking collar faces the splines on the output shaft -arrow B-.

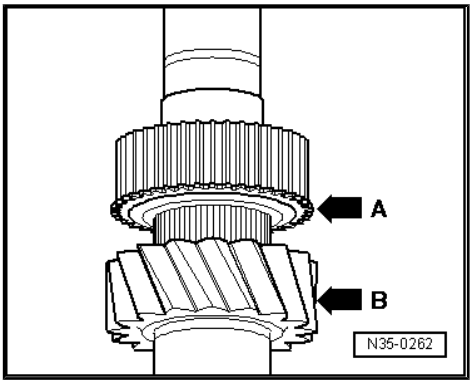


### Warming and Installing the Reverse Gear Synchronizer Hub

– Install the locking ring.

– Mount the reverse gear locking collar on the reverse gear synchronizer hub.

– Install the reverse gear wheel and the needle bearing.

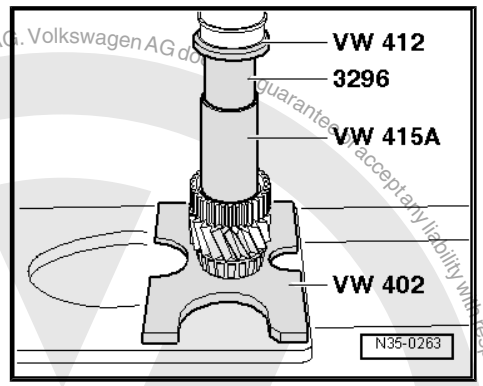


### Installing the Sleeve -A-

- Installed position: wide collar points toward reverse gear selector gear.

– Install the locking ring.

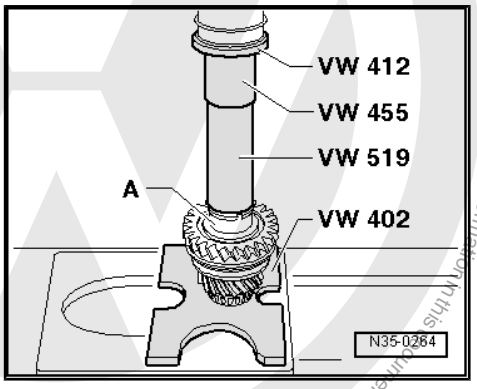


### Checking 5th and 6th Gear Synchronizer Ring for Wear

| -A- = Brass Synchronizer Ring | | |
|---|---|---|
| Gap Dimension -a- | Installation Dimension | Wear Limit |
| 5th and 6th gear | 1.0 to 1.7 mm | 0.5 mm |

| -B- = Steel Synchronizer Ring | | |
|---|---|---|
| Gap Dimension -a- | Installation Dimension | Wear Limit |
| 5th and 6th gear | 1.2 to 2.1 mm | 0.8 mm |

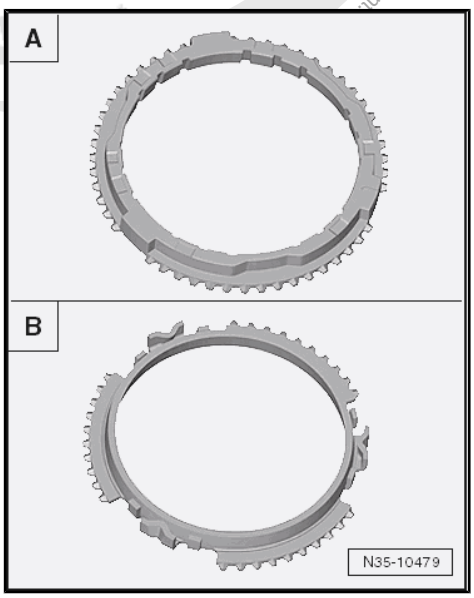


Protected by copyright. Copying for private or commercial purposes, in part or in whole, is not permitted unless authorised by Volkswagen AG. Volkswagen AG does not guarantee or accept any liability with respect to the correctness of information in this document.

Protected by copyright. Copying for private or commercial purposes, in part or in whole, is not permitted unless authorised by Volkswagen AG. Volkswagen AG does not guarantee or accept any liability with respect to the correctness of information.

– Press synchronizer ring onto taper of the gear wheel and measure gap dimension -a- using a feeler gauge.

### Disassembling and Assembling Locking Collar and Synchronizer Hub for 5th and 6th Gears

To disassemble, remove the springs -1-.

1 - Spring

2 - Locking piece

3 - Locking collar

4 - Synchronizer hub

– Slide the locking collar over the synchronizer hub.

• Installed position: The narrow locking piece recesses in the synchronizer hub align with the recesses in the locking collar.

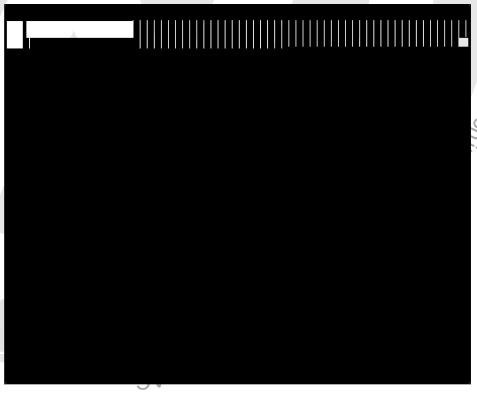

### Assembling Locking Collar/Synchronizer Hub for 5th and 6th Gears

• The locking collar is pushed over the synchronizer hub.

– Install the locking pieces and springs offset by 120°.

• The angled end of the spring must engage into the hollow locking piece.

– Install the 6th gear wheel with needle bearing.

– Install the 6th gear synchronizer ring.

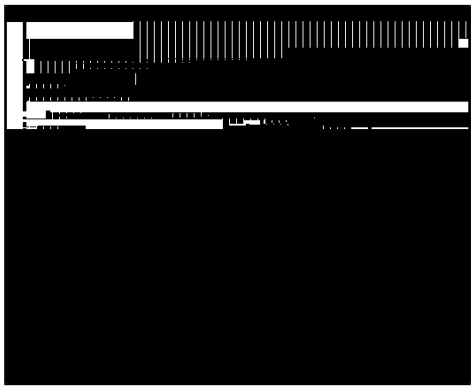

### Installing the Locking Collar/Synchronizer Hub for 5th and 6th Gears

On some locking collars, there is a chamfer on the outer diameter.

Installed position: The chamfer on the outer diameter of the locking collar faces toward the 5th gear selector gear

– Turn the synchronizer ring so that the grooves line up with the locking pieces.

– Install the locking ring.

– Install the 5th gear synchronizer ring.

– Install 5th gear wheel with needle bearing.

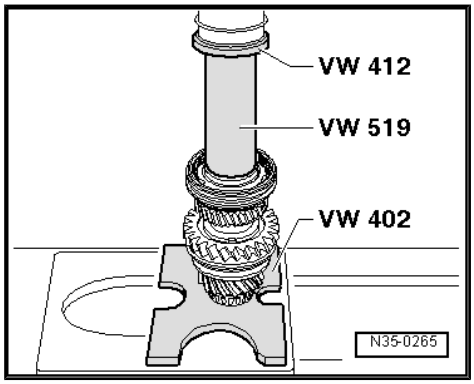

**Installing the Inner Race/Tapered Roller Bearing on the side of the Transmission Housing**

– Choose the correct locking ring. Refer to ⇒ Fig. ""Selecting the Locking Ring"" , page 187 and install.

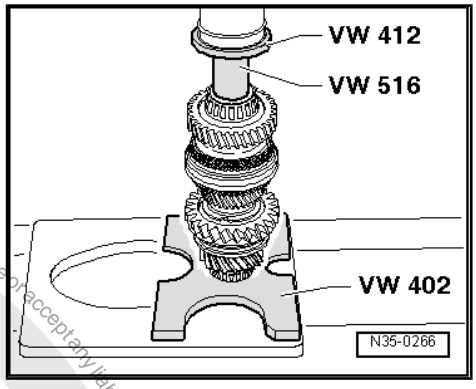


**Selecting the Locking Ring**

– Choose and install the thickest locking ring that will fit.

– Select the locking ring according to the Table. For the correct part number. Refer to the Parts Catalog.

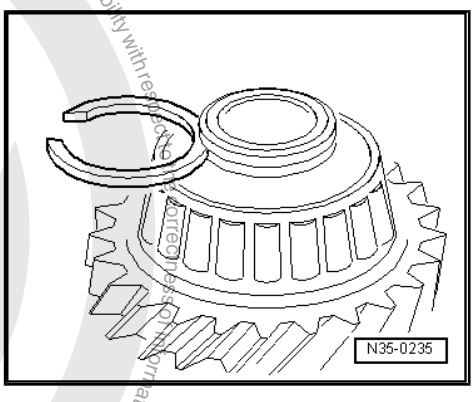


**Available Locking Rings**

| Thickness (mm) | | |
|---|---|---|
| 1.79 | 1.89 | 1.98 |
| 1.83 | 1.92 | |
| 1.86 | 1.95 | |

**Installing the Inner Race/Tapered Roller Bearing on the side of the Clutch Housing**

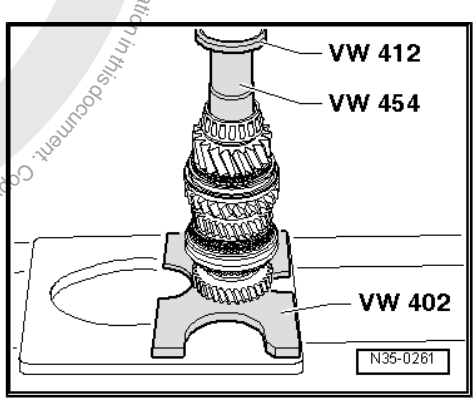


Protected by copyright. Copying for private or commercial purposes, in part or whole is not permitted unless authorised by Volkswagen AG. Volkswagen AG does not guarantee or accept any liability with respect to the correctness of information in this document. Copyright by Volkswagen AG.

## 2.3 Output Shaft, Adjusting

⇒ "2.3.1 Output Shaft, Adjusting, 1st through 4th Gear", page 187

⇒ "2.3.2 Output Shaft, 5th, 6th and Reverse Gears, Adjusting", page 190

### 2.3.1 Output Shaft, Adjusting, 1st through 4th Gear

**Special tools and workshop equipment required**

- Transmission Support - VW353-
- Dial Gauge Holder - VW387-
- Press Piece - Rod - VW407-
- Press Piece - Multiple Use - VW433-
- Seal Installer - Stator - VW792-
- Crankshaft Holding Fixture - VW801-
- Holding Plate - VW309A-

- Slide Hammer - Press Plate - 2050-
- Torque Wrench 1331 5-50Nm - VAG1331-
- Puller - Kukko Internal - 46-56mm - 21/07-
- Puller - Kukko Counterstay - 22/2-
- Dial Indicator - VAS6080A-

(Selecting the correct adjusting shim for the output shaft)

It is necessary to adjust the output shaft if the following components were replaced:

- Transmission Housing
- Clutch Housing
- Output shaft, 1st to 4th gears or
- Output shaft tapered roller bearing

Adjustment overview. Refer to
⇒ “3 Adjustment Overview”, page 221 .

**Requirements:**

- Remove any sealant still on the sealing surfaces on the clutch and transmission housings.
- Install the output shaft that is going to be measured.

– Install the tapered roller bearing outer race in the transmission housing with a 1.70 mm shim. Support transmission housing directly beneath bearing mount using -2050- .

– Install the output shaft for 1st through 4th gears into the clutch housing.

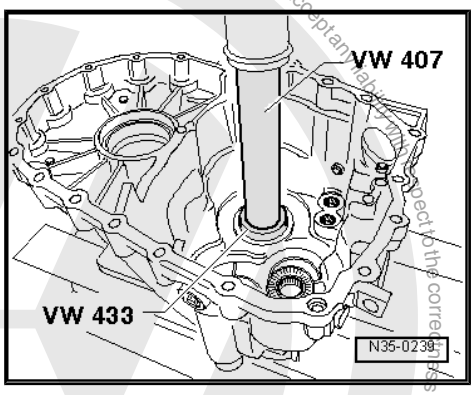


– Install the transmission housing and tighten the bolts -A and B- diagonally.

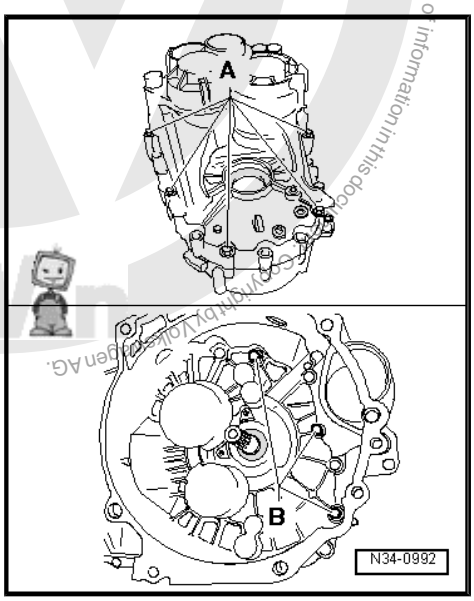


Protected by copyright. Copying for private or commercial purposes, in part or in whole, is not permitted unless authorised by Volkswagen AG. Volkswagen AG does not guarantee or accept any liability with respect to the correctness of information in this document. Copyright by Volkswagen AG.

– Position the measuring tools on the clutch housing and secure them with a bolt -arrow-.

– Set the dial gauge (3 mm range) with 1 mm preload to “0”.

– Loosen securing bolts for clutch housing/transmission housing in diagonal sequence until bolts clear transmission housing and output shaft.

– Read measured value on dial indicator and note (example: 0.14 mm).

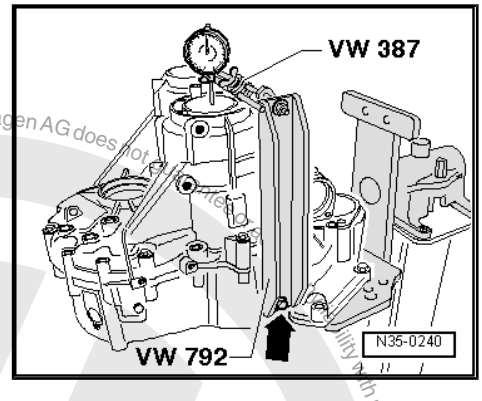


**Note**

- *The measured value will not be displayed when loosening the bolts that connect the clutch housing to the transmission housing.*
- *Install a 1.95 mm shim or, if necessary, a 2.20 mm shim in place of the 1.70 mm shim for measuring.*
- *For the correct adjusting shim. Refer to the Parts Catalog.*

### Determining the Shim

The required bearing tension is reached as follows:

The specified bearing pre-load is reached when determined measured value (0.14 mm) is subtracted from inserted adjustment shim (1.70 mm).

A constant figure of (0.20 mm) is added to the reading.

**Example:**

| | |
|---|---|
| Inserted shim | 1.70 mm |
| - Measured value | 0.14 mm |
| + Preload (constant value) | 0.20 mm |
| = Shim thickness | 1.76 mm |

– Select the correct shim thickness according to the Table. Refer to ⇒ page 189 .

– Remove the transmission housing and remove the tapered roller bearing outer race from the transmission housing.

A - Counter Support , for example, -22/2-

B - Internal Puller 46 to 58 mm , for example, -21/7-

– Remove the inserted shim (1.70 mm) from the transmission housing.

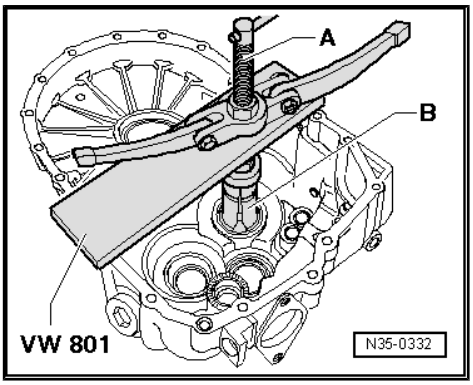


### Shim Table

| | Thickness (mm) | |
|---|---|---|
| 1.45 | 1.75 | 2.05 |
| 1.50 | 1.80 | 2.10 |
| 1.55 | 1.85 | 2.15 |
| 1.60 | 1.90 | 2.20 |
| 1.65 | 1.95 | 2.25 |
| 1.70 | 2.00 | |

Tolerance variations make it possible to find the exact shim thickness required.

– For the correct part number. Refer to the Parts Catalog.

Protected by copyright. Copying for private or commercial purposes, in any form or in any way is not permitted unless authorised by Volkswagen AG. Volkswagen AG does not guarantee or accept any liability with respect to the correctness of information in this document. Copyright by Volkswagen AG.

– Install the outer race/tapered roller bearing with the selected shim (in the example: 1.75 mm). Support transmission housing directly beneath bearing mount using -2050- .

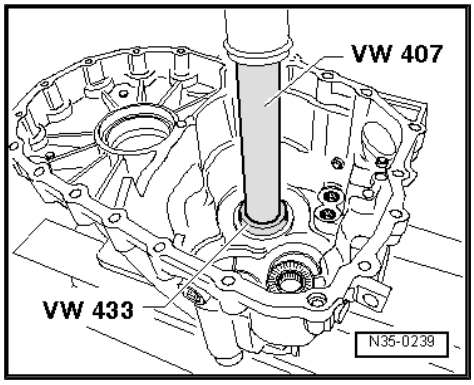


**Checking Measurement**

- The selected adjusting shim is installed.

– Position the measuring tools on the clutch housing and secure them with a bolt -arrow-.

– Set the dial gauge (3 mm range) with 1 mm preload to “0”.

– Loosen securing bolts for clutch housing/transmission housing in diagonal sequence until bolts clear transmission housing and output shaft.

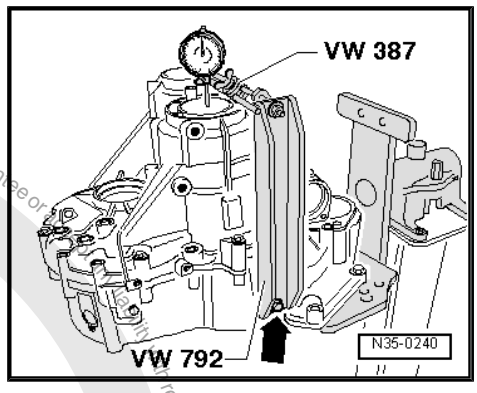


- For correctly selected adjustment shim, dial gauge must now display a value of 0.15 mm to 0.25 mm.

**Tightening Specifications**

♦ Refer to
⇒ “5.3 Overview - Transmission Housing and Selector Mechanism”, page 111 .

## 2.3.2 Output Shaft, 5th, 6th and Reverse Gears, Adjusting

**Special tools and workshop equipment required**

♦ Transmission Support - VW353-

♦ Dial Gauge Holder - VW387-

♦ Press Piece - Rod - VW407-

♦ Press Piece - Multiple Use - VW433-

♦ Seal Installer - Stator - VW792-

♦ Crankshaft Holding Fixture - VW801-

♦ Holding Plate - VW309A-

♦ Slide Hammer - Press Plate - 2050-

♦ Torque Wrench 1331 5-50Nm - VAG1331-

♦ Puller - Kukko Internal - 46-56mm - 21/07-

♦ Puller - Kukko Counterstay - 22/2-

♦ Dial Indicator - VAS6080A-

It is necessary to adjust the output shaft if the following components were replaced:

♦ Transmission Housing

♦ Clutch Housing

♦ Output shaft, 5th, 6th and Reverse Gears or

♦ Output shaft tapered roller bearing

Adjustment Overview. Refer to
⇒ “3 Adjustment Overview”, page 221 .

Copyright by Volkswagen AG. Volkswagen AG does not guarantee or assume any liability with respect to the correctness of information in this document. Copyright by Volkswagen AG. Reproduced by VerWin. Copyright by Volkswagen AG. Copies, in part or in whole, are not permitted unless authorized by Volkswagen AG.

Requirements

- Remove any sealant still on the sealing surfaces on the clutch and transmission housings.
- Install the output shaft that is going to be measured.

– Install the tapered roller bearing outer race in the transmission housing with a 1.70 mm shim. Support transmission housing directly beneath bearing mount using -2050- .

– Install the output shaft for 5th/6th gears and reverse gear into the clutch housing.

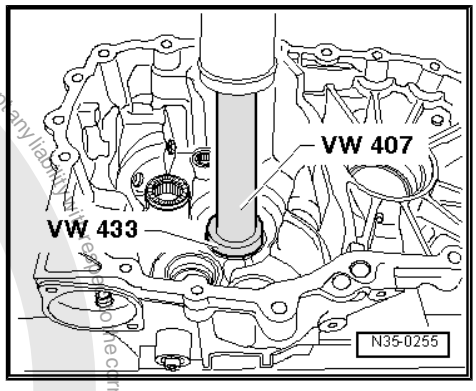


– Install the transmission housing and tighten the bolts -A and B- diagonally.

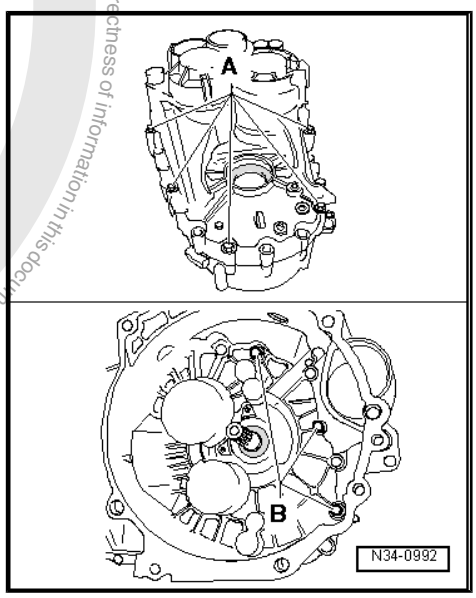


Protected by copyright. Copying for private or commercial purposes, in part or in whole, is not permitted unless authorised by Volkswagen AG. Volkswagen AG does not guarantee or accept any liability with respect to the correctness of information in this document. Copyright by Volkswagen AG.

– Attach the measuring tools to the clutch housing.

In the case of protruding housing edges:

– Place washers (total thickness: 8 mm) under the -VW792- -arrow-.

– Set the dial gauge (3 mm range) with 1 mm preload to “0”.

– Loosen securing bolts for clutch housing/transmission housing in diagonal sequence until bolts clear transmission housing and output shaft.

– Read measured value on dial indicator and note (example: 0.25 mm).

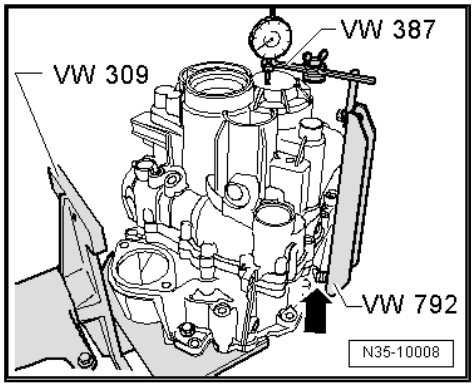


**Note**

- *The measured value will not be displayed when loosening the bolts that connect the clutch housing to the transmission housing.*
- *Install a 1.95 mm shim or, if necessary, a 2.20 mm shim in place of the 1.70 mm shim for measuring.*
- *For the correct adjusting shim. Refer to the Parts Catalog.*

Protected by copyright. Copying for private or commercial purposes, in part or in whole, is not permitted unless authorised by Volkswagen AG. Volkswagen AG does not guarantee or accept any liability with respect to the correctness of information in this document. Copyright by Volkswagen AG.

### Determining the Shim

The required bearing tension is reached as follows:

The specified bearing pre-load is reached when determined measured value (0.25 mm) is subtracted from inserted shim (1.70 mm).

A constant figure of (0.20 mm) is added to the reading.

### Example

| | |
|---|---|
| Inserted shim | 1.70 mm |
| - measured value | 0.25mm |
| + Preload (constant value) | 0.20 mm |
| = Shim thickness | 1.65 mm |

– Select the correct shim thickness according to the table. Refer to ⇒ page 193 .

– Remove the transmission housing and remove the tapered roller bearing outer race from the transmission housing.

A - Counter Support , for example, -22/2-

B - Internal Puller 46 to 58 mm , for example, -21/7-

– Remove the inserted shim (1.70 mm) from the transmission housing.

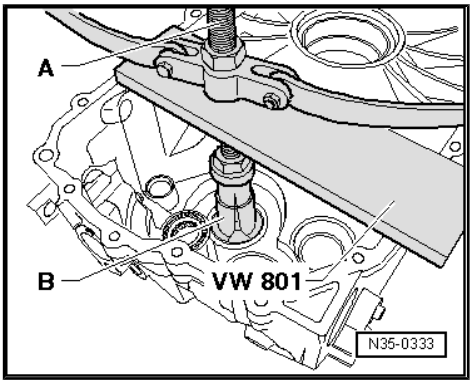


### Shim Table

| Thickness (mm) | | |
|---|---|---|
| 1.50 | 1.80 | 2.10 |
| 1.55 | 1.85 | 2.15 |
| 1.60 | 1.90 | 2.20 |
| 1.65 | 1.95 | 2.25 |
| 1.70 | 2.00 | |
| 1.75 | 2.05 | |

– For the correct part numbers. Refer to the Parts Catalog.

Tolerance variations make it possible to find the exact shim thickness required.

– Install the outer race/tapered roller bearing with the selected shim (in the example: 1.65 mm) Support transmission housing directly beneath bearing mount using -2050- .

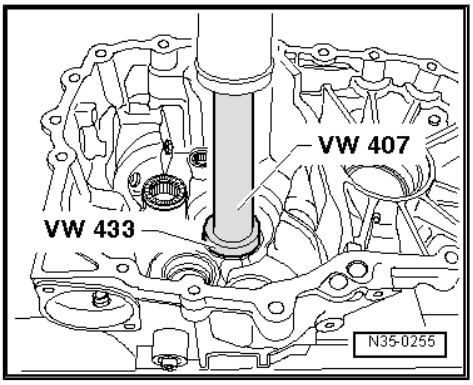


### Checking Measurement

- The selected adjusting shim is installed.

Protected by copyright. Copying for private or commercial purposes, in part or in whole, is not permitted unless authorised by Volkswagen AG. Volkswagen AG does not guarantee or accept any liability with respect to the correctness of information in this document. Copyright by Volkswagen AG.

– Attach the measuring tools to the clutch housing.

In the case of protruding housing edges:

– Place washers (total thickness: 8 mm) under the -VW792- -arrow-.

– Set the dial gauge (3 mm range) with 1 mm preload to “0”.

– Loosen securing bolts for clutch housing/transmission housing in diagonal sequence until bolts clear transmission housing and output shaft.

- For correctly selected adjustment shim, dial gauge must now display a value of 0.15 mm to 0.25 mm.

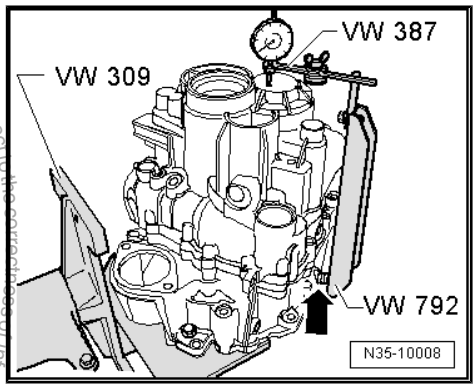


### Tightening Specifications

◆ Refer to
⇒ “5.3 Overview - Transmission Housing and Selector Mechanism”, page 111 .

# 3 Special Tools

**Special tools and workshop equipment required**

- Press Plate - VW401-
- Press Plate - VW402-
- Press Piece - Rod - VW407-
- Press Piece - Rod - VW408A-
- Press Piece - Multiple Use - VW412-
- Press Piece - 60mm - VW415A-

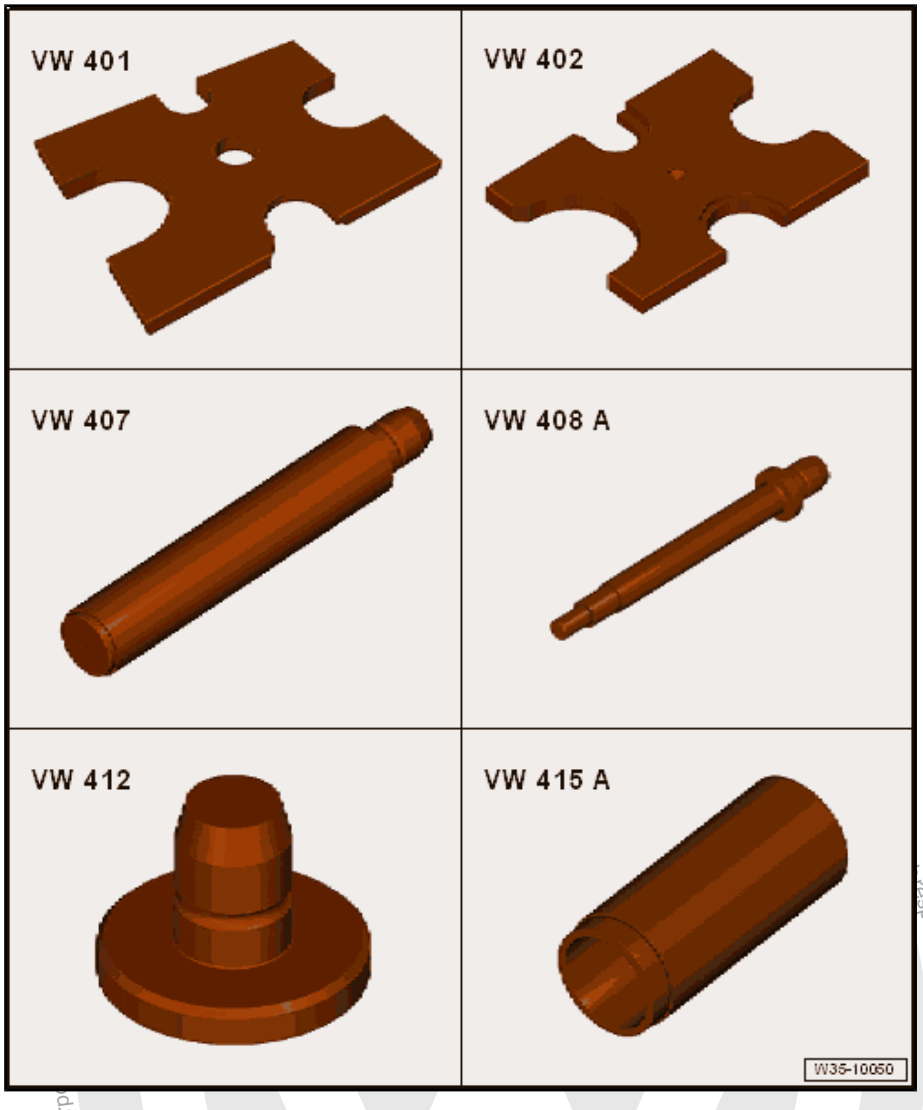


Protected by copyright. Copying for private or commercial purposes, in part or in whole, is not permitted unless authorised by Volkswagen AG. Volkswagen AG does not guarantee or accept any liability with respect to the correctness of information in this document. Copyright by Volkswagen AG.

- Holding Plate - VW309A-
- Transmission Support - VW353-
- Press Piece - Multiple Use - VW433-
- Press Piece - Multiple Use - VW454-
- Support Channels - VW457-
- Crankshaft Holding Fixture - VW801-

Protected by copyright. Copying for private or commercial purposes, in part or in whole, is not permitted unless auth
Copyright by Volkswagen AG. any liability with respect to the correctness of information in this document.

- Holding Plate - VW309A-
- Holding Fixture - VW313-
- Transmission Support - VW353-
- Press Piece - Multiple Use - VW431-
- Press Piece - Multiple Use - VW433-
- Press Piece - Multiple Use - VW454-

Protected by copyright. Copying for private or commercial purposes, in part or in whole, is not permitted unless authorised by Volkswagen AG. Copyright by Volkswagen AG. No liability for information in this document.

- Press Piece - Multiple Use - VW512-
- Press Piece - 42mm - VW516-
- Press Piece - Multiple Use - VW519-
- Slide Hammer Set - VW771-
- Crankshaft Holding Fixture - VW801-
- Press Piece - Multiple Use - 40-105-

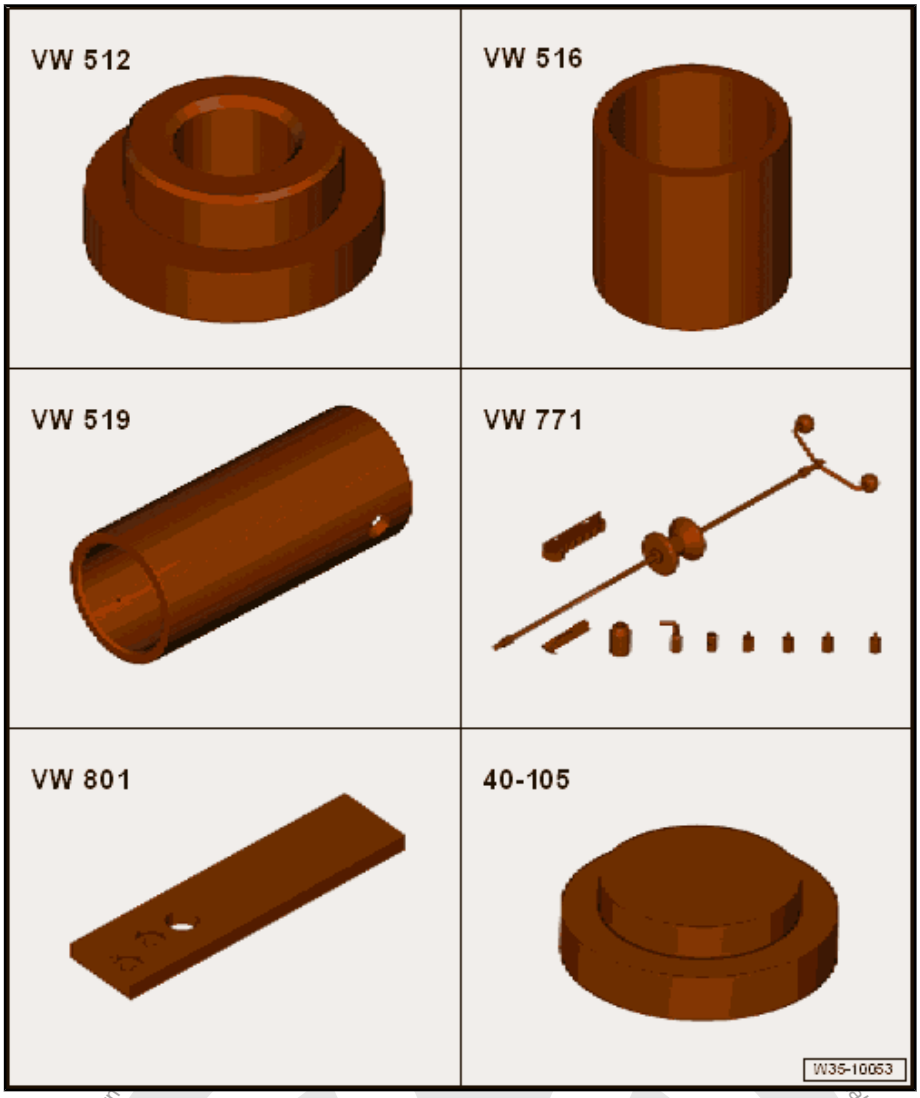


Protected by copyright. Copyright by Volkswagen AG. Copying for private or commercial purposes, in part or in whole, is not permitted. Liability with respect to the correctness of information in this document.

- Transmission Support - VW353-
- Dial Gauge Holder - VW387-
- Press Piece - Rod - VW407-
- Press Piece - Multiple Use - VW433-
- Seal Installer - Stator - VW792-
- Crankshaft Holding Fixture - VW801-

Protected by copyright. Copying for private or commercial purposes, in part or in whole, is not per
the correctness of information in this document. Copyright by Volkswagen AG.

- Press Piece - Multiple Use - VW431-
- Press Piece - Multiple Use - VW455-
- Press Piece - Multiple Use - VW510-
- Press Piece - 42mm - VW516-
- Press Piece - Multiple Use - VW519-
- Press Piece - Multiple Use - 30-11-

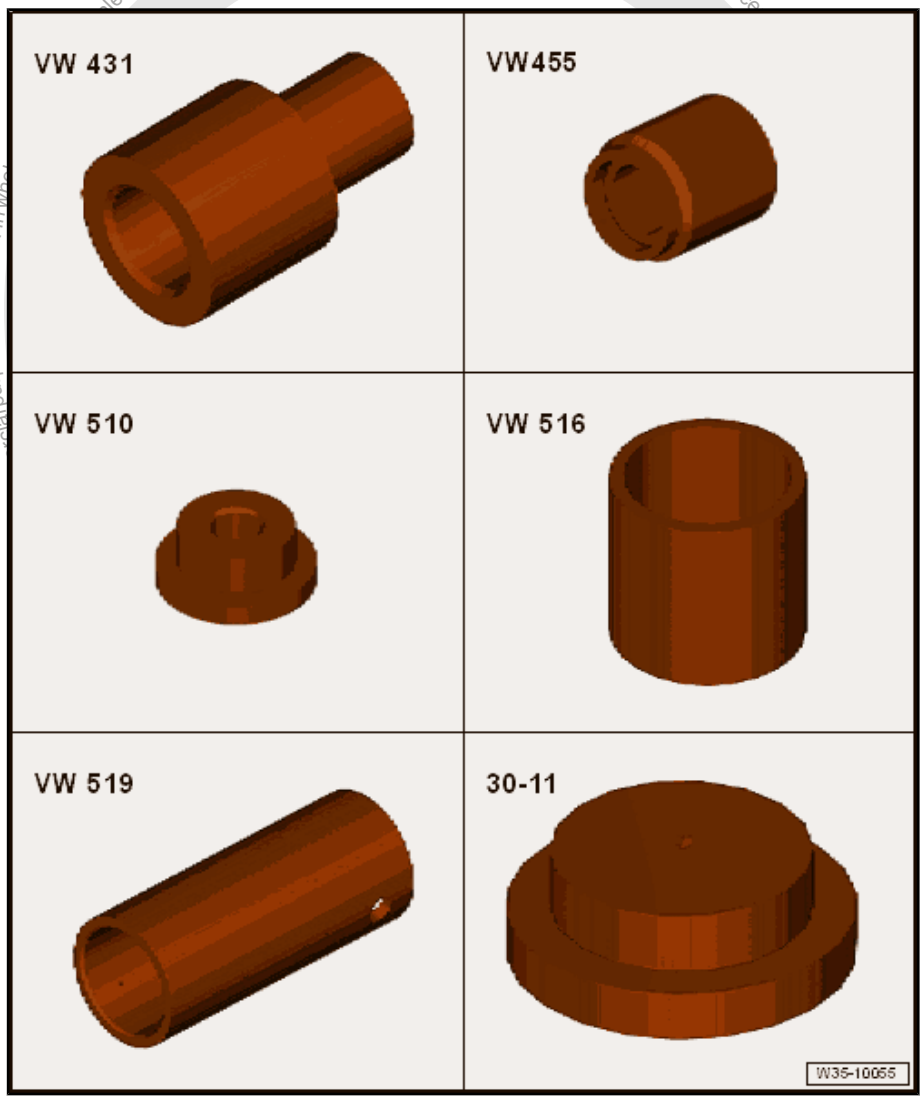

authorised by Volkswagen AG. Volkswagen AG does not guarantee or accept any liability with respect to the correctness of information in this document.

- Holding Plate - VW 09A-
- Slide Hammer - Press Plate - 2050-
- Torque Wrench 1331 5-50Nm - VAG1331-
- -1- Internal Puller - VAS251615-
- -4- Counter Support - VAS251623-

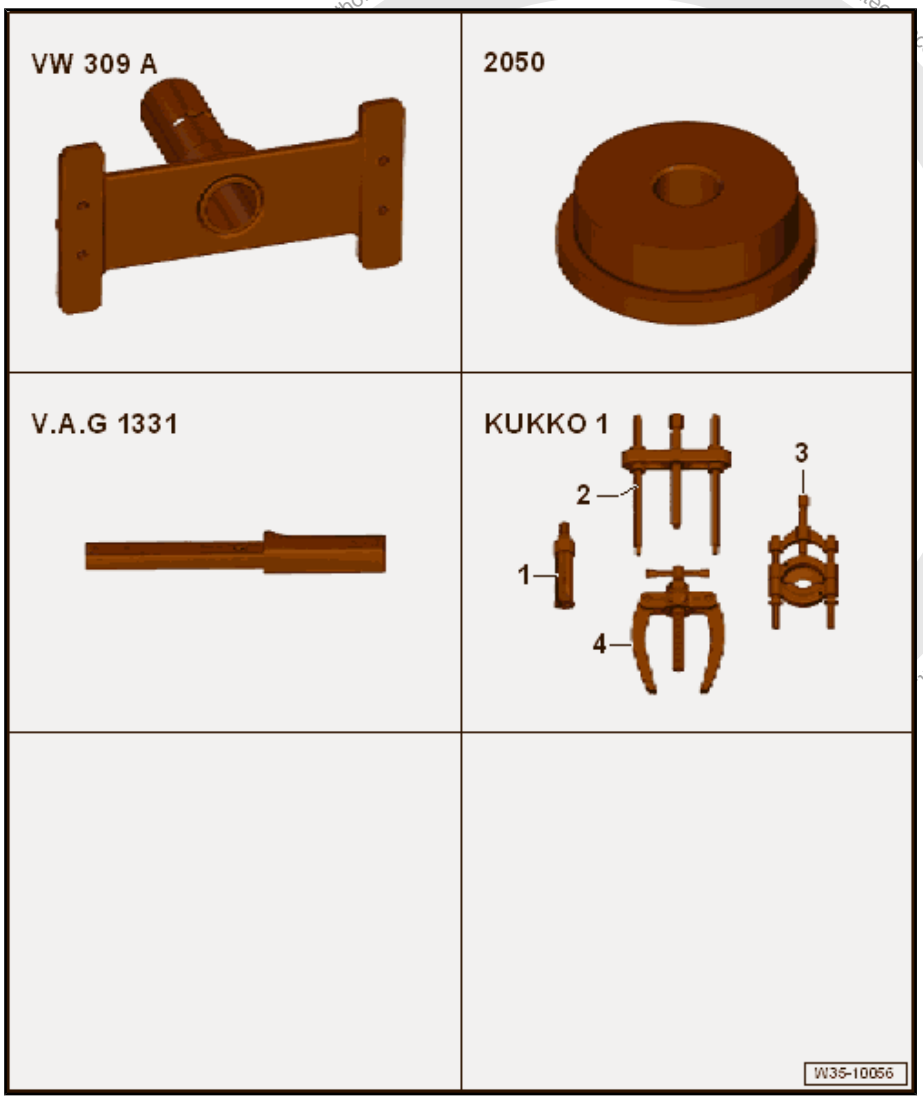

- Transmission Support - VW353-
- Dial Gauge Holder - VW387-
- Press Piece - Rod - VW407-
- Press Piece - Multiple Use - VW433-
- Seal Installer - Stator - VW792-
- Crankshaft Holding Fixture - VW801-

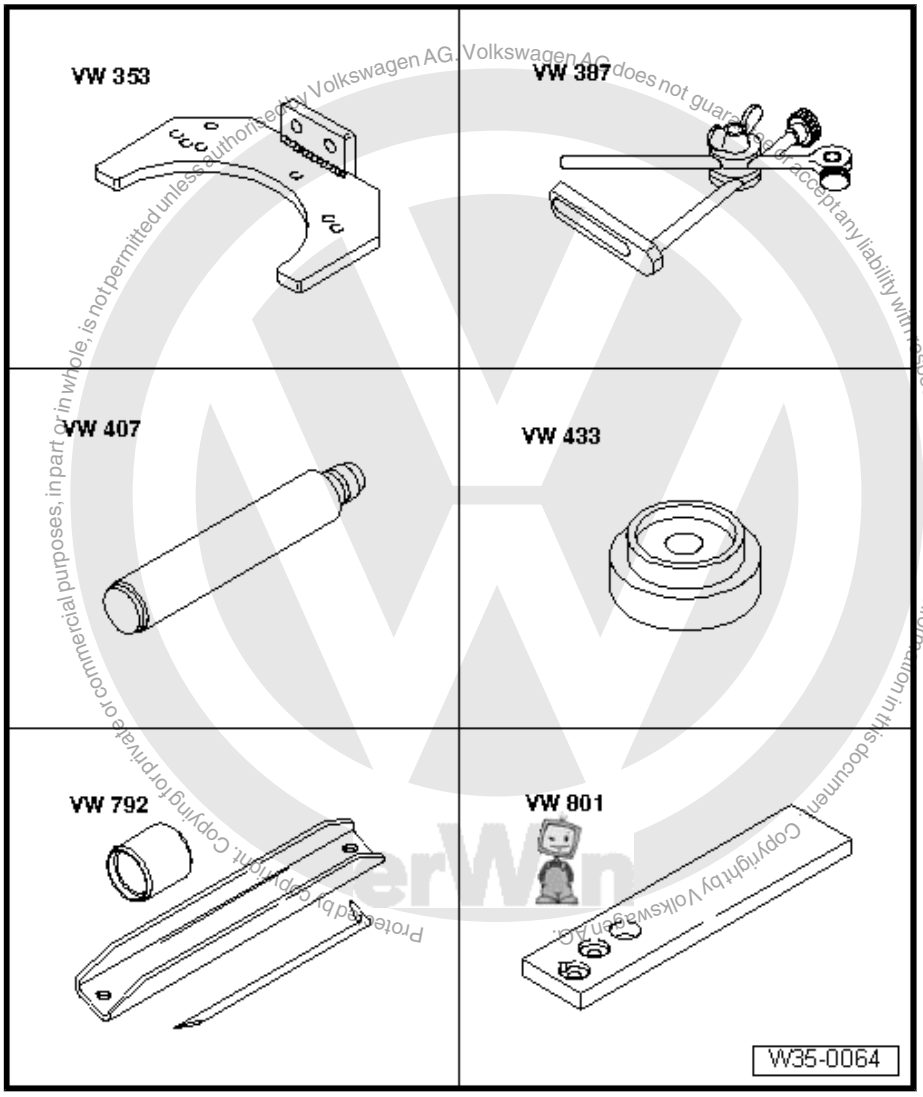


Protected by copyright. Copying for private or commercial purposes, in part or in whole, is not permitted unless authorised by Volkswagen AG. Volkswagen AG does not guarantee or accept any liability with respect to the correctness of information in this document.
Copyright by Volkswagen AG.

- Press Piece - Multiple Use - 40-105-
- Bearing Installer - Multiple Use - 40-20-
- Slide Hammer - Press Plate - 2050-
- Press Piece - Reverse Gear Syncro - 3296-
- Puller - Taper Roller Bearing - VAG1582-
- Puller - Taper Roller Bearing - Adapter 4 - VAG1582/4-

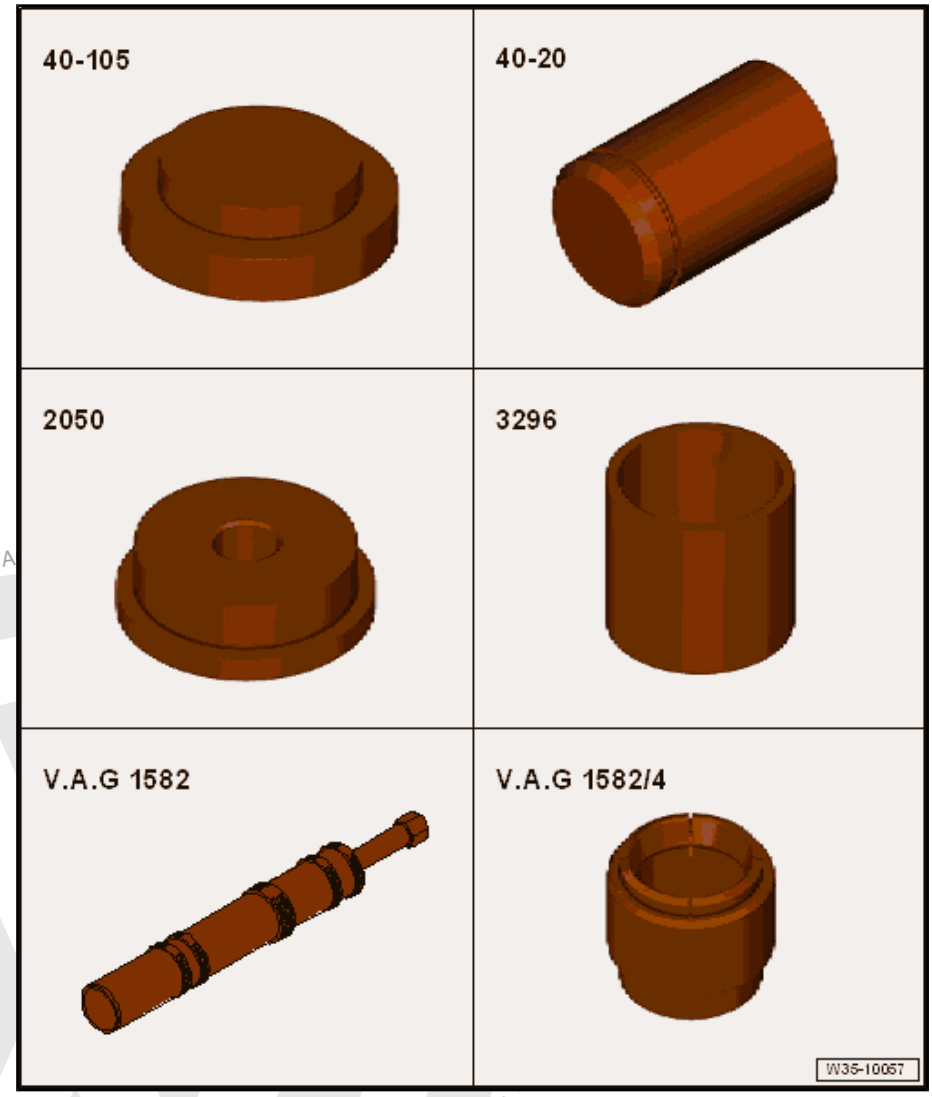


Protected by copyright. Copying for private or commercial purposes, in part or in whole, is not permitted unless authorised by Volkswagen AG. Copyright by Volkswagen AG. Information in this document.

- Press Plate - VW401-
- Press Plate - VW402-
- Press Piece - Rod - VW407-
- Press Piece - Rod - VW408A-
- Press Piece - Multiple Use - VW412-
- Press Piece - Multiple Use - VW454-

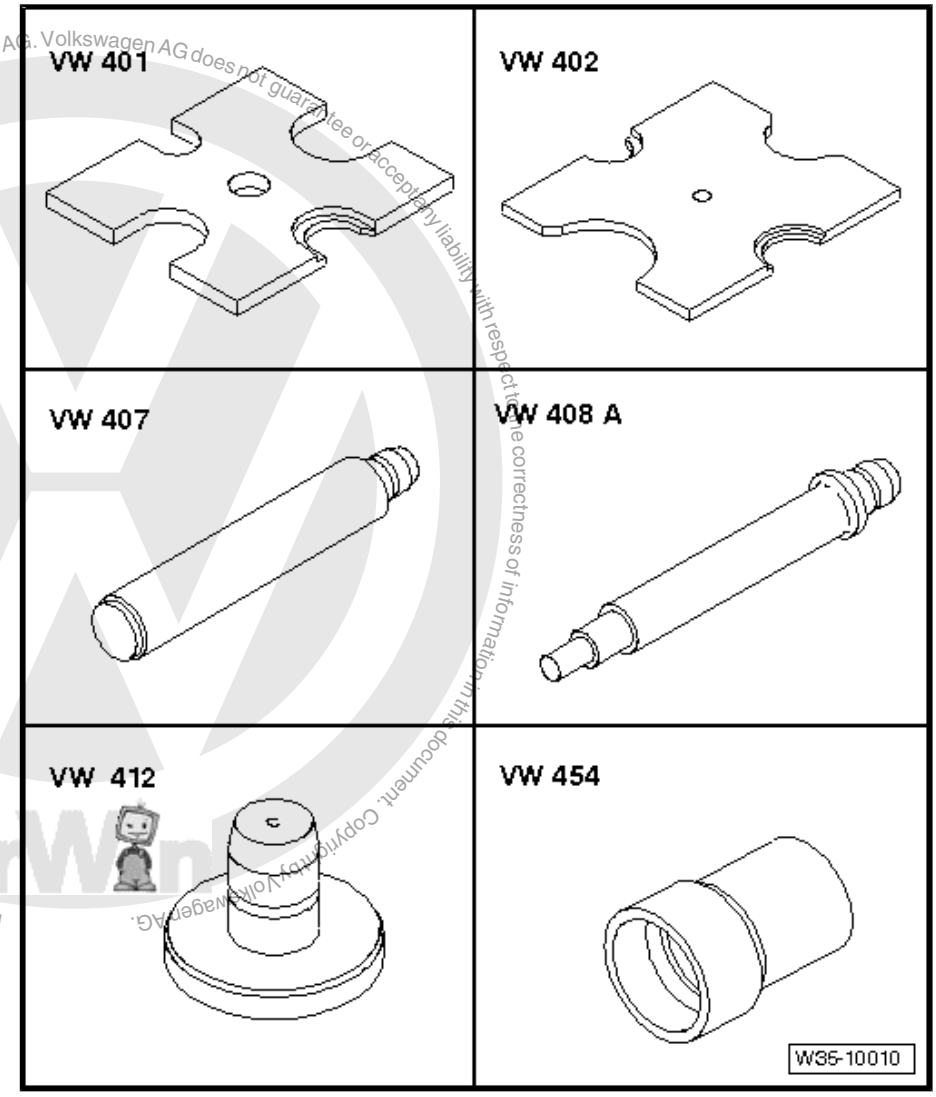


Protected by copyright. Copying for private or commercial purposes, in part or in whole, is not permitted unless authorised by Volkswagen AG. Volkswagen AG does not guarantee or accept any liability with respect to the correctness of information in this document. Copyright by Volkswagen AG.

- Bearing Installer - Multiple Use - 40-20-
- Bearing Installer - Differential Bearing - 40-21-
- Press Piece - Multiple Use - 2050-
- Holding Fixture - Spacers - VW540/1B-
- Puller - Taper Roller Bearing - VAG1582-
- Puller - Taper Roller Bearing - Adapter 7 - VAG1582/7-

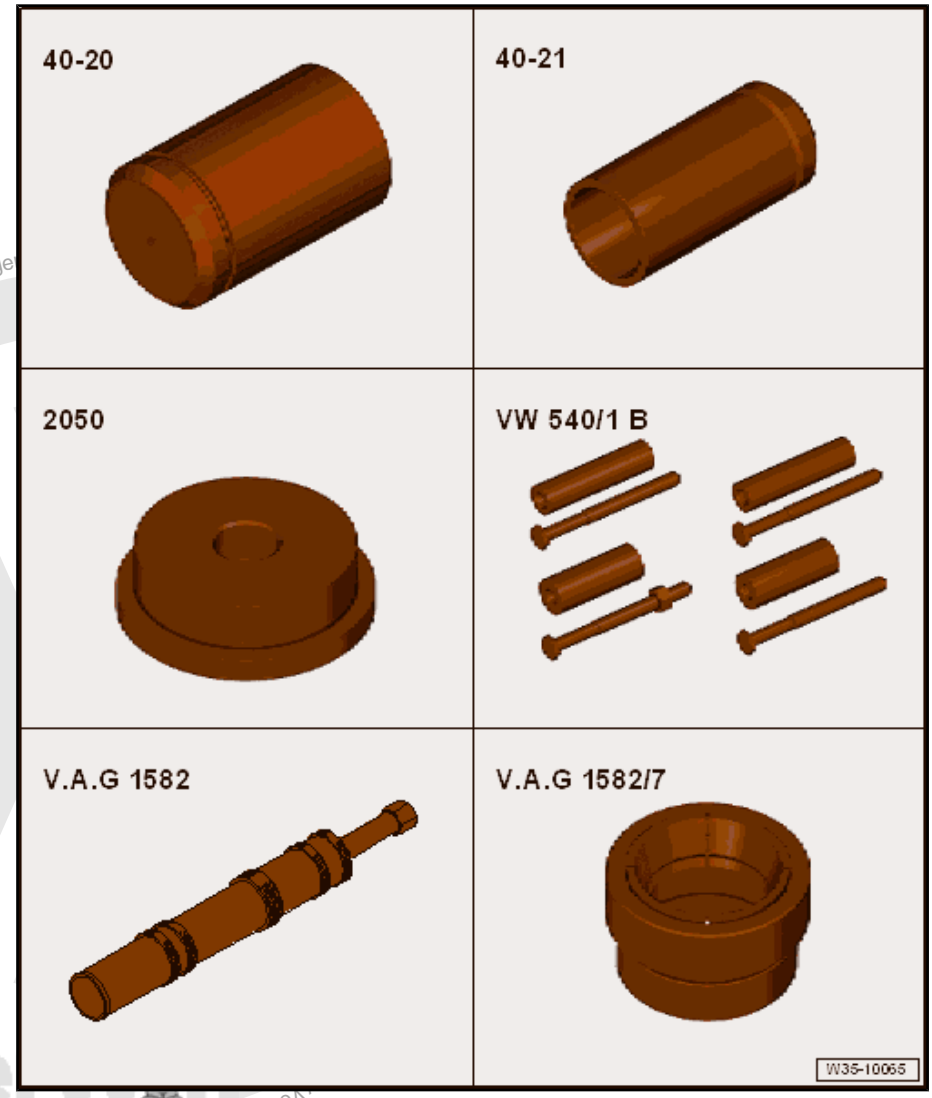


Protected by copyright. Copying for private or commercial purposes, in part or in whole, is not permitted unless authorised by Volkswagen AG.

- Seal Installer - Driveshaft - T40008-

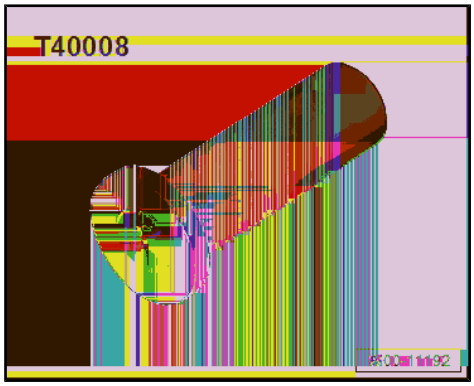

- Puller - Crankshaft/Power Steering Seal - T20143/1-

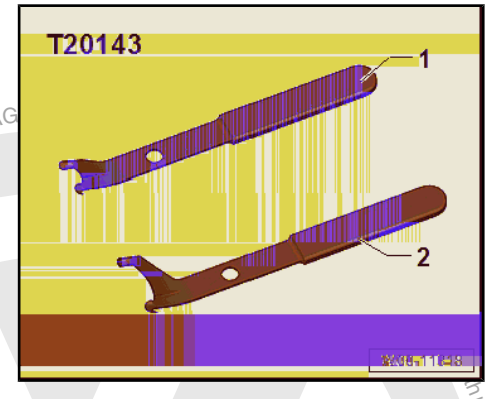


- Puller - Taper Roller Bearing - Adapter 7 - VAG1582/7-

- Dial Indicator - VAS6080A-

- Inductive Heater - VAS6414-

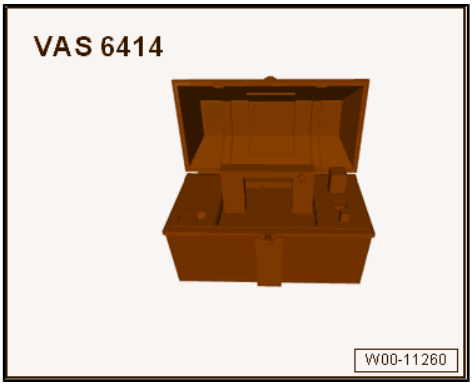


Protected by copyright. Copying for private or commercial purposes, in part or in whole, is not permitted unless authorised by Volkswagen AG

Copyright. Copying for private or commercial purposes, in part or in whole, is not permitted unless authorised by Volkswagen AG. Volkswagen AG does not guarantee or accept any liability with respect to the correctness of information in this document.

- Press Piece - Bushing - 50mm Diameter - VW432-

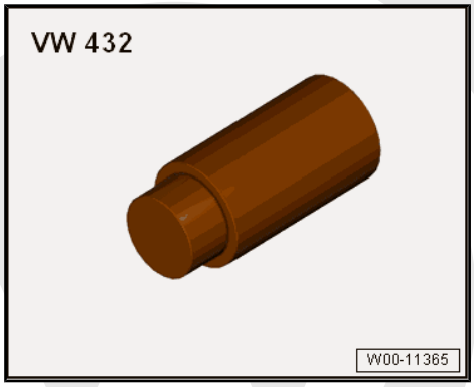


- -1- Puller - Kukko Internal - 28-37mm - 21/5-

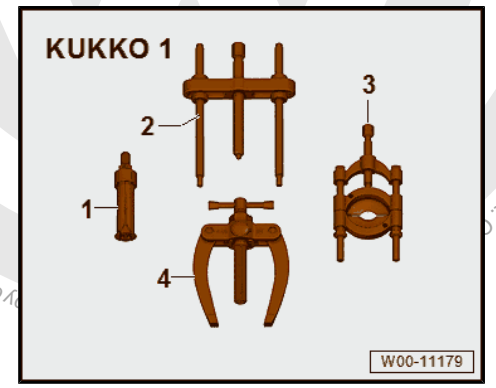


- -3- Puller - Kukko Quick Action Separating Tool - 22-115mm - 17/2-
- -4- Puller - Kukko Counterstay - 22/2-
- -1- Puller - Kukko Internal - 46-56mm - 21/7-

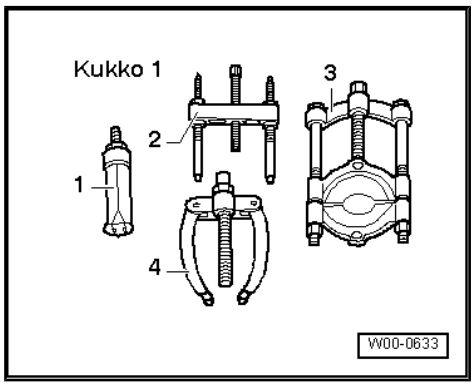


- -1- Puller - Kukko Internal - 56-70mm - 21/8-
- -2- Puller - Kukko Puller - 60-200mm Width, 250mm Length - 18/2-
- Bearing Installer - Multiple Use - 32-111-

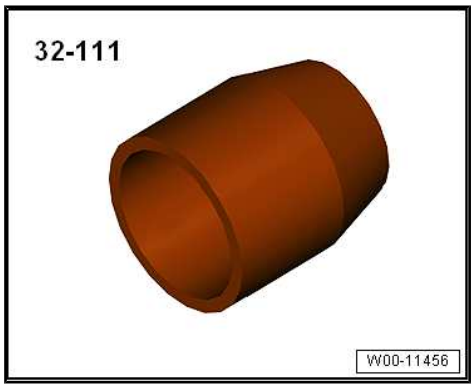

# 39 – Final Drive, Differential

## 1 Seals

⇒ “1.1 Overview - Component Location, Seals”, page 207
⇒ “1.2 Left Seal, Replacing”, page 207
⇒ “1.3 Right Seal, Replacing”, page 209

### 1.1 Overview - Component Location, Seals

**1 - Bolt**

- ❑ For right flange shaft to transmission
- ❑ Tightening specification. Refer to ⇒ “2.1 Overview - Differential”, page 212 .

**2 - Right Flange Shaft**

**3 - Seal**

- ❑ For the right flange shaft
- ❑ Replace when the transmission is installed. Refer to ⇒ “1.3 Right Seal, Replacing”, page 209 .

**4 - Bolt**

- ❑ For left flange shaft to the transmission
- ❑ Tightening specification. Refer to ⇒ “2.1 Overview - Differential”, page 212 .

**5 - Left Flange Shaft**

**6 - Seal**

- ❑ For the left flange shaft
- ❑ Replace when the transmission is installed. Refer to ⇒ “1.2 Left Seal, Replacing”, page 207 .

### 1.2 Left Seal, Replacing

**Special tools and workshop equipment required**

- ♦ Slide Hammer Set - VW771-
- ♦ Slide Hammer Set - Hook - VW 771/37-
- ♦ Seal Installer - Flange Shaft - 3305-
- ♦ Torque Wrench 1331 5-50Nm - VAG1331-
- ♦ Torque Wrench 1332 40-200Nm - VAG1332-

- Shop Crane - Drip Tray - VAS6208- or Used Oil Collection and Extraction Unit - SMN372500-
- Sealing Grease - G 052 128 A1-

**Removing**

– Remove the left wheel.

– Remove the noise insulation. Refer to ⇒ Body Exterior; Rep. Gr. 66 ; Noise Insulation; Overview - Noise Insulation .

– Remove the lower section of the left front wheel housing liner. Refer to ⇒ Body Exterior; Rep. Gr. 66 ; Wheel Housing Liner; Front Wheel Housing Liner, Removing and Installing .

– Remove the left drive axle. Refer to ⇒ Suspension, Wheels, Steering; Rep. Gr. 40 ; Drive Axle; Drive Axle, Removing and Installing .

– Place the -VAS6208- or -SMN372500- underneath.

– Remove flange shaft bolt. To do this, install two bolts on the flange and counterhold the flange shaft with a pry bar.

– Remove the flange shaft and the pressure spring.

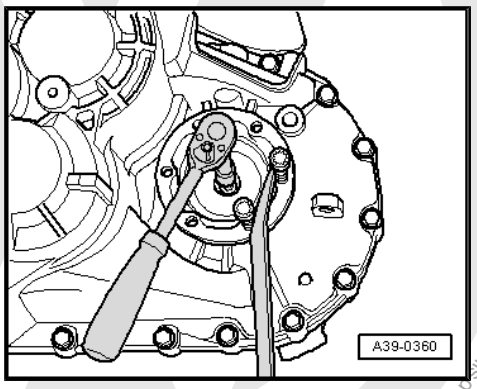


– Remove flange shaft seal.

**Installing**

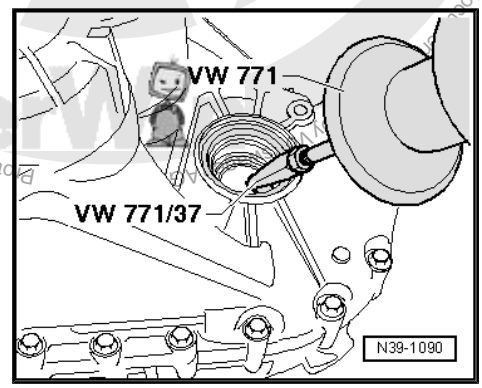


– Lightly oil new seal on outer circumference.

– Fill the space between the sealing/dust lip -arrow- halfway with Sealing Grease - G 052 128 A1- .

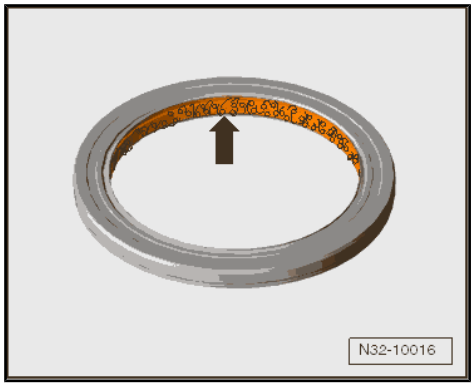


Protected by copyright. Copying for private or commercial purposes, in part, or whole is not permitted unless authorised by Volkswagen AG. Volkswagen AG does not guarantee or accept any liability with respect to the correctness of information in this document.

– Install the seal all the way in without tilting it.

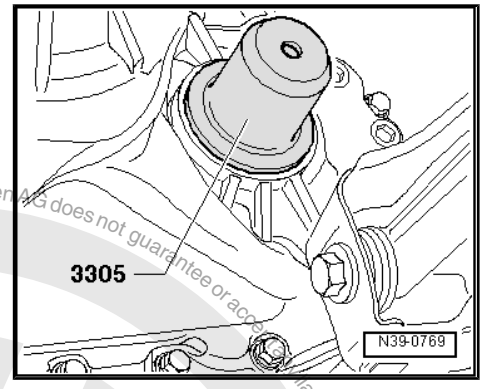


– Fill the space between the sealing and dust lip -arrow- halfway with Sealing Grease - G 052 128 A1- .

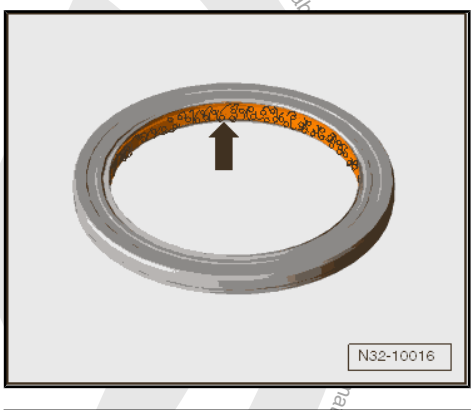


– Install the flange shaft.
– Hold the flange shaft to the transmission and tighten.
– Install the left drive axle. Refer to ⇒ Suspension, Wheels, Steering; Rep. Gr. 40 ; Drive Axle; Drive Axle, Removing and Installing .
– Check transmission fluid level. Refer to ⇒ “8.1 Transmission Fluid Level, Checking”, page 142 .
– Install the lower section of the left front wheel housing liner. Refer to ⇒ Body Exterior; Rep. Gr. 66 ; Wheel Housing Liner; Front Wheel Housing Liner, Removing and Installing .
– Install the noise insulation. Refer to ⇒ Body Exterior; Rep. Gr. 66 ; Noise Insulation; Overview - Noise Insulation .
– Install the wheel. Refer to ⇒ Suspension, Wheels, Steering; Rep. Gr. 44 ; Wheels, Tires; Wheel Bolts, Tightening Specifications .

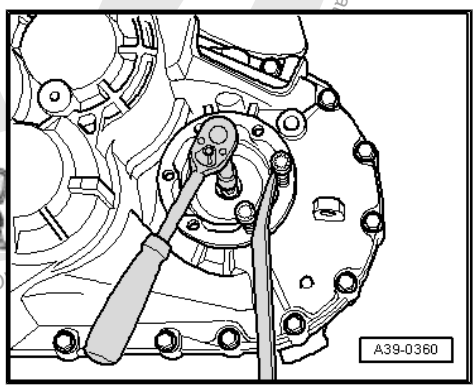


### Tightening Specification

♦ Refer to ⇒ “2.1 Overview - Differential”, page 212 .

## 1.3 Right Seal, Replacing

### Special tools and workshop equipment required

♦ Torque Wrench 1331 5-50Nm - VAG1331-
♦ Shop Crane - Drip Tray - VAS6208- or Used Oil Collection and Extraction Unit - SMN372500-
♦ Seal Installer - Flange Shaft - 3305-
♦ Sealing Grease - G 052 128 A1-

### Removing

– Remove the noise insulation. Refer to ⇒ Body Exterior; Rep. Gr. 66 ; Noise Insulation; Overview - Noise Insulation .

Protected by copyright. Copying for private or commercial purposes, in part or in whole, is not permitted unless authorised by Volkswagen AG. Volkswagen AG does not guarantee or accept any liability

– Remove the heat shield above the right drive axle -arrows-, if equipped.

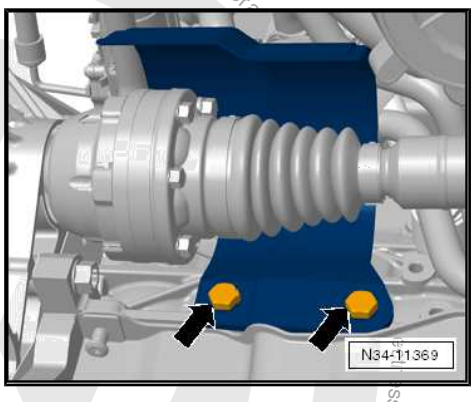


– Remove the right drive axle from the transmission flange shaft -A-. Refer to ⇒ Suspension, Wheels, Steering; Rep. Gr. 40 ; Drive Axle; Drive Axle, Removing and Installing .

– Secure the drive axle with wire and do not damage the surface protection.

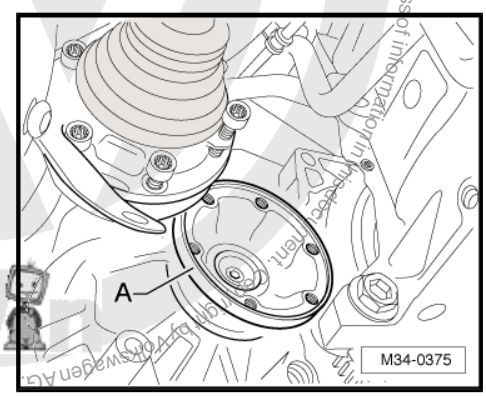


**Note**

- *On some engines, the drive axle cannot be tied up so that the flange shaft can be removed.*
- *Remove the drive axle. Refer to ⇒ Suspension, Wheels, Steering; Rep. Gr. 40 ; Drive Axle; Drive Axle, Removing and Installing .*

– Place the Drip Tray , for example -VAS 6208- or -SMN372500- under the transmission.

– Remove flange shaft bolt -arrow-. To do this, install two bolts on the flange and counterhold the flange shaft with a pry bar.

– Remove the flange shaft and the pressure spring.

– Pry out the sealing ring.

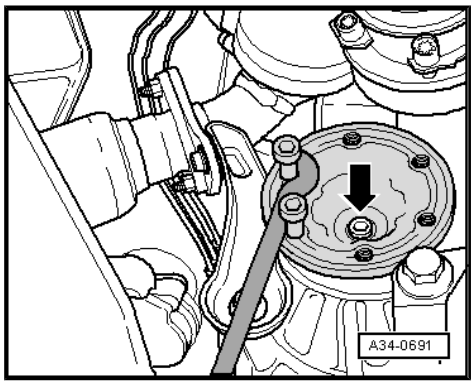


**Installing**

– Lightly oil the new gasket on the outer edge.

– Fill the space between the sealing/dust lip -arrow- halfway with Sealing Grease - G 052 128 A1- .

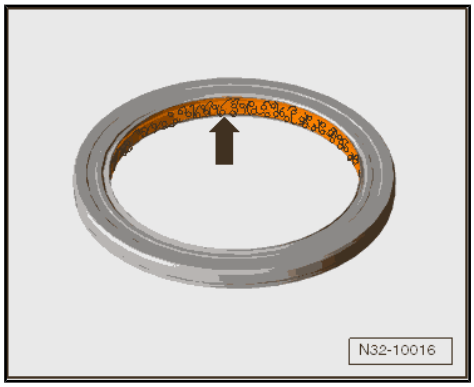

– Install the seal all the way in without tilting it.

– Install the seal all the way in without tilting it.

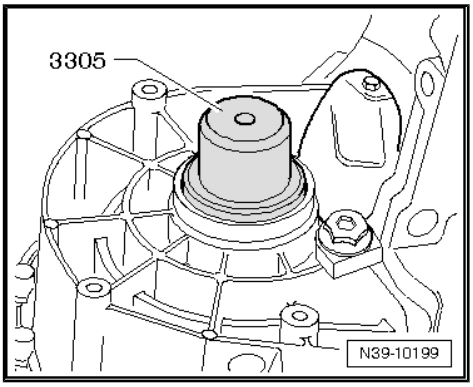


– Push the flange shaft -A- toward the transmission and secure.

– Attach the right drive axle to the transmission flange shaft -A-. Refer to ⇒ Suspension, Wheels, Steering; Rep. Gr. 40 ; Drive Axle; Drive Axle, Removing and Installing .

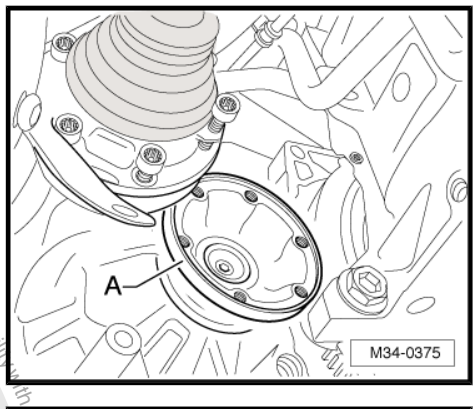


– If removed, install the heat shield over the right drive axle. Refer to ⇒ Suspension, Wheels, Steering; Rep. Gr. 40 ; Drive Axle; Drive Axle Heat Shield, Removing and Installing .

– Check transmission fluid level. Refer to ⇒ "8.1 Transmission Fluid Level, Checking", page 142 .

– Install the noise insulation. Refer to ⇒ Body Exterior; Rep. Gr. 66 ; Noise Insulation; Overview - Noise Insulation .

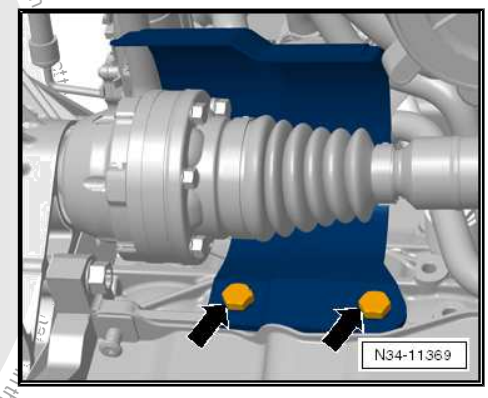


## Tightening Specification

◆ Refer to ⇒ "2.1 Overview - Differential", page 212 .

Protected by copyright. Copying for private or commercial purposes, in part or in whole, is not permitted unless authorised by Volkswagen AG. Volkswagen AG does not guarantee or accept any liability with this document. Copyright by Volkswagen AG.

# 2 Differential

⇒ “2.1 Overview - Differential”, page 212

⇒ “2.2 Differential, Disassembling and Assembling”, page 214

⇒ “2.3 Differential, Adjusting”, page 218

## 2.1 Overview - Differential

…or private or commercial purposes, in part or in whole, is not permitted unless authorised by Volkswagen AG. Volkswagen AG does not guarantee or accept any liability with respect to the correctness of in…

Note

- *Secure the transmission on the assembly stand. Refer to ⇒ “7 Securing on Engine and Transmission Holder”, page 141 .*
- *To install, warm the inner races/tapered roller bearing to approximately 100 °C (212 °F) with Inductive Heater - VAS6414- .*
- *Replace both tapered roller bearings together.*
- *Adjust the differential when replacing tapered roller bearing, differential housing, transmission housing or clutch housing. Refer to ⇒ “2.3 Differential, Adjusting”, page 218 .*
- *The items -18 to 23- are no longer individual replacement parts on some transmissions. Refer to the Parts Catalog.*

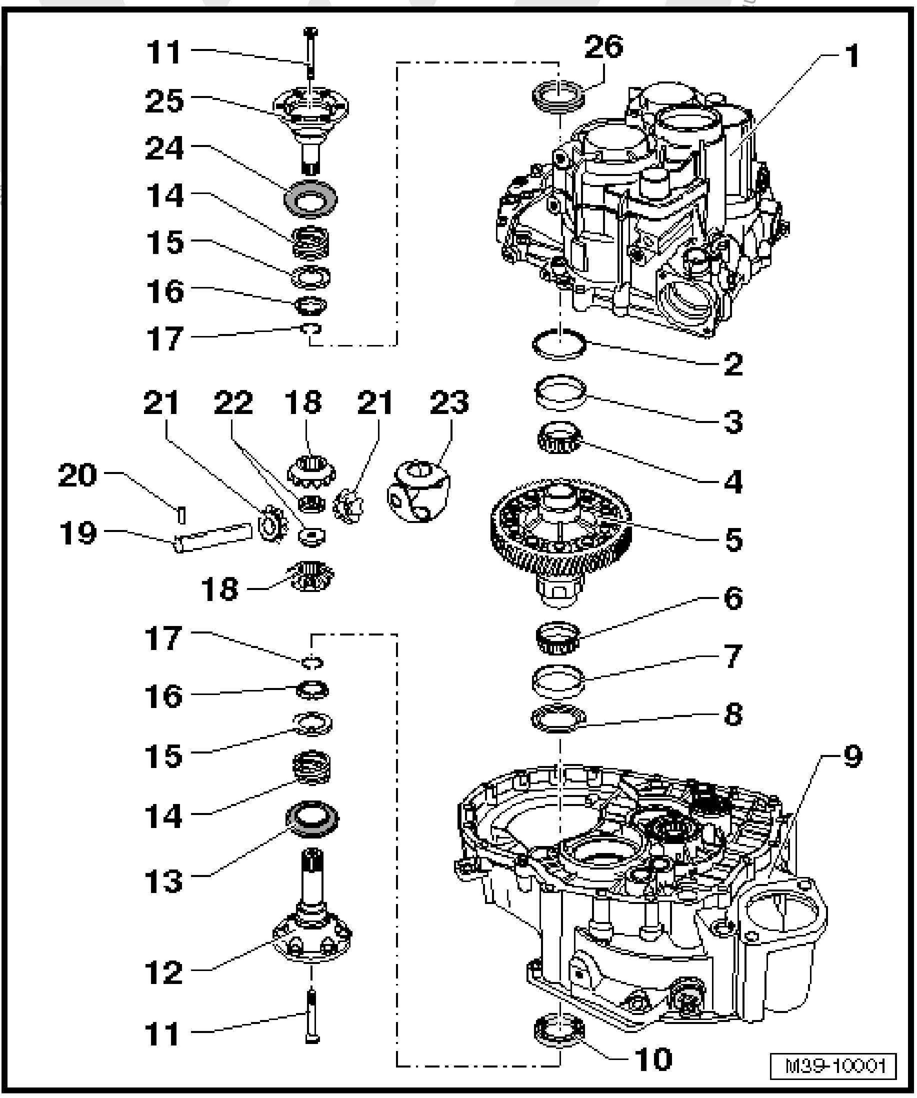


1 - Transmission Housing

2 - Shim

- ❑ For the differential
- ❑ Selecting thickness. Refer to ⇒ “2.3 Differential, Adjusting”, page 218 .

3 - Outer Race/Tapered Roller Bearing

- ❑ Removing. Refer to ⇒ Fig. ““Removing the Outer Race/Tapered Roller Bearing from the Transmission Housing”“ , page 216
- ❑ Installing. Refer to ⇒ Fig. ““Installing Outer Race/Tapered Roller Bearing into the Transmission Housing”“ , page 217

4 - Inner Race / Tapered Roller Bearing

- ❑ Removing. Refer to ⇒ Fig. ““Removing the Inner Race/Tapered Roller Bearing”“ , page 215
- ❑ Installing. Refer to ⇒ Fig. ““Heat the Inner Race/Tapered Roller Bearing and Press On It”“ , page 216

5 - Differential

- ❑ With final drive gear

wheel

**6 - Inner Race / Tapered Roller Bearing**

- ❑ Removing. Refer to ⇒ Fig. ""Removing the Inner Race/Tapered Roller Bearing"" , page 216
- ❑ Installing. Refer to ⇒ Fig. ""Heat the Inner Race/Tapered Roller Bearing and Press On It"" , page 216

**7 - Outer Race/Tapered Roller Bearing**

- ❑ Removing. Refer to
  ⇒ Fig. ""Removing the Outer Race/Tapered Roller Bearing from the Clutch Housing"" , page 215
- ❑ Installing. Refer to
  ⇒ Fig. ""Pressing Outer Race/Tapered Roller Bearing with Shim into Clutch Housing"" , page 215

**8 - Washer**

- ❑ Installation position: The collar on the inner diameter faces the right flange shaft seal.
- ❑ Allocation. Refer to the Parts Catalog.

**9 - Clutch Housing**

**10 - Seal**

- ❑ For the right flange shaft
- ❑ Allocation. Refer to the Parts Catalog.
- ❑ Replace when the transmission is installed. Refer to ⇒ "1.3 Right Seal, Replacing", page 209 .

**11 - Bolt**

- ❑ 33 Nm
- ❑ Install with the threaded piece -Item 22- ⇒ Item 22 (page 214)

**12 - Right Flange Shaft**

**13 - Ring**

- ❑ Pry the ring off the right flange shaft with a screwdriver
- ❑ Installed position: The depression faces away from threaded holes in flange shaft.
- ❑ Install the ring all the way by hand. Refer to ⇒ "2.1 Overview - Differential", page 212 .
- ❑ The ring must lock into the flange shaft.

**14 - Flange Shaft Pressure Spring**

- ❑ Installed behind the flange shaft

**15 - Thrust Washer**

- ❑ Installed position: Collar to compression spring, braces (if installed) to tapered ring

**16 - Tapered Ring**

- ❑ Installed position: differential housing taper

**17 - Locking Ring**

- ❑ Holds the tapered ring, the thrust washer and the pressure spring when the flange shaft is removed

**18 - Large Differential Bevel Gear**

- ❑ Availability. Refer to the Parts Catalog.
- ❑ Installing. Refer to ⇒ Fig. ""Installing the Differential Bevel Gears"" , page 217 .

**19 - Differential Taper Axle**

- ❑ Availability. Refer to the Parts Catalog.
- ❑ Remove using a drift
- ❑ Installing. Refer to ⇒ Fig. ""Installing the Differential Bevel Gears"" , page 217 .

**20 - Adapter Sleeve**

- ❑ Availability. Refer to the Parts Catalog.
- ❑ To secure the differential bevel gear axle
- ❑ Removing. Refer to
  ⇒ Fig. ""Removing the Spring Pin for the Differential Bevel Gear Axle"" , page 217 .
- ❑ Installing. Refer to ⇒ Fig. ""Installing the Spring Pin for the Differential Bevel Gear Axle"" , page 218 .

Protected by copyright. Copyright by Volkswagen AG. Volkswagen AG does not guarantee or accept any liability with respect to the correctness of information in this document. Copying for private or commercial purposes, in part or in whole, is not permitted unless authorized by Volkswagen AG.

**21 - Small Differential Bevel Gear**

- ❑ Availability. Refer to the Parts Catalog.
- ❑ Installing. Refer to ⇒ Fig. ""Installing the Differential Bevel Gears"" , page 217 .

**22 - Threaded Piece**

- ❑ Availability. Refer to the Parts Catalog.
- ❑ Installing. Refer to ⇒ Fig. ""Installing the Differential Bevel Gears"" , page 217 .

**23 - Thrust Washer Union**

- ❑ Availability. Refer to the Parts Catalog.
- ❑ Install with transmission fluid

**24 - Ring**

- ❑ Pry the ring off the left flange shaft with a screwdriver
- ❑ Installed position: The depression faces away from threaded holes in flange shaft.
- ❑ Install the ring all the way by hand.
- ❑ The ring must lock into the flange shaft.

**25 - Left Flange Shaft**

**26 - Seal**

- ❑ For the left flange shaft
- ❑ Allocation. Refer to the Parts Catalog.
- ❑ Replace when the transmission is installed. Refer to ⇒ "1.2 Left Seal, Replacing", page 207 .

## 2.2 Differential, Disassembling and Assembling

**Special tools and workshop equipment required**

- ♦ Press Plate - VW402-
- ♦ Press Piece - Rod - VW408A-
- ♦ Press Piece - Multiple Use - VW412-
- ♦ Press Piece - 60mm - VW415A-
- ♦ Press Piece - Multiple Use - 40-105-
- ♦ Press Piece - Multiple Use - 3005-
- ♦ Press Piece - Bushing - 3259-
- ♦ Press Piece - Reverse Gear Syncro - 3296-
- ♦ Bearing Installer - Wheel Bearing - 3345-
- ♦ Puller - Taper Roller Bearing - VAG1582-
- ♦ Puller - Taper Roller Bearing - Adapter 6A - VAG1582/6A-
- ♦ Puller - Kukko Internal - 46-56mm - 21/07-
- ♦ Puller - Kukko Puller - 60-150mm Width, 200mm Length - 18/1-
- ♦ Puller - Kukko Quick Action Separating Tool - 12-75mm - 17/1-
- ♦ Puller - Kukko Counterstay - 22/2-
- ♦ Inductive Heater - VAS6414-

Protected by copyright. Copying for private or commercial purposes, in part or in whole, is not permitted unless authorised by Volkswagen AG. Volkswagen AG does not guarantee or accept any liability with respect to the correctness of information in this document. Copyright by Volkswagen AG.

Copyright by Volkswagen AG. Volkswagen AG does not guarantee or accept any liability with respect to the correctness of information in this document. Copyright by Volkswagen AG. Protected by copyright. Copying for private or commercial purposes, in part or in whole, is not permitted unless authorised by Volkswagen AG.

**Caution**

*This procedure contains mandatory replaceable parts. Refer to component overview prior to starting procedure.*

### Mandatory Replacement Parts

- Seal - Right Flange Shaft

### Removing the Outer Race/Tapered Roller Bearing from the Clutch Housing

A - Counter Support, for example, -22/2-

B - Internal Puller 46 to 58 mm , for example, -21/7-

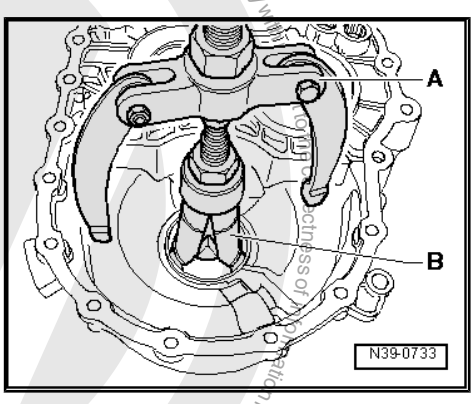


**Note**

- *Tension the -21/7- -B- between the outer race/tapered roller bearing and shim tightly -Item 8-* *⇒ Item 8 (page 213)* *.*
- *Check the shim for damage after removing it. Replace, if necessary.*
- *Instead of the -21/7- the -21/8- can also be used.*

### Pressing Outer Race/Tapered Roller Bearing with Shim into Clutch Housing

– Install the old washer -Item 8- ⇒ Item 8 (page 213) , into the clutch housing.

• Installed position of shim: The collar on the inner circumference faces the seal.

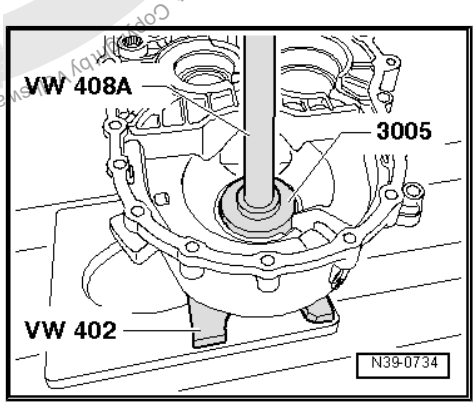


### Removing the Inner Race/Tapered Roller Bearing

– Before installing the puller, mount the -40-105- onto the differential housing.

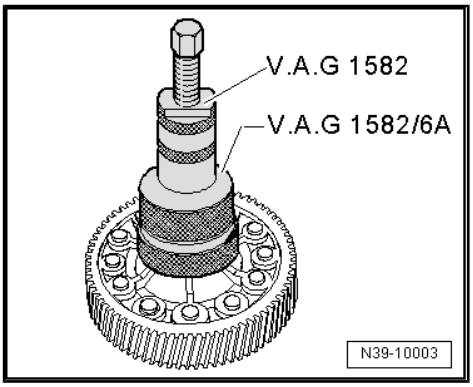

### Heat the Inner Race/Tapered Roller Bearing and Press On It

The cage wit the tapered rollers must rotate easily when being installed.

> **WARNING**
>
> *Wear safety gloves.*

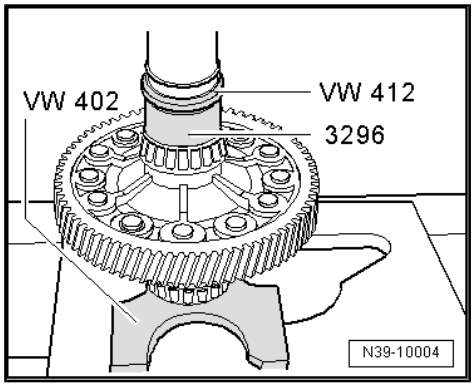


### Removing the Inner Race/Tapered Roller Bearing

A - Puller , for example, -18/1-

B - Puller , for example, -17/1-

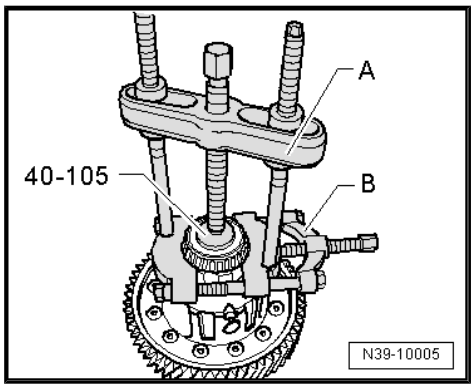


### Heat the Inner Race/Tapered Roller Bearing and Press On It

The cage wit the tapered rollers must rotate easily when being installed.

> **WARNING**
>
> *Wear safety gloves.*

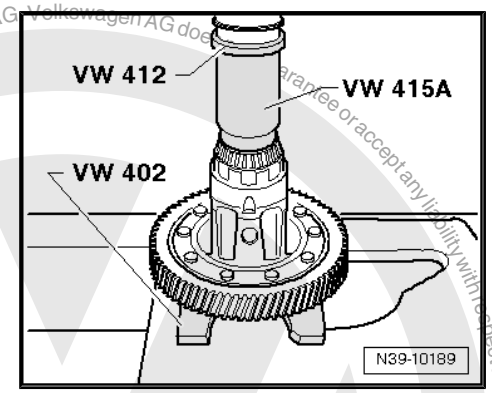


### Removing the Outer Race/Tapered Roller Bearing from the Transmission Housing

A - Counter Support , for example, -Kukko 22/2-

B - Internal Puller 46 to 58 mm , for example, -Kukko 21/7-

**Note**

*Instead of the -21/7- the -21/8- can also be used.*

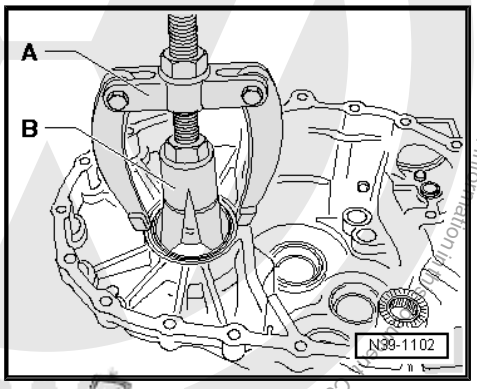


Protected by copyright. Copying for private or commercial purposes, in part or in whole, is not permitted unless authorised by Volkswagen AG. Volkswagen AG does not guarantee or accept any liability with respect to the correctness of information.
Copyright by Volkswagen AG.

### Installing Outer Race/Tapered Roller Bearing into the Transmission Housing

– Support the transmission housing directly under the bearing mount using the - 3345- .

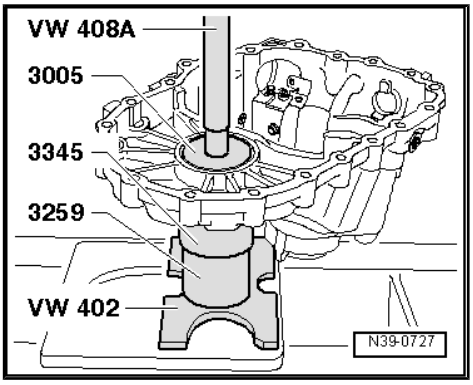


### Removing the Spring Pin for the Differential Bevel Gear Axle

– Use a 5 mm diameter drift -B- to remove the adapter sleeve -A- from the hole -arrow- on the differential housing.

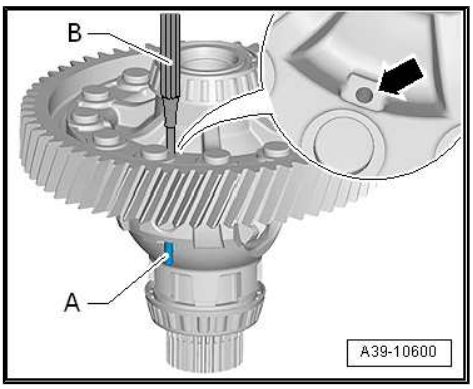


**Note**

- *If there is no hole -arrow- on the differential housing, remove the adapter sleeve as follows:*
- *Cover the inner race/tapered roller bearing in order to prevent possible damage and entry of shavings.*
- *Remove the adapter sleeve using a chisel.*

### Installing the Differential Bevel Gears

– Insert thrust washer union with transmission fluid.

– Install and secure both large differential planetary gears, for example, with a flange shaft.

– Insert the small differential planetary gears 180° offset and pivot them into position.

– Press the differential bevel gear axle -arrow A- up to the first small differential bevel gear.

– Insert threaded pieces -arrow B- into the large differential planetary gears.

• Installed position: Collar toward the differential bevel gear

– Install the differential bevel gear axle up the end position and secure it with a new spring pin. Refer to ⇒ Fig. ""Installing the Spring Pin for the Differential Bevel Gear Axle"" , page 218 .

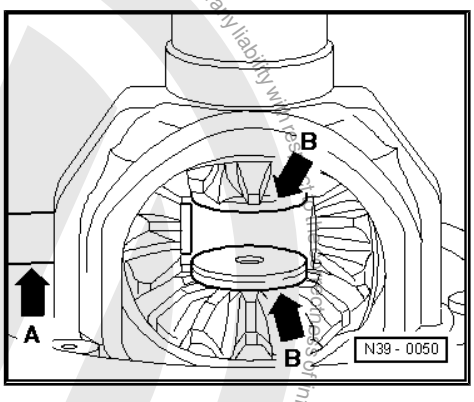


Protected by copyright. Copying for private or commercial purposes, in part or in whole, is not permitted unless authorised by Volkswagen AG. Volkswagen AG does not guarantee or assume any liability with respect to the correctness of information in this document. Copyright by Volkswagen AG.

**Installing the Spring Pin for the Differential Bevel Gear Axle**

– Align the hole in the differential bevel gear axle to the hole in the differential housing.

– Using a drift, install the adapter sleeve -1- to the dimension -a- = 2.5 ± 0.5 mm.

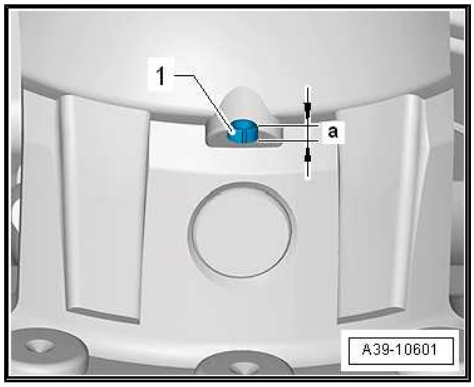


## 2.3 Differential, Adjusting

**Special tools and workshop equipment required**

- Transmission Support - VW353-
- Measuring Set - Magnetic Plate - 50mm - VW385/17-
- Dial Gauge Holder - VW387-
- Press Plate - VW402-
- Press Piece - Rod - VW408A-
- Press Piece - Multiple Use - 3005-
- Press Piece - Bushing - 3259-
- Bearing Installer - Wheel Bearing - 3345-
- Torque Wrench 1331 5-50Nm - VAG1331-
- Puller - Kukko Internal - 46-56mm - 21/7-
- Counter Support - VAS251623-
- Puller - Kukko Counterstay - 22/2-
- Dial Indicator - VAS6080A-
- 30 mm Dial Gauge Extension

**A New Differential Adjustment is Required When the Following Components Have Been Replaced:**

- Transmission Housing
- Clutch Housing
- Differential housing or
- Differential tapered roller bearing

Adjustment Overview. Refer to
⇒ "3 Adjustment Overview", page 221 .

– Pressing outer race/tapered roller bearing with shim into clutch housing -Item 8- ⇒ Item 8 (page 213) .

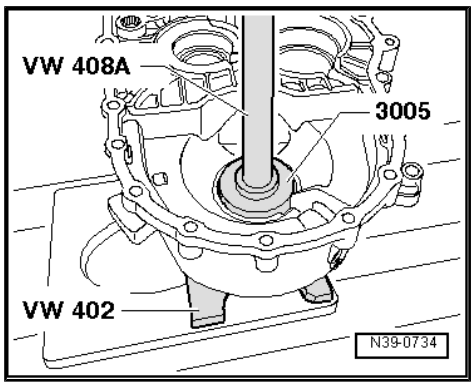


**Note**

- *Pay attention to the shim installed position.*
- *The collar on the inner circumference faces the seal.*

Protected by copyright. Copyright by Volkswagen AG. Volkswagen AG does not guarantee or accept any liability with respect to the correctness of information in this document. Copying for private or commercial purposes, in whole or in part, is not permitted unless authorized by Volkswagen AG.

– Install the outer race/tapered roller bearing without adjustment shim into transmission housing.
– Insert differential into clutch housing.
– Mount transmission housing and tighten five bolts.
– Press differential in direction of clutch housing and rotate eight times at the same time.
– Press differential in direction of transmission housing and rotate eight times at the same time.

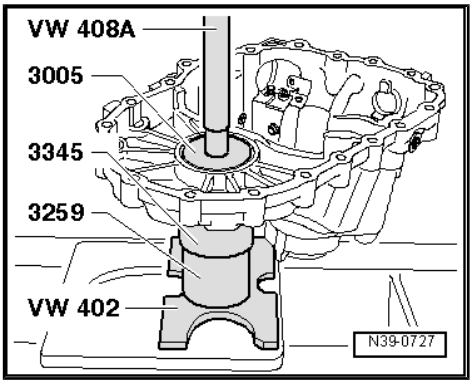


– Attach the measuring tools to the transmission housing.
– Set the dial gauge with 1 mm pretension to “0”.

A - 30 mm dial gauge extension

– Move the differential up and down and read the play on the dial gauge and note it (example: 0.70 mm).

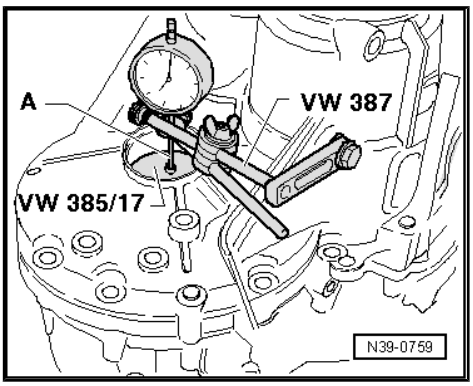


**Determining the Shim**

The specified bearing pre-load is obtained by adding a constant pre-load figure of 0.25mm to the reading obtained.

**Example**

| | |
|---|---|
| Measured value | 0.70 mm |
| + Preload (constant value) | 0.25mm |
| = Shim thickness | 0.95 mm |

– Remove the transmission housing.

– Removing the outer race/tapered roller bearing from the transmission housing

A - Counter Support , for example, -22/2-

B - Internal Puller 46 to 58 mm , for example, -21/7-

– For the correct part number. Refer to the Parts Catalog.
– Insert shim with the correct thickness.

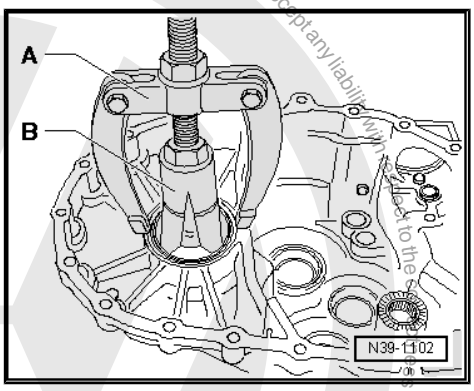


The following shims are available:

| Shim Thickness (mm) | | | |
|---|---|---|---|
| 0.65 | 0.85 | 1.05 | 1.25 |
| 0.70 | 0.90 | 1.10 | |
| 0.75 | 0.95 | 1.15 | |
| 0.80 | 1.00 | 1.20 | |

If the measured shim thickness is larger than those listed in the Table, then install two shims that add up to the necessary thickness. Install the thicker shim first.

Tolerance variations make it possible to find the exact shim thickness required.

Protected by copyright. Copying for private or commercial purposes, in part or on whole, is only permitted unless authorised by Volkswagen AG. Volkswagen AG does not guarantee or accept any liability with respect to the correctness of information in this document. Copyright by Volkswagen AG.

– Install the outer race again and the tighten the transmission housing to the tightening specification.

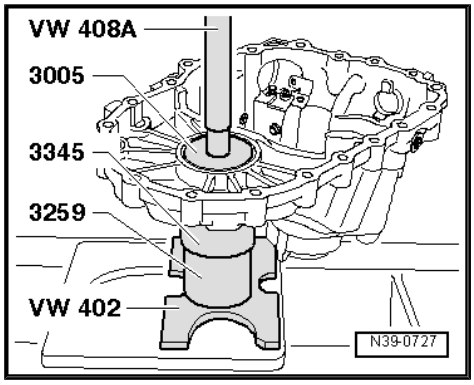


### Tightening Specifications

- Transmission housing to clutch housing. Refer to ⇒ “5.3 Overview - Transmission Housing and Selector Mechanism”, page 111 .

Protected by copyright. Copying for private or commercial purposes, in part or in whole, is not permitted unless authorised by Volkswagen AG. Volkswagen AG does not guarantee or accept any liability with respect to the correctness of information in this document. Copyright by Volkswagen AG.

# 3 Adjustment Overview

⇒ “3.1 Overview - Adjustment”, page 221

## 3.1 Overview - Adjustment

**Note**

*When performing repairs on the transmission, readjustment of the output shaft for 1st to 4th gears, output shaft for 5th/6th gear and reverse gears or differential is only required if components, which have a direct influence on transmission adjustment, have been replaced. Refer to table to avoid any unnecessary adjusting.*

| Replaced part: | To be adjusted: | | |
|---|---|---|---|
| | Output Shaft, 1st to 4th Gears. Refer to ⇒ “2.3 Output Shaft, Adjusting”, page 187 . | Output shaft, 5th/6th and reverse gears. Refer to ⇒ “2.3.2 Output Shaft, 5th, 6th and Reverse Gears, Adjusting”, page 190 . | Differential . Refer to ⇒ “2.3 Differential, Adjusting”, page 218 . |
| Transmission Housing | x | x | x |
| Clutch Housing | x | x | x |
| Output Shaft, 1st to 4th Gears | x | | |
| Output Shaft, 5th/6th and Reverse Gears | | x | |
| Differential | | | x |
| Output shaft tapered roller bearing, 1st to 4th Gears | x | | |
| Output shaft tapered roller bearing, 5th/6th and Reverse Gears | | x | |
| Differential tapered roller bearing | | | x |

Protected by copyright. Copying for private or commercial purposes, in any form and by any means, is not permitted unless authorised by Volkswagen AG. Volkswagen AG does not give any warranty nor accept any liability with respect to the correctness of information in this document. Copyright by Volkswagen AG.

# 4 Special Tools

lkswagen AG. Volkswagen AG does
ivate or commercial purposes in part or in whole, is not permitte

**Special tools and workshop equipment required**

- Press Plate - VW402-
- Press Piece - Rod - VW408A-
- Press Piece - Multiple Use - VW412-
- Press Piece - 60mm - VW415A-
- Press Piece - Multiple Use - 40-105-
- Press Piece - Multiple Use - 3005-

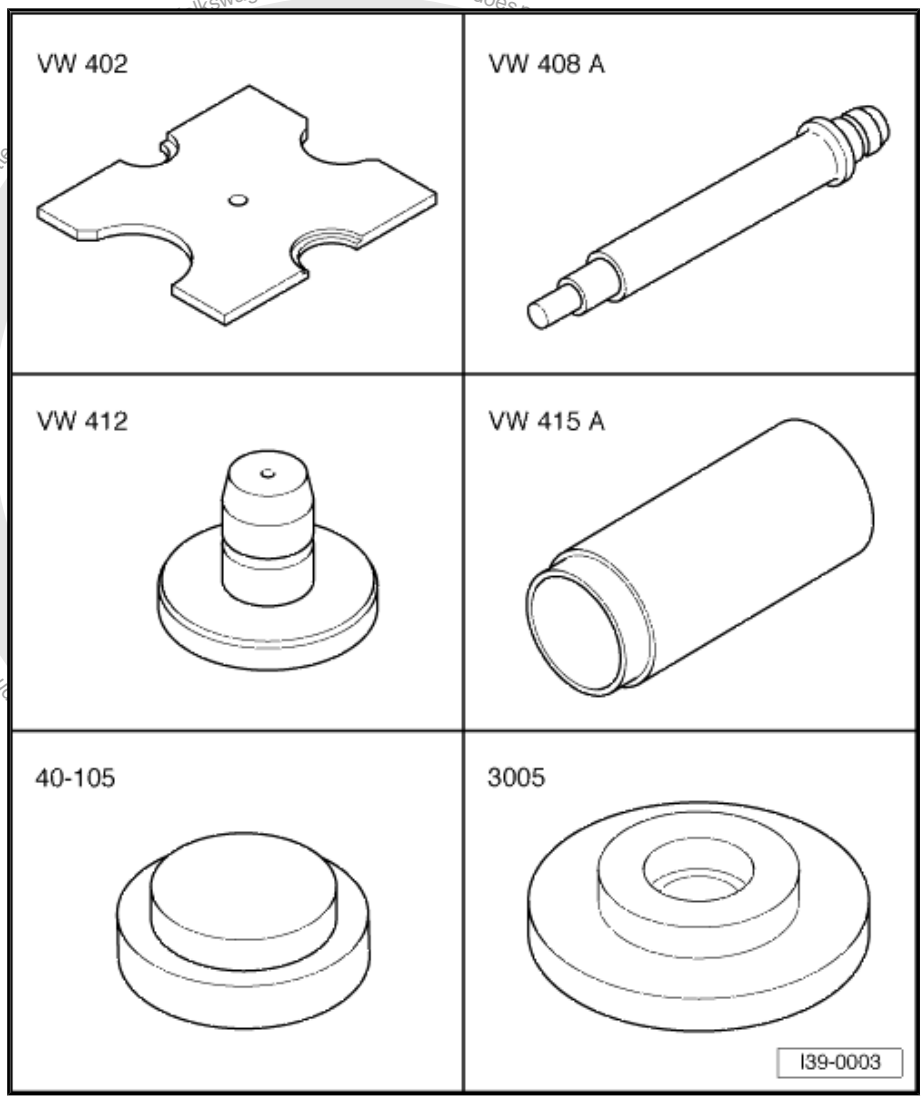

- Slide Hammer Set - VW771-
- Slide Hammer Set - Hook - VW 771/37-
- Seal Installer - Flange Shaft - 3305-
- Torque Wrench 1331 5-50Nm - VAG1331-
- Torque Wrench 1332 40-200Nm - VAG1332-
- Shop Crane - Drip Tray - VAS6208- or Used Oil Collection and Extraction Unit - SMN372500-

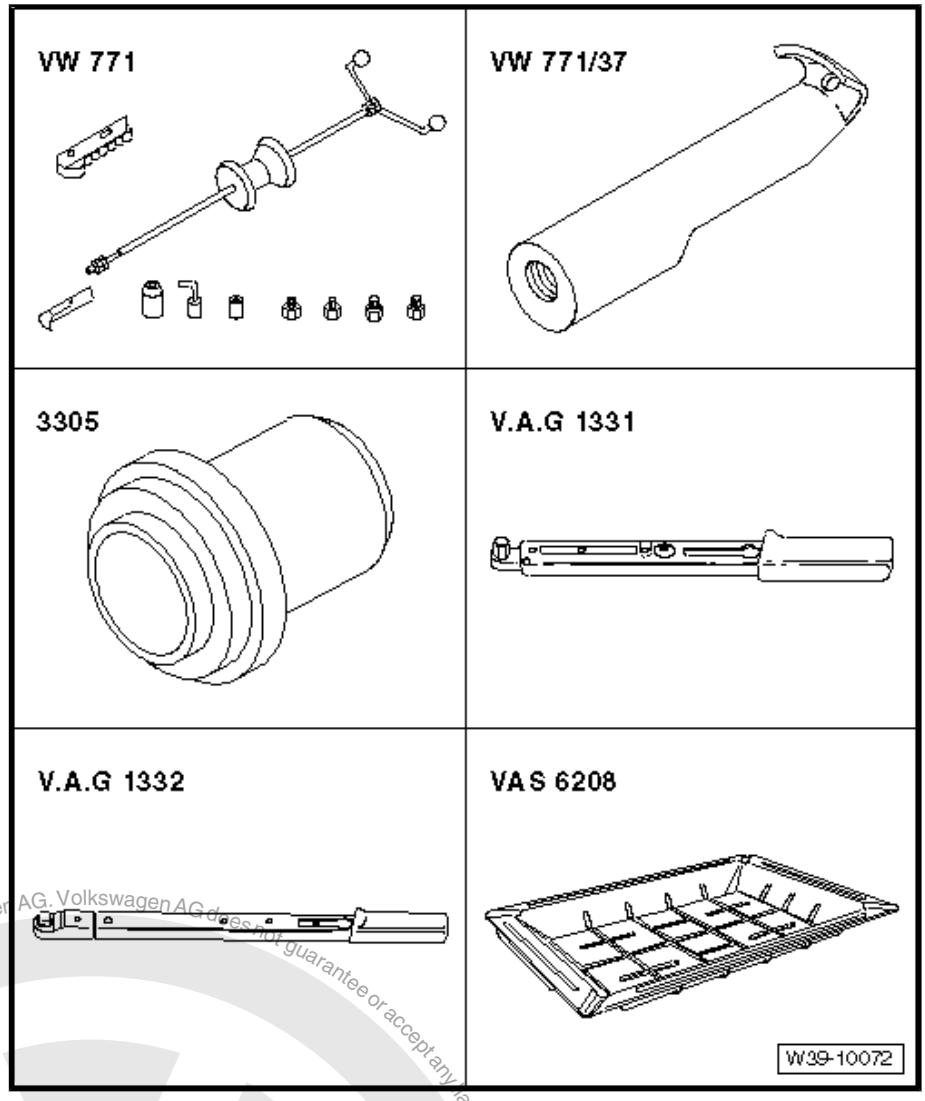


Protected by copyright. Copying for private or commercial purposes, in part or in whole, is not permitted unless authorised by Volkswagen AG. Volkswagen AG does not guarantee or accept any liability with respect to the correctness of information in this document. Copyright by Volkswagen AG.

- Measuring Set - Magnetic Plate - 50mm - VW385/17-
- Dial Gauge Holder - VW387-
- Press Plate - VW402-
- Press Piece - Rod - VW408A-
- Press Piece - Multiple Use - 3005-
- Press Piece - Bushing - 3259-

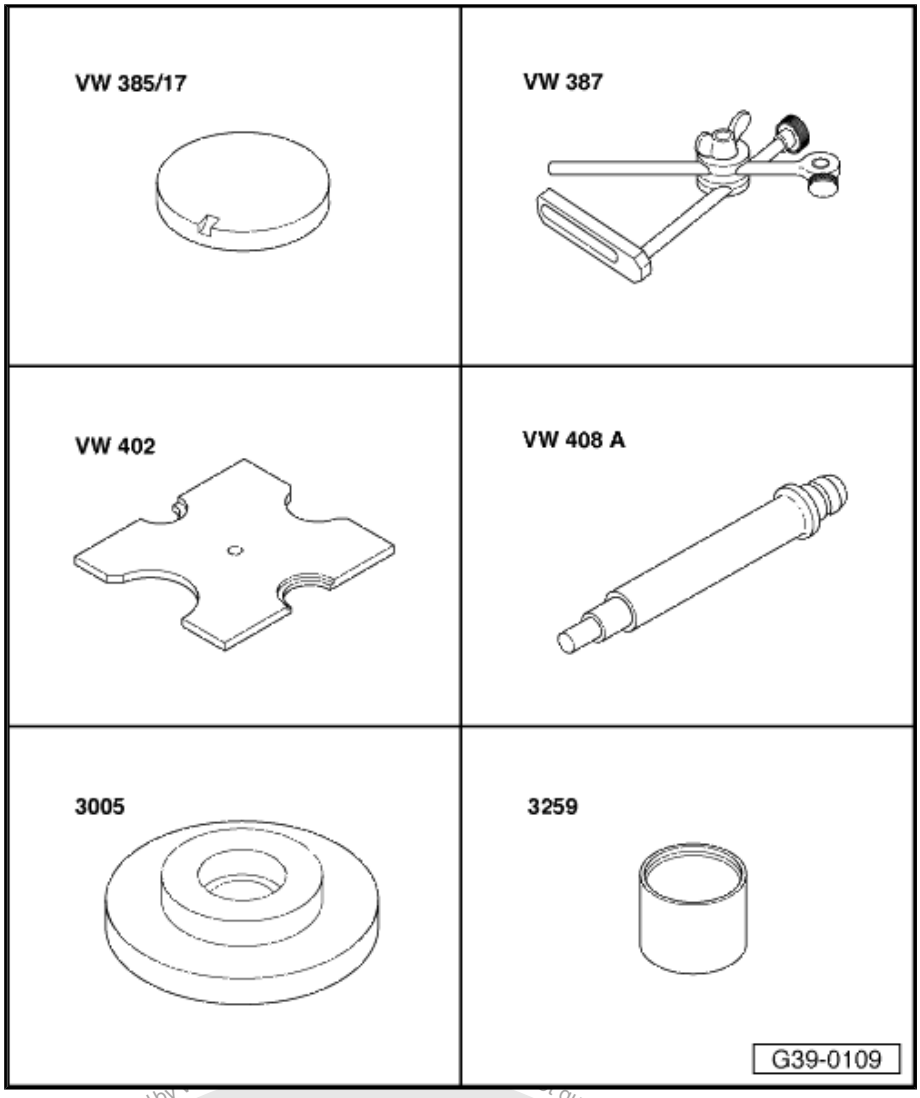


Protected by copyright. Copying for private or commercial purposes, in part or in whole, is not permitted unless authorised by Volkswagen AG. Copyright by Volkswagen AG. We guarantee or accept any liability with respect to the correctness of information in this document.

**Special tools and workshop equipment required**

- Press Piece - Bushing - 3259-
- Press Piece - Reverse Gear Syncro - 3296-
- Bearing Installer - Wheel Bearing - 3345-
- Puller - Taper Roller Bearing - VAG1582-
- Puller - Taper Roller Bearing - Adapter 6A - VAG1582/6A-
- -1- Internal Puller - VAS 251 615-
- -2- Puller - Kukko Puller - 60-150mm Width, 200mm Length - 18/1-
- -3- Puller - Kukko Quick Action Separating Tool - 12-75mm - 17/1-
- -4- Puller - Kukko Counterstay - 22/2-

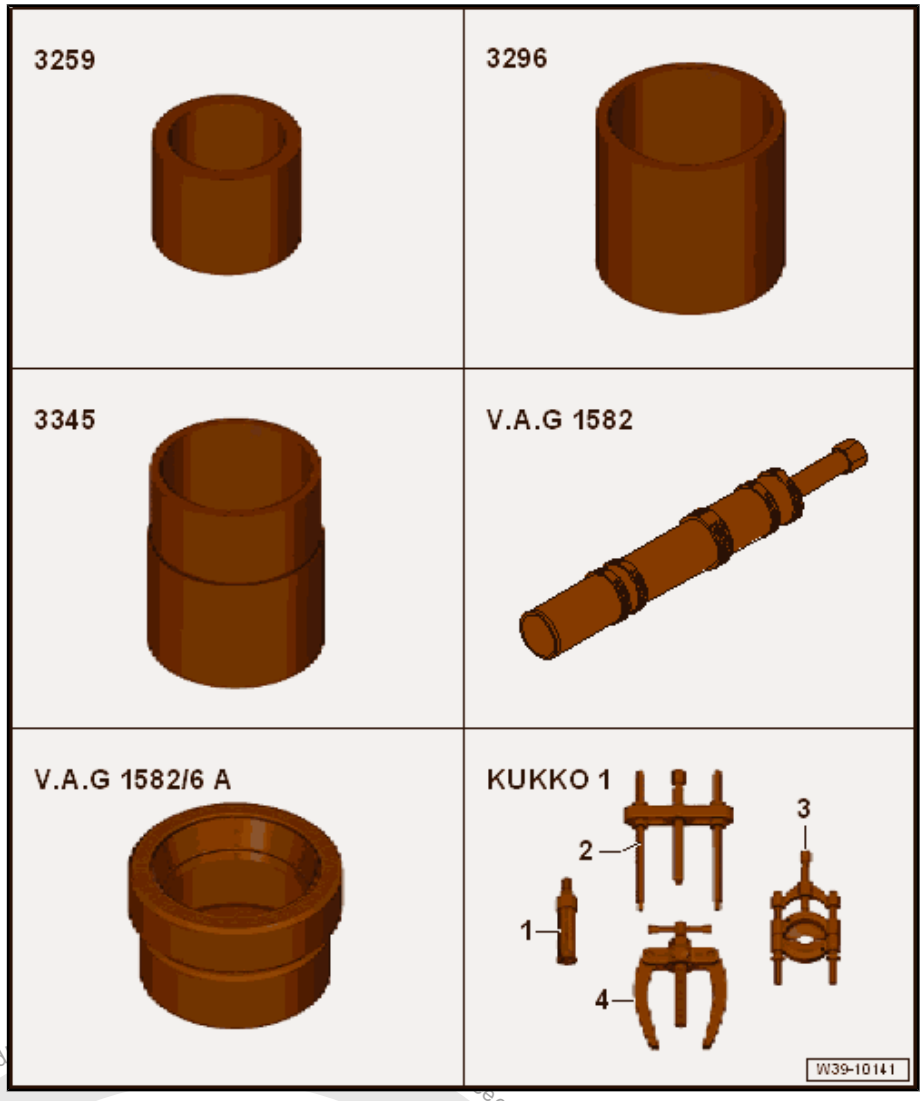


- Dial Indicator - VAS6080A-

- 30 mm Dial Gauge Extension

Protected by copyright. Copying for private or commercial purposes, in part or in whole, is not permitted unless authorised. Copyright by Volkswagen AG.

- Inductive Heater - VAS6414-

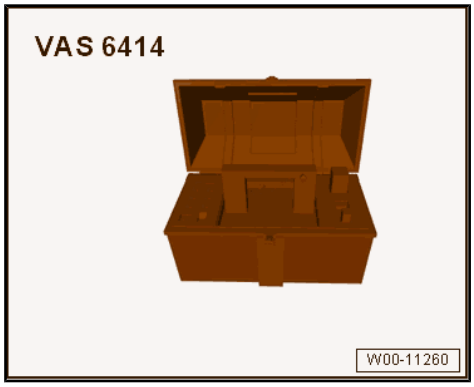


- -1- Puller - Kukko Internal - 46-56mm - 21/7-

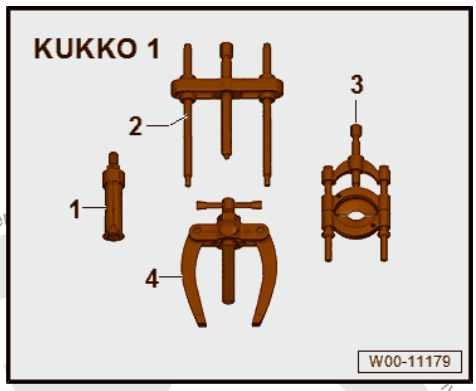


- -4- Counter Support - VAS 251 623-

Protected by copyright. Copying for private or commercial purposes, in part or in whole, is not permitted unless authorised by Volkswagen AG. Copyright by Volkswagen AG. No liability with respect to the correctness of information in this document.

# 5 Revision History

DRUCK NUMBER: K0059240421

| Factory Edition | Edit Edition | Job Type | Feedback | Notes | Quality Checked By |
|---|---|---|---|---|---|
| 02.2016 | 3/30/2016 | Factory Update | Factory Update | Remove tool names from text. | Jim H |
| 11.2014 | 02/23/2016 | Local Feedback | 1146030 | | Eric P. |
| 11.2014 | 8/12/2015 | Editorial Review | | | Jim H |
| 11.2014 | 02/13/2015 | Link Checking | | Updated ext-rl tags | Eric P |
| 11.2014 | 01/06/2015 | Factory Update | | Added BX5 to medata and added engine allocation for BX5 | Eric P |
| | 05/02/2014 | Factory New | | AU1 - Golf - Launch | Gary R |

Protected by Volkswagen AG. Volkswagen AG does not guarantee or accept any liability with respect to the correctness of information in this document. Copyright by Volkswagen AG. Copying for private or commercial purposes, in part or in whole, is not permitted unless authorised by Volkswagen AG.

# Cautions & Warnings

**Please read these WARNINGS and CAUTIONS before proceeding with maintenance and repair work. You must answer that you have read and you understand these WARNINGS and CAUTIONS before you will be allowed to view this information.**

- If you lack the skills, tools and equipment, or a suitable workshop for any procedure described in this manual, we suggest you leave such repairs to an authorized Volkswagen retailer or other qualified shop. We especially urge you to consult an authorized Volkswagen retailer before beginning repairs on any vehicle that may still be covered wholly or in part by any of the extensive warranties issued by Volkswagen.

- Disconnect the battery negative terminal (ground strap) whenever you work on the fuel system or the electrical system. Do not smoke or work near heaters or other fire hazards. Keep an approved fire extinguisher handy.

- Volkswagen is constantly improving its vehicles and sometimes these changes, both in parts and specifications, are made applicable to earlier models. Therefore, part numbers listed in this manual are for reference only. Always check with your authorized Volkswagen retailer parts department for the latest information.

- Any time the battery has been disconnected on an automatic transmission vehicle, it will be necessary to reestablish Transmission Control Module (TCM) basic settings using the VAG 1551 Scan Tool (ST).

- Never work under a lifted vehicle unless it is solidly supported on stands designed for the purpose. Do not support a vehicle on cinder blocks, hollow tiles or other props that may crumble under continuous load. Never work under a vehicle that is supported solely by a jack. Never work under the vehicle while the engine is running.

- For vehicles equipped with an anti-theft radio, be sure of the correct radio activation code before disconnecting the battery or removing the radio. If the wrong code is entered when the power is restored, the radio may lock up and become inoperable, even if the correct code is used in a later attempt.

- If you are going to work under a vehicle on the ground, make sure that the ground is level. Block the wheels to keep the vehicle from rolling. Disconnect the battery negative terminal (ground strap) to prevent others from starting the vehicle while you are under it.

- Do not attempt to work on your vehicle if you do not feel well. You increase the danger of injury to yourself and others if you are tired, upset or have taken medicine or any other substances that may impair you or keep you from being fully alert.

- Never run the engine unless the work area is well ventilated. Carbon monoxide (CO) kills.

- Always observe good workshop practices. Wear goggles when you operate machine tools or work with acid. Wear goggles, gloves and other protective clothing whenever the job requires working with harmful substances.

- Tie long hair behind your head. Do not wear a necktie, a scarf, loose clothing, or a necklace when you work near machine tools or running engines. If your hair, clothing, or jewelry were to get caught in the machinery, severe injury could result.

- Do not re-use any fasteners that are worn or deformed in normal use. Some fasteners are designed to be used only once and are unreliable and may fail if used a second time. This includes, but is not limited to, nuts, bolts, washers, circlips and cotter pins. Always follow the recommendations in this manual - replace these fasteners with new parts where indicated, and any other time it is deemed necessary by inspection.

next



© 2002 Volkswagen of America, Inc.
All rights reserved. Information contained in this document is based on the latest information available at the time of printing and is subject to the copyright and other intellectual property rights of Volkswagen of America, Inc., its affiliated companies and its licensors. All rights are reserved to make changes at any time without notice. No part of this document may be reproduced, stored in a retrieval system, or transmitted in any form or by any means, electronic, mechanical, photocopying, recording, or otherwise, nor may these materials be modified or reposted to other sites, without the prior expressed written permission of the publisher.
Version 1.0

# Cautions & Warnings

- Illuminate the work area adequately but safely. Use a portable safety light for working inside or under the vehicle. Make sure the bulb is enclosed by a wire cage. The hot filament of an accidentally broken bulb can ignite spilled fuel or oil.

- Friction materials such as brake pads and clutch discs may contain asbestos fibers. Do not create dust by grinding, sanding, or by cleaning with compressed air. Avoid breathing asbestos fibers and asbestos dust. Breathing asbestos can cause serious diseases such as asbestosis or cancer, and may result in death.

- Finger rings should be removed so that they cannot cause electrical shorts, get caught in running machinery, or be crushed by heavy parts.

- Before starting a job, make certain that you have all the necessary tools and parts on hand. Read all the instructions thoroughly; do not attempt shortcuts. Use tools that are appropriate to the work and use only replacement parts meeting Volkswagen specifications. Makeshift tools, parts and procedures will not make good repairs.

- Catch draining fuel, oil or brake fluid in suitable containers. Do not use empty food or beverage containers that might mislead someone into drinking from them. Store flammable fluids away from fire hazards. Wipe up spills at once, but do not store the oily rags, which can ignite and burn spontaneously.

- Use pneumatic and electric tools only to loosen threaded parts and fasteners. Never use these tools to tighten fasteners, especially on light alloy parts. Always use a torque wrench to tighten fasteners to the tightening torque listed.

- Keep sparks, lighted matches, and open flame away from the top of the battery. If escaping hydrogen gas is ignited, it will ignite gas trapped in the cells and cause the battery to explode.

- Be mindful of the environment and ecology. Before you drain the crankcase, find out the proper way to dispose of the oil. Do not pour oil onto the ground, down a drain, or into a stream, pond, or lake. Consult local ordinances that govern the disposal of wastes.

- The air-conditioning (A/C) system is filled with a chemical refrigerant that is hazardous. The A/C system should be serviced only by trained automotive service technicians using approved refrigerant recovery/recycling equipment, trained in related safety precautions, and familiar with regulations governing the discharging and disposal of automotive chemical refrigerants.

- Before doing any electrical welding on vehicles equipped with anti-lock brakes (ABS), disconnect the battery negative terminal (ground strap) and the ABS control module connector.

- Do not expose any part of the A/C system to high temperatures such as open flame. Excessive heat will increase system pressure and may cause the system to burst.

- When boost-charging the battery, first remove the fuses for the Engine Control Module (ECM), the Transmission Control Module (TCM), the ABS control module, and the trip computer. In cases where one or more of these components is not separately fused, disconnect the control module connector(s).

- Some of the vehicles covered by this manual are equipped with a supplemental restraint system (SRS), that automatically deploys an airbag in the event of a frontal impact. The airbag is operated by an explosive device. Handled improperly or without adequate safeguards, it can be accidentally activated and cause serious personal injury. To guard against personal injury or airbag system failure, only trained Volkswagen Service technicians should test, disassemble or service the airbag system.

back next



© 2002 Volkswagen of America, Inc.
All rights reserved. Information contained in this document is based on the latest information available at the time of printing and is subject to the copyright and other intellectual property rights of Volkswagen of America, Inc., its affiliated companies and its licensors. All rights are reserved to make changes at any time without notice. No part of this document may be reproduced, stored in a retrieval system, or transmitted in any form or by any means, electronic, mechanical, photocopying, recording, or otherwise, nor may these materials be modified or reposted to other sites, without the prior expressed written permission of the publisher.
Version 1.0

# Cautions & Warnings

- Do not quick-charge the battery (for boost starting) for longer than one minute, and do not exceed 16.5 volts at the battery with the boosting cables attached. Wait at least one minute before boosting the battery a second time.

- Never use a test light to conduct electrical tests of the airbag system. The system must only be tested by trained Volkswagen Service technicians using the VAG 1551 Scan Tool (ST) or an approved equivalent. The airbag unit must never be electrically tested while it is not installed in the vehicle.

- Some aerosol tire inflators are highly flammable. Be extremely cautious when repairing a tire that may have been inflated using an aerosol tire inflator. Keep sparks, open flame or other sources of ignition away from the tire repair area. Inflate and deflate the tire at least four times before breaking the bead from the rim. Completely remove the tire from the rim before attempting any repair.

- When driving or riding in an airbag-equipped vehicle, never hold test equipment in your hands or lap while the vehicle is in motion. Objects between you and the airbag can increase the risk of injury in an accident.

**I have read and I understand these Cautions and Warnings.**

back OK

Protected by copyright. Copying for private or commercial purposes, in part or in whole, is not permitted unless authorized by Volkswagen AG. Volkswagen AG does not guarantee or accept any liability with respect to the correctness of information in this document. Copyright by Volkswagen AG.



© 2002 Volkswagen of America, Inc.
All rights reserved. Information contained in this document is based on the latest information available at the time of printing and is subject to the copyright and other intellectual property rights of Volkswagen of America, Inc., its affiliated companies and its licensors. All rights are reserved to make changes at any time without notice. No part of this document may be reproduced, stored in a retrieval system, or transmitted in any form or by any means, electronic, mechanical, photocopying, recording, or otherwise, nor may these materials be modified or reposted to other sites, without the prior expressed written permission of the publisher.
Version 1.0