A040A01A-AAT

FOREWORD

Thank you for choosing Hyundai. We are pleased to welcome you to the growing number of discriminating people who drive Hyundais. The advanced engineering and high-quality construction of each Hyundai we build is something of which we're very proud.

Your Owner's Manual will introduce you to the features and operation of your new Hyundai. It is suggested that you read it carefully because the information it contains can contribute greatly to the satisfaction you receive from your new car.

The manufacturer also recommends that all service and maintenance on your car be performed by an authorized Hyundai dealer. Hyundai dealers are prepared to provide high-quality service, maintenance and any other assistance that may be required.

A050A01HR-GAT

HYUNDAI MOTOR COMPANY

Note: Because future owners will also need the information included in this manual, if you sell this Hyundai, please leave the manual in the vehicle for their use. Thank you.

CAUTION:
Severe engine and transmission damage may result from the use of poor quality fuels and lubricants that do not meet Hyundai specifications. You must always use high quality fuels and lubricants that meet the specifications listed on Page 9-4 in the Vehicle Specifications section of the Owner's Manual.

Copyright 2009 Hyundai Motor Company. All rights reserved. No part of this publication may be reproduced, stored in any retrieval system or transmitted in any form or by any means without the prior written permission of Hyundai Motor Company.

FEATURES OF YOUR HYUNDAI

Fuel Recommendations 1-2
Breaking In Your New Hyundai 1-3
Key 1-4
Door Locks 1-5
Window Glass 1-7
Seat 1-8
To Access the Engine 1-12
Seat Belt 1-14
Child Restraint System 1-19
Instrument Cluster and Indicator Lights 1-22
Warning Light and Indicator Lights 1-26
Odometer/Trip Odometer 1-31
Multi-function Light Switch 1-32
Windshield Wiper/Washer Switch 1-35
Digital Clock 1-39
Glove Box 1-43
Center Seatback Console Compartment 1-44
Mirror 1-45
Hood Release 1-47
Fuel Tank Cap 1-48
Rear Gate 1-49
Side Gate 1-49
Heating and Cooling Control 1-53
Stereo Sound System 1-64
Audio System 1-66
Antenna 1-77

B010A03HR-GAT

Use Diesel

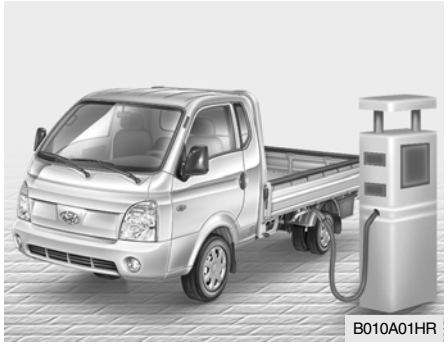

Diesel fuel

Diesel engine must be operated only on commercially available diesel fuel that complies with EN 590 or comparable standard. (EN stands for "European Norm"). Do not use marine diesel fuel, heating oils, or non-approved fuel additives, as this will increase wear and cause damage to the engine and fuel system. The use of non-approved fuels and / or fuel additives will result in a limitation of your warranty rights.

Diesel fuel of above cetane 52 is used in Hyundai vehicle. If two types of diesel fuel are available, use summer or winter fuel properly according to the following temperature conditions.

- o Above -5°C (23°F) ... Summer type diesel fuel.
- o Below -5°C (23°F) ... Winter type diesel fuel.

Watch the fuel level in the tank very carefully : If the engine stops through fuel failure, the circuits must be completely purged to permit restarting.

CAUTION:

- **o Do not let any gasoline or water enter the tank. This would make it necessary to drain it out and to bleed the lines to avoid jamming the injection pump and damaging the engine.**
- **o In winter, in order to cut down incidents due to freezing, paraffin oil may be added to the fuel if the temperature drops to below -10°C. Never use more than 20% paraffin oil.**

Biodiesel

Commercially supplied biodiesel blends of no more than 5% biodiesel, commonly known as "B5 biodiesel" may be used in your vehicle if it meets EN 14214 or equivalent specifications. (EN stands for "European Norm"). The use of biofuels made from rapeseed methyl ester (RME), fatty acid methyl ester (FAME), vegetable oil methyl ester (VME) etc. or mixing diesel with biodiesel will cause increased wear or damage to the engine and fuel system. Repair or replacement of worn or damaged components due to the use of non approved fuels will not be covered by the manufactures warranty.

Biodiesel (for New Zealand)

Commercially supplied biodiesel blends of no more than 5% biodiesel, commonly known as "B5 biodiesel" may be used in your vehicle if it meets EN 14214 or equivalent specifications. (EN stands for "European Norm"). The use of biofuels exceeding 5%, made from rapeseed methyl ester (RME), vegetable oil methyl ester (VME) etc. or mixing diesel exceeding 5% with biodiesel will cause increased wear or damage to the engine and fuel system.

Repair or replacement of worn or damaged components due to the use of non approved fuels will not be covered by the manufactures warranty.

CAUTION:

- **Never use any fuel, whether diesel or B5 biodiesel that fails to meet the latest petroleum industry specification.**
- **Never use any fuel additives or treatments that are not recommended or approved by the vehicle manufacturer.**

B010F01A-AAT

Operation in Foreign Countries

If you are going to drive your Hyundai in another country, be sure to:

- Observe all regulations regarding registration and insurance.
- Determine that acceptable fuel is available.

BREAKING IN YOUR NEW HYUNDAI

B020B01HR-GAT

During the First 1,000 Km (600 Miles)

No formal "break-in" procedure is required with your new Hyundai. However, you can contribute to the economical operation and durability of your Hyundai by observing the following recommendations during the first 1,000 km (600 miles).

- While driving, keep your engine speed (rpm, or revolutions per minute) between 2,000 rpm and 4,000 rpm.
- While driving, keep under three quarters of maximum speed.
- Use moderate acceleration. Don't start, depress the accelerator pedal fully.
- For the first 300 km (200 miles), try to avoid hard stops.
- Don't lug the engine (in other words, don't drive so slowly in too-high a gear that the engine "bucks": shift to a lower gear).
- Whether going fast or slow, vary your speed from time to time.
- Don't let the engine idle longer than 3 minutes at one time.
- Don't tow a trailer during the first 1,000 km (600 miles) of operation.
- Do not exceed loading limits.

B030A01P-GAT

Before Operation Precautions for New Vehicle

The performance and life of a vehicle depend largely on how the vehicle is handled when new.
To maintain the parts smoothly and sustain high performance for a long time to come, be sure to observe the following points.

Make sure that your vehicle does not miss the first 5,000 km inspections.

After the first 5,000 km of driving, take your vehicle to your nearest service shop for inspection.

B055A02P-GAT

LOADING YOUR VEHICLE

Never load the luggage and people to exceed GVWR (MLW) and GAWR of your vehicle.
You can find the GVWR(MLW) and GAWR -maximum loading capacities- on the VIN plate (See page 8-2).
The GVWR (Gross Vehicle Weight Rating) or MLW (Maximum Loaded Weight) means total weight of the vehicle, all occupants, fuel and cargo. And GAWR means the maximum weights that the front and rear axles can endure the weights including vehicle itself weight.

WARNING:
Improperly loading your car can serious affect its steering and braking performance causing a crash in which you may be seriously injured or killed.

NOTE:
Your warranty does not cover parts or components that fail because of overloading.

B030A01A-AAT

For greater convenience, the same key operates all the locks in your Hyundai. However, because the doors can be locked without a key, carrying a spare key is recommended in case you accidentally lock one key inside the car.

B030B01A-AAT

Record Your Key Number

Type A

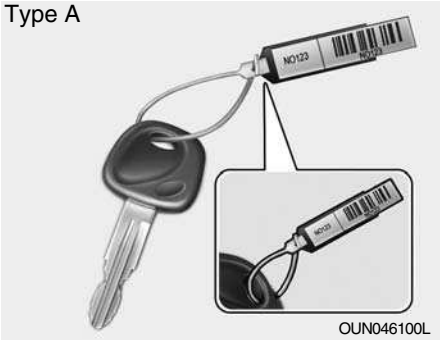

Type B

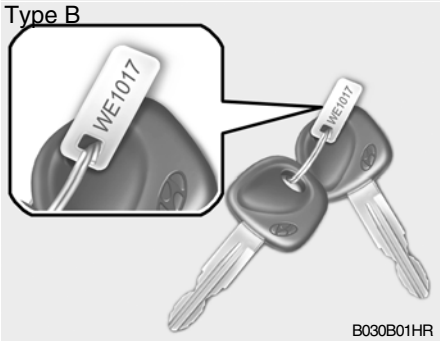

A code number is stamped on the number plate that came with the keys to your Hyundai.

This key number plate should not be left with the keys but kept in a safe place, not in the vehicle. The key number should also be recorded in a place where it can be found in an emergency.

If you need additional keys, or if you should lose your keys, your authorized Hyundai dealer can make new keys if you can supply the key number.

B030D01HR-GAT

Use of key

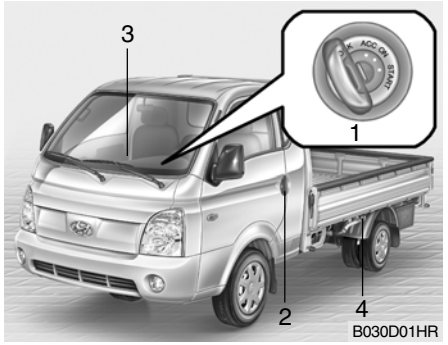

1. Ignition Switch
2. Front Door (Driver's Door)
3. Front Door (Passenger's Door) (if installed)
4. Fuel Tank Cap

B040A01A-AAT

WARNING:

- **Unlocked doors can be dangerous. Before you drive away (especially if there are children in the car), be sure that all the doors are securely closed and locked so that the doors cannot be inadvertently opened from the inside. This helps ensure that the doors will not be opened accidentally. Also, when combined with the proper use of seat belts, locking the doors helps keep occupants from being ejected from the car in case of an accident.**
- **Before opening the door, always look for and avoid oncoming traffic.**

B040B01HR-GAT

Locking and Unlocking Front Doors With a Key

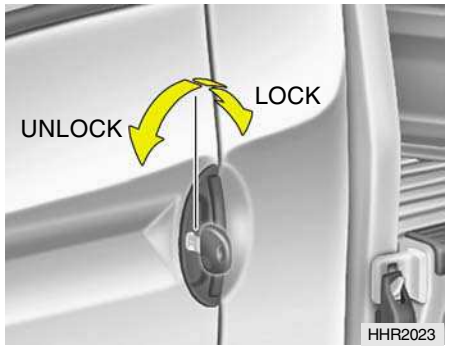

- The door can be locked or unlocked with a key.
- Lock the door by turning the key toward the rear of the vehicle and unlock it by turning the key toward the front.

B040C01S-AAT

Locking From the Outside

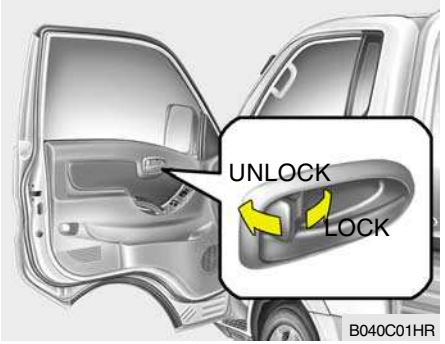

The doors can be locked without a key. To lock the doors, first push the inside lock switch to the "LOCK" position so that the red mark on the switch is not visible, then close the door.

NOTE:

- **When locking the door this way, be careful not to lock the door with the ignition key left in the vehicle.**
- **To protect against theft, always remove the ignition key, close all windows, and lock all doors when leaving your vehicle unattended.**

B040D01FC-GAT

Locking From the Inside

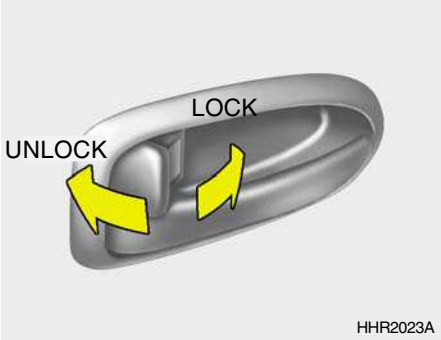

To lock the doors from the inside, simply close the door and push the lock switch to the "LOCK" position. When this is done, neither the outside nor the inside door handle can be used.

NOTE:

When the door is locked, the red mark on the switch is not visible and the character "LOCK" on the switch is visible.

B040G02HR-GAT

Central Door Lock (If Installed)

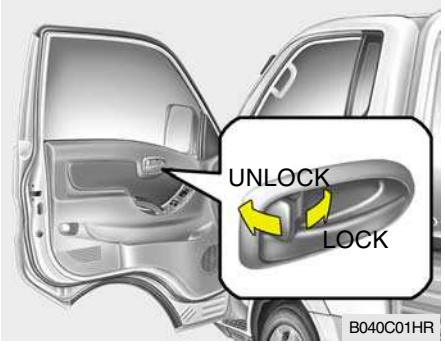

The central door locking is operated by pushing the driver's door lock switch toward the front or rear of the vehicle. If the passenger or rear doors are open when the switch is pushed, the door will remain locked when closed.

NOTE:

- **When pushing the switch toward the rear, all doors will unlock. When pushing the switch toward the front, all doors will lock.**
- **When the door is unlocked, the red mark on the switch is visible and the character "LOCK" on the switch is not visible.**

o **The central door locking is operated by turning the key (driver's door only) toward the front or rear of the vehicle.**

CAUTION:
If the door is locked/unlocked multiple times in rapid succession with either the vehicle key or door lock switch, the system may stop operating temporarily in order to protect the circuit and prevent damage to system components.

WINDOW GLASS

B050A01A-AAT

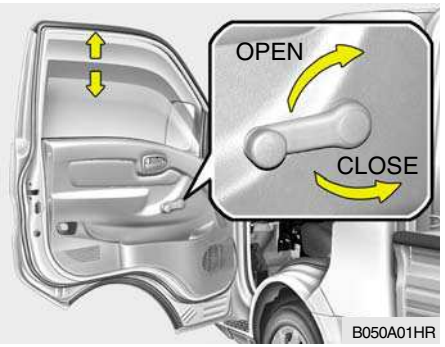

To raise or lower the window, turn the window regulator handle clockwise or counterclockwise.

WARNING:
When opening or closing the windows, make sure your passenger's arms, hands and body are safely out of the way.

B060A01HR-GAT

POWER WINDOWS (If Installed)

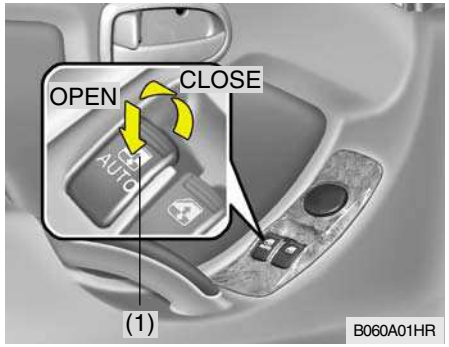

The power windows operate when the ignition key is in the "ON" position. The main switches are located on the driver's armrest and control the front windows on both sides of the vehicle. The windows may be opened by depressing the appropriate window switch and closed by pulling up the switch. To open the window on the driver's side, press the switch(1) down. The window moves as long as the switch is operated.

Auto-Down Window (Driver's Side) (If Installed)

The Auto-Down window is moved to its fully open position by pushing the switch. To stop at the desired position push the switch again.

WARNING:

1) Be careful that someone's head, hands and body are not trapped by a closing window.
2) Never try to operate the main switch on the driver's door and the passenger's door window switch in opposing directions at the same time. If this is done, the window will stop and cannot be opened or closed.
3) Do not leave children alone in the car. Always remove the ignition key for their safety.

B080A01FC-GAT

WARNING:

Never attempt to adjust the seat while the vehicle is moving. This could result in loss of control or an accident which may cause death, serious injury, or property damage.

B080B01HR-GAT

FRONT SEATS

Adjusting Seat Forward and Rearward (Driver's Seat Only)

To move the seat toward the front or rear, pull the lock release lever upward. This will release the seat on its track so you can move it forward or rearward to the desired position. When you find the position you want, release the lever and slide the seat forward or rearward on its track until it locks into the desired position and cannot be moved further.

WARNING:
To ensure the seat is locked securely, attempt to move the seat forward or rearward without using the lock release lever.

B080C01HR-GAT

Adjusting Seatback Angle (Driver's Seat Only) (If Installed)

To recline the seatback, lean forward to take your weight off it, then pull up on the recliner control lever at the outside edge of the seat. Now lean back until the desired seatback angle is achieved. To lock the seatback into position, release the recliner control lever.

WARNING:
To minimize risk of severe injury in the event of a collision or a sudden stop, both the driver and passenger seatbacks should always be in an upright position while the vehicle is in motion. The protection provided by the seat belts in a frontal collision may be reduced significantly when the seatbacks are reclined. There is greater risk that the driver and passenger will slide under the seat belt which may result in serious injury if a crash occurs when the seatbacks are reclined. The seat belt cannot provide full protection to an occupant if the seatback is reclined.

B080D02JM-GAT

Adjustable Headrests

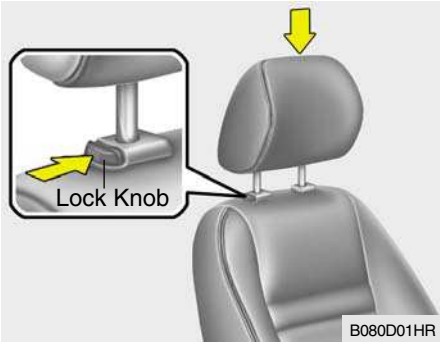

Headrests are designed to help reduce the risk of neck injuries.
To raise the headrest, pull it up. To lower it, push it down while pressing the lock knob. To remove the headrest, raise it as far as it can go then press the lock knob while pulling upward.

WARNING:

- **For maximum effectiveness in case of an accident the headrest should be adjusted so the middle of the headrest is at the same height as the top of the occupant's eyes. For this reason, the use of a cushion that holds the body away from the seatback should not be recommended.**
- **Do not operate vehicle with the headrests removed as injury to the occupants may occur in the event of an accident. Headrests may provide protection against neck injuries when properly adjusted.**
- **Do not adjust the headrest height while the vehicle is in motion.**

B080E02O-AAT

Lumbar Support Control (Driver's Seat Only) (If Installed)

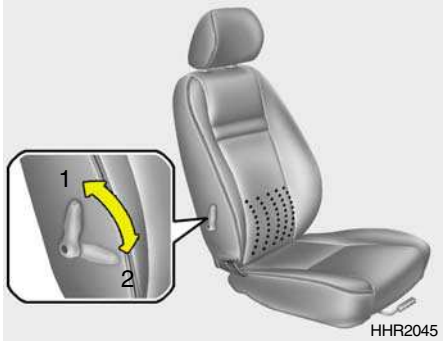

To adjust the lumbar support, turn the handle on the inboard side of the seat. To increase the amount of lumbar support, pull the lever forward. To decrease it, push the lever toward the rear.

1. Minimum support
2. Maximum support

B080G01HR-GAT

Center Seat (With Seatback Console Compartment) (If Installed)

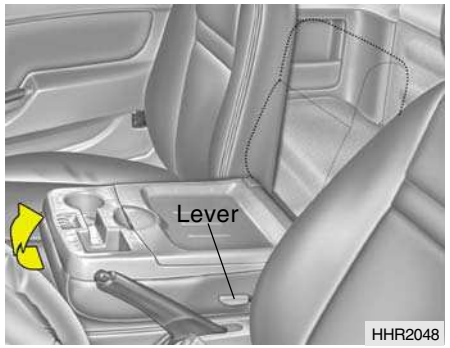

- o To use the console compartment, push down the lever and tilt the seatback forward.
- o To use the center seat, lift up the seatback until it locks into position.

CAUTION:
When lifting up the seatback, do not place any object on the console compartment.

B110B02HR-GAT

REAR SEAT (If Installed) Rear Seat Cushion Under Box

There is mutipurpose receipt space under the rear seat cushion.

To use the rear seat cushion under box, pull up the clamp levers on the both sides of the cushion and unhook the clamp from the seat cushion's hook. And then, pull the strap on the seat cushion.

WARNING:
When you return the seat cushion to its original position, make sure the seat belts are in position to be accessible and to function properly.

TO ACCESS THE ENGINE

B300A01H-GAT

The engine compartment can be checked by moving the driver's seat and the front passenger's seat.

B300B01HR-GAT

To Inspect the Engine Compartment Under the Diver's Seat

1. Move the seat all the way forward by pulling the lever up.

2. Pull the recliner control lever and tilt the seatback forward.

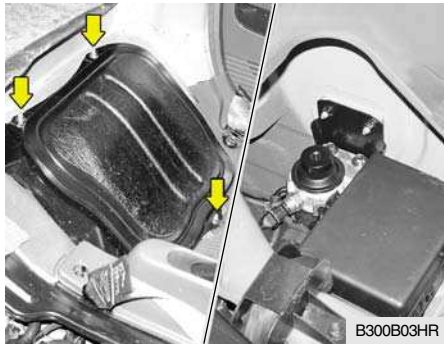

3. After lifting up the mat, open the access hole cover by removing the nut with a spanner.

B300C05HR-GAT

To Inspect the Engine Compartment Under the Front Passenger's Seat (Fixed Seatback type)

1. Pull the clamp lever up and unhook the clamp from the seat pan's hook.

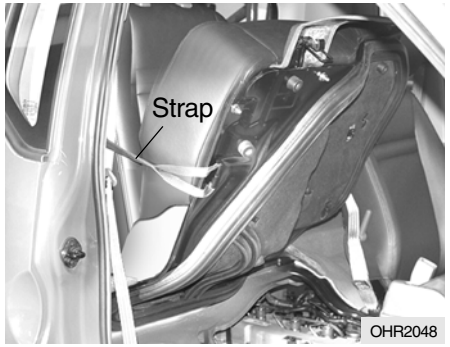

2. Lift up the seat cushion and secure the strap to the seat pan's hook on the left side to hold the seat.
   And then, inspect the engine compartment under the front passenger seat.

NOTE:
To return the seat cushion to its normal position, reverse the above procedure.

B300D05HR-GAT

To Inspect the Engine Compartment Under the Front Passenger's Seat (Folding Seatback type)

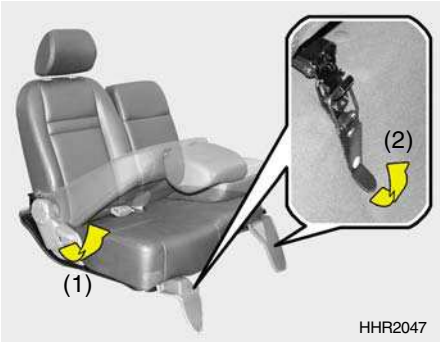

1. Pull the recliner control lever (1) and tilt the seatback forward.
2. Pull the clamp lever (2) up and unhook the clamp from the seat pan's hook.

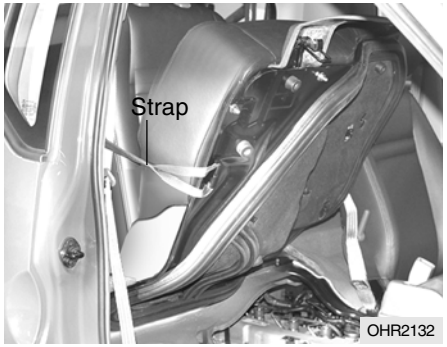

3. Lift up the seat cushion and secure the strap to the seat pan's hook on the left side to hold the seat.
   And then, inspect the engine compartment under the front passenger seat.

NOTE:
To return the seat cushion to its normal position, reverse the above procedure.

B150A03A-GAT
SEAT BELT PRECAUTIONS

All occupants of the vehicle should wear their seat belts at all times. Indeed, your province's laws may require that some or all occupants of the vehicle use seat belts.
The possibility of injury or the severity of injury in an accident will be decreased if this elementary safety precaution is observed. In addition, follow the other instructions provided in this section.

B150B01Y-GAT
Infant or Small Child

Some countries require the use of child restraint systems for infants and small children. Whether this is required by law or not, it is strongly recommended that a child restraint seat or infant restraint system be used for infants or small children weighing less than 18 kilograms (40 pounds).

NOTE:
Small children are best protected in an accident when properly restrained by a child restraint system.

B150C02A-AAT
Larger Children

Children who are too large for child restraint systems should always occupy the rear seat and use the available lap/shoulder belts. The lap portion should be fastened snug on the hips and as low as possible. Check belt fit periodically. A child's squirming could put the belt out of position. Children are afforded the most safety in the event of an accident when they are restrained by a proper restraint system in the rear seat. If a larger child (over age 13) must be seated in the front seat, the child should be securely restrained by the available lap/shoulder belt and the seat should be placed in the rearmost position. Children under the age of 13 should be restrained securely in the rear seat. NEVER place a child under the age of 13 in the front seat. NEVER place a rear facing child seat in the front seat of a vehicle.

B150D01S-AAT
Pregnant Women

The use of a seat belt is recommended for pregnant women to lessen the chance of injury in an accident. When a seat belt is used, it should be placed as low and snugly as possible on the hips, not across the abdomen. For specific recommendations, consult a physician.

B150E01A-AAT
Injured Person

A seat belt should be used when an injured person is being transported. When this is necessary, you should consult a physician for recommendations.

B150F01A-AAT
One Person Per Belt

Two people (including children) should never attempt to use a single seat belt. This could increase the severity of injuries in case of an accident.

B150G01A-AAT
Do Not Lie Down

To reduce the chance of injuries in the event of an accident and to achieve maximum effectiveness of the restraint system, all passengers should be sitting up and the front seats should be in an upright position when the car is moving. A seat belt cannot provide proper protection if the person is lying down in the rear seat or if the front seat is in a reclined position.

WARNING:
Sitting in a reclined position or lying down when your vehicle is in motion can be dangerous. Even if you buckle up, your seat belts can't do their job when you're reclined. The shoulder belt can't do its job because it won't be against your body. Instead, it will be in front of you. In a crash you could go into it with great force, receiving serious neck or other injuries.

The lap belt can't do its job either. In a crash the belt could go up over your abdomen. The belt forces would be applied there, not at your strong pelvic bones. This could cause serious internal injuries.
For proper protection when the vehicle is in motion, have the seatback upright. Then sit back in the seat and wear your seat belt properly. See page 1-16.

B160A02A-AAT

CARE OF SEAT BELTS

Seat belt systems should never be disassembled or modified. In addition, care should be taken to assure that seat belts and belt hardware are not damaged by seat hinges, doors or other abuse.

B160B01A-AAT

Periodic Inspection

It is recommended that all seat belts be inspected periodically for wear or damage of any kind. Parts of the system that are damaged should be replaced as soon as possible.

B160C01A-AAT

Keep Belts Clean and Dry

Seat belts should be kept clean and dry. If belts become dirty, they can be cleaned by using a mild soap solution and warm water. Bleach, dye, strong detergents or abrasives should not be used because they may damage and weaken the fabric.

B160D01A-AAT

When to Replace Seat Belts

Entire in-use seat belt assembly or assemblies should be replaced if the vehicle has been involved in an accident. This should be done even if no damage is visible. Additional questions concerning seat belt operation should be directed to your Hyundai Dealer.

B180A03A-GAT

SEAT BELTS 3-Point System with Emergency Locking Retractor

To Fasten Your Belt

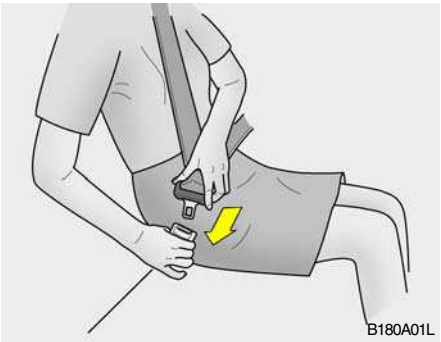

To fasten your seat belt, pull it out of the retractor and insert the metal tab into the buckle. There will be an audible "click" when the tab locks into the buckle.

The seat belt automatically adjusts to the proper length only after the lap belt is adjusted manually so that it fits snugly around your hips. If you lean forward in a slow, easy motion, the belt will extend and let you move around.

If there is a sudden stop or impact, however, the belt will lock into position. It will also lock if you try to lean forward too quickly. Check to make sure that the belt is properly locked and that the belt is not twisted.

NOTE:
If you are not able to pull out the seat belt from the retractor, firmly pull the belt out and release it. Then you will be able to pull the belt out smoothly.

B200A01S-GAT

Adjusting Your Seat Belt

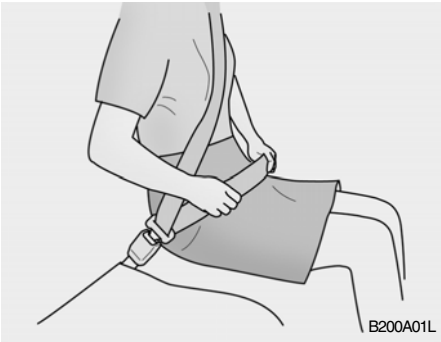

You should place the belt as low as possible on your hips, not on your waist. If the belt is located too high on your body, you could slide under it in case of accident or a sudden stop. This could result of death, serious injury or property damage. Both arms should not be under or over the belt. Rather, one should be over and the other under, as shown in the illustration. Never wear the seat belt under the arm nearest the door.

B210A01A-AAT

To Release the Seat Belt

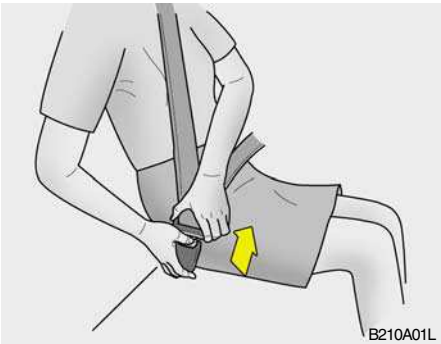

The seat belt is released by pressing the release button in the locking buckle. When it is released, the belt should automatically draw back into the retractor.
If this does not happen, check the belt to be sure it is not twisted, then try again.

B220A01A-AAT

SEAT BELTS (2-Point Static Type) To Fasten Your Seat Belt

To fasten a 2-point static type belt, insert the metal tab into the locking buckle. There will be an audible "click" when the tab locks into the buckle. Check to make sure the belt is properly locked and that the belt is not twisted.

B220B01A-AAT

Adjusting Your Seat Belt

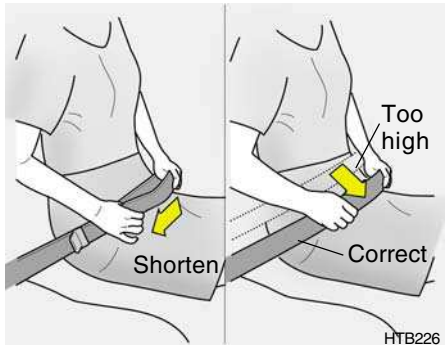

With a 2-point static type seat belt, the length must be adjusted manually so it fits snugly around your body. Fasten the belt and pull on the loose end to tighten. The belt should be placed as low as possible on your hips, not on your waist. If the belt is too high, it could increase the possibility of your being injured in an accident.

B220C02HR-GAT

To Release the Seat Belt

When you want to release the seat belt, press the button in the locking buckle.

WARNING:
The center lap belt latching mechanism is different from those for the front seat shoulder belts. When fastening the front seat shoulder belts or the center lap belt, make sure they are inserted into the correct buckles to obtain maximum protection from the seat belt system and assure proper operation.

CHILD RESTRAINT SYSTEM

B230A02HP-GAT

(If Installed)

Children riding in the car should sit in the rear seat and must always be properly restrained to minimize the risk of injury in an accident, sudden stop or sudden maneuver. According to accident statistics, children are safer when properly restrained in the rear seats than in the front seat. Larger children not in a child restraint should use one of the seat belts provided.

You are required by law to use safety restraints for children. If small children ride in your vehicle you must put them in a child restraint system (safety seat). Child restraint systems are designed to be secured in vehicle seats by lap belts or the lap belt portion of a lap/shoulder belt, or by a tether anchor and/or ISOFIX anchors (if installed).

Children could be injured or killed in a crash if their restraints are not properly secured. For small children and babies, a child seat or infant seat must be used. Before buying a particular child restraint system, make sure it fits your car and seat belts, and fits your child. Follow all the instructions provided by the manufacturer when installing the child restraint system.

WARNING:

- **A child restraint system must be placed in the rear seat. Never install a child or infant seat on the front passenger's seat. Should an accident occur it could severely injure or kill an infant or child seated in an infant or child seat. Thus, only use a child restraint in the rear seat of your vehicle.**
- **Since a safety belt or child restraint system can become very hot if it is left in a closed vehicle, be sure to check the seat cover and buckles before placing a child there.**
- **When the child restraint system is not in use, fasten it with a safety belt so that it will not be thrown forward in the case of a sudden stop or an accident.**
- **Children who are too large to be in a child restraint should sit in the rear seat and be restrained with the available lap/shoulder belts. Never allow children to ride in the front passenger seat.**
- **Always make sure that the shoulder belt portion of the outboard lap/shoulder belt is positioned midway over the shoulder, never across the neck or behind the back. Moving the child closer to the center of the vehicle may help provide a good shoulder belt fit. The lap belt portion of the lap/shoulder belt or the center seat lap belt must always be positioned as low as possible on the child's hips and as snug as possible.**
- **If the seat belt will not properly fit the child, Hyundai recommends the use of an approved booster seat in the rear seat in order to raise the child's seating height so that the seat belt will properly fit the child.**

- **Never allow a child to stand up or kneel on the seat.**
- **Never use an infant carrier or child safety seat that "hooks" over a seatback; it may not provide adequate security in an accident.**
- **Never allow a child to be held in a person's arms while they are in a moving vehicle, as this could result in serious injury to the child in the event of an accident or a sudden stop. Holding a child in a moving vehicle does not provide the child with any means of protection during an accident, even if the person holding the child is wearing a seat belt.**
- **If the child restaint seat is not anchored properly, the risk of a child being seriously injured or killed in a collision greatly increases.**

B230F01HR-GAT

Installation on Front Seat Center Position

Use the center seat belt to secure the child restraint system as illustrated. After installation of the child restraint system, rock the child seat back and forth, and side to side to ensure that it is properly secured by the seat belt.
If the child seat moves, readjust the length of the seat belt. Then, if equipped, insert the child restraint tether strap hook into the child restraint hook holder and tighten to secure the seat. Always refer to the child restraint system manufacturer's recommendation before installing the child restraint system in your vehicle.

B230G01HR-GAT

Installation on Outboard Front Passenger's Seat

To install a child restraint system on the outboard front passenger's seat, extend the shoulder/lap belt from its retractor. Install the child restraint system, buckle the seat belt and allow the seat belt to take up any slack. Make sure that the lap portion of the belt is tight around the child restraint system and the shoulder portion of the belt is positioned so that it cannot interfere with the child's head or neck. After installation of the child restraint system, try to move it in all directions to be sure the child restraint system is securely installed.

If you need to tighten the belt, pull more webbing toward the retractor. When you unbuckle the seat belt and allow it to retract, the retractor will automatically revert back to its normal seated passenger emergency locking usage condition.

NOTE:

- **Before installing the child restraint system, read the instructions supplied by the child restraint system manufacturer.**
- **If the seat belt does not operate as described, have the system checked immediately by your authorized Hyundai dealer.**

B230H01HR-GAT

Child Seat Restraint Suitability For Seat Position

Use child safety seats that have been officially approved and are appropriate for your children. When using the child safety seats, refer to the following table.

Age Group	Seating Position	
	Passenger Outboard	Passenger Center
0 : Up to 10 kg (0 ~ 9 months)	X	X
0+ : Up to 13 kg (0 ~ 2 years)	U	X
I : 9kg to 18kg (9 months ~ 4 years)	UF	UF
II & III : 15kg to 36kg (4 ~ 12 years)	X	X

U : Suitable for "universal" category restraints approved for use in this mass group (PEG-PEREGO E13 03 0010 083779)

UF: Suitable for forward-facing "universal" category restraints approved for use in this mass group (ROMER E1 03301133)

X : Seat position not suitable for children in this mass group

B260A01HR-GAT

Type A (Without Tachometer)

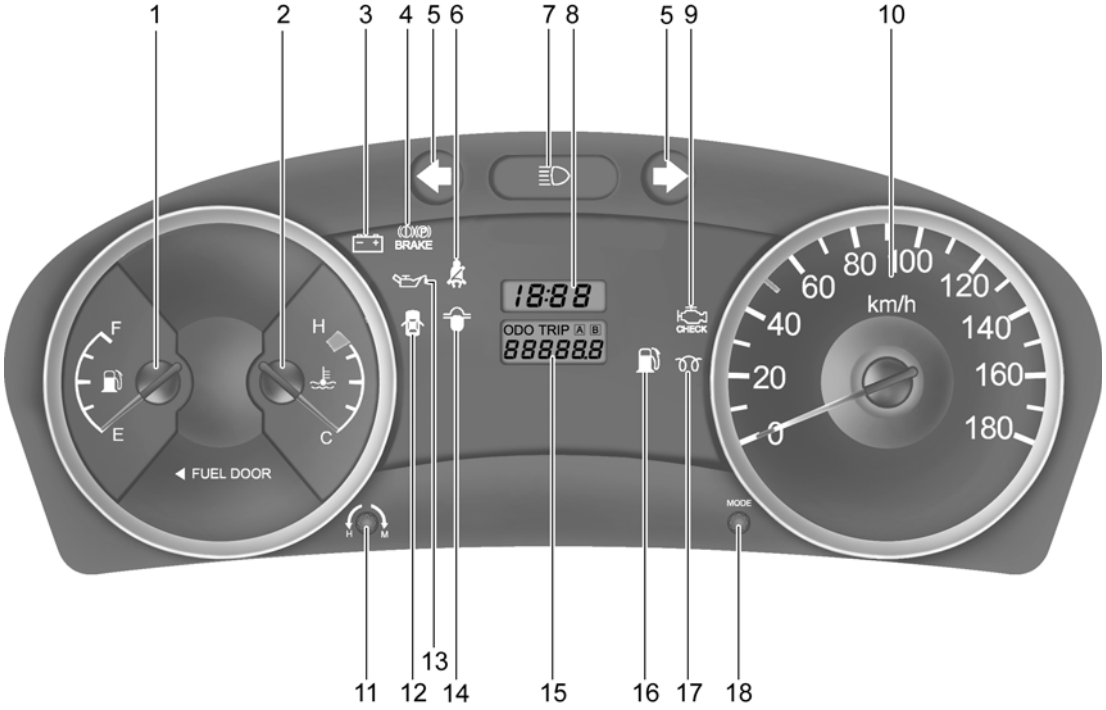

B260A01HR

1. Fuel Gauge
2. Coolant Temperature Gauge
3. Charging System Warning Light
4. Parking Brake/Low Brake Fluid Level Warning Light
5. Turn Signal Indicator Light
6. Seat Belt Warning Light
7. High Beam Indicator Light
8. Digital Clock
9. Malfunction Indicator Light (MIL) (If Installed)
10. Speedometer
11. Digital Clock Reset Switch
12. Door Ajar Warning Light
13. Low Oil Pressure Warning Light
14. Fuel Filter Warning Light
15. Odometer/Trip Odometer
16. Low Fuel Warning Light
17. Diesel Pre-heat Indicator Light
18. Trip Odometer Reset Switch

B260B01HR-GAT

Type B (With Tachometer)

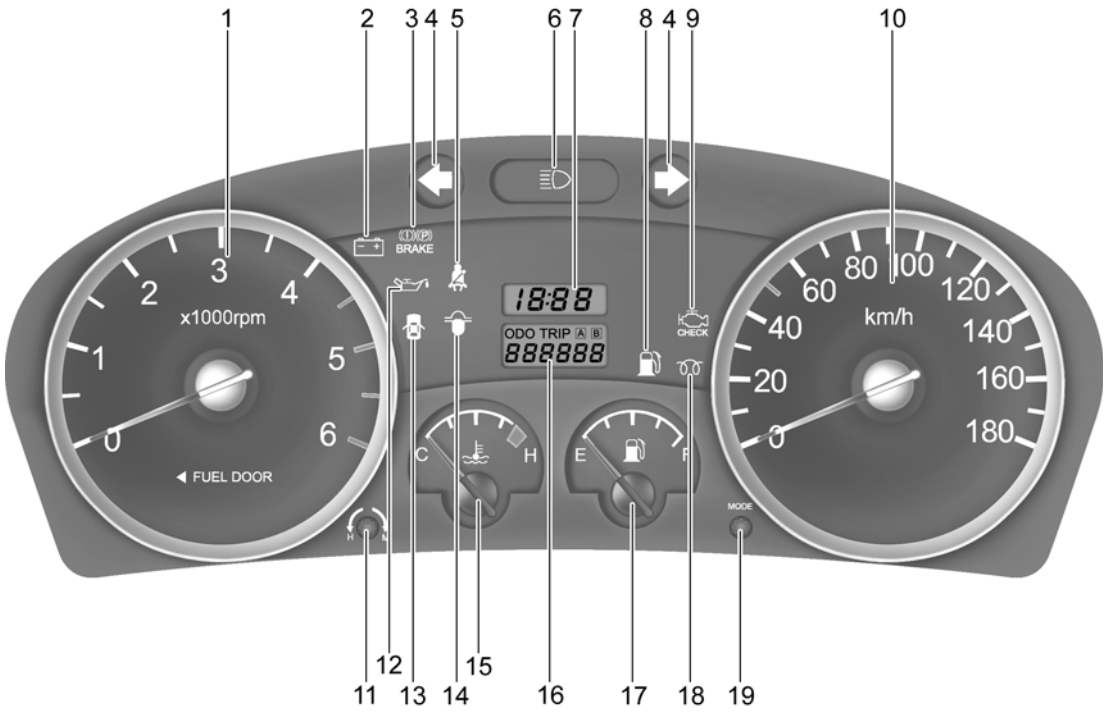

B260B01HR

1. Tachometer
2. Charging System Warning Light
3. Parking Brake/Low Brake Fluid Level Warning Light
4. Turn Signal Indicator Light
5. Seat Belt Warning Light
6. High Beam Indicator Light
7. Digital Clock
8. Low Fuel Warning Light
9. Malfunction Indicator Light (MIL) (If Installed)
10. Speedometer
11. Digital Clock Reset Switch
12. Low Oil Pressure Warning Light
13. Door Ajar Warning Light
14. Fuel Filter Warning Light
15. Coolant Temperature Gauge
16. Odometer/Trip Odometer
17. Fuel Gauge
18. Diesel Pre-heat Indicator Light
19. Trip Odometer Reset Switch

B260D01A-AAT

Turn Signal Indicator Lights

The blinking green arrows on the instrument panel show the direction indicated by the turn signals. If the arrow comes on but does not blink, blinks more rapidly than normal, or does not illuminate at all, a malfunction in the turn signal system is indicated. Your dealer should be consulted for repairs.

B260F01A-AAT

High Beam Indicator Light

The high beam indicator light comes on whenever the headlights are switched to the high beam or flash position.

B260G01A-AAT

Low Oil Pressure Warning Light

CAUTION:

If the oil pressure warning light stays on while the engine is running, serious engine damage may result. The oil pressure warning light comes on whenever there is insufficient oil pressure. In normal operation, it should come on when the ignition switch is turned on, then go out when the engine is started. If the oil pressure warning light stays on while the engine is running, there may be a serious malfunction.
If this happens, stop the car as soon as it is safe to do so, turn off the engine and check the oil level. If the oil level is low, fill the engine oil to the proper level and start the engine again. If the light stays on with the engine running, turn the engine off immediately. In any instance where the oil light stays on when the engine is running, the engine should be checked by an authorized Hyundai dealer before the car is driven again.

B260H02O-GAT

Parking Brake/Low Brake Fluid Level Warning Light

WARNING:

If you suspect brake trouble, have your brakes checked by a Hyundai dealer as soon as possible. Driving your car with a problem in either the brake electrical system or brake hydraulic system is dangerous, and could result in a serious injury or death.

Warning Light Operation

The parking brake/low brake fluid level warning light should come on when the parking brake is applied and the ignition switch is turned to "ON" or "START". After the engine is started, the light should go out when the parking brake is released.
If the parking brake is not applied, the warning light should come on when the ignition switch is turned to "ON" or "START", then go out when the engine starts. If the light comes on at any other

time, you should slow the vehicle and bring it to a complete stop in a safe location off the roadway.
The brake fluid level warning light indicates that the brake fluid level in the brake master cylinder is low and hydraulic brake fluid conforming to DOT 3 or DOT 4 specifications should be added. After adding fluid, if no other trouble is found, the car should be immediately and carefully driven to a Hyundai dealer for inspection. If further trouble is experienced, the vehicle should not be driven at all but taken to a dealer by a professional towing service or some other safe method.
Your Hyundai is equipped with dual-diagonal braking systems. This means you still have braking on two wheels even if one of the dual systems should fail. With only one of the dual systems working, more than normal pedal travel and greater pedal pressure are required to stop the car. Also, the car will not stop in as short a distance with only half of the brake system working. If the brakes fail while you are driving, shift to a lower gear for additional engine braking and stop the car as soon as it is safe to do so.

CAUTION:
The parking brake/low brake fluid warning light should also come on when the vacuum level in brake booster descends to about 275 mmHg or below. The brake system is designed to stop the vehicle with reserve assist if brake pedal is held down. This reserve is greatly reduced each time you release the brake. Without vacuum assist your vehicle can still be stopped by pushing much harder on brake pedal, however the stopping distance may be much longer. If the light comes on at any other time, you should slow the vehicle and bring it to a complete stop in a safe location off the roadway.
After starting the engine, do not drive the vehicle until the vacuum level is above 275 mmHg below atmosphere and warning light has turned off. If further trouble is experienced, the vehicle should not be driven at all but taken to a dealer by a professional towing service.

B260J01S-GAT

Charging System Warning Light

The charging system warning light should come on when the ignition is turned on, then go out when the engine is running. If the light stays on while the engine is running, there is a malfunction in the electrical charging system. If the light comes on while you are driving, stop, turn off the engine and check under the hood. First, make certain the generator drive belt is in place. If it is, check the tension of the belt.
And then, have the system checked by your Hyundai dealer.

CAUTION:
If the drive belt (generator belt) is loosen, broken, or mission while the vehicle is driving, there may be a serious malfunction, engine could overheat because this belt also drives the water pump.

B260L02HP-GAT

Door Ajar Warning Light and Chime (If Installed)

The door ajar warning light warns you that a door is not completely closed and the chime warns you that the key is in the ignition switch.

NOTE :

The warning chime only sounds whenever the key is in the ignition switch and the driver's side front door is open simultaneously. The chime sounds until the key is removed from the ignition switch or the driver's side front door is closed.

B260M01A-AAT

Low Fuel Level Warning Light

The low fuel level warning light comes on when the fuel tank is approaching empty. When it comes on, you should add fuel as soon as possible. Driving with the fuel level warning light on or with the fuel level below "E" can cause the engine to misfire and damage the catalytic converter.

B260N01HR-GAT

Malfunction Indicator Light (If Installed)

The MIL(Malfunction Indicator Light) illuminates when there are the malfunctions in main sensors(such as pedal sensor, booster sensor, etc.) or FIP(Fuel Injection Pump) during driving.
This light will illuminate when the ignition key is turned from the "OFF" position to the "ON" position, and will go out after the engine starts. If it illuminates while driving, or does not illuminate when the ignition key is turned from the "OFF" position to the "ON" position, take your car to your nearest authorized Hyundai dealer and have the system checked.

B260E01HP-GAT

Seat Belt Warning Light

The seat belt warning light blinks for about 6 seconds when the ignition key is turned from the "OFF" position to "ON" or "START".

B265C01HR-GAT

Diesel Preheat Indicator Light

The indicator light illuminates amber when the ignition switch is placed at the "ON" position. The engine can be started after the preheat indicator light goes off. The illuminating time varies with the water temperature.

Water temperature (°C)	Illuminating time (sec)
Below -30	22.5
-20	8
-15	6
60	0.5
80	0

NOTE:

If the engine were not started within 2 seconds after the preheating is completed, turn the ignition key once more to the "LOCK" position during 10 seconds, and then to the "ON" position, in order to preheat again.

B265A01B-GAT

Fuel Filter Warning Light

This light illuminates when the ignition switch is set to the "ON" position and goes off after the engine has started. If it lights up while the engine is running, it indicates that water has accumulated inside the fuel filter. If this happens, remove the water from the fuel filter. (Refer to "6-28 page")

B270B01HR-GAT

PARKING START WARNING SOUND

If the vehicle is driven at 10km/h(6mph) for more 2~3 than seconds, the warning chime will sound continuously when the parking brake engaged.

SB210U1-G

OVER SPEED WARNING BUZZER (If Installed)

When the car speed is in excess of 120 km/h (75 mph), a buzzer will sound to warn you.

B270A01A-AAT

BRAKE PAD WEAR WARNING SOUND

The front disc brake pads have wear indicators that should make a high-pitched squealing or scraping noise when new pads are needed. The sound may come and go or be heard all the time when the vehicle is moving. It may also be heard when the brake pedal is pushed down firmly. Excessive rotor damage will result if the worn pads are not replaced. See your Hyundai dealer immediately.

B280A02A-AAT

FUEL GAUGE

Without Tachometer

HHR2058

With Tachometer

HHR2015

The needle on the gauge indicates the approximate fuel level in the fuel tank. The fuel capacity is given in Section 9.

CAUTION:
Avoid driving with a very low fuel level. If you run out of fuel, it could cause the engine to misfire and result in excessive loading of the catalytic converter.

B290A02A-AAT

ENGINE COOLANT TEMPERATURE GAUGE

Without Tachometer

HHR2059

With Tachometer

HHR2016

WARNING:
Never remove the radiator cap when the engine is hot. The engine coolant is under pressure and could erupt and cause severe burns. Wait until the engine is cool before removing the radiator cap.

The needle on the engine coolant temperature gauge should stay in the normal range. If it moves across the dial to "H" (Hot), pull over and stop as soon as possible and turn off the engine. Then open the hood and, after the engine has cooled, check the coolant level and the water pump drive belt. If you suspect cooling system trouble, have your cooling system checked by a Hyundai dealer as soon as possible.

B300A01A-GAT

SPEEDOMETER

HHR2011

Your Hyundai's speedometer is calibrated in kilometers per hour or miles per hour.

B330A02A-AAT

TACHOMETER (If Installed)

B330A01HR

The tachometer registers the speed of your engine in revolutions per minute (rpm).

CAUTION:
The engine should not be raced to such a speed that the needle enters the red zone on the tachometer face. This can cause severe engine damage and may void your warranty.

B310B01HR-GAT

ODOMETER/TRIP ODOMETER

HHR2060

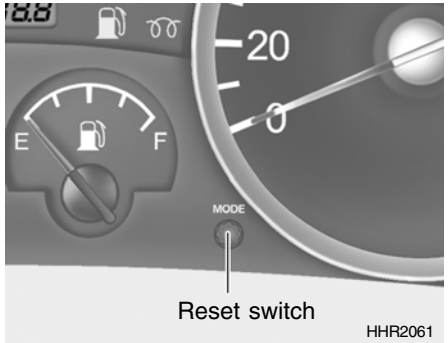

HHR2061

Function of digital odometer/trip odometer

Pushing in the reset switch when the ignition switch is turned "ON" will display the following sequence:

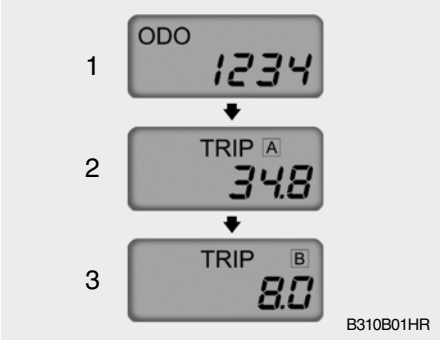

1. Odometer

The odometer records the total driving distance in kilometers or miles, and is useful for keeping a record for maintenance intervals.

It is normal for a new vehicle to have the odometer indicating less than 50 km.

NOTE:
Any alteration of the odometer may void your warranty coverage.

2,3 Trip odometer

Records the distance of 2 trips in kilometers or miles.
TRIP A: First distance you have traveled from your origination point to a first destination.
TRIP B: Second distance from the first destination to the final destination.

To shift from TRIP A to TRIP B, press the reset switch. When it pressed for more than 1 second, the trip odometer will reset to 0.

COMBINATION TURN SIGNAL, HEADLIGHT AND HIGH-BEAM SWITCH

B340A01A-AAT

Turn Signal Operation

Pulling down on the lever causes the turn signals on the left side of the car to blink. Pushing upwards on the lever causes the turn signals on the right side of the car to blink. As the turn is completed, the lever will automatically return to the center position and turn off the turn signals at the same time. If either turn signal indicator light blinks more rapidly than usual, goes on but does not blink, or does not go on at all, there is a malfunction in the system. Check for a burned-out fuse or bulb or see your Hyundai dealer.

B340B01A-AAT

Lane Change Signal

Type A

Type B

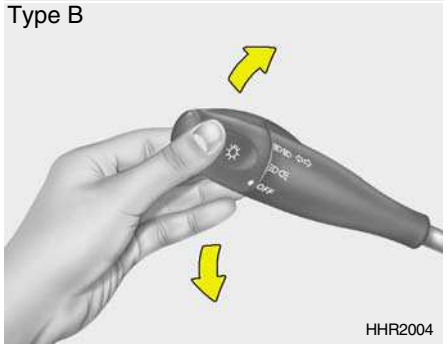

To indicate a lane change, move the lever up or down to a point where it begins flashing.
The lever will automatically return to the center position when released.

B340C03FC-GAT

Headlight Switch

Type A

Type B

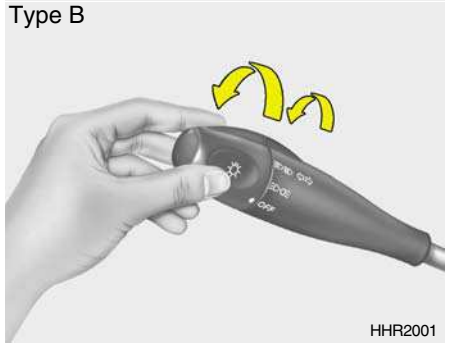

To operate the headlights, turn the barrel on the end of the multi-function switch. The first position turns on the parking lights, sidelights, tail lights and instrument panel lights. The second position turns on the headlights.

NOTE:
The ignition must be in the "ON" position to turn on the headlights.

Parking Light Auto Cut

- o The purpose of this feature is to prevent the battery from being discharged. The system automatically turns off the small light when the driver removes the ignition key and opens the driver- side door.
- o With this feature, the parklight will be turned off automatically if the driver parks on the side of road at night.

If necessary, to keep the lights on when the ignition key is removed, perform the following :

1) Open the driver-side door.
2) Turn the parklights OFF and ON again using the light switch on the steering column.

B340D01A-AAT

High-beam Switch

Type A

Type B

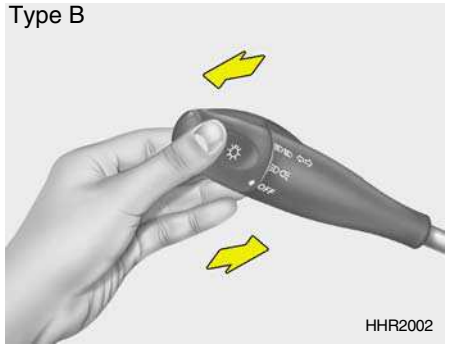

To turn on the headlight high beams, push the lever forward (away from you). The high beam indicator light will come on at the same time. For low beams, pull the lever back toward you.

B340E01A-AAT

Headlight Flasher

Type A

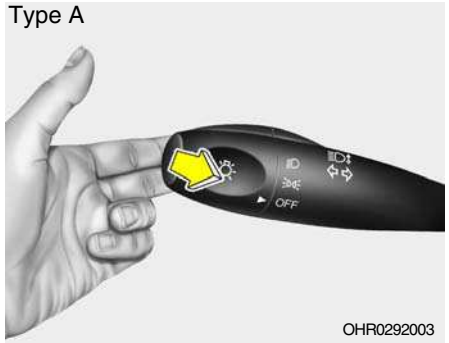

Type B

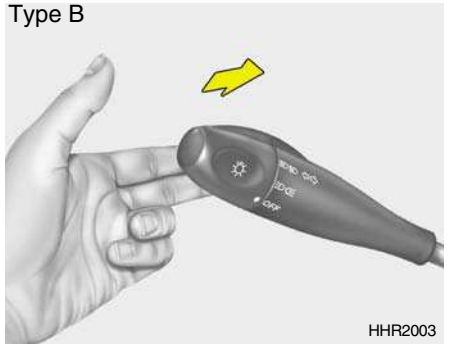

To flash the headlights, pull the switch lever toward you, then release it. The headlights can be flashed even though the headlight switch is in the "OFF" position.

WINDSHIELD WIPER AND WASHER SWITCH

B350A02HR-AAT

Type A

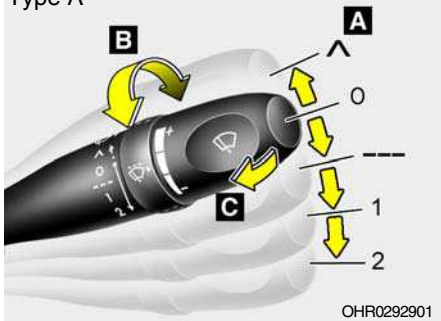

OHR0292901

Type C

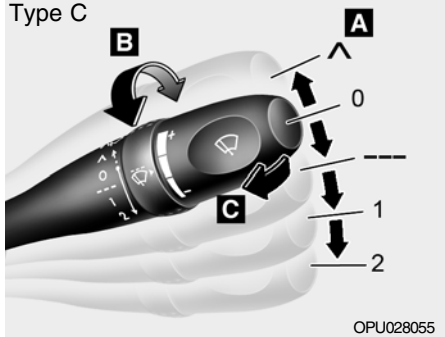

OPU028055

Type B

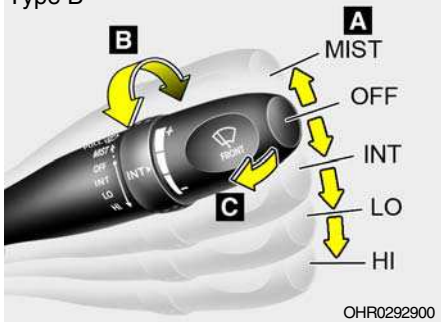

OHR0292900

Type D

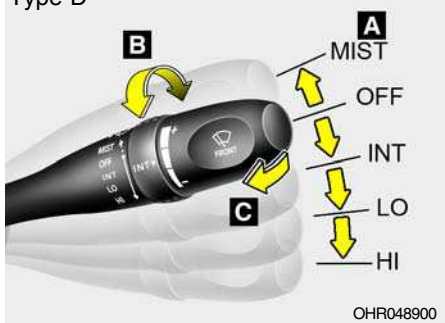

OHR048900

A : Wiper speed control

- (∧ or MIST) – Single wipe
- OFF (0) – Off
- INT (---) – Intermittent wipe
- LO (1) – Low wiper speed
- HI (2) – High wiper speed

B : Intermittent wipe time adjustment

C : Wash with brief wipes

B350B01O-GAT

Windshield wiper

Operates as follows when the ignition switch is turned ON.

(∧ or MIST) : For a single wiping cycle, push the lever upward and release it with the lever in the OFF (0) position. The wipers will operate continuously if the lever is pushed upward and held.

OFF (0) : Wiper is not in operation

INT (---) : Wiper operates intermittently at the same wiping intervals. Use this mode in a light rain or mist. To vary the speed setting, turn the speed control knob. (If installed)

LO (1) : Normal wiper speed

HI (2) : Fast wiper speed

NOTE:

To prevent damage to the wiper system, do not attempt to wipe away heavy accumulations of snow or ice. Accumulated snow and ice should be removed manually. If there is only a light layer of snow or ice, operate the heater in the defrost mode to melt the snow or ice before using the wiper.

B350C02O-AAT

Adjustable Intermittent Wiper Operation

To use the intermittent wiper feature, place the wiper switch (1) in the "INT (---)" position.

With the switch in this position, the interval between wipes can be varied from approximately 1 to 18 seconds by turning the interval adjuster barrel.

B350D01O-GAT

Windshield Washer Operation

To use the windshield washer, pull the wiper/washer lever toward the steering wheel. When the washer lever is operated, the wipers automatically make two passes across the windshield.

The washer continues to operate until the lever is released.

NOTE:

- **Do not operate the washer more than 15 seconds at a time or when the fluid reservoir is empty.**
- **In icy or freezing weather, be sure the wiper blades are not frozen to the glass prior to operating the wipers.**
- **In areas where water freezes in winter, use windshield washer antifreeze.**

HEADLIGHT LEVELING DEVICE SYSTEM

B340G01HR-GAT

(Left-hand Drive Type) (If Installed)

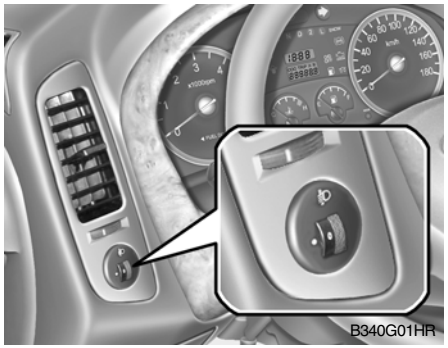

To adjust the headlight beam level according to the number of the passengers and the loading weight in the cargo area, turn the beam leveling switch.
The higher the number of the switch position, the lower the headlight beam level. Always keep the headlight beam at the proper leveling position, or headlights may dazzle other road users.
Listed below are the examples of proper switch settings. For loading conditions other than those listed below, adjust the switch position so that the beam level may be the nearest as the condition obtained according to the list.

Loading condition	Switch position
Driver only	0
Driver + Permissible RR axle load	1

FOG LIGHT SWITCH

B360B01FC-GAT

Front Fog Light Switch (If Installed)

To turn on the front fog lights, push the switch in the "ON" position. They will light when the headlight switch is in the first or second position.

B360A01Y-GAT

Rear Fog Light Switch (If Installed)

OHR028101

To turn on the rear fog lights, push the switch. They will light when the headlight switch is in the second position and the key is in the "ON" position.

HAZARD WARNING SYSTEM

B370A01A-AAT

OHR028102

The hazard warning system should be used whenever you find it necessary to stop the car in a hazardous location. When you must make such an emergency stop, always pull off the road as far as possible.

The hazard warning lights are turned on by pushing in the hazard switch. This causes all turn signal lights to blink. The hazard warning lights will operate even though the key is not in the ignition.

To turn the hazard warning lights off, push the switch a second time.

REAR WINDOW DEFROSTER SWITCH

B380A02HR-GAT

(If Installed)

OHR028103

The rear window defroster is turned on by pushing in the switch. To turn the defroster off, push the switch a second time. The rear window defroster automatically turns itself off after about 20 minutes. To restart the defroster cycle, push in the switch again after it has turned itself off.

CAUTION:
Do not clean the inner side of the rear window glass with an abrasive type of glass cleaner or use a scraper to remove foreign deposits from the inner surface of the glass as this may cause damage to the defroster elements.

NOTE:
The engine must be running for the rear window defroster to operate.

TICKET HOLDER

B590A01HR-GAT

(If Installed)

For your convenience, it may be used for holding a tollgate ticket or a card.

DIGITAL CLOCK

B400A01HR-GAT

(If Installed)

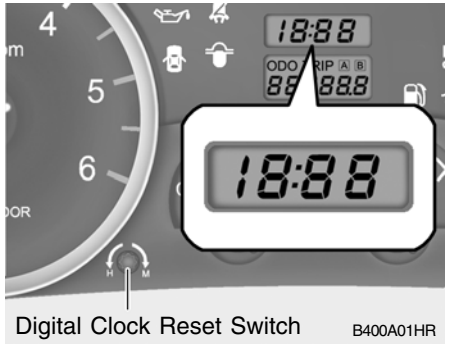

There is a digital clock reset switch for the digital clock. Its functions are:

Hour/Minute Adjustment:

Turn the switch counterclockwise for less than 1.5 seconds to advance the hour indicated. Turn the switch clockwise for less than 1.5 seconds to advance the minute indicated.

Auto Mode:

Turn the switch counterclockwise or clockwise for more than 1.5 seconds to advance the hour or the minute automatically.

Reset:

Press the switch for more than 1 second to reset minutes to ":00" or to facilitate resetting the clock to the correct time. When this is done:

Pressing the switch between 9 : 01 and 9 : 29 changes the readout to 9 : 00. Pressing the switch between 9 : 30 and 9 : 59 changes the readout to 10 : 00.

CAUTION:
Don't turn the switch excessively to prevent switch damage.

CIGARETTE LIGHTER

B420A02A-AAT

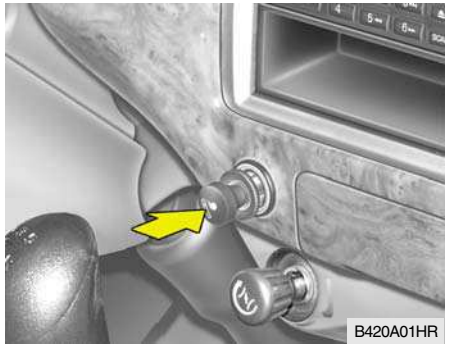

For the cigarette lighter to work, the key must be in the "ACC" position or the "ON" position.
To use the cigarette lighter, push it all the way into its socket. When the element has heated, the lighter will pop out to the "ready" position.
Do not hold the cigarette lighter pressed in. This can damage the heating element and create a fire hazard.
If it is necessary to replace the cigarette lighter, use only a genuine Hyundai replacement or its approved equivalent.

CAUTION:
Do not use electric accessories or equipment other than the Hyundai genuine parts in the socket.

ASHTRAY

B430A01HR-GAT

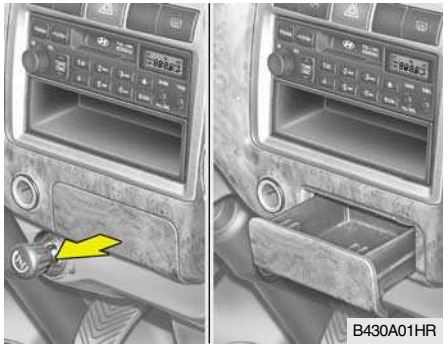

The front ashtray may be opened by pulling it out by its grip. To remove the ashtray to empty or clean it, press down on the spring-loaded tab inside the ashtray and pull it all the way out.

ENGINE ILDE RPM ADJUSTMENT KNOB

B420B01HR-GAT

(If Installed)

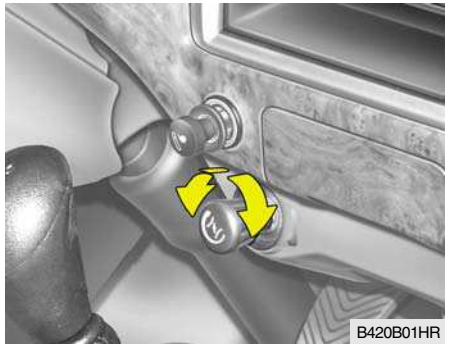

When the outside air temperature is very low or it is necessary to warm up the engine, turn the knob clockwise to that point at which the engine runs smoothly. Once the warming up is completed, fully turn the knob counterclockwise.

CAUTION:

Never attempt to adjust the control knob during driving.
This can cause severe engine damage.

DRINK HOLDER

B450A01HR-GAT

(If Installed)

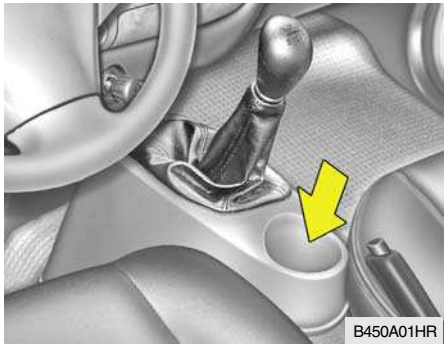

WARNING:

- **Use caution when using the drink holders. A spilled beverage that is very hot can injure you or your passengers. Spilled liquids can damage interior trim and electrical components.**
- **Do not place anything except drinks in the drink holder. Such objects can be thrown out, possibly injuring persons in the vehicle during sudden braking or in the event of an accident.**

B480A01HR-GAT

Map Light (If installed, With Spectacle Case)

The map light has two kinds button. The two buttons are as follow:

o "☞"

Push in this button to turn on or off the map light.
This light produces a spot beam for convenient use as a map light at night or as a personal light for the driver and the passenger.

o "🔊"

With this button pressed, both map lights come on when any door is opened regardless of the ignition key position. The light goes out gradually 6 seconds after the door is closed.

B490A01HR-GAT

Interior Light (If installed, Without Spectacle Case)

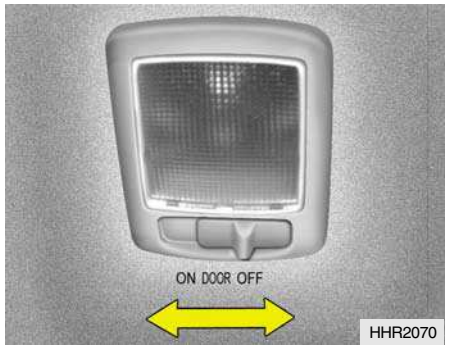

The interior courtesy light switch has three positions. The three positions are:

o "DOOR"

In the "DOOR" position, the interior courtesy light comes on when any door is opened regardless of the ignition key position. The light goes out gradually 6 seconds after the door is closed.

o "ON"

In the "ON" position, the light stays on at all times.

CAUTION:
Do not leave the switch in this position for an extended period of time when the vehicle is not running.

o "OFF"

In the "OFF" position, the light stays off at all times even though a door is open.

SPECTACLE CASE

B491A02O-GAT

(If Installed)

The spectacle case is located on the front overhead console.
Push the end of the cover to open the spectacle case.

WARNING:
Do not keep objects such as sharp or unsuitable things inside the spectacle case. Such objects can be thrown out in the event of a sudden stop or an accident, possibly injuring the passengers in the vehicle.

GLOVE BOX

B500A01A-AAT

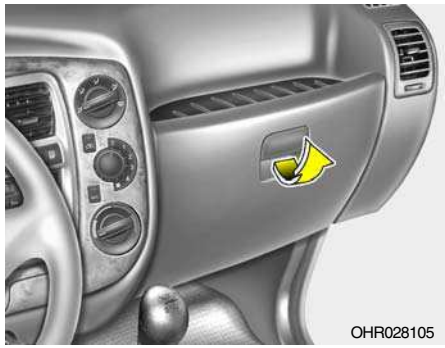

WARNING:
To avoid the possibility of injury in case of an accident or a sudden stop, the glove box door should be kept closed when the car is in motion.

o To open the glove box, pull on the glove box release lever.

B500C01HR-GAT

Pen, Card and Tissue Holder

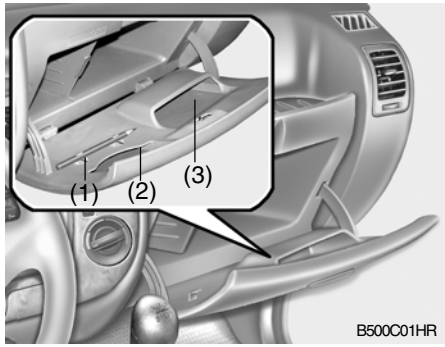

For your convenience, a pen holder (1), a card holder (2) and a tissue holder (3) are located in the glove box cover.

CENTER SEATBACK CONSOLE COMPARTMENT

B505A01HR-GAT

(If Installed)

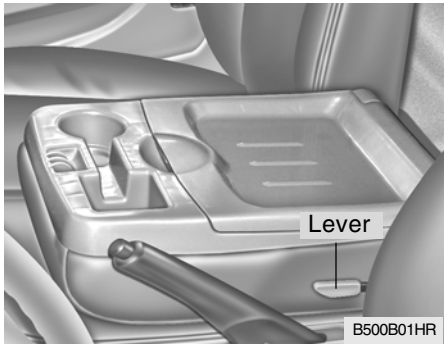

Your vehicle is equipped with a console compartment on the backside of front center seat.
To use console compartment, push down the lever and tilt the seatback forward.

B505B01HR-GAT

Multi Tray

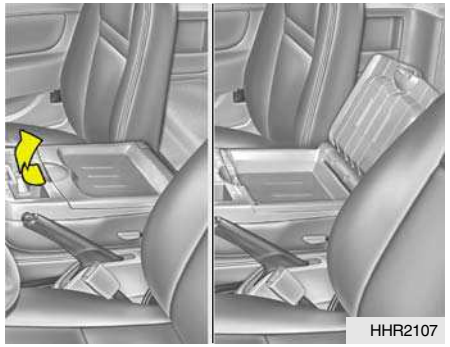

The multi tray is used for storing cassette tapes or small articles.
To open the multi tray lid, press the hook in the lid's grip and pull up the lid.

B505C01HR-GAT

Auxiliary Drink Holder (If Installed)

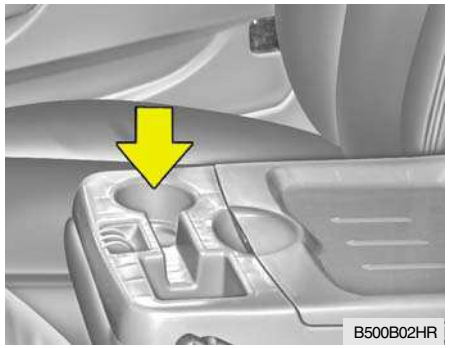

The auxiliary drink holder is used for holding cups or cans.

WARNING:

- **Use caution when using the drink holders. A spilled beverage that is very hot can injure you or your passengers. Spilled liquids can damage interior trim and electrical components.**
- **Do not place anything except drinks in the drink holder. Such objects can be thrown out, possibly injuring persons in the vehicle during sudden braking or in the event of an accident.**

B505D01HR-GAT

Coin Holder

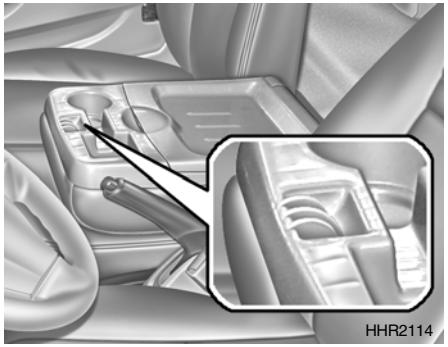

The coin holder is used to store coins.

OUTSIDE REARVIEW MIRROR

B510A01HR-GAT

Manual Type

Before driving away, always check that your mirrors are positioned so you can see behind you, both to the left and right sides, as well as directly behind your vehicle. When using the mirror, always exercise caution when attempting to judge the distance of vehicles behind or along side of you.

NOTE:

There is the assist convex mirror at the under side of driver's outside rearview mirror. You can take a better look at the dead zone. But, the object seems to be distorted.

CAUTION:

If the mirror control is jammed with ice, do not attempt to break it free using the control handle or by manipulating the face of the mirror. Use an approved spray de-icer (not radiator antifreeze) to release the frozen mechanism or move the vehicle to a warm place and allow the ice to melt.

WARNING:

Be careful when judging the size or distance of any object seen in the rearview mirror. It is a convex mirror with a curved surface. Any objects seen in this mirror are closer than they appear.
Check your inside rearview mirror or glance over your shoulder before changing lanes.

B510C01A-AAT

Folding the Outside Rearview Mirrors

To fold the outside rearview mirrors, push them towards the rear.
The outside rearview mirrors can be folded rearward for parking in narrow areas.

WARNING:
Do not adjust or fold the outside rearview mirrors while the vehicle is moving. This could result in loss of control, and an accident which could cause death, serious injury or property damage.

DAY/NIGHT INSIDE REARVIEW MIRROR

B520A01A-AAT

Your Hyundai is equipped with a day/night inside rearview mirror. The "night" position is selected by flipping the tab at the bottom of the mirror toward you. In the "night" position, the glare of headlights of cars behind you is reduced.

PARKING BRAKE

B530A02A-AAT

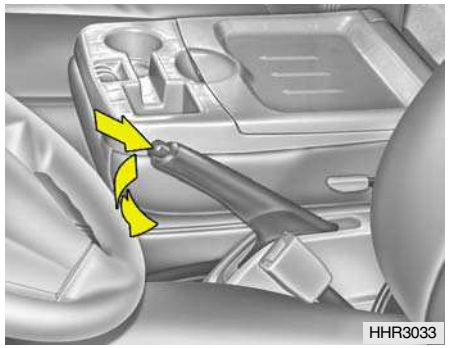

Applying the parking brake

To engage the parking brake, first apply the foot brake and then without pressing the release button in, pull the parking brake lever up as far as possible. In addition it is recommended that when parking the vehicle on a gradient, the shift lever should be positioned in the appropriate low gear on manual transaxle vehicles or in the P (Park) position on automatic transaxle vehicles.

CAUTION:
Driving with the parking brake applied will cause excessive brake pad (or lining) and brake rotor wear.

Releasing the parking brake

To release the parking brake, first apply the foot brake and pull the parking brake lever slightly. Secondly, depress the release button and lower the parking brake lever while holding the button.

HOOD RELEASE

B570A01HR-GAT

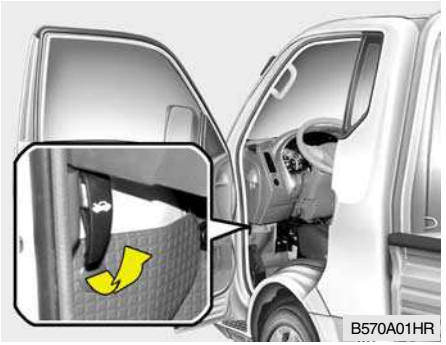

1. Pull the release knob to unlatch the hood.

2. Push the secondary latch lever to the left and lower the hood.

To close the hood, lift up it and hit the center of the hood with your hand. Make sure that it locks into place.

NOTE:
If the hood will not open because ice has formed around it, tap lightly or push on the hood to break the ice and release the hood. Do not pry on the hood. If necessary, spray around the hood with an approved de-icer fluid (do not use radiator anti-freeze) or move the vehicle to a warm place and allow the ice to melt.

WARNING:
- **Always double check to be sure that the hood is firmly latched before driving away.**
- **Do not press excessively or step on the hood. This can cause the hood to fall and result in serious injury.**

FUEL TANK CAP

B560A03HR-GAT

The fuel tank cap is located at the left side of the vehicle body.
The fuel tank cap can be unlocked by turning the key counterclockwise.
To lock the fuel tank cap, turn it clockwise until it locks into place.

NOTE:
If the fuel tank cap will not open because ice has formed around it, tap lightly on the cap to break the ice and release the cap. If necessary, spray around the cap with an approved de-icer fluid (do not use radiator anti-freeze) or move the vehicle to a warm place and allow the ice to melt.

WARNING:

- **Make sure to refuel your vehicle according to the "Fuel requirements" suggested in section 1.**
- **Fuel vapors are dangerous. Before refueling, always stop the engine and never allow sparks or open flames near the tank area. If you need to replace the tank cap, use a genuine Hyundai replacement part.**
  If you open the fuel tank cap during high ambient temperatures, a slight "pressure sound" may be heard. This is normal and not a cause for concern. Whenever you open the fuel tank cap, turn it slowly.
- **Automotive fuels are flammable/explosive materials. When refueling, please note the following guidelines carefully.**
  - **Before touching the fuel nozzle or fuel tank cap, have one's hands in contact with metal parts away from the tank neck to discharge static electricity.**
  - **Do not get back in the vehicle while refueling. Do not operate anything that can produce static electricity. Static electricity discharge can ignite fuel vapors resulting in an explosion.**
  - **When using a portable fuel container, be sure to place the container on the ground while refueling. Static electricity discharge from the container can ignite fuel vapors causing a fire. While starting refueling, contact should be maintained until the filling is complete.**
  - **Do not use cellular phones around a gas station. The electric current or electronic interference from cellular phones can ignite fuel vapors causing a fire.**
  - **When refueling, always turn the engine off. Sparks by engine compartment electrical equipment can ignite fuel vapors causing a fire. After refueling, check to make sure the fuel tank cap is securely closed, and then start the engine.**
  - **Do not smoke or try to light cigarettes around a gas station. Automotive fuels are flammable.**

REAR GATE

B191A01HR-GAT

To open the rear gate

1. Lift up the rear gate handle, push it inside and pull it toward you.

2. Lower the rear gate slowly with it received on both arms.

WARNING:
When the rear combination lamps are hidden, other road users should be warned by means of warning triangle or other devices.

To close the rear gate

Lift the rear gate up and lock the rear gate handle in place.

SIDE GATE

B191B01HR-GAT

To open the side gate

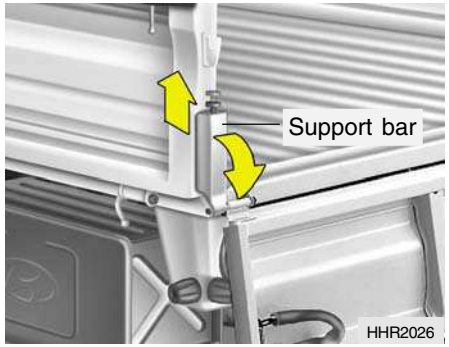

1. With the rear gate opened, pull up the knob to release the support bar down.

2. Remove the side gate handle from the hook after pulling it up.
3. Lower the side gate slowly with it received on both arms.

To close the side gate

1. Lift the side gate up and lock the side gate handle in place.

WARNING:
When locking the side gate handle, be careful not to get your fingers into the chink in the handle.

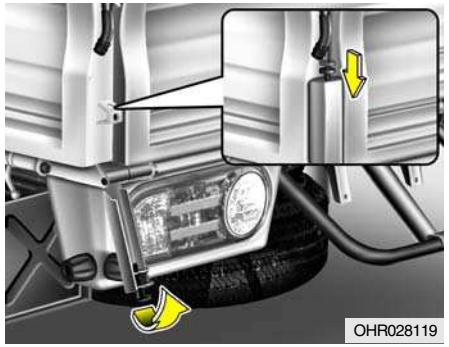

2. Push the knob down to lock the side gates.

EXTERIOR TOOL BOX

B650A02HR-GAT

(If Installed)

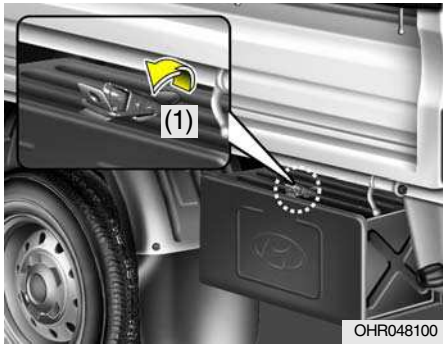

The exterior tool box is located behind the rear tire on left side to store jack and tool.
To open it, pull up the clamp lever (1) and unhook the clamp.

SUN VISOR

B580A01HR-GAT

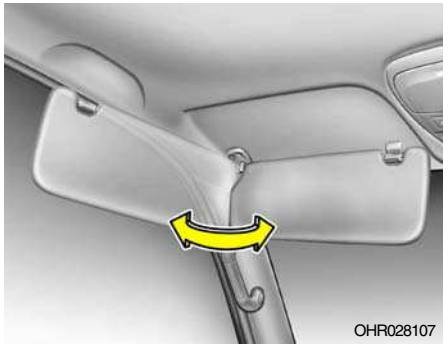

Your Hyundai is equipped with sun visors to give the driver and front passenger either frontal or sideward shade. To reduce glare or to shut out direct rays of the sun, turn the sun visor down. Ticket holders are provided on the back of the sun visor for the driver and front passenger.

WARNING:
Do not place the sun visor in such a manner that it obscures visibility of the roadway, traffic or other objects.

STEERING WHEEL TILT LEVER

B600A01HR-AAT

(If Installed)

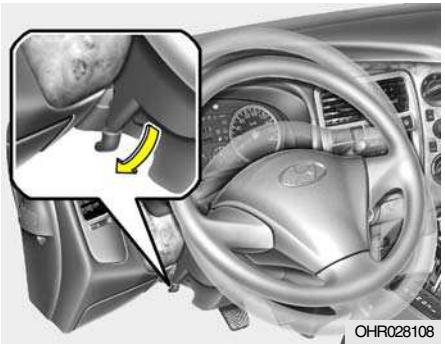

To Adjust the Steering Wheel:
1. Push the lever and hold it to unlock.
2. Raise or lower the steering wheel to the desired position.
3. After adjustment, release the lever.

WARNING:
Do not attempt to adjust the steering wheel while driving as this may result in loss of control of the vehicle which may cause serious injury or death.

HORN

B610B01A-GAT

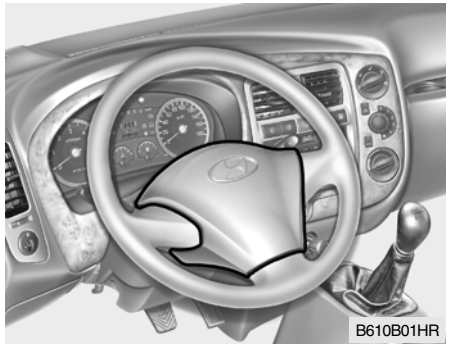

Press the center hub of the steering wheel to sound the horn.

B710A01TB-GAT
(If Installed)

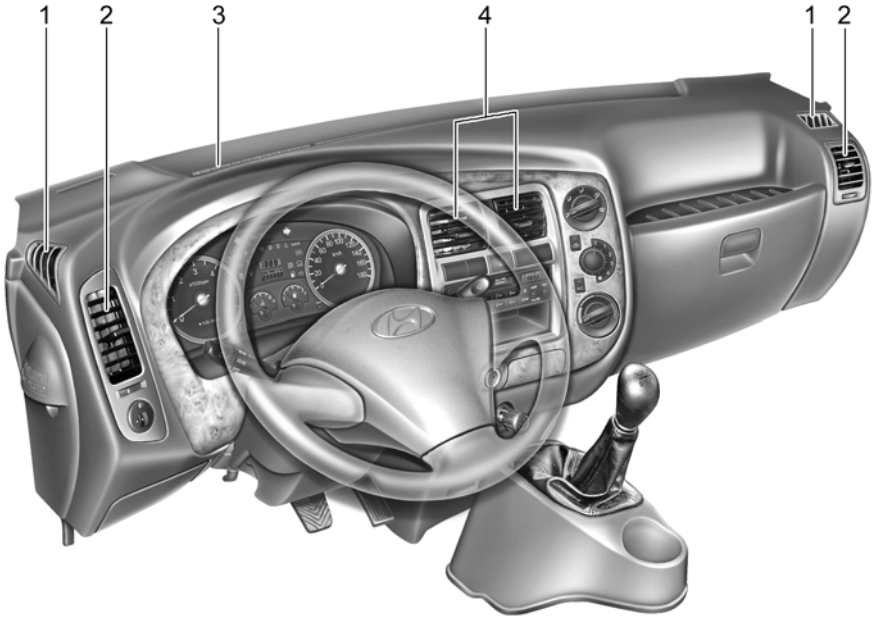

1. Side Defrost Nozzle
2. Side Ventilator
3. Windshield Defrost Nozzle
4. Center Ventilator

OHR028110

B710B01S-AAT
CENTER VENTILATOR

The center ventilators are located in the middle of the dashboard. The direction of air flow from the vents in the center of the dashboard is adjustable.
To control the direction of the air flow, move the knob in the center of the vent up-and-down and side-to-side.

B710C02HP-AAT
SIDE VENTILATOR

The side ventilators are located on each side of dashboard. To change the direction of the air flow, move the knob in the center of the vent up-and-down and side-to-side.
The vents are opened when the vent knob is moved to " " position. The vents are closed when the vent knob is moved to " ". Keep these vents clear of any obstructions.

B670A01HR-GAT

(If Installed)

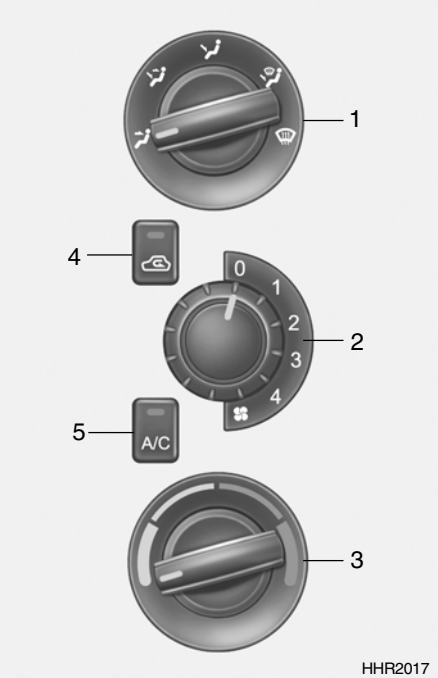

1. Air flow control switch
2. Fan speed control switch
3. Temperature control switch
4. Air intake control switch
5. Air conditioning switch

B670D01HR-GAT

Air Flow Control

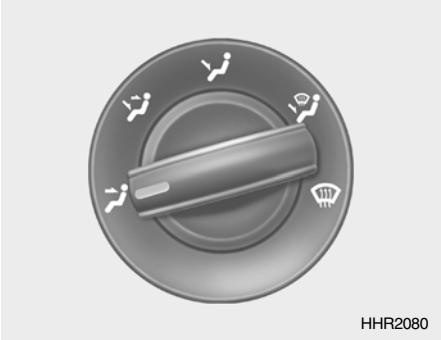

This is used to direct the flow of air. Air can be directed to the floor, dashboard outlets, or windshield. Five symbols are used to represent Face, Bi-Level, Floor, Floor-Defrost and Defrost air position.

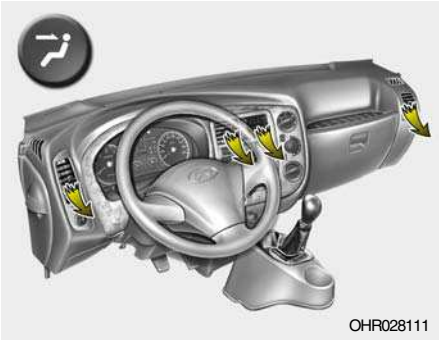

Face-Level

Selecting the "Face" mode will cause air to be discharged through the face level vents.

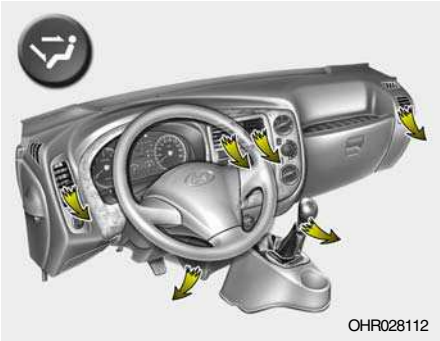

Bi-Level

Air is discharged through the face vents and the floor vents. This makes it possible to have cooler air from the dashboard vents and warmer air from the floor outlets at the same time.

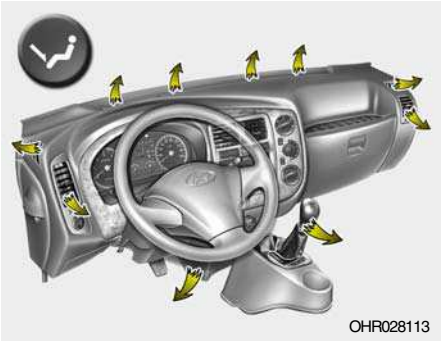

Floor-Level

Air is discharged through the floor vents, windshield defroster nozzle, side defroster nozzle, side ventilator.

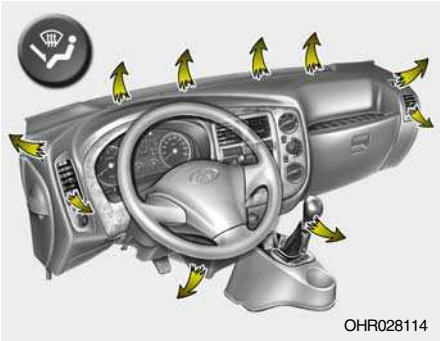

Floor-Defrost Level

Air is discharged through the windshield defroster nozzle, the floor vents, side defroster nozzle, side ventilator.

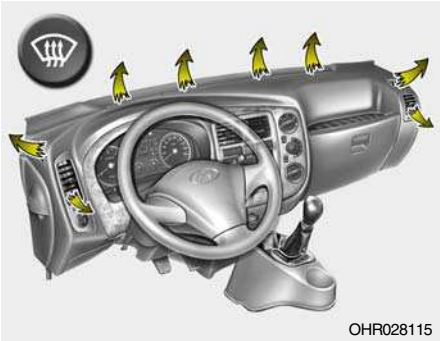

Defrost-Level

Air is discharged through the windshield defroster nozzle, side defroster nozzle, side ventilator.

B670B01A-AAT

Fan Speed Control (Blower Control)

This is used to turn the blower fan on or off and to select the fan speed.
This blower fan speed, and therefore the volume of air delivered from the system, may be controlled manually by setting the blower control between the "1" and "4" positions.

B670E02A-AAT

Temperature Control

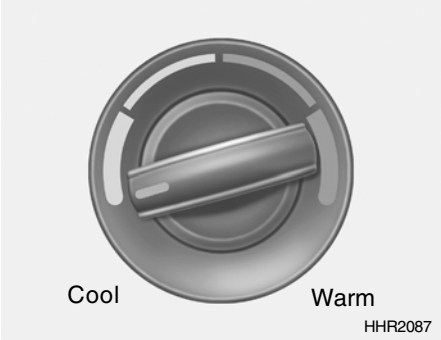

This control is used to adjust the degree of heating or cooling desired.

B670C01E-AAT

Air Intake Control

This is used to select fresh outside air or recirculating inside air.
To change the air intake control mode (Fresh mode, Recirculation mode), push the control button.

FRESH MODE ( ) : The indicator light on the button goes off when the air intake control is fresh mode.

RECIRCULATION MODE ( ): The indicator light on the button is illuminated when the air intake control is recirculation mode.

With the "Fresh" mode selected, air enters the vehicle from the outside and is heated or cooled according to the function selected.

With the "Recirculation" mode selected, air from within the passenger compartment will be drawn through the heating system and heated or cooled according to the function selected.

NOTE:

It should be noted that prolonged operation of the heating in "Recirculation" mode ( ) will give rise to fogging of the windshield and side windows and the air within the passenger compartment will become stale. In addition, prolonged use of the air conditioning with the "Recirculation" mode ( ) selected may result in the air within the passenger compartment becoming excessively dry.

B690A01HR-GAT

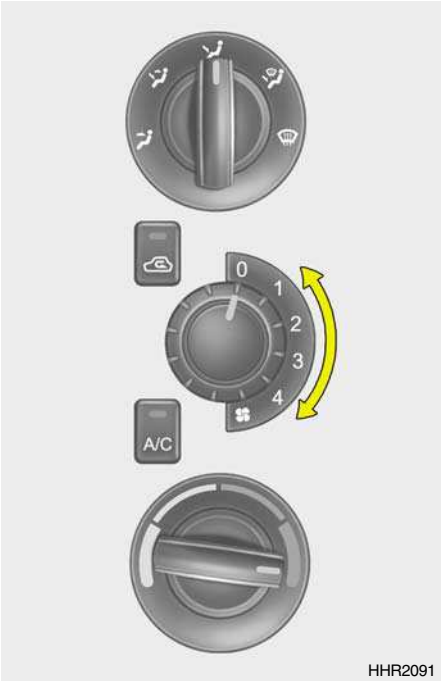

For normal heating operation, set the air intake control to the fresh air ( ) position and the air flow control to the floor ( ) position.

For faster heating, the air intake control should be set in the recirculate ( ) position.

If the windows fog up, set the air flow control to the defrost ( ) position and the air intake control to the fresh air ( ) position.

For maximum heat, move the temperature control to "Warm".

BI-LEVEL HEATING

B700A01A-AAT

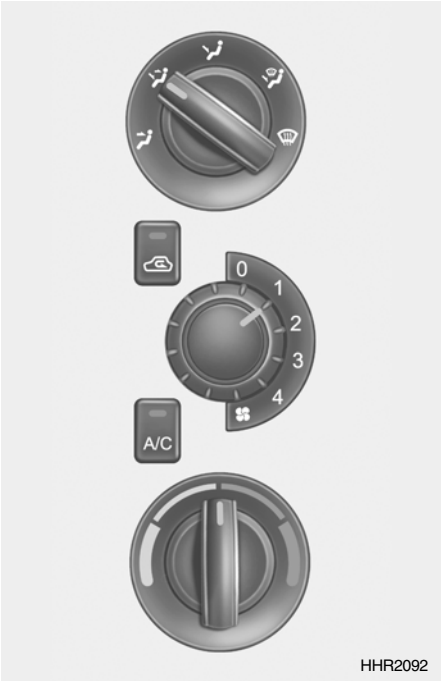

Your Hyundai is equipped with bi-level heating controls. This makes it possible to have cooler air from the dashboard vents and warmer air from the floor outlets at the same time. To use this feature:

- o Set the air intake control to the fresh air ( ) position.
- o Set the air flow control at the bi-level ( ) position.
- o Set the temperature control between "Cool" and "Warm".

VENTILATION

B710A01S-AAT

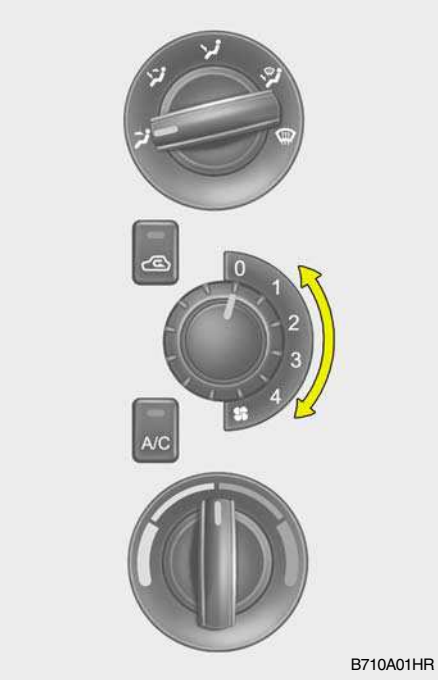

B710A01HR

To operate the ventilation system:

- o Set the air intake control to "Fresh" mode ( ).
- o To direct all intake air to the dashboard vents, set the air flow control to "Face".
- o Adjust the fan speed control to the desired speed.
- o Set the temperature control between "Cool" and "Warm".

DEFROSTING/DEFOGGING

B720A01HR-GAT

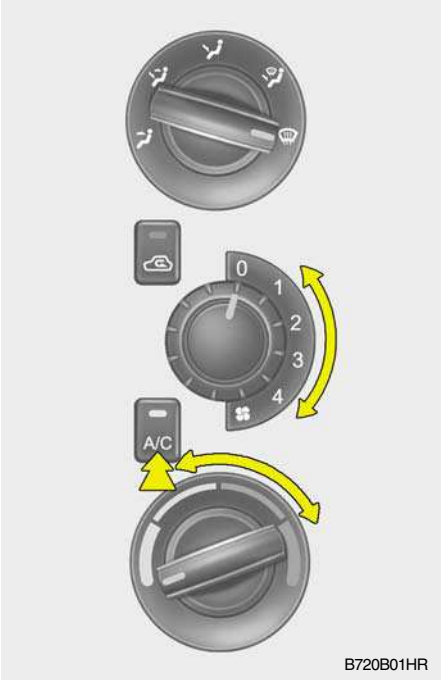

B720B01HR

Use the heating/ventilation system to defrost or defog the windshield:

To remove interior fog on the windshield:

- o Set the air flow control to the defrost ( ) position.
- o If the vehicle is equipped with a air conditioning system, turn on the air conditioning switch.
- o Set the air intake control to the fresh air ( ) position.
- o Set the fan speed control between "1" and "4" position.
- o Set the temperature control to the desired position.

To remove the frost or exterior fog on the windshield:

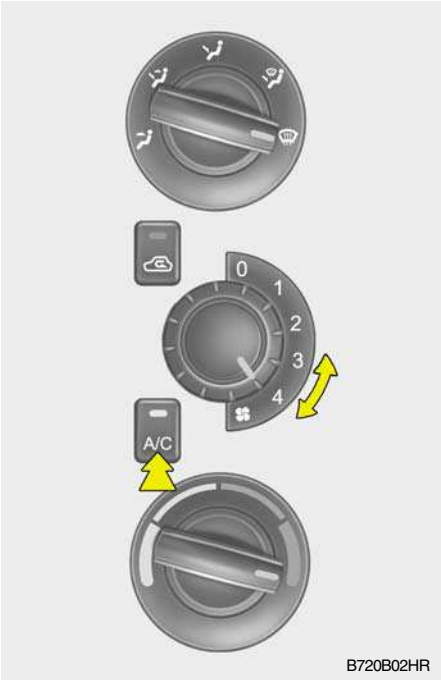

- o Set the air flow control to the defrost ( ) position.
- o If the vehicle is equipped with a air conditioning system, turn on the air conditioning switch.
- o Set the air intake control to the fresh ( ) position.
- o Set the fan speed control to position "3" or "4".
- o Set the temperature control to warm.

NOTE:

When the A/C is operated continuously on the floor-defrost level ( ) or defrost level ( ), it may cause fog to form on the exterior windshield. If this occurs, set the air flow control to the face level position ( ) and fan speed control to the low position.

B730A01L-AAT

Operation Tips

- To keep dust or unpleasant fumes from entering the car through the ventilation system, temporarily set the air intake control at "Recirculation ( )". Be sure to return the control to "Fresh ( )" when the irritation has passed to keep fresh air in the vehicle. This will help keep the driver alert and comfortable.
- Air for the heating/cooling system is drawn in through the grilles just ahead of the windshield. Care should be taken that these are not blocked by leaves, snow, ice or other obstructions.
- To prevent interior fog on the windshield, set the air intake control to the fresh air ( ) position, fan speed to the desired position, turn on the air conditioning system, and adjust temperature control to desired temperature.

B740A01A-AAT

Air Conditioning Switch (If Installed)

The air conditioning is turned on by pushing the A/C button on the heating/air conditioning control panel.

B740B02A-AAT

Air Conditioning Operation (Cooling)

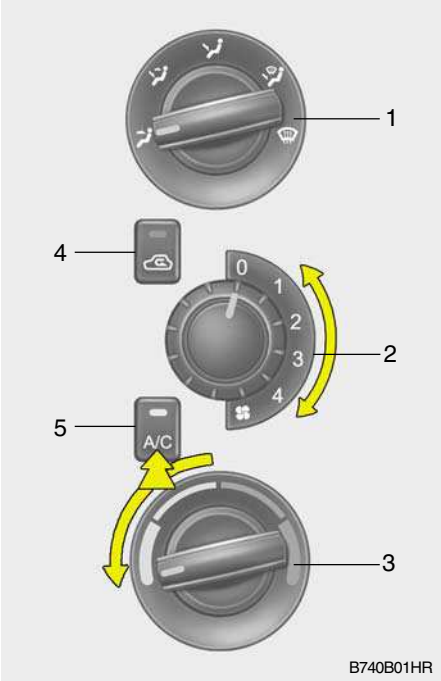

To use the air conditioning to cool the interior:

- o Turn on the fan control switch (2).
- o Turn on the air conditioning switch (5) by pushing in on the switch. The air conditioning indicator light should come on at the same time.
- o Set the air intake control (4) to the position.
- o Set the temperature control (3) to "Cool". ("Cool" provides maximum cooling. The temperature may be moderated by moving the control toward "Warm".)
- o Adjust the fan control (2) to the desired speed. For greater cooling, turn the fan control to one of the higher speeds or temporarily select the position on the air intake control.

B740C01A-AAT

De-Humidified Heating

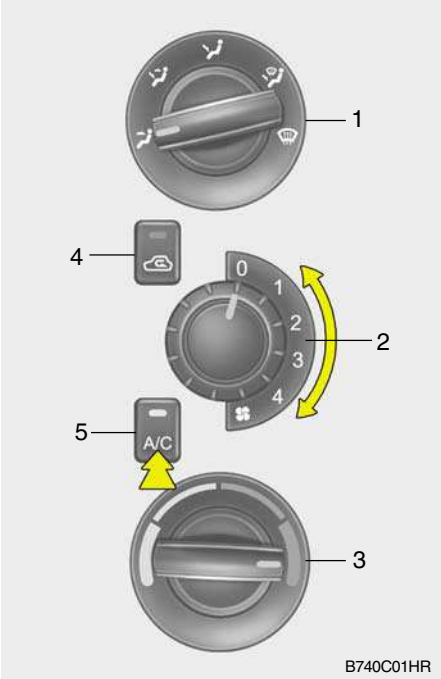

For dehumidified heating:

- o Turn on the fan control switch (2).
- o Turn on the air conditioning switch (5). The air conditioning indicator light should come on at the same time.
- o Set the air intake control (4) to the fresh air ( ) position.
- o Set the air flow control (1) to the face ( ) position.
- o Adjust the fan control (2) to the desired speed.
- o For more rapid action, set the fan at one of the higher speeds.
- o Adjust the temperature control (3) to provide the desired amount of warmth.

B740D01A-AAT

Operation Tips

- o If the interior of the car is hot when you first get in, open the windows for a few minutes to expel the hot air.
- o When you are using the air conditioning system, keep all windows closed to keep hot air out.
- o When moving slowly, as in heavy traffic, shift to a lower gear.
  This increases engine speed, which in turn increases the speed of the air conditioning compressor.
- o On steep grades, turn the air conditioning off to avoid the possibility of the engine over-heating.
- o During winter months or in periods when the air conditioning is not used regularly, run the air conditioning once every month for a few minutes.
  This will help circulate the lubricants and keep your system in peak operating condition.

CLIMATE CONTROL AIR FILTER (FOR EVAPORATOR AND BLOW UNIT)

B760A04HR-GAT

(If Installed)

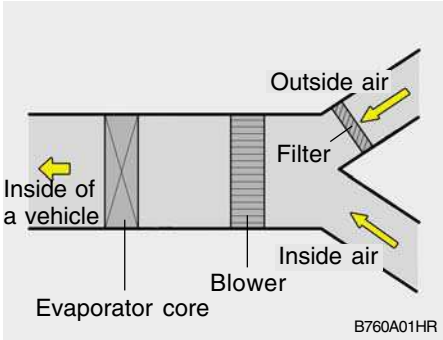

The climate control air filter is located in the hood.
It operates to decrease the amount of pollutants entering the car.
To check the climate control air filter, refer to the page 6-19.

CAUTION:

- **o If the car is being driven in severe conditions such as dusty, rough roads, more frequent climate control air filter inspections are required.**
- **o When the air flow rate is decreased, it must be checked at an authorized dealer.**

B750A02A-AAT

How Car Audio Works

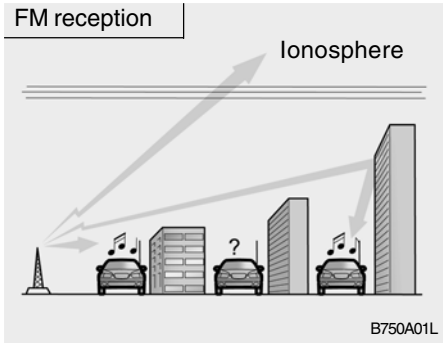

AM and FM radio signals are broadcast from transmitter towers located around your city. They are intercepted by the radio antenna on your car. This signal is then received by the radio and sent to your car speakers.

When a strong radio signal has reached your vehicle, the precise engineering of your audio system ensures the best possible quality reproduction. However, in some cases the signal coming to your vehicle may not be strong and clear. This can be due to factors such as the distance from the radio station, closeness of other strong radio stations or the presence of buildings, bridges or other large obstructions in the area.

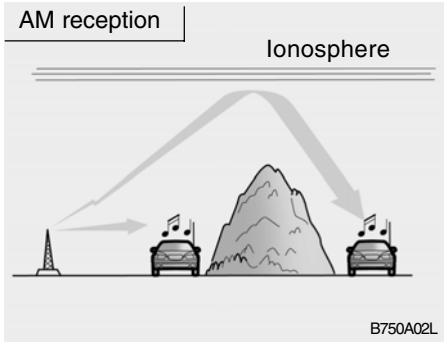

AM broadcasts can be received at greater distances than FM broadcasts. This is because AM radio waves are transmitted at low frequencies. These long, low frequency radio waves can follow the curvature of the earth rather than travelling straight out into the atmosphere. In addition, they curve around obstructions so that they can provide better signal coverage.

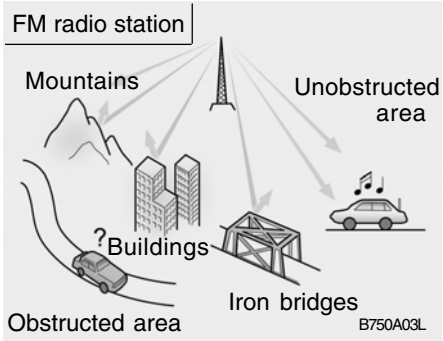

FM broadcasts are transmitted at high frequencies and do not bend to follow the earth's surface. Because of this, FM broadcasts generally begin to fade at short distances from the station. Also, FM signals are easily affected by buildings, mountains, or other obstructions. These can result in certain listening conditions which might lead you to believe a problem exists with your radio. The following conditions are normal and do not indicate radio trouble:

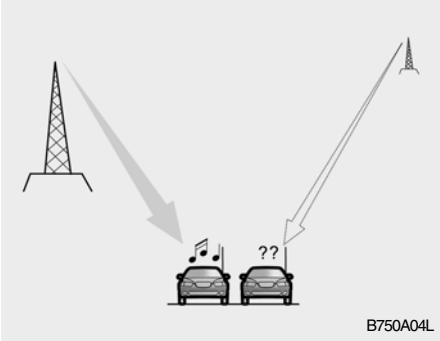

- Fading - As your car moves away from the radio station, the signal will weaken and sound will begin to fade. When this occurs, we suggest that you select another stronger station.
- Flutter/Static - Weak FM signals or large obstructions between the transmitter and your radio can disturb the signal causing static or fluttering noises to occur. Reducing the treble level may lessen this effect until the disturbance clears.

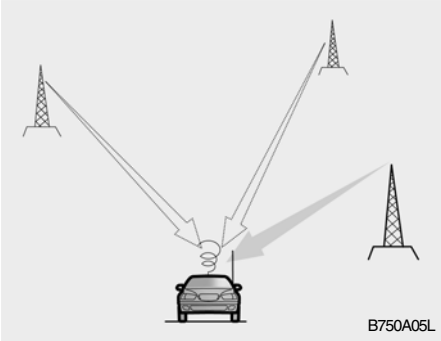

- Station Swapping - As an FM signal weakens, another more powerful signal near the same frequency may begin to play. This is because your radio is designed to lock onto the clearest signal. If this occurs, select another station with a stronger signal.
- Multi-Path Cancellation - Radio signals being received from several directions can cause distortion or fluttering. This can be caused by a direct and reflected signal from the same station, or by signals from two stations with close frequencies. If this occurs, select another station until the condition has passed.

B750B02Y-AAT

Using a cellular phone or a two-way radio

When a cellular phone is used inside the vehicle, noise may be produced from the audio equipment. This does not mean that something is wrong with the audio equipment. In such a case, use the cellular phone at a place as far as possible from the audio equipment.

CAUTION:
When using a communication system such as a cellular phone or a radio set inside the vehicle, a separate external antenna must be fitted. When a cellular phone or a radio set is used with an internal antenna alone, it may interfere with the vehicle's electrical system and adversely affect safe operation of the vehicle.

WARNING:
Don't use a cellular phone when you are driving, you must stop at a safe place to use a cellular phone.

K220A01HR-GAT

STEREO RADIO OPERATION (K220) (If Installed)

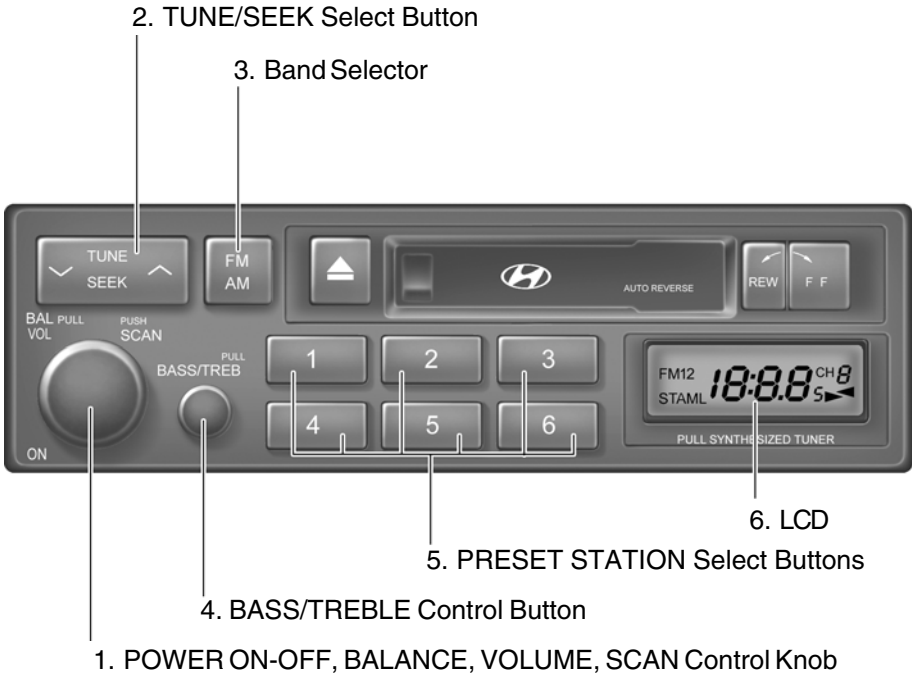

K220A01HR

K220B01HR-GAT

1. POWER ON-OFF/VOLUME Control Knob

The radio unit may be operated when the ignition key is in the "ACC" or "ON" position. Rotate the knob clockwise to switch the radio unit on and to increase the volume.
The LCD shows the radio frequency in the radio mode. Turn the knob counterclockwise to reduce the volume and to switch the radio unit off.

BAL (Balance) Control Knob

Pull and turn the control knob clockwise to emphasize right speaker sound (left speaker sound will be attenuated). When the control knob is turned counterclockwise, left speaker sound will be emphasized (right speaker sound will be attenuated).
After adjusting the balance, push the knob again to use the other function.

SCAN Knob

When the scan knob is pressed, the frequency will increase and the receivable stations will be tuned in one after another, receiving each station for 5 seconds. To stop scanning, press the scan knob again.

2. TUNE (manual) Select Button

Press the (∧) side or (∨) side to increase or to decrease the frequency. With the button held down for 1 sec. or more, the stop signal (broadcasting radio wave) is ignored and channel selection continues.

SEEK Operation (Automatic Channel Selection)

Press the TUNE select button for 1 sec. or more. When the (∧) side is pressed, the unit will automatically tune to the next higher frequency and when the (∨) side is pressed, it will automatically tune to the next lower frequency.

3. BAND Selector

Pressing the FM/AM button changes the AM, FM1 and FM2 bands. The mode selected is displayed on LCD.

Each press of the button changes the display as follows;

FM1 → FM2 → AM → FM1

4. BASS Control Knob

Press to pop the knob out and turn to the left or right for the desired bass tone.

TREBLE Control Knob

Pull the bass control knob further out. Turn to the left or right for the desired treble tone.

5. PRESET STATION Select Buttons

Six (6) stations for AM, FM1 and FM2 respectively can be preset in the electronic memory circuit on this unit.

HOW TO PRESET STATIONS

Six AM and twelve FM stations may be programmed into the memory of the radio. Then, by simply pressing the band select button and/or one of the six station select buttons, you may recall any of these stations instantly. To program the stations, follow these steps:

- o Press band selector to set the band for AM, FM1, and FM2.
- o Select the desired station to be stored by seek, scan or manual tuning.
- o Determine the preset station select button you wish to use to access that station.
- o Press the station select button for more than two seconds. A select button indicator will show in the display indicating which select button you have depressed. You should then release the button, and proceed to program the next desired station. A total of 18 stations can be programmed by selecting one AM and two FM stations per button.
- o When completed, any preset station may be recalled by selecting AM, FM1 or FM2 band and the appropriate station button.

6. LCD

LCD shows the following information; Band of FM1/FM2/AM frequency, preset channel number, ST in case of FM stereo.

CAUTION:

- **o Do not place beverages close to the audio system. The audio system mechanism may be damaged if you spill them.**
- **o Do not impact on the audio system, or the audio system mechanism could be damaged.**

K220C01HR-GAT

CASSETTE TAPE PLAYER OPERATION (K220) (If Installed)

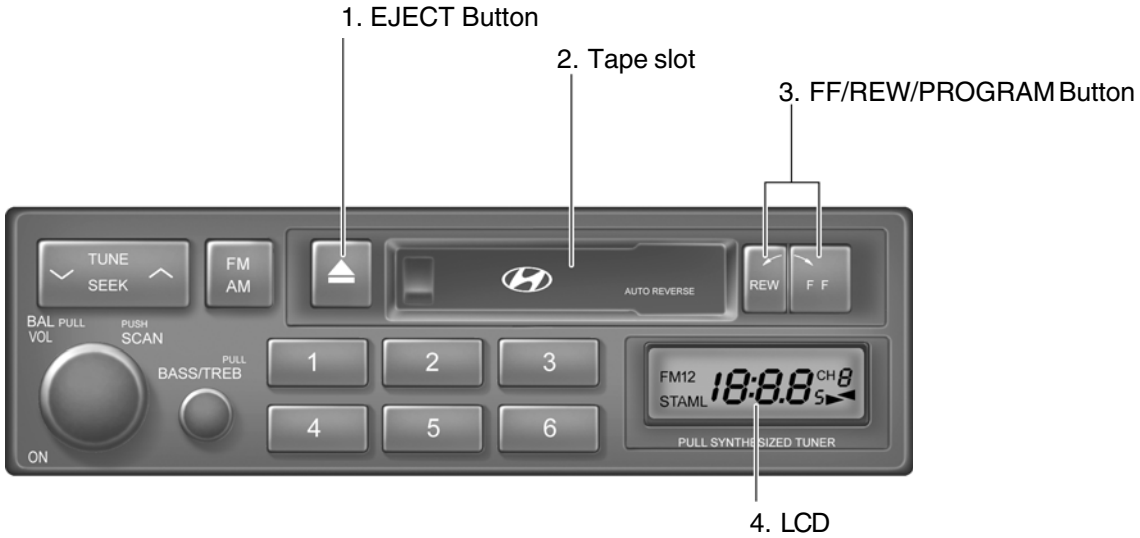

K220C01HR

K220D01HR-GAT

1. TAPE EJECT BUTTON

While the tape is playing, press the eject button when you want to eject the cassette tape.

2. TAPE SLOT

Insert cassette with exposed tape side facing the right.
Insertion of the cassette will automatically cut off the radio reception and tape playback will start.

3. FF/REW/PROGRAM BUTTON

Pushing the FF button will cause the tape to move rapidly in the forward direction of play. Pushing the REW button will cause the tape to move rapidly in the reverse direction of play. To stop fast-forward or rewind action, press the opposite button.
While the tape is playing, depress the FF and REW buttons simultaneously to play the reverse side of the tape.

4. LCD

LCD shows the tape direction (▶ or ◀) of the cassette in play.

CAUTION:

- **Do not insert anything like coins into the player slot as damage to the unit may occur.**
- **Do not place beverages close to the audio system. The playback mechanism may be damaged if you spill them.**
- **Do not impact on the audio system, or the playback mechanism could be damaged.**

K240A01HR-GAT

STEREO RADIO OPERATION (K240) (If Installed)

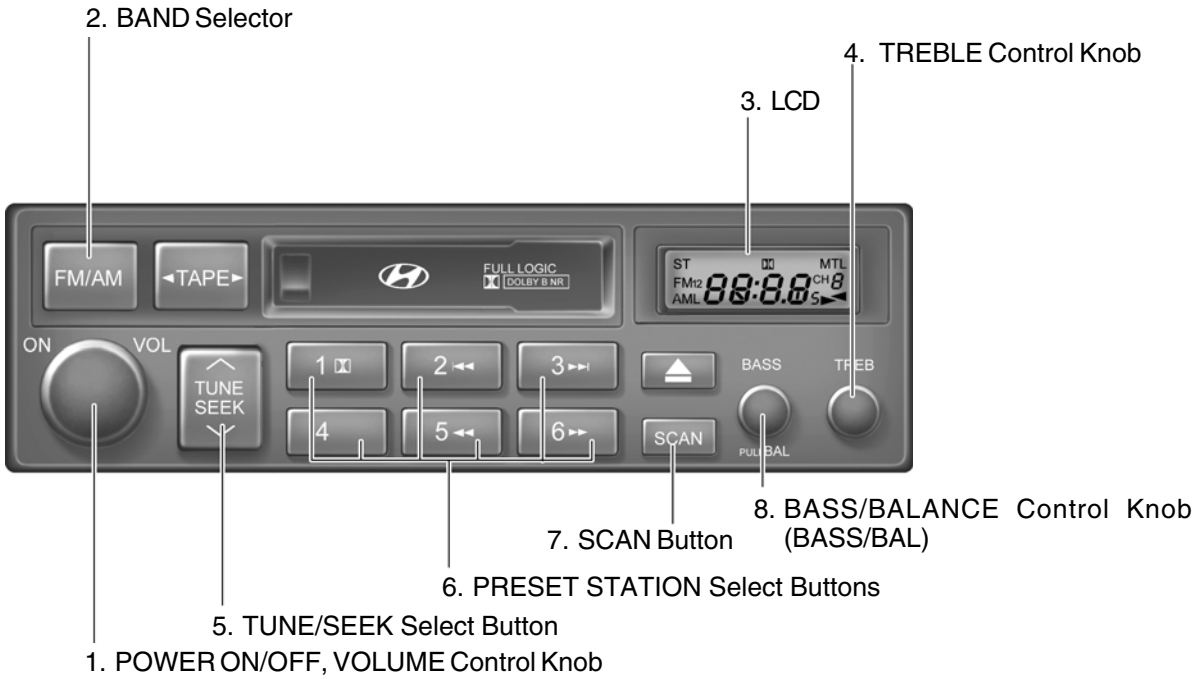

K240A01HR

K240B01HR-GAT

1. POWER ON-OFF Control Knob

The radio unit may be operated when the ignition key is in the "ACC" or "ON" position. Press the knob to switch the power on. The LCD shows the radio frequency in the radio mode or the tape direction indicator in the tape mode. To switch the power off, press the knob again.

VOLUME Control

Rotate the knob clockwise to increase the volume and turn the knob counter-clockwise to reduce the volume.

2. BAND Selector

Pressing the FM/AM button changes the AM, FM1 and FM2 bands. The mode selected is displayed on LCD.
Each press of button changes the display as follows;

FM1 → FM2 → AM → FM1

3. LCD

LCD shows the following informations; Band of FM1/FM2/AM frequency, preset channel number, ST in case of FM stereo.

4. TREB (Treble) Control Knob

Press to pop the knob out and turn to the left or right for the desired treble tone.

5. TUNE (Manual) Select Button

Press the (∧) side or (∨) side to increase or to decrease the frequency. Press either button and hold down to continuously scroll. Release button once the desired station is reached.

SEEK Operation (Automatic Channel Selection)

Press the TUNE select button 0.5 sec or more. Releasing it will automatically tune to the next available station with a beep sound.

When the (∧) side is pressed longer than 0.5 second, releasing will automatically tune to the next higher frequency and when the (∨) side is pressed longer than 0.5 second and releasing will automatically tune to the next lower frequency.

6. PRESET STATION Select Buttons

Six (6) stations for AM, FM1 and FM2 respectively can be preset in the electronic memory circuit on this unit.

HOW TO PRESET STATIONS

Six AM and twelve FM stations may be programmed into the memory of the radio. Then, by simply pressing the band select button and/or one of the six station select buttons, you may recall any of these stations instantly. To program the stations, follow these steps:

- o Press band selector to set the band for AM, FM1, or FM2.
- o Select the desired station to be stored by seek or manual tuning.
- o Determine the preset station select button you wish to use to access that station.

- o Press the station select button for more than two seconds. A select button indicator will show in the display indicating which select button you have depressed. The frequency display will flash after it has been stored into the memory with beep sound. You should then release the button, and proceed to program the next desired station. A total of 18 stations can be programmed by selecting one AM and two FM stations per button.
- o When completed, any preset station may be recalled by selecting AM, FM1 or FM2 band and the appropriate station button.

7. SCAN Button

When the scan button is pressed, the frequency will be increased and the receivable stations will be tuned in one after another, receiving each station for 5 seconds. To stop scanning, press the scan button again.

8. BASS Control Knob

Press to pop the knob out and turn to the left or right for the desired bass tone.

BAL (Balance) Control Knob

Pull the bass control knob further out. Turn the control knob clockwise to emphasize right speaker sound (left speaker sound will be attenuated).
When the control knob is turned counterclockwise, left speaker sound will be emphasized (right speaker sound will be attenuated).

CAUTION:

- **o Do not place beverages close to the audio system. The playback mechanism may be damaged if you spill them.**
- **o Do not impact on the audio system, or the playback mechanism could be damaged.**

K240C01HR-GAT

CASSETTE TAPE PLAYER OPERATION (K240) (If Installed)

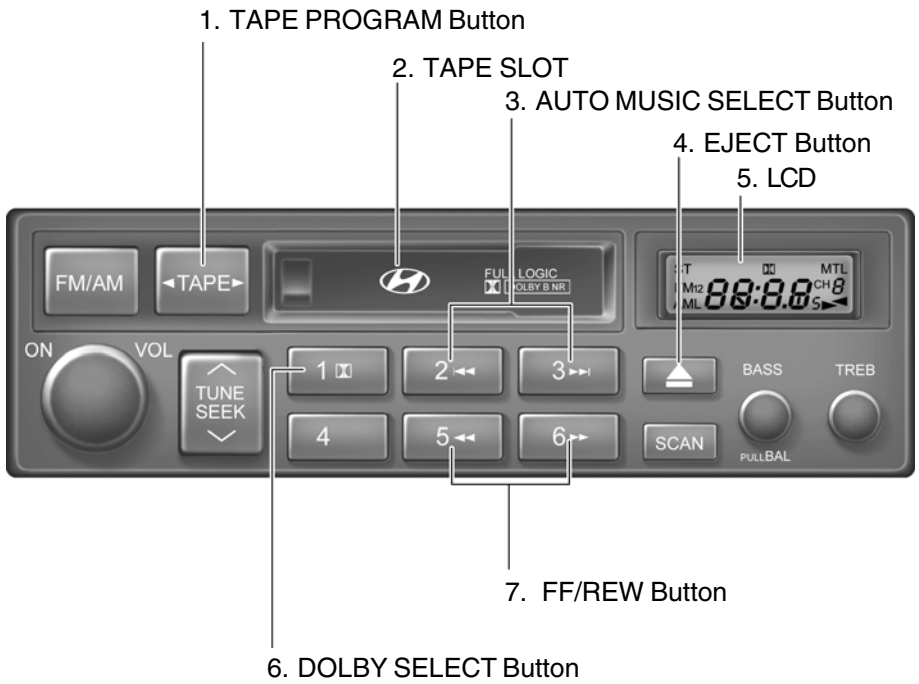

K240C01HR

K240A01HR-GAT

1. TAPE PROGRAM Button

This allows you to play the reverse side of the tape by merely depressing the program button.
An arrow (▶ or ◀) will appear in the display to show tape direction.

2. TAPE SLOT

Insert cassette with exposed tape side facing the right.
Insertion of the cassette will automatically cut off the radio reception and tape playback will start.

3. AUTO MUSIC SELECT Button

Press the button to find the starting point of each song in a prerecorded music tape.
The quiet space between songs (must have at least a 4 sec. gap) can be identified by the AUTO MUSIC SELECT button.

- o Pressing the ▶▶| button will play the beginning of the next music segment.
- o Pressing the |◀◀ button will start replay at the beginning of the music just listened to.

4. EJECT Button

- o When the EJECT button is pressed with the cassette loaded, the cassette is ejected.
- o When the EJECT button is pressed during the FF/REW, the cassette is ejected.

5. LCD

LCD shows the following information;
Playing status, tape direction, FF or REW, MTL in metallic tape use, and Dolby etc.

6. DOLBY SELECT Button

If you get background noise during PLAY, you can reduce this considerably by merely pressing DOLBY SELECT button.
If you want to release, press the button again.

7. FF/REW Button

- o The FF (fast forward tape winding) starts when the ▶▶ button is pressed during the PLAY or REW.
- o The play starts when the ▶▶ button is pressed again during the FF.
- o The REW (rewinding) starts when the ◀◀ button is pressed during the PLAY or FF.
- o The play starts when the ◀◀ button is pressed again during the REW.

CAUTION:

- **o Do not insert anything like coins into the player slot as damage to the unit may occur.**
- **o Do not place beverages close to the audio system. The playback mechanism may be damaged if you spill them.**
- **o Do not impact on the audio system, or the playback mechanism could be damaged.**

CARE OF CASSETTE TAPES

B860A01A-AAT

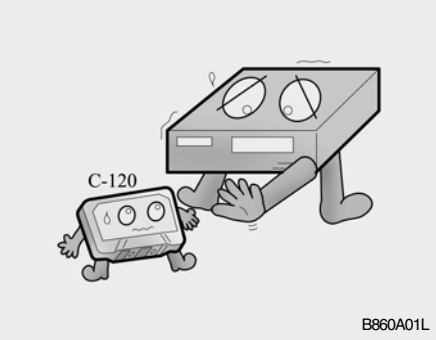

Proper care of your cassette tapes will extend the tape life and increase your listening enjoyment. Always protect your tapes and cassette cases from direct sunlight, severely cold and dusty conditions.
When not in use, cassettes should always be stored in the original protective cassette case. When the vehicle is very hot or cold, allow the interior temperature to become more comfortable before listening to your cassettes.

- o Never leave a cassette inserted in the player when not being played. This could damage the tape player unit and the cassette tape.
- o We strongly recommend against the use of tapes longer than C-60 (60 minutes total). Tapes such as C-120 or C-180 are very thin and do not perform as well in the automotive environment.

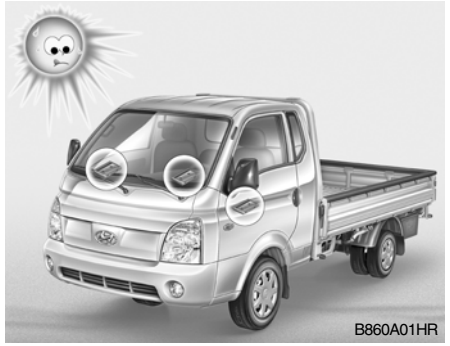

- o Be sure that the cassette label is not loose or peeling off or tape ejection may be difficult.
- o Never touch or soil the actual audio tape surfaces.
- o Keep all magnetized objects, such as electric motors, speakers or transformers away from your cassette tapes and tape player unit.
- o Store cassettes in a cool, dry place with the open side facing down to prevent dust from setting in the cassette body.
- o Avoid repeated fast / reverse usage to replay one given tune or tape section. This can cause poor tape winding to occur, and eventually cause excessive internal drag and poor audio quality in the cassette. If this occurs, it can sometimes be corrected by fast winding the tape from end to end several times. If this does not correct the problem, do not continue to use the tape in your vehicle.

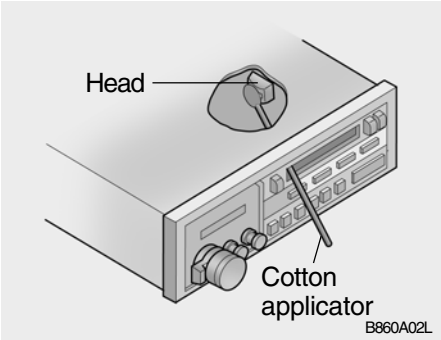

- The playback head, capstan and pinch rollers will develop a coating of tape residue that can result in deterioration of sound quality, such as a wavering sound. They should be cleaned monthly using a commercially available head cleaning tape or special solution available from audio specialty shops. Follow the supplier's directions carefully and never oil any part of the tape player unit.
- Always be sure that the tape is tightly wound on its reel before inserting in the player. Rotate a pencil in the drive sprockets to wind up any slack.

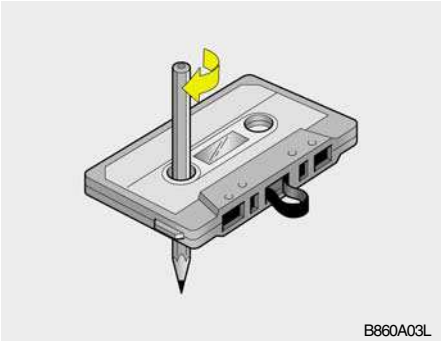

NOTE:

Look at a tape before you insert it. If the tape is loose, tighten it by turning one of the hubs with a pencil or your finger.
If the label is peeling off, do not put it in the drive mechanism.
Do not leave tapes sitting where they are exposed to hot, warm, or high humidity, such as on top of the dashboard or in the player.
If a tape is exposed to excessively hot or cold, let it reach a moderate temperature before putting it in the player.

B870C01A-GAT

Manual Antenna

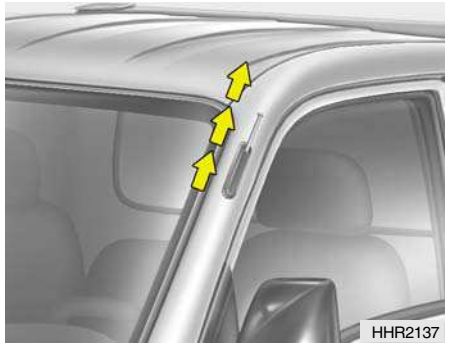

Your car uses a manual stainless steel antenna to receive both AM and FM broadcast signals. Pull up the antenna using your fingers, as shown in the drawing.

NOTE:

Before entering an automatic car wash or a place with a low height clearance, be sure that the antenna is fully retracted.

B710A01TB-GAT
(If Installed)

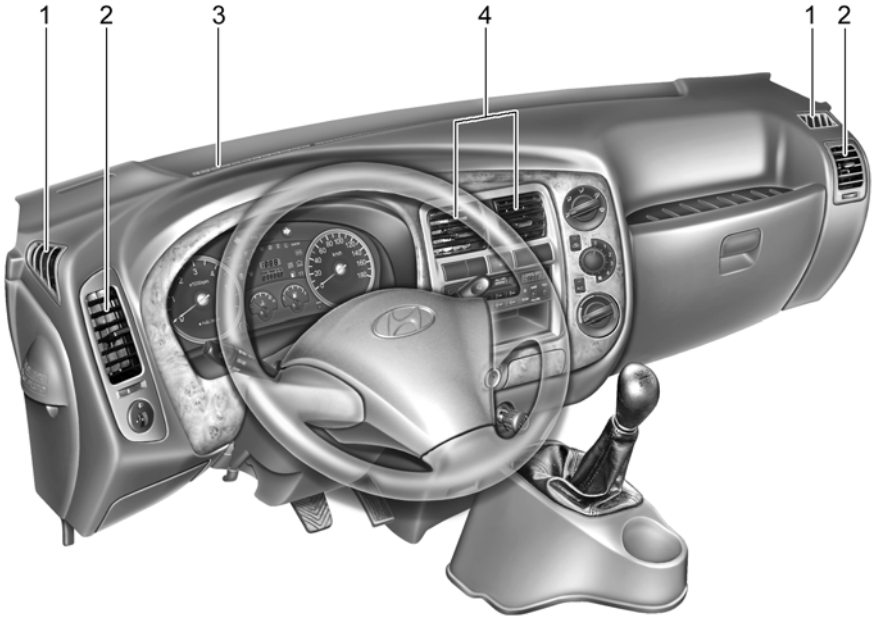

1. Side Defrost Nozzle
2. Side Ventilator
3. Windshield Defrost Nozzle
4. Center Ventilator

OHR028110

B710B01S-AAT
CENTER VENTILATOR

The center ventilators are located in the middle of the dashboard. The direction of air flow from the vents in the center of the dashboard is adjustable.
To control the direction of the air flow, move the knob in the center of the vent up-and-down and side-to-side.

B710C02HP-AAT
SIDE VENTILATOR

The side ventilators are located on each side of dashboard. To change the direction of the air flow, move the knob in the center of the vent up-and-down and side-to-side.
The vents are opened when the vent knob is moved to " " position. The vents are closed when the vent knob is moved to " ". Keep these vents clear of any obstructions.

B670A01HR-GAT

(If Installed)

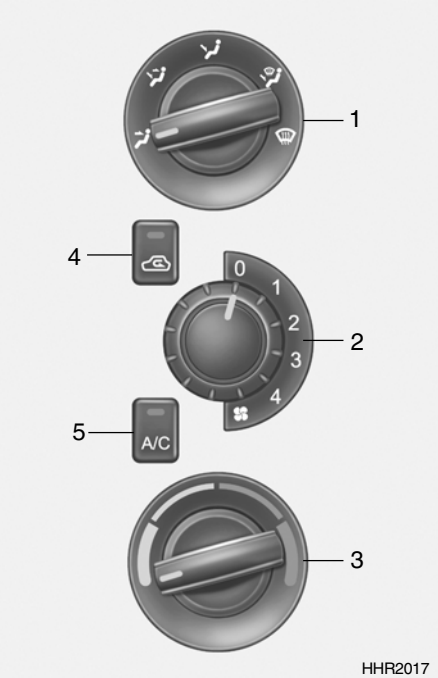

1. Air flow control switch
2. Fan speed control switch
3. Temperature control switch
4. Air intake control switch
5. Air conditioning switch

B670D01HR-GAT

Air Flow Control

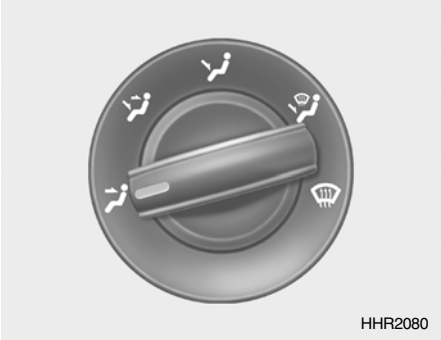

This is used to direct the flow of air. Air can be directed to the floor, dashboard outlets, or windshield. Five symbols are used to represent Face, Bi-Level, Floor, Floor-Defrost and Defrost air position.

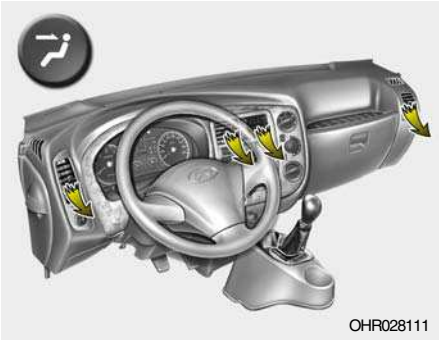

Face-Level

Selecting the "Face" mode will cause air to be discharged through the face level vents.

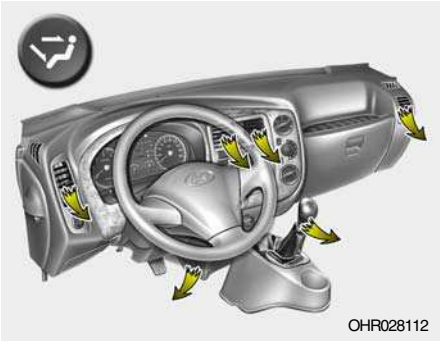

Bi-Level

Air is discharged through the face vents and the floor vents. This makes it possible to have cooler air from the dashboard vents and warmer air from the floor outlets at the same time.

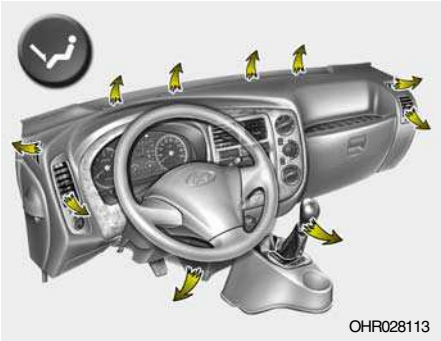

Floor-Level

Air is discharged through the floor vents, windshield defroster nozzle, side defroster nozzle, side ventilator.

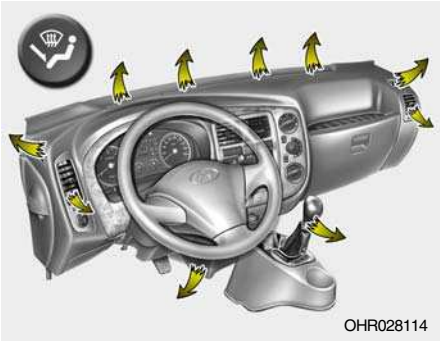

Floor-Defrost Level

Air is discharged through the windshield defroster nozzle, the floor vents, side defroster nozzle, side ventilator.

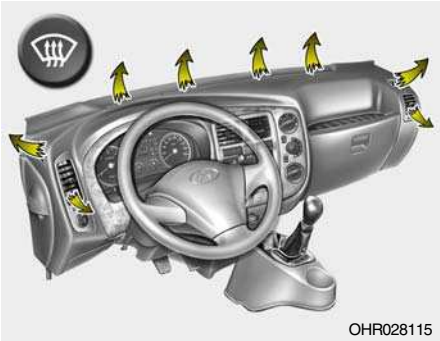

Defrost-Level

Air is discharged through the windshield defroster nozzle, side defroster nozzle, side ventilator.

B670B01A-AAT

Fan Speed Control (Blower Control)

This is used to turn the blower fan on or off and to select the fan speed.
This blower fan speed, and therefore the volume of air delivered from the system, may be controlled manually by setting the blower control between the "1" and "4" positions.

B670E02A-AAT

Temperature Control

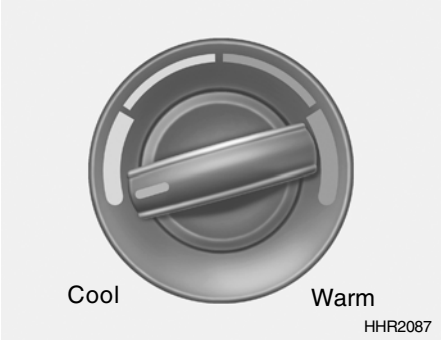

This control is used to adjust the degree of heating or cooling desired.

B670C01E-AAT

Air Intake Control

This is used to select fresh outside air or recirculating inside air.
To change the air intake control mode (Fresh mode, Recirculation mode), push the control button.

FRESH MODE ( ) : The indicator light on the button goes off when the air intake control is fresh mode.

RECIRCULATION MODE ( ): The indicator light on the button is illuminated when the air intake control is recirculation mode.

With the "Fresh" mode selected, air enters the vehicle from the outside and is heated or cooled according to the function selected.

With the "Recirculation" mode selected, air from within the passenger compartment will be drawn through the heating system and heated or cooled according to the function selected.

NOTE:

It should be noted that prolonged operation of the heating in "Recirculation" mode ( ) will give rise to fogging of the windshield and side windows and the air within the passenger compartment will become stale. In addition, prolonged use of the air conditioning with the "Recirculation" mode ( ) selected may result in the air within the passenger compartment becoming excessively dry.

B690A01HR-GAT

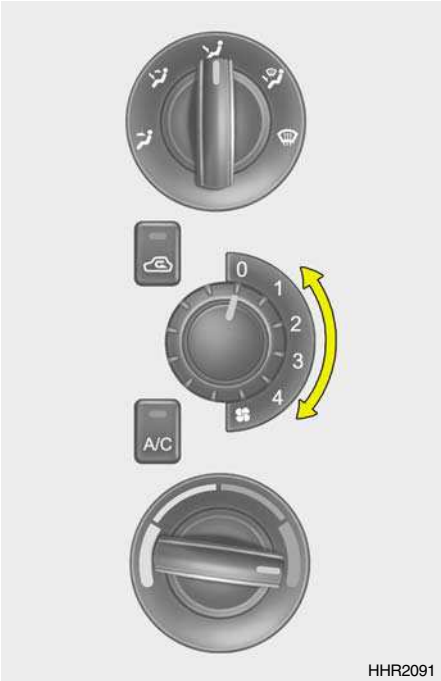

For normal heating operation, set the air intake control to the fresh air ( ) position and the air flow control to the floor ( ) position.

For faster heating, the air intake control should be set in the recirculate ( ) position.

If the windows fog up, set the air flow control to the defrost ( ) position and the air intake control to the fresh air ( ) position.

For maximum heat, move the temperature control to "Warm".

BI-LEVEL HEATING

B700A01A-AAT

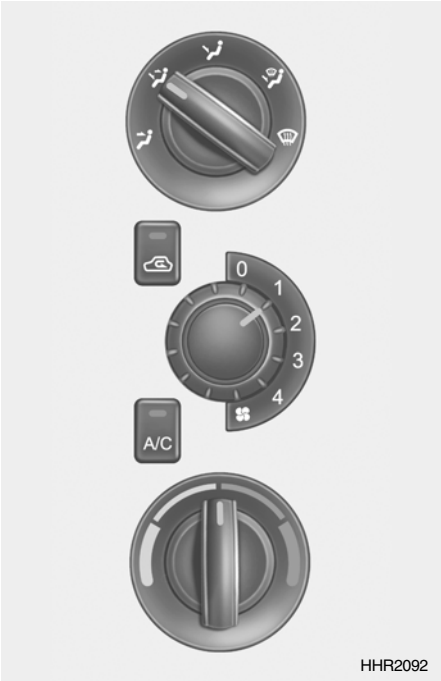

Your Hyundai is equipped with bi-level heating controls. This makes it possible to have cooler air from the dashboard vents and warmer air from the floor outlets at the same time. To use this feature:

- o Set the air intake control to the fresh air ( ) position.
- o Set the air flow control at the bi-level ( ) position.
- o Set the temperature control between "Cool" and "Warm".

VENTILATION

B710A01S-AAT

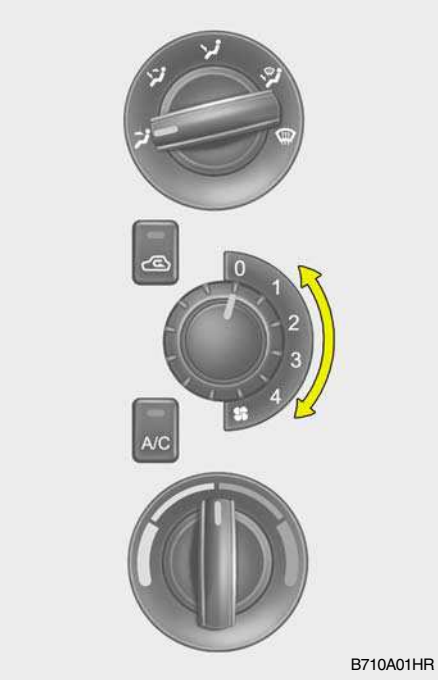

B710A01HR

To operate the ventilation system:

- o Set the air intake control to "Fresh" mode ( ).
- o To direct all intake air to the dashboard vents, set the air flow control to "Face".
- o Adjust the fan speed control to the desired speed.
- o Set the temperature control between "Cool" and "Warm".

DEFROSTING/DEFOGGING

B720A01HR-GAT

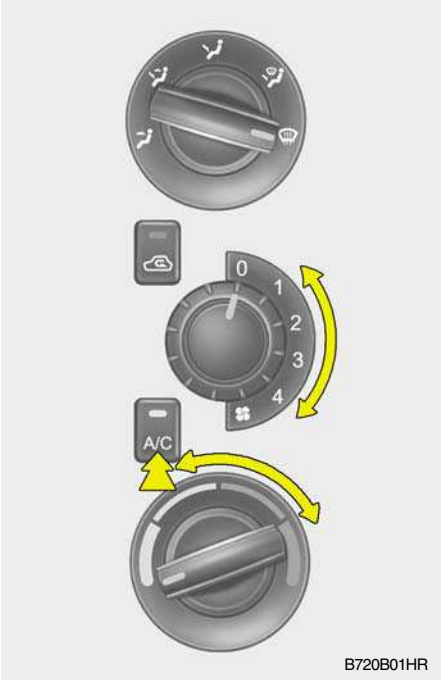

B720B01HR

Use the heating/ventilation system to defrost or defog the windshield:

To remove interior fog on the windshield:

- o Set the air flow control to the defrost ( ) position.
- o If the vehicle is equipped with a air conditioning system, turn on the air conditioning switch.
- o Set the air intake control to the fresh air ( ) position.
- o Set the fan speed control between "1" and "4" position.
- o Set the temperature control to the desired position.

To remove the frost or exterior fog on the windshield:

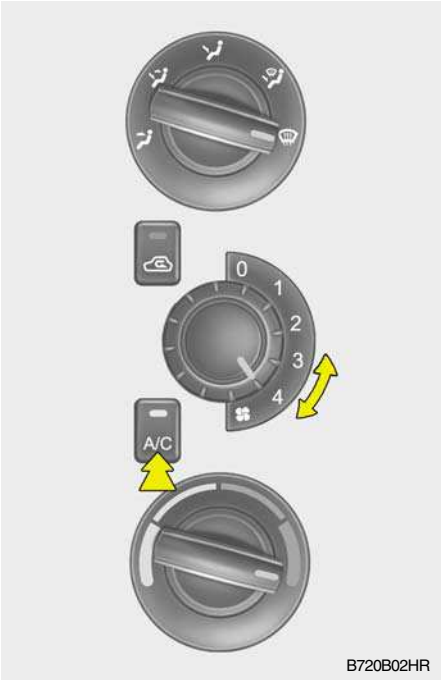

- o Set the air flow control to the defrost ( ) position.
- o If the vehicle is equipped with a air conditioning system, turn on the air conditioning switch.
- o Set the air intake control to the fresh ( ) position.
- o Set the fan speed control to position "3" or "4".
- o Set the temperature control to warm.

NOTE:

When the A/C is operated continuously on the floor-defrost level ( ) or defrost level ( ), it may cause fog to form on the exterior windshield. If this occurs, set the air flow control to the face level position ( ) and fan speed control to the low position.

B730A01L-AAT

Operation Tips

- To keep dust or unpleasant fumes from entering the car through the ventilation system, temporarily set the air intake control at "Recirculation ( )". Be sure to return the control to "Fresh ( )" when the irritation has passed to keep fresh air in the vehicle. This will help keep the driver alert and comfortable.
- Air for the heating/cooling system is drawn in through the grilles just ahead of the windshield. Care should be taken that these are not blocked by leaves, snow, ice or other obstructions.
- To prevent interior fog on the windshield, set the air intake control to the fresh air ( ) position, fan speed to the desired position, turn on the air conditioning system, and adjust temperature control to desired temperature.

B740A01A-AAT

Air Conditioning Switch (If Installed)

The air conditioning is turned on by pushing the A/C button on the heating/air conditioning control panel.

B740B02A-AAT

Air Conditioning Operation (Cooling)

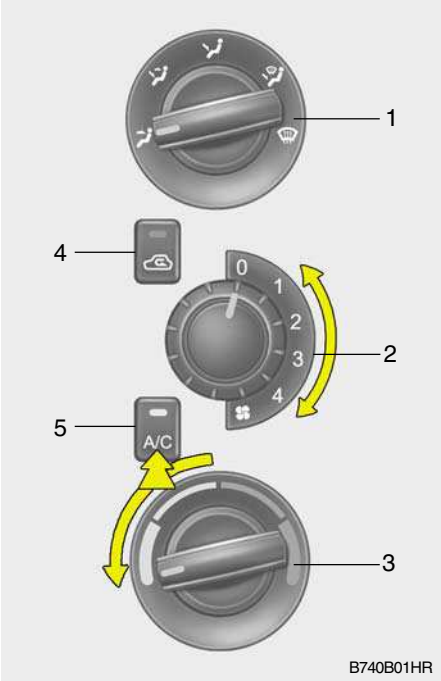

To use the air conditioning to cool the interior:

- o Turn on the fan control switch (2).
- o Turn on the air conditioning switch (5) by pushing in on the switch. The air conditioning indicator light should come on at the same time.
- o Set the air intake control (4) to the position.
- o Set the temperature control (3) to "Cool". ("Cool" provides maximum cooling. The temperature may be moderated by moving the control toward "Warm".)
- o Adjust the fan control (2) to the desired speed. For greater cooling, turn the fan control to one of the higher speeds or temporarily select the position on the air intake control.

B740C01A-AAT

De-Humidified Heating

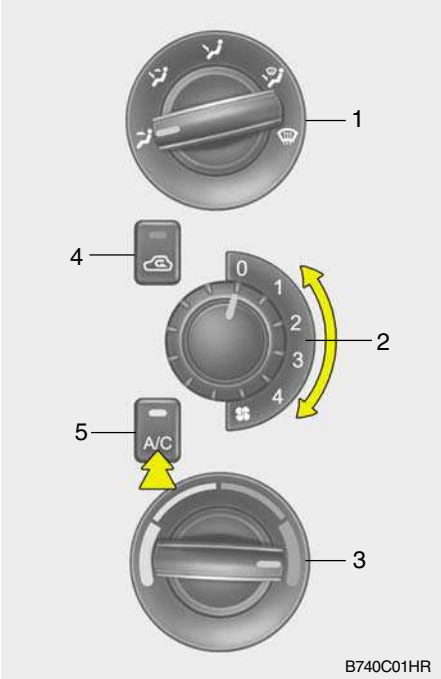

For dehumidified heating:

- o Turn on the fan control switch (2).
- o Turn on the air conditioning switch (5). The air conditioning indicator light should come on at the same time.
- o Set the air intake control (4) to the fresh air ( ) position.
- o Set the air flow control (1) to the face ( ) position.
- o Adjust the fan control (2) to the desired speed.
- o For more rapid action, set the fan at one of the higher speeds.
- o Adjust the temperature control (3) to provide the desired amount of warmth.

B740D01A-AAT

Operation Tips

- o If the interior of the car is hot when you first get in, open the windows for a few minutes to expel the hot air.
- o When you are using the air conditioning system, keep all windows closed to keep hot air out.
- o When moving slowly, as in heavy traffic, shift to a lower gear.
  This increases engine speed, which in turn increases the speed of the air conditioning compressor.
- o On steep grades, turn the air conditioning off to avoid the possibility of the engine over-heating.
- o During winter months or in periods when the air conditioning is not used regularly, run the air conditioning once every month for a few minutes.
  This will help circulate the lubricants and keep your system in peak operating condition.

CLIMATE CONTROL AIR FILTER (FOR EVAPORATOR AND BLOW UNIT)

B760A04HR-GAT

(If Installed)

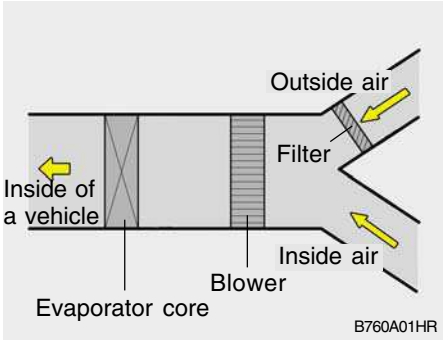

The climate control air filter is located in the hood.
It operates to decrease the amount of pollutants entering the car.
To check the climate control air filter, refer to the page 6-19.

CAUTION:

- **o If the car is being driven in severe conditions such as dusty, rough roads, more frequent climate control air filter inspections are required.**
- **o When the air flow rate is decreased, it must be checked at an authorized dealer.**

B750A02A-AAT

How Car Audio Works

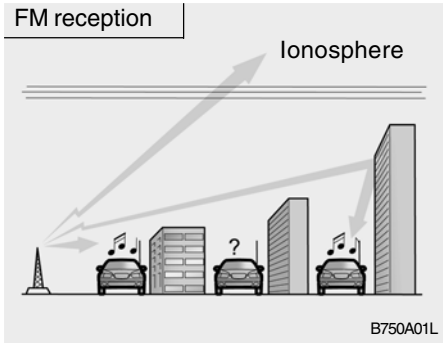

AM and FM radio signals are broadcast from transmitter towers located around your city. They are intercepted by the radio antenna on your car. This signal is then received by the radio and sent to your car speakers.

When a strong radio signal has reached your vehicle, the precise engineering of your audio system ensures the best possible quality reproduction. However, in some cases the signal coming to your vehicle may not be strong and clear. This can be due to factors such as the distance from the radio station, closeness of other strong radio stations or the presence of buildings, bridges or other large obstructions in the area.

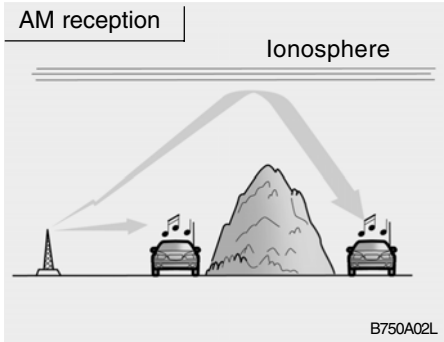

AM broadcasts can be received at greater distances than FM broadcasts. This is because AM radio waves are transmitted at low frequencies. These long, low frequency radio waves can follow the curvature of the earth rather than travelling straight out into the atmosphere. In addition, they curve around obstructions so that they can provide better signal coverage.

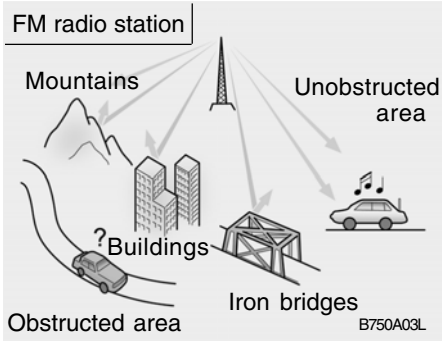

FM broadcasts are transmitted at high frequencies and do not bend to follow the earth's surface. Because of this, FM broadcasts generally begin to fade at short distances from the station. Also, FM signals are easily affected by buildings, mountains, or other obstructions. These can result in certain listening conditions which might lead you to believe a problem exists with your radio. The following conditions are normal and do not indicate radio trouble:

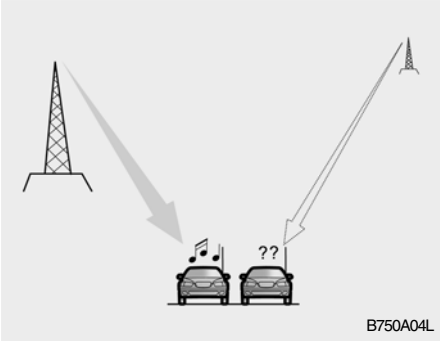

- Fading - As your car moves away from the radio station, the signal will weaken and sound will begin to fade. When this occurs, we suggest that you select another stronger station.
- Flutter/Static - Weak FM signals or large obstructions between the transmitter and your radio can disturb the signal causing static or fluttering noises to occur. Reducing the treble level may lessen this effect until the disturbance clears.

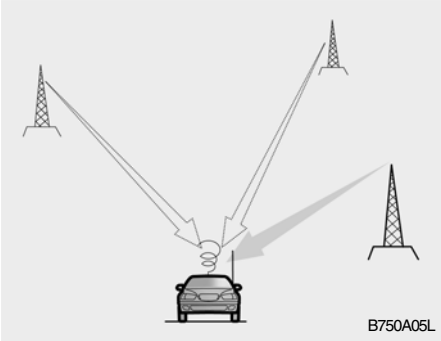

- Station Swapping - As an FM signal weakens, another more powerful signal near the same frequency may begin to play. This is because your radio is designed to lock onto the clearest signal. If this occurs, select another station with a stronger signal.
- Multi-Path Cancellation - Radio signals being received from several directions can cause distortion or fluttering. This can be caused by a direct and reflected signal from the same station, or by signals from two stations with close frequencies. If this occurs, select another station until the condition has passed.

B750B02Y-AAT

Using a cellular phone or a two-way radio

When a cellular phone is used inside the vehicle, noise may be produced from the audio equipment. This does not mean that something is wrong with the audio equipment. In such a case, use the cellular phone at a place as far as possible from the audio equipment.

CAUTION:
When using a communication system such as a cellular phone or a radio set inside the vehicle, a separate external antenna must be fitted. When a cellular phone or a radio set is used with an internal antenna alone, it may interfere with the vehicle's electrical system and adversely affect safe operation of the vehicle.

WARNING:
Don't use a cellular phone when you are driving, you must stop at a safe place to use a cellular phone.

K220A01HR-GAT

STEREO RADIO OPERATION (K220) (If Installed)

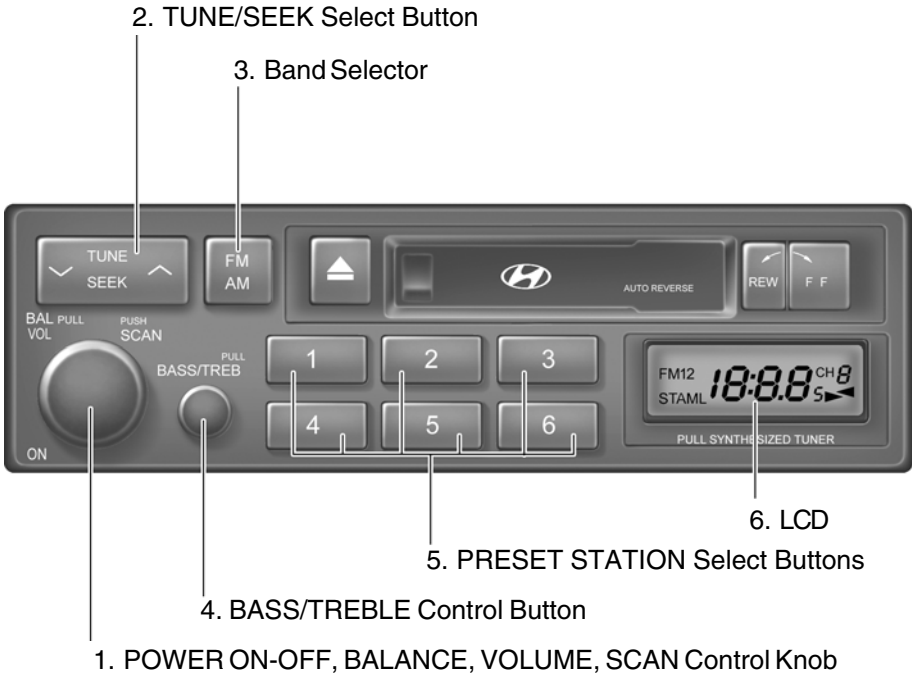

K220A01HR

K220B01HR-GAT

1. POWER ON-OFF/VOLUME Control Knob

The radio unit may be operated when the ignition key is in the "ACC" or "ON" position. Rotate the knob clockwise to switch the radio unit on and to increase the volume.
The LCD shows the radio frequency in the radio mode. Turn the knob counterclockwise to reduce the volume and to switch the radio unit off.

BAL (Balance) Control Knob

Pull and turn the control knob clockwise to emphasize right speaker sound (left speaker sound will be attenuated). When the control knob is turned counterclockwise, left speaker sound will be emphasized (right speaker sound will be attenuated).
After adjusting the balance, push the knob again to use the other function.

SCAN Knob

When the scan knob is pressed, the frequency will increase and the receivable stations will be tuned in one after another, receiving each station for 5 seconds. To stop scanning, press the scan knob again.

2. TUNE (manual) Select Button

Press the (∧) side or (∨) side to increase or to decrease the frequency. With the button held down for 1 sec. or more, the stop signal (broadcasting radio wave) is ignored and channel selection continues.

SEEK Operation (Automatic Channel Selection)

Press the TUNE select button for 1 sec. or more. When the (∧) side is pressed, the unit will automatically tune to the next higher frequency and when the (∨) side is pressed, it will automatically tune to the next lower frequency.

3. BAND Selector

Pressing the FM/AM button changes the AM, FM1 and FM2 bands. The mode selected is displayed on LCD.

Each press of the button changes the display as follows;

FM1 → FM2 → AM → FM1

4. BASS Control Knob

Press to pop the knob out and turn to the left or right for the desired bass tone.

TREBLE Control Knob

Pull the bass control knob further out. Turn to the left or right for the desired treble tone.

5. PRESET STATION Select Buttons

Six (6) stations for AM, FM1 and FM2 respectively can be preset in the electronic memory circuit on this unit.

HOW TO PRESET STATIONS

Six AM and twelve FM stations may be programmed into the memory of the radio. Then, by simply pressing the band select button and/or one of the six station select buttons, you may recall any of these stations instantly. To program the stations, follow these steps:

- o Press band selector to set the band for AM, FM1, and FM2.
- o Select the desired station to be stored by seek, scan or manual tuning.
- o Determine the preset station select button you wish to use to access that station.
- o Press the station select button for more than two seconds. A select button indicator will show in the display indicating which select button you have depressed. You should then release the button, and proceed to program the next desired station. A total of 18 stations can be programmed by selecting one AM and two FM stations per button.
- o When completed, any preset station may be recalled by selecting AM, FM1 or FM2 band and the appropriate station button.

6. LCD

LCD shows the following information; Band of FM1/FM2/AM frequency, preset channel number, ST in case of FM stereo.

CAUTION:

- **o Do not place beverages close to the audio system. The audio system mechanism may be damaged if you spill them.**
- **o Do not impact on the audio system, or the audio system mechanism could be damaged.**

K220C01HR-GAT

CASSETTE TAPE PLAYER OPERATION (K220) (If Installed)

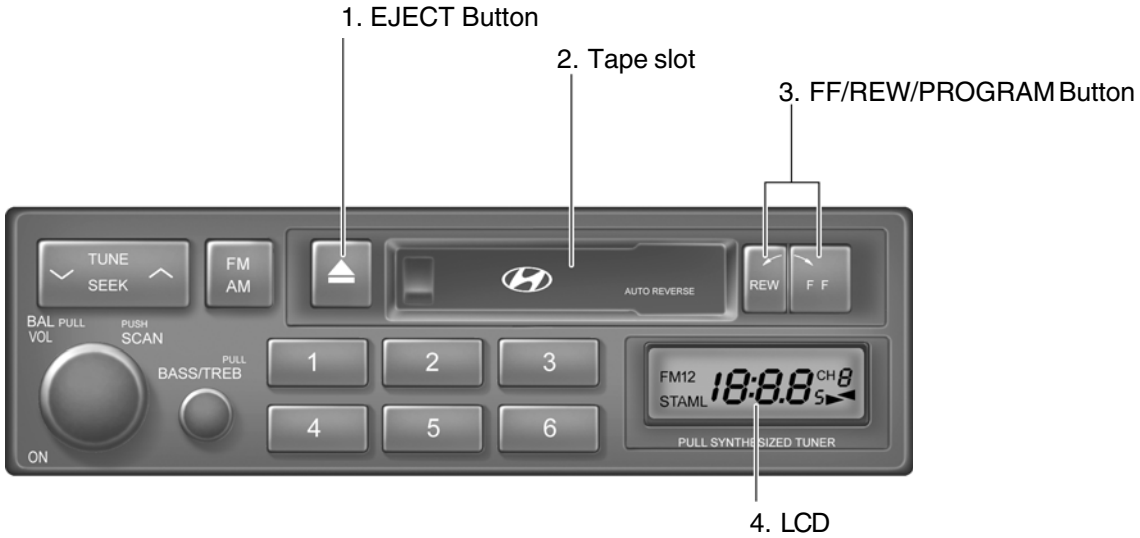

K220C01HR

K220D01HR-GAT

1. TAPE EJECT BUTTON

While the tape is playing, press the eject button when you want to eject the cassette tape.

2. TAPE SLOT

Insert cassette with exposed tape side facing the right.
Insertion of the cassette will automatically cut off the radio reception and tape playback will start.

3. FF/REW/PROGRAM BUTTON

Pushing the FF button will cause the tape to move rapidly in the forward direction of play. Pushing the REW button will cause the tape to move rapidly in the reverse direction of play. To stop fast-forward or rewind action, press the opposite button.
While the tape is playing, depress the FF and REW buttons simultaneously to play the reverse side of the tape.

4. LCD

LCD shows the tape direction (▶ or ◀) of the cassette in play.

CAUTION:

- **Do not insert anything like coins into the player slot as damage to the unit may occur.**
- **Do not place beverages close to the audio system. The playback mechanism may be damaged if you spill them.**
- **Do not impact on the audio system, or the playback mechanism could be damaged.**

K240A01HR-GAT

STEREO RADIO OPERATION (K240) (If Installed)

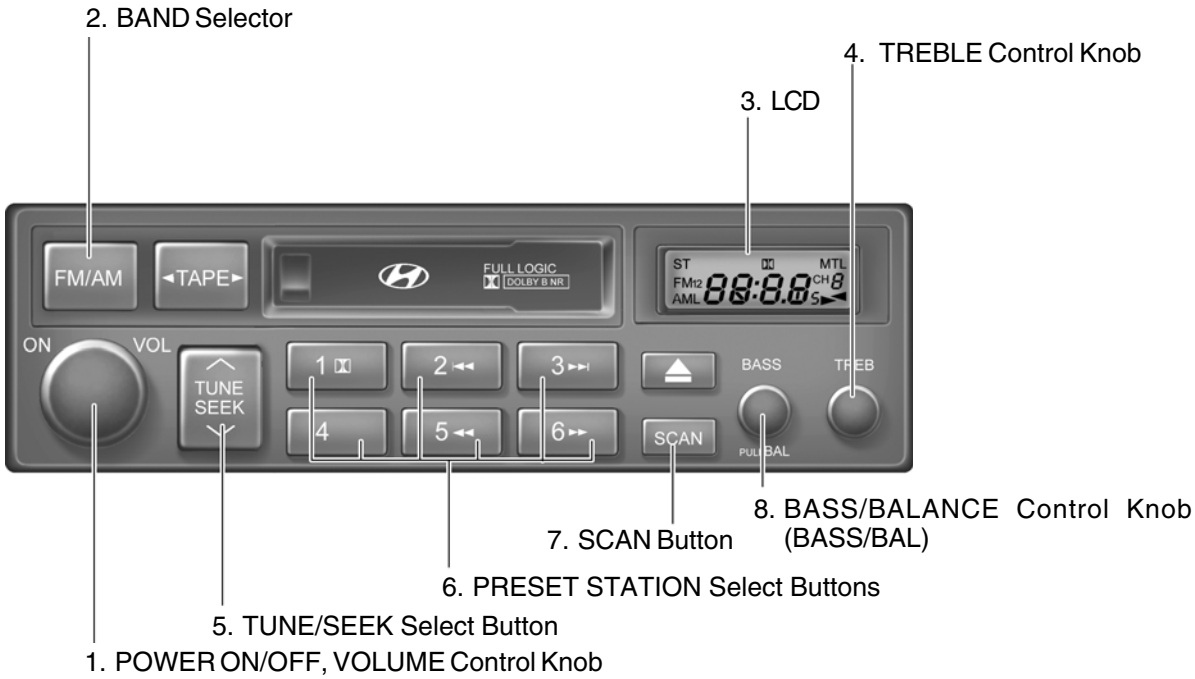

K240A01HR

K240B01HR-GAT

1. POWER ON-OFF Control Knob

The radio unit may be operated when the ignition key is in the "ACC" or "ON" position. Press the knob to switch the power on. The LCD shows the radio frequency in the radio mode or the tape direction indicator in the tape mode. To switch the power off, press the knob again.

VOLUME Control

Rotate the knob clockwise to increase the volume and turn the knob counter-clockwise to reduce the volume.

2. BAND Selector

Pressing the FM/AM button changes the AM, FM1 and FM2 bands. The mode selected is displayed on LCD.
Each press of button changes the display as follows;

FM1 → FM2 → AM → FM1

3. LCD

LCD shows the following informations; Band of FM1/FM2/AM frequency, preset channel number, ST in case of FM stereo.

4. TREB (Treble) Control Knob

Press to pop the knob out and turn to the left or right for the desired treble tone.

5. TUNE (Manual) Select Button

Press the (∧) side or (∨) side to increase or to decrease the frequency. Press either button and hold down to continuously scroll. Release button once the desired station is reached.

SEEK Operation (Automatic Channel Selection)

Press the TUNE select button 0.5 sec or more. Releasing it will automatically tune to the next available station with a beep sound.

When the (∧) side is pressed longer than 0.5 second, releasing will automatically tune to the next higher frequency and when the (∨) side is pressed longer than 0.5 second and releasing will automatically tune to the next lower frequency.

6. PRESET STATION Select Buttons

Six (6) stations for AM, FM1 and FM2 respectively can be preset in the electronic memory circuit on this unit.

HOW TO PRESET STATIONS

Six AM and twelve FM stations may be programmed into the memory of the radio. Then, by simply pressing the band select button and/or one of the six station select buttons, you may recall any of these stations instantly. To program the stations, follow these steps:

- o Press band selector to set the band for AM, FM1, or FM2.
- o Select the desired station to be stored by seek or manual tuning.
- o Determine the preset station select button you wish to use to access that station.

- o Press the station select button for more than two seconds. A select button indicator will show in the display indicating which select button you have depressed. The frequency display will flash after it has been stored into the memory with beep sound. You should then release the button, and proceed to program the next desired station. A total of 18 stations can be programmed by selecting one AM and two FM stations per button.
- o When completed, any preset station may be recalled by selecting AM, FM1 or FM2 band and the appropriate station button.

7. SCAN Button

When the scan button is pressed, the frequency will be increased and the receivable stations will be tuned in one after another, receiving each station for 5 seconds. To stop scanning, press the scan button again.

8. BASS Control Knob

Press to pop the knob out and turn to the left or right for the desired bass tone.

BAL (Balance) Control Knob

Pull the bass control knob further out. Turn the control knob clockwise to emphasize right speaker sound (left speaker sound will be attenuated).
When the control knob is turned counterclockwise, left speaker sound will be emphasized (right speaker sound will be attenuated).

CAUTION:

- **o Do not place beverages close to the audio system. The playback mechanism may be damaged if you spill them.**
- **o Do not impact on the audio system, or the playback mechanism could be damaged.**

K240C01HR-GAT

CASSETTE TAPE PLAYER OPERATION (K240) (If Installed)

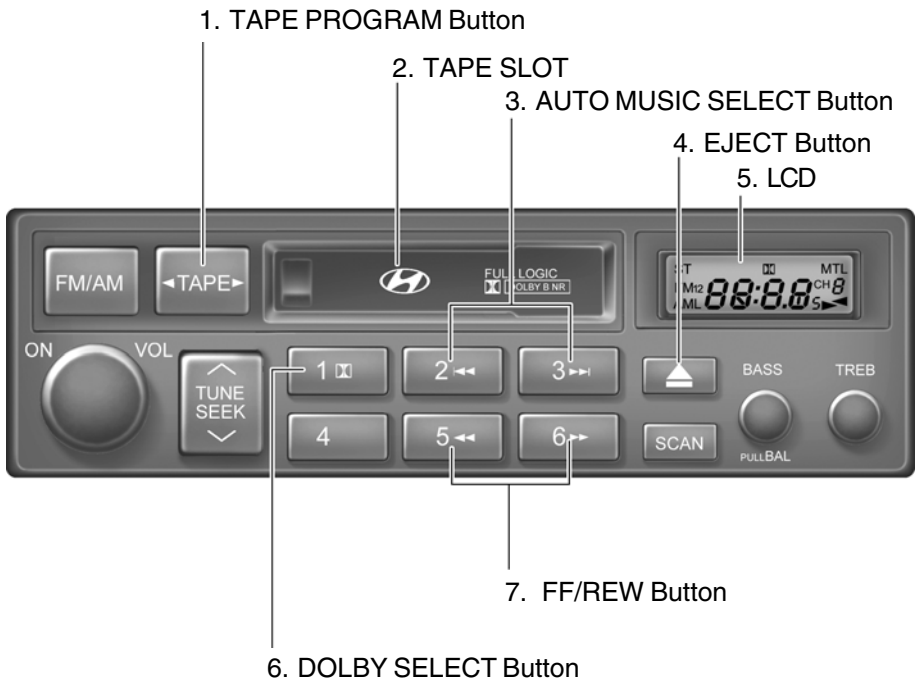

K240C01HR

K240A01HR-GAT

1. TAPE PROGRAM Button

This allows you to play the reverse side of the tape by merely depressing the program button.
An arrow (▶ or ◀) will appear in the display to show tape direction.

2. TAPE SLOT

Insert cassette with exposed tape side facing the right.
Insertion of the cassette will automatically cut off the radio reception and tape playback will start.

3. AUTO MUSIC SELECT Button

Press the button to find the starting point of each song in a prerecorded music tape.
The quiet space between songs (must have at least a 4 sec. gap) can be identified by the AUTO MUSIC SELECT button.

- o Pressing the ▶▶| button will play the beginning of the next music segment.
- o Pressing the |◀◀ button will start replay at the beginning of the music just listened to.

4. EJECT Button

- o When the EJECT button is pressed with the cassette loaded, the cassette is ejected.
- o When the EJECT button is pressed during the FF/REW, the cassette is ejected.

5. LCD

LCD shows the following information;
Playing status, tape direction, FF or REW, MTL in metallic tape use, and Dolby etc.

6. DOLBY SELECT Button

If you get background noise during PLAY, you can reduce this considerably by merely pressing DOLBY SELECT button.
If you want to release, press the button again.

7. FF/REW Button

- o The FF (fast forward tape winding) starts when the ▶▶ button is pressed during the PLAY or REW.
- o The play starts when the ▶▶ button is pressed again during the FF.
- o The REW (rewinding) starts when the ◀◀ button is pressed during the PLAY or FF.
- o The play starts when the ◀◀ button is pressed again during the REW.

CAUTION:

- **o Do not insert anything like coins into the player slot as damage to the unit may occur.**
- **o Do not place beverages close to the audio system. The playback mechanism may be damaged if you spill them.**
- **o Do not impact on the audio system, or the playback mechanism could be damaged.**

CARE OF CASSETTE TAPES

B860A01A-AAT

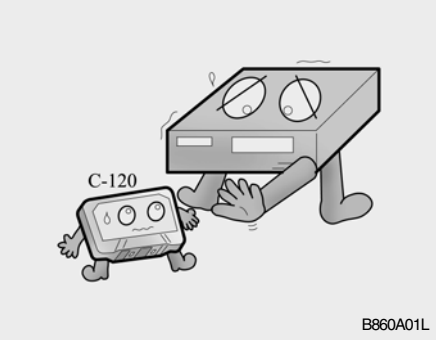

Proper care of your cassette tapes will extend the tape life and increase your listening enjoyment. Always protect your tapes and cassette cases from direct sunlight, severely cold and dusty conditions.
When not in use, cassettes should always be stored in the original protective cassette case. When the vehicle is very hot or cold, allow the interior temperature to become more comfortable before listening to your cassettes.

- o Never leave a cassette inserted in the player when not being played. This could damage the tape player unit and the cassette tape.
- o We strongly recommend against the use of tapes longer than C-60 (60 minutes total). Tapes such as C-120 or C-180 are very thin and do not perform as well in the automotive environment.

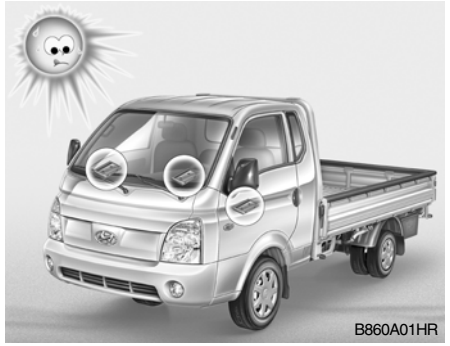

- o Be sure that the cassette label is not loose or peeling off or tape ejection may be difficult.
- o Never touch or soil the actual audio tape surfaces.
- o Keep all magnetized objects, such as electric motors, speakers or transformers away from your cassette tapes and tape player unit.
- o Store cassettes in a cool, dry place with the open side facing down to prevent dust from setting in the cassette body.
- o Avoid repeated fast / reverse usage to replay one given tune or tape section. This can cause poor tape winding to occur, and eventually cause excessive internal drag and poor audio quality in the cassette. If this occurs, it can sometimes be corrected by fast winding the tape from end to end several times. If this does not correct the problem, do not continue to use the tape in your vehicle.

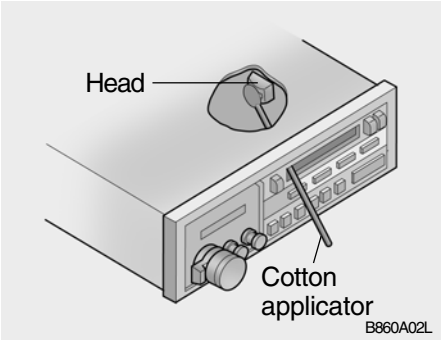

- The playback head, capstan and pinch rollers will develop a coating of tape residue that can result in deterioration of sound quality, such as a wavering sound. They should be cleaned monthly using a commercially available head cleaning tape or special solution available from audio specialty shops. Follow the supplier's directions carefully and never oil any part of the tape player unit.
- Always be sure that the tape is tightly wound on its reel before inserting in the player. Rotate a pencil in the drive sprockets to wind up any slack.

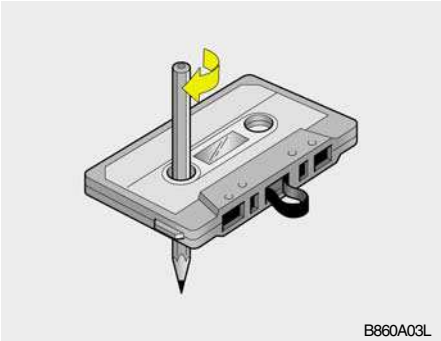

NOTE:

Look at a tape before you insert it. If the tape is loose, tighten it by turning one of the hubs with a pencil or your finger.
If the label is peeling off, do not put it in the drive mechanism.
Do not leave tapes sitting where they are exposed to hot, warm, or high humidity, such as on top of the dashboard or in the player.
If a tape is exposed to excessively hot or cold, let it reach a moderate temperature before putting it in the player.

B870C01A-GAT

Manual Antenna

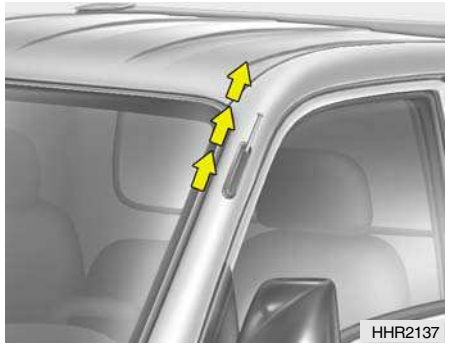

Your car uses a manual stainless steel antenna to receive both AM and FM broadcast signals. Pull up the antenna using your fingers, as shown in the drawing.

NOTE:

Before entering an automatic car wash or a place with a low height clearance, be sure that the antenna is fully retracted.

DRIVING YOUR HYUNDAI

Engine Exhaust Can Be Dangerous 2-2
Before Starting the Engine 2-3
Key Position 2-4
Starting 2-4
Operating the Manual Transmission 2-7
Locking Differential 2-9
Good Braking Practices 2-10
Driving for Economy 2-11
Winter Driving 2-13
Trailer or Vehicle Towing 2-15

2

C010A01HR-GAT

WARNING: ENGINE EXHAUST CAN BE DANGEROUS!

Engine exhaust fumes can be extremely dangerous. If, at any time, you smell exhaust fumes inside the vehicle, open the windows immediately.

o Do not inhale exhaust fumes.
Exhaust fumes contain carbon monoxide, a colorless, odorless gas that can cause unconsciousness and death by asphyxiation.

o Be sure the exhaust system does not leak.
The exhaust system should be checked whenever the vehicle is raised to change the oil or for any other purpose. If you hear a change in the sound of the exhaust or if you drive over something that strikes the underneath side of the car, have the exhaust system checked as soon as possible by your Hyundai dealer.

o Do not run the engine in an enclosed area.
Letting the engine idle in your garage, even with the garage door open, is a hazardous practice. Never run the engine in your garage any longer than it takes to start the engine and back the car out.

o Avoid idling the engine for prolonged periods with people inside the car.
If it is necessary to idle the engine for a prolonged period with people inside the car, be sure to do so only in an open area with the air intake set at "Fresh" and fan operating at one of the higher speeds so fresh air is drawn into the interior.

To assure proper operation of the ventilation system, be sure the ventilation air intakes located just in front of the windshield are kept clear of snow, ice, leaves or other obstructions.

BEFORE STARTING THE ENGINE

C020A02A-AAT

Before you start the engine, you should always:

1. Look around the vehicle to be sure there are no flat tires, puddles of oil, water or other indications of possible trouble.
2. After entering the car, check to be sure the parking brake is engaged.
3. Check that all windows, and lights are clean.
4. Check that the interior and exterior mirrors are clean and in position.
5. Check your seat, seatback and headrest to be sure they are in their proper positions.
6. Lock all the doors.
7. Fasten your seat belt and be sure that all other occupants have fastened theirs.
8. Turn off all lights and accessories that are not needed.
9. When you turn the ignition switch to "ON", check that all appropriate warning lights are operating and that you have sufficient fuel.
10. Check the operation of warning lights and all bulbs when key is in the "ON" position.

WARNING:
To ensure that sufficient vacuum exists within the brake system during cold weather start-up conditions, it is necessary to run the engine at idle for several seconds after starting the engine.

WARNING:
Always wear appropriate shoes when operating your vehicle. Unsuitable shoes (high heels, ski boots,etc.) may interfere with your ability to use the brake and accelerator pedal, and the clutch (if installed).

WARNING:
When you intend to park or stop the vehicle with the engine on, be careful not to depress the accelerator pedal for a long period of time. It may overheat the engine or exhaust system and cause fire.

TO START THE ENGINE

C030A03HR-GAT

COMBINATION IGNITION SWITCH

- Place the shift lever in neutral and depress the clutch pedal fully.
- To start the engine, insert the ignition key and turn it to the "START" position. Release it as soon as the engine starts. Do not hold the key in the "START" position for more than 15 seconds.

KEY POSITIONS

C040A02A-AAT

WARNING:
The engine should not be turned off or the key removed from the ignition key cylinder while the vehicle is in motion. The steering wheel is locked by removing the key.

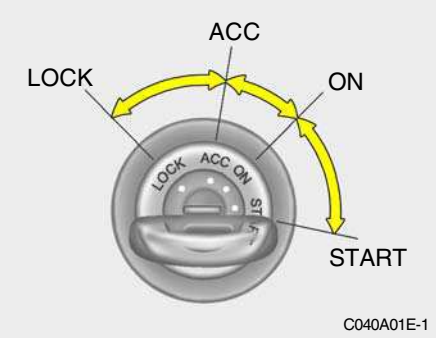

C040A01E-1

o "START"
The engine is started in this position. It will crank until you release the key.

NOTE:
Do not hold the key in the "START" position for more than 15 seconds.

o "ON"
When the key is in the "ON" position, the ignition is on and all accessories may be turned on. If the engine is not running, the key should not be left in the "ON" position. This will discharge the battery and may also damage the ignition system.

o "ACC"
With the key in the "ACC" position, some electrical accessories (radio etc.) may be operated.

o "LOCK"
The key can be removed or inserted in this position.
To protect against theft, the steering wheel locks by removing the key.

NOTE:
If difficulty is experienced turning the ignition key to the ACC position, turn the key while turning steering wheel right and left to release the tension.

C070C01A-AAT

To Remove the Ignition Key

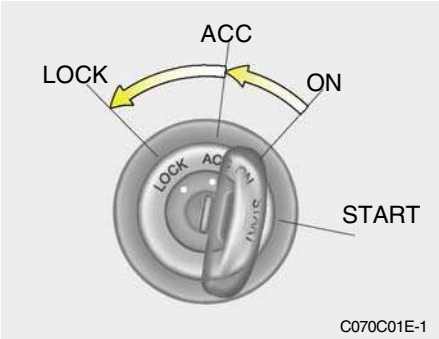

C070C01E-1

1. Turn the ignition key to the "ACC" position.
2. Simultaneously push and turn the ignition key counterclockwise from the "ACC" position to the "LOCK" position.
3. The key can be removed in the "LOCK" position.

C050A01A-AAT

STARTING

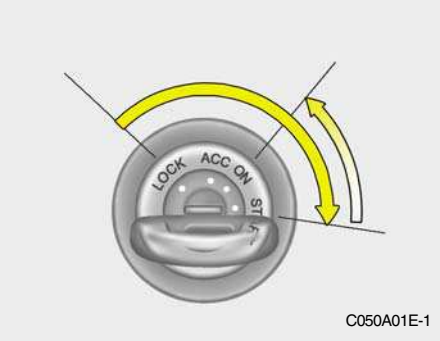

C050A01E-1

WARNING:
Never run the engine in a closed or poorly ventilated area any longer than is needed to move your car in or out of the area. The carbon monoxide gas emitted is odorless and can cause serious injury or death.

C051A01O-GAT

STARTING FOR THE DIESEL ENGINE

ENGINE COLD

- o Turn the ignition key to position "ON" and wait for the pre-heat indicator light to go out.
- o Operate the starter until the engine runs.

ENGINE WARM

Operate the starter. If the engine does not respond on the first attempt, wait several seconds and try again using the pre-heat.

C050B01HR-GAT

NORMAL CONDITIONS

The Starting Procedure:

1. Insert key, and fasten the seat belt.
2. Depress the clutch pedal fully and place the gearshift lever in neutral.
3. After turning the ignition key to the "ON" position, make certain all warning lights and gauges are functioning properly before starting the engine.
4. On vehicles equipped with the diesel preheat indicator light, turn the ignition key to the "ON" position. The diesel pre-heat indicator light will first illuminate in amber, and then after a short time, the amber illumination will go off, indicating that preheating is completed.

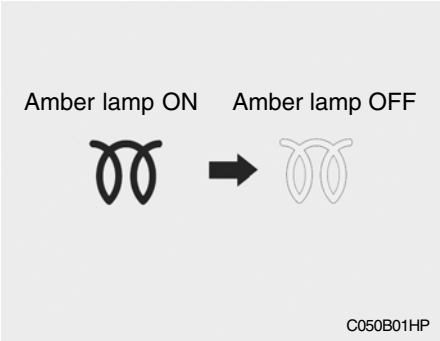

NOTE:
If the engine were not started within 10 seconds after the preheating is completed, turn the ignition key once more to the "LOCK" position, and then to the "ON" position, in order to preheat again.

WARNING:
Be sure that the clutch is fully depressed when starting a manual transmission vehicle. Otherwise there is the potential to cause damage to the vehicle or injury to someone inside or outside the vehicle as a result of the forward or backward movement of the vehicle that will occur if the clutch is not depressed when the vehicle is started.

5. Turn the ignition key to the "START" position and release it when the engine starts.

C055B01HR-GAT

STARTING AND STOPPING THE ENGINE FOR TURBO CHARGER INTERCOOLER (Diesel Engine)

(1) Do not race, accelerate suddenly, or accelerate immediately the engine after starting it. If the engine is cold, allow the engine to idle for several seconds before it is driven to ensure sufficient lubrication of the turbo charger unit.

(2) After high speed driving or prolonged engine loading, the engine should be allowed to idle, as shown in the chart below, before turning it off. This idle time will allow the turbo charger to cool prior to shutting the engine off.

Driving Condition		Required Idle Time
High speed driving	Up to 80 km/h	About 20 seconds
	Up to 100km/h	About 1 minute
Steep mountain slopes or continued driving in excess of 100km/h		About 2 minutes

WARNING:
Do not turn the engine off immediately after it has been subjected to a heavy load. Doing so may cause severe damage to the engine or turbo charger unit.

OPERATING THE MANUAL TRANSMISSION

C070A01HR-GAT

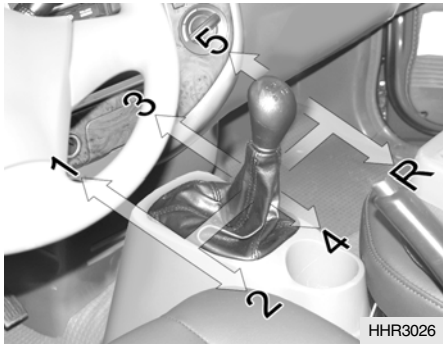

Your Hyundai's manual transmission has a conventional shift pattern. This shift pattern is imprinted on the shift knob. The transmission is fully synchronized in all forward gears so shifting to either a higher or a lower gear is easily accomplished.

NOTE:

- **To shift into reverse, rest the lever in neutral for at least 3 seconds after your car is completely stopped. Then move the lever into the reverse position.**
- **During cold weather, shifting may be difficult until the transmission lubricant has warmed up. This is normal and not harmful to the transmission.**
- **If you've come to a complete stop and it's hard to shift into 1st or R (Reverse), put the shift lever in N (Neutral) position and release the clutch. Press the clutch pedal back down, and then shift into 1st or R (Reverse) gear position.**
- **Do not use the shift lever as a handrest during driving, as this can result in premature wear of the transmission shift forks.**

CAUTION:

When downshifting from fifth gear to fourth gear, caution should be taken not to inadvertently press the gear lever sideways in such a manner that second gear is engaged. Such a drastic downshift may cause the engine speed to increase to the point that the tachometer will enter the red-zone. Such over-revving of the engine may possibly cause engine damage.

WARNING:

If your vehicle has a manual transmission not equipped with a ignition lock switch, it may move and cause a serious accident when starting the engine without depressing the clutch pedal while the parking brake is released and the shift lever not in the N (Neutral) position.

C070B01A-AAT

Using the Clutch

The clutch should be pressed all the way to the floor before shifting, then released slowly. The clutch pedal should always be used after fully returning to the original position. Do not rest your foot on the clutch pedal while driving. This can cause unnecessary wear. Do not partially engage the clutch to hold the car on an incline. This causes unnecessary wear. Use the parking brake to hold the car on an incline. Do not operate the clutch pedal rapidly and repeatedly.

C070E03A-GAT

RECOMMENDED SHIFT POINTS

Shift from-to	Recommended
1-2	20 km/h (15 mph)
2-3	40 km/h (25 mph)
3-4	55 km/h (35 mph)
4-5	75 km/h (45 mph)

The shift points as shown above are recommended for optimum fuel economy and performance.

C070D02O-AAT

Good Driving Practices

- Never take the car out of gear and coast down a hill. This is extremely hazardous. Always leave the car in gear.
- Don't "ride" the brakes. This can cause them to overheat and malfunction. Instead, when you are driving down a long hill, slow down and shift to a lower gear. When you do this, engine braking will help slow the car.
- Slow down before shifting to a lower gear. This will help avoid over-revving the engine, which can cause damage.
- Slow down when you encounter cross winds. This gives you much better control of your car.
- Be sure the car is completely stopped before you attempt to shift into reverse. The transmission can be damaged if you do not. To shift into reverse, depress the clutch, move the shift lever to neutral, wait three seconds, then shift to the reverse position.
- Exercise extreme caution when driving on a slippery surface. Be espe-

cially careful when braking, accelerating or shifting gears. On a slippery surface, an abrupt change in vehicle speed can cause the drive wheels to lose traction and the vehicle to go out of control.

WARNING:

- **Avoid high cornering speeds.**
- **Do not make quick steering wheel movements, such as sharp lane changes or fast, sharp turns.**
- **Always wear your seat belts. In a collision crash, an unbelted person is significantly more likely to die than a person wearing a seatbelt.**
- **The risk of rollover is greatly increased if you lose control of your vehicle at highway speeds.**
- **Loss of control often occurs if two or more wheels drop off the roadway and the driver oversteers to reenter the roadway.**
- **In the event your vehicle leaves the roadway, do not steer sharply. Instead, slow down before pulling back into the travel lanes.**
- **Never exceed posted speed limits.**

LOCKING DIFFERENTIAL

D190A01HR-GAT

(If Installed)

A locking differential, if equipped, is for the rear wheel differential only. The features of this locking differential are described below:
Just as with a conventional differential, the wheel on one side is allowed to turn at a different speed from the wheel on the other side when the vehicle is cornering. The difference between the locking differential and a conventional differential is that if the wheel on one side of the vehicle loses traction, a greater amount of torque is applied to the rear wheel on the other side to improve traction.

NOTE:

In a stationary position, the LD (Locking Differential) will operate when the difference of the revolution speed between the rear right wheel and the rear left wheel occurs.

The following procedures can be used to confirm that the locking differential is functioning properly:

(1) Position the vehicle so that one wheel is on a dry paved surface and the other on ice, snow, mud, etc. Drive the vehicle, and observe the operation of the locking differential. The vehicle should not become stuck if the differential is functioning properly.
(2) Depress the accelerator pedal gradually, and then when traction is good, depress it forcefully. If the vehicle accelerates well, the differential is functioning properly.

CAUTION:

- **Never start the engine with the gearshift lever placed in the forward or reverse while one of the rear wheels is jacked up and the other in contact with the ground; doing so may cause the vehicle to jump forward.**
- **If one of the rear wheels begins to spin in mud, snow, etc., the vehicle can sometimes be driven out by depressing the accelerator pedal further; however, avoid running the engine continuously at high rpm because doing so could damage the locking differential.**

GOOD BRAKING PRACTICES

C130A01HR-GAT

WARNING:

Objects should not extend higher than the top of the front seatbacks. If there were an accident or a sudden stop, such objects could move forward and cause damage to the vehicle or injure the occupants.

- After being parked, check to be sure the parking brake is not engaged and that the parking brake indicator light is out before driving away.
- Driving through water may get the brakes wet. They can also get wet when the car is washed. Wet brakes can be dangerous! Your car will not stop as quickly if the brakes are wet. Wet brakes may cause the car to pull to one side. To dry the brakes, apply the brakes lightly until the braking action returns to normal, taking care to keep the car under control at all times. If the braking action does not return to normal, stop as soon as it is safe to do so and call your Hyundai dealer for assistance.
- Don't coast down hills with the car out of gear. This is extremely hazardous. Keep the car in gear at all times, use the brakes to slow down, then shift to a lower gear so that engine braking will help you maintain a safe speed.
- Don't "ride" the brake pedal. Resting your foot on the brake pedal while driving can be dangerous because it can result in the brakes overheating and losing their effectiveness. It also increases the wear of the brake components.
- If a tire goes flat while you are driving, apply the brakes gently and keep the car pointed straight ahead while you slow down. When you are moving slowly enough for it to be safe to do so, pull off the road and stop in a safe place.
- Use caution when parking on a hill. Engage the parking brake and place the gear selector lever in first or reverse gear. If your car is facing downhill, turn the front wheels into the curb to help keep the car from rolling. If your car is facing uphill,

turn the front wheels away from the curb to help keep the car from rolling.
If there is no curb or if it is required by other conditions to keep the car from rolling, block the wheels.

- Under some conditions your parking brake can freeze in the engaged position. This is most likely to happen when there is an accumulation of snow or ice around or near the rear brakes or if the brakes are wet. If there is a risk that the parking brake may freeze, apply it only temporarily while you put the gear selector lever in first or reverse gear and block the rear wheels so the car cannot roll. Then release the parking brake.
- Do not hold the vehicle on the upgrade with the accelerator pedal. This can cause the transmission to overheat. Always use the brake pedal or parking brake.

DRIVING FOR ECONOMY

C140A01A-GAT

You can save fuel and get more kilometers from your car if you follow these suggestions:

- Drive smoothly. Accelerate at a moderate rate. Don't make "jackrabbit" starts or full-throttle shifts and maintain a steady cruising speed. Don't race between stoplights. Try to adjust your speed to that of the other traffic so you don't have to change speeds unnecessarily. Avoid heavy traffic whenever possible.
  Always maintain a safe distance from other vehicles so you can avoid unnecessary braking. This also reduces brake wear.
- Drive at a moderate speed. The faster you drive, the more fuel your car uses. Driving at a moderate speed, especially on the highway, is one of the most effective ways to reduce fuel consumption.
- Don't "ride" the brake or clutch pedal. This can increase fuel consumption and also increase wear on these components. In addition, driving with your foot resting on the brake pedal may cause the brakes to overheat, which reduces their effectiveness and may lead to more serious consequences.
- Take care of your tires. Keep them inflated to the recommended pressure. Incorrect inflation, either too much or too little, results in unnecessary tire wear. Check the tire pressures at least once a month.
- Be sure that the wheels are aligned correctly. Improper alignment can result from hitting curbs or driving too fast over irregular surfaces. Poor alignment causes faster tire wear and may also result in other problems as well as greater fuel consumption.
- Keep your car in good condition. For better fuel economy and reduced maintenance costs, maintain your car in accordance with the maintenance schedule in Section 5. If you drive your car in severe conditions,

more frequent maintenance is required (see Section 5 for details).

- o Keep your car clean. For maximum service, your Hyundai should be kept clean and free of corrosive materials. It is especially important that mud, dirt, ice, etc. not be allowed to accumulate on the underside of the car. This extra weight can result in increased fuel consumption and also contribute to corrosion.
- o Travel lightly. Don't carry unnecessary weight in your car. Weight reduces fuel economy.
- o Don't let the engine idle longer than necessary. If you are waiting (and not in traffic), turn off your engine and restart only when you're ready to go.
- o Remember, your Hyundai does not require extended warm-up. As soon as the engine is running smoothly, you can drive away. In very cold weather, however, give your engine a slightly longer warm-up period.
- o Don't "lug" or "over-rev" the engine. Lugging is driving too slowly in too high a gear resulting in the engine bucking. If this happens, shift to a lower gear. Over-revving is racing the engine beyond its safe limit. This can be avoided by shifting at the recommended speeds.
- o Use your air conditioning sparingly. The air conditioning system is operated by engine power so your fuel economy is reduced when you use it.

SMOOTH CORNERING

C150A01A-AAT

Avoid braking or gear changing in corners, especially when roads are wet. Ideally, corners should always be taken under gentle acceleration. If you follow these suggestions, tire wear will be held to a minimum.

WINTER DRIVING

C160A01A-AAT

The more severe weather conditions of winter result in greater wear and other problems. To minimize the problems of winter driving, you should follow these suggestions:

C160B01A-GAT

Snowy or Icy Conditions

To drive your vehicle in deep snow, it may be necessary to use snow tires or to install tire chains on your tires. If snow tires are needed, it is necessary to select tires equivalent in size and type to the original equipment tires. Failure to do so may adversely affect the safety and handling of your car. Speeding, rapid acceleration, sudden brake applications, and sharp turns are potentially very hazardous practices. During deceleration, use engine braking to the fullest extent. Sudden brake applications on snowy or icy roads may cause skids to occur. You need to keep sufficient distance between the vehicle in front and your vehicle. Also, apply the brake gently. It should be noted that installing tire chains on the tire will provide a greater driving force, but will not prevent side skids.

NOTE:
Tire chains are not legal in all provinces. Check province laws before fitting tire chains.

C160C01A-AAT

Use High Quality Ethylene Glycol Coolant

Your Hyundai is delivered with high quality ethylene glycol coolant in the cooling system. It is the only type of coolant that should be used because it helps prevent corrosion in the cooling system, lubricates the water pump and prevents freezing. Be sure to replace or replenish your coolant in accordance with the maintenance schedule in Section 5. Before winter, have your coolant tested to assure that its freezing point is sufficient for the temperatures anticipated during the winter.

C160D01A-AAT

Check Battery and Cables

Winter puts additional burdens on the battery system. Visually inspect the battery and cables as described in Section 6. The level of charge in your battery can be checked by your Hyundai dealer or a service station.

C160E01A-AAT

Change to "Winter Weight" Oil if Necessary

In some climates it is recommended that a lower viscosity "winter weight" oil be used during cold weather. See Section 9 for recommendations. If you aren't sure what weight oil you should use, consult your Hyundai dealer.

C160G01A-AAT

To Keep Locks from Freezing

To keep the locks from freezing, squirt an approved de-icer fluid or glycerine into the key opening. If a lock is covered with ice, squirt it with an approved de-icing fluid to remove the ice. If the lock is frozen internally, you may be able to thaw it out by using a heated key. Handle the heated key with care to avoid injury.

C160H01A-AAT

Use Approved Anti-Freeze in Window Washer System

To keep the water in the window washer system from freezing, add an approved anti-freeze solution in accordance with instructions on the container. Window washer anti-freeze is available from Hyundai dealers and most auto parts outlets. Do not use engine coolant or other types of anti-freeze as these may damage the finish.

C160I01HR-GAT

Don't Let Your Parking Brake Freeze

Under some conditions your parking brake can freeze in the engaged position. This is most likely to happen when there is an accumulation of snow or ice around or near the rear brakes or if the brakes are wet. If there is a risk the parking brake may freeze, apply it only temporarily while you put the gear selector lever in first or reverse gear and block the rear wheels so the car cannot roll. Then release the parking brake.

C160J01A-AAT

Don't Let Ice and Snow Accumulate Underneath

Under some conditions, snow and ice can build up under the fenders and interfere with the steering. When driving in severe winter conditions where this may happen, you should periodically check underneath the car to be sure the movement of the front wheels and the steering components is not obstructed.

C160K01A-AAT

Carry Emergency Equipment

Depending on the severity of the weather where you drive your car, you should carry appropriate emergency equipment. Some of the items you may want to carry include tire chains, tow straps or chains, flashlight, emergency flares, sand, a shovel, jumper cables, a window scraper, gloves, ground cloth, coveralls, a blanket, etc.

HIGHER SPEED MOTORING

C170A01A-AAT

Pre-Trip Inspections

1. Tires:

Adjust the tire inflation pressures to specification. Low tire inflation pressures will result in overheating and possible failure of the tires.
Avoid using worn or damaged tires which may result in reduced traction or tire failure.

NOTE:

Never exceed the maximum tire inflation pressure shown on the tires.

2. Fuel, engine coolant and engine oil:

High speed travel consumes more fuel than urban motoring. Do not forget to check both engine coolant and engine oil.

3. Drive belt:

A loose or damaged drive belt may result in overheating of the engine.

USE OF LIGHTS

C180A01A-AAT

Check your lights regularly for correct operation and always keep them clean. When driving during the day in conditions of poor visibility, it is helpful to drive with headlights on low beam. This enables you to be seen as well as to see.

TRAILER OR VEHICLE TOWING

C190A01HR-GAT

If you are considering towing with your car, you should first check with your Province Department of Motor Vehicles to determine their legal requirements. Since laws vary from province to province, the requirements for towing trailers, cars, other types of vehicles, or apparatus may differ. Ask your Hyundai dealer for further details before towing.

CAUTION

Do not do any towing with your car during its first 1,000 km (600 miles) in order to allow the engine to properly break in. Failure to heed this caution may result in serious engine or transmission damage.

C190B01S-AAT
Trailer Hitches

Select the proper hitch and ball combination, making sure that it's location is compatible with that of the trailer or vehicle being towed.
Use a quality non-equalizing hitch which distributes the tongue load uniformly throughout the chassis.

The hitch should be bolted securely to the car and installed by a qualified technician. DO NOT USE A HITCH DESIGNED FOR TEMPORARY INSTALLATION AND NEVER USE ONE THAT ATTACHES ONLY TO THE BUMPER.

C190C03S-GAT
Trailer Brakes

If your trailer is equipped with a braking system, make sure it conforms to federal and/or local regulations and that it is properly installed and operating correctly.

NOTE:
If you tow a trailer or vehicle, your car will require more frequent maintenance due to the additional load. See "Maintenance Under Severe Usage Conditions" on page 5-8.

CAUTION:
- **Never connect a trailer brake system directly to the vehicle brake system.**
- **When towing a trailer on steep grades (in excess of 6%) pay close attention to the engine coolant temperature gauge to ensure the engine does not overheat. If the needle of the coolant temperature gauge moves across the dial towards "H" (HOT), pull over and stop as soon as it is safe to do so, and allow the engine to idle until it cools down. You may proceed once the engine has cooled sufficiently.**

C190D01A-GAT
Safety Chains

Should the hitch connection between your car and the trailer or vehicle you are towing fail, the trailer or vehicle could wander dangerously across other lanes of traffic and ultimately collide with another vehicle. To eliminate this potentially dangerous situation, safety chains, attached between your car and the trailer or towed vehicle, are required in most provinces.

C190E01HR-GAT

Trailer Weight Limit

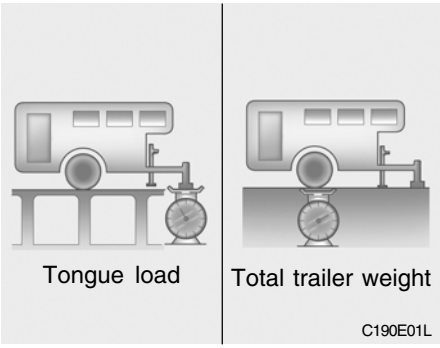

Tongue loads can be increased or decreased by redistributing the load in the trailer. This can be verified by checking the total weight of the loaded trailer and then checking the load on the tongue.

NOTE:

1. **Never load the trailer with more weight in the back than in the front. About 60% of the trailer load should be in the front half on the trailer and the remaining 40% in the rear.**

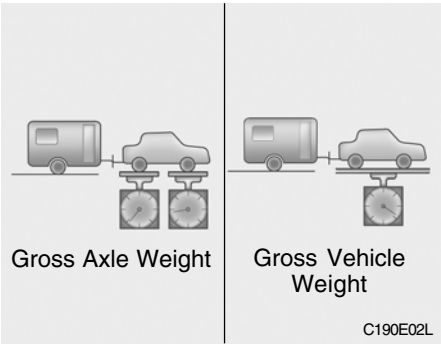

2. **The total gross vehicle weight with trailer must not exceed the Gross Vehicle Weight Rating (GVWR) shown on the vehicle identification plate (see page 8-2). The total gross vehicle weight is the combined weight of the vehicle, driver, all passengers and their luggage, cargo, hitch, trailer tongue load and other optional equipment.**
3. **The front or rear axle weight must not exceed the Gross Axle Weight Rating (GAWR) shown on the vehicle identification plate (see page 8-2). It is possible that your towing package does not exceed the GVWR but exceeds the GAWR. Improper trailer loading and/or too much luggage in the cargo deck can overload the rear axle. Redistribute the load and check the axle weight again.**

CAUTION:
The following specifications are recommended when towing a trailer. The loaded trailer weight cannot safely exceed the values in the chart below.

kg. (Lbs)

	Maximum Towable Weight	
	Trailer	Tongue
With Brake Type	1200 (2646)	48 (106)
Without Brake Type	750 (1653)	48 (106)

WARNING:
Improperly loading your car and trailer can seriously affect its steering and braking performance causing a crash which could cause serious injury or death.

C190F01HR-GAT

Trailer or Vehicle Towing Tips

1. Before towing, check hitch and safety chain connections as well as proper operation of the trailer running lights, brake lights, and turn signals.
2. Always drive your vehicle at a moderate speed (Less than 100 km/h).
3. Trailer towing requires more fuel than normal conditions.
4. To maintain engine braking efficiency, do not tow a trailer with transmission in fifth gear.
5. Always secure items in the trailer to prevent load shift while driving.
6. Check the condition and air pressure of all tires on the trailer and your car. Low tire pressure can seriously affect the handling. Also check the spare tire.
7. The vehicle/trailer combination is more affected by crosswind and buffeting.
   When being passed by a large vehicle, keep a constant speed and steer straight ahead. If there is too much wind buffeting, slow down to get out of the other vehicle's air turbulence.
8. When parking your car and trailer, especially on a hill, be sure to follow all the normal precautions. Turn your front wheel into the curb, set the parking brake firmly, and put the transmission in 1st or Reverse. In addition, place wheel chocks at each of the trailer's tires.
9. If the trailer has electric brakes, start your vehicle and trailer moving, and then apply the trailer brake controller by hand to be sure the brakes are working. This lets you check your electrical connection at the same time.
10. During your trip, check occasionally to be sure that the load is secure, and that the lights and any trailer brakes are still working.
11. Avoid jerky starts, sudden acceleration or sudden stops.
12. Avoid sharp turns and rapid lane changes.
13. Avoid holding the brake pedal down too long or too frequently. This could cause the brakes to overheat, resulting in reduced braking efficiency.

14. When going down a hill, shift into a lower gear and use the engine braking effect.
    When ascending a long grade, downshift the transmission to a lower gear and reduce speed to reduce chances of engine overloading and/or overheating.
15. If you have to stop while going uphill, do not hold the vehicle in place by pressing on the accelerator. Use the parking brake or footbrake.

NOTE:
When towing check transmission fluid more frequently.

CAUTION:
If overheating should occur when towing, (temperature gauge reads near red zone), taking the following action may reduce or eliminate the problem.

1. **Turn off the air conditioner.**
2. **Reduce highway speed.**
3. **Select a lower gear when going uphill.**
4. **While in stop and go traffic, place the gear selector in park or neutral and idle the engine at a higher speed.**

WHAT TO DO IN AN EMERGENCY

If the Engine Will not Start 3-2
Jump Starting 3-3
If the Engine Overheats 3-4
Spare Tire 3-5
If You Have a Flat Tire 3-7
Changing a Flat Tire 3-8
Emergency Commodity 3-15
If Your Vehicle Must Be Towed 3-16
Emergency Towing 3-17
If You Lose Your Keys 3-18

IF THE ENGINE WILL NOT START

D010A01A-AAT

CAUTION:
If the engine will not start, do not push or pull the car to start it. This could result in a collision or cause other damage. In addition, push or pull starting may cause the catalytic converter to be overloaded and create a fire hazard.

D010B01HR-GAT

If Engine Doesn't Turn Over or Turns Over Slowly

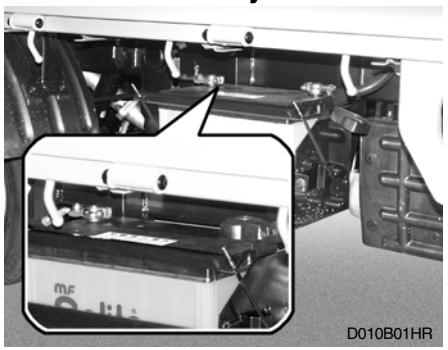

1. Check the battery connections to be sure they are clean and tight.
2. Turn on the interior light. If the light dims or goes out when you operate the starter, the battery is discharged.
3. Check the starter connections to be sure they are securely tightened.
4. Do not push or pull the vehicle to start it. See instructions for "Jump Starting".

D010C01HR-GAT

If Engine Turns Over Normally but Does Not Start

1. Check fuel level.
2. With the key in the "OFF" position, check all connectors at glow plug and glow plug relay. Reconnect any that may be disconnected or loose.
3. Check fuel line in the engine room.
4. If engine still refuses to start, call a Hyundai dealer or seek other qualified assistance.

D010D01HR-AAT

If the Engine Stalls While Driving

1. Reduce your speed gradually, keeping a straight line. Move cautiously off the road to a safe place.
2. Turn on your emergency flashers.
3. Try to start the engine again. If your vehicle will not start, contact a Hyundai dealer or seek other qualified assistance.

If the Engine Stalls at a Crossroad or Crossing

- If the engine stalls at a crossroad or crossing, set the shift lever in the N (Neutral) position and then push the vehicle to a safe place.
- If your vehicle has a manual transmission not equipped with a ignition lock switch, the vehicle can move forward by shifting to the 2 (second) or 3 (third) gear and then turning the starter without depressing the clutch pedal.

JUMP STARTING

D020A01HR-GAT

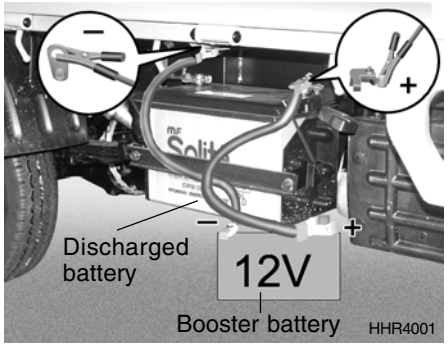

WARNING:
The gas produced by the battery during the jump-start operation is highly explosive. If these instructions are not followed exactly, serious personal injury and damage to the vehicle may occur! If you are not sure how to follow this procedure, seek qualified assistance. Automobile batteries contain sulfuric acid. This is poisonous and highly corrosive. When jump starting, wear protective glasses and be careful not to get acid on yourself, your clothing or on the car.

- o If you should accidentally get acid on your skin or in your eyes, immediately remove any contaminated clothing and flush the area with clear water for at least 15 minutes. Then promptly obtain medical attention. If you must be transported to an emergency facility, continue to apply water to the affected area with a sponge or cloth.
- o The gas produced by the battery during the jump-start operation is highly explosive. Do not smoke or allow a spark or open flame in the vicinity.
- o The battery being used to provide the jump start must be 12-volts. If you cannot determine that it is a 12-volt battery, do not attempt to use it for the jump start.
- o To jump start a car with a discharged battery, follow this procedure exactly:

1. If the booster battery is installed in another vehicle, be sure the two vehicles are not touching.
2. Turn off all unnecessary lights and accessories in both vehicles.
3. Attach the clamps of the jumper cable in the exact order shown in the illustration. That is, first, attach one clamp of the jumper cable to the positive (+) post or cable of the discharged battery. Then attach the other end of the same cable to the positive (+) post or cable of the booster battery. Next, using the other cable, attach one clamp to the negative (-) post or cable of the booster battery. Then attach the other end of that cable to a solid metal part of the vehicle away from the battery. Do not connect the cable to any moving part.
4. Start the engine in the car with the booster battery and let it run for a few minutes. This will help to assure that the booster battery is fully charged. During the jumping operation, run the engine in this vehicle at about 2,000 rpm.
5. Start the engine in the car with the discharged battery using the normal starting procedure. After the engine starts, leave the jumper cables connected and let the engine run at fast idle or about 2,000 rpm for several minutes.

6. Carefully remove the jumper cables in the reverse order of attachment.

If you do not know why your battery became discharged (because the lights were left on, etc.), have the charging system checked by your Hyundai dealer.

NOTE:
If your vehicle is equipped with double cab, frist pull the cushion of the reat seat forward (Refer to "Rear Seat Cushion Under Box" on page 1-11.) And remove the battery cover by turning the knob counterclockwise. And then you can jump start the car.

IF THE ENGINE OVERHEATS

D030A01HR-GAT

If your temperature gauge indicates overheating, you experience a loss of power, or hear loud pinging or knocking, the engine is probably too hot. If this happens to you, you should:

1. Pull off the road and stop as soon as it is safe to do so.
2. Place the gear selector lever in neutral and set the parking brake. If the air conditioning is on, turn it off.
3. If engine coolant is running out under the car or steam is coming out from the hood, allow the engine to idle. Do not open the hood until the engine coolant has stopped running or the steaming has stopped. If there is no visible loss of engine coolant and no steam, leave the engine running, lift up the passenger's seat (Refer to "To Inspect the Engine Compartment Under the Passenger's Seat" on page 1-13.) and check to be sure the engine cooling fan is operating. If the fan is not running, turn the engine off.
4. Check to see if the water pump drive belt is missing. If it is not missing, check to see that it is tight. If the drive belt seems to be satisfactory, check for coolant leaking from the radiator, hoses or under the car. (If the air conditioning had been in use, it is normal for cold water to be draining from it when you stop).

WARNING:
While the engine is running, keep hair, hands, and clothing away from moving parts such as the fan and drive belts to prevent injury.

WARNING:
Never work on injection system with engine running or within 30 seconds after shutting off engine. High pressure pump, rail, injectors and high pressure pipes are subject to high pressure even after the engine stopped. The fuel jet produced by fuel leaks may cause serious injury, if it touch the body. People using pacemakers should not move than 30cm closer to the ECU or wiring harness within the engine room while engine is running, since the high currents in the Common Rail system produce considerable magnetic fields.

5. If the water pump drive belt is broken or coolant is leaking out, stop the engine immediately and call the nearest Hyundai dealer for assistance.

WARNING:
Do not remove the radiator cap when the engine is hot. This can allow coolant to be blown out of the opening and cause serious burns.

6. If you cannot find the cause of the overheating, wait until the engine temperature has returned to normal. Then, if the engine coolant has been lost, carefully add coolant to the reservoir (Page 6-10) to bring the fluid level in the reservoir up to the halfway mark.
7. Proceed with caution, keeping alert for further signs of overheating. If overheating happens again, call a Hyundai dealer for assistance.

CAUTION:
Serious loss of engine coolant indicates there is a leak in the cooling system and this should be checked as soon as possible by a Hyundai dealer.

D040A01HR-GAT

The following instructions for the FULL SIZE spare tire should be observed:

Check inflation pressure as soon as practical after installing the spare tire, and adjust to the specified pressure. The tire pressure should be periodically checked and maintained at the specified pressure while the tire is stored.

Spare Tire Pressure

TIRE SIZE		TIRE INFLATION PRESSURE	
		FRONT	REAR
195/70R15C-6PR		290kPa (42PSI)	-
155R12C-8PR	Low Deck (STD)	-	340kPa (50PSI)
	Low Deck (DBL)	-	440kPa (64PSI)
195/70R15C-8PR	High Deck	-	440kPa (64PSI)

D040B02HR-GAT

Handling the Spare Tire

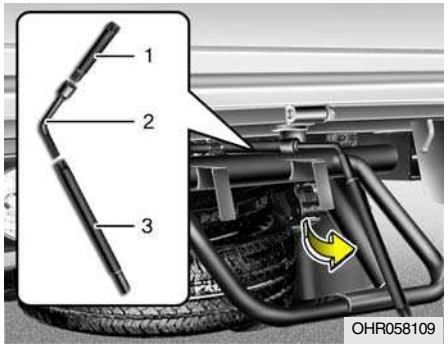

1. Assemble the tools(1)(2)(3) into the spare tire carrier wrench orderly like the picture.
2. Insert the spare tire carrier wrench into the hole of the spare tire carrier, turn it counterclockwise, then the spare tire comes down.

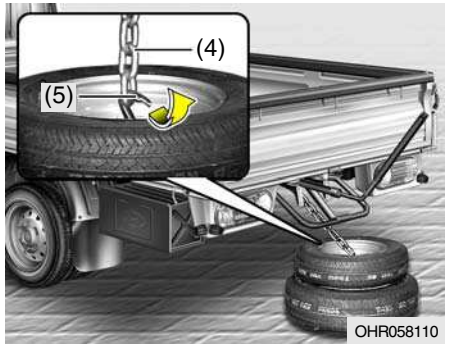

3. Disconnect the steel wire (4) from the tire support hook (5) after the spare tire comes down completely.
4. To install the spare tire, build the spare tire as following and pull the tire support.

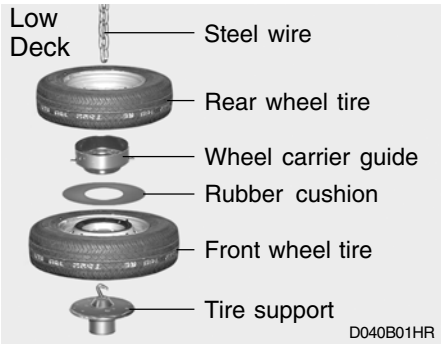

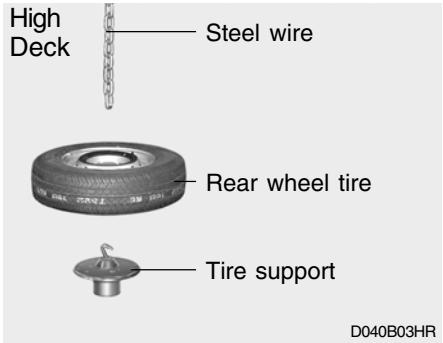

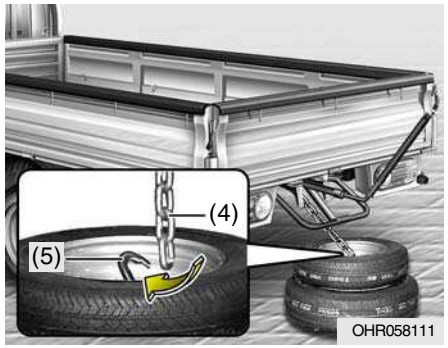

5. Connect the steel wire (4) with the support hook (5).

6. Insert the spare tire carrier wrench into the hole in the spare tire carrier and turn it clockwise.
7. After the spare tire fully raised, tighten by hand to about 30 kg·f (295 N). Then, remove the spare tire carrier wrench with care not to turn it in the reverse direction. Now, ensure that the tire is secured in position.

CAUTION:
If you cannot secure the spare tire in position, load it on the cargo deck and ask your nearest service shop for inspection.

E050D02HR-GAT

Spare tire anti-theft device (If Installed)

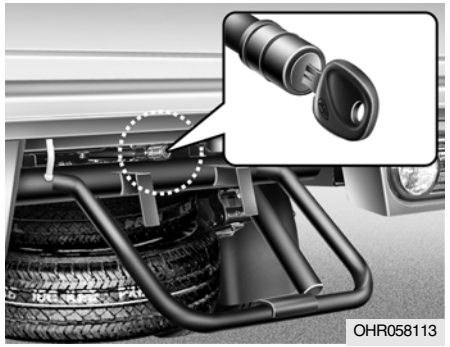

This device is designed to protect the spare tire theft.
To unlock the spare tire-anti theft device insert the key into the lock, push it once, then pull out it with the key.
To lock the spare tire anti-theft device fit the lock connected to the key in the hole of the spare tire carrier, push it once until in "clicks", then pull out the key.

D050A01HR-GAT

If a tire goes flat while you are driving:

1. Take your foot off the accelerator pedal and let the car slow down while driving straight ahead. Do not apply the brakes immediately or attempt to pull off the road as this may cause a loss of control. When the car has slowed to such a speed that it is safe to do so, brake carefully and pull off the road. Drive off the road as far as possible and park on firm, level ground. If you are on a divided highway, do not park in the median area between the two traffic lanes.
2. When the car is stopped, turn on your emergency hazard flashers, set the parking brake and put the transmission in reverse.
3. Have all passengers get out of the car. Be sure they all get out on the side of the car that is away from traffic.
4. Change the tire according to the instructions provided as following.

D060A01HR-GAT

The procedure described on the following pages can be used to rotate tires as well as to change a flat tire. When preparing to change a flat tire, check to be sure the gear selector lever is in reverse gear and that the parking brake is set, then:

D060K02HR-GAT

Wheel Cover (If Installed)

Front

To remove the wheel cover insert the rod (1) into the crack between the wheel and wheel cover, and pry up the wheel cover gently with the rod.

To reinstall the wheel cover fit the grooves of the wheel cover in the wheel lug nuts of wheel and hit the center of the wheel cover with your hand.

Rear
To remove the wheel cover insert the fingers into the holes in the wheel cover and pull the wheel cover powerfully from the wheel.

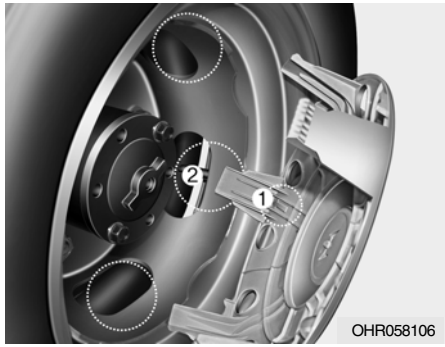

To reinstall the wheel cover fit the point (1) of the wheel cover in the valve (2) of the wheel, and hit the center of the wheel cover with your hand.

CAUTION:
Make sure there's nothing behind you before removing the wheel cover.

D060B01HR-GAT

1. Obtain Spare Tire and Tool

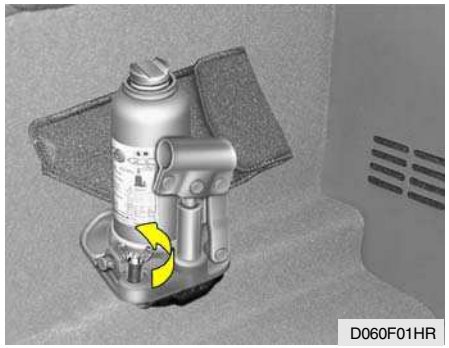

Remove the spare tire and take out the jack and tool bag.
To remove the spare tire, refer to "Handling the Spare Tire" on page 3-6.
To take out the jack, loosen the securing unt.

NOTE:
The spare tire is located underneath the car.

D060C01A-AAT

2. Block the Wheel

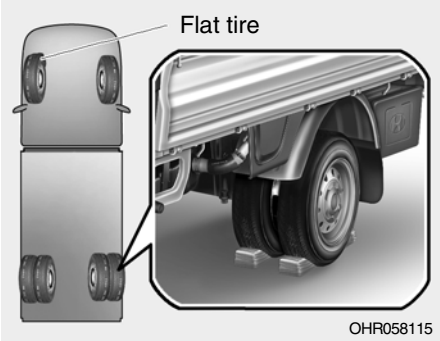

Block the wheel that is diagonally opposite from the flat tire to keep the vehicle from rolling when the car is raised on the jack.

D060D01A-AAT

3. Loosen Wheel Nuts

Assemble the tools(1)(2)(3) into the wheel lug nut wrench orderly like the picture.

The wheel nuts should be loosened slightly before raising the car. To loosen the nuts, turn the wrench handle counterclockwise. When doing this, be sure that the socket is seated completely over the nut so it cannot slip off. For maximum leverage, position the wrench so the handle is to the right as shown in the illustration. Then, while holding the wrench near the end of the handle, pull up on it with steady pressure. Do not remove the nuts at this time. Just loosen them about one-half turn.

D060E01P-AAT

4. Put the Jack in Place

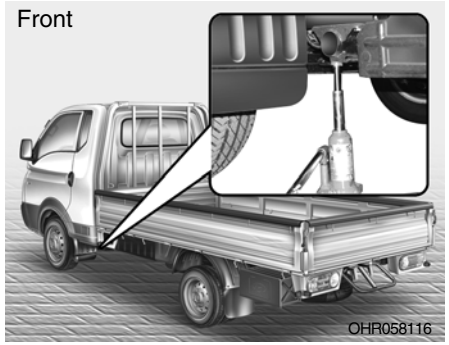

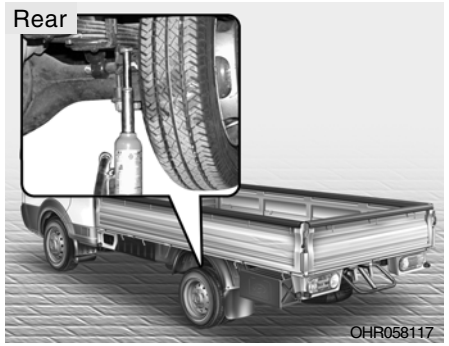

The method for jacking up the vehicle should be remembered in order to change a tire in the event of a puncture and in order to install tire chains.

After stopping the engine and applying the parking brake on a flat level surface, also use chocks to hold the wheels.
Position the jack only at the specified points indicated in the illustration, and the use of the jack at other points could damage the vehicle body.

D060F02HR-GAT

5. Raising the Car

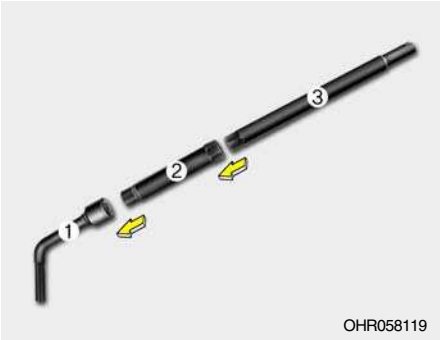

(1) Assemble the tools(1)(2)(3) into the jack handle orderly like the picture.

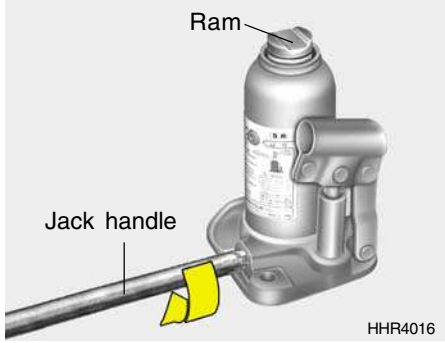

(2) Using the jack handle, turn the release valve clockwise until it reaches a stop.

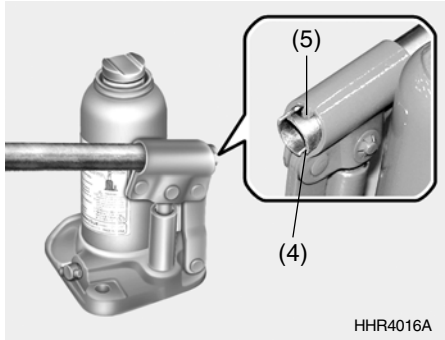

(3) Fit the jack handle into the holder, and align the groove of the jack handle (4) with the notch of the holder (5).

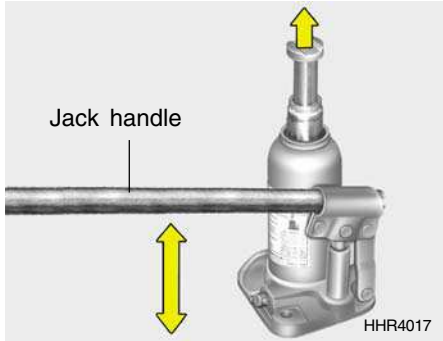

(4) Move the jack handle up and down to raise the ram until just before the jack contacts the jacking point of the car.
(5) Position the jack with the jack handle. Position it only at the specified points indicated in the "Put the Jack in Place".
Use of the jack at other points could damage the car.
(6) Moving the jack handle up and down to raise the ram. As the jack begins to raise the vehicle, double check that it is properly positioned and will not slip. Raise the car high enough so that the fully inflated spare tire can be installed. To do this, you will need more ground clearance than is required to remove the flat tire.

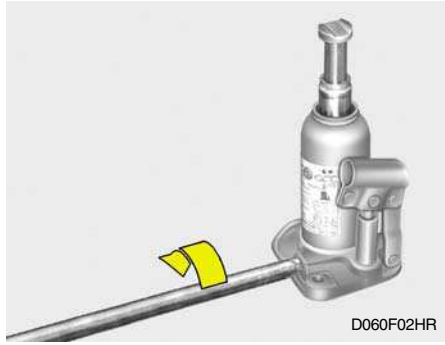

(7) Using the jack handle, turn the release valve counterclockwise slow to lower the ram, and then take out the jack.

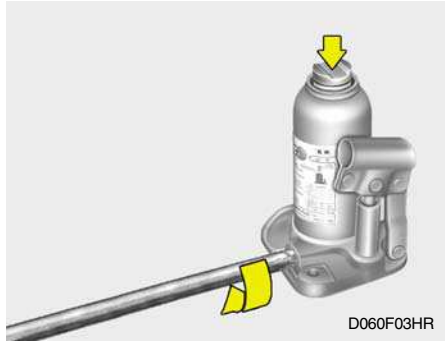

(8) Press the piston down all the way and turn the release valve clockwise as far as possible.

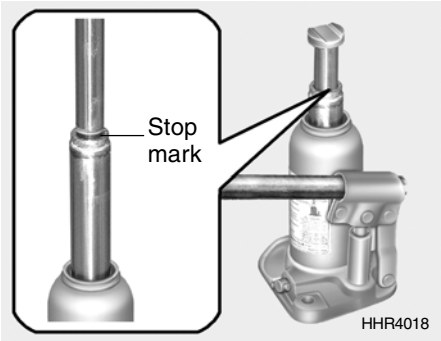

CAUTION:

- **Use only the jack included with the vehicle and use it only for changing a wheel.**
- **Position the jack on a hard level surface.**
- **If the release valve is loosened by turning it 2 or more times in the counterclockwise direction, the jack's oil will leak and the jack cannot be used.**
- **This jack is hydraulic, and the ram is a two-stage type. When both rams are raised and the stop mark(Green paint) of the upper ram becomes visible, stop jacking immediately. Further extension of the ram may damage the jack.**
- **When the jack is used, be sure that there is no one in or under the vehicle.**
- **When jacking up the vehicle, do so only until the tires are slightly lifted from the ground. It is dangerous to jack up the vehicle more than that much.**
- **It is very dangerous if the jack somehow slips, so never leave the vehicle in the jacked-up position, and never shake the vehicle while it is raised.**

WARNING:
Do not get under the car when it is supported by the jack! This is very dangerous as the vehicle could fall and cause serious injury or death. No one should stay in the car while the jack is being used.

D060G02Y-AAT

6. Changing Wheels

D060G01HR

Loosen the wheel nuts and remove them with your fingers. Slide the wheel off the studs and lay it flat so it cannot roll away. To put the wheel on the hub, pick up the spare tire, line up the holes with the studs and slide the wheel onto them. If this is difficult, tip the wheel slightly and get the top hole in the wheel lined up with the top stud. Then jiggle the wheel back and forth until the wheel can be slid over the other studs.

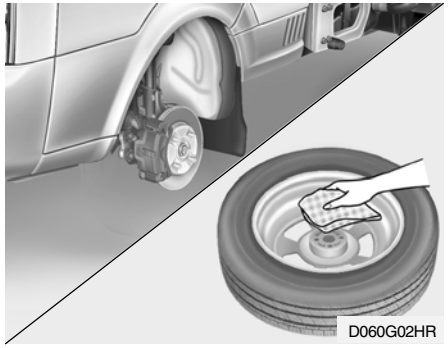
D060G02HR

WARNING:
Wheel and wheel covers may have sharp edges. Handle them carefully to avoid possible severe injury.
Before putting the wheel into place, be sure that there is nothing on the hub or wheel (such as mud, tar, gravel, etc.) that interferes with the wheel from fitting solidly against the hub. If there is, remove it. If there is not good contact on the mounting surface between the wheel and hub, the wheel nuts could loosen and cause the loss of a wheel. Loss of a wheel may result in loss of control of the vehicle. This may cause serious injury or death.

D060H02O-AAT

7. Re-install Wheel Nuts

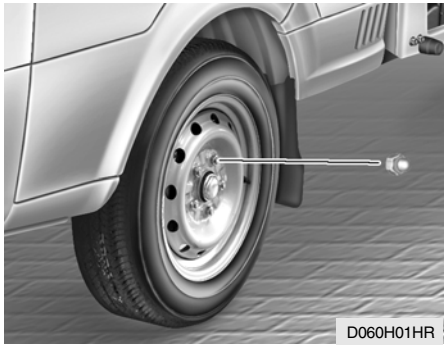

To reinstall the wheel, hold it on the studs, put the wheel nuts on the studs and tighten them finger tight. The nuts should be installed with their small diameter ends directed inward. Jiggle the tire to be sure it is completely seated, then tighten the nuts as much as possible with your fingers again.

D060I01HR-GAT

8. Lower Vehicle and Tighten Nuts

Lower the car to the ground by moving the jack handle up and down. Then position the wrench as shown in the drawing and tighten the wheel nuts. Be sure the socket is seated completely over the nut. Do not stand on the wrench handle or use an extension pipe over the wrench handle.
Go around the wheel tightening every other nut until they are all tight. Then double-check each nut for tightness. After changing wheels, have a technician tighten the wheel nuts to their proper torque as soon as possible.

Tightening torque:

	Front	Rear
Low Deck	15 to 20 kg.m (147 to 196 N.m, 108 to 145 ft.lbs)	12 to 14 kg.m (118 to 137 N.m, 87 to 101 lbs.ft)
High Deck	15 to 20 kg.m (147 to 196 N.m, 108 to 145 ft.lbs)	15 to 20 kg.m (147 to 196 N.m, 108 to 145 ft.lbs)

EMERGENCY COMMODITY

D060J01A-AAT

After changing wheels

If you have a tire gauge, remove the valve cap and check the air pressure. If the pressure is lower than recommended, drive slowly to the nearest service station and inflate to the correct pressure. If it is too high, adjust it until it is correct. Always reinstall the valve cap after checking or adjusting tire pressure. If the cap is not replaced, air may leak from the tire. If you lose a valve cap, buy another and install it as soon as possible.
After you have changed wheels, always secure the flat tire in its place and return the jack, jack handle, and tools to their proper storage locations.

D070A01HR-GAT

(If Installed)

There are some emergency commodities in the vehicle to help you respond to the emergency situation.

Fire extinguisher

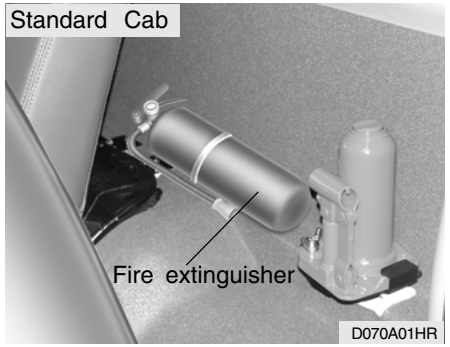

The fire extinguisher is located behind the front seat (Standard Cab) or under the rear seat cushion (Double Cab).

NOTE:
If your vehicle is equipped with double cab, first pull the cushion of rear seat forward (Refer to "Rear Seat Cushion Under Box" on page 1-11) to take out the fire extinguisher.

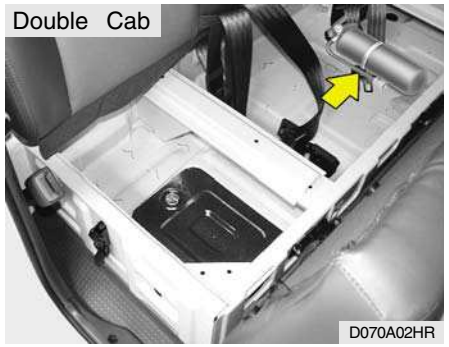

If there is small fire and you know how to use the fire extinguisher, take the following steps carefully.

1. Pull the pin at the top of the extinguisher that keeps the handle from being accidentally pressed.
2. Aim the nozzle toward the base of the fire.

3. Stand approximately 2.5 m (8 ft) away from the fire and squeeze the handle to discharge the extinguisher. If you release the handle, the discharge will stop.
4. Sweep the nozzle back and forth at the base of the fire. After the fire appears to be out, watch it carefully since it may re-ignite.

Triangle Reflector

Placed the triangle reflector on the road to warn oncoming vehicles during emergencies, such as when the vehicle is parked by the roadside due to any problems.

First Aid Kit

There are some items such as scissors, bandage and adhesive tape and etc. in the kit to give first aid to an injured person.

Tire Pressure Gauge (If Installed)

You can easily check the tire pressure with a tire pressure gauge that is found in OVM tool bag. Tires normally lose some air in day-to-day use, and you may have to add a few pounds of air periodically and it is not usually a sign of a leaking tire, but of normal wear. Always check tire pressure when the tires are cold because tire pressure increases with temperature.

To check the tire pressure, take the following steps;

1. Unscrew the inflation valve cap that is located on the rim of the tire.
2. Press and hold the gauge against the tire valve. Some air will escape as you begin and more will escape if you don't press the gauge in firmly.
3. A firm non-leaking push will activate the gauge.
4. Read the tire pressure on the gauge to know whether the tire pressure is low or high.
5. Adjust the tire pressures to the specified pressure. See page 8-3.
6. Reinstall the inflation valve cap.

IF YOUR VEHICLE MUST BE TOWED

D080A02HR-GAT

If your vehicle has to be towed, it should be done by your Hyundai dealer or a commercial tow truck service. This will help assure that your vehicle is not damaged in towing. Also, professionals are generally aware of local laws governing towing. In any case, rather than risk damage to your car, it is suggested that you show this information to the tow truck operator. Be sure that a safety chain system is used and that all local laws are observed.
It is recommended that your vehicle be towed with a wheel lift and dollies or flatbed equipment with all the wheels off the ground.

CAUTION:

- **Your vehicle can be damaged if towed incorrectly!**
- **Be sure the transmission is in neutral.**
- **When the engine will not start, be sure the steering is unlocked by placing the key in the "ACC" position.**

D080B02HR-GAT

Towing the vehicle

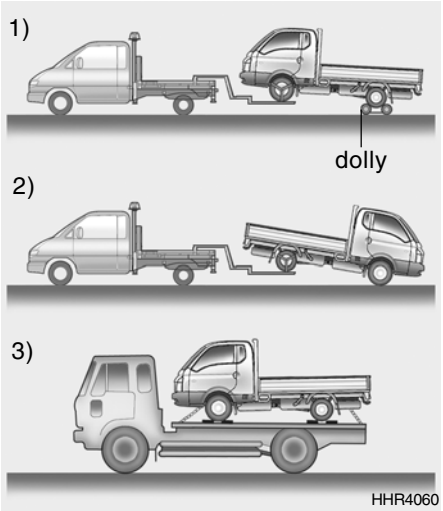

Your vehicle can be towed by wheel lift type truck (1), (2) or flatbed equipment (3).

CAUTION:

- **When towing the vehicle, take care not to cause damage to the bumper or underbody of the vehicle.**

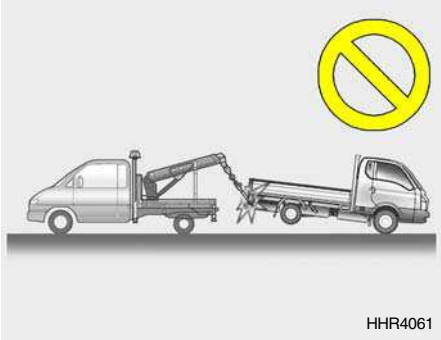

- **Do not tow with sling type truck as this may cause damage to the bumper or underbody of the vehicle.**

1) If any of the loaded wheels or suspension components are damaged or the vehicle is being towed with the rear wheels on the ground, use a towing dolly under the rear wheels. If you do not use a towing dolly, place the ignition key in the "ACC" position and put the transmission in "N (Neutral)".

CAUTION:

Do not tow with the key removed or in the "LOCK" position when towing from the front without a towing dolly.

2) If the vehicle is being towed with the front wheels on the ground, be sure the parking brake is released.

3) It is recommended that your vehicle be towed with all the wheels off the ground.

D080D01HR-GAT

EMERGENCY TOWING

For emergency towing when no commercial tow vehicle is available, attach a tow cable, chain or strap to the towing hook under the front of your car. Do not attempt to tow your vehicle in this manner on any unpaved surface. This may result in serious damage to your car.

Nor should it be attempted if the wheels, drive train, axles, steering or brakes are damaged. Before towing, be sure the transmission is in neutral and the key in "ACC" (with the engine off) or in the "ON" position (with the engine running). A driver must be in the towed car to steer it and operate the brakes.

CAUTION:

If the car is being towed with all four wheels on the ground, it can be towed only from the front. Be sure that the transmission is in neutral. Do not tow at speeds greater than 50 km/h (25 mph) and for more than 25 km (15 miles).

Be sure the steering is unlocked by placing the key in the "ACC" position. A driver must be in the towed vehicle to operate the steering and brakes.

IF YOU LOSE YOUR KEYS

D120A01A-AAT

If you lose your keys, many Hyundai dealers can make you a new key if you have your key number.

If you lock the keys inside your car and you cannot obtain a new key, many Hyundai dealers can use special tools to open the door for you.

CORROSION PREVENTION & APPEARANCE CARE

CORROSION PROTECTION 4-2
TO HELP PREVENT CORROSION 4-3
WASHING AND WAXING 4-4
CLEANING THE INTERIOR 4-5

4

CORROSION PROTECTION

E010A01A-AAT

Protecting Your Hyundai from Corrosion:

By using the most advanced design and construction practices to combat corrosion, Hyundai produces cars of the highest quality. However, this is only part of the job. To achieve the long-term corrosion resistance your Hyundai can deliver, the owner's co-operation and assistance is also required.

E010B01A-AAT

Common Causes of Corrosion

The most common causes of corrosion on your car are:

- o Road salt, dirt and moisture that is allowed to accumulate underneath the car.
- o Removal of paint or protective coatings by stones, gravel, abrasion or minor scrapes and dents which leave unprotected metal exposed to corrosion.

E010C01A-AAT

High-Corrosion Areas

If you live in an area where your car is regularly exposed to corrosive materials, corrosion protection is particularly important. Some of the common causes of accelerated corrosion are road salts, dust control chemicals, ocean air and industrial pollution.

E010D01A-AAT

Moisture Breeds Corrosion

Moisture creates the conditions in which corrosion is most likely to occur. For example, corrosion is accelerated by high humidity, particularly when temperatures are just above freezing. In such conditions, the corrosive material is kept in contact with the car surfaces by moisture that is slow to evaporate.
Mud is particularly corrosive because it is slow to dry and holds moisture in contact with the vehicle. Although the mud appears to be dry, it can still retain the moisture and promote corrosion.
High temperatures can also accelerate corrosion of parts that are not properly ventilated so the moisture can be dispersed. For all these reasons, it is particularly important to keep your car clean and free of mud or accumulations of other materials. This applies not only to the visible surfaces but particularly to the underside of the car.

TO HELP PREVENT CORROSION

E020A01A-AAT

You can help prevent corrosion from getting started by observing the following:

E020B01A-AAT

Keep Your Car Clean

The best way to prevent corrosion is to keep your car clean and free of corrosive materials. Attention to the underside of the car is particularly important.

- o If you live in a high-corrosion area — where road salts are used, near the ocean, areas with industrial pollution, acid rain, etc.—, you should take extra care to prevent corrosion. In winter, hose off the underside of your car at least once a month and be sure to clean the underside thoroughly when winter is over.
- o When cleaning underneath the car, give particular attention to the components under the fenders and other areas that are hidden from view. Do a thorough job; just dampening the accumulated mud rather than washing it away will accelerate corrosion rather than prevent it. Water under high pressure and steam are particularly effective in removing accumulated mud and corrosive materials.
- o When cleaning lower door panels, rocker panels and frame members, be sure that drain holes are kept open so that moisture can escape and not be trapped inside to accelerate corrosion.

E020C01A-AAT

Keep Your Garage Dry

Don't park your car in a damp, poorly ventilated garage. This creates a favorable environment for corrosion. This is particularly true if you wash your car in the garage or drive it into the garage when it is still wet or covered with snow, ice or mud. Even a heated garage can contribute to corrosion unless it is well ventilated so moisture is dispersed.

E020D01A-AAT

Keep Paint and Trim in Good Condition

Scratches or chips in the finish should be covered with "touch-up" paint as soon as possible to reduce the possibility of corrosion. If bare metal is showing through, the attention of a qualified body and paint shop is recommended.

E020E01A-AAT

Don't Neglect the Interior

Moisture can collect under the floor mats and carpeting to cause corrosion. Check under the mats periodically to be sure the carpeting is dry. Use particular care if you carry fertilizers, cleaning materials or chemicals in the car.
These should be carried only in proper containers and any spills or leaks should be cleaned up, flushed with clear water and thoroughly dried.

E030A04HR-GAT

Washing Your Hyundai

Never wash your car when the surface is hot from being in the sun. Always wash your car in the shade.
Wash your car frequently. Dirt is abrasive and can scratch the paint if it is not removed. Air pollution or acid rain may damage the paint and trim through chemical action if pollutants are allowed to remain in contact with the surface. If you live near the ocean or in an area where road salts or dust control chemicals are used, you should pay particular attention to the underside of the car. Start by rinsing the car to remove dust and loose dirt. In winter, or if you have driven through mud or muddy water, be sure to thoroughly clean the underside as well. Use a hard direct stream of water to remove accumulations of mud or corrosive materials.
Use a good quality car-washing solution and follow the manufacturer's directions on the package. These are available at your Hyundai dealer or auto parts outlet. Don't use strong household detergents, gasoline, strong solvents or abrasive cleaning powders as these may damage the finish.

Use a clean sponge or cloth, rinse it frequently and don't damage the finish by rubbing too hard. For stubborn spots, dampen them frequently and remove them a little at a time.
To clean whitewall tires, use a stiff brush or soapy steel-wool scouring pad. To clean plastic wheel covers, use a clean sponge or soft cloth and water.

If you find any nicks or scratches in the paint, use touch-up paint to cover them to prevent corrosion. To protect the paintwork of the car against corrosion, you must clean your Hyundai (at least once a month). Give special attention to the removal of salt, mud and other substances on the underside of the splashboards of the car. Make sure that the outlets and the underside of the doors are open. Paint damage can be caused by small accumulation of tar, industrial precipitation, tree resin, insects and bird droppings, when not removed immediately. If water alone is not strong enough to remove the accumulated dirt, use a mild car washing solution. Be sure to rinse the surface after washing to remove the solution. Never allow the solution to dry on the painted surfaces.

CAUTION:

- **Water washing in the engine compartment including high pressure water washing may cause the failure of electrical circuits located in the engine compartment.**
- **Never allow water or other liquids to come in contact with electrical/electronic components inside the vehicle as this may damage them.**
- **Be careful when washing the side windows of your vehicle. Especially, with high-pressure water, water may leak through the windows and wet the interior.**

- **To prevent damage to the plastic parts, do not clean with chemical solvents or strong detergents.**

E030B01A-AAT
Spot Cleaning

Don't use gasoline, strong solvents or corrosive cleaning agents. These can damage the finish of the car. To remove road tar, use turpentine on a clean, soft cloth or commercially available bug and tar remover. Be gentle. To remove dead insects or tree sap, use warm water and mild soap or car-washing solution. Soak the spot and rub gently. If the paint has lost its luster, use a commercial car-cleaning polish.

E030C01A-AAT
Polishing and Waxing

Always wash and dry the car before polishing or waxing or using a combination cleaner and wax. Use a good quality commercial product and follow the manufacturer's directions on the container. Polish and wax the bright trim pieces as well as the paint.

E030D01A-AAT
When to Wax Again

You should polish and wax the car again when water no longer beads on a clean surface but spreads out over a larger area.

E030E01A-AAT
Maintaining Bumpers

Special precautions must be observed to preserve the appearance of the bumpers on your Hyundai. They are:

- Be careful not to spill battery electrolyte or hydraulic brake fluid on the bumpers. If you do, wash it off immediately with clear water.
- Be gentle when cleaning the bumper surfaces. They are made of soft plastic and the surface can be damaged if mistreated. Do not use abrasive cleaners. Use warm water and mild soap or car-washing solution.
- Do not expose the bumpers to high temperatures. For example, if you have your car repainted, do not leave the bumpers on the car if the car is going to be placed in a high-temperature paint booth.

E040A01A-AAT
To Clean the Vinyl Upholstery

To clean the vinyl upholstery, first remove loose dirt and dust with a vacuum cleaner. Then apply a solution of mild soap or detergent and water using a clean sponge or soft cloth. Allow this to stay on the surface to loosen the dirt, then wipe with a clean damp sponge or cloth. If all the dirt stains are not removed, repeat this procedure until the upholstery is clean. Do not use gasoline, solvent, paint thinner or other strong cleaners.

E040B01HR-AAT
To Clean the Leather Upholstery

CAUTION:
When cleaning leather products (steering wheel, seats etc.), use neutral detergents or low alcohol content solutions. If you use high alcohol content solutions or acid/alkaline detergents, the color of the leather may fade or the surface may get stripped off.

E040C01A-AAT

Cleaning the Carpets

Use a foam-type carpet cleaner. Cleaners of this type are available in aerosol cans in liquid form or powder. Read the instructions and follow them exactly. Using a vacuum cleaner with the appropriate attachment, remove as much dirt from the carpets as possible. Apply the foam following the manufacturer's directions, then rub in overlapping circles. Do not add water. These cleaners work best when the carpet is kept as dry as possible.

E040D01A-AAT

Cleaning the Seat Belts

To clean the seat belts, use a cloth or sponge with mild soap or detergent and warm water. Do not use strong detergents, dye, bleach or abrasive materials on the seat belts as this may weaken the fabric.
While cleaning the belts, inspect them for excessive wear, cuts, fraying or other signs of damage and replace them if necessary.

E040E01A-AAT

Cleaning the Windows

You may use any household window cleaner on the windows. However, when cleaning the inside of the rear window be careful not to damage the rear window defroster wiring.

ANY QUESTIONS?

E050A01A-AAT

If you have any questions about the care of your car, consult your Hyundai dealer.

VEHICLE MAINTENANCE REQUIREMENTS

Maintenance Intervals 5-2
Scheduled Maintenance 5-4
Maintenance Under Severe Usage Conditions 5-8
Explanation of Scheduled Maintenance Items 5-9

5

F010A01A-GAT
Service Requirements

To assure that you receive the greatest number of kilometers of satisfying operation from your Hyundai, certain maintenance procedures must be performed. Although careful design and engineering have reduced these to a minimum, those that are required are of the utmost importance.
It is your responsibility to have these maintenance procedures performed to comply with the terms of the warranties covering your new Hyundai. The Service Passport supplied with your new vehicle provides further information about these warranties.

F010B01A-AAT
Maintenance Requirements

The maintenance required for your Hyundai can be divided into three main areas:

- o Specified scheduled procedures
- o General checks
- o Do-it-yourself maintenance

F010C01HR-GAT
Specified Scheduled Procedures

These are the procedures such as inspections, adjustments and replacements that are listed in the maintenance charts starting on page 5-4. These procedures must be performed at the intervals shown in the maintenance schedule to assure that your warranty remains in effect. Although it is strongly recommended that they be performed by the factory-trained or distributor-trained technicians at your Hyundai dealer, these procedures may be performed at any qualified service facility.

It is suggested that genuine Hyundai service parts be used for any required repairs or replacements. Other parts of equivalent quality such as engine oil, engine coolant, manual transmission oil, brake fluid and so on which are not supplied by Hyundai Motor Company or its distributor may be used without affecting your warranty coverage but you should always be sure these are equivalent to the quality of the original Hyundai parts. Your Service Passport provides further information about your warranty coverage.

F010D01A-GAT
General Checks

These are the regular checks you should perform when you drive your Hyundai or you fill the fuel tank. A list of these items will be found on page 6-5.

F010E01A-AAT

Do-It-Yourself Maintenance

If you are mechanically inclined, own a few tools that are required and want to take the time to do so, you can inspect and service a number of items. For more information about doing it yourself, see Section 6.

F010F01A-GAT

A Few Tips

Whenever you have your Hyundai serviced, keep copies of the service records in your glove box. This will help ensure that you can document that the required procedures have been performed to keep your warranties in effect.
This is especially important when service is not performed by an authorized Hyundai dealer.

SCHEDULED MAINTENANCE REQUIREMENTS

F020A01Y-GAT

Inspection should be performed any time a malfunction is experienced or suspected. Receipts for all emission control system services should be retained to demonstrate compliance with conditions of the emissions system warranty.
For severe usage maintenance requirements, see page 5-8 of this section.

F030A01HR-GAT

Except European Community

The following maintenance services must be performed to assure good vehicle control and performance. Keep receipts for all vehicle services to protect your warranty. Where both kilometers and time are shown, the frequency of service is determined by whichever occurs first.

F030D02HR-GAT

R : Replace I : Inspect and, after inspection, clean, adjust, repair or replace if necessary

NO.	DESCRIPTION	KILOMETERS X 1000	5	10	20	30	40	50	60	70	80	90
		MONTHS	4	8	16	24	32	40	48	56	64	72
	ENGINE CONTROL SYSTEM MAINTENANCE (DIESEL)											
1	ENGINE OIL AND FILTER		See Note(1), (2)									
2	AIR CLEANER FILTER		See Note(3)									
3	FUEL FILTER*					R			R			R
4	VALVE CLEARANCE				I		I		I		I	
5	INJECTION TIMING (IF EXHAUST GAS INCLUDES BLACK SMOKE)					I			I			I
6	EGR SYSTEM (VALVE, TUBE, HOSE)					I			I			I
7	TIMING BELT						I				R	
8	DRIVE BELT (FOR WATER PUMP AND ALTERNATOR)			I	I	I	I	I	I	I	I	I
9	ENGINE IDLE SPEED				I		I		I		I	
10	FUEL SYSTEM LEAKS		See Note(4)									
11	INJECTION NOZZLE (IF EXHAUST GAS INCLUDES BLACK SMOKE)					I			I			I
12	VACUUM PUMP AND VACUUM HOSE		See Note(5)									
13	VACUUM PUMP OIL HOSE		See Note(5)									

Note : (1) For every 5,000 KM or 6 months, whichever occurs first : "R"
(2) Republic of South Africa (If the vehicle is lubricated API CH-4 grade or above.):
For every 7,500 KM or 6 months, whichever occurs first : "R"
(3) For China, India and Middle East : For every 15,000 KM or 12 months, whichever occurs first : "R"
Except China, India and Middle East : For every 45,000 KM or 36 months, whichever occurs first : "R"
(4) Inspect every day.
(5) For every 15,000 KM or 12 months, whichever occurs first : "I"

F030C06HR-GAT

R : Replace I : Inspect and, after inspection, clean, adjust, repair or replace if necessary

NO.	DESCRIPTION	KILOMETERS X 1000	5	10	20	30	40	50	60	70	80	90
		MONTHS	4	8	16	24	32	40	48	56	64	72
	GENERAL MAINTENANCE											
1	COOLANT		See Note (1), (2), (3)									
2	MANUAL TRANSMISSION OIL								I			
3	REAR AXLE OIL			I	I	I	R	I	I	I	R	I
4	CLUTCH / BRAKE PEDAL FREE-PLAY		See Note (4)									
5	BRAKE OIL RESERVOIR											
6	BRAKE HYDRAULIC FLUID					I			I			I
7	FRONT BRAKE PADS			I	I	I	I	I	I	I	I	I
8	FRONT BRAKE CALIPERS / CYLINDERS / DISC				I		I		I		I	
9	REAR BRAKE DRUMS / LININGS / CYLINDERS				I		I		I		I	
10	PARKING BRAKE			I	I	I	I	I	I	I	I	I
11	TIRE CONDITION / PRESSURE			I	I	I	I	I	I	I	I	I
12	EXHAUST SYSTEM / MOUNTING			I	I	I	I	I	I	I	I	I
13	STEERING JOINT / RACK / BOX OIL LEAKS			I	I	I	I	I	I	I	I	I
14	SUSPENSION JOINT / SEALS				I		I		I		I	
15	FRONT WHEEL BEARING				I		I		I		I	
16	COOLANT HOSES			I	I	I	I	I	I	I	I	I
17	BRAKE PIPE CORROSION			I	I	I	I	I	I	I	I	I
18	CLIMATE CONTROL AIR FILTER		See Note (5)									
19	AIR CONDITIONING REFRIGERANT			I	I	I	I	I	I	I	I	I
20	POWER STEERING PUMP AND HOSES			I	I	I	I	I	I	I	I	I

Note : (1) At first, replace at 48,000 km (30,000 miles) or 24 months: after that, replace every 40,000 km (25,000 miles) or 24 months.
(2) When adding coolant, use only a qualified coolant additive for your vehicle and never mix hard water in the coolant filled at the factory. An improper coolant mixture can result in serious malfunction or engine damage.
(3) For your convenience, it can be replaced prior to it's interval when you do maintenance of other items.
(4) Inspect every day.
(5) Clean it every 10,000 km or 6 month or more frequently.

F040A01HR-GAT

For European Community Only

The following maintenance services must be performed to assure good vehicle control and performance. Keep receipts for all vehicle services to protect your warranty. Where both kilometers and time are shown, the frequency of service is determined by whichever occurs first.

F040D03HR-GAT

R : Replace I : Inspect and, after inspection, clean, adjust, repair or replace if necessary

NO.	DESCRIPTION	KILOMETERS X 1000	7.5	15	30	45	60	75	90
		MONTHS	6	12	24	36	48	60	72
	ENGINE CONTROL SYSTEM MAINTENANCE (DIESEL)								
1	ENGINE OIL AND FILTER		See Note (1)						
2	AIR CLEANER FILTER			I	I	R	I	I	R
3	FUEL SYSTEM LEAKS		See Note (2)						
4	FUEL FILTER*		See Note (3), (4)						
5	VALVE CLEARANCE		See Note (5)						
6	EGR SYSTEM (VALVE, TUBE, HOSE)				I		I		I
7	INJECTION TIMING (IF EXHAUST GAS INCLUDES BLACK SMOKE)				I		I		I
8	TIMING BELT						I		R
9	DRIVE BELT (FOR WATER PUMP/ALTERNATOR)			I	I	I	I	I	I
10	ENGINE IDLE SPEED			I	I	I	I	I	I
11	INJECTION NOZZLE (IF EXHAUST GAS INCLUDES BLACK SMOKE)				I		I		I
12	VACUUM PUMP AND VACUUM HOSE			I	I	I	I	I	I
13	VACUUM PUMP OIL HOSE			I	I	I	I	I	I

Note : (1) For every 7,500 KM or 6 months, whichever occurs first : "R"
(2) Inspect every day.
(3) Inspect every 30,000 km or 18 months; replace every 60,000 km or 36 months
(4) This interval depends on fuel quality. It is applicable only when using a qualified fuel, "EN 590 or equivalent". If the diesel fuel specifications don't meet the European standards EN590, replace it more frequently. Consult an authorized HYUNDAI dealer for details. In case of low engine power or fuel pressure decrease of the fuel filter, replace fuel filter immediately regardless of maintenance schedule.
(5) For every 20,000 KM : "I"

F040C06HR-GAT

R : Replace I : Inspect and, after inspection, clean, adjust, repair or replace if necessary

NO.	DESCRIPTION	KILOMETERS X 1000	7.5	15	30	45	60	75	90
		MONTHS	6	12	24	36	48	60	72
	GENERAL MAINTENANCE								
1	COOLANT		See Note (1), (2), (3)						
2	MANUAL TRANSMISSION OIL						I		
3	REAR AXLE OIL			I	I	R	I	I	R
4	CLUTCH / BRAKE PEDAL FREE-PLAY		See Note (4)						
5	BRAKE OIL RESERVOIR								
6	BRAKE HYDRAULIC FLUID				I		I		I
7	FRONT BRAKE PAD			I	I	I	I	I	I
8	FRONT BRAKE CALIPERS/CYLINDERS/DISC			I	I	I	I	I	I
9	REAR BRAKE DRUMS/LININGS/CYLINDERS			I	I	I	I	I	I
10	PARKING BRAKE			I	I	I	I	I	I
11	TIRE CONDITION/PRESSURE			I	I	I	I	I	I
12	EXHAUST SYSTEM/MOUNTING				I		I		I
13	STEERING JOINT/RACK/BOX/OIL LEAKS				I		I		I
14	SUSPENSION JOINT/SEALS				I		I		I
15	FRONT WHEEL BEARING				I		I		I
16	COOLANT HOSES				I		I		I
17	BRAKE PIPE CORROSION			I	I	I	I	I	I
18	CLIMATE CONTROL AIR FILTER		See Note (5)						
19	AIR CONDITIONING REFRIGERANT			I	I	I	I	I	I
20	POWER STEERING PUMP AND HOSES			I	I	I	I	I	I

Note: (1) At first, replace at 100,000 km (62,500 miles) or 60 months: after that, replace every 40,000 km (25,000 miles) or 24 months.
(2) When adding coolant, use only a qualified coolant additive for your vehicle and never mix hard water in the coolant filled at the factory. An improper coolant mixture can result in serious malfunction or engine damage.
(3) For your convenience, it can be replaced prior to it's interval when you do maintenance of other items.
(4) Inspect every day.
(5) Clean it every 10,000 KM or 6 month, or more frequently.

MAINTENANCE UNDER SEVERE USAGE CONDITIONS

F050A04HR-GAT

The following items must be serviced more frequently on cars normally used under severe driving conditions. Refer to the chart below for the appropriate maintenance intervals.

R : Replace I : Inspect and, after inspection, clean, adjust, repair or replace if necessary

MAINTENANCE ITEM	MAINTENANCE OPERATION	MAINTENANCE INTERVALS		DRIVING CONDITION
ENGINE OIL AND FILTER	R	Except E.C	EVERY 3,000 KM	A, B, C, F, H, J
		For E.C	EVERY 4,000 KM	
AIR CLEANER FILTER	R	MORE FREQUENTLY		C, E
TIMING BELT	R	EVERY 60,000 KM OR 48 MONTHS		D, E, F, G
BRAKE PADS, CALIPERS, ROTORS	I	MORE FREQUENTLY		C, D, G, H
REAR BRAKE DRUMS AND LININGS	I	MORE FREQUENTLY		C, D, G, H
STEERING GEAR BOX, LINKAGE & BOOTS	I	EVERY 10,000 KM OR 6 MONTHS		C, D, E, F
CLIMATE CONTROL AIR FILTER	I	MORE FREQUENTLY		C, E
MANUAL TRANSMISSION OIL	R	EVERY 120,000 KM		A, C, D, E, F, G, H, I, J

SEVERE DRIVING CONDITIONS

A - Repeated short distance driving
B - Extensive idling
C - Driving in dusty conditions
D - Driving in areas using salt or other corrosive materials or in very cold weather
E - Driving in sandy areas
F - More than 50% driving in heavy city traffic during hot above 32°C (90°F)
G - Driving in mountainous areas
H - Towing a trailer or police car, taxi, or commercial type operation
I - Driving for patrol car, taxi, commercial car or vehicle towing
J - Driving over 170 km/h

EXPLANATION OF SCHEDULED MAINTENANCE ITEMS

F060M01A-AAT

o Engine Oil and Filter

The engine oil and filter should be changed at those intervals specified in the maintenance schedule. If the vehicle is being driven in severe conditions, more frequent oil and filter changes are required.

F060N01HR-GAT

o Valve Clearances

An incorrect valve clearance will not only result in rough engine operation, but will also cause excessive noise and reduced engine output.
Inspect valve clearance and adjust as required while the engine is hot.

See page 9-4 for the valve clearance description.

F060D01TB-GAT

o Fuel Lines, Fuel Hoses and Connections

Check the fuel lines, fuel hoses and connections for leakage and damage. Have a trained technician replace any damaged or leaking parts immediately.

WARNING:
Never work on injection system with engine running or within 30 seconds after shutting off engine. High pressure pump, rail, injectors and high pressure pipes are subject to high pressure even after the engine stopped. The fuel jet produced by fuel leaks may cause serious injury, if it touch the body. People using pacemakers should not move than 30cm closer to the ECU or wiring harness within the engine room while engine is running, since the high currents in the Common Rail system produce considerable magnetic fields.

F060C01A-AAT

o Fuel Filter

A clogged filter can limit the speed at which the vehicle may be driven, damage the emission system and cause hard starting. If an excessive amount of foreign matter accumulates in the fuel tank, the filter may require replacement more frequently.
After installing a new filter, run the engine for several minutes, and check for leaks at the connections. Fuel filters should be installed by trained technicians.

F060F01A-AAT

o Vacuum and Crankcase Ventilation Hoses

Inspect the surface of hoses for evidence of heat and/or mechanical damage. Hard and brittle rubber, cracking, tears, cuts, abrasions, and excessive swelling indicate deterioration. Particular attention should be paid to examining those hose surfaces nearest to high heat sources, such as the exhaust manifold.
Inspect the hose routing to assure that the hoses do not come in contact with any heat source, sharp edges or moving component which might cause heat damage or mechanical wear. Inspect all hose connections, such as clamps and couplings, to make sure they are secure, and that no leaks are present. Hoses should be replaced immediately if there is any evidence of deterioration or damage.

F060G01A-AAT

o Vapor Hose and Fuel Filler Cap

The vapor hose and fuel filler cap should be inspected at those intervals specified in the maintenance schedule. Make sure that a new vapor hose or fuel filler cap is correctly replaced.

F060H01A-AAT

o Air Cleaner Filter

A Genuine Hyundai air cleaner filter is recommended when the filter is replaced.

F070B01A-GAT

o Cooling System

Check the cooling system part, such as radiator, coolant reservoir, hoses and connections for leakage and damage. Replace any damaged parts.

F070C01A-AAT

o Coolant

The coolant should be changed at the intervals specified in the maintenance schedule.

F060B01HR-GAT

o Drive Belts

Inspect all drive belts (water pump and alternator) for evidence of cuts, cracks, excessive wear or oiliness, and replace if necessary. Drive belts should be checked periodically for proper tension and adjusted as necessary.

F060E01A-GAT

o Timing Belt

Inspect all parts related with the timing belt for damage and deformation. Replace any damaged parts immediately.

F070D01HP-GAT

o Manual Transmission Oil

Inspect the manual transmission oil according to the maintenance schedule.

NOTE:
If the oil level is low, check for possible leaks before adding oil. Do not overfill.

F070F01A-AAT

o Brake Hoses and Lines

Visually check for proper installation, chafing, cracks, deterioration and any leakage. Replace any deteriorated or damaged parts immediately.

F070G02A-GAT

o Brake Fluid

Check brake fluid level in the brake fluid reservoir. The level should be between "MIN" and "MAX" marks on the side of the reservoir. Use only hydraulic brake fluid conforming to DOT 3 or DOT 4.

F070H01A-AAT

o Rear Brake Drums/Linings Parking Brake

Check the rear brake drums and linings for scoring, burning, leaking fluid, broken parts, and excessive wear. Inspect the parking brake system including the parking brake lever and cables. For detailed service procedures, refer to the Shop Manual.

F070J01A-AAT

o Brake Pads, Calipers and Rotors

Check the pads for excessive wear, discs for run out and wear, and calipers for fluid leakage.

F070K01A-AAT

o Exhaust Pipe and Muffler

Visually inspect the exhaust pipes, muffler and hangers for cracks, deterioration, or damage. Start the engine and listen carefully for any exhaust gas leakage. Tighten connections or replace parts as necessary.

F070L01A-AAT

o Suspension Mounting Bolts

Check the suspension connections for looseness or damage. Retighten to the specified torque.

F070M01A-AAT

o Steering Gear Box, Linkage & Boots/Lower arm Ball Joint

With the vehicle stopped and engine off, check for excessive free-play in the steering wheel. Check the linkage for bends or damage. Check the dust boots and ball joints for deterioration, cracks, or damage. Replace any damaged parts.

F070N01A-AAT

o Power Steering Pump, Belt and Hoses

Check the power steering pump and hoses for leakage and damage. Replace any damaged or leaking parts immediately. Inspect the power steering belt for evidence of cuts, cracks, excessive wear, oiliness and proper tension. Replace or adjust it if necessary.

G080U01P-GAT

o Wheel Bearing Grease

Check the wheel bearings and grease according to the maintenance schedule. For inspection procedures, see Shop Manual.

F070Q01A-AAT

o Air Conditioning Refrigerant

Check the air conditioning lines and connections for leakage and damage. Check air conditioning performance according to the relevant shop manual if necessary.

DO-IT-YOURSELF MAINTENANCE

Front Open Service Panel 6-2
Engine Compartment 6-3
General Checks 6-5
Checking the Engine Oil 6-6
Changing the Oil and Filter 6-8
Checking and Changing the Engine Coolant 6-10
Changing the Air Cleaner Filter 6-12
Checking the Transmission Oil (Manual) 6-15
Checking the Rear Axle Oil 6-16
Checking the Brakes 6-17
Air Conditioning Care 6-18
Checking the Climate Control Air Filter
(For Evaporator and Blower Unit) 6-19
Checking Drive Belts 6-21
Checking and Replacing Fuses 6-22
Checking the Battery 6-24
Power Steering Fluid Level 6-26
Fuel Filter 6-27
Replacement of Light Bulbs 6-30
Bulb Wattages 6-37
Fuse Panel Description 6-38

2 FRONT OPEN SERVICE PANEL

G010A01HR-GAT

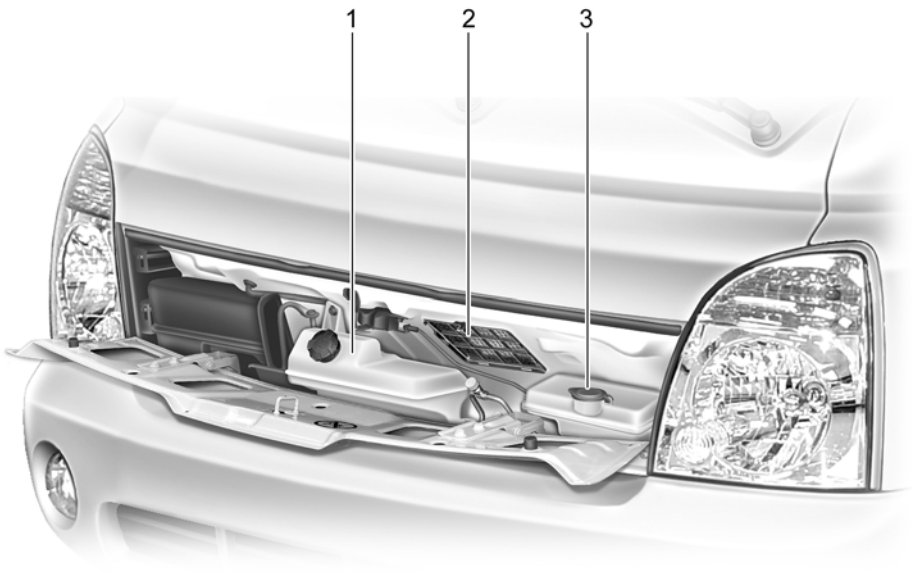

WARNING:
Do not press excessively or step on the hood. This can cause the hood to fall and result in serious injury.

1. Engine Coolant Reservoir
2. Air Conditioner Filter (If Installed)
3. Windshield Washer Fluid Reservoir Cap

G010A01HR

ENGINE COMPARTMENT

G010B01HR-GAT

Diesel Engine (2.6 N/A)

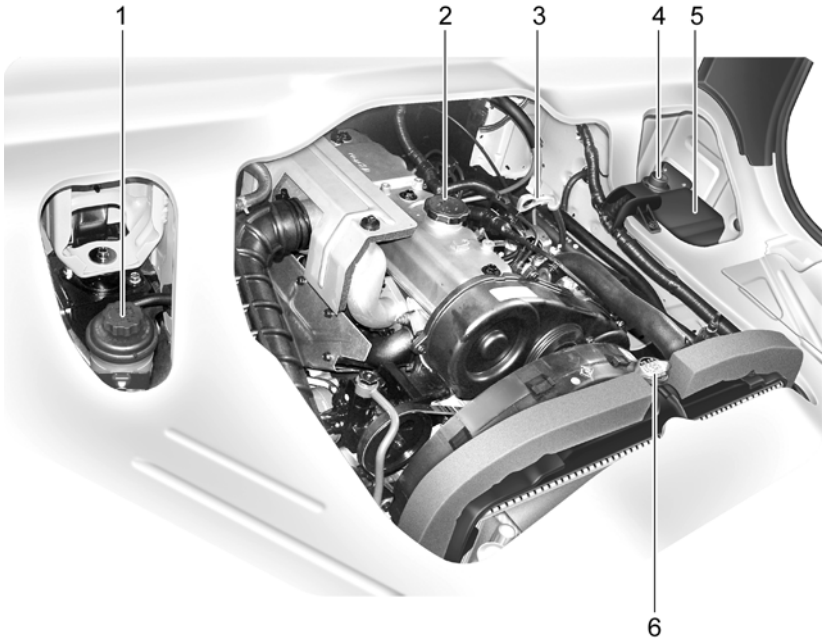

CAUTION:
To inspect or service the engine, first move the front seat. (Refer to " To Access the Engine" on page 1-12).

G010B01HR

1. Power Steering Fluid Reservoir (If Installed)
2. Engine Oil Filler Cap
3. Engine Oil Level Dipstick
4. Fuel Filter
5. Fuse and Relay Box
6. Radiator Cap

G010C01HR-GAT

Diesel Engine (2.5 TCI)

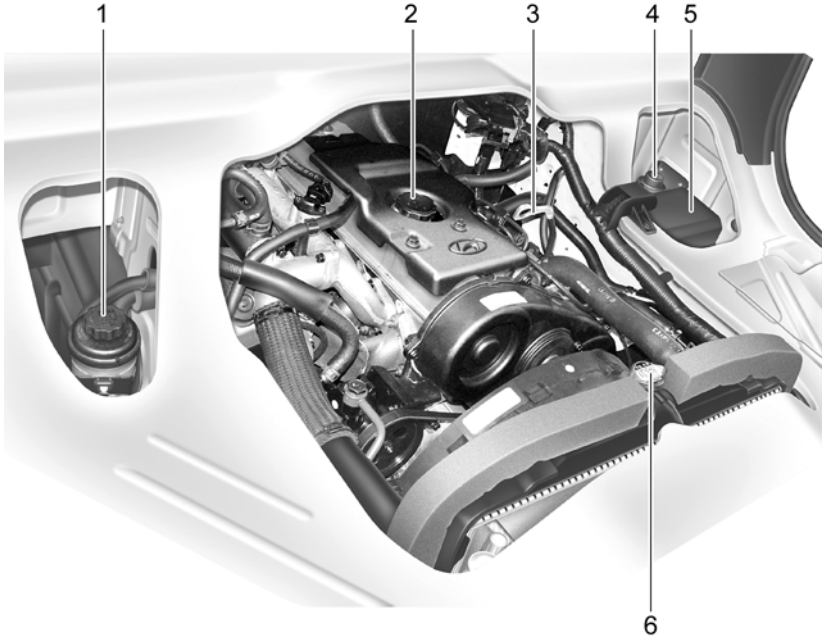

HHR5001

CAUTION:

- **To inspect or service the engine, first move the front seat. (Refer to " To Access the Engine" on page 1-12).**
- **When inspecting or servicing the engine, you should handle tools and other heavy objects carefully so that the plastic cover of the engine is not damaged.**

1. Power Steering Fluid Reservoir (If Installed)
2. Engine Oil Filler Cap
3. Engine Oil Level Dipstick
4. Fuel Filter
5. Fuse and Relay Box
6. Radiator Cap

GENERAL CHECKS

G020A01HR-GAT

Engine Compartment

The following should be checked regularly:

- o Engine oil level and condition
- o Transmission fluid level and condition
- o Brake fluid level
- o Engine coolant level
- o Windshield washer fluid level
- o Accessory drive belt condition
- o Engine coolant hose condition
- o Fluid leaks (on or below components)
- o Power steering fluid level
- o Battery condition
- o Air filter condition

G020B01A-AAT

Vehicle Exterior

The following should be checked monthly:

- o Overall appearance and condition
- o Wheel condition and wheel nut torque
- o Exhaust system condition
- o Light condition and operation
- o Windshield glass condition
- o Wiper blade condition
- o Paint condition and body corrosion
- o Fluid leaks
- o Door and hood lock condition
- o Tire pressure and condition (including spare tire)

G020C01HR-GAT

Vehicle Interior

The following should be checked each time when the vehicle is driven:

- o Lights operation
- o Windshield wiper operation
- o Horn operation
- o Defroster, heater system operation (and air conditioning, if installed)
- o Steering operation and condition
- o Mirror condition and operation
- o Turn signal operation
- o Accelerator pedal operation
- o Brake operation, including parking brake
- o Manual transmission operation, including clutch operation
- o Seat control condition and operation
- o Seat belt condition and operation
- o Sunvisor operation

If you notice anything that does not operate correctly or appears to be functioning incorrectly, inspect it carefully and seek assistance from your Hyundai dealer if service is needed.

6 CHECKING THE ENGINE OIL

G030A01HR-GAT

Engine oil is essential to the performance and service of the engine. It is suggested that you check the oil level at least once a week or every 500 km in normal use and more often if you are on a trip or driving in severe conditions.

G030B02HR-GAT

Recommended Oil

(1) Select engine oil of the proper SAE viscosity number according to the atmospheric temperature. Recommended viscosity is given in the following illustration.

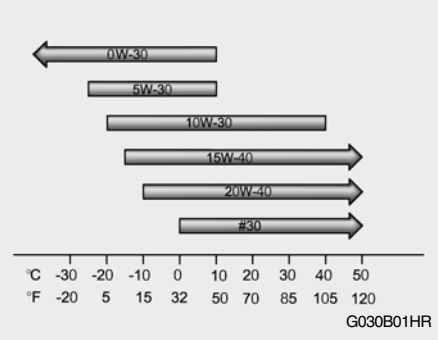

(2) The engine oil quality should meet the following API classification: CF-4 or ABOVE
(3) The engine oil quality should meet the following ACEA classification : B2 or B3

NOTE:

- **For diesel-powered vehicle SAE 0W-30 oil should be used only in areas where extremely cold temperatures of 10°C (50°F) or below are experienced.**
- **For diesel-powered vehicle, if the atmospheric temperatures are 0°C (32°F) or below, SAE 30 oil must not be used. This oil should be used only in areas where the atmospheric temperatures are 0°C(32°F) or above.**

G030C01HR-GAT

To Check the Oil Level

2.6 N/A

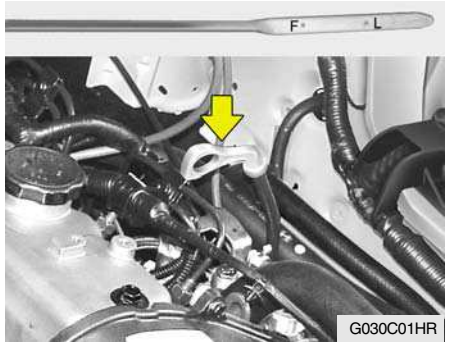

2.5 TCI

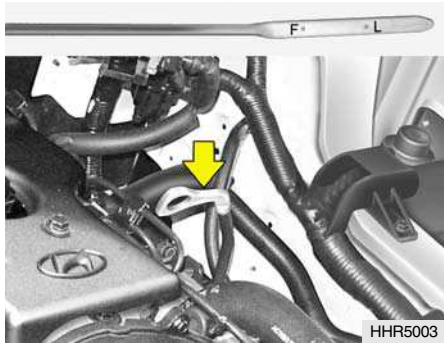

Before checking the oil, warm up the engine to normal operating temperature and be sure your car is parked on level ground. Turn the engine off.

Wait about ten minutes, then remove the dipstick, wipe it off, fully reinsert the dipstick and withdraw it again. Then note the highest level the oil has reached on the dipstick. It should be between the upper ("F") and lower ("L") range.

G030D01HR-GAT

Adding Oil

2.6 N/A

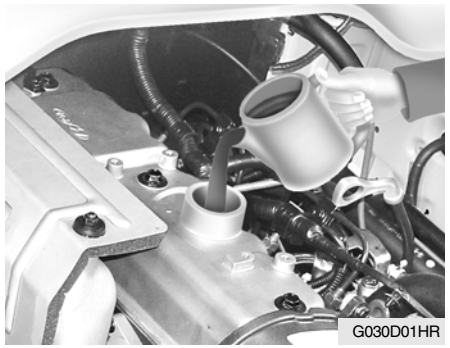
G030D01HR

2.5 TCI

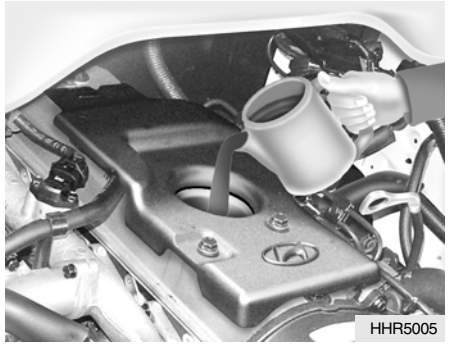
HHR5005

If the oil level is close to or below the "L" mark, add oil until it reaches the "F" mark. To add oil:

1. Remove the oil filler cap by turning it counterclockwise.
2. Add oil, then check the level again. Do not overfill.
3. Replace the cap by turning it clockwise.

The distance between the "F" and "L" marks is equal to about 1.5 liters of oil.

G350A01A-GAT

ENGINE OIL CONSUMPTION

Function of Engine Oil

Engine oil has the primary function of lubricating and cooling the inside of the engine.

Engine oil consumption

It is normal that an engine should consume some engine oil while normal driving. The cause of oil consumption in a normal engine are as follows;

- Engine oil is used to lubricate pistons, piston rings and cylinders.
  A thin film of oil is left on the cylinder wall when a piston moves downwards in the cylinder. High negative pressure generated during engine operation sucks some of the oil into the combustion chamber.
  This oil with some oil of the cylinder wall is burned by the high temperature combustion gases during the combustion process.
- The engine oil consumption is strongly effected by the viscosity and quality of oil, engine rpm and driving condition etc. The engine oil is more consumed under severe driving conditions such as high speeds and frequent acceleration and deceleration than normal driving condition.

CHANGING THE OIL AND FILTER

G040A03HR-GAT

2.6 N/A

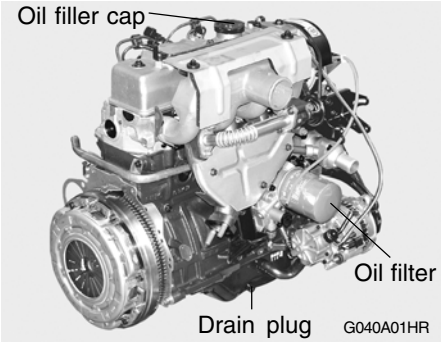

2.5 TCI

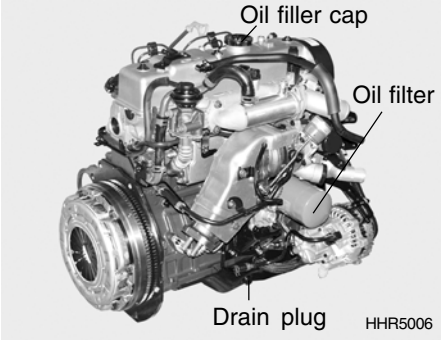

The engine oil and filter should be changed at those intervals specified in the maintenance schedule in Section 5. If the car is being driven in severe conditions, more frequent oil and filter changes are required.

The procedure for changing the oil and filter is as follows:

1. Park the car on level ground and set the parking brake. Start the engine and let it warm up until the needle on the coolant temperature gauge moves above the lowest mark. Turn the engine off and place the gear selector lever in reverse gear.
2. Lift up the front passenger's seat (Refer to "To Inspect the Engine Compartment Under the Front Passenger's Seat" on page 1-13.) and remove the engine oil filler cap.
3. Slide underneath the car and loosen the drain plug by turning it counterclockwise with a wrench of the proper size. Be sure that a drain pan is in position to catch the oil as it drains out, then remove the drain plug.

WARNING:
Be very careful when draining the engine oil as it may be hot enough to burn you!

4. When the oil has stopped draining, replace the drain plug using a new gasket and retighten by turning it clockwise.

   Tightening torque : 3.5 ~ 4.5 kgf.m

5. Remove the oil filter by turning it counterclockwise with a oil filter wrench of the proper size. A certain amount of oil will come out when you remove the filter. So be sure to have your drain pan in place underneath it.
6. Install a new oil filter in accordance with the instructions on the carton or on the filter itself. Do not over-tighten.

   Tightening torque: 2.3 ~ 2.5 kgf.m

   Be sure that the mounting surface on the engine is clean and that the old gasket is removed completely. Lubricate the new gasket on the filter with clean engine oil before installation.

7. Remove the engine oil level dipstick.
8. Refill the crankcase with the recommended engine oil slowly. Refer to the specification in chapter 9 for engine oil capacity.

CAUTION:
Slowly pour the recommended oil by using a funnel. Do not overfill not to damage the engine.

9. Start the engine and check to be sure no oil is leaking from the drain plug or oil filter.
10. Shut off the engine and recheck the oil level.

NOTE:
Always dispose of used engine oil in an environmentally acceptable manner. It is suggested that it be placed in a sealed container and taken to a service station for reclamation. Do not pour the oil on the ground or put it into the household trash.

WARNING:
Used motor oil may cause irritation or cancer of the skin if left in contact with the skin for prolonged periods of time. Wash your hands thoroughly with soap and warm water as soon as possible after handling used oil.

10 CHECKING AND CHANGING THE ENGINE COOLANT

G050A01A-AAT

WARNING:
Do not remove the radiator cap when the engine is hot. When the engine is hot, the engine coolant is under pressure and may erupt through the opening if the cap is removed. You could be seriously burned if you do not observe this precaution. Do not remove the radiator cap until the radiator is cool to the touch.

G050B01A-AAT

Recommended Engine Coolant

Use a high quality ethylene-glycol coolant in a 50/50 mix with water. The engine coolant should be compatible with aluminum engine parts. Additional corrosion inhibitors or additives should not be used. The cooling system must be maintained with the correct concentration and type of engine coolant to prevent freezing and corrosion. Never allow the concentration of antifreeze to exceed the 60% level or go below the 35% level, or damage to the cooling system may result. For proper concentration when adding or replacing the engine coolant, refer to the following table.

Ambient temperature °C (°F)	Engine coolant concentration	
	Antifreeze solution	Water
-15 (5)	35%	65%
-25 (-13)	40%	60%
-35 (-31)	50%	50%
-45 (-49)	60%	40%

G050C01A-GAT

To Check the Coolant Level

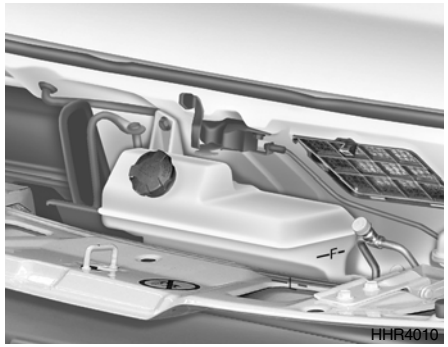

The coolant level can be seen on the side of the plastic coolant reservoir. The level of the coolant should be between the "L" and "F" lines on the reservoir when the engine is cold. If the level is below the "L" mark, add engine coolant to bring it up between "L" and "F". If the level is low, inspect for coolant leaks and recheck the fluid level frequently. If the level drops again, visit your Hyundai dealer for an inspection and diagnosis of the reason.

G050D01HR-GAT

To Change the Coolant

The coolant should be changed at those intervals specified in the vehicle maintenance schedule in Section 5.

CAUTION:
Engine coolant can damage the finish of your car. If you spill engine coolant on the car, wash it off thoroughly with clean water.

1. Park the car on level ground, set the parking brake and lift up the front passenger's seat. (Refer to "To inspect the Engine Compartment Under the Front Passenger's Seat" on page 1-13).

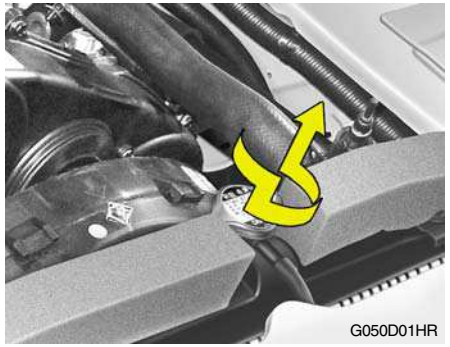
G050D01HR

2. Turn the radiator cap counterclockwise without pressing down on it, until it stops. This relieves any pressure remaining in the cooling system. And remove the radiator cap by pushing down and turning counterclockwise.

WARNING:
Remove the radiator cap when the radiator is cool.

3. Be sure your drain receptacle is in place. Open the drain cock on the radiator. Allow all the engine coolant to drain from the cooling system, then securely close the drain cock.
4. Check Section 9 for the capacity of the cooling system in your car. Then, following the manufacturer's directions on the engine coolant container, add the appropriate quantity of coolant to the radiator.
5. Fill the radiator with clean demineralized or distilled water. Continue to add clean demineralized or distilled water in small quantities until the fluid level stays up in the radiator neck.

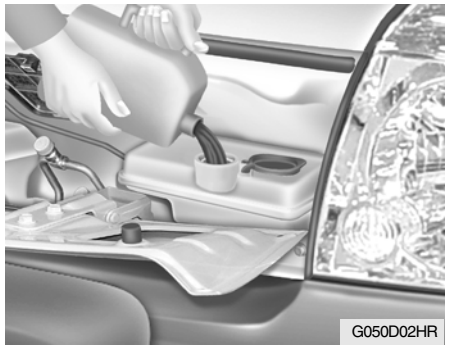
G050D02HR

6. Start the engine, top off the radiator with water, open the hood and then add engine coolant to the reservoir until the level is between "L" and "F".
7. Replace the radiator and reservoir caps and check to be sure the drain cocks are fully closed and not leaking.

WARNING:
The cooling fan is controlled by engine coolant temperature and may sometimes operate even when the engine is not running. Use extreme caution when working near the blades of the cooling fan so that you are not injured by a rotating fan blade. As the engine coolant temperature decreases, the fan will automatically shut off. This is a normal condition.

CHANGING THE AIR CLEANER FILTER

G070A01HR-GAT

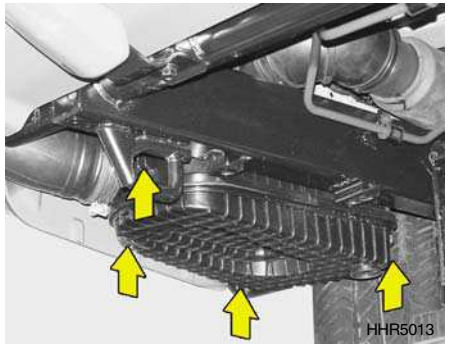

The air cleaner filter is located in front of the front tire on the right side.
The replacement of air cleaner filter is performed in the following manner.

1. Unsnap the clips around the cover.
2. When this is done, the cover can be taken off, the old filter removed and the new filter put in its place.

Genuine Hyundai replacement parts are recommended.

CAUTION:
- **Operating your vehicle without a proper air filter in place can result in excessive engine wear.**
- **When removing the air cleaner filter, be careful that dust or dirt does not enter the air intake. These may result in damage to the air cleaner filter.**

WINDSHIELD WIPER BLADES

G080A02A-AAT

The wiper blades should be carefully inspected from time to time and cleaned to remove accumulations of road film or other debris. To clean the wiper blades and arms, use a clean sponge or cloth with a mild soap or detergent and water. If the wipers continue to streak or smear the glass, replace them with Genuine Hyundai Replacement parts or their equivalent.

CAUTION:

- **Do not operate the wipers on dry glass. This can result in more rapid wear of the wiper blades and may scratch the glass.**
- **Keep the blade rubber out of contact with petroleum products such as engine oil, gasoline, etc.**

G080B01HR-GAT

Replacing the Wiper Blades

To replace the wiper blades, raise the wiper to the vertical.

To remove the wiper blade

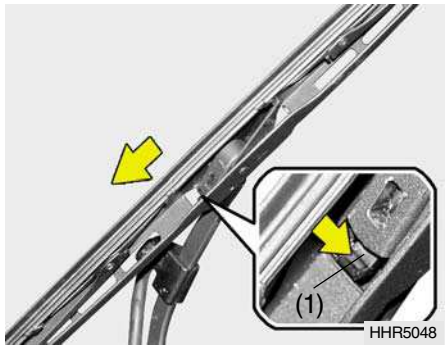

1. Push down the wiper blade with the locking clip (1) pressed to detach it from the wiper arm.

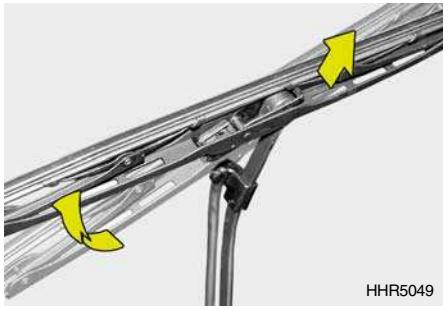

2. Raise the wiper blade lightly and pull up it.

To install the wiper blade

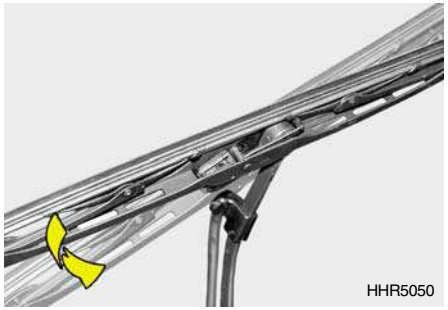

1. Put a new wiper blade onto the wiper arm and lower the wiper blade at the level of the wiper arm as shown in the drawing.

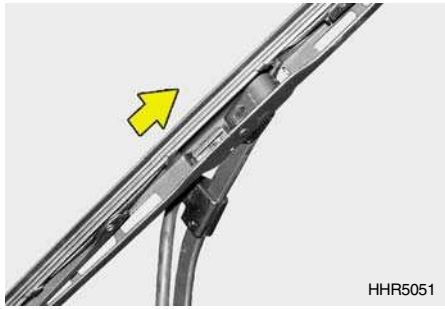

2. Pull up the wiper blade until you hear an audible "click" to engage in the end of the wiper arm.

NOTE:
Do not allow the wiper arm to fall against the windshield.

FILLING THE WASHER RESERVOIR

G090A02HR-GAT

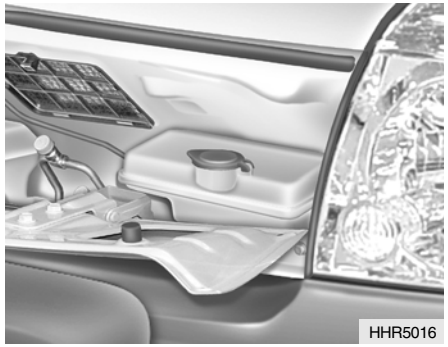

The washer fluid reservoir supplies fluid to the windshield washer system.
A good quality washer fluid should be used to fill the washer reservoir. The fluid level should be checked more frequently during inclement weather or whenever the washer system is in more frequent use.
The capacity of the washer reservoir is 2.0 liters.

CAUTION:

- **Radiator antifreeze (engine coolant) should not be used in the washer system because it will damage the car's finish.**
- **The washer should not be operated if the washer reservoir is empty. This can damage the washer fluid pump.**

WARNING:

- **Windshield washer fluid agents contain some amounts of alcohol and can be flammable under certain circumstances. Do not allow sparks or flame to contact the washer fluid or the washer fluid reservoir. Damage to the vehicle or its occupants could occur.**
- **Windshield washer fluid is poisonous to humans and animals. Do not drink windshield washer fluid. Serious injury or death could occur.**

G100A03HR-GAT

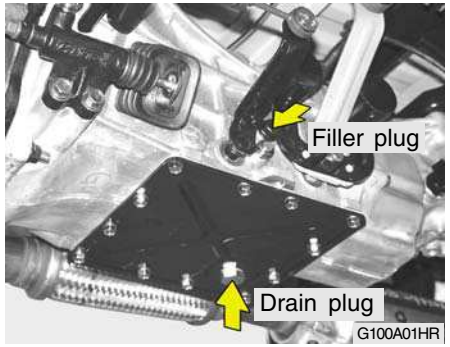

Transmission lubricant in the manual transmission should be checked at those intervals specified in the vehicle maintenance schedule in Section 5.

Recommended Oil

Use only HYUNDAI GENUINE PARTS MTF 75W/85 (API GL-4) in the manual transmission.

Manual Transmission Oil Capacity

The oil capacity of the manual transmission is 2.4 liters (2.6 N/A)/1.95 liters (2.5 TCI).

WARNING:

It is always better to check the transmission oil level when the engine is cool or cold. If the engine is hot, you should exercise great caution to avoid burning yourself on hot engine or exhaust parts.

G100B01HP-GAT

To Check the Maunal Transmission Fluid Level

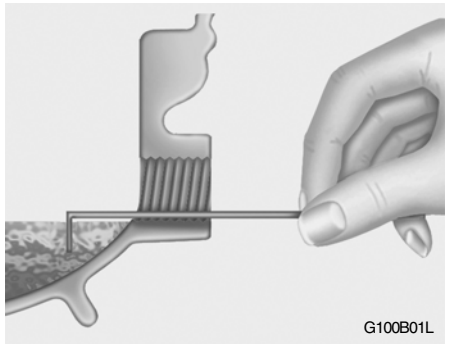

Park the car on level ground with the engine off.

1. Using a wrench of the correct size, loosen the oil filler plug by turning it counterclockwise and remove it with your fingers.
2. Use your finger or suitable tool to feel inside the hole. The oil level should be at its bottom edge. If it is not, check for leaks before adding oil. To refill the transmission or bring the oil level up, add oil slowly until it reaches the proper level. Do not overfill.
3. Replace the plug and washer, screw it in with your fingers and then tighten securely with the wrench.

CHECKING THE REAR AXLE OIL

G130A01HR-GAT

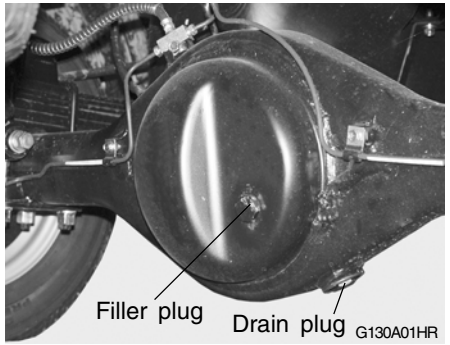

Rear axle oil should be checked at those intervals specified in the vehicle maintenance schedule in Section 5.

Recommended Oil

See page 9-5.

Rear Axle Oil Capacity

The oil capacity of the rear axle is 1.5 liters (2.6 N/A)/ 1.7 liters (2.5 TCI).

WARNING:
The rear axle oil should be checked when the engine is cool or cold. If the engine is hot, you should exercise great caution to avoid burning yourself on hot engine or exhaust parts.

G130B01HR-GAT

To Check the Rear Axle Oil Level

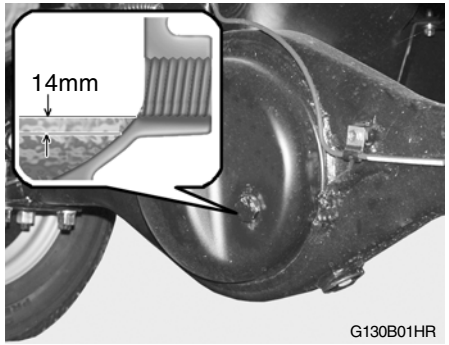

Park the car on level ground with the engine off.

1. Using a wrench of the correct size, loosen the oil filler plug by turning it counterclockwise and remove it with your fingers.
2. Use a suitable tool to feel inside the hole. The oil level should be within 14 mm from its bottom edge. If it is not, check for leaks before adding oil. To refill the rear axle or bring the oil level up,add oil slowly until it reaches the proper level. Do not overfill.
3. Replace the plug and washer, screw it in with your fingers and then tighten securely with the wrench.

NOTE:
It is recommended that the rear axle oil should be checked by an authorized Hyundai dealer.

CHECKING THE BRAKES

G120A01A-AAT

CAUTION:
Because brakes are essential to the safe operation of the car, it is suggested that they be checked and inspected by your Hyundai dealer. The brakes should be checked and inspected for wear at those intervals specified in the vehicle maintenance schedule in Section 5.

G120B01A-AAT

Checking the Brake Fluid Level

WARNING:
Use caution when handling brake fluid. It can damage your vision if it gets into your eyes. It will also damage your vehicle's paint if spilled on it and not removed immediately.

G120C02A-AAT

Recommended Brake Fluid

Use only hydraulic brake fluid conforming to DOT 3 or DOT 4 specifications in your braking system. Follow the instructions printed on the container.

G120D01A-AAT

To Check the Fluid Level

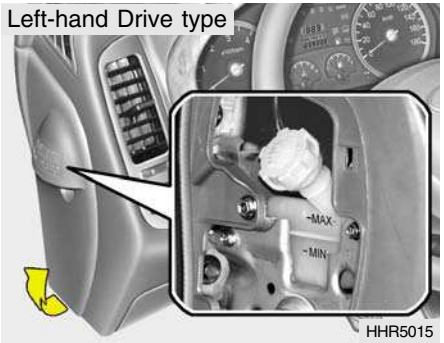

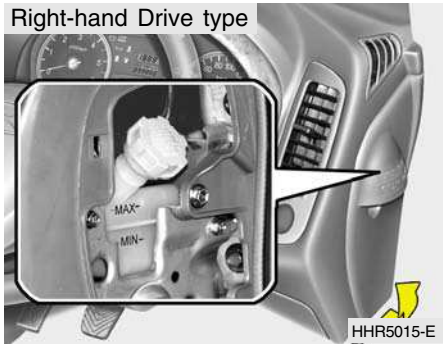

The fluid level in the brake fluid reservoir should be checked periodically. The level should be between the "MIN" and "MAX" marks on the side of the reservoir. If the level is at or below the "MIN" mark, carefully add fluid to bring it up to "MAX". Do not overfill.

G120E01HR-GAT

Adding Brake Fluid

WARNING:
Handle brake fluid carefully. It can damage your vision if it gets into your eyes. Use only DOT 3 or DOT 4 specification fluid from a sealed container. Do not allow the fluid can or reservoir to remain open any longer than required. This will prevent entry of dirt and moisture which can damage the brake system and cause improper operation.

To add brake fluid, pull up the cover, wipe away any dirt, and open the fluid reservoir cap. Slowly pour the recommended fluid into the reservoir. Do not overfill. Carefully replace the cap on the reservoir and tighten.

G140A01A-AAT

Keeping the Condenser Clean

The air conditioning condenser (and engine radiator) should be checked periodically for accumulation of dirt, dead insects, leaves, etc. These can interfere with maximum cooling efficiency. When removing such accumulations, brush or hose them away carefully to avoid bending the cooling fans.

G140B01A-AAT

Checking the Air Conditioning Operation

1. Start the engine and let it run at a fast idle for several minutes with the air conditioning set at the maximum cold setting.
2. If the air coming out of the in-dash vents is not cold, have the air conditioning system inspected by your Hyundai dealer.

CAUTION:
Running the air conditioning system for extended periods of time with a low refrigerant level may damage the compressor.

G140C01A-AAT

Lubrication

To lubricate the compressor and the seals in the system, the air conditioning should be run for at least 10 minutes each week. This is particularly important during cool weather when the air conditioning system is not otherwise in use.

G140D01A-GAT

Checking the Compressor Drive Belt

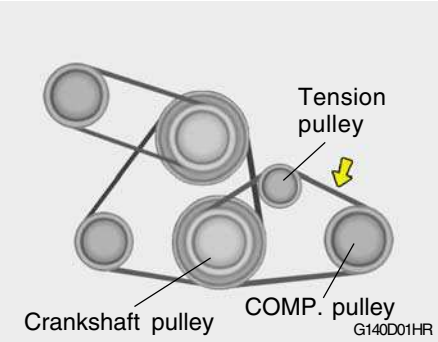

When the air conditioning is being used regularly, the compressor drive belt tension should be checked at least once a month.
To check the drive belt tension, press down on the belt halfway between the engine crankshaft and compressor pulleys. Pressing with your finger, you should not be able to deflect this belt anymore than 8.0 mm. If you have the instruments to check it with a force of 98N (22 lb.), the deflection should be approx. 8.0 mm (0.315 in.). If the belt is too loose, have it adjusted by your Hyundai dealer.

CHECKING THE CLIMATE CONTROL AIR FILTER

B145A03HR-GAT

(For Evaporator and Blower Unit) (If Installed)

The climate control air filter is located in the hood.
It helps to decrease the amount of pollutants entering the car.

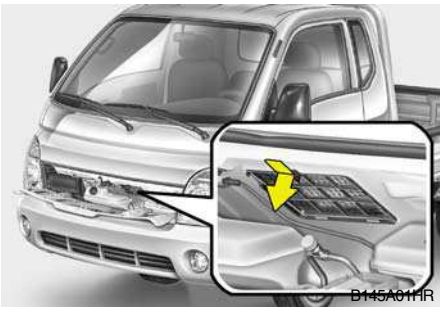

1. Open the hood.
2. Remove the filter by pressing the upper end of the filter.
3. Clean the filter with compressed air or water.
4. Reassemble in the reverse order of disassembly after the filter is completely dried.

NOTE:

- **If you clean the filter with water, dry it in the open air.**
- **When cleaning the filter, be careful that the filter doesn't drop or bump against other objects, or damage may result.**

CHECKING THE FREE-PLAY

G150A01A-GAT

STEERING WHEEL

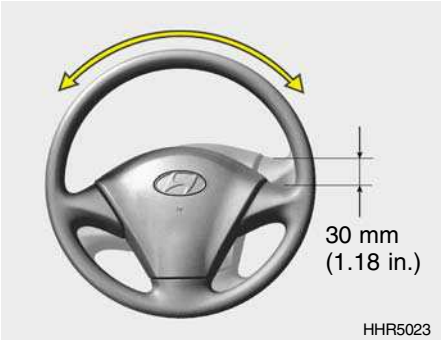

To check the steering wheel free-play, stop the car with the wheels pointed straight ahead and gently move the steering wheel back and forth. Use very light finger pressure and be sensitive to changes in resistance that mark the limits of the freeplay. If the free-play is greater than specified, have it inspected by your Hyundai dealer and adjusted or repaired if necessary.

G160A01A-GAT

CLUTCH PEDAL

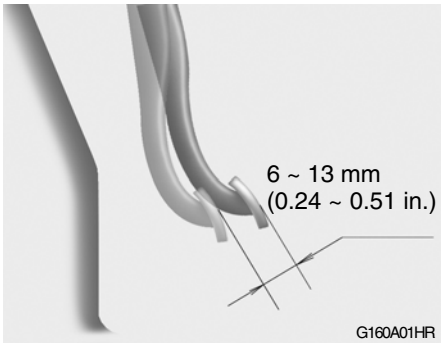

With the engine off, press lightly on the clutch pedal until you feel a change in resistance. This is the clutch pedal free-play. The free-play should be within the limits specified in the illustration. If it is not, have it inspected by your Hyundai dealer and adjusted or repaired if necessary.

CHECKING DRIVE BELTS

G170A01A-GAT

BRAKE PEDAL

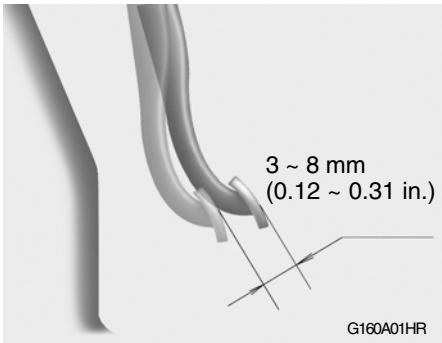

With the engine off, press down on the brake pedal several times to reduce the vacuum in the brake booster.
Then, using your hand, press down slowly on the brake pedal until you feel a change in resistance. This is the brake pedal free-play.
The free-play should be within the limits specified in the illustration. If it is not, have it inspected by your Hyundai dealer and adjusted or repaired if necessary.

G190A01HR-GAT

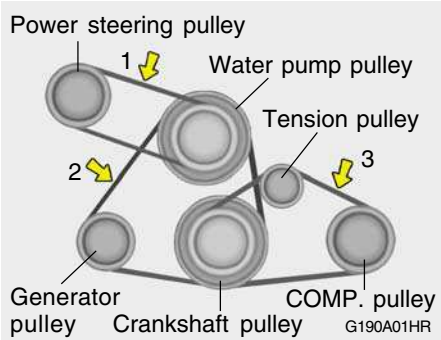

Drive belts should be checked periodically for proper tension and adjusted if necessary.

Belt		Proper tension
1		7 ~ 10 mm
2	a new belt	9 ~ 12 mm
	a used belt	11 ~ 14 mm
3		7 ~ 10 mm

At the same time, belts should be examined for cracks, wear, fraying or other evidence of deterioration and replaced if necessary.

Belt routing should also be checked to be sure there is no interference between the belts and other parts of the engine. After a belt is replaced, the new belt should be adjusted again after two or three weeks to eliminate slack resulting from initial stretching after use.

WARNING:
The drive belt should be checked when the engine is cool or cold to avoid burning yourself on hot engine.

CHECKING AND REPLACING FUSES

G200A01HR-GAT

Replacing a Fusible Link

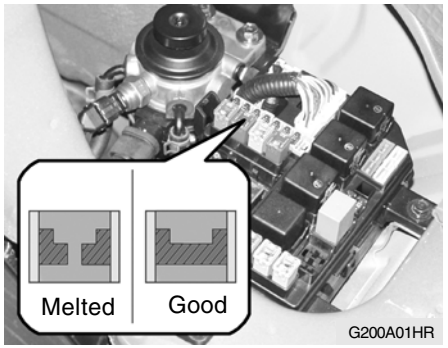

A fusible link will melt if the electrical circuits from the battery are ever overloaded, thus preventing damage to the entire wiring harness. (This could be caused by a short in the system drawing too much current.) If this ever happens, have a Hyundai dealer determine the cause, repair the system and replace the fusible link. The fusible links are located in a fuse box for easy inspection.

CAUTION:
When replacing a fusible link, never use anything but a new fusible link with the same or lower amperage rating. Never use a piece of wire or a higher-rated fusible link. This could result in serious damage and create a fire hazard.

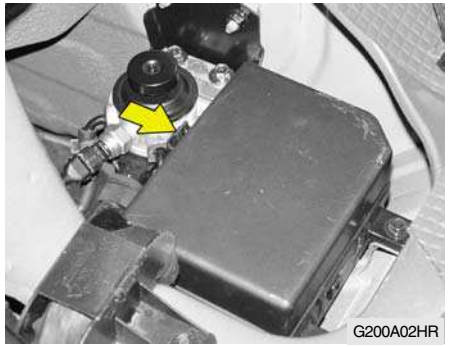

NOTE:

- **To replace a fusible link, first tilt the driver's seatback forward. (Refer to "To Inspect the Engine Compartment Under the Driver's Seat" on page 1-12.)**
- **To open the fuse box cover, press the hook of the cover and pull up the cover.**

G200B01HR-GAT

Replacing Accessory Fuse

The fuse box for the lights and other electrical accessories will be found low on the dashboard on the driver's side. Inside the box you will find a list showing the circuits protected by each fuse. If any of your car's lights or other electrical accessories stop working, a blown fuse could be the reason. If the fuse has burned out, you will see that the metal strip inside the fuse has burned through. If you suspect a blown fuse, follow this procedure:

1. Turn off the ignition and all other switches.
2. Open the fuse box and examine each fuse. Remove each fuse by pulling it toward you (a small "fuse puller" tool is contained in the fuse box cover to simplify this operation).
3. Be sure to check all other fuses even if you find one that appears to have burned out.

4. Replace the blown fuse by pressing a new fuse of the same rating into place. The fuse should be a snug fit. If it is not, have the fuse clip repaired or replaced by a Hyundai dealer. If you do not have a spare fuse, you may be able to borrow a fuse of the same or lower rating from an accessory you can temporarily get along without (the radio or cigarette lighter, for example). Always remember to replace the borrowed fuse.

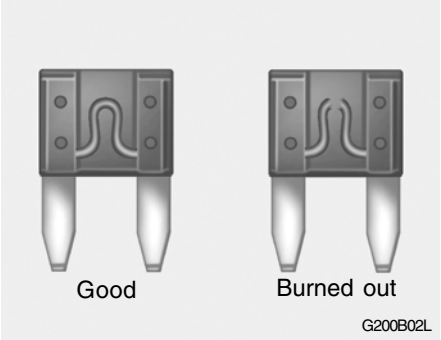

CAUTION:
A burned-out fuse indicates that there is a problem in the electrical circuit. If you replace a fuse and it blows as soon as the accessory is turned on, the problem is serious and should be referred to a Hyundai dealer for diagnosis and repair. Never replace a fuse with anything except a fuse with the same or a lower amperage rating. A higher capacity fuse could cause damage and create a fire hazard.

NOTE:
See page 6-38 for the fuse panel descriptions.

G200C01HR-GAT

Power Connector

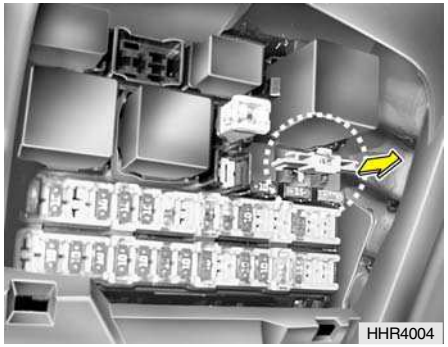
HHR4004

Your vehicle is equipped with a power connector to prevent battery discharge if your vehicle is parked without being operated for prolonged periods. Use the following procedures before parking the vehicle for prolonged periods.

1. Turn off the engine.
2. Turn off the headlights and tail lights.
3. Open the driver's side panel cover and pull up the power connector.
4. Insert the power connector in the opposite direction.

NOTE:
- **If the power connector is pulled up from the fuse panel, the warning chime, audio, clock and interior lamps, etc., will not operate. The following items must be reset after replacement.**
  - Digital Clock
- **Even though the power connector is pulled up, the battery can still be discharged by operation of the headlights or other electrical devices.**

G210A01A-AAT

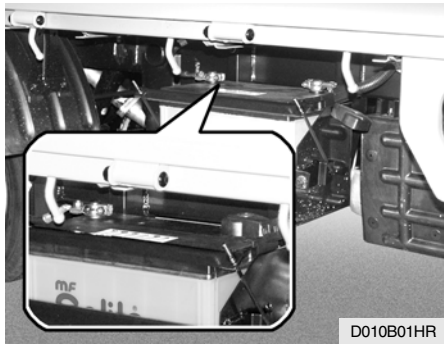
D010B01HR

WARNING:
Batteries can be dangerous! When working with batteries, carefully observe the following precautions to avoid serious injuries.

The fluid in the battery contains a strong solution of sulfuric acid, which is poisonous and highly corrosive. Be careful not to spill it on yourself or the car. If you do spill battery fluid on yourself, immediately do the following:

- o If battery fluid is on your skin, flush the affected areas with water for at least 15 minutes and then seek medical assistance.
- o If battery fluid is in your eyes, rinse out your eyes with water and get medical assistance as soon as possible. While you are being driven to get medical assistance, continue to rinse your eyes by using a sponge or soft cloth saturated with water.
- o If you swallow battery fluid, drink a large quantity of water or milk followed by milk of magnesia, eat a raw egg or drink vegetable oil. Get medical assistance as soon as possible.

While batteries are being charged (either by a battery charger or by the vehicle's alternator), they produce explosive gases. Always observe these warnings to prevent injuries from occurring:

- o Charge batteries only in a well ventilated area.
- o Do not permit flames, sparks or smoking in the area.
- o Keep children away from the area.

G210B01HR-GET

Checking the Battery

Keep the battery clean. Any evidence of corrosion around the battery posts or terminals should be removed using a solution of household baking soda and warm water. After the battery terminals are dry, cover them with a light coating of grease.

WARNING:

Always read the following instructions carefully when handling a battery.

Keep lighted cigarettes and all other flames or sparks away from the battery.

Hydrogen, which is a highly combustible gas, is always present in battery cells and may explode if ignited.

Keep batteries out of the reach of children because batteries contain highly corrosive SULFURIC ACID. Do not allow battery acid to contact your skin, eyes, clothing or paint finish.

If any electrolyte gets into your eyes, flush your eyes with clean water for at least 15 minutes and get immediate medical attention. If possible, continue to apply water with a sponge or cloth until medical attention is received.

If electrolyte gets on your skin, thoroughly wash the contacted area.

If you feel a pain or a burning sensation, get medical attention immediately.

Wear eye protection when charging or working near a battery.

Always provide ventilation when working in an enclosed space.

An inappropriately disposed battery can be harmful to the environment and human health. Dispose the battery according to your local law(s) or regulation.

- **When lifting a plastic-cased battery, excessive pressure on the case may cause battery acid to leak, resulting in personal injury. Lift with a battery carrier or with your hands on opposite corners.**
- **Never attempt to charge the battery when the battery cables are connected.**
- **The electrical ignition system works with high voltage. Never touch these components with the engine running or the ignition switched on.**

CHECKING ELECTRIC COOLING FANS

G220A01A-AAT

WARNING:
The cooling fan is controlled by engine coolant temperature and may sometimes operate even when the engine is not running. Use extreme caution when working near the blades of the cooling fan, so that you are not injured by a rotating fan blade. As the engine coolant temperature decreases the fan will automatically shut off. This is a normal condition.

G220B01A-AAT

Checking Engine Cooling Fan

The engine cooling fan should come on automatically if the engine coolant temperature is high.

G220C01TB-GAT

Checking Condenser Cooling Fan

When the air conditioning is in operation, the condenser cooling fan comes on automatically to be controlled by ECU.

POWER STEERING FLUID LEVEL

G230A03A-GAT

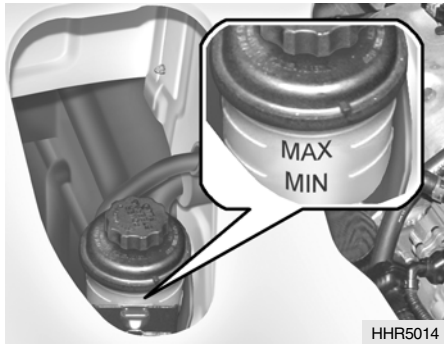

The power steering fluid level should be checked regularly.
To check the power steering fluid level, be sure the ignition is "OFF", then check to make certain that the power steering fluid level is between the "MAX" and "MIN" level markings on the fluid reservoir.

NOTE:
Grinding noise from the power steering pump may be heard immediately after the engine is started in extremely cold conditions (below - 20°C). If the noise stops during warm up, there is no abnormal function in the system.

It is due to a power steering fluid characteristic in extremely cold conditions.

Recommended Fluid
Use PSF-3 type fluid

NOTE:
Do not start the engine when the power steering oil reservoir is empty.

G240A01A-AAT
POWER STEERING HOSES

It is suggested that you check the power steering hose connections for fluid leakage at regular intervals. The power steering hoses should be replaced if there is severe surface cracking, scuffing or worn spots. Deterioration of the hose could cause premature failure.

FUEL FILTER

G350B01HR-GAT
BLEEDING THE FUEL SYSTEM

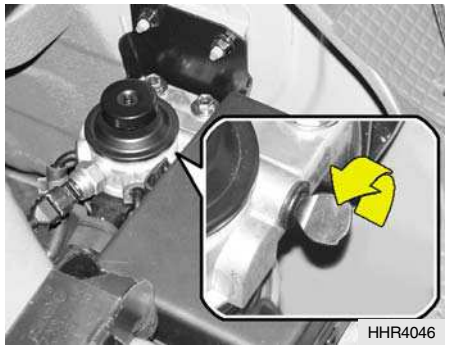
HHR4046

The fuel system should be bled to remove air as described in the illustration if the fuel supply is exhausted during travel, when the fuel filter is replaced, or if the vehicle is not used for a long time.

1. Loosen the air plug at the upper part of the fuel filter.

NOTE:
The fuel filter is located under the driver's seat. To bleed the fuel system, first tilt the driver's seatback forward. (Refer to "To Inspect the Engine Compartment Under the Driver's Seat." on page 1-12.)

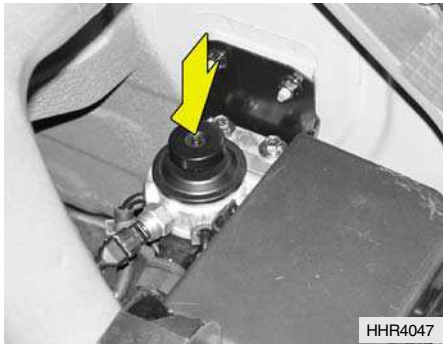
HHR4047

2. Pump the hand pump until there are no more bubbles in the fuel coming out of the air plug. When doing this, place a cloth around the air plug to prevent the escaping fuel from spewing about.
3. Tighten the air plug when there are no more bubbles in the fuel.
4. Continue pumping until the hand pump becomes stiff.
5. Finally, check to be sure that there is no leakage of fuel.
   If in doubt, consult your nearest authorized HYUNDAI dealer.

WARNING:

- **Do not smoke or have any other open flame near the vehicle while bleeding the fuel system.**
- **Be sure to carefully clean away any fuel which spilled onto nearby parts coming out of the air plug, because such accumulations of fuel might ignite and cause a fire.**

G300A01HR-GAT

REMOVAL OF WATER FROM THE FUEL FILTER

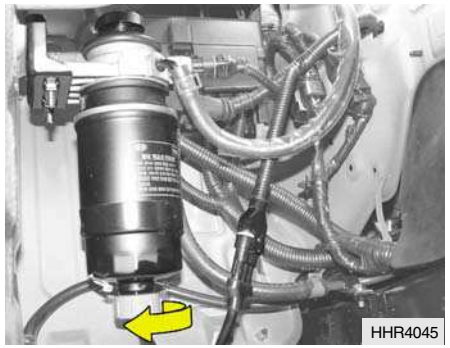
HHR4045

If the fuel filter warning light illuminates during driving, it indicates that water has accumulated in the fuel filter. If this occurs, remove the water as described below.

1. Loosen the drain plug at the bottom of the fuel filter.

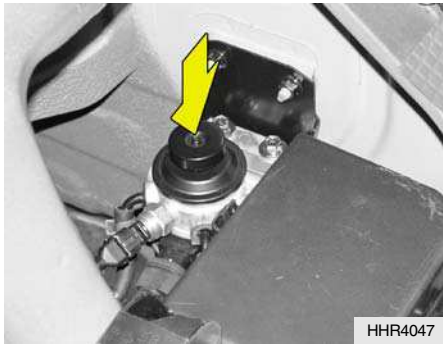
HHR4047

2. Operate the hand pump slowly 6 or 7 times in order to force the water out through the drain plug.
3. Tighten the drain plug when water no longer comes out.
4. Loosen the air plug and bleed the air. (Refer to "Bleeding the fuel system")
5. Check to be sure that the warning light illuminates when the ignition key is turned to "ON", and that it goes off when the engine is started. If in doubt, consult your nearest authorized HYUNDAI dealer.

NOTE:
It is recommended that water accumulated in the fuel filter should be removed by an authorized Hyundai dealer.

WARNING:
- **Do not smoke or have any other open flame near the vehicle while bleeding the fuel system.**
- **Be sure to carefully wipe away any water drained out in this manner, because the fuel mixed in the water might be ignited and result in a fire.**

HEADLIGHT AIMING ADJUSTMENT

G290A01FC-GAT

Before performing aiming adjustment, make sure of the following.

1. Keep all tires inflated to the correct pressure.
2. Place the vehicle on level ground and press the front bumper and rear bumper down several times. Place the vehicle at a distance of 3,000 mm (118 in.) from the test wall.
3. See that the vehicle is unloaded (except for full levels of coolant, engine oil and fuel, and spare tire, jack, and tools).
4. Clean the head lights lens and turn on the headlight (low beam).
5. Open the hood.
6. Draw the vertical line (through the center of each headlight beam pattern) and the horizontal line (through the center of each headlight beam pattern) on the aiming screen.

   And then, draw a horizontal parallel line at 30 mm (1.18 in.) under the horizontal line.

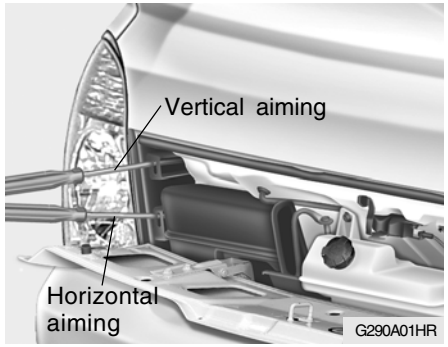

7. Adjust each cut-off line of the low beam to the parallel line with a phillips screwdriver - VERTICAL AIMING.
8. Adjust each cut-off line of the low beam to each vertical line with a phillips screwdriver - HORIZONTAL AIMING.

G290B01HR-GAT

Adjustment After Headlight Assembly Replacement

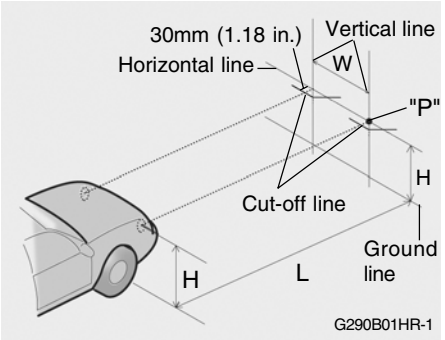

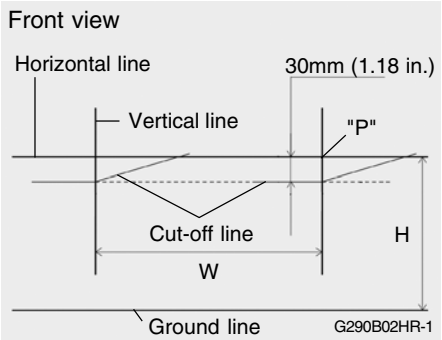

If the vehicle has had front body repair and the headlight assembly has been replaced, an headlight aiming should be checked using an aiming screen as shown in the illustration. Turn on the headlight switch. (Low Beam Position)

1. Adjust headlights so that main axis of light is parallel to center line of the body and is aligned with point "P" shown in the illustration.
2. Dotted lines in the illustration show the center of headlights.

SPECIFICATIONS:

"H"
Horizontal center line of headlights from ground.
Low Deck: 815 mm (32.1 in.)
High Deck: 820 mm (32.3 in.)

"W"
Distance between each headlight center : 1,330 mm (52.4 in.)

"L"
Distance between the headlights and the wall that the lights are tested against.
: 3,000 mm (118 in.).

REPLACEMENT OF LIGHT BULBS

G260A03A-AAT

Before attempting to replace a light bulb, be sure the switch is turned to the "OFF" position.
The next paragraph shows how to reach the light bulbs so they may be changed. Be sure to replace the burned-out bulb with one of the same number and wattage rating.
See page 6-37 for the wattage descriptions.

CAUTION:

- **Keep the lamps out of contact with petroleum products, such as oil, gasoline, etc.**
- **After heavy, driving rain or washing, headlight and taillight lenses could appear frosty. This condition is caused by the temperature difference between the lamp inside and outside. This is similar to the condensation on your windows inside your vehicle during the rain and doesn't indicate a problem with your vehicle. If the water leaks into the lamp bulb circuitry, have the vehicle checked by an Authorized Hyundai Dealer.**

G270A01HR-GAT

Headlight Bulb

1. Allow the bulb to cool. Wear eye protection.
2. Always grasp the bulb by its terminal plate base, avoid touching the glass.

3. Open the door and remove a headlight assembly mounting screw with a philips screwdriver.

4. Open the hood and remove a headlight assembly mounting bolt with a spanner.

5. Disconnect the power cord from the bulb base in the back of the headlight.

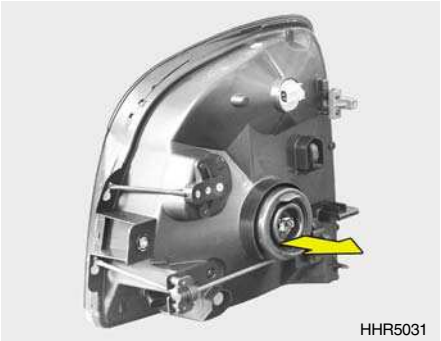

6. Remove the dust cover.

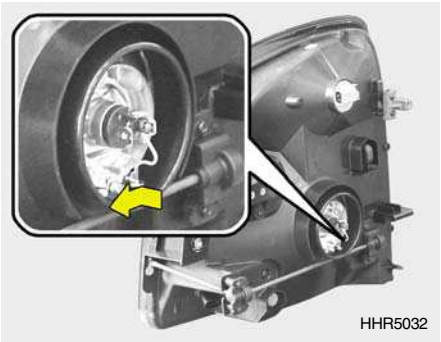

7. Push the bulb spring to remove the headlight bulb.

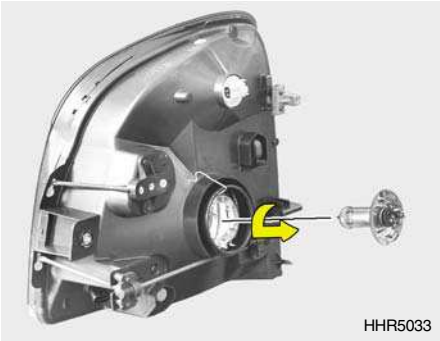
HHR5033

8. Remove the protective cap from the replacement bulb and install the new bulb by matching the plastic base with the headlight hole. Reattach the bulb spring and install the dust cover. Reconnect the power cord.
9. Use the protective cap and carton to dispose of the old bulb.
10. Check for proper headlight aim.

G270A03O

WARNING:
The halogen bulb contains gas under pressure and if impacted could shatter, resulting in flying fragments. Always wear eye protection when servicing the bulb. Protect the bulb against abrasions or scratches and against liquids when lighted. Turn the bulb on only when installed in a headlight. Replace the headlight if damaged or cracked. Keep the bulb out of the reach of children and dispose of the used bulb with care.

G270B01HR-GAT

Front Turn Signal light / Position Light

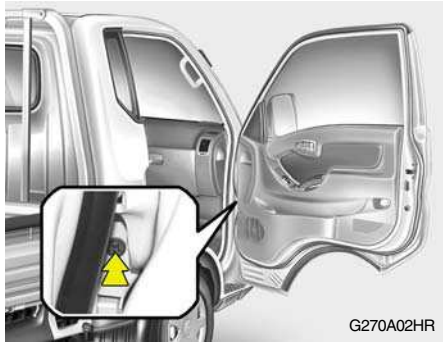
G270A02HR

1. Open the door and remove a headlight assembly mounting screw with a philips screwdriver.

G270A01HR

2. Open the hood and remove a head-light assembly mounting bolt with a spanner.

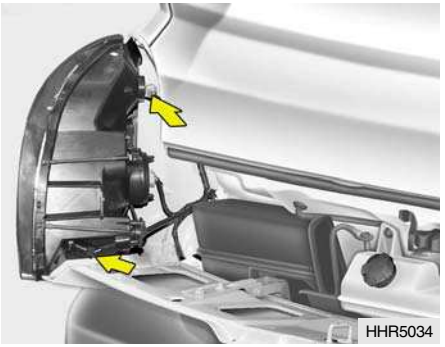

3. Disconnect the power cord from the bulb.

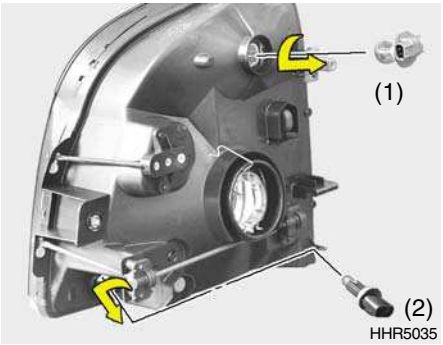

4. To replace the front turn signal light (1) or position light (2), take it out from the bulb holder by turning it counterclockwise.
5. Install the new bulb.

G270D01HR-GAT

Rear Combination Light

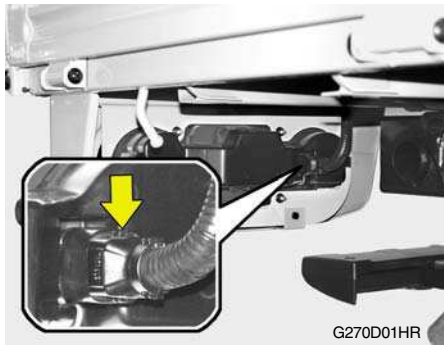

1. Disconnect the power cord from the bulb.

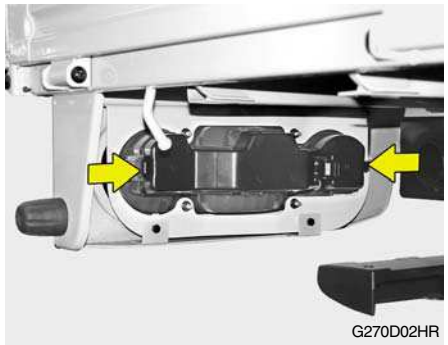

2. Remove the cover by pressing the both sides of the cover.

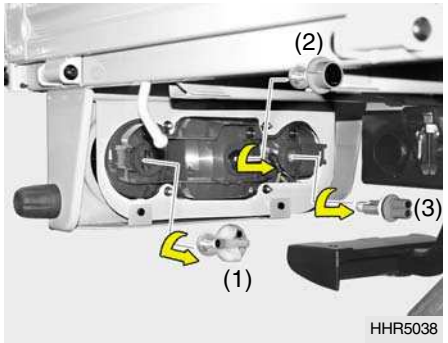

3. To replace the rear combination light (stop/tail light, turn signal light or back-up light), take it out from the bulb holder by turning it counter-clockwise.

(1) Turn Signal Light
(2) Stop/Tail Light
(3) Back-up Light

4. Install the new bulb.

G270I01HR-GAT

License Plate Light

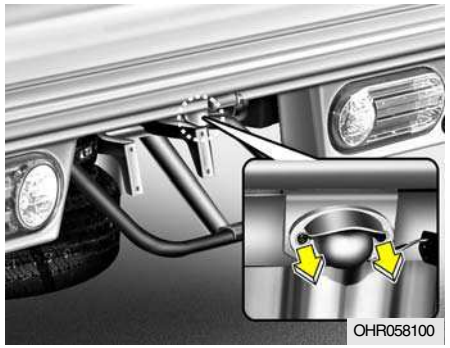

1. Remove the mounting screws of the license plate light with a phillips screwdriver.

2. Take the bulb out from the bulb holder by turning it counterclockwise and disconnect the power code.
3. Install the new bulb.

G270E01A-GAT

Side Repeater (If Installed)

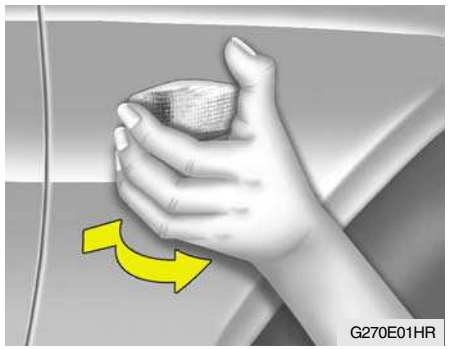

1. Push the cover toward the front of vehicle and remove it.

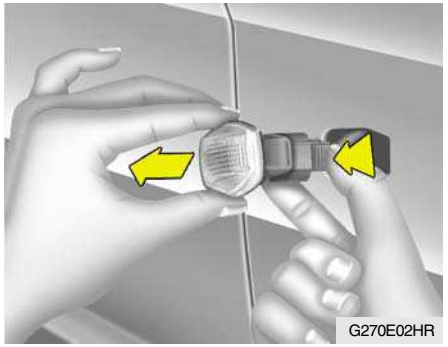

2. Disconnect the power code.

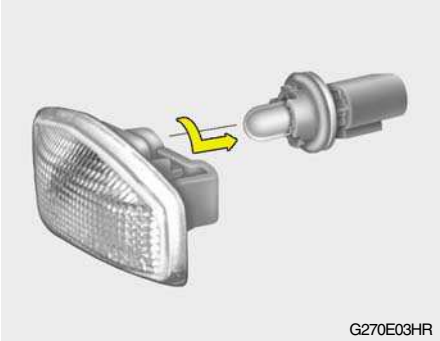

3. Replace with a new bulb.

G270F02HR-GAT

Rear Fog Light (If Installed)

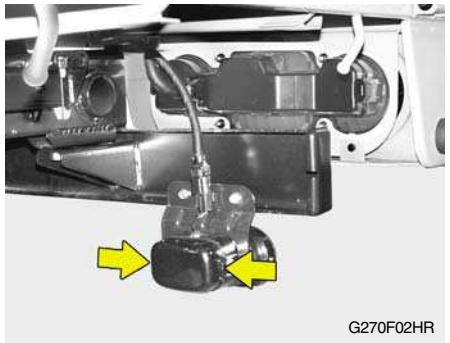

1. Remove the cover by pressing the both sides of the cover.

2. Take the bulb out from the bulb holder by turning it counterclockwise.
3. Replace with a new bulb. (21 W)

G270G01HR-GAT

Map Light (If installed, With Spectacle Case)

1. Remove the cover with a flat-head screwdriver.

2. Replace with a new bulb.

G270H01HR-GAT

Interior Light (If installed, Without Spectacle Case)

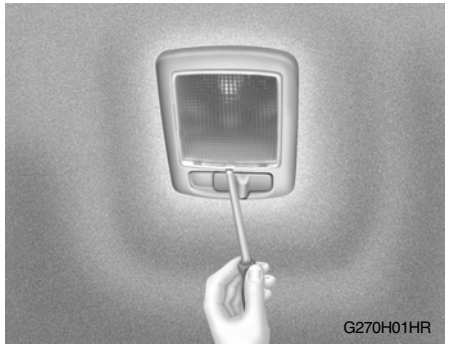

1. Remove the cover with a flat-head screwdriver.

2. Replace with a new bulb.

BULB WATTAGES

G280A03HR-GAT

OHR058102

No.	Part Name	Wattage	Socket Type	No.	Part Name		Wattage	Socket Type
1	Front Fog Light (If Installed)	27	PG13	7	Interior Light (If installed, Without Spectacle Case)		10	S8.5/8.5
2	Front Position Light	5	W2.1 x 9.5D					
3	Headlight (High/Low)	60/55	P43t-38	8	Rear Combination Light	Turn Signal Light	21	BA 15s
4	Front Turn Signal Light	21	BA 15s	9		Stop/Tail Light	21/5	BAY 15d
5	Side Repeater (If Installed)	5	W2.1 x 9.5D	10		Back-up Light	16	W2.1 x 9.5D
6	Map Light (If installed, With Spectacle Case)	10	W2.1 x 9.5D	11	License Plate Light		5	W2.1 x 9.5D

FUSE PANEL DESCRIPTION

G200C01HR-GAT

Engine Compartment

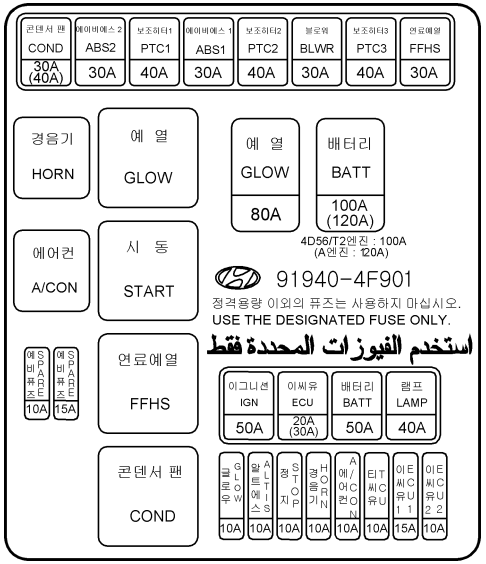

G200C02HR

DESCRIPTION		AMPERAGES	CIRCUIT PROTECTED
FUSIBLE LINK	BATT	100A	Generator
	GLOW	80A	Glow relay
	IGN	50A	Start relay, Ignition switch
	ECU	20A	Engine control relay
	BATT	50A	I/P Fuse box (A/Con, Hazard, DR Lock), Power connector
	LAMP	40A	P/WDW fusible link, Front Fog fuse, Tail lamp relay
	COND	30A	Condenser fan relay
	ABS2	30A	Not used
	PTC1	40A	Not used
	ABS1	30A	Not used
	PTC2	40A	Not used
	BLWR	30A	Blower relay
	PTC3	40A	Not used
	FFHS	30A	Not used
FUSE	GLOW	10A	ECM
	ALT_S	10A	Generator
	STOP	10A	Stop lamp switch
	HORN	10A	Horn relay
	A/CON	10A	A/Con relay
	TCU	10A	Not used
	ECU1	15A	Not used
	ECU2	10A	Not used

NOTE:

Not all fuse panel descriptions in this manual may be applicable to your vehicle. It is accurate at the time of printing. When you inspect the fuse box on your vehicle, refer to the fuse box label.

G200E01HR-GAT

Inner Panel

USE THE DESIGNATED FUSE ONLY.

정격용량 이외의 휴즈는 사용하지 말것.

استخدم الفيوزات المحددة فقط

P/WINDOW 파워 윈도우 30A

ROOM LP 실내등 15A

91940-4F490

SPARE FUSE 예비 휴즈

SPARE FUSE 예비 휴즈

SPARE FUSE 예비 휴즈

DIODE 다이오드 ⇩	START 시동	FRT FOG 전방안개등	H/LP LH 전조등 (좌)	H/LP RH 전조등 (우)	IGN2 이그니션2	WIPER 와이퍼	RR FOG 시트열선	C/LIGHT 시가라이터	P/OUT 파워아웃렛	AUDIO 오디오	RR P/WDW 리어파워 윈도우	PTO 동력인출장치	특장용		
	10A	10A	10A	10A	10A	20A	10A	15A	15A	10A	25A	10A	10A		
DIODE 다이오드 ⇩	TAIL RH 미등 (우)	TAIL LH 미등 (좌)	A B S 에이비에스	CLUSTER 계기판	ECU 이시유	T/SIG 방향등	IGN1 이그니션1	IGN COIL 이그니션코일	O/S MIRR FOLD'G 전동접이식 미러	PTC HTR 보조히터	HTD MIRR 열선미러 / HTD GLASS 열선유리	HAZARD 비상등	DR LOCK 도어 록		
	10A	10A	10A	10A	10A	10A	10A	10A	10A	10A	10A / 15A	15A	15A		

G200E02HR

DESCRIPTION		AMPERAGES	CIRCUIT PROTECTED
FUSIBLE LINK	P/WINDOW	30A	Power window relay
FUSE	START	10A	Start relay, Glow control module, ECM
	FRT FOG	10A	Front fog lamp relay
	H/LP LH	10A	Left head lamp, Instrument cluster
	H/LP RH	10A	Right head lamp
	IGN 2	10A	Heater control switch, ETACM, Head lamp leveling switch, Blower relay
	WIPER	20A	Wiper motor, Multi-function switch
	RR FOG	10A	Rear fog lamp relay
	C/LIGHT	15A	Cigarette lighter
	P/OUT	15A	Not used
	AUDIO	10A	Audio
	RR P/WDW	25A	Power window switch
	PTO	10A	Not used
	TAIL RH	10A	Right position lamp, Right rear combination lamp, License plate lamp
	THIL LH	10A	Left position lamp, Left rear combination lamp
	ABS	10A	Not used
	CLUSTER	10A	Instrument cluster, Generator resister
	ECU	10A	ECM
	T/SIG	10A	Hazard switch, Back-up lamp switch
	IGN 1	10A	ETACM
	IGN COIL	10A	EGR solenoid valve #1, #2 (2.5 TCI), Glow control module (2.6 N/A), Fuel water sensor, Neutral switch
	O/S MIRR FOLD'G	10A	Not used
	PTC HTR	10A	Heater control switch
	HTD GLASS	15A	Rear window defroster switch
	HAZARD	15A	Hazard switch
	DR LOCK	15A	ETACM, Left front door lock actuator
	ROOM LP	15A	Room lamp, Door warning switch, Audio, ETACM

EMISSION CONTROL SYSTEM

Emission Control System 7-2
Catalytic Converter 7-2
EGR System 7-3

7

EMISSION CONTROL SYSTEM

H010A01HR-GAT

(If Installed)

Your Hyundai is equipped with an emission control system to meet all requirements of the Emission prohibition rules of your province.

In order to assure the proper function of the emission control systems, it is recommended that you have your car inspected and maintained by an authorized Hyundai dealer in accordance with the maintenance schedule in this manual.

H010D01A-AAT

Exhaust Emission Control System

The exhaust emission control system is a highly effective system which controls exhaust emission while maintaining good vehicle performance.

CATALYTIC CONVERTER

H020D03HR-GAT

(If Installed)

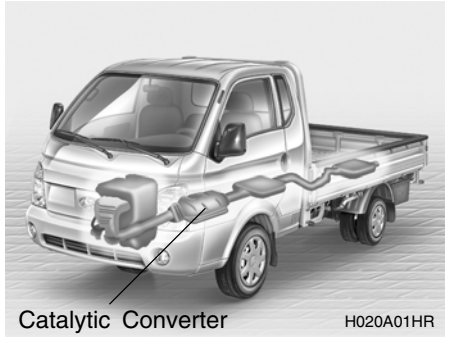

Hyundai vehicle is equipped with oxidation type catalytic converter to reduce the carbon monoxide, hydrocarbons and particulates contained in the exhaust gas.

WARNING:

- **Use diesel only.**
- **Maintain the engine in good operating condition. Extremely high catalytic converter temperatures can result from improper operation of the electrical, ignition or electronic fuel injection.**
- **If your engine stalls, pings, or is hard to start, have your Hyundai dealer inspect and repair the problem as soon as possible.**
- **Avoid driving with a very low fuel level. Running out of diesel may cause the engine to stop and result in damage to the catalytic converter.**
- **Avoid idling the engine for periods longer than 10 minutes.**
- **The vehicle should not be pushed or pulled to get started. This may cause the catalytic converter to overheat and create a fire hazard.**
- **Do not touch the catalytic converter or any other part of the exhaust system while the catalytic converter is hot. Shut off the engine, wait for at least one hour before touching the catalytic converter or any other part of the exhaust system.**
- **Remember that your Hyundai dealer is your best source of assistance.**
- **Do not park, idle or drive your vehicle over any combustible material such as grass, paper, leaves or rags. These materials might contact the hot catalytic converter and a fire might result.**

H020C01HR-GAT

(If Installed)

This system helps control oxides of nitrogen by recirculating a part of the exhaust gas into the engine, there by reducing cylinder combustion temperature.
The EGR system helps reduce Nox (Oxides of Nitrogen) emission gasses.

CONSUMER INFORMATION

Vehicle Identification Number (VIN) 8-2
Engine Number 8-2
Recommended Inflation Pressures 8-3
Snow Tires 8-4
Tire Chains 8-4
Tire Rotation 8-4
Tire Balancing 8-5
Tire Traction 8-5
When to Replace Tires 8-5
Spare Tire and Tools 8-6

8

2 VEHICLE IDENTIFICATION NUMBER (VIN)

I010A01HR-GAT

The vehicle identification number (VIN) is the number used in registering your car and in all legal matters pertaining to its ownership, etc.
It can be found on the identification plate attached on the driver's side of the center pillar outer panel.

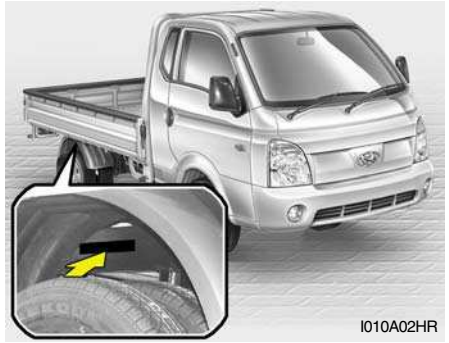

The vehicle identification number is stamped as shown in the illustration. Please use this number when ordering replacement parts.

ENGINE NUMBER

I010B01A-GAT

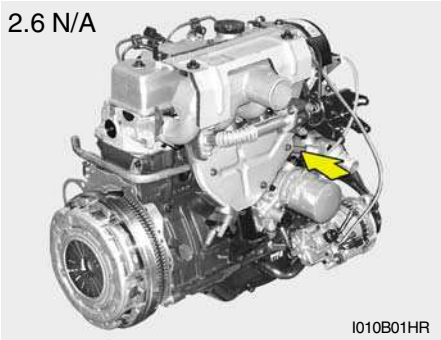

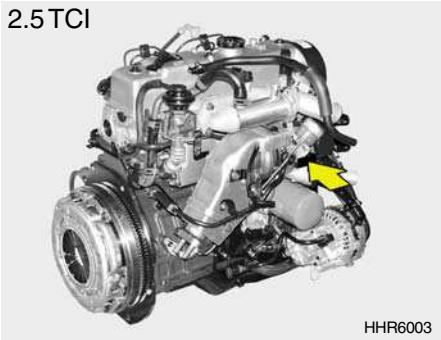

The engine number is stamped on the engine block as shown in the drawing.

TIRE

I020A01A-AAT

TIRE INFORMATION

The tires supplied on your new Hyundai are chosen to provide the best performance for normal driving.

I030A01HR-GAT

RECOMMENDED INFLATION PRESSURES

The tire label located on the driver's side of the center pillar outer panel gives the tire pressures recommended for your car.

TIRE SIZE		TIRE INFLATION PRESSURE	
		FRONT	REAR
195/70R15C-6PR		290kPa (42PSI)	-
155R12C-8PR	Low Deck (STD)	-	340kPa (50PSI)
	Low Deck (DBL)	-	440kPa (64PSI)
195/70R15C-8PR	High Deck	-	440kPa (64PSI)

These pressures were chosen to provide the most satisfactory combination of ride comfort, tire wear and stability under normal conditions. Tire pressures should be checked at least monthly. Proper tire inflation pressures should be maintained for these reasons:

- o Lower-than-recommended tire pressures cause uneven tread wear and poor handling.
- o Higher-than-recommended tire pressures increase the chance of damage from impacts and cause uneven tread wear.

CAUTION:

Always observe the following:

- **o Check pressures when the tires are cold. That is, after the car has been parked for at least three hours and hasn't been driven more than 1.6 km or one mile since starting up.**
- **o Check the pressure of your spare tire each time you check the pressure of other tires.**

I040A02S-GAT

SNOW TIRES

If you equip your car with snow tires, they should be the same size and have the same load capacity as the original tires. Snow tires should be installed on all four wheels; otherwise, poor handling may result.
Snow tires should carry 28 kPa (4 psi) more air pressure than the pressure recommended for the standard tires on the tire label on the driver's door edge, or up to the maximum pressure shown on the tire sidewall whichever is less.
Do not drive faster than 120 km/h (75 mph) when your car is equipped with snow tires.

I050A01HR-GAT

TIRE CHAINS

Tire chains, if necessary should be installed on the rear wheels. Be sure that the chains are installed in accordance with the manufacturer's instructions.
To minimize tire and chain wear, do not continue to use tire chains when they are no longer needed.

WARNING:

- **When driving on roads covered with snow or ice, drive at less than 30 km/h (20 mph).**
- **Use the SAE "S" class or wire & plastic chains.**
- **If you have noise caused by chains contacting the body, retighten the chain to avoid contact with the vehicle body.**
- **To prevent body damage, retighten the chains after driving 0.5 ~ 1 km.**

I060A01HP-GAT

TIRE ROTATION

With Spare tire

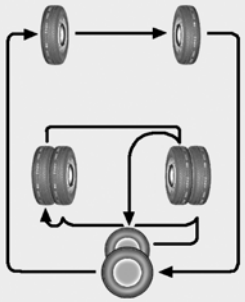

HHR5019

Without Spare tire

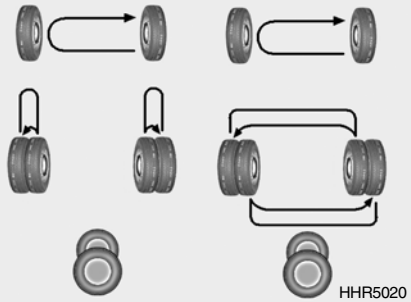

HHR5020

Tires should be rotated every 5,000 km (3,000 miles). If you notice that tires are wearing unevenly between rotations, have the car checked by a Hyundai dealer so the cause may be corrected. After rotating, adjust the tire pressures and be sure to check wheel nut torque.

WARNING:
Do not mix bias-ply and radial-ply tires under any circumstances. This may cause dangerous handling characteristics.

I070A01A-AAT
TIRE BALANCING

A tire that is out of balance may affect handling and tire wear. The tires on your Hyundai were balanced before the car was delivered but may need balancing again during the years you own the car.
Whenever a tire is dismounted for repair, it should be rebalanced before being reinstalled on the car.

I080A01A-AAT
TIRE TRACTION

Tire traction can be reduced if you drive on worn tires, tires that are improperly inflated or on slippery road surfaces. Tires should be replaced when tread wear indicators appear. To reduce the possibility of losing control, slow down whenever there is rain, snow or ice on the road.

I090A01S-GAT
WHEN TO REPLACE TIRES

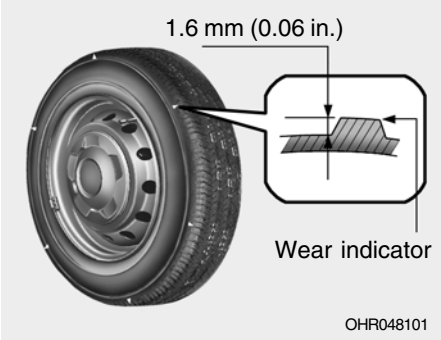

The original tires on your car have tread wear indicators. The tread wear indicators appear when the tread depth is 1.6 mm (0.06 in.). The tire should be replaced when these appear as a solid bar across two or more grooves of the tread. Always replace your tires with those of the recommended size. If you change wheels, the new wheel's rim width and offset must meet Hyundai specification.

WARNING:
- **Driving on worn-out tires is dangerous! Worn-out tires can cause loss of braking effectiveness, steering control and traction. When replacing tires, never mix radial and bias-ply tires on the same car. If you replace radial tires with bias-ply tires, they must be installed in sets of four.**
- **Using tires and wheels of other than the recommended sizes may cause unusual handling characteristics that may cause death, serious injury or property damage.**

- **Tires degrade over time, even when they are not being used. Regardless of the remaining tread, it is recommended that tires tread, It is recommended that tires generally be replaced after 6 years of normal service. Heat caused by not climates or frequent high loading Conditions can accelerate the aging process. Failure to follow this Warning can result in sudden tire failure, which could lead to a loss of control and an accident involving serious injury or death.**

I100A03HR-GAT

SPARE TIRE AND TOOLS

Your Hyundai is delivered with the following:

Spare tire and wheel
Jack, Jack handle
Wheel nut wrench,
Spare tire carrier wrench