POWER STEERING SYSTEM

ON-VEHICLE INSPECTION

1. CHECK STEERING EFFORT (TORQUE)

NOTICE:

Some of these service operations may affect the SRS airbags. Read the precautionary notices concerning the SRS airbags before servicing.

(a) Stop the vehicle on a level, paved road and align the wheels facing straight ahead.

(b) Disconnect the cable from the negative battery terminal.

(c) Remove the steering pad (See page RS-309).

(d) Connect the cable to the negative battery terminal.

(e) Using a torque wrench, check that the steering wheel set nut is properly tightened.
Torque: 50 N*m (510 kgf*cm, 37 ft.*lbf)

(f) Turn the ignition switch to ON (the engine is stopped) so that the power steering is ready to operate.

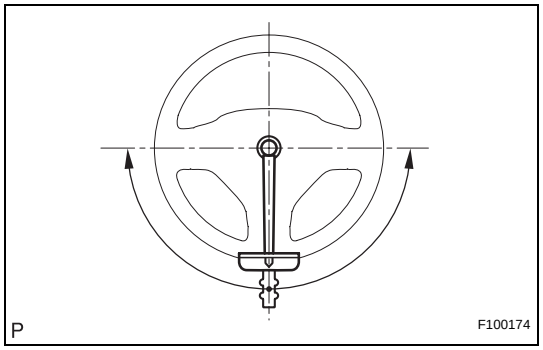

(g) Turn the steering wheel 90 degrees to the right and check the steering effort (torque) while turning. Check the opposite direction in the same manner.
Steering effort (Reference):
5.5 N*m (56 kgf*cm, 49 in.*lbf)

(h) Align the front wheels facing straight ahead.

(i) Disconnect the cable from the negative battery terminal.

(j) Install the steering pad (See page RS-310).

(k) Connect the cable to the negative battery terminal.

(l) Clear the DTCs (See page RS-38).

(m) Inspect the airbag warning light (See page RS-31).

2. CHECK STEERING WHEEL FREE PLAY

(a) Turn the ignition switch to ON so that the power steering is ready to operate.

(b) Align the wheels facing straight ahead.

(c) Gently turn the steering wheel right and left with your finger and check the steering wheel freeplay.
Maximum freeplay:
30 mm (1.18 in.)
HINT:
If the freeplay is outside the specifications, replace intermediate shaft No. 2 or the steering gear with a new one.

ELECTRONIC POWER STEERING SYSTEM

PRECAUTION

1. HANDLING PRECAUTION

(a) When handling the electronic parts;
- Avoid any impact to parts such as ECUs and relays. Replace with new ones if dropped or subjected to a severe blow.
- Do not expose to high temperatures or humidity.
- Do not touch the connector terminals, in order to prevent deformation or malfunctions due to static electricity.
- When the power steering ECU has been replaced with a new one, perform the torque sensor zero point calibration. (See page PS-12)

(b) When handling the steering column assembly;
- Avoid any impact to the steering column assembly, especially to the motor and torque sensor. Replace with new ones if dropped or subjected to a severe blow.
- Do not pull the wire harness when moving the steering column assembly.
- When the steering column assembly has been replaced, perform the torque sensor zero point calibration after initializing the torque sensor zero point. (See page PS-12)

(c) When disconnecting and reconnecting the connectors;
- When disconnecting the connectors related to the electronic power steering system, turn the ignition switch on, center the steering wheel, turn the ignition switch off, and then disconnect the connectors.
- When reconnecting the connectors related to the electronic power steering system, ensure that the ignition switch is off. Center the steering wheel and then turn the ignition switch on.
  NOTICE:
  Do not turn the ignition switch on when the steering wheel is not centered.
- If the above operations are not carried out properly, the steering center point (zero point) will deviate, which may lead to a difference in steering effort between turning right and left. If there is a difference in steering effort between turning right and left, perform the torque sensor zero point calibration. (See page PS-12)

2. PRECAUTIONS FOR CAN COMMUNICATION

(a) CAN communication lines are used to receive information from the skid control ECU (ABS ECU) and the ECM, and to transmit warnings to the combination meter. When there are any problems in the CAN communication lines, DTCs of the CAN communication line are output.

(b) Perform troubleshooting of the communication line problems when the CAN communication DTCs are output. Be sure to start troubleshooting on the electronic power steering system after confirming that the CAN communication system is normal.

(c) Since the CAN communication line has its own length and route, it cannot be repaired temporarily with the bypass wire, etc.

PARTS LOCATION

HATCHBACK:

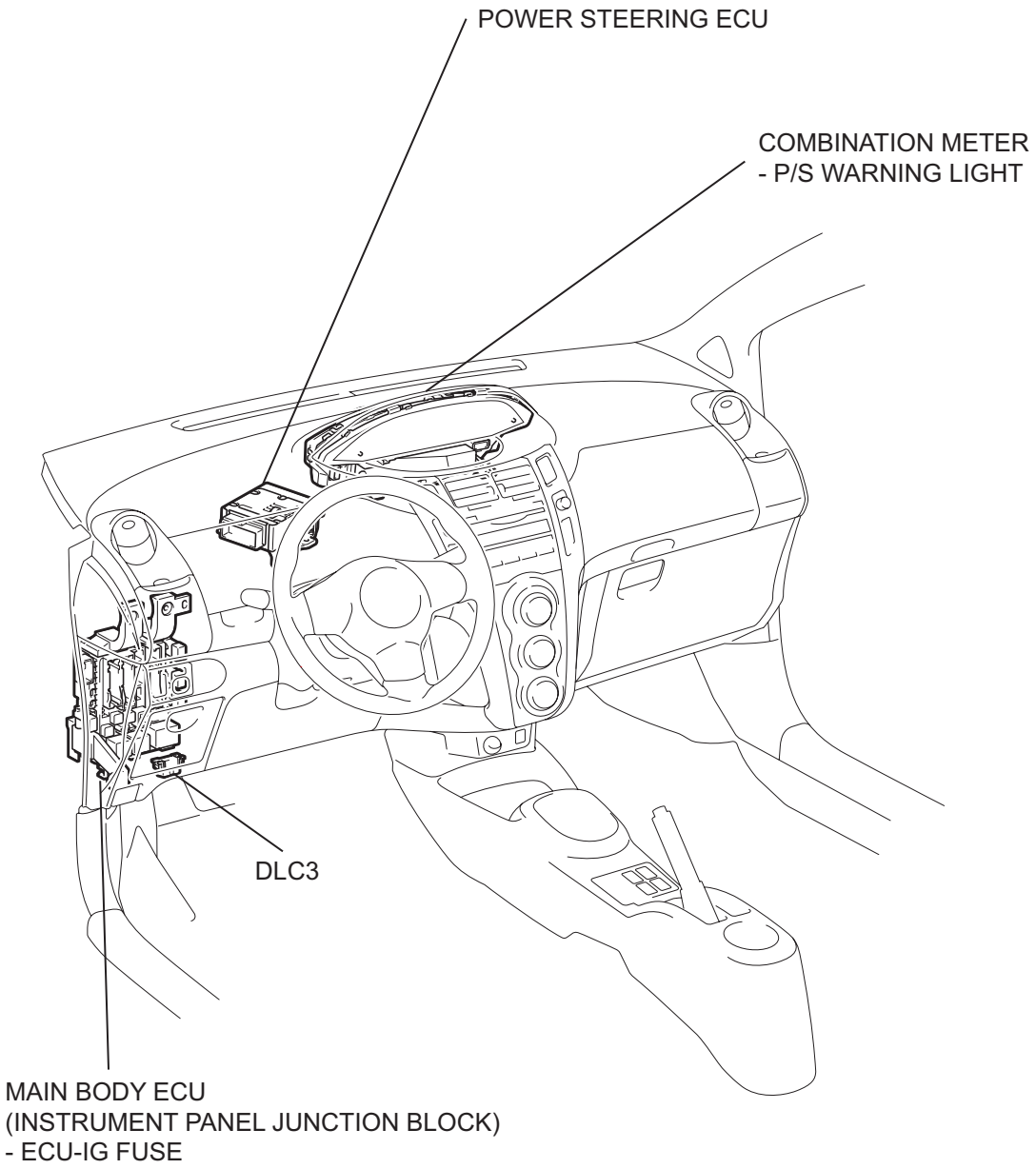

C117896E02

HATCHBACK:

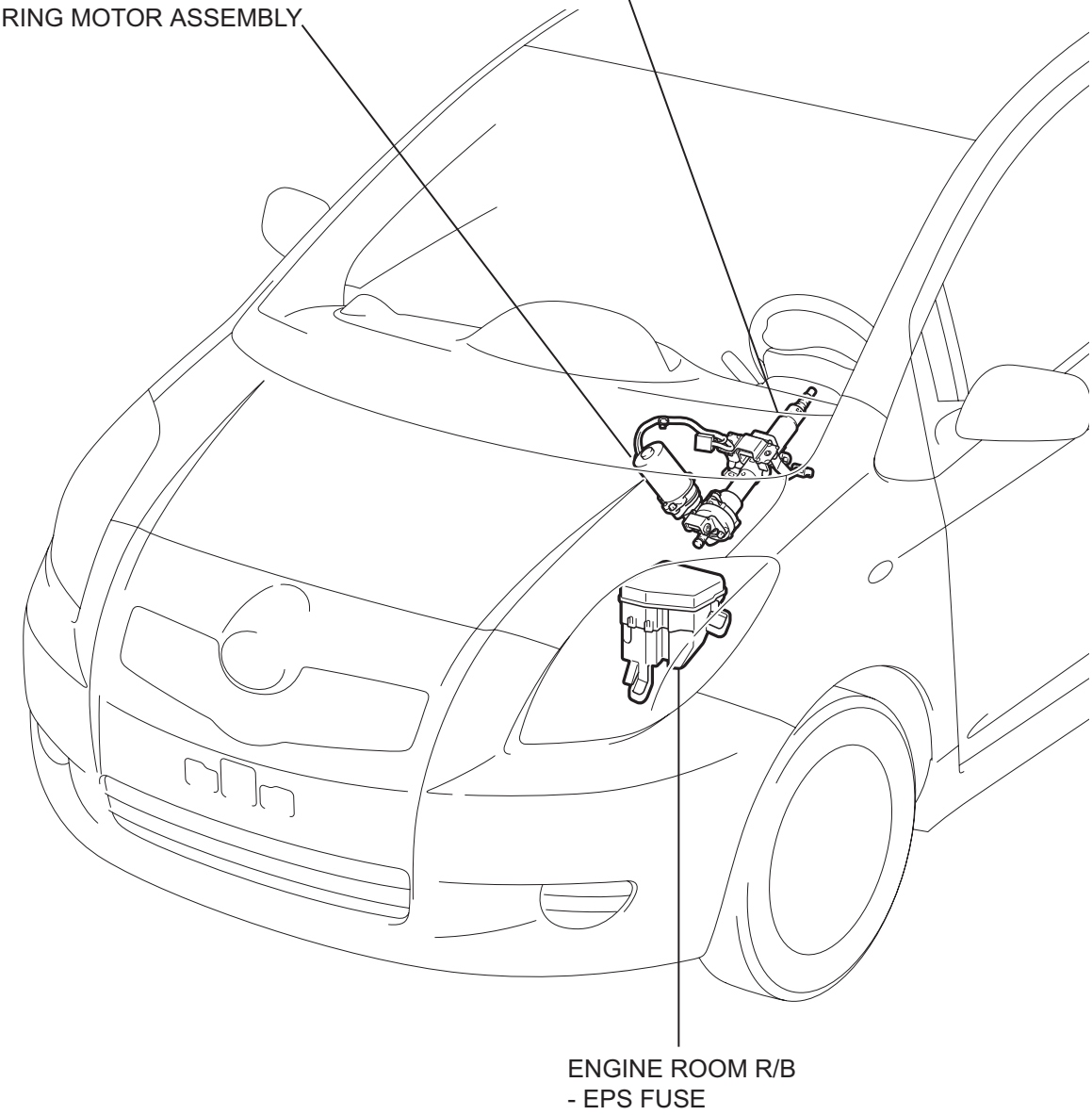

P

C117899E02

SEDAN:

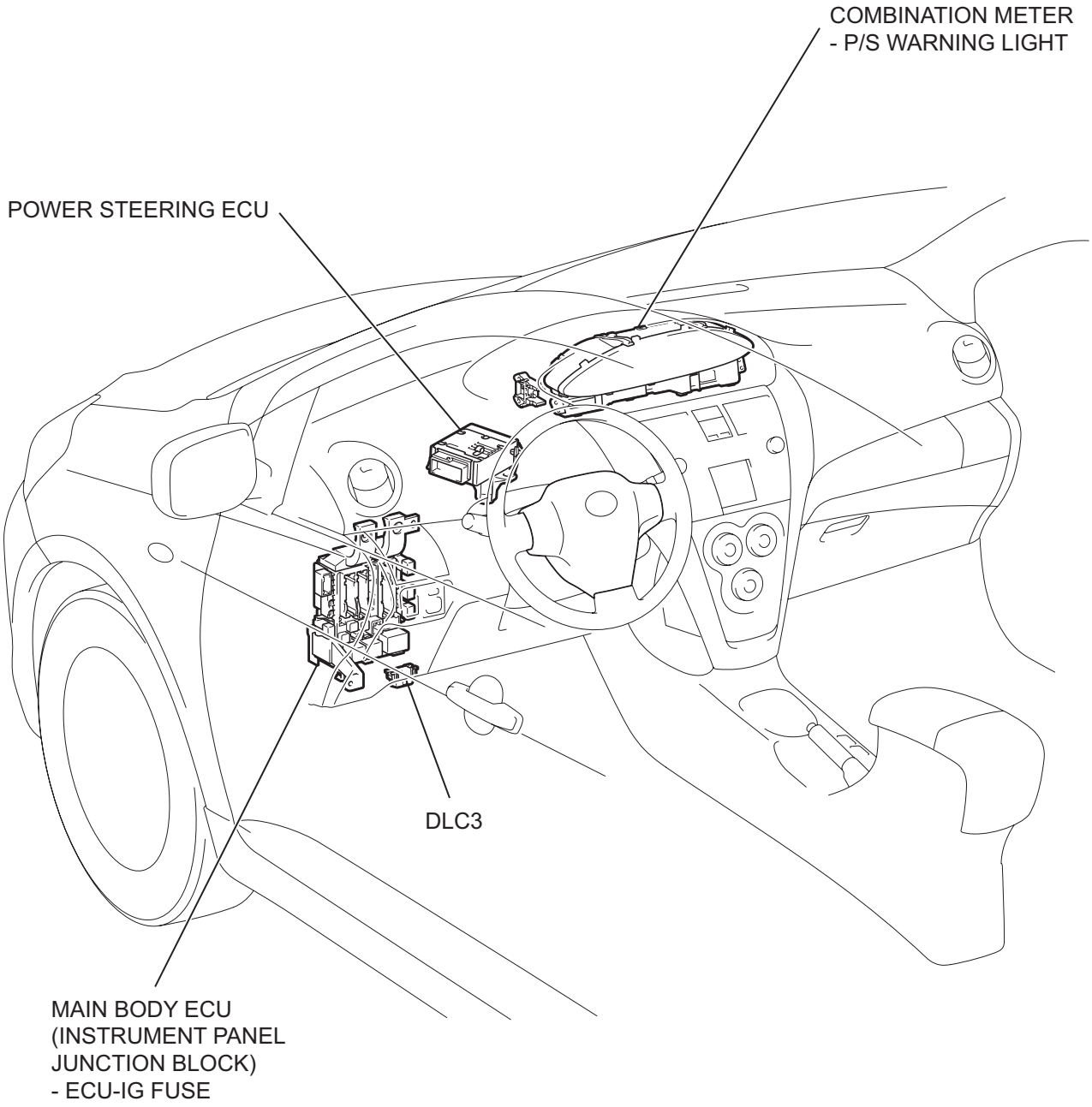

P

C138624E03

SEDAN:

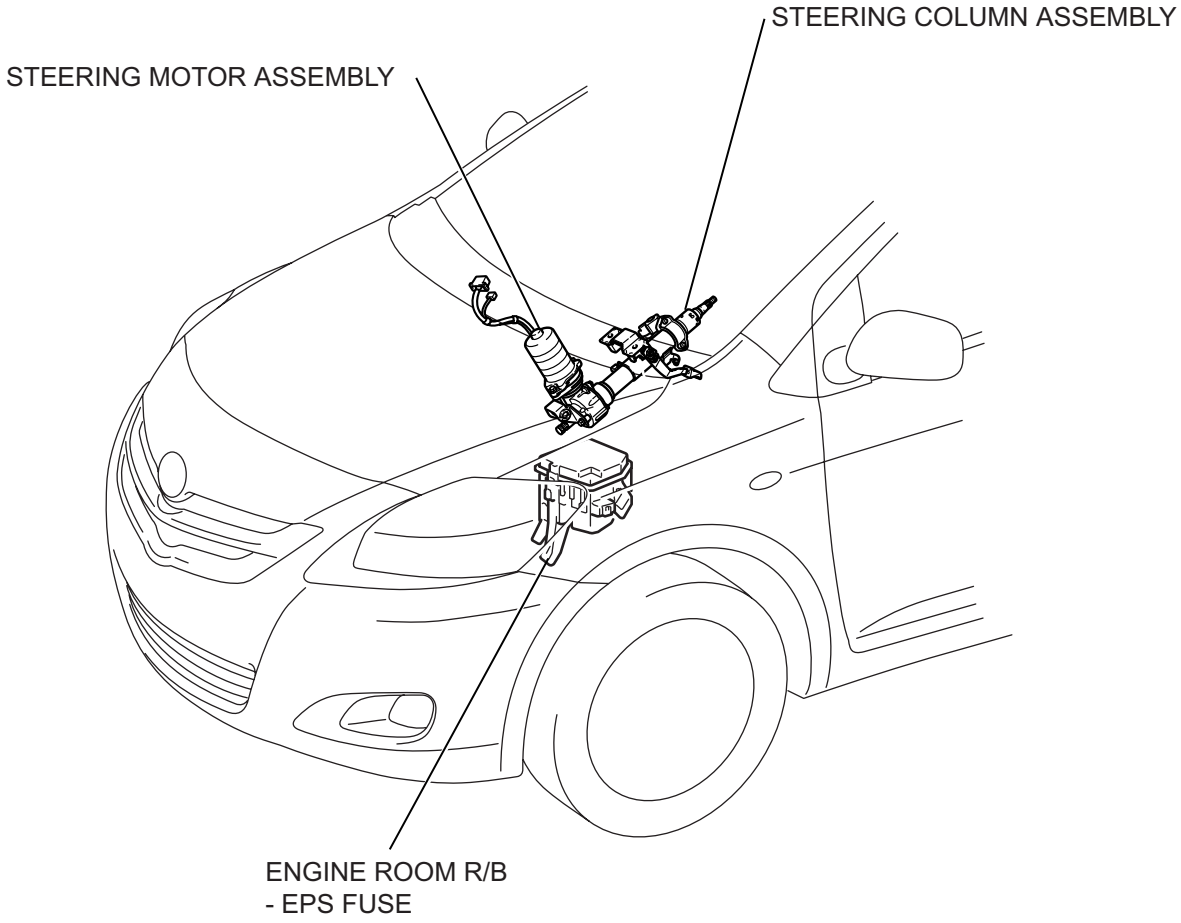

C138622E02

SYSTEM DIAGRAM

w/ ABS:

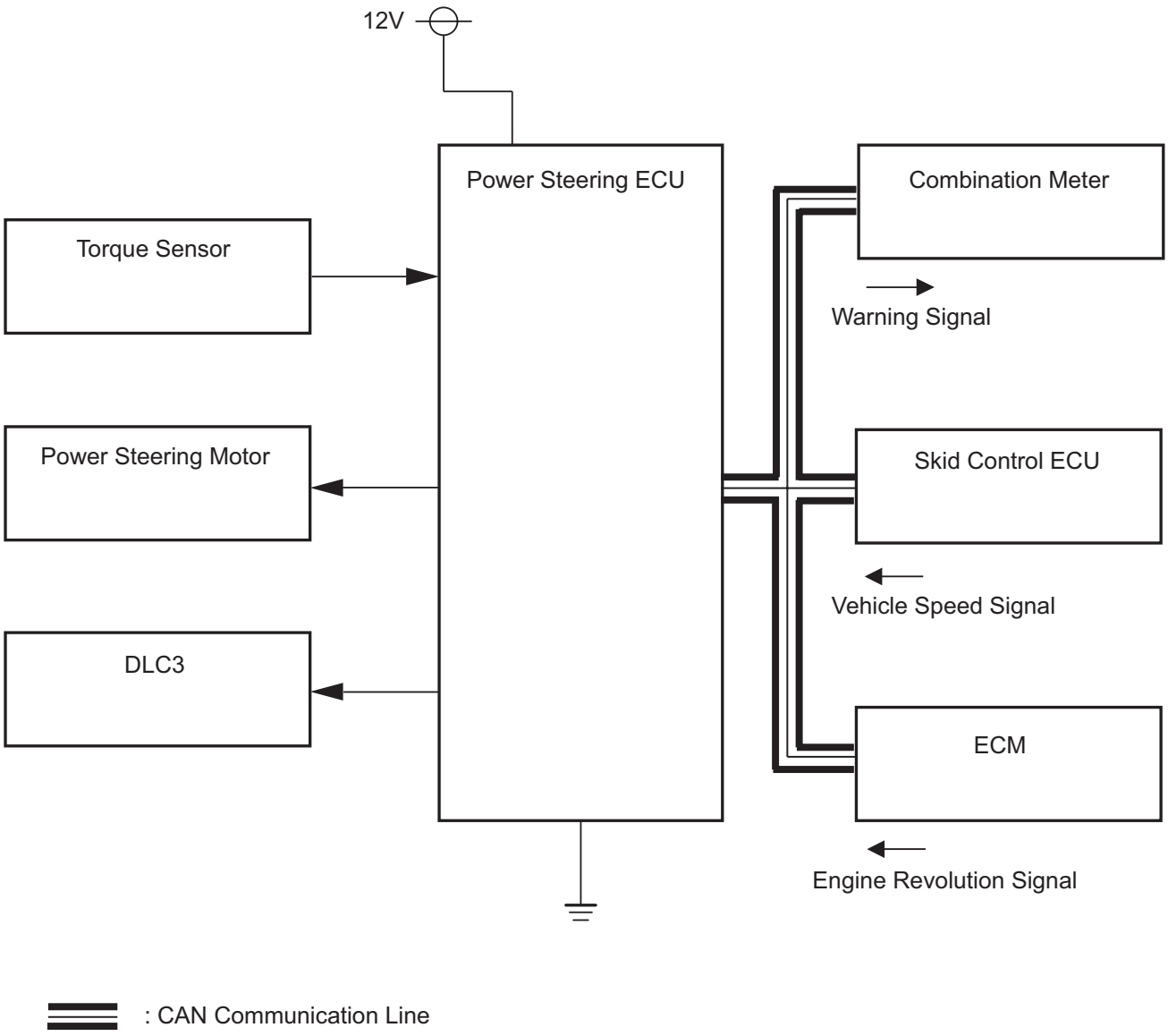

w/o ABS:

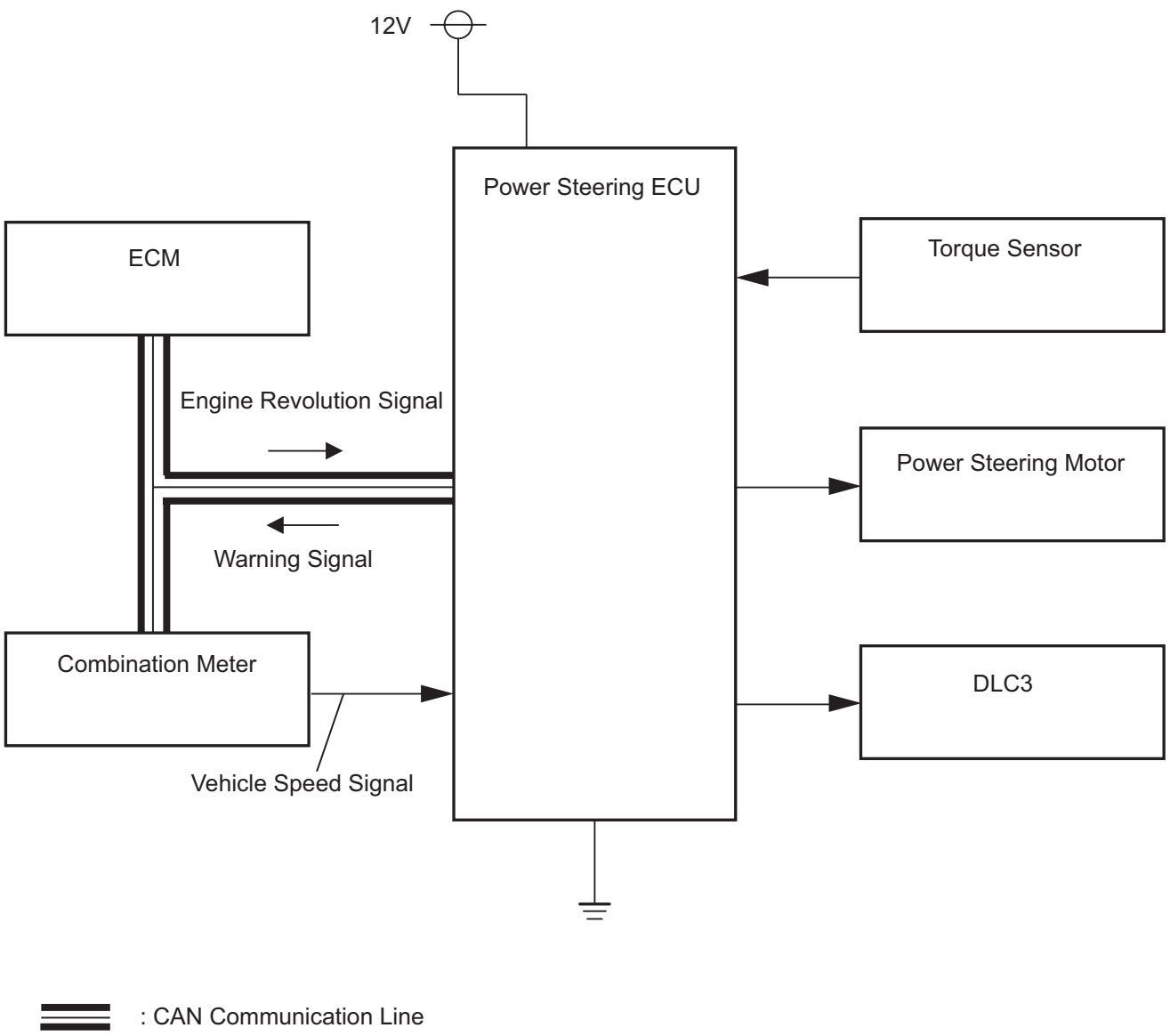
12V
Power Steering ECU
ECM
Torque Sensor
Engine Revolution Signal
Power Steering Motor
Warning Signal
Combination Meter
DLC3
Vehicle Speed Signal
: CAN Communication Line
C122331E01

SYSTEM DESCRIPTION

1. DESCRIPTION

The EPS (Electronic Power Steering) system generates torque through the operation of the motor and the reduction gear installed on the column shaft in order to assist power steering effort.

The power steering ECU determines the direction and the amount of assisting power in accordance with the vehicle speed signals and signals from the torque sensor built into the steering column assembly. As a result, steering effort is controlled to be light during low speed driving and moderately high during high speed driving.

(a) Power steering ECU:
The power steering ECU calculates assisting power based on steering torque signals from the torque sensor and vehicle speed signals from the skid control ECU.
For vehicles without ABS, the power steering ECU receives vehicle speed signals from the speedometer.

(b) Torque sensor:
The torque sensor detects the steering effort generated when the steering wheel is turned and converts it to an electrical signal.

(c) EPS motor:
The EPS motor is activated by the current from the power steering ECU and generates torque to assist the steering effort.

HOW TO PROCEED WITH TROUBLESHOOTING

Perform troubleshooting according to the following flowchart.
HINT:
For further details, see the page given.
The intelligent tester can be used in steps 3, 4, 7, 10 and 13.

1 VEHICLE BROUGHT TO WORKSHOP

NEXT

2 CUSTOMER PROBLEM ANALYSIS

NEXT

3 CHECK DTC AND FREEZE FRAME DATA

(a) Record DTCs and freeze frame data. (See page PS-25)

NEXT

4 CLEAR DTC AND FREEZE FRAME DATA

HINT:
Clear DTC and FREEZE FRAME DATA (See page PS-25).

NEXT

5 PROBLEM SYMPTOM CONFIRMATION

SYMPTOM DOES NOT OCCUR: GO TO STEP 6

SYMPTOM OCCURS: GO TO STEP 7

6 SYMPTOM SIMULATION

NEXT

7 CHECK DTC

(a) Recheck for DTCs (See page PS-25).
HINT:
- Refer to the diagnostic trouble code chart when any DTCs are output.

- When any CAN communication system DTCs are output, perform troubleshooting on the CAN communication system first.
- When communication to the power steering ECU is not established through the intelligent tester, inspect terminals SIL of the DLC3 and the power steering ECU, and the IG circuit of the power steering ECU.

NORMAL SYSTEM CODE OUTPUT: GO TO STEP 8

DTC OUTPUT: GO TO STEP 9

8	PROBLEM SYMPTOMS TABLE

HINT:
Refer to PROBLEM SYMPTOMS TABLE (See page PS-21).

NEXT

9	DTC CHART

HINT:
Refer to DIAGNOSTIC TROUBLE CODE CHART (See page PS-29).

NEXT

10	CIRCUIT INSPECTION

NEXT

11	PROBLEM IDENTIFICATION

NEXT

12	REPAIR OR REPLACE

NEXT

13	CONFIRMATION TEST

NEXT

PS

END

CALIBRATION

1. TORQUE SENSOR ZERO POINT CALIBRATION (USING INTELLIGENT TESTER)

NOTICE:

Perform the torque sensor zero point calibration when any of the following conditions occur.

- The steering column assembly (containing the torque sensor) has been replaced.
- The power steering ECU has been replaced.
- The steering wheel has been replaced.
- The steering gear assembly has been replaced.
- There is a difference in steering effort between turning right and left.

(a) Center the steering wheel and align the front wheels straight ahead.

(b) Connect the intelligent tester to the DLC3.

(c) Turn the ignition switch on and turn the tester on.

(d) Initialize the torque sensor zero point calibration signal and perform the zero point calibration by following the prompts on the tester screen.

(e) Confirm that no DTCs are output after the zero point calibration is completed.

1. When DTC C1515/15 is output, see page PS-35.
2. When DTC C1516/16 is output, see page PS-36.
3. When DTC C1534/34 is output, see page PS-40.

NOTICE:

Do not touch the steering wheel during the calibration.

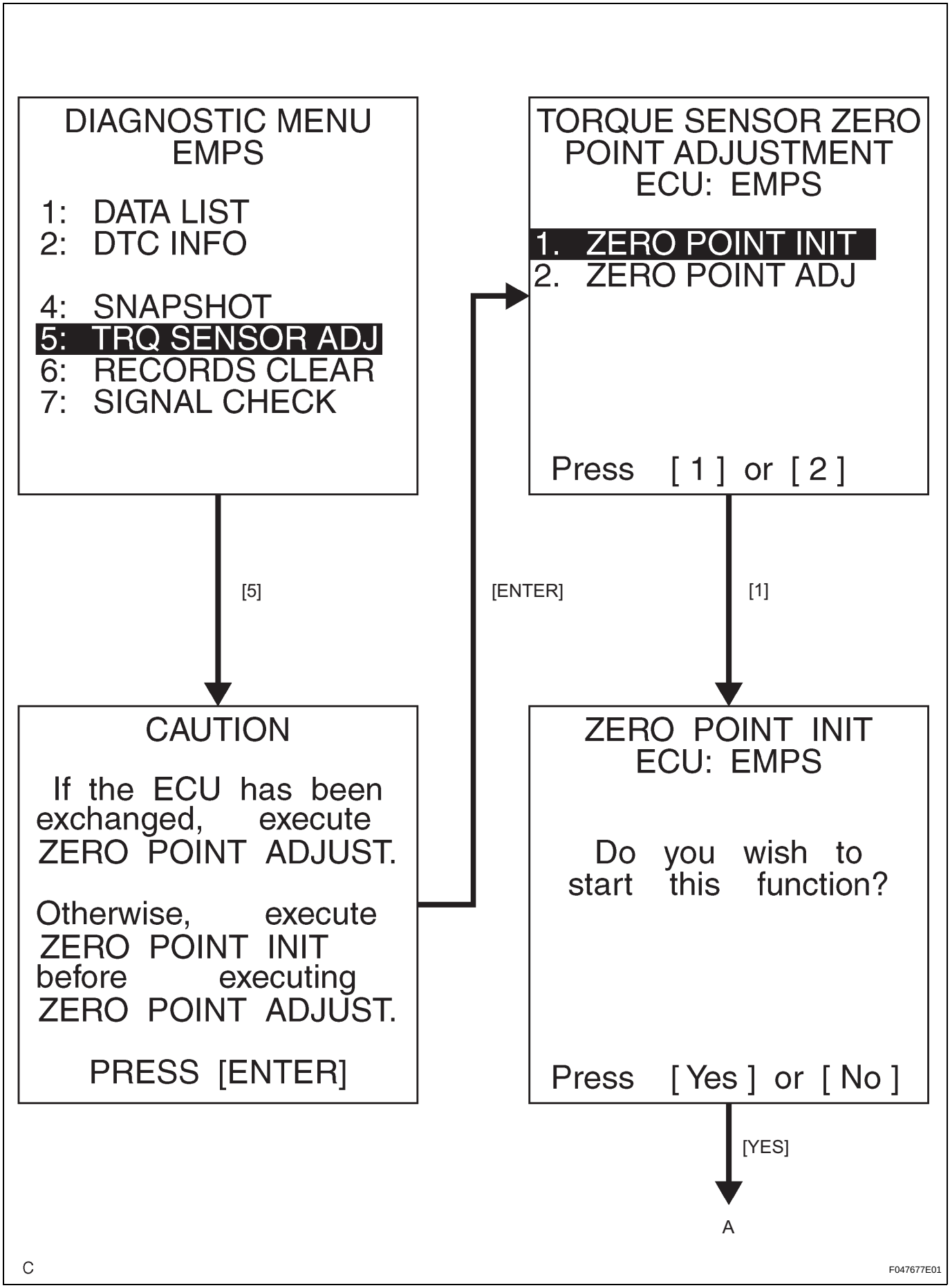
DIAGNOSTIC MENU
EMPS
1: DATA LIST
2: DTC INFO
4: SNAPSHOT
5: TRQ SENSOR ADJ
6: RECORDS CLEAR
7: SIGNAL CHECK
[5]
CAUTION
If the ECU has been exchanged, execute ZERO POINT ADJUST.
Otherwise, execute ZERO POINT INIT before executing ZERO POINT ADJUST.
PRESS [ENTER]
[ENTER]
TORQUE SENSOR ZERO POINT ADJUSTMENT
ECU: EMPS
1. ZERO POINT INIT
2. ZERO POINT ADJ
Press [1] or [2]
[1]
ZERO POINT INIT
ECU: EMPS
Do you wish to start this function?
Press [Yes] or [No]
[YES]
A
C
F047677E01

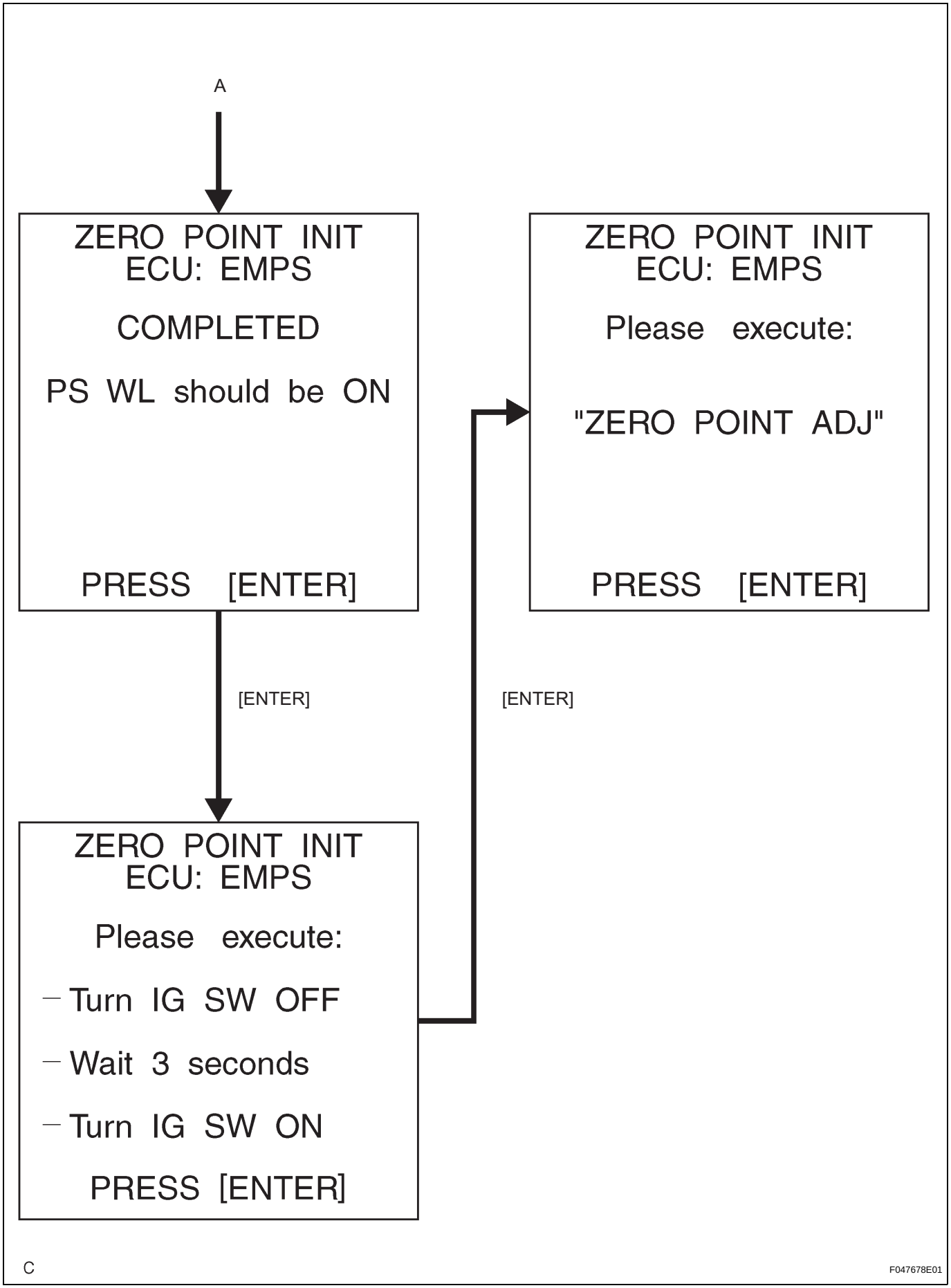
A
ZERO POINT INIT
ECU: EMPS
COMPLETED
PS WL should be ON
PRESS [ENTER]
[ENTER]
ZERO POINT INIT
ECU: EMPS
Please execute:
– Turn IG SW OFF
– Wait 3 seconds
– Turn IG SW ON
PRESS [ENTER]
[ENTER]
ZERO POINT INIT
ECU: EMPS
Please execute:
"ZERO POINT ADJ"
PRESS [ENTER]
C
F047678E01

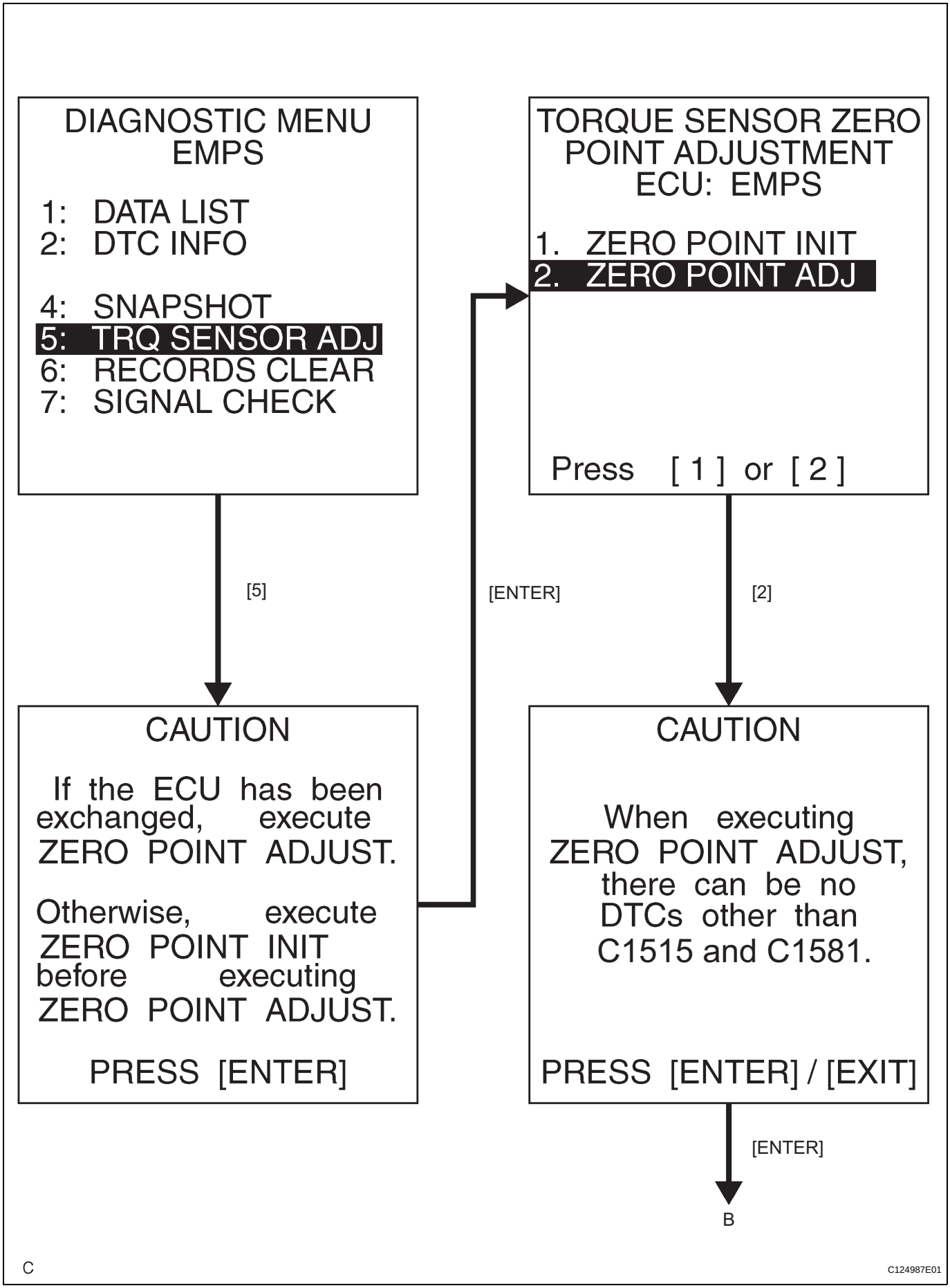
DIAGNOSTIC MENU
EMPS
1: DATA LIST
2: DTC INFO
4: SNAPSHOT
5: TRQ SENSOR ADJ
6: RECORDS CLEAR
7: SIGNAL CHECK
[5]
CAUTION
If the ECU has been exchanged, execute ZERO POINT ADJUST.
Otherwise, execute ZERO POINT INIT before executing ZERO POINT ADJUST.
PRESS [ENTER]
[ENTER]
TORQUE SENSOR ZERO POINT ADJUSTMENT
ECU: EMPS
1. ZERO POINT INIT
2. ZERO POINT ADJ
Press [1] or [2]
[2]
CAUTION
When executing ZERO POINT ADJUST, there can be no DTCs other than C1515 and C1581.
PRESS [ENTER] / [EXIT]
[ENTER]
B
C
C124987E01

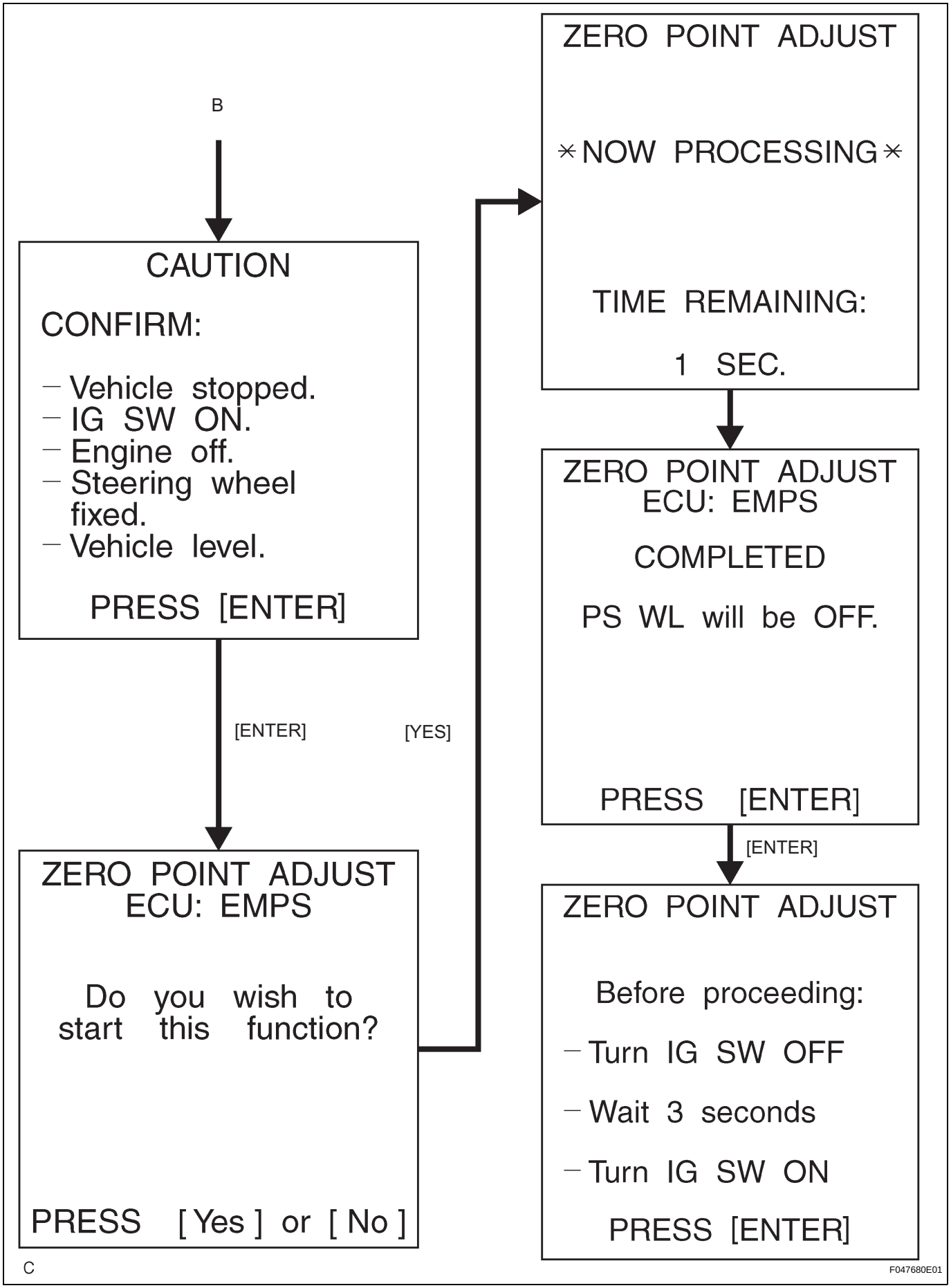
B
CAUTION
CONFIRM:
– Vehicle stopped.
– IG SW ON.
– Engine off.
– Steering wheel fixed.
– Vehicle level.
PRESS [ENTER]
[ENTER]
ZERO POINT ADJUST
ECU: EMPS
Do you wish to start this function?
PRESS [Yes] or [No]
[YES]
ZERO POINT ADJUST
＊NOW PROCESSING＊
TIME REMAINING:
1 SEC.
ZERO POINT ADJUST
ECU: EMPS
COMPLETED
PS WL will be OFF.
PRESS [ENTER]
[ENTER]
ZERO POINT ADJUST
Before proceeding:
– Turn IG SW OFF
– Wait 3 seconds
– Turn IG SW ON
PRESS [ENTER]
C
F047680E01

PS

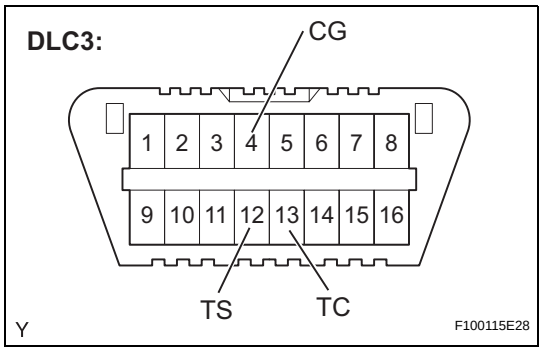

2. TORQUE SENSOR ZERO POINT CALIBRATION (USING SST CHECK WIRE)

(a) Center the steering wheel and align the front wheels straight ahead.

(b) Initialize the torque sensor zero point calibration signal.

HINT:
If the power steering ECU is replaced, initialization is not necessary.

(1) Stop the vehicle and turn the ignition switch off.
(2) Using SST, connect terminals TS and CG of the DLC3.
SST 09843-18040
(3) Using SST, connect terminals TC and CG of the DLC3.
SST 09843-18040
(4) Turn the ignition switch on.
(5) Disconnect and reconnect terminal TC of the DLC3 20 times or more within 20 seconds.
(6) Check that DTC C1515/15 is output.

(c) Perform the torque sensor zero point calibration.

NOTICE:
Do not touch the steering wheel during the calibration.

HINT:
Check whether any DTCs except C1515/15 are output.

(1) Stop the vehicle and turn the ignition switch off.
(2) Using SST, connect terminals TS and CG of the DLC3 and turn the ignition switch on.
SST 09843-18040
(3) Wait for 7 seconds after the P/S warning light comes on.

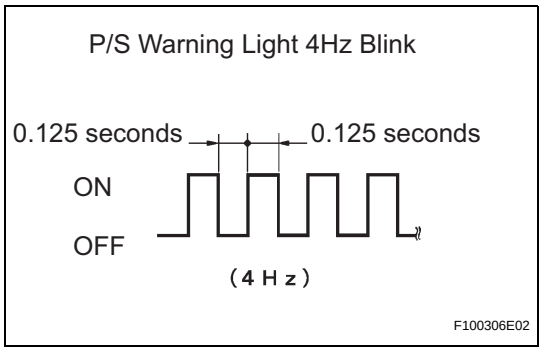

(4) Confirm that the P/S warning light blinks at intervals of 0.125 seconds (4Hz blink).
(5) Disconnect the SST.
SST 09843-18040
(6) Confirm that no DTCs are output.
1. When DTC C1515/15 is output, see page PS-35.
2. When DTC C1516/16 is output, see page PS-36.
3. When DTC C1534/34 is output, see page PS-40.

TEST MODE PROCEDURE

NOTICE:
The torque sensor zero point calibration is performed automatically when the test mode inspection is conducted after the power steering ECU has been replaced with a new one.

HINT:
- Speed sensor signals can be checked easily in test mode.
- Test mode code C1571/71 is stored during the transition to test mode. This code does not indicate a malfunction since the code will be cleared when the ECU determines that the sensor is normal.
- The test mode code is cleared simultaneously when test mode is terminated.

1. TEST MODE START-UP

(a) When using an intelligent tester;
(1) Connect the intelligent tester to the DLC3.
(2) Turn the ignition switch on and enter test mode by following the instructions on the tester screen.

(b) When not using an intelligent tester;
(1) Turn the ignition switch off and connect terminals 12 (TS) and 4 (CG) of the DLC3.
SST 09843-18040
(2) Turn the ignition switch on.

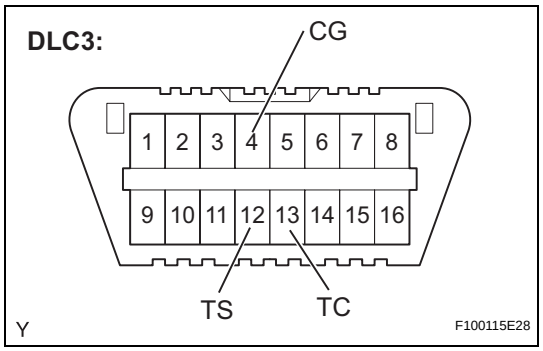

NOTICE:
- **Be sure to connect the correct terminals of the connector, otherwise a malfunction may occur.**
- **If the torque sensor zero point calibration has not been performed, the torque sensor zero point calibration is performed automatically when test mode is entered.**

2. CHECK TEST MODE DISPLAY

(a) The P/S warning light blinks as shown on the left when test mode is entered.
NOTICE:
If the torque sensor zero point calibration has not been performed, the P/S warning comes on until the torque sensor zero point calibration is completed, and shows the test mode blink pattern after the torque sensor zero point calibration is completed.

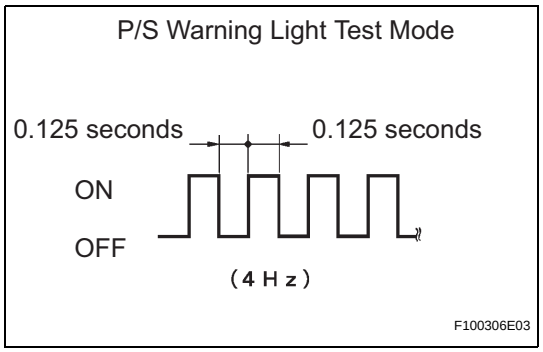

3. CHECK VEHICLE SPEED SIGNAL (W/O ABS)

(a) Drive the vehicle until the vehicle speed reaches 6 mph (10 Km/h) or more.

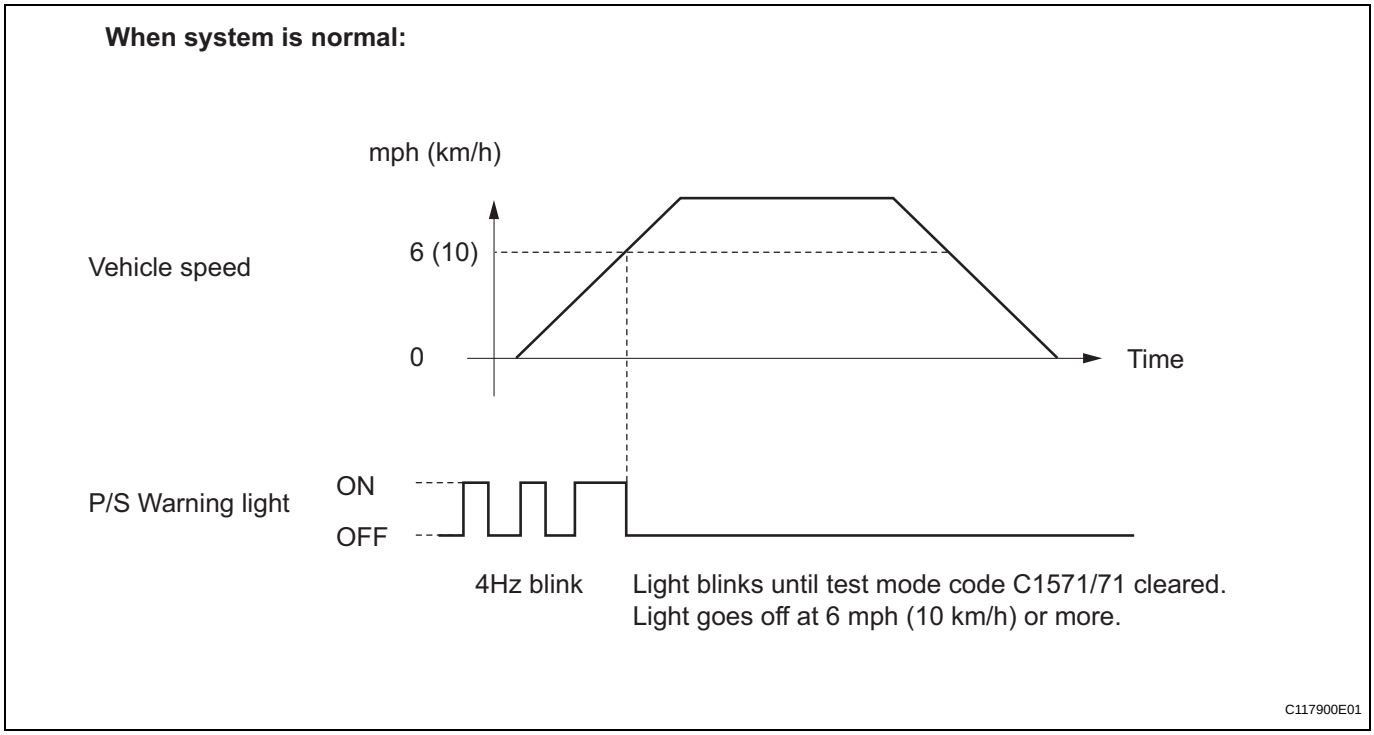

4. READ TEST MODE CODE

(a) When using an intelligent tester;

(1) Check the DTCs in test mode.

NOTICE:

Test mode code is cleared when test mode is terminated.

(b) When not using an intelligent tester;

(1) Turn the ignition switch off.

(2) Connect terminals 12 (TS) and 4 (CG) of the DLC3, and also terminals 13 (TC) and 4 (CG) of the DLC3.

SST 09843-18040

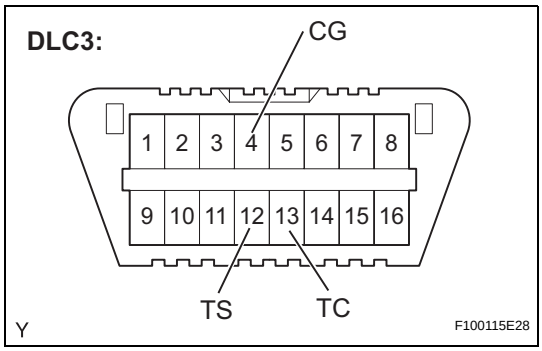

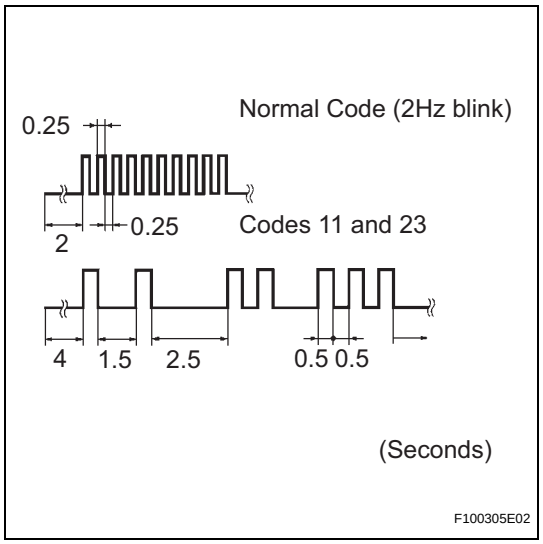

(3) Read the number of times that the P/S warning light on the combination meter blinks.
- To indicate the normal code, the P/S warning light comes on for 0.25 seconds at intervals of 0.25 seconds (2Hz blink).
- When outputting a DTC, the P/S warning light displays it at intervals of 4 seconds. When outputting two or more DTCs, the P/S warning light displays each DTC at intervals of 2.5 seconds, and repeats from the first one 4 seconds after indicating the last one.
- If two or more malfunctions are detected at the same time, DTCs are displayed in ascending numerical order.

5. END OF TEST MODE

(a) When using an intelligent tester;

(1) Return to normal mode by following the instructions on the tester screen.

(2) Turn the ignition switch off and disconnect the tester.

(b) When not using an intelligent tester;

(1) Turn the ignition switch off and disconnect terminals 13 (TC) and 4 (CG), and terminals 12 (TS) and 4 (CG) of the DLC3.
SST 09843-18040

(2) Turn the ignition switch on.

TEST MODE CODE

Code	Detection Item	Conditions to clear code	Trouble areas
C1571/71	Vehicle speed check	Vehicle speed 6 mph (10 Km/h) or more	If code cannot be cleared, any of following areas may malfunction. • Speed sensor • Combination meter • Power steering ECU • Wire harness and connector

PROBLEM SYMPTOMS TABLE

for Hatchback

Symptom	Suspected area	See page
Heavy steering	Front tires (improperly inflated, unevenly worn)	TW-1
	Front wheel alignment (incorrect)	SP-2
	Front suspension (Lower ball joint)	SP-23
	Steering gear assembly	PS-73
	Power steering motor	SR-30
	Battery and power source system	-
	Power source voltage of power steering ECU	IN-26
	Power steering ECU	PS-89
Steering effort differs between turning right and left or uneven	Steering center point (zero point) not recorded completely	PS-12
	Front tires (improperly inflated, unevenly worn)	TW-1
	Front wheel alignment (incorrect)	SP-2
	Front suspension (Lower ball joint)	SP-23
	Steering gear assembly	PS-73
	Torque sensor (built into steering column)	SR-30
	Steering column assembly	SR-30
	Power steering motor	SR-30
	Power steering ECU	PS-89
While driving, steering effort does not change in accordance with vehicle speed or steering wheel does not return properly	Front suspension (Lower ball joint)	SP-23
	Speed sensor (w/ ABS)	BC-14
	Skid control ECU (ABS ECU)	BC-89
	Combination meter (w/o ABS)	ME-145
	Torque sensor (built into steering column)	SR-30
	Power steering motor	SR-30
	Power steering ECU	PS-89
	Controlling CAN communication system	CA-9
Friction occurs when turning steering wheel during low speed driving	Power steering motor	SR-30
	Steering column assembly	SR-30
High-pitched sound (squeaking) occurs when turning steering wheel slowly when vehicle stopped	Power steering motor	SR-30
Steering wheel vibrates and noise occurs when turning steering wheel with vehicle stopped	Power steering motor	SR-30
	Steering column assembly	SR-30
P/S warning always indicated on combination meter	Power source voltage of power steering ECU	IN-26
	Combination meter	ME-145
	Power steering ECU	PS-89

for Sedan

Symptom	Suspected area	See page
Heavy steering	Front tires (improperly inflated, unevenly worn)	TW-1
	Front wheel alignment (incorrect)	SP-2
	Front suspension (Lower ball joint)	SP-23
	Steering gear assembly	PS-63
	Power steering motor	SR-12
	Battery and power source system	-
	Power source voltage of power steering ECU	IN-26
	Power steering ECU	PS-83

Symptom	Suspected area	See page
Steering effort differs between turning right and left or uneven	Steering center point (zero point) not recorded completely	PS-12
	Front tires (improperly inflated, unevenly worn)	TW-1
	Front wheel alignment (incorrect)	SP-2
	Front suspension (Lower ball joint)	SP-23
	Steering gear assembly	PS-63
	Torque sensor (built into steering column)	SR-12
	Steering column assembly	SR-12
	Power steering motor	SR-12
	Power steering ECU	PS-83
While driving, steering effort does not change in accordance with vehicle speed or steering wheel does not return properly	Front suspension (Lower ball joint)	SP-23
	Speed sensor (w/ABS)	BC-14
	Skid control ECU (ABS ECU)	BC-89
	Combination meter (w/o ABS)	ME-138
	Torque sensor (built into steering column)	SR-12
	Power steering motor	SR-12
	Power steering ECU	PS-83
	Controlling CAN communication system	CA-9
Friction occurs when turning steering wheel during low speed driving	Power steering motor	SR-12
	Steering column assembly	SR-12
High-pitched sound (squeaking) occurs when turning steering wheel slowly when vehicle stopped	Power steering motor	SR-12
Steering wheel vibrates and noise occurs when turning steering wheel with vehicle stopped	Power steering motor	SR-12
	Steering column assembly	SR-12
P/S warning always indicated on combination meter	Power source voltage of power steering ECU	IN-26
	Combination meter	ME-138
	Power steering ECU	PS-83

TERMINALS OF ECU

Power Steering ECU:

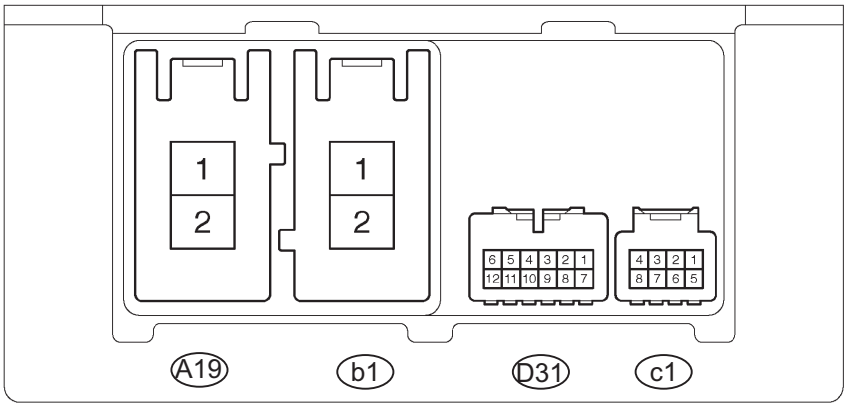

N

F044303E02

Symbols (Terminals No.)	Terminal Description	Condition	Specified Condition
PIG (A19-1) - PGND (A19-2)	EPS fuse	Always	11 to 14 V
PGND (A19-2) - Body ground	Body ground	Always	Below 1 Ω
M1 (b1-1) - PGND (A19-2)	Power steering motor	1. With ignition switch on, turn steering wheel to left 2. With ignition switch on, turn steering wheel to right	1. 11 to 14 V 2. Below 1 V
M2 (b1-2) - PGND (A19-2)	Power steering motor	1. With ignition switch on, turn steering wheel to left 2. With ignition switch on, turn steering wheel to right	1. Below 1 V 2. 11 to 14 V
CANH (D31-1) - CANL (D31-7)	CAN BUS	Ignition switch off	108 to 132 Ω
SIL (D31-2) - PGND (A19-2)	DLC3	Communication established by connecting intelligent tester to DLC3	Pulse generation (See waveform 1)
IG (D31-6) - PGND (A19-2)	ECU-IG fuse	Ignition switch on	11 to 14 V
TS (D31-11) - PGND (A19-2)	DLC3	Ignition switch on	11 to 14 V
SPD* (D31-5) - PGND (A19-2)	Speed signal	Ignition switch on	Pulse generation (See waveform 2)
TRQ1 (c1 -5) - PGND (A19-2)	Torque sensor	With ignition switch on, turn steering wheel to left and right	0.3 to 4.7 V
TRQV (c1-6) - PGND (A19-2)	Torque sensor	Ignition switch on	7.5 to 8.5 V
TRQ2 (c1-7) - PGND (A19-2)	Torque sensor	With ignition switch on, turn steering wheel to left and right	0.3 to 4.7 V
TRQG (c1-8) - PGND (A19-2)	Torque sensor	Always	Below 1 Ω

* Only for vehicles without ABS

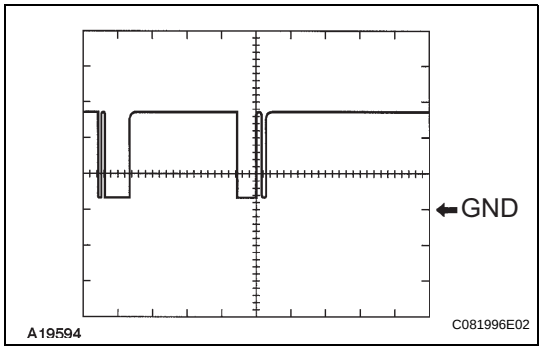

1. Waveform 1 Reference

Terminal	SIL - Body ground
Tool setting	5 V/DIV, 1 ms/DIV
Condition	Communication established by connecting intelligent tester to DLC3

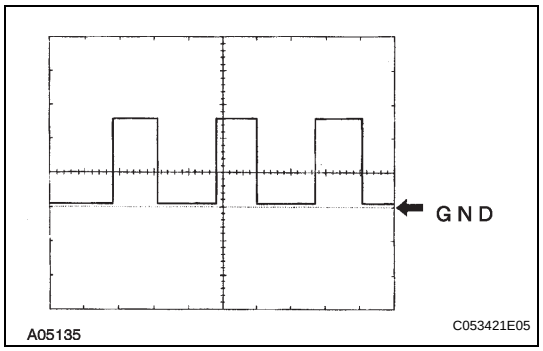

2. Waveform 2
Reference

Terminal	SPD - Body ground
Tool setting	5 V/DIV, 20 ms/DIV
Condition	Vehicle speed approximately 12.4 mph (20 km/h)

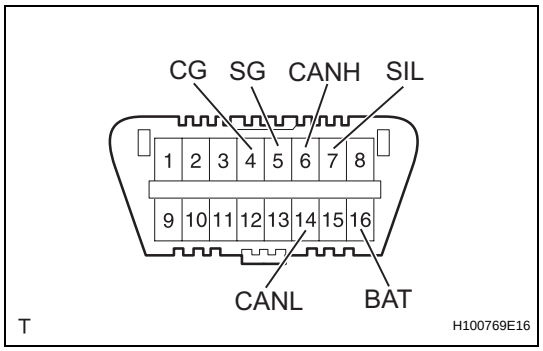

DIAGNOSIS SYSTEM

1. CHECK DLC3

(a) Check the DLC3:
The ECU uses ISO 15765-4 for communication. The terminal arrangement of the DLC3 complies with SAE J1962 and matches the ISO 15765-4 format.

Symbols (Terminal No.)	Terminal Description	Condition	Specified Condition
SIL (7) - SG (5)	Bus "+" line	During transmission	Pulse generation
CG (4) - Body ground	Chassis ground	Always	Below 1 Ω
SG (5) - Body ground	Signal ground	Always	Below 1 Ω
BAT (16) - Body ground	Battery positive	Always	11 to 14 V
CANH (6) - CANL (14)	CAN bus line	Ignition switch OFF*	54 to 69 Ω
CANH (6) - CG (4)	HIGH-level CAN bus line	Ignition switch OFF*	200 Ω or higher
CANL (14) - CG (4)	LOW-level CAN bus line	Ignition switch OFF*	200 Ω or higher
CANH (6) - BAT (16)	HIGH-level CAN bus line	Ignition switch OFF*	6 kΩ or higher
CANL (14) - BAT (16)	LOW-level CAN bus line	Ignition switch OFF*	6 kΩ or higher

NOTICE:
***: Before measuring the resistance, leave the vehicle as is for at least 1 minute and do not operate the ignition switch, any other switches or the doors.**
If the result is not as specified, the DLC3 may have a malfunction. Repair or replace the harness and connector.
HINT:
Connect the cable of the intelligent tester to the CAN VIM, connect the CAN VIM to the DLC3, turn the ignition switch ON and attempt to use the tester. If the display indicates that a communication error has occurred, there is a problem either with the vehicle or with the tester.

- If communication is normal when the tester is connected to another vehicle, inspect the DLC3 of the original vehicle.

- If communication is still not possible when the tester is connected to another vehicle, the problem is probably in the tester itself. Consult the Service Department listed in the tester's instruction manual.

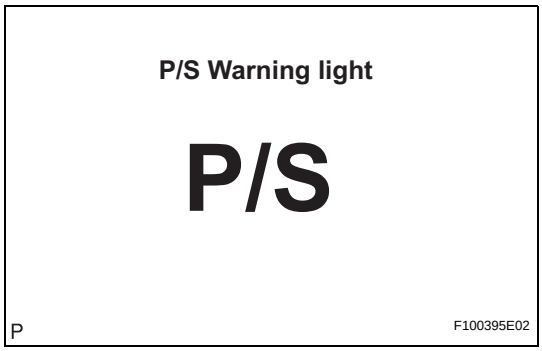

2. WARNING LIGHT

(a) When a problem occurs in the electronic power steering system, the P/S warning light on the combination meter comes on to inform the driver of the problem.

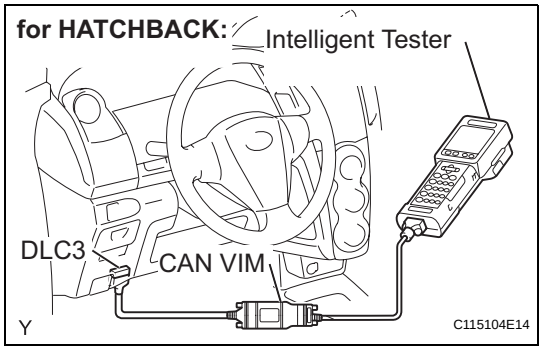

DTC CHECK / CLEAR

1. CHECK DTC

(a) When using an intelligent tester;

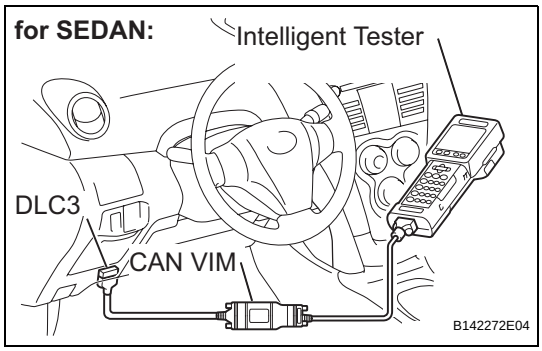

(1) Connect the intelligent tester to the DLC3.
(2) Turn the ignition switch on and turn the tester on.
(3) Read the DTCs by following the prompts on the intelligent tester.
HINT:
Refer to the intelligent tester operator's manual for further details.

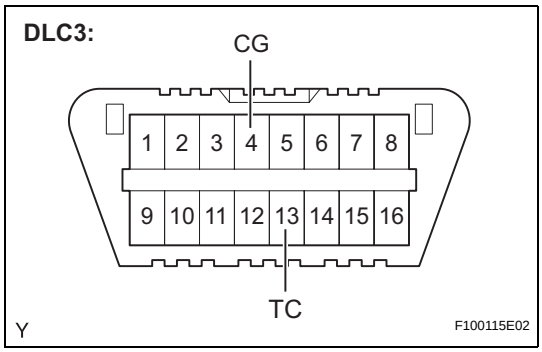

(b) When not using an intelligent tester;
(1) Using SST, connect terminals 13 (TC) and 4 (CG) of the DLC3.
SST 09843-18040
(2) Turn the ignition switch on.

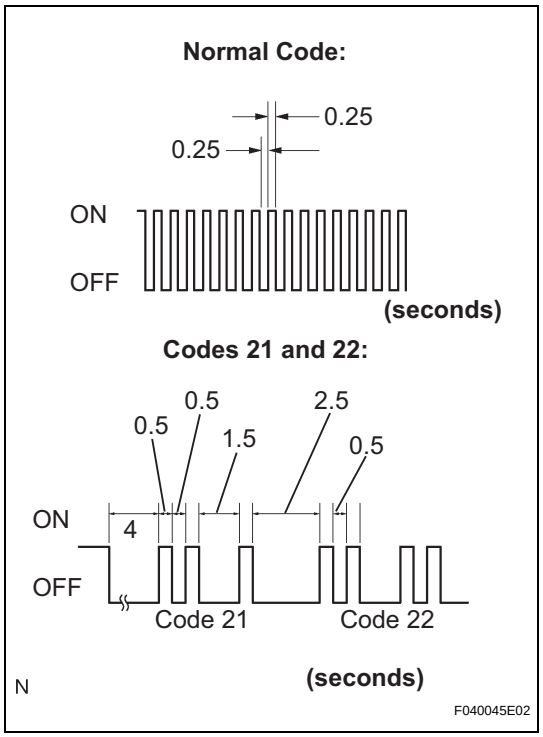

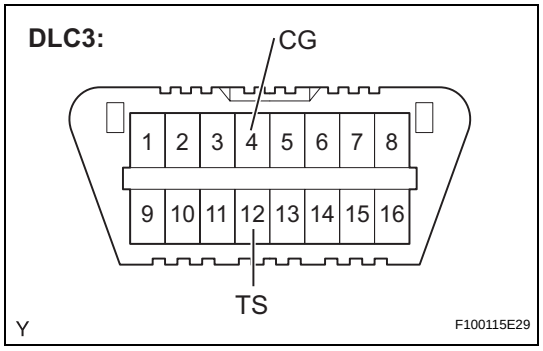

(3) Read and write down any DTCs indicated by the P/S warning light on the combination meter. Refer to the chart on the left for examples of a normal code and DTCs 21 and 22.
HINT:
- If the P/S warning light does not blink to display any DTCs set or the normal code, inspect the circuit shown in the table below.

Trouble Area	See Page
EPS warning light circuit	PS-53

- If two or more malfunctions are detected simultaneously, DTCs will be displayed in ascending numerical order.

(4) Refer to the Diagnostic Trouble Code Chart (See page PS-29) for DTC information.

2. CLEAR DTC

(a) When using an intelligent tester;
(1) Connect the intelligent tester to the DLC3.
(2) Turn the ignition switch on and turn the tester on.
(3) Clear the DTCs by following the prompts on the intelligent tester.
(4) Turn the ignition switch off.
(5) Disconnect the intelligent tester from the DLC3.

(b) When not using an intelligent tester;
(1) Using SST, connect terminals 12 (TS) and 4 (CG) of the DLC3.
SST 09843-18040
(2) Turn the ignition switch on.
(3) Disconnect the SST check wire from terminal 4 (CG) and reconnect it, and repeat this procedure 4 times or more within 8 seconds.
(4) Check that the P/S warning light blinks a code to indicate normality.
(5) Turn the ignition switch off.
(6) Remove the SST from the DLC3.

FAIL-SAFE CHART

When a problem occurs in the electronic power steering system, the P/S warning light on the combination meter comes on, and the ECU stops the steering power assist, maintains the amount of power assist constant, or reduces the amount of power assist to protect the system.

DTC No.	Malfunction	Fail-safe
C1511/11 C1512/12 C1513/13 C1514/14	Torque sensor malfunction	Assist force restricted
C1517/17	Torque sensor malfunction	Power assist stopped
C1524/24	Motor malfunction	Power assist stopped
C1531/31 C1532/32	Power steering ECU malfunction	Power assist stopped
C1533/33	Temperature sensor malfunction in power steering ECU	Assist force restricted
C1534/34	EEPROM abnormal	Assist force restricted
C1535/35	Steering wheel location data error	Power assist stopped
C1541/41 C1542/42	Speed sensor malfunction	Amount of power assist remains constant at speed of 43 mph (70 Km/h)
C1551/51	IG power source voltage error	Assist force restricted
C1552/52	PIG power source voltage error	Assist force restricted
C1553/53	Overvoltage at IG and PIG terminals	Assist force restricted
C1554/54	Power source relay malfunction	Power assist stopped
C1555/55	Motor relay malfunction	Power assist stopped
U0073	CAN bus malfunction	-
U0105	ECM communication error	Amount of power assist remains constant at speed of 43 mph (70 Km/h)
U0121	ABS ECU communication error	Amount of power assist remains constant at speed of 43 mph (70 Km/h)
-	Extremely high temperature in ECU	Assist force restricted until normal ECU temperature recovers
-	Power source voltage drop	Assist force suspended until voltage recovers

HINT:
The amount of power assist may be decreased to prevent the motor and ECUs from overheating if the steering wheel is continuously turned when the vehicle is either stopped or driven at a low speed, or if the steering wheel is kept at either full lock position for a long time. In such cases, the amount of power assist returns to normal if the steering wheel is not turned for approximately 10 minutes with the engine idling.

DATA LIST / ACTIVE TEST

1. DATA LIST

(a) Connect an intelligent tester to the DLC3.
(b) Turn the ignition switch on and turn the tester on.
(c) Operate the intelligent tester according to the prompts on the tester and select DATA LIST.

Item	Item Description	Inspection Condition	Reference value
TRQ1	Torque sensor 1 output value: Minimum: 0 V, Maximum: 5 V	1. Steering wheel not turned (without load) 2. Steering wheel turned to right with vehicle stopped 3. Steering wheel turned to left with vehicle stopped	1. 2.3 to 2.7 V 2. 2.5 to 4.7 V 3. 0.3 to 2.5 V
TRQ2	Torque sensor 2 output value: Minimum: 0 V, Maximum: 5 V	1. Steering wheel not turned (without load) 2. Steering wheel turned to right with vehicle stopped 3. Steering wheel turned to left with vehicle stopped	1. 2.3 to 2.7 V 2. 2.5 to 4.7 V 3. 0.3 to 2.5 V
TRQ3	Torque value for assist control: Minimum: 0 V, Maximum: 5 V	1. Steering wheel not turned (without load) 2. Steering wheel turned to right with vehicle stopped 3. Steering wheel turned to left with vehicle stopped	1. 2.3 to 2.7 V 2. 2.5 to 4.7 V 3. 0.3 to 2.5 V
SPD	Vehicle speed from meter: Minimum: 0 mph (km/h), Maximum: 158.5 mph (255 km/h)	1. Vehicle stopped 2. Vehicle driven at constant speed	1. 0 mph (km/h) 2. No significant fluctuation
MOTOR ACTUAL	Current to motor: Minimum: -128 A, Maximum: 127 A	-	-
COMMAND VALUE	Requested current to motor: Minimum: -128 A, Maximum: 127 A	-	-
THERMISTOR TEMP	ECU substrate temperature: Minimum: -50 °C, Maximum: 205 °C	Ignition switch on	-
PIG SUPPLY	Power source voltage to activate motor: Minimum: 0 V, Maximum: 25.5 V	Power steering in operation	11 to 14 V
IG SUPPLY	ECU power source voltage: Minimum: 0 V, Maximum: 25.5 V	-	11 to 14 V
TRQ1 ZERO VAL	Zero point value of torque sensor 1: Minimum: 0 V, Maximum: 5 V	Steering wheel not turned (without load)	2.3 to 2.7 V
TRQ2 ZERO VAL	Zero point value of torque sensor 2: Minimum: 0 V, Maximum: 5 V	Steering wheel not turned (without load)	2.3 to 2.7 V
TRQ3 ZERO VAL	Zero point value of torque sensor for assist control: Minimum: 0 V, Maximum: 5 V	Steering wheel not turned (without load)	2.3 to 2.7 V
MOTOR TERMINAL(+)	Motor terminal M1 voltage: Minimum: 0 V, Maximum: 25.5 V	1. Steering wheel turned to right 2. Steering wheel turned to left	1. Below 1 V 2. 11 to 14 V
MOTOR TERMINAL(-)	Motor terminal M2 voltage: Minimum: 0 V, Maximum: 25.5 V	1. Steering wheel turned to right 2. Steering wheel turned to left	1. 11 to 14 V 2. Below 1 V
MTR OVERHEAT	Continuous overheat prevention control record: REC/UNREC	-	-
MTR LOW POWER	PIG power source voltage drop record: REC/UNREC	-	-

Item	Item Description	Inspection Condition	Reference value
CONTROL MODE	Codes indicating DTC detection timing during ECU control displayed in hexadecimal	-	-
IG ON/OFF TIMES	Number of times ignition switch turned on after DTC detection: Minimum: 0 time, Maximum: 255 times	-	-
# CODE	Number of detected DTCs when freeze frame data stored: Minimum: 0 time, Maximum: 255 times	-	-
ECU ID	ECU identification information	-	-
TEST MODE STAT	Selected mode: NORMAL MODE / TEST MODE	-	-

DIAGNOSTIC TROUBLE CODE CHART

HINT:

- If any DTCs are displayed during the DTC check, inspect the circuit listed for those DTCs. For details of each DTC, refer to the page indicated in the DTC chart.
- Test mode code C1571/71 is stored during the transition to test mode. This code does not indicate a malfunction since the code will be cleared when the ECU determines that the sensor is normal. The test mode code is cleared simultaneously when test mode is terminated.
- The P/S warning light remains illuminated during test mode and starts blinking when the speed sensor is determined to be normal.

DTC No.	Detection Item	Trouble Areas	Normal Return	P/S Warning Light	See page
C1511/11	Torque Sensor 1 Malfunction	• Steering column assembly (Torque sensor) • Power steering ECU	Ignition switch on again	○	PS-32
C1512/12	Torque Sensor Circuit Malfunction	• Steering column assembly (Torque sensor) • Power steering ECU	Ignition switch on again	○	PS-32
C1513/13	Torque Sensor Circuit Malfunction	• Steering column assembly (Torque sensor) • Power steeing ECU	Ignition switch on again	○	PS-32
C1514/14	Torque Sensor Power Source Circuit Malfunction	• Steering column assembly (Torque sensor) • Power steering ECU	Ignition switch on again	○	PS-32
C1515/15	Torque Sensor Zero Point Adjustment is not Initialized	• Torque sensor zero point calibration not performed • Steering column assembly	After calibrating torque sensor zero point	○	PS-35
C1516/16	Torque Sensor Zero Point Adjustment Incomplete	• Torque sensor zero point calibration failure • Steering column assembly	After calibrating torque sensor zero point normally	○	PS-36
C1517/17	Torque Sensor Hold Malfunction	• Steering column assembly (Torque sensor) • Power steering ECU	Ignition switch on again	○	PS-32
C1524/24	Motor Circuit Malfunction	• Steering column assembly • Power steering ECU	Ignition switch on again	○	PS-37
C1531/31	EPS ECU Circuit Malfunction	• Power steering ECU	Ignition switch on again	○	PS-40
C1532/32	EPS ECU Circuit Malfunction	• Power steering ECU	Ignition switch on again	○	PS-40
C1533/33	EPS ECU Circuit Malfunction	• Power steering ECU	Ignition switch on again	○	PS-40

DTC No.	Detection Item	Trouble Areas	Normal Return	P/S Warning Light	See page
C1534/34	EPS ECU Circuit Malfunction	• Power steering ECU	Ignition switch on again	-	PS-40
C1535/35	Steering Wheel Location Data Error	• Power steering ECU	-	○	PS-40
C1541/41 *1	Speed Sensor Malfunction	• Speed sensor • Speed sensor circuit • Combination meter • Power steering ECU	Ignition switch on again	○	PS-41
C1542/42 *1	Speed Sensor Malfunction	• Speed sensor • Speed sensor circuit • Combination meter • Power steering ECU	Return to normal	X	PS-41
C1551/51	IG Power Source Circuit Malfunction	• ECU-IG fuse • IG power source circuit • Power steering ECU	Ignition switch on again and after normal confirmation	○	PS-44
C1552/52	PIG Power Source Circuit	• EPS fuse • PIG power source circuit • Power steering ECU	Ignition switch on again and after normal confirmation	○	PS-46
C1553/53	When Resetting Voltage, Vehicle is Being Driven	• IG and PIG power source circuit • Power steering ECU	Ignition switch on again and after normal confirmation	○	PS-46
C1554/54	EPS Relay Circuit	• EPS fuse • PIG power source circuit • Power steering ECU	Ignition switch on again	○	PS-46
C1555/55	EPS Motor Relay Circuit	• Power steering ECU	Ignition switch on again	○	PS-46
C1571/71 *1	Speed Sensor Malfunction (Test Mode DTC)	• Speed sensor • Speed sensor circuit • Combination meter • Power steering ECU	-	-	PS-41
C1581/81	Assist Map Un-Writing	• Power steeering ECU	-	○	PS-49
U0073	Control Module Communication Bus OFF	• CAN communication system	Ignition switch on again and after normal confirmation	○	PS-50
U0105	Lost Communication with ECM	• CAN communication system • ECM	Ignition switch on again and after normal confirmation	○	PS-50
U0121 *2	Lost Communication with Anti-lock Brake System (ABS) Control Module	• CAN communication system • ABS ECU	Ignition switch on again and after notmal confirmation	○	PS-50

(Warning light) ○---turn on, X---turn off (Normal reset)
*1---w/o ABS, *2---w/ ABS

DTC	C1511/11	Torque Sensor 1 Malfunction

DTC	C1512/12	Torque Sensor Circuit Malfunction

DTC	C1513/13	Torque Sensor Circuit Malfunction

DTC	C1514/14	Torque Sensor Power Source Circuit Malfunction

DTC	C1517/17	Torque Sensor Hold Malfunction

DESCRIPTION

The torque sensor converts the rotation torque input from the steering wheel into electric signals and sends them to the power steering ECU.

DTC No.	Detection Item	Trouble Area
C1511/11	Torque sensor (TRQ1) signal error or stop	• Torque sensor (built into steering column assembly) • Power steering ECU
C1512/12	Torque sensor (TRQ2) signal error or stop	
C1513/13	Deviation between torque sensor TRQ1 and TRQ2 exceeds specified value	
C1514/14	Torque sensor power source voltage error	
C1517/17	Temporary control due to malfunction related to torque sensor continues for long time	

WIRING DIAGRAM

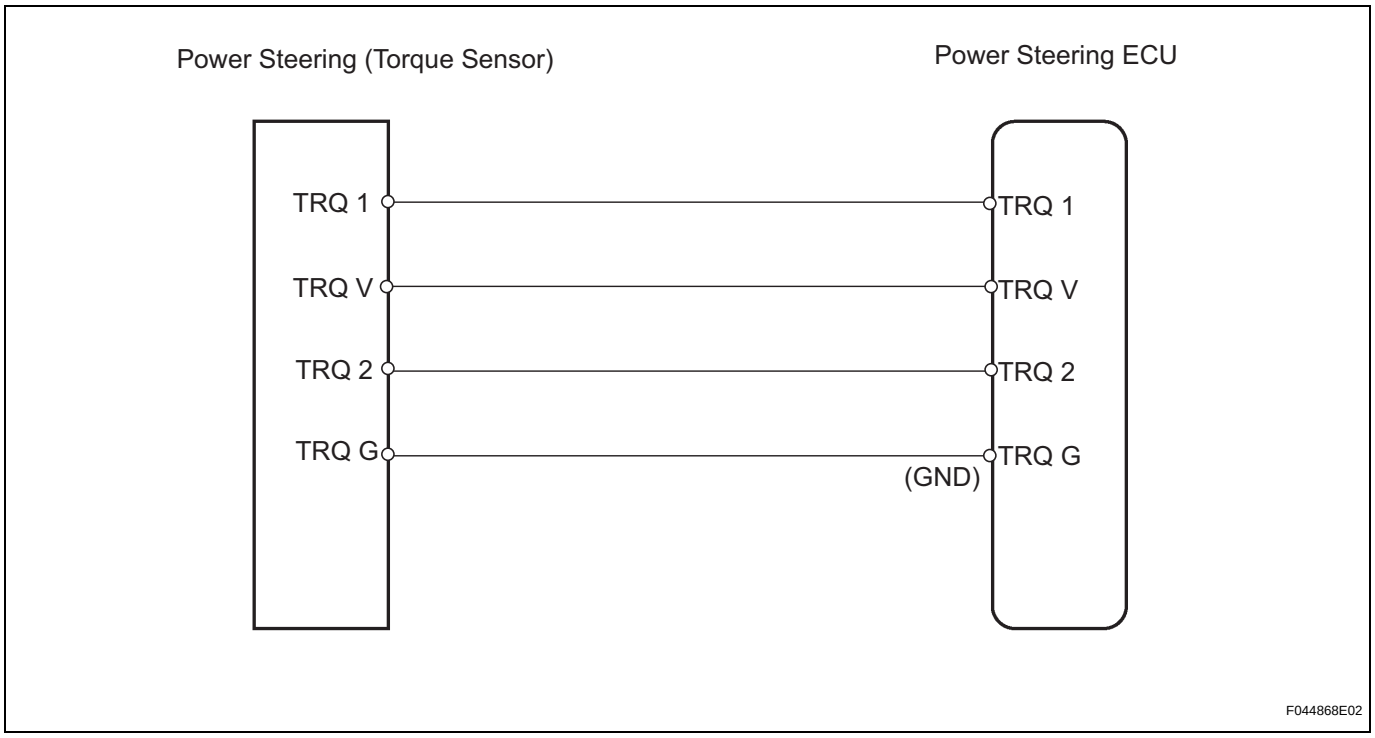

INSPECTION PROCEDURE

1 READ VALUE OF DATA LIST (TRQ1, TRQ2)

(a) Connect the intelligent tester to DLC3.
(b) Turn the ignition switch on and turn the tester on.
(c) Select the items [TRQ1] and [TRQ2] in the DATA LIST.
(d) Measure the voltage.

Item	Item Description	Inspection Condition	Reference Value
TRQ1	Torque sensor 1 output value Minimum: 0 V, Maximum: 5 V	1. Steering wheel not turned (without load) 2. Turning steering wheel to right with vehicle stopped 3. Turning steering wheel to left with vehicle stopped	1. 2.3 to 2.7 V 2. 2.5 to 4.7 V 3. 0.3 to 2.5 V
TRQ2	Torque sensor 2 output value Minimum: 0 V, Maximum: 5 V		

(e) Check the difference in the values between [TRQ1] and [TRQ2].

OK:

The voltage difference is below 0.3 V.

OK → **CHECK INTERMITTENT PROBLEMS**

NG

2 INSPECT POWER STEERING ECU (OUTPUT)

Power Steering ECU:

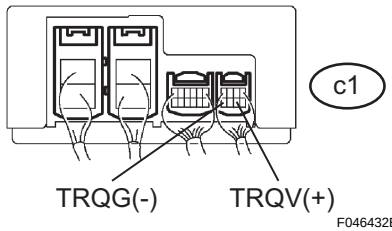

(a) Turn the ignition switch on.
(b) Measure the voltage.

Standard voltage

Tester Connection	Condition	Specified condition
TRQV (c1-6) - TRQG (c1-8)	Ignition switch on	7.5 to 8.5 V

NG → **REPLACE POWER STEERING ECU**

OK

3 INSPECT STEERING COLUMN ASSEMBLY (TORQUE SENSOR)

Power Steering ECU:

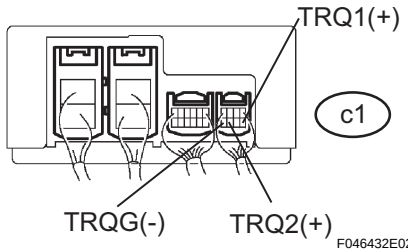

(a) Turn the ignition switch on.
(b) Measure the voltage.

Standard voltage

Tester Connection	Condition (Steering Position)	Specified Condition
TRQ1 (c1-5) - TRQG (c1-8)	Center position	2.3 to 2.7 V
TRQ2 (c1-7) - TRQG (c1-8)	Center position	2.3 to 2.7 V
TRQ1 (c1-5) - TRQG (c1-8)	Turned to right	2.5 to 4.7 V

Tester Connection	Condition (Steering Position)	Specified Condition
TRQ2 (c1-7) - TRQG (c1-8)	Turned to right	2.5 to 4.7 V
TRQ1 (c1-5) - TRQG (c1-8)	Turned to left	0.3 to 2.5 V
TRQ2 (c1-7) - TRQG (c1-8)	Turned to left	0.3 to 2.5 V

NG → **REPLACE STEERING COLUMN ASSEMBLY**

OK

REPLACE POWER STEERING ECU

DTC	C1515/15	Torque Sensor Zero Point Adjustment is not Initialized

DESCRIPTION

This DTC does not indicate a malfunction. The power steering ECU outputs this DTC when it determines that the torque sensor zero point calibration has not been performed.

DTC No.	DTC Detection Condition	Trouble Area
C1515/15	Torque sensor zero point calibration not performed.	• Torque sensor zero point calibration • Steering column assembly

INSPECTION PROCEDURE

1	PERFORM ZERO POINT CALIBRATION (TORQUE SENSOR)

NEXT

2	CONFIRM DTC

(a) Check for DTCs (See page PS-25).

Result

DTC still output even after performing torque sensor zero point calibration 3 times.	A
DTC still output even after performing torque sensor zero point calibration once or twice.	B
Normal system code output.	C

HINT:
The steering column assembly must be replaced if C1515/15 is still output even after the torque sensor zero point calibration is performed 3 times.

B → Go to step 1

C → END

A

REPLACE STEERING COLUMN ASSEMBLY

DTC	C1516/16	Torque Sensor Zero Point Adjustment Incomplete

DESCRIPTION

This DTC does not indicate a malfunction. The power steering ECU outputs this DTC when it determines that the torque sensor zero point calibration has not been completed successfully.

DTC No.	DTC Detection Condition	Trouble area
C1516/16	Torque sensor zero point calibration not completed successfully.	• Torque sensor zero point calibration failure • Steering column assembly

INSPECTION PROCEDURE

1 CLEAR DTC

NEXT

2 PERFORM INITIALIZATION (TORQUE SENSOR ZERO POINT)

NEXT

3 PERFORM ZERO POINT CALIBRATION (TORQUE SENSOR)

NEXT

4 CONFIRM DTC

(a) Check for DTCs (See page PS-25).

Result

DTC still output even after performing torque sensor zero point calibration 3 times.	**A**
DTC still output even after performing torque sensor zero point calibration once or twice.	**B**
Normal system code output.	**C**

HINT:
The steering column assembly must be replaced if C1516/16 is still output even after the torque sensor zero point calibration is performed 3 times.

B → **Go to step 1**

C → **END**

A

REPLACE STEERING COLUMN ASSEMBLY

DTC	C1524/24	Motor Circuit Malfunction

DESCRIPTION

The power steering ECU supplies the current to the power steering motor through the motor circuit.

DTC No.	DTC Detection Condition	Trouble Area
C1524/24	Short (or open) in motor circuit or abnormal voltage or current in motor circuit.	• Steering column assembly • Power steering ECU

WIRING DIAGRAM

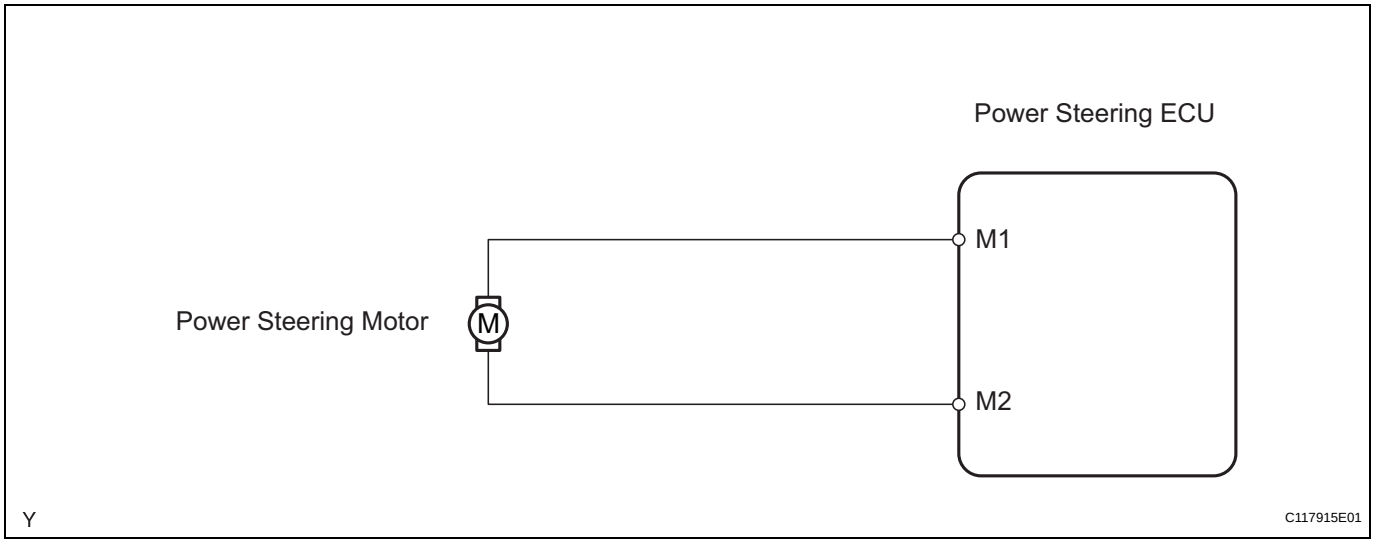

INSPECTION PROCEDURE

1	READ VALUE OF DATA LIST (MOTOR ACTUAL CURRENT)

(a) Connect the intelligent tester to the DLC3.
(b) Turn the ignition switch on and turn the tester on.
(c) Select the items [MOTOR ACTUAL CURRENT] and [COMMAND VALUE] in the DATA LIST and read the value displayed on the intelligent tester.

Standard current

Data List Item	Steering Position (Left Turned)	Steering Position (Center)	Steering Position (Right Turned)
MOTOR ACTUAL	10 A to 55 A	-1 A to +1 A	-55 A to -10 A
COMMAND VALUE	55 A	0 A	-55 A

HINT:
The current changes when steering wheel is turned.

OK → CHECK INTERMITTENT PROBLEMS

NG

2 INSPECT POWER STEERING ECU

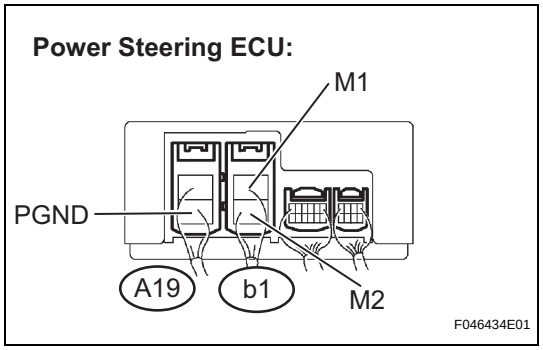

(a) Turn the ignition switch on.
(b) Measure the voltage.

Standard voltage

Tester Connection	Condition (Steering Position)	Specified Condition
M1 (b1-1) - PGND (A19-2)	Turned to right	Below 1 V
M1 (b1-1) - PGND (A19-2)	Turned to left	11 to 14 V
M2 (b1-2) - PGND (A19-2)	Turned to right	11 to 14 V
M2 (b1-2) - PGND (A19-2)	Turned to left	Below 1 V

OK → **Go to step 4**

NG

3 CHECK HARNESS AND CONNECTOR (POWER STEERING ECU - BODY GROUND)

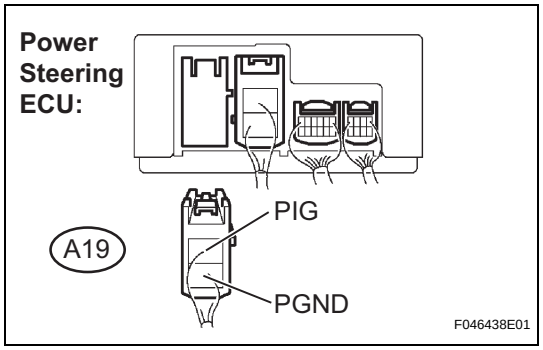

(a) Disconnect the connector from the power steering ECU.
(b) Measure the resistance and the voltage.

Standard

Tester Connection	Condition	Specified Condition
PGND (A19-2) - Body ground	Always	Below 1 Ω
PIG (A19-1) - Body ground	Ignition switch on.	11 to 14 V

NG → **REPAIR OR REPLACE HARNESS OR CONNECTOR**

OK

4 INSPECT STEERING COLUMN ASSEMBLY (POWER STEERING MOTOR)

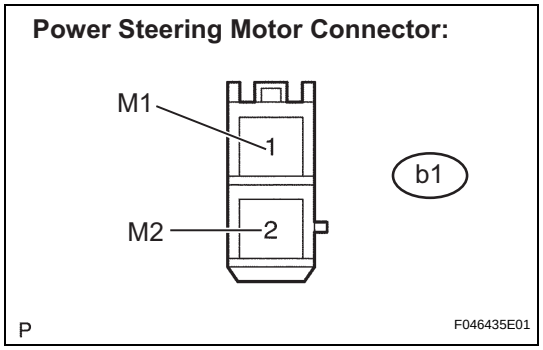

(a) Disconnect the connector from the power steering ECU.
(b) Measure the resistance.

Standard resistance

Tester Connection	Condition	Specified Condition
M1 (b1-1) - M2 (b1-2)	Always	0.08 to 0.15 Ω
M1 (b1-1) - Body ground	Always	1 MΩ or higher
M2 (b1-2) - Body ground	Always	1 MΩ or higher

NG → **REPLACE STEERING COLUMN ASSEMBLY**

OK

REPLACE POWER STEERING ECU

DTC	C1531/31	EPS ECU Circuit Malfunction

DTC	C1532/32	EPS ECU Circuit Malfunction

DTC	C1533/33	EPS ECU Circuit Malfunction

DTC	C1534/34	EPS ECU Circuit Malfunction

DTC	C1535/35	Steering Wheel Location Data Error

DESCRIPTION

The fail-safe function operates to stop power assist when DTCs indicating ECU malfunctions are output. However, the power assist operation continues when DTC C1534/34 is output because it indicates an EEPROM error in the ECU.

DTC No.	DTC Detection Condition	Trouble Area
C1531/31	ECU internal malfunction (CPU malfunction)	Power steering ECU
C1532/32	ECU internal malfunction (Peripheral circuit malfunction)	
C1533/33	ECU internal malfunction (Substrate temperature sensor malfunction)	
C1534/34	ECU internal malfunction (EEPROM error)	
C1535/35	Steering wheel location data error (LHD or RHD)	

INSPECTION PROCEDURE

1 CONFIRM DTC

(a) Check for DTCs.
OK:
DTCs other than C1531/31, C1532/32, C1533/33, C1534/34 and C1535/35 are not output.

NG → **REPAIR CIRCUITS INDICATED BY OUTPUT DTCS**

OK

REPLACE POWER STEERING ECU

DTC	C1541/41	Speed Sensor Malfunction

DTC	C1542/42	Speed Sensor Malfunction

DTC	C1571/71	Speed Sensor Malfunction (Test Mode DTC)

DESCRIPTION

The power steering ECU controls the assisting power in accordance with the vehicle speed signals from the combination meter.
HINT:
These DTCs are only for vehicles without a skid control ECU (ABS ECU).
When the sensor is normal, a pulse signal (43 Hz at 37 mph [60 km/h]) that alternates between 0 V and 5 V is transmitted to the ECU.

DTC No.	Detection Item	Trouble Area
C1541/41	Speed sensor malfunction.	• Speed sensor • Speed sensor circuit • Combination meter • Power steering ECU
C1542/42		
C1571/71	Speed sensor malfunction (Test mode).	

WIRING DIAGRAM

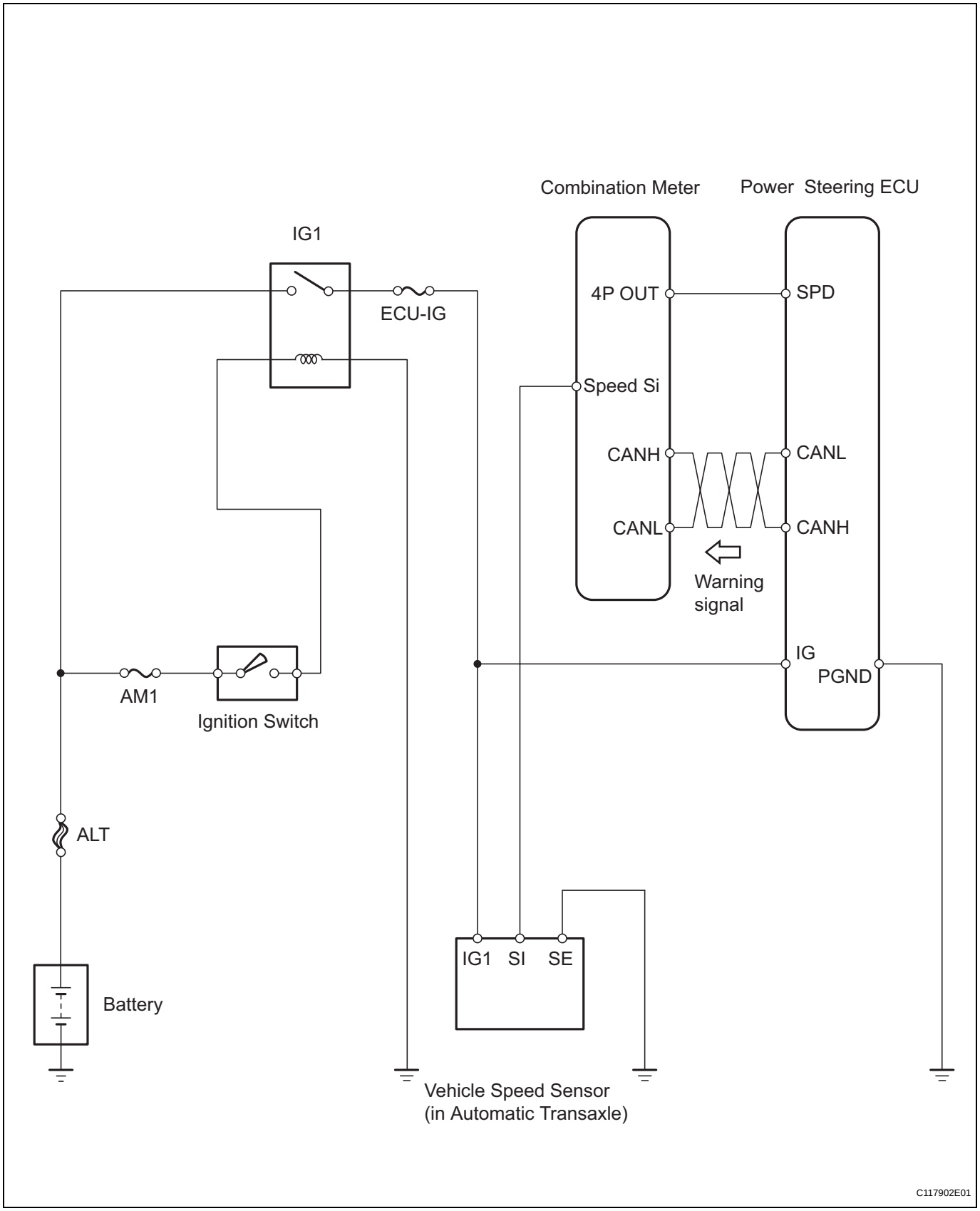

INSPECTION PROCEDURE

HINT:

Confirm that DTC C1571/71 has been cleared by activating test mode after the repair is completed.

1 READ VALUE OF DATA LIST (SPD)

(a) Connect the intelligent tester to the DLC3.
(b) Turn the ignition switch on and turn the tester on.
(c) Select the item [SPD] in the DATA LIST and read the value displayed on the intelligent tester.
(d) Drive the vehicle and check that there is no significant difference between the speed value displayed by the intelligent tester and the speed value displayed by the speedometer.
OK:
Speed values are same.
HINT:
There is tolerance of + - 10 % in the speedometer indication.

OK → **CHECK INTERMITTENT PROBLEMS**

NG

2 CHECK HARNESS AND CONNECTOR (POWER STEERING ECU - COMBINATION METER)

Combination Meter (harness side):

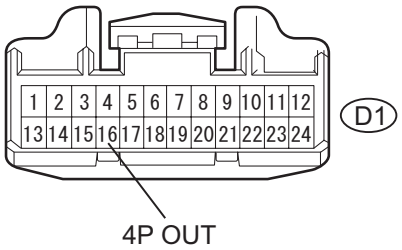

Power steering ECU:

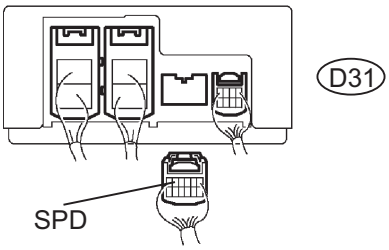

C122913E01

(a) Disconnect the connectors from the power steering ECU and the combination meter.
(b) Measure the resistance.
Standard resistance

Tester Connection	Condition	Specified Condition
SPD (D31-5) - 4P OUT (D1-16)	Always	Below 1 Ω
SPD (D31-5) - Body ground	Always	10 kΩ or higher

NG → **REPAIR OR REPLACE HARNESS OR CONNECTOR**

OK

GO TO COMBINATION METER SYSTEM

DTC	C1551/51	IG Power Source Circuit Malfunction

DESCRIPTION

The power steering ECU distinguishes the ignition switch status as on or off through the IG power source circuit.

DTC No.	DTC Detection Condition	Trouble Area
C1551/51	Open or short in IG power source circuit with ignition switch on.	• ECU-IG fuse • IG power source circuit • Power steering ECU

WIRING DIAGRAM

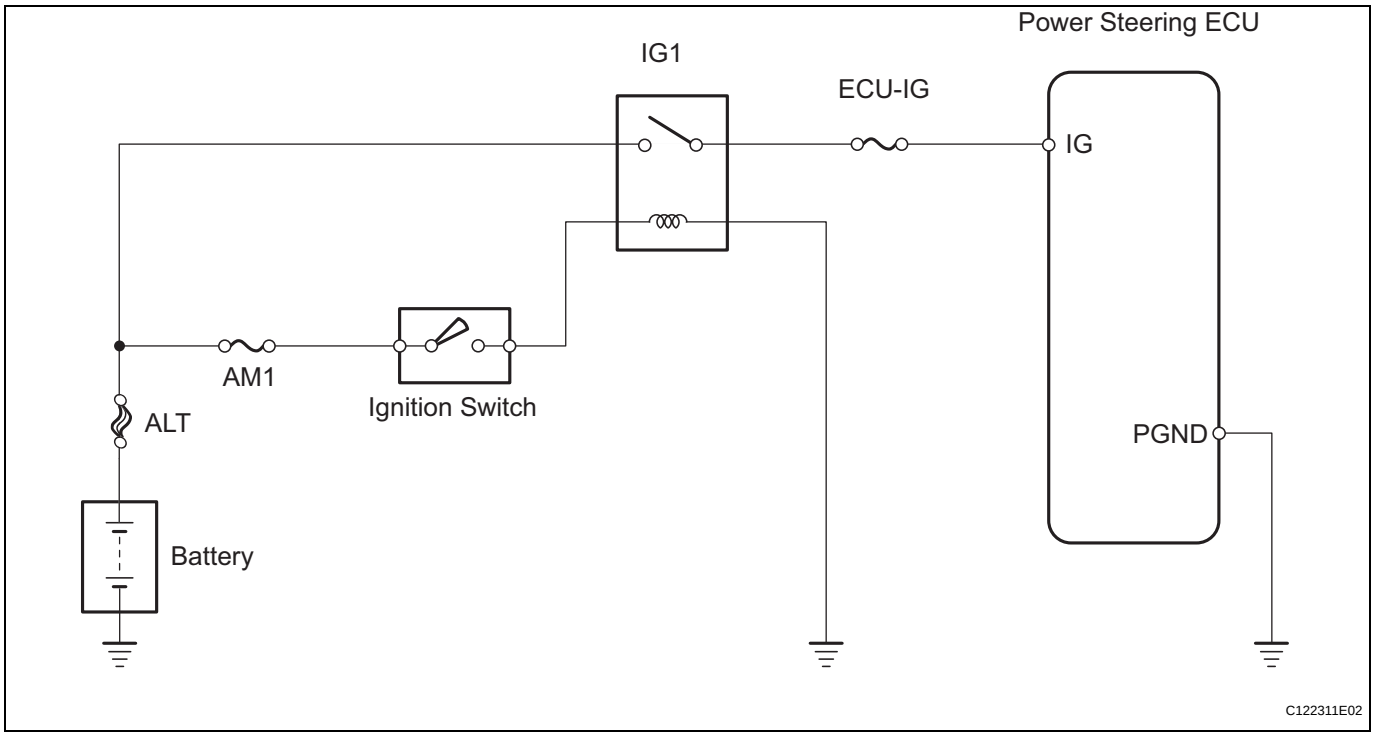

INSPECTION PROCEDURE

1	READ VALUE OF DATA LIST (IG SUPPLY)

(a) Connect the intelligent tester to the DLC3.
(b) Turn the ignition switch on and turn the tester on.
(c) Select the item [IG SUPPLY] in the DATA LIST and read the value displayed on the intelligent tester.
Standard voltage:
11 to 14 V

OK → **CHECK INTERMITTENT PROBLEMS**

NG

2 INSPECT FUSE (ECU-IG)

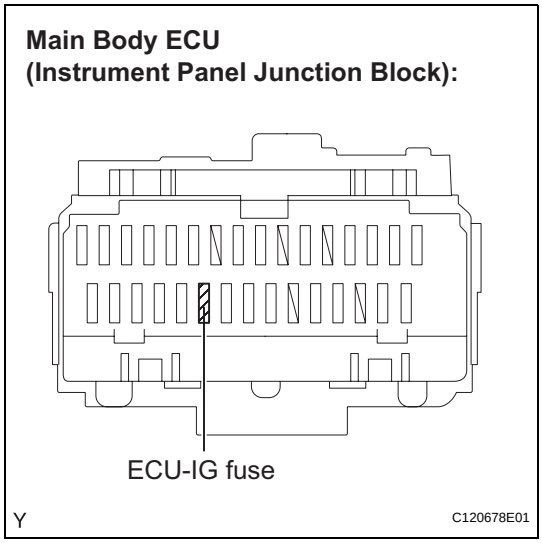

(a) Remove the ECU-IG fuse from the instrument panel J/B.
(b) Check the resistance of the fuse.
Standard resistance:
Below 1 Ω

NG → **INSPECT SHORT CIRCUIT IN COMPONENTS AND WIRES CONNECTED TO FUSE**

OK

3 CHECK HARNESS AND CONNECTOR (POWER STEERING ECU - BODY GROUND)

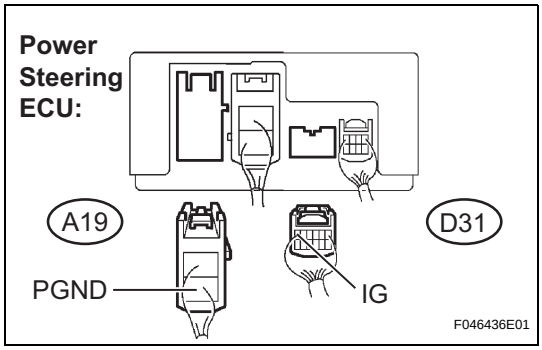

(a) Disconnect the connectors from the power steering ECU.
(b) Measure the voltage and the resistance.
Standard

Tester Connection	Condition	Specified Condition
IG (D31-6) - Body ground	Ignition switch on	11 to 14 V
PGND (A19-2) - Body ground	Always	Below 1 Ω

NG → **REPAIR OR REPLACE HARNESS OR CONNECTOR**

OK

REPLACE POWER STEERING ECU

DTC	C1552/52	PIG Power Source Circuit

DTC	C1553/53	When Resetting Voltage, Vehicle is Being Driven

DTC	C1554/54	EPS Relay Circuit

DTC	C1555/55	EPS Motor Relay Circuit

DESCRIPTION

When a problem occurs in the system, the power source relay circuit and the motor relay circuit are shut off to stop the power assist. The ECU must be replaced when there is a problem with the relays because each relay is built into the ECU.

DTC No.	DTC Detection Condition	Trouble Area
C1552/52	PIG power source circuit malfunction	• EPS fuse • PIG power source circuit • Power steering ECU
C1553/53	Abnormal overvoltage	• IG and PIG power source circuit • Power steering ECU
C1554/54	Power source relay circuit malfunction	• EPS fuse • PIG power source circuit • Power steering ECU
C1555/55	Motor relay circuit malfunction	• Power steering ECU

WIRING DIAGRAM

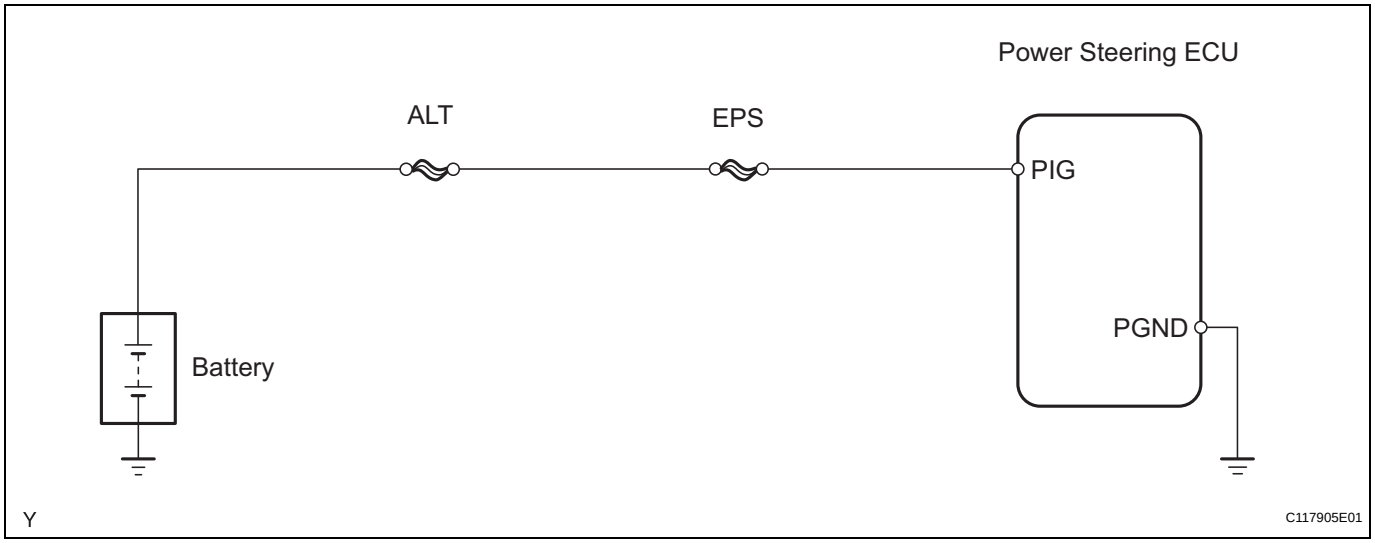

INSPECTION PROCEDURE

1	READ VALUE OF DATA LIST (PIG SUPPLY)

(a) Connect the intelligent tester to the DLC3.
(b) Select the item [PIG SUPPLY] in the DATA LIST and read the value displayed on the intelligent tester.

Standard voltage:
Always 11 to 14 V

OK → **CHECK INTERMITTENT PROBLEMS**

NG

2 INSPECT FUSE (EPS FUSE)

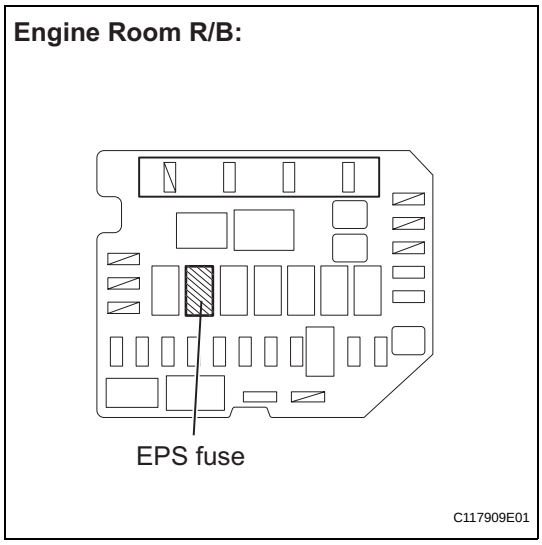

(a) Remove the EPS fuse from the engine room R/B.
(b) Measure the resistance of the fuse.
Standard resistance:
Below 1Ω

NG → **INSPECT SHORT CIRCUIT IN COMPONENTS AND WIRES CONNECTED TO FUSE**

OK

3 CHECK HARNESS AND CONNECTOR (POWER STEERING ECU - BODY GROUND)

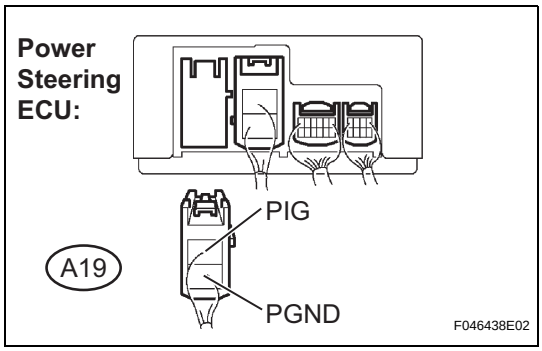

(a) Disconnect the connector from the power steering ECU.
(b) Measure the voltage and the resistance.
Standard

Tester Connection	Condition	Specified Condition
PIG (A19-1) - Body ground	Always	11 to 14 V
PGND (A19-2) - Body ground	Always	Below 1 Ω

NG → **REPAIR OR REPLACE HARNESS OR CONNECTOR**

OK

4 INSPECT STEERING COLUMN ASSEMBLY (POWER STEERING MOTOR)

Power Steering Motor Connector:

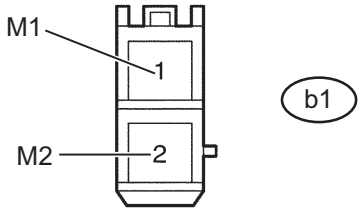

(a) Disconnect the connector from the power steering ECU.
(b) Measure the resistance.
Standard resistance

Tester Connection	Condition	Specified Condition
M1 (b1-1) - M2 (b1-2)	Always	0.08 to 0.15 Ω
M1 (b1-1) - Body ground	Always	1 MΩ or higher
M2 (b1-2) - Body ground	Always	1 MΩ or higher

NG → **REPLACE STEERING COLUMN ASSEMBLY**

OK

REPLACE POWER STEERING ECU

DTC	C1581/81	Assist Map Un-Writing

DESCRIPTION

The power steering ECU outputs this DTC when it determines that the assist map is not written in the ECU.
The power steering ECU must be replaced when this DTC is output because this malfunction cannot be repaired.
HINT:
The assist map data is written in the power steering ECU to control assisting power. The assist map is selected from five types based on the vehicle specification communication data (designation and grade package information).

DTC No.	DTC Detection Condition	Trouble Area
C1581/81	Assist map not written in power steering ECU	Power steering ECU

INSPECTION PROCEDURE

1	CONFIRM DTC

(a) Check for DTCs (See page PS-25).
OK:
DTCs other than C1581/81 are not output.

NG → **REPAIR CIRCUITS INDICATED BY OUTPUT DTCS**

OK

REPLACE POWER STEERING ECU

DTC	U0073	Control Module Communication Bus OFF

DTC	U0105	Lost Communication with ECM

DTC	U0121	Lost Communication with Anti-lock Brake System (ABS) Control Module

DESCRIPTION

The power steering ECU receives signals from the ECM and the skid control ECU (ABS ECU) via the CAN communication system.

DTC No.	DTC Detection Condition	Trouble Area
U0073	CAN communication error (CAN bus off)	• CAN communication system
U0105	ECM communication error	• CAN communication system • ECM
U0121	Skid control ECU (ABS ECU) communication error	• CAN communication system • Skid control ECU (ABS ECU)

HINT:
When two or more DTCs starting with [U] are output simultaneously, inspect the connectors and wire harness of each ECU.

WIRING DIAGRAM

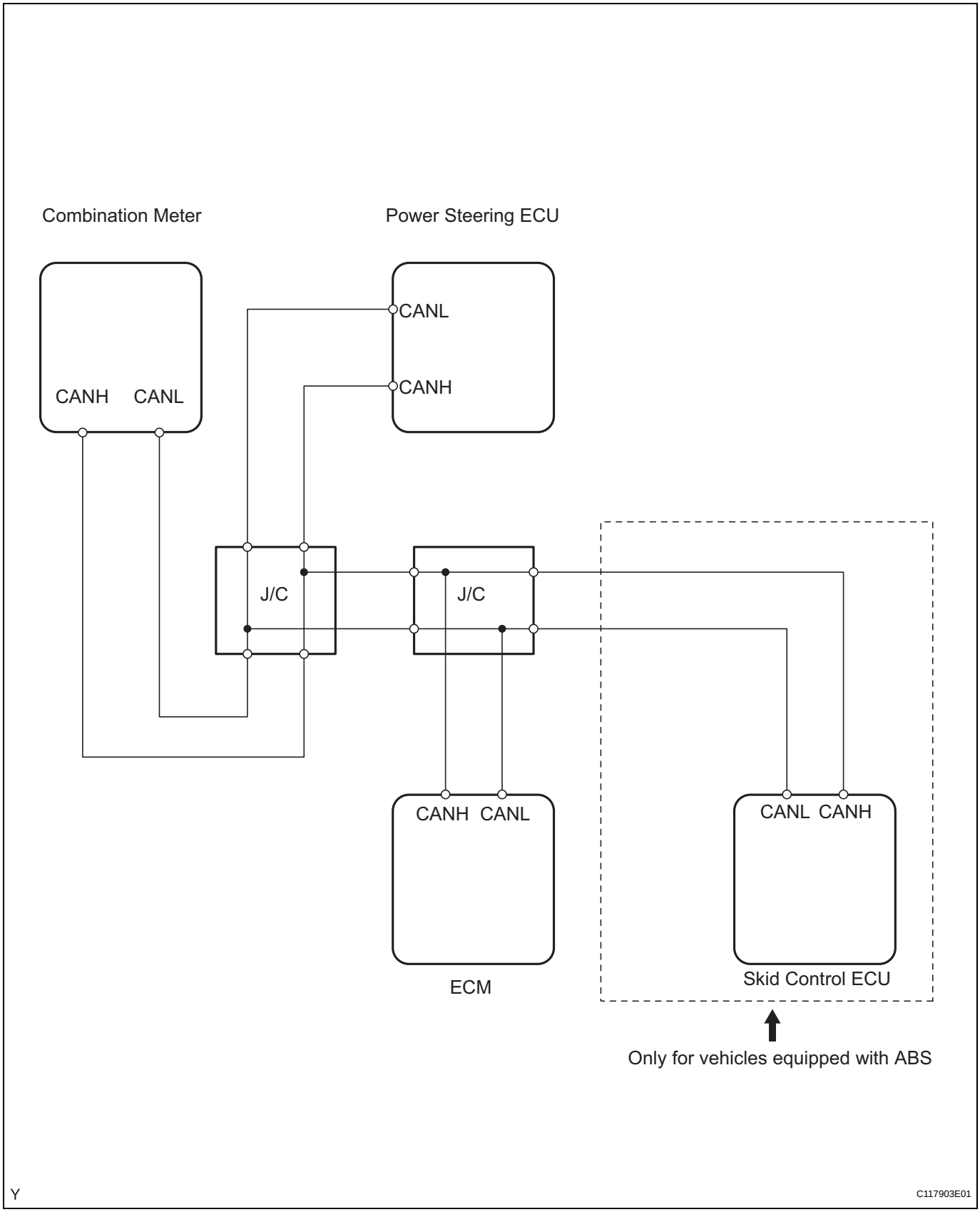

INSPECTION PROCEDURE

1	**CONFIRM DTC**

(a) Check for DTCs (See page PS-25).
OK:
DTCs other than U0073, U0105 and U0121 are not output.

NG → **REPAIR CIRCUITS INDICATED BY OUTPUT DTCS**

OK

GO TO CAN COMMUNICATION SYSTEM

EPS Warning Light Circuit

DESCRIPTION

If the power steering ECU detects a malfunction, the P/S warning light comes on. At this time, the power steering ECU stores a DTC in its memory.

WIRING DIAGRAM

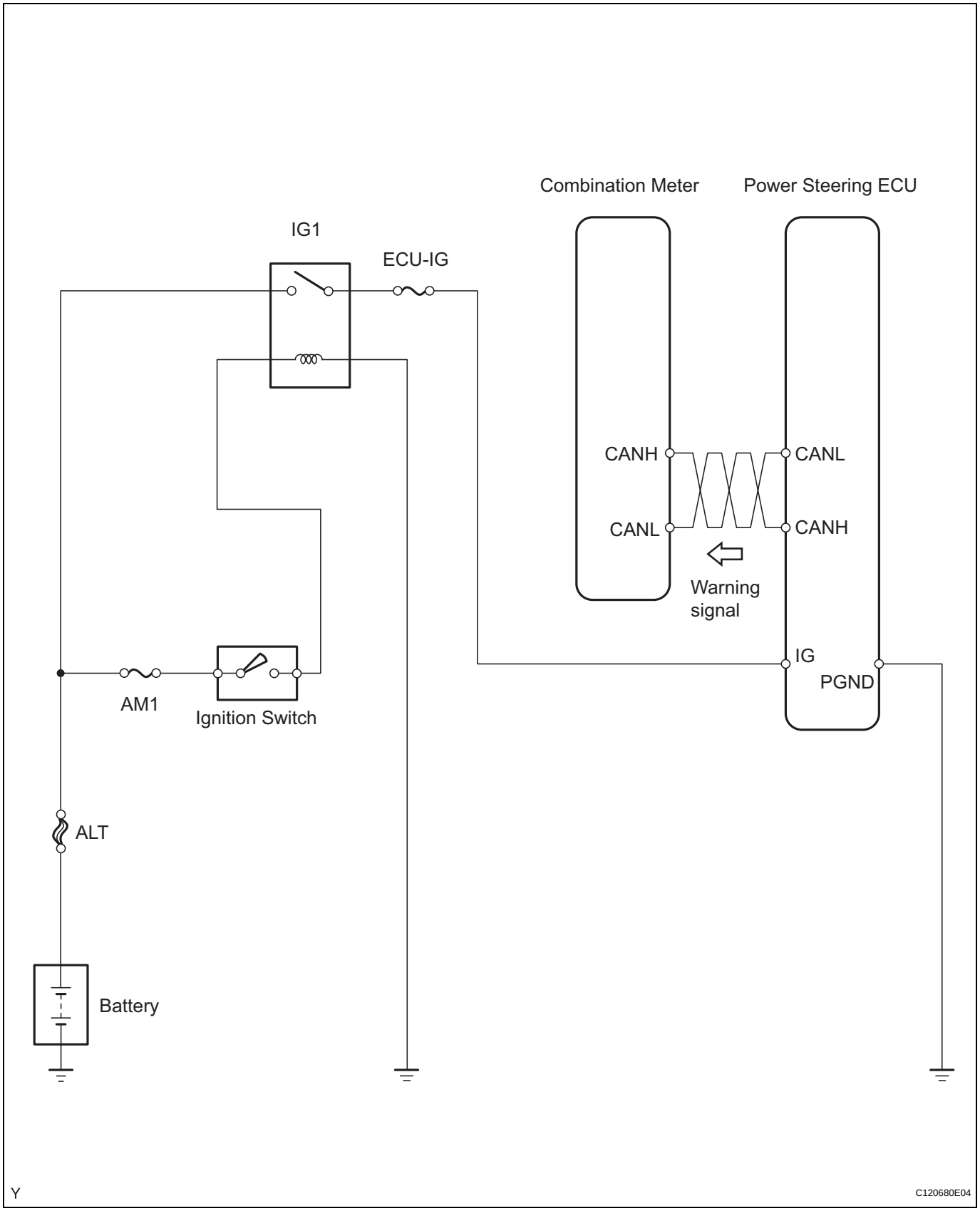

INSPECTION PROCEDURE

1 INSPECT CAN COMMUNICATION SYSTEM

(a) Using the intelligent tester, check for DTCs and confirm that there are no problems in the CAN communication system.
OK:
DTCs are not output.

NG → **GO TO CAN COMMUNICATION SYSTEM**

OK

2 READ VALUE OF DATA LIST (IG SUPPLY)

(a) Connect the intelligent tester to the DLC3.
(b) Turn the ignition switch on and turn the tester on.
(c) Select the item [IG SUPPLY] in the DATA LIST and read value displayed on the intelligent tester.
Standard voltage:
11 to 14 V

NG → **INSPECT POWER SOURCE CIRCUIT (IG) (See page PS-45)**

OK

3 CHECK HARNESS AND CONNECTOR (POWER STEERING ECU - BODY GROUND)

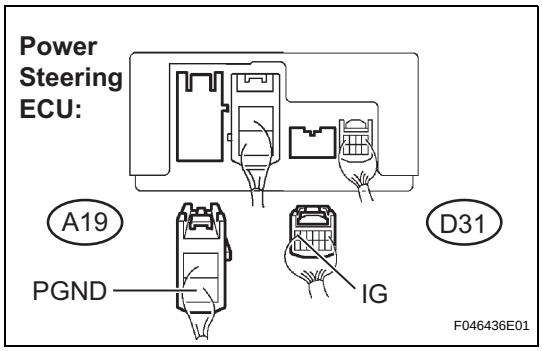

(a) Disconnect the connectors from the power steering ECU.
(b) Measure the voltage and the resistance.
Standard

Tester Connection	Condition	Specified Condition
IG (D31-6) - Body ground	Ignition switch on	11 to 14 V
PGND (A19-2) - Body ground	Always	Below 1 Ω

NG → **REPAIR OR REPLACE HARNESS OR CONNECTOR**

OK

4 REPLACE POWER STEERING ECU

NOTICE:
After replacing the power steering ECU, perform the torque sensor zero point calibration.

NEXT

5	CHECK PS WARNING LIGHT (COMBINATION METER)

(a) Check that the P/S warning light on the combination meter does not come on.
OK:
The P/S warning light does not come on.

NG → **REPLACE COMBINATION METER**

OK

END

TS and CG Terminal Circuit

DESCRIPTION

The power steering ECU can be changed from normal mode to the mode for the torque sensor zero point calibration by turning the ignition switch on after the DLC3 TS and CG terminals have been connected.

WIRING DIAGRAM

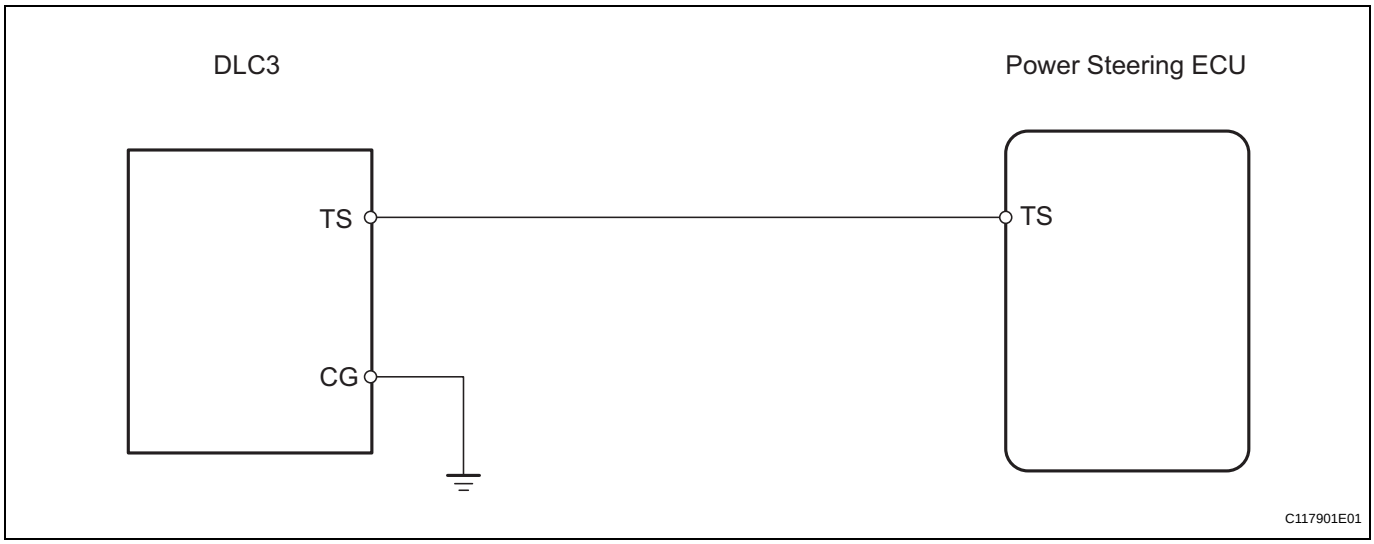

INSPECTION PROCEDURE

1	INSPECT DLC3 TERMINAL VOLTAGE

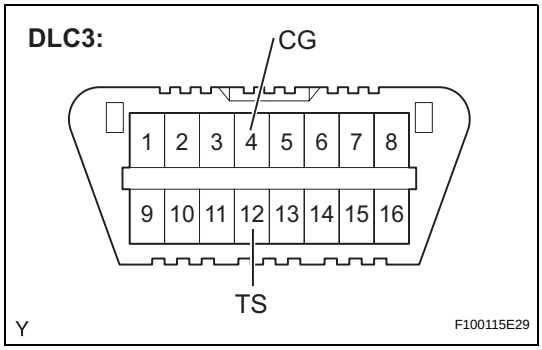

(a) Turn the ignition switch on.
(b) Measure the voltage.
Standard voltage

Tester Connection	Specified Condition
TS (12) - CG (4)	11 to 14 V

OK → **END**

NG

2 CHECK HARNESS AND CONNECTOR (DLC3 - BODY GROUND)

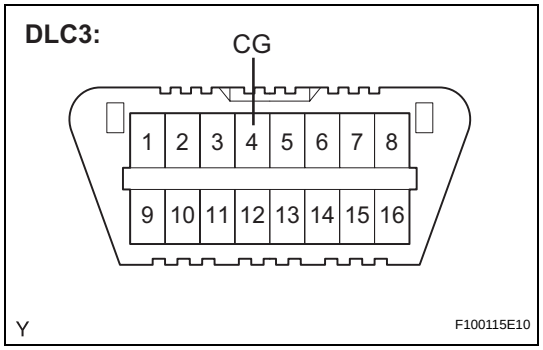

(a) Measure the resistance.
Standard resistance

Tester Connection	Specified Condition
CG (4) - Body ground	Below 1 Ω

NG → **REPAIR OR REPLACE HARNESS OR CONNECTOR**

OK

3 CHECK HARNESS AND CONNECTOR (POWER STEERING ECU - DLC3)

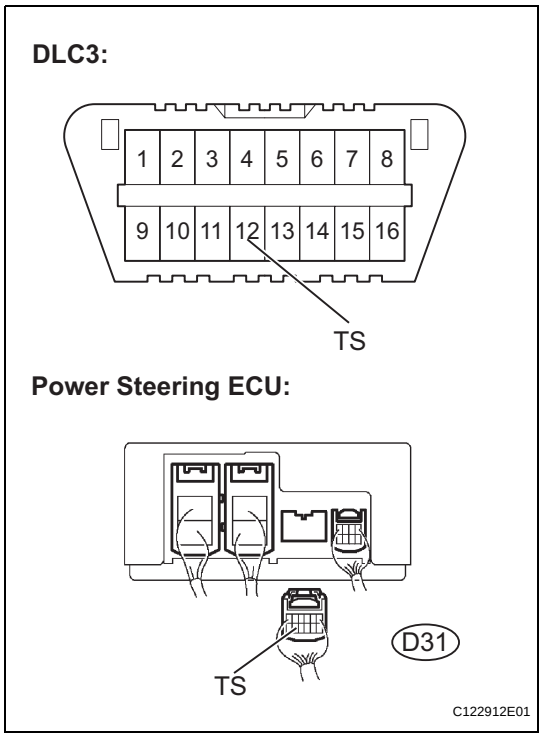

(a) Disconnect the connector from the power steering ECU.
(b) Measure the resistance.
Standard resistance

Tester Connection	Specified Condition
TS (D31-11) -TS (12)	Below 1 Ω
TS (D31-11) - Body ground	10 kΩ or higher

NG → **REPAIR OR REPLACE HARNESS OR CONNECTOR**

OK

REPLACE POWER STEERING ECU

POWER STEERING GEAR (for Sedan)

COMPONENTS

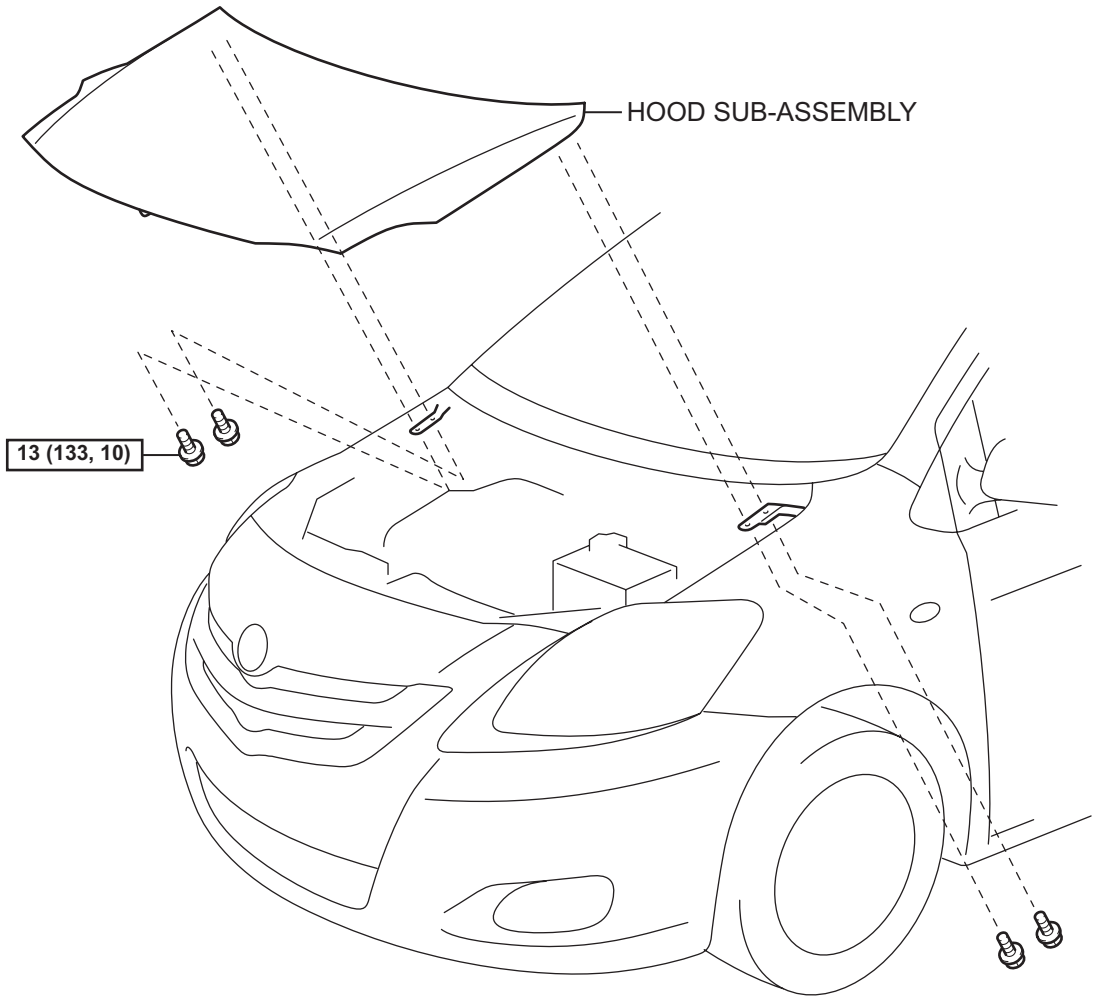

N*m (kgf*cm, ft*lbf) : Specified torque

B135922E01

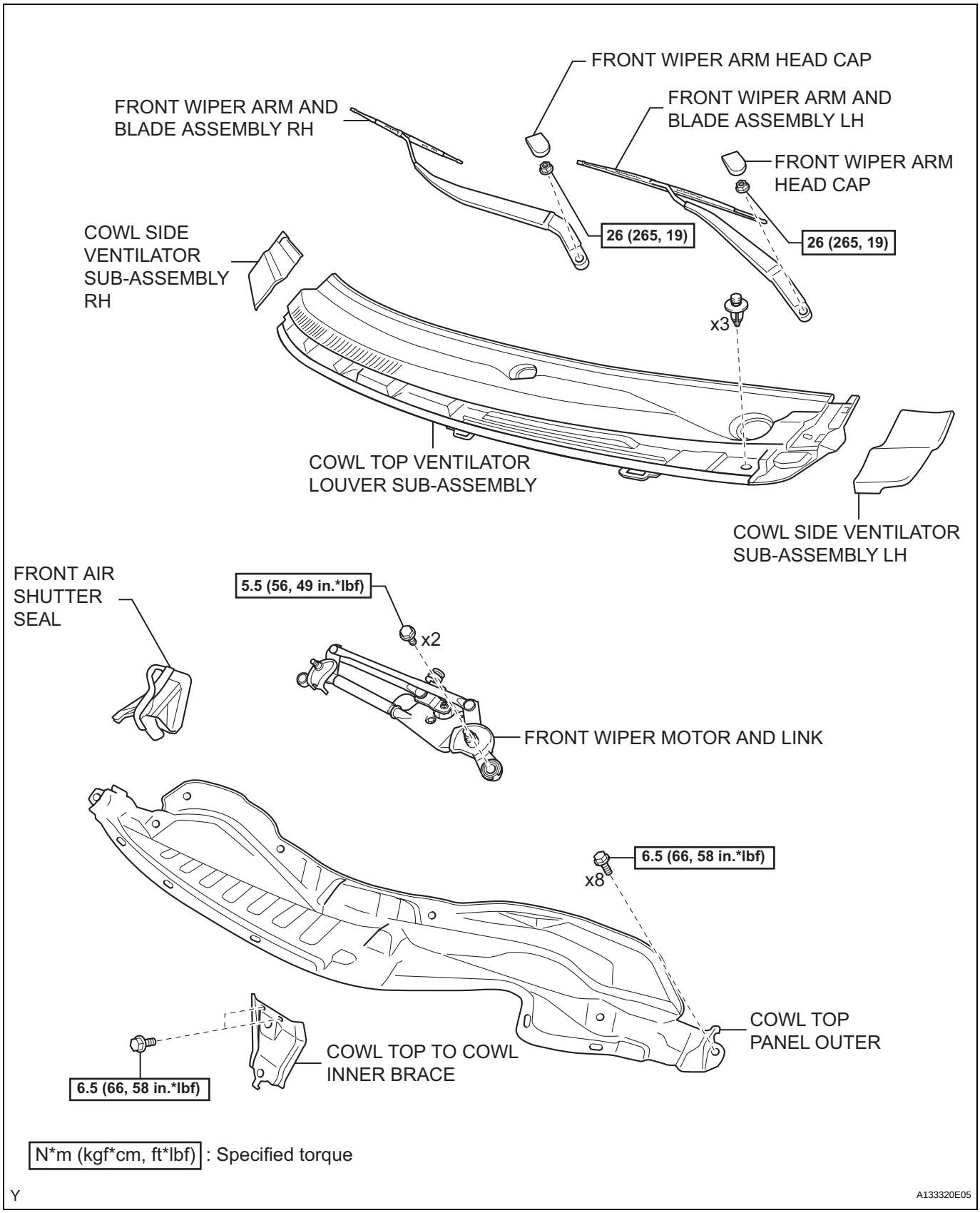
FRONT WIPER ARM HEAD CAP
FRONT WIPER ARM AND BLADE ASSEMBLY RH
FRONT WIPER ARM AND BLADE ASSEMBLY LH
FRONT WIPER ARM HEAD CAP
26 (265, 19)
26 (265, 19)
COWL SIDE VENTILATOR SUB-ASSEMBLY RH
x3
COWL TOP VENTILATOR LOUVER SUB-ASSEMBLY
COWL SIDE VENTILATOR SUB-ASSEMBLY LH
FRONT AIR SHUTTER SEAL
5.5 (56, 49 in.*lbf)
x2
FRONT WIPER MOTOR AND LINK
6.5 (66, 58 in.*lbf)
x8
COWL TOP PANEL OUTER
COWL TOP TO COWL INNER BRACE
6.5 (66, 58 in.*lbf)
N*m (kgf*cm, ft*lbf) : Specified torque
Y
A133320E05

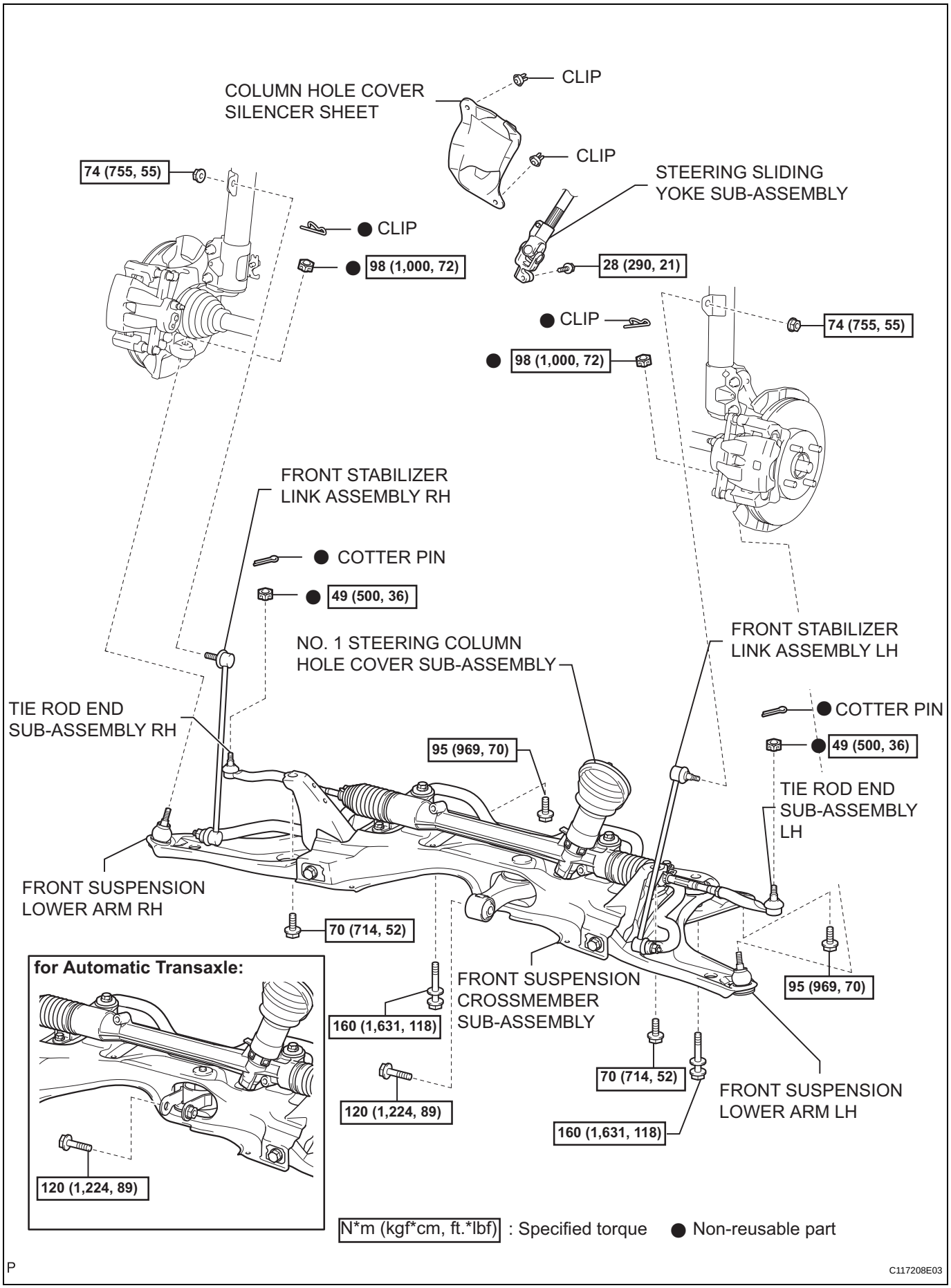
CLIP
COLUMN HOLE COVER SILENCER SHEET
CLIP
74 (755, 55)
STEERING SLIDING YOKE SUB-ASSEMBLY
● CLIP
● 98 (1,000, 72)
28 (290, 21)
● CLIP
74 (755, 55)
● 98 (1,000, 72)
FRONT STABILIZER LINK ASSEMBLY RH
● COTTER PIN
● 49 (500, 36)
NO. 1 STEERING COLUMN HOLE COVER SUB-ASSEMBLY
FRONT STABILIZER LINK ASSEMBLY LH
TIE ROD END SUB-ASSEMBLY RH
● COTTER PIN
● 49 (500, 36)
95 (969, 70)
TIE ROD END SUB-ASSEMBLY LH
FRONT SUSPENSION LOWER ARM RH
70 (714, 52)
for Automatic Transaxle:
FRONT SUSPENSION CROSSMEMBER SUB-ASSEMBLY
95 (969, 70)
160 (1,631, 118)
70 (714, 52)
120 (1,224, 89)
FRONT SUSPENSION LOWER ARM LH
160 (1,631, 118)
120 (1,224, 89)
N*m (kgf*cm, ft.*lbf) : Specified torque
● Non-reusable part
P
C117208E03

PS

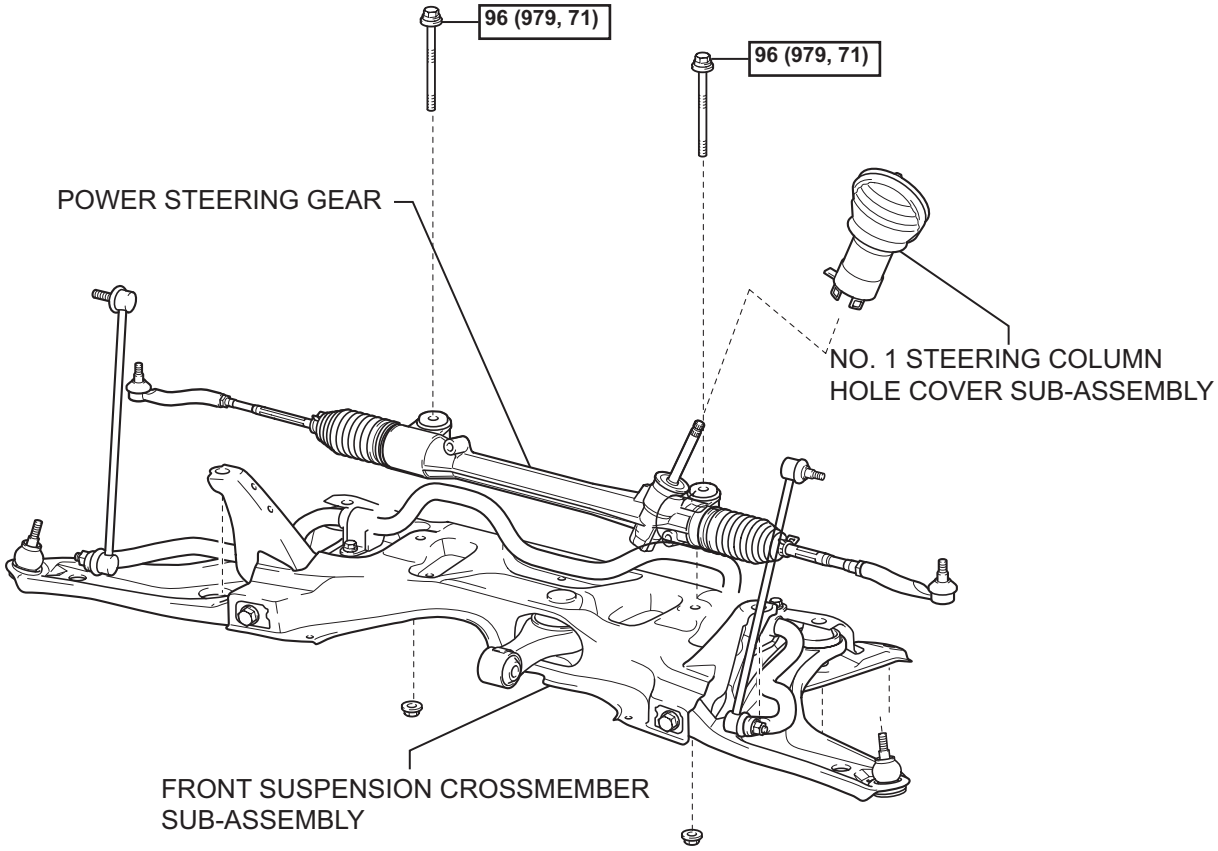

N*m (kgf*cm, ft.*lbf) : Specified torque

C119861E02

REMOVAL

1. **POSITION FRONT WHEELS FACING STRAIGHT AHEAD**
2. **DISCONNECT CABLE FROM NEGATIVE BATTERY TERMINAL**
3. **REMOVE HOOD SUB-ASSEMBLY**
   (a) Remove the 4 bolts and remove the hood.
4. **REMOVE FRONT WIPER ARM HEAD CAP (See page WW-9)**
5. **REMOVE FRONT WIPER ARM AND BLADE ASSEMBLY LH (See page WW-9)**
6. **REMOVE FRONT WIPER ARM AND BLADE ASSEMBLY RH (See page WW-9)**
7. **REMOVE COWL SIDE VENTILATOR SUB-ASSEMBLY LH (See page WW-10)**
8. **REMOVE COWL SIDE VENTILATOR SUB-ASSEMBLY RH (See page WW-10)**
9. **REMOVE COWL TOP VENTILATOR LOUVER SUB-ASSEMBLY (See page WW-10)**
10. **REMOVE FRONT WIPER MOTOR AND LINK (See page WW-10)**
11. **REMOVE FRONT AIR SHUTTER SEAL (See page EM-123)**
12. **REMOVE COWL TOP PANEL OUTER (See page BR-41)**
13. **REMOVE COLUMN HOLE COVER SILENCER SHEET**
    (a) Remove the floor carpet and 2 clips and remove the column hole cover silencer.

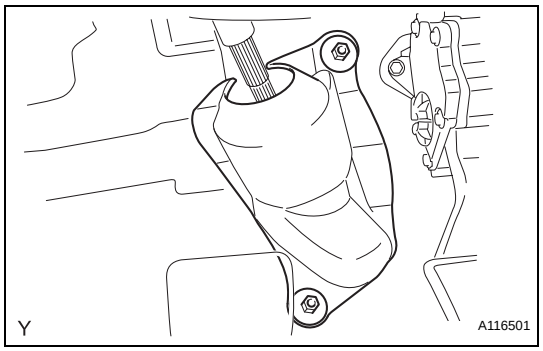

14. **REMOVE STEERING SLIDING YOKE SUB-ASSEMBLY**
    (a) Use a seat belt to fix the steering wheel assembly, in order to avoid breakage of the spiral cable.

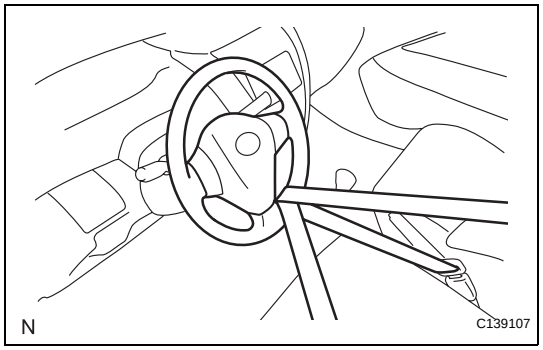

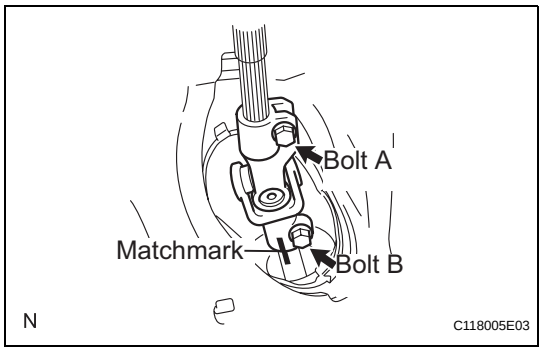

(b) Place matchmarks on the sliding yoke of the steering intermediate shaft assembly and the power steering.

(c) Loosen bolt A, remove bolt B and separate the steering intermediate shaft assembly.

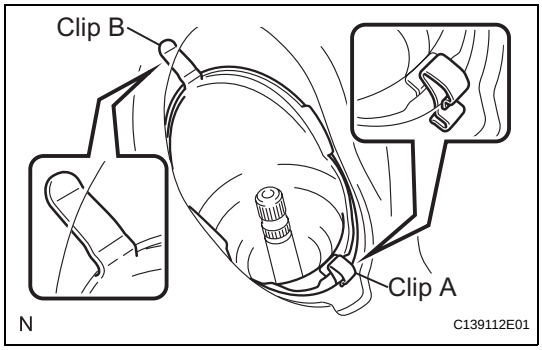

15. REMOVE NO. 1 STEERING COLUMN HOLE COVER SUB-ASSEMBLY

(a) Remove clip A, separate clip B from the body and separate No. 1 steering column hole cover sub-assembly.

16. REMOVE FRONT WHEEL

17. REMOVE TIE ROD END SUB-ASSEMBLY LH (See page DS-3)

18. REMOVE TIE ROD END SUB-ASSEMBLY RH

HINT:
Use the same procedure for the RH side as for the LH side.

19. REMOVE FRONT STABILIZER LINK ASSEMBLY LH (See page DS-4)

20. REMOVE FRONT STABILIZER LINK ASSEMBLY RH

HINT:
Use the same procedure for the RH side as for the LH side.

21. REMOVE FRONT SUSPENSION LOWER ARM LH (See page DS-4)

22. REMOVE FRONT SUSPENSION LOWER ARM RH

HINT:
Use the same procedure for the RH side as for the LH side.

23. SUSPEND ENGINE ASSEMBLY

(a) 1NZ-FE

(1) Remove the bolt and remove the radio setting condenser.

(2) Remove the bolt and remove the air-fuel ratio sensor wiring bracket.

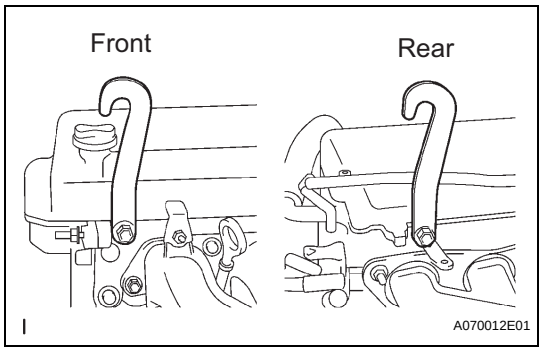

(3) Install the engine hanger with the bolt in the position shown in the illustration.
Part No.:
Engine hanger :
12281-21010
Bolt:
91642-81025
Torque: 40 N*m (408 kgf*cm, 30 ft.*lbf)

(4) Using an engine sling device and a chain block, support the engine assembly w/transaxle and front suspension crossmember.

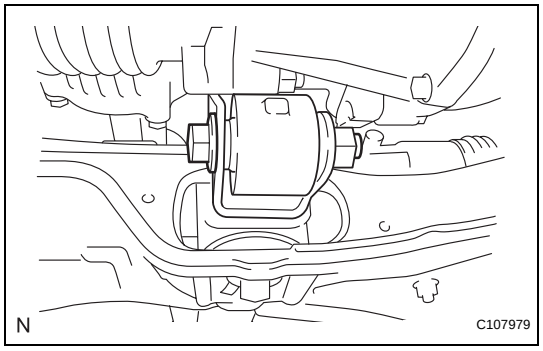

24. REMOVE FRONT SUSPENSION CROSSMEMBER SUB-ASSEMBLY

(a) Remove the bolt and separate the engine moving control rod.

(b) Support the front suspension crossmember with a transmission jack.

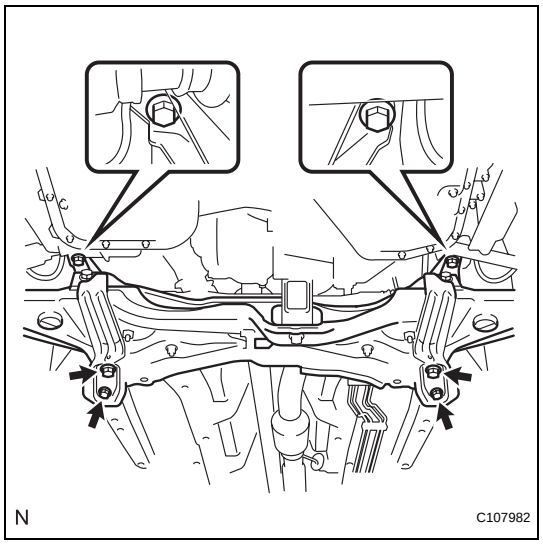

(c) Remove the 6 bolts and remove the suspension crossmember.

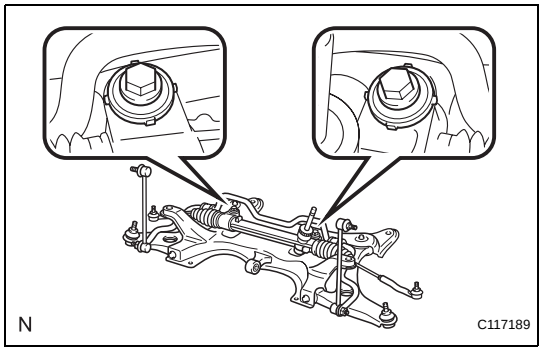

25. REMOVE POWER STEERING GEAR

(a) Remove the 2 bolts and 2 nuts and remove the power steering gear from the suspension crossmember.
NOTICE:
Keep the nut from rotating while turning the bolt.

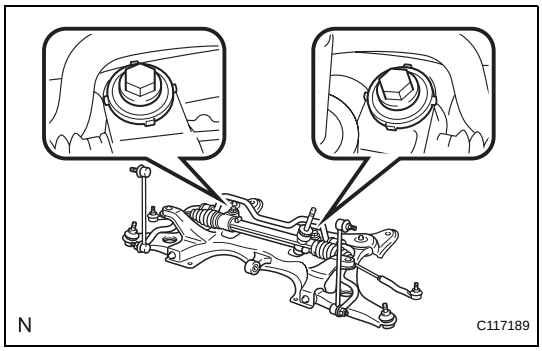

INSTALLATION

1. INSTALL POWER STEERING GEAR

(a) Install the power steering gear onto the front suspension crossmember with the 2 bolts and 2 nuts.
Torque: 96 N*m (979 kgf*cm, 71 ft.*lbf)
NOTICE:
Keep the nut from rotating while turning the bolt.

2. INSTALL FRONT SUSPENSION CROSSMEMBER SUB-ASSEMBLY

(a) Support the front suspension crossmember with a transmission jack.

(b) Provisionally install the front suspension crossmember onto the body with the 6 bolts.

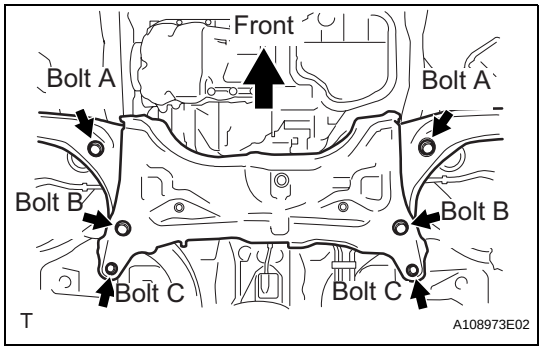

Bolt	Underhead Length (mm)
A	38
B	99
C	45

(c) By inserting SST into the datum holes in the front suspension crossmembers RH and LH alternately, tighten bolts A, B and C on both sides to the specified torque, in several steps.
SST 09670-00011
Torque: 70 N*m (714 kgf*cm, 52 ft.*lbf) for Bolt A
160 N*m (1,631 kgf*cm, 118 ft.*lbf) for Bolt B
95 N*m (969 kgf*cm, 70 ft.*lbf) for Bolt C
NOTICE:
- **Insert SST into the datum hole in a vertical orientation.**
- **If SST can not be inserted into the datum hole vertically, loosen all the bolts and then insert SST again.**

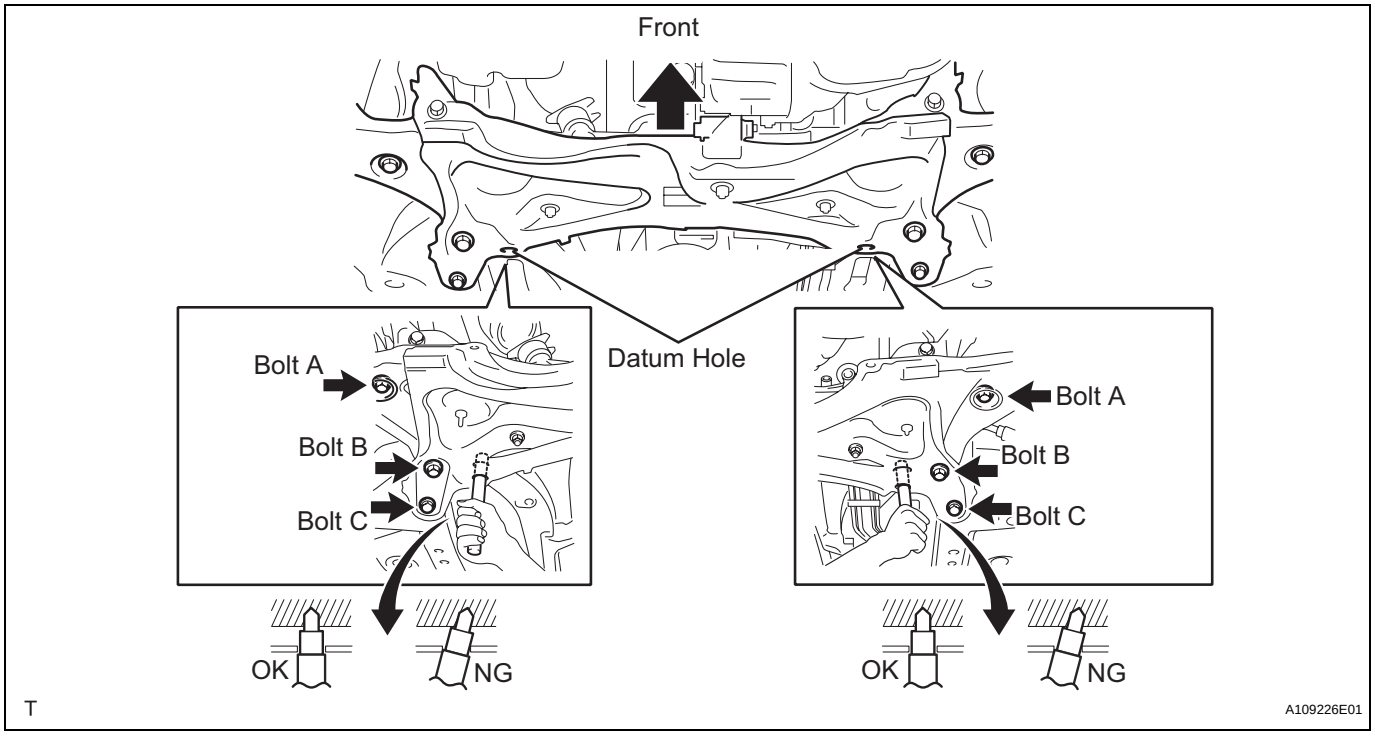

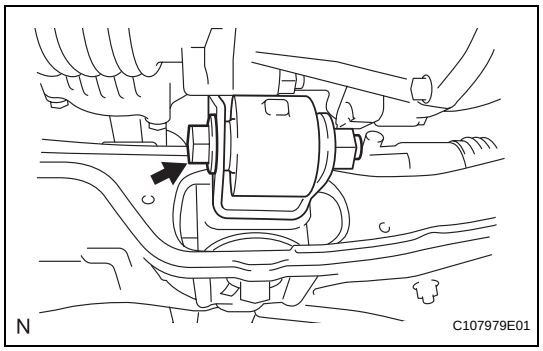

(d) Install the engine moving control rod with the bolt.
Torque: 120 N*m (1,224 kgf*cm, 89 ft.*lbf)

3. **INSTALL FRONT SUSPENSION LOWER ARM LH (See page DS-14)**

4. **INSTALL FRONT SUSPENSION LOWER ARM RH**
HINT:
Use the same procedure for the LH side.

5. **INSTALL FRONT STABILIZER LINK ASSEMBLY LH (See page DS-14)**

6. **INSTALL FRONT STABILIZER LINK ASSEMBLY RH**
HINT:
Use the same procedure for the LH side.

7. **INSTALL TIE ROD END SUB-ASSEMBLY LH (See page DS-15)**

8. **INSTALL TIE ROD END SUB-ASSEMBLY RH**
HINT:
Use the same procedure for the LH side.

9. **INSTALL FRONT WHEEL**
Torque: 103 N*m (1,050 kgf*cm, 76 ft.*lbf)

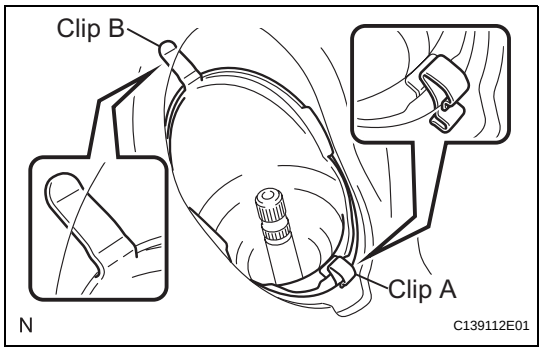

10. INSTALL NO. 1 STEERING COLUMN HOLE COVER SUB-ASSEMBLY

(a) Install clip B onto the body portion and install No. 1 steering column hole cover sub-assembly onto the body portion with clip A.

NOTICE:

Make sure that the lip portion of hole cover No. 1 is not damaged.

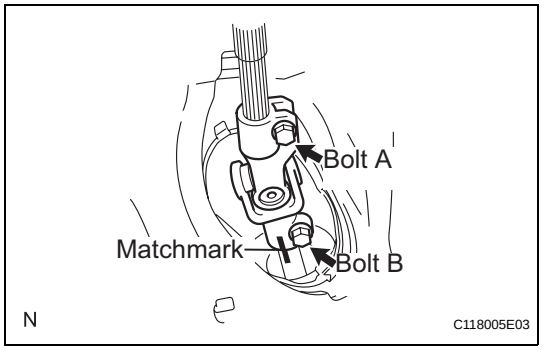

11. INSTALL STEERING SLIDING YOKE SUB-ASSEMBLY

(a) Align the matchmarks and install the sliding yoke onto the intermediate shaft.

Torque: 28 N*m (290 kgf*cm, 21 ft.*lbf)

(b) Tighten bolt A.

Torque: 28 N*m (290 kgf*cm, 21 ft.*lbf)

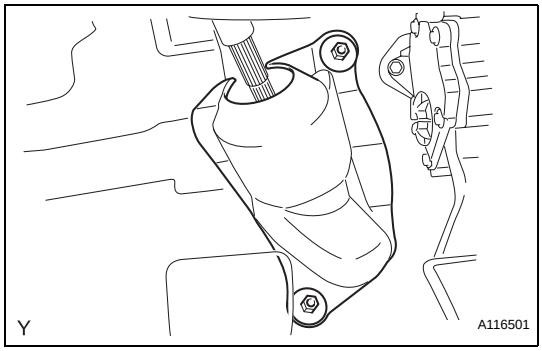

12. INSTALL COLUMN HOLE COVER SILENCER SHEET

(a) Install the column hole cover silencer sheet with the 2 clips.

(b) Install the floor carpet.

13. INSTALL COWL TOP PANEL OUTER (See page BR-45)

14. INSTALL FRONT AIR SHUTTER SEAL (See page EM-148)

15. INSTALL WINDSHIELD WIPER MOTOR AND LINK (See page WW-12)

16. REMOVE COWL TOP VENTILATOR LOUVER SUB-ASSEMBLY (See page WW-12)

17. INSTALL COWL SIDE VENTILATOR SUB-ASSEMBLY LH (See page WW-13)

18. INSTALL COWL SIDE VENTILATOR SUB-ASSEMBLY RH (See page WW-13)

19. INSTALL FRONT WIPER ARM AND BLADE ASSEMBLY LH (See page WW-13)

20. INSTALL FRONT WIPER ARM AND BLADE ASSEMBLY RH (See page WW-14)

21. INSTALL FRONT WIPER ARM HEAD CAP (See page WW-15)

22. PROVISIONALLY TIGHTEN HOOD SUB-ASSEMBLY

(a) Provisionally install the hood with the 4 bolts.

HINT:

Tighten the bolts to the specified torque after inspecting the hood.

23. INSPECT HOOD SUB-ASSEMBLY (See page ED-1)

24. **ADJUST HOOD SUB-ASSEMBLY (See page ED-2)**
25. **CONNECT CABLE TO NEGATIVE BATTERY TERMINAL**
    Torque: 5.4 N*m (55 kgf*cm, 48 ft.*lbf)
26. **POSITION FRONT WHEELS FACING STRAIGHT AHEAD**
27. **INSPECT AND ADJUST FRONT WHEEL ALIGNMENT**
    (See page SP-2)
28. **CHECK ABS SPEED SENSOR SIGNAL**
    (See page BC-14)

POWER STEERING GEAR (for Hatchback)

COMPONENTS

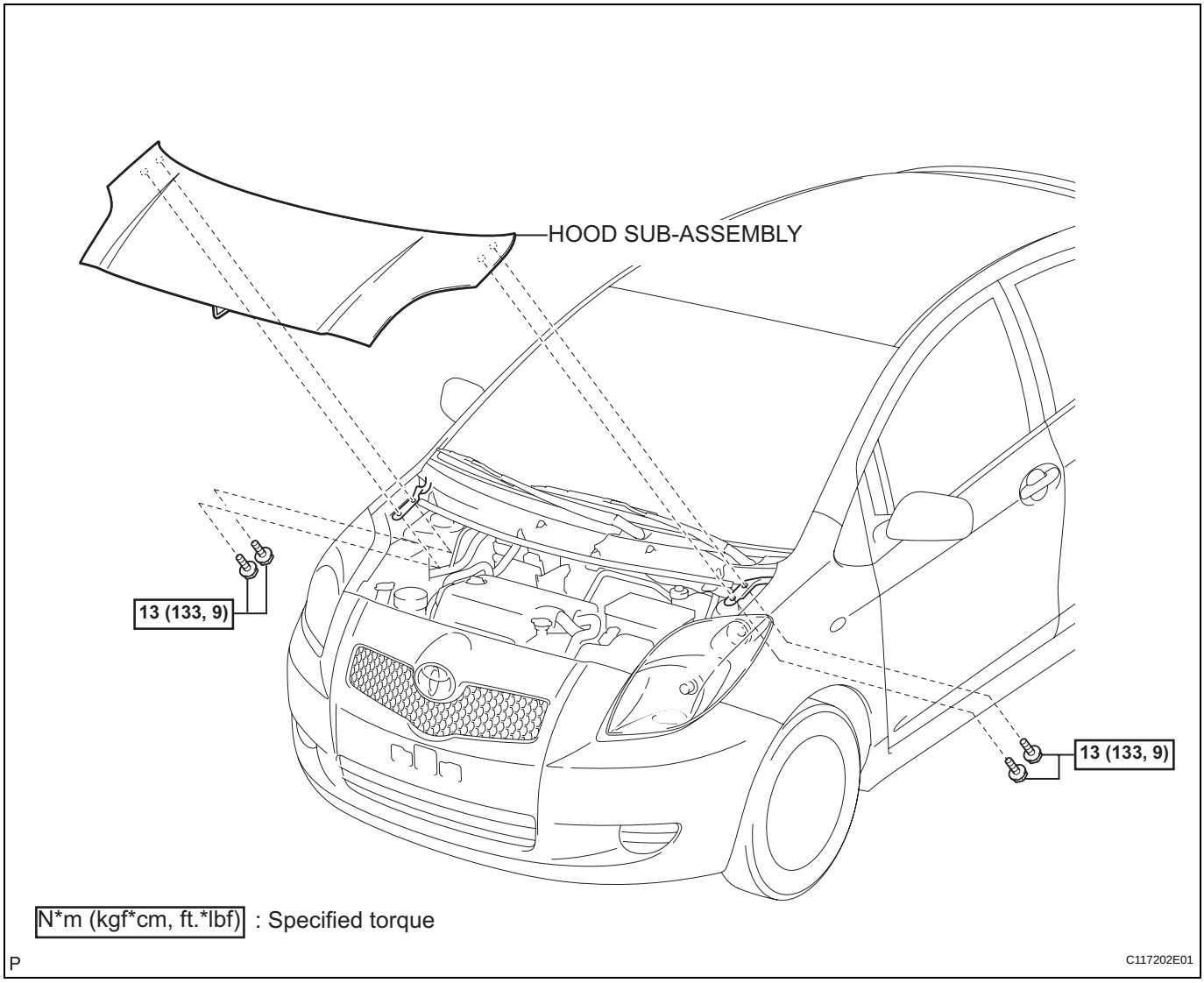

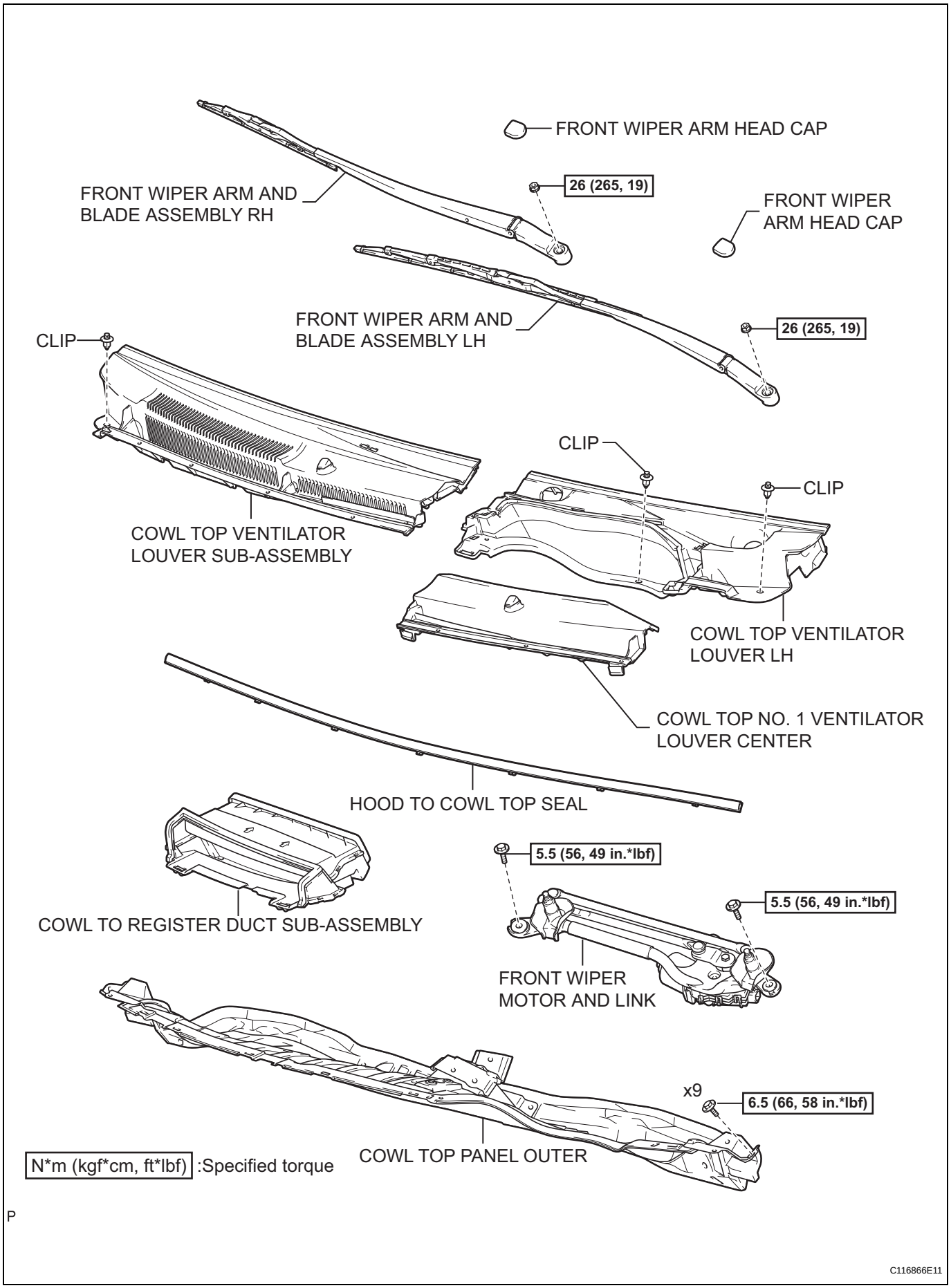
FRONT WIPER ARM HEAD CAP
26 (265, 19)
FRONT WIPER ARM AND BLADE ASSEMBLY RH
FRONT WIPER ARM HEAD CAP
FRONT WIPER ARM AND BLADE ASSEMBLY LH
26 (265, 19)
CLIP
CLIP
CLIP
COWL TOP VENTILATOR LOUVER SUB-ASSEMBLY
COWL TOP VENTILATOR LOUVER LH
COWL TOP NO. 1 VENTILATOR LOUVER CENTER
HOOD TO COWL TOP SEAL
5.5 (56, 49 in.*lbf)
5.5 (56, 49 in.*lbf)
COWL TO REGISTER DUCT SUB-ASSEMBLY
FRONT WIPER MOTOR AND LINK
x9
6.5 (66, 58 in.*lbf)
COWL TOP PANEL OUTER
N*m (kgf*cm, ft*lbf) :Specified torque
P
C116866E11

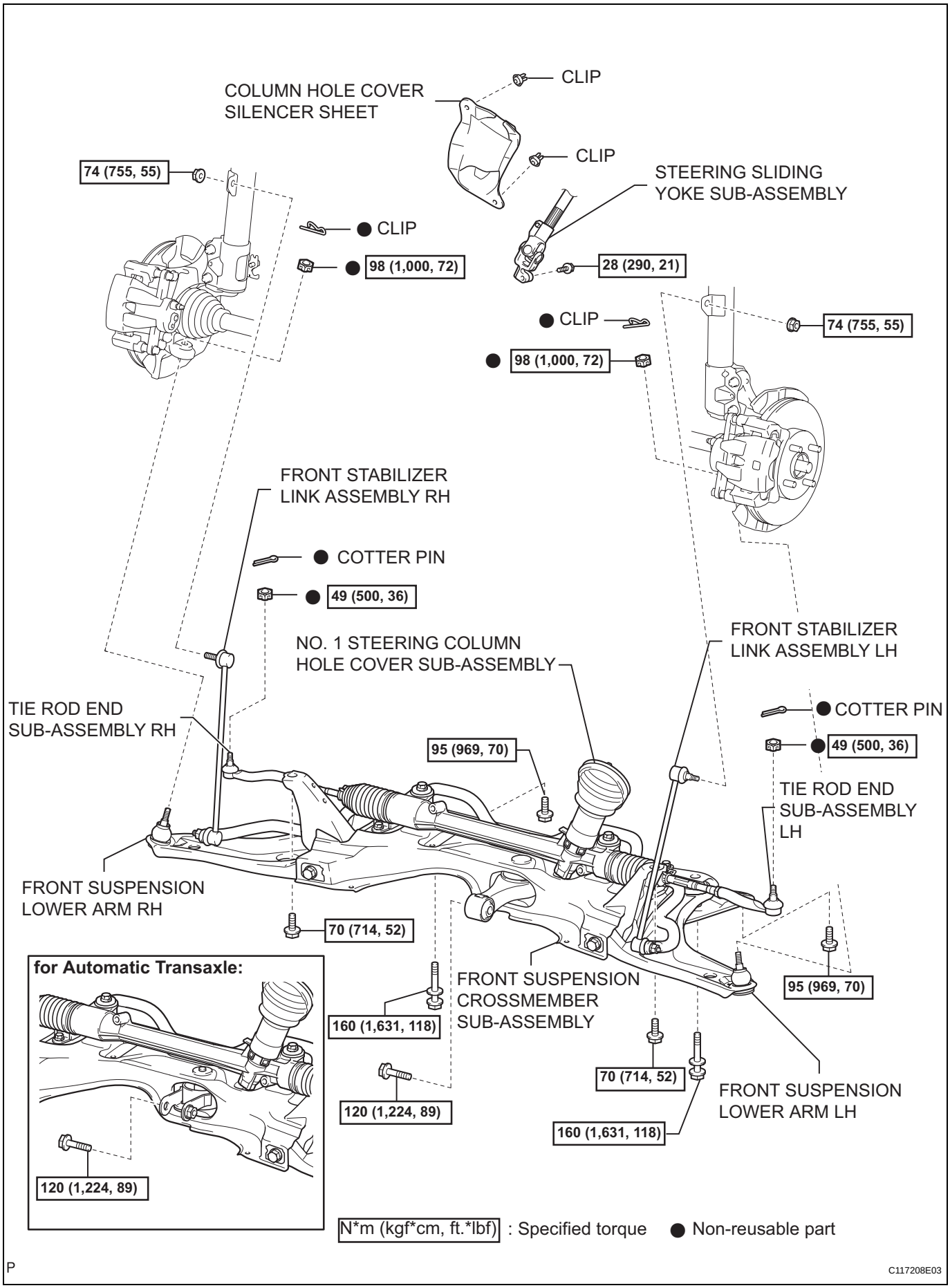
CLIP
COLUMN HOLE COVER SILENCER SHEET
CLIP
74 (755, 55)
STEERING SLIDING YOKE SUB-ASSEMBLY
● CLIP
● 98 (1,000, 72)
28 (290, 21)
● CLIP
74 (755, 55)
● 98 (1,000, 72)
FRONT STABILIZER LINK ASSEMBLY RH
● COTTER PIN
● 49 (500, 36)
NO. 1 STEERING COLUMN HOLE COVER SUB-ASSEMBLY
FRONT STABILIZER LINK ASSEMBLY LH
TIE ROD END SUB-ASSEMBLY RH
● COTTER PIN
● 49 (500, 36)
95 (969, 70)
TIE ROD END SUB-ASSEMBLY LH
FRONT SUSPENSION LOWER ARM RH
70 (714, 52)
for Automatic Transaxle:
FRONT SUSPENSION CROSSMEMBER SUB-ASSEMBLY
95 (969, 70)
160 (1,631, 118)
70 (714, 52)
120 (1,224, 89)
FRONT SUSPENSION LOWER ARM LH
160 (1,631, 118)
120 (1,224, 89)
N*m (kgf*cm, ft.*lbf) : Specified torque
● Non-reusable part
P
C117208E03

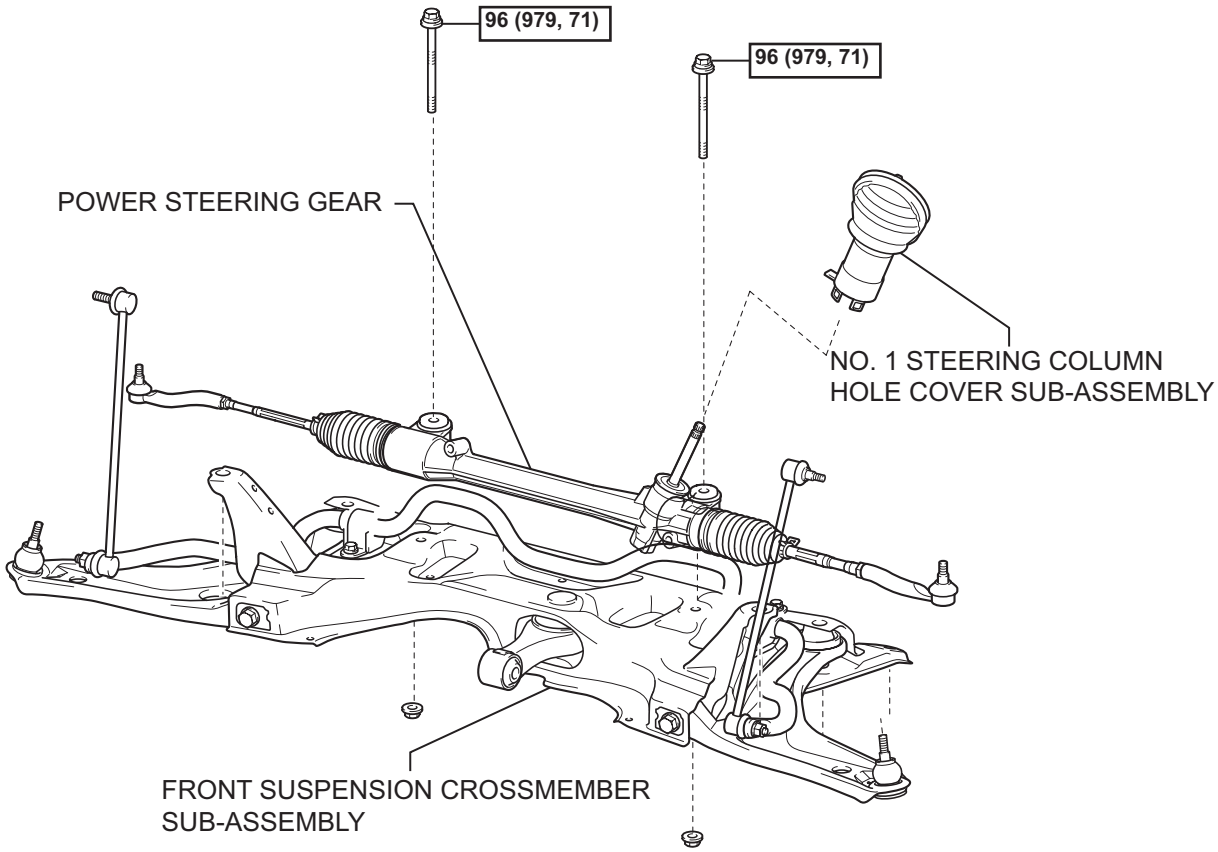

N*m (kgf*cm, ft.*lbf) : Specified torque

C119861E02

REMOVAL

1. **POSITION FRONT WHEELS FACING STRAIGHT AHEAD**
2. **DISCONNECT CABLE FROM NEGATIVE BATTERY TERMINAL**
3. **REMOVE HOOD SUB-ASSEMBLY**
   (a) Remove the 4 bolts and remove the hood.
4. **REMOVE FRONT WIPER ARM HEAD CAP (See page WW-17)**
5. **REMOVE FRONT WIPER ARM AND BLADE ASSEMBLY LH (See page WW-17)**
6. **REMOVE FRONT WIPER ARM AND BLADE ASSEMBLY RH (See page WW-17)**
7. **REMOVE HOOD TO COWL TOP SEAL (See page WW-18)**
8. **REMOVE COWL TOP VENTILATOR LOUVER SUB-ASSEMBLY (See page WW-18)**
9. **REMOVE COWL TOP VENTILATOR LOUVER LH (See page WW-18)**
10. **REMOVE WINDSHIELD WIPER MOTOR AND LINK (See page WW-19)**
11. **REMOVE COWL TO REGISTER DUCT SUB-ASSEMBLY (See page EM-122)**
12. **REMOVE COWL TOP PANEL OUTER (See page EM-123)**
13. **REMOVE COLUMN HOLE COVER SILENCER SHEET**
    (a) Remove the floor carpet and 2 clips and remove the column hole cover silencer.

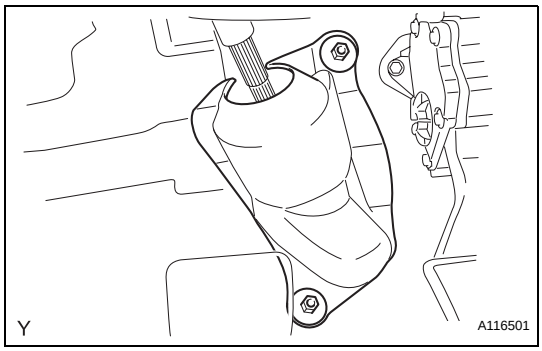

14. **REMOVE STEERING SLIDING YOKE SUB-ASSEMBLY**
    (a) Use a seat belt to fix the steering wheel assembly, in order to avoid breakage of the spiral cable.

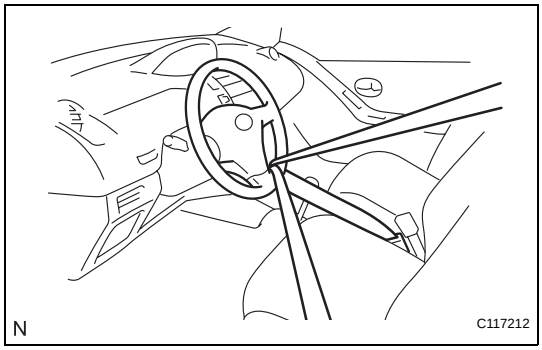

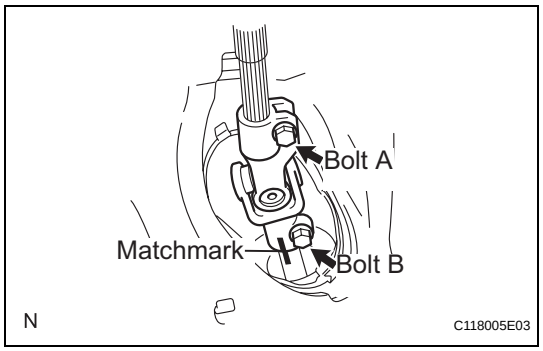

(b) Place the matchmarks on the sliding yoke of the steering intermediate shaft assembly and the power steering.

(c) Loosen bolt A, remove bolt B and separate the steering intermediate shaft assembly

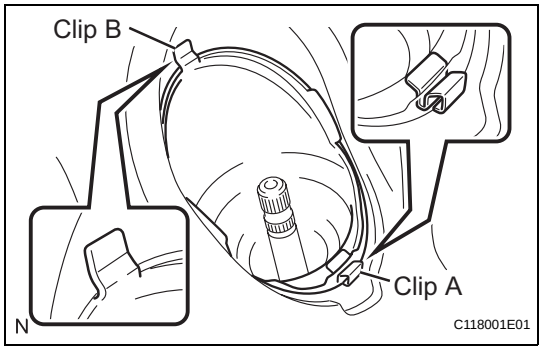

15. REMOVE NO. 1 STEERING COLUMN HOLE COVER SUB-ASSEMBLY

(a) Remove clip A, separate clip B from the body and separate No. 1 steering column hole cover sub-assembly.

NOTICE:

Do not damage clip B.

16. REMOVE FRONT WHEEL

17. REMOVE TIE ROD END SUB-ASSEMBLY (See page DS-3)

18. REMOVE TIE ROD END SUB-ASSEMBLY

HINT:

Use the same procedure for the RH side as for the LH side.

19. REMOVE FRONT STABILIZER LINK ASSEMBLY LH (See page DS-4)

20. REMOVE FRONT STABILIZER LINK ASSEMBLY RH

HINT:

Use the same procedure for the RH side as for the LH side.

21. REMOVE FRONT SUSPENSION LOWER ARM LH (See page DS-4)

22. REMOVE FRONT SUSPENSION LOWER ARM RH

HINT:

Use the same procedure for the RH side as for the LH side.

23. SUSPEND ENGINE ASSEMBLY

(a) 1NZ-FE

(1) Remove the bolt and remove the radio setting condenser.

(2) Remove the bolt and remove the air-fuel ratio sensor wiring bracket.

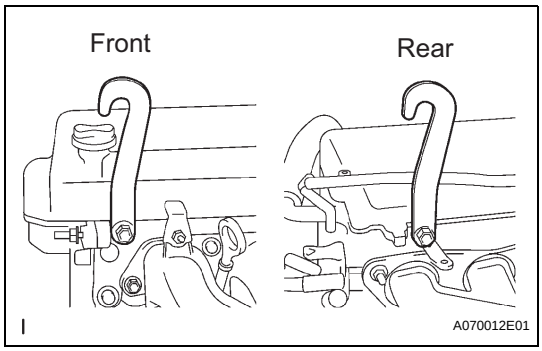

(3) Install the engine hanger with the bolt in the position shown in the illustration.
Part No. :
Engine hanger : 12281-21010
Bolt :
91642-81025
Torque: 40 N*m (408 kgf*cm, 30 ft.*lbf)

(4) Using an engine sling device and chain block, support the engine assembly with transaxle and front suspension crossmember.

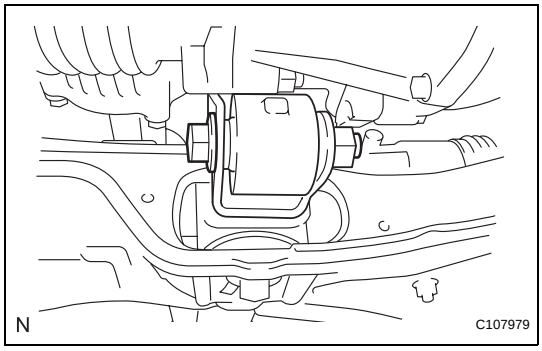

24. REMOVE FRONT SUSPENSION CROSSMEMBER SUB-ASSEMBLY

(a) Remove the bolt and separate the engine moving control rod.

(b) Support the front suspension crossmember with a tool such as a transmission jack.

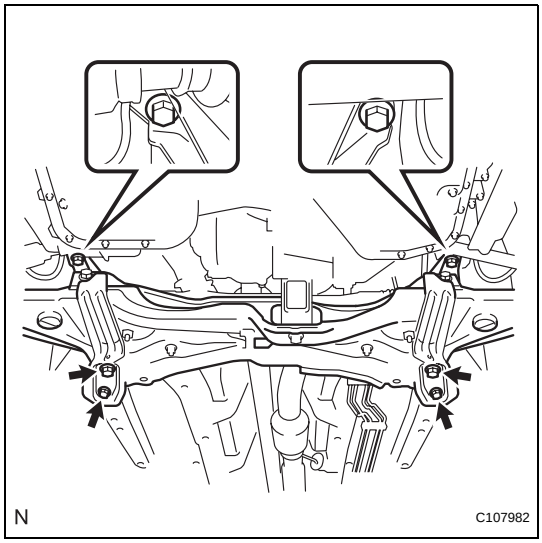

(c) Remove the 6 bolts and remove the suspension crossmember.

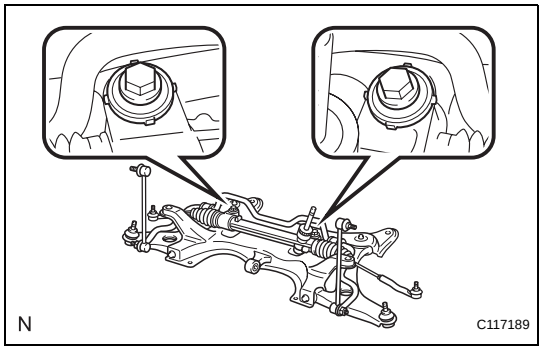

25. REMOVE POWER STEERING GEAR

(a) Remove the 2 bolts and 2 nuts and remove the power steering gear from the suspension crossmember.
NOTICE:
Keep the nut from rotating while turning the bolt.

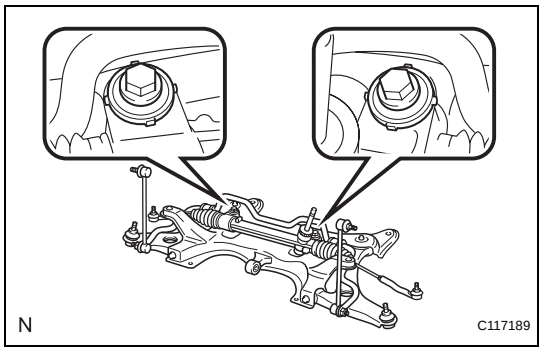

INSTALLATION

1. INSTALL POWER STEERING GEAR

(a) Install the power steering gear onto the front suspension crossmember with the 2 bolts and 2 nuts.
Torque: 96 N*m (979 kgf*cm, 71 ft.*lbf)
NOTICE:
Keep the nut from rotating while turning the bolt.

2. INSTALL FRONT SUSPENSION CROSSMEMBER SUB-ASSEMBLY
SST 09670-00010

(a) Support the front suspension crossmember with a tool such as transmission jack.

(b) Provisionally install the front suspension crossmember into the vehicle with the 6 bolts

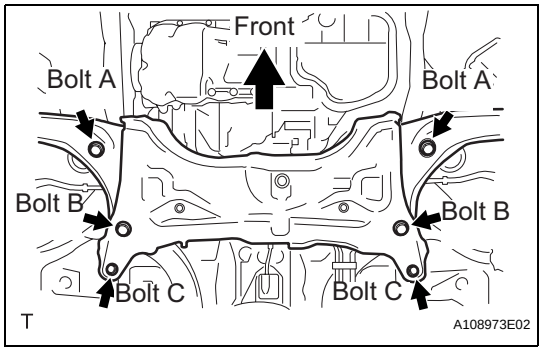

Bolt	Underhead Length (mm)
A	38
B	99
C	45

(c) By inserting SST into the datum holes in the front suspension crossmembers RH and LH sides alternately, tighten bolts A, B and C on both sides to the specified torque, in several steps.
Torque: 70 N*m (714 kgf*cm, 52 ft.*lbf) for Bolt A
160 N*m (1,631 kgf*cm, 118 ft.*lbf) for Bolt B
95 N*m (969 kgf*cm, 70 ft.*lbf) for Bolt C
NOTICE:
- **Insert SST into the datum holes in a vertical orientation.**
- **If SST can not be inserted into the datum holes vertically, loosen all the bolts and then insert SST again.**

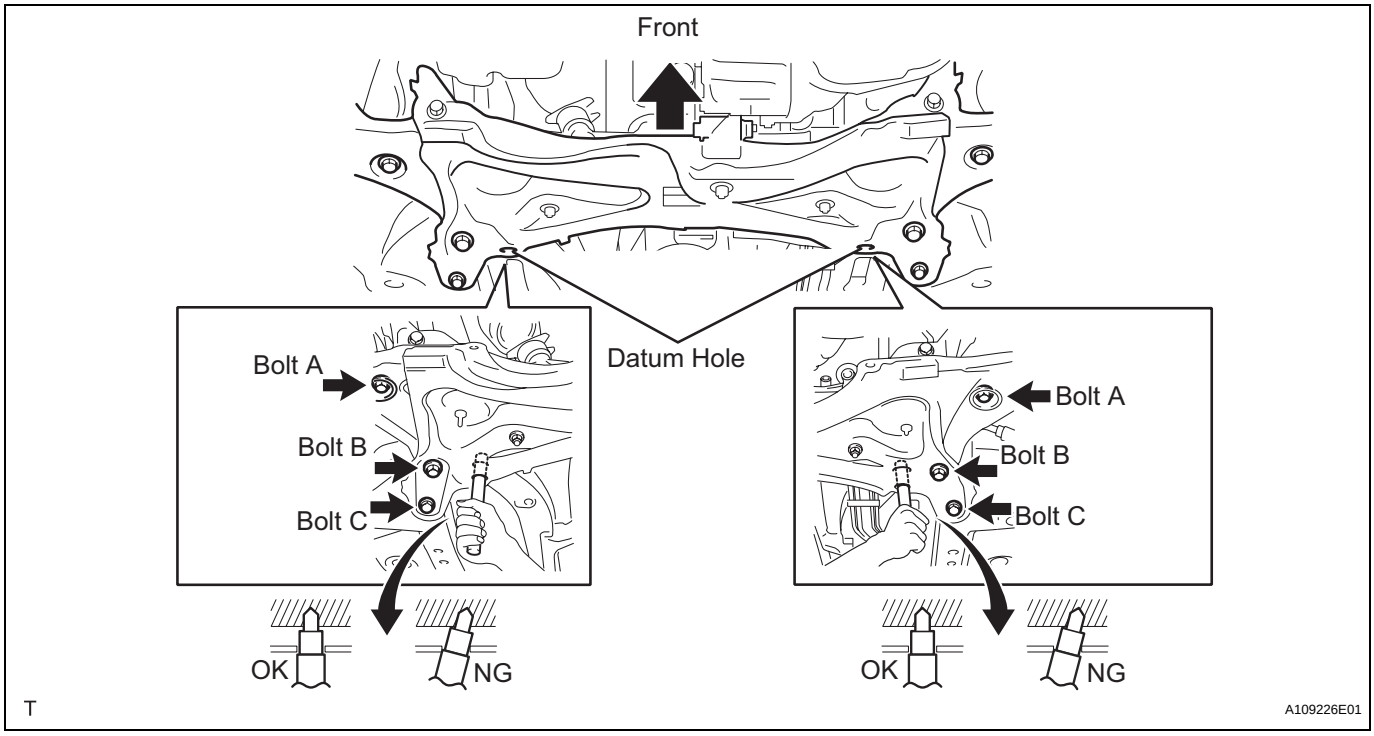

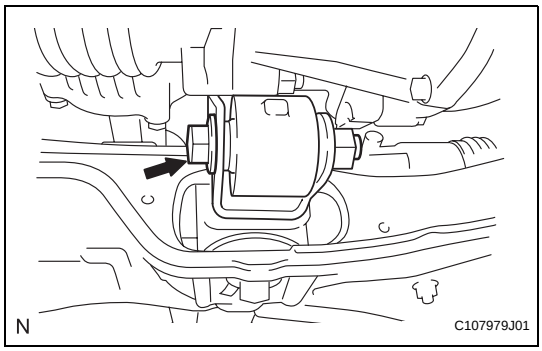

(d) Install the engine moving control rod with the bolt.
Torque: 120 N*m (1224 kgf*cm, 89 ft.*lbf)

3. **INSTALL FRONT SUSPENSION LOWER ARM LH (See page DS-14)**

4. **INSTALL FRONT SUSPENSION LOWER ARM RH**
HINT:
Use the same procedure for the LH side.

5. **INSTALL FRONT STABILIZER LINK ASSEMBLY LH (See page DS-4)**

6. **INSTALL FRONT STABILIZER LINK ASSEMBLY RH**
HINT:
Use the same procedure for the LH side.

7. **INSTALL TIE ROD END SUB-ASSEMBLY LH (See page DS-15)**

8. **INSTALL TIE ROD END SUB-ASSEMBLY RH**
HINT:
Use the same procedure for the LH side.

9. **INSTALL FRONT WHEEL**
Torque: 103 N*m (1,050 kgf*cm, 76 ft.*lbf)

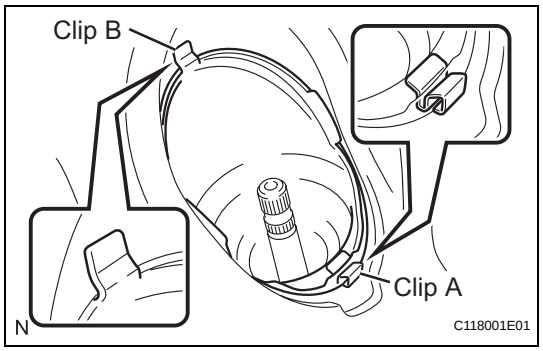

10. INSTALL NO. 1 STEERING COLUMN HOLE COVER SUB-ASSEMBLY

(a) Install clip B onto the body portion and install No. 1 steering column hole cover sub-assembly onto the body portion with clip A.

NOTICE:

Make sure that the lip portion of No. 1 steering column hole cover sub-assembly is not damaged.

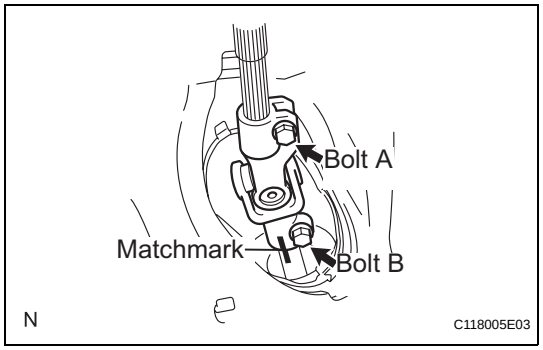

11. INSTALL STEERING SLIDING YOKE SUB-ASSEMBLY

(a) Align the matchmarks and install the sliding yoke onto the intermediate shaft.

Torque: 28 N*m (290 kgf*cm, 21 ft.*lbf)

(b) Tighten bolt A.

Torque: 28 N*m (290 kgf*cm, 21 ft.*lbf)

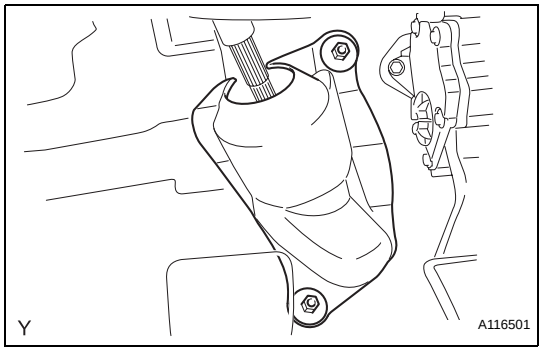

12. INSTALL COLUMN HOLE COVER SILENCER SHEET

(a) Install the column hole cover silencer sheet with the 2 clips.

(b) Install the floor carpet

13. INSTALL COWL TOP PANEL OUTER (See page EM-146)

14. INSTALL COWL TO REGISTER DUCT SUB-ASSEMBLY (See page EM-147)

15. INSTALL WINDSHIELD WIPER MOTOR AND LINK (See page WW-21)

16. INSTALL COWL TOP VENTILATOR LOUVER LH (See page WW-21)

17. INSTALL COWL TOP VENTILATOR LOUVER SUB-ASSEMBLY (See page WW-21)

18. INSTALL HOOD TO COWL TOP SEAL (See page WW-22)

19. INSTALL FRONT WIPER ARM AND BLADE ASSEMBLY LH (See page WW-17)

20. INSTALL FRONT WIPER ARM AND BLADE ASSEMBLY RH (See page WW-23)

21. INSTALL FRONT WIPER ARM HEAD CAP (See page WW-23)

22. TEMPORARILY TIGHTEN HOOD SUB-ASSEMBLY

(a) Provisionally install the hood with the 4 bolts.

HINT:

Tighten the bolts to the specified torque after inspecting the hood.

23. INSPECT HOOD SUB-ASSEMBLY (See page ED-3)

24. **ADJUST HOOD SUB-ASSEMBLY (See page ED-4)**
25. **CONNECT CABLE TO NEGATIVE BATTERY TERMINAL**
    Torque: 5.4 N*m (55 kgf*cm, 48 in.*lbf)
26. **POSITION FRONT WHEELS FACING STRAIGHT AHEAD**
27. **INSPECT AND ADJUST FRONT WHEEL ALIGNMENT**
    (See page SP-2)
28. **CHECK ABS SPEED SENSOR SIGNAL**
    (See page BC-14)

POWER STEERING ECU (for Sedan)

COMPONENTS

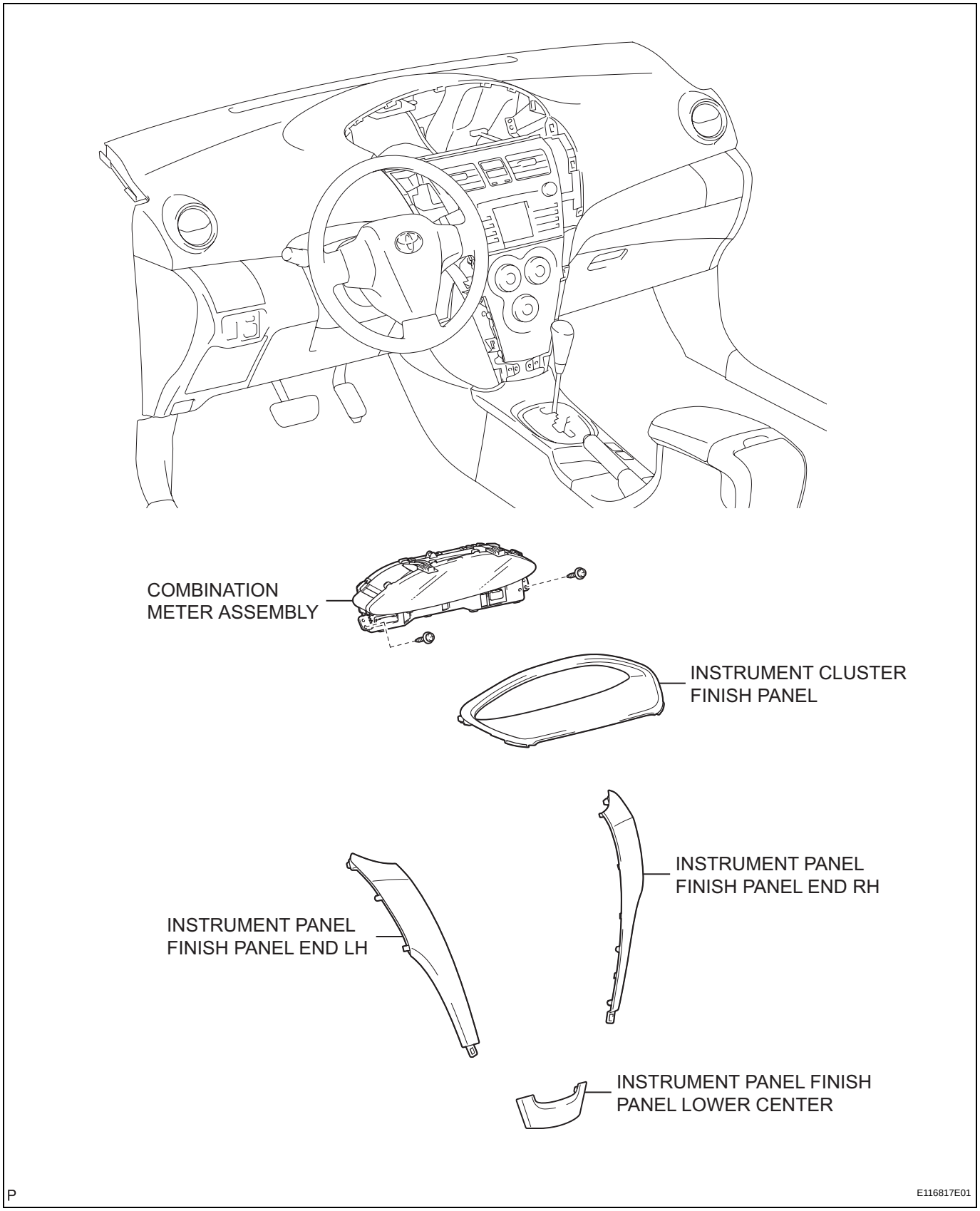

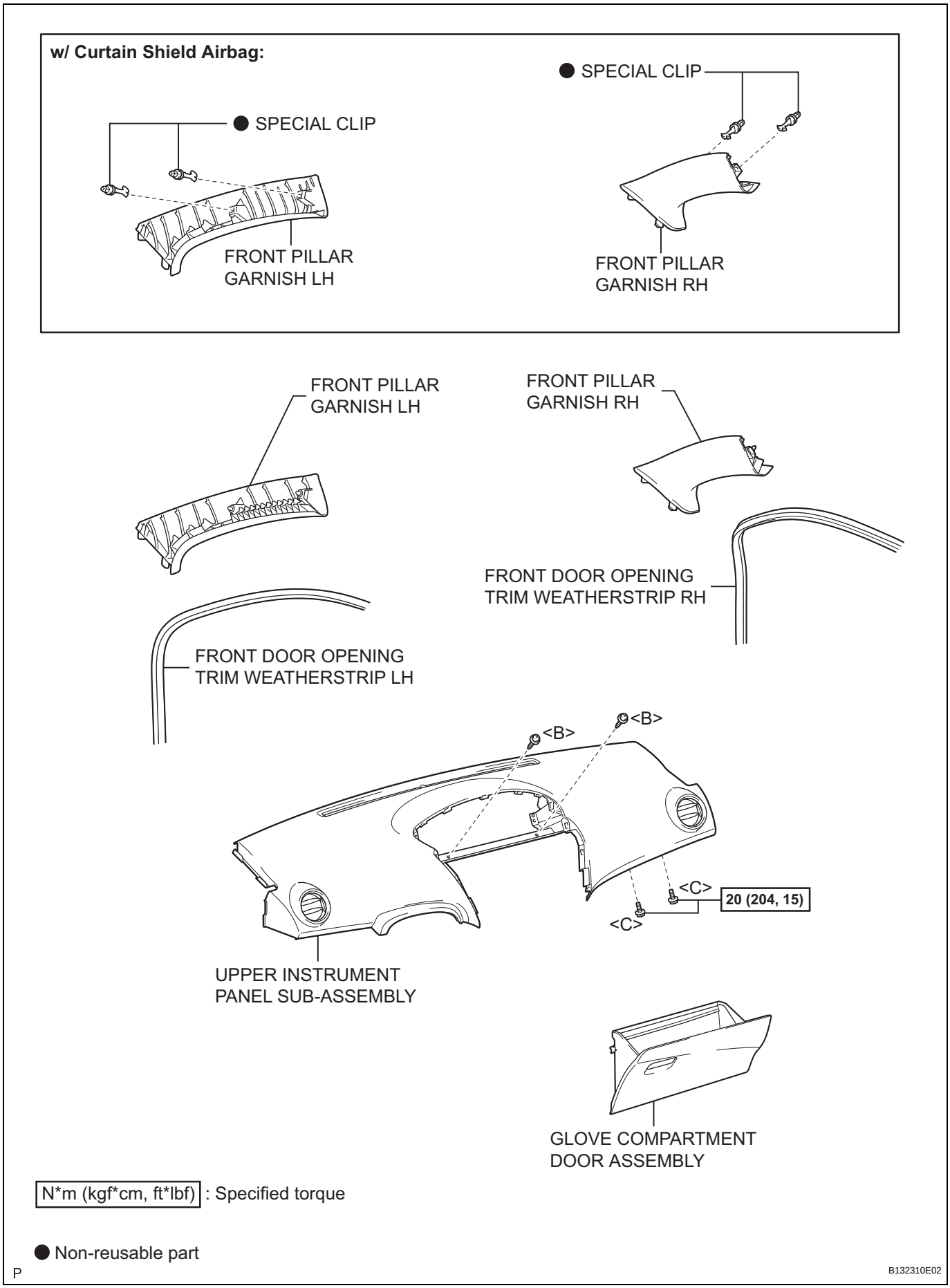
w/ Curtain Shield Airbag:
● SPECIAL CLIP
FRONT PILLAR GARNISH LH
● SPECIAL CLIP
FRONT PILLAR GARNISH RH
FRONT PILLAR GARNISH LH
FRONT PILLAR GARNISH RH
FRONT DOOR OPENING TRIM WEATHERSTRIP RH
FRONT DOOR OPENING TRIM WEATHERSTRIP LH
<B>
<B>
<C>
<C>
20 (204, 15)
UPPER INSTRUMENT PANEL SUB-ASSEMBLY
GLOVE COMPARTMENT DOOR ASSEMBLY
N*m (kgf*cm, ft*lbf) : Specified torque
● Non-reusable part
P
B132310E02

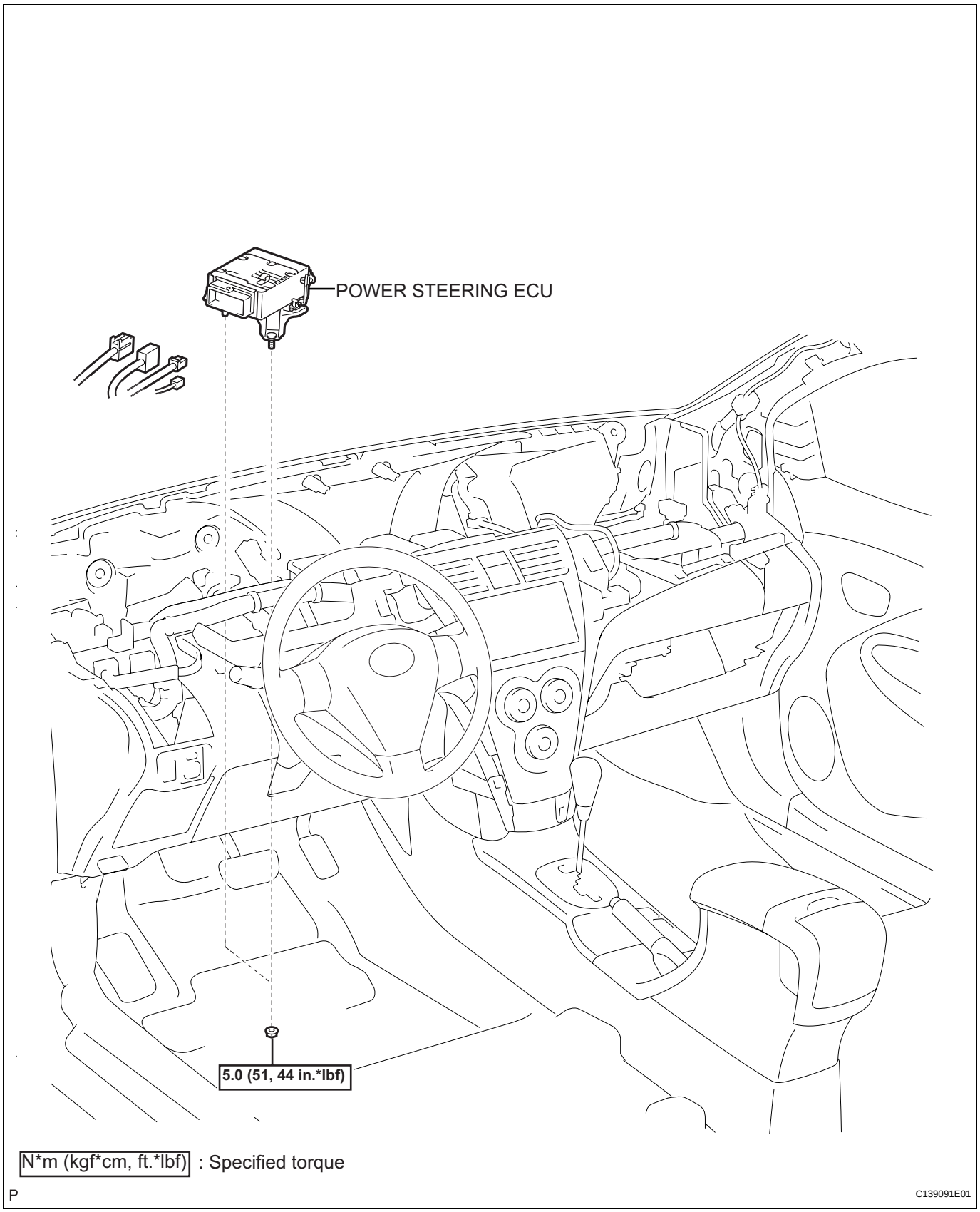
POWER STEERING ECU
5.0 (51, 44 in.*lbf)
N*m (kgf*cm, ft.*lbf) : Specified torque
P
C139091E01

REMOVAL

HINT:
Use the same procedure for both the RH and LH sides.

1. **DISCONNECT CABLE FROM NEGATIVE BATTERY TERMINAL**
   (a) Wait for at least 90 seconds after disconnecting the cable to prevent the airbag from working.
2. **REMOVE INSTRUMENT PANEL FINISH PANEL LOWER CENTER (See page ME-138)**
3. **REMOVE INSTRUMENT PANEL FINISH PANEL END LH (See page ME-138)**
4. **REMOVE INSTRUMENT PANEL FINISH PANEL END RH (See page ME-138)**
5. **REMOVE INSTRUMENT CLUSTER FINISH PANEL (See page ME-139)**
6. **REMOVE COMBINATION METER ASSEMBLY (See page ME-139)**
7. **SEPARATE FRONT DOOR OPENING TRIM WEATHERSTRIP RH**
   (a) Separate the front door opening trim weatherstrip.
8. **SEPARATE FRONT DOOR OPENING TRIM WEATHERSTRIP LH**
   (a) Separate the front door opening trim weatherstrip.
9. **REMOVE FRONT PILLAR GARNISH RH (See page IR-18)**
10. **REMOVE FRONT PILLAR GARNISH LH (See page IR-19)**
11. **REMOVE GLOVE COMPARTMENT DOOR ASSEMBLY (See page IP-6)**
12. **REMOVE UPPER INSTRUMENT PANEL SUB-ASSEMBLY (See page IP-6)**
13. **REMOVE POWER STEERING ECU**
    (a) Separate the wire harness clamp.

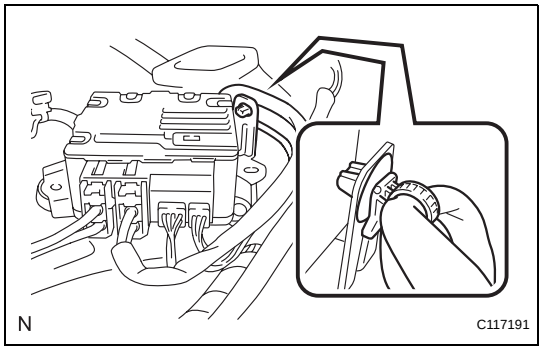

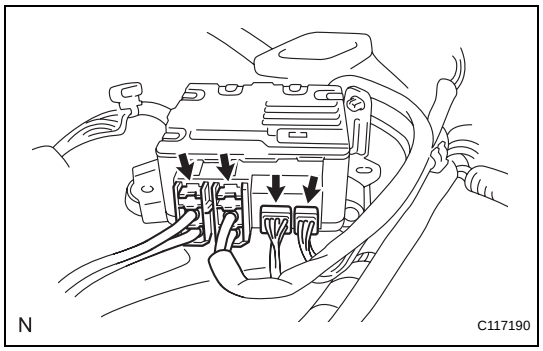

(b) Disconnect the 4 connectors.

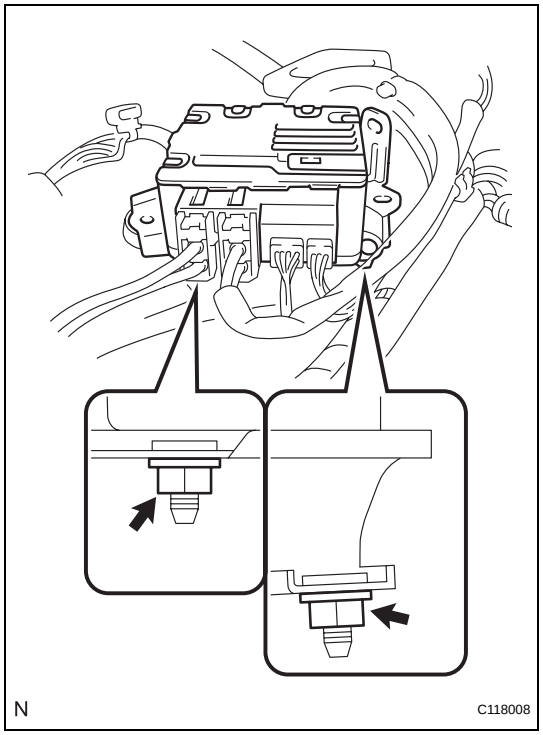

(c) Remove the 2 nuts and remove the power steering ECU.

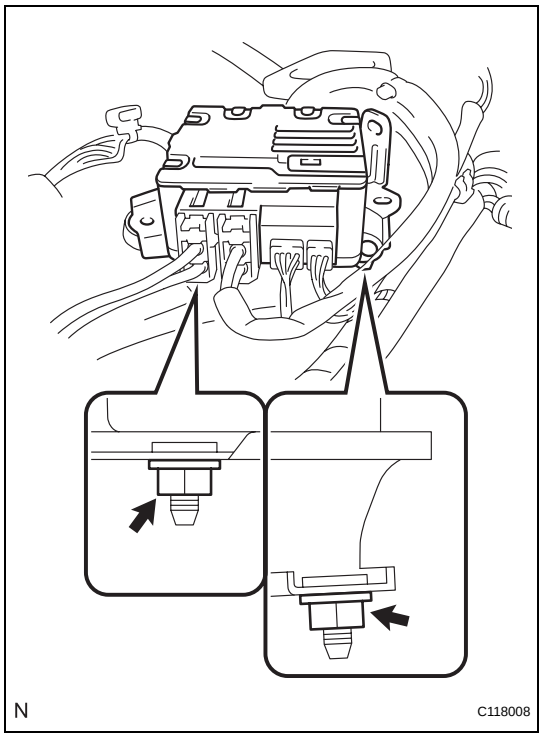

INSTALLATION

1. INSTALL POWER STEERING ECU

(a) Install the power steering ECU with the 2 nuts.
Torque: 5.0 N*m (51 kgf*cm, 44 in.*lbf)

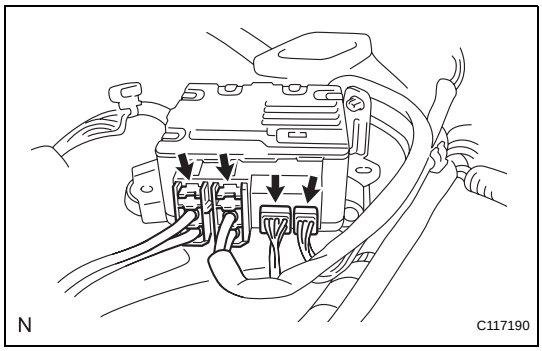

(b) Connect the 4 connectors.

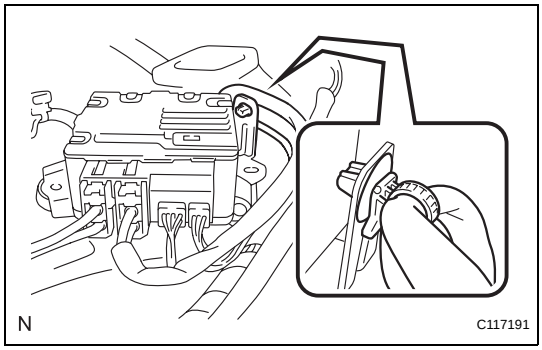

(c) Install the wire harness clamp.
NOTICE:
Make sure that the wire harness of the steering column assembly is installed onto the power steering ECU bracket and that it is not pulled too tightly.

2. **INSTALL UPPER INSTRUMENT PANEL SUB-ASSEMBLY (See page IP-11)**
3. **INSTALL GLOVE COMPARTMENT DOOR ASSEMBLY (See page IP-13)**
4. **INSTALL FRONT PILLAR GARNISH RH (See page IR-29)**
5. **INSTALL FRONT PILLAR GARNISH LH (See page IR-30)**
6. **INSTALL FRONT DOOR OPENING TRIM WEATHERSTRIP RH (See page IR-34)**
7. **INSTALL FRONT DOOR OPENING TRIM WEATHERSTRIP LH (See page IP-14)**
8. **INSTALL COMBINATION METER ASSEMBLY (See page ME-140)**
9. **INSTALL INSTRUMENT CLUSTER FINISH PANEL (See page ME-140)**
10. **INSTALL INSTRUMENT PANEL FINISH PANEL END RH (See page ME-141)**
11. **INSTALL INSTRUMENT PANEL FINISH PANEL END LH (See page ME-141)**
12. **INSTALL INSTRUMENT PANEL FINISH PANEL LOWER CENTER (See page ME-142)**
13. **CONNECT CABLE TO NEGATIVE BATTERY TERMINAL**
    Torque: 5.4 N*m (55 kgf*cm, 48 in.*lbf)
14. **CHECK SRS WARNING LIGHT**
    (See page RS-31)
15. **PERFORM ZERO POINT CALIBRATION**
    (See page PS-12)

POWER STEERING ECU (for Hatchback)

COMPONENTS

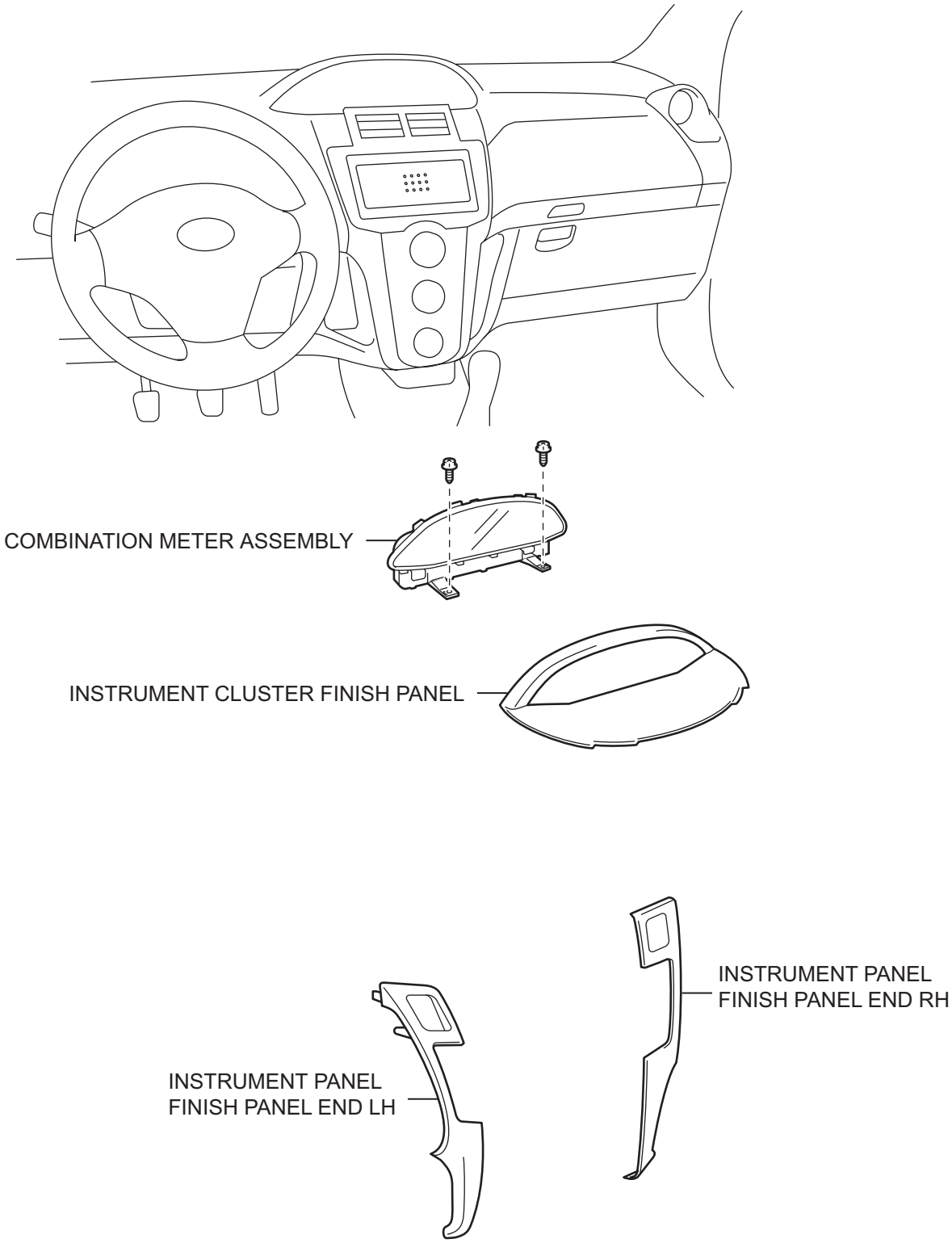

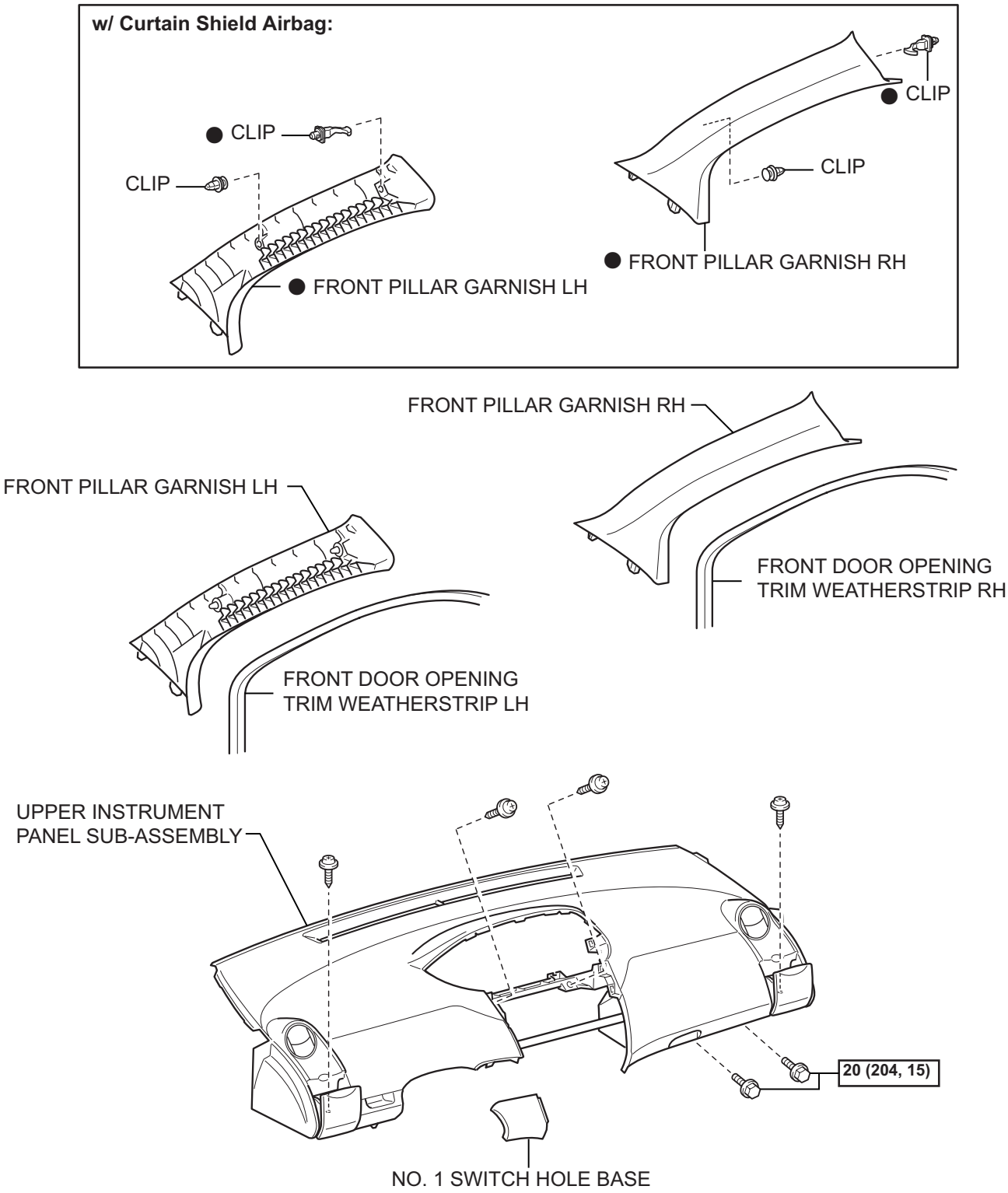

PS

N*m (kgf*cm, ft.*lbf) : Specified torque ● Non-reusable part

O

C119857E02

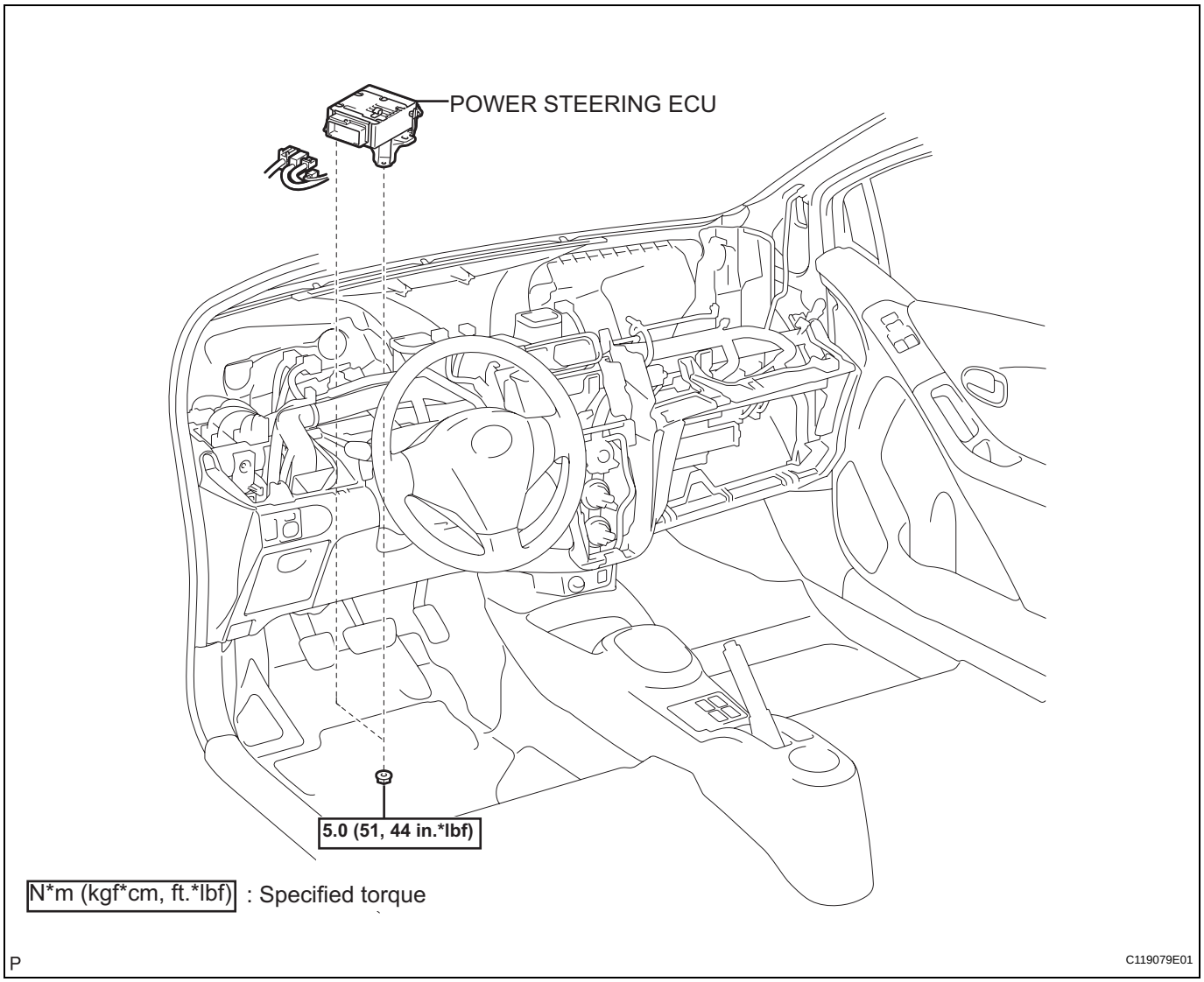
POWER STEERING ECU
5.0 (51, 44 in.*lbf)
N*m (kgf*cm, ft.*lbf) : Specified torque
P
C119079E01

REMOVAL

1. **DISCONNECT CABLE FROM NEGATIVE BATTERY TERMINAL**
2. **REMOVE INSTRUMENT PANEL FINISH PANEL END LH (See page ME-145)**
3. **REMOVE INSTRUMENT PANEL FINISH PANEL END RH (See page ME-145)**
4. **REMOVE INSTRUMENT CLUSTER FINISH PANEL (See page ME-145)**
5. **REMOVE COMBINATION METER ASSEMBLY (See page ME-146)**
6. **REMOVE FRONT DOOR OPENING TRIM WEATHERSTRIP RH (See page IR-50)**
7. **REMOVE FRONT DOOR OPENING TRIM WEATHERSTRIP LH**
   HINT:
   Use the same procedure for the RH side as for the LH side.
8. **REMOVE FRONT PILLAR GARNISH RH (See page IR-58)**
9. **REMOVE FRONT PILLAR GARNISH LH (See page IR-59)**
10. **REMOVE NO. 1 SWITCH HOLE BASE (See page IP-20)**
11. **REMOVE GLOVE COMPARTMENT DOOR ASSEMBLY (See page IP-20)**
12. **REMOVE UPPER INSTRUMENT PANEL SUB-ASSEMBLY (See page IP-21)**
13. **REMOVE POWER STEERING ECU**
    (a) Separate the wire harness clamp.

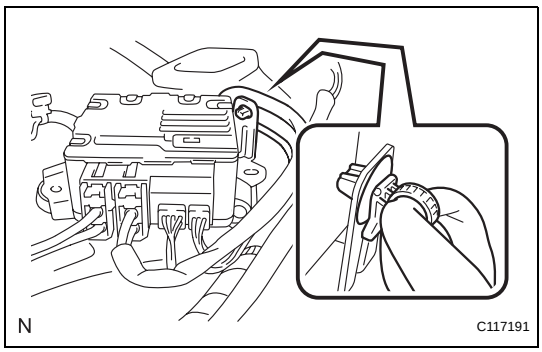

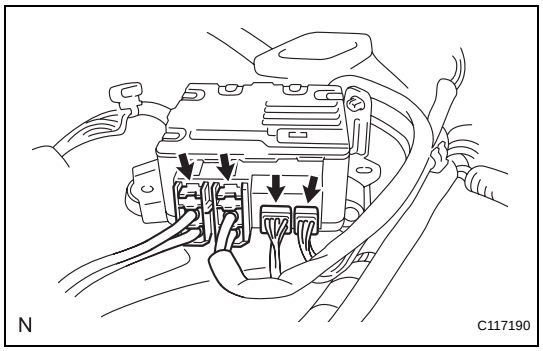

(b) Disconnect the 4 connectors.

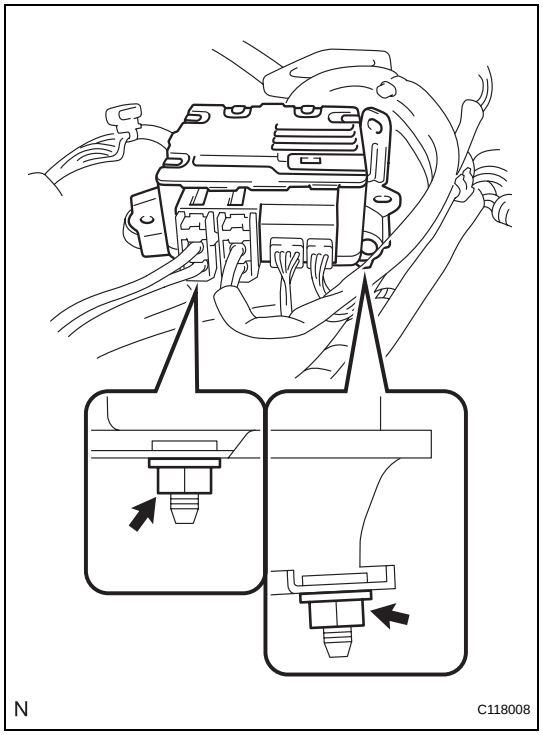

(c) Remove the 2 nuts and remove the power steering ECU.

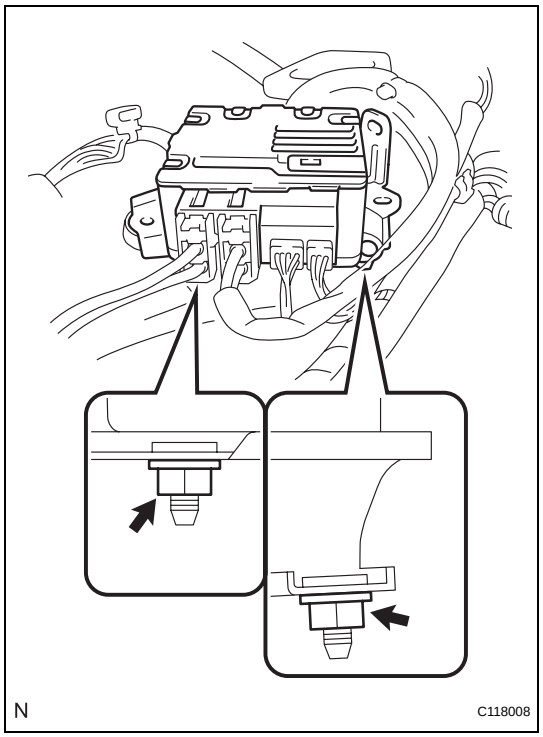

INSTALLATION

1. INSTALL POWER STEERING ECU

(a) Install the power steering ECU with the 2 nuts.
Torque: 5.0 N*m (51 kgf*cm, 44 in.*lbf)

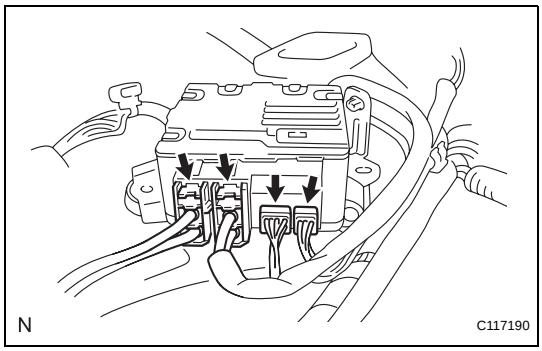

(b) Connect the 4 connectors.

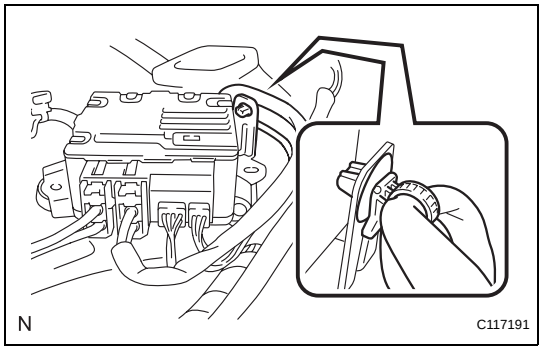

(c) Install the wire harness clamp.
NOTICE:
Make sure that the wire harness of the steering column assembly is installed onto the power steering ECU bracket and that it is not pulled too tightly.

2. **INSTALL UPPER INSTRUMENT PANEL SUB-ASSEMBLY (See page IP-29)**
3. **INSTALL NO. 1 SWITCH HOLE BASE (See page IP-32)**
4. **INSTALL GLOVE COMPARTMENT DOOR ASSEMBLY (See page IP-32)**
5. **INSTALL FRONT PILLAR GARNISH RH (See page IR-71)**
6. **INSTALL FRONT PILLAR GARNISH LH (See page IR-72)**
7. **INSTALL FRONT DOOR OPENING TRIM WEATHERSTRIP RH (See page IR-81)**
8. **INSTALL FRONT DOOR OPENING TRIM WEATHERSTRIP LH**
   HINT:
   Use the same procedure for the RH side as for the LH side.
9. **INSTALL COMBINATION METER ASSEMBLY (See page ME-148)**
10. **INSTALL INSTRUMENT CLUSTER FINISH PANEL (See page ME-148)**
11. **INSTALL INSTRUMENT PANEL FINISH PANEL END RH (See page ME-149)**
12. **INSTALL INSTRUMENT PANEL FINISH PANEL END LH (See page IR-72)**
13. **CONNECT CABLE TO NEGATIVE BATTERY TERMINAL**
    Torque: 5.4 N*m (55 kgf*cm, 48 in.*lbf)
14. **PERFORM CALIBRATION OF TORQUE SENSOR ZERO POINT**
    (See page PS-12).