2JZ–GTE ENGINE TROUBLESHOOTING

HOW TO PROCEED WITH TROUBLESHOOTING

Troubleshoot in accordance with the procedure on the following pages.

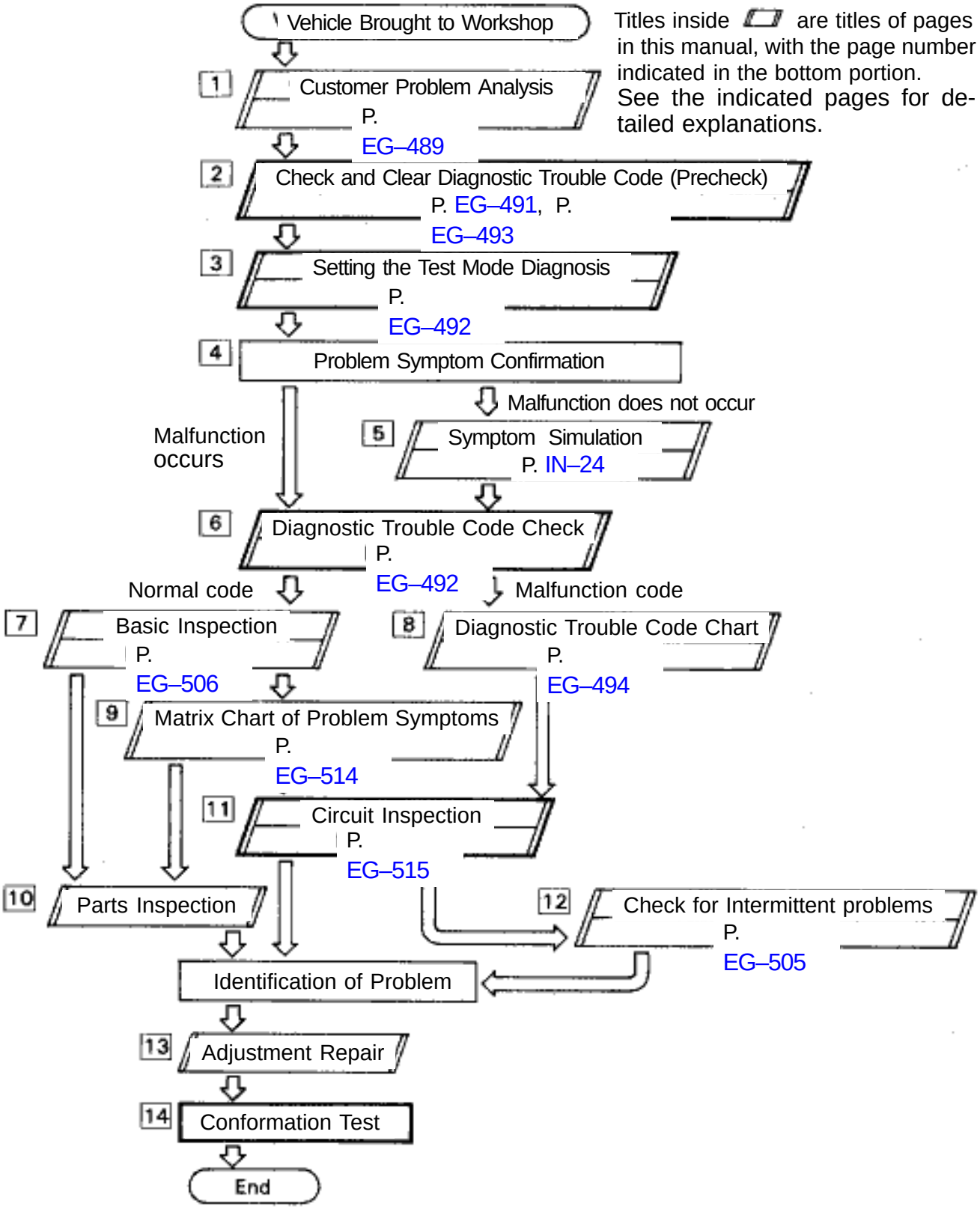

Step 2, 3, 6, 11, 14: Diagnostic steps permitting the use of the TOYOTA hand–held tester or TOYOTA break–out box.

CUSTOMER PROBLEM ANALYSIS CHECK SHEET

ENGINE CONTROL System Check Sheet

Inspector's Name

Customer's Name		Registration No.	
		Registration Year	/ /
		Frame No.	
Date Vehicle Brought In		Odometer Reading	km Miles

Date Problem Occurred		
Frequency Problem Occurs		☐ Constant ☐ Sometimes (times per day/month) ☐ Once only ☐ Other ( )
Conditions When Problem Occurres	Weather	☐ Fine ☐ Cloudy ☐ Rainy ☐ Snowy ☐ Various/Other ( )
	Outdoor Temperature	☐ Hot ☐ Warm ☐ Cool ☐ Cold (Approx. °F(°C))
	Place	☐ Highway ☐ Suburbs ☐ Inner City ☐ Hill (☐ Up, ☐ Down) ☐ Rough road ☐ Other ( )
	Engine Temp.	☐ Cold ☐ Warming up ☐ After warming up ☐ Any temp. ☐ Other ( )
	Engine Operation	☐ Starting ☐ Just after starting ☐ Idling ☐ Racing without load ☐ Driving (☐ Constant speed ☐ Acceleration ☐ Deceleration ☐ Other ( ))

Problem Symptoms	☐ Engine does not Start	☐ Engine does not crank ☐ No initial combustion ☐ No complete combustion
	☐ Difficult to Start	☐ Engine cranks slowly ☐ Other ( )
	☐ Poor Idling	☐ Incorrect first idle ☐ Idling rpm is abnormal [☐ High ☐ Low (rpm)] ☐ Rough idling ☐ Other ( )
	☐ Poor Driveability	☐ Hesitation ☐ Back fire ☐ Muffler explosion (after fire) ☐ Surging ☐ Knocking ☐ Other ( )
	☐ Engine Stall	☐ Engine stall soon after starting ☐ After accelerator pedal depressed ☐ After accelerator pedal released ☐ During A/C operation ☐ When N to D shift ☐ Other ( )
	☐ Others	

Condition of Malfunction Indicator Lamp		☐ Remains on ☐ Sometimes lights up ☐ Does not light up
Diagnostic Trouble Code Inspection	Normal Mode (Precheck)	☐ Normal code ☐ Malfunction code [code]
	Test Mode	☐ Normal code ☐ Malfunction code [code]

DIAGNOSIS SYSTEM DESCRIPTION

The ECM contains a built–in self–diagnosis system by which troubles with the engine signal network are detected and a Malfunction Indicator Lamp on the instrument panel lights up.

By analyzing various signals as shown in a later table (See page EG–494) the Engine Control Module (ECM) detects system malfunctions relating to the sensors or actuators.

In the normal mode, the self–diagnosis system monitors 19 items, indicated by code No. as shown in EG–494. A malfunction indicator lamp informs the driver that a malfunction has been detected. The lamp goes off automatically when the malfunction has been repaired, but the diagnostic trouble code(s) remains stored in the ECM memory (except for code Nos. 16 and 53). The ECM stores the code(s) until it is cleared by removing the EFI No. 1 fuse with the ignition switch OFF.

The diagnostic trouble code can be read by the number of blinks of the malfunction indicator lamp when TE1 and E1 terminals on the data link connector 1 or 2 are connected. When 2 or more codes are indicated, the lowest number (code) will appear first.

In the test mode, 13 items, indicated by code No. as shown in EG–494 are monitored. If a malfunction is detected in any one of the systems indicated by code Nos. 13, 21, 22, 24, 25, 26, 27, 35, 41, 47, 71 and 78 the ECM lights the malfunction indicator lamp to warn the technician that a malfunction has been detected. In this case, TE2 and E1 terminals on the data link connector 2 should be connected as shown later. (See page EG–492).

In the test mode, even if the malfunction is corrected, the malfunction code is stored in the ECM memory even when the ignition switch OFF (except code Nos. 43 and 51). The also applies in the normal mode. The diagnostic trouble mode (normal or test) and the output of the malfunction indicator lamp can be selected by connecting the TE1, TE2 and E1 terminals on the data link connector 2, as shown later.

A test mode function has been added to the functions of the self–diagnosis system of the normal mode for the purpose of detecting malfunctions such as poor contact, which are difficult to detect in the normal mode. This function fills up the self–diagnosis system. The test mode can be implemented by the technician following the appropriate procedures of check terminal connection and operation described later. (See page EG–492)

Diagnosis Inspection (Normal Mode)

MALFUNCTION INDICATOR LAMP CHECK

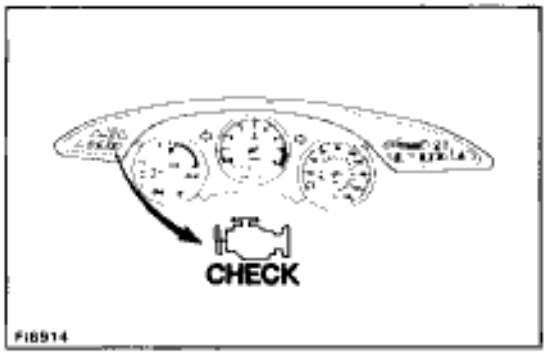

1. The Malfunction Indicator Lamp will come on when the ignition switch is turned ON and the engine is not running.
   HINT: If the malfunction indicator lamp does not light up, proceed to troubleshooting of the telltale light RH (See page BE–48).

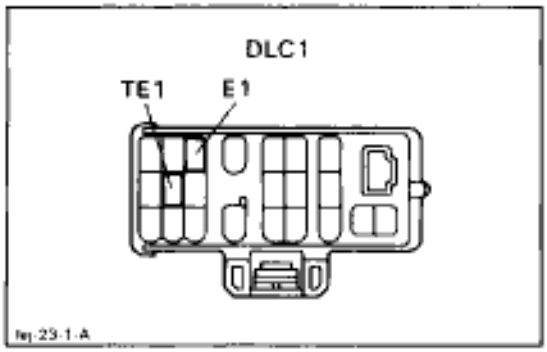

2. When the engine is started, the malfunction indicator lamp should go off.
   If the light remains on, the diagnosis system has detected a malfunction or abnormality in the system.

DIAGNOSTIC TROUBLE CODE CHECK

1. Turn ignition switch ON.
2. Using SST, connect terminals between TE1 and E1 of data link connector 1 or 2.
   SST 09843–18020

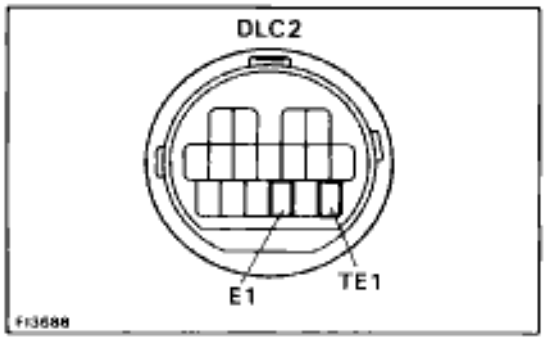

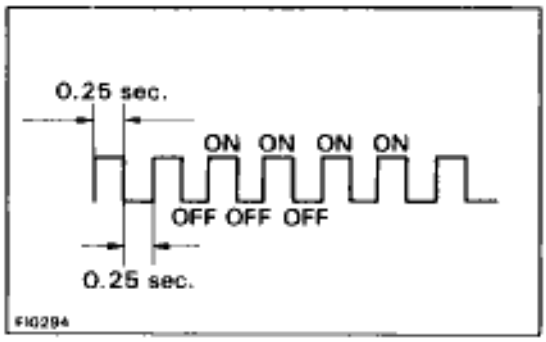

3. Read the diagnostic trouble code from malfunction indicator lamp.
   HINT: If a diagnostic trouble code is not output, check the TE1 terminal circuit (See page EG–598).

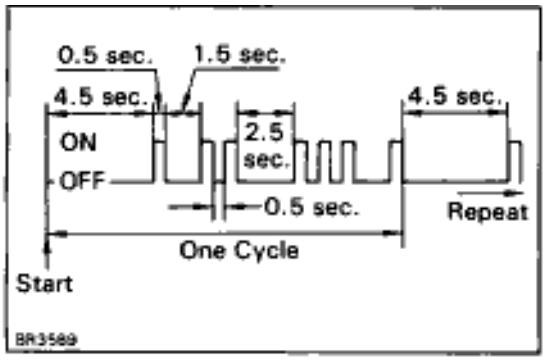

   As an example, the blinking patterns for codes; normal, 12 and 31 are as shown on the illustration.
4. Check the details of the malfunction using the diagnostic trouble code table on page EG–494.
5. After completing the check, disconnect terminals TE1 and E1, and turn off the display.
   HINT: In the event of 2 or more malfunction codes, indication will begin from the smaller numbered code and continue in order to the larger.

Diagnosis Inspection (Test Mode)

Compared to the normal mode, the test mode has an increased sensing ability to detect malfunctions.
It can also detect malfunctions in the starter signal circuit, the IDL contact signal of the throttle position sensor, air conditioning signal and park/neutral position switch signal.
Furthermore, the same diagnostic items which are detected in the normal mode can also be detected in the test mode.

DIAGNOSTIC TROUBLE CODE CHECK

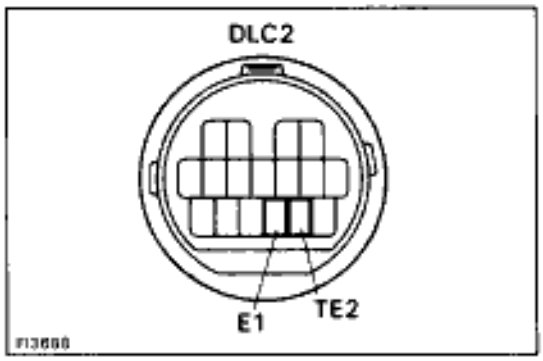

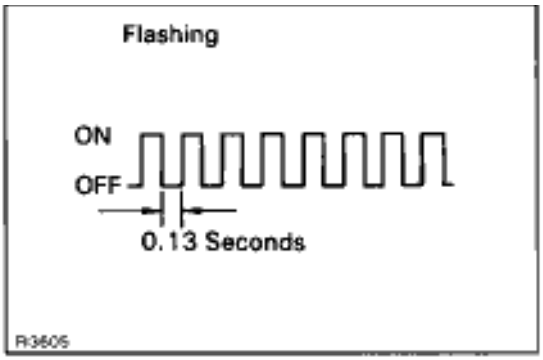

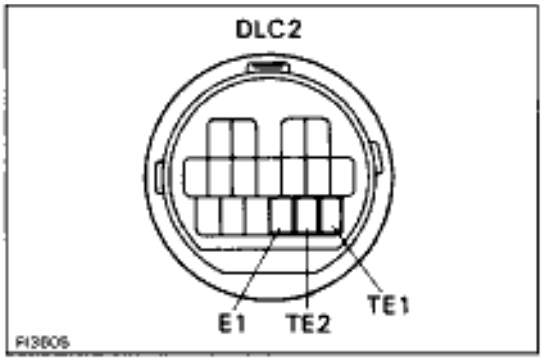

1. Initial conditions.
   (a) Battery voltage 11 V or more
   (b) Throttle valve fully closed
   (c) Transmission in neutral position
   (d) Air conditioning switched OFF
2. Turn ignition switch OFF
3. Using SST, connect terminals TE2 and E1 of the data link connector 2.
   SST 09843–18020
4. Turn ignition switch ON.
   HINT:
   - To confirm that the test mode is operating, check that the malfunction indicator lamp flashes when the ignition switch is turned to ON.
   - If the malfunction indicator lamp does not flash, proceed to troubleshooting of the TE2 terminal circuit on page EG–598.
5. Start the engine.
6. Simulate the conditions of the malfunction described by the customer.
7. After the road test, using SST, connect terminals TE1 and E1 of the data link connector 2.
   SST 09843–18020
8. Read the diagnostic trouble code on malfunction indicator lamp on the telltale light RH (See page EG–491).
9. After completing the check, disconnect terminals TE1, TE2 and E1, and turn off the display.
   HINT:
   - The test mode will not start if terminals TE2 and E1 are connected after the ignition switch is turned ON.
   - When the engine is not cranked, diagnostic trouble codes ”43” (Starter signal) output, but this is not abnormal.
   - When the automatic transmission shift lever is in the ”D”, ”2”, ”L” or ”R” shift position, or when the air conditioning is on or when the accelerator pedal is depressed, code ”51” (Switch condition signal) is output, but this is not abnormal.

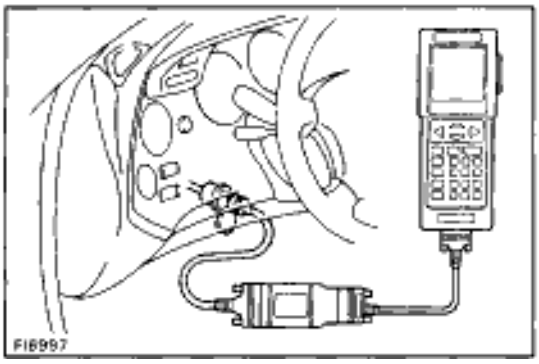

DIAGNOSTIC TROUBLE CODE CHECK USING TOYOTA HAND–HELD TESTER

1. Hook up the TOYOTA hand–held tester to the DLC2.
2. Read the diagnostic trouble codes by following the prompts on the tester screen.

Please refer to the TOYOTA hand–held tester operation's manual for further details.

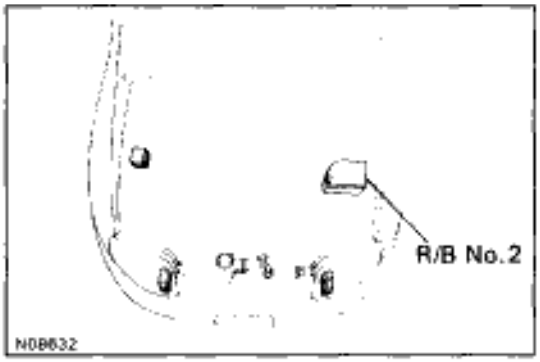

DIAGNOSTIC TROUBLE CODE CLEARANCE

1. After repair of the trouble areas, the diagnostic trouble code retained in the ECM memory must be cleared out by removing the EFI No.1 fuse (30A) from R/B No.2 for 10 seconds or more, with the ignition switch OFF.
   HINT:
   - Cancellation can also be done by removing the negative (–) terminal cable from the battery, but in this case, other memory systems (clock, etc.) will also be cancelled out.
   - If it is necessary to work on engine components requiring removal of the negative (–) terminal cable from the battery, a check must first be made to see if a diagnostic trouble code has been recorded.
2. After cancellation, road test the vehicle to check that a normal code is now read on the malfunction indicator lamp.
   If the same diagnostic trouble code appears, it indicates that the trouble area has not been repaired thoroughly.

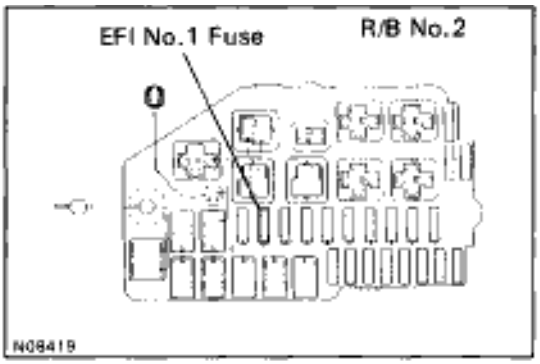

ECM DATA MONITOR USING TOYOTA HAND–HELD TESTER

1. Hook up the TOYOTA hand–held tester to the DLC2.
2. Monitor the ECM data by following the prompts on the tester screen.

HINT: TOYOTA hand–held tester has a "Snapshot" function which records the monitored data.
Please refer to TOYOTA hand–held tester operator's manual for further details.

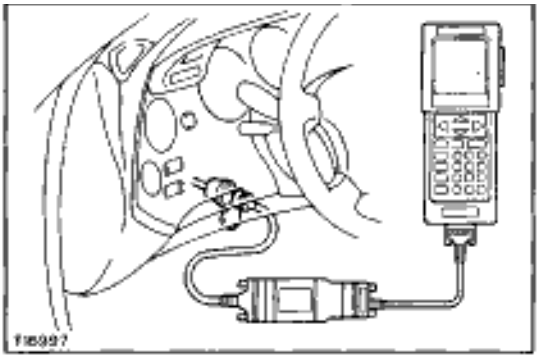

ECM TERMINAL VALUES MEASUREMENT USING TOYOTA BREAK–OUT–BOX AND TOYOTA HAND–HELD TESTER

1. Hook up the TOYOTA break–out–box and TOYOTA handheld tester to the vehicle.
2. Read the ECM input/output values by following the prompts on the tester screen.

HINT: TOYOTA hand–held tester has a "Snapshot" function. This records the measured values and is effective in the diagnosis of intermittent problems.
Please refer to TOYOTA hand–held tester/TOYOTA break–out–box operator's manual for further details.

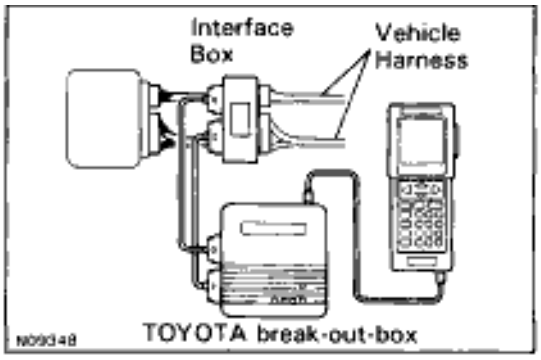

DIAGNOSTIC TROUBLE CODE CHART

HINT: Parameters listed in the chart may not be exactly the same as your reading due to type of the instruments or other factors.

DTC No.	Number of MIL Blinks	Circuit	Diagnostic Trouble Code Detecting Condition
–		Normal	No code is recorded
12		G, NE Signal (No.1)	No “NE” or “G1” and “G2” signal to ECM for 2 sec. or more after cranking
13		G, NE Signal (No.2)	No NE signal to ECM for 0.1 sec. or more at 1,000 rpm or more
			NE signal does not pulse 12 times to ECM during the interval between G1 and G2 pulses
			Deviation in G (G1, G2) and NE signal continues for 3 sec. during idling (throttle fully closed) after engine warmed up
14		Ignition Signal	No IGF signal to ECM for 4~7 consecutive IGT signals with engine speed less than 3,000 rpm
16		A/T Control Signal	Fault in communications between the engine CPU and A/T CPU in the ECM

If a malfunction code is displayed during the diagnostic trouble code check in test mode, check the circuit for that code listed in the table below (Proceed to the page given for that circuit).

Trouble Area	Malfunction Indicator Lamp*1		Memory*2	See page
	Normal Mode	Test Mode		
–	–	–	–	–
• Open or short in crankshaft position sensor, camshaft position sensor No.1, No.2 circuit • Crankshaft position sensor • Camshaft position sensor No.1, No.2 • Starter • ECM	ON	N.A.	○	EG–515
• Open or short in crankshaft position sensor circuit • Crankshaft position sensor • ECM	ON	N.A.	○	EG–518
• Open or short in crankshaft position sensor circuit • Mechanical system malfunction (skipping teeth of timing belt, belt stretched) • Crankshaft position sensor • ECM	N.A.	ON		
• Mechanical system malfunction (skipping teeth of timing belt, belt stretched) • Camshaft position sensor No.1, No.2 • ECM	ON	N.A.		
• Open or short in IGF circuit from igniter to ECM • Igniter • ECM	ON	N.A.	○	EG–519
• ECM	ON	N.A.	X	EG–524

*1, 2: See page EG–502.

DTC No.	Number of MIL Blinks	Circuit	Diagnostic Trouble Code Detecting Condition
21	BE3932	Main Heated Oxygen Sensor Signal	(1) Open or short in heater circuit of main heated oxygen sensor (Fr) for 0.5 sec. or more.
			(2) Main heated oxygen sensor (Fr) signal voltage is reduced to between 0.35 V and 0.70 V for 90 sec. under conditions (a) ~ (d): (2 trip dectection logic)*3 (a) Engine coolant temp.: Between 80˚C (176˚F) and 95˚C (203˚F) (b) Engine speed: 1,500 rpm or more (c) Load driving (Example A/T in Overdrive, (5th for M/T), A/C ON, Flat road, 80 km/h (50 mph) (d) Main heated oxygen sensor signal voltage: Alternating above and below 0.45 V
22	BE3932	Engine Coolant Temp. Sensor Circuit	Open or short in engine coolant temp. sensor circuit for 0.5 sec. or more
24	BE3932	Intake Air Temp. Sensor Signal	Open or short in intake air temp. sensor circuit for 0.5 sec. or more
25	BE3932	Air–Fuel Ratio Lean Malfunction	(1) Main heated oxygen sensor voltage is 0.45 V or less (lean) for 90 sec. under conditions (a) and (b): (2 trip dectection logic)*3 (a) Engine speed: 1,500 rpm or more (b) Engine coolant temp.: 70˚C or more
			(2) Engine speed varies by more than 20 rpm over the preceding crank angle period during a period of 20 sec. or more under conditions (a) and (b): (2 trip dectection logic)*4 (a) Engine speed: Below 950 rpm (b) Engine coolant temp.: 80˚C (176˚F) or more

*3: See page EG–503.

Trouble Area	Malfunction Indicator Lamp*1		Memory*2	See page
	Normal Mode	Test Mode		
• Open or short in heater circuit of main heated oxygen sensor • Main heated oxygen sensor heater • ECM	ON	N.A.	○	EG–525
• Main heated oxygen sensor circuit • Main heated oxygen sensor	ON	ON		
• Open or short in engine coolant temp. sensor circuit • Engine coolant temp. sensor • ECM	ON	ON	○	EG–530
• Open or short in intake air temp. sensor circuit • Intake air temp. sensor • ECM	ON	ON	○	EG–532
• Open or short in Main heated oxygen sensor circuit • Main heated oxygen sensor • Ignition system • ECM	ON	ON	○	EG–534
• Open or short in injector circuit • Fuel line pressure (injector leak, blockage) • Mechanical system malfunction (skipping teeth of timing belt) • Ignition system • Compression pressure (foreign object caught in valve) • Mass air flow meter (air intake) • ECM				

*1, 2: See page EG–502

DTC No.	Number of MIL Blinks	Circuit	Diagnostic Trouble Code Detecting Condition
26		Air–Fuel Ratio Rich Malfunction	Engine speed varies by more than 20 rpm over the preceding crank angle period during a period of 25 sec. or more under conditions (a) and (b): (2 trip dectection logic)*3 (a) Engine speed: Below 950 rpm (b) Engine coolant temp.: 80˚C (176˚F) or more
27		Sub Heated Oxygen Sensor Signal	(1) Open or short in heater circuit of sub heated oxygen sensor for 0.5 sec. or more (2) Main heated oxygen sensor signal is 0.45 V or more and sub heated oxygen sensor signal is 0.45 V or less under conditions (a) ~ (c): (2 trip dectection logic)*3 (a) Engine coolant temp.: 80˚C (176˚F) or more (b) Engine speed: 1,5000 rpm or more (c) Accel. pedal: Fully depressed for 2 sec. or more
31		Mass Air Flow Meter Circuit	Open or short in mass air flow meter circuit for 3 sec. or more with engine speed less than 3,000 rpm
34		Turbo Pressure Malfunction	All conditions below are detected continuously for 2 sec. or more: (a) Mainfold absolute pressure: 200 kPa (2.0 kgf/cm^2, 29 psi) or more (b) Thottle valve opening angle: 20˚ or more (c) Engine speed: 2,4000 rpm or more
35		Turbo Pressure Sensor Circuit	Open or short in turbo pressure sensor circuit for 0.5 sec. or more
35		Barometric Pressure Sensor Circuit	Open or short in BARO sensor circuit for 0.5 sec. or more

*3: See page EG–503.

Trouble Area	Malfunction Indicator Lamp*1		Memory*2	See page
	Normal Mode	Test Mode		
• Open or short in injector circuit • Fuel line pressure (injector leak, blockage) • Mechanical system malfunction (skipping teeth of timing belt) • Ignition system • Compression pressure (foreign object caught in valve) • Mass air flow meter (air intake) • ECM	ON	ON	○	EG–534
• Open or short in heater circuit of sub heated oxygen sensor. • Sub heated oxygen sensor • ECM	ON	N.A.	○	EG–540
• Open or short in sub heated oxygen sensor circuit • Sub heated oxygen sensor • ECM	ON	ON		
• Open or short in mass air flow meter circuit • Mass air flow meter • ECM	ON	N.A.	○	EG–544
• Actuator (for waste gate valve) • Short in VSV for waste gate valve circuit • ECM	ON	N.A.	○	EG–546
• Open or short in turbo pressure sensor circuit • Turbo pressure sensor • ECM	ON	ON	○	EG–549
• ECM	ON	ON	○	EG–549

*1, 2: See page EG–502.

DTC No.	Number of MIL Blinks	Circuit	Diagnostic Trouble Code Detecting Condition
41		Throttle Position Sensor Signal	Open or short in throttle position sensor circuit for 0.5 sec. or more
42		No. 1 Vehicle Speed Sensor Signal (for A/T)	All conditions below are detected continuously for 8 sec. or more: (a) No. 1 vehicle speed signal: 0 km/h (mph) (b) Engine speed: 3,000 or more (c) Park/neutral position switch: OFF (d) Stop light switch: OFF
		No. 1 Vehicle Speed Sensor Signal (for M/T)	All conditions below are detected continuously for 8 sec. or more: (a) No. 1 vehicle speed signal: 0 km/h (mph) (b) Engine speed: Between 1,500 rpm and 4,000 rpm (c) Engine coolant temp.: 80°C (176°F) or more (d) Load driving
43		Starter Signal	No starter signal to ECM
47		Sub–Throttle Position Sensor Signal	Open or short in sub–throttle position sensor circuit for 0.5 sec. or more
52		Knock Sensor Signal (front side)	No No.1 knock sensor signal to ECM for 4 crank revolutions with engine speed between 2,050 rpm and 5,950 rpm
53		Knock Control Signal	Engine control computer (for knock control) malfunction at engine speed between 650 rpm and 5,200 rpm
55		Knock Sensor Signal (rear side)	No No.2 knock sensor signal to ECM for 4 crank revolutions with engine speed between 2,050 rpm and 5,950 rpm

Trouble Area	Malfunction Indicator Lamp*1		Memory*2	See page
	Normal Mode	Test Mode		
• Open or short in throttle position sensor circuit • Throttle position sensor • ECM	ON	ON	○	EG–552
• No.1 vehicle speed sensor • Telltale light RH • Open or short in No.1 vehicle speed sensor circuit • ECM	OFF	OFF	○	EG–556
• Open or short in starter signal circuit • Open or short in ignition switch or starter relay circuit • ECM	N.A	OFF	X	EG–559
• Open or short sub–throttle position sensor circuit • Sub–throttle position sensor • ECM	OFF	ON	○	EG–552
• Open or short in No.1 knock sensor circuit • No.1 Knock sensor (loosensess) • ECM	ON	N.A	○	EG–561
• ECM	ON	N.A	X	EG–561
• Open or short in No.2 knock sensor circuit • No.2 Knock sensor (looseness) • ECM	ON	N.A	○	EG–561

*1, 2: See page EG–502.

DTC No.	Number of MIL Blinks	Circuit	Diagnostic Trouble Code Detecting Condition
71	BE3937	EGR System Malfunction	EGR gas temp. and intake air temp. are 60˚C (140˚F) or less for A/T, 55˚C (131˚F) or less for 1 ~ 4 min. under conditions (a) and (b): (2 trip dectection logic)*3 (a) Engine coolant temp.: 60˚C (140˚F) or more (b) EGR operation possible (Example A/T in 3rd speed (5th for M/T), A/C ON, 96 km/h (60 mph), Flat road)
78	BE3937	Fuel Pump Control Signal	(1) Open or short in fuel pump circuit for 1 sec. or more with engine speed 1,000 rpm or less (2 trip dectection logic)*3
			(2) Open in input circuit for 1 sec. or more with engine speed 1,000 rpm or less (2 trip dectection logic)*3
			(3) Open or short in diagnostic signal line (DI) fuel pump ECU with engine speed 1,000 rpm or less (2 trip dectection logic)*3
51	BE3935	Switch Condition Signal	(1) 3 sec. or more after engine starts, with closed throttle position switch OFF (IDL1) (2) Park/neutral position switch: OFF (Shift position in ”R”, ”D”, ”2”, or ”L” position) (3) A/C switch ON

*1: ”ON” displayed in the diagnostic mode column indicates that the Malfunction Indicator Lamp is lit up when a malfunction is defected. ”OFF” indicates that the ”CHECK” does not light up during malfunction diagnosis, even if a malfunction is detected. ”N.A.” indicates that the item is not included in malfunction diagnosis.

*2: ”○” in the memory column indicates that a diagnostic trouble code is recorded in the ECM memory when a malfunction occurs. ”X” indicates that a diagnostic trouble code is not recorded in the ECM memory even if a malfunction occurs. Accordingly, output of diagnostic results in normal or test mode is done with the IG switch ON.

Trouble Area	Malfunction Indicator Lamp*1		Memory*2	See page
	Normal Mode	Test Mode		
• Open in EGR gas temp. sensor circuit • Short in VSV circuit for EGR • EGR hose disconnected, valve stuck • Clogged EGR gas passage • ECM	ON	ON	○	EG–564
• Open or short in fuel pump ECU circuit • Fuel pump ECU • Fuel pump • ECM power source circuit • ECM	OFF	ON	○	EG–568
• A/C switch circuit • Throttle position sensor IDL circuit • Park/neutral position switch circuit • Accelerator pedal and cable • ECM	N.A.	OFF	X	EG–571

*3: This indicates items for which ”2 trip detection logic” is used. With this logic, when a logic malfunction is first detected, the malfunction is temporarily stored in the ECM memory. If the same case is detected again during the second drive test, this second detection causes the Malfunction Indicator Lamp to light up. The 2 trip repeats the same mode a 2nd time. (However, the IG switch must be turned OFF between the 1st trip and 2nd trip).
In the Test Mode, the Malfunction Indicator Lamp lights up the 1st trip a malfunction is detected.

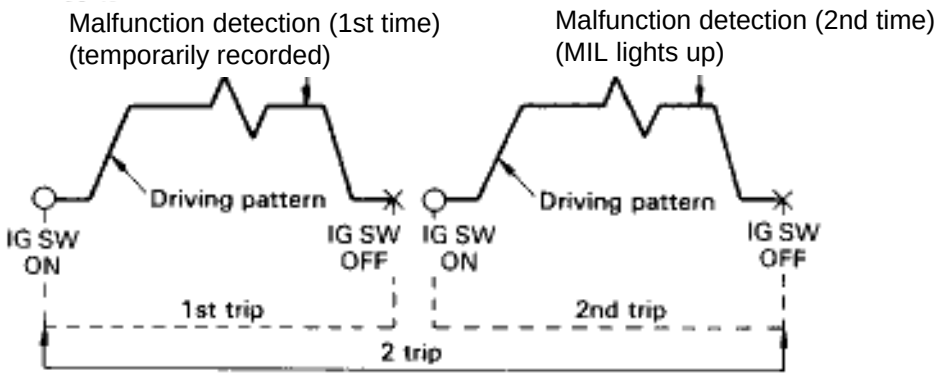

FAIL–SAFE CHART

If any of the following codes is detected, the ECM enters fail–safe mode.

DTC No.	Fail–Safe Operation		Fail–Safe Deactivation Conditions
14	Fuel cut		6 IGF signals detected in 6 consecutive ignitions
16	Torque control prohibited		Returned to normal condition
22	THW is fixed at 80˚C (176˚F)		Returned to normal condition
24	THA is fixed at 20˚C (68˚F)		Returned to normal condition
31	Volume of air flowing is measured by turbo pressure Sensor to determine injection volume and ignition Timing		Returned to normal condition
34	Fuel cut		Returned to normal condition
35	Turbo Pressure Sensor	Fuel cut	Returned to normal condition
	BARO Sensor	Atmospheric pressure is fixed at 101.3 kPa (760 mmHg, 29.92 in·Hg)	Returned to normal condition
41	VTA1 is fixed at closed throttle position		The following must each be repeated at least 2 times consecutively: • 0.1 V × VTA1 × 0.95 V • IDL: ON
47	VTA2 is fixed at wide open throttle Position		The following must be repeated at least 2 times consecutively • 0.1 V × VTA2 × 0.95 V
52	Max. timing retardation		IG switch OFF
53	Max. timing retardation		Returned to normal condition
55	Max. timing retardation		IG switch OFF

Back–Up Function

If there is trouble with the program in the ECM and the ignition signals (IGT) are not output from the microcomputer, the ECM controls fuel injection and ignition timing at predetermined levels as a back–up function to make it possible to continue to operate the vehicle.

Furthermore, the injection duration is calculated from the starting signal (STA) and the throttle position signal (IDL). Also, the ignition timing is fixed at the initial ignition timing, 10˚BTDC, without relation to the engine speed.

HINT: If the engine is controlled by the back–up function, the malfunction indicator lamp lights up to warn the driver of the malfunction but the diagnostic trouble code is not output.

CHECK FOR INTERMITTENT PROBLEMS

As described in the preceding paragraph, abnormality detection ability in the test mode is increased compared to that in the normal mode, so that when intermittent problems occur in the ECM signal circuits (G1, G2, NE, THW, THA, VTA1, VTA2) shown in the table below, the appropriate diagnostic trouble code is output.

Accordingly, when the diagnostic trouble codes shown in the table opposite (13, 22, 24, 41, 47) are output during the diagnostic trouble code check, and inspection of the appropriate circuits reveals no abnormality, check for intermittent problems as described below.

By checking for intermittent problems, the place where intermittent problems are occurring due to poor contacts can be isolated.

DTC	Circuit
13	G, NE signal circuit (No.2)
22	Engine coolant temp. sensor circuit
24	Intake air temp. sensor circuit
41	Throttle position sensor circuit
47	Sub–throttle position sensor circuit

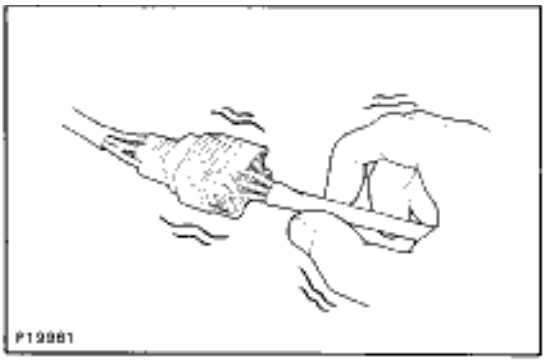

CLEAR DIAGNOSTIC TROUBLE CODES

See page EG–493**.**

SET TEST MODE

1. With the ignition switch OFF, using SST, connect the terminals TE2 and E1 of the data link connector 2.
   SST 09843–18020
2. Start the engine and check to see the malfunction indicator lamp goes off.

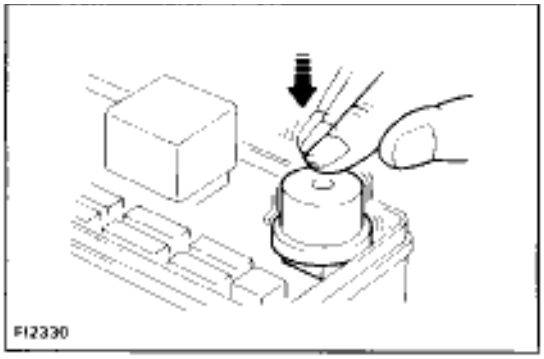

PERFORM A SIMULATION TEST

Using the symptom simulation (See page IN–24), apply vibration to and pull lightly on the wire harness, connector or terminals in the circuit indicated by the malfunction code.

In this test, if the malfunction indicator lamp lights up, it indicates that the place where the wire harness, connector or terminals being pulled or vibrated has faulty contact. Check that point for loose connections, dirt on the terminals, poor fit or other problems and repair as necessary.

HINT: After cancelling out the diagnostic trouble code in memory and set the test mode, if the malfunction indicator lamp does not go off after the engine is started, check thoroughly for faulty contacts, etc., then try the check again, if the malfunction indicator lamp still does not go off, check and replace ECM.

BASIC INSPECTION

In many cases, by carrying out the basic engine check shown in the following flow chart, the location causing the problem can be found quickly and efficiently. Therefore, use of this check is essential in engine troubleshooting.

If there is a problem, and a normal code is displayed, proceed to the matrix chart of problem symptoms on page EG–514. Make sure that every likely cause of the problem is checked.

1 **Is battery positive voltage 11 V or more when engine is stopped?**

- **YES**
- **NO** → **Charge or replace battery.**

2 **Is engine cranked?**

- **YES**
- **NO** → **Proceed to matrix chart of problem symptom on page EG–514.**

3 **Does engine start?**

- **YES**
- **NO** → **Go to step 7.**

4 **Check air filter.**

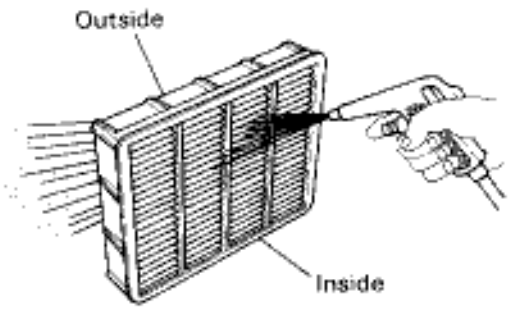

P Remove air filter.

C Visually check that the air filter is not excessively dirty or oily.

Hint If necessary, clean the air filter with compressed air. First blow from inside thoroughly, then blow from outside of the air filter.

- **OK**
- **NG** → **Repair or replace.**

5 Check idle speed.

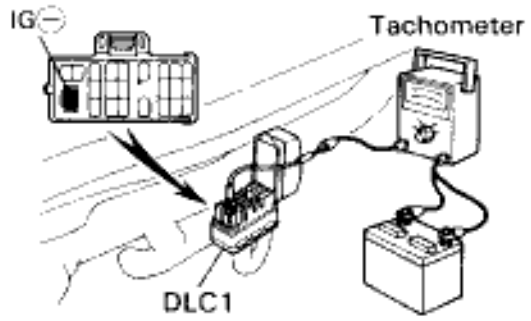

P11291

P
(1) Shift transmission into “N” position.
(2) Warm up engine to normal operating tempera–ture.
(3) Switch OFF all accessories.
(4) Switch OFF air conditioning.
(5) Connect tachometer test probe to terminal IG ⊖ of data link connector 1.

C Check Idle speed.

OK **Idle speed: 650 ± 50 rpm**

Caution
- **Never allow tachometer test probe to touch ground as it could result in damage to igniter and/or ignition coil.**
- **As some tachometers are not compatible with this ignition system, we recommended that you confirm the compatibility of your unit before use.**

OK

NG **Proceed to matrix chart of problem symp-toms on page EG–514.**

6 Check ignition timing.

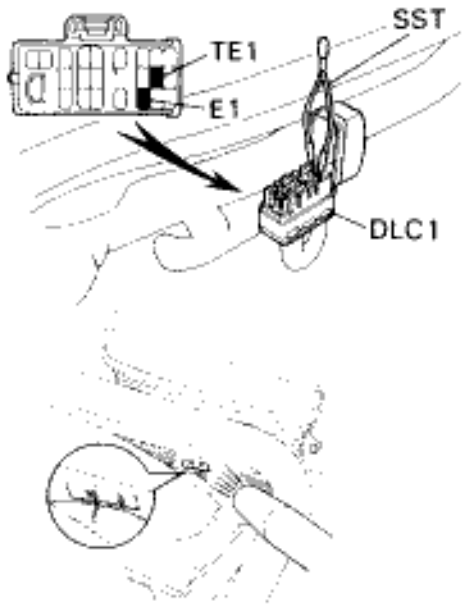

P11288
P11833

P
(1) Shift transmission into “N” position.
(2) Warm up engine to normal operating tempera–ture.
(3) Keep the engine speed at idle.
(4) Using SST, connect terminals TE1 and E1 of data link connector 1.
SST 09843–18020
(5) Connect a timing light clip to the check wire. (See page EG–20)

C Check ignition timing.

OK **Ignition timing: 10 ± 2° BTDC @ idle**

OK

NG **Proceed to page EG–518 and continue to troubleshoot.**

Proceed to matrix chart of problem symp-toms on page EG–514.

7 Check fuel pressure.

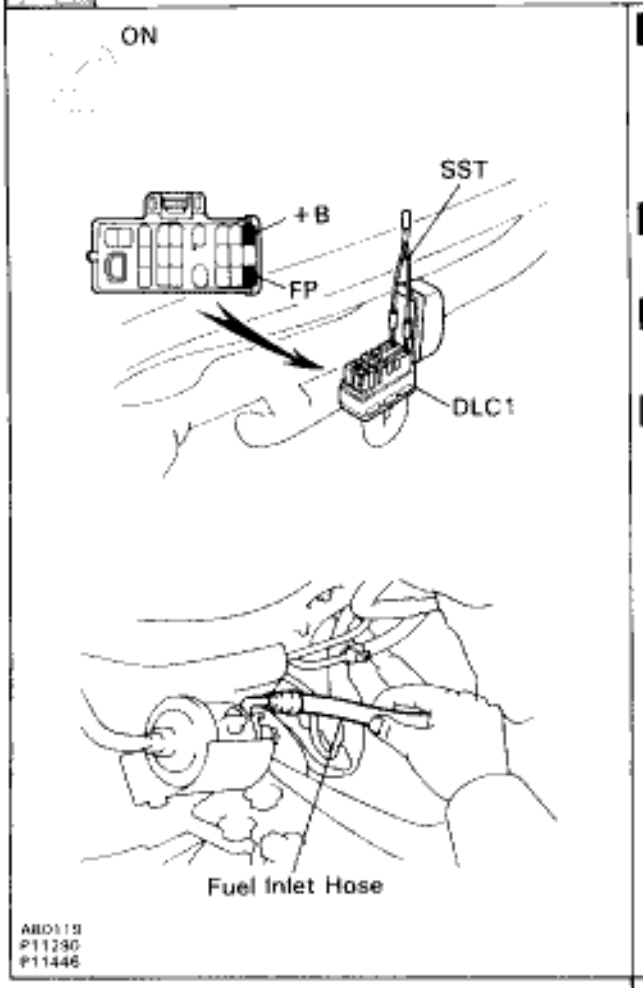

P
(1) Be sure that there is enough fuel in the tank.
(2) Turn ignition switch ON.
(3) Using SST, connect terminals FP and +B of data link connector 1.
SST 09843–18020

C Check that there is pressure in the hose from the fuel filter.

Hint If there is fuel pressure, you will hear the sound of fuel flowing.

Caution
Never make a mistake with the terminal connection position as this will cause a malfunction.

OK

NG **Proceed to page EG–264 and continue to troubleshoot.**

8 Check for spark.

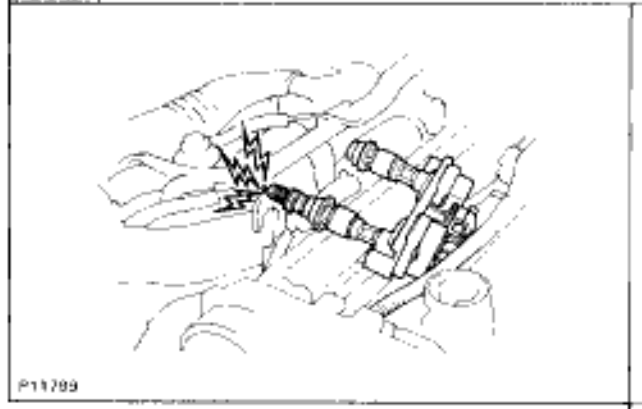

P
(1) Remove ignition coil (See page IG–26)
(2) Remove spark plug.
(3) Install the spark plug to the ignition coil, and connect the ignition coil connector.
(4) Ground the spark plug.

C Check if spark occurs while engine is being cranked.

Hint To prevent excess fuel being injected from the injectors during this test, don't crank the engine for more than 1 — 2 seconds at a time.

OK

NG **Proceed to page IG–21 and continue to troubleshoot.**

Proceed to matrix chart of problem symptoms on page EG–514.

PARTS LOCATION

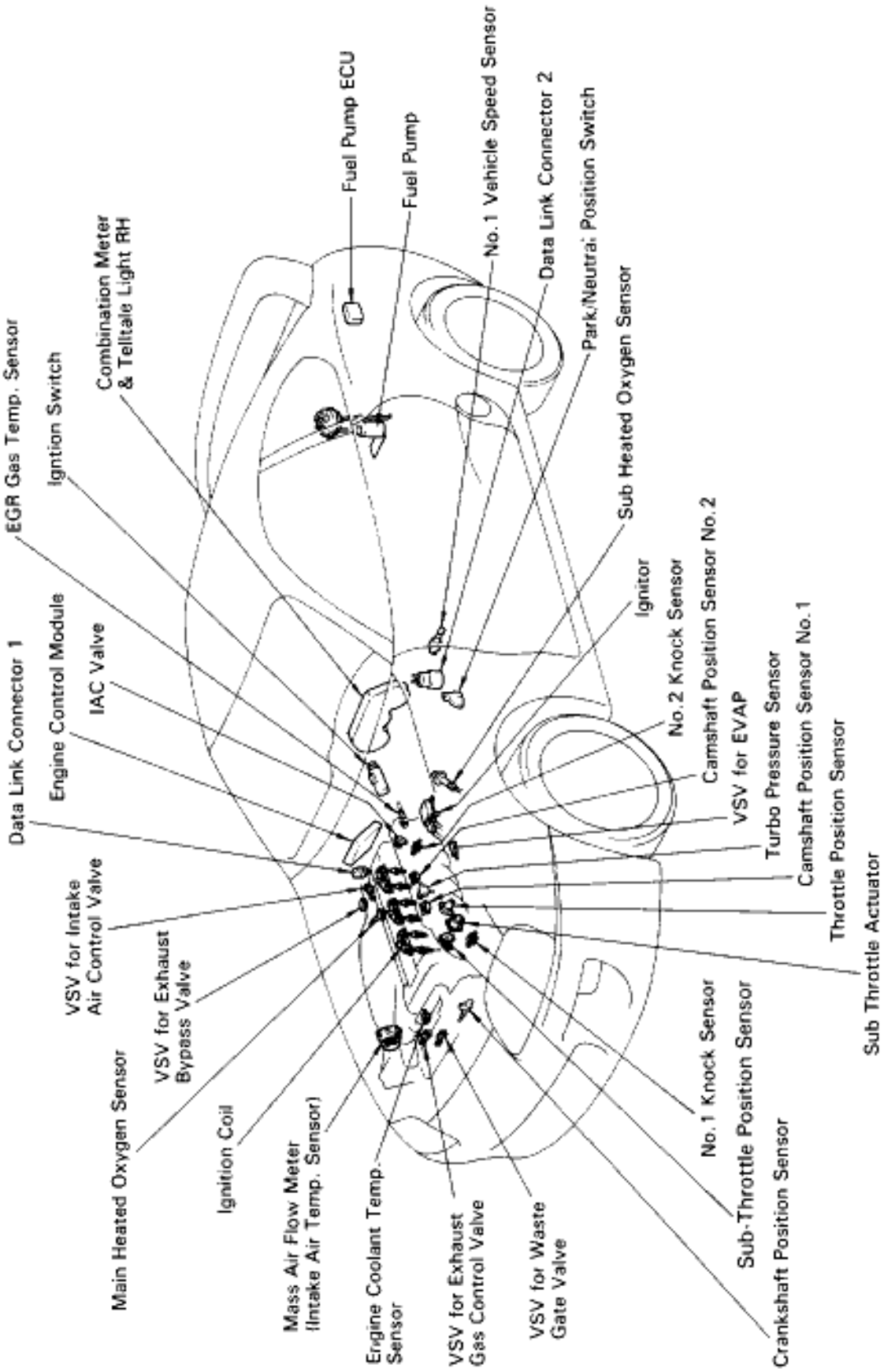

STANDARD VALUE OF ECM TERMINALS

Connectors of the engine control module are waterproof and are the bolt type.

For waterproof type connectors, in order to measure the voltage of ECM terminals and the resistance of connected parts, connect the inspection sub wire harness between the ECM and vehicle wire harness, then do the inspection.

The inspection method of inserting a tester probe from the other side of connector significantly reduces the waterproof performance.

Disconnect the connector by fully loosening the bolt.

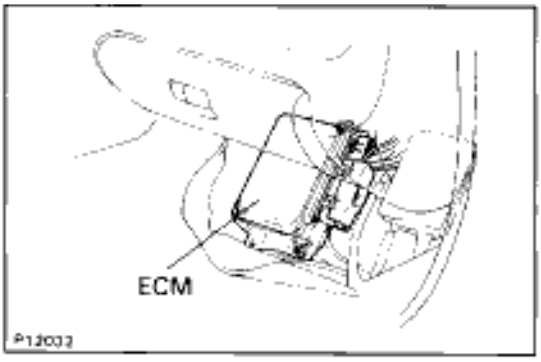

PREPARATION

1. Turn the ignition switch OFF.
2. Turn up the passenger side floor carpet.
   (See page EG–324)
3. Remove the ECM protector.
4. Disconnect the connector from the ECM.

   After completely loosening the bolt, the 2 parts of the connector can be separated.

   NOTICE:
   - **Do not pull the wire harness when disconnecting the connector.**
   - **When disconnecting the connector, the ECM's back–up power source is cut off, so the malfunction codes, etc. recorded in the ECM memory are cancelled.**
   - **Never insert a tester probe or male terminal used for inspection purposes into the female terminal of the vehicle wire harness. Otherwise, the female terminal may be widened, which can result in faulty connection.**

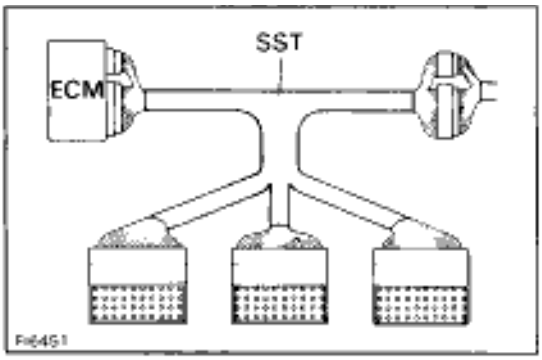

5. Connect SST (check harness "A") between the ECM and connector of the vehicle wire harness.
   SST 09990–01000
   HINT: The arrangement of the check connector terminals are the same as those of the ECM.
   See page EG–511.
6. Disconnect the SST.
   SST 09990–01000
7. Reconnect the connector to the ECM.

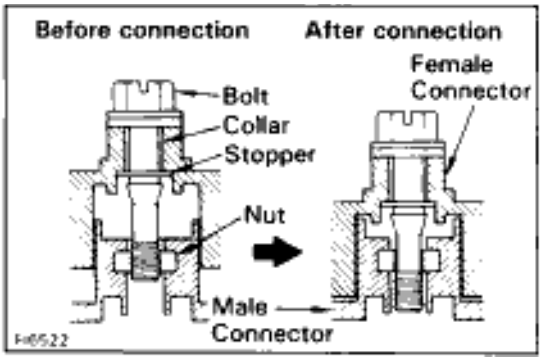

(a) Match the male connector correctly with the female connector, then press them together.

(b) Tighten the bolt.
   Make sure the connector is completely connected by tightening the bolt until there is a clearance of less than 1 mm (0.04 in.) between the bottom of the male connector and the end of the female connector.

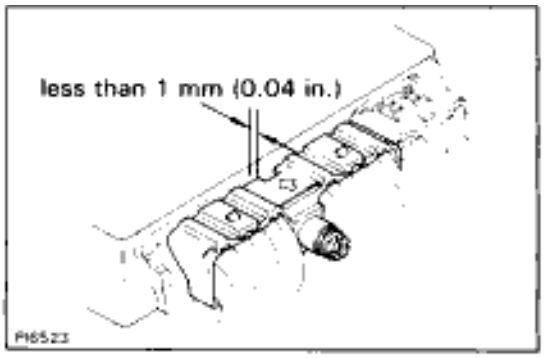

8. Install the ECM protector and floor carpet.

STANDARD VALUE OF ECM TERMINALS

ECM Terminals

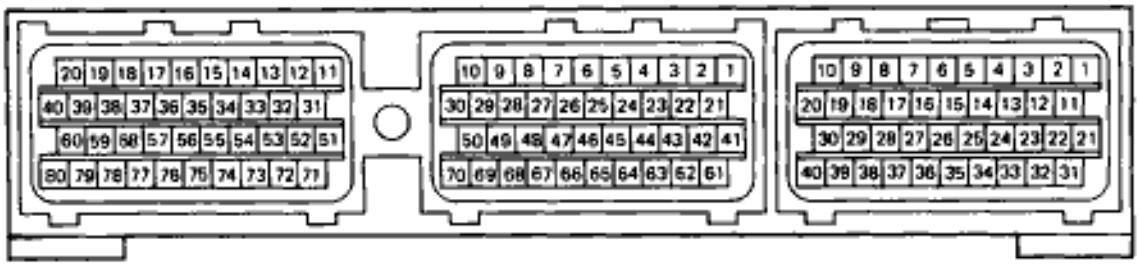

Symbols (Terminals No.)	STD Voltage (V)	Condition
BATT (A33) – E1 (B69)	9 ~ 14	Always
IGSW (A1) + B (A31) – E1 (B69)	9 ~ 14	IG switch ON
VCC (B41) – E2 (B65)	4.5 ~ 5.5	IG switch ON
IDL1 (B64) – E2 (B65)	0 ~ 3.0	IG switch ON and apply vacuum to the throttle opener Throttle valve fully closed
	9 ~ 14	IG switch ON Throttle valve fully open
IDL2 (B63) – E2 (B65)	0 ~ 3.0	IG switch ON Sub–throttle valve fully closed
	9 ~ 14	IG switch ON Sub–throttle valve fully open
VTA1 (B43) VTA2 (B42) – E2 (B65)	0.3 ~ 0.8	IG switch ON Main or sub–throttle valve fully closed
	3.2 ~ 4.9	IG switch ON Main or sub–throttle valve fully open
THA (B45) – E2 (B65)	0.5 ~ 3.4	Idling, Intake air temp. 0˚C (32˚F) to 80˚C (176˚F)
THW (B44) – E2 (B65)	0.2 ~ 1.0	Idling, Engine coolant temp. 60˚C (140˚F) to 120˚C (248˚F)
STA (B77) – E1 (B69)	6.0 or more	Cranking
#10 (B20), #20 (B19) #30 (B18), #40 (B17) #50 (B16), #60 (B15) – E01 (B80)	9 ~ 14	IG switch ON
	Pulse generation (See page EG–583)	Idling
IGT1 (B57), IGT2 (B56) IGT3 (B55), IGT4 (B54) IGT5 (B53), IGT6 (B52) – E1 (B69)	9 ~ 14	IG switch ON
	Pulse generation (See page EG–521)	Idling
IGF (B58) – E1 (B69)	4.5 ~ 5.5	IG switch ON
	Pulse generation (See page EG–521)	Idling
G1 (B26) – G1 ⊖ (B6) G2 (B25) – G2 ⊖ (B5) NE (B27) – NE ⊖ (B7)	Pulse generation (See page EG–517)	Idling
M-REL (A24) – E1 (B69)	9 ~ 14	IG switch ON
FPC (A22) – E1 (B69)	Below 1.5	IG switch ON
	Pulse generation (4.5 ~ 5.5)	Idling
DI (A21) – E1 (B69)	7.0 or more	Idling
EVAP (B74) – E01 (B80)	9 ~ 14	IG switch ON

Symbols (Terminals No.)	STD Voltage (V)	Condition
EGR (B75)–E01 (B80)	Below 2.0	Idling
	9 ~ 14	Engine speed at 3,500 rpm
VG (B66)–E21 (B28)	0.7 ~ 1.7	Idling
ISC1 (B35), ISC2 (B34) ISC3 (B33), ISC4 (B32) — E01 (B80)	Pulse generation (See page EG–586)	Idling when A/C switch ON or OFF
VF1 (B29)–E1 (B69)	1.8 ~ 3.2	Maintain engine speed at 2,500 rpm for 2 minutes after warming up then return to Idling
OX1 (B48), OX2 (B47)–E1 (B69)	Pulse generation (See page EG–529)	Maintain engine speed at 2,500 rpm for 2 minutes after warming up
HT1 (B71), HT2 (B72)–E01 (B80)	Below 3.0	Idling
	9 ~ 14	IG switch ON
KNK1 (B50), KNK2 (B49)–E1 (B69)	Pulse generation (See page EG–563)	Idling
NSW (B76)–E1 (B69)	9 ~ 14	IG switch ON Other shift position in ”P”, ”N” position
	0 ~ 3.0	IG switch ON Shift position in ”P”, ”N” position
SP1 (A2)–E1 (B69)	Pulse generation (See page EG–556)	IG switch ON Rotate driving wheel slowly
TE1 (A20)–E1 (B69)	9 ~ 14	IG switch ON
TE2 (A19)–E1 (B69)	9 ~ 14	IG switch ON
W (A6)–E1 (B69)	9 ~ 14	Idling
	0 ~ 3.0	IG switch ON
OD1 (A12)–E1 (B69)	9 ~ 14	IG switch ON
A/C (A34)–E1 (B69)	7.5 ~14	A/C switch OFF
	0 ~ 1.5	A/C switch ON (At idling)
ACMG (A23)–E1 (B69)	0 ~ 3.0	A/C switch ON (At idling)
	9 ~ 14	A/C switch OFF
FPU (B73)–E01 (B80)	9 ~ 14	IG switch ON
	Below 2.0	Restarting at high engine coolant temp.
ELS (A15)–E1 (B69)	7.5 ~ 14	Defogger switch and taillight switch ON
	0 ~ 1.5	Defogger’s switch and taillight switch OFF
VSV1 (B40)–E1 (B69)	Below 3.0	Immediately after racing
	9 ~ 14	Idling
VSV2 (B39)–E1 (B69)	Below 3.0	For 2 sec. after IG switch ON to OFF
	9 ~ 14	Idling
VSV3 (B38)–E1 (B69)	9 ~ 14	Idling
PMC (B60)–E1 (B69)	Below 3.0	Idling (for M/T) Idling and shift position ”P”, ”N” position (for AT)
	9 ~ 14	Idling and other shift position ”P”, ”N” position (for A/T))
PM1 (B62)–E2 (A65)	2.3 ~ 3.0	IG switch ON
	1.8 ~ 2.4	IG switch ON and apply vacuum 26.7 kPa (200 mmHg, 7.9 in Hg)

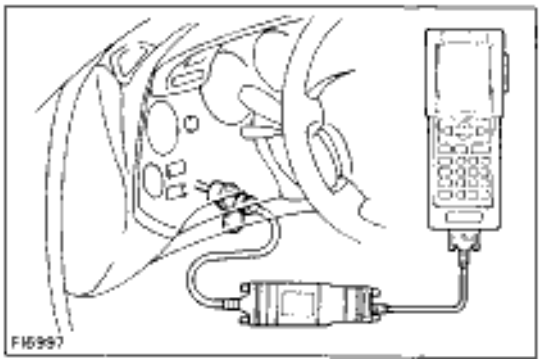

REFERENCE VALUE OF ECM DATA

HINT: ECM data can be monitored by TOYOTA hand–held tester.

1. Hook up the TOYOTA hand–held tester to DLC2.
2. Monitor ECM data by following the prompts on the tester screen.

Please refer to the TOYOTA hand–held tester operator's manual for further details.

REFERENCE VALUE

Item	Inspection condition	Reference value
INJECTOR	Engine cold to hot Engine idling at normal operating temp.*1	Gradually decreases Approx. 1.8 msec.
IGNITION	Increase engine speed	Gradually increases
IAC STEP #	Engine idling at normal operating temp..*1 A/C switch ON A/T shifting in "D" position Ignition switch ON (Engine off)	20 ~ 30 steps Step increases Step increases Approx. 125 steps'
ENGINE SPEED	RPM kept stable (Comparison with tachometer)	No great changes
MAF	Engine idling at normal operating temp..*1 Increase engine speed	Approx. 3.8 g/s Gradually increases
ECT	Engine at normal operating temp.	75–95°C (185–203°F).*2
THROTTLE	Closed throttle position Wide open throttle From closed throttle position to wide open throttle	Below 5° Above 70° Gradually increases
VEHICLE SPD	During driving (Comparison with speedometer)	No large differences
TARGET A/FL	Engine idling at normal operating temp.	2.50 ± 1.25 V*3
A/F FB LEFT	RPM stable at 2,500 rpm with normal operating temp.	ON
KNOCK FB	Depress throttle pedal suddenly during idling	ON
STA SIGNAL	During cranking	ON
CTP SIGNAL	Closed throttle position	ON
A/C SIGNAL	A/C switch ON	ON
PNP SIGNAL.*4	When shifting from "P" or "N" position into a position other than "P" or "N"	GEAR
OxL	RPM stable at 2,500 rpm with normal operating temp.	RICH LEAN is repeated

*1: All accessories and A/C switched OFF
*2: If the engine coolant temp. sensor circuit is open or shorted, the ECM assumes an engine coolant temp. value of 80°C (176°F).
*3: When feedback control is forbidden, 0 V is displayed.
*4: A/T only

MATRIX CHART OF PROBLEM SYMPTOMS

When the malfunction code is not confirmed in the diagnostic trouble code check and the problem still can not be confirmed in the basic inspection, proceed to this matrix chart and troubleshoot according to the numbered order given below.

	See page	EG–544	EG–559	EG–564	EG–571	EG–574	EG–576	EG–581	EG–583	EG–586	EG–568	EG–595	EG–589	AC–62	ST–3,	IG–21	IG–22	IG–23	EG–9	AT2–101	BE–123	IN–35
	Suspect area	Mass air flow meter circuit	Starter signal circuit	EGR system	Switch condition signal circuit	Park/neutral position switch circuit	ECM power source circuit	Back up power source circuit	Injector circuit	IAC valve circuit	Fuel pump control circuit	VSV circuit for fuel Pressure Control	Turbo control circuit	A/C signal circuit (Compressor circuit)	Starter and Starter relay	Ignition signal circuit (Spark test)	Spark plug	Ignition coil	Compression	A/T faulty	Theft deterrent ECU	Engine control module (ECM)
	Symptom																					
Does not start	Engine does not crank					2									1						3	
	No initial combustion						1		5		3					2	4					
	No complete combustion								5		1					4	3	2				
Difficult to start	Engine cranks normally		1						7	2	3						5	4	6			
	Cold engine		1						4	2	3						6	5				
	Hot engine		1						5	2	4	3					7	6				
Poor Idling	Incorrect first idle				1					2												
	High engine idle speed				1	5	4	6		2				3								
	Low engine idle speed	7			3	4		8	6	1	5			2								
	Rough idling	3		5	1			11	4	2	8					6	10	9	7			
	Hunting	3			1		4			2	5											
Poor Driveability	Hesitation/Poor acceleration	2			1				3		4		8			5	7	6		9		
	Muffler explosion (after fire)				1				4								3	2				
	Surging				1				4		2						3					
Engine Stall	Soon after starting	2								3	1											
	After accelerator pedal depressed	2			1																	
	After accelerator pedal released								1	2												3
	During A/C operation									1				2								3
	When shifting N to D					1				2												

CIRCUIT INSPECTION

DTC 12 G NE Signal Circuit (No.1)

CIRCUIT DESCRIPTION

Camshaft position sensors (G1 and G2 signals) are mounted on the intake side of the cylinder head and the crankshaft position sensor (NE signal) is mounted on the oil pump body. These sensors consist of a timing rotor and pick up coil.

The G1, G2 timing rotors have 1 tooth each on their outer circumference and are mounted on the intake camshaft.

When the intake camshaft rotates, the protrusion on the timing rotors and the air gap on the pick up coil change, causing fluctions in the magnetic field and generating an electromotive force in the pick up coil.

The NE timing rotor has 12 teeth and is mounted on the crankshaft. The NE signal sensor generates 12 NE signals per engine revolution. The ECM detects the standard crankshaft angle based on the G1, G2 signals, and the actual crankshaft angle and the engine speed by the NE signals.

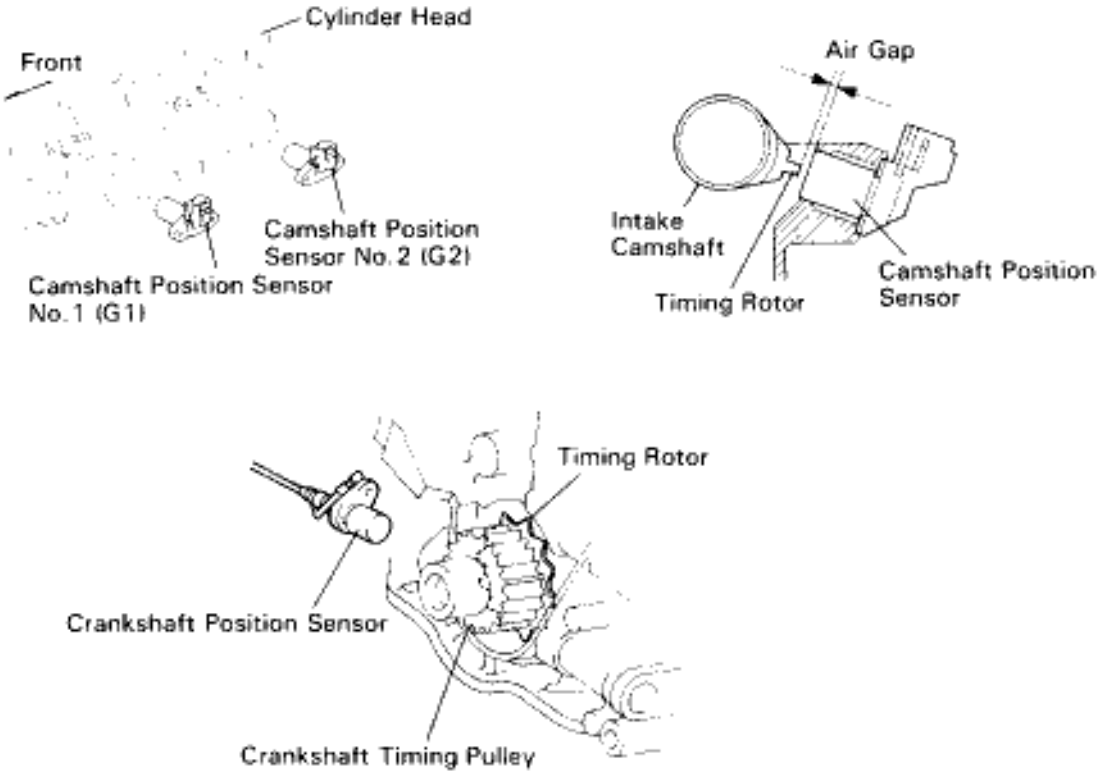

FI6920 FI8921
FI8922

DTC No.	Diagnostic Trouble Code Detecting Condition	Trouble Area
12	No “NE” or “G1” and “G2” signal to ECM for 2 sec. or more after cranking	• Open or short in crankshaft position sensor, camshaft position sensor No.1, No.2 circuit • Crankshaft position sensor • Camshaft position sensor No.1, No.2 • Starter • ECM

WIRING DIAGRAM

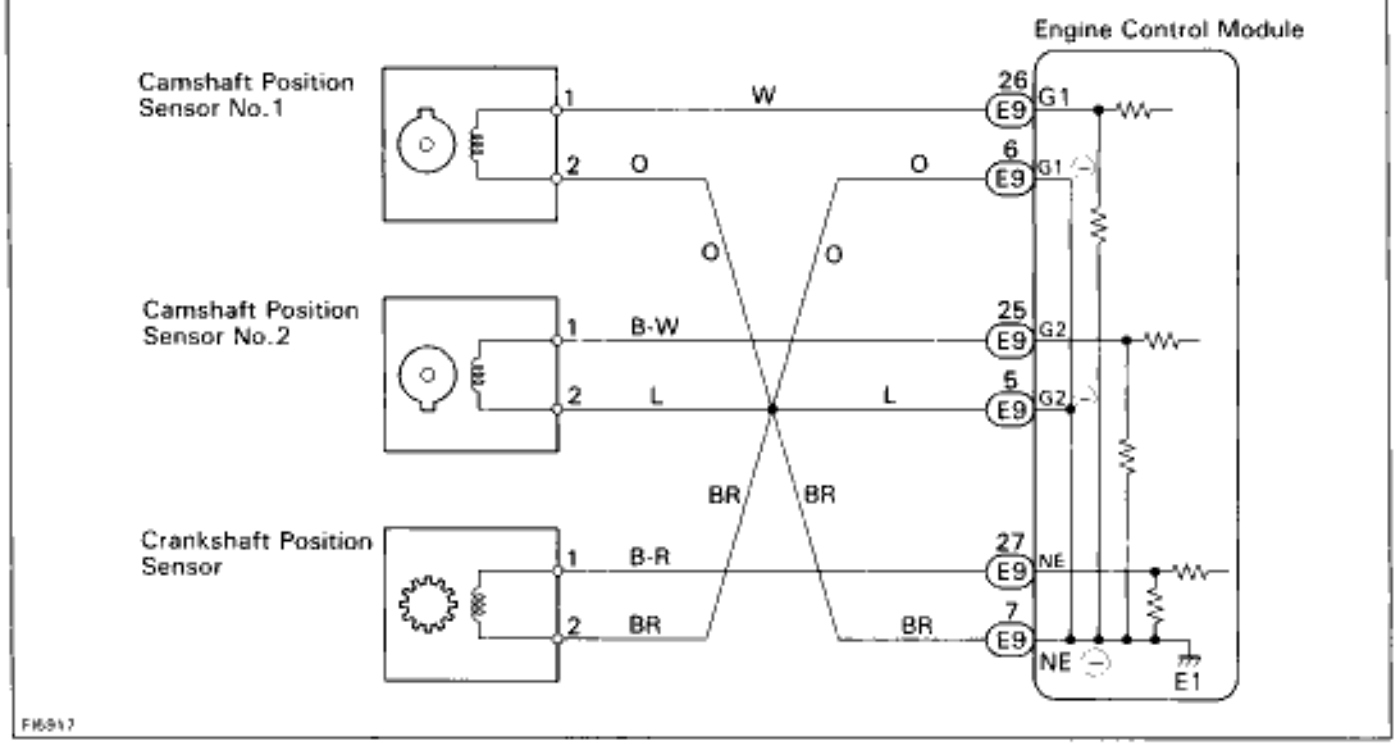

INSPECTION PROCEDURE

1 Check crankshaft position sensor, camshaft position sensors No.1, No.2.

For Crankshaft Position Sensor

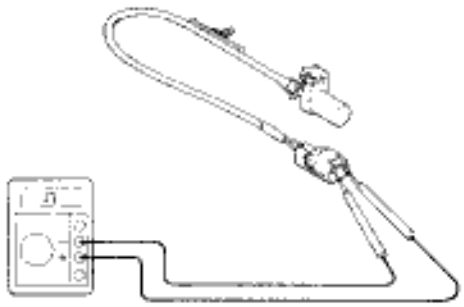

For Camshaft Position Sensor No.1, No.2

P12341
P12177

P For crankshaft position sensor, remove crankshaft position sensor (See page IG–30).

For camshaft position sensor No.1, No.2, disconnect camshaft position sensor No.1 No.2 connectors.

C Measure resistance of crankshaft position sensor, camshaft position sensor No.1 and No.2.

OK

		Resistance	
Camshaft Position Sensor	Cold	835 – 1,400 Ω	ND
		985 – 1,600 Ω	Aisan
	Hot	1,060 – 1,645 Ω	ND
		1,265 – 1,890 Ω	Aisan
Camshaft Position Sensor No.1 and No.2	Cold	835 – 1,400 Ω	ND
		985 – 1,600 Ω	Aisan
	Hot	1,060 – 1,645 Ω	ND
		1,265 – 1,890 Ω	Aisan

"Cold" is from — 10˚C (14˚F) to 50˚C (122˚F) and "Hot" is from 50˚C (122˚F) to 100˚C (212˚F).

Reference **INSPECTION USING OSCILLOSCOPE**

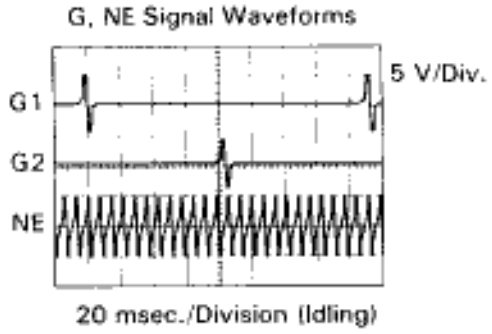

- During cranking or idling, check waveforms between terminals G1, G2 and G1 ×, G2 ×, NE and NE × of engine control module.

HINT: The correct waveforms are as shown.

OK

NG **Replace crankshaft position sensor, camshaft position sensor No.1, No.2.**

2 **Check for open and short in harness and connector between engine control module and each sensor (See page IN–30).**

OK

NG **Repair or replace harness or connector.**

3 **Inspect sensor installation and teeth of timing rotor.**

OK

NG **Tighten the sensor. Replace timing rotor (Intake camshaft, crankshaft timing pulley).**

Check and replace engine control module.

DTC 13 G NE Signal Circuit (No.2)

CIRCUIT DESCRIPTION

Refer to G, NE signal circuit (No.1) on page EG–515

DTC No.	Diagnostic Trouble Code Detecting Condition	Trouble Area
13	No NE signal to ECM for 0.1 sec. or more at 1,000 rpm or more	• Open or short in crankshaft position sensor circuit • Crankshaft position sensor • ECM
	NE signal does not pulse 12 times to ECM during the interval between G1 and G2 pulses	• Open or short in crankshaft position sensor circuit • Mechanical system malfunction (skipping teeth of timing belt, belt stretched) • Crankshaft position sensor • ECM
	Deviation in G (G1, G2) and NE signal Continues for 3 sec. during idling throttle fully closed after engine warmed up	• Mechanical system malfunction (skipping teeth of timing belt, belt stretched) • Camshaft position sensor No. 1, No.2 • ECM

INSPECTION PROCEDURE

1 **Inspect sensor installation. Check if any teeth of NE signal plate are broken.**

OK

NG → **Tighten sensor.**
Replace timing rotor.

2 **Check valve timing (Check for loose and jumping teeth of timing belt (See page EG–33)).**

OK

NG → **Adjust valve timing (repair or replace timing belt).**

Check for intermittent problems.
(See page EG–505)

DTC 14 Ignition Signal Circuit

CIRCUIT DESCRIPTION

The ECM determines the ignition timing, turns on Tr_1 at a predetermined angle (˚CA) before the desired ignition timing and outputs an ignition signal (IGT) ”1” to the igniter.
Since the width of the IGT signal is constant, the dwell angle control circuit in the igniter determines the time the control circuit starts primary current flow to the ignition coil based on the engine rpm and ignition timing one revolution ago, that is, the time the Tr_2 turns on.
When it reaches the ignition timing, the ECM turns Tr_1 off and outputs the IGT signal ”O”.
This turns Tr_2 off, interrupting the primary current flow and generating a high voltage in the secondary coil which causes the spark plug to spark. Also, by the counter electromotive force generated when the primary current is interrupted, the igniter sends an ignition confirmation signal (IGF) to the ECM.
The ECM stops fuel injection as a fail safe function when the IGF signal is not input to the ECM.

DTC No.	Diagnostic Trouble Code Detecting Condition	Trouble Area
14	No IGF signal to ECM for 4 ~ 7 consecutive IGT signals with engine speed less than 3,000 rpm	• Open or short in IGF circuit from igniter to ECM • Igniter • ECM

WIRING DIAGRAM

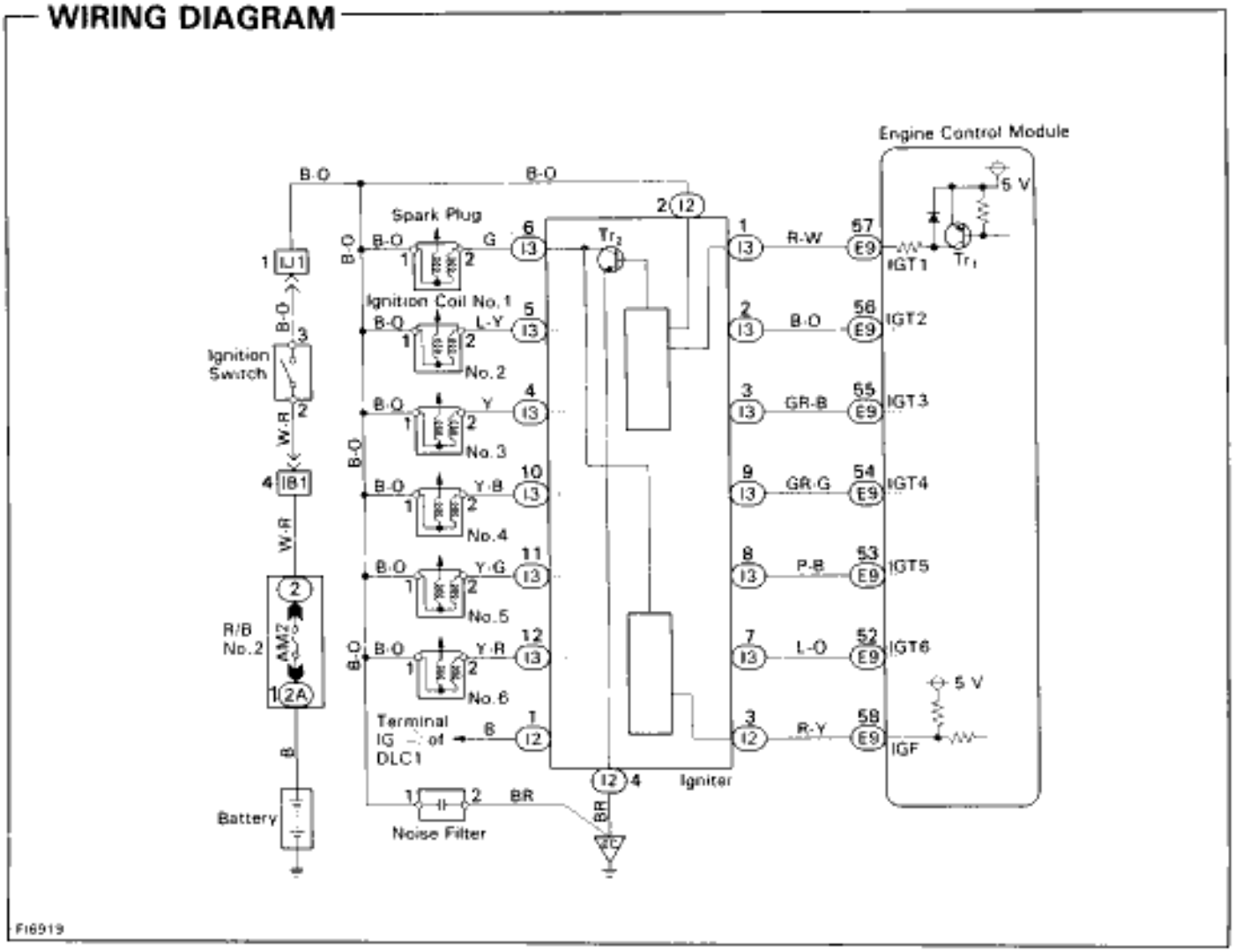

INSPECTION PROCEDURE

1 Check for spark.

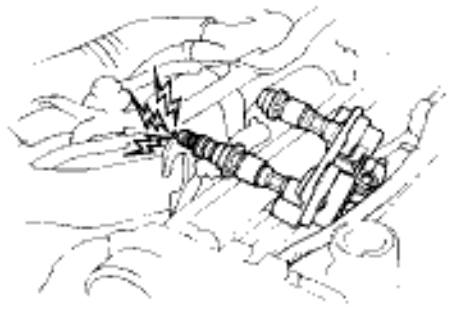

P
(1) Remove ignition coil. (See page IG–26)
(2) Remove spark plug.
(3) Install the spark plug to the ignition coil, and connect the ignition coil connector.
(4) Ground the spark plug.

C Check if spark occurs while engine is being cranked.

Hint To prevent excess fuel being injected from injectors during this test, don't crank the engine for more than 1—2 seconds at a time.

OK

NG Go to step 4.

2 Check for open and short in harness and connector in IGF signal circuit between engine control module and igniter (See page IN–30).

OK

NG **Repair or replace harness or connector.**

3 Disconnect igniter connector and check voltage between terminal IGF of engine control module connector and body ground.

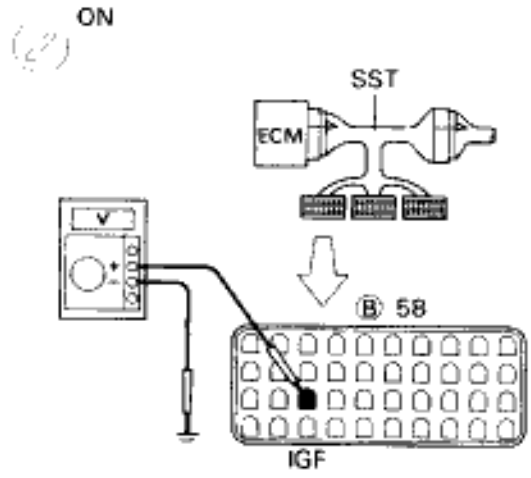

P
(1) Disconnect igniter connector.
(2) Connect SST (check harness "A").
(See page EG–510)
SST 09990–01000
(3) Turn ignition switch ON.

C Measure voltage between terminal IGF of engine control module connector and body ground.

OK **Voltage: 4.5 — 5.5 V**

NG

Check and replace engine control module.

OK **Replace igniter.**

4 Check voltage between terminal IGT (1 ~ 6) of engine control module connector and body ground.

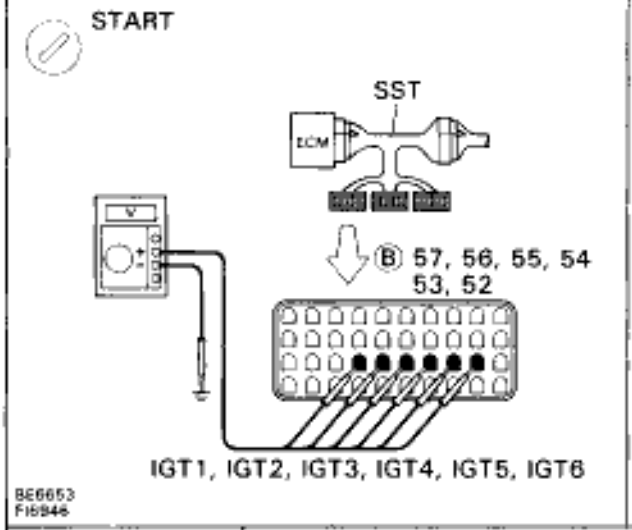

P Connect SST (check harness “A”).
(See page EG–510)
SST 09990–01000

C Measure voltage between terminal IGT (1 ~ 6) of engine control module connector and body ground when engine is cranked.

OK **Voltage: 0.5 — 1.0 V**
(Neither 0 V nor 5 V)

Reference **INSPECTION USING OSCILLOSCOPE**

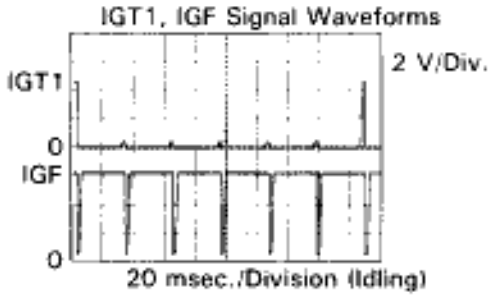

- During idling, check waveforms between terminals IGT1, IGF and E1 of engine control module.

HINT: The correct rectangular waveforms are as shown, IGT2, IGT3, IGT4, IGT5 and IGT6 signal waveforms are same as IGT1 signal waveform.

OK

NG Go to step **8**.

5 Check voltage between terminal 2 of igniter connector (I2) and body ground.

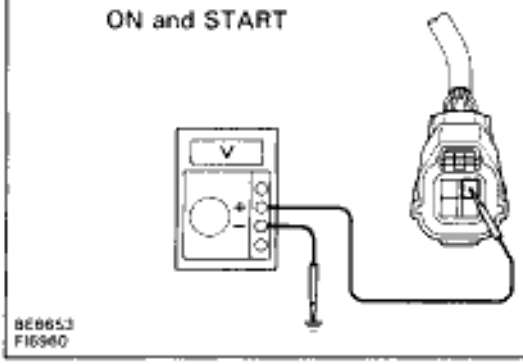

P Disconnect igniter connector.

C Measure voltage between terminal 2 of igniter connector (I2) and body ground, when ignition switch is turned to “ON” and and “START” position.

OK **Voltage: 9 — 14 V**

OK

NG **Check and repair igniter power source circuit.**

6 **Check for open and short in harness and connector between ignition switch and ignition coil, ignition coil and igniter (See page IN–30).**

OK

NG **Repair or replace harness or connector.**

7 **Check ignition coil.**

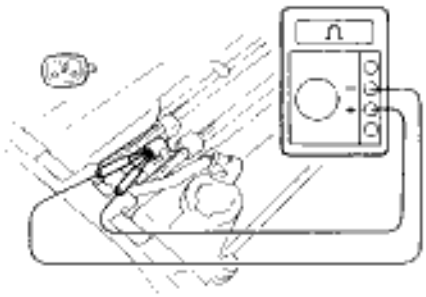

P Disconnect ignition coil connector.
(See page IG–23)

C Measure resistance between terminals of ignition coil connector.

OK

	Resistance
Cold	0.54 – 0.84 Ω
Hot	0.68 – 0.98 Ω

"Cold" is from — 10˚C (14˚F) to 50˚C (122˚F) and "Hot" is from 50˚C (122˚F) to 100˚C (212˚F).

OK

NG **Replace ignition coil.**

Replace igniter.

8 Disconnect igniter connector and check voltage between terminal IGT (1 ~ 6) of engine control module connector and body ground.

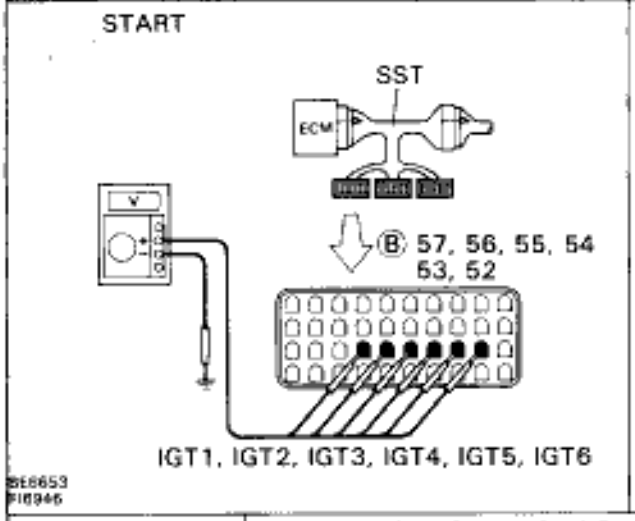

P Disconnect igniter connector.

C Measure voltage between terminal IGT (1 ~ 6) of engine control module connector and body ground when engine is cranked.

OK **Voltage: 0.5 — 1.0 V (Neither 0 V nor 5 V)**

Reference **INSPECTION USING OSCILLOSCOPE**

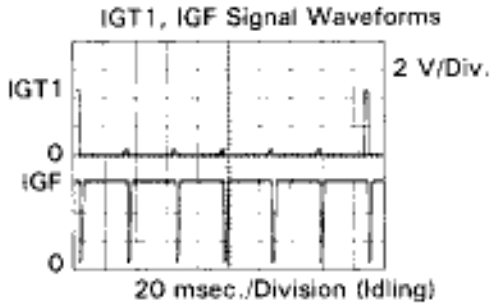

- During idling, check waveforms between terminals IGF1, IGF and E1 of engine control module.

HINT: The correct rectangular waveforms are as shown, IGT2, IGT3, IGT4, IGT5 and IGT6 signal wave–forms are same as IGT1 signal waveform.

NG

OK → **Replace igniter.**

9 Check for open and short in harness and connector in IGT (1 ~ 6) signal circuit between engine control module and igniter (See page IN–30).

OK

NG → **Repair or replace harness or connector.**

Check and replace engine control module.

DTC 16 A T Control Signal Malfunction

CIRCUIT DESCRIPTION

The signal from the A/T CPU retards the ignition timing of the engine during A/T gear shifting, thus momentarily reducing torque output of the engine for smooth clutch operation inside the transmission and reduced shift shock.

DTC No.	Diagnostic Trouble Code Detecting Condition	Trouble Area
16	Fault in communications between the engine CPU and A/T CPU in the ECM	• ECM

If the ECM detects the diagnostic trouble code ”16” in memory, it prohibits the torque control of the A/T which performs smooth gear shifting.

INSPECTION PROCEDURE

1 **Are there any other codes (besides Code 16) being output?**

YES → **Go to relevant diagnostic trouble code chart.**

NO → **Replace engine control module.**

DTC 21 Main Heated Oxygen Sensor Circuit

CIRCUIT DESCRIPTION

To obtain a high purification rate for the CO, HC and NOx components of the exhaust gas, a three–way catalytic converter is used, but for most efficient use of the three–way catalytic converter, the air–fuel ratio must be precisely controlled so that it is always close to the stoichiometric air–fuel ratio.
The oxygen sensor has the characteristic whereby its output voltage changes suddenly in the vicinity of the stoichiometric air–fuel ratio. This characteristic is used to detect the oxygen concentration in the exhaust gas and provide feedback to the computer for control of the air–fuel ratio.
When the air–fuel ratio becomes LEAN, the oxygen concentration in the exhaust increases and the oxygen sensor informs the ECM of the LEAN condition (small electromotive force: 0 V).
When the air–fuel ratio is RICHER than the stoichiometric air–fuel ratio the oxygen concentration in the exhaust gas is reduced and the oxygen sensor informs the ECM of the RICH condition (large electromotive force: 1 V).
The ECm judges by the electromotive force from the oxygen sensor whether the air–fuel ratio if RICH or LEAN and controls the injection duration accordingly. However, if malfunction of the oxygen sensor causes an output of abnormal electromotive force, the ECM is unable to perform accurate air–fuel ratio control.
The main heated oxygen sensor include a heater which heats the Zirconia element. The heater is controlled by the ECM. When the intake air volume is low (the temperature of the exhaust has is low) current flows to the heater to heat the sensor for accurate oxygen concentration detection.)

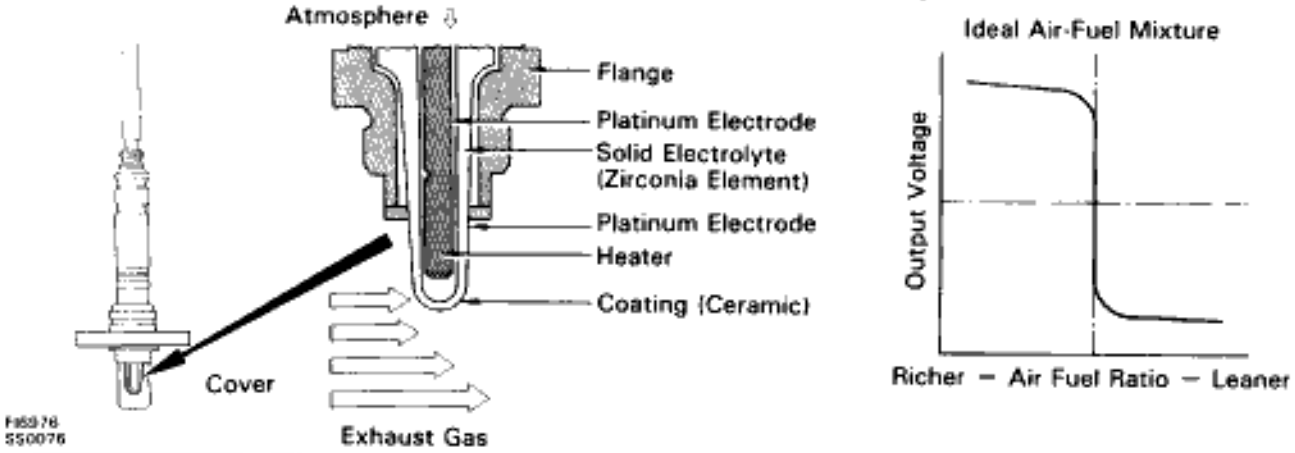

DTC No.	Diagnostic Trouble Code Detecting Condition	Trouble Area
21	(1) Open or short in heater circuit of main heated oxygen sensor for 0.5 sec. or more.	• Open or short in heater circuit of main heated oxygen sensor • Main heated oxygen sensor heater • ECM
	(2) Main heated oxygen sensor signal voltage is reduced to be 0.35 V and 0.70V for 60 sec. under condition (a) ~ (d): (2 trip detection logic)*1 (a) Engine coolant temp.: Between 80˚C (176˚F) and 95˚C (203˚F) (b) Engine speed: 1,500 rpm or more (c) Load driving (Example A/T in overdrive (5th for M/T), A/C ON, Flat road, 80 km/h (50 mph)) (d) Main heated oxygen sensor signal voltage: Alternating above and below 0.45V	• Main heated oxygen sensor circuit • Main heated oxygen sensor

*1: See page EG–503.

CIRCUIT DESCRIPTION (Cont'd)

DIAGNOSTIC TROUBLE CODE DETECTION DRIVING PATTERN

Purpose of the driving pattern.

(a) To simulate diagnostic trouble code detecting condition after diagnostic trouble code is recorded.

(b) To check that the malfunction is corrected when the repair is completed confirming that diagnostic trouble code is no longer detected.

Malfunction: Main Heated Oxygen Sensor Deterioration

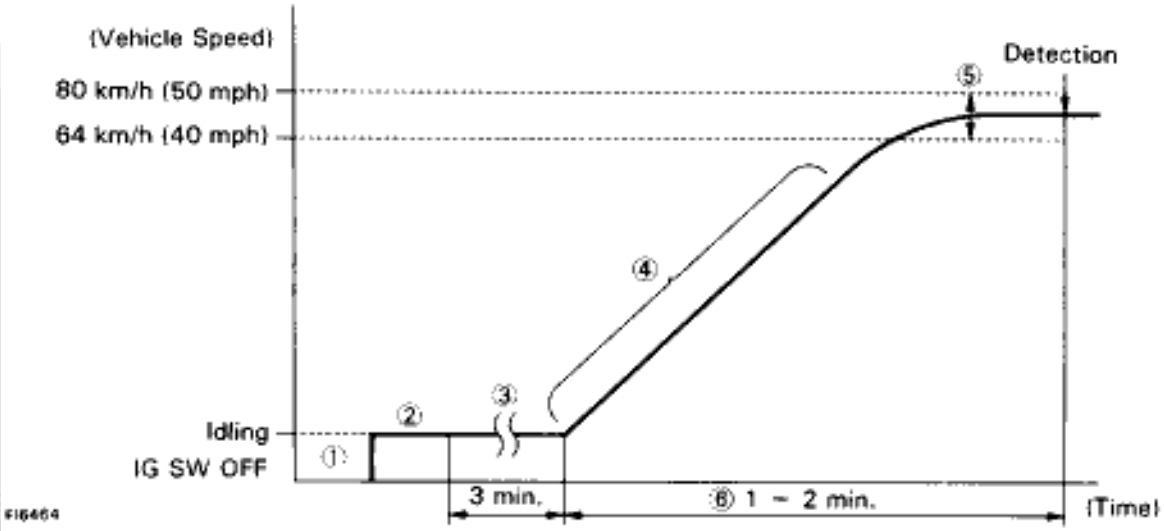

It is vital that this test routine is adhered to detect the malfunction:

(1) Disconnect the EFI No.1 fuse (30 A) for 10 sec. or more, with IG switch OFF. Initiate test mode (Connect terminal TE2 and E1 of data link connector 2 with IG switch OFF).

(2) Start the engine and warm up with all ACC switch OFF.

(3) Idle the engine for 3 min.

(4) Accelerate gradually within the range 1,300 ~ 1,7700 rpm (centered around 1,500 rpm) with the A/C switch ON and D position for A/T (5th for M/T).

HINT:
- Ensure engine rpm does NOT fall below 1200 rpm.
- Gradually depress the accelerator pedal at a suitable rate to comply with the test re–quirements on the above graph.
- Never allow engine rpm to drop at any time during the test.

(5) Maintain the vehicle speed at 64 — 80 km/h (40 — 50 mph).

(6) Keep the vehicle running for — 2 min. after starting acceleration.

HINT: If a malfunction exists, the Malfunction Indicator Lamp will light up after approx. 60 sec. from the start of acceleration.

NOTICE: If the conditions in this test are not strictly followed, detection of the malfunc–tion will not be possible.

WIRING DIAGRAM

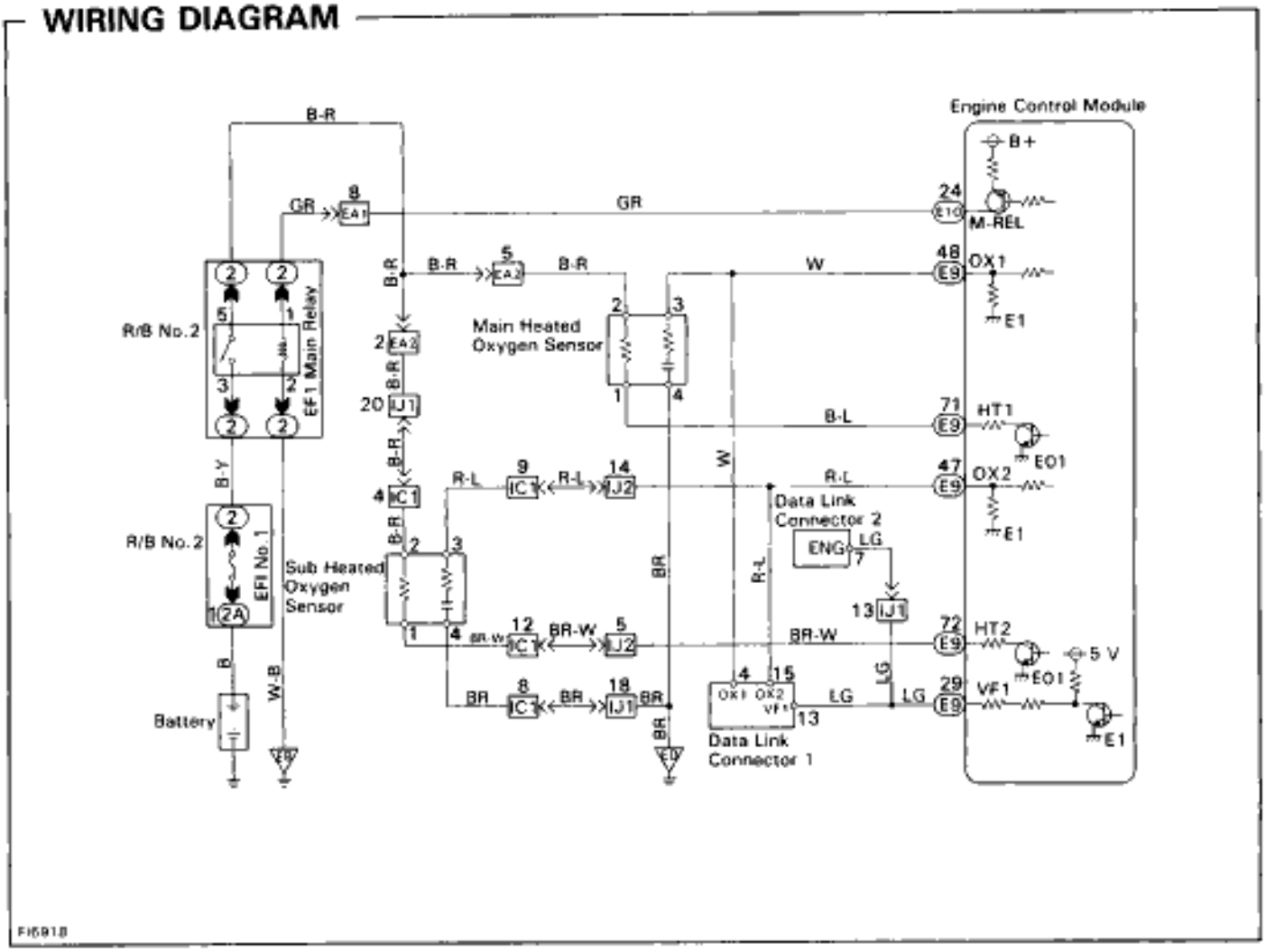

INSPECTION PROCEDURE

1 **Check voltage between terminals HT1 of engine control module connector and body ground.**

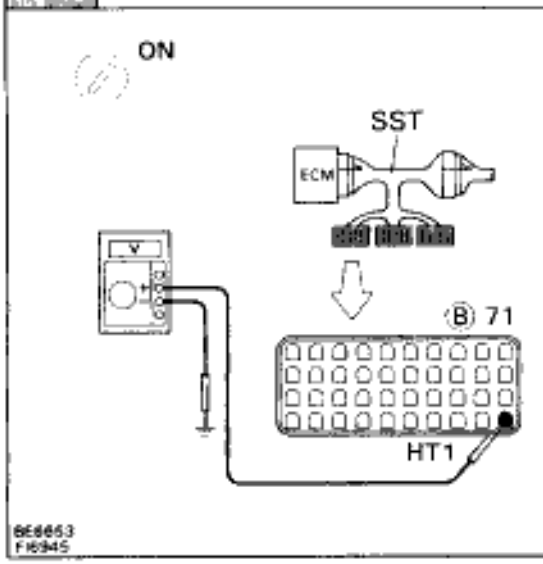

P Connect SST (check harness "A").
(See page EG–510)
SST 09990–01000

C Measure voltage between terminals HT1 of engine control module connector and body ground.

OK **Voltage: 9 — 14 V**

NG

OK Go to step **3**.

2 Check main heated oxygen sensor heater.

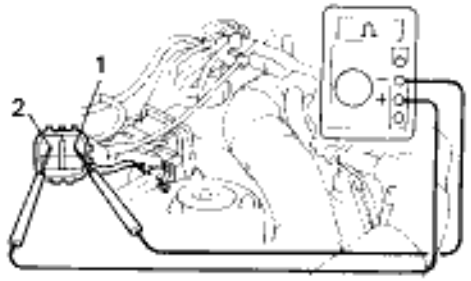

P Disconnect main heated oxygen sensor connector.

C Measure resistance between terminals 1 and 2 of main heated oxygen sensor connector.

OK **Resistance: 11 — 16 at 20˚C (68˚F)**

OK

Check and repair harness or connector between main relay and main heated oxygen sensor, main heated oxygen sensor and engine control module.

NG **Replace main heated oxygen sensor.**

3 Check voltage between terminals HT1 of engine control module connector and body ground.

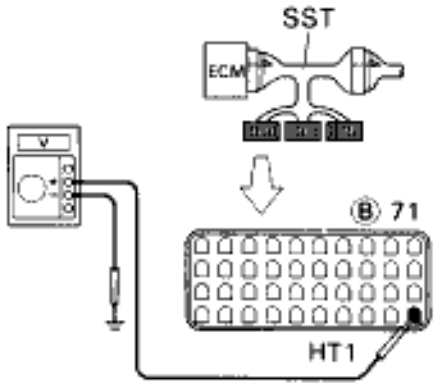

P Warm up engine to normal operating temperature.

C Measure voltage between terminals HT1 of engine control module connector and body ground, when engine is idling and racing at 4,000 rpm.

OK

	Voltage
Idling	0 V
Racing at 4,000 rpm	9 – 14 V

Hint In the 4,000 rpm racing check, continue engine racing at 4,000 rpm for approx. 20 seconds or more.

NG

Check and replace engine control module.

OK **Replace main heated oxygen sensor.***

*: It is probable the oxygen sensor has deteri–orated. Usually, this cannot be confirmed by visual inspection.

Reference **INSPECTION USING OSCILLOSCOPE**

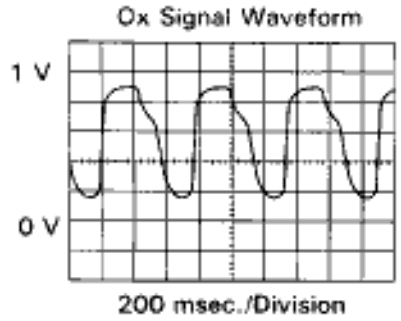

- With the engine racing (4,000 rpm) measure waveform between terminals OX1 and E1 of engine control module.

HINT: The correct waveform is as shown oscillating between approx. 0.1 V and 0.9 V

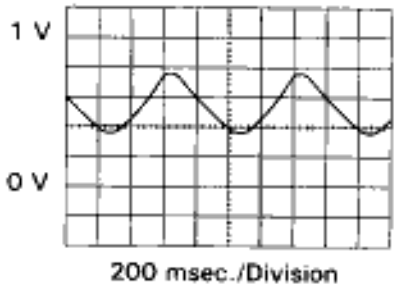

If the oxygen sensor has deteriorated, the amplitude of the voltage will be reduced as shown on the left.

FI6514
FI6515

DTC 22 Engine Coolant Temp. Sensor Circuit

CIRCUIT DESCRIPTION

The engine coolant temperature sensor senses the coolant temperature. A thermistor built in the sensor changes its resistance value according to the coolant temperature. The lower the coolant temperature, the greater the thermistor resistance value, and the higher the coolant temperature, the lower the thermistor resistance value (See Fig. 1).

The engine coolant temperature sensor is connected to the ECM (See wiring diagram). The 5 V power source voltage in the ECM is applied to the engine coolant temperature sensor from the terminal THW via a resistor R. That is, the resistor R and the engine coolant temperature sensor are connected in series. When the resistance value of th engine coolant temperature sensor changes in accordance with changes in the coolant temperature, the potential at the terminal THW also changes. Based on this signal, the ECM increases the fuel injection volume to improve driveability during cold engine operation. If the ECM records the diagnostic trouble code 22, it operates the fail safe function in which the engine coolant temperature is assumed to be 80˚C (176˚F).

(Fig. 1)

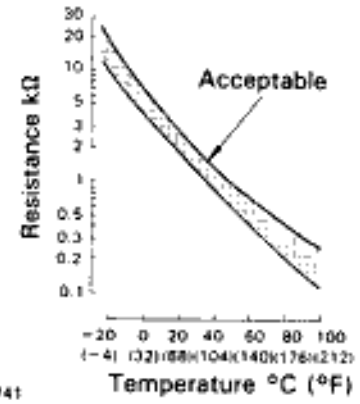

Reference

Engine Coolant Temp. °C (°F)	Resistance (kΩ)	Voltage (V)
−20 (−4)	15.0	4.2
0 (32)	5.7	3.4
20 (68)	2.5	2.4
40 (104)	1.2	1.5
60 (140)	0.6	0.9
80 (176)	0.3	0.5
100 (212)	0.2	0.3

DTC No.	Diagnostic Trouble Code Detecting Condition	Trouble Area
22	Open or short in engine coolant temp. sensor circuit for 0.5 sec. or more	• Open or short in engine coolant temp. sensor circuit • Engine coolant temp. sensor • ECM

WIRING DIAGRAM

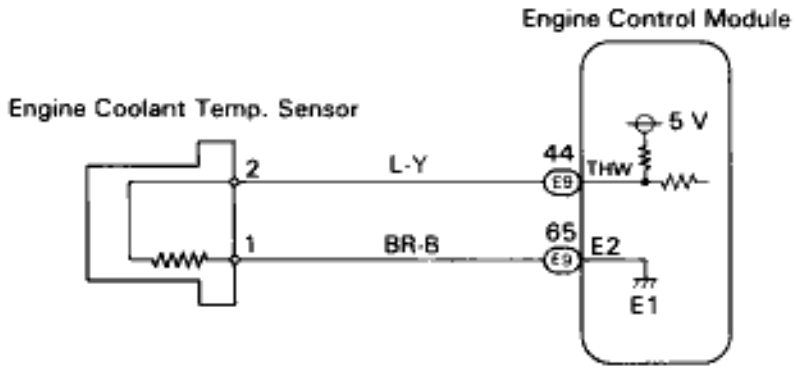

INSPECTION PROCEDURE

HINT: If diagnostic trouble codes ”22” (engine coolant temperature sensor circuit), ”24” (intake air temperature sensor circuit) and ”41” (throttle position sensor circuit) are output simultaneously, E2 (sensor ground) may be open.

1 Check voltage between terminals THW and E2 of engine control module connector.

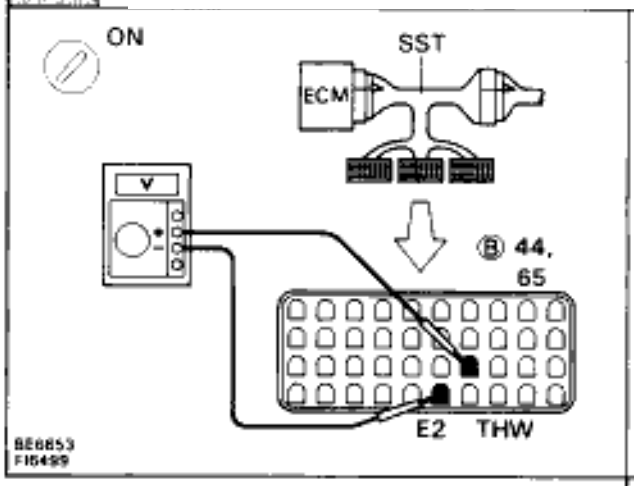

P (1) Connect SST (check harness “A”). (See page EG–510)
(2) Turn ignition switch ON

C Measure voltage between terminals THW and E2 of engine control module connector.

OK

Engine Coolant Temp. °C (°F)	Voltage
20 (68) (Engine is cool)	0.5 ~ 3.4 V
80 (176) (Engine is hot)	0.2 ~ 1.0 V

NG → **OK** → **Check for intermittent problems. (See page EG–505)**

2 Check engine coolant temp. sensor.

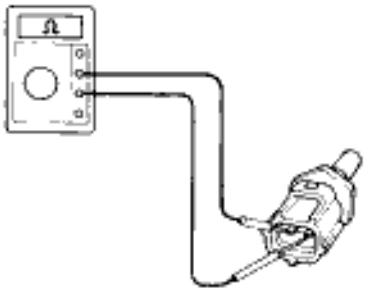

P Disconnect the engine coolant temp. sensor connector.

C Measure resistance between terminals.

OK **Resistance is within Acceptale Zone on chart.**

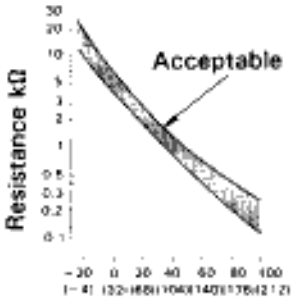

Engine Coolant Temp. °C (°F)	Resistance
20 (68)	2 – 3 kΩ
80 (176)	0.2 – 0.4 kΩ

OK → **NG** → **Replace engine coolant temp. sensor.**

3 Check for open and short in harness and connector between engine control module and engine coolant temp. sensor (See page IN–30).

OK → **NG** → **Repair or replace harness or connector.**

Check and replace engine control module.

DTC 24 Intake Air Temp. Sensor Circuit

CIRCUIT DESCRIPTION

The intake air temp. sensor is built into the mass air flow meter and senses the intake air temperature. The structure of the sensor and connection to the ECM is the same as in the engine coolant temp. sensor shown on page EG–530.
If the ECM detects the diagnostic trouble code ”24”, it operates the fail safe function in which the intake air temperature is assumed to be 20˚C (68˚F).

DTC No.	Diagnostic Trouble Code Detecting Condition	Trouble Area
24	Open or short in intake air temp. sensor circuit for 0.5 sec. or more	• Open or short in intake air temp. sensor • Circuit • Intake air temp. sensor • ECM

WIRING DIAGRAM

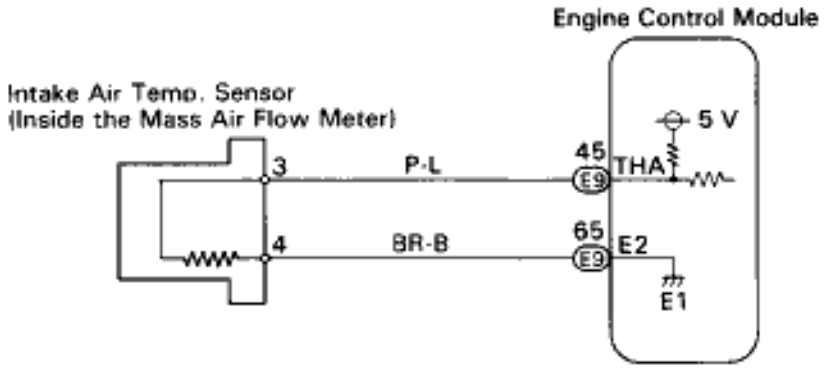

FI6448

INSPECTION PROCEDURE

HINT: If diagnostic trouble codes ”22” (engine coolant temperature sensor circuit), ”24” (intake air temperature sensor circuit) and ”41” (throttle position sensor circuit) are output simultaneously, E2 (sensor ground) may be open.

1 Check voltage between terminals THA and E2 of engine control module connector.

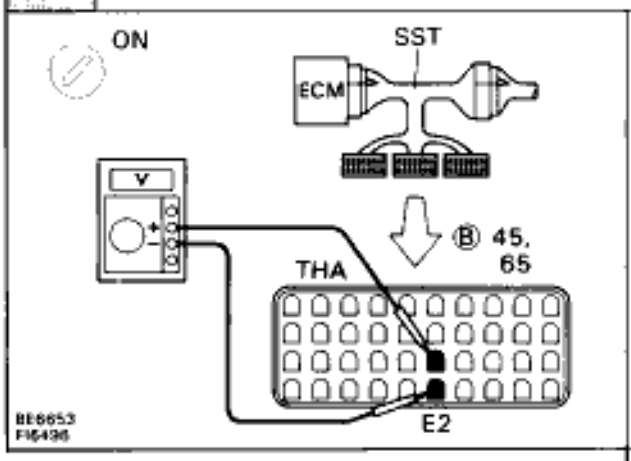

P (1) Connect SST (check harness “A”).
(See page EG–510)
SST 09990–01000
(2) Turn ignition switch ON

C Measure voltage between terminals THW and E2 of engine control module connector.

OK

Intake air temp. °C (°F)	Voltage
20 (68)	0.5 – 3.4 V
60 (140)	0.2 – 1.0 V

NG

OK **Check for intermittent problems. (See page EG–505)**

2 Check intake air temp. sensor.

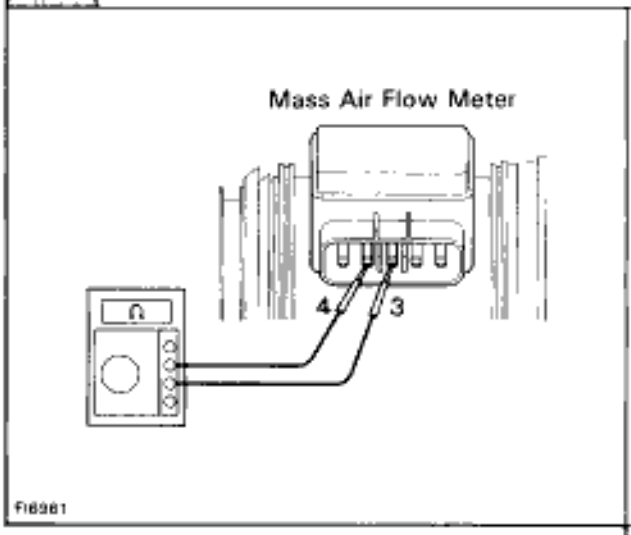

P Disconnect the mass air flow meter connector.

C Measure resistance between terminals 3 and 4 of mass air flow meter connector.

OK **Resistance is within Acceptable Zone on chart.**

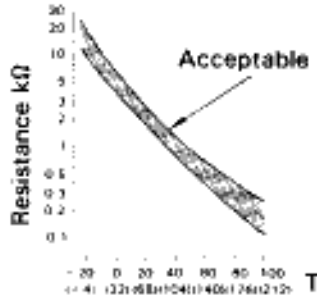

Intake air temp. °C (°F)	Resistance
20 (68)	2 – 3 kΩ
60 (14)	0.4 – 0.7 kΩ

OK

NG **Replace intake air temp. sensor (Replace mass air flow meter).**

3 Check for open and short in harness and connector between engine control module and intake air temp. sensor (See page IN–30)

OK

NG **Repair or replace harness or connector.**

Check and replace engine control module.

DTC 25 26 Air–Fuel Ratio Lean Rich Malfunction

CIRCUIT DESCRIPTION

See EG–525 for the circuit description.

DTC No.	Diagnostic Trouble Code Detecting Condition	Trouble Area
25	(1) Main heated oxygen sensor voltage is 0.45 V or less (lean) for 90 sec. under conditions (a) and (b): (2 trip detection logic)*2 (a) Engine coolant temp.: 70˚C (158˚F) or more (b) Engine speed: 1,500 rpm or more	• Open or short in main heated oxygen sensor circuit • Main heated oxygen sensor • Ignition system • ECM
	(2) Engine speed varies by more than 20 rpm over the preceding crank angle period during a period of 25 sec. or more under conditions (a) and (b): (2 trip detection logic).* (a) Engine speed: Below 950 rpm (b) Engine coolant temp.: 80˚C (176˚F) or more	• Open and short in injector circuit • Fuel line pressure (injector leak, blockage) • Mechanical system malfunction (skipping teeth of timing belt) • Ignition system • Compression pressure (foreign object caught in valve) • Mass air flow meter (air intake) • ECM
26	Engine speed varies by more than 20 rpm over The preceding crank angle period during a Period of 25 sec. or more under conditions (a) And (b): (2 trip detection logic).* (a) Engine speed: Below 950 rpm (b) Engine coolant temp.: 80˚C (176˚F) or more	• Open and short in injector circuit • Fuel line pressure (injector leak, blockage) • Mechanical system malfunction (skipping teeth of timing belt) • Ignition system • Compression pressure (foreign object caught in valve) • Mass air flow meter (air intake) • ECM

*: See page EG–503.

CIRCUIT DESCRIPTION (Cont'd)

DIAGNOSTIC TROUBLE CODE DETECTION DRIVING PATTERN

Purpose of the driving pattern.

(a) To simulate diagnostic trouble code detecting condition after diagnostic trouble code is recorded.

(b) To check that the malfunction is corrected when the repair is completed confirming that diagnostic trouble code is no longer detected.

Malfunction: Open or Short in Main Heated Oxygen Sensor

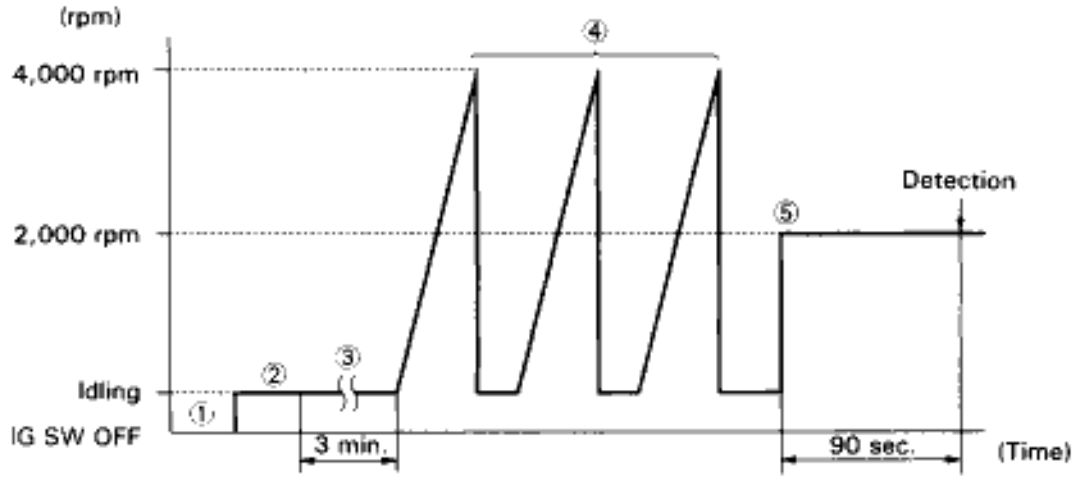

F18465

HINT: Before this test, check the feedback voltage for oxygen sensor.

(1) Disconnect the EFI No.1 fuse (30A) for 10 sec. or more, with IG switch OFF. Initiate test mode (Connect terminal TE2 and E1 of data link connector 2 with IG switch OFF).
(2) Start the engine and warm up.
(3) Idle the engine for 3 min.
(4) Race the engine quickly to 4,000 rpm 3 times using the accelerator pedal.
(5) Race the engine at 2,000 rpm for 90 sec.

HINT: If a malfunction exists, the malfunction indicator lamp will light up during step (4).

NOTICE: If the conditions in this test are not strictly followed, detection of the malfunction will not be possible.

CIRCUIT DESCRIPTION (Cont'd)
DIAGNOSTIC TROUBLE CODE DETECTION DRIVING PATTERN

Purpose of the driving pattern.
(a) To simulate diagnostic trouble code detecting condition after diagnostic trouble code is recorded.
(b) To check that the malfunction is corrected when the repair is completed confirming that diagnostic trouble code is no longer detected.

Malfunction: Open or Short in Injector circuit, Injector Leak or Blockage

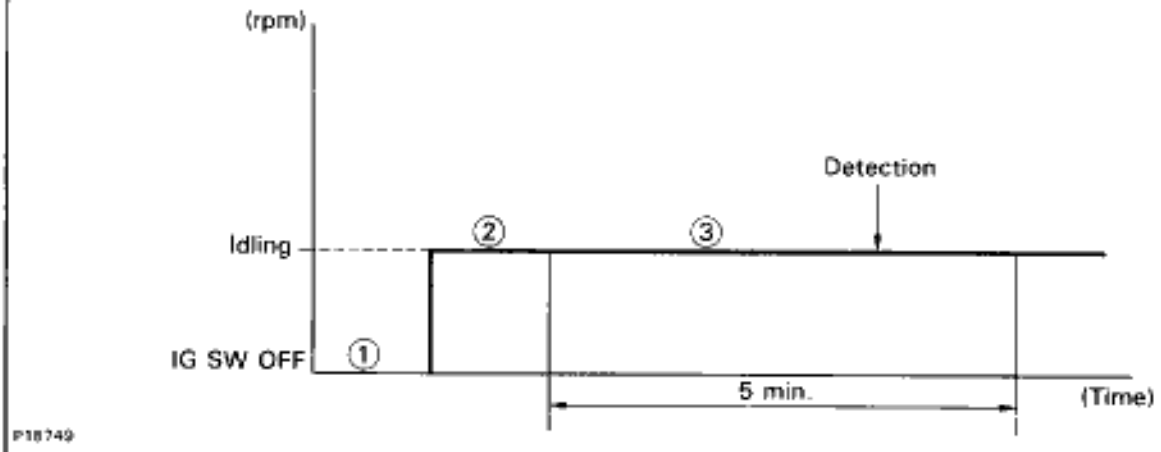

(1) Disconnect the EFI No.1 fuse (30A) for 10 sec. or more, with IG switch OFF.
Initiate test mode (Connect terminal TE2 and E1 of data link connector 2 with IG switch OFF).
(2) Start the engine and warm up with all ACC switched OFF.
(3) Idle the engine for 5 min.
(After the entine is started, do not depress the accelertor pedal.)

HINT: If a malfunction exists, the malfunction indicator lamp will light up during the 5 min. idling period.

NOTICE: If the conditions in this test are not strictly followed, detection of the malfunction will not be possible.

WIRING DIAGRAM

See page EG–527 for the WIRING DIAGRAM

INSPECTION PROCEDURE

1 Check voltage between terminals VF1 and E1 of data link connector .

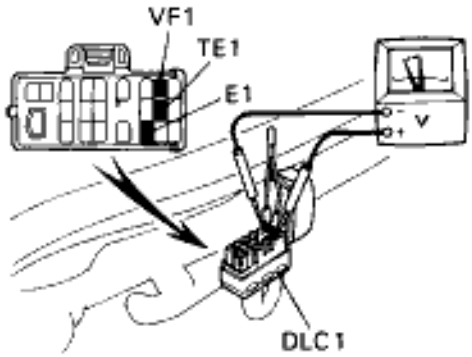

P11364

P (1) Warm up engine to normal operating tempera–ture.
(2) Connect terminals TE1 and E1 of data link connector 1.
(3) Connect positive probe to terminal VF1 and negative probe to terminal E1 of data link connector 1.

C (1) warm up the oxygen sensor by racing engine at 2,500 rpm for about 2 minutes.
(2) Then, still maintaining engine at 2,500 rpm, count how many times voltmeter fluctuates need between 0 and 5 V.

Result

Result	
Needle fluctuates 8 times or more for every ten seconds	OK
Continue at 0 V	NG Type I
Continue at 5 V	NG Type II

NG Type I

NG Type II → Go to step 7.

2 Check voltage between terminals OX1 and E1 data link connector 1.

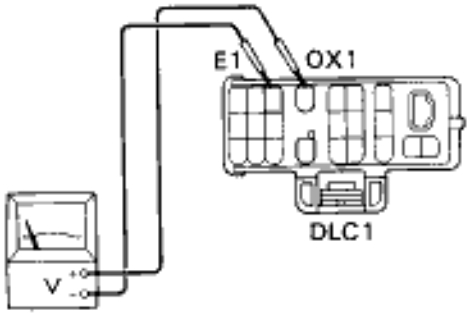

FI6652

P Warm up engine to normal operating temperature.

C Measure voltage between terminals OX1 and E1 of data link connector 1 when engine is suddenly raced to full throttle.

OK **The voltage should be 0.5 V or higher at least once.**

Hint Inspection should not take linger than 1 second.

NG

OK → Go to step 7.

3 **Check for open and short in harness and connector between engine control module and main heated oxygen sensor, engine control module and data link connector 1 (See page IN–30).**

OK

NG **Repair or replace harness or connector.**

4 **Check each item found to be a possible cause of problem.**

Check each circuit found to be a possible cause of trouble according to the results of the check in 1 or 2 . The numbers int he table below show the order in which the checks should be done.

Main heater oxygen sensor signal continues at 0 V	Possible Cause	See page
1	Faulty sensor installation	–
2	Air leakage	EG–261
3	Misfire	IG–21
4	Fuel system	EG–568
5	Injector circuit	EG–583
6	Characteristics deviation in engine coolant temp. sensor	EG–530
7	Characteristics deviation in intake air temp. sensor	EG–532
8	Characteristics deviation in mass air flow meter	EG–544
9	Valve timing	EG–33

OK

NG **Repair or replace.**

5 **Check compression (See page EG–9).**

OK

NG **Repair or replace.**

6 **Does malfunction disappear when a good main heated oxygen sensor is installed?**

NG

YES **Replace main heated oxygen sensor.**

Check and replace engine control module.

7 Check each item found to be a possible cause of problem.

Check each circuit found to be a possible cause of trouble according to the results of the check in 1 . The numbers int he table below show the order in which the checks should be done.

Main heater oxygen sensor signal continues at 5.0 V	Main heater oxygen sensor signal is normal	Possible Cause	See page
2	7	Injector circuit	EG–583
	3	Misfire	IG–21
6	4	Valve timing	EG–33
	1	Air leakage	EG–261
1	2	Fuel system	EG–568
5	8	Characteristics deviation in mass air flow meter	EG–544
3	5	Characteristics deviation in engine coolant temp. sensor	EG–530
4	6	Characteristics deviation in intake air temp. sensor	EG–532

OK

NG → **Repair or replace.**

8 Check compression (See page EG–9).

OK

NG → **Repair or replace.**

9 Does malfunction disappear when a good main heated oxygen sensor is installed?

NG

YES → **Repair main heated oxygen sensor.**

Check and replace engine control module.

DTC 27 Sub Heated Oxygen Sensor Circuit

CIRCUIT DESCRIPTION

The sub heated oxygen sensor is installed on the exhaust pipe. Its construction and operation is the same as the main heated oxygen sensor on page EG–525.

DTC No.	Diagnostic Trouble Code Detecting Condition	Trouble Area
27	(1) Open or short in heater circuit of sub heated oxygen sensor for 0.5 sec. or more	• Open or short in heater circuit of sub heated oxygen sensor • Sub heated oxygen sensor heater • ECM
	(2) Main heated oxygen sensor signal is 0.45 V or more and sub heated oxygen sensor signal is 0.45 V or less under conditions (a) ~ (c): (2 trip detection logic).* (a) Engine coolant temp.: 80°C (176°F) or more (b) Engine speed: 1,500 rpm or more (c) Accel. pedal: Fully depressed for 2 sec. or more	• Open or short in sub heated oxygen sensor circuit • Sub heated oxygen sensor • ECM

*: See page EG–503.

CIRCUIT DESCRIPTION (Cont'd)

DIAGNOSTIC TROUBLE CODE DETECTION DRIVING PATTERN

Purpose of the driving pattern.
(a) To simulate diagnostic trouble code detecting condition after diagnostic trouble code is recorded.
(b) To check that the malfunction is corrected when the repair is completed confirming that diagnostic trouble code is no longer detected.

Malfunction: Open or Short in Sub Heated Oxygen Sensor

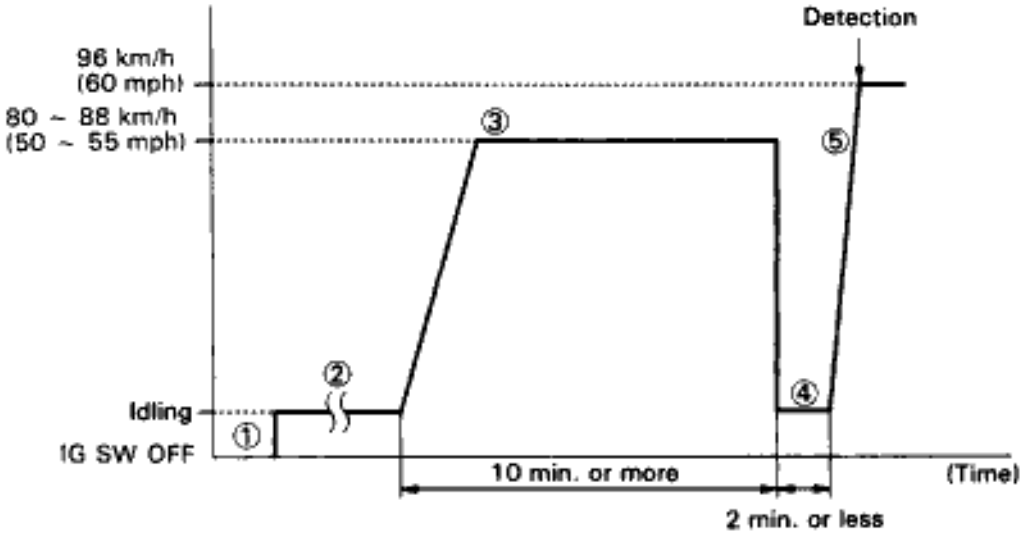

(1) Disconnect the EFI No.1 fuse (30A) for 10 sec. or more, with IG switch OFF. Initiate test mode (Connect terminal TE2 and E1 of data link connector 2 with IG switch OFF).
(2) Start the engine and warm up with all ACC switched OFF.
(3) Drive the vehicle at 80 ~ 88 km/h (50 ~ 55 mph) for 10 min. or more.
(4) Stop at a safe place and idle the engine for 2 min. or less.
(5) Accelerate to 96 km/h (60 mph) with the throttle valve fully open.

HINT: If a malfunction exists, the malfunction indicator lamp will light up during step (5).

NOTICE: If the conditions in this test are not strictly followed, detection of the malfunction will not be possible.

WIRING DIAGRAM

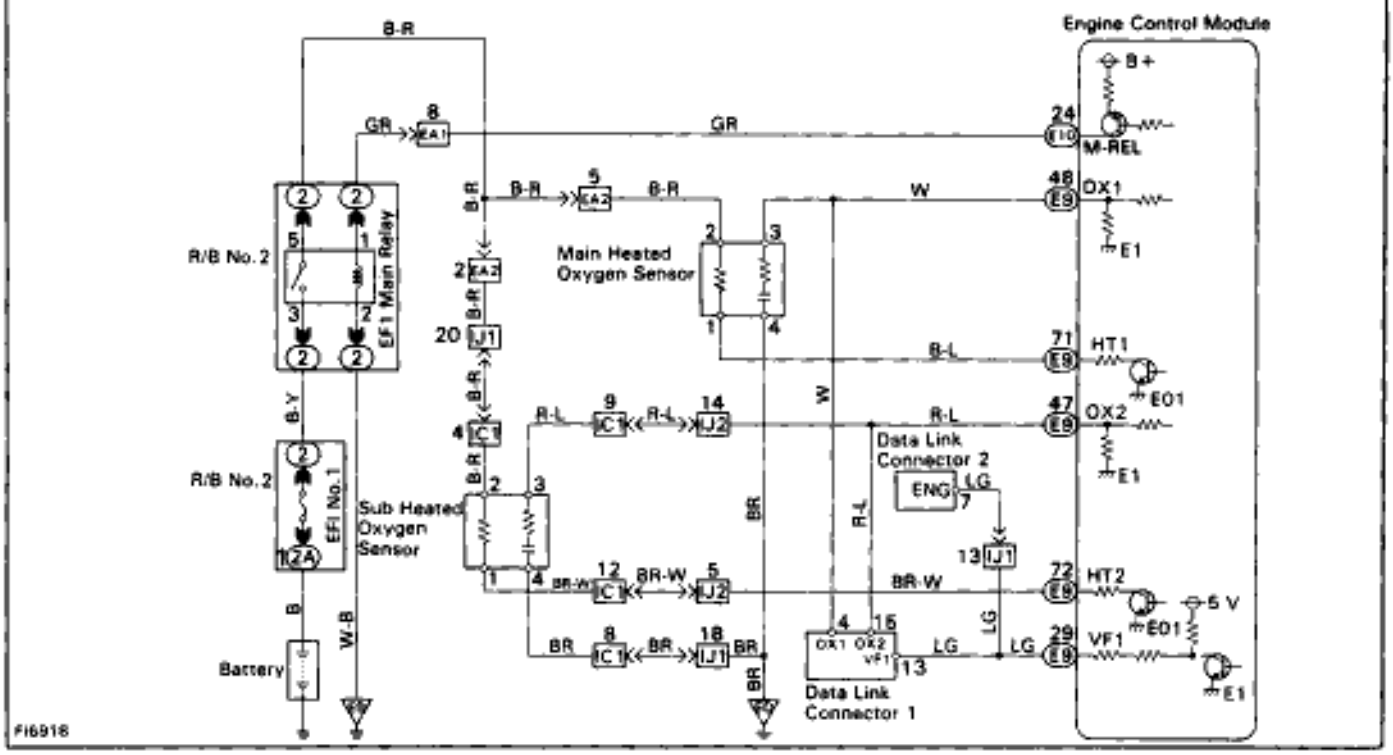

INSPECTION PROCEDURE

HINT: When other codes are output in addition to 27 at the same time, check the circuits for other codes first.

1 **Check voltage between terminal HT2 of engine control module connector and body ground.**

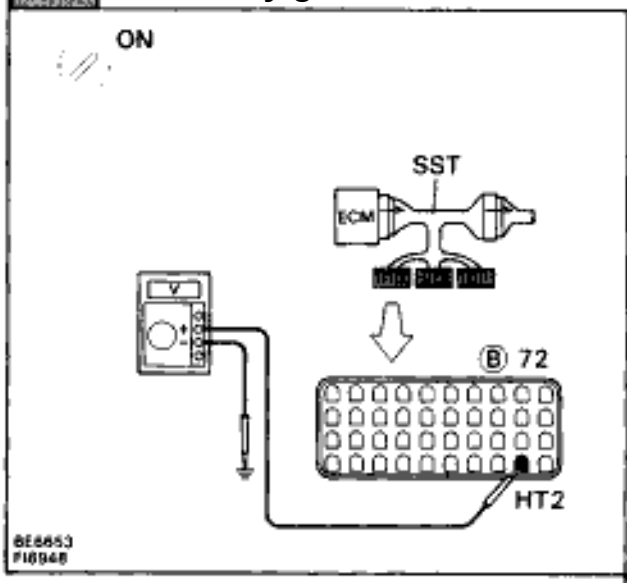

P (1) Connect SST (check harness "A").
(See page EG–510)
SST 09990–01000
(2) Turn ignition switch ON.

C Measure voltage between terminal HT2 of engine control module connector and body ground.

OK

Voltage: 9 — 14 V

NG

OK Go to step **4**.

2 Check sub heated oxyten sensor heater.

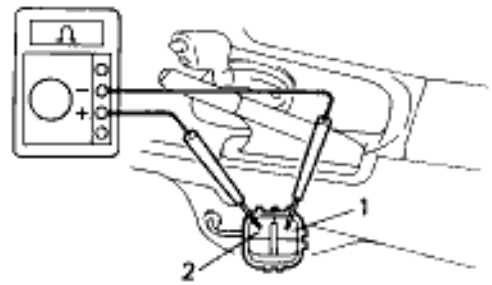

P Disconnect sub heated oxygen sensor connector. (See page EG–321)

C Measure resistance between terminals 1 and 2 of sub heated oxygen sensor connector.

OK **Resistance: 11 — 16 at 20˚C (68˚F)**

OK

NG **Replace sub heated oxygen sensor.**

3 Check for open and short in harness and connector between EFI main replay and engine control module (See page IN–30).

OK

NG **Repair or replace harness or connector.**

Check and replace engine control module.

4 Check voltage between terminal HT2 of engine control module connector and body ground.

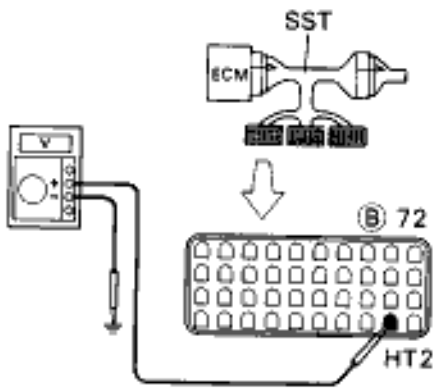

P Warm up engine to normal operating temperature.

C Measure voltage between terminal HT2 of engine control module connector and body ground, when engine is idling and racing at 3,500 rpm.

OK

	Voltage
Idling	0 V
Racing at 3,500 rpm	9 – 14 V

NG

OK **Replace sub heated oxygen sensor.***

Check and replace engine control module.

*: It is probable the oxygen sensor has deteri–orated.
Usually, this cannot be confirmed by visual inspection.

DTC 31 Mass Air Flow Meter Circuit

CIRCUIT DESCRIPTION

The mass air flow meter is an air flow meter which uses a platinum hot wire. The hot wire air flow meter works on the principle that when the electrically heated platinum hot wire is positioned inside the intake air bypass, the intake air volume can be calculated according to the change in the hot wire temperature. This change in temperature is measured by the thermistor at the rear of the hot wire. And feedback from the circuit maintains the hot wire at a set temperature by controlling the current flowing through the hot wire. This current flow is then measured as the output voltage of the air flow meter. The circuit is constructed so that the platinum hot wire and the thermistor provide a bridge circuit, with the power transistor controlled so that the potential of (A) or (B) remains equal to maintain the set temperature.

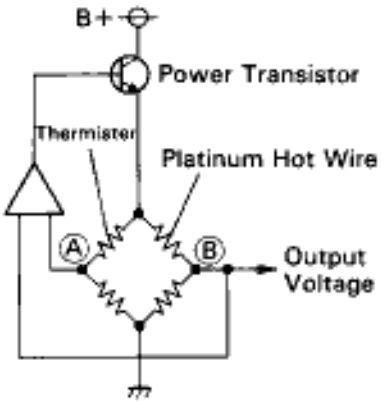

F16929

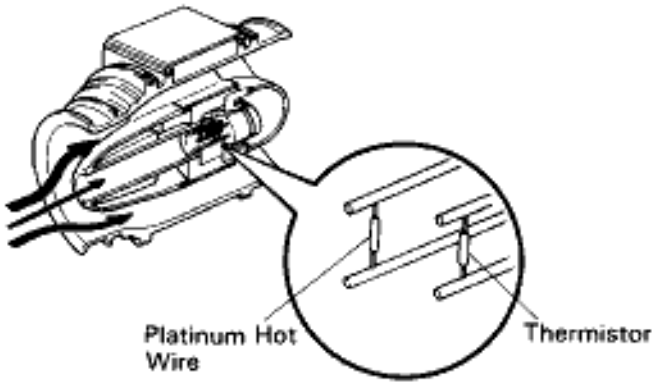

F16972

DTC No.	Diagnostic Trouble Code Detecting Condition	Trouble Area
31	Open or short in mass air flow meter circuit for 3 sec. or more with engine speed less than 3,000 rpm	• Open or short in mass air flow master circuit • Mass air flow meter • ECM

If the ECM detects diagnostic trouble code “31”, it operates the fail safe function whereby the turbo pressure sensor is used, making it possible to continue to drive the vehicle.

WIRING DIAGRAM

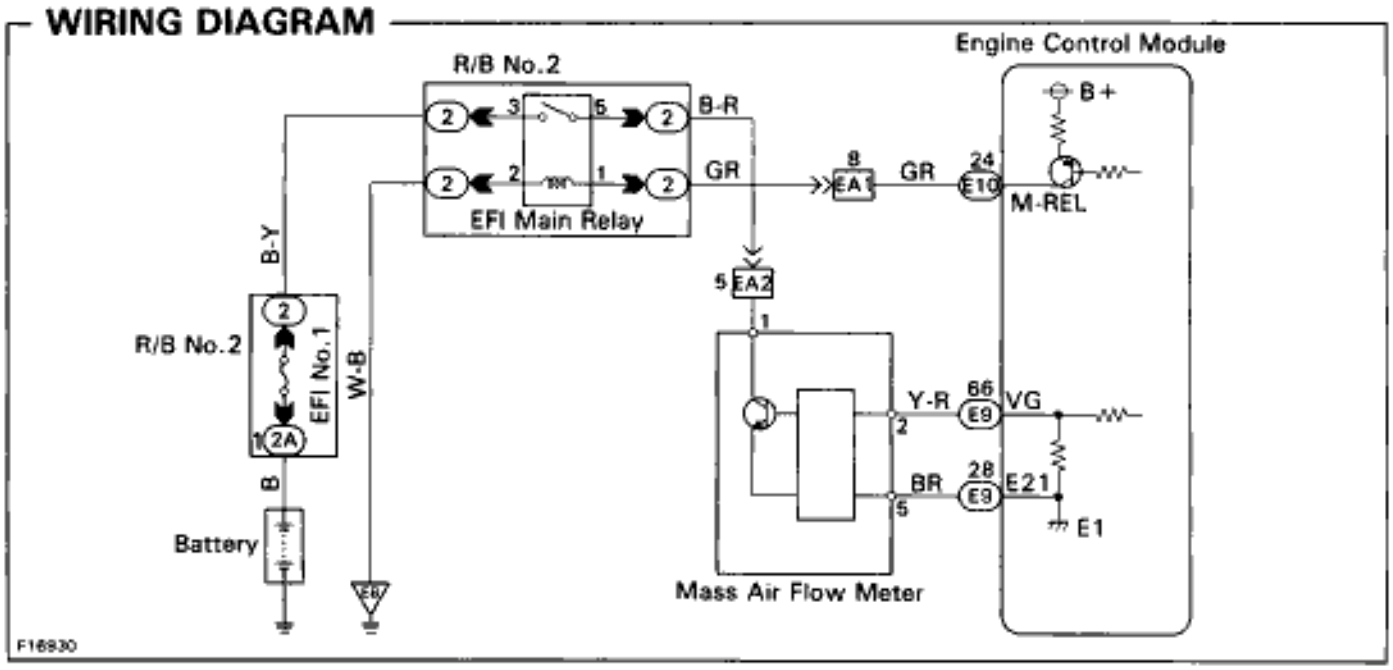

F16930

INSPECTION PROCEDURE

1 Check voltage between terminals VG and E21 of engine control module connector.

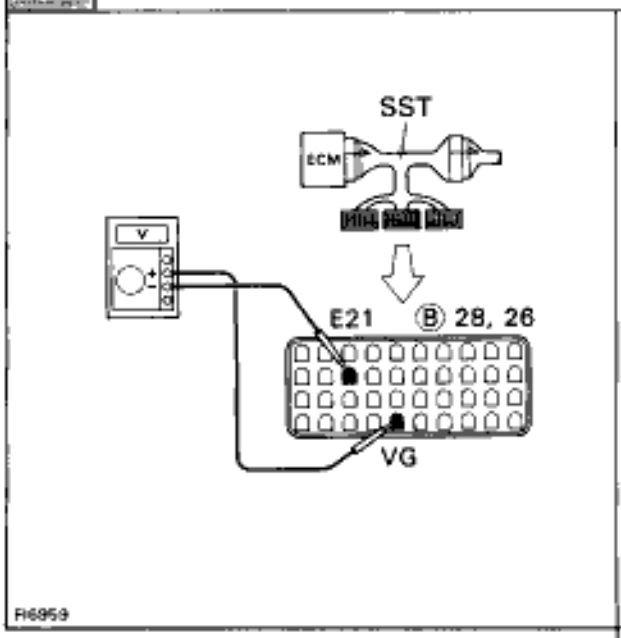

P (1) Connect SST (check harness “A”).
(See page EG–510)
SST 09990–01000
(2) Start engine.

C Measure voltage between terminals VG and E21 of engine control module connector while engine rpm at idling.

OK **Voltage: 0.7 — 1.7 V**

NG

OK **Check and replace engine control module**

2 Check voltage between terminal 1 of mass air flow meter connector and body ground.

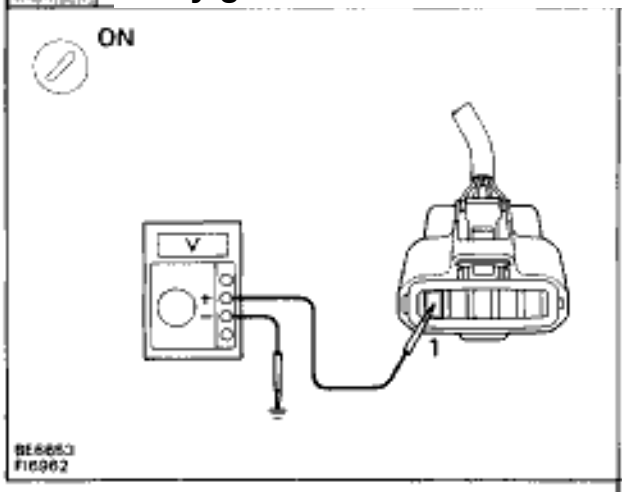

P (1) Disconnect the mass air flow meter connector.
(2) Turn ignition switch ON.

C Measure voltage between terminal 1 of mass air flow meter connector and body ground.

OK **Voltage: 9 — 14 V**

OK

NG **Check and repair mass air flow meter power source circuit.**

3 Check for open and short in harness and connector between engine control module and mass air flow meter (See page IN–30).

OK

NG **Repair or replace harness or connector.**

Replace mass air flow meter.

DTC 34 Turbo Pressure Malfunction

CIRCUIT DESCRIPTION

To control maximum turbocharging pressure the turbocharger system includes a waste gate valve controlled by an actuator. The actuator is controlled by the manifold pressure which is duty controlled by the VSV based on signals from the ECM.
If the ECM detects the below diagnosis conditions, it operates the fail safe function in which the ECM stops fuel injection.

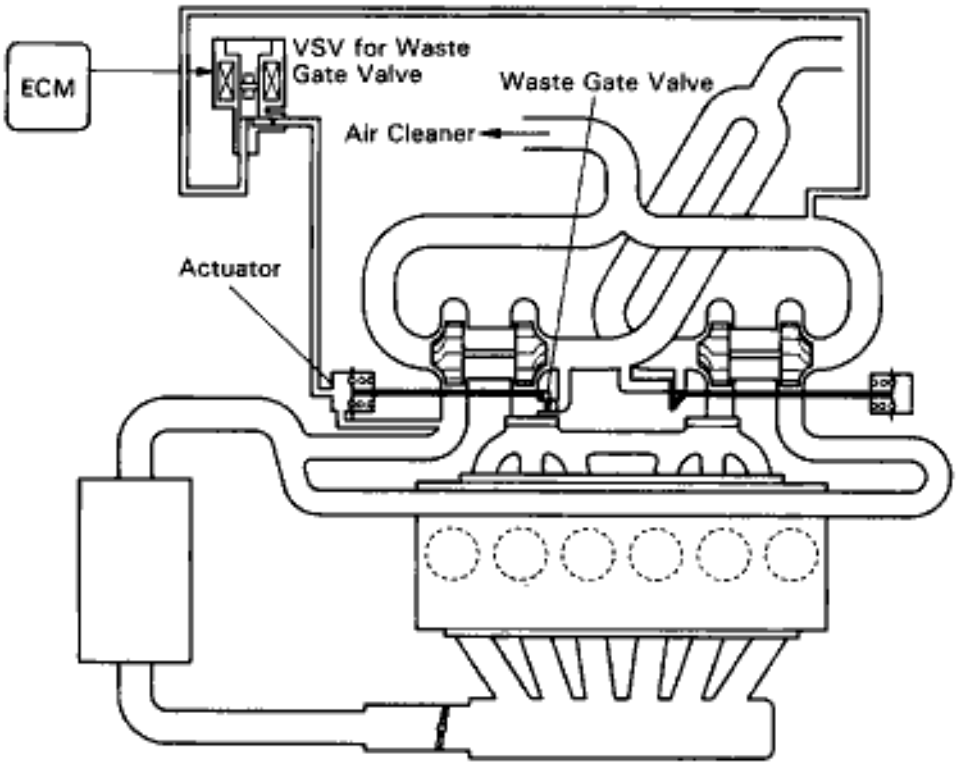

F16974

DTC No.	Diagnostic Trouble Code Detecting Condition	Trouble Area
34	All conditions below are detected continuously for 2 sec. or more: (a) Manifold absolute pressure: 200 kPa (2.0 kgf/cm^2, 29 psi) or more (b) Throttle valve opening angle: 20° or more (c) Engine speed: 2,400 rpm or more	• Actuator (for waste gate valve) • Short in VSV for waste gate valve circuit • ECM

WIRING DIAGRAM

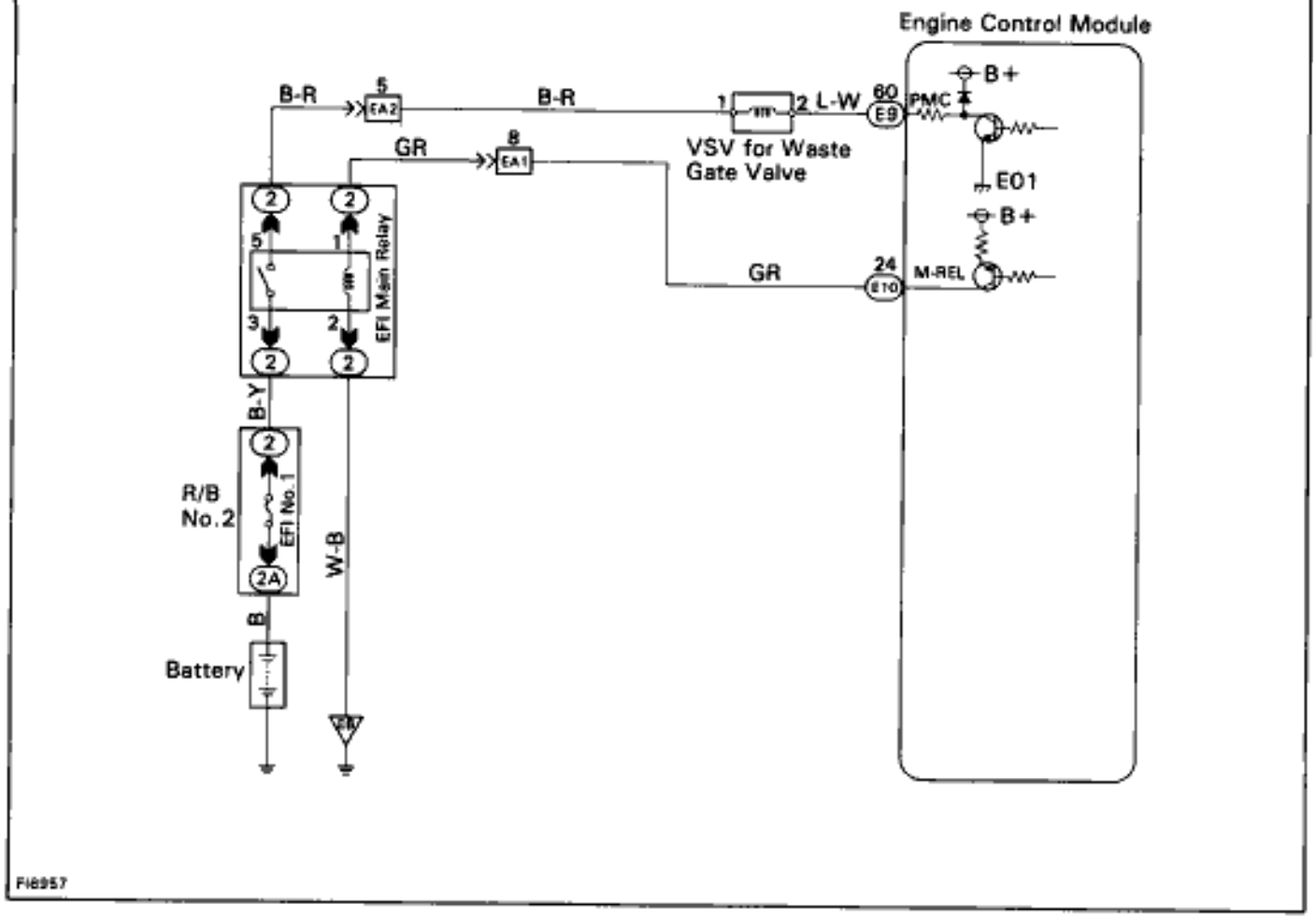

INSPECTION PROCEDURE

Check operation of actuator.

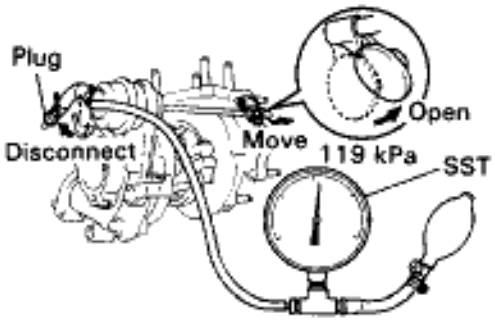

P (1) Check actuator hose connection.
(2) Disconnect actuator hose.
(3) Using SST, apply pressure to the actuator.
SST 09992–00241

C Waste gate valve operate smoothly.

OK **Operation pressure:**
119 kpa (1.2 kgf/cm^2, 17.3 psi) or less

OK

NG **Replace actuator.**

2 Check operation of VSV for waste gate valve.

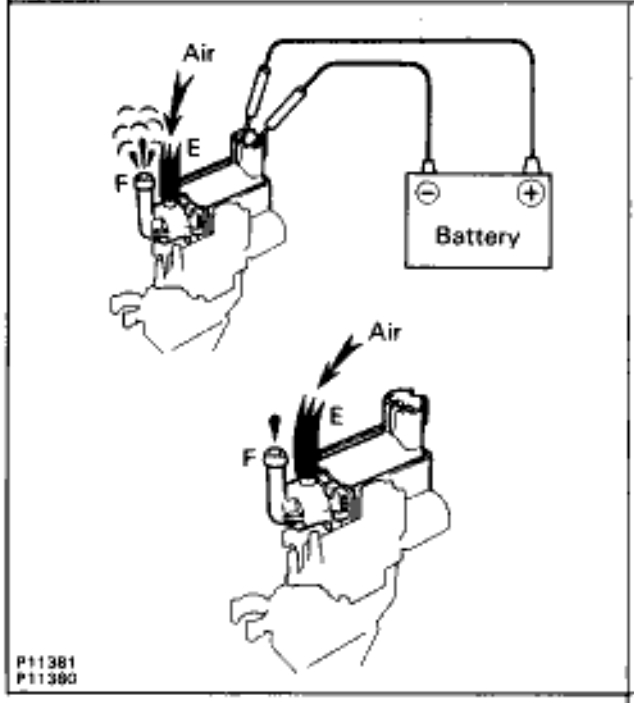

P (1) Remove VSV.
(2) Disconnect VSV connector.

C Check operation of VSV for waste gate valve when battery positive voltage is applied and released to the VSV terminals.

OK **Battery positivie voltage is applied:**
Air from port E is flowing out through port F.
Battery positive voltage is applied:
Closed air passage from E to F.

OK

NG **Replace VSV for waste gate valve.**

3 Check voltage terminals PMC of engine control module connector and body ground.

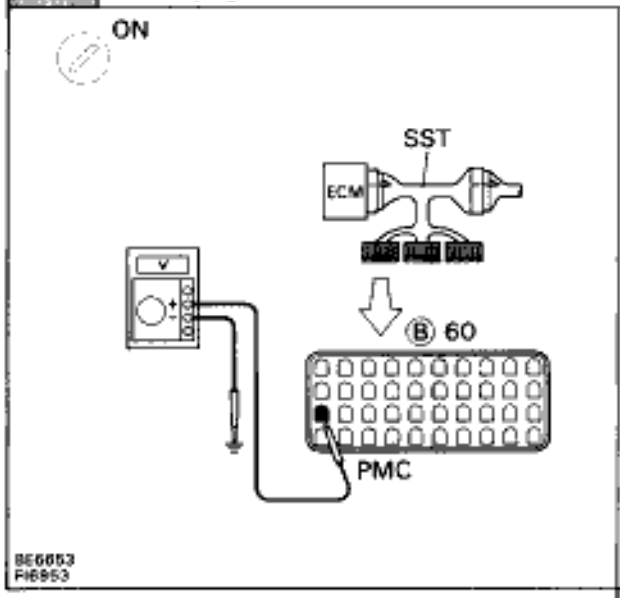

P (1) Connect SST (check harness “A”).
(See page EG–510)
SST 09990–01000
(2) Turn ignition switch ON.

C Measure voltage between terminals PMC of engine control module and ground.

OK **Voltage: 9 — 14 V**

OK

NG **Check and repair harness and connector between VSV for waste gate valve and engine control module.**

Check and replace enginie control module.

DTC 35 Turbo Pressure Sensor Circuit Barometric Pressure (BARO) Sensor Circuit

CIRCUIT DESCRIPTION

HINT DTC 35 is used to indicate malfunctions in the turbo pressure sensor circuit or BARO sensor circuit.

1. TURBO PRESSURE SENSOR

This sensor detects the air intake chamber pressure and converts the pressure reading into a voltage which is used to control the turbo pressure by the ECM.
If the ECM detects the below diagnosis conditions, it operates the fail safe function in which the ECM stops fuel injection at engine speed 2,400 rpm or more and throttle opening angle 20° or more.

DTC No.	Circuit	Diagnostic Trouble Code Detecting Condition	Trouble Area
35	Turbo Pressure Sensor	Open or short in turbo pressure sensor circuit for 0.5 sec. or more	• Open or short in turbo pressure sensor circuit • Turbo pressure sensor • ECM

2. BARO SENSOR

This sensor is built into the ECM. It is used to detect the atmospheric (absolute) pressure and outputs corresponding electrical signals. Fluctuations in the air pressure cause changes in the intake air density which can cause deviations in the air–fuel ratio. The signals from BARO sensor are used to make corrections for the fluctuations. If the ECM detects the below diagnosis conditions, it operates the fail safe function in which the atmospheric pressure is assumed to be 101.3 kPa (1.03 kgf/cm^2, 14.7 psi).

DTC No.	Circuit	Diagnostic Trouble Code Detecting Condition	Trouble Area
35	BARO Sensor	Open or short in BARO sensor circuit for 0.5 sec. or more	• ECM

WIRING DIAGRAM

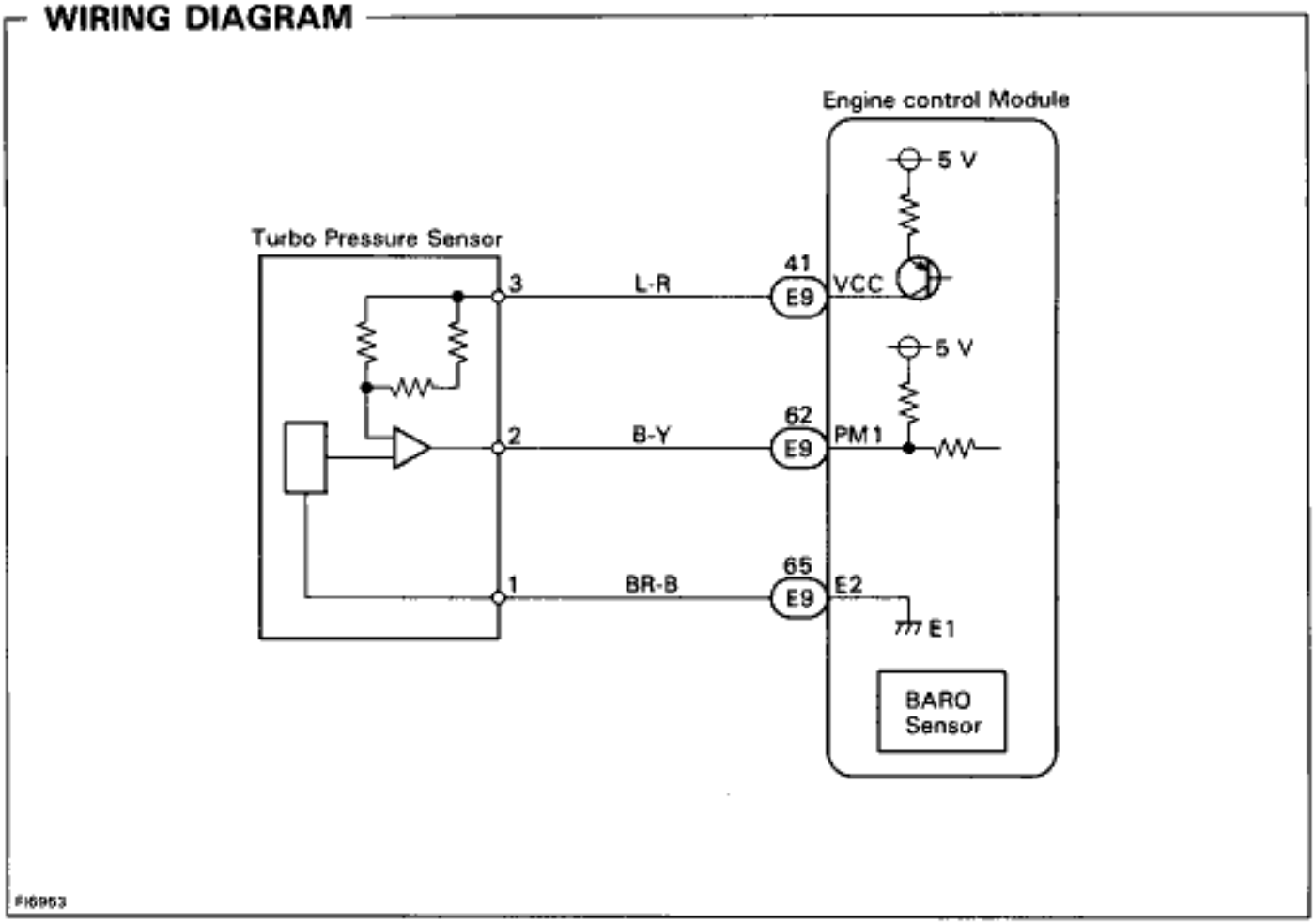

INSPECTION PROCEDURE

HINT: DTC 35 indicates trouble in the BARO sensor circuit or turbo pressure sensor circuit. Because all func–tions of the BARO sensor circuit are built into the ECM, it is not possible to check this circuit. However, if no problem is found in the turbo pressure sensor circuit, it can be concluded that the problem is in the BARO sensor circuit.

1 Check voltage between terminals VCC and E1 of engine control module connector.

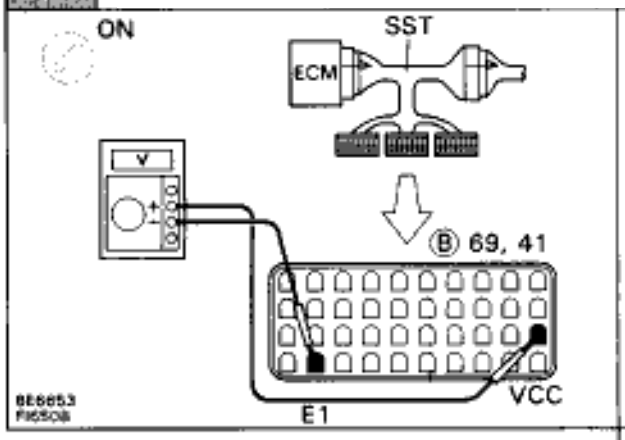

P (1) Connect SST (check harness “A”).
(See page EG–510)
SST 09990–01000
(2) Turn ignition switch ON.

C Measure voltage between terminals VCC and E1 of engine control module.

OK **Voltage: 4.5 — 5.5 V**

OK

NG **Check and replace engine control module.**

2 Check voltage between terminals PM1 and E2 of engine control module.

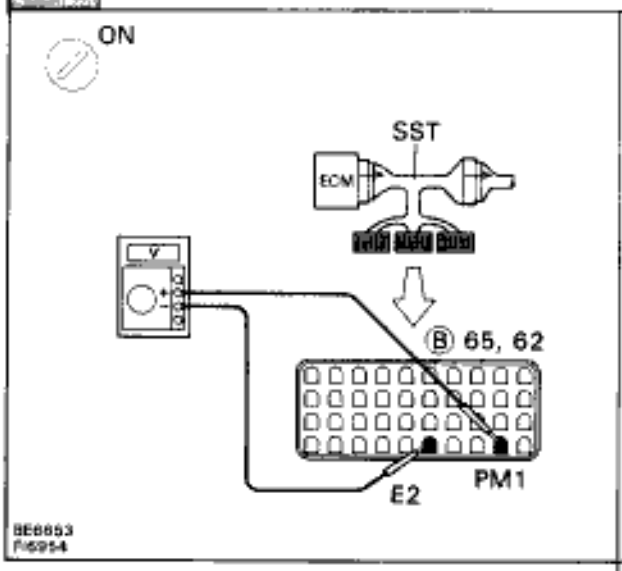

P Turn ignition switch ON.

C Measure voltage between terminals PM1 and E2 of engine control module.

OK **Voltage: 2.3 — 3.0 V**

NG

OK **Check and replace engine control module.**

3 Check for open and short in harness and connector between engine control module and turbo pressure sensor (See page IN–30).

OK

NG **Repair or replace harness or connector.**

Replace turbo pressure sensor.

DTC 41 47 Throttle Position Sensor(s) Circuit

CIRCUIT DESCRIPTION

The throttle position sensor is mounted in the throttle body and detects the the throttle valve opening angle. When the throttle valve is fully closed, the IDL contacts in the throttle position sensor are on, so the voltage at the terminal IDL of the ECM becomes 0 V. At this time, a voltage of approximately 0.7 V is applied to the terminal VTA of the ECM. When the throttle valve is opened, the IDL contacts go off and thus the power source voltage of approximately 12 V in the ECM is applied to the terminal IDL of the ECM. The voltage applied to the terminal VTA of the ECM increases in the proportion to the opening angle of the throttle valve and becomes approximately 3.2 – 4.9 V when the throttle valve is fully opened. The ECM judges the vehicle driving conditions from these signals input from the terminals VTA and IDL, and uses them as one of the conditions for deciding the air–fuel ratio correction, power increase corrections and fuel–cut control etc. The sub–throttle position sensor is built and operates in the same way as the main throttle position sensor. This sensor is used for traction control. The sub–throttle valve is opened and closed by the sub–throttle actuator according to signals from the TRAC ECU to control the engine output.

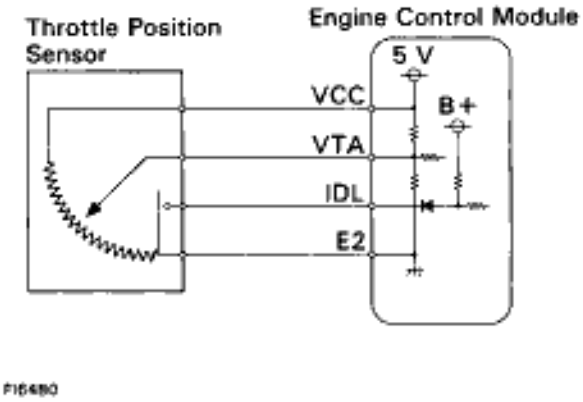

DTC No.	Diagnostic Trobule Code Detecting Condition	Trouble Area
41	Open or short in throttle position sensor circuit for 0.5 sec. or more	• Open or short in throttle position sensor circuit • Throttle position sensor • ECM
47	Open or short in sub–throttle position sensor circuit for 0.5 sec. or more	• Open or short in sub–throttle position sensor circuit • Sub–throttle position sensor • ECM

HINT:

Diagnostic trouble code 41 is for the throttle position sensor circuit.
Diagnostic trouble code 47 is for the sub–throttle position sensor circuit.

- When the connector for the throttle position sensor(s) is disconnected, diagnostic trouble code 41 or 47 is not displayed. Diagnostic trouble code 41 or 47 is displayed only when there is an open or short in the VTA signal circuit of the throttle position sensor(s).
- Signals from the throttle position sensor(s) are also input to the TRAC ECU, so when a malfunction occurs on the TRAC side, code 41 or 47 may be displayed.

WIRING DIAGRAM

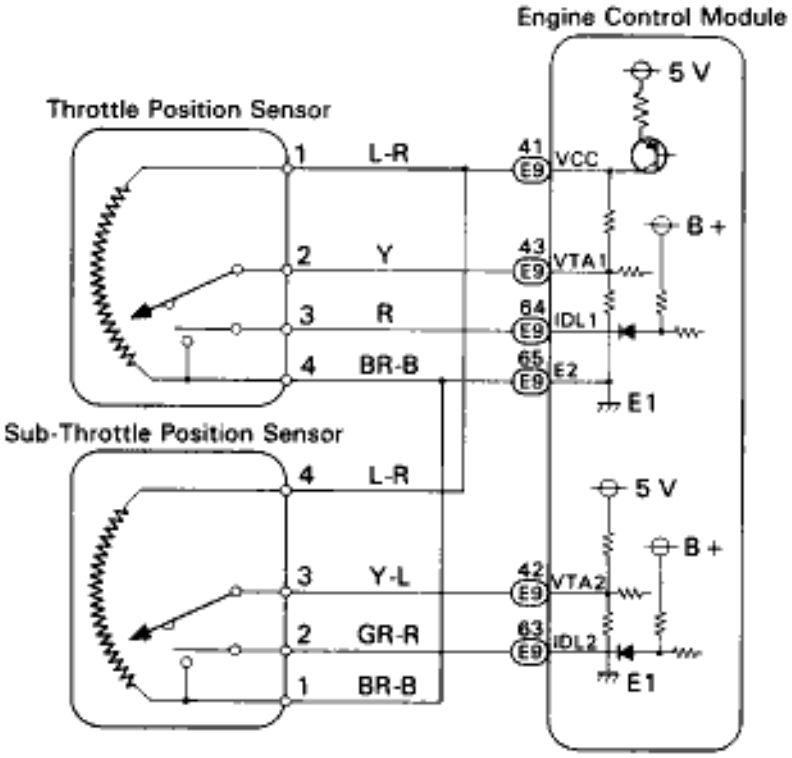

FI6878

INSPECTION PROCEDURE

HINT:

- If diagnostic trouble code 41 is displayed, check throttle position sensor circuit. If diagnostic trouble code 47 is displayed, check sub–throttle position sensor circuit.
- If diagnostic trouble code ”22” (engine coolant temperature sensor circuit), ”24” (intake air temperature sensor circuit) and ”41” (throttle position sensor circuit) are output simultaneously. E2 (sensor ground) may be open.

Check voltage between terminals VTA1, 2, IDL1, 2 and E2 of engine control module connector.

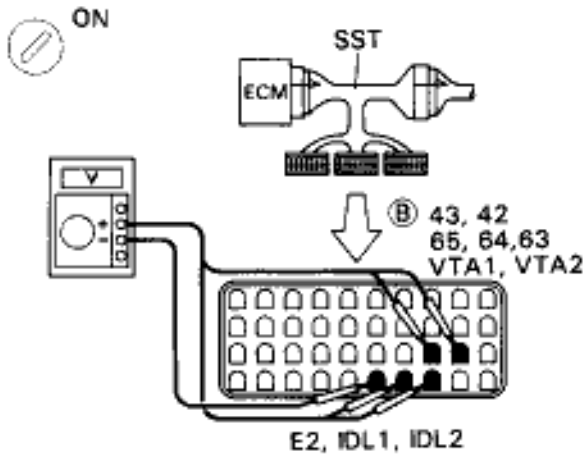

P (1) Connect SST (check harness “A”).
(See page EG–510)
SST 09990–01000
(2) Turn ignition switch ON.
(3) For throttle position sensor, disconnect the vacuum hose from the throttle body, then apply vacuum to the throttle opener.
(See page EG–292)
(4) For sub–throttle position sensor, remove intake air duct and disconnect sub–throttle valve step motor connector.

C Measure voltage between terminals VTA1, 2, IDL1, 2 and E2 of engine control module connector when the (sub–) throttle valve is opened gradually from the closed condition.

OK

Terminal / Throttle Valve	VTA1 – E2 VTA2 – E2	IDL1 – E2 IDL2 – E2
Fully Closed	0.3 – 0.8 V	0 – 3.0 V
Fully Open	3.2 – 4.9 V	9 – 14 V

Hint The voltage should increase steadily in proportion to the throttle valve opening angle.

NG

OK **Check for intermittent problems.**
(See page EG–505)

2 Check throttle position sensor(s).

For Throttle Position Sensor

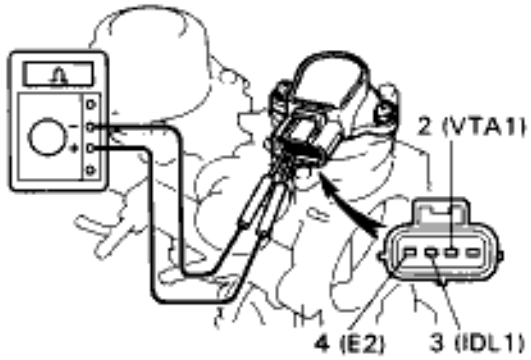

For Sub–Throttle Position Sensor

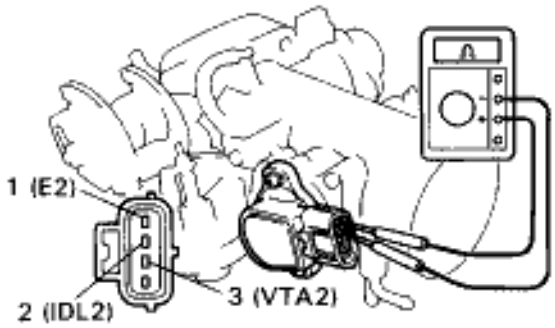

P11452
P12008

P (1) Remove throttle body. (See page EG–291)
(2) For throttle position sensor, apply vacuum to throttle opener. (See page EG–292)

C Measure resistance of each terminal as below table when the throttle valve is opened gradually from the closed condition.

OK

Terminal \ Throttle Valve		Fully Closed	Fully Opened
Throttle Position Sensor	2 (VTA1) – 4 (E2)	0.3 ~ 6.3 kΩ	2.4 ~ 11.2 kΩ
	3 (IDL1) – 4 (E2)	Less than 0.5 kΩ	1 MΩ or higher
Sub throttle Position Sensor	3 (VTA2) – 1 (E2)	0.3 ~ 6.3 kΩ	2.0 ~ 10.8 kΩ
	2 (IDL2) – 1 (E2)	Less than 0.5 kΩ	1 MΩ or higher

Hint Resistance between terminals 2,3 (VTA1,2) and 4,1 (E2) should increase gradually in accordance with the throttle valve opening angle.

OK

NG **Adjust or replace throttle position sensor(s). (See page EG–292)**

3 Check for open and short in harness and connector between engine control module and throttle position sensors(s) (See page IN–30).

OK

NG **Repair or replace harness or connector.**

Check and replace engine control module.

DTC 42 No. 1 Vehicle Speed Sensor Signal Circuit

CIRCUIT DESCRIPTION

The No.1 vehicle speed sensor outputs a 4–pulse signal for every revolution of the rotor shaft, which is rotated by the transmission output shaft via the driven gear. After this signal is converted into a more precise rectangular waveform by the waveform shaping circuit inside the odometer and trip meter, it is then transmitted to the engine control module. The ECM determines the vehicle speed based on the frequency of these pulse signals.

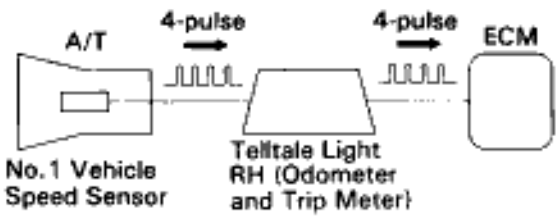

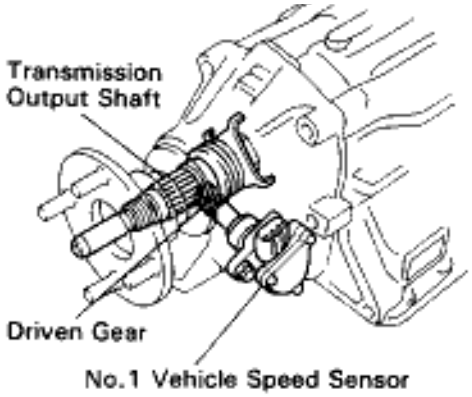

FI8643 G04361

DTC No.	Diagnostic Trouble Code Detecting Condition	Trouble Area
42	For A/T All conditions below are detected Continuously for 8 sec. or more: (a) No.1 vehicle speed signal: 0 km/h (mph) (b) Engine speed: 3,000 rpm or more (c) Park/neutral position switch: OFF (d) Stop light switch: OFF	• No.1 vehicle speed sensor • Telltale light RH (Odometer and trip meter) • Open or short in No.1 vehicle speed sensor circuit • ECM
	For A/T All conditions below are detected Continuously for 8 sec. or more: (a) No.1 vehicle speed signal: 0 km/h (mph) (b) Engine speed: Between 1,500 rpm and 4,000 rpm (c) Engine coolant temp.: 80˚C (176˚F) or more (d) Load driving	

HINT: In test mode, diagnostic trouble code 42 is output when vehicle speed is 5 km/h (3 mph) or below.

Reference

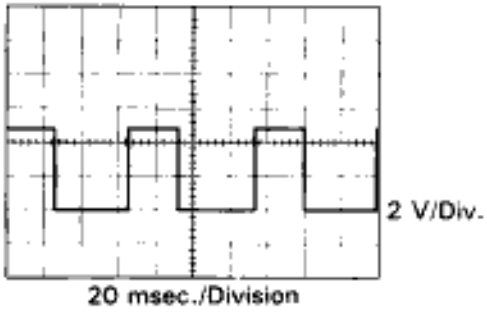

VD1436

- Waveform between terminals SP1 and E1 when vehicle speed is approx. 20 km/h (12mph).

HINT: As the vehicle speed increases, the number of signals from SP1 increases.

WIRING DIAGRAM

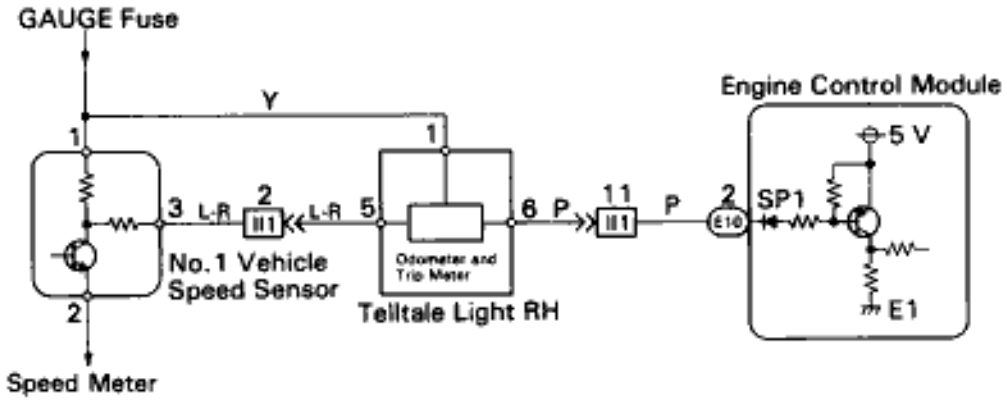

INSPECTION PROCEDURE

1 **Check voltage between terminal SP1 of engine control module connector and body ground.**

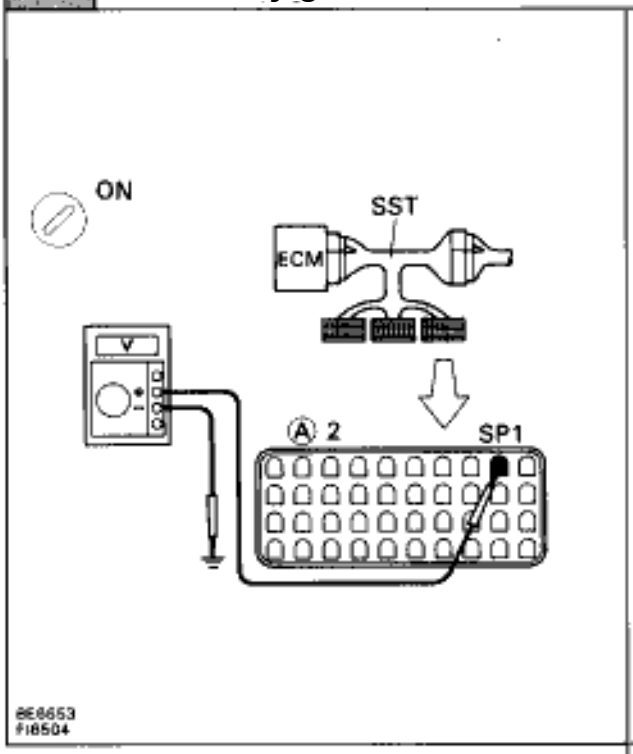

P
(1) Shift the shift lever to N position.
(2) Jack up one of the rear wheels.
(3) Connect SST (check harness “A”).
(See page EG–510)
(4) Disconnect power steering ECU connector and cruise control ECU connector.
(5) Turn ignition switch ON.

C Measure voltage between terminal SP1 of engine control module connector and body ground when the wheel is turned slowly.

OK **Voltage is generated intermittently.**

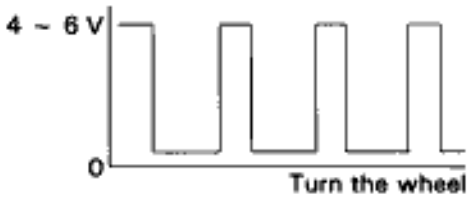

NG

OK **Check and replace engine control module.**

2 **Check operation of odometer and trip meter (telltale light RH (See page Be–48)).**

NG

OK **Repair or replace harness or connector between ECM and telltale light RH.**

3 **Check operation of No.1 vehicle speed sensor (See page BE–46).**

NG

OK **Repair or replace harness or connector between telltale light RH and No.1 vehicle speed sensor.**

Replace No.1 vehicle speed sensor.

DTC 43 Starter Signal Circuit

CIRCUIT DESCRIPTION

When the engine is being cranked, the intake air flow is slow, so fuel vaporization is poor. A rich mixture is therefore necessary in order to achieve good startability. While the engine is being cranked, the battery positive voltage is applied to terminal STA of the ECM. The starter signal is mainly used to increase the fuel injection volume for the starting injection control and after–start injection control.

DTC No.	Diagnostic Trouble Code Detecting Condition	Trouble Area
43	No starter signal to ECM	• Open or short in starter signal circuit • Open or short in ignition switch or starter relay circuit • ECM

WIRING DIAGRAM

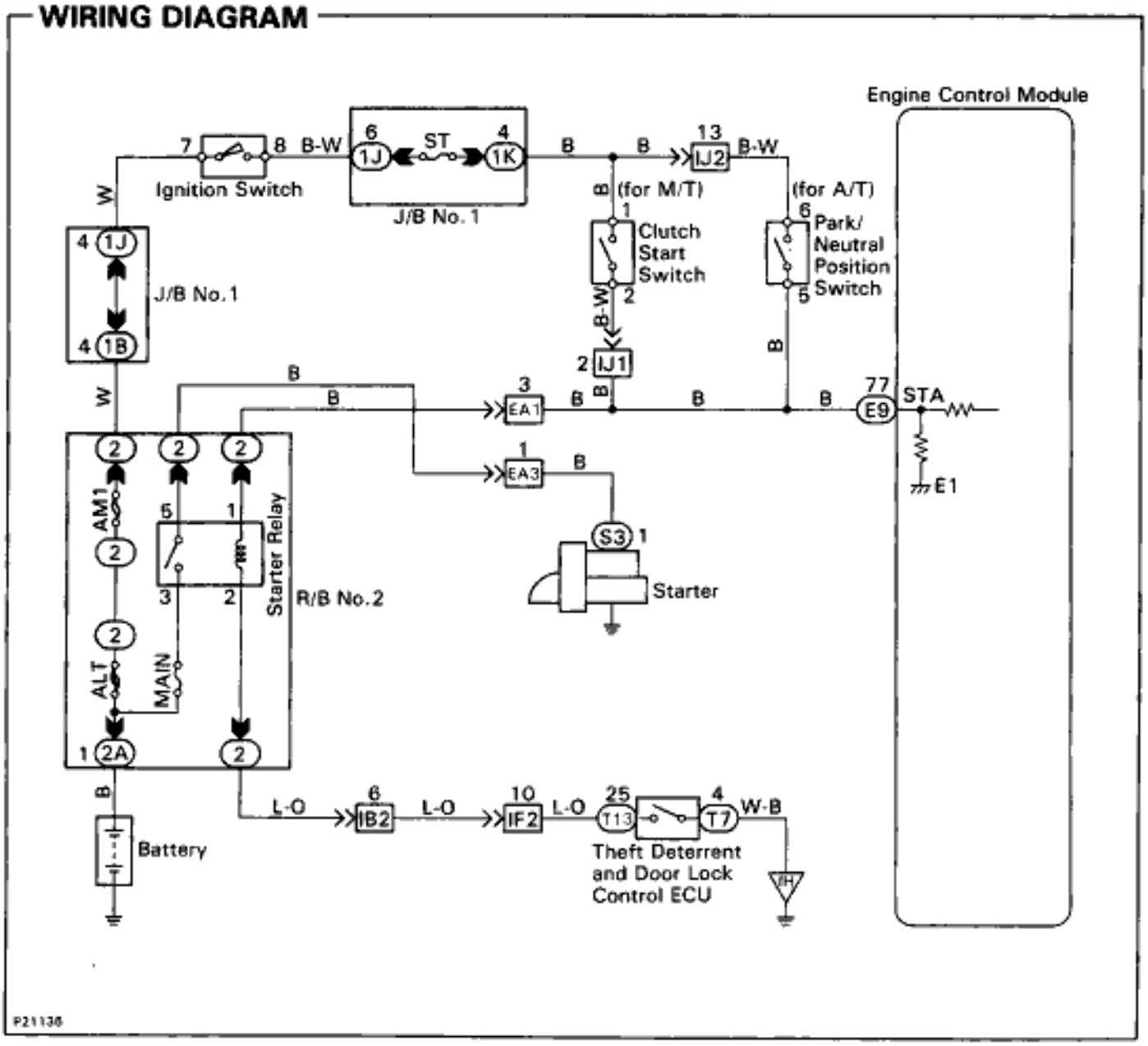

INSPECTION PROCEDURE

HINT: This diagnostic chart is based on the premise that the engine is being cranked under normal conditions. If the engine does not crank, proceed to the matrix chart of problem symptoms on page EG–514.

Check output condition of diagnostic trouble code 43.

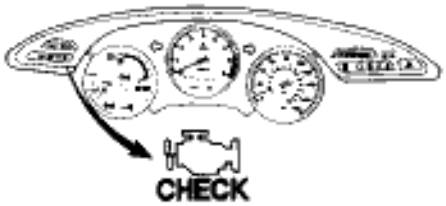

F16814

P Setting the test mode.
(1) Turn ignition switch OFF.
(2) Connect terminals TE2 and E1 of DLC2.
(3) Turn ignition switch ON.
(Don't start the engine)
(4) Connect terminal TE1 and E1 of DLC2.

C Check if code "43" is output by the malfunction indicator lamp.

OK **Code "43" is output.**

C Start the engine.
Check if code "43" disappears.

OK **Code "43" is not output.**

OK → **Proceed to next circuit inspection shown on matrix chart (See page Eg–514.)**

NG

Check for open in harness and connector between engine control module and starter relay (See page IN–30).

NG → **Repair or replace harness or connector.**

OK

Check and replace engine control module.

DTC 52 53 55 Knock Sensor Circuit

CIRCUIT DESCRIPTION

Knock sensors are fitted one each to the front and rear of the left side of the cylinder block to detect engine knocking. This sensor contains a piezoelectric element which generates a voltage when it becomes deformed, which occurs when the cylinder block vibrates due to knocking. If engine knocking occurs, ignition timing is retarding to suppress it.

DTC No.	Diagnostic Trouble Code Detecting Condition	Trouble Area
52	No No.1 knock sensor signal to ECM for 4 crank revolutions with engine speed between 2,050 rpm and 5,950 rpm	• Open or short in No.1 knock sensor circuit • No.1 knock sensor (Looseness) • ECM
53	Engine control computer (for knock control) malfunction at engine speed between 650 rpm and 5,200 rpm	• ECM
55	No No.2 knock sensor signal to ECM for 4 crank revolutions with engine speed between 2,050 rpm and 5,950 rpm	• Open or short No.2 knock sensor circuit • No.2 knock sensor (looseness) • ECM

If the ECM detects the above diagnosis conditions, it operates the fail safe function in which the corrective retard angle value is set to the maximum value.

DIAGNOSTIC TROUBLE CODE DETECTION DRIVING PATTERN

Purpose of the driving pattern.

(a) To simulate diagnostic trouble code detecting condition after diagnostic trouble code is recorded.

(b) To check that the malfunction is corrected when the repair is completed by confirming that diagnostic trouble code is no longer detected.

Malfunction: Open or short in Knock Sensor

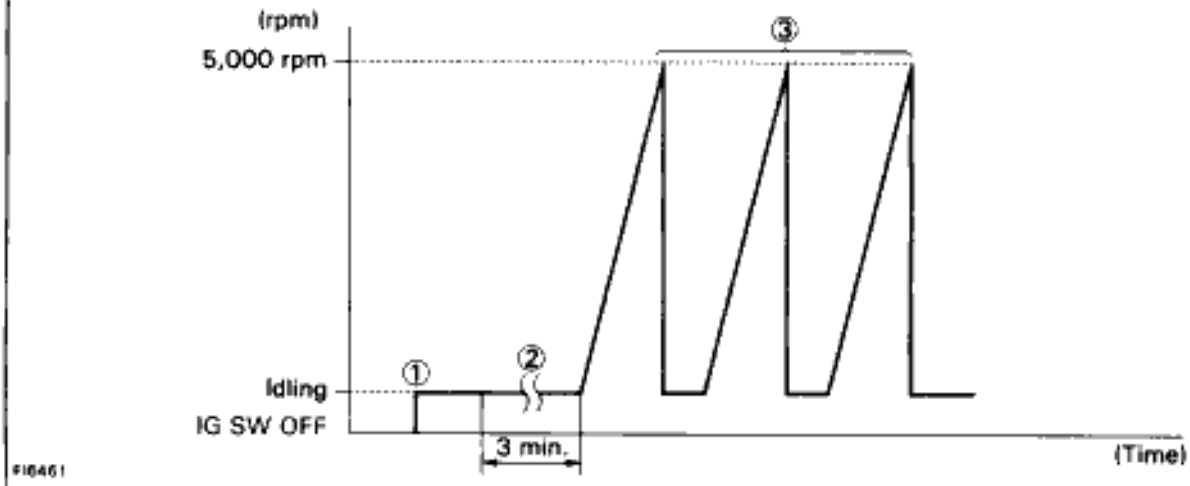

(1) Start the engine and warm up.
(2) Idle the engine for 3 min.
(3) With the A/C ON, race the engine quickly to 5,000 rpm 3 times.
(Rapidly depress the accelerator pedal and suddenly release it.)

HINT: If a malfunction exists, the malfunction indicator lamp will light up when sudden racing is performed.

NOTICE: If the conditions in this test are not strictly followed, detection of the malfunction will not be possible.

WIRING DIAGRAM

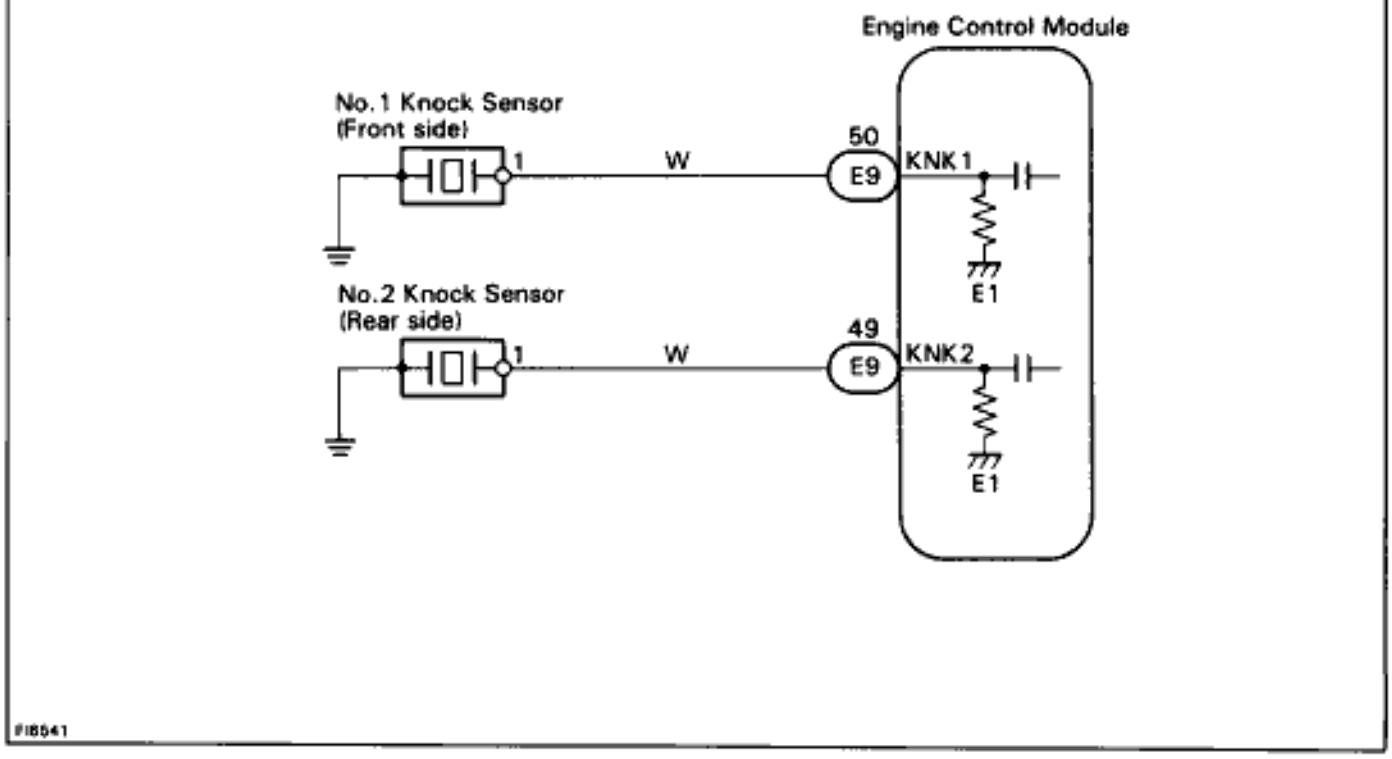

INSPECTION PROCEDURE

HINT: If diagnostic trouble code 52 is displayed, check No.1 knock sensor (for front side) circuit.
If diagnostic trouble code 55 is displayed, check No.2 knock sensor (for rear side) circuit.
If diagnostic trouble code 53 is displayed, replace engine control module.

1 Check continuity between terminals KNK1, KNK2 of engine control module connector and body ground.

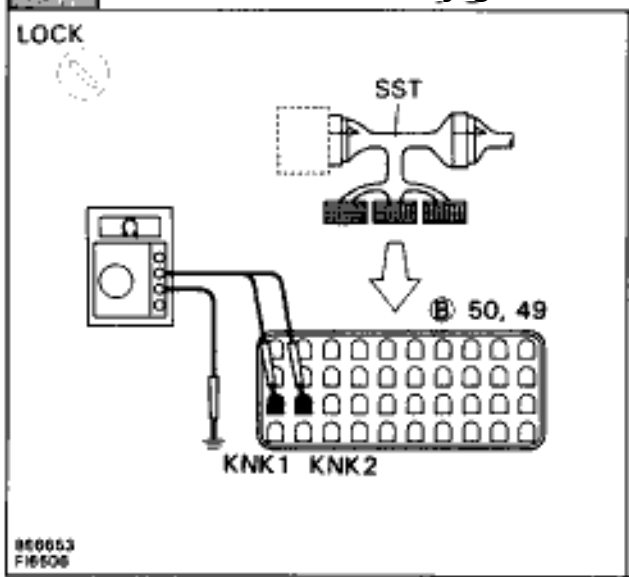

P (1) Connect SST (check harness “A”).
(See page EG–510)
SST 09990–01000
(2) Disconnect the engine control module con–nectors.

C Measure resistance between terminals KNK1, KNK2 of engine control module connector and body ground.

OK **Resistance: 1 M or higher**

NG

OK → Go to step 3

2 Check knock sensor.

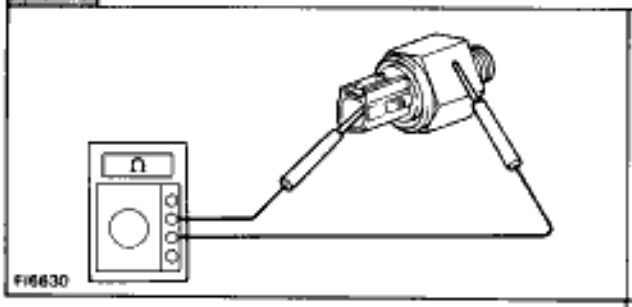

P Disconnect knock sensor connector.

C Measure resistance between the knock sensor terminal and body.

OK **Resistance: 1 M or higher**

OK

NG **Replace knock sensor (See page EG–316)**

3 Check for open and short in harness and connector between engine control module and knock sensor (See page IN–30).

OK

NG **Repair or replace harness or connector.**

4 Does malfunction disappear when a good knock sensor is installed?

NO

YES **Replace knock sensor. (See page EG–316)**

Check and replace engine control module.

Reference INSPECTION USING OSCILLOSCOPE

KNK Signal Waveform

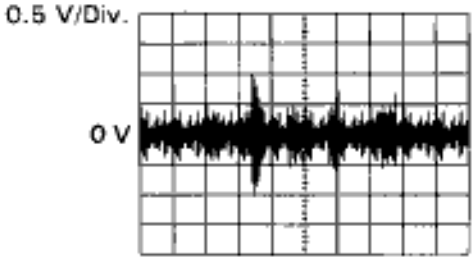

- With the engine racing (4,000 rpm) measure waveform between terminals KNK1, KNK2 of engine cotrol module and body ground.

HINT: The correct waveform is as shown.

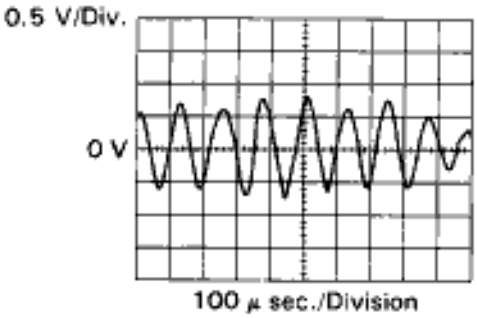

- Spread the time on the horizontal axis, and con firm that the period of the wave is 123 Ωsec. (Normal mode vibration frequency of knock sensor: 8.1 KHz).

HINT: If normal mode vibration frequency is not 8.1 KHz, the sensor is malfunctioning.

FI6510
FI6642

DTC 71 EGR System Malfunction

CIRCUIT DESCRIPTION

The EGR system is designed to recirculate the exhaust gas, controlled according to the driving conditions back into the intake air–fuel mixture. It helps to slow down combustion in the cylinder and thus lower the combustion temperature which, in turn, reduces the amount of NO_X emission. The amount of EGR is regulated by the EGR vacuum modulator according to the engine load.

If even one of the following conditions is fulfilled, the VSV is turned ON by a signal from the ECM. This resists in atmospheric air acting on the EGR valve, closing the EGR valve and shutting off the exhaust gas (EGR cut–OFF).

- Engine coolant temp. below 50˚C (122˚F)
- During deceleration (throttle valve closed)
- Light engine load (amount of intake air very small)
- Engine speed over 4,800 rpm
- Manifold absolute pressure more than 120 kPa (1.2 kgf/cm^2, 17.4 psi)

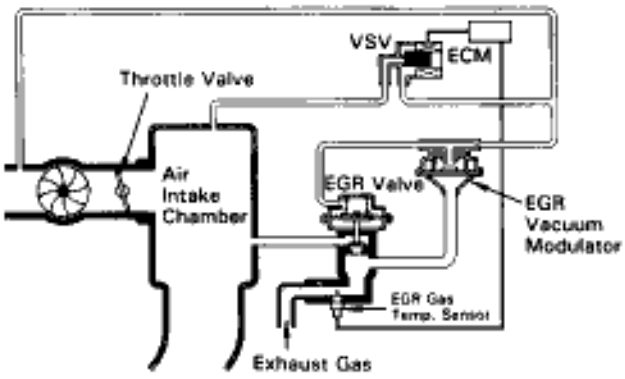

DTC No.	Diagnostic Trouble Code Detecting Condition	Trouble Area
71	EGR gas temp. and intake air temp. are 60˚C(140˚F) or less for A/T, 55˚C (131˚F) or less for M/T for 1 ~ 4 min. under conditions (a) and (b): (2 trip detection logic)* (a) Engine coolant temp.: 60˚C (140˚F) or more (b) EGR operation possible (Example A/T in 3rd speed (5th for M/T), A/C ON, 96 km/h (60 mph), Flat road)	• Open EGR gas temp. sensor circuit • Short in VSV circuit for EGR • EGR hose disconnected, valve stuck • Clogged EGR gas passage • ECM

*: **See page EG–503.**

DIAGNOSTIC TROUBLE CODE DETECTION DRIVING PATTERN

Purpose of the driving pattern.

(a) To simulate diagnostic trouble code detecting condition after diagnostic trouble code is recorded.

(b) To check that the malfunction is corrected when the repair is completed by confirming that diagnostic trouble code is no longer detected.

CIRCUIT DESCRIPTION (Cont'd)

Malfunction: Open in EGR Gas Temp. Sensor Circuit

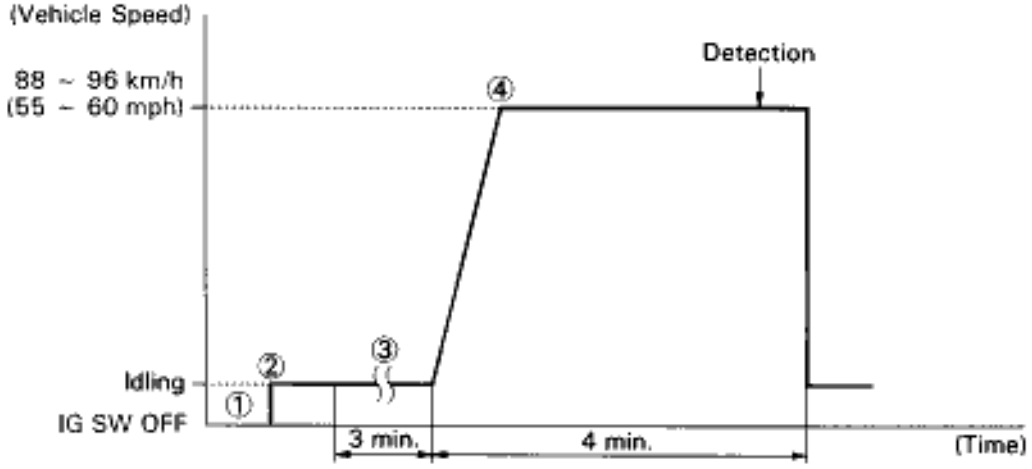

(1) Disconnect the EFI No.1 fuse (30A) for 10 sec. or more, with IG switch OFF. Initiate test mode (Connect terminal TE2 and E1 of data link connector 2 with IG switch OFF).
(2) Start the engine and warm up.
(3) Idle the engine for 3 min.
(4) With the A/C ON and transmission in 5th position (A/T in 3rd speed) drive at 88 96 km/h (55 60 mph) for 4 min or less.

HINT: If a malfunction exists, the malfunction indicator lamp will light up during step (4).

NOTICE: If the conditions in this test are not strictly followed, detection of the malfunction will not be possible.

WIRING DIAGRAM

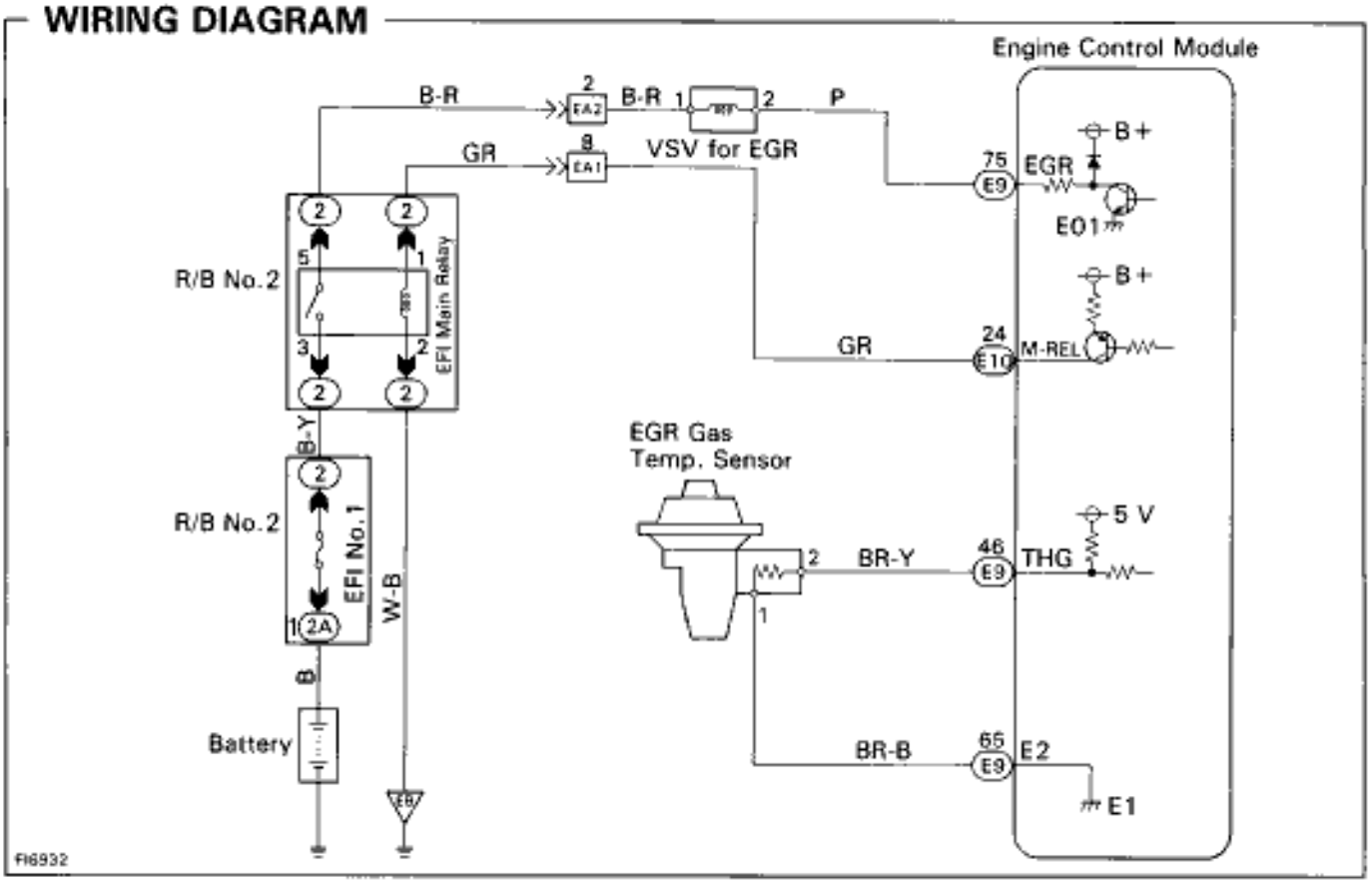

INSPECTION PROCEDURE

1 **Check voltage between terminal EGR of engine control module connector and body ground.**

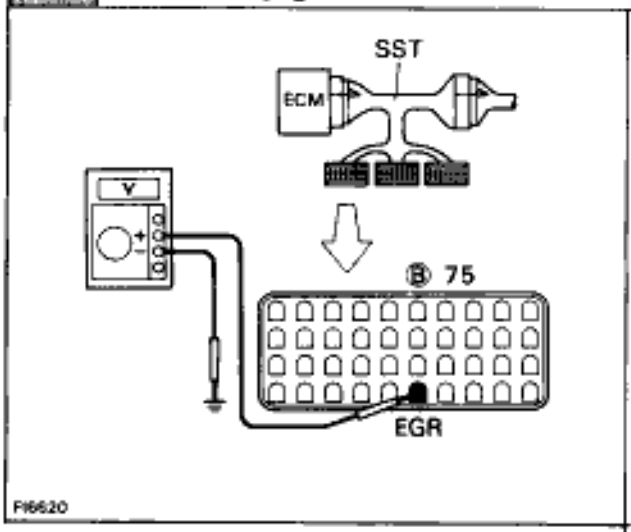

P (1) Connect SST (check harness "A").
(See page EG–510)
SST 09990–01000
(2) Warm up engine to normal operating temperature.

C Measure voltage between terminal EGR of engine control module connector and body ground.

OK **Voltage: 9 — 14 V**

NG

OK Go to step **4**.

2 **Check resistance between terminals of VSV for EGR.**

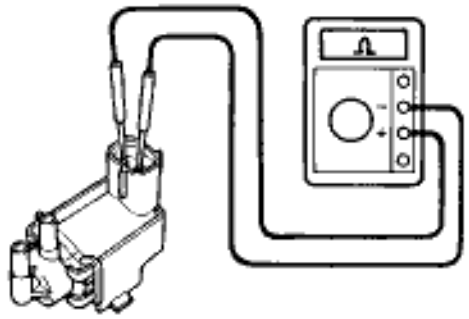

P Remove VSV for EGR. (See page EG–310)

C Measure resistance between terminals of VSV for EGR.

OK **Resistance: 30 — 34 Ω at 20°C (68°F)**

OK

NG **Replace VSV for EGR.**

3 **Check for open and short in harness and connector between EFI main relay and VSV for EGR, VSV for EGR and engine control module (See page IN–30).**

OK

NG **Repair or replace harness or connector.**

Check and replace engine control module.

4 **Check EGR system (See page EG–180).**

OK

NG **Repair EGR system.**

5 **Check resistance of EGR gas temp. sensor.**

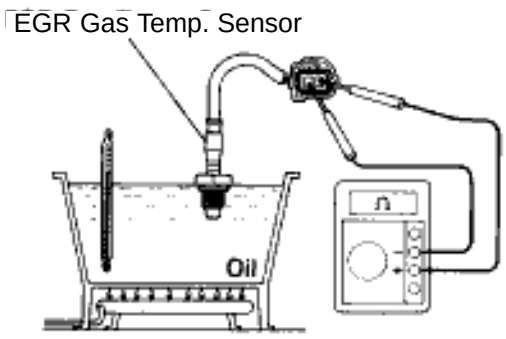

P Remove EGR gas temp. sensor.

C Measure resistance between terminals of EGR gas temp. sensor connector.

OK **Resistance: 64 — 973 k at 50˚C (122˚F)**
11 — 163 k at 100˚C (212˚F)
2 — 3 k at 150˚C (302˚F)

OK

NG **Replace EGR gas temp. sensor.**

6 **Check for open in harness and connector between EGR gas temp. sensor and engine control module. (See page IN–30).**

OK

NG **Repair or replace harness or connector.**

Check and replace engine control module.

DTC 78 Fuel Pump Control Circuit

CIRCUIT DESCRIPTION

The fuel pump speed is controlled at 2 steps (high speed, low speed) by the condition of the engine (starting, light load, heavy load), when the engine starts (STA ON), the engine control module sends a Hi signal (battery positive voltage) to the fuel pump ECU (FPC terminal).
The fuel pump ECU then outputs Hi voltage (battery positive voltage) to the fuel pump so that the fuel pump operates at high speed.
After the engine starts, during idling or light loads, the engine control module outputs a Low signal (about 9 V) to the fuel pump ECU, the fuel pump ECU outputs Low battery voltage (about 9 V) to the fuel pump and causes the fuel pump to operate at low speed.
If the intake air volume increases (high engine load), the engine control module sends a Hi signal to the fuel pump ECU and causes the fuel pump to operate at high speed.

DTC No.	Diagnostic Trouble Code Detecting Condition	Trouble Area
78	(1) Open or short in fuel pump circuit for 1 sec. Or more with engine speed 1,000 rpm or less (2 trip detection logic)*	• Open or short in fuel pump ECU circuit • Fuel pump ECU • Engine control module power source circuit • Fuel pump • Engine control module
	(2) Open in input circuit of fuel pump ECU (FPC) with engine speed 1,000 rpm or less (2 trip detection logic)*	
	(3) Open or short in diagnostic signal line (DI) of fuel pump ECU with engine speed 1,000 rpm or less (2 trip detection logic)*	

*: See page EG–503.

WIRING DIAGRAM

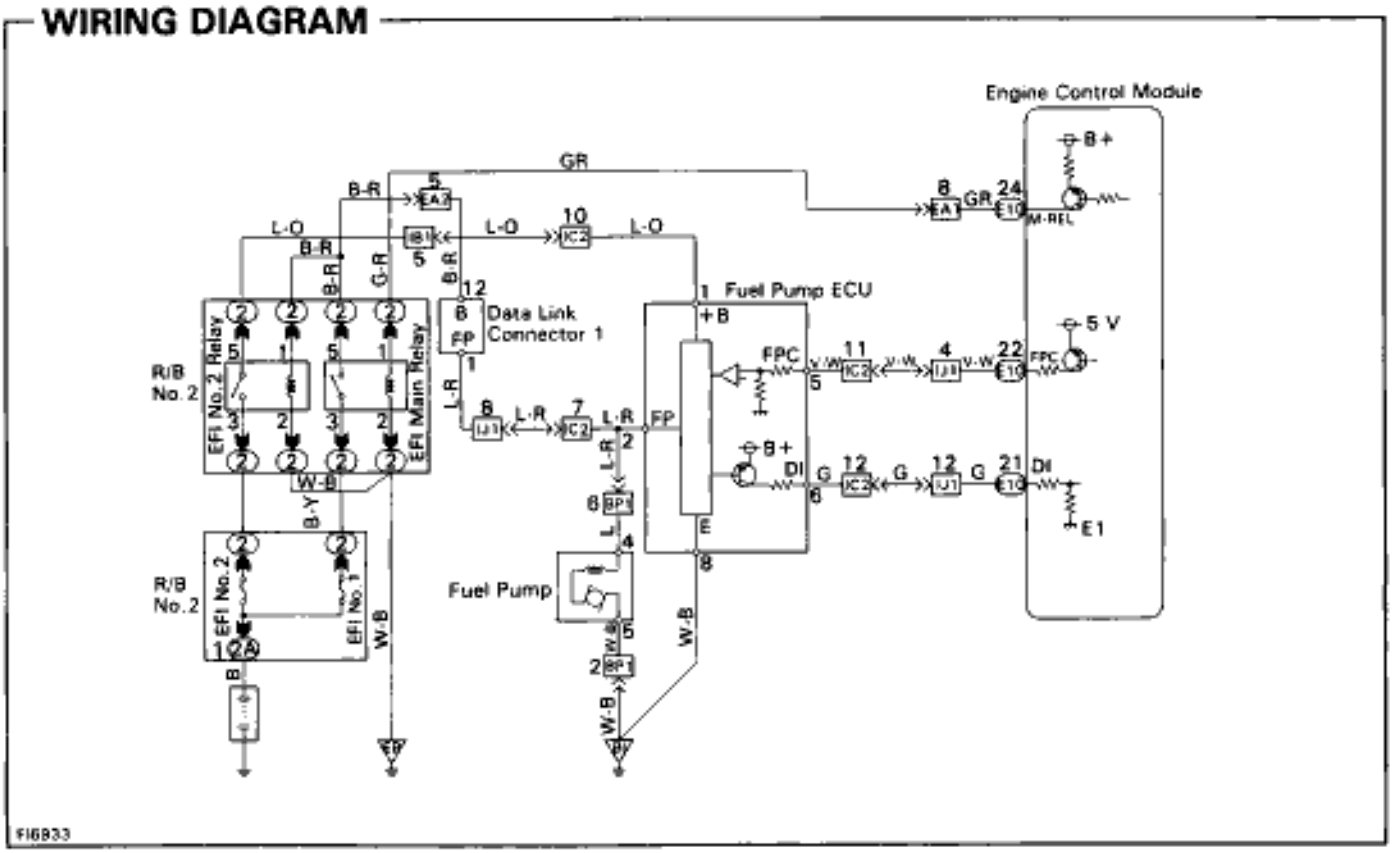

INSPECTION PROCEDURE

1 Check fuel pump operation.

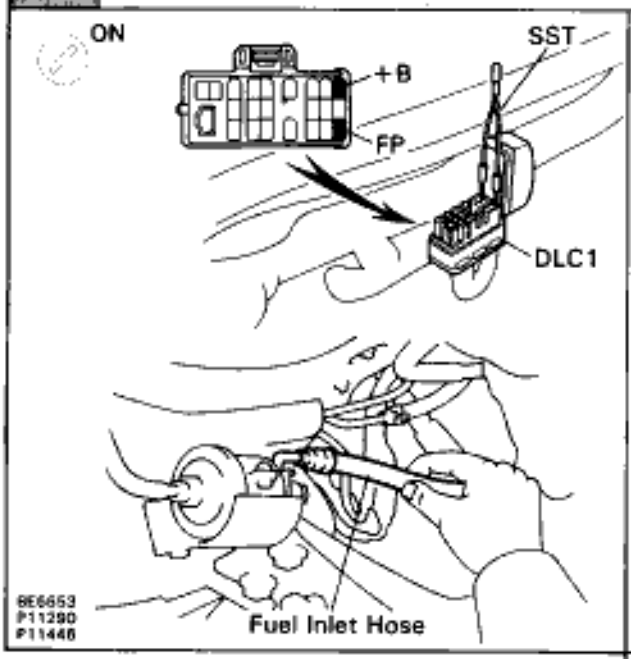

P (1) Turn ignition switch ON.
(2) Using SST, connect terminals +B and FP of data link connector 1.
SST 09843–18020

C Check that there is pressure in the hose from the fuel filter.

OK **Fuel pressure can be felt.**

OK

NG Go to step **3**.

2 Check for open and short in harness and connector between terminals +B ↔ +B, FP ↔ FP of the data link connector 1 and fuel pump ECU (See page IN–30).

NG

OK Go to step **5**.

Repair or replace harness or connector.

3 Check voltage of terminal +B of data link connector 1.

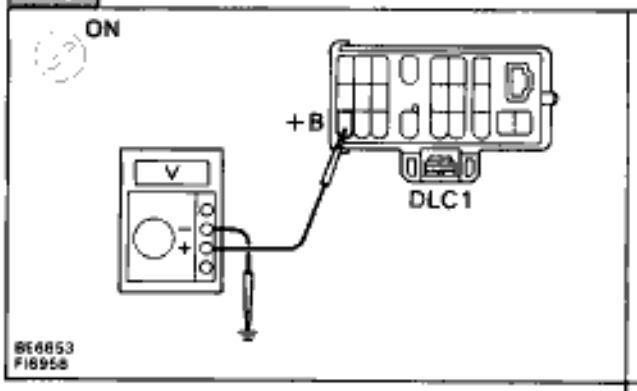

P Turn ignition switch ON.

C Measure voltage between terminal +B of data link connector 1 and body ground.

OK **Voltage: 9 — 14 V**

OK

NG **Check for ECM power source circuit (See page EG–576), and check for open in harness and connector between terminal +B of data link connector 1 and main relay.**

4 **Check for open and short in harness and connector between terminal FP of data link connector 1, fuel pump and body ground)See page IN–30).**

NG

Repair or replace harness or connector.

OK **Repair or replace fuel pump.**

5 **Check voltage between terminals 5 (FPC) and 8 (E) of fuel pump ECU connector.**

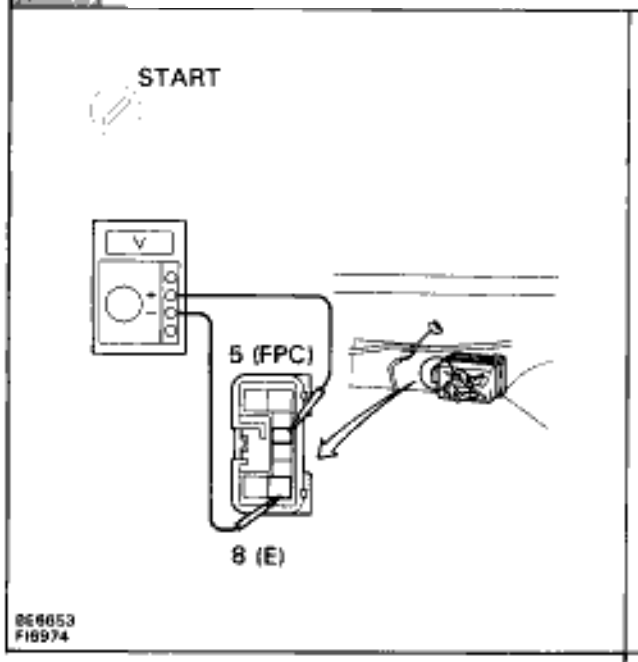

P
(1) Remove the LH quarter trim panel.
(See page EG–323)
(2) Disconnect fuel pump ECU connector.

C
Measure voltage between terminals 5 (FPC) and 8 (E) of fuel pump ECU connector when igintion switch is turned to START.

OK
Voltage: 4.5 — 5.5 V

NG

OK **Replace fuel pump ECU.**

6 **Check for open in harness and connector between terminal FPC of engine control module and terminal 5 (FPC) of fuel pump ECU, terminal 8 (E) of fuel pump ECU and body ground (See page IN–30).**

OK

NG **Repair or replace harness or connector.**

7 **Check for open and short in harness and connector between terminal DI of engine control module and terminal 6 (DI) of fuel pump ECU (See page IN–30).**

OK

NG **Repair or replace harness or connector.**

Check and replace engine control module.

DTC 51 Switch Condition Signal Circuit

CIRCUIT DESCRIPTION

Park/Neutral Position Switch

The ECM uses the signals from the park/neutral position switch to determine whether the transmission is in park or neutral, or in some other position.

Air Conditioning Switch Signal

The ECM uses the output from the air conditioning switch to determine whether or not the air conditioning is operating so that it can increase the idling speed of the engine if necessary.

Throttle Position Sensor IDL Signal

The IDL contacts are mounted in the throttle position sensor, and detects the idle condition.

DTC No.	Diagnostic Trouble Code Detecting Condition	Trouble Area
51	(1) 3 sec. or more after engine starts with closed throttle position switch OFF (IDL1) (2) Park/neutral position switch: OFF (Shift position in ”R”, ”D”, ”2” or ”1” position.) (3) A/C switch ON	• Throttle position sensor IDL circuit • Accelerator pedal and cable • Park/neutral position switch • A/C switch circuit • ECM

HINT: In this circuit, diagnosis can only be made in the test mode.

WIRING DIAGRAM

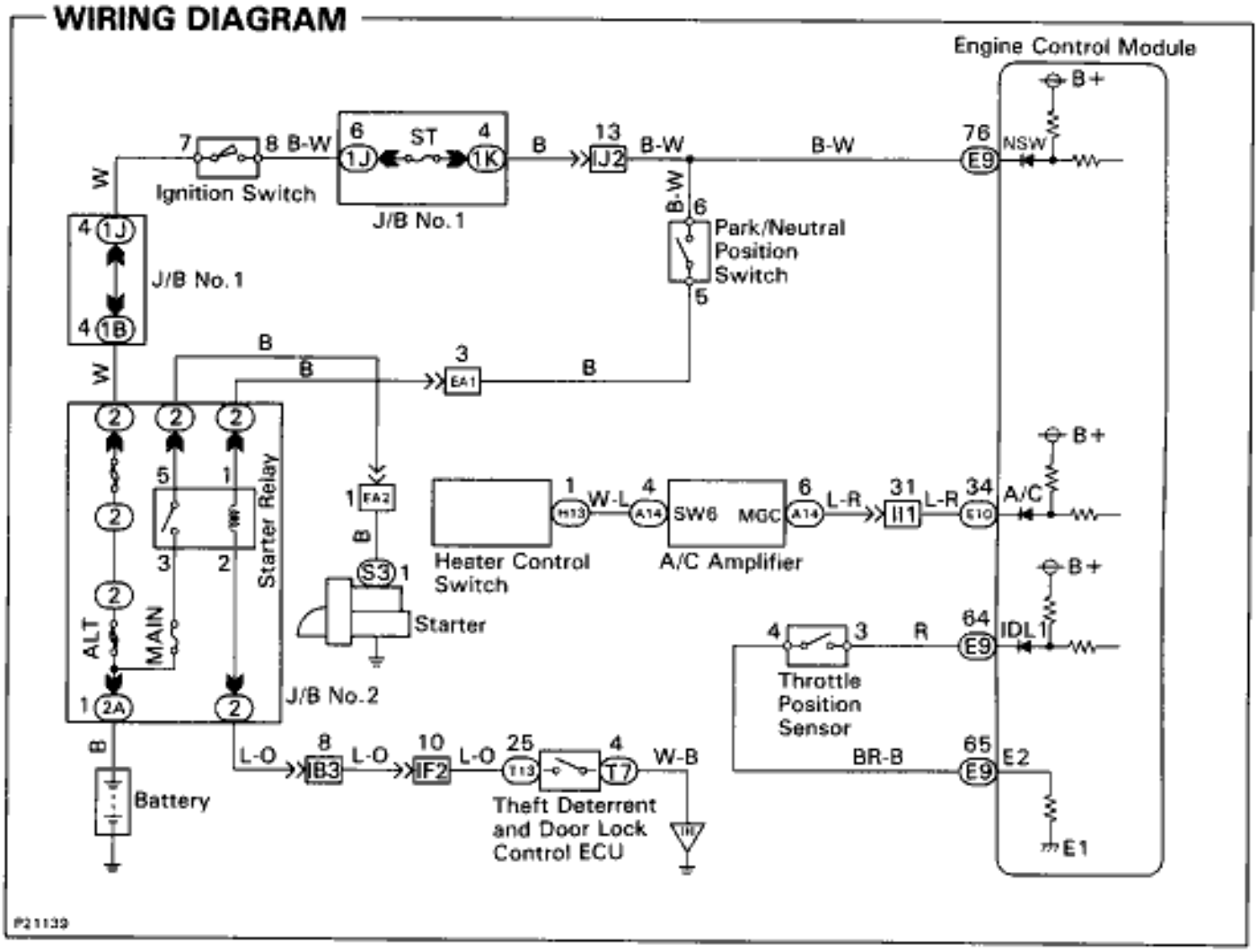

INSPECTION PROCEDURE

1 Check output condition of diagnostic trouble code 51.

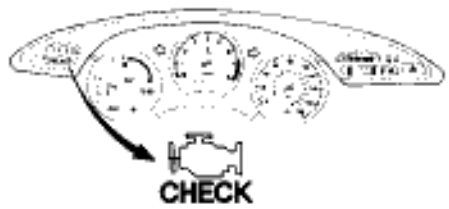

FI8914

P Setting the test mode.
(1) Turn ignition switch OFF.
(2) Connect terminals TE2 and E1 of DLC2.
(3) Turn ignition switch ON.
(For checking terminal IDL, disconnect the vacuum hose from the throttle body, then apply vacuum to the throttle opener (See page EG–292)).
((For checking terminal A/C, start the engine.)
(4) connect terminals TE1 and E1 of DLC2.

C Check if code “51” is output by the malfunction indicator lamp.

OK

	Condition	Code
Park/Neutral Position Switch (PNP)	P or N position	Normal*
	R, D, 2 or L position	51*
Throttle Position Sensor (IDL1)	Accelerator pedal released	Normal*
	Accelerator pedal depressed	51*
A/C Switch (A/C)	A/C SW ON	51
	A/C SW OFF	Normal

*: Before the STA signal is input (ST is not ON), diagnostic trouble code 43 is also output.

Hint Diagnostic trouble code 42 is output with vehicle speed 5 km/h (3 mph) or below.

OK

NG
IDL1...Go to step [2].
PNP....Go to page Eg–574.
A/C....Go to step [3].

Proceed to next circuit inspection shown on matrix chart (See page Eg–514).

2 Check throttle position sensor.

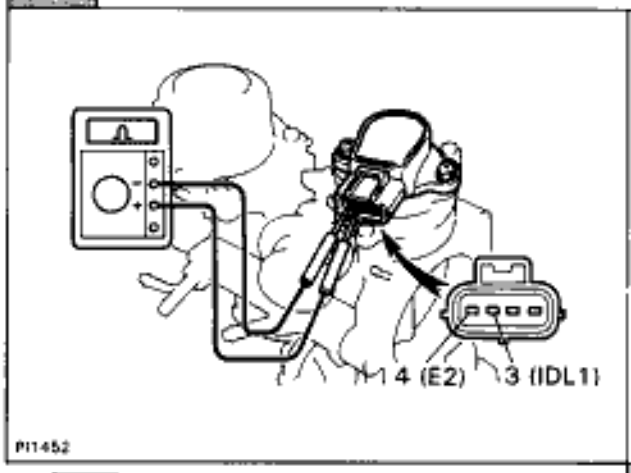

P (1) Remove throttle body.
(See page EG 291)
(2) Apply vacuum to throttle opener.
(See page EG–292)

C Measure resistance between terminals 3 (IDL1) and 4 (E2) of throttle position sensor connector.

OK

Throttle Valve	Resistance
Fully closed	Less than 0.5 kΩ
Opened	1 MΩ or higher

OK

NG **Adjust or replace throttle position sensor. (See page EG–292)**

Check and repair harness or connector between engine control module and throttle position sensor.

3 Check voltage between terminal A/C of engine control module connector and body ground.

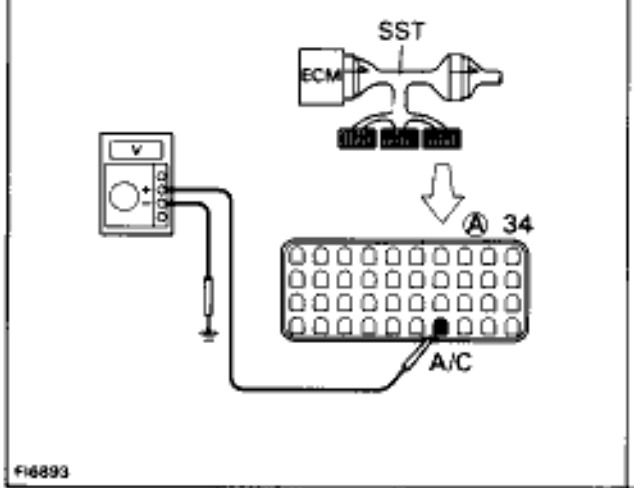

P (1) Connect SST (check harness "A").
(See page EG–510)
SST 09990–01000
(2) Start the engine.

C Measure voltage between terminal A/C of engine control module and body ground.

OK

A/C Switch	Voltage
OFF	7.5 – 14 V
ON	0 – 1.5 V

OK

NG **Check A/C compressor circuit. (See page EG–62)**

Check and replace engine control module.

Park Neutral Position Switch Circuit

CIRCUIT DESCRIPTION

The park/neutral position switch goes on when the shift lever is in the N or P shift position. When it goes on the terminal NSW of the ECM is grounded to body ground via the starter relay and theft deterrent ECU, thus the terminal NSW voltage becomes 0 V. When the shift lever is in the D, 2, L or R position, the park/neutral position switch goes off, so the voltage of ECM terminal NSW becomes positive battery voltage, the voltage of the ECM internal power source.

If the shift lever is moved from the N position to the D position, this signal is used for air–fuel ratio correction and for idle speed control (estimated control), etc.

When the park/neutral position switch is off, code ”51” is output in the test mode diagnosis. (This is not abnormal.)

WIRING DIAGRAM

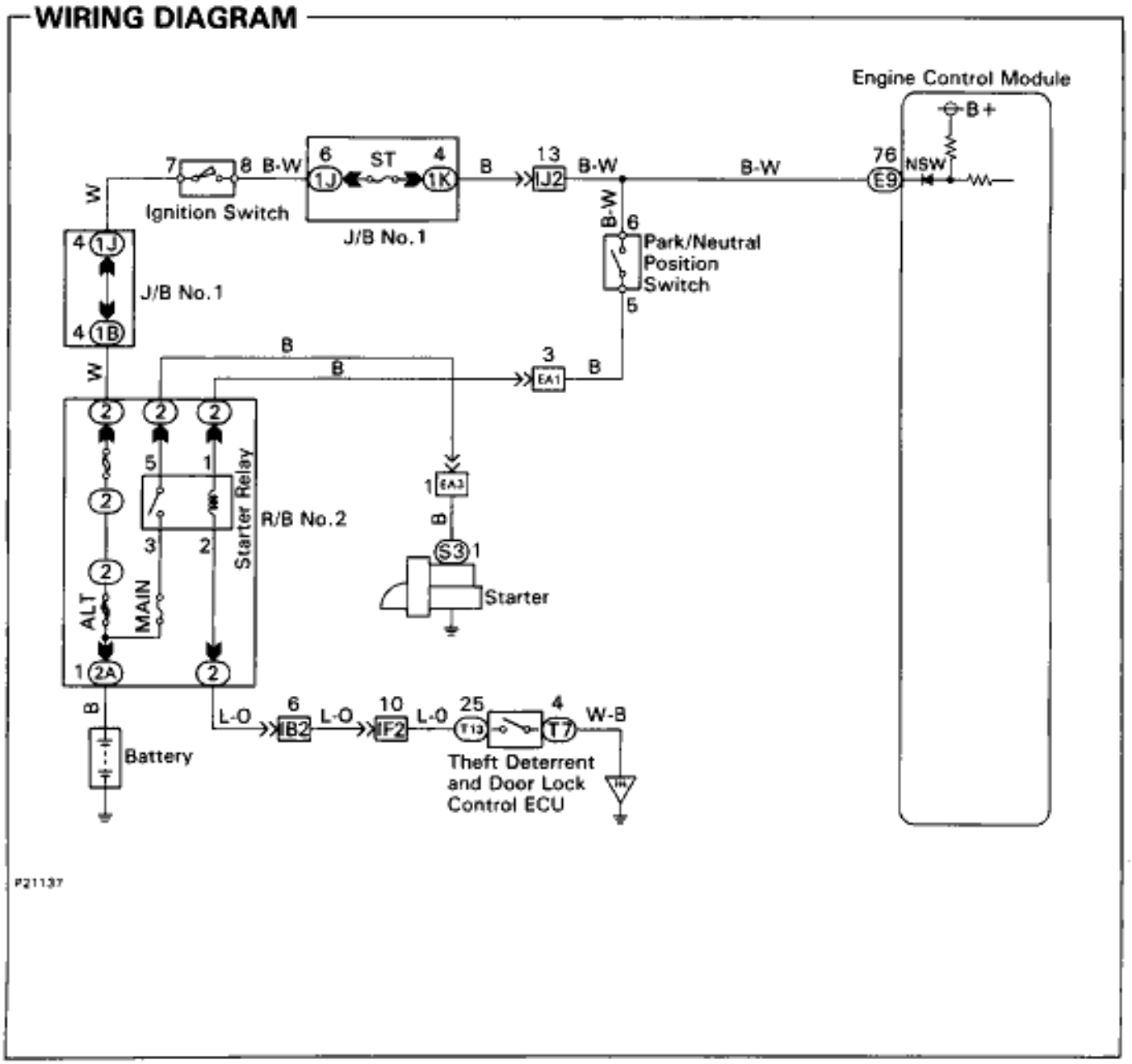

INSPECTION PROCEDURE

HINT: This diagnosis chart is based on the premise that the engine is being cranked under normal conditions. If the engine does not crank, proceed to the matrix chart of problem symptoms on page EG–514.

1 Check output condition of diagnostic trouble code 51.

PI6914

P

(1) Connect terminals TE2 and E1 of DLC2.
(2) Turn ignition switch ON.
(3) Crank the engine.
(4) Connect terminals TE1 and E1 of DLC2.

C

Check if diagnostic trouble code "51" is output when the shift lever is in the P and D shift positions.

Result

Shift Position	Result		
	OK	NG Type I	NG Type II
"P"	Normal Code	Code 51	Normal Code
"D"	Code 51	Code 51	Normal Code

OK

NG Type I → **Go to step 2.**

NG Type II → **Go to step 3.**

Proceed to next circuit inspection shown on matrix chart (See page EG–514).

2 Check for open in harness and connector between engine control module and park/neutral position switch (See page IN–30).

NG

Repair or replace harness or connector.

OK → **Check and replace engine control module.**

3 Check park/neutral position switch (See page AT2–101).

OK

Check and replace engine control module.

NG → **Replace park/neutral position switch.**

ECM Power Source Circuit

CIRCUIT DESCRIPTION

When the ignition switch is turned on, battery voltage is applied to the terminal IGSW of the ECM, and the main relay control circuit in the ECM sends a signal to the terminal M–REL of the ECM, switching on the main relay. This signal causes current to flow to the coil, closing the contacts of the main relay and supplying power to the terminal + B of the ECM.
If the ignition switch is turned off, the ECM continues to switch on the main relay for a maximum of 2 seconds for the initial setting of the IAC valve.

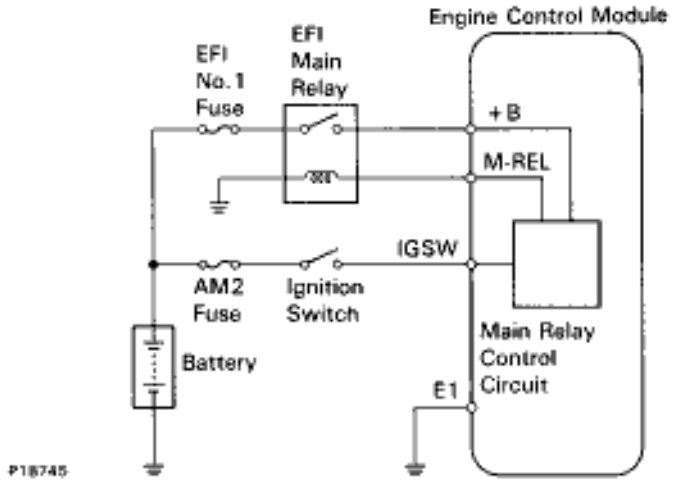

WIRING DIAGRAM

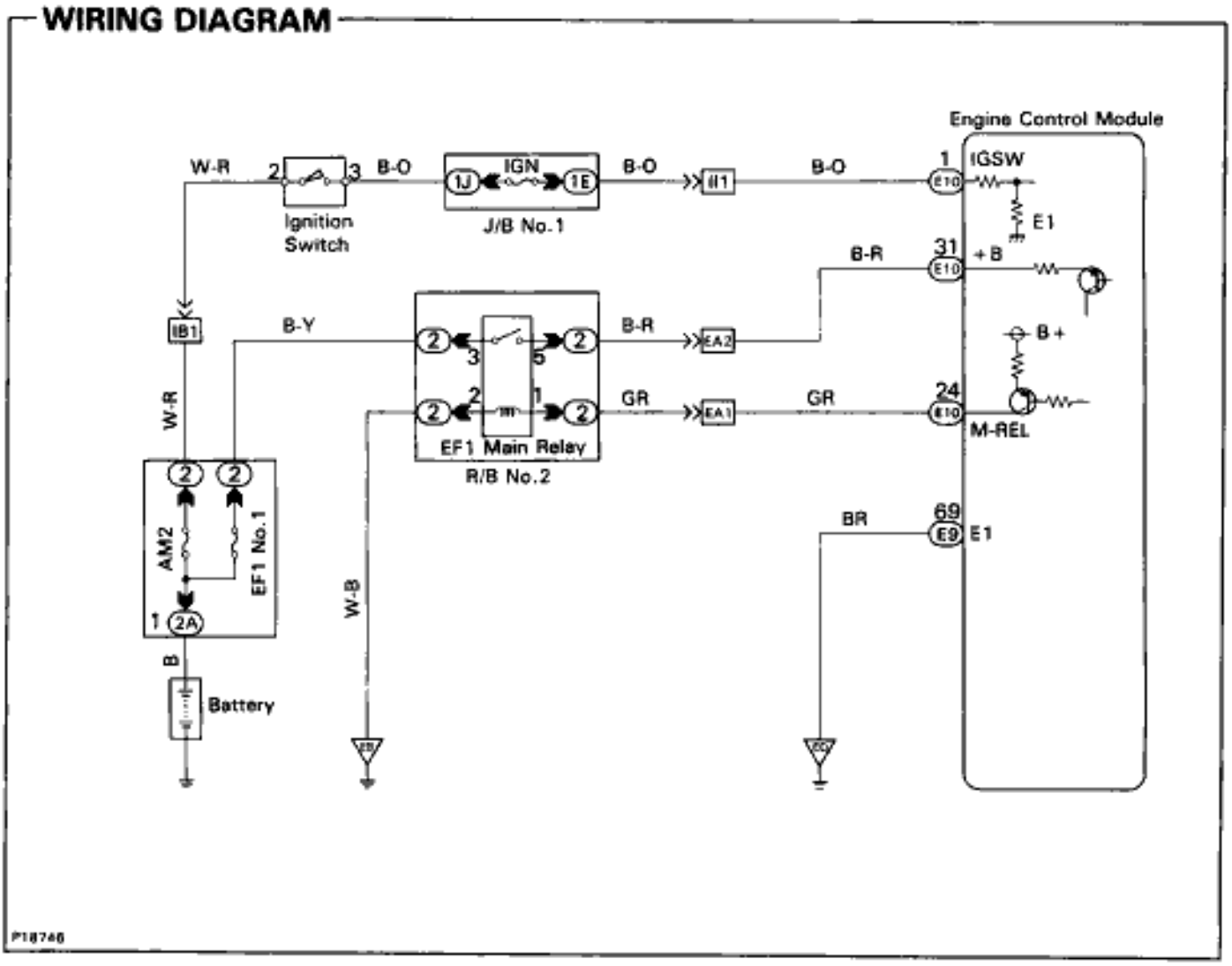

INSPECTION PROCEDURE

1 Check voltage between terminal +B and E1 of engine control module connector.

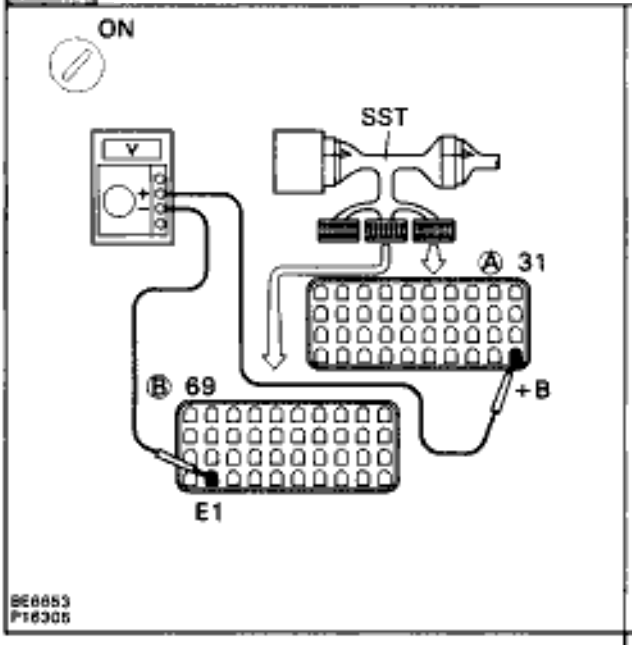

P (1) Connect SST (check harness “A”).
(See page EG–510)
SST 09990–01000
(2) Turn ignition switch ON.

C Measure voltage between terminal +B and E1 of engine control module connector.

OK **Voltage: 9 — 14 V**

NG

OK → **Proceed to next circuit inspection shown on matrix chart (See page EG–514).**

2 Check for open in harness and connector between terminal E1 of engine control module and body ground (See page IN–30).

OK

NG → **Repair or replace harness or connector.**

3 Check voltage between terminal IGSW of engine control module connector and body ground.

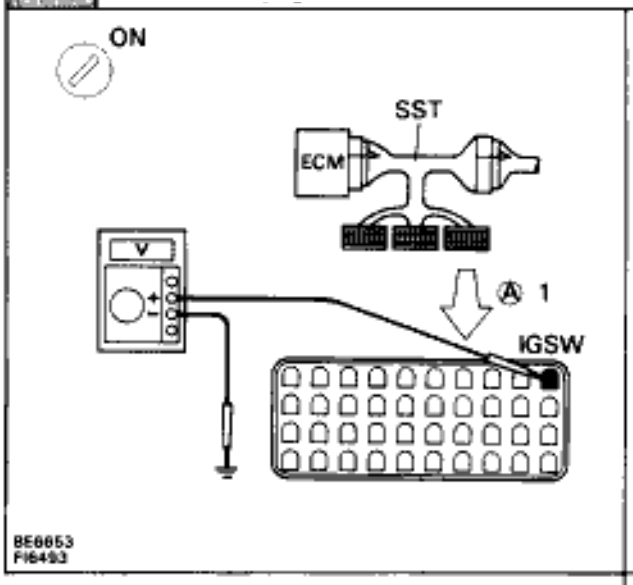

P Turn ignition switch ON.

C Measure voltage between terminal IGSW of engine control module connector and body ground.

OK **Voltage: 9 — 14 V**

NG

OK → **Go to step 6.**

4 Check IGN fuse.

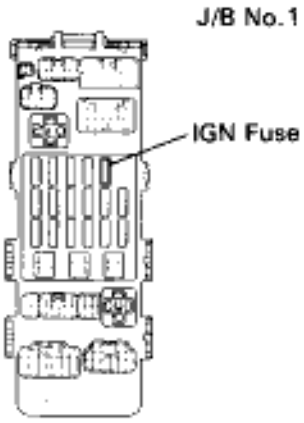

N08417

P Remove IGN fuse from J/B No.1.

C Check continuity of IGN fuse.

OK **Continuity**

OK

NG **Check for short in the harness and all the components connected to IGN fuse (See Electrical Wiring Diagram).**

5 Check ignition switch.

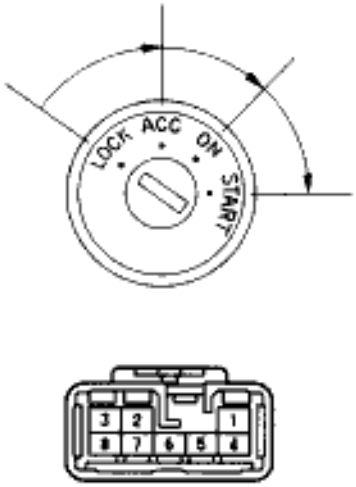

8E3582
g-8-2

P (1) Remove finish lower panel and finish lower panel LH.
(2) Remove heater to register duct No.2.

C Check continuity between terminals.

OK

continuity

Terminal / Switch position	1	2	3	4	5	7	8
LOCK							
ACC					○—○		
ON		○—○		○—	○—	○—	
START	○—	○—	○—	○—		○—	○—

OK

NG **Replace ignition switch.**

Check and repair harness and connector between battery and ignition switch, ignition switch and engine control module.

6 Check voltage between terminal M–REL of engine control module connector and body ground

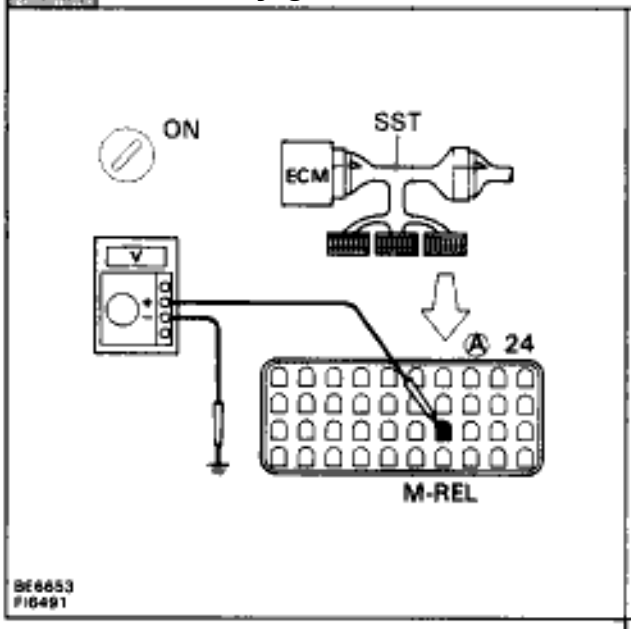

P Turn ignition switch ON.

C Measure voltage between terminal M–REL of engine control module connector and body ground.

OK **Voltage: 9 — 14 V**

OK

NG **Check and replace engine control module.**

7 Check EFI No.1 Fuse.

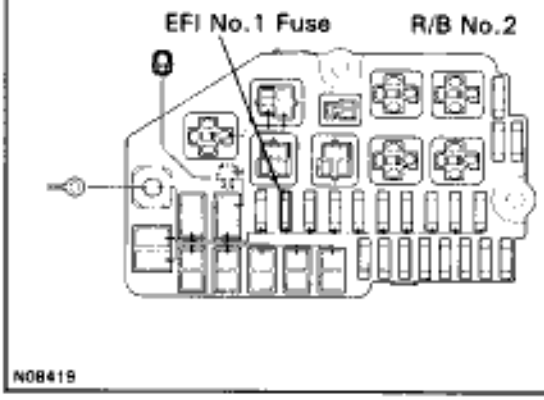

P Remove EFI No.1 fuse from R/B No.2.

C Check continuity of EFI No.1 fuse.

OK **Continuity**

OK

NG **Check for short in the harness and all the components connected to EFI No.1 fuse (See Electrical Wiring Diagram).**

8 Check EFI main relay.

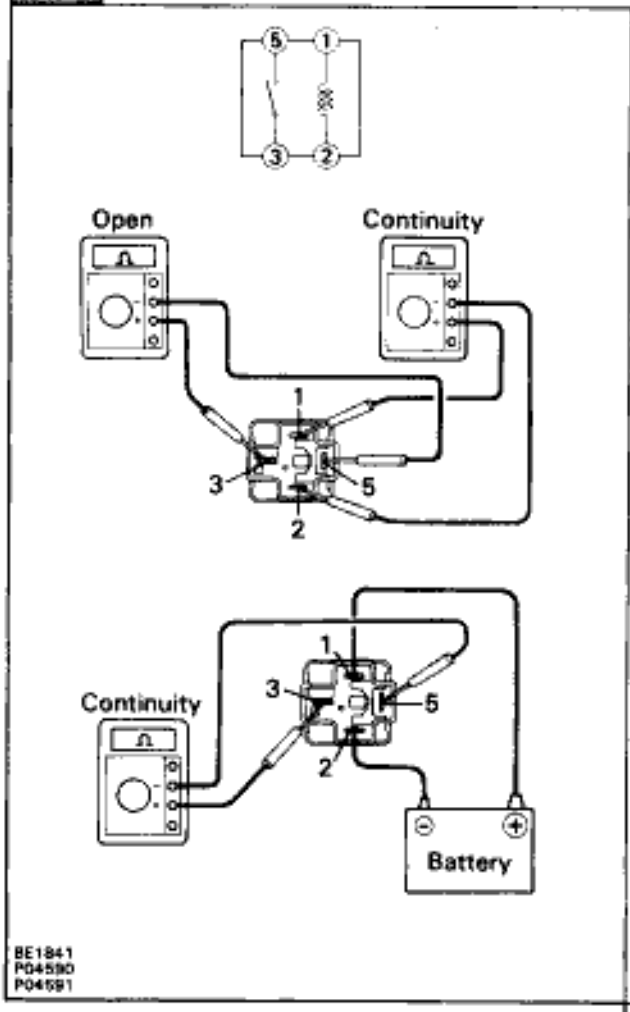

P Remove EFI main relay from R/B No.2.

C Check continuity between terminals of EFI main relay shown below.

OK

Terminals 3 and 5	Open
Terminals 1 and 2	Continuity (Reference value 72 Ω)

C (1) Apply battery positive voltage between terminals 1 and 2.
(2) Check continuity between terminals 3 and 5.

OK

Terminals 3 and 6	Continuity

OK

NG **Replace EFI main relay.**

9 Check for open and short in harness and connector between terminals M–REL of engine control module and body ground (See page IN–30).

OK

NG **Repair or replace harness or connector.**

Check and repair harness or connector between EFI No.1 fuse and battery.

Back Up Power Source Circuit

CIRCUIT DESCRIPTION

Battery positive voltage is supplied to terminal BATT of the ECM even when the ignition switch is off for use by the diagnostic trouble code memory and air–fuel ratio adaptive control value memory, etc.

WIRING DIAGRAM

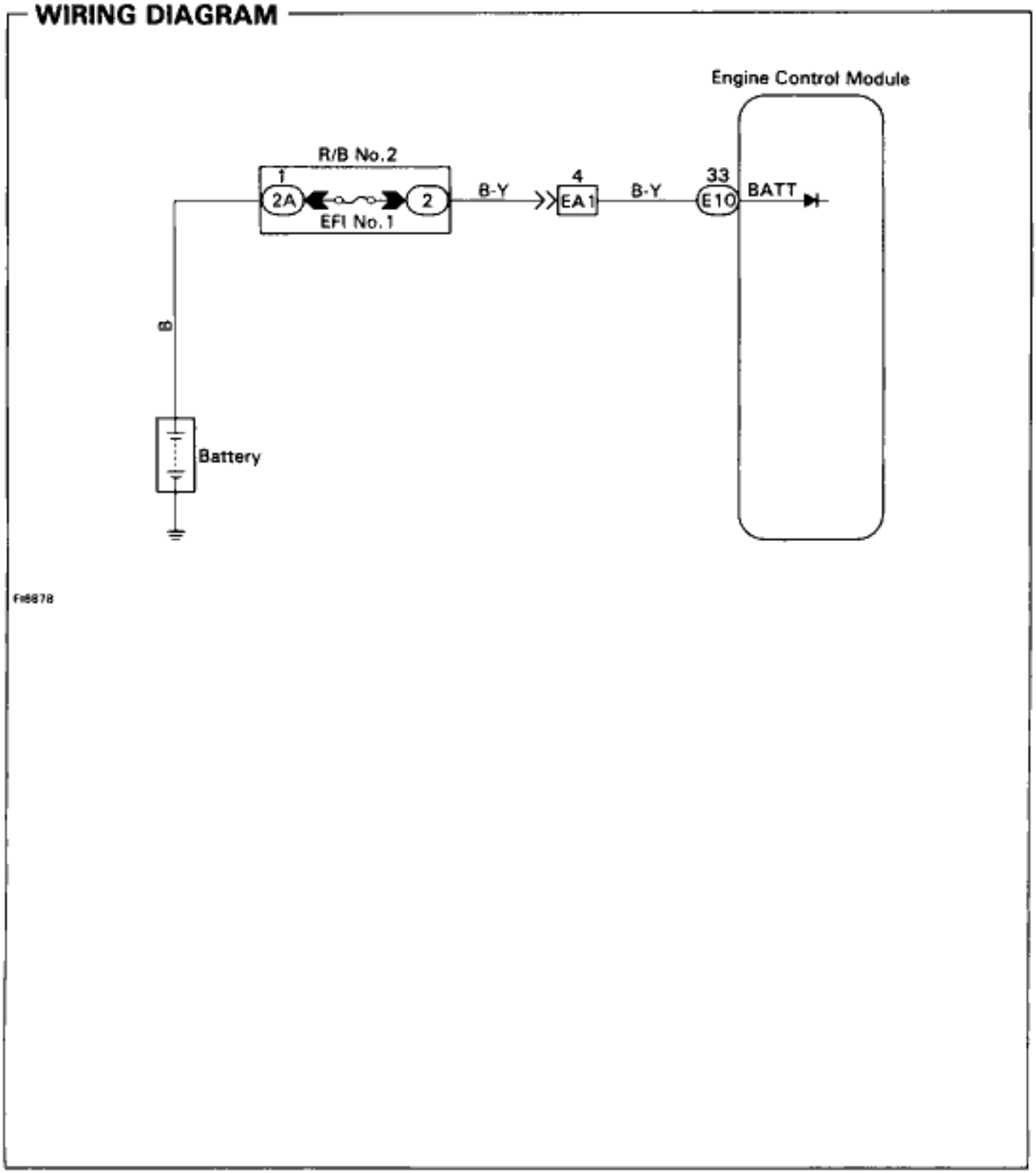

INSPECTION PROCEDURE

1 Check EFI No.1 Fuse.

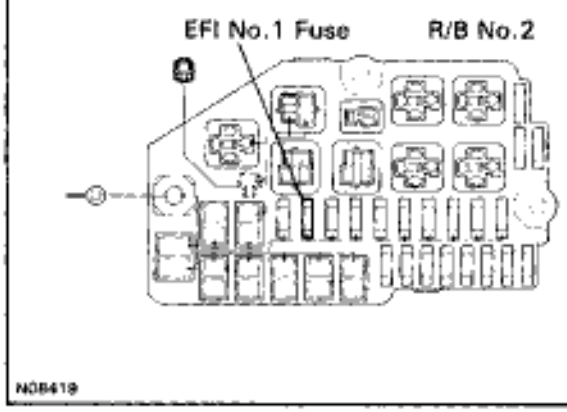

P Remove EFI No.1 fuse from R/B No.2.

C Check continuity of EFI No.1 fuse.

OK **Continuity**

OK

NG **Check for short in the harness and all the components connected to EFI No.1 fuse (See attached wiring diagram).**

2 Check voltage between terminal BATT of engine control module connector and body ground.

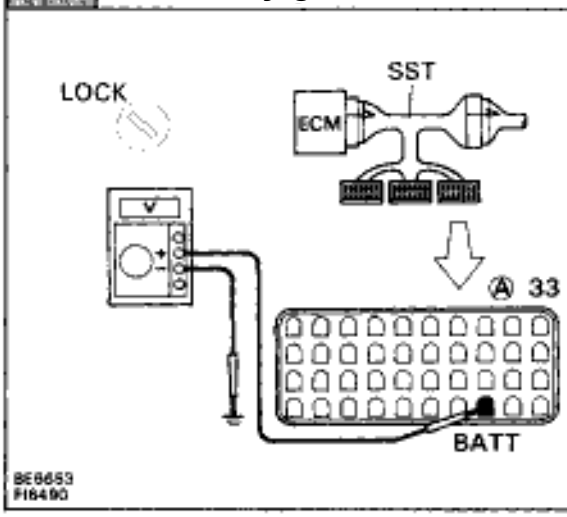

P Connect SST (check harness “A”).
See page EG–510)
SST 09990–01000

C Measure voltage between terminal BATT of engine control module connector and body ground.

OK **Voltage: 9 — 14 V**

OK

NG **Check and repair harness or connector between engine control module and EFI No.1 fuse, EFI No.1 fuse and battery.**

3 Are the diagnostic trouble codes still in the memory when the ignition switch is turned OFF?

YES

NO **Check and replace engine control module.**

Proceed to next circuit inspection shown on matrix chart (See page EG–514).

Injector Circuit

CIRCUIT DESCRIPTION

The injectors are located in the intake manifold. They inject fuel into the cylinders based on the signals from the engine control module.

Reference

INSPECTION USING OSCILLOSCOPE

- With engine idling measure waveform between terminals # 10 ~ 60 and E01 of engine control module.

HINT: The correct waveform is as shown.

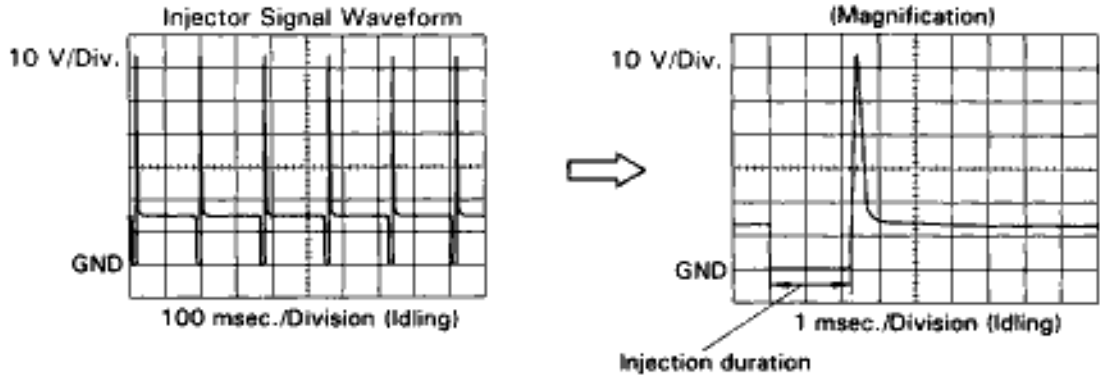

FI6568 FI6538

WIRING DIAGRAM

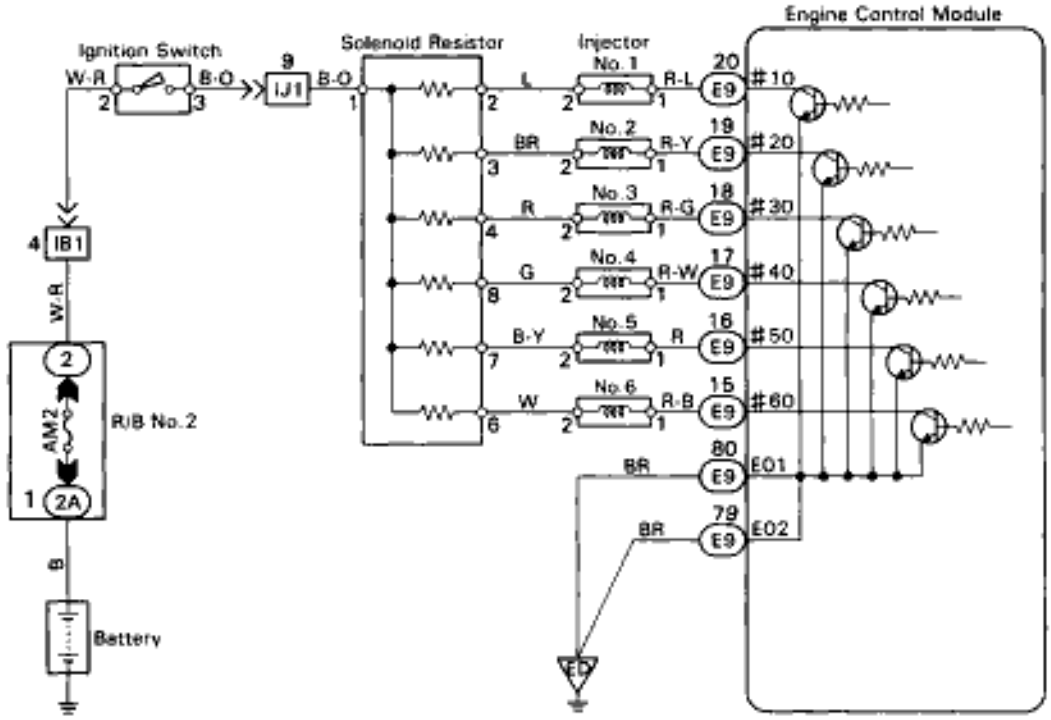

FI6934

INSPECTION PROCEDURE

1 Check voltage between terminals # 10 ~ 60 of engine control module and body ground.

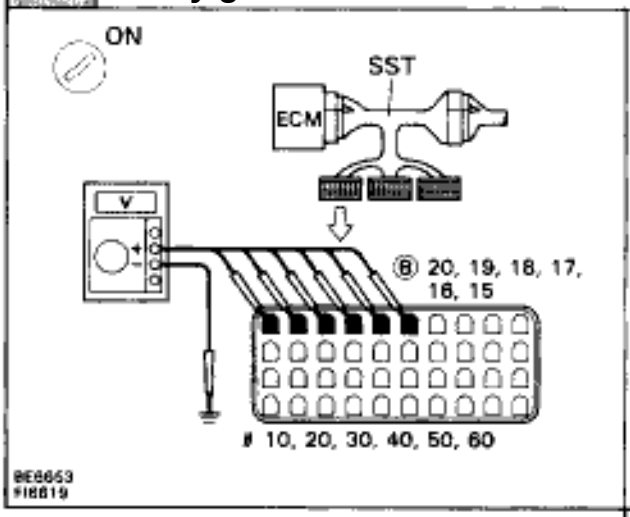

P (1) Connect SST (check harness "A").
See page EG–510)
SST 09990–01000
(2) Turn ignition switch ON.

C Measure voltage between terminals # 10 ~ 60 of engine control module and body ground.

OK **Voltage: 9 — 14 V**

NG

OK Go to step 4.

2 Check AM2 fuse.

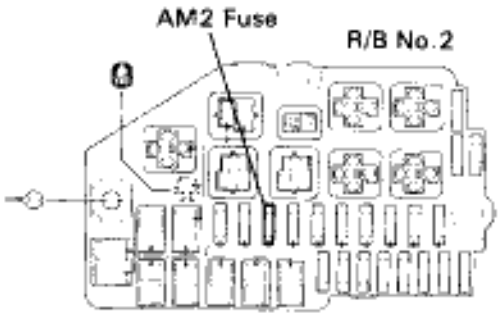

P Remove AM2 fuse from R/B No.2.

C Check continuity of AM2 fuse.

OK **Continuity**

OK

NG **Check for short in the harness and all the components connected to AM2 fuse.**

3 Check resistance between terminals 1 and 2 ~ 4, 6 ~ 8 of solenoid resistor connector.

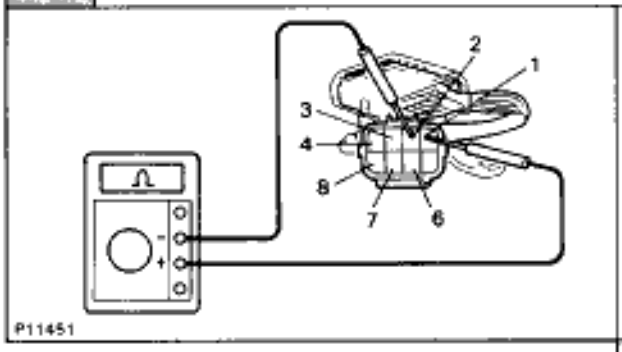

P Disconnect solenoid resistor connector.

C Measure resistance between terminals 1 and 2 ~ 4, 6 ~ 8 of solenoid resistor connector.

OK **Resistance: Approx. 6 at 20˚C (68˚F)**

NG **Replace solenoid resistor.**

OK

Check and repair harness and connector between engine control module and battery.

4 Check for open in harness and connector between terminal E01, E02 of ECM connector and body ground (See page IN–30).

OK

NG **Repair or replace harness or connector.**

5 Check injectors.

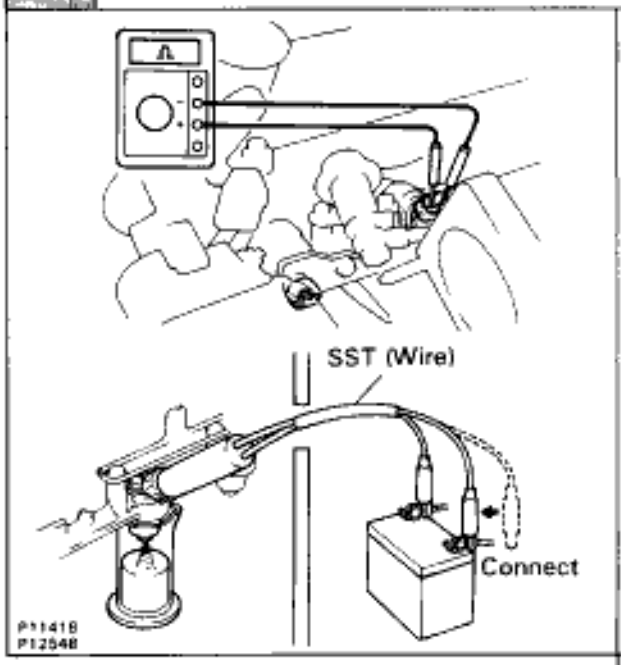

P Disconnect injector connector.
See page EG–273)

C Measure resistance of injector.

OK **Resistance: Approx. 1.95 at 20˚C (68˚F)**

C Check injection volume of injector.
(See page EG–279)

OK
- **Injection volume**
  124 ~ cm^3/15 sec.
  (7.6 — 8.8 cu in./15 sec.)
  Difference between each injector:
  Less than 10 cm^3 (0.6 cu in.)
- **Leakage**
  Fuel drop: One drop or less per minute

NG **Replace injector.**

OK

Check and replace engine control module.

IAC Valve Circuit

CIRCUIT DESCRIPTION

The IAC valve is situated on the intake air chamber Intake air bypassing the throttle valve is directed to the IAC valve through a passage.
A step motor is built into the IAC valve. It consists of 4 coils, a magnetic rotor, valve shaft and a valve.
When the current flows to the coils due to signals from the ECM, the rotor turns and moves the valve shaft forward or backward, changing the clearance between the valve and the valve seat.
In this way the intake air volume bypassing the throttle valve is regulated, controlling the engine speed.
There are 125 possible positions to which the valve can be opened.

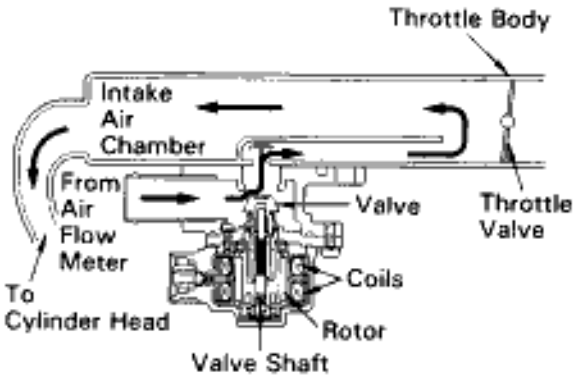

FI6973

Reference

INSPECTION USING OSCILLOSCOPE

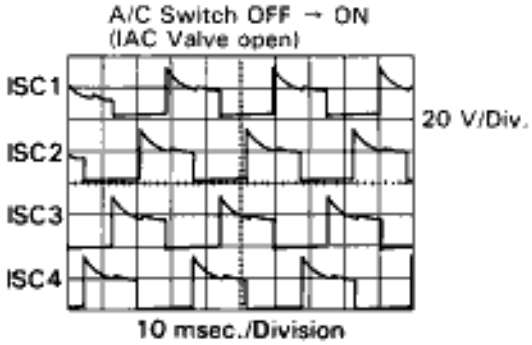

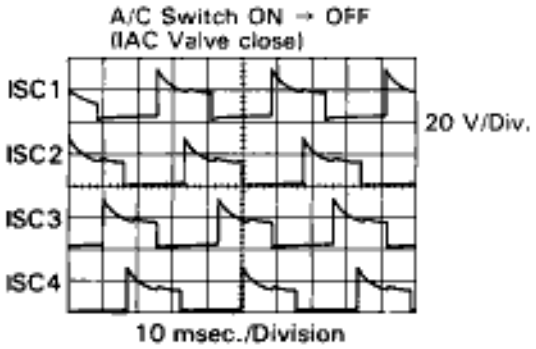

FI6536
FI6537

- With the engine idling measure wave forms between terminals ISC1, ISC2, ISC3, ISC4 and E01 of engine control module when A/C switch ON or OFF.

HINT:

The correct waveforms are as shown.

WIRING DIAGRAM

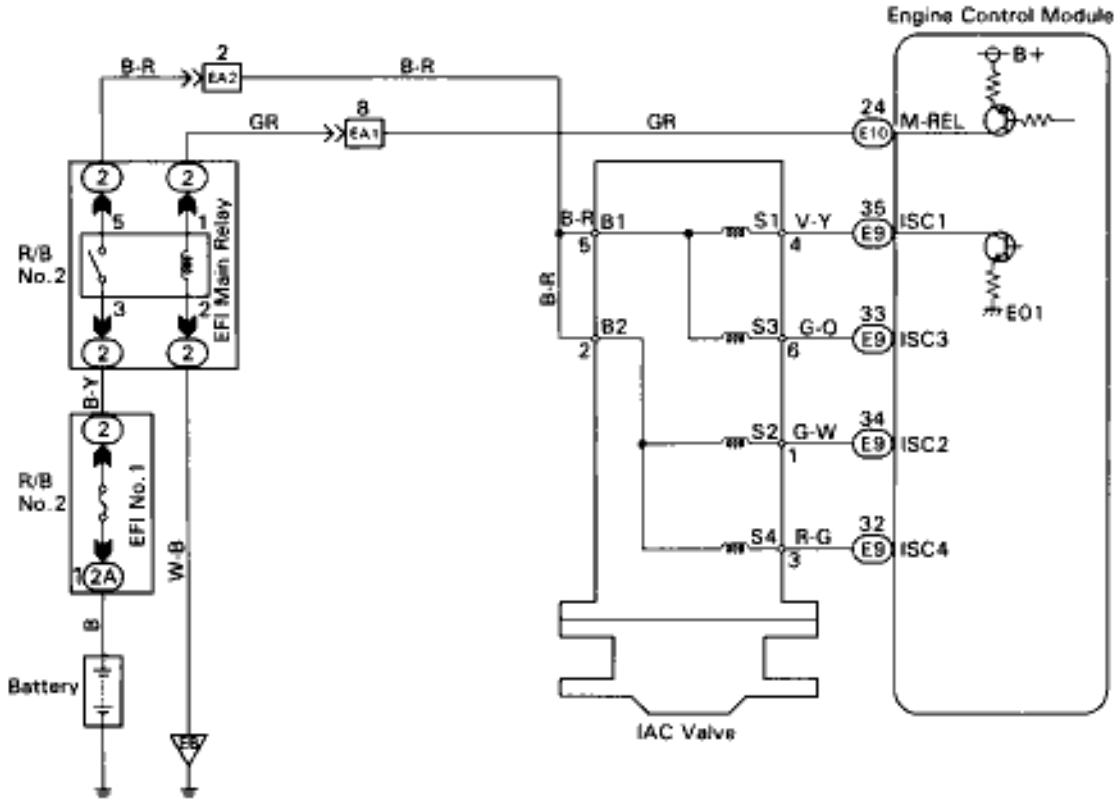

F16935

INSPECTION PROCEDURE

1 Check IAC valve.

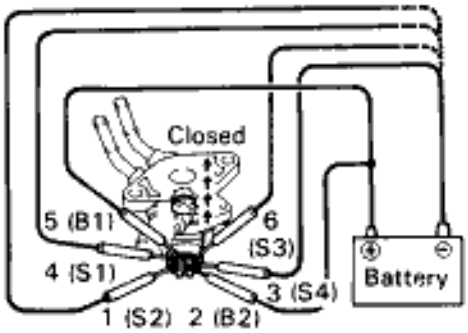

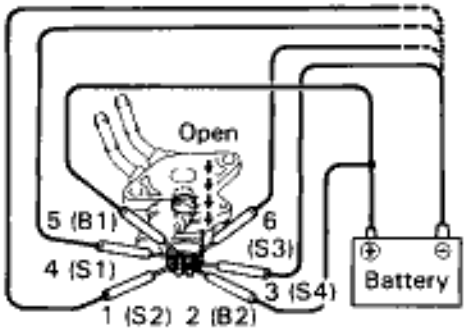

F11694
P11389
P11388

P Disconnect IAC valve connector.

C Measure resistance between terminals shown below.

OK

Terminal	Resistance
5 (B1) – 4 (S1)	10 Ω – 30 Ω
5 (B1) – 6 (S3)	10 Ω – 30 Ω
2 (B2) – 1 (S2)	10 Ω – 30 Ω
2 (B2) – 3 (S4)	10 Ω – 30 Ω

P Remove IAC Valve.

C
(1) Connect the battery positive lead to terminals 5 (B1) and 2 (B2), and the negative lead to terminals 4(S1)—1(S2)—6(S3)—3(S4) in that order.
(2) Connect the battery positive lead to terminals 5 (B1) and 2 (B2) and the negative lead to terminals 3(S4)—6(S3)—1(S2)—4(S1) in that order.

OK
(1) The valve moves in the closing direction
(2) The valve moves in the opening direction.

OK

NG **Replace IAC valve.**

2 Check for open and short in harness and connector between EFI main relay and IAC valve, IAC valve and engine control module (See page IN–30).

OK

NG **Repair or replace harness or connector.**

Proceed to next circuit inspection shown on matrix chart (See page EG–514).

Turbo Control Circuit

CIRCUIT DESCRIPTION

[HINT] This turbocharger system has 3 control valves (Exhaust Bypass Valve, Exhaust Gas Control Valve, Intake Air control Valve). Each valve is controlled by turbo pressure which is controlled by VSV based on signals from ECM.

1. **EXHAUST BYPASS VALVE**

   This valve controls the opening or closing of the exhaust bypass passage to ensure a smooth transition from 1 turbo operation to 2 turbo operation.

2. **EXHAUST GAS CONTROL VALVE**

   This valve controls the opening or closing of the No.2 exhaust passage in order to operate No.2 turbocharger.

3. **INTAKE AIR CONTROL VALVE**

   This valve controls the opening or closing of the No.2 intake air passage in order to pass the charged air from No.2 turbocharger.

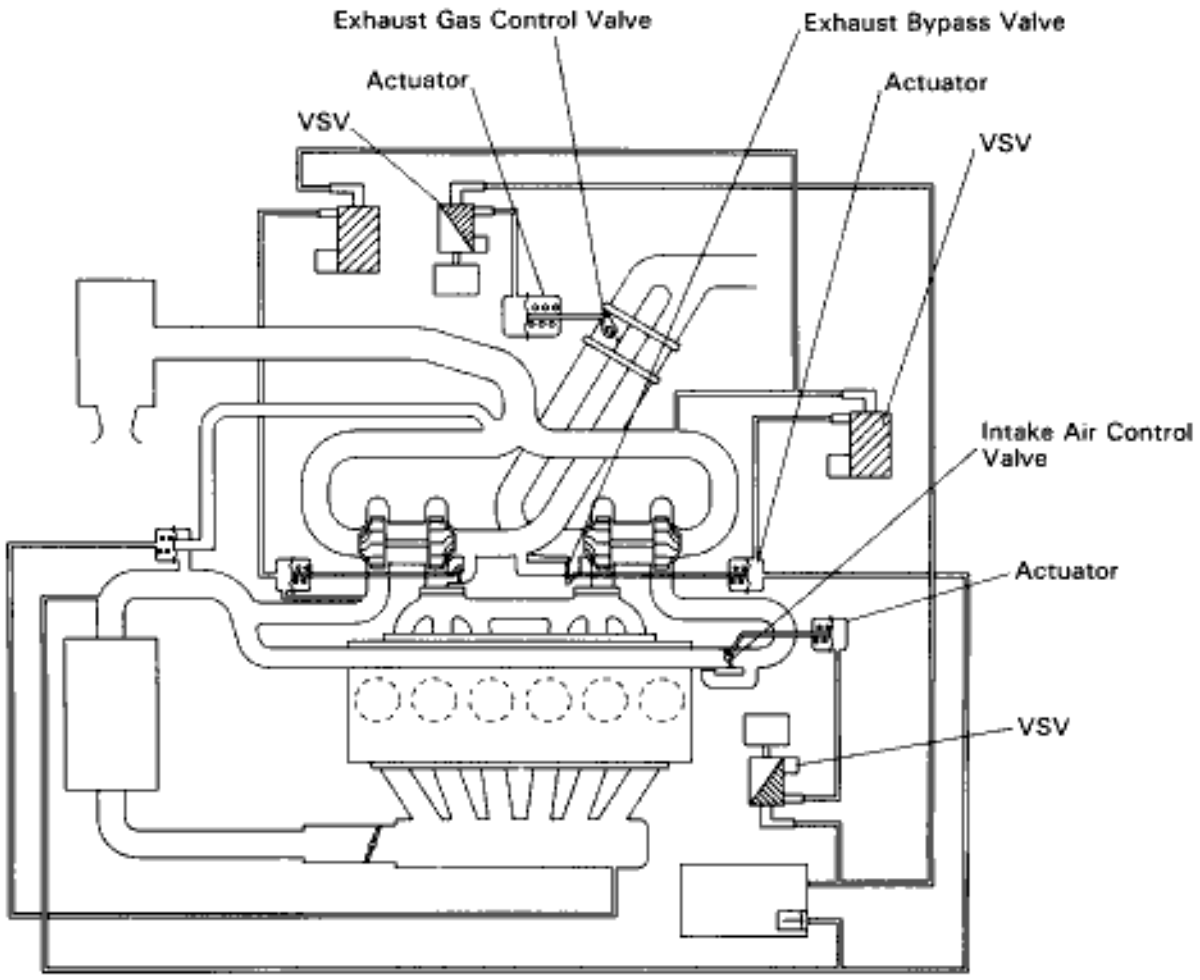

WIRING DIAGRAM

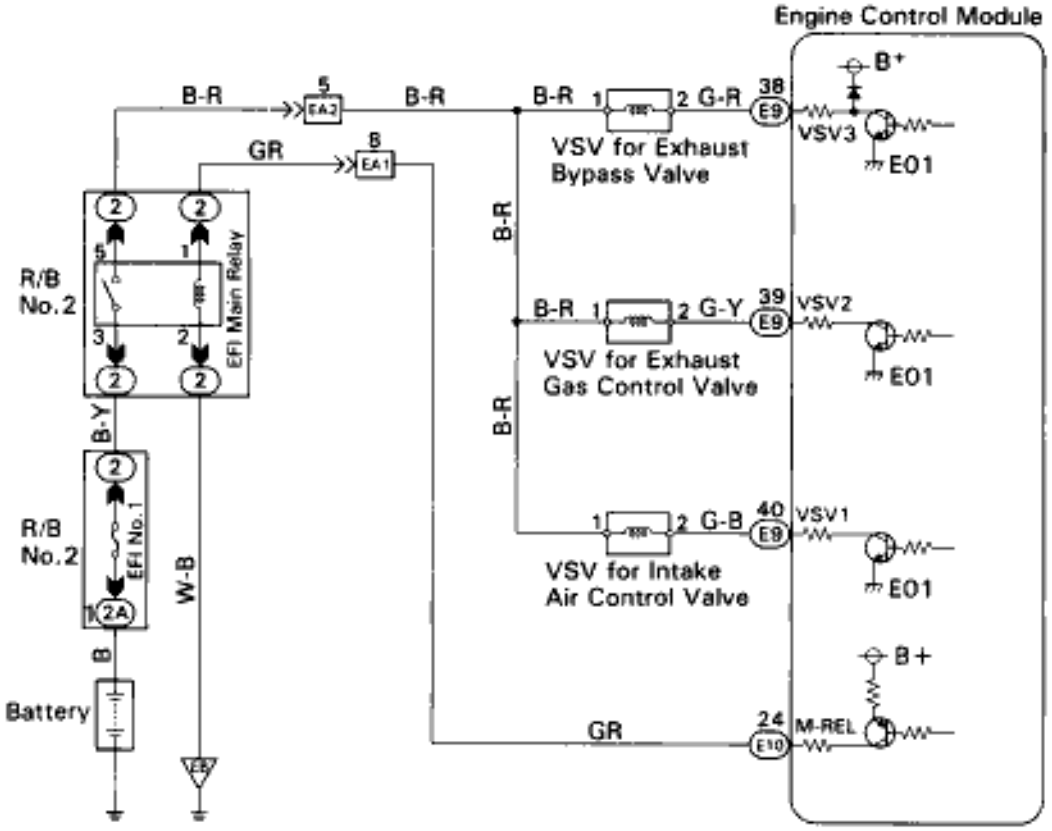

FI6957

INSPECTION PROCEDURE

1 Check VSV for Exhaust Bypass Valve

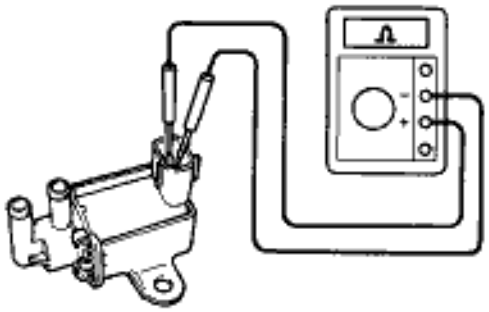

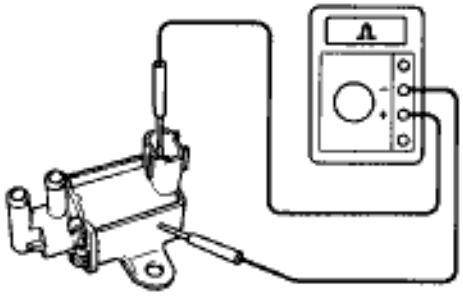

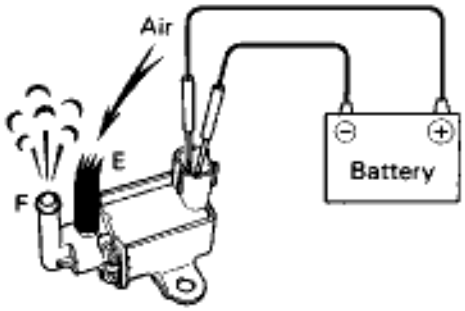

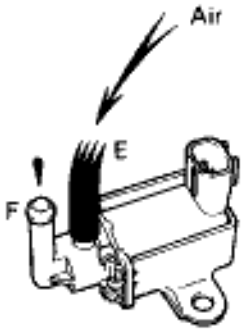

P11374
P11375
P11377
P11376

P
(1) Remove VSV.
(2) Disconnect VSV connector.

C
(1) Measure resistance between terminals.
(2) Measure resistance between each terminal and the body.

OK
(1) Resistance: 22 —26 at 20˚C (68˚F)
(2) Resistance: 1 M or higher

C
Check operation of VSV when battery positive voltage is applied and released to the VSV terminals.

OK
Battery positive voltage is applied:
Air from port E is flowing out through port F.

Battery positive voltage is not applied:
Closed air passage from port E to F.

OK

NG **Replace VSV for exhaust bypass valve.**

2 Check VSV for Exhaust Gas Control Valve

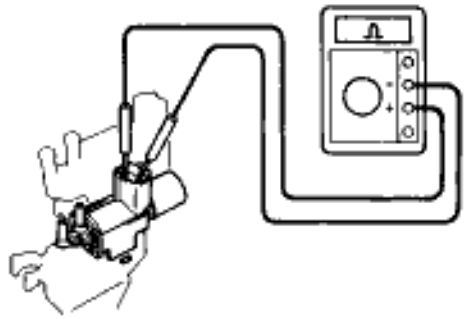

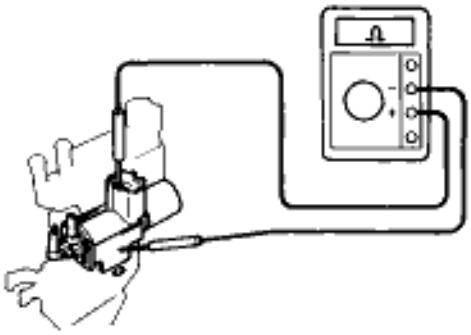

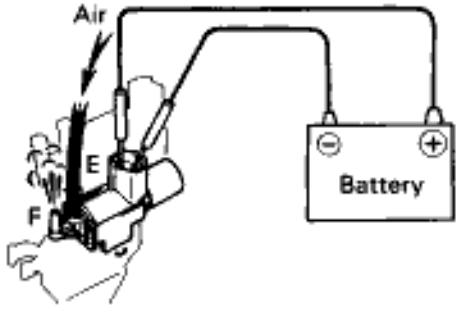

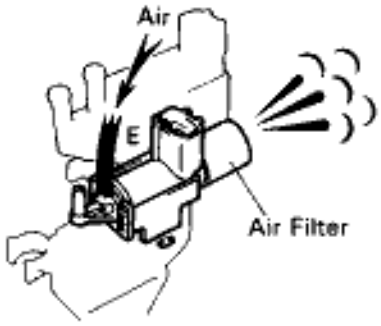

P11382
P11383
P11384
P11415

P (1) Remove VSV.
(2) Disconnect VSV connector.

C (1) Measure resistance between terminals.
(2) Measure resistance between each terminal and the body.

OK **(1) Resistance: 38 — 44 at 20˚C (68˚F)**
(2) Resistance: 1 M or higher

C Check operation of VSV when battery positive voltage is applied and released to the VSV terminals.

OK **Battery positive voltage is applied:**
Air from port E is flowing out through port F.

Battery positive voltage is not applied:
Air from port E is flowing out through the air filter.

OK

NG **Replace VSV for exhaust gas control valve.**

3 Check VSV for Intake Air Control Valve

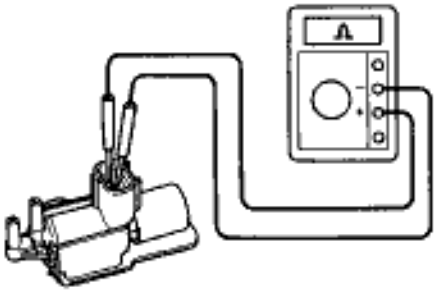

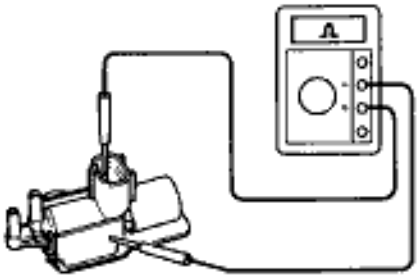

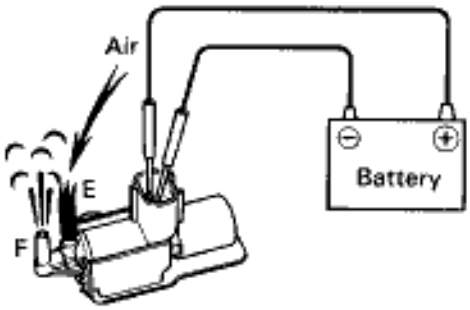

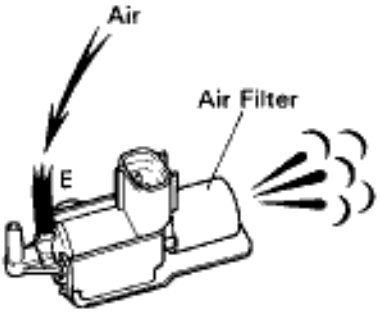

P11371
P11372
P11373
P11414

P (1) Remove VSV.
(2) Disconnect VSV connector.

C (1) Measure resistance between terminals.
(2) Measure resistance between each terminal and the body.

OK **(1) Resistance: 38.5 — 44.5 at 20˚C (68˚F)**
(2) Resistance: 1 M or higher

C Check operation of VSV when battery positive voltage is applied and released to the VSV terminals.

OK **Battery positive voltage is applied:**
Air from port E is flowing out through port F.

Battery positive voltage is not applied:
Air from port E is flowing out through the air filter.

OK

NG **Replace VSV for intake gas control valve.**

4 Check voltage between terminal VSV1, VSV2, VSV3 of engine control module connector and body ground.

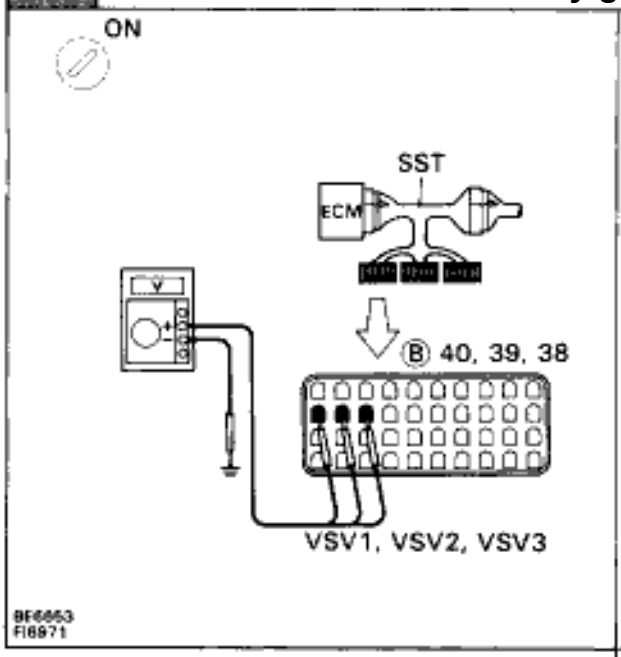

P (1) Connect SST (check harness "A").
(See page EG–510)
(2) Turn ignition switch ON.

C Measure voltage between terminal VSV1, VSV2, VSV3 of engine control module connector and body ground.

OK **Voltage: 9 — 14 V**

NG

OK **Check actuator. (See page EG–144, 158)**

5 Check for open and short in harness and connector between EFI main replay and engine control module (See page IN–30).

OK

NG **Repair or replace harness or connector.**

Check and replace engine control module.

VSV Circuit for Fuel Pressure Control

CIRCUIT DESCRIPTION

The ECM turns on a VSV (Vacuum Switching Valve) to draw air into the diaphragm chamber of the pressure regulator if it detects that the temperature of the engine coolant is too high during engine starting.
The air drawn into the chamber increases the fuel pressure to prevent fuel vapor lock at high engine temperature in order to help the engine start when it is warm.
Fuel pressure control ends approx. 120 sec. after the engine is started.

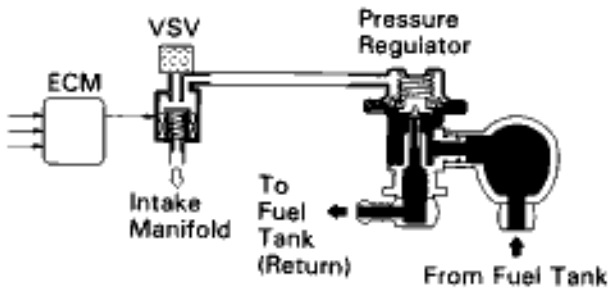

F18969

WIRING DIAGRAM

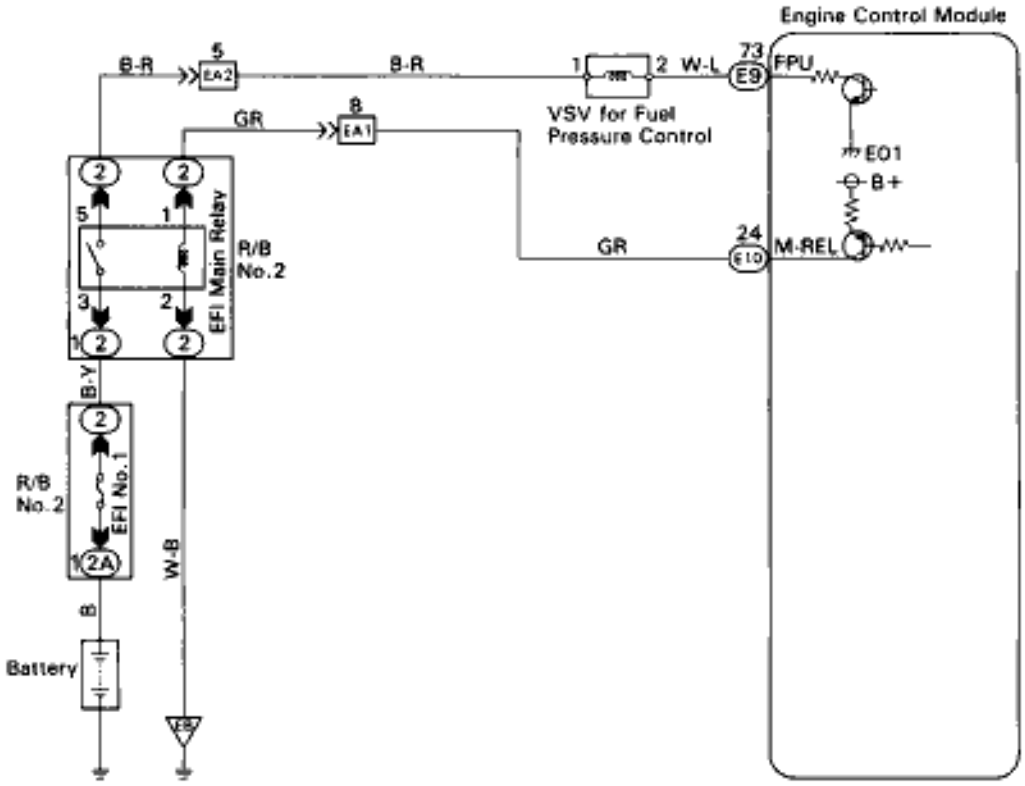

F18938

INSPECTION PROCEDURE

1 Check VSV for fuel pressure control.

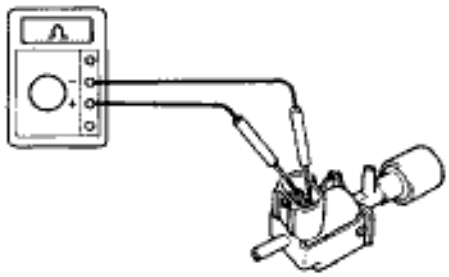

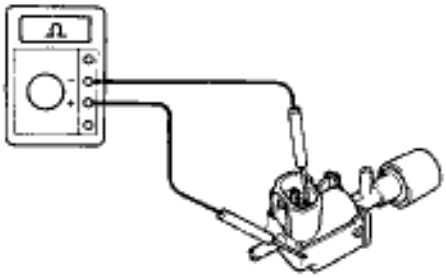

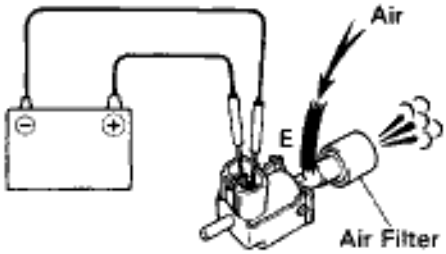

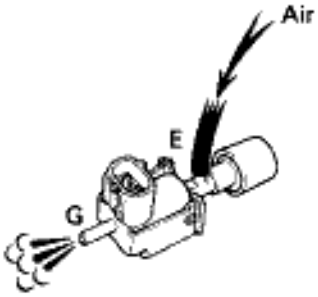

P11340
P11341
P11343
P11342

P
(1) Remove VSV.
(2) Disconnect VSV connector.

C
(1) Measure resistance between terminals.
(2) Measure resistance between each terminal and the body.

OK
(1) Resistance: 33 — 39 at 20°C (68°F)
(2) Resistance: 1 M or higher

C
Check operation of VSV when battery positive voltage is applied and released to the VSV terminals.

OK
Battery positive voltage is applied:
Air from port E is flowing out through the air filter.

Battery positive voltage is not applied:
Air from port E is flowing out through port G.

OK

NG **Replace VSV for fuel pressure control.**

2 Check voltage between terminal FPU of engine control module connector and body ground.

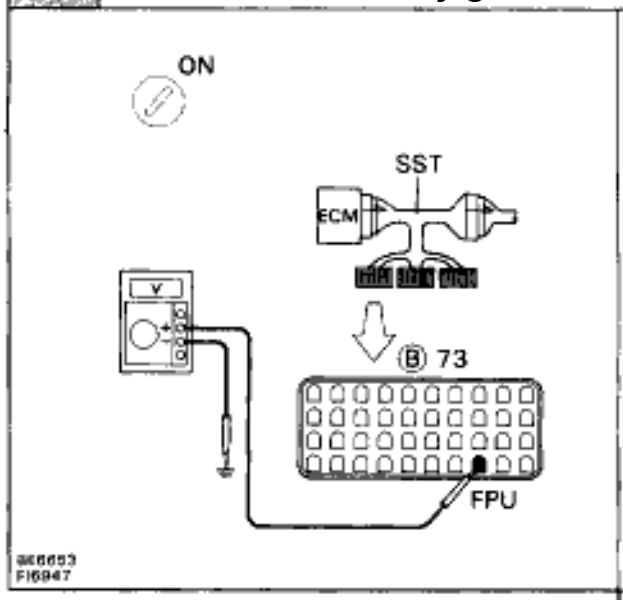

P (1) Connect SST (check harness “A”).
(See page EG–510)
SST 09990–01000
(2) Turn ignition switch ON.

C Measure voltage between terminal FPU of engine control module connector and body ground.

OK **Voltage: 9 — 14 V**

NG

OK **Proceed to next circuit inspection shown on matrix chart (See page Eg–514).**

3 Check for open and short in harness and connector between engine control module and VSV, VSV and EFI main relay (See page IN–30).

OK

NG **Repair or replace harness or connector.**

Check and replace engine control module.

TE1 TE2 Terminal Circuit

CIRCUIT DESCRIPTION

Terminal TE1 is located in data link connectors 1 and 2. Terminal TE2 is located ONLY in data link connector 2.

The data link connector 1 is located in the engine compartment and the data link connector 2 is located in the cabin. When these terminals are connected with the E1 terminal, diagnostic trouble codes in normal mode or test mode can be read from the malfunction indicator lamp on the telltale light RH.

WIRING DIAGRAM

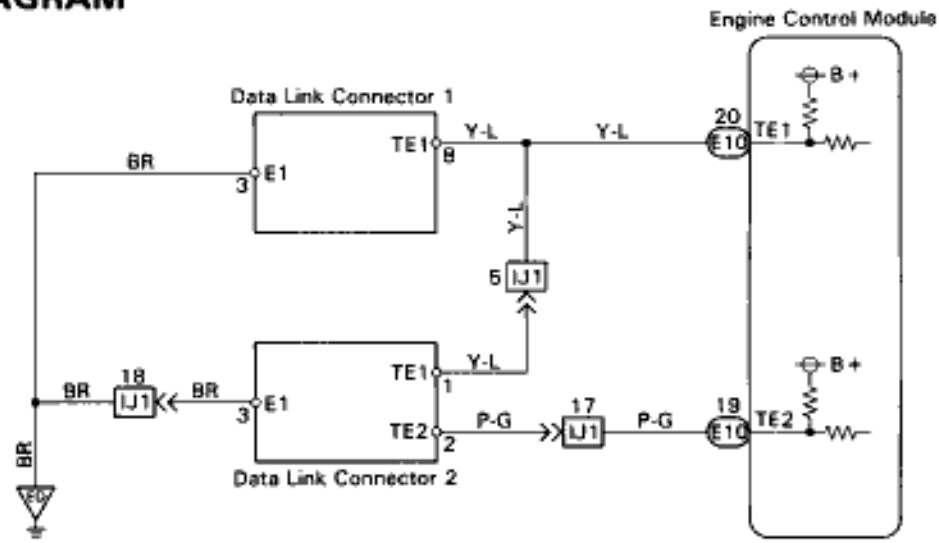

INSPECTION PROCEDURE

HINT: If terminals TE1 and TE2 are connected with terminal E1, diagnostic trouble code is not output or test mode is not activated.
Even though terminal TE1 is not connected with terminal E1, the malfunction indicator lamp blinks.
For the above phenomenon, the likely cause is an open or short in the wire harness, or malfunction inside the ECM.

1 Check voltage between terminals TE1, TE2 and E1 of data link connectors 1 and 2.

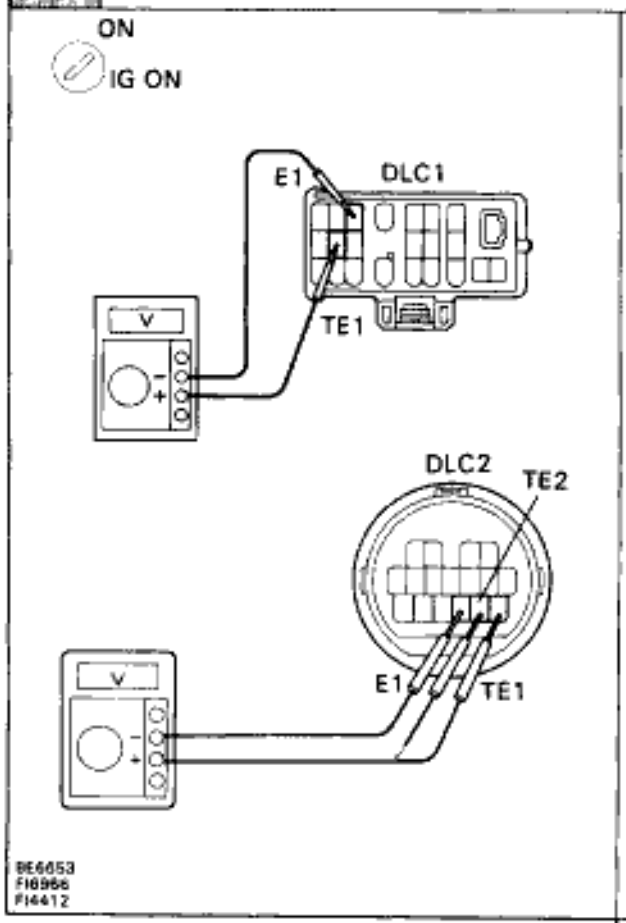

P Turn ignition switch ON.

C (1) For DLC1, measure voltage between terminal TE1 and E1.
(2) For DLC2 measure voltage between terminals TE1, TE2 and E1.

OK **Voltage: 9 — 14 V**

NG → **OK** → **Check and replace engine control module.**

2 Check continuity between terminal E1 of data link connectors 1, 2 and body ground.

OK → **NG** → **Repair or replace harness or connector.**

3 Check for open and short in harness and connector between engine control module and data link connectors 1, 2 (See page IN–30).

OK → **NG** → **Repair or replace harness or connector.**

Check and replace engine control module.