2006 Pontiac Torrent Owner Manual

Seats and Restraint Systems 1-1
- Front Seats 1-2
- Rear Seats 1-10
- Safety Belts 1-12
- Child Restraints 1-30
- Airbag System 1-53
- Restraint System Check 1-62

Features and Controls 2-1
- Keys 2-2
- Doors and Locks 2-6
- Windows 2-11
- Theft-Deterrent Systems 2-13
- Starting and Operating Your Vehicle 2-15
- Mirrors 2-27
- OnStar® System 2-32
- Storage Areas 2-34
- Sunroof 2-40

Instrument Panel 3-1
- Instrument Panel Overview 3-4
- Climate Controls 3-19
- Warning Lights, Gages, and Indicators 3-23
- Audio System(s) 3-38

Driving Your Vehicle 4-1
- Your Driving, the Road, and Your Vehicle 4-2
- Towing 4-36

Service and Appearance Care 5-1
- Service 5-3
- Fuel 5-5
- Checking Things Under the Hood 5-10
- All-Wheel Drive 5-40
- Bulb Replacement 5-42
- Windshield Wiper Blade Replacement 5-45
- Tires 5-46
- Appearance Care 5-74
- Vehicle Identification 5-82
- Electrical System 5-83
- Capacities and Specifications 5-88

Maintenance Schedule 6-1
- Maintenance Schedule 6-2

Customer Assistance and Information 7-1
- Customer Assistance and Information 7-2
- Reporting Safety Defects 7-14

Index 1

Downloaded from www.Manualslib.com manuals search engine

GENERAL MOTORS, GM, the GM Emblem, PONTIAC, and the PONTIAC Emblem are registered trademarks; and the name TORRENT is a trademark of General Motors Corporation.

This manual includes the latest information at the time it was printed. We reserve the right to make changes after that time without further notice. For vehicles first sold in Canada, substitute the name “General Motors of Canada Limited” for Pontiac Division whenever it appears in this manual.

Keep this manual in the vehicle, so it will be there if it is needed while you are on the road. If the vehicle is sold, leave this manual in the vehicle.

Canadian Owners

A French language copy of this manual can be obtained from your dealer or from:

Helm, Incorporated
P.O. Box 07130
Detroit, MI 48207

How to Use This Manual

Many people read the owner manual from beginning to end when they first receive their new vehicle. If this is done, it can help you learn about the features and controls for the vehicle. Pictures and words work together in the owner manual to explain things.

Index

A good place to quickly locate information about the vehicle is the Index in the back of the manual. It is an alphabetical list of what is in the manual and the page number where it can be found.

Litho in U.S.A.
Part No. 06TORRENT A First Printing

©2005 General Motors Corporation. All Rights Reserved.

Downloaded from www.Manualslib.com manuals search engine

Safety Warnings and Symbols

There are a number of safety cautions in this book. We use a box and the word CAUTION to tell about things that could hurt you if you were to ignore the warning.

⚠ CAUTION:

These mean there is something that could hurt you or other people.

In the caution area, we tell you what the hazard is. Then we tell you what to do to help avoid or reduce the hazard. Please read these cautions. If you do not, you or others could be hurt.

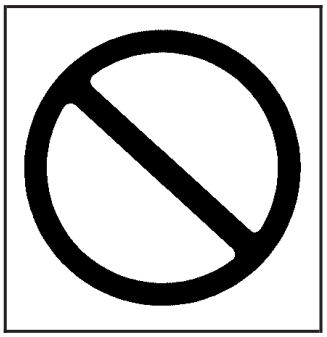

You will also find a circle with a slash through it in this book. This safety symbol means “Do Not,” “Do Not do this” or “Do Not let this happen.”

Downloaded from www.Manualslib.com manuals search engine

Vehicle Damage Warnings

Also, in this manual you will find these notices:

Notice: **These mean there is something that could damage your vehicle.**

A notice tells about something that can damage the vehicle. Many times, this damage would not be covered by your vehicle's warranty, and it could be costly. But the notice will tell what to do to help avoid the damage.

When you read other manuals, you might see CAUTION and NOTICE warnings in different colors or in different words.

There are also warning labels on the vehicle. They use the same words, CAUTION or NOTICE.

Vehicle Symbols

The vehicle has components and labels that use symbols instead of text. Symbols are shown along with the text describing the operation or information relating to a specific component, control, message, gage, or indicator.

If you need help figuring out a specific name of a component, gage, or indicator, reference the following topics:

- Seats and Restraint Systems in Section 1
- Features and Controls in Section 2
- Instrument Panel Overview in Section 3
- Climate Controls in Section 3
- Warning Lights, Gages, and Indicators in Section 3
- Audio System(s) in Section 3
- Engine Compartment Overview in Section 5

Downloaded from www.Manualslib.com manuals search engine

These are some examples of symbols that may be found on the vehicle:

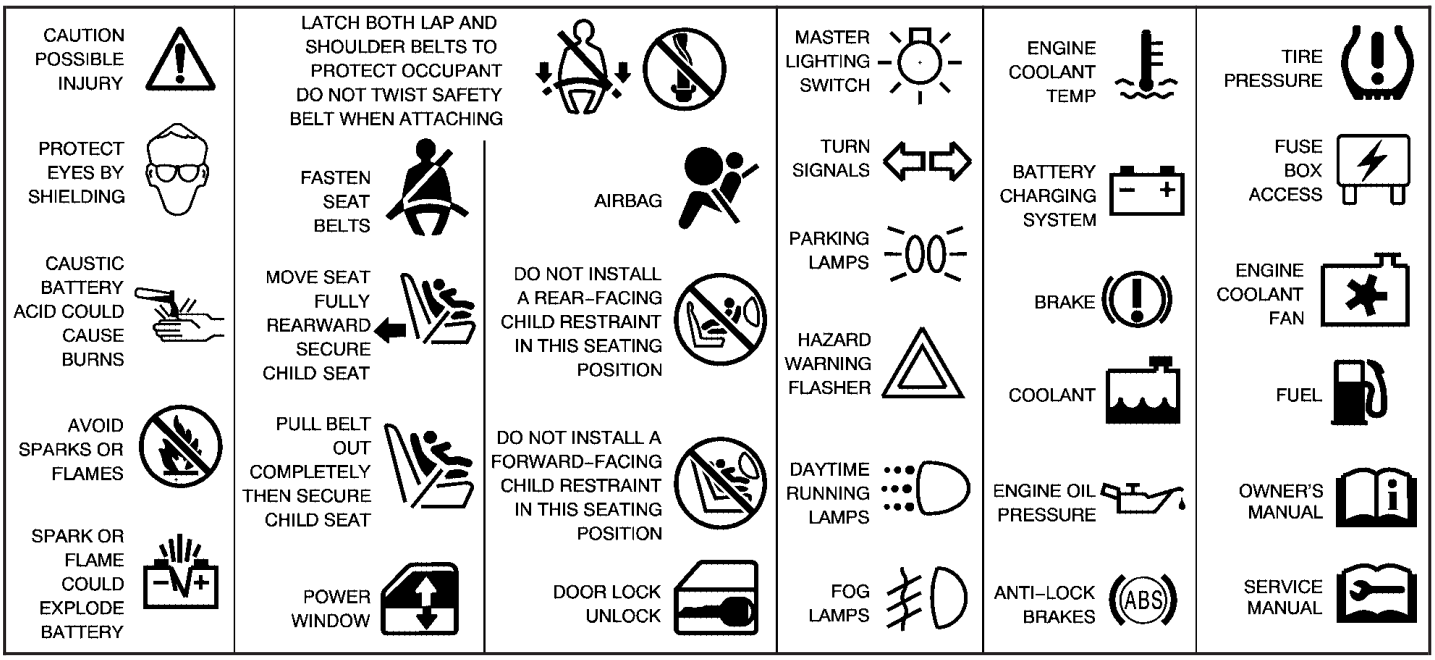

Downloaded from www.Manualslib.com manuals search engine

✍ NOTES

Downloaded from www.Manualslib.com manuals search engine

Section 1 Seats and Restraint Systems

Front Seats 1-2
Manual Seats 1-2
Driver Seat Height Adjuster 1-3
Six-Way Power Driver Seat 1-3
Manual Lumbar 1-4
Heated Seats 1-4
Reclining Seatbacks 1-5
Head Restraints 1-8
Passenger Folding Seatback 1-9

Rear Seats 1-10
Split Folding Rear Seat 1-10

Safety Belts 1-12
Safety Belts: They Are for Everyone 1-12
Questions and Answers About Safety Belts 1-17
How to Wear Safety Belts Properly 1-17
Driver Position 1-18
Shoulder Belt Height Adjustment 1-24
Safety Belt Use During Pregnancy 1-24
Right Front Passenger Position 1-25
Rear Seat Passengers 1-25
Rear Safety Belt Comfort Guides 1-27
Safety Belt Pretensioners 1-29
Safety Belt Extender 1-30

Child Restraints 1-30
Older Children 1-30
Infants and Young Children 1-33
Child Restraint Systems 1-36
Where to Put the Restraint 1-40
Lower Anchors and Tethers for Children (LATCH) 1-42
Securing a Child Restraint in a Rear Seat Position 1-47
Securing a Child Restraint in the Right Front Seat Position 1-50

Airbag System 1-53
Where Are the Airbags? 1-55
When Should an Airbag Inflate? 1-58
What Makes an Airbag Inflate? 1-59
How Does an Airbag Restrain? 1-59
What Will You See After an Airbag Inflates? 1-60
Servicing Your Airbag-Equipped Vehicle 1-61
Adding Equipment to Your Airbag-Equipped Vehicle 1-62

Restraint System Check 1-62
Checking the Restraint Systems 1-62
Replacing Restraint System Parts After a Crash 1-63

Downloaded from www.Manualslib.com manuals search engine

Front Seats

Manual Seats

⚠ CAUTION:

You can lose control of the vehicle if you try to adjust a manual driver's seat while the vehicle is moving. The sudden movement could startle and confuse you, or make you push a pedal when you do not want to. Adjust the driver's seat only when the vehicle is not moving.

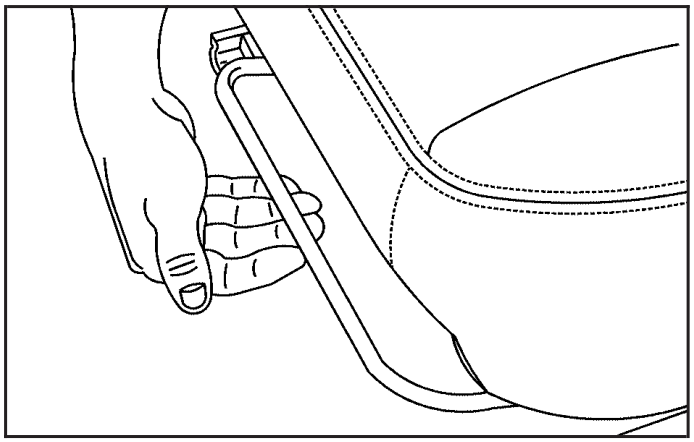

Lift the bar located under the front of the seat to unlock it. Slide the seat to where you want it and release the bar. Try to move the seat with your body to be sure the seat is locked in place.

Downloaded from www.Manualslib.com manuals search engine

Driver Seat Height Adjuster

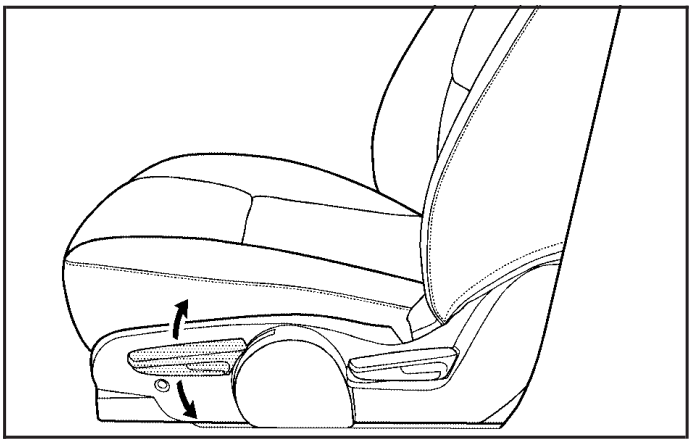

If your vehicle has a manual driver seat height adjuster, it is located on the outboard side of the seat near the front of the seat cushion. To raise the seat, move the lever upward repeatedly until the seat is at the desired height. To lower the seat, move the lever downward repeatedly until the seat is at the desired height.

Six-Way Power Driver Seat

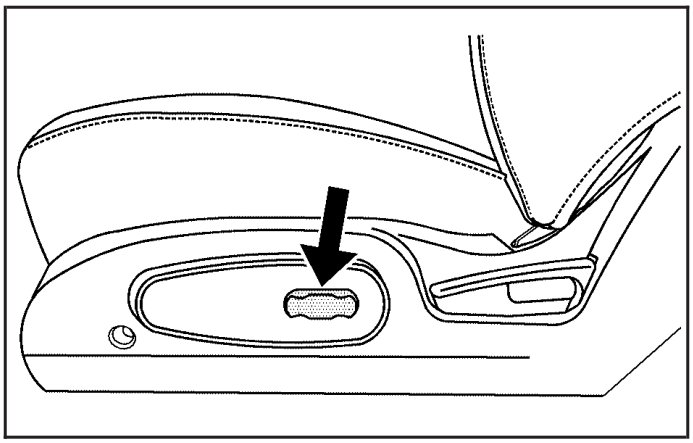

If your vehicle has this feature, the control is located on the outboard side of the driver's seat. To adjust the seat do any of the following:

- Move the seat forward or rearward by moving the control forward or rearward.
- Raise or lower the front portion of the seat by sliding the front of the control up or down.
- Raise or lower the rear portion of the seat by sliding the rear of the control up or down.

Downloaded from www.Manualslib.com manuals search engine

Manual Lumbar

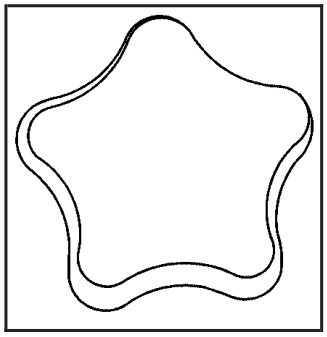

If your vehicle has this feature, the knob is located on the front of the driver seat lower cushion on the inboard side.

Turn the knob clockwise or counterclockwise to increase or decrease the lumbar support.

Heated Seats

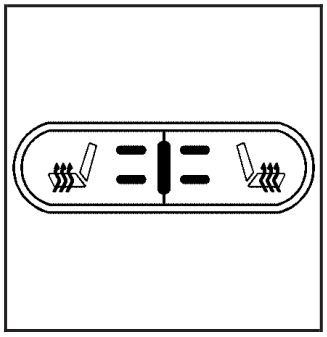

If your vehicle has heated seats, the switches are located on the center console of the instrument panel above the shift lever.

Press the switch, nearest to the seat, once to turn the heated seat on to the high setting. Both indicator lights will be lit. Press the switch a second time to turn the heated seat to the low setting. One indicator light will be lit. Press the switch a third time to turn the heated seat off.

The ignition must be on for the heated seats to operate.

Downloaded from www.Manualslib.com manuals search engine

Reclining Seatbacks

⚠ CAUTION:

If the seatback is not locked, it could move forward in a sudden stop or crash. That could cause injury to the person sitting there. Always push and pull on the seatback to be sure it is locked.

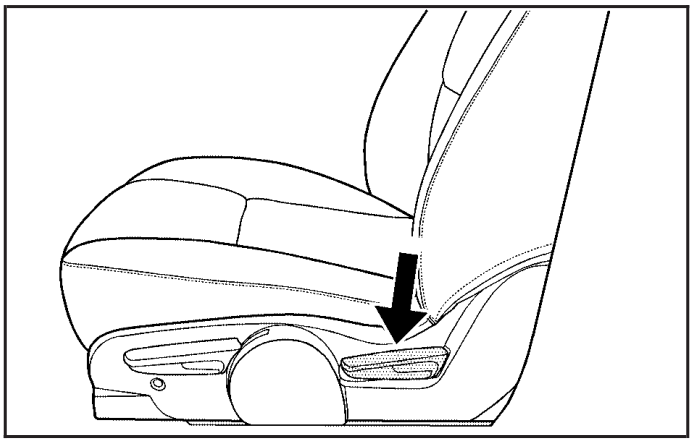

Driver's Seat with Manual Recline and Manual Height Adjuster shown

To adjust the seatback on the driver's seat, lift the lever on the rear outboard side of the seat and move the seatback to the desired position. Then release the lever to lock the seatback in place.

Downloaded from www.Manualslib.com manuals search engine

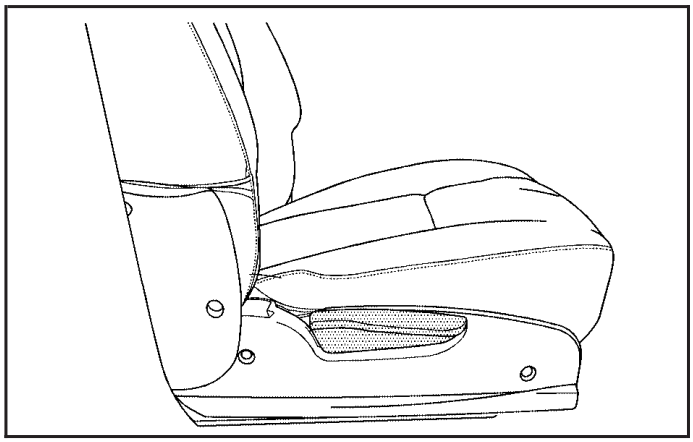

Passenger Seat with Folding Seatback Option shown

To adjust the seatback on the front passenger's seat, lift the lever on the outboard side of the seat and move the seatback to the desired position. Then release the lever to lock the seatback in place. If your front passenger's seat is a flat folding seat, you must fully raise the lever to disengage the seatback.

Downloaded from www.Manualslib.com manuals search engine

⚠ CAUTION:

Sitting in a reclined position when your vehicle is in motion can be dangerous. Even if you buckle up, your safety belts cannot do their job when you are reclined like this.

The shoulder belt cannot do its job because it will not be against your body. Instead, it will be in front of you. In a crash, you could go into it, receiving neck or other injuries.

The lap belt cannot do its job either. In a crash, the belt could go up over your abdomen. The belt forces would be there, not at your pelvic bones. This could cause serious internal injuries.

For proper protection when the vehicle is in motion, have the seatback upright. Then sit well back in the seat and wear your safety belt properly.

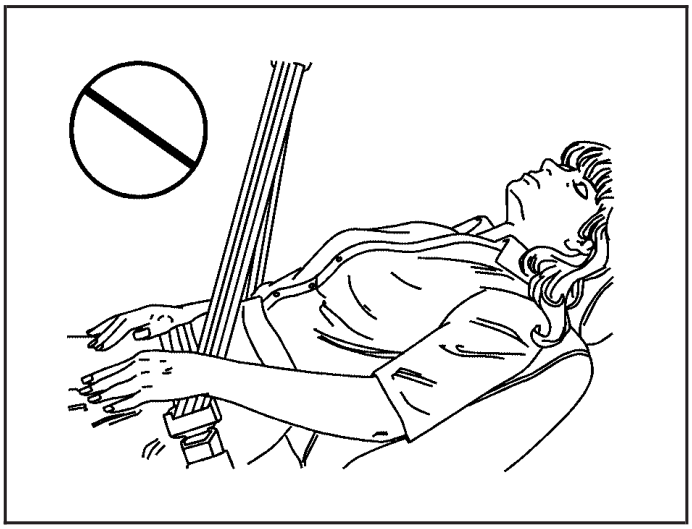

Do not have a seatback reclined if your vehicle is moving.

Downloaded from www.Manualslib.com manuals search engine

Head Restraints

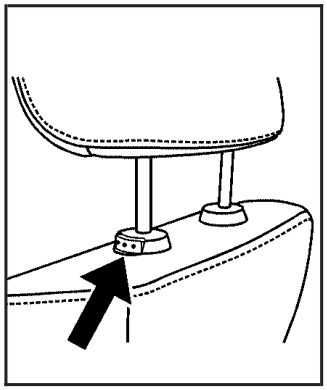

Press the button on the side of the head restraint to lower it.

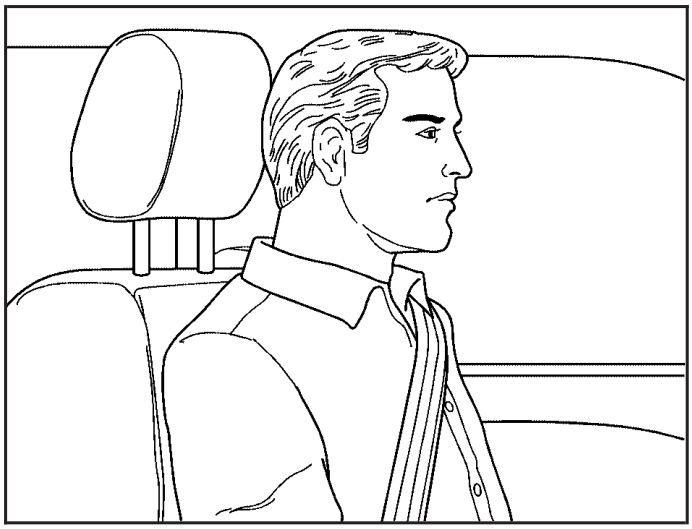

Adjust your head restraint so that the top of the restraint is closest to the top of your head. This position reduces the chance of a neck injury in a crash.

Downloaded from www.Manualslib.com manuals search engine

Passenger Folding Seatback

The front passenger's seatback may fold flat.

⚠ CAUTION:

If you fold the seatback forward to carry longer objects, such as skis, be sure any such cargo is not near an airbag. In a crash, an inflating airbag might force that object toward a person. This could cause severe injury or even death. Secure objects away from the area in which an airbag would inflate. For more information, see *Where Are the Airbags? on page 1-55* and *Loading Your Vehicle on page 4-31*.

⚠ CAUTION:

Things you put on this seatback can strike and injure people in a sudden stop or turn, or in a crash. Remove or secure all items before driving.

To fold the seatback, do the following:

1. Lower the head restraint all the way.
2. Lift the bar under the front of the seat to unlock it. Slide the seat as far back as it will go and release the bar. Try to move the seat back and forth to make sure it is locked into place.

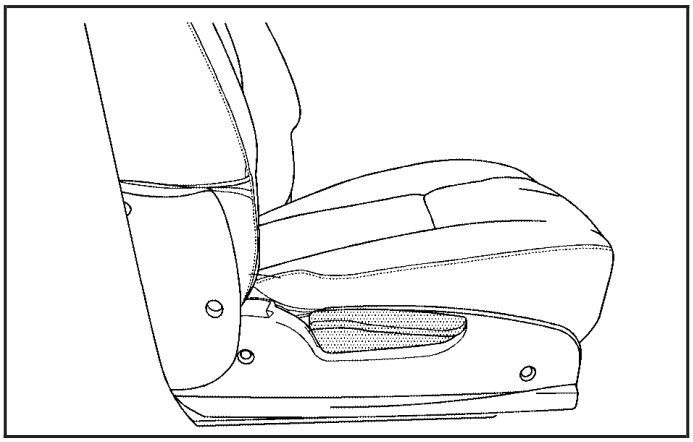

3. Lift the recliner lever, located on the outboard side of the seat, up fully and fold the seatback forward until it disengages.

Downloaded from www.Manualslib.com manuals search engine

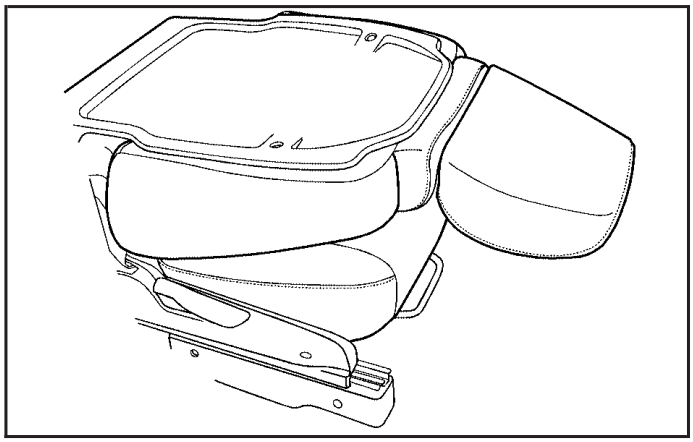

4. Continue to fold the seat forward until it locks in the folded position.
5. Pull up on the seatback to be sure it is locked.

To raise the seatback, do the following:

1. Lift the recliner lever, located on the outboard side of the seat, up fully and push up on the seatback.
2. Continue raising the seatback until the seatback re-engages.

⚠ CAUTION:

If the seatback is not locked, it could move forward in a sudden stop or crash. That could cause injury to the person sitting there. Always push and pull on the seatback to be sure it is locked.

3. Push and pull on the seatback to make sure it is locked in place.

The recliner lever is also used to recline the seatback while a passenger is seated. See *Reclining Seatbacks on page 1-5*.

Rear Seats

Split Folding Rear Seat

The rear split bench seatbacks have three available positions — folded forward, upright, or partially reclined. Both of the seatbacks can be moved to any of the three positions independent of the other seatback position. The rear bench seat can also be moved forward and rearward.

Downloaded from www.Manualslib.com manuals search engine

⚠ CAUTION:

If the seatback is not locked, it could move forward in a sudden stop or crash. That could cause injury to the person sitting there. Always push and pull on the seatback to be sure it is locked.

⚠ CAUTION:

A safety belt that is improperly routed, not properly attached, or twisted will not provide the protection needed in a crash. The person wearing the belt could be seriously injured. After raising the rear seatback, always check to be sure that the safety belts are properly routed and attached, and are not twisted.

To fold the seatback down, do the following:

1. Ensure all three of the safety belts are unbuckled and the front seatbacks are not reclined.

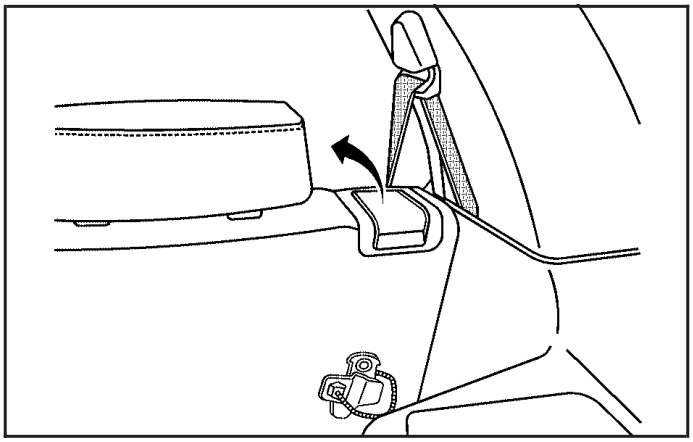

2. Lift the lever located on the top of the seatback to release the seatback.
3. Fold the seatback forward to the desired position.

Downloaded from www.Manualslib.com manuals search engine

To recline the seatback, do the following:

1. Lift and hold the lever located on top of the seatback.
2. Tilt the seatback rearward, then release the lever when the seatback is in the desired position.

To slide the entire seat forward or rearward, do the following:

1. Lift and hold the release bar located under the front of the seat cushion to unlock the seat.
2. Slide the seat to the desired position.
3. Release the bar.
4. Try to move the seat back and forth to ensure the seat is locked in place.

Safety Belts

Safety Belts: They Are for Everyone

This part of the manual tells you how to use safety belts properly. It also tells you some things you should not do with safety belts.

⚠ CAUTION:

Do not let anyone ride where he or she cannot wear a safety belt properly. If you are in a crash and you are not wearing a safety belt, your injuries can be much worse. You can hit things inside the vehicle or be ejected from it. You can be seriously injured or killed. In the same crash, you might not be, if you are buckled up. Always fasten your safety belt, and check that your passengers' belts are fastened properly too.

Downloaded from www.Manualslib.com manuals search engine

⚠ CAUTION:

It is extremely dangerous to ride in a cargo area, inside or outside of a vehicle. In a collision, people riding in these areas are more likely to be seriously injured or killed. Do not allow people to ride in any area of your vehicle that is not equipped with seats and safety belts. Be sure everyone in your vehicle is in a seat and using a safety belt properly.

Your vehicle has a light that comes on as a reminder to buckle up See *Safety Belt Reminder Light on page 3-26*.

In most states and in all Canadian provinces, the law says to wear safety belts. Here is why: *They work*.

You never know if you will be in a crash. If you do have a crash, you do not know if it will be a bad one.

A few crashes are mild, and some crashes can be so serious that even buckled up, a person would not survive. But most crashes are in between. In many of them, people who buckle up can survive and sometimes walk away. Without belts they could have been badly hurt or killed.

After more than 30 years of safety belts in vehicles, the facts are clear. In most crashes buckling up does matter...a lot!

Downloaded from www.Manualslib.com manuals search engine

Why Safety Belts Work

When you ride in or on anything, you go as fast as it goes.

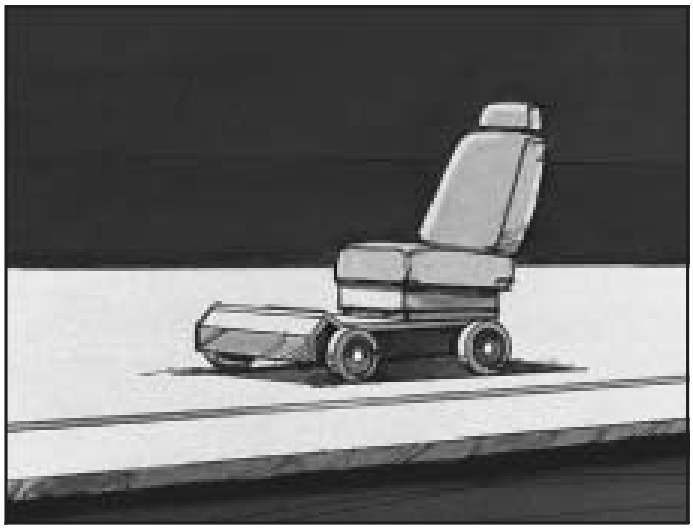

Take the simplest vehicle. Suppose it is just a seat on wheels.

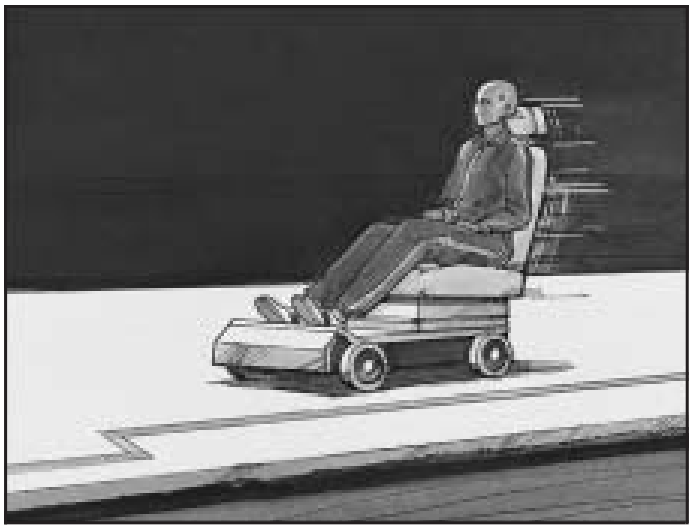

Put someone on it.

Downloaded from www.Manualslib.com manuals search engine

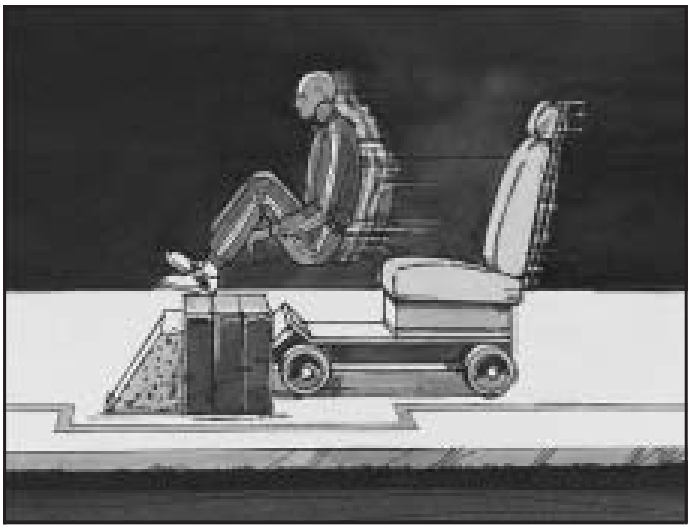

Get it up to speed. Then stop the vehicle.
The rider does not stop.

The person keeps going until stopped by something.
In a real vehicle, it could be the windshield...

Downloaded from www.Manualslib.com manuals search engine

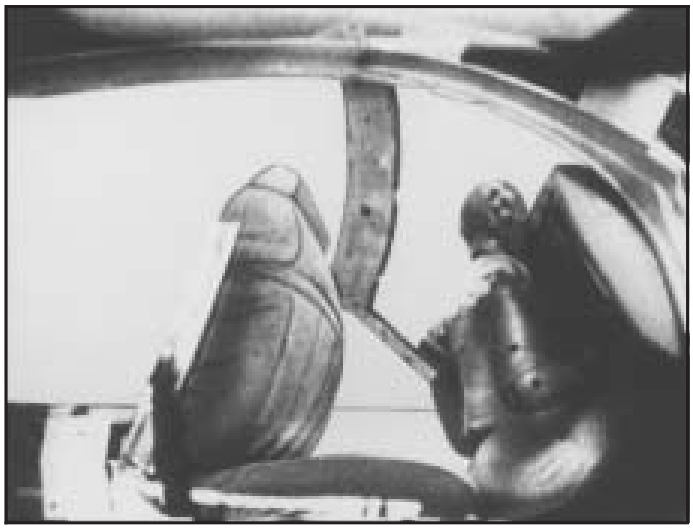

or the instrument panel...

or the safety belts!

With safety belts, you slow down as the vehicle does. You get more time to stop. You stop over more distance, and your strongest bones take the forces. That is why safety belts make such good sense.

Downloaded from www.Manualslib.com manuals search engine

Questions and Answers About Safety Belts

Q: Will I be trapped in the vehicle after an accident if I am wearing a safety belt?

A: You *could* be — whether you are wearing a safety belt or not. But you can unbuckle a safety belt, even if you are upside down. And your chance of being conscious during and after an accident, so you *can* unbuckle and get out, is *much* greater if you are belted.

Q: If my vehicle has airbags, why should I have to wear safety belts?

A: Airbags are in many vehicles today and will be in most of them in the future. But they are supplemental systems only; so they work *with* safety belts — not instead of them. Every airbag system ever offered for sale has required the use of safety belts. Even if you are in a vehicle that has airbags, you still have to buckle up to get the most protection. That is true not only in frontal collisions, but especially in side and other collisions.

Q: If I am a good driver, and I never drive far from home, why should I wear safety belts?

A: You may be an excellent driver, but if you are in an accident — even one that is not your fault — you and your passengers can be hurt. Being a good driver does not protect you from things beyond your control, such as bad drivers.

Most accidents occur within 25 miles (40 km) of home. And the greatest number of serious injuries and deaths occur at speeds of less than 40 mph (65 km/h).

Safety belts are for everyone.

How to Wear Safety Belts Properly

This part is only for people of adult size.

Be aware that there are special things to know about safety belts and children. And there are different rules for smaller children and babies. If a child will be riding in your vehicle, see *Older Children on page 1-30* or *Infants and Young Children on page 1-33*. Follow those rules for everyone's protection.

First, you will want to know which restraint systems your vehicle has.

Downloaded from www.Manualslib.com manuals search engine

We will start with the driver position.

Driver Position

Lap-Shoulder Belt

The driver has a lap-shoulder belt. Here is how to wear it properly.

1. Close and lock the door.
2. Adjust the seat so you can sit up straight. To see how, see “Seats” in the Index.

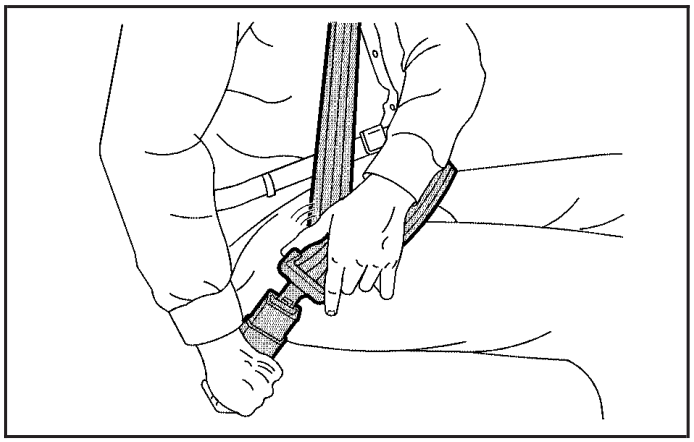

3. Pick up the latch plate and pull the belt across you. Do not let it get twisted.

   The shoulder belt may lock if you pull the belt across you very quickly. If this happens, let the belt go back slightly to unlock it. Then pull the belt across you more slowly.

4. Push the latch plate into the buckle until it clicks.

   Pull up on the latch plate to make sure it is secure. If the belt is not long enough, see *Safety Belt Extender on page 1-30*.

   Make sure the release button on the buckle is positioned so you would be able to unbuckle the safety belt quickly if you ever had to.

Downloaded from www.Manualslib.com manuals search engine

5. Move the shoulder belt height adjuster to the height that is right for you. See *Shoulder Belt Height Adjustment on page 1-24*.

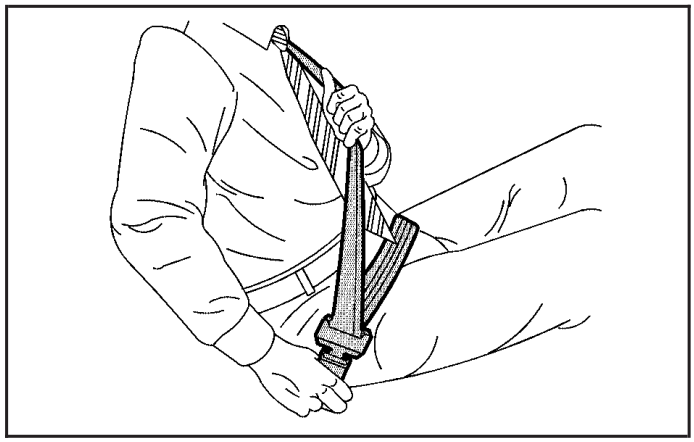

6. To make the lap part tight, pull up on the shoulder belt.

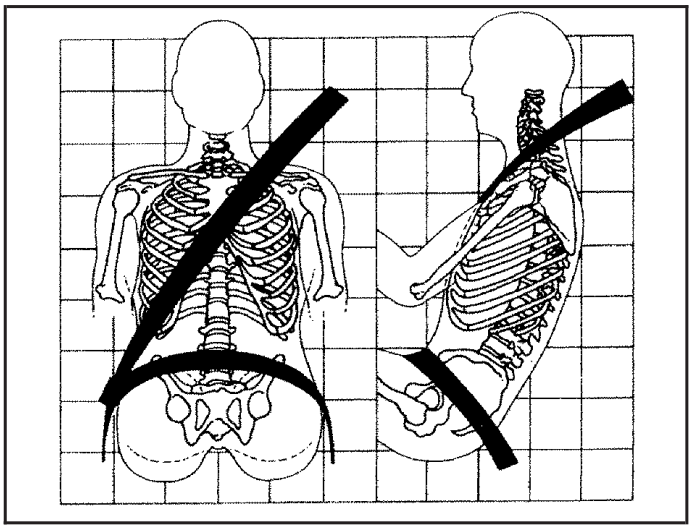

The lap part of the belt should be worn low and snug on the hips, just touching the thighs. In a crash, this applies force to the strong pelvic bones. And you would be less likely to slide under the lap belt. If you slid under it, the belt would apply force at your abdomen. This could cause serious or even fatal injuries. The shoulder belt should go over the shoulder and across the chest. These parts of the body are best able to take belt restraining forces.

The safety belt locks if there is a sudden stop or crash, or if you pull the belt very quickly out of the retractor.

Downloaded from www.Manualslib.com manuals search engine

Q: What is wrong with this?

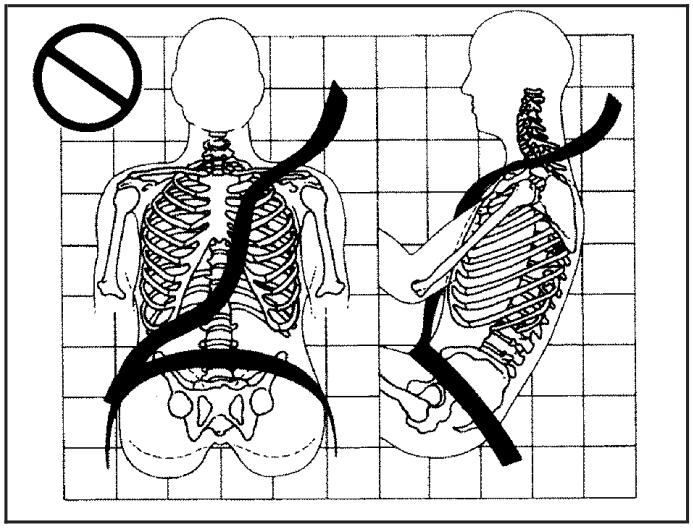

A: The shoulder belt is too loose. It will not give nearly as much protection this way.

⚠ CAUTION:

You can be seriously hurt if your shoulder belt is too loose. In a crash, you would move forward too much, which could increase injury. The shoulder belt should fit against your body.

Downloaded from www.Manualslib.com manuals search engine

Q: What is wrong with this?

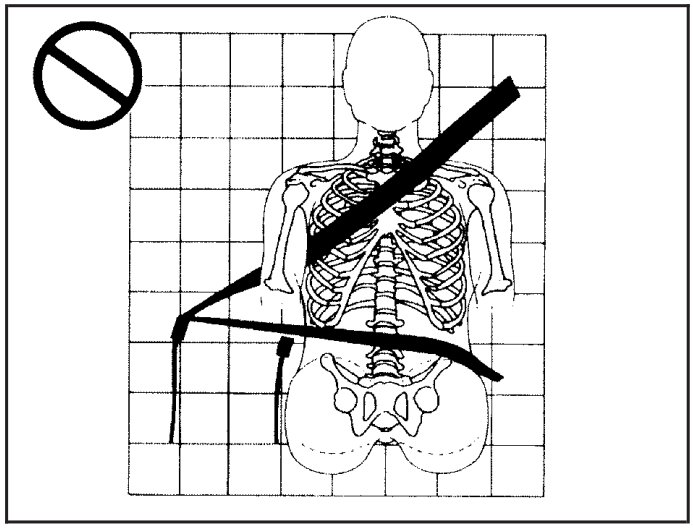

A: The belt is buckled in the wrong place.

⚠ CAUTION:

You can be seriously injured if your belt is buckled in the wrong place like this. In a crash, the belt would go up over your abdomen. The belt forces would be there, not at the pelvic bones. This could cause serious internal injuries. Always buckle your belt into the buckle nearest you.

Downloaded from www.Manualslib.com manuals search engine

Q: What is wrong with this?

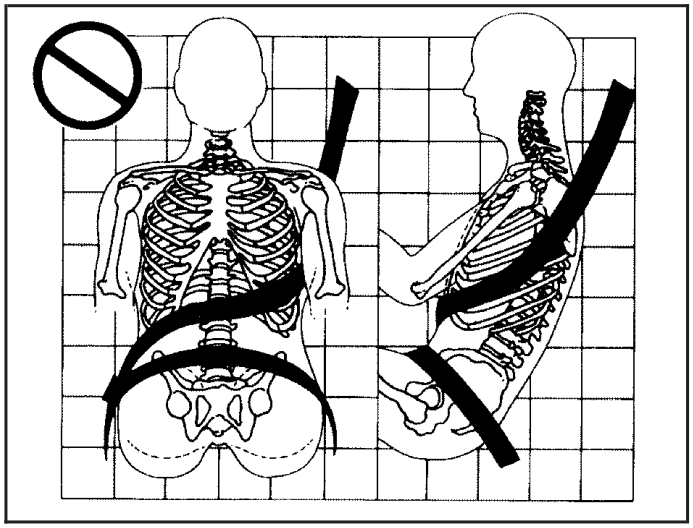

A: The shoulder belt is worn under the arm.
It should be worn over the shoulder at all times.

⚠ CAUTION:

You can be seriously injured if you wear the shoulder belt under your arm. In a crash, your body would move too far forward, which would increase the chance of head and neck injury. Also, the belt would apply too much force to the ribs, which are not as strong as shoulder bones. You could also severely injure internal organs like your liver or spleen.

Downloaded from www.Manualslib.com manuals search engine

Q: What is wrong with this?

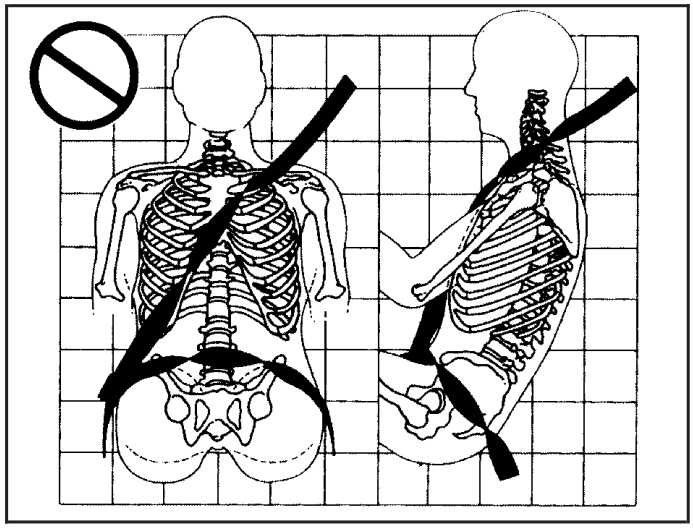

A: The belt is twisted across the body.

⚠ CAUTION:

You can be seriously injured by a twisted belt. In a crash, you would not have the full width of the belt to spread impact forces. If a belt is twisted, make it straight so it can work properly, or ask your dealer to fix it.

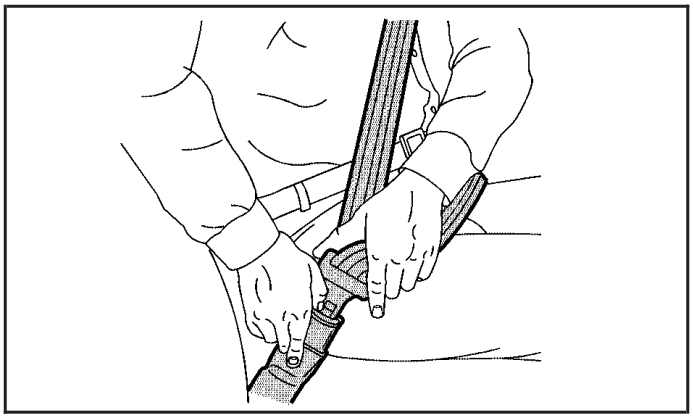

To unlatch the belt, just push the button on the buckle. The belt should go back out of the way.

Before you close the door, be sure the belt is out of the way. If you slam the door on it, you can damage both the belt and your vehicle.

Downloaded from www.Manualslib.com manuals search engine

Shoulder Belt Height Adjustment

Before you begin to drive, move the shoulder belt height adjuster to the height that is right for you.

Adjust the height so that the shoulder portion of the belt is centered on your shoulder. The belt should be away from your face and neck, but not falling off your shoulder.

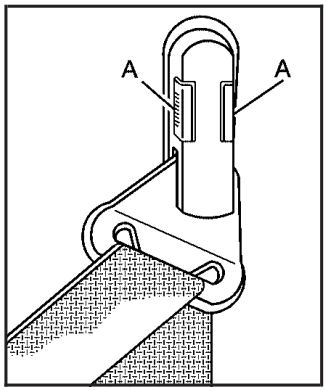

To move it up or down, squeeze the release buttons (A) together and move the height adjuster to the desired position. After you move the height adjuster to where you want it, try to move it up or down without squeezing the release buttons to make sure it has locked into position.

Safety Belt Use During Pregnancy

Safety belts work for everyone, including pregnant women. Like all occupants, they are more likely to be seriously injured if they do not wear safety belts.

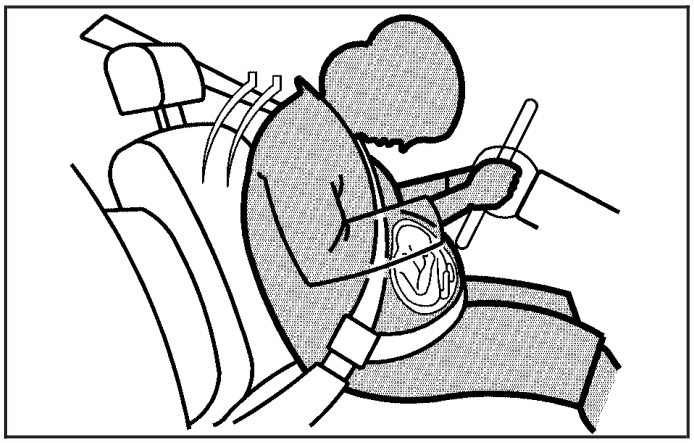

A pregnant woman should wear a lap-shoulder belt, and the lap portion should be worn as low as possible, below the rounding, throughout the pregnancy.

The best way to protect the fetus is to protect the mother. When a safety belt is worn properly, it is more likely that the fetus will not be hurt in a crash. For pregnant women, as for anyone, the key to making safety belts effective is wearing them properly.

Downloaded from www.Manualslib.com manuals search engine

Right Front Passenger Position

To learn how to wear the right front passenger's safety belt properly, see *Driver Position on page 1-18*.

The right front passenger's safety belt works the same way as the driver's safety belt — except for the following.

If you ever pull the shoulder portion of the belt out all the way, you will engage the child restraint locking feature. If this happens, just let the belt go back all the way and start again.

When the safety belt is not in use, slide the latch plate up the safety belt webbing. The latch plate should rest on the stitching on the safety belt, near the guideloop.

Rear Seat Passengers

It is very important for rear seat passengers to buckle up! Accident statistics show that unbelted people in the rear seat are hurt more often in crashes than those who are wearing safety belts.

Rear passengers who are not safety belted can be thrown out of the vehicle in a crash. And they can strike others in the vehicle who are wearing safety belts.

Lap-Shoulder Belt

All rear seating positions have lap-shoulder belts. Here is how to wear one properly.

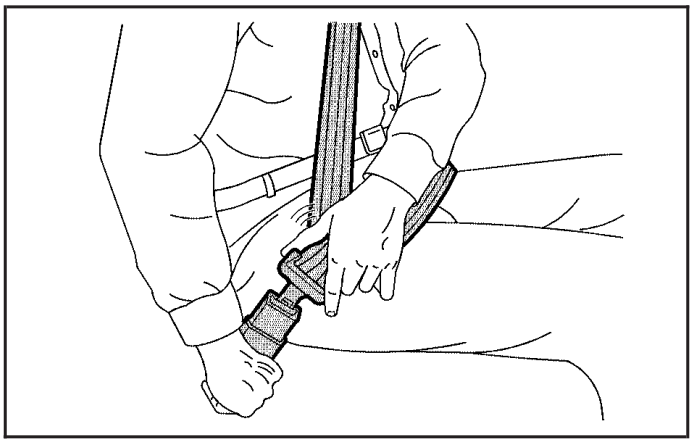

1. Pick up the latch plate and pull the belt across you. Do not let it get twisted.

   The shoulder belt may lock if you pull the belt across you very quickly. If this happens, let the belt go back slightly to unlock it. Then pull the belt across you more slowly.

Downloaded from www.Manualslib.com manuals search engine

2. Push the latch plate into the buckle until it clicks. Pull up on the latch plate to make sure it is secure.

   When the shoulder belt is pulled out all the way, it will lock. If it does, let it go back all the way and start again.

   If the belt is not long enough, see *Safety Belt Extender on page 1-30*.

   Make sure the release button on the buckle is positioned so you would be able to unbuckle the safety belt quickly if you ever had to.

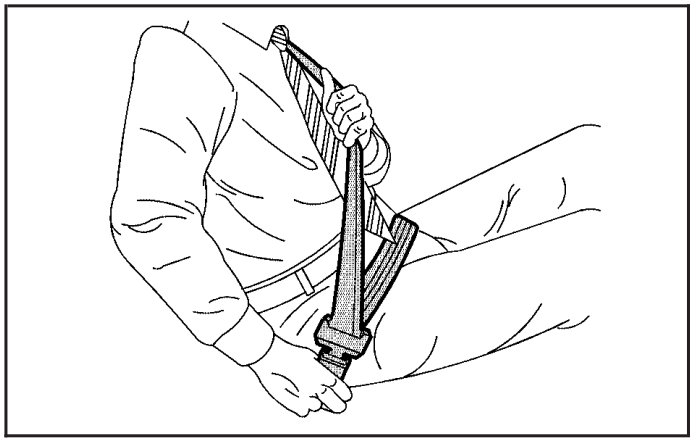

3. To make the lap part tight, pull up on the shoulder part.

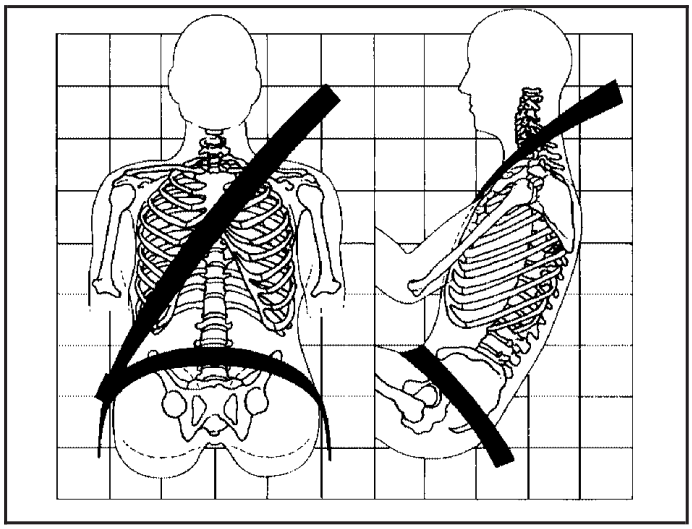

The lap part of the belt should be worn low and snug on the hips, just touching the thighs. In a crash, this applies force to the strong pelvic bones. And you would be less likely to slide under the lap belt. If you slid under it, the belt would apply force at your abdomen. This could cause serious or even fatal injuries. The shoulder belt should go over the shoulder and across the chest. These parts of the body are best able to take belt restraining forces.

Downloaded from www.Manualslib.com manuals search engine

The safety belt locks if there is a sudden stop or a crash.

The safety belt also locks if you pull the belt very quickly out of the retractor.

⚠ CAUTION:

You can be seriously hurt if your shoulder belt is too loose. In a crash, you would move forward too much, which could increase injury. The shoulder belt should fit against your body.

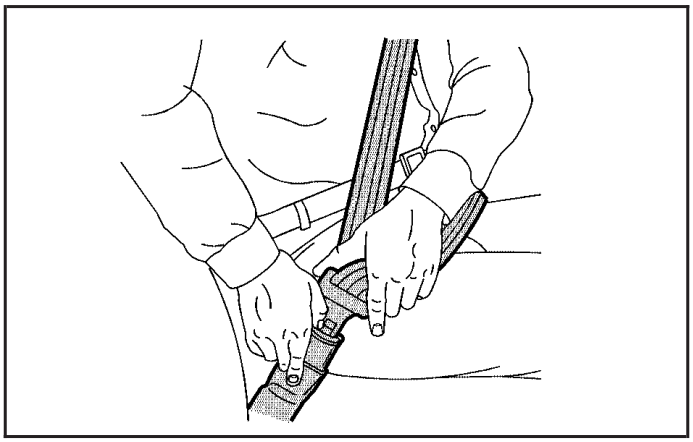

To unlatch the belt, just push the button on the buckle. For outboard seating positions, when the safety belt is not in use, slide the latch plate up the safety belt webbing. The latch plate should rest on the stitching on the safety belt, near the guide loop on the side wall.

Rear Safety Belt Comfort Guides

Rear shoulder belt comfort guides may provide added safety belt comfort for older children who have outgrown booster seats and for some adults. When installed on a shoulder belt, the comfort guide positions the belt away from the neck and head.

Downloaded from www.Manualslib.com manuals search engine

There is one guide available for each outboard passenger position in the rear seat. Here is how to install a comfort guide and use the safety belt:

1. Remove the guide from its storage clip on the back of the seatback.

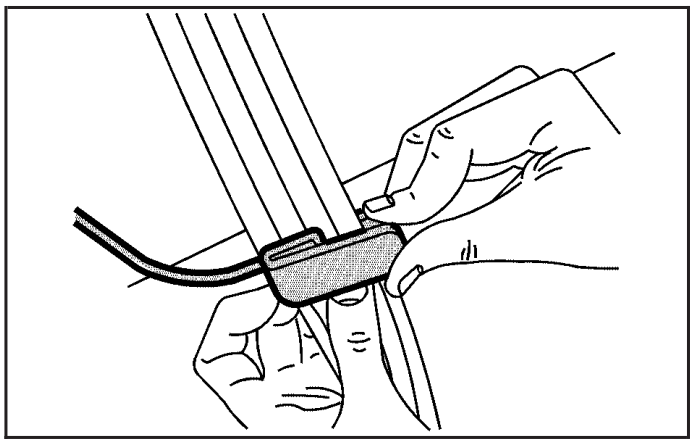

2. Slide the guide under and past the belt. The elastic cord must be under the belt. Then, place the guide over the belt, and insert the two edges of the belt into the slots of the guide.

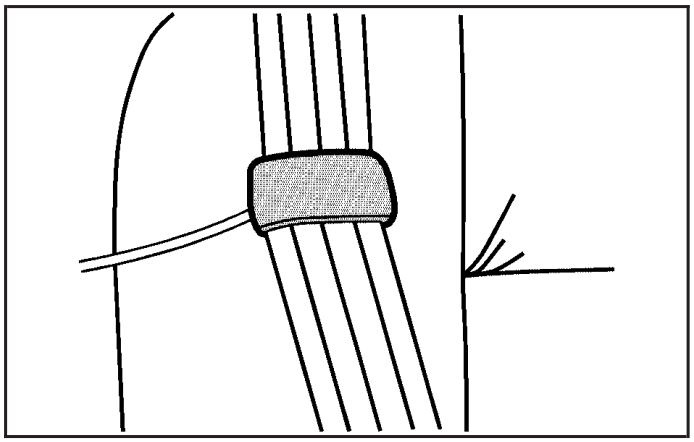

3. Be sure that the belt is not twisted and it lies flat. The elastic cord must be under the belt and the guide on top.

Downloaded from www.Manualslib.com manuals search engine

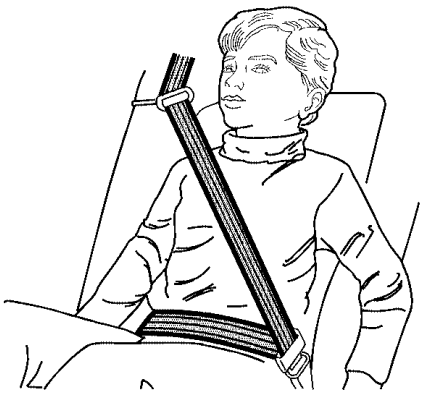

⚠ CAUTION:

A safety belt that is not properly worn may not provide the protection needed in a crash. The person wearing the belt could be seriously injured. The shoulder belt should go over the shoulder and across the chest. These parts of the body are best able to take belt restraining forces.

4. Buckle, position, and release the safety belt as described in *Rear Seat Passengers on page 1-25*. Make sure that the shoulder belt crosses the shoulder.

To remove and store the comfort guides, squeeze the belt edges together so that you can take them out of the guides. Pull the guide upward to expose its storage clip, and then slide the guide onto the clip. Turn the guide and clip inward and slide them in between the seatback and the interior body, leaving only the loop of elastic cord exposed.

Safety Belt Pretensioners

Your vehicle has safety belt pretensioners for the driver and right front passenger. Although you cannot see them, they are located on the retractor part of the safety belts. They help the safety belts reduce a person's forward movement in a moderate to severe frontal or near frontal crash.

Pretensioners work only once. If they activate in a crash, you will need to get new ones, and probably other new parts for your safety belt system. See *Replacing Restraint System Parts After a Crash on page 1-63*.

Downloaded from www.Manualslib.com manuals search engine

Safety Belt Extender

If the vehicle's safety belt will fasten around you, you should use it.

But if a safety belt is not long enough, your dealer will order you an extender. It is free. When you go in to order it, take the heaviest coat you will wear, so the extender will be long enough for you. To help avoid personal injury, do not let someone else use it, and use it only for the seat it is made to fit. The extender has been designed for adults. Never use it for securing child seats. To wear it, just attach it to the regular safety belt. For more information, see the instruction sheet that comes with the extender.

Child Restraints

Older Children

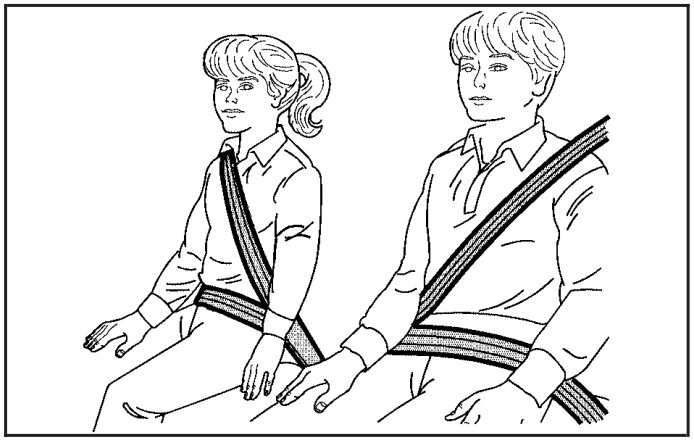

Older children who have outgrown booster seats should wear the vehicle's safety belts.

Downloaded from www.Manualslib.com manuals search engine

Q: What is the proper way to wear safety belts?

A: An older child should wear a lap-shoulder belt and get the additional restraint a shoulder belt can provide. The shoulder belt should not cross the face or neck. The lap belt should fit snugly below the hips, just touching the top of the thighs. It should never be worn over the abdomen, which could cause severe or even fatal internal injuries in a crash.

Accident statistics show that children are safer if they are restrained in the rear seat.

In a crash, children who are not buckled up can strike other people who are buckled up, or can be thrown out of the vehicle. Older children need to use safety belts properly.

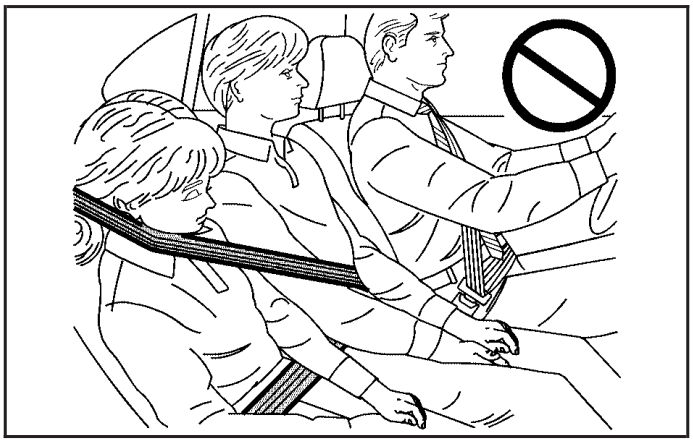

⚠ CAUTION:

Never do this.

Here two children are wearing the same belt. The belt can not properly spread the impact forces. In a crash, the two children can be crushed together and seriously injured. A belt must be used by only one person at a time.

Downloaded from www.Manualslib.com manuals search engine

Q: What if a child is wearing a lap-shoulder belt, but the child is so small that the shoulder belt is very close to the child's face or neck?

A: If the child is sitting in a seat next to a window, move the child toward the center of the vehicle. Also see *Rear Safety Belt Comfort Guides on page 1-27*. If the child is sitting in the center rear seat passenger position, move the child toward the safety belt buckle. In either case, be sure that the shoulder belt still is on the child's shoulder, so that in a crash the child's upper body would have the restraint the belts provide.

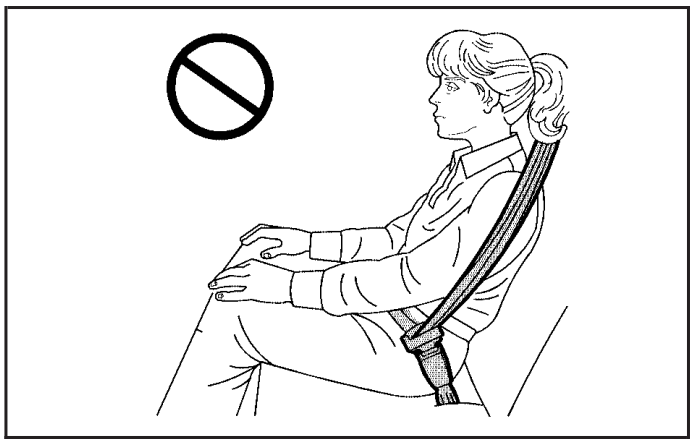

⚠ CAUTION:

Never do this.

Here a child is sitting in a seat that has a lap-shoulder belt, but the shoulder part is behind the child. If the child wears the belt in this way, in a crash the child might slide under the belt. The belt's force would then be applied right on the child's abdomen. That could cause serious or fatal injuries.

Wherever the child sits, the lap portion of the belt should be worn low and snug on the hips, just touching the child's thighs. This applies belt force to the child's pelvic bones in a crash.

Downloaded from www.Manualslib.com manuals search engine

Infants and Young Children

Everyone in a vehicle needs protection! This includes infants and all other children. Neither the distance traveled nor the age and size of the traveler changes the need, for everyone, to use safety restraints.
In fact, the law in every state in the United States and in every Canadian province says children up to some age must be restrained while in a vehicle.

Every time infants and young children ride in vehicles, they should have the protection provided by appropriate restraints. Young children should not use the vehicle's adult safety belts alone, unless there is no other choice. Instead, they need to use a child restraint.

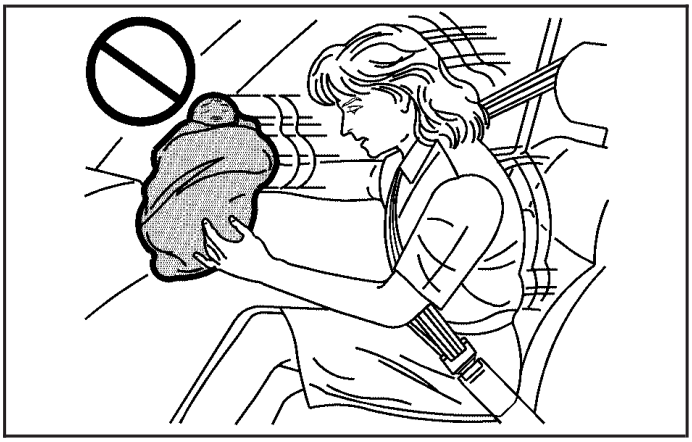

⚠ CAUTION:

People should never hold a baby in their arms while riding in a vehicle. A baby does not weigh much — until a crash. During a crash a baby will become so heavy it is not possible to hold it. For example, in a crash at only 25 mph (40 km/h), a 12 lb (5.5 kg) baby will suddenly become a 240 lb (110 kg) force on a person's arms. A baby should be secured in an appropriate restraint.

Downloaded from www.Manualslib.com manuals search engine

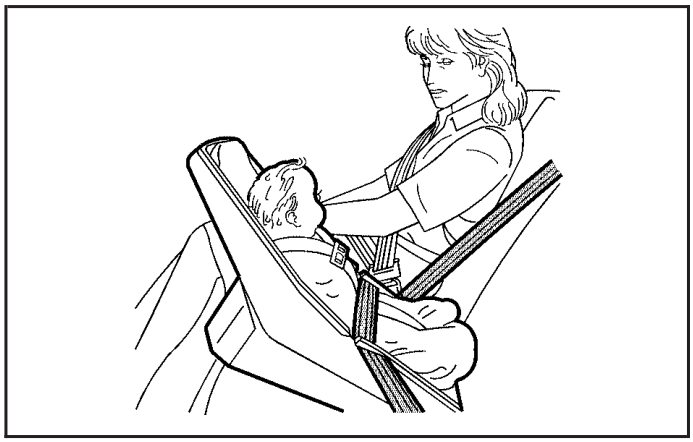

⚠ CAUTION:

Children who are up against, or very close to, any airbag when it inflates can be seriously injured or killed. Airbags plus lap-shoulder belts offer protection for adults and older children, but not for young children and infants. Neither the vehicle's safety belt system nor its airbag system is designed for them. Young children and infants need the protection that a child restraint system can provide.

Q: What are the different types of add-on child restraints?

A: Add-on child restraints, which are purchased by the vehicle's owner, are available in four basic types. Selection of a particular restraint should take into consideration not only the child's weight, height and age but also whether or not the restraint will be compatible with the motor vehicle in which it will be used.

Downloaded from www.Manualslib.com manuals search engine

For most basic types of child restraints, there are many different models available. When purchasing a child restraint, be sure it is designed to be used in a motor vehicle. If it is, the restraint will have a label saying that it meets federal motor vehicle safety standards.

The restraint manufacturer's instructions that come with the restraint, state the weight and height limitations for a particular child restraint. In addition, there are many kinds of restraints available for children with special needs.

⚠ CAUTION:

Newborn infants need complete support, including support for the head and neck. This is necessary because a newborn infant's neck is weak and its head weighs so much compared with the rest of its body. In a crash, an infant in a rear-facing seat settles into the restraint, so the crash forces can be distributed across the strongest part of an infant's body, the back and shoulders. Infants always should be secured in appropriate infant restraints.

⚠ CAUTION:

The body structure of a young child is quite unlike that of an adult or older child, for whom the safety belts are designed. A young child's hip bones are still so small that the vehicle's regular safety belt may not remain low on the hip bones, as it should. Instead, it may settle up around the child's abdomen. In a crash, the belt would apply force on a body area that is unprotected by any bony structure. This alone could cause serious or fatal injuries. Young children always should be secured in appropriate child restraints.

Downloaded from www.Manualslib.com manuals search engine

Child Restraint Systems

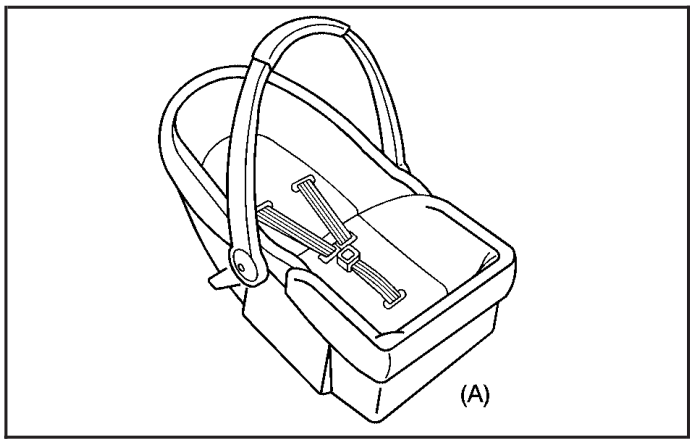

An infant car bed (A), a special bed made for use in a motor vehicle, is an infant restraint system designed to restrain or position a child on a continuous flat surface. Make sure that the infant's head rests toward the center of the vehicle.

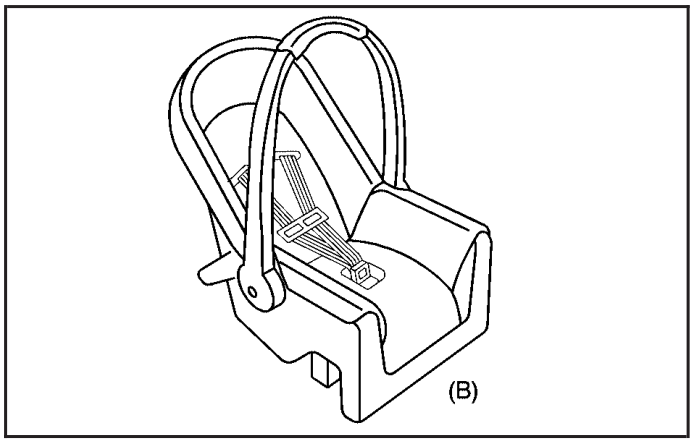

A rear-facing infant seat (B) provides restraint with the seating surface against the back of the infant. The harness system holds the infant in place and, in a crash, acts to keep the infant positioned in the restraint.

Downloaded from www.Manualslib.com manuals search engine

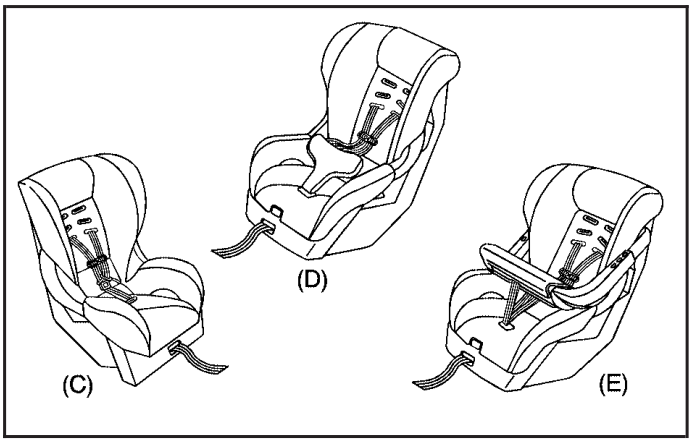

A forward-facing child seat (C-E) provides restraint for the child's body with the harness and also sometimes with surfaces such as T-shaped or shelf-like shields.

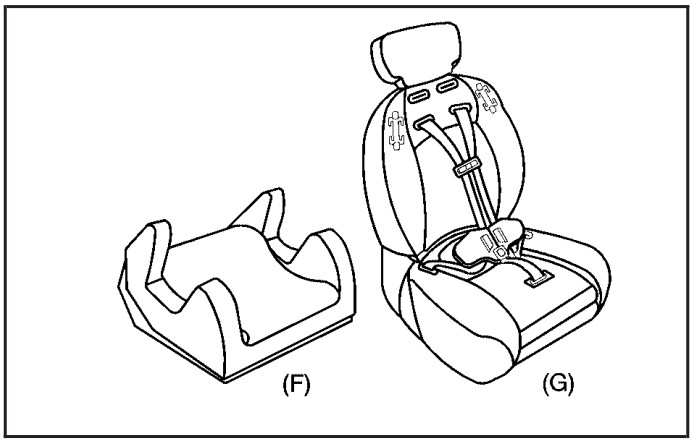

A booster seat (F-G) is a child restraint designed to improve the fit of the vehicle's safety belt system. Some booster seats have a shoulder belt positioner, and some high-back booster seats have a five-point harness. A booster seat can also help a child to see out the window.

Downloaded from www.Manualslib.com manuals search engine

Q: How Should I Use a Child Restraint?

A: A child restraint system is any device designed for use in a motor vehicle to restrain, seat, or position children. A built-in child restraint system is a permanent part of the motor vehicle. An add-on child restraint system is a portable one, which is purchased by the vehicle's owner. To help reduce injuries, an add-on child restraint must be secured in the vehicle. With built-in or add-on child restraints, the child has to be secured within the child restraint.

When choosing an add-on child restraint, be sure the child restraint is designed to be used in a vehicle. If it is, it will have a label saying that it meets federal motor vehicle safety standards. Then follow the instructions for the restraint. You may find these instructions on the restraint itself or in a booklet, or both.

Securing an Add-on Child Restraint in the Vehicle

⚠ CAUTION:

A child can be seriously injured or killed in a crash if the child restraint is not properly secured in the vehicle. Make sure the child restraint is properly installed in the vehicle using the vehicle's safety belt or LATCH system, following the instructions that came with that restraint, and also the instructions in this manual.

To help reduce the chance of injury, the child restraint must be secured in the vehicle. Child restraint systems must be secured in vehicle seats by lap belts or the lap belt portion of a lap-shoulder belt, or by the LATCH system. See *Lower Anchors and Tethers for Children (LATCH) on page 1-42* for more information. A child can be endangered in a crash if the child restraint is not properly secured in the vehicle.

Downloaded from www.Manualslib.com manuals search engine

When securing an add-on child restraint, refer to the instructions that come with the restraint which may be on the restraint itself or in a booklet, or both, and to this manual. The child restraint instructions are important, so if they are not available, obtain a replacement copy from the manufacturer.

Keep in mind that an unsecured child restraint can move around in a collision or sudden stop and injure people in the vehicle. Be sure to properly secure any child restraint in your vehicle — even when no child is in it.

Securing the Child Within the Child Restraint

There are several systems for securing the child within the child restraint. One system, the three-point harness, has straps that come down over each of the infant's shoulders and buckle together at the crotch. The five-point harness system has two shoulder straps, two hip straps, and a crotch strap.

A shield may take the place of hip straps. A T-shaped shield has shoulder straps that are attached to a flat pad which rests low against the child's body. A shelf- or armrest-type shield has straps that are attached to a wide, shelf-like shield that swings up or to the side.

⚠ CAUTION:

A child can be seriously injured or killed in a crash if the child is not properly secured in the child restraint. Make sure the child is properly secured, following the instructions that came with that restraint.

Because there are different systems, it is important to refer to the instructions that come with the restraint. A child can be endangered in a crash if the child is not properly secured in the child restraint.

Downloaded from www.Manualslib.com manuals search engine

Where to Put the Restraint

Accident statistics show that children are safer if they are restrained in the rear rather than the front seat. We, therefore, recommend that child restraints be secured in a rear seat, including an infant riding in a rear-facing infant seat, a child riding in a forward-facing child seat and an older child riding in a booster seat. *Never* put a rear-facing child restraint in the front passenger seat. Here is why:

⚠ CAUTION:

A child in a rear-facing child restraint can be seriously injured or killed if the right front passenger's airbag inflates. This is because the back of the rear-facing child restraint would be very close to the inflating airbag. Always secure a rear-facing child restraint in a rear seat.

If you need to secure a forward-facing child restraint in the right front seat, always move the front passenger seat as far back as it will go. It is better to secure the child restraint in a rear seat.

If you need to secure more than one child restraint in the rear seat, review the following illustrations. Depending on where you place the child restraint or the size of the child restraint, you may not be able to access certain safety belt assemblies or LATCH anchors for additional passengers or child restraints.

Downloaded from www.Manualslib.com manuals search engine

Configurations for Use of Two Child Restraints

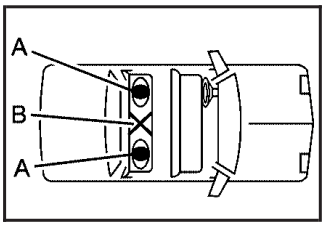

A. Child restraint using LATCH
B. Occupant prohibited

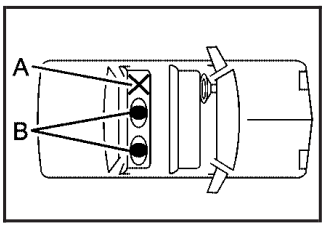

A. Occupant prohibited
B. Child restraint using LATCH

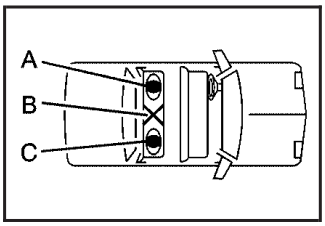

A. Child restraint using LATCH
B. No occupant recommended
C. Child restraint or occupant using safety belt

Configurations for Use of Three Child Restraints

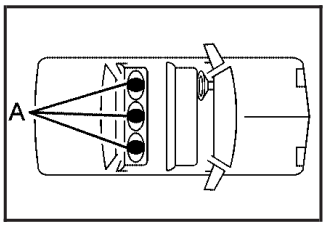

A. Child restraint or occupant using safety belt

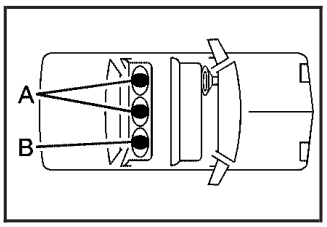

A. Child restraint or occupant using safety belt
B. Child restraint using LATCH

Wherever you install a child restraint, be sure to secure the child restraint properly.

Keep in mind that an unsecured child restraint can move around in a collision or sudden stop and injure people in the vehicle. Be sure to properly secure any child restraint in your vehicle — even when no child is in it.

Downloaded from www.Manualslib.com manuals search engine

Lower Anchors and Tethers for Children (LATCH)

Your vehicle has the LATCH system. The LATCH system holds a child restraint during driving or in a crash. This system is designed to make installation of a child restraint easier. The LATCH system uses anchors in the vehicle and attachments on the child restraint that are made for use with the LATCH system

Make sure that a LATCH-compatible child restraint is properly installed using the anchors, or use the vehicle's safety belts to secure the restraint, following the instructions that came with that restraint, and also the instructions in this manual. When installing a child restraint with a top tether, you must also use either the lower anchors or the safety belts to properly secure the child restraint. A child restraint must never be installed using only the top tether and anchor.

In order to use the LATCH system in your vehicle, you need a child restraint equipped with LATCH attachments. The child restraint manufacturer will provide you with instructions on how to use the child restraint and its attachments. The following explains how to attach a child restraint with these attachments in your vehicle.

Your vehicle has lower anchors and top tether anchors. Your child restraint may have lower attachments and a top tether.

Not all vehicle seating positions or child restraints have lower anchors and attachments or top tether anchors and attachments.

Lower Anchors

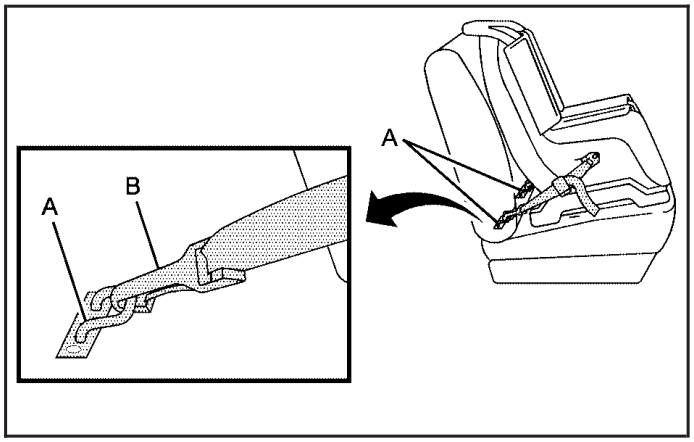

Lower anchors (A) are metal bars built into the vehicle. There are two lower anchors for each LATCH seating position that will accommodate a child restraint with lower attachments (B).

Downloaded from www.Manualslib.com manuals search engine

Top Tether Anchor

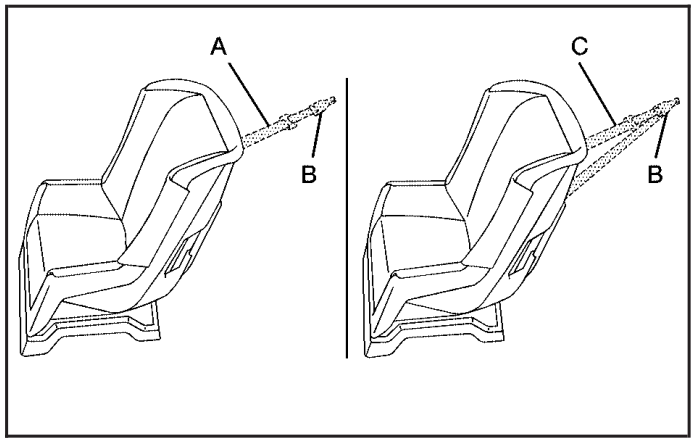

A top tether (A, C) anchors the top of the child restraint to the vehicle. A top tether anchor is built into the vehicle. The top tether attachment (B) on the child restraint connects to the top tether anchor in the vehicle in order to reduce the forward movement and rotation of the child restraint during driving or in a crash.

Your child restraint may have a single tether (A) or a dual tether (C). Either will have a single attachment (B) to secure the top tether to the anchor.

Some top tether-equipped child restraints are designed for use with or without the top tether being attached. Others require the top tether always to be attached. In Canada, the law requires that forward-facing child restraints have a top tether, and that the tether be attached. In the United States, some child restraints also have a top tether. Be sure to read and follow the instructions for your child restraint.

If the child restraint does not have a top tether, one can be obtained, in kit form, for many child restraints. Ask the child restraint manufacturer whether or not a kit is available.

Lower Anchor and Top Tether Anchor Locations

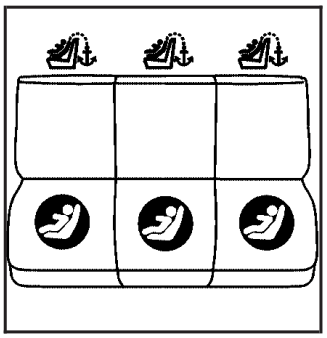

Rear Seat

(Top Tether Anchor): Seating positions with top tether anchors.

(Lower Anchor): Seating positions with two lower anchors.

Downloaded from www.Manualslib.com manuals search engine

Each rear seating position has exposed metal anchors located in the crease between the seatback and the seat cushion.

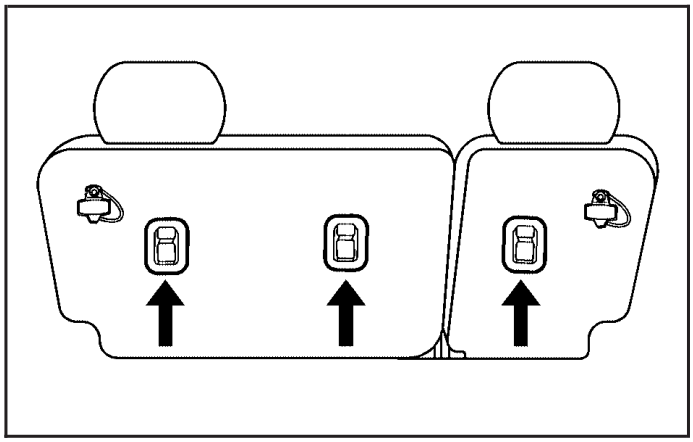

The top tether anchors for each rear seating position are located on the back of the rear seatback. You may need to adjust the rear compartment storage panel/cover in the rear cargo area to access the anchors. Be sure to use an anchor located on the same side of the vehicle as the seating position where the child restraint will be placed.

Do not secure a child restraint in the right front passenger's position if a national or local law requires that the top tether be attached, or if the instructions that come with the child restraint say that the top tether must be attached. There is no place to attach the top tether in this position.

Accident statistics show that children are safer if they are restrained in the rear rather than the front seat. See *Where to Put the Restraint on page 1-40* for additional information.

Securing a Child Restraint Designed for the LATCH System

⚠ CAUTION:

If a LATCH-type child restraint is not attached to anchors, the restraint will not be able to protect the child correctly. In a crash, the child could be seriously injured or killed. Make sure that a LATCH-type child restraint is properly installed using the anchors, or use the vehicle's safety belts to secure the restraint, following the instructions that came with that restraint, and also the instructions in this manual.

Downloaded from www.Manualslib.com manuals search engine

⚠ CAUTION:

Each top tether anchor and lower anchor in the vehicle is designed to hold only one child restraint. Attaching more than one child restraint to a single anchor could cause the anchor or attachment to come loose or even break during a crash. A child or others could be injured if this happens. To help prevent injury to people and damage to your vehicle, attach only one child restraint per anchor.

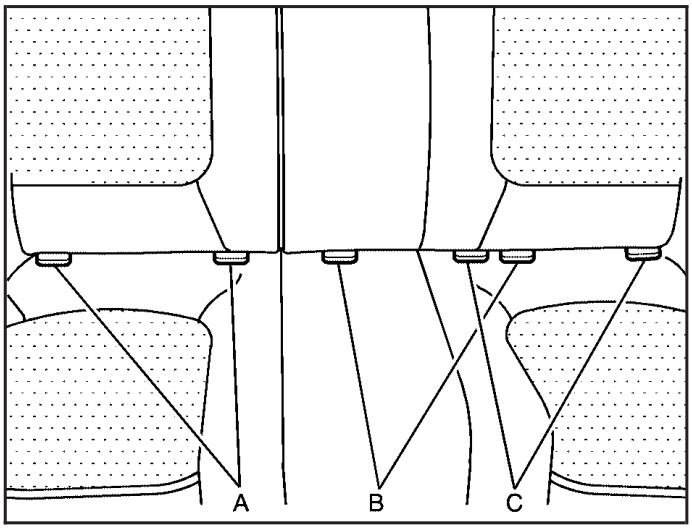

A. Passenger's Side Rear Seat Lower Anchors
B. Center Rear Seat Lower Anchors
C. Driver's Side Rear Seat Lower Anchors

Make sure to attach the child restraint at the proper anchor location.

Downloaded from www.Manualslib.com manuals search engine

This system is designed to make installation of child restraints easier. When using lower anchors, do not use the vehicle's safety belts. Instead use the vehicle's anchors and child restraint attachments to secure the restraints. Some restraints also use another vehicle anchor to secure a top tether.

1. Attach and tighten the lower attachments to the lower anchors. If the child restraint does not have lower attachments or the desired seating position does not have lower anchors, secure the child restraint with the top tether and the safety belts. Refer to your child restraint manufacturer instructions and the instructions in this manual.
   1.1. Find the lower anchors for the desired seating position.
   1.2. Put the child restraint on the seat.
   1.3. Attach and tighten the lower attachments on the child restraint to the lower anchors.
2. If the child restraint manufacturer recommends that the top tether be attached, attach and tighten the top tether to the top tether anchor, if equipped. Refer to the child restraint instructions and the following steps:
   2.1. Find the top tether anchor.
   2.2. You may need to adjust the rear compartment storage panel/cover in the rear cargo area to access the anchors. See *Rear Compartment Storage Panel/Cover on page 2-37*.
   2.3. Route, attach and tighten the top tether according to your child restraint instructions and the following instructions:

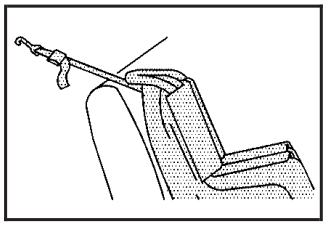

If the position you are using does not have a head restraint and you are using a single tether, route the tether over the seatback.

Downloaded from www.Manualslib.com manuals search engine

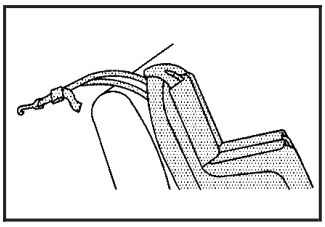

If the position you are using does not have a head restraint and you are using a dual tether, route the tether over the seatback.

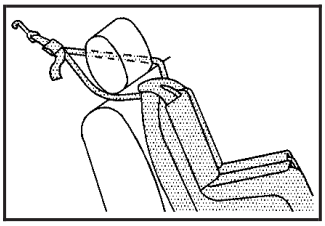

If the position you are using has an adjustable head restraint and you are using a dual tether, route the tether around the head restraint.

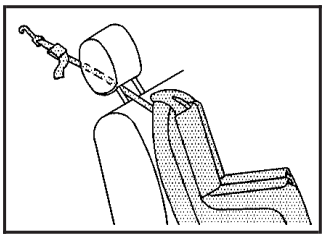

If the position you are using has an adjustable head restraint and you are using a single tether, route the tether under the head restraint and in between the head restraint posts.

3. Push and pull the child restraint in different directions to be sure it is secure.

Securing a Child Restraint in a Rear Seat Position

If your child restraint is equipped with the LATCH system, see *Lower Anchors and Tethers for Children (LATCH) on page 1-42*.

If your child restraint does not have the LATCH system, you will be using the lap-shoulder belt to secure the child restraint in this position. Be sure to follow the instructions that came with the child restraint. Secure the child in the child restraint when and as the instructions say.

1. Put the child restraint on the seat.
2. Pick up the latch plate, and run the lap and shoulder portions of the vehicle's safety belt through or around the restraint. The child restraint instructions will show you how.

Downloaded from www.Manualslib.com manuals search engine

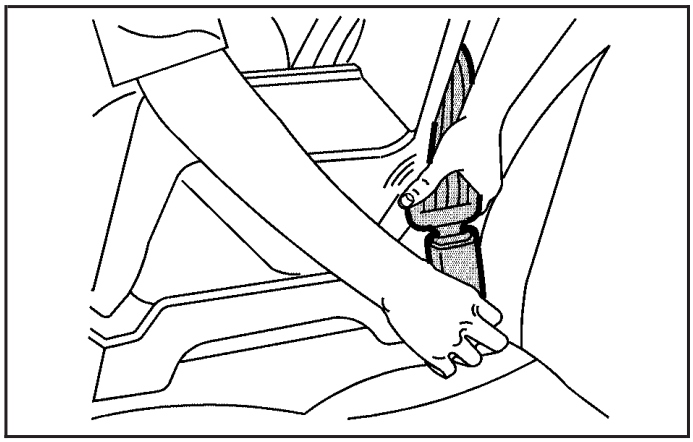

3. Buckle the belt. Make sure the release button is positioned so you would be able to unbuckle the safety belt quickly if you ever had to.

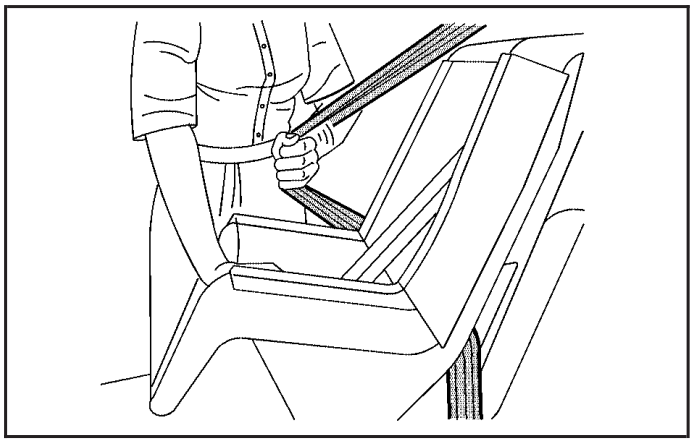

4. Pull the rest of the shoulder belt all the way out of the retractor to set the lock.

Downloaded from www.Manualslib.com manuals search engine

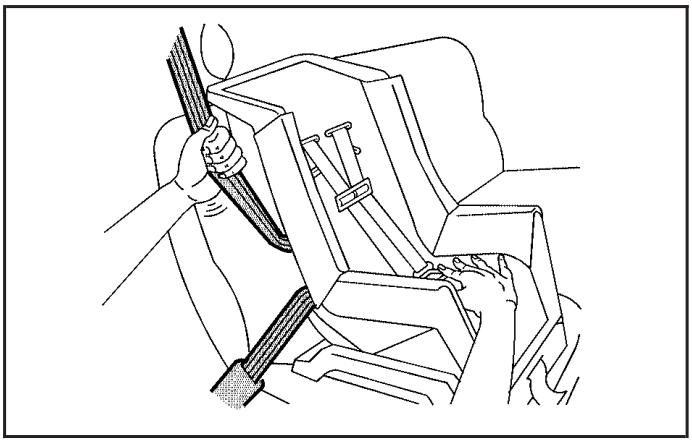

5. To tighten the belt, push down on the child restraint, pull the shoulder portion of the belt to tighten the lap portion of the belt and feed the shoulder belt back into the retractor. If you are using a forward-facing child restraint, you may find it helpful to use your knee to push down on the child restraint as you tighten the belt.
6. If your child restraint manufacturer recommends using a top tether, attach and tighten the top tether to the top tether anchor. Refer to the instructions that came with the child restraint and to *Lower Anchors and Tethers for Children (LATCH) on page 1-42*.
7. Push and pull the child restraint in different directions to be sure it is secure.

To remove the child restraint, if the top tether is attached, disconnect it. Unbuckle the vehicle's safety belt and let it go back all the way. The safety belt will move freely again and be ready to work for an adult or larger child passenger. For outboard seating positions, when the safety belt is not in use, slide the latch plate up the safety belt webbing. The latch plate should rest on the stitching on the safety belt, near the upper anchor on the side wall.

Downloaded from www.Manualslib.com manuals search engine

Securing a Child Restraint in the Right Front Seat Position

If your child restraint is equipped with the LATCH system, see *Lower Anchors and Tethers for Children (LATCH) on page 1-42*.

There is no top tether anchor in the right front passenger's position. Do not secure a child seat in this position if a national or local law requires that the top tether be anchored, or if the instructions that come with the child restraint say that the top tether must be anchored. See *Lower Anchors and Tethers for Children (LATCH) on page 1-42* if the child restraint has a top tether.

Your vehicle has a right front passenger's airbag. *Never* put a rear-facing child restraint in this seat. Here is why:

⚠ CAUTION:

A child in a rear-facing child restraint can be seriously injured or killed if the right front passenger's airbag inflates. This is because the back of the rear-facing child restraint would be very close to the inflating airbag. Always secure a rear-facing child restraint in a rear seat.

Downloaded from www.Manualslib.com manuals search engine

A rear seat is a safer place to secure a forward-facing child restraint. If you need to secure a forward-facing child restraint in the right front seat, you will be using the lap-shoulder belt to secure the child restraint in this position. Be sure to follow the instructions that came with the child restraint. Secure the child in the child restraint when and as the instructions say.

1. Because your vehicle has a right front passenger's airbag, always move the seat as far back as it will go before securing a forward-facing child restraint. See *Manual Seats on page 1-2*.
2. Put the child restraint on the seat.
3. Pick up the latch plate, and run the lap and shoulder portions of the vehicle's safety belt through or around the restraint. The child restraint instructions will show you how.

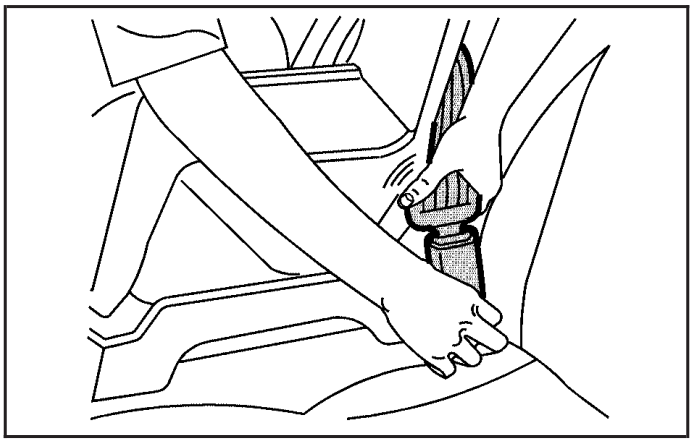

4. Buckle the belt. Make sure the release button is positioned so you would be able to unbuckle the safety belt quickly if you ever had to.

Downloaded from www.Manualslib.com manuals search engine

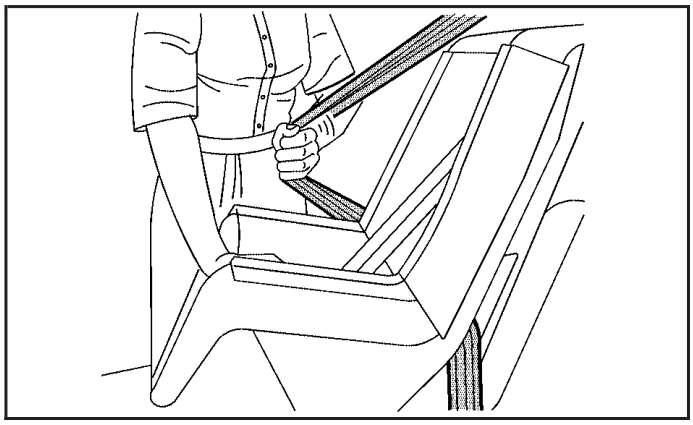

5. Pull the rest of the shoulder belt all the way out of the retractor to set the lock.

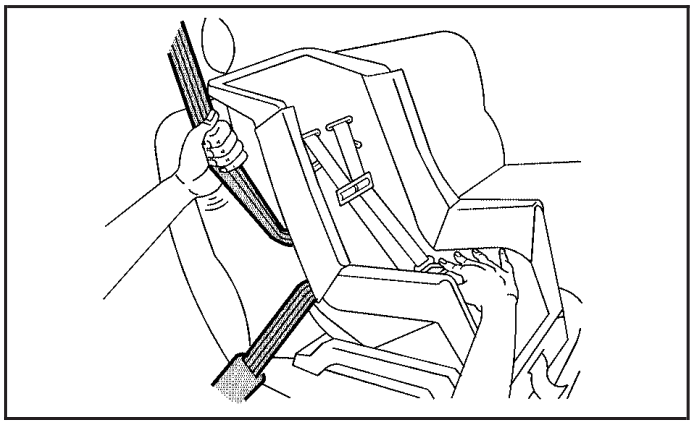

6. To tighten the belt, push down on the child restraint, pull the shoulder portion of the belt to tighten the lap portion of the belt and feed the shoulder belt back into the retractor. You may find it helpful to use your knee to push down on the child restraint as you tighten the belt.
7. Push and pull the child restraint in different directions to be sure it is secure.

To remove the child restraint, just unbuckle the vehicle's safety belt and let it go back all the way. The safety belt will move freely again and be ready to work for an adult or larger child passenger. When the safety belt is not in use, slide the latch plate up the safety belt webbing. The latch plate should rest on the stitching on the safety belt, near the guide loop on the side wall.

Downloaded from www.Manualslib.com manuals search engine

Airbag System

Your vehicle has a frontal airbag for the driver and a frontal airbag for the right front passenger. Your vehicle may also have roof-mounted side impact airbags. Roof-mounted side impact airbags are available for the driver and the passenger seated directly behind the driver and for the right front passenger and the passenger seated directly behind that passenger.

If your vehicle has side impact airbags, the word AIRBAG will appear on the airbag covering on the ceiling near the driver's and right front passenger's window.

Even if you do not have a right front passenger seat in your vehicle there is still an active frontal airbag in the right side of the instrument panel. Do not place cargo in front of this airbag.

⚠ CAUTION:

Be sure that cargo is not near an airbag. In a crash, an inflating airbag might force that object toward a person. This could cause severe injury or even death. Secure objects away from the area in which an airbag would inflate. For more information, see *Where Are the Airbags? on page 1-55* and *Loading Your Vehicle on page 4-31*.

Frontal airbags are designed to help reduce the risk of injury from the force of an inflating frontal airbag. But these airbags must inflate very quickly to do their job and comply with federal regulations.

Downloaded from www.Manualslib.com manuals search engine

Here are the most important things to know about the airbag system:

⚠ CAUTION:

You can be severely injured or killed in a crash if you are not wearing your safety belt — even if you have airbags. Wearing your safety belt during a crash helps reduce your chance of hitting things inside the vehicle or being ejected from it. Airbags are "supplemental restraints" to the safety belts. All airbags are designed to work with safety belts but do not replace them.

Frontal airbags for the driver and right front passenger are designed to deploy in moderate to severe frontal and near frontal crashes. They are not designed to inflate in rollover, rear crashes, or in many side crashes. And, for some unrestrained occupants, frontal airbags may provide less protection in frontal crashes than more forceful airbags have provided in the past.

CAUTION: (Continued)

CAUTION: (Continued)

Roof-mounted side impact airbags are designed to inflate in moderate to severe crashes where something hits the side of your vehicle. They are not designed to inflate in frontal, in rollover or in rear crashes. Everyone in your vehicle should wear a safety belt properly — whether or not there is an airbag for that person.

⚠ CAUTION:

Both frontal and side impact airbags inflate with great force, faster than the blink of an eye. If you are too close to an inflating airbag, as you would be if you were leaning forward, it could seriously injure you. Safety belts help keep you in position for airbag inflation before and during a crash. Always wear your safety belt even with frontal airbags. The driver should sit as far back as possible while still maintaining control of the vehicle. Occupants should not lean on or sleep against the door.

Downloaded from www.Manualslib.com manuals search engine

⚠ CAUTION:

Anyone who is up against, or very close to, any airbag when it inflates can be seriously injured or killed. Airbags plus lap-shoulder belts offer the best protection for adults, but not for young children and infants. Neither the vehicle's safety belt system nor its airbag system is designed for them. Young children and infants need the protection that a child restraint system can provide. Always secure children properly in your vehicle. To read how, see *Older Children on page 1-30* or *Infants and Young Children on page 1-33*.

There is an airbag readiness light on the instrument panel cluster, which shows the airbag symbol.

The system checks the airbag electrical system for malfunctions. The light tells you if there is an electrical problem. See *Airbag Readiness Light on page 3-26* for more information.

Where Are the Airbags?

The driver's frontal airbag is in the middle of the steering wheel.

Downloaded from www.Manualslib.com manuals search engine

The right front passenger's frontal airbag is in the instrument panel on the passenger's side.

If your vehicle has a side impact airbag for the driver and the person seated directly behind the driver, it is in the ceiling above the side windows.

Downloaded from www.Manualslib.com manuals search engine

If your vehicle has a side impact airbag for the right front passenger and the person seated directly behind that passenger, it is in the ceiling above the side windows.

⚠ CAUTION:

If something is between an occupant and an airbag, the bag might not inflate properly or it might force the object into that person causing severe injury or even death. The path of an inflating airbag must be kept clear. Do not put anything between an occupant and an airbag, and do not attach or put anything on the steering wheel hub or on or near any other airbag covering. And, if your vehicle has roof-mounted side impact airbags, never secure anything to the roof of your vehicle by routing the rope or tiedown through any door or window opening. If you do, the path of an inflating side impact airbag will be blocked. The path of an inflating airbag must be kept clear.

Downloaded from www.Manualslib.com manuals search engine

When Should an Airbag Inflate?

The driver's and right front passenger's frontal airbags are designed to inflate in moderate to severe frontal or near-frontal crashes. But they are designed to inflate only if the impact exceeds a predetermined deployment threshold. Deployment thresholds take into account a variety of desired deployment and non-deployment events and are used to predict how severe a crash is likely to be in time for the airbags to inflate and help restrain the occupants. Whether your frontal airbags will or should deploy is not based on how fast your vehicle is traveling. It depends largely on what you hit, the direction of the impact and how quickly your vehicle slows down.

In addition, your vehicle has "dual-stage" frontal airbags, which adjust the restraint according to crash severity. Your vehicle is equipped with electronic frontal sensors which help the sensing system distinguish between a moderate frontal impact and a more severe frontal impact. For moderate frontal impacts, these airbags inflate at a level less than full deployment. For more severe frontal impacts, full deployment occurs.

If the front of your vehicle goes straight into a wall that does not move or deform, the threshold level for the reduced deployment is about 11 to 16 mph (17 to 26 km/h), and the threshold level for a full deployment is about 20 to 25 mph (32 to 40 km/h). The threshold level can vary, however, with specific vehicle design, so that it can be somewhat above or below this range.

Frontal airbags may inflate at different crash speeds. For example:

- If the vehicle hits a stationary object, the airbags could inflate at a different crash speed than if the vehicle hits a moving object.
- If the vehicle hits an object that deforms, the airbags could inflate at a different crash speed than if the vehicle hits an object that does not deform.
- If the vehicle hits a narrow object (like a pole) the airbags could inflate at a different crash speed than if the vehicle hits a wide object (like a wall).
- If the vehicle goes into an object at an angle the airbags could inflate at a different crash speed than if the vehicle goes straight into the object.

The frontal airbags (driver and right front passenger) are not intended to inflate during vehicle rollovers, rear impacts, or in many side impacts.

Downloaded from www.Manualslib.com manuals search engine

Your vehicle may or may not have side impact airbags. See *Airbag System on page 1-53*. Side impact airbags are intended to inflate in moderate to severe side crashes. A side impact airbag will inflate if the crash severity is above the system's designed "threshold level." The threshold level can vary with specific vehicle design. Side impact airbags are not intended to inflate in frontal or near-frontal impacts, rollovers or rear impacts.

In any particular crash, no one can say whether an airbag should have inflated simply because of the damage to a vehicle or because of what the repair costs were. For frontal airbags, inflation is determined by what the vehicle hits, the angle of the impact, and how quickly the vehicle slows down. For side impact airbags, inflation is determined by the location and severity of the impact.

What Makes an Airbag Inflate?

In an impact of sufficient severity, the airbag sensing system detects that the vehicle is in a crash. The sensing system triggers a release of gas from the inflator, which inflates the airbag. The inflator, airbag, and related hardware are all part of the airbag modules inside the steering wheel and in the instrument panel in front of the right front passenger. For vehicles with side impact airbags, there are also airbag modules in the ceiling of the vehicle, near the side windows.

How Does an Airbag Restrain?

In moderate to severe frontal or near frontal collisions, even belted occupants can contact the steering wheel or the instrument panel. In moderate to severe side collisions, even belted occupants can contact the inside of the vehicle. The airbag supplements the protection provided by safety belts. Airbags distribute the force of the impact more evenly over the occupant's upper body, stopping the occupant more gradually. But the frontal airbags would not help you in many types of collisions, including rollovers, rear impacts, and many side impacts, primarily because an occupant's motion is not toward the airbag. Side impact airbags would not help you in many types of collisions, including many frontal or near frontal collisions, and rear impacts, primarily because an occupant's motion is not toward those airbags. Airbags should never be regarded as anything more than a supplement to safety belts, and then only in moderate to severe frontal or near-frontal collisions for the driver's and right front passenger's frontal airbags, and only in moderate to severe side collisions for side impact airbags.

Downloaded from www.Manualslib.com manuals search engine

What Will You See After an Airbag Inflates?

After a frontal airbag inflates, it quickly deflates, so quickly that some people may not even realize the airbag inflated. Roof-mounted side impact airbags deflate more slowly and may still be at least partially inflated minutes after the vehicle comes to rest. Some components of the airbag module may be hot for a short time. These components include the steering wheel hub for the driver's frontal airbag and the instrument panel for the right front passenger's frontal airbag. For vehicles with roof-mounted side impact airbags, the ceiling of your vehicle near the side windows, and the vehicle metal near the rear windows and tailgate may be warm. The parts of the airbag that come into contact with you may be warm, but not too hot to touch. There will be some smoke and dust coming from the vents in the deflated airbags. Airbag inflation does not prevent the driver from seeing out of the windshield or being able to steer the vehicle, nor does it stop people from leaving the vehicle.

⚠ CAUTION:

When an airbag inflates, there is dust in the air. This dust could cause breathing problems for people with a history of asthma or other breathing trouble. To avoid this, everyone in the vehicle should get out as soon as it is safe to do so. If you have breathing problems but cannot get out of the vehicle after an airbag inflates, then get fresh air by opening a window or a door. If you experience breathing problems following an airbag deployment, you should seek medical attention.

In many crashes severe enough to inflate an airbag, windshields are broken by vehicle deformation. Additional windshield breakage may also occur from the right front passenger airbag.

Downloaded from www.Manualslib.com manuals search engine

Your vehicle has a feature that may automatically unlock the doors and turn the interior dome lamp on and flash the parklamps on and off when the airbags inflate (if battery power is available.) You can lock the doors again and turn the interior lamps off by using the door lock and interior lamp controls.

- Airbags are designed to inflate only once. After an airbag inflates, you will need some new parts for your airbag system. If you do not get them, the airbag system will not be there to help protect you in another crash. A new system will include airbag modules and possibly other parts. The service manual for your vehicle covers the need to replace other parts.
- Your vehicle is equipped with a crash sensing and diagnostic module which records information after a crash. See *Vehicle Data Collection and Event Data Recorders on page 7-10*.
- Let only qualified technicians work on your airbag system. Improper service can mean that your airbag system will not work properly. See your dealer for service.

Servicing Your Airbag-Equipped Vehicle

Airbags affect how your vehicle should be serviced. There are parts of the airbag system in several places around your vehicle. You do not want the system to inflate while someone is working on your vehicle. Your dealer and the service manual have information about servicing your vehicle and the airbag system. To purchase a service manual, see *Service Publications Ordering Information on page 7-15*.

⚠ CAUTION:

For up to 10 minutes after the ignition key is turned off and the battery is disconnected, an airbag can still inflate during improper service. You can be injured if you are close to an airbag when it inflates. Avoid yellow connectors. They are probably part of the airbag system. Be sure to follow proper service procedures, and make sure the person performing work for you is qualified to do so.

The airbag system does not need regular maintenance.

Downloaded from www.Manualslib.com manuals search engine

Adding Equipment to Your Airbag-Equipped Vehicle

Q: Is there anything I might add to the front or sides of the vehicle that could keep the airbags from working properly?

A: Yes. If you add things that change your vehicle's frame, bumper system, front end or side sheet metal or height, they may keep the airbag system from working properly. Also, the airbag system may not work properly if you relocate any of the airbag sensors. If you have any questions about this, you should contact Customer Assistance before you modify your vehicle. The phone numbers and addresses for Customer Assistance are in Step Two of the Customer Satisfaction Procedure in this manual. See *Customer Satisfaction Procedure on page 7-2*.

Restraint System Check

Checking the Restraint Systems

Now and then, make sure the safety belt reminder light and all your belts, buckles, latch plates, retractors and anchorages are working properly. Look for any other loose or damaged safety belt system parts. If you see anything that might keep a safety belt system from doing its job, have it repaired.

Torn or frayed safety belts may not protect you in a crash. They can rip apart under impact forces. If a belt is torn or frayed, get a new one right away.

Also look for any opened or broken airbag covers, and have them repaired or replaced. (The airbag system does not need regular maintenance.)

Notice: **If you damage the covering for the driver's or the right front passenger's airbag, or the side impact airbag covering (if equipped) on the ceiling near the side windows, the airbag may not work properly. You may have to replace the airbag module in the steering wheel, both the airbag module and the instrument panel for the right front passenger's airbag, or side impact airbag module and ceiling covering for roof-mounted side impact airbags (if equipped.) Do not open or break the airbag coverings.**

Downloaded from www.Manualslib.com manuals search engine

Replacing Restraint System Parts After a Crash

⚠ CAUTION:

A crash can damage the restraint systems in your vehicle. A damaged restraint system may not properly protect the person using it, resulting in serious injury or even death in a crash. To help make sure your restraint systems are working properly after a crash, have them inspected and any necessary replacements made as soon as possible.

If you have had a crash, do you need new belts or LATCH system parts?

After a very minor collision, nothing may be necessary. But if the belts were stretched, as they would be if worn during a more severe crash, then you need new parts.

If the LATCH system was being used during a more severe crash, you may need new LATCH system parts.

If belts are cut or damaged, replace them. Collision damage also may mean you will need to have LATCH system, safety belt or seat parts repaired or replaced. New parts and repairs may be necessary even if the belt or LATCH system was not being used at the time of the collision.

If an airbag inflates, you will need to replace airbag system parts. See the part on the airbag system earlier in this section.

If the frontal airbags inflate you will also need to replace the driver and front passenger's safety belt retractor assembly. Be sure to do so. Then the new retractor assembly will be there to help protect you in a collision.

After a crash you may need to replace the driver and front passenger's safety belt retractor assemblies, even if the frontal airbags have not deployed. The driver and front passenger's safety belt retractor assemblies contain the safety belt pretensioners. Have your safety belt pretensioners checked if your vehicle has been in a collision, or if your airbag readiness light stays on after you start your vehicle or while you are driving. See *Airbag Readiness Light on page 3-26*.

Downloaded from www.Manualslib.com manuals search engine

NOTES

Downloaded from www.Manualslib.com manuals search engine

Section 2 Features and Controls

Keys 2-2
Remote Keyless Entry System 2-3
Remote Keyless Entry System Operation 2-4

Doors and Locks 2-6
Door Locks 2-6
Power Door Locks 2-7
Delayed Locking 2-7
Automatic Door Lock 2-8
Programmable Automatic Door Unlock 2-8
Rear Door Security Locks 2-8
Lockout Protection 2-9
Liftgate 2-10

Windows 2-11
Power Windows 2-12
Sun Visors 2-12

Theft-Deterrent Systems 2-13
Content Theft-Deterrent 2-13
Passlock® 2-15

Starting and Operating Your Vehicle 2-15
New Vehicle Break-In 2-15
Ignition Positions 2-16
Retained Accessory Power (RAP) 2-17
Starting the Engine 2-17
Engine Coolant Heater 2-18
Automatic Transaxle Operation 2-19
Parking Brake 2-22
Shifting Into Park (P) 2-23
Shifting Out of Park (P) 2-24
Parking Over Things That Burn 2-25
Engine Exhaust 2-25
Running the Engine While Parked 2-26

Mirrors 2-27
Manual Rearview Mirror 2-27
Automatic Dimming Rearview Mirror with OnStar®, Compass and Temperature Display 2-27
Automatic Dimming Rearview Mirror with Compass and Temperature Display 2-29
Outside Power Mirrors 2-31
Outside Convex Mirrors 2-32

OnStar® System 2-32

Storage Areas 2-34
Glove Box 2-34
Cupholder(s) 2-34
Center Console Storage Area 2-35
Luggage Carrier 2-35
Rear Compartment Storage Panel/Cover 2-37
Table 2-39
Convenience Net 2-40

Sunroof 2-40

Downloaded from www.Manualslib.com manuals search engine

Keys

⚠ CAUTION:

Leaving children in a vehicle with the ignition key is dangerous for many reasons. They could operate the power windows or other controls or even make the vehicle move. The children or others could be badly injured or even killed. Do not leave the keys in a vehicle with children.

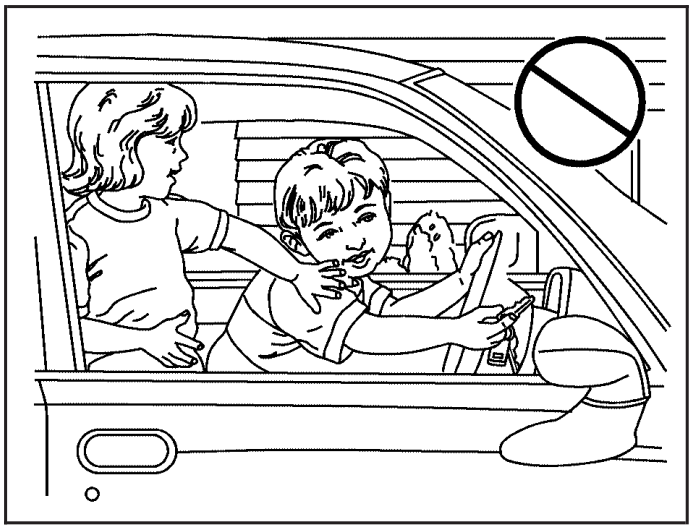

One key is used for the ignition and all of the locks.

Key code information can be obtained by your dealer. These code numbers can be used to make new keys. Additional keys that are needed can be made at any retail service facility provided you have the key code information. Store this information in a safe place, but not in your vehicle.

Downloaded from www.Manualslib.com manuals search engine

Have extra keys made. Your service parts department can make extra keys for you.

Notice: **If you ever lock your keys in your vehicle, you may have to damage the vehicle to get in. Be sure you have spare keys.**

If your vehicle is equipped with the OnStar® system with an active subscription and you lock your keys inside the vehicle, OnStar® may be able to send a command to unlock your vehicle. See *OnStar® System on page 2-32* for more information.

Remote Keyless Entry System

The remote keyless entry system operates on a radio frequency subject to Federal Communications Commission (FCC) Rules and with Industry Canada.

This device complies with Part 15 of the FCC Rules. Operation is subject to the following two conditions:

- This device may not cause harmful interference.
- This device must accept any interference received, including interference that may cause undesired operation of the device.

This device complies with RSS-210 of Industry Canada. Operation is subject to the following two conditions:

- This device may not cause interference.
- This device must accept any interference received, including interference that may cause undesired operation of the device.

Changes or modifications to this system by other than an authorized service facility could void authorization to use this equipment.

At times you may notice a decrease in range. This is normal for any remote keyless entry system. If the transmitter does not work or if you have to stand closer to your vehicle for the transmitter to work, try this:

- Check the distance. You may be too far from your vehicle. You may need to stand closer during rainy or snowy weather.
- Check the location. Other vehicles or objects may be blocking the signal. Take a few steps to the left or right, hold the transmitter higher, and try again.
- Check to determine if battery replacement or resynchronization is necessary. See “Battery Replacement” and “Resynchronization” under *Remote Keyless Entry System Operation on page 2-4*.
- If you are still having trouble, see your dealer or a qualified technician for service.

Downloaded from www.Manualslib.com manuals search engine

Remote Keyless Entry System Operation

With this feature, you can lock and unlock the doors from about 26 feet (8 m) away using the remote keyless entry transmitter supplied with your vehicle.

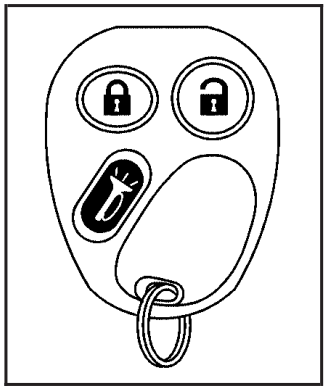

(Lock): Press this button on the remote keyless entry transmitter one time to lock the doors. The parking lamps will flash once. This also arms the content theft-deterrent system.

Pressing the lock button two times within three seconds will lock the doors. The parking lamps will flash twice and the horn chirps.

(Unlock): Press this button on the remote keyless entry transmitter one time to unlock the driver's door. The parking lamps will flash three times and the headlamps and interior lamps will come on. The interior lights will stay on for 20 seconds or until the key is turned in the ignition. Press the button again within five seconds to unlock the rest of the doors. The unlock button also disarms the content theft-deterrent system.

(Panic Alarm): Press the button with the horn symbol when the ignition is turned off. The horn will sound and the parking lamps and dome lamp will flash for up to two minutes. To stop the panic alarm, press this button again.

The remote keyless entry transmitter is used to arm/disarm the content theft-deterrent system. Your vehicle's theft-deterrent system can be programmed to three different modes. See *Content Theft-Deterrent on page 2-13*

If you accidentally set off the alarm when entering or exiting the vehicle, you can shut it off by pressing the lock or unlock button once or the panic alarm button twice.

Downloaded from www.Manualslib.com manuals search engine

Matching Transmitter(s) to Your Vehicle

Each remote keyless entry transmitter is coded to prevent another transmitter from unlocking your vehicle. If a transmitter is lost or stolen, a replacement can be purchased through your dealer. Remember to bring any remaining transmitters with you when you go to your dealer. When the dealer matches the replacement transmitter to your vehicle, any remaining transmitters must also be matched. Once your dealer has coded the new transmitter, the lost transmitter will not unlock your vehicle. Each vehicle can have a maximum of four transmitters matched to it.

Battery Replacement

Under normal use, the battery in your remote keyless entry transmitter should last about four years.

You can tell the battery is weak if the transmitter will not work at the normal range in any location. If you have to get close to your vehicle before the transmitter works, it is probably time to change the battery.

Notice: **When replacing the battery, use care not to touch any of the circuitry. Static from your body transferred to these surfaces may damage the transmitter.**

1. Use a flat thin object to pry open the transmitter.

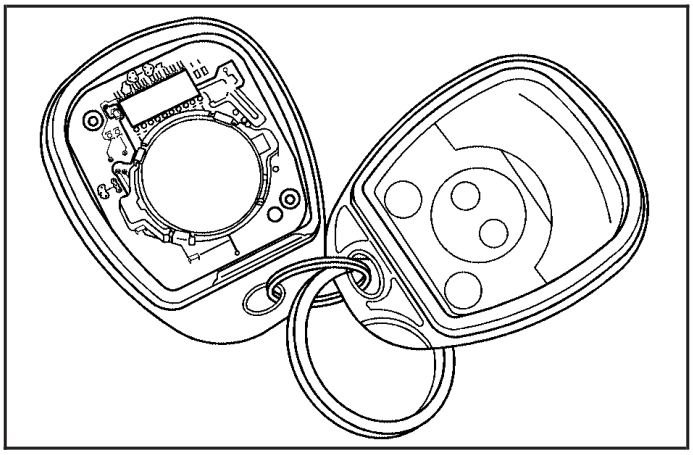

2. Once the transmitter is separated, use a pencil or similar object to remove the old battery. Do not use a metal object.
3. Insert the new battery as the instructions under the cover indicate.
4. Snap the transmitter back together tightly to be sure no moisture can enter.
5. Check the operation of the transmitter.

If the transmitter does not work, try synchronizing your transmitter with your receiver. See “Resynchronization” for more information.

Downloaded from www.Manualslib.com manuals search engine

Resynchronization

This is used to keep the transmitter of the vehicle communicating with the receiver of the vehicle. Resynchronization may be required due to the security method used by this system.

Your vehicle has an automatic resynchronization function built into the system. If your transmitter is not working properly and you have to manually resynchronize, press the lock and unlock buttons at the same time for seven seconds while you are near your vehicle. The doors will lock or unlock, depending on their starting position. If they do not, contact your dealer for service.

Doors and Locks

Door Locks

⚠ CAUTION:

Unlocked doors can be dangerous.

- **Passengers — especially children — can easily open the doors and fall out of a moving vehicle. When a door is locked, the handle will not open it. You increase the chance of being thrown out of the vehicle in a crash if the doors are not locked. So, wear safety belts properly and lock the doors whenever you drive.**
- **Young children who get into unlocked vehicles may be unable to get out. A child can be overcome by extreme heat and can suffer permanent injuries or even death from heat stroke. Always lock your vehicle whenever you leave it.**
- **Outsiders can easily enter through an unlocked door when you slow down or stop your vehicle. Locking your doors can help prevent this from happening.**

Downloaded from www.Manualslib.com manuals search engine

There are a couple of ways to manually lock or unlock your vehicle.

From the outside, use the key in the driver's door.

From the inside, use the lock control on the door.

Power Door Locks

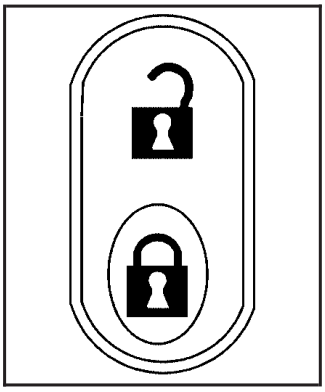

The power door lock switches are located on the driver's and front passenger's doors.

(Unlock): To unlock the doors, press the unlock symbol.

(Lock): Remove the ignition key and press the lock symbol to lock all of the doors.

Delayed Locking

A chime will sound three times to indicate a door or liftgate is open when you try to lock the doors with the remote keyless entry transmitter or the power door lock switch. The doors will not lock, and the theft-deterrent system will not arm until all the doors are closed and five seconds have passed.

The delayed locking feature can be overridden by pressing the lock button on the remote keyless entry transmitter, or the door lock switch, a second time. The doors will lock immediately and when all doors are closed the theft-deterrent system will arm after 30 seconds.

To get the horn to chirp if a door was open during the arming process, you must press the lock button on your transmitter twice after the doors are closed.

Downloaded from www.Manualslib.com manuals search engine

Automatic Door Lock

With this feature, all the doors will automatically lock when the shift lever is moved out of PARK (P) if the ignition is in the run position and all doors are closed. Otherwise, the doors will automatically lock if the vehicle is going faster than 3 mph (5 km/h).

In the following two situations, all doors will lock again when:

- The brake pedal is applied, a door is opened and then closed, and the brake pedal is released.
- A door is opened and closed without the brake pedal applied while the vehicle is moving faster than 3 mph (5 km/h).

This feature cannot be disabled.

Programmable Automatic Door Unlock

Your vehicle is programmed to automatically unlock all doors when the shift lever is moved into PARK (P).

To turn this feature on or off, turn the ignition to the run position and press the unlock part of the power door lock switch for eight seconds. The horn will chirp once when this feature is on and twice when it is off.

Rear Door Security Locks

Your vehicle has rear door security locks that prevent passengers from opening the rear doors from the inside.

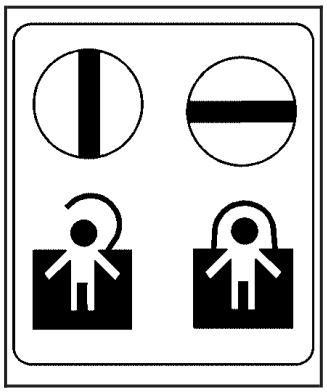

The rear door security locks are located on the inside edge of each rear door. You must open the rear doors to access them.

Downloaded from www.Manualslib.com manuals search engine

To set the security locks, do the following:

1. Insert the key into the lock above the rear door security lock label and turn it to the horizontal position.
2. Close the door.
3. Repeat the steps for the other rear door.

To open a rear door while the security lock is on, do the following:

1. Unlock the door using the remote keyless entry transmitter, the front door power lock switch, or by lifting the rear door manual lock.
2. Open the door from the outside.

To cancel the rear door security lock, do the following:

1. Unlock the door and open it from the outside.
2. Insert the key into the slot next to the rear door security lock label and turn it to the vertical position.
3. Repeat the steps for the other lock.

Lockout Protection

If you press the power door lock switch when the key is in the ignition and any door is open, all the doors will lock and only the driver's door will unlock. Be sure to remove the key from the ignition when locking your vehicle.

If the keyless entry transmitter is used to lock the doors and the key is in the ignition, a chime will sound three times. All passenger doors will lock, but the driver's door will remain unlocked.

Downloaded from www.Manualslib.com manuals search engine

Liftgate

⚠ CAUTION:

It can be dangerous to drive with the liftgate or liftglass open because carbon monoxide (CO) gas can come into your vehicle. You cannot see or smell CO. It can cause unconsciousness and even death. If you must drive with the liftgate open or if electrical wiring or other cable connections must pass through the seal between the body and the liftgate or liftglass:

- **Make sure all other windows are shut.**
- **Turn the fan on your climate control system to its highest speed and select the control setting that will force outside air into your vehicle. See "Climate Control System" in the Index.**
- **If you have air outlets on or under the instrument panel, open them all the way. See *Engine Exhaust on page 2-25*.**

To unlock the liftgate, press the unlock button on the remote keyless entry transmitter twice or use the power door lock switch.

To lock the liftgate, press the lock button on the remote keyless entry transmitter or use the power door lock switch. The liftgate does not have a key lock cylinder.

To open the liftgate, pull up on the handle located in the center of the liftgate.

When closing the liftgate, use the molded handles to pull the liftgate down. Push the liftgate closed until it latches.

Downloaded from www.Manualslib.com manuals search engine

Windows

⚠ CAUTION:

Leaving children, helpless adults, or pets in a vehicle with the windows closed is dangerous. They can be overcome by the extreme heat and suffer permanent injuries or even death from heat stroke. Never leave a child, a helpless adult, or a pet alone in a vehicle, especially with the windows closed in warm or hot weather.

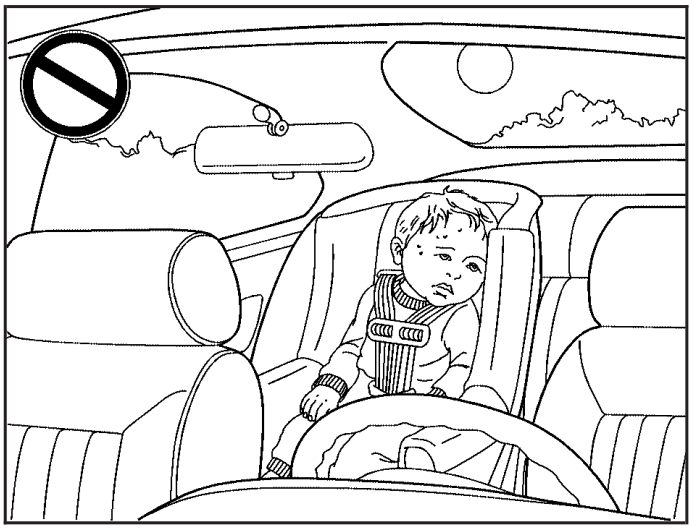

Downloaded from www.Manualslib.com manuals search engine

Power Windows

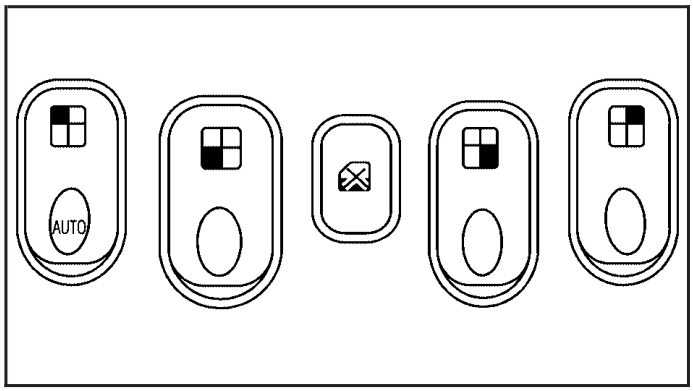

The window switches for all doors are located on the center console. A window switch for each rear window is located on each rear door.

To open a window, press the bottom of the switch. To close a window, press the top of the switch.

The power windows operate when the ignition is RUN or ACC (Accessory), or while in Retained Accessory Power (RAP). See *Retained Accessory Power (RAP) on page 2-17*.

Express-Down Window

The driver's window switch has an express-down feature that allows the window to be lowered without holding the switch. The switch is labeled AUTO. Press the bottom of the switch part way, and the driver's window will open a small amount. Press the switch down all the way down and release it and the window will go down automatically.

To stop the window while it is lowering, press and release the top of the switch.

Window Lockout

(Window Lockout): Your vehicle has a lockout feature to prevent rear seat passengers from operating the windows. Press the lockout button, located with the power window switches, to turn the feature on and off. When the red band on the button is showing, the lockout feature is off.

Sun Visors

To block out glare, swing the sun visor down. You can also detach the driver's sun visor from the center mount and slide it along the rod from side-to-side for greater coverage.

Visor Vanity Mirrors

Your vehicle has covered visor vanity mirrors on both the driver's and passenger's side.

Downloaded from www.Manualslib.com manuals search engine

Theft-Deterrent Systems

Vehicle theft is big business, especially in some cities. Although your vehicle has a number of theft-deterrent features, we know that nothing we put on it can make it impossible to steal.

Content Theft-Deterrent

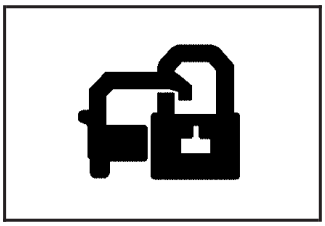

Your vehicle has a content theft-deterrent alarm system.

The remote keyless entry transmitter is used to arm/disarm the content theft-deterrent system. See *Remote Keyless Entry System Operation on page 2-4*. Your vehicle's theft-deterrent system can be programmed to three different modes.

Active Arming: The system will arm when the lock button on the remote keyless entry transmitter is pressed. The security system light will come on steady for thirty seconds. During this time you can still get back into the vehicle without triggering the alarm. Once the light starts flashing the system is armed. The system will disarm when the unlock button on the transmitter is pressed.

Passive Arming: The system will arm itself one minute after the ignition is turned off and the driver's door has been opened and closed. If the lock button on the transmitter is pressed before the minute has passed, the system will arm immediately. The system will disarm when the unlock button is pressed.

Security System Disable: The system will not arm.

Downloaded from www.Manualslib.com manuals search engine

Content Theft-Deterrent Personalization

To change the mode that your vehicle is programmed to, do the following:

1. Turn the ignition to RUN or ACC (Accessory).
2. Press the panic alarm button on the transmitter slowly four times within five seconds.
3. You must complete one of the following within three seconds to change the mode.
   - To select the active arming mode, press the lock button on the transmitter once within three seconds. A chime will sound two times to acknowledge that the active arming mode has been selected.
   - To select the passive arming mode, press the lock button on the transmitter twice within three seconds. A chime will sound three times to acknowledge that the passive arming mode has been selected.
   - To select the security system disable mode, press the unlock button on the transmitter once within three seconds. A chime will sound one time to acknowledge that the security system disabled mode has been selected.

If you accidentally set off the alarm when entering or exiting the vehicle, you can shut it off by pressing either the lock or unlock button once on the remote keyless entry transmitter. The panic alarm button needs to be pressed twice to turn off the alarm. There is a ten second pre-alarm grace period indicated by a rapid beeping. By pressing the transmitter buttons as indicated above, you can disarm the system before the horn begins to sound and the exterior lights begin to flash.

If you hear three horn chirps when you press the unlock button on the transmitter, that means the vehicle's alarm was triggered while you were away.

Downloaded from www.Manualslib.com manuals search engine

Passlock®

Your vehicle has the Passlock® theft-deterrent system.

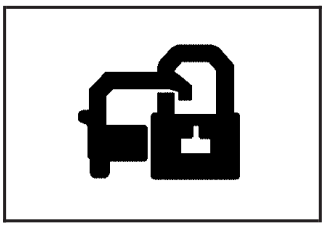

This light will come on for the theft-deterent system and is located on the instrument panel cluster.

Passlock® is a passive theft-deterrent system. Passlock® enables fuel if the ignition lock cylinder is turned with a valid key. If a correct key is not used or the ignition lock cylinder is tampered with, fuel is disabled.

If the engine stalls and the security light flashes, wait until the light stops flashing before trying to restart the engine. Remember to release the key from START as soon as the engine starts.

If the engine is running and the security light comes on, you will be able to restart the engine if you turn the engine off. However, your Passlock® system is not working properly and must be serviced by your dealer. Your vehicle is not protected by Passlock® at this time. You may also want to check the fuses. See your dealer for service.

Starting and Operating Your Vehicle

New Vehicle Break-In

Notice: **Your vehicle does not need an elaborate break-in. But it will perform better in the long run if you follow these guidelines:**

- **Do not drive at any one constant speed, fast or slow, for the first 500 miles (805 km). Do not make full-throttle starts. Avoid downshifting to brake, or slow, the vehicle.**
- **Avoid making hard stops for the first 200 miles (322 km) or so. During this time your new brake linings are not yet broken in. Hard stops with new linings can mean premature wear and earlier replacement. Follow this breaking-in guideline every time you get new brake linings.**
- **Do not tow a trailer during break-in. See *Towing a Trailer on page 4-38* for the trailer towing capabilities of your vehicle and more information.**

Following break-in, engine speed and load can be gradually increased.

Downloaded from www.Manualslib.com manuals search engine

Ignition Positions

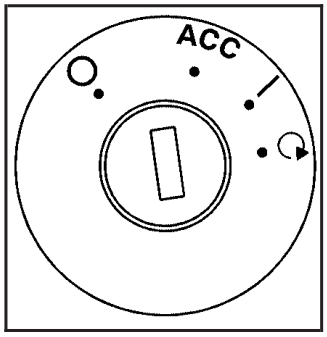

With the key in the ignition switch, you can turn it to four different positions. A warning tone will sound if you open the driver's door when the key has not been removed from the ignition.

Notice: **Using a tool to force the key from the ignition switch could cause damage or break the key. Use the correct key and turn the key only with your hand. Make sure the key is in all the way. If none of this works, then your vehicle needs service.**

(LOCK): You will only be able to remove your key when the ignition is turned to LOCK.

The ignition switch cannot be turned to LOCK unless the shift lever is in PARK (P).

ACC (Accessory): This position operates some of your electrical accessories.

(RUN): This is the position the switch returns to after you start your engine and release the switch. The switch stays in the RUN position when the engine is running. But even when the engine is not running, you can use RUN to operate your electrical accessories and to display some warning and indicator lights.

(START): This position starts the engine. When the engine starts, release the key. The ignition switch will return to RUN for normal driving.

Downloaded from www.Manualslib.com manuals search engine

Retained Accessory Power (RAP)

Your vehicle has a Retained Accessory Power (RAP) feature which will allow the radio to continue to work up to 10 minutes after the ignition is turned off.

Your radio will work when the ignition key is in RUN or ACC. Once the key is turned off, the radio will continue to work for up to 10 minutes or until any door is opened.

Starting the Engine

Move your shift lever to PARK (P) or NEUTRAL (N). Your engine will not start in any other position — that is a safety feature. To restart when you are already moving, use NEUTRAL (N) only.

Notice: **Shifting into PARK (P) with the vehicle moving could damage the transaxle. Shift into PARK (P) only when your vehicle is stopped.**

1. With your foot off the accelerator pedal, turn the ignition key to START. When the engine starts, let go of the key. The idle speed will go down as your engine gets warm.

Notice: **Repeated attempts to start your engine, will cause your battery to drain much sooner. Excessive heat can damage your starter motor. Wait about 15 seconds between each try to help avoid draining your battery or damaging your starter.**

2. If it does not start within 10 seconds, rotate the key back from START to RUN. Holding the key in START will not cause the vehicle to keep cranking. Then push the accelerator pedal all the way to the floor, while you turn the ignition key to START. When the engine starts, let go of the key and let up on the accelerator pedal. Wait about 15 seconds between each try.

Use the same instructions as stated earlier, when starting your engine in very cold weather. It is recommended that you use the engine block heater, if equipped, to assist in starting your engine in very cold weather.

Notice: **Your engine is designed to work with the electronics in your vehicle. If you add electrical parts or accessories, you could change the way the engine operates. Before adding electrical equipment, check with your dealer. If you do not, your engine might not perform properly. Any resulting damage would not be covered by your vehicle's warranty.**

Downloaded from www.Manualslib.com manuals search engine

Engine Coolant Heater

If your vehicle has this feature, in very cold weather 0°F (–18°C) or colder, the engine coolant heater can help. You will get easier starting and better fuel economy during engine warm-up. Usually, the coolant heater should be plugged in a minimum of four hours prior to starting your vehicle. At temperatures above 32°F (0°C), use of the coolant heater is not required.

To Use the Engine Coolant Heater

1. Turn off the engine.
2. Open the hood and unwrap the electrical cord. The cord is located on the driver's side of the engine compartment, behind the battery.
3. Plug it into a normal, grounded 110-volt AC outlet.

⚠ CAUTION:

Plugging the cord into an ungrounded outlet could cause an electrical shock. Also, the wrong kind of extension cord could overheat and cause a fire. You could be seriously injured. Plug the cord into a properly grounded three-prong 110-volt AC outlet. If the cord will not reach, use a heavy-duty three-prong extension cord rated for at least 15 amps.

4. Before starting the engine, be sure to unplug and store the cord as it was before to keep it away from moving engine parts. If you do not, it could be damaged.

How long should you keep the coolant heater plugged in? The answer depends on the outside temperature, the kind of oil you have, and some other things. Instead of trying to list everything here, we ask that you contact your dealer in the area where you will be parking your vehicle. The dealer can give you the best advice for that particular area.

Downloaded from www.Manualslib.com manuals search engine

Automatic Transaxle Operation

The shift lever is located on the center console.

There are several different positions for the automatic transaxle.

PARK (P): This position locks your front wheels. It is the best position to use when you start your engine because your vehicle cannot move easily.

⚠ CAUTION:

It is dangerous to get out of your vehicle if the shift lever is not fully in PARK (P) with the parking brake firmly set. Your vehicle can roll.

Do not leave your vehicle when the engine is running unless you have to. If you have left the engine running, the vehicle can move suddenly. You or others could be injured. To be sure your vehicle will not move, even when you are on fairly level ground, always set your parking brake and move the shift lever to PARK (P). See *Shifting Into Park (P) on page 2-23*. If you are pulling a trailer, see *Towing a Trailer on page 4-38*.

Make sure the shift lever is fully in PARK (P) before starting the engine. Your vehicle has an automatic transaxle shift lock control system. You have to fully apply your regular brakes before you can shift from PARK (P) when the ignition key is in RUN.

Downloaded from www.Manualslib.com manuals search engine

If you cannot shift out of PARK (P), ease pressure on the shift lever – push the shift lever all the way into PARK (P) and also release the shift lever button as you maintain brake application. Then, press the shift lever button and move the shift lever into the desired gear. See *Shifting Out of Park (P) on page 2-24*.

REVERSE (R): Use this gear to back up.

Notice: **Shifting to REVERSE (R) while your vehicle is moving forward could damage the transaxle. The repairs would not be covered by your warranty. Shift to REVERSE (R) only after your vehicle is stopped.**

To rock your vehicle back and forth to get out of snow, ice, or sand without damaging your transaxle, see *If Your Vehicle is Stuck in Sand, Mud, Ice or Snow on page 4-30*.

NEUTRAL (N): In this position, your engine does not connect with the wheels. To restart when you are already moving, use NEUTRAL (N) only. Also, use NEUTRAL (N) when your vehicle is being towed.

⚠ CAUTION:

Shifting into a drive gear while your engine is running at high speed is dangerous. Unless your foot is firmly on the brake pedal, your vehicle could move very rapidly. You could lose control and hit people or objects. Do not shift into a drive gear while your engine is running at high speed.

Notice: **Shifting out of PARK (P) or NEUTRAL (N) while the engine is running at high speed may damage the transaxle. The repairs would not be covered by your warranty. Be sure the engine is not running at high speeds when shifting your vehicle.**

Notice: **Shifting to a drive gear from NEUTRAL (N) while the vehicle is moving could damage the transaxle. Make sure the vehicle is stopped before shifting from NEUTRAL (N) into a drive gear.**

Downloaded from www.Manualslib.com manuals search engine

AUTOMATIC OVERDRIVE (D): This position is for normal driving with the automatic transaxle. If you need more power for passing, and you are:

- Going less than about 35 mph (55 km/h), push your accelerator pedal about halfway down.
- Going about 35 mph (55 km/h), push your accelerator all the way down.

LOW FOUR (L4): This position is also used for normal driving, however, it offers more power and lower fuel economy than AUTOMATIC OVERDRIVE (D). Here are some times you might choose LOW FOUR (L4) instead of AUTOMATIC OVERDRIVE (D):

- When driving on hilly, winding roads.
- When going down a steep hill.

LOW TWO (L2): This position gives you more power but lower fuel economy than AUTOMATIC OVERDRIVE (D). You can use LOW TWO (L2) on hills. It can help control your speed as you go down steep mountain roads, but then you would also want to use your brakes off and on.

Notice: **Do not drive in LOW TWO (L2) for more than 25 miles (40 km), or at speeds over 55 mph (90 km/h), or you can damage your transaxle.**

Use AUTOMATIC OVERDRIVE (D) or LOW FOUR (L4) as much as possible. Do not shift into LOW TWO (L2) unless you are going slower than 65 mph (105 km/h) or you can damage your engine.

Notice: **Spinning the tires or holding the vehicle in one place on a hill using only the accelerator pedal may damage the transaxle. If you are stuck, do not spin the tires. When stopping on a hill, use the brakes to hold the vehicle in place.**

Transaxle Overheating

If the transaxle fluid temperature rises above 284°F (140°C) or rises rapidly, the Engine Coolant Temperature Warning Light will flash. See *Engine Coolant Temperature Warning Light on page 3-31* for more information. When the transaxle overheats it will go into a protection mode and will default shift into fifth gear if in the AUTOMATIC OVERDRIVE (D) position, or second gear if in the LOW TWO (L2) position. Continue driving the vehicle in either position depending on the required vehicle speed and load. Once the fluid temperature lowers to the normal temperature range, the transaxle will return to the normal shift patterns. Towing or driving on long hills can cause the transaxle fluid temperature to be higher than normal. If the transaxle fluid temperature will not cool, you may need to pull over and check the transaxle fluid level. You should also check the engine coolant temperature. If it is hot, see *Engine Overheating on page 5-23*.

Downloaded from www.Manualslib.com manuals search engine

Parking Brake

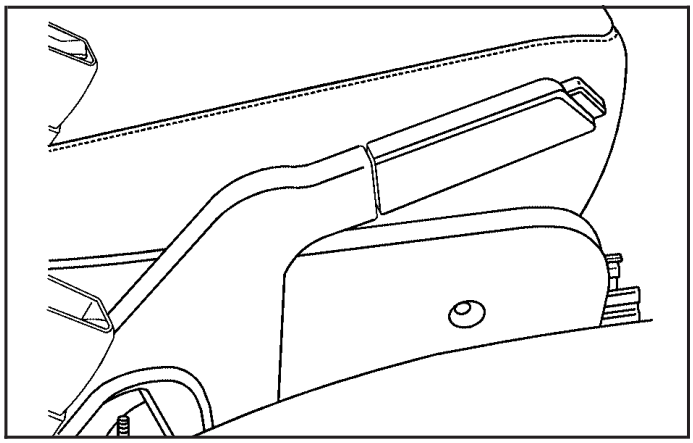

The parking brake lever is located to the right of the driver's seat.

To set the parking brake, hold the brake pedal down and pull up on the parking brake lever. If the ignition is on, the brake system warning light will come on.

To release the parking brake, hold the brake pedal down. Pull the parking brake lever up until you can press the release button. Hold the release button in as you move the brake lever all the way down.

Make sure to release the parking brake before driving the vehicle.

If the parking brake is applied and the vehicle is moving at least 4 mph (6 km/h), a chime will activate to remind you to release the parking brake.

Notice: **Driving with the parking brake on can overheat the brake system and cause premature wear or damage to brake system parts. Verify that the parking brake is fully released and the brake warning light is off before driving.**

Downloaded from www.Manualslib.com manuals search engine

Shifting Into Park (P)

⚠ CAUTION:

It can be dangerous to get out of your vehicle if the shift lever is not fully in PARK (P) with the parking brake firmly set. Your vehicle can roll. If you have left the engine running, the vehicle can move suddenly. You or others could be injured. To be sure your vehicle will not move, even when you are on fairly level ground, use the steps that follow. If you are pulling a trailer, see *Towing a Trailer on page 4-38*.

1. Hold the brake pedal down and set the parking brake.
2. Move the shift lever into the PARK (P) position by holding in the button on the shift lever and pushing it all the way toward the front of the vehicle.
3. Turn the ignition key to LOCK.
4. Remove the key and take it with you. If you can leave your vehicle with the ignition key in your hand, your vehicle is in PARK (P).

Leaving Your Vehicle With the Engine Running

⚠ CAUTION:

It can be dangerous to leave your vehicle with the engine running. Your vehicle could move suddenly if the shift lever is not fully in PARK (P) with the parking brake firmly set. And, if you leave the vehicle with the engine running, it could overheat and even catch fire. You or others could be injured. Do not leave your vehicle with the engine running.

If you have to leave your vehicle with the engine running, be sure your vehicle is in PARK (P) and your parking brake is firmly set before you leave it. After you have moved the shift lever into PARK (P), hold the regular brake pedal down. Then, see if you can move the shift lever away from PARK (P) without first pushing the button. If you can, it means that the shift lever was not fully locked into PARK (P).

Downloaded from www.Manualslib.com manuals search engine

Torque Lock

If you are parking on a hill and you do not shift your transaxle into PARK (P) properly, the weight of the vehicle may put too much force on the parking pawl in the transaxle. You may find it difficult to pull the shift lever out of PARK (P). This is called “torque lock.” To prevent torque lock, set the parking brake and then shift into PARK (P) properly before you leave the driver’s seat. To find out how, see *Shifting Into Park (P) on page 2-23*.

When you are ready to drive, move the shift lever out of PARK (P) before you release the parking brake.

If torque lock does occur, you may need to have another vehicle push yours a little uphill to take some of the pressure from the parking pawl in the transaxle, so you can pull the shift lever out of PARK (P).

Shifting Out of Park (P)

Your vehicle has an automatic transaxle shift lock control system. You have to fully apply your regular brakes before you can shift from PARK (P) when the ignition is in RUN.

If you cannot shift out of PARK (P), ease pressure on the shift lever — push the shift lever all the way into PARK (P), as you maintain brake application. Then, press the button on the shift lever and move the shift lever into the gear you wish.

If you ever hold the brake pedal down but still cannot shift out of PARK (P), try this:

1. Turn the key to LOCK.
2. Apply and hold the brake until the end of Step 4.
3. Shift to NEUTRAL (N).
4. Start the vehicle and then shift to the desired drive gear.
5. Have your vehicle fixed as soon as you can.

Downloaded from www.Manualslib.com manuals search engine

Parking Over Things That Burn

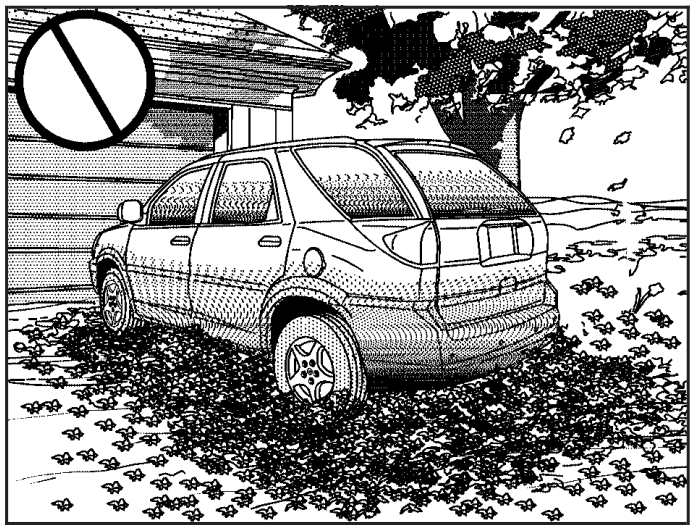

⚠ CAUTION:

Things that can burn could touch hot exhaust parts under your vehicle and ignite. Do not park over papers, leaves, dry grass, or other things that can burn.

Engine Exhaust

⚠ CAUTION:

Engine exhaust can kill. It contains the gas carbon monoxide (CO), which you cannot see or smell. It can cause unconsciousness and death.

You might have exhaust coming in if:

- **Your exhaust system sounds strange or different.**
- **Your vehicle gets rusty underneath.**
- **Your vehicle was damaged in a collision.**
- **Your vehicle was damaged when driving over high points on the road or over road debris.**
- **Repairs were not done correctly.**
- **Your vehicle or exhaust system had been modified improperly.**

If you ever suspect exhaust is coming into your vehicle:

- **Drive it only with all the windows down to blow out any CO; and**
- **Have your vehicle fixed immediately.**

Downloaded from www.Manualslib.com manuals search engine

Running the Engine While Parked

It is better not to park with the engine running. But if you ever have to, here are some things to know.

⚠ CAUTION:

Idling the engine with the climate control system off could allow dangerous exhaust into your vehicle. See the earlier caution under *Engine Exhaust on page 2-25*.

Also, idling in a closed-in place can let deadly carbon monoxide (CO) into your vehicle even if the climate control fan is at the highest setting. One place this can happen is a garage. Exhaust — with CO — can come in easily. NEVER park in a garage with the engine running.

Another closed-in place can be a blizzard. See *Winter Driving on page 4-26*.

⚠ CAUTION:

It can be dangerous to get out of your vehicle if the shift lever is not fully in PARK (P) with the parking brake firmly set. Your vehicle can roll. Do not leave your vehicle when the engine is running unless you have to. If you have left the engine running, the vehicle can move suddenly. You or others could be injured. To be sure your vehicle will not move, even when you are on fairly level ground, always set your parking brake and move the shift lever to PARK (P).

Follow the proper steps to be sure your vehicle will not move. See *Shifting Into Park (P) on page 2-23*.

If you are parking on a hill and if you are pulling a trailer, also see *Towing a Trailer on page 4-38*.

Downloaded from www.Manualslib.com manuals search engine

Mirrors

Manual Rearview Mirror

To adjust the angle of the mirror, move the mirror to a position that allows you see to out of the back window. To adjust the height of the mirror, adjust the arm that connects the mirror to the windshield.

To reduce glare from lights behind you, move the lever toward you to the night position.

Automatic Dimming Rearview Mirror with OnStar®, Compass and Temperature Display

If the vehicle has this feature, an automatic dimming mirror automatically dims to the proper level to minimize glare at night from lights behind your vehicle. For more information about OnStar®, see *OnStar® System on page 2-32*.

The mirror also includes a dual display in the upper right corner of the mirror face. The compass reading and the outside temperature will both appear in the display at the same time.

(On/Off): This is the on/off button.

Automatic Dimming Mirror Operation

The automatic dimming mirror function is turned on each time the ignition is started. A light near the on/off button will come on to indicate the automatic dimming is on.

Press the on/off button for about four seconds to manually turn the automatic dimming function on or off.

Temperature and Compass Display

Press the on/off button, located to the far left, to cycle between °F, °C and off.

If the display reads CAL, the compass needs to be calibrated. For more information, see “Compass Calibration” later in this section.

If an abnormal temperature reading is displayed for an extended period of time, please consult your dealer. Under certain circumstances, especially in idle, an increase and delay in updating the temperature is normal.

Downloaded from www.Manualslib.com manuals search engine

Compass Variance

Press the on/off button twice to turn on the compass.

Compass variance is the difference between earth's magnetic north and true geographic north. If not adjusted to account for compass variance, the mirror's compass could give false readings. The mirror is set in zone eight upon leaving the factory. It will be necessary to adjust the compass to compensate for compass variance if you live outside of zone eight. Under certain circumstances, as during a long distance cross-country trip, it will also be necessary to adjust for compass variance.

To adjust for compass variance do the following:

1. Find your current location and variance zone number on the following zone map.

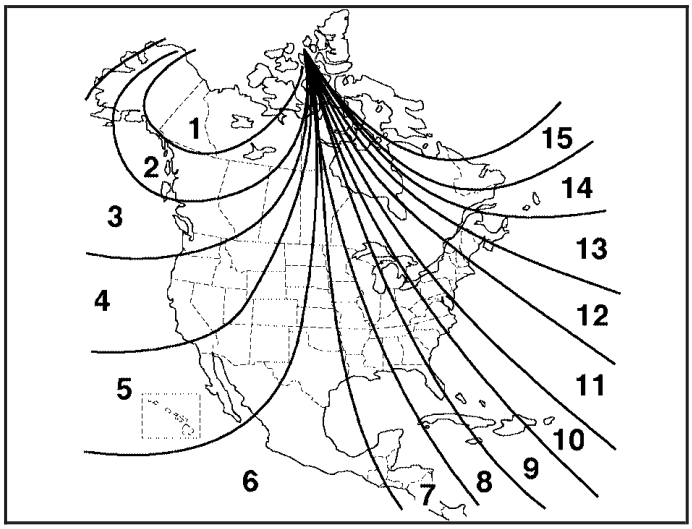

2. Press the on/off button approximately seven seconds until the word ZONE appears in the display. The compass is now in zone mode.
3. Press and release the on/off button until the desired zone number appears in the display. After approximately four seconds of inactivity, the new zone number will be locked in and the compass/temperature display will return.
4. Calibrate the compass as described below.

Downloaded from www.Manualslib.com manuals search engine

Compass Calibration

The compass may need calibration if one of the following occurs:

- After approximately five seconds, the display does not show a compass heading (N for North, for example), there may be a strong magnetic field interfering with the compass. Such interference may be caused by a magnetic antenna mount, magnetic note pad holder, or a similar magnetic item.
- The compass does not display the correct heading and the compass zone variance is set correctly.

In order to calibrate, CAL must be displayed in the mirror compass windows. If CAL is not displayed, push the on/off button for approximately 12 seconds or until CAL is displayed.

The compass can be calibrated by driving the vehicle in circles at 5 mph (8 km/h) or less until the display reads a direction.

Cleaning the Mirror

When cleaning the mirror, use a paper towel or similar material dampened with glass cleaner. Do not spray glass cleaner directly on the mirror as that may cause the liquid cleaner to enter the mirror housing.

Automatic Dimming Rearview Mirror with Compass and Temperature Display

If the vehicle has this feature, the automatic dimming mirror automatically dims to the proper level to minimize glare at night from lights behind your vehicle.

The mirror also has a dual display in the upper right corner of the mirror that shows the compass reading and the outside temperature.

On/Off: Press this button to operate the automatic dimming, compass and temperature features.

Automatic Dimming Mirror Operation

The automatic dimming mirror function is turned on each time the ignition is started. A light near the on/off button will come on to indicate the automatic dimming is on.

If the automatic dimming function is off, press and hold the on/off button for four seconds to manually turn the system back on.

Downloaded from www.Manualslib.com manuals search engine

Temperature and Compass Display

Press the on/off button, located in the center, to cycle between °F, °C and off. If the display reads CAL, the compass needs to be calibrated. For more information, see “Compass Calibration” later in this section.

If an abnormal temperature reading is displayed for an extended period of time, please consult your dealer. Under certain circumstances, a delay in updating the temperature is normal.

Compass Variance

Compass variance is the difference between earth’s magnetic north and true geographic north. If not adjusted to account for compass variance, the mirror’s compass could give false readings. The mirror is set in zone eight upon leaving the factory. It will be necessary to adjust the compass to compensate for compass variance if you live outside zone eight. Under certain circumstances, as during a long distance cross-country trip, it will be necessary to adjust for compass variance.

To adjust for compass variance:

1. Find the current location and variance zone number on the following zone map.
2. Press and hold the on/off button for five seconds until the word ZONE appears in the display. The compass is now in zone mode.
3. Press and release the on/off button within five seconds until the new zone number appears in the display. The display will show a compass direction within a few seconds.

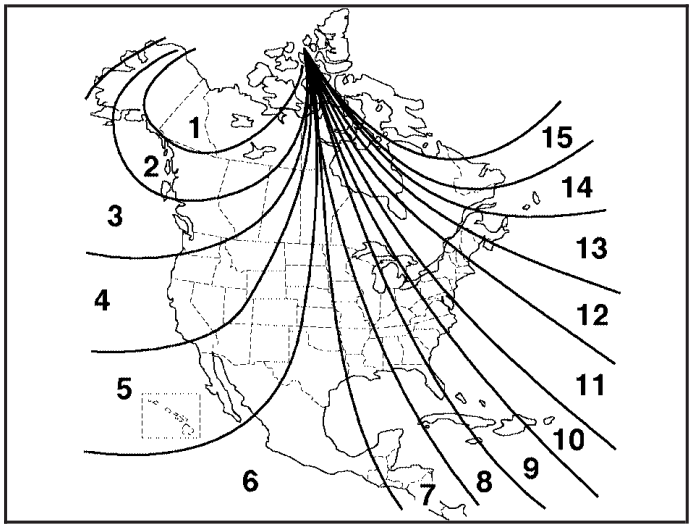

Downloaded from www.Manualslib.com manuals search engine

Compass Calibration

The compass may need calibration if one of the following occurs:

- If CAL is displayed while driving in the vehicle.
- After approximately five seconds, the display does not show a compass heading (N for North, for example), there may be a strong magnetic field interfering with the compass. Such interference may be caused by a magnetic antenna mount, magnetic note pad holder, or a similar magnetic item.
- The compass does not display the correct heading and the compass zone variance is set correctly.

In order to calibrate, CAL must be displayed in the mirror compass windows. If CAL is not displayed, push in the on/off button for approximately eight seconds or until CAL is displayed.

The compass can be calibrated by driving the vehicle in circles at 5 mph (8 km/h) or less until the display reads a direction.

Cleaning the Mirror

When cleaning the mirror, use a paper towel or similar material dampened with glass cleaner. Do not spray glass cleaner directly on the mirror as that may cause the liquid cleaner to enter the mirror housing.

Outside Power Mirrors

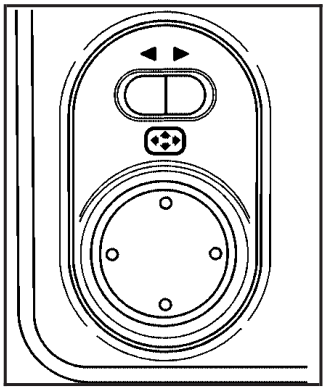

The controls for the power mirrors are located on the instrument panel.

To adjust the mirrors do the following:

1. Move the selector switch to the left or right to choose the driver's or passenger's mirror.
2. Press the corresponding edges of the round control pad to move each mirror to the desired direction.

Adjust each outside mirror so that you can see a little of your vehicle, and the area behind your vehicle.

Downloaded from www.Manualslib.com manuals search engine

Outside Convex Mirrors

The passenger's side mirror is convex. A convex mirror's surface is curved, creating a wider area of vision for the driver.

⚠ CAUTION:

A convex mirror can make things (like other vehicles) look farther away than they really are. If you cut too sharply into the right lane, you could hit a vehicle on your right. Check your inside mirror or glance over your shoulder before changing lanes.

OnStar® System

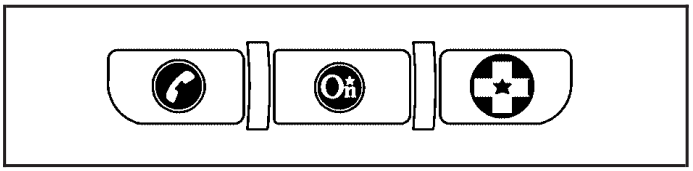

OnStar® uses global positioning system (GPS) satellite technology, wireless communications, and live advisors to provide you with a wide range of safety, security, information, and convenience services. If your airbags deploy, the system is designed to make an automatic call to OnStar® Emergency where we can request emergency services be sent to your location. If you lock your keys in the car, call OnStar® at 1-888-4-ONSTAR and they can send a signal to unlock your doors. If you need roadside assistance, press the OnStar® button and they will get you the help you need.

A complete OnStar® User's Guide and the Terms and Conditions of the OnStar® Subscription Service Agreement are included in the vehicle's glove box literature. For more information, visit www.onstar.com or www.onstar.ca. Contact OnStar® at 1-888-4-ONSTAR (1-888-466-7827), or press the OnStar® button to speak to an OnStar® advisor 24 hours a day, 7 days a week.

Terms and conditions of the Subscription Service Agreement can be found at www.onstar.com or www.onstar.ca.

Downloaded from www.Manualslib.com manuals search engine

OnStar® Services

For new vehicles equipped with OnStar®, the Safe and Sound Plan is included for one year from the date of purchase. You can extend this plan beyond the first year, or upgrade to the Directions and Connections® Plan to meet your needs. For more information, press the OnStar® button to speak to an advisor.

Safe and Sound Plan

- Automatic Notification of Airbag Deployment
- Emergency Services
- Roadside Assistance
- Stolen Vehicle Tracking
- AccidentAssist
- Remote Door Unlock/Vehicle Alert
- Remote Diagnostics
- Online Concierge

Directions and Connections® Plan

- All Safe and Sound Plan Services
- Driving Directions
- RideAssist
- Information and Convenience Services

OnStar® Personal Calling

As an OnStar® subscriber, the Personal Calling capability allows you to make hands-free calls using a wireless system that is integrated into the vehicle. Calls can be placed nationwide using simple voice commands with no additional contracts and no additional roaming charges. To find out more about OnStar® Personal Calling, refer to the OnStar® User's Guide in the vehicle's glove box, visit www.onstar.com or www.onstar.ca, or speak to an OnStar® advisor by pressing the OnStar® button or calling 1-888-4-ONSTAR (1-888-466-7827).

OnStar® Virtual Advisor

Your vehicle may have Virtual Advisor. It is a feature of OnStar® Personal Calling that uses minutes to access weather, local traffic reports, and stock quotes. By pressing the phone button and giving a few simple voice commands, you can browse through the various topics. Customize your information profile at www.myonstar.com. See the OnStar® User's Guide for more information.

Downloaded from www.Manualslib.com manuals search engine

OnStar® Steering Wheel Controls

🔇**:** For vehicles equipped with a Talk/Mute button, it can be used to interact with OnStar®. See *Radio with CD (Base Level) on page 3-40* or *Radio with CD (MP3) on page 3-50* or *Radio with Six-Disc CD on page 3-65* for more information.

When calling into voice mail systems, or to dial directory numbers, press this button once, wait for the response, say the number(s) to be dialed, wait for the number(s) to be repeated and then say “dial”. See the OnStar® User’s Guide for more information.

Storage Areas

Glove Box

To open the glove box, pull the handle to the left and pull the glove box door down until it stops and is fully open.

Cupholder(s)

There are two cupholders located at the lower front of the center console armrest and a molded cupholder on the floor of the center console.

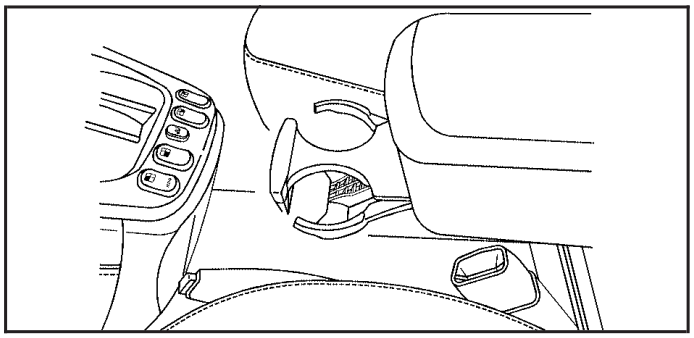

To use the cupholders on the armrest, pull the tray forward.

There are two cupholders located at the rear of the center console. Pull downward on the lid to use the cupholders.

Downloaded from www.Manualslib.com manuals search engine

Center Console Storage Area

Your vehicle has a center console armrest with storage area. Use the lever on the front of the console to open it. There is a removable coinholder and tissue holder inside. The coinholder can be removed by pulling it up from the console.

Luggage Carrier

⚠ CAUTION:

If you try to carry something on top of your vehicle that is longer or wider than the luggage carrier — like paneling, plywood, a mattress and so forth — the wind can catch it as you drive along. This can cause you to lose control. What you are carrying could be violently torn off, and this could cause you or other drivers to have a collision, and of course damage your vehicle. You may be able to carry something like this inside. But, never carry something longer or wider than the luggage carrier on top of your vehicle.

A luggage carrier allows you to load things on top of your vehicle. The luggage carrier has side rails attached to the roof, sliding crossrails (if equipped) and places to use for tying things down. These let you load some things on top of your vehicle, as long as they are not wider or longer than the luggage carrier.

The roof rack crossrails lock in any position along the straight section of the side rail.

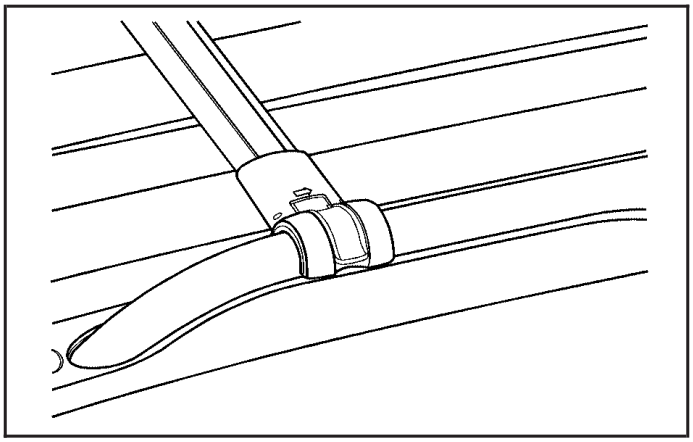

Press the levers down until the locking mechanisms fully engage to the side rail. Make sure each lever is in the down position. The crossrail will not slide when properly engaged.

Downloaded from www.Manualslib.com manuals search engine

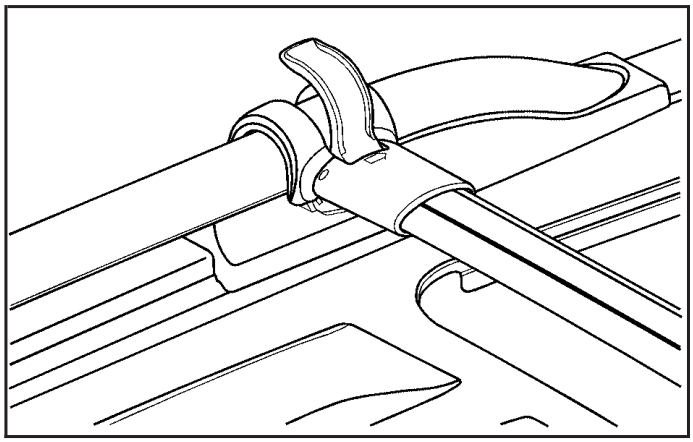

To reposition the crossrail, pull up on the end levers on each side of the crossrail to the upright position. This will release the locking mechanism from the siderail. Lift and place the crossrail into the new position. Press the levers down until the locking mechanisms fully engage to the side rail. Make sure each lever is in the down position. The crossrail will not slide when properly engaged.

Notice: **Loading cargo on the luggage carrier that weighs more than 220 lbs (100 kg) or hangs over the rear or sides of the vehicle may damage your vehicle. When loading cargo, tie it to the crossrail and against the siderail.**

Lock the crossrails to the far forward and backward location to make sure the load is evenly distributed on the luggage carrier.

Do not stand on the plastic lower body panel when loading cargo on the luggage carrier.

Loading cargo on the luggage carrier will make the center of vehicle gravity higher. Avoid high speeds, sudden starts, sharp turns, sudden braking or abrupt maneuvers. This could result in loss of control of the vehicle.

Do not exceed the maximum vehicle capacity when loading your vehicle. For more information on vehicle capacity and loading, see *Loading Your Vehicle on page 4-31*

To prevent damage or loss of cargo as you are driving, check now and then to make sure the luggage carrier crossrails are locked and cargo is still securely fastened.

When the luggage carrier is not in use, store the crossrail inside the vehicle. If not possible, lock one crossrail at the rear most position on the siderails and lock the other crossrail above the opening of the rear door to reduce wind noise.

Downloaded from www.Manualslib.com manuals search engine

Rear Compartment Storage Panel/Cover

Your vehicle may be equipped with an adjustable panel/cargo cover feature. The panel/cargo cover can be adjusted into three positions.

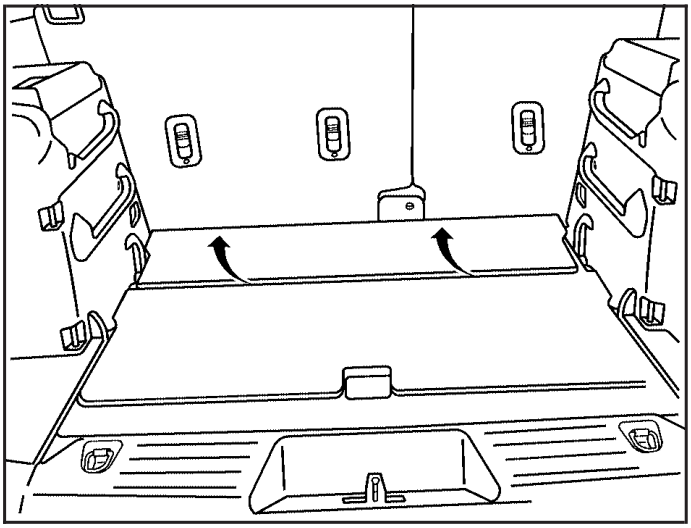

There is a flip panel towards the front of the cargo cover. You may have to flip this panel upward in order to gain access to the cargo cover.

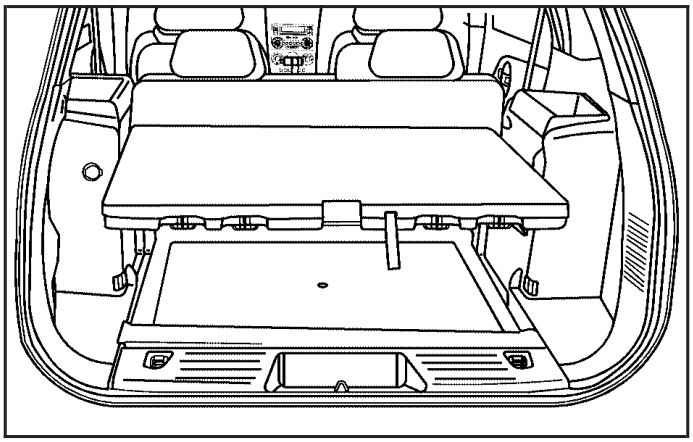

To use the panel in the lower position, do the following:

1. Insert the front corners of the panel into the lower guides.
2. Slide the panel forward.
3. Press down on the back of the panel to lock it in place.

The panel can be used in this position if you need additional space above the panel. Place the cargo on top of the panel in this position.

Downloaded from www.Manualslib.com manuals search engine

⚠ CAUTION:

If you were to carry things on the adjustable panel when it is in the upper (cargo cover) or center positions, during a sudden vehicle movement or a crash, those things could be thrown around in the vehicle. You or others could be injured. When it is in the upper or center position, always secure any cargo on the floor beneath the panel/cover.

To use the panel in the center position, do the following:

1. Insert the front corners of the panel into the middle guides.
2. Slide the panel forward.
3. Press down and pull rearward on the back of the panel to lock it in place.

The panel can be used in this position when you have to place a flat or spare tire in the rear cargo area.

To use the panel in the upper position, do the following:

1. Insert the front corners of the panel into the top guides.
2. Slide the panel forward.
3. Press down and pull rearward on the back of the panel to lock it in place.

This can be used as a cargo cover for the rear area. The panel may be installed either carpet or plastic side up. The panel may also be used as a table in this position. See “Table” following for more information.

Downloaded from www.Manualslib.com manuals search engine

Table

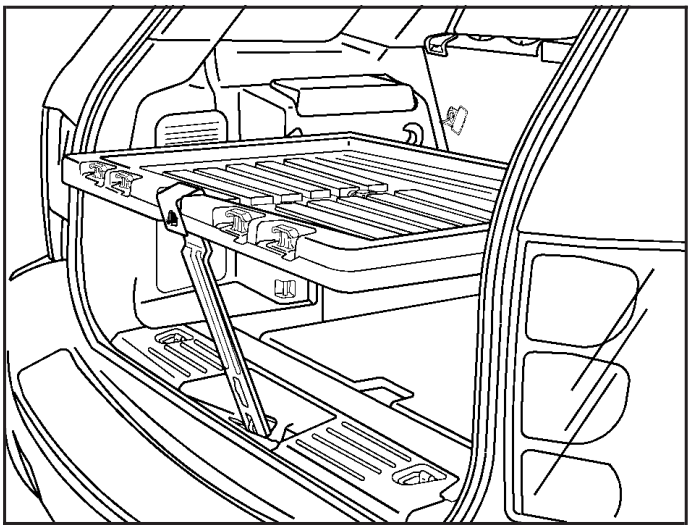

Your vehicle may have an adjustable panel that also functions as a table. The maximum load for the table is 100 lbs. distributed (45 kg).

To set up the table, do the following:

1. With the adjustable panel in the upper position pull rearward to position it for use as a table. The plastic side should be up.
2. Rotate the knob to release the leg from the plastic side of the table and rotate the leg outward.
3. Set the table leg onto the liftgate lock striker at the rear edge of the vehicle.

Make sure to place the table leg securely onto the liftgate lock striker.

Notice: **Driving with the panel extended into the table position could damage your vehicle. Always have the panel in the stored position while you are driving.**

Notice: **Placing hot items on the surface of the table could damage it. Always be sure that the items that are placed on the surface of the table are of moderate temperature.**

There are four hooks located on the table that can be used for grocery bags.

Downloaded from www.Manualslib.com manuals search engine

Convenience Net

Your vehicle may have a rear compartment net to prevent items from rolling under the rear seat. There may also be four convenience net tie-downs. Two tie-downs are located on the side trim just behind the rear seat and the other two are located on the floor at the rear of the cargo area.

Sunroof

If the vehicle has an express-open sunroof, the controls to operate it are located on the headliner above the rearview mirror. The ignition must be in RUN or ACC to operate the sunroof.

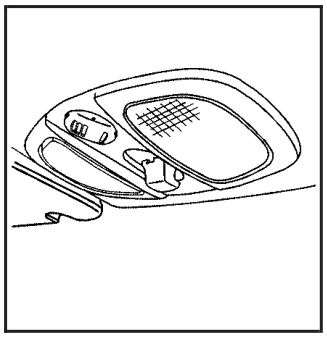

To express-open the sunroof glass panel and sunshade, press the switch rearward and release it.

To stop the sunroof before it is completely open, press the switch rearward again. The sunshade cannot be closed with the sunroof open. To close the sunroof, press forward and hold the switch until the sunroof stops, lifts and seals at the back of the sunroof glass.

To put the sunroof in the vent position, pull down on the front of the switch. Push up on the front of the switch to close it.

Downloaded from www.Manualslib.com manuals search engine

Section 3 Instrument Panel

Instrument Panel Overview 3-4
Hazard Warning Flashers 3-6
Other Warning Devices 3-6
Horn 3-6
Tilt Wheel 3-7
Turn Signal/Multifunction Lever 3-7
Turn and Lane-Change Signals 3-8
Headlamp High/Low-Beam Changer 3-8
Flash-to-Pass 3-8
Windshield Wipers 3-8
Windshield Washer 3-10
Rear Window Wiper/Washer 3-10
Cruise Control 3-11
Headlamps 3-14
Headlamps on Reminder 3-14
Daytime Running Lamps (DRL) 3-14
Automatic Headlamp System 3-15
Fog Lamps 3-15
Instrument Panel Brightness 3-16
Dome Lamp 3-16
Entry Lighting 3-17
Map Lamps 3-17
Cargo Lamp 3-17
Battery Run-Down Protection 3-18
Accessory Power Outlet(s) 3-18
Ashtray(s) and Cigarette Lighter 3-19

Climate Controls 3-19
Climate Control System 3-19
Outlet Adjustment 3-22
Passenger Compartment Air Filter 3-22

Warning Lights, Gages, and Indicators 3-23
Instrument Panel Cluster 3-24
Speedometer and Odometer 3-25
Trip Odometer 3-25
Tachometer 3-25
Safety Belt Reminder Light 3-26
Airbag Readiness Light 3-26
Battery Warning Light 3-27
Brake System Warning Light 3-28
Anti-Lock Brake System Warning Light 3-29
Traction Control System (TCS) Warning Light ...3-30
Low Traction Light 3-30
Engine Coolant Temperature Warning Light 3-31
Engine Coolant Temperature Gage 3-31
Malfunction Indicator Lamp 3-32
Oil Pressure Light 3-35
Change Engine Oil Light 3-36
Security Light 3-36
Reduced Engine Power Light 3-36
Highbeam On Light 3-37
Daytime Running Lamps (DRL)
Indicator Light 3-37

Downloaded from www.Manualslib.com manuals search engine

Section 3 Instrument Panel

Gate Ajar Light 3-37
Fuel Gage 3-37
Low Fuel Warning Light 3-38

Audio System(s) 3-38
Setting the Time 3-40
Radio with CD (Base Level) 3-40
Radio with CD (MP3) 3-50
Radio with Six-Disc CD 3-65
Theft-Deterrent Feature 3-79
Audio Steering Wheel Controls 3-79
Radio Reception 3-80
Care of Your CDs 3-80
Care of the CD Player 3-81
Fixed Mast Antenna 3-81
XM™ Satellite Radio Antenna System 3-81
Chime Level Adjustment 3-81

Downloaded from www.Manualslib.com manuals search engine

✍ NOTES

Downloaded from www.Manualslib.com manuals search engine

Instrument Panel Overview

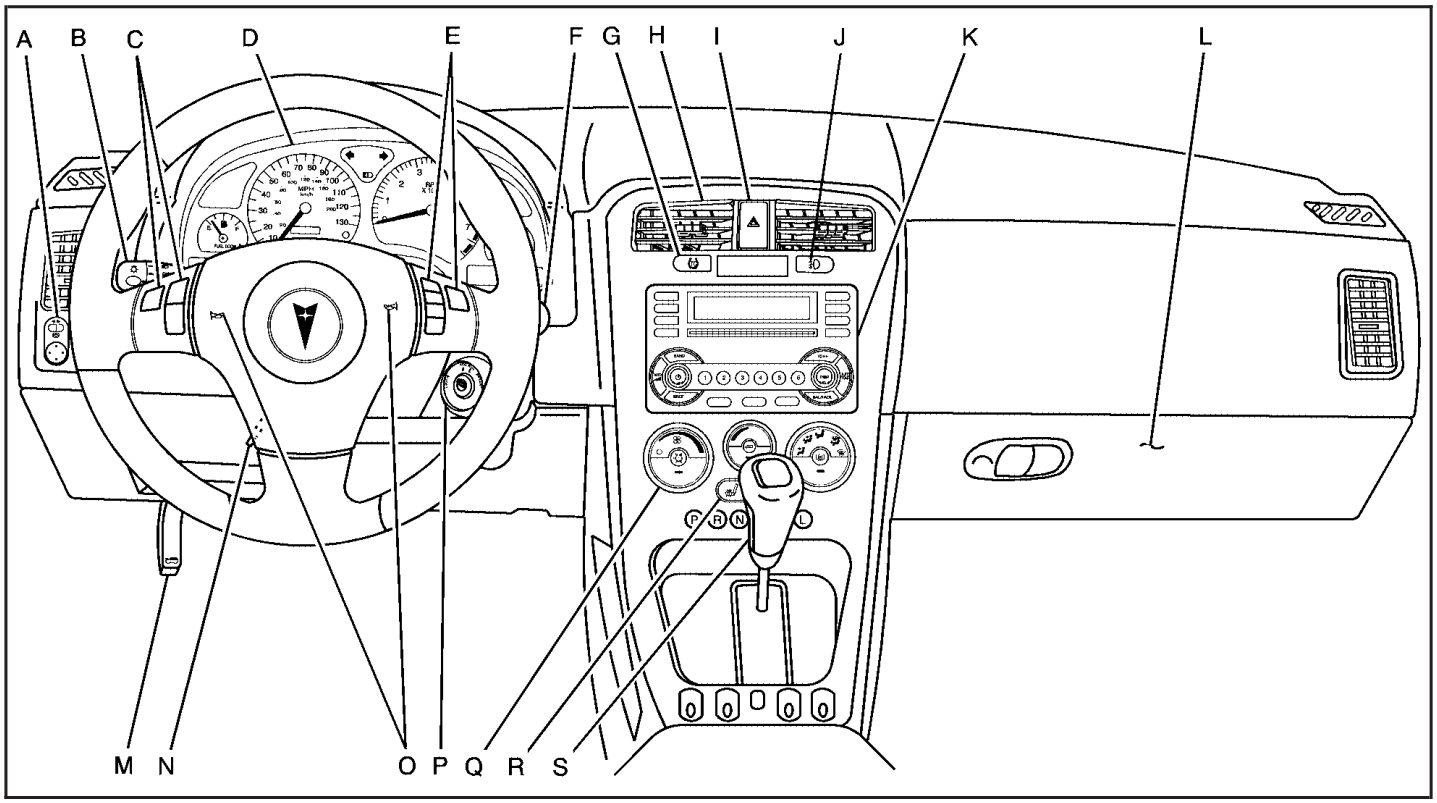

Downloaded from www.Manualslib.com manuals search engine

The main components of your instrument panel are the following:

A. Power Mirror Control. See *Outside Power Mirrors on page 2-31*

B. Turn Signal/Multifunction Lever. See *Turn Signal/Multifunction Lever on page 3-7*.

C. Cruise Controls. See *Cruise Control on page 3-11*.

D. Instrument Panel Cluster. See *Instrument Panel Cluster on page 3-24*.

E. Audio Steering Wheel Controls (If Equipped). See *Audio Steering Wheel Controls on page 3-79*.

F. Windshield Wiper/Washer Lever. See *Windshield Wipers on page 3-8*.

G. Traction Control System Button. See *Traction Control System (TCS) on page 4-9*.

H. Outlets. See *Outlet Adjustment on page 3-22*.

I. Hazard Warning Flashers. See *Hazard Warning Flashers on page 3-6*.

J. Fog Lamps Button. See *Fog Lamps on page 3-15*.

K. Audio System. See *Audio System(s) on page 3-38*.

L. Glove Box. See *Glove Box on page 2-34*.

M. Hood Release. See *Hood Release on page 5-11*.

N. Tilt Wheel. See *Tilt Wheel on page 3-7*.

O. Horn. See *Horn on page 3-6*.

P. Ignition Switch. See *Ignition Positions on page 2-16*.

Q. Climate Control System. See *Climate Control System on page 3-19*.

R. Heated Seats Buttons. See *Heated Seats on page 1-4*.

S. Shift Lever. See *Shifting Into Park (P) on page 2-23*.

Downloaded from www.Manualslib.com manuals search engine

Hazard Warning Flashers

Your hazard warning flashers let you warn others. They also let police know you have a problem. Your front and rear turn signal lamps will flash on and off.

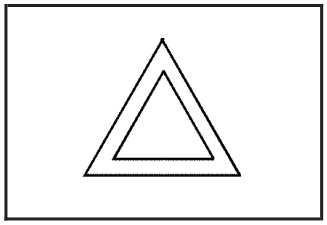

The hazard warning flasher button is located in the center of the instrument panel.

Your hazard warning flashers work no matter what position your key is in, and even if the key is not in the ignition switch.

Press the button to make the front and rear turn signal lamps flash on and off. Press the button again to turn the flashers off.

When the hazard warning flashers are on, your turn signals will not work.

Other Warning Devices

If you carry reflective triangles, you can set them up at the side of the road about 300 feet (100 m) behind your vehicle.

Horn

Press near or on the horn symbols on your steering wheel pad to sound the horn.

Downloaded from www.Manualslib.com manuals search engine

Tilt Wheel

Your vehicle has a tilt wheel that allows you to adjust the steering wheel.

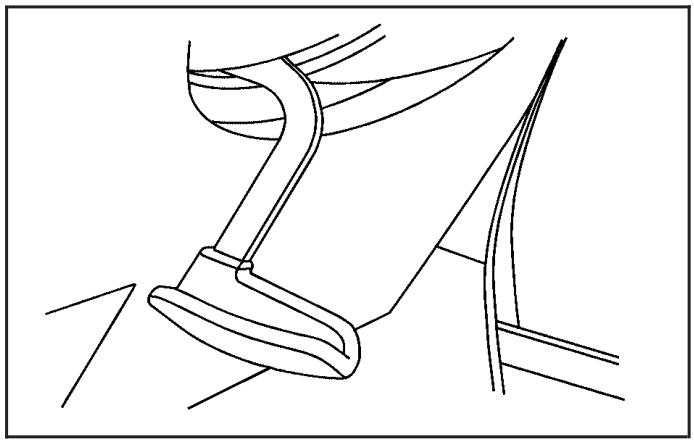

The lever to tilt the steering wheel is located on the left side of the steering column.

To tilt the wheel, hold the steering wheel and push the lever down. Then, move the steering wheel to a comfortable position and pull the lever up firmly to lock the column in place.

Turn Signal/Multifunction Lever

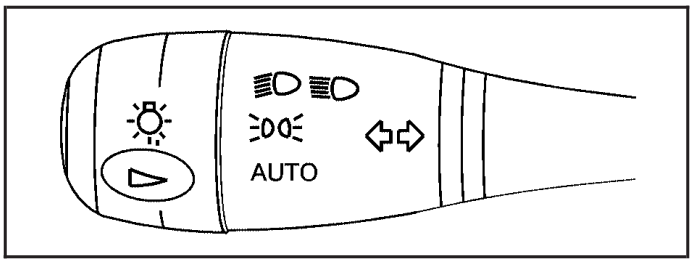

The lever on the left side of the steering column includes the following:

- **Turn and Lane-Change Signals.**
  See *Turn and Lane-Change Signals on page 3-8*.
- **Exterior Lamps.**
  See *Headlamps on page 3-14*.
- **Headlamp High/Low-Beam Changer.**
  See *Headlamp High/Low-Beam Changer on page 3-8*.
- Flash-to-Pass.
  See *Flash-to-Pass on page 3-8*.

Downloaded from www.Manualslib.com manuals search engine

Turn and Lane-Change Signals

The turn signal has two upward (for right) and two downward (for left) positions. These positions allow you to signal a turn or a lane change.

To signal a turn, move the lever all the way up or down. When the turn is finished, the lever will return automatically.

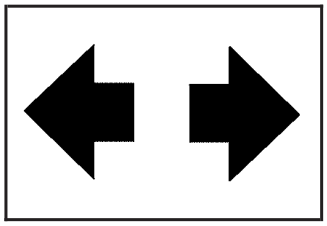

An arrow on the instrument panel cluster will flash in the direction of the turn or lane change.

To signal a lane change, raise or lower the lever until the arrow starts to flash. Hold it there until you complete the lane change. The lever will return by itself when you release it.

As you signal a turn or a lane change, if the arrows flash rapidly, a signal bulb may be burned out and other drivers won't see your turn signal.

If a bulb is burned out, replace it to help avoid an accident. If the arrows do not go on at all when you signal a turn, check the fuse, see *Fuses and Circuit Breakers on page 5-83* and for burned-out bulbs.

Headlamp High/Low-Beam Changer

To change the headlamps from low beam to high or high beam to low, pull the turn signal lever all the way towards you. Then release it.

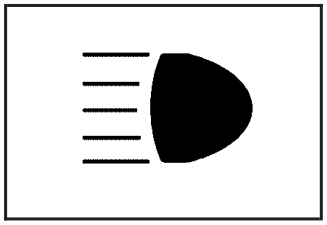

When the high beams are on, this light on the instrument panel cluster will also be on.

Flash-to-Pass

This feature lets you use your high-beam headlamps to signal a driver in front of you that you want to pass.

To use it, pull the turn signal/multifunction lever toward you until the high-beam headlamps come on, then release the lever to turn them off.

Windshield Wipers

Be sure to clear ice and snow from the wiper blades before using them. If the wiper blades are frozen to the windshield, gently loosen or thaw them. If the blades do become damaged, install new blades or blade inserts. See *Windshield Wiper Blade Replacement on page 5-45*.

Downloaded from www.Manualslib.com manuals search engine

Heavy snow or ice can overload the wiper motor. A circuit breaker will stop the motor until it cools down. Clear away snow or ice to prevent an overload.

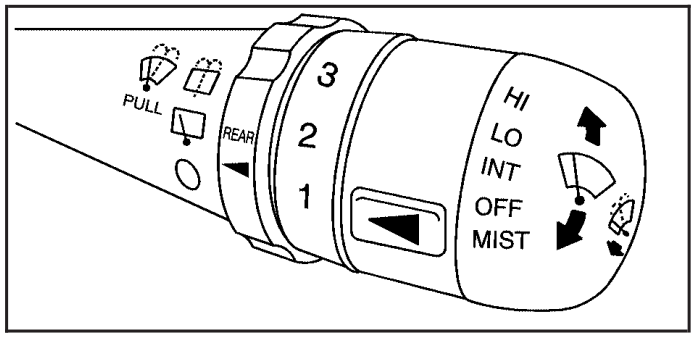

United States

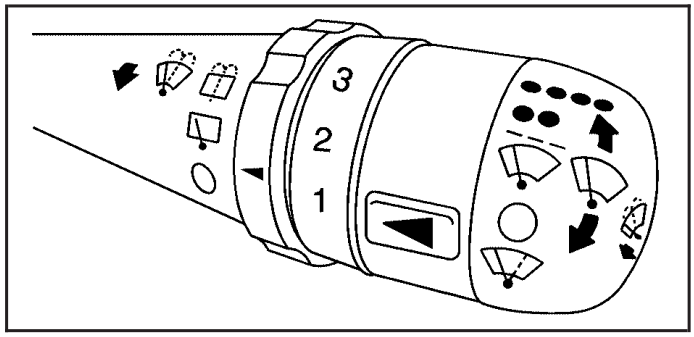

Canada

The lever on the right side of the steering column operates the windshield wipers. Push up or pull down on the lever to place it in one of the following positions.

MIST or (Mist): Pull the lever down and release it for a single wiping cycle. The lever will return to its original position. For more cycles, hold the lever down before releasing it.

OFF or ○ (Off): Move the lever to this position to turn off the wipers.

INT or (Intermittent): Move the lever to this position to set a delay between wipes. To set for a shorter or longer delay between wipes, turn the band with the arrow pointing to the numbers (1, 2, or 3). Select 3 for the most frequent movement; select 1 for the least frequent.

LO or ●● (Low): Move the lever to this position for slow, steady wiping cycles.

HI or ●●●● (High): Move the lever to this position for rapid wiping cycles.

Downloaded from www.Manualslib.com manuals search engine

Windshield Washer

⚠ CAUTION:

In freezing weather, do not use your washer until the windshield is warmed. Otherwise the washer fluid can form ice on the windshield, blocking your vision.

Pull the windshield wiper lever toward you to operate the windshield wipers. Washer fluid will squirt onto the windshield and the wipers will run for a few cycles to clear the windshield. For more wash cycles, pull the lever toward you and hold it there.

Rear Window Wiper/Washer

The band on the wiper lever with the smaller arrow operates the rear wiper/washer.

○ **(Off):** Turn the band to this position to turn off the rear wiper.

(Rear Wiper): Turn the band with the smaller arrow to this position to turn on the rear wiper. To set for a shorter or longer delay between wipes, turn the other band with the larger arrow pointing to the numbers (1, 2, or 3). Select 3 for the most frequent movement; select 1 for the least frequent. The band with the arrow pointing to the numbers (1, 2, or 3) will affect both the front and rear wipers if they are on at the same time.

(Wash): Turn and hold the band in this position to spray washer fluid on the rear window. The rear wiper will also come on. Release the band when enough fluid has been sprayed on the window. The rear wiper will run a few additional times after you release it.

Downloaded from www.Manualslib.com manuals search engine

Cruise Control

If your vehicle is equipped with cruise control, you can maintain a speed of about 25 mph (40 km/h) or more without keeping your foot on the accelerator. This can really help on long trips. Cruise control does not work at speeds below 25 mph (40 km/h).

⚠ CAUTION:

Cruise control can be dangerous where you cannot drive safely at a steady speed. So, do not use your cruise control on winding roads or in heavy traffic.

Cruise control can be dangerous on slippery roads. On such roads, fast changes in tire traction can cause excessive wheel slip, and you could lose control. Do not use cruise control on slippery roads.

Setting Cruise Control

⚠ CAUTION:

If you leave your cruise control on when you are not using cruise, you might hit a button and go into cruise when you do not want to. You could be startled and even lose control. Keep the cruise control switch off until you want to use cruise control.

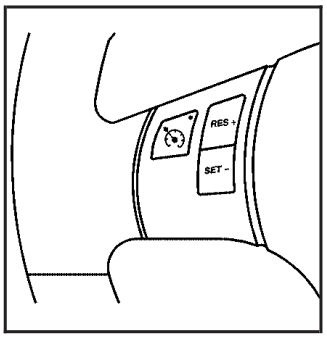

The cruise control buttons are located on the steering wheel.

(On/Off): Press this symbol to turn the cruise control system on and off.

Downloaded from www.Manualslib.com manuals search engine

RES+ (Resume): Press this symbol to resume a set speed and to accelerate the speed.

SET– (Set): Press this symbol to set a speed and to decrease the speed.

To set a speed do the following:

1. Press the on/off symbol to turn cruise control on. The indicator light on the button will come on.
2. Get to the speed you want.
3. Press the SET– symbol and release it.
4. Take your foot off the accelerator pedal.

When the brakes are applied, the cruise control shuts off.

If the vehicle is in cruise control and the Traction Control System (TCS) begins to limit wheel spin, the cruise control will automatically disengage. See *Traction Control System (TCS) on page 4-9*. When road conditions allow, the cruise control can be used again.

Resuming a Set Speed

Suppose you set your cruise control at a desired speed and then you apply the brakes. This, of course, disengages the cruise control. The cruise symbol in the instrument panel cluster will also go out indicating cruise is no longer engaged. To return to your previously set speed, you do not need to go through the set process again. Once at a speed of about 25 mph (40 km/h) or more, you can press the RES+ symbol briefly.

This will take you back up to your previously chosen speed and stay there.

Increasing Speed While Using Cruise Control

There are two ways to go to a higher speed.

- If the cruise control system is already engaged, press the RES+ symbol. Hold it there until you get up to the speed you want, and then release the button.
- To increase your speed in very small amounts, press the RES+ symbol briefly and then release it. Each time you do this, your vehicle will go about 1 mph (1.6 km/h) faster.

Downloaded from www.Manualslib.com manuals search engine

Reducing Speed While Using Cruise Control

If the cruise control system is already engaged,

- Push and hold the SET– symbol until you reach the lower speed you want, then release it.
- To slow down in very small amounts, push the SET– symbol briefly. Each time you do this, you will go about 1 mph (1.6 km/h) slower.

Passing Another Vehicle While Using Cruise Control

Use the accelerator pedal to increase your speed. When you take your foot off the pedal, your vehicle will slow down to the cruise control speed you set earlier. However, if you use the accelerator to increase the vehicle's speed for approximately 60 seconds, cruise control will disengage.

Using Cruise Control on Hills

How well your cruise control will work on hills depends upon your speed, load, and the steepness of the hills. When going up steep hills, you may have to step on the accelerator pedal to maintain your vehicle's speed. When going downhill, you may have to brake or shift to a lower gear to keep your vehicle's speed down. Of course, applying the brakes ends cruise control. Many drivers find this to be too much trouble and do not use cruise control on steep hills.

Ending Cruise Control

To end a cruise control session, step lightly on the brake pedal.

Stepping on the brake will end the current cruise control session only. Press the cruise on/off button to turn off the system completely.

If the driver takes over the acceleration pedal for more than sixty seconds, cruise control will shut off.

Erasing Speed Memory

When you turn off the cruise control or the ignition, your cruise control set speed memory is erased.

Downloaded from www.Manualslib.com manuals search engine

Headlamps

The exterior lamp control is located on the turn signal/multifunction lever.

(Exterior Lamp Control): Turn the control with this symbol on it to operate the exterior lamps.

The exterior lamp control has the following positions:

AUTO (Off/Automatic Headlamps): Turn the control to this position to put the headlamps in automatic mode. Automatic mode will turn the exterior lamps on and off depending upon how much light is available outside of the vehicle.

(Parking Lamps): Turn the control to this position to turn on the parking lamps together with the following:

- Sidemarker Lamps
- Taillamps
- License Plate Lamps
- Instrument Panel Lights

(Headlamps): Turning the control to this position turns on the headlamps, together with the previously listed lamps and lights.

Headlamps on Reminder

If you open the driver's door with the ignition off and the lamps on, you will hear a warning chime.

Daytime Running Lamps (DRL)

Daytime Running Lamps (DRL) can make it easier for others to see the front of your vehicle during the day. DRL can be helpful in many different driving conditions, but they can be especially helpful in the short periods after dawn and before sunset. Fully functional daytime running lamps are required on all vehicles first sold in Canada.

The DRL system will make your low-beam headlamps come on at a reduced brightness in daylight when the following conditions are met:

- The ignition is on,
- the exterior lamp band is in the automatic position,
- the transaxle is not in PARK (P),
- the light sensor determines it is daytime, and
- the parking brake is released.

When the DRL are on, the low-beam headlamps will be on at a reduced brightness. The taillamps, sidemarker and other lamps will not be on. The instrument panel will not be lit up either.

Downloaded from www.Manualslib.com manuals search engine

When you turn the exterior lamp band to the headlamp position, your low-beam headlamps will come on. The other lamps that come on with your headlamps will also come on.

When you turn off the headlamps, the regular lamps will go off, and your low-beam headlamps will come on to the reduced brightness.

To idle your vehicle with the DRL off, move the shift lever to PARK (P). The DRL will stay off until you move the shift lever out of PARK (P).

As with any vehicle, you should turn on the regular headlamp system when you need it.

Automatic Headlamp System

When it is dark enough outside and the exterior lamps control is in the automatic position, the headlamps will come on automatically. See *Headlamps on page 3-14*.

Your vehicle has a light sensor located on top of the instrument panel. Make sure it is not covered, or the headlamps will be on when you don't need them.

The system may also turn on the headlamps when driving through a parking garage or tunnel.

Fog Lamps

If your vehicle has this feature, use your fog lamps for better visibility in foggy or misty conditions.

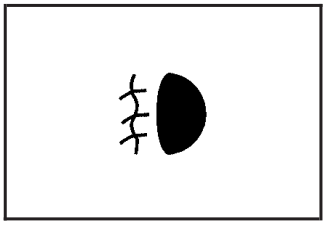

The button for your fog lamps is located in the instrument panel above the radio.

Push the button to turn the fog lamps on or off.

When using fog lamps, the parking lamps or low-beam headlamps must be on.

A light on the button will come on when the fog lamps are on. Fog lamps will go off whenever you turn the high-beam headlamps on. When the high-beam headlamps are turned off, the fog lamps will come on again.

Some localities have laws that require the headlamps to be on along with the fog lamps.

Downloaded from www.Manualslib.com manuals search engine

Instrument Panel Brightness

This feature controls the brightness of the instrument panel lights.

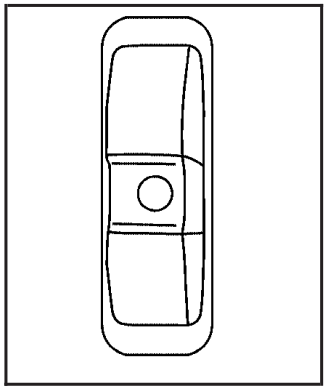

The control for this feature is located on the instrument panel to the left of the steering column.

Turn the control up to brighten the lights or down to dim them.

Dome Lamp

The dome lamp switch has three positions.

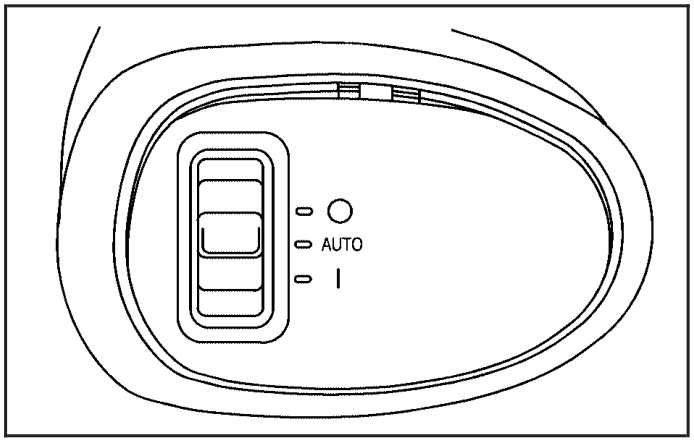

◯ **(Off):** The lamp will not come on as long as the switch is in this position.

AUTO: The lamp will come on when a door is opened. See *Entry Lighting on page 3-17*.

| **(On):** The lamp will stay on as long as the switch is in this position.

Downloaded from www.Manualslib.com manuals search engine

Entry Lighting

If the dome lamp is in the AUTO position, the dome lamp and the cargo lamp inside your vehicle will come on when any door is opened. In addition, the light will come on when the remote keyless entry unlock button is pressed. It will stay on for 20 seconds or until a door is opened. After the door is opened the light will remain on and stay on for 20 seconds after the doors are closed, or until you put the key in the ignition and turn the key to RUN.

Map Lamps

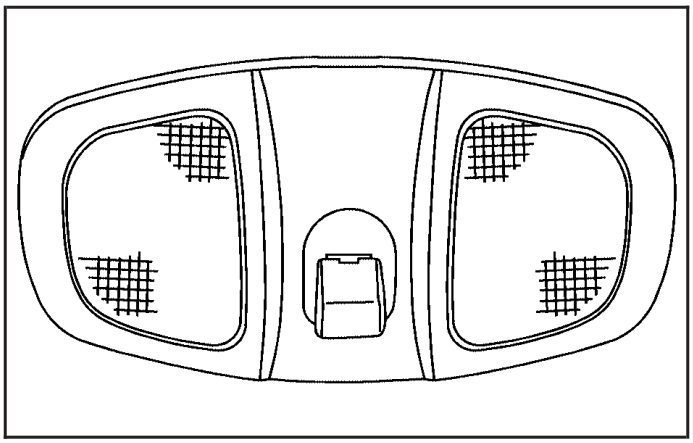

Your vehicle may have lamps located on the headliner above the rearview mirror. Push on the lens in the lamp to turn them on and off.

Cargo Lamp

The cargo lamp is located over the rear compartment, and is controlled by the dome lamp. See *Dome Lamp on page 3-16*.

Downloaded from www.Manualslib.com manuals search engine

Battery Run-Down Protection

Your vehicle has a battery saver feature designed to protect your vehicle's battery.

When any interior lamp is left on and the ignition is turned off, the battery rundown protection system will automatically turn the lamp off after 20 minutes. This will avoid draining the battery. If the radio is on, it will turn off after 10 minutes or if any door on the vehicle is opened. See *Retained Accessory Power (RAP) on page 2-17*.

Accessory Power Outlet(s)

The accessory power outlets can be used to connect electrical equipment such as a cellular phone or CB radio.

The accessory power outlets are located in front of the center console storage area, at the rear of the center console, and in the rear cargo area.

To use the outlets, remove the cover. When not in use, always cover the outlet with the protective cap.

Notice: **Leaving electrical equipment on for extended periods will drain the battery. Always turn off electrical equipment when not in use and do not plug in equipment that exceeds the maximum amperage rating.**

Certain electrical accessories may not be compatible with the accessory power outlets and could result in blown vehicle or adapter fuses. If you experience a problem, see your dealer for additional information on the accessory power outlet.

Notice: **Adding any electrical equipment to your vehicle may damage it or keep other components from working as they should. The repairs would not be covered by your warranty. Do not use equipment exceeding maximum amperage rating. Check with your dealer before adding electrical equipment.**

When adding electrical equipment, be sure to follow the installation instructions included with the equipment.

Notice: **Improper use of the power outlet can cause damage not covered by your warranty. Do not hang any type of accessory or accessory bracket from the plug because the power outlets are designed for accessory power plugs only.**

The accessory power outlets can use equipment with a maximum amperage rating up to 14. However, at 14 amperage, there is a potential to drain the battery. Extended use of the auxiliary power outlets or large current draws may drain the battery and/or shorten battery life.

Downloaded from www.Manualslib.com manuals search engine

Ashtray(s) and Cigarette Lighter

Your vehicle may have an ashtray and cigarette lighter. Lift the lid to expose the ashtray. To remove the ashtray, lift it up.

Lift the lid to expose the cigarette lighter.

To use the lighter, push it in all the way and let go. When it is ready, it will pop back out by itself.

Notice: **Holding a cigarette lighter in while it is heating will not allow the lighter to back away from the heating element when it is hot. Damage from overheating may occur to the lighter or heating element, or a fuse could be blown. Do not hold a cigarette lighter in while it is heating.**

Notice: **If you put papers, pins, or other flammable items in the ashtray, hot cigarettes or other smoking materials could ignite them and possibly damage your vehicle. Never put flammable items in the ashtray.**

Climate Controls

Climate Control System

With this system you can control the heating, cooling and ventilation for your vehicle.

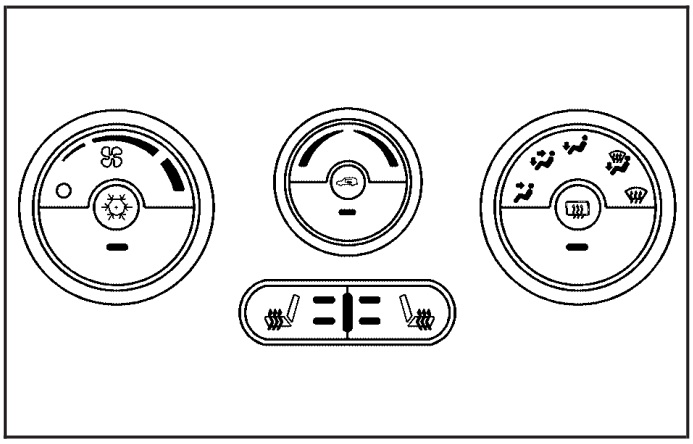

Operation

Temperature Control: Turn the center knob clockwise or counterclockwise to increase or decrease the temperature inside your vehicle.

Downloaded from www.Manualslib.com manuals search engine

(Fan): Turn the left knob clockwise or counterclockwise to increase or decrease the fan speed. In any setting other than off, the fan will run continuously with the ignition on. To turn off the air completely, turn fan to 0 and select Recirculate.

Use the right knob to select from the following modes:

There are two minor detents between each mode to finely adjust airflow position.

(Vent): This mode directs air to the instrument panel outlets.

(Bi-Level): This mode directs approximately half of the air to the instrument panel outlets, and then directs the remaining air to the floor outlets.

(Floor): This mode directs most of the air to the floor outlets with some air directed to the windshield.

The right knob may also be used to select the defrost and defog modes that are described in this section.

You can also select modes by using the following buttons:

(Recirculate): Press this button on the center knob to recirculate cabin air through the vehicle. It can be used to prevent outside air and odors from entering your vehicle or to help heat or cool the air inside your vehicle more quickly. An indicator light below the symbol will come on in this mode. Operation in this mode during periods of high humidity and cool outside temperatures may result in increased window fogging. If window fogging is experienced, select the defrost mode.

(Air Conditioning): Press this button to turn the air-conditioning system on or off. When this button is pressed, an indicator light on the button will come on to let you know the air conditioning is activated. Air-conditioning can be selected in any mode as long as the fan switch is on.

The air-conditioning system removes moisture from the air, so you may sometimes notice a small amount of water dripping underneath your vehicle while idling or after turning off the engine. This is normal.

Downloaded from www.Manualslib.com manuals search engine

Defogging and Defrosting

Fog or frost on the inside of windows is a result of high humidity (moisture) condensing on the cool window glass. This can be minimized if the climate control system is used properly. Use the defog mode to clear the windows of fog or moisture and warm the passengers. To avoid fogging windows on rainy and humid days at temperatures above freezing, run the air conditioning compressor. Also, it is best to avoid the use of recirculation mode except when maximum A/C performance is needed or for short times to avoid exterior odors. Use the defrost mode to remove fog or frost from the windshield more quickly. When you select either of these modes (or the floor mode which also helps defog the windows slightly), the system runs the air-conditioning compressor and cancels recirculation mode to dry the air; however, the recirculation light will stay on. For best results, clear all snow and ice from the windshield before defrosting.

Turn the right knob to select the defog or defrost mode.

(Defog): This mode directs half of the air to the windshield and the side window outlets and half to the floor outlets.

(Defrost): This mode directs most of the air to the windshield and the side window outlets, with some air directed to the floor outlets.

Rear Window Defogger

The rear window defogger uses a warming grid to remove fog from the rear window.

The rear window defogger will only work when the ignition is in RUN.

(Rear): Press this button to turn the rear window defogger on or off. An indicator light on the button will come on to let you know that the rear window defogger is activated.

The rear window defogger will only work when the ignition is in RUN. The rear window defogger will stay on for approximately 15 minutes after the button is pressed, unless the ignition is turned to ACC or LOCK. If turned on again, the defogger will only run for approximately five minutes before turning off. The defogger can also be turned off by pressing the button again or by turning off the engine.

Notice: **Do not use anything sharp on the inside of the rear window. If you do, you could cut or damage the warming grid, and the repairs would not be covered by your warranty. Do not attach a temporary vehicle license, tape, a decal or anything similar to the defogger grid.**

Downloaded from www.Manualslib.com manuals search engine

Outlet Adjustment

Use the louvers located on the air outlets to change the direction of the airflow.

Operation Tips

- Clear away any ice, snow, or leaves from the air inlets at the base of the vehicle that may block the flow of air into your vehicle.
- Use of non-GM approved hood deflectors may adversely affect the performance of the system.
- Keep the path under the front seats clear of objects to help circulate the air inside of your vehicle more effectively.

Passenger Compartment Air Filter

The passenger compartment outside air is routed through a passenger compartment filter. The filter removes certain particles from the air, including pollen and dust particles. Reductions in airflow, which may occur more quickly in dusty areas, indicate that the filter needs to be replaced early.

The filter should be replaced as part of routine scheduled maintenance. See *Scheduled Maintenance on page 6-4* for when to replace the filter.

To change the passenger compartment air filter, use the following steps:

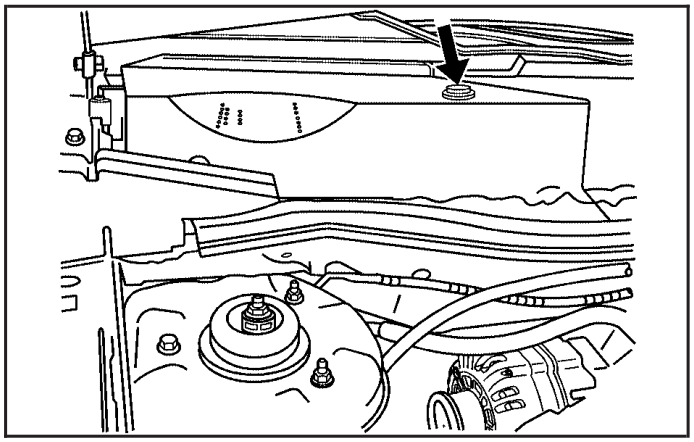

1. Remove the push pins from the rear of the passenger's side air inlet panel. It is located in the rear of the engine compartment on the passenger side of the vehicle.
2. Open the hood.
3. Remove the push pins from the top and forward edge of the passenger's side air inlet panel.
4. Remove the air inlet panel.

Downloaded from www.Manualslib.com manuals search engine

5. Remove the filter from the filter housing by pressing the release tab at the inboard edge of the filter housing.

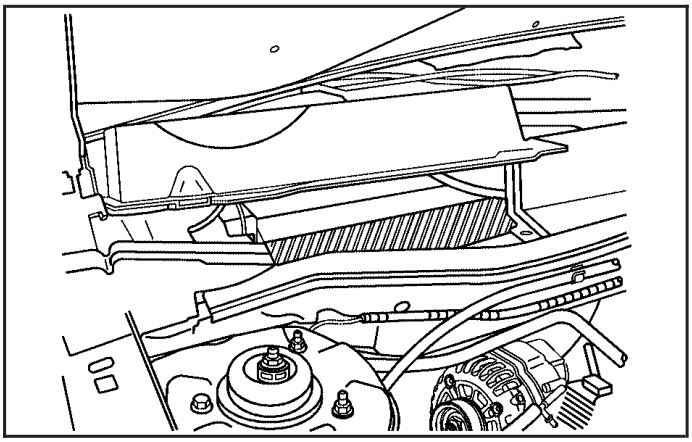

6. Remove the filter from the vehicle.
7. Install a new passenger compartment air filter. For the type of filter to use see *Normal Maintenance Replacement Parts on page 6-13*.
8. Reverse Steps 1 through 5.

Warning Lights, Gages, and Indicators

This part describes the warning lights and gages that may be on your vehicle. The pictures will help you locate them.

Warning lights and gages can signal that something is wrong before it becomes serious enough to cause an expensive repair or replacement. Paying attention to your warning lights and gages could also save you or others from injury.

Warning lights come on when there may be or is a problem with one of your vehicle's functions. As you will see in the details on the next few pages, some warning lights come on briefly when you start the engine just to let you know they're working. If you are familiar with this section, you should not be alarmed when this happens.

Gages can indicate when there may be or is a problem with one of your vehicle's functions. Often gages and warning lights work together to let you know when there's a problem with your vehicle.

When one of the warning lights comes on and stays on when you are driving, or when one of the gages shows there may be a problem, check the section that tells you what to do about it. Please follow this manual's advice. Waiting to do repairs can be costly — and even dangerous. So please get to know your warning lights and gages. They're a big help.

Downloaded from www.Manualslib.com manuals search engine

Instrument Panel Cluster

Your instrument panel cluster is designed to let you know at a glance how your vehicle is running. You will know how fast you are going, how much fuel you are using, and many other things you will need to drive safely and economically.

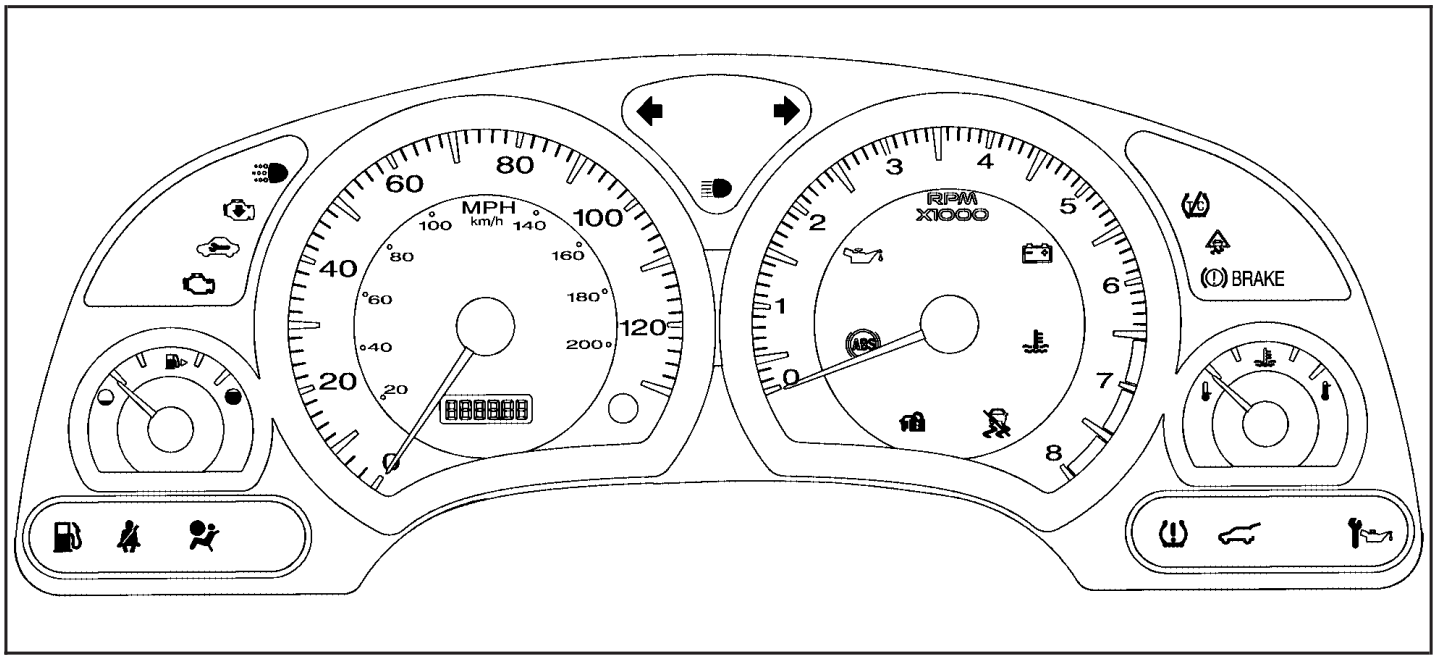

United States version shown, Canada similar

Downloaded from www.Manualslib.com manuals search engine

Speedometer and Odometer

Your speedometer lets you see your speed in both miles per hour (mph) and kilometers per hour (km/h).

Your odometer shows how far your vehicle has been driven, in either miles (used in the United States) or kilometers (used in Canada).

Your vehicle has a tamper resistant odometer. The digital odometer will read 999,999 if someone tries to turn it back.

The ERROR message is displayed on the odometer indicating that the speedometer reading is approximately 10 percent above the actual speed. Press the trip odometer button to return to the odometer/trip mode. This message will appear every 10 minutes. If this occurs, see your dealer for service.

You may wonder what happens if your vehicle needs a new odometer installed. If the new one can be set to the mileage total of the old odometer, then it must be. If not, then it is set at zero and a label must be put on the driver's door to show the old mileage reading when the new odometer was installed.

Trip Odometer

Your trip odometer is located on the instrument panel and shows how far your vehicle has been driven since the trip odometer was last reset. To reset the trip odometer to zero, press and hold the trip/reset button on the speedometer for about two seconds.

Tachometer

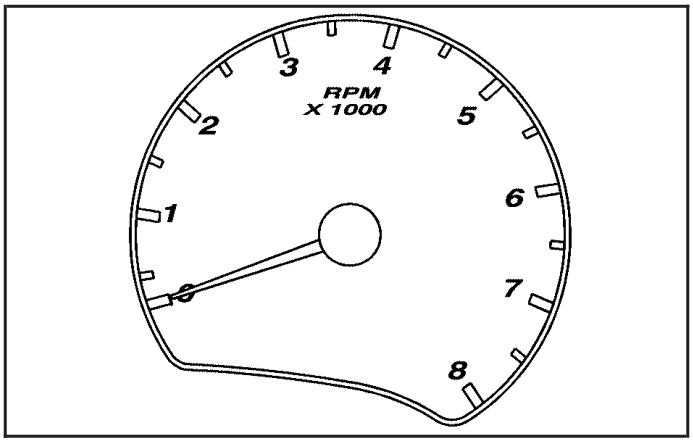

The tachometer shows your engine speed in revolutions per minute (rpm).

Downloaded from www.Manualslib.com manuals search engine

Safety Belt Reminder Light

When the key is turned to RUN or START, a chime will come on for several seconds to remind people to fasten their safety belts, unless the driver's safety belt is already buckled.

The safety belt light will also come on and stay on for several seconds, then it will flash for several more.

If the driver's belt is already buckled, neither the chime nor the light will come on.

Airbag Readiness Light

There is an airbag readiness light on the instrument panel, which shows the airbag symbol. The system checks the airbag's electrical system for malfunctions. The light tells you if there is an electrical problem. The system check includes the airbag sensor, the airbag modules, the wiring and the crash sensing and diagnostic module.

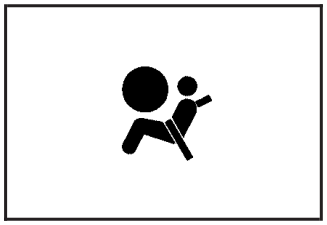

This light will come on when you start your vehicle, and it will flash for a few seconds. Then the light should go out. This means the system is ready.

If the airbag readiness light stays on after you start the vehicle or comes on when you are driving, your airbag system may not work properly. Have your vehicle serviced right away.

Downloaded from www.Manualslib.com manuals search engine

⚠ CAUTION:

If the airbag readiness light stays on after you start your vehicle, it means the airbag system may not be working properly. The airbags in your vehicle may not inflate in a crash, or they could even inflate without a crash. To help avoid injury to yourself or others, have your vehicle serviced right away if the airbag readiness light stays on after you start your vehicle.

The airbag readiness light should flash for a few seconds when you turn the ignition key to RUN. If the light does not come on then, have it fixed so it will be ready to warn you if there is a problem.

Battery Warning Light

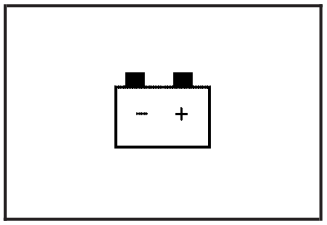

The battery warning light will come on briefly as a check, when you turn on the ignition. Then it should go out when the engine is started.

If the light does not come on when you start your vehicle, have your vehicle serviced right away. This condition may indicate your battery warning light is not functioning properly. If this light comes on while you are driving, be sure to turn off accessories such as the radio and climate control system. Have your vehicle serviced right away.

Downloaded from www.Manualslib.com manuals search engine

Brake System Warning Light

Your vehicle's hydraulic brake system is divided into two parts. If one part isn't working, the other part can still work and stop you. For good braking, though, you need both parts working well.

If the brake system warning light comes on, there is a brake problem. Have your brake system inspected right away.

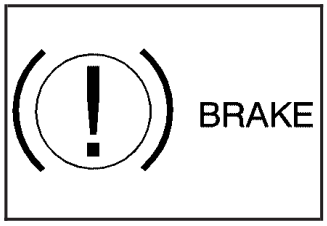

United States

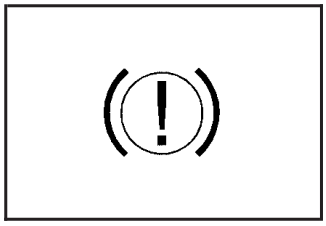

Canada

The brake light is located in the instrument panel cluster.

This light should come on briefly when you turn the ignition key to RUN. If it doesn't come on then, have it fixed so it will be ready to warn you if there's a problem.

When the ignition is on, the brake light will come on when you set your parking brake. The light will stay on if your parking brake doesn't release fully. A chime will also sound if the parking brake is not fully released and the vehicle is moving. If it stays on after your parking brake is fully released, it means you have a brake problem.

The brake light will also come on to indicate a low brake fluid level. See *Brakes on page 5-32* for more information.

Downloaded from www.Manualslib.com manuals search engine

If the light comes on while you are driving, pull off the road and stop carefully. You may notice that the pedal is harder to push. Or, the pedal may go closer to the floor. It may take longer to stop. If the light is still on, have the vehicle towed for service. See *Towing Your Vehicle on page 4-36*.

⚠ CAUTION:

Your brake system may not be working properly if the brake system warning light is on. Driving with the brake system warning light on can lead to an accident. If the light is still on after you have pulled off the road and stopped carefully, have the vehicle towed for service.

Anti-Lock Brake System Warning Light

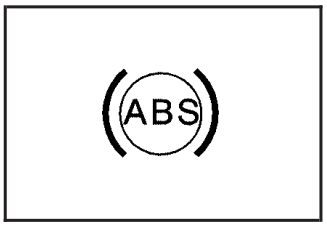

With the anti-lock brake system, the light will come on when your engine is started and may stay on for several seconds. That is normal.

If the ABS warning light comes on and stays on, there may be a problem with the anti-lock portion of the brake system. If the red BRAKE light is not on, you still have brakes, but you do not have anti-lock brakes. See *Brake System Warning Light on page 3-28*.

If the light stays on, turn the ignition to OFF. If the light comes on when you are driving, stop as soon as possible and turn the ignition off. Then start the engine again to reset the system. If the light still stays on, or comes on again while you are driving, your vehicle needs service. If the regular brake system warning light is not on, you still have brakes, but you do not have anti-lock brakes. If the regular brake system warning light is also on, you do not have anti-lock brakes and there is a problem with your regular brakes. See *Brake System Warning Light on page 3-28*.

Downloaded from www.Manualslib.com manuals search engine

Traction Control System (TCS) Warning Light

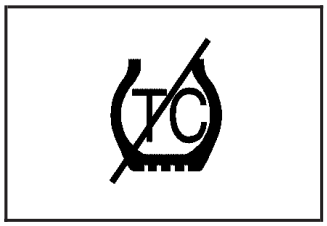

Your vehicle may have a traction control system warning light. The traction control system warning light may come on for the following reasons:

- For vehicles equipped with the traction control system and front-wheel drive, this light will come on and stay on if you turn the system off by pressing the traction control button located on the instrument panel above the audio system. To turn the system back on, press the button again. The warning light should go off. See *Traction Control System (TCS) on page 4-9* for more information.
- For vehicles equipped with all-wheel-drive, this light will come on and stay on when the all-wheel-drive system is unable to protect for overheating under extended heavy all-wheel-drive usage.
- If there is an engine-related and brake system problem that is specifically related to traction control, the traction control system will turn off and the warning light will come on.

If the traction control system warning light comes on and stays on for an extended period of time when the system is turned on, your vehicle needs service.

Low Traction Light

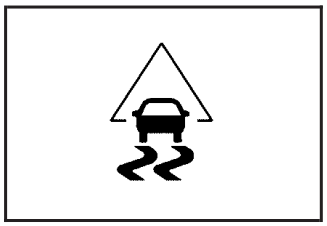

If your vehicle has the Traction Control System (TCS) and has front-wheel-drive, this light will come on when the system is limiting wheel spin.

If your vehicle has all-wheel-drive, this light will come on when the all-wheel-drive system is protecting itself from overheating due to extended heavy all wheel drive usage.

You may feel or hear the system working, but this is normal. The roads may be slippery if this light comes on. Adjust your driving accordingly.

The light will stay on for a few seconds after the system stops limiting wheel spin. This light should also come on for a few seconds when you start your vehicle. If it does not, have your vehicle serviced.

Downloaded from www.Manualslib.com manuals search engine

Engine Coolant Temperature Warning Light

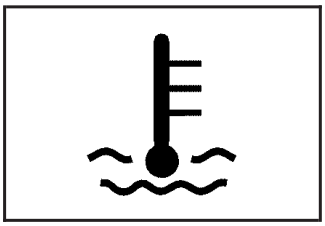

The engine coolant temperature warning light will come on when the engine has overheated.

If this happens you should pull over and turn off the engine as soon as possible. See *Engine Overheating on page 5-23* for more information.

Notice: **Driving with the engine coolant temperature warning light on could cause your vehicle to overheat. See *Engine Overheating on page 5-23*. Your vehicle could be damaged, and it might not be covered by your warranty. Never drive with the engine coolant temperature warning light on.**

This light will also come on when starting your vehicle. If it doesn't, have your vehicle serviced.

This light will flash when the transaxle has overheated. See "Transaxle Overheating", under *Automatic Transaxle Operation on page 2-19*, for more information.

Engine Coolant Temperature Gage

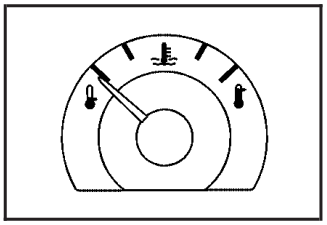

This gage measures the temperature of the vehicle's engine.

If the indicator needle moves into the shaded area, the engine is too hot. A temperature indicator light will turn on.

If you have been operating your vehicle under normal driving conditions, and the temperature indicator light comes on, you should pull off the road, stop your vehicle and turn off the engine as soon as possible.

Downloaded from www.Manualslib.com manuals search engine

Malfunction Indicator Lamp

Check Engine Light

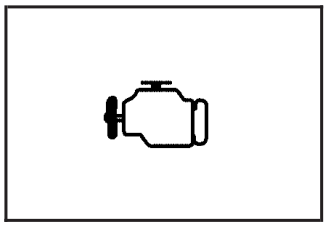

Your vehicle is equipped with a computer which monitors operation of the fuel, ignition, and emission control systems.

This system is called OBD II (On-Board Diagnostics-Second Generation) and is intended to assure that emissions are at acceptable levels for the life of the vehicle, helping to produce a cleaner environment. The check engine light comes on to indicate that there is a problem and service is required. Malfunctions often will be indicated by the system before any problem is apparent. This may prevent more serious damage to your vehicle. This system is also designed to assist your service technician in correctly diagnosing any malfunction.

Notice: **If you keep driving your vehicle with this light on, after awhile, your emission controls may not work as well, your fuel economy may not be as good, and your engine may not run as smoothly. This could lead to costly repairs that may not be covered by your warranty.**

Notice: **Modifications made to the engine, transaxle, exhaust, intake, or fuel system of your vehicle or the replacement of the original tires with other than those of the same Tire Performance Criteria (TPC) can affect your vehicle's emission controls and may cause this light to come on. Modifications to these systems could lead to costly repairs not covered by your warranty. This may also result in a failure to pass a required Emission Inspection/Maintenance test. See *Accessories and Modifications on page 5-3*.**

Downloaded from www.Manualslib.com manuals search engine

This light should come on, as a check to show you it is working, when the ignition is on and the engine is not running. If the light does not come on, have it repaired. This light will also come on during a malfunction in one of two ways:

- **Light Flashing** — A misfire condition has been detected. A misfire increases vehicle emissions and may damage the emission control system on your vehicle. Diagnosis and service may be required.
- **Light On Steady** — An emission control system malfunction has been detected on your vehicle. Diagnosis and service may be required.

If the Light is Flashing

The following may prevent more serious damage to your vehicle:

- Reducing vehicle speed
- Avoiding hard accelerations
- Avoiding steep uphill grades
- If you are towing a trailer, reduce the amount of cargo being hauled as soon as it is possible

If the light stops flashing and remains on steady, see “If the Light Is On Steady” following.

If the light continues to flash, when it is safe to do so, stop the vehicle. Find a safe place to park your vehicle. Turn the key off, wait at least 10 seconds and restart the engine. If the light remains on steady, see “If the Light Is On Steady” following. If the light is still flashing, follow the previous steps, and see your dealer for service as soon as possible.

If the Light Is On Steady

You may be able to correct the emission system malfunction by considering the following:

Did you recently put fuel into your vehicle?

If so, reinstall the fuel cap, making sure to fully install the cap. See *Filling the Tank on page 5-8*. The diagnostic system can determine if the fuel cap has been left off or improperly installed. A loose or missing fuel cap will allow fuel to evaporate into the atmosphere. A few driving trips with the cap properly installed should turn the light off.

Downloaded from www.Manualslib.com manuals search engine

Did you just drive through a deep puddle of water?

If so, your electrical system may be wet. The condition will usually be corrected when the electrical system dries out. A few driving trips should turn the light off.

Have you recently changed brands of fuel?

If so, be sure to fuel your vehicle with quality fuel. See *Gasoline Octane on page 5-5*. Poor fuel quality will cause your engine not to run as efficiently as designed. You may notice this as stalling after start-up, stalling when you put the vehicle into gear, misfiring, hesitation on acceleration, or stumbling on acceleration. (These conditions may go away once the engine is warmed up.) This will be detected by the system and cause the light to turn on.

If you experience one or more of these conditions, change the fuel brand you use. It will require at least one full tank of the proper fuel to turn the light off.

If none of the above steps have made the light turn off, your dealer can check the vehicle. Your dealer has the proper test equipment and diagnostic tools to fix any mechanical or electrical problems that may have developed.

Emissions Inspection and Maintenance Programs

Some state/provincial and local governments have or may begin programs to inspect the emission control equipment on your vehicle. Failure to pass this inspection could prevent you from getting a vehicle registration.

Here are some things you need to know to help your vehicle pass an inspection:

Your vehicle will not pass this inspection if the check engine light is on or not working properly.

Your vehicle will not pass this inspection if the OBD (on-board diagnostic) system determines that critical emission control systems have not been completely diagnosed by the system. The vehicle would be considered not ready for inspection. This can happen if you have recently replaced your battery or if your battery has run down. The diagnostic system is designed to evaluate critical emission control systems during normal driving. This may take several days of routine driving. If you have done this and your vehicle still does not pass the inspection for lack of OBD system readiness, your GM dealer can prepare the vehicle for inspection.

Downloaded from www.Manualslib.com manuals search engine

Oil Pressure Light

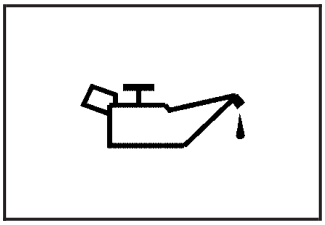

If you have a low engine oil pressure problem, this light will stay on after you start your engine, or come on when you are driving. This indicates that your engine is not receiving enough oil.

The engine could be low on oil, or could have some other oil problem. Have it fixed immediately.

The oil light could also come on in three other situations:

- When the ignition is on but the engine is not running, the light will come on as a test to show you it is working, but the light will go out when you turn the ignition to START. If it doesn't come on with the ignition on, you may have a problem with the fuse or bulb. Have it fixed right away.
- If the vehicle is idling at a stop sign, the light may blink on and then off.
- If you make a hard stop, the light may come on for a moment. This is normal.

⚠ CAUTION:

Do not keep driving if the oil pressure is low. If you do, your engine can become so hot that it catches fire. You or others could be burned. Check your oil as soon as possible and have your vehicle serviced.

Notice: **Lack of proper engine oil maintenance may damage the engine. The repairs would not be covered by your warranty. Always follow the maintenance schedule in this manual for changing engine oil.**

Downloaded from www.Manualslib.com manuals search engine

Change Engine Oil Light

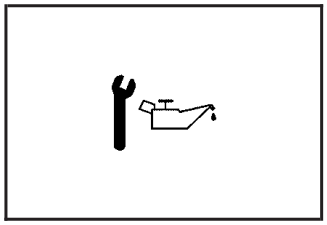

If this light comes on and stays on for 30 seconds, it means that service is required for your vehicle. See *Scheduled Maintenance on page 6-4* for more information.

After having the oil changed you will need to reset the light. See *Engine Oil on page 5-13* for more information.

Security Light

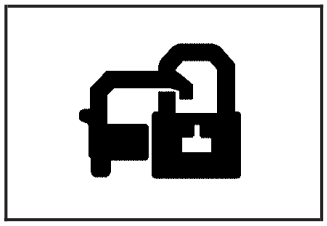

Your vehicle is equipped with a Passlock® theft-deterrent system. With this system, the security light will flash as you open the door if your ignition is off.

This light will come on briefly when the vehicle is turned on.

For more information, see *Passlock® on page 2-15*.

Reduced Engine Power Light

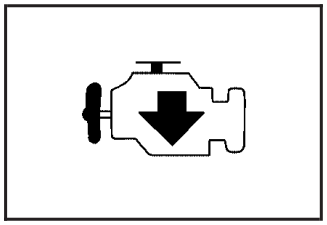

This light will come on briefly when you start the engine.

This light, along with the service engine soon light, will be displayed when a noticeable reduction in the vehicle's performance may occur. Stop the vehicle and turn off the ignition. Wait for 10 seconds and restart your vehicle. This may correct the condition.

The vehicle may be driven at a reduced speed when the reduced engine power light is on, but acceleration and speed may be reduced. The performance may be reduced until the next time you drive your vehicle. If this light stays on, see your GM dealer as soon as possible for diagnosis and repair.

Downloaded from www.Manualslib.com manuals search engine

Highbeam On Light

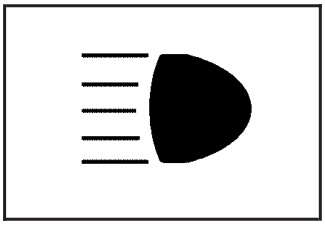

This light will come on when the high-beam headlamps are in use.

See *Headlamp High/Low-Beam Changer on page 3-8*.

Daytime Running Lamps (DRL) Indicator Light

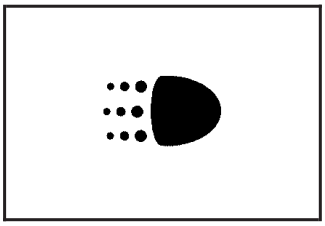

This light is located on the instrument panel cluster. It comes on whenever the Daytime Running Lamps are on.

See *Daytime Running Lamps (DRL) on page 3-14* for further information.

Gate Ajar Light

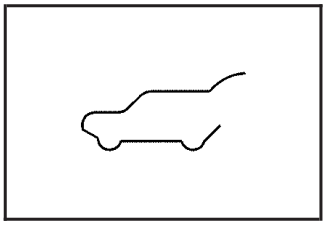

If this light comes on, your liftgate is not completely closed. Driving with the liftgate open can cause carbon monoxide (CO) to enter the vehicle.

See *Engine Exhaust on page 2-25* for more information.

Fuel Gage

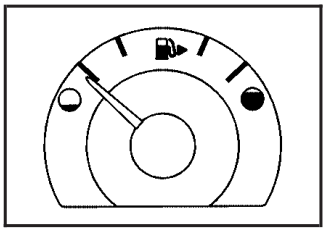

When the ignition is on, the fuel gage tells you about how much fuel you have left in your tank.

When the indicator nears empty, the low fuel light will come on. You still have a little fuel left, but you should get more soon. See *Low Fuel Warning Light on page 3-38* for more information.

Downloaded from www.Manualslib.com manuals search engine

Here are four things that some owners ask about. None of these show a problem with your fuel gage:

- At the service station, the fuel pump shuts off before the gage reads full.
- It takes a little more or less fuel to fill up than the gage indicated. For example, the gage may have indicated the tank was half full, but it actually took a little more or less than half the tank's capacity to fill the tank.
- The gage moves a little when you turn a corner or speed up.
- The gage takes a few seconds to stabilize after the ignition is turned on, and will go back to empty when you turn the ignition off.

For your fuel tank capacity, see *Capacities and Specifications on page 5-88*.

Low Fuel Warning Light

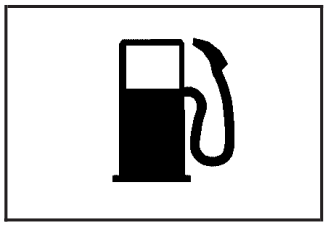

The light below the fuel gage will come on briefly when you are starting the engine.

This light also comes on when the fuel tank is low on fuel. When you add fuel the light should go off. If it does not, have your vehicle serviced.

Audio System(s)

Determine which radio your vehicle has and then read the pages following to familiarize yourself with its features.

Driving without distraction is a necessity for a safer driving experience. See *Defensive Driving on page 4-2*. By taking a few moments to read this manual and get familiar with your vehicle's audio system, you can use it with less effort, as well as take advantage of its features. While your vehicle is parked, set up your audio system by presetting your favorite radio stations, setting the tone and adjusting the speakers. Then, when driving conditions permit, you can tune to your favorite stations using the presets and steering wheel controls (if equipped).

Downloaded from www.Manualslib.com manuals search engine

⚠ CAUTION:

This system provides you with a far greater access to audio stations and song listings. Giving extended attention to entertainment tasks while driving can cause a crash and you or others can be injured or killed. Always keep your eyes on the road and your mind on the drive — avoid engaging in extended searching while driving.

Keeping your mind on the drive is important for safe driving. For more information, see *Defensive Driving on page 4-2*.

Here are some ways in which you can help avoid distraction while driving.

While your vehicle is parked:

- Familiarize yourself with all of its controls.
- Familiarize yourself with its operation.
- Set up your audio system by presetting your favorite radio stations, setting the tone, and adjusting the speakers. Then, when driving conditions permit, you can tune to your favorite radio stations using the presets and steering wheel controls (if equipped).

Notice: **Before adding any sound equipment to your vehicle, such as an audio system, CD player, CB radio, mobile telephone, or two-way radio, make sure that it can be added by checking with your dealer. Also, check federal rules covering mobile radio and telephone units. If sound equipment can be added, it is very important to do it properly. Added sound equipment may interfere with the operation of your vehicle's engine, radio, or other systems, and even damage them. Your vehicle's systems may interfere with the operation of sound equipment that has been added.**

Notice: **The chime signals related to safety belts, parking brake, and other functions of your vehicle operate through the GM radio/entertainment system. If that equipment is replaced or additional equipment is added to your vehicle, the chimes may not work. Make sure that replacement or additional equipment is compatible with your vehicle before installing it. See *Accessories and Modifications on page 5-3*.**

Your vehicle has a feature called Retained Accessory Power (RAP). With RAP, the audio system can be played even after the ignition is turned off. See *Retained Accessory Power (RAP) on page 2-17* for more information.

Downloaded from www.Manualslib.com manuals search engine

Setting the Time

To set the hour, press the clock button. The clock symbol will appear on the audio display and the hour number will flash. Then turn the ADJ knob to increase or to decrease the hour. To set the minutes, press the clock button again. The minute numbers will flash. Then turn the ADJ knob to increase or to decrease the minutes. The time can be set with the ignition on or off.

To synchronize the time with an FM station broadcasting Radio Data System (RDS) information, press and release the clock button to enter the clock set mode, then press and hold the clock button for three seconds until UPDATED appears on the display. If the time is not available from the station, NO TIME UPDATE will appear on the display.

RDS time is broadcast once a minute. After tuning to an RDS broadcast station, it may take a few minutes for the time to update.

Radio with CD (Base Level)

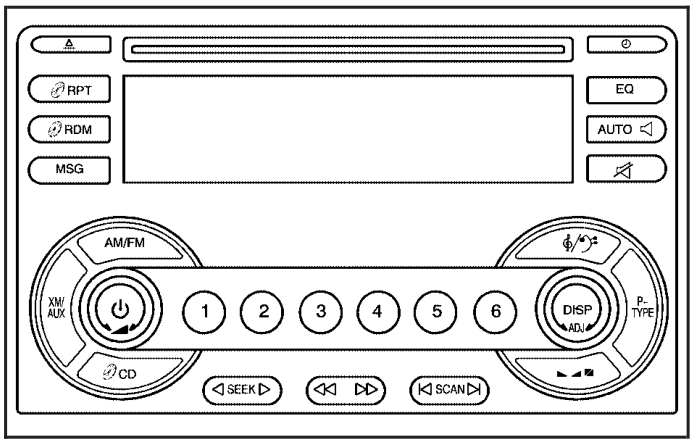

Radio Data System (RDS)

The audio system has a Radio Data System (RDS). RDS features are available for use only on FM stations that broadcast RDS information.

With RDS, the radio can do the following:

- Seek to stations broadcasting the selected type of programming
- Receive announcements concerning local and national emergencies
- Display messages from radio stations

Downloaded from www.Manualslib.com manuals search engine

This system relies upon receiving specific information from these stations and will only work when the information is available. In rare cases, a radio station may broadcast incorrect information that will cause the radio features to work improperly. If this happens, contact the radio station.

While the radio is tuned to an RDS station, the station name or call letters will appear on the display. RDS stations may also provide the time of day, a program type (PTY) for current programming, and the name of the program being broadcast.

XM™ Satellite Radio Service

XM™ is a satellite radio service that is based in the 48 contiguous United States and in Canada (if available). XM™ offers over 100 coast-to-coast channels including music, news, sports, talk, and children's programming. XM™ provides digital quality audio and text information that includes song title and artist name. A service fee is required in order to receive the XM™ service. For more information, contact XM™ at www.xmradio.com or call 1-800-852-XMXM (9696).

Playing the Radio

(Power): Press this button to turn the system on and off.

(Volume): Turn this knob to increase or to decrease the volume.

AUTO (Automatic Volume): With automatic volume, the audio system adjusts automatically to make up for road and wind noise as you drive.

Set the volume at the desired level. Press this button to select LOW, MEDIUM, or HIGH. AUTO VOL LOW, AUTO VOL MEDIUM, or AUTO VOL HIGH will appear on the display. Each higher setting will allow for more volume compensation at faster vehicle speeds. Then as you drive, automatic volume increases the volume, as necessary, to overcome noise at any speed. The volume level should always sound the same to you as you drive. AUTO VOL NONE will appear on the display if the radio cannot determine the vehicle speed or if the engine is not running. To turn automatic volume off, press this button until AUTO VOL OFF appears on the display.

(Mute): Press and release this button for less than two seconds to silence the system. MUTE will appear on the display. Pressing this button again or any pushbutton on the radio turns the sound back on.

Downloaded from www.Manualslib.com manuals search engine

DISP (Display): For RDS, press the DISP knob to change what appears on the display while using RDS. The display options are station name, RDS station frequency, PTY, and the name of the program (if available).

For XM™ (if equipped), press the DISP knob while in XM™ mode to retrieve four different categories of information related to the current song or channel: Artist, Song Title, Category or PTY, Channel Number/Channel Name.

Finding a Station

AM/FM: Press this button to switch between FM1, FM2 or AM. The display will show the selection.

XM/AUX: Press this button to switch between XM1 or XM2 (if equipped).

ADJ (Adjust): Turn this knob to select radio stations.

◁ **SEEK** ▷ **:** Press the left or right arrow to go to the previous or the next station and stay there.

The radio will only seek stations with a strong signal that are in the selected band.

⊲ **SCAN** ⊳ **:** Press and hold either arrow for less than two seconds until SCAN appears on the display and you hear a beep. The radio will go to a station, play for a few seconds, then go on to the next station. Press either arrow again to stop scanning. If no station can be found during scan, NOT FOUND will appear on the display and the radio will go back to the last tuned station.

To scan preset stations, press and hold SCAN for more than two seconds until you hear a beep. The radio will go to the first preset station stored on the pushbuttons, play for five seconds, then go on to the next preset station. Press SCAN again to stop scanning presets.

The radio will only scan stations with a strong signal that are in the selected band.

1–6 (Preset Pushbuttons): Press this button to play stations that are programmed on the radio preset pushbuttons.

The radio will only seek preset stations with a strong signal that are in the selected band.

Downloaded from www.Manualslib.com manuals search engine

Setting Preset Stations

Up to 30 stations (six FM1, six FM2, and six AM, six XM1 and six XM2 (if equipped)), can be programmed on the six numbered pushbuttons, by performing the following steps:

1. Turn the radio on.
2. Press AM/FM to select FM1, FM2 or AM. Press XM/AUX to select XM1 or XM2.
3. Tune in the desired station.
4. Press EQ to select the equalization.
5. Press and hold one of the six numbered pushbuttons until you hear a beep. Whenever that numbered pushbutton is pressed, the station that was set will return and the equalization that was selected will be stored for that pushbutton.
6. Repeat the steps for each pushbutton.

Setting the Tone (Bass/Midrange/Treble)

/ (Bass/Treble): Press this button until BASS, MID, or TREBLE appears on the display. Turn the ADJ knob to increase or to decrease. The display will show the bass, mid, or treble level. If a station is weak or noisy, decrease the treble.

To adjust bass, midrange, or treble to the middle position, select BASS, MID, or TREBLE. Then press and hold this button for more than two seconds. You will hear one beep and the tone control will be adjusted to the middle position.

To adjust all tone controls to the middle position, push and hold the tone button when no tone control is displayed. ALL CENTERED will appear on the display and you will hear one beep. The bass, midrange, and treble will be adjusted to the middle position.

EQ (Equalizer): Press this button to select customized equalization settings designed for country, jazz, talk, pop, rock, and classical.

To return to the manual mode, press and release the EQ button until TONE Custom appears on the display. You can also manually adjust the bass, midrange, and treble using the Bass/Treble button.

Downloaded from www.Manualslib.com manuals search engine

Adjusting the Speakers (Balance/Fade)

(Balance/Fade): To adjust the balance between the right and the left speakers, push and release the balance and fade button until BAL appears on the display. Turn the ADJ knob to move the sound toward the right or the left speakers.

To adjust the fade between the front and the rear speakers, push and release the balance and fade button until FADE appears on the display. Turn the ADJ knob to move the sound toward the front or the rear speakers.

To adjust the balance and the fade to the middle position, select BAL or FADE. Then press and hold this button for more than two seconds. You will hear a beep and the speaker control will be adjusted to the middle position.

To adjust both speaker controls to the middle position, push and hold the tone button for more than four seconds when no speaker control is displayed. ALL CENTERED will appear on the display and you will hear a beep. The balance and fade will be adjusted to the middle position.

Finding a Program Type (PTY) Station (RDS and XM™)

To select and find a desired PTY perform the following:

1. Press the P-TYPE button to activate program type select mode. P-TYPE and a program type will appear on the display.
2. Turn the ADJ knob to select a PTY.
3. Once the desired PTY is displayed, press the SEEK right arrow to select the PTY and to take you to the PTYs first station.
4. To go to another station within that PTY press the SEEK right arrow again. If the radio cannot find the desired PTY, NOT FOUND will appear on the display and the radio will return to the last station you were listening to.
5. Press the P-TYPE button or wait 15 seconds, to exit program type select mode.

If PTY times out and is no longer on the display, go back to Step 1.

If PTY is on, the radio will search for stations with the selected PTY.

Downloaded from www.Manualslib.com manuals search engine

RDS Messages

ALERT!: Alert warns of local or national emergencies. When an alert announcement comes on the current radio station, ALERT! will appear on the display. You will hear the announcement, even if the volume is low or a CD is playing. If a CD is playing, play will stop during the announcement. Alert announcements cannot be turned off.

ALERT! will not be affected by tests of the emergency broadcast system. This feature is not supported by all RDS stations.

MSG (Message): If the current station has a message, MSG will appear on the display. Press this button to see the message. The message may display the artist, song title, call in phone numbers, etc.

If the entire message is not displayed, parts of the message will appear every three seconds. To scroll through the message, press and release the MSG button. A new group of words will appear on the display after every press of the button. Once the complete message has been displayed, MSG will disappear from the display until another new message is received.

The last message can be displayed by pressing the MSG button. You can view the last message until a new message is received or a different station is tuned to.

When a message is not available from a station, NO MESSAGE AVAIL will appear on the display.

Radio Messages

CALIBRATE: The audio system has been calibrated for your vehicle from the factory. If CALIBRATE appears on the display, it means that the radio has not been configured properly for your vehicle and must be returned to the dealer for service.

LOCKED: This message is displayed when the THEFTLOCK® system has locked up. Take the vehicle to the dealer for service.

If any error occurs repeatedly or if an error cannot be corrected, contact your dealer.

Downloaded from www.Manualslib.com manuals search engine

XM™ Radio Messages

Radio Display Message	Condition	Action Required
Not Available	The Radio senses that the XM™ system is not present.	Your vehicle may not be equipped with the XM™ system. Contact your dealership for more information.
XL (Explicit Language Channels)	XL on the radio display, after the channel name, indicates content with explicit language.	These channels, or any others, can be blocked at a customer's request, by calling 1-800-852-XMXM (9696).
Updating	Updating encryption code	The encryption code in the receiver is being updated, and no action is required. This process should take no longer than 30 seconds.
No Signal	Loss of signal	The system is functioning correctly, but the vehicle is in a location that is blocking the XM™ signal. When you move into an open area, the signal should return.
Loading XM	Acquiring channel audio (after 4 second delay)	The audio system is acquiring and processing audio and text data. No action is needed. This message should disappear shortly.
Off Air	Channel not in service	This channel is not currently in service. Tune to another channel.
CH Unavl	Channel no longer available	This previously assigned channel is no longer assigned. Tune to another station. If this station was one of the presets, choose another station for that preset button.
No Info	Artist Name/Feature not available	No artist information is available at this time on this channel. The system is working properly.

Downloaded from www.Manualslib.com manuals search engine

XM™ Radio Messages (cont'd)

Radio Display Message	Condition	Action Required
No Info	Song/Program Title not available	No song title information is available at this time on this channel. The system is working properly.
No Info	Category Name not available	No category information is available at this time on this channel. The system is working properly.
No Info	No Text/Informational message available	No text or informational messages are available at this time on this channel. The system is working properly.
Not Found	No channel available for the chosen category	There are no channels available for the selected category. The system is working properly.
XM Lock	Theft lock active	The XM™ receiver in the vehicle may have previously been in another vehicle. For security purposes, XM™ receivers cannot be swapped between vehicles. If this message is received after having your vehicle serviced, check with the servicing facility.
Radio ID	Radio ID label (channel 0)	If tuned to channel 0, this message will alternate with the XM™ Radio 8 digit radio ID label. This label is needed to activate the service.
Unknown	Radio ID not known (should only be if hardware failure)	If this message is received when tuned to channel 0, there may be a receiver fault. Consult with your dealer.
Check XM	Hardware failure	If this message does not clear within a short period of time, the receiver may have a fault. Consult with your dealer.

Downloaded from www.Manualslib.com manuals search engine

Playing a CD

Insert a CD partway into the slot, label side up. The player will pull it in and the CD should begin playing. If you want to insert a CD with the ignition off, first press the eject or DISP knob.

If the ignition or radio is turned off with the CD in the player, it will stay in the player. When the ignition or the radio is turned on, the CD will start playing, where it stopped, if it was the last selected audio source.

When the CD is inserted, the CD icon will appear on the display. As each new track starts to play, TRACK and the track number will appear on the display.

If playing a CD-R, the sound quality may be reduced due to CD-R quality, the method of recording, the quality of the music that has been recorded, and the way the CD-R has been handled. There may be an increase in skipping, difficulty in finding tracks, and/or difficulty in loading and ejecting. If these problems occur, check the bottom surface of the CD. If the surface of the CD is damaged, such as cracked, broken, or scratched, the CD will not play properly. If the surface of the CD is soiled, see *Care of Your CDs on page 3-80* for more information.

If there is no apparent damage, try a known good CD.

Do not add any label to a CD, it could get caught in the CD player. If a CD is recorded on a personal computer and a description label is needed, try labeling the top of the recorded CD with a marking pen instead.

Notice: **If you add any label to a CD, insert more than one CD into the slot at a time, or attempt to play scratched or damaged CDs, you could damage the CD player. When using the CD player, use only CDs in good condition without any label, load one CD at a time, and keep the CD player and the loading slot free of foreign materials, liquids, and debris.**

Do not play 3 inch (8 cm) CDs without a standard adapter CD.

If an error appears on the display, see “CD Messages” later in this section.

◁◁ **(Reverse):** Press and hold this pushbutton to reverse quickly within a track. You will hear sound at a reduced volume. Release the button to play the passage. The elapsed time of the track will appear on the display.

▷▷ **(Fast Forward):** Press and hold this button to advance quickly within a track. You will hear sound at a reduced volume. Release the button to play the passage. The elapsed time of the track will appear on the display.

Downloaded from www.Manualslib.com manuals search engine

RPT (Repeat): Press this button once to hear a track over again. RPT ON will appear on the display. The current track will continue to repeat. Press RPT again to turn off repeat play. RPT OFF will appear on the display and RPT will disappear from the display.

RDM (Random): Press this button to hear the tracks in random, rather than sequential, order. TRACK, TRK#, and the RDM icon will appear on the display. TRACK and the track number will appear on the display when each track starts to play. Press RDM again to turn off random play. RDM OFF will appear on the display and the RDM icon will disappear from the display.

SEEK : Press the left arrow to go to the start of the current track. If this button is pressed more than once, the player will continue moving backward through the CD.

Press the right arrow to go to the start of the next track. If this button is pressed more than once, the player will continue moving forward through the CD.

SCAN : To scan the CD, press either SCAN arrow. Use this feature to listen to ten seconds of each track of the CD. Press either SCAN arrow again, to stop scanning.

DISP (Display): Press the DISP knob to see how long the current track has been playing. The track number, and the elapsed time of the track will appear on the display. To change the default on the display, track or elapsed time, press the knob until you see the display you want, then hold the knob for two seconds. The radio will produce one beep and the selected display will now be the default. Pressing this knob will also display text on commercially recorded CDs (if available).

EQ (Equalizer): Press this button to select the desired equalization setting while playing a CD. The equalization will be automatically recalled whenever a CD is played. For more information, see “EQ” listed previously in this section.

AM/FM: Press this button to listen to the radio when a CD is playing. The inactive CD will remain safely inside the radio for future listening.

CD: Press this button to play a CD when listening to the radio. CD will appear on the display.

(Eject): Press this button to eject a CD. Eject may be activated with either the ignition or radio off. CDs may be loaded with the ignition and radio off if this button is pressed first.

Downloaded from www.Manualslib.com manuals search engine

CD Messages

CHECK DISK: If this message appears on the display, it could be for one of the following reasons:

- It is very hot. When the temperature returns to normal, the CD should play.
- You are driving on a very rough road. When the road becomes smoother, the CD should play.
- The CD is dirty, scratched, wet, or upside down.
- The air is very humid. If so, wait about an hour and try again.
- There may have been a problem while burning the CD.
- The label may be caught in the CD player.

If the CD is not playing correctly, for any other reason, try a known good CD.

If any error occurs repeatedly or if an error cannot be corrected, contact your dealer. If the radio displays an error message, write it down and provide it to your dealer when reporting the problem.

Radio with CD (MP3)

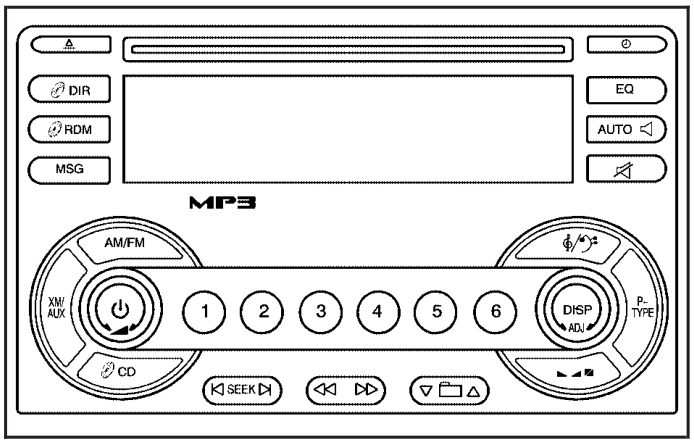

Radio Data System (RDS)

The audio system has a Radio Data System (RDS). RDS features are available for use only on FM stations that broadcast RDS information.

With RDS, the radio can do the following:

- Seek to stations broadcasting the selected type of programming
- Receive announcements concerning local and national emergencies
- Display messages from radio stations

Downloaded from www.Manualslib.com manuals search engine

This system relies upon receiving specific information from these stations and will only work when the information is available. In rare cases, a radio station may broadcast incorrect information that will cause the radio features to work improperly. If this happens, contact the radio station.

While the radio is tuned to an RDS station, the station name or call letters will appear on the display. RDS stations may also provide the time of day, a program type (PTY) for current programming, and the name of the program being broadcast.

XM™ Satellite Radio Service

XM™ is a satellite radio service that is based in the 48 contiguous United States and in Canada (if available). XM™ offers over 100 coast-to-coast channels including music, news, sports, talk, and children's programming. XM™ provides digital quality audio and text information that includes song title and artist name. A service fee is required in order to receive the XM™ service. For more information, contact XM™ at www.xmradio.com or call 1-800-852-XMXM (9696).

Playing the Radio

(Power): Press this button to turn the system on and off.

(Volume): Turn this knob to increase or to decrease the volume.

AUTO (Automatic Volume): With automatic volume, the audio system adjusts automatically to make up for road and wind noise as you drive.

Set the volume at the desired level. Press this button to select LOW, MEDIUM, or HIGH. AUTO VOL LOW, AUTO VOL MEDIUM, or AUTO VOL HIGH will appear on the display. Each higher setting will allow for more volume compensation at faster vehicle speeds. Then as you drive, automatic volume increases the volume, as necessary, to overcome noise at any speed. The volume level should always sound the same to you as you drive. AUTO VOL NONE will appear on the display if the radio cannot determine the vehicle speed or if the engine is not running. To turn off automatic volume, press this button until AUTO VOL OFF appears on the display.

(Mute): Press and release this button for less than two seconds to silence the system. MUTE will appear on the display. Pressing this button again or any pushbutton on the radio turns the sound back on.

Downloaded from www.Manualslib.com manuals search engine

DISP (Display): For RDS, press the DISP knob to change what appears on the display while using RDS. The display options are station name, RDS station frequency, PTY, and the name of the program (if available).

For XM™ (if equipped), press the DISP knob while in XM™ mode to retrieve four different categories of information related to the current song or channel: Artist, Song Title, Category or PTY, Channel Number/Channel Name.

Finding a Station

AM/FM: Press this button to switch between FM1, FM2 or AM. The display will show the selection.

XM/AUX: Press this button to switch between XM1 or XM2 (if equipped).

ADJ (Adjust): Turn this knob to select radio stations.

⊲ **SEEK** ⊳ **:** Press the left or right arrow to go to the previous or the next station and stay there.

The radio will only seek stations with a strong signal that are in the selected band.

Press and hold either arrow for two seconds until SCAN appears on the display and you hear a beep. The radio will go to a station, play for a few seconds, then go on to the next station. Press either arrow again to stop scanning. If no station can be found during scan, NOT FOUND will appear on the display and the radio will go back to the last tuned station.

To scan preset stations, press and hold SEEK for more than four seconds until you hear a beep. The radio will go to the first preset station stored on the pushbuttons, play for five seconds, then go on to the next preset station. Press SEEK again to stop scanning presets.

The radio will only scan stations with a strong signal that are in the selected band.

1–6 (Preset Pushbuttons): Press this button to play stations that are programmed on the radio preset pushbuttons.

The radio will only seek preset stations with a strong signal that are in the selected band.

Downloaded from www.Manualslib.com manuals search engine

Setting Preset Stations

Up to 30 stations (six FM1, six FM2, and six AM, six XM1 and six XM2 (if equipped)), can be programmed on the six numbered pushbuttons, by performing the following steps:

1. Turn the radio on.
2. Press AM/FM to select FM1, FM2 or AM. Press XM/AUX to select XM1 or XM2 (if equipped).
3. Tune in the desired station.
4. Press EQ to select the equalization.
5. Press and hold one of the six numbered pushbuttons until you hear a beep. Whenever that numbered pushbutton is pressed, the station that was set will return and the equalization that was selected will be stored for that pushbutton.
6. Repeat the steps for each pushbutton.

Setting the Tone (Bass/Midrange/Treble)

/ (Bass/Treble): Press this button until BASS, MID, or TREBLE appears on the display. Turn the ADJ knob to increase or to decrease. The display will show the bass, mid, or treble level. If a station is weak or noisy, decrease the treble.

To adjust bass, midrange, or treble to the middle position, select BASS, MID, or TREBLE. Then press and hold this button for more than two seconds. You will hear one beep and the tone control will be adjusted to the middle position.

To adjust all tone controls to the middle position, push and hold the tone button when no tone control is displayed. ALL CENTERED will appear on the display and you will hear one beep. The bass, midrange, and treble will be adjusted to the middle position.

EQ (Equalizer): Press this button to select customized equalization settings designed for country, jazz, talk, pop, rock, and classical.

To return to the manual mode, press and release the EQ button until TONE Custom appears on the display. You can also manually adjust the bass, midrange, and treble using the Bass/Treble button.

Downloaded from www.Manualslib.com manuals search engine

Adjusting the Speakers (Balance/Fade)

(Balance/Fade): To adjust the balance between the right and the left speakers, push and release the balance and fade button until BAL appears on the display. Turn the ADJ knob to move the sound toward the right or the left speakers.

To adjust the fade between the front and the rear speakers, push and release the balance and fade button until FADE appears on the display. Turn the ADJ knob to move the sound toward the front or the rear speakers.

To adjust the balance or the fade to the middle position, select BAL or FADE. Then press and hold this button for more than two seconds. You will hear one beep and the speaker control will be adjusted to the middle position.

To adjust both speaker controls to the middle position, push and hold the tone button for more than four seconds when no speaker control is displayed. ALL CENTERED will appear on the display and you will hear one beep. The balance and the fade will be adjusted to the middle position.

Finding a Program Type (PTY) Station (RDS and XM™)

To select and find a desired PTY perform the following:

1. Press the P-TYPE button to activate program type select mode. P-TYPE and a program type will appear on the display.
2. Turn the ADJ knob to select a PTY.
3. Once the desired PTY is displayed, press the SEEK right arrow to take you to the PTYs first station.
4. To go to another station within that PTY press the SEEK right arrow again. If the radio cannot find the desired PTY, NOT FOUND will appear on the display and the radio will return to the last station that was playing.
5. Press the P-TYPE button or wait 15 seconds, to exit program type select mode.

If PTY times out and is not longer on the display, go back to Step 1.

If PTY is on, the radio will search for stations with the selected PTY.

Downloaded from www.Manualslib.com manuals search engine

RDS Messages

ALERT!: Alert warns of local or national emergencies. When an alert announcement comes on the current radio station, ALERT! will appear on the display. You will hear the announcement, even if the volume is low or a CD is playing. If a CD is playing, play will stop during the announcement. Alert announcements cannot be turned off.

ALERT! will not be affected by tests of the emergency broadcast system. This feature is not supported by all RDS stations.

MSG (Message): If the current station has a message, MSG will appear on the display. Press this button to see the message. The message may display the artist, song title, call in phone numbers, etc.

If the entire message is not displayed, parts of the message will appear every three seconds. To scroll through the message, press and release the MSG button. A new group of words will appear on the display after every press of this button. Once the complete message has been displayed, MSG will disappear from the display until another new message is received.

The last message can be displayed by pressing the MSG button. You can view the last message until a new message is received or a different station is tuned to.

When a message is not available from a station, NO MESSAGE AVAIL will appear on the display

Radio Messages

CALIBRATE: The audio system has been calibrated for your vehicle from the factory. If CALIBRATE appears on the display it means that the radio has not been configured properly for your vehicle and it must be returned to the dealer for service.

LOCKED: This message is displayed when the THEFTLOCK® system has locked up. Take your vehicle to the dealer for service.

If any error occurs repeatedly or if an error cannot be corrected, contact your dealer.

Downloaded from www.Manualslib.com manuals search engine

XM™ Radio Messages

Radio Display Message	Condition	Action Required
Not Available	The Radio senses that the XM™ system is not present.	Your vehicle may not be equipped with the XM™ system. Contact your dealership for more information.
XL (Explicit Language Channels)	XL on the radio display, after the channel name, indicates content with explicit language.	These channels, or any others, can be blocked at a customer's request, by calling 1-800-852-XMXM (9696).
Updating	Updating encryption code	The encryption code in the receiver is being updated, and no action is required. This process should take no longer than 30 seconds.
No Signal	Loss of signal	The system is functioning correctly, but the vehicle is in a location that is blocking the XM™ signal. When you move into an open area, the signal should return.
Loading XM	Acquiring channel audio (after 4 second delay)	The audio system is acquiring and processing audio and text data. No action is needed. This message should disappear shortly.
Off Air	Channel not in service	This channel is not currently in service. Tune to another channel.
CH Unavl	Channel no longer available	This previously assigned channel is no longer assigned. Tune to another station. If this station was one of the presets, choose another station for that preset button.
No Info	Artist Name/Feature not available	No artist information is available at this time on this channel. The system is working properly.

Downloaded from www.Manualslib.com manuals search engine

XM™ Radio Messages (cont'd)

Radio Display Message	Condition	Action Required
No Info	Song/Program Title not available	No song title information is available at this time on this channel. The system is working properly.
No Info	Category Name not available	No category information is available at this time on this channel. The system is working properly.
No Info	No Text/Informational message available	No text or informational messages are available at this time on this channel. The system is working properly.
Not Found	No channel available for the chosen category	There are no channels available for the selected category. The system is working properly.
XM Lock	Theft lock active	The XM™ receiver in your vehicle may have previously been in another vehicle. For security purposes, XM™ receivers cannot be swapped between vehicles. If this message is received after having your vehicle serviced, check with the servicing facility.
Radio ID	Radio ID label (channel 0)	If tuned to channel 0, this message will alternate with the XM™ Radio 8 digit radio ID label. This label is needed to activate the service.
Unknown	Radio ID not known (should only be if hardware failure)	If this message is received when tuned to channel 0, there may be a receiver fault. Consult with your dealer.
Check XM	Hardware failure	If this message does not clear within a short period of time, the receiver may have a fault. Consult with your dealer.

Downloaded from www.Manualslib.com manuals search engine

Playing a CD

Insert a CD partway into the slot, label side up. The player will pull it in and the CD should begin playing. If you want to insert a CD with the ignition off, first press the eject or DISP knob.

If the ignition or radio is turned off with the CD in the player, it will stay in the player. When the ignition or the radio is turned on, the CD will start playing, where it stopped, if it was the last selected audio source.

When a CD is inserted, the CD icon will appear on the display. As each new track starts to play, TRACK and the track number will appear on the display.

If playing a CD-R, the sound quality may be reduced due to CD-R quality, the method of recording, the quality of the music that has been recorded, and the way the CD-R has been handled. There may be an increase in skipping, difficulty in finding tracks, and/or difficulty in loading and ejecting. If these problems occur, check the bottom surface of the CD. If the surface of the CD is damaged, such as cracked, broken, or scratched, the CD will not play properly. If the surface of the CD is soiled, see *Care of Your CDs on page 3-80* for more information.

If there is no apparent damage, try a known good CD.

Do not add any label to a CD, it could get caught in the CD player. If a CD is recorded on a personal computer and a description label is needed, try labeling the top of the recorded CD with a marking pen instead.

Notice: **If you add any label to a CD, insert more than one CD into the slot at a time, or attempt to play scratched or damaged CDs, you could damage the CD player. When using the CD player, use only CDs in good condition without any label, load one CD at a time, and keep the CD player and the loading slot free of foreign materials, liquids, and debris.**

Do not play 3 inch (8 cm) CDs without a standard adapter CD.

If an error appears on the display, see “CD Messages” later in this section.

◁◁ **(Reverse):** Press and hold this pushbutton to reverse quickly within a track. You will hear sound at a reduced volume. Release the button to play the passage. The elapsed time of the track will appear on the display.

▷▷ **(Fast Forward):** Press and hold this pushbutton to advance quickly within a track. You will hear sound at a reduced volume. Release the button to play the passage. The elapsed time of the track will appear on the display.

Downloaded from www.Manualslib.com manuals search engine

RDM (Random): Press this button to hear the tracks in random, rather than sequential, order. TRACK, TRK #, and the RDM icon will appear on the display. TRACK and the track number will appear on the display when each track starts to play. Press RDM again to turn off random play. RDM OFF will appear on the display and the RDM icon will disappear from the display.

SEEK : Press and release the left arrow to go to the start of the current track. If this button is pressed more than once, the player will continue moving backward through the CD.

Press and release the right arrow to go to the start of the next track. If this button is pressed more than once, the player will continue moving forward through the CD.

To scan the CD, press and hold either SEEK arrow for more than two seconds. Use this feature to listen to ten seconds of each track of the CD. Press either SEEK arrow again, to stop scanning.

DISP (Display): Press the DISP knob to see how long the current track has been playing. The track number, and the elapsed time of the track will appear on the display. To change the default on the display, track or elapsed time, press the knob until you see the display you want, then hold the knob for two seconds. The radio will produce one beep and the selected display will now be the default. Pressing this knob will also display text on commercially recorded CDs (if available).

EQ (Equalizer): Press this button to select the desired equalization setting while playing a CD. The equalization will be automatically recalled whenever a CD is played. For more information, see “EQ” listed previously in this section.

AM/FM: Press this button to listen to the radio when a CD is playing. The inactive CD will remain safely inside the radio for future listening.

XM/AUX: Press this button to listen to XM™ (if equipped) when a CD is playing. The inactive CD will remain safely inside the radio for future listening.

CD: Press this button to play a CD when listening to the radio. CD will appear on the display.

(Eject): Press this button to eject a CD. Eject may be activated with either the ignition or radio off. CDs may be loaded with the ignition or radio off if this button is pressed first.

Downloaded from www.Manualslib.com manuals search engine

Using an MP3 CD

MP3 Format

If you burn your own MP3 disc on a personal computer:

- Make sure the MP3 files are recorded on a CD-R disc.
- Make sure to finalize the disc when burning an MP3 disc, using multiple sessions. It is usually better to burn the disc all at once.
- Files can be recorded with a variety of fixed or variable bit rates. Song title, artist name, and album will be available for display by the radio when recorded using ID3 tags version 1 and 2.
- Do not mix standard audio and MP3 files on one disc.
- Make sure playlists have a.pls, or.m3u, or.rmp extension, other file extensions may not work.

The player will be able to read and play a maximum of 50 folders, 50 playlists, 10 sessions, and 255 files. Long file names, folder names, or playlist names may use more disc memory space than necessary. To conserve space on the disc, minimize the length of the file, folder or playlist names. You can also play an MP3 CD that was recorded using no file folders.

The system can support up to 11 folders in depth, though, keep the depth of the folders to a minimum in order to keep down the complexity and confusion in trying to locate a particular folder during playback.

Root Directory

The root directory will be treated as a folder. If the root directory has compressed audio files, the directory will be displayed as ROOT. All files contained directly under the root directory will be accessed prior to any root directory folders. However, playlists (Px) will always be accessed before root folders or files.

Empty Directory or Folder

If a root directory or a folder exists somewhere in the file structure that contains only folders/subfolders and no compressed files directly beneath them, the player will advance to the next folder in the file structure that contains compressed audio files and the empty folder will not be displayed or numbered.

Downloaded from www.Manualslib.com manuals search engine

No Folder

When the CD contains only compressed files, the files will be located under the root folder. When displaying the name of the folder the radio will display ROOT.

When the CD contains only playlists and compressed audio files, but no folders, all files will be located under the root folder. The folder down and the folder up buttons will search playlists (Px) first and then go to the root folder. When the radio displays the name of the folder the radio will display ROOT.

Order of Play

Tracks will be played in the following order:

- Play will begin from the first track in the first playlist and will continue sequentially through all tracks in each playlist. When the last track of the last playlist has been played, play will continue from the first track of the first playlist.
- If the CD does not contain any playlists, then play will begin from the first track under the root directory. When all tracks from the root directory have been played, play will continue from files according to their numerical listing. After playing the last track from the last folder, play will begin again at the first track of the first folder or root directory.

When play enters a new folder, the display will not automatically show the new folder name unless you have chosen the folder mode as the default display. See DISP later in this section for more information. The new track name will appear on the display.

File System and Naming

The song name that will be displayed will be the song name that is contained in the ID3 tag. If the song name is not present in the ID3 tag, then the radio will display the file name without the extension (such as .mp3) as the track name.

Track names longer than 32 characters or 2 pages will be shortened.

Preprogrammed Playlists

You can access preprogrammed playlists which were created by WinAmp™, MusicMatch™, or Real Jukebox™ software, however, you will not have editing capability. These playlists will be treated as special folders containing compressed audio song files.

Downloaded from www.Manualslib.com manuals search engine

Playing an MP3

Insert a CD partway into the slot, label side up. The player will pull it in and the CD will begin to play after the player has read the table of contents, has read the file structure, and has determined where the first playable track is located. READING DISC will appear on the display. After the MP3 has been read, the number of folders and tracks will appear on the display. The radio will go back to the default display and the CD icon will appear. If you want to insert an MP3 with the ignition off, first press the EJECT button or push the RCL knob. If you insert a CD with the radio off and the ignition on, it will start to play.

If the ignition or radio is turned off with a CD in the player, it will stay in the player. When the ignition or radio is turned on, the CD will start playing where it stopped, if it was the last selected audio source.

The track number will appear on the display, as each new track starts to play.

The CD player can play the smaller 3 inch (8 cm) single CDs with an adapter ring. Full-size CDs and the smaller CDs are loaded in the same manner.

If playing a CD-R, the sound quality may be reduced due to CD-R quality, the method of recording, the quality of the music that has been recorded, and the way the CD-R has been handled. There may be an increase in skipping, difficulty in finding tracks, and/or difficulty in loading and ejecting. If these problems occur, check the bottom surface of the CD. If the surface of the CD is damaged, such as cracked, broken, or scratched, the CD will not play properly. If the surface of the CD is soiled, see *Care of Your CDs on page 3-80* for more information.

If there is no apparent damage, try a known good CD.

Do not add any label to a CD, it could get caught in the CD player. If a CD is recorded on a personal computer and a description label is needed, try labeling the top of the recorded CD with a marking pen instead.

Notice: **If you add any label to a CD, insert more than one CD into the slot at a time, or attempt to play scratched or damaged CDs, you could damage the CD player. When using the CD player, use only CDs in good condition without any label, load one CD at a time, and keep the CD player and the loading slot free of foreign materials, liquids, and debris.**

Downloaded from www.Manualslib.com manuals search engine

If an error appears on the display, see “CD Messages” later in this section.

DIR (Directory): Press and release this button to display the current directory structure (flat or normal). Press and release this button twice to change the directory structure. When flat is enabled, the tracks on the MP3 will be alphabetized by song name. The MP3 will play the next alphabetical track when the current track is finished.

(Previous/Next Folder): Press the down or the up arrow to go to the first track in the previous or next folder. Pressing this button while in folder random mode will take you to the previous or next folder and random the tracks in that folder.

(Reverse): Press and hold this button to reverse quickly within a track. Press and hold this button for less than two seconds to reverse at 10 times the normal playing speed. Press and hold it for more than two seconds to reverse at 20 times the normal playing speed. Release the button to play the track. REV and the elapsed time of the track will appear on the display.

(Forward): Press and hold this button to advance quickly within a track. Press and hold this button for less than two seconds to advance at 10 times the normal playing speed. Press and hold it for more than two seconds to advance at 20 times the normal playing speed. Release the button to play the track. FWD and the elapsed time of the track will appear on the display.

RDM (Random): To random the tracks in the current folder or playlist, press and release this button. FLDR RDM ON will appear on the display. Once all of the tracks in the current folder or playlist have been played the system will move on to the next folder or playlist and play all of the tracks in random order.

To random all the tracks on the CD, press and hold this button for two seconds. You will hear a beep and DISC RDM ON will appear on the display. This feature will not work with playlists.

When in random, pressing and releasing either SEEK arrow will take you to the next or previous random track.

Press and release this button again to turn off random play. RDM OFF will appear on the display.

Downloaded from www.Manualslib.com manuals search engine

⊲ **SEEK** ⊳ **:** Press the left arrow to go to the start of the previous track. Press the right arrow to go to the start of the next track. Pressing either arrow for more than two seconds will search the previous or next tracks at two tracks per second. Release the button to stop searching and to play the track.

ADJ (Adjust): Turning this knob will fast track reverse or advance through the tracks in all folders or playlists. The track number and file name will appear on the display for each track. Turning this knob while in random will fast track reverse or advance the tracks in sequential order.

DISP (Display): Press the DISP knob to switch between track mode, folder/playlist mode, and time of day mode. The display will show sixteen characters, but there can be two pages of text. If there are more than eight characters in the song, folder, or playlist name, pressing this knob within two seconds will take you to the next page of text. If there are no other pages to be shown, pressing this knob within two seconds will take you to the next display mode.

- Track mode will display the current track number and the ID3 tag song name.
- Folder/playlist mode will display the current folder or playlist number and the folder/playlist name.

To change the default on the display, press the DISP knob until you see the display you want, then hold this knob for two seconds. The radio will produce one beep and the selected display will now be the default.

MSG (Message): Press this button to switch within the ID3 tag information such as title, artist name, and album.

AM/FM: Press this button to listen to the radio when a CD is playing. The inactive CD will remain safely inside the radio for future listening.

XM/AUX: Press this button to listen to XM™ (if equipped) when a CD is playing. The inactive CD will remain safely inside the radio for future listening.

CD: Press this button to play a CD when listening to the radio. CD will appear on the display when a CD is loaded.

(Eject): Press this button to eject a CD. Eject may be activated with either the ignition or radio off. CDs may be loaded with the ignition and radio off if this button is pressed first.

Downloaded from www.Manualslib.com manuals search engine

CD Messages

CHECK CD: If this message appears on the display and/or the CD comes out, it could be for one of the following reasons:

- It is very hot. When the temperature returns to normal, the CD should play.
- You are driving on a very rough road. When the road becomes smoother, the CD should play.
- The CD is dirty, scratched, wet, or upside down.
- The air is very humid. If so, wait about an hour and try again.
- The format of the CD may not be compatible. See “MP3 Format” earlier in this section.
- There may have been a problem while burning the CD.
- The label may be caught in the CD player.

If the CD is not playing correctly, for any other reason, try a known good CD.

If any error occurs repeatedly or if an error cannot be corrected, contact your dealer. If the radio displays an error message, write it down and provide it to your dealer when reporting the problem.

Radio with Six-Disc CD

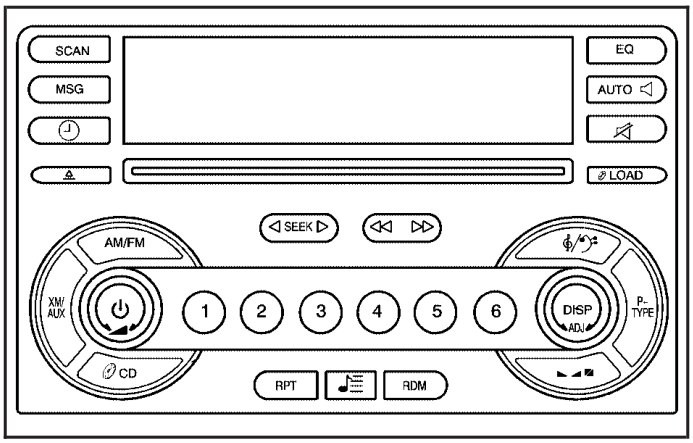

Radio Data System (RDS)

The audio system has a Radio Data System (RDS). RDS features are available for use only on FM stations that broadcast RDS information.

With RDS, the radio can do the following:

- Seek to stations broadcasting the selected type of programming
- Receive announcements concerning local and national emergencies
- Display messages from radio stations

Downloaded from www.Manualslib.com manuals search engine

This system relies upon receiving specific information from these stations and will only work when the information is available. In rare cases, a radio station may broadcast incorrect information that will cause the radio features to work improperly. If this happens, contact the radio station.

While the radio is tuned to an RDS station, the station name or call letters will appear on the display. RDS stations may also provide the time of day, a program type (PTY) for current programming, and the name of the program being broadcast.

XM™ Satellite Radio Service

XM™ is a satellite radio service that is based in the 48 contiguous United States and in Canada (if available). XM™ offers over 100 coast-to-coast channels including music, news, sports, talk, and children's programming. XM™ provides digital quality audio and text information that includes song title and artist name. A service fee is required in order to receive the XM™ service. For more information, contact XM™ at www.xmradio.com or call 1-800-852-XMXM (9696).

Playing the Radio

⏻ **(Power):** Press this button to turn the system on and off.

(Volume): Turn this knob to increase or to decrease the volume.

AUTO **(Automatic Volume):** With automatic volume, the audio system adjusts automatically to make up for road and wind noise as you drive.

Set the volume at the desired level. Press this button to select LOW, MEDIUM, or HIGH. AUTO VOL LOW, AUTO VOL MEDIUM, or AUTO VOL HIGH will appear on the display. Each higher setting will allow for more volume compensation at faster vehicle speeds. Then as you drive, automatic volume increases the volume, as necessary, to overcome noise at any speed. The volume level should always sound the same to you as you drive. AUTO VOL NONE will appear on the display if the radio cannot determine the vehicle speed or if the engine is not running. To turn automatic volume off, press this button until AUTO VOL OFF appears on the display.

Downloaded from www.Manualslib.com manuals search engine

(Mute): Press and release this button for less than two seconds to silence the system. MUTE will appear on the display. Pressing this button again or any pushbutton on the radio turns the sound back on.

DISP (Display): For RDS, press the DISP knob to change what appears on the display while using RDS. The display options are station name, RDS station frequency, PTY, and the name of the program (if available).

For XM™ (if equipped), press the DISP knob while in XM™ mode to retrieve four different categories of information related to the current song or channel: Artist, Song Title, Category or PTY, Channel Number/Channel Name.

Finding a Station

AM/FM: Press this button to switch between FM1, FM2 or AM. The display will show the selection.

XM/AUX: Press this button to switch between XM1 or XM2 (if equipped).

ADJ (Adjust): Turn this knob to select radio stations.

SEEK : Press the left or right arrow to go to the previous or the next station and stay there.

The radio will only seek stations with a strong signal that are in the selected band.

SCAN: Press and hold this button for less than two seconds until SCAN appears on the display and you hear a beep. The radio will go to a station, play for a few seconds, then go on to the next station. Press SCAN again to stop scanning. If no station can be found during scan, NOT FOUND will appear on the display and the radio will go back to the last tuned station.

To scan preset stations, press and hold SCAN for more than two seconds until you hear a beep. the radio will go to the first preset station stored on the pushbuttons, play for five seconds, then go on to the next preset station. Press SCAN again to stop scanning presets.

The radio will only scan stations with a strong signal that are in the selected band.

Downloaded from www.Manualslib.com manuals search engine

Setting Preset Stations

Up to 30 stations (six FM1, six FM2, and six AM, six XM1 and six XM2 (if equipped)), can be programmed on the six numbered pushbuttons, by performing the following steps:

1. Turn the radio on.
2. Press AM/FM to select FM1, FM2 or AM. Press XM/AUX to select XM1 or XM2.
3. Tune in the desired station.
4. Press EQ to select the equalization.
5. Press and hold one of the six numbered pushbuttons until you hear a beep. Whenever that numbered pushbutton is pressed, the station that was set will return and the equalization that was selected will be stored for that pushbutton.
6. Repeat the steps for each pushbutton.

Setting the Tone (Bass/Midrange/Treble)

(Bass/Treble): Press this button until BASS, MID, or TREBLE appears on the display. Turn the ADJ knob to increase or to decrease. The display will show the bass, mid, or treble level. If a station is weak or noisy, decrease the treble.

To adjust bass, midrange, or treble to the middle position, select BASS, MID, or TREBLE. Then press and hold this button for more than two seconds. You will hear one beep and the tone control will be adjusted to the middle position.

To adjust all tone controls to the middle position, push and hold the tone button when no tone control is displayed. ALL CENTERED will appear on the display, you will hear one beep and the tone controls will be adjusted to the middle position.

EQ (Equalizer): Press this button to select customized equalization settings designed for country, jazz, talk, pop, rock, and classical.

To return to the manual mode, press and release the EQ button until TONE Custom appears on the display. Then manually adjust the bass, midrange, and treble using the Bass/Treble button.

Downloaded from www.Manualslib.com manuals search engine

Adjusting the Speakers (Balance/Fade)

(Balance/Fade): To adjust the balance between the right and the left speakers, press and release the balance and fade button until BAL appears on the display. Turn the ADJ knob to move the sound toward the right or the left speakers.

To adjust the fade between the front and the rear speakers, press and release the balance and fade button until FADE appears on the display. Turn the ADJ knob to move the sound toward the front or the rear speakers.

To adjust the balance or the fade to the middle position, select BAL or FADE. Then press and hold this button for more than two seconds. You will hear one beep and the speaker control will be adjusted to the middle position.

To adjust both speaker controls to the middle position, push and hold the tone button when no speaker control is displayed. ALL CENTERED will appear on the display, you will hear one beep and the speaker controls will be adjusted to the middle position.

Finding a Program Type (PTY) Station (RDS and XM™)

To select and find a desired PTY perform the following:

1. Press the P-TYPE button to activate program type select mode. P-TYPE and a program type will appear on the display.
2. Turn the ADJ knob to select a PTY.
3. Once the desired PTY is displayed, press the SEEK right arrow to select and to take you to the PTYs first station.
4. To go to another station within that PTY press the SEEK right arrow again. If the radio cannot find the desired PTY, NOT FOUND will appear on the display and the radio will return to the last station that was playing.
5. Press the P-TYPE button or wait 15 seconds, to exit program type select mode.

If PTY times out and is no longer on the display, go back to Step 1.

If PTY is on, the radio will search for stations with the selected PTY.

Downloaded from www.Manualslib.com manuals search engine

RDS Messages

ALERT!: Alert warns of local or national emergencies. When an alert announcement comes on the current radio station, ALERT! will appear on the display. You will hear the announcement, even if the volume is low or a CD is playing. If a CD is playing, play will stop during the announcement. Alert announcements cannot be turned off.

ALERT! will not be affected by tests of the emergency broadcast system. This feature is not supported by all RDS stations.

MSG (Message): If the current station has a message, MSG will appear on the display. Press this button to see the message. The message may display the artist, song title, call in phone numbers, etc.

If the entire message is not displayed, parts of the message will appear every three seconds. To scroll through the message, press and release the MSG button. A new group of words will appear on the display after every press of this button. Once the complete message has been displayed, MSG will disappear from the display until another new message is received.

The last message can be displayed by pressing the MSG button. You can view the last message until a new message is received or a different station is tuned to.

When a message is not available from a station, NO MESSAGE AVAIL will appear on the display.

Radio Messages

CALIBRATE: The audio system has been calibrated for your vehicle from the factory. If CALIBRATE appears on the display it means that the radio has not been configured properly for the vehicle and it must be returned to the dealer for service.

LOCKED: This message is displayed when the THEFTLOCK® system has locked up. Take your vehicle to the dealer for service.

If any error occurs repeatedly or if an error cannot be corrected, contact your dealer.

Downloaded from www.Manualslib.com manuals search engine

XM™ Radio Messages

Radio Display Message	Condition	Action Required
Not Available	The Radio senses that the XM™ system is not present.	Your vehicle may not be equipped with the XM™ system. Contact your dealership for more information.
XL (Explicit Language Channels)	XL on the radio display, after the channel name, indicates content with explicit language.	These channels, or any others, can be blocked at a customer's request, by calling 1-800-852-XMXM (9696).
Updating	Updating encryption code	The encryption code in the receiver is being updated, and no action is required. This process should take no longer than 30 seconds.
No Signal	Loss of signal	The system is functioning correctly, but the vehicle is in a location that is blocking the XM™ signal. When the vehicle is moved into an open area, the signal should return.
Loading XM	Acquiring channel audio (after 4 second delay)	The audio system is acquiring and processing audio and text data. No action is needed. This message should disappear shortly.
Off Air	Channel not in service	This channel is not currently in service. Tune to another channel.
CH Unavl	Channel no longer available	This previously assigned channel is no longer assigned. Tune to another station. If this station was one of the presets, choose another station for that preset button.
No Info	Artist Name/Feature not available	No artist information is available at this time on this channel. The system is working properly.

Downloaded from www.Manualslib.com manuals search engine

XM™ Radio Messages (cont'd)

Radio Display Message	Condition	Action Required
No Info	Song/Program Title not available	No song title information is available at this time on this channel. The system is working properly.
No Info	Category Name not available	No category information is available at this time on this channel. The system is working properly.
No Info	No Text/Informational message available	No text or informational messages are available at this time on this channel. The system is working properly.
Not Found	No channel available for the chosen category	There are no channels available for the selected category. The system is working properly.
XM Lock	Theft lock active	The XM™ receiver in the vehicle may have previously been in another vehicle. For security purposes, XM™ receivers cannot be swapped between vehicles. If this message is received after having your vehicle serviced, check with your dealer.
Radio ID	Radio ID label (channel 0)	If tuned to channel 0, this message will alternate with the XM™ Radio 8 digit radio ID label. This label is needed to activate the service.
Unknown	Radio ID not known (should only be if hardware failure)	If this message is received when tuned to channel 0, there may be a receiver fault. Consult with your dealer.
Check XM	Hardware failure	If this message does not clear within a short period of time, the receiver may have a fault. Consult with your dealer.

Downloaded from www.Manualslib.com manuals search engine

Playing a CD

If the ignition or radio is turned off, with a CD in the player, it will stay in the player. When the ignition or radio is turned on, the CD will start playing where it stopped, if it was the last selected audio source.

When a CD is inserted, the CD icon will appear on the CD. As each new track starts to play, the track number will appear on the display.

The CD player can play the smaller 3 inch (8 cm) single CDs with an adapter ring. Full-size CDs and the smaller CDs are loaded in the same manner.

If playing a CD-R, the sound quality may be reduced due to CD-R quality, the method of recording, the quality of the music that has been recorded, and the way the CD-R has been handled. There may be an increase in skipping, difficulty in finding tracks, and/or difficulty in loading and ejecting. If these problems occur, check the bottom surface of the CD. If the surface of the CD is damaged, such as cracked, broken, or scratched, the CD will not play properly. If the surface of the CD is soiled, see *Care of Your CDs on page 3-80* for more information.

If there is no apparent damage, try a known good CD.

Do not add any label to a CD, it could get caught in the CD player. If a CD is recorded on a personal computer and a description label is needed, try labeling the top of the recorded CD with a marking pen instead.

Notice: **If you add any label to a CD, insert more than one CD into the slot at a time, or attempt to play scratched or damaged CDs, you could damage the CD player. When using the CD player, use only CDs in good condition without any label, load one CD at a time, and keep the CD player and the loading slot free of foreign materials, liquids, and debris.**

If an error appears on the display, see “CD Messages” later in this section.

LOAD: Press the LOAD button to load CDs into the CD player. This CD player will hold up to six CDs.

To insert one CD, do the following:

1. Turn the ignition on.
2. Press and release the LOAD button.
3. Wait for INSERT CD to flash on the display.
4. Load a CD. Insert the CD partway into the slot, label side up. The player will pull the CD in.

Downloaded from www.Manualslib.com manuals search engine

To insert multiple CDs, do the following:

1. Turn the ignition on.
2. Press and hold the LOAD button for two seconds.

   You will hear a beep and MULTI LOAD CD, then INSERT CD and the number will appear on the display.
3. Once INSERT CD and the number appears on the display, load a CD. Insert the CD partway into the slot, label side up. The player will pull the CD in.

   Once the CD is loaded, INSERT CD and the number will appear on the display again. Once INSERT CD and the number appear on the display again, you can load another CD. The CD player takes up to six CDs. Do not try to load more than six.

To load more than one CD but less than six, complete Steps 1 through 3. When finished loading CDs, with the radio on or off, press the LOAD button to cancel the loading function. The radio will begin to play the last CD loaded.

If more than one CD has been loaded, a number for each CD will be displayed and the currently selected slot number will be underlined.

⏏ **(Eject):** To eject a single CD press this button. EJECTING CD # will appear on the display and the single CD icon will flash. When the CD is ready to be removed the CD will eject part way from the radio and REMOVE CD # will flash with the single CD icon flashing until the CD is removed. If the CD is not removed within 25 seconds the radio will pull it back in.

To eject multiple CDs, press and hold the eject button. EJECTING ALL CDS will appear on the display, the single CD icon will flash, and you will hear a beep. When the CD is ready to be removed the CD will eject part way from the radio and REMOVE CD # will flash with the single CD icon flashing until the CD is removed. If the CD is not removed within 25 seconds the radio will pull it back in. After the CD is removed the radio will repeat the previous actions until all of the CDs have been removed or a CD is pulled back in.

Downloaded from www.Manualslib.com manuals search engine

Playing a Specific Loaded CD

For every CD loaded, a number will appear on the display. To play a specific CD, press the numbered pushbutton that corresponds to the CD you want to play. A small bar will appear under the CD number that is playing, and the track number will appear.

If an error appears on the display, see “CD Messages” later in this section.

◁◁ **(Reverse):** Press and hold this button to reverse quickly within a track. You will hear sound at a reduced volume. T#, the elapsed time of the track, and REV will appear on the display. Release this button to play the passage.

▷▷ **(Fast Forward):** Press and hold this button to advance quickly within a track. You will hear sound at a reduced volume. T#, the elapsed time of the track, and FWD will appear on the display. Release this button to play the passage.

RPT (Repeat): With repeat, one track or an entire CD can be repeated.

To use repeat, do the following:

- To repeat the track you are listening to, press and release the RPT button. RPT ON TRK # will appear on the display. Press RPT again to turn it off. RPT OFF will appear on the display.
- To repeat the CD you are listening to, press and hold the RPT button for more than two seconds. RPT CD # will appear on the display. Press RPT again to turn it off. RPT OFF will appear on the display.

Downloaded from www.Manualslib.com manuals search engine

RDM (Random): With random, you can listen to the tracks in random, rather than sequential, order, on one CD or on all of the CDs.

To use random, do one of the following:

- To play the tracks on the CD you are listening to in random order, press the RDM button. RDM ONE will appear on the display. Press RDM again to turn it off. RDM OFF will appear on the display.
- To play the tracks on all of the CDs that are loaded in random order, press and hold the RDM button for more than two seconds. You will hear a beep and RANDOM ALL CDS and RDM will appear on the display. Press RDM again to turn it off. RANDOM OFF will appear on the display.

◁ **SEEK** ▷ **:** Press the left arrow to go to the start of the current track if more than eight seconds have played. Press the right arrow to go to the beginning of the next track. If either arrow is held or pressed more than once, the player will continue moving backward or forward through the CD.

SCAN: Press and release this button to scan the current CD. The CD will go to the next track, play the first 10 seconds, then go on to the next track. Press the SCAN button again to stop scanning.

To scan all of the CDs loaded, press and hold the SCAN button for more than two seconds. The CD will go to the next CD, play the first 10 seconds of each track, then go on to the next CD. Press the SCAN button again to stop scanning.

DISP (Display): Press the DISP button to switch between time and the elapsed time of the track. To change the default on the display (CD#/Track#/Time, CD#/Track#, or Track#/Elapsed Time), press the button until you see the display you want, then hold the button for two seconds. The radio will produce one beep and the selected display will now be the default.

EQ (Equalizer): Press this button to select the desired equalization setting while playing a CD. The equalization will be automatically set whenever a CD is played. For more information on equalization, see “EQ” listed previously in this section.

AM/FM: Press this button to play the radio when a CD is playing. The inactive CD(s) will remain safely inside the radio for future listening.

XM/AUX: Press this button to listen to XM™ (if equipped) when a CD is playing. The inactive CD will remain safely inside the radio for future listening.

CD: Press this button to play a CD when listening to the radio.

Downloaded from www.Manualslib.com manuals search engine

Using Song List Mode

(Song List): The six-disc CD changer has a feature called song list. This feature is capable of saving 20 track selections.

To save tracks into the song list feature, perform the following steps:

1. Turn the radio on and load it with at least one CD. See “LOAD” listed previously in this section for more information.
2. Check to see that the CD changer is not in song list mode. S-LIST should not appear in the display. If S-LIST appears on the display, press the song list button to turn it off.
3. Select the desired CD by pressing the numbered pushbutton and then use the SEEK left arrow to locate the track to be saved. The track will begin to play.
4. Press and hold the song list button for two or more seconds to save the track into memory. When song list is pressed, a beep will be heard immediately. After two seconds of continuously pressing song list, two beeps will sound to confirm that the track has been saved and TRACK number ADDED will appear on the display.
5. Repeat Steps 3 and 4 for saving other selections.

SONG LIST FULL will appear on the display if you try to save more than 20 selections.

To play the song list, press and release the song list button. One beep will be heard and SONG LIST will appear on the display. The recorded tracks will begin to play in the order that they were saved.

Seek through the song list by using the SEEK arrows. Seeking past the last saved track will return to the first saved track.

To delete tracks from the song list, perform the following steps:

1. Turn the CD player on.
2. Press the song list button to turn song list on. SONG LIST will appear on the display.
3. Press either SEEK arrow to select the desired track to be deleted.
4. Press and hold the song list button for two seconds. When pressing song list, one beep will be heard immediately. After two seconds of continuously pressing the song list button, two beeps will be heard to confirm that the track has been deleted and TRACK number DELETED will appear on the display.

After a track has been deleted, the remaining tracks are moved up the list. When another track is added to the song list, the track will be added to the end of the list.

Downloaded from www.Manualslib.com manuals search engine

To delete the entire song list, perform the following steps:

1. Turn the CD player on.
2. Press the song list button to turn song list on. SONG LIST will appear on the display.
3. Press and hold the song list button for more than four seconds. A beep will be heard, followed by two beeps after two seconds, and a final beep will be heard after four seconds. SONG LIST EMPTY will appear on the display indicating the song list has been deleted.

If a CD is ejected, and the song list contains saved tracks from that CD, those tracks are automatically deleted from the song list. Any tracks saved to the song list again are added to the bottom of the list.

To end song list mode, press the song list button. One beep will be heard and SONG LIST will be removed from the display.

CD Messages

CHECK CD: If this message appears on the display and/or the CD comes out, it could be for one of the following reasons:

- It is very hot. When the temperature returns to normal, the CD should play.
- You are driving on a very rough road. When the road becomes smoother, the CD should play.
- The CD is dirty, scratched, wet, or upside down.
- The air is very humid. If so, wait about an hour and try again.
- There may have been a problem while burning the CD.
- The label may be caught in the CD player.

If the CD is not playing correctly, for any other reason, try a known good CD.

If any error occurs repeatedly or if an error cannot be corrected, contact your dealer. If the radio displays an error message, write it down and provide it to your dealer when reporting the problem.

Downloaded from www.Manualslib.com manuals search engine

Theft-Deterrent Feature

THEFTLOCK® is designed to discourage theft of your vehicle's radio. The feature works automatically by learning a portion of the Vehicle Identification Number (VIN). If the radio is moved to a different vehicle, it will not operate and LOCKED will appear on the display.

With THEFTLOCK® activated, the radio will not operate if stolen.

Audio Steering Wheel Controls

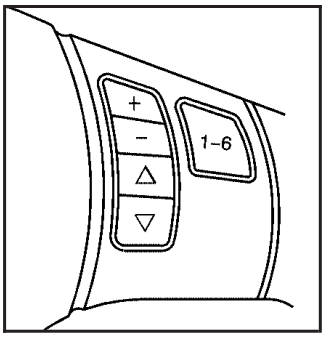

If your vehicle has this feature, some audio controls can be adjusted at the steering wheel. They include the following:

▽ △: Press the up or the down arrow to go to the next or to the previous radio station and stay there. The radio will only seek stations with a strong signal that are in the selected band.

To scan stations, press and hold either arrow for two seconds until SCAN appears on the display and you hear a beep. The radio will go to a station, play for a few seconds, then go on to the next station. Press either arrow again to stop scanning.

When a CD is playing, press the up or the down arrow to go to the next or previous track.

To scan the current CD, press and hold either up or down arrow for more than two seconds. The CD will go to the next track, play the first 10 seconds, then go on to the next track. Press either up or down arrow again to stop scanning.

To scan all of the CDs loaded, press and hold either up or down arrow for more than four seconds. The CD will go to the next CD, play the first 10 seconds of each track, then go on to the next CD. Press either up or down arrow again to stop scanning.

+ – (Volume): Press the plus or minus button to increase or to decrease the volume.

1–6 (Preset Pushbuttons): Press this button to play stations that are programmed on the radio preset pushbuttons. The radio will only seek preset stations with a strong signal that are in the selected band.

When a CD is playing in the six-disc CD changer, press this button to go to the next available CD, if multiple CDs are loaded.

Downloaded from www.Manualslib.com manuals search engine

Radio Reception

You may experience frequency interference and static during normal radio reception if items such as cellphone chargers, vehicle convenience accessories, and external electronic devices are plugged into the accessory power outlet. If there is interference or static, unplug the item from the accessory power outlet.

AM

The range for most AM stations is greater than for FM, especially at night. The longer range can cause station frequencies to interfere with each other. For better radio reception, most AM radio stations will boost the power levels during the day, and then reduce these levels during the night. Static can also occur when things like storms and power lines interfere with radio reception. When this happens, try reducing the treble on your radio.

FM Stereo

FM stereo will give the best sound, but FM signals will reach only about 10 to 40 miles (16 to 65 km). Tall buildings or hills can interfere with FM signals, causing the sound to fade in and out.

XM™ Satellite Radio Service

XM™ Satellite Radio Service gives digital radio reception from coast-to-coast in the 48 contiguous United States, and in Canada (if available). Just as with FM, tall buildings or hills can interfere with satellite radio signals, causing the sound to fade in and out. In addition, traveling or standing under heavy foliage, bridges, garages, or tunnels may cause loss of the XM™ signal for a period of time. The radio may display NO SIGNAL to indicate interference.

Care of Your CDs

Handle CDs carefully. Store them in their original cases or other protective cases and away from direct sunlight and dust. The CD player scans the bottom surface of the disc. If the surface of a CD is damaged, such as cracked, broken, or scratched, the CD will not play properly or not at all. If the surface of a CD is soiled, take a soft, lint free cloth or dampen a clean, soft cloth in a mild, neutral detergent solution mixed with water, and clean it. Make sure the wiping process starts from the center to the edge.

Do not touch the bottom side of a CD while handling it; this could damage the surface. Pick up CDs by grasping the outer edges or the edge of the hole and the outer edge.

Downloaded from www.Manualslib.com manuals search engine

Care of the CD Player

The use of CD lens cleaners for CD players is not advised, due to the risk of contaminating the internal lens of the CD optics with lubricants.

Fixed Mast Antenna

The fixed mast antenna can withstand most car washes without being damaged. If the mast should ever become slightly bent, straighten it out by hand. If the mast is badly bent, replace it.

Check occasionally to make sure the mast is still tightened to the front quarter panel.

XM™ Satellite Radio Antenna System

The XM™ Satellite Radio antenna is located on the roof of your vehicle. Keep this antenna clear of snow and ice build up for clear radio reception.

If your vehicle has a sunroof, the performance of the XM™ system may be affected if the sunroof is open.

If the rear roof rack rail is too close to the XM™ antenna or if objects stored on the roof rack cover or block the XM™ antenna, the performance of the XM™ system may be affected.

Chime Level Adjustment

Chime level adjustment is only available on RDS radios. The radio is used to adjust the vehicle's chime level. To change the volume level of the chime, press and hold pushbutton 6 with the ignition on and the radio power off. The volume level will change from the normal level to loud, and LOUD will appear on the radio display. To change back to the default or normal setting, press and hold pushbutton 6 again. The volume level will change from the loud level to normal, and NORMAL will appear on the radio display. Each time the chime volume is changed, three chimes will sound as an example of the new volume selected. Removing the radio and not replacing it with a factory radio or chime module will disable vehicle chimes.

Downloaded from www.Manualslib.com manuals search engine

✍ NOTES

Downloaded from www.Manualslib.com manuals search engine

Section 4 Driving Your Vehicle

Your Driving, the Road, and Your Vehicle 4-2
Defensive Driving 4-2
Drunken Driving 4-3
Control of a Vehicle 4-5
Braking 4-6
Anti-Lock Brake System (ABS) 4-7
Braking in Emergencies 4-8
Traction Control System (TCS) 4-9
All-Wheel Drive (AWD) System 4-10
Steering 4-11
Off-Road Recovery 4-13
Passing 4-14
Loss of Control 4-15
Driving at Night 4-16
Driving in Rain and on Wet Roads 4-17
City Driving 4-20
Freeway Driving 4-21
Before Leaving on a Long Trip 4-22
Highway Hypnosis 4-23
Hill and Mountain Roads 4-24
Winter Driving 4-26
If Your Vehicle is Stuck in Sand, Mud, Ice or Snow 4-30
Rocking Your Vehicle to Get It Out 4-31
Loading Your Vehicle 4-31
Towing 4-36
Towing Your Vehicle 4-36
Recreational Vehicle Towing 4-36
Towing a Trailer 4-38

Downloaded from www.Manualslib.com manuals search engine

Your Driving, the Road, and Your Vehicle

Defensive Driving

The best advice anyone can give about driving is: Drive defensively.

Please start with a very important safety device in your vehicle: Buckle up. See *Safety Belts: They Are for Everyone on page 1-12*.

⚠ CAUTION:

Defensive driving really means "Be ready for anything." On city streets, rural roads, or expressways, it means "Always expect the unexpected." Assume that pedestrians or other drivers are going to be careless and make mistakes. Anticipate what they might do and be ready. Rear-end collisions are about the most preventable of accidents. Yet they are common. Allow enough following distance. Defensive driving requires that a driver concentrate on the driving task. Anything that distracts from the driving task makes proper defensive driving more difficult and can even cause a collision, with resulting injury. Ask a passenger to help do these things, or pull off the road in a safe place to do them. These simple defensive driving techniques could save your life.

Downloaded from www.Manualslib.com manuals search engine

Drunken Driving

Death and injury associated with drinking and driving is a national tragedy. It is the number one contributor to the highway death toll, claiming thousands of victims every year.

Alcohol affects four things that anyone needs to drive a vehicle:

- Judgment
- Muscular Coordination
- Vision
- Attentiveness

Police records show that almost half of all motor vehicle-related deaths involve alcohol. In most cases, these deaths are the result of someone who was drinking and driving. In recent years, more than 16,000 annual motor vehicle-related deaths have been associated with the use of alcohol, with more than 300,000 people injured.

Many adults — by some estimates, nearly half the adult population — choose never to drink alcohol, so they never drive after drinking. For persons under 21, it is against the law in every U.S. state to drink alcohol. There are good medical, psychological, and developmental reasons for these laws.

The obvious way to eliminate the leading highway safety problem is for people never to drink alcohol and then drive. But what if people do? How much is “too much” if someone plans to drive? It is a lot less than many might think. Although it depends on each person and situation, here is some general information on the problem.

The Blood Alcohol Concentration (BAC) of someone who is drinking depends upon four things:

- The amount of alcohol consumed
- The drinker’s body weight
- The amount of food that is consumed before and during drinking
- The length of time it has taken the drinker to consume the alcohol

Downloaded from www.Manualslib.com manuals search engine

According to the American Medical Association, a 180 lb (82 kg) person who drinks three 12 ounce (355 ml) bottles of beer in an hour will end up with a BAC of about 0.06 percent. The person would reach the same BAC by drinking three 4 ounce (120 ml) glasses of wine or three mixed drinks if each had 1-1/2 ounces (45 ml) of liquors like whiskey, gin, or vodka.

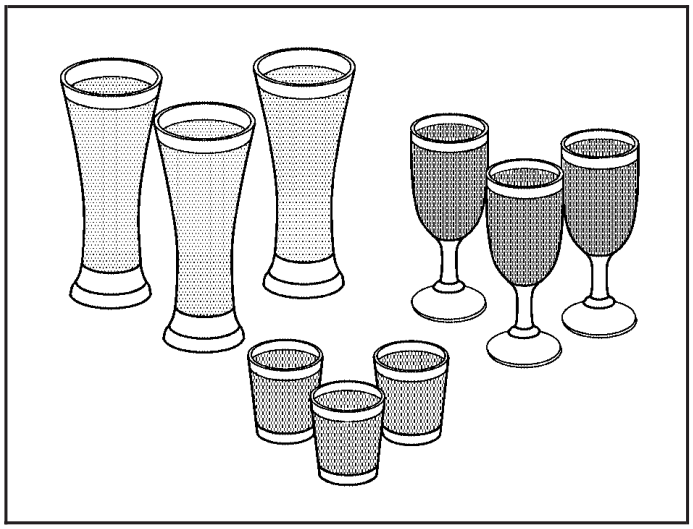

It is the amount of alcohol that counts. For example, if the same person drank three double martinis (3 ounces or 90 ml of liquor each) within an hour, the person's BAC would be close to 0.12 percent. A person who consumes food just before or during drinking will have a somewhat lower BAC level.

There is a gender difference, too. Women generally have a lower relative percentage of body water than men. Since alcohol is carried in body water, this means that a woman generally will reach a higher BAC level than a man of her same body weight will when each has the same number of drinks.

The law in most U.S. states, and throughout Canada, sets the legal limit at 0.08 percent. In some other countries, the limit is even lower. For example, it is 0.05 percent in both France and Germany. The BAC limit for all commercial drivers in the United States is 0.04 percent.

The BAC will be over 0.10 percent after three to six drinks (in one hour). Of course, as we have seen, it depends on how much alcohol is in the drinks, and how quickly the person drinks them.

But the ability to drive is affected well below a BAC of 0.10 percent. Research shows that the driving skills of many people are impaired at a BAC approaching 0.05 percent, and that the effects are worse at night. All drivers are impaired at BAC levels above 0.05 percent.

Downloaded from www.Manualslib.com manuals search engine

Statistics show that the chance of being in a collision increases sharply for drivers who have a BAC of 0.05 percent or above. A driver with a BAC level of 0.06 percent has doubled his or her chance of having a collision. At a BAC level of 0.10 percent, the chance of this driver having a collision is 12 times greater; at a level of 0.15 percent, the chance is 25 times greater!

The body takes about an hour to rid itself of the alcohol in one drink. No amount of coffee or number of cold showers will speed that up. “I will be careful” is not the right answer. What if there is an emergency, a need to take sudden action, as when a child darts into the street? A person with even a moderate BAC might not be able to react quickly enough to avoid the collision.

There is something else about drinking and driving that many people do not know. Medical research shows that alcohol in a person’s system can make crash injuries worse, especially injuries to the brain, spinal cord, or heart. This means that when anyone who has been drinking — driver or passenger — is in a crash, that person’s chance of being killed or permanently disabled is higher than if the person had not been drinking.

⚠ CAUTION:

Drinking and then driving is very dangerous. Your reflexes, perceptions, attentiveness, and judgment can be affected by even a small amount of alcohol. You can have a serious — or even fatal — collision if you drive after drinking. Please do not drink and drive or ride with a driver who has been drinking. Ride home in a cab; or if you are with a group, designate a driver who will not drink.

Control of a Vehicle

You have three systems that make your vehicle go where you want it to go. They are the brakes, the steering, and the accelerator. All three systems have to do their work at the places where the tires meet the road.

Sometimes, as when you are driving on snow or ice, it is easy to ask more of those control systems than the tires and road can provide. That means you can lose control of your vehicle. See *Traction Control System (TCS) on page 4-9*.

Adding non-GM accessories can affect your vehicle’s performance. See *Accessories and Modifications on page 5-3*.

Downloaded from www.Manualslib.com manuals search engine

Braking

See *Brake System Warning Light on page 3-28*.

Braking action involves perception time and reaction time.

First, you have to decide to push on the brake pedal. That is perception time. Then you have to bring up your foot and do it. That is reaction time.

Average reaction time is about three-fourths of a second. But that is only an average. It might be less with one driver and as long as two or three seconds or more with another. Age, physical condition, alertness, coordination, and eyesight all play a part. So do alcohol, drugs, and frustration. But even in three-fourths of a second, a vehicle moving at 60 mph (100 km/h) travels 66 feet (20 m). That could be a lot of distance in an emergency, so keeping enough space between your vehicle and others is important.

And, of course, actual stopping distances vary greatly with the surface of the road, whether it is pavement or gravel; the condition of the road, whether it is wet, dry, or icy; tire tread; the condition of your brakes; the weight of the vehicle; and the amount of brake force applied.

Avoid needless heavy braking. Some people drive in spurts — heavy acceleration followed by heavy braking — rather than keeping pace with traffic. This is a mistake. Your brakes may not have time to cool between hard stops. Your brakes will wear out much faster if you do a lot of heavy braking. If you keep pace with the traffic and allow realistic following distances, you will eliminate a lot of unnecessary braking. That means better braking and longer brake life.

If your engine ever stops while you are driving, brake normally but do not pump your brakes. If you do, the pedal may get harder to push down. If your engine stops, you will still have some power brake assist. But you will use it when you brake. Once the power assist is used up, it may take longer to stop and the brake pedal will be harder to push.

Adding non-GM accessories can affect your vehicle's performance. See *Accessories and Modifications on page 5-3*.

Downloaded from www.Manualslib.com manuals search engine

Anti-Lock Brake System (ABS)

Your vehicle may have anti-lock brakes. ABS is an advanced electronic braking system that will help prevent a braking skid.

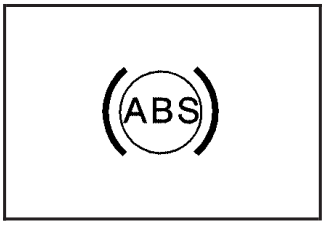

If your vehicle has anti-lock brakes, this warning light on the instrument panel will come on briefly when you start your vehicle.

When you start your engine, or when you begin to drive away, your anti-lock brake system will check itself. You may hear a momentary motor or clicking noise while this test is going on, and you may even notice that your brake pedal moves or pulses a little. This is normal.

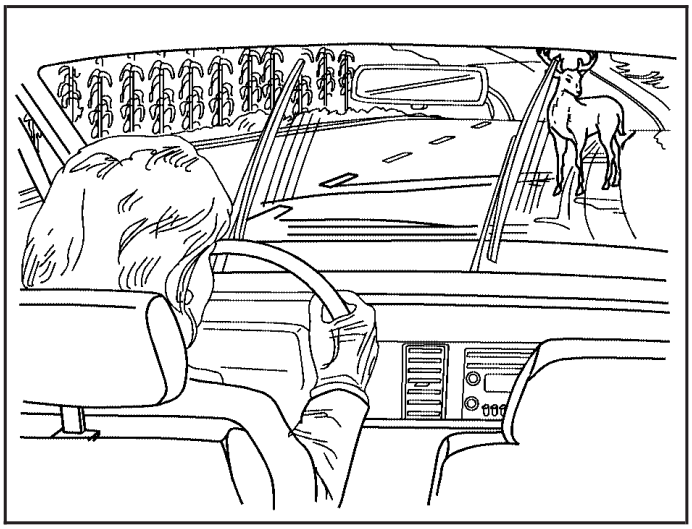

Let us say the road is wet and you are driving safely. Suddenly, an animal jumps out in front of you. You slam on the brakes and continue braking. Here is what happens with ABS:

A computer senses that wheels are slowing down. If one of the wheels is about to stop rolling, the computer will separately work the brakes at each wheel.

Downloaded from www.Manualslib.com manuals search engine

The anti-lock system can change the brake pressure faster than any driver could. The computer is programmed to make the most of available tire and road conditions. This can help you steer around the obstacle while braking hard.

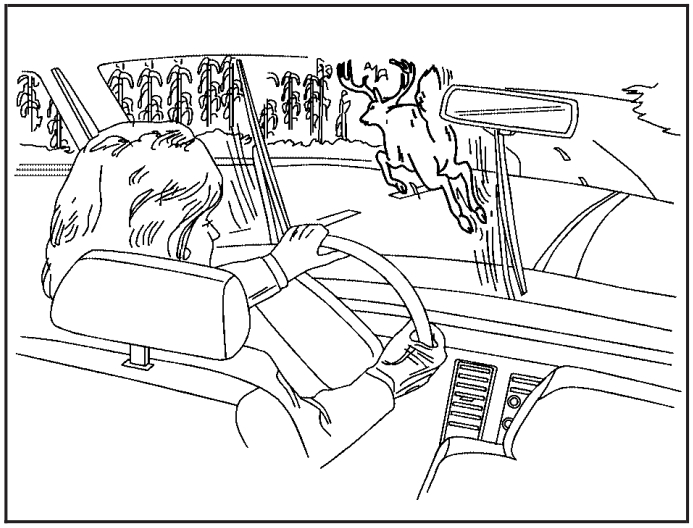

As you brake, your computer keeps receiving updates on wheel speed and controls braking pressure accordingly.

Remember: Anti-lock does not change the time you need to get your foot up to the brake pedal or always decrease stopping distance. If you get too close to the vehicle in front of you, you will not have time to apply your brakes if that vehicle suddenly slows or stops. Always leave enough room up ahead to stop, even though you have anti-lock brakes.

Using Anti-Lock

Do not pump the brakes. Just hold the brake pedal down firmly and let anti-lock work for you. You may feel a slight brake pedal pulsation or notice some noise, but this is normal.

Braking in Emergencies

At some time, nearly every driver gets into a situation that requires hard braking.

If you have anti-lock brakes, you can steer and brake at the same time. However, if you do not have anti-lock brakes, your first reaction — to hit the brake pedal hard and hold it down — may be the wrong thing to do. Your wheels can stop rolling. Once they do, the vehicle cannot respond to your steering.

Downloaded from www.Manualslib.com manuals search engine

Momentum will carry it in whatever direction it was headed when the wheels stopped rolling. That could be off the road, into the very thing you were trying to avoid, or into traffic.

If you do not have anti-lock brakes, use a “squeeze” braking technique. This will give you maximum braking while maintaining steering control. You can do this by pushing on the brake pedal with steadily increasing pressure.

In an emergency, you will probably want to squeeze the brakes hard without locking the wheels. If you hear or feel the wheels sliding, ease off the brake pedal. This will help you retain steering control. If you do have anti-lock brakes, it is different. See *Anti-Lock Brake System (ABS) on page 4-7*.

In many emergencies, steering can help you more than even the very best braking.

Traction Control System (TCS)

Your vehicle may have a traction control system that limits wheel spin. This is especially useful in slippery road conditions. The system operates only if it senses that one or both of the front wheels are spinning or beginning to lose traction. When this happens, the system reduces engine power to limit wheel spin.

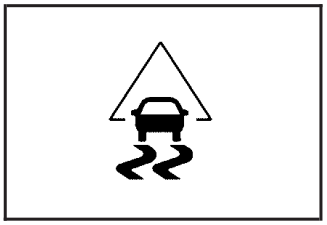

This light will come on when your traction control system is limiting wheel spin. You may feel or hear the system working, but this is normal.

The traction control system automatically comes on whenever you start your vehicle. To limit wheel spin, especially in slippery road conditions, you should always leave the system on. But you can turn the traction control system off if you ever need to. You should turn the system off if your vehicle ever gets stuck in sand, mud, ice or snow and rocking the vehicle is required. See *Rocking Your Vehicle to Get It Out on page 4-31*.

Downloaded from www.Manualslib.com manuals search engine

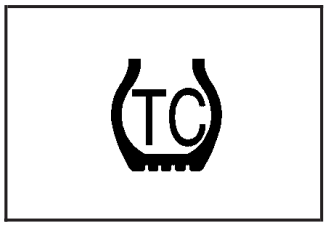

The traction control system can be turned off by pressing the traction control button, located on the instrument panel above the audio system.

The traction control system can be activated again by pressing the traction control button.

If the system is limiting wheel spin when you press the button, the traction control off light will appear on the instrument panel cluster. The system will not turn off until there is no longer a current need to limit wheel spin. You can turn the system back on at any time by pressing the button again. If the light does not come on, you may not have traction control and your vehicle should be serviced by a dealer.

Adding non-GM accessories can affect your vehicle's performance. See *Accessories and Modifications on page 5-3* for more information.

All-Wheel Drive (AWD) System

If your vehicle has all-wheel drive (AWD), the AWD system operates automatically without any action required by the driver. If the front drive wheels begin to slip, the rear wheels will automatically begin to drive the vehicle as required. There may be a slight engagement noise during hard use but this is normal.

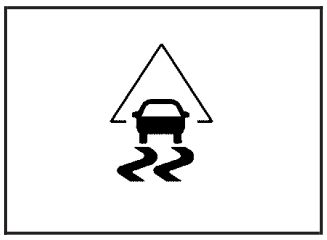

This light will come on when engine torque is reduced to protect the AWD system from overheating. You may feel or hear a change in engine output, but this is normal.

During heavy AWD applications, the engine torque may be reduced to protect AWD system components. If the vehicle is exposed to extended heavy AWD usage, the AWD system will shut itself off to protect the system from overheating. When the system cools down, the AWD system will activate itself again automatically; this cool-down can take up to 20 minutes depending on outside temperature and vehicle use.

Downloaded from www.Manualslib.com manuals search engine

If the AWD system is unable to protect the system from overheating, the traction off light will come on to indicate no protection capability. If this light comes on, take your vehicle in for service.

Steering

Electric Power Steering

If the engine stalls while you are driving, the power steering assist system will continue to operate until you are able to stop your vehicle. If you lose power steering assist because the electric power steering system is not functioning, you can steer, but it will take more effort.

If you turn the steering wheel in either direction several times until it stops, or hold the steering wheel in the stopped position for an extended amount of time, you may notice a reduced amount of power steering assist. The normal amount of power steering assist should return shortly after a few normal steering movements.

The electric power steering system does not require regular maintenance. If you suspect steering system problems, such as abnormally high steering effort for a prolonged period of time, contact your dealer for service repairs.

Steering Tips

It is important to take curves at a reasonable speed.

A lot of the “driver lost control” accidents mentioned on the news happen on curves. Here is why:

Experienced driver or beginner, each of us is subject to the same laws of physics when driving on curves. The traction of the tires against the road surface makes it possible for the vehicle to change its path when you turn the front wheels. If there is no traction, inertia will keep the vehicle going in the same direction. If you have ever tried to steer a vehicle on wet ice, you will understand this.

The traction you can get in a curve depends on the condition of your tires and the road surface, the angle at which the curve is banked, and your speed. While you are in a curve, speed is the one factor you can control.

Suppose you are steering through a sharp curve. Then you suddenly apply the brakes. Both control systems — steering and braking — have to do their work where the tires meet the road. Unless you have four-wheel anti-lock brakes, adding the hard braking can demand too much of those places. You can lose control.

Downloaded from www.Manualslib.com manuals search engine

The same thing can happen if you are steering through a sharp curve and you suddenly accelerate. Those two control systems — steering and acceleration — can overwhelm those places where the tires meet the road and make you lose control. See *Traction Control System (TCS) on page 4-9*.

What should you do if this ever happens? Ease up on the brake or accelerator pedal, steer the vehicle the way you want it to go, and slow down.

Speed limit signs near curves warn that you should adjust your speed. Of course, the posted speeds are based on good weather and road conditions. Under less favorable conditions you will want to go slower.

If you need to reduce your speed as you approach a curve, do it before you enter the curve, while your front wheels are straight ahead.

Try to adjust your speed so you can “drive” through the curve. Maintain a reasonable, steady speed. Wait to accelerate until you are out of the curve, and then accelerate gently into the straightaway.

Adding non-GM accessories can affect your vehicle’s performance. See *Accessories and Modifications on page 5-3*.

Steering in Emergencies

There are times when steering can be more effective than braking. For example, you come over a hill and find a truck stopped in your lane, or a car suddenly pulls out from nowhere, or a child darts out from between parked cars and stops right in front of you. You can avoid these problems by braking — if you can stop in time. But sometimes you cannot; there is not room. That is the time for evasive action — steering around the problem.

Your vehicle can perform very well in emergencies like these. First apply your brakes — but, unless you have anti-lock brakes, not enough to lock your wheels.

See *Braking on page 4-6*. It is better to remove as much speed as you can from a possible collision. Then steer around the problem, to the left or right depending on the space available.

Downloaded from www.Manualslib.com manuals search engine

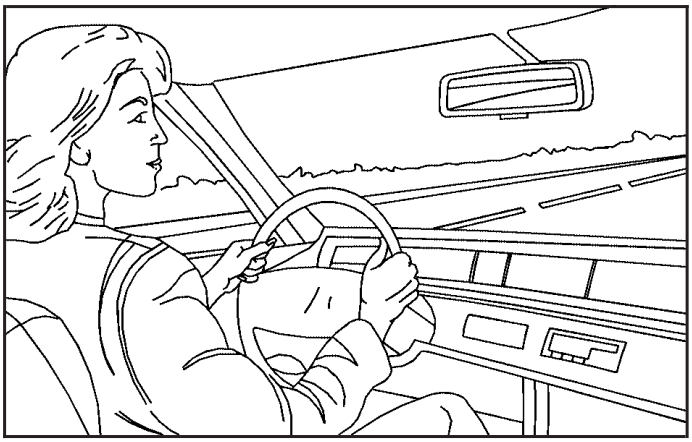

An emergency like this requires close attention and a quick decision. If you are holding the steering wheel at the recommended 9 and 3 o'clock positions, you can turn it a full 180 degrees very quickly without removing either hand. But you have to act fast, steer quickly, and just as quickly straighten the wheel once you have avoided the object.

The fact that such emergency situations are always possible is a good reason to practice defensive driving at all times and wear safety belts properly.

Off-Road Recovery

You may find that your right wheels have dropped off the edge of a road onto the shoulder while you are driving.

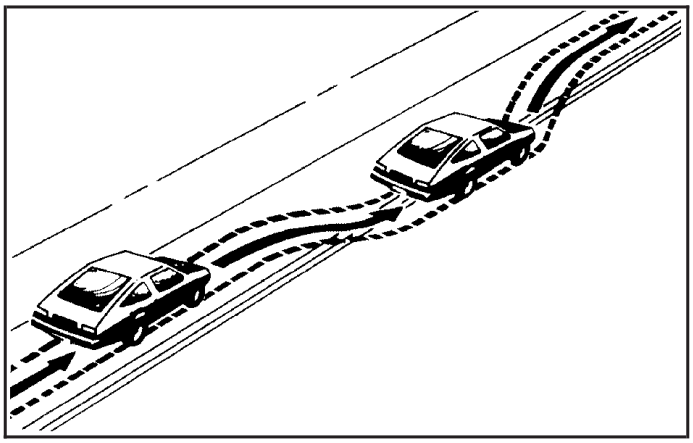

If the level of the shoulder is only slightly below the pavement, recovery should be fairly easy. Ease off the accelerator and then, if there is nothing in the way, steer so that your vehicle straddles the edge of the pavement. You can turn the steering wheel up to one-quarter turn until the right front tire contacts the pavement edge. Then turn your steering wheel to go straight down the roadway.

Downloaded from www.Manualslib.com manuals search engine

Passing

The driver of a vehicle about to pass another on a two-lane highway waits for just the right moment, accelerates, moves around the vehicle ahead, then goes back into the right lane again. A simple maneuver?

Not necessarily! Passing another vehicle on a two-lane highway is a potentially dangerous move, since the passing vehicle occupies the same lane as oncoming traffic for several seconds. A miscalculation, an error in judgment, or a brief surrender to frustration or anger can suddenly put the passing driver face to face with the worst of all traffic accidents — the head-on collision.

So here are some tips for passing:

- Drive ahead. Look down the road, to the sides and to crossroads for situations that might affect your passing patterns. If you have any doubt whatsoever about making a successful pass, wait for a better time.
- Watch for traffic signs, pavement markings and lines. If you can see a sign up ahead that might indicate a turn or an intersection, delay your pass. A broken center line usually indicates it is all right to pass, providing the road ahead is clear. Never cross a solid line on your side of the lane or a double solid line, even if the road seems empty of approaching traffic.
- Do not get too close to the vehicle you want to pass while you are awaiting an opportunity. For one thing, following too closely reduces your area of vision, especially if you are following a larger vehicle. Also, you will not have adequate space if the vehicle ahead suddenly slows or stops. Keep back a reasonable distance.
- When it looks like a chance to pass is coming up, start to accelerate but stay in the right lane and do not get too close. Time your move so you will be increasing speed as the time comes to move into the other lane. If the way is clear to pass, you will have a running start that more than makes up for the distance you would lose by dropping back. And if something happens to cause you to cancel your pass, you need only slow down and drop back again and wait for another opportunity.
- If other vehicles are lined up to pass a slow vehicle, wait your turn. But take care that someone is not trying to pass you as you pull out to pass the slow vehicle. Remember to glance over your shoulder and check the blind spot.
- Check your mirrors, glance over your shoulder, and start your left lane change signal before moving out of the right lane to pass. When you are far enough ahead of the passed vehicle to see its front in your inside mirror, activate your right lane change signal and move back into the right lane.

Downloaded from www.Manualslib.com manuals search engine

Remember that your passenger side outside mirror is convex. The vehicle you just passed may seem to be farther away from you than it really is.

- Try not to pass more than one vehicle at a time on two-lane roads. Reconsider before passing the next vehicle.
- Do not overtake a slowly moving vehicle too rapidly. Even though the brake lamps are not flashing, it may be slowing down or starting to turn.
- If you are being passed, make it easy for the following driver to get ahead of you. Perhaps you can ease a little to the right.

Loss of Control

Let us review what driving experts say about what happens when the three control systems — brakes, steering, and acceleration — do not have enough friction where the tires meet the road to do what the driver has asked.

In any emergency, do not give up. Keep trying to steer and constantly seek an escape route or area of less danger.

Skidding

In a skid, a driver can lose control of the vehicle. Defensive drivers avoid most skids by taking reasonable care suited to existing conditions, and by not overdriving those conditions. But skids are always possible.

The three types of skids correspond to your vehicle's three control systems. In the braking skid, your wheels are not rolling. In the steering or cornering skid, too much speed or steering in a curve causes tires to slip and lose cornering force. And in the acceleration skid, too much throttle causes the driving wheels to spin.

A cornering skid is best handled by easing your foot off the accelerator pedal.

If you have the Traction Control System (TCS), remember: It helps avoid only the acceleration skid. See *Traction Control System (TCS) on page 4-9*. If you do not have this system, or if the system is off, then an acceleration skid is also best handled by easing your foot off the accelerator pedal.

If your vehicle starts to slide, ease your foot off the accelerator pedal and quickly steer the way you want the vehicle to go. If you start steering quickly enough, your vehicle may straighten out. Always be ready for a second skid if it occurs.

Downloaded from www.Manualslib.com manuals search engine

Of course, traction is reduced when water, snow, ice, gravel, or other material is on the road. For safety, you will want to slow down and adjust your driving to these conditions. It is important to slow down on slippery surfaces because stopping distance will be longer and vehicle control more limited.

While driving on a surface with reduced traction, try your best to avoid sudden steering, acceleration, or braking, including engine braking by shifting to a lower gear. Any sudden changes could cause the tires to slide. You may not realize the surface is slippery until your vehicle is skidding. Learn to recognize warning clues — such as enough water, ice, or packed snow on the road to make a mirrored surface — and slow down when you have any doubt.

If you have the Anti-Lock Brake System (ABS), remember: It helps avoid only the braking skid. If you do not have ABS, then in a braking skid, where the wheels are no longer rolling, release enough pressure on the brakes to get the wheels rolling again. This restores steering control. Push the brake pedal down steadily when you have to stop suddenly. As long as the wheels are rolling, you will have steering control.

Driving at Night

Night driving is more dangerous than day driving. One reason is that some drivers are likely to be impaired — by alcohol or drugs, with night vision problems, or by fatigue.

Here are some tips on night driving.

- Drive defensively.
- Do not drink and drive.
- Adjust the inside rearview mirror to reduce the glare from headlamps behind you.
- Since you cannot see as well, you may need to slow down and keep more space between you and other vehicles.
- Slow down, especially on higher speed roads. Your vehicle's headlamps can light up only so much road ahead.
- In remote areas, watch for animals.
- If you are tired, pull off the road in a safe place and rest.

No one can see as well at night as in the daytime. But as we get older these differences increase. A 50-year-old driver may require at least twice as much light to see the same thing at night as a 20-year-old.

Downloaded from www.Manualslib.com manuals search engine

What you do in the daytime can also affect your night vision. For example, if you spend the day in bright sunshine you are wise to wear sunglasses. Your eyes will have less trouble adjusting to night. But if you are driving, do not wear sunglasses at night. They may cut down on glare from headlamps, but they also make a lot of things invisible.

You can be temporarily blinded by approaching headlamps. It can take a second or two, or even several seconds, for your eyes to re-adjust to the dark. When you are faced with severe glare, as from a driver who does not lower the high beams, or a vehicle with misaimed headlamps, slow down a little. Avoid staring directly into the approaching headlamps.

Keep the windshield and all the glass on your vehicle clean — inside and out. Glare at night is made much worse by dirt on the glass. Even the inside of the glass can build up a film caused by dust. Dirty glass makes lights dazzle and flash more than clean glass would, making the pupils of your eyes contract repeatedly.

Remember that the headlamps light up far less of a roadway when you are in a turn or curve. Keep your eyes moving; that way, it is easier to pick out dimly lighted objects. Just as the headlamps should be checked regularly for proper aim, so should your eyes be examined regularly. Some drivers suffer from night blindness — the inability to see in dim light — and are not even aware of it.

Driving in Rain and on Wet Roads

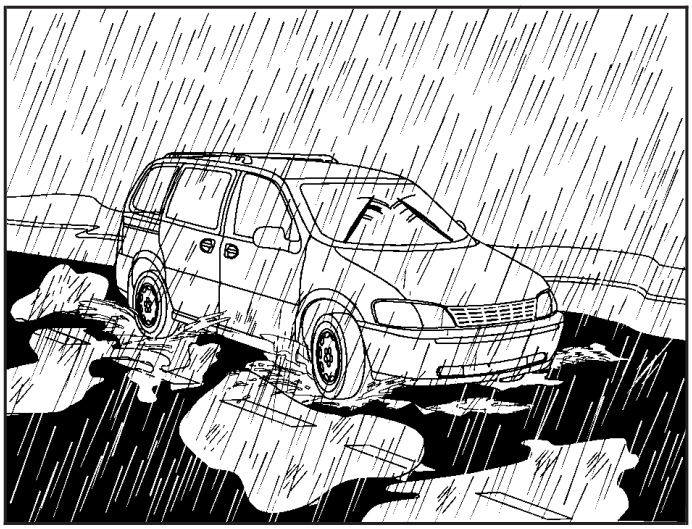

Rain and wet roads can mean driving trouble. On a wet road, you cannot stop, accelerate, or turn as well because your tire-to-road traction is not as good as on dry roads. And, if your tires do not have much tread left, you will get even less traction. It is always wise to go slower and be cautious if rain starts to fall while you are driving. The surface may get wet suddenly when your reflexes are tuned for driving on dry pavement.

Downloaded from www.Manualslib.com manuals search engine

The heavier the rain, the harder it is to see. Even if your windshield wiper blades are in good shape, a heavy rain can make it harder to see road signs and traffic signals, pavement markings, the edge of the road, and even people walking.

It is wise to keep your wiping equipment in good shape and keep your windshield washer fluid reservoir filled with washer fluid. Replace your windshield wiper inserts when they show signs of streaking or missing areas on the windshield, or when strips of rubber start to separate from the inserts.

⚠ CAUTION:

Wet brakes can cause accidents. They will not work as well in a quick stop and may cause pulling to one side. You could lose control of the vehicle.

After driving through a large puddle of water or a car wash, apply your brake pedal lightly until your brakes work normally.

Driving too fast through large water puddles or even going through some car washes can cause problems, too. The water may affect your brakes. Try to avoid puddles. But if you cannot, try to slow down before you hit them.

Hydroplaning

Hydroplaning is dangerous. So much water can build up under your tires that they can actually ride on the water. This can happen if the road is wet enough and you are going fast enough. When your vehicle is hydroplaning, it has little or no contact with the road.

Hydroplaning does not happen often. But it can if your tires do not have much tread or if the pressure in one or more is low. It can happen if a lot of water is standing on the road. If you can see reflections from trees, telephone poles, or other vehicles, and raindrops dimple the water's surface, there could be hydroplaning.

Hydroplaning usually happens at higher speeds. There just is not a hard and fast rule about hydroplaning. The best advice is to slow down when it is raining.

Downloaded from www.Manualslib.com manuals search engine

Driving Through Deep Standing Water

Notice: **If you drive too quickly through deep puddles or standing water, water can come in through your engine's air intake and badly damage your engine. Never drive through water that is slightly lower than the underbody of your vehicle. If you cannot avoid deep puddles or standing water, drive through them very slowly.**

Driving Through Flowing Water

⚠ CAUTION:

Flowing or rushing water creates strong forces. If you try to drive through flowing water, as you might at a low water crossing, your vehicle can be carried away. As little as six inches of flowing water can carry away a smaller vehicle. If this happens, you and other vehicle occupants could drown. Do not ignore police warning signs, and otherwise be very cautious about trying to drive through flowing water.

Some Other Rainy Weather Tips

- Turn on your low-beam headlamps — not just your parking lamps — to help make you more visible to others.
- Besides slowing down, allow some extra following distance. And be especially careful when you pass another vehicle. Allow yourself more clear room ahead, and be prepared to have your view restricted by road spray.
- Have good tires with proper tread depth. See *Tires on page 5-46*.

Downloaded from www.Manualslib.com manuals search engine

City Driving

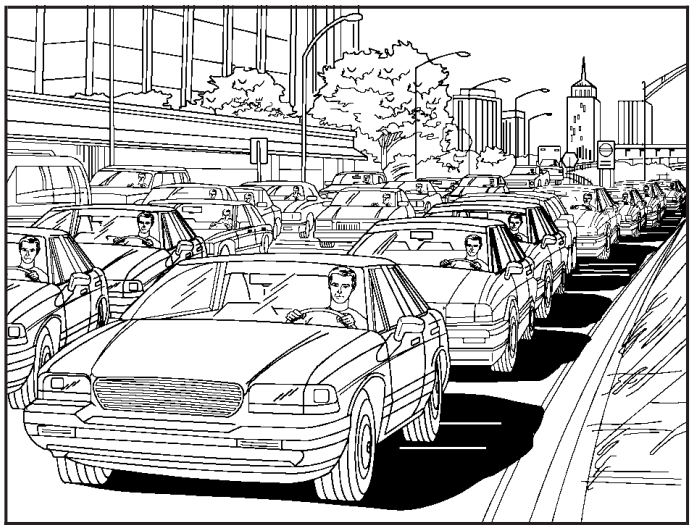

One of the biggest problems with city streets is the amount of traffic on them. You will want to watch out for what the other drivers are doing and pay attention to traffic signals.

Here are ways to increase your safety in city driving:

- Know the best way to get to where you are going. Get a city map and plan your trip into an unknown part of the city just as you would for a cross-country trip.
- Try to use the freeways that rim and crisscross most large cities. You will save time and energy. See *Freeway Driving on page 4-21*.
- Treat a green light as a warning signal. A traffic light is there because the corner is busy enough to need it. When a light turns green, and just before you start to move, check both ways for vehicles that have not cleared the intersection or may be running the red light.

Downloaded from www.Manualslib.com manuals search engine

Freeway Driving

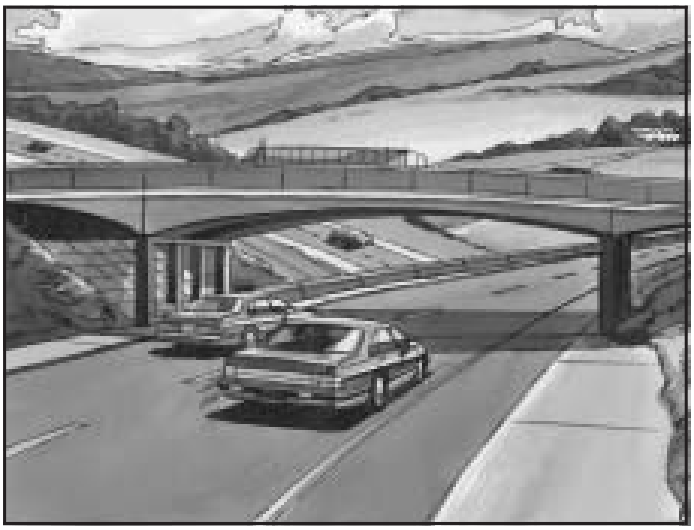

Mile for mile, freeways — also called thruways, parkways, expressways, turnpikes, or superhighways — are the safest of all roads. But they have their own special rules.

The most important advice on freeway driving is: Keep up with traffic and keep to the right. Drive at the same speed most of the other drivers are driving. Too-fast or too-slow driving breaks a smooth traffic flow. Treat the left lane on a freeway as a passing lane.

At the entrance, there is usually a ramp that leads to the freeway. If you have a clear view of the freeway as you drive along the entrance ramp, you should begin to check traffic. Try to determine where you expect to blend with the flow. Try to merge into the gap at close to the prevailing speed. Switch on your turn signal, check your mirrors, and glance over your shoulder as often as necessary. Try to blend smoothly with the traffic flow.

Once you are on the freeway, adjust your speed to the posted limit or to the prevailing rate if it is slower. Stay in the right lane unless you want to pass.

Before changing lanes, check your mirrors. Then use your turn signal.

Downloaded from www.Manualslib.com manuals search engine

Just before you leave the lane, glance quickly over your shoulder to make sure there is not another vehicle in your blind spot.

Once you are moving on the freeway, make certain you allow a reasonable following distance. Expect to move slightly slower at night.

When you want to leave the freeway, move to the proper lane well in advance. If you miss your exit, do not, under any circumstances, stop and back up. Drive on to the next exit.

The exit ramp can be curved, sometimes quite sharply. The exit speed is usually posted.

Reduce your speed according to your speedometer, not to your sense of motion. After driving for any distance at higher speeds, you may tend to think you are going slower than you actually are.

Before Leaving on a Long Trip

Make sure you are ready. Try to be well rested. If you must start when you are not fresh — such as after a day's work — do not plan to make too many miles that first part of the journey. Wear comfortable clothing and shoes you can easily drive in.

Is your vehicle ready for a long trip? If you keep it serviced and maintained, it is ready to go. If it needs service, have it done before starting out. Of course, you will find experienced and able service experts in GM dealerships all across North America. They will be ready and willing to help if you need it.

Downloaded from www.Manualslib.com manuals search engine

Here are some things you can check before a trip:

- *Windshield Washer Fluid:* Is the reservoir full? Are all windows clean inside and outside?
- *Wiper Blades:* Are they in good shape?
- *Fuel, Engine Oil, Other Fluids:* Have you checked all levels?
- *Lamps:* Are they all working? Are the lenses clean?
- *Tires:* They are vitally important to a safe, trouble-free trip. Is the tread good enough for long-distance driving? Are the tires all inflated to the recommended pressure?
- *Weather Forecasts:* What is the weather outlook along your route? Should you delay your trip a short time to avoid a major storm system?
- *Maps:* Do you have up-to-date maps?

Highway Hypnosis

Is there actually such a condition as highway hypnosis? Or is it just plain falling asleep at the wheel? Call it highway hypnosis, lack of awareness, or whatever.

There is something about an easy stretch of road with the same scenery, along with the hum of the tires on the road, the drone of the engine, and the rush of the wind against the vehicle that can make you sleepy. Do not let it happen to you! If it does, your vehicle can leave the road in less than a second, and you could crash and be injured.

What can you do about highway hypnosis? First, be aware that it can happen.

Then here are some tips:

- Make sure your vehicle is well ventilated, with a comfortably cool interior.
- Keep your eyes moving. Scan the road ahead and to the sides. Check your mirrors and your instruments frequently.
- If you get sleepy, pull off the road into a rest, service, or parking area and take a nap, get some exercise, or both. For safety, treat drowsiness on the highway as an emergency.

Downloaded from www.Manualslib.com manuals search engine

Hill and Mountain Roads

Driving on steep hills or mountains is different from driving in flat or rolling terrain.

If you drive regularly in steep country, or if you are planning to visit there, here are some tips that can make your trips safer and more enjoyable.

- Keep your vehicle in good shape. Check all fluid levels and also the brakes, tires, cooling system, and transaxle. These parts can work hard on mountain roads.

⚠ CAUTION:

If you do not shift down, your brakes could get so hot that they would not work well. You would then have poor braking or even none going down a hill. You could crash. Shift down to let your engine assist your brakes on a steep downhill slope.

Downloaded from www.Manualslib.com manuals search engine

⚠ CAUTION:

Coasting downhill in NEUTRAL (N) or with the ignition off is dangerous. Your brakes will have to do all the work of slowing down. They could get so hot that they would not work well. You would then have poor braking or even none going down a hill. You could crash. Always have your engine running and your vehicle in gear when you go downhill.

- Know how to go down hills. The most important thing to know is this: let your engine do some of the slowing down. Shift to a lower gear when you go down a steep or long hill.
- Know how to go uphill. You may want to shift down to a lower gear. The lower gears help cool your engine and transaxle, and you can climb the hill better.
- Stay in your own lane when driving on two-lane roads in hills or mountains. Do not swing wide or cut across the center of the road. Drive at speeds that let you stay in your own lane.
- As you go over the top of a hill, be alert. There could be something in your lane, like a stalled car or an accident.
- You may see highway signs on mountains that warn of special problems. Examples are long grades, passing or no-passing zones, a falling rocks area, or winding roads. Be alert to these and take appropriate action.

Downloaded from www.Manualslib.com manuals search engine

Winter Driving

Here are some tips for winter driving:

- Have your vehicle in good shape for winter.
- You may want to put winter emergency supplies in your vehicle.

Also see *Tires on page 5-46*.

Include an ice scraper, a small brush or broom, a supply of windshield washer fluid, a rag, some winter outer clothing, a small shovel, a flashlight, a red cloth, and a couple of reflective warning triangles. And, if you will be driving under severe conditions, include a small bag of sand, a piece of old carpet, or a couple of burlap bags to help provide traction. Be sure you properly secure these items in your vehicle.

Driving on Snow or Ice

Most of the time, those places where the tires meet the road probably have good traction.

However, if there is snow or ice between the tires and the road, you can have a very slippery situation. You will have a lot less traction, or grip, and will need to be very careful.

Downloaded from www.Manualslib.com manuals search engine

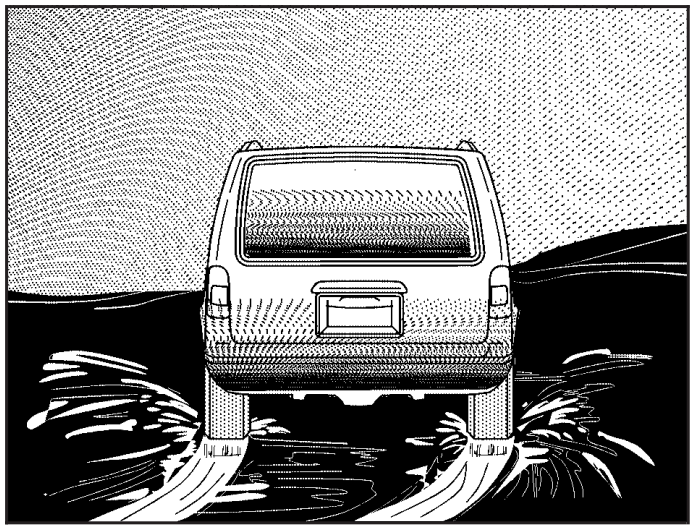

What is the worst time for this? Wet ice. Very cold snow or ice can be slick and hard to drive on. But wet ice can be even more trouble because it may offer the least traction of all. You can get wet ice when it is about freezing, 32°F (0°C), and freezing rain begins to fall. Try to avoid driving on wet ice until salt and sand crews can get there.

Whatever the condition — smooth ice, packed, blowing, or loose snow — drive with caution.

If you have the Traction Control System (TCS), it will improve your ability to accelerate when driving on a slippery road. But you can turn the TCS off if you ever need to. You should turn the TCS off if your vehicle ever gets stuck in sand, mud, ice, or snow. See *If Your Vehicle is Stuck in Sand, Mud, Ice or Snow on page 4-30*. Even though your vehicle has TCS, you will want to slow down and adjust your driving to the road conditions. Under certain conditions, you may want to turn the TCS off, such as when driving through deep snow and loose gravel, to help maintain vehicle motion at lower speeds. See *Traction Control System (TCS) on page 4-9*.

If you do not have TCS, accelerate gently. Try not to break the fragile traction. If you accelerate too fast, the drive wheels will spin and polish the surface under the tires even more.

Unless you have the Anti-Lock Brake System (ABS), you will want to brake very gently, too. If you do have ABS, see *Anti-Lock Brake System (ABS) on page 4-7*. ABS improves your vehicle's stability when you make a hard stop on a slippery road. Whether you have ABS or not, you will want to begin stopping sooner than you would on dry pavement. Without ABS, if you feel your vehicle begin to slide, let up on the brakes a little. Push the brake pedal down steadily to get the most traction you can.

Downloaded from www.Manualslib.com manuals search engine

Remember, unless you have ABS, if you brake so hard that your wheels stop rolling, you will just slide. Brake so your wheels always keep rolling and you can still steer.

- Whatever your braking system, allow greater following distance on any slippery road.
- Watch for slippery spots. The road might be fine until you hit a spot that is covered with ice. On an otherwise clear road, ice patches may appear in shaded areas where the sun cannot reach, such as around clumps of trees, behind buildings, or under bridges. Sometimes the surface of a curve or an overpass may remain icy when the surrounding roads are clear. If you see a patch of ice ahead of you, brake before you are on it. Try not to brake while you are actually on the ice, and avoid sudden steering maneuvers.

If You Are Caught in a Blizzard

If you are stopped by heavy snow, you could be in a serious situation. You should probably stay with your vehicle unless you know for sure that you are near help and you can hike through the snow.

Here are some things to do to summon help and keep yourself and your passengers safe:

- Turn on your hazard flashers.
- Tie a red cloth to your vehicle to alert police that you have been stopped by the snow.
- Put on extra clothing or wrap a blanket around you. If you do not have blankets or extra clothing, make body insulators from newspapers, burlap bags, rags, floor mats — anything you can wrap around yourself or tuck under your clothing to keep warm.

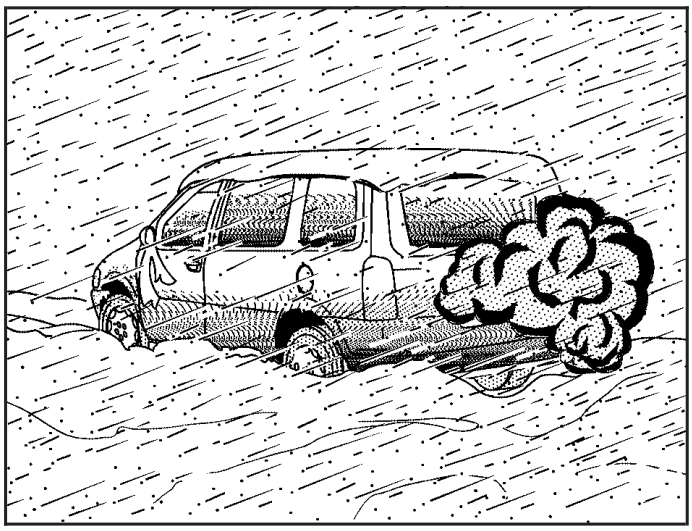

Downloaded from www.Manualslib.com manuals search engine

You can run the engine to keep warm, but be careful.

⚠ CAUTION:

Snow can trap exhaust gases under your vehicle. This can cause deadly CO (carbon monoxide) gas to get inside. CO could overcome you and kill you. You cannot see it or smell it, so you might not know it is in your vehicle. Clear away snow from around the base of your vehicle, especially any that is blocking your exhaust pipe. And check around again from time to time to be sure snow does not collect there.

Open a window just a little on the side of the vehicle that is away from the wind. This will help keep CO out.

Run your engine only as long as you must. This saves fuel. When you run the engine, make it go a little faster than just idle. That is, push the accelerator slightly. This uses less fuel for the heat that you get and it keeps the battery charged. You will need a well-charged battery to restart the vehicle, and possibly for signaling later on with your headlamps. Let the heater run for a while.

Then, shut the engine off and close the window almost all the way to preserve the heat. Start the engine again and repeat this only when you feel really uncomfortable from the cold. But do it as little as possible. Preserve the fuel as long as you can.
To help keep warm, you can get out of the vehicle and do some fairly vigorous exercises every half hour or so until help comes.

Downloaded from www.Manualslib.com manuals search engine

If Your Vehicle is Stuck in Sand, Mud, Ice or Snow

In order to free your vehicle when it is stuck, you will need to spin the wheels, but you do not want to spin your wheels too fast. The method known as rocking can help you get out when you are stuck, but you must use caution.

⚠ CAUTION:

If you let your tires spin at high speed, they can explode, and you or others could be injured. And, the transaxle or other parts of the vehicle can overheat. That could cause an engine compartment fire or other damage. When you are stuck, spin the wheels as little as possible. Do not spin the wheels above 35 mph (55 km/h) as shown on the speedometer.

Notice: **Spinning your wheels can destroy parts of your vehicle as well as the tires. If you spin the wheels too fast while shifting your transaxle back and forth, you can destroy your transaxle. See *Rocking Your Vehicle to Get It Out on page 4-31*.**

For information about using tire chains on your vehicle, see *Tire Chains on page 5-61*.

Downloaded from www.Manualslib.com manuals search engine

Rocking Your Vehicle to Get It Out

First, turn your steering wheel left and right. That will clear the area around your front wheels. If your vehicle has traction control, you should turn your traction control system off. See *Traction Control System (TCS) on page 4-9*. Then shift back and forth between REVERSE (R) and a forward gear, spinning the wheels as little as possible. Release the accelerator pedal while you shift, and press lightly on the accelerator pedal when the transaxle is in gear. By slowly spinning your wheels in the forward and reverse directions, you will cause a rocking motion that may free your vehicle. If that does not get you out after a few tries, you may need to be towed out. If you do need to be towed out, see *Towing Your Vehicle on page 4-36*.

Loading Your Vehicle

It is very important to know how much weight your vehicle can carry. Two labels on your vehicle show how much weight it may properly carry, the Tire and Loading Information label and the Vehicle Certification label.

⚠ CAUTION:

Do not load your vehicle any heavier than the Gross Vehicle Weight Rating (GVWR), or either the maximum front or rear Gross Axle Weight Rating (GAWR). If you do, parts on your vehicle can break, and it can change the way your vehicle handles. These could cause you to lose control and crash. Also, overloading can shorten the life of your vehicle.

Downloaded from www.Manualslib.com manuals search engine

Tire and Loading Information Label

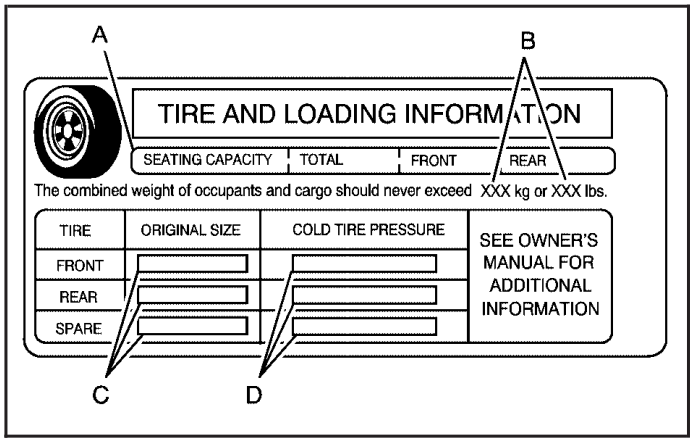

Label Example

A vehicle specific Tire and Loading Information label is attached to the vehicle's center pillar (B-pillar). With the driver's door open, you will find the label attached below the door lock post (striker).

The tire and loading information label lists the number of occupant seating positions (A), and the maximum vehicle capacity weight (B) in kilograms and pounds. The vehicle capacity weight includes the weight of all occupants, cargo, and all nonfactory-installed options.

The Tire and Loading Information label also lists the tire size of the original equipment tires (C) and the recommended cold tire inflation pressures (D). For more information on tires and inflation, see *Tires on page 5-46* and *Inflation - Tire Pressure on page 5-52*.

There is also important loading information on the Certification/Tire label. It tells you the Gross Vehicle Weight Rating (GVWR) and the Gross Axle Weight Rating (GAWR) for the front and rear axles. See "Certification/Tire Label" later in this section.

Steps for Determining Correct Load Limit

1. Locate the statement "The combined weight of occupants and cargo should never exceed XXX kg or XXX lbs" on your vehicle's placard.
2. Determine the combined weight of the driver and passengers that will be riding in your vehicle.

Downloaded from www.Manualslib.com manuals search engine

3. Subtract the combined weight of the driver and passengers from XXX kg or XXX lbs.
4. The resulting figure equals the available amount of cargo and luggage load capacity. For example, if the “XXX” amount equals 1400 lbs and there will be five 150 lb passengers in your vehicle, the amount of available cargo and luggage load capacity is 650 lbs (1400 – 750 (5 x 150) = 650 lbs).
5. Determine the combined weight of luggage and cargo being loaded on the vehicle. That weight may not safely exceed the available cargo and luggage load capacity calculated in Step 4.
6. If your vehicle will be towing a trailer, the load from your trailer will be transferred to your vehicle. Consult this manual to determine how this reduces the available cargo and luggage load capacity for your vehicle.

If your vehicle can tow a trailer, see *Towing a Trailer on page 4-38* for important information on towing a trailer, towing safety rules, and trailering tips.

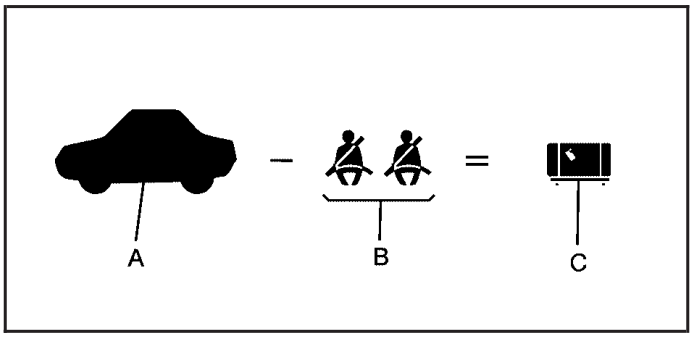

Example 1

Item	Description	Total
A	Maximum Vehicle Capacity Weight for Example 1 =	1,000 lbs (453 kg)
B	Subtract Occupant Weight 150 lbs (68 kg) × 2 =	300 lbs (136 kg)
C	Available Occupant and Cargo Weight =	700 lbs (317 kg)

Downloaded from www.Manualslib.com manuals search engine

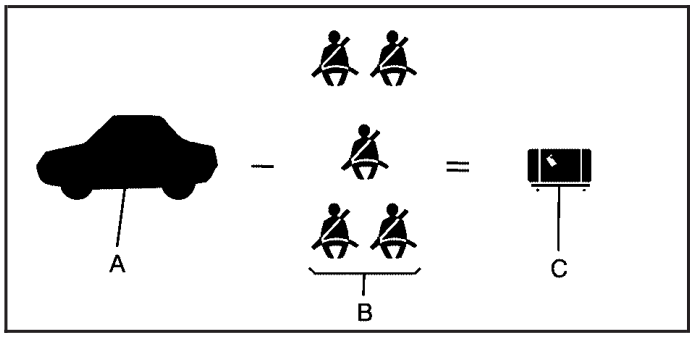

Example 2

Item	Description	Total
A	Maximum Vehicle Capacity Weight for Example 2 =	1,000 lbs (453 kg)
B	Subtract Occupant Weight 150 lbs (68 kg) × 5 =	750 lbs (340 kg)
C	Available Cargo Weight =	250 lbs (113 kg)

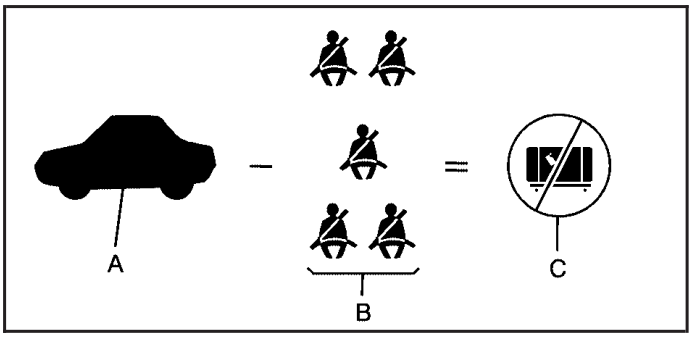

Example 3

Item	Description	Total
A	Maximum Vehicle Capacity Weight for Example 3 =	1,000 lbs (453 kg)
B	Subtract Occupant Weight 200 lbs (91 kg) × 5 =	1,000 lbs (453 kg)
C	Available Cargo Weight =	0 lbs (0 kg)

Refer to your vehicle's tire and loading information label for specific information about your vehicle's maximum vehicle capacity weight and seating positions. The combined weight of the driver, passengers, and cargo should never exceed your vehicle's maximum vehicle capacity weight.

Downloaded from www.Manualslib.com manuals search engine

Certification Label

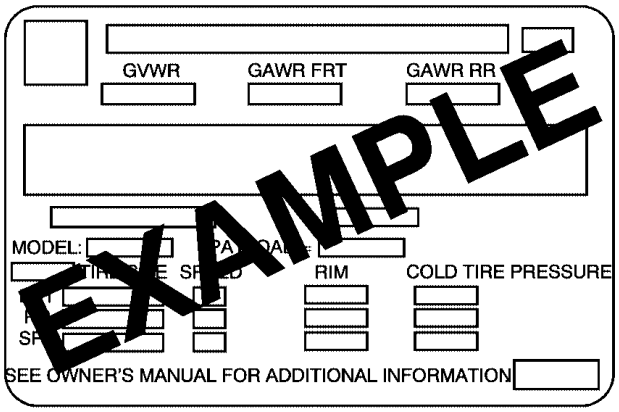

A vehicle specific Certification/Tire label is found on the rear edge of the driver's door.

The label shows the size of your original tires and the inflation pressures needed to obtain the gross weight capacity of your vehicle. This is called the Gross Vehicle Weight Rating (GVWR). The GVWR includes the weight of the vehicle, all occupants, fuel, and cargo.

The Certification/Tire label also tells you the maximum weights for the front and rear axles, called the Gross Axle Weight Rating (GAWR). To find out the actual loads on your front and rear axles, you need to go to a weigh station and weigh your vehicle. Your dealer can help you with this. Be sure to spread out your load equally on both sides of the centerline.

Never exceed the GVWR for your vehicle or the GAWR for either the front or rear axle.

⚠ CAUTION:

Do not load your vehicle any heavier than the Gross Vehicle Weight Rating (GVWR), or either the maximum front or rear Gross Axle Weight Rating (GAWR). If you do, parts on your vehicle can break, and it can change the way your vehicle handles. These could cause you to lose control and crash. Also, overloading can shorten the life of your vehicle.

Notice: **Overloading your vehicle may cause damage. Repairs would not be covered by your warranty. Do not overload your vehicle.**

Downloaded from www.Manualslib.com manuals search engine

If you put things inside your vehicle — like suitcases, tools, packages, or anything else — they will go as fast as the vehicle goes. If you have to stop or turn quickly, or if there is a crash, they will keep going.

⚠ CAUTION:

Things you put inside your vehicle can strike and injure people in a sudden stop or turn, or in a crash.

- **Put things in the cargo area of your vehicle. Try to spread the weight evenly.**
- **Never stack heavier things, like suitcases, inside the vehicle so that some of them are above the tops of the seats.**
- **Do not leave an unsecured child restraint in your vehicle.**
- **When you carry something inside the vehicle, secure it whenever you can.**
- **Do not leave a seat folded down unless you need to.**

Towing

Towing Your Vehicle

Consult your dealer or a professional towing service if you need to have your disabled vehicle towed. See *Roadside Assistance Program on page 7-6*.

If you want to tow your vehicle behind another vehicle for recreational purposes (such as behind a motorhome), see “Recreational Vehicle Towing” following.

Recreational Vehicle Towing

Recreational vehicle towing means towing your vehicle behind another vehicle – such as behind a motorhome. The two most common types of recreational vehicle towing are known as “dinghy towing” (towing your vehicle with all four wheels on the ground) and “dolly towing” (towing your vehicle with two wheels on the ground and two wheels up on a device known as a “dolly”).

With the proper preparation and equipment, many vehicles can be towed in these ways. See “Dinghy Towing” and “Dolly Towing,” following.

Downloaded from www.Manualslib.com manuals search engine

Here are some important things to consider before you do recreational vehicle towing:

- What's the towing capacity of the towing vehicle? Be sure you read the tow vehicle manufacturer's recommendations.
- How far will you tow? Some vehicles have restrictions on how far and how long they can tow.
- Do you have the proper towing equipment? See your dealer or trailering professional for additional advice and equipment recommendations.
- Is your vehicle ready to be towed? Just as you would prepare your vehicle for a long trip, you'll want to make sure your vehicle is prepared to be towed. See *Before Leaving on a Long Trip on page 4-22*.

Dinghy Towing

Notice: **Towing an all-wheel-drive vehicle with all four wheels on the ground, or even with only two of its wheels on the ground, will damage drivetrain components. Do not tow an all-wheel-drive vehicle if any of its wheels will be on the ground.**

Your vehicle was not designed to be towed with all of its wheels on the ground. If you have a two-wheel-drive vehicle, it can be towed with two of its wheels on the ground. See "Dolly Towing" following.

If you have an all-wheel-drive vehicle, it cannot be towed with any of its wheels on the ground. It can be towed with the car carrier equipment.

Dolly Towing

If you have a two-wheel-drive vehicle, it can be towed with two of its wheels on the ground. To dolly tow your vehicle, do the following:

1. Put the front wheels on a dolly.
2. Put the vehicle in PARK (P).
3. Set the parking brake and then remove the key.
4. Clamp the steering wheel in a straight-ahead position with a clamping device designed for towing.
5. Release the parking brake.

Notice: **Towing an all-wheel-drive vehicle with all four wheels on the ground, or even with only two of its wheels on the ground, will damage drivetrain components. Do not tow an all-wheel-drive vehicle if any of its wheels will be on the ground.**

If you have an all-wheel-drive vehicle, it cannot be towed with any of its wheels on the ground. It can be towed with car carrier equipment.

Downloaded from www.Manualslib.com manuals search engine

Towing a Trailer

⚠ CAUTION:

If you do not use the correct equipment and drive properly, you can lose control when you pull a trailer. For example, if the trailer is too heavy, the brakes may not work well — or even at all. You and your passengers could be seriously injured. Pull a trailer only if you have followed all the steps in this section. Ask your dealer for advice and information about towing a trailer with your vehicle.

Notice: **Pulling a trailer improperly can damage your vehicle and result in costly repairs that would not be covered by your warranty. Always follow the instructions in this section and check with your dealer for more information about towing a trailer with your vehicle.**

To identify the trailering capacity of your vehicle, you should read the information in “Weight of the Trailer” that appears later in this section. Trailering is different than just driving your vehicle by itself. Trailering means changes in handling, acceleration, braking, durability, and fuel economy. Successful, safe trailering takes correct equipment, and it has to be used properly.

That is the reason for this section. In it are many time-tested, important trailering tips and safety rules. Many of these are important for your safety and that of your passengers. So please read this section carefully before you pull a trailer.

If You Do Decide To Pull A Trailer

If you do, here are some important points:

- There are many different laws, including speed limit restrictions, having to do with trailering. Make sure your rig will be legal, not only where you live but also where you will be driving. A good source for this information can be state or provincial police.
- Consider using a sway control. See “Hitches” later in this section.

Downloaded from www.Manualslib.com manuals search engine

- Do not tow a trailer at all during the first 500 miles (800 km) your new vehicle is driven. Your engine, axle or other parts could be damaged.
- During the first 500 miles (800 km) that you tow a trailer, do not drive over 50 mph (80 km/h) and do not make starts at full throttle. This helps your engine and other parts of your vehicle wear in at the heavier loads.

Three important considerations have to do with weight:

- Weight of the trailer
- Weight of the trailer tongue
- Weight on your vehicle's tires

Weight of the Trailer

How heavy can a trailer safely be?

If you have the trailer towing package, your vehicle can tow up to 2,900 lbs. (1 300 kg) with up to five occupants or up to 3,500 lbs. (1 575 kg) with up to two occupants. But even that can be too heavy.

It depends on how you plan to use your rig. For example, speed, altitude, road grades, outside temperature and how much your vehicle is used to pull a trailer are all important. It can also depend on any special equipment that you have on your vehicle, and the amount of tongue weight the vehicle can carry. See "Weight of the Trailer Tongue" later in this section for more information.

Maximum trailer weight is calculated assuming only the driver is in the tow vehicle and it has all the required trailering equipment. The weight of additional optional equipment, passengers and cargo in the tow vehicle must be subtracted from the maximum trailer weight.

You can ask your dealer for our trailering information or advice, or you can write us at our Customer Assistance Offices. See *Customer Assistance Offices on page 7-4* for more information.

In Canada, write to:

General Motors of Canada Limited
Customer Communication Centre, 163-005
1908 Colonel Sam Drive
Oshawa, Ontario L1H 8P7

Downloaded from www.Manualslib.com manuals search engine

Weight of the Trailer Tongue

The tongue load (A) of any trailer is an important weight to measure because it affects the total or gross weight of your vehicle. The Gross Vehicle Weight (GVW) includes the curb weight of the vehicle, any cargo you may carry in it, and the people who will be riding in the vehicle. If you have a lot of options, passengers, or cargo in the vehicle, it will reduce the tongue weight your vehicle can carry, which will also reduce the trailer weight your vehicle can tow. And if you will tow a trailer, you must add the tongue load to the GVW because your vehicle will be carrying that weight, too. See *Loading Your Vehicle on page 4-31* for more information about your vehicle's maximum load capacity.

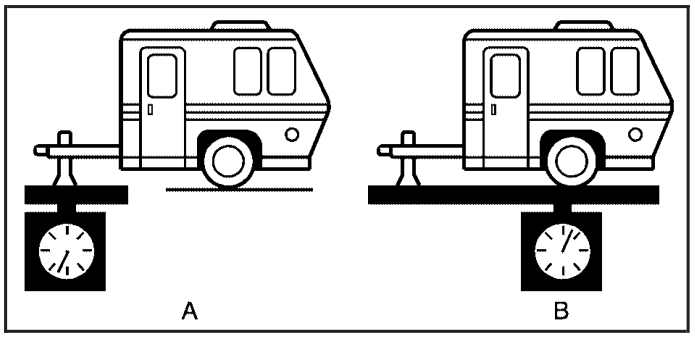

If you are using a weight-carrying or a weight-distributing hitch, the trailer tongue weight (A) should be 10 percent to 15 percent of the total loaded trailer weight (B). Do not exceed the maximum allowable tongue weight for your vehicle.

After you have loaded your trailer, weigh the trailer and then the tongue, separately, to see if the weights are proper. If they are not, you may be able to get them right simply by moving some items around in the trailer.

Downloaded from www.Manualslib.com manuals search engine

Total Weight on Your Vehicle's Tires

Be sure your vehicle's tires are inflated to the upper limit for cold tires. You will find these numbers on the Certification/Tire Label at the rear edge of the driver's door, or see *Loading Your Vehicle on page 4-31*. Then be sure you do not go over the GVW limit for your vehicle, including the weight of the trailer tongue.

Hitches

It is important to have the correct hitch equipment. Crosswinds, large trucks going by and rough roads are a few reasons why you will need the right hitch. Here are some rules to follow:

- If you will be pulling a trailer that, when loaded, will weigh more than 2,000 lbs (900 kg), be sure to use a properly mounted, weight-carrying hitch and sway control of the proper size. This equipment is very important for proper vehicle loading and good handling when you're driving.
- Will you have to make any holes in the body of your vehicle when you install a trailer hitch?

  If you do, remember to seal the holes when you remove the hitch. If you do not seal them, deadly carbon monoxide (CO) from your exhaust can get into your vehicle. See *Engine Exhaust on page 2-25*. Dirt and water can, too.

Safety Chains

You should always attach chains between your vehicle and your trailer. Cross the safety chains under the tongue of the trailer to help prevent the tongue from contacting the road if it becomes separated from the hitch. Instructions about safety chains may be provided by the hitch manufacturer or by the trailer manufacturer. Follow the manufacturer's recommendation for attaching safety chains and do not attach them to the bumper. Always leave just enough slack so you can turn with your rig. Never allow safety chains to drag on the ground.

Trailer Brakes

If your trailer weighs more than 1,000 lbs (450 kg) loaded, then it needs its own brakes – and they must be adequate. Be sure to read and follow the instructions for the trailer brakes so you will be able to install, adjust and maintain them properly.

Because your vehicle may have anti-lock brakes, do not try to tap into your vehicle's brake system. If you do, both brake systems will not work well, or at all.

Downloaded from www.Manualslib.com manuals search engine

Driving with a Trailer

⚠ CAUTION:

If you have a rear-most window open and you pull a trailer with your vehicle, carbon monoxide (CO) could come into your vehicle. You cannot see or smell CO. It can cause unconsciousness or death. See *Engine Exhaust on page 2-25*. To maximize your safety when towing a trailer:

- **Have your exhaust system inspected for leaks, and make necessary repairs before starting on your trip.**
- **Keep the rear-most windows closed.**
- **If exhaust does come into your vehicle through a window in the rear or another opening, drive with your front, main heating or cooling system on and with the fan on any speed. This will bring fresh, outside air into your vehicle. Do not use the climate control setting for maximum air because it only recirculates the air inside your vehicle. See *Climate Control System on page 3-19*.**

Towing a trailer requires a certain amount of experience. Before setting out for the open road, you will want to get to know your rig. Acquaint yourself with the feel of handling and braking with the added weight of the trailer. And always keep in mind that the vehicle you are driving is now a good deal longer and not nearly as responsive as your vehicle is by itself.

Before you start, check all trailer hitch parts and attachments, safety chains, electrical connector, lamps, tires and mirror adjustment. If the trailer has electric brakes, start your vehicle and trailer moving and then apply the trailer brake controller by hand to be sure the brakes are working. This lets you check your electrical connection at the same time.

During your trip, check occasionally to be sure that the load is secure, and that the lamps and any trailer brakes are still working.

Following Distance

Stay at least twice as far behind the vehicle ahead as you would when driving your vehicle without a trailer. This can help you avoid situations that require heavy braking and sudden turns.

Downloaded from www.Manualslib.com manuals search engine

Passing

You will need more passing distance up ahead when you are towing a trailer. And, because you are a good deal longer, you will need to go much farther beyond the passed vehicle before you can return to your lane.

Backing Up

Hold the bottom of the steering wheel with one hand. Then, to move the trailer to the left, just move that hand to the left. To move the trailer to the right, move your hand to the right. Always back up slowly and, if possible, have someone guide you.

Making Turns

Notice: **Making very sharp turns while trailering could cause the trailer to come in contact with the vehicle. Your vehicle could be damaged. Avoid making very sharp turns while trailering.**

When you are turning with a trailer, make wider turns than normal. Do this so your trailer will not strike soft shoulders, curbs, road signs, trees or other objects. Avoid jerky or sudden maneuvers. Signal well in advance.

Turn Signals When Towing a Trailer

When you tow a trailer, your vehicle has to have extra wiring.

The arrows on your instrument panel will flash whenever you signal a turn or lane change. Properly hooked up, the trailer lamps will also flash, telling other drivers you are about to turn, change lanes or stop.

When towing a trailer, the arrows on your instrument panel will flash for turns even if the bulbs on the trailer are burned out. Thus, you may think drivers behind you are seeing your signal when they are not. It's important to check occasionally to be sure the trailer bulbs are still working.

Driving On Grades

Reduce speed and shift to a lower gear before you start down a long or steep downgrade. If you do not shift down, you might have to use your brakes so much that they would get hot and no longer work well.

If you are towing a trailer that weighs more than 1,000 lbs (450 kg), drive in L4 instead of AUTOMATIC OVERDRIVE (D) or, as you need to, a lower gear. This will minimize heat build-up and extend the life of your transaxle.

Downloaded from www.Manualslib.com manuals search engine

Parking on Hills

⚠ CAUTION:

You really should not park your vehicle, with a trailer attached, on a hill. If something goes wrong, your rig could start to move. People can be injured, and both your vehicle and the trailer can be damaged.

But if you ever have to park your rig on a hill, do the following:

1. Apply your regular brakes, but do not shift into PARK (P) yet.
2. Have someone place chocks under the trailer wheels.
3. When the wheel chocks are in place, release the regular brakes until the chocks absorb the load.
4. Reapply the regular brakes. Then apply your parking brake, and then shift to PARK (P).
5. Release the regular brakes.

When You Are Ready to Leave After Parking on a Hill

1. Apply your regular brakes and hold the pedal down while you do the following:
   - Start your engine.
   - Shift into a gear.
   - Release the parking brake.
2. Let up on the brake pedal.
3. Drive slowly until the trailer is clear of the chocks.
4. Stop and have someone pick up and store the chocks.

Maintenance When Trailer Towing

Your vehicle will need service more often when you are pulling a trailer. See the Maintenance Schedule for more on this. Things that are especially important in trailer operation are automatic transaxle fluid, engine oil, belts, cooling system and brake system. Each of these is covered in this manual, and the Index will help you find them quickly. If you are trailering, it is a good idea to review these sections before you start your trip.

Check periodically to see that all hitch nuts and bolts are tight.

Downloaded from www.Manualslib.com manuals search engine

Section 5 Service and Appearance Care

Service 5-3
Accessories and Modifications 5-3
California Proposition 65 Warning 5-4
Doing Your Own Service Work 5-4
Adding Equipment to the Outside of Your Vehicle 5-5

Fuel 5-5
Gasoline Octane 5-5
Gasoline Specifications 5-5
California Fuel 5-6
Additives 5-6
Fuels in Foreign Countries 5-7
Filling the Tank 5-8
Filling a Portable Fuel Container 5-10

Checking Things Under the Hood 5-10
Hood Release 5-11
Engine Compartment Overview 5-12
Engine Oil 5-13
Engine Oil Life System 5-16
Engine Air Cleaner/Filter 5-18
Automatic Transaxle Fluid 5-21
Engine Coolant 5-21
Engine Overheating 5-23
Overheated Engine Protection Operating Mode 5-25
Cooling System 5-26
Windshield Washer Fluid 5-31
Brakes 5-32
Battery 5-34
Jump Starting 5-34

All-Wheel Drive 5-40

Bulb Replacement 5-42
Halogen Bulbs 5-42
Headlamps, Front Turn Signal, Sidemarker, and Parking Lamps 5-42
Taillamps, Turn Signal, Stoplamps and Back-up Lamps 5-43
Replacement Bulbs 5-44

Windshield Wiper Blade Replacement 5-45

Tires 5-46
Tire Sidewall Labeling 5-47
Tire Terminology and Definitions 5-50
Inflation - Tire Pressure 5-52
Tire Inspection and Rotation 5-54
When It Is Time for New Tires 5-55
Buying New Tires 5-56
Different Size Tires and Wheels 5-57
Uniform Tire Quality Grading 5-58
Wheel Alignment and Tire Balance 5-59
Wheel Replacement 5-60
Tire Chains 5-61

Downloaded from www.Manualslib.com manuals search engine

Section 5 Service and Appearance Care

If a Tire Goes Flat 5-62
Changing a Flat Tire 5-62
Removing the Spare Tire and Tools 5-64
Removing the Flat Tire and Installing the Spare Tire 5-65
Storing a Flat or Spare Tire and Tools 5-72
Compact Spare Tire 5-73

Appearance Care 5-74
Cleaning the Inside of Your Vehicle 5-74
Fabric/Carpet 5-75
Leather 5-76
Instrument Panel, Vinyl, and Other Plastic Surfaces 5-76
Care of Safety Belts 5-77
Weatherstrips 5-77
Washing Your Vehicle 5-77
Cleaning Exterior Lamps/Lenses 5-78
Finish Care 5-78
Windshield and Wiper Blades 5-78
Aluminum Wheels 5-79
Tires 5-80
Sheet Metal Damage 5-80
Finish Damage 5-80
Underbody Maintenance 5-80
Chemical Paint Spotting 5-80
Vehicle Care/Appearance Materials 5-81

Vehicle Identification 5-82
Vehicle Identification Number (VIN) 5-82
Service Parts Identification Label 5-82

Electrical System 5-83
Add-On Electrical Equipment 5-83
Windshield Wiper Fuses 5-83
Power Windows and Other Power Options 5-83
Fuses and Circuit Breakers 5-83
Instrument Panel Fuse Block 5-84
Engine Compartment Fuse Block 5-85

Capacities and Specifications 5-88

Downloaded from www.Manualslib.com manuals search engine

Service

Your dealer knows your vehicle best and wants you to be happy with it. We hope you will go to your dealer for all your service needs. You will get genuine GM parts and GM-trained and supported service people.

We hope you will want to keep your GM vehicle all GM. Genuine GM parts have one of these marks:

Accessories and Modifications

When you add non-GM accessories to your vehicle they can affect your vehicle's performance and safety, including such things as, braking, stability, ride and handling, emissions systems, aerodynamics, durability, and electronic systems like antilock brakes, traction control and stability control. Some of these accessories may even cause malfunction or damage not covered by warranty.

GM Accessories are designed to complement and function with other systems on your vehicle. Your GM dealer can accessorize your vehicle using genuine GM Accessories. When you go to your GM dealer and ask for GM Accessories, you will know that GM-trained and supported service technicians will perform the work using genuine GM Accessories.

Downloaded from www.Manualslib.com manuals search engine

California Proposition 65 Warning

Most motor vehicles, including this one, contain and/or emit chemicals known to the State of California to cause cancer and birth defects or other reproductive harm. Engine exhaust, many parts and systems (including some inside the vehicle), many fluids, and some component wear by-products contain and/or emit these chemicals.

Doing Your Own Service Work

⚠ CAUTION:

You can be injured and your vehicle could be damaged if you try to do service work on a vehicle without knowing enough about it.

- **Be sure you have sufficient knowledge, experience, the proper replacement parts, and tools before you attempt any vehicle maintenance task.**
- **Be sure to use the proper nuts, bolts, and other fasteners. English and metric fasteners can be easily confused. If you use the wrong fasteners, parts can later break or fall off. You could be hurt.**

If you want to do some of your own service work, you will want to use the proper service manual. It tells you much more about how to service your vehicle than this manual can. To order the proper service manual, see *Service Publications Ordering Information on page 7-15*.

Downloaded from www.Manualslib.com manuals search engine

Your vehicle has an airbag system. Before attempting to do your own service work, see *Servicing Your Airbag-Equipped Vehicle on page 1-61*.

You should keep a record with all parts receipts and list the mileage and the date of any service work you perform. See *Maintenance Record on page 6-14*.

Adding Equipment to the Outside of Your Vehicle

Things you might add to the outside of your vehicle can affect the airflow around it. This may cause wind noise and affect windshield washer performance. Check with your dealer before adding equipment to the outside of your vehicle.

Fuel

Use of the recommended fuel is an important part of the proper maintenance of your vehicle.

Gasoline Octane

Use regular unleaded gasoline with a posted octane rating of 87 or higher. If the octane rating is less than 87, you may notice an audible knocking noise when you drive, commonly referred to as spark knock. If this occurs, use a gasoline rated at 87 octane or higher as soon as possible. If you are using gasoline rated at 87 octane or higher and you hear heavy knocking, your engine needs service.

Gasoline Specifications

At a minimum, gasoline should meet ASTM specification D 4814 in the United States or CAN/CGSB-3.5 in Canada. Some gasolines may contain an octane-enhancing additive called methylcyclopentadienyl manganese tricarbonyl (MMT). General Motors recommends against the use of gasolines containing MMT. See *Additives on page 5-6* for additional information.

Downloaded from www.Manualslib.com manuals search engine

California Fuel

If your vehicle is certified to meet California Emissions Standards, it is designed to operate on fuels that meet California specifications. See the underhood emission control label. If this fuel is not available in states adopting California emissions standards, your vehicle will operate satisfactorily on fuels meeting federal specifications, but emission control system performance may be affected. The malfunction indicator lamp may turn on and your vehicle may fail a smog-check test. See *Malfunction Indicator Lamp on page 3-32*. If this occurs, return to your authorized GM dealer for diagnosis. If it is determined that the condition is caused by the type of fuel used, repairs may not be covered by your warranty.

Additives

To provide cleaner air, all gasolines in the United States are now required to contain additives that will help prevent engine and fuel system deposits from forming, allowing your emission control system to work properly. In most cases, you should not have to add anything to your fuel. However, some gasolines contain only the minimum amount of additive required to meet U.S. Environmental Protection Agency regulations. To help keep fuel injectors and intake valves clean, or if your vehicle experiences problems due to dirty injectors or valves, look for gasoline that is advertised as TOP TIER Detergent Gasoline. Also, your GM dealer has additives that will help correct and prevent most deposit-related problems.

Gasolines containing oxygenates, such as ethers and ethanol, and reformulated gasolines may be available in your area. General Motors recommends that you use these gasolines if they comply with the specifications described earlier. However, E85 (85% ethanol) and other fuels containing more than 10% ethanol must not be used in vehicles that were not designed for those fuels.

Downloaded from www.Manualslib.com manuals search engine

Notice: **Your vehicle was not designed for fuel that contains methanol. Do not use fuel containing methanol. It can corrode metal parts in your fuel system and also damage the plastic and rubber parts. That damage would not be covered under your warranty.**

Some gasolines that are not reformulated for low emissions may contain an octane-enhancing additive called methylcyclopentadienyl manganese tricarbonyl (MMT); ask the attendant where you buy gasoline whether the fuel contains MMT. General Motors recommends against the use of such gasolines. Fuels containing MMT can reduce the life of spark plugs and the performance of the emission control system may be affected. The malfunction indicator lamp may turn on. If this occurs, return to your authorized GM dealer for service.

Fuels in Foreign Countries

If you plan on driving in another country outside the United States or Canada, the proper fuel may be hard to find. Never use leaded gasoline or any other fuel not recommended in the previous text on fuel. Costly repairs caused by use of improper fuel would not be covered by your warranty.

To check the fuel availability, ask an auto club, or contact a major oil company that does business in the country where you will be driving.

Downloaded from www.Manualslib.com manuals search engine

Filling the Tank

⚠ CAUTION:

Fuel vapor burns violently and a fuel fire can cause bad injuries. To help avoid injuries to you and others, read and follow all the instructions on the pump island. Turn off your engine when you are refueling. Do not smoke if you are near fuel or refueling your vehicle. Keep sparks, flames, and smoking materials away from fuel. Do not leave the fuel pump unattended when refueling your vehicle — this is against the law in some places. Keep children away from the fuel pump; never let children pump fuel.

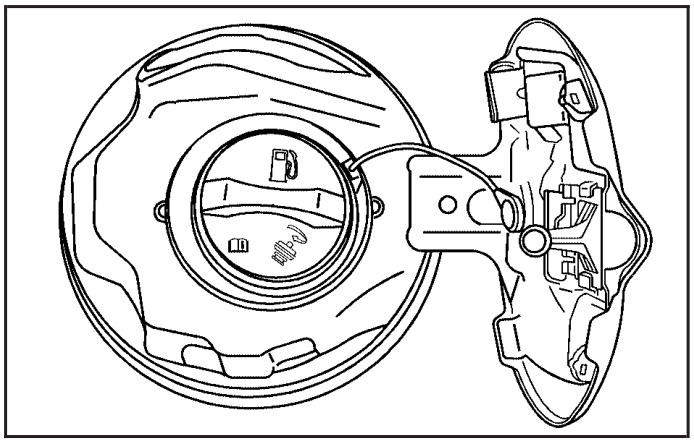

The tethered fuel cap is located behind a hinged fuel door on the passenger's side of the vehicle.

To remove the fuel cap, turn it slowly counterclockwise. The fuel cap has a spring in it; if the cap is released too soon, it will spring back to the right.

Downloaded from www.Manualslib.com manuals search engine

⚠ CAUTION:

If you spill fuel and then something ignites it, you could be badly burned. Fuel can spray out on you if you open the fuel cap too quickly. This spray can happen if your tank is nearly full, and is more likely in hot weather. Open the fuel cap slowly and wait for any hiss noise to stop. Then unscrew the cap all the way.

Be careful not to spill fuel. Do not top off or overfill the tank and wait a few seconds after you have finished pumping before removing the nozzle. Clean fuel from painted surfaces as soon as possible. See *Washing Your Vehicle on page 5-77*.

When replacing the fuel cap, turn it clockwise until it clicks. Make sure the cap is fully installed. The diagnostic system can determine if the fuel cap has been left off or improperly installed. This would allow fuel to evaporate into the atmosphere. See *Malfunction Indicator Lamp on page 3-32*.

⚠ CAUTION:

If a fire starts while you are refueling, do not remove the nozzle. Shut off the flow of fuel by shutting off the pump or by notifying the station attendant. Leave the area immediately.

Notice: **If you need a new fuel cap, be sure to get the right type. Your dealer can get one for you. If you get the wrong type, it may not fit properly. This may cause your malfunction indicator lamp to light and may damage your fuel tank and emissions system. See *Malfunction Indicator Lamp on page 3-32*.**

Downloaded from www.Manualslib.com manuals search engine

Filling a Portable Fuel Container

⚠ CAUTION:

Never fill a portable fuel container while it is in your vehicle. Static electricity discharge from the container can ignite the gasoline vapor. You can be badly burned and your vehicle damaged if this occurs. To help avoid injury to you and others:

- **Dispense gasoline only into approved containers.**
- **Do not fill a container while it is inside a vehicle, in a vehicle's trunk, pickup bed, or on any surface other than the ground.**
- **Bring the fill nozzle in contact with the inside of the fill opening before operating the nozzle. Contact should be maintained until the filling is complete.**
- **Do not smoke while pumping gasoline.**

Checking Things Under the Hood

⚠ CAUTION:

An electric fan under the hood can start up and injure you even when the engine is not running. Keep hands, clothing and tools away from any underhood electric fan.

⚠ CAUTION:

Things that burn can get on hot engine parts and start a fire. These include liquids like fuel, oil, coolant, brake fluid, windshield washer and other fluids, and plastic or rubber. You or others could be burned. Be careful not to drop or spill things that will burn onto a hot engine.

Downloaded from www.Manualslib.com manuals search engine

Hood Release

To open the hood, do the following:

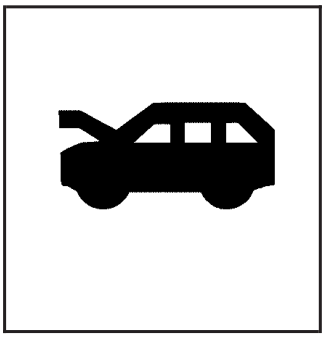

1. Pull the handle with this symbol on it. It is located inside the vehicle, to the left of the steering column.

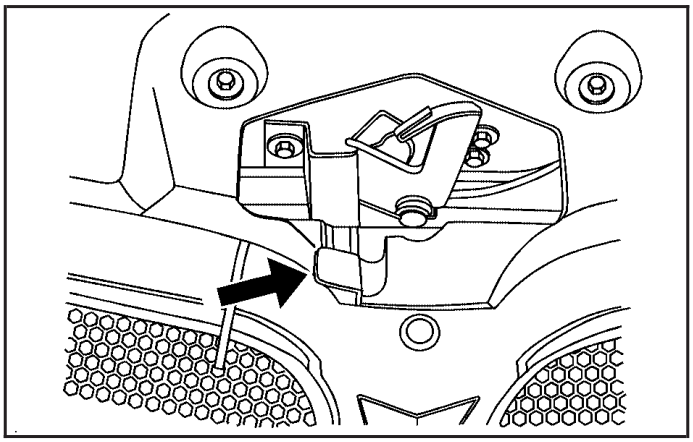

2. Then go to the front of the vehicle and move the secondary hood release lever to the right.
3. Lift the hood.

Before closing the hood, be sure all the filler caps are on properly. Then pull the hood down and close it firmly.

Downloaded from www.Manualslib.com manuals search engine

Engine Compartment Overview

When you open the hood you will see the following:

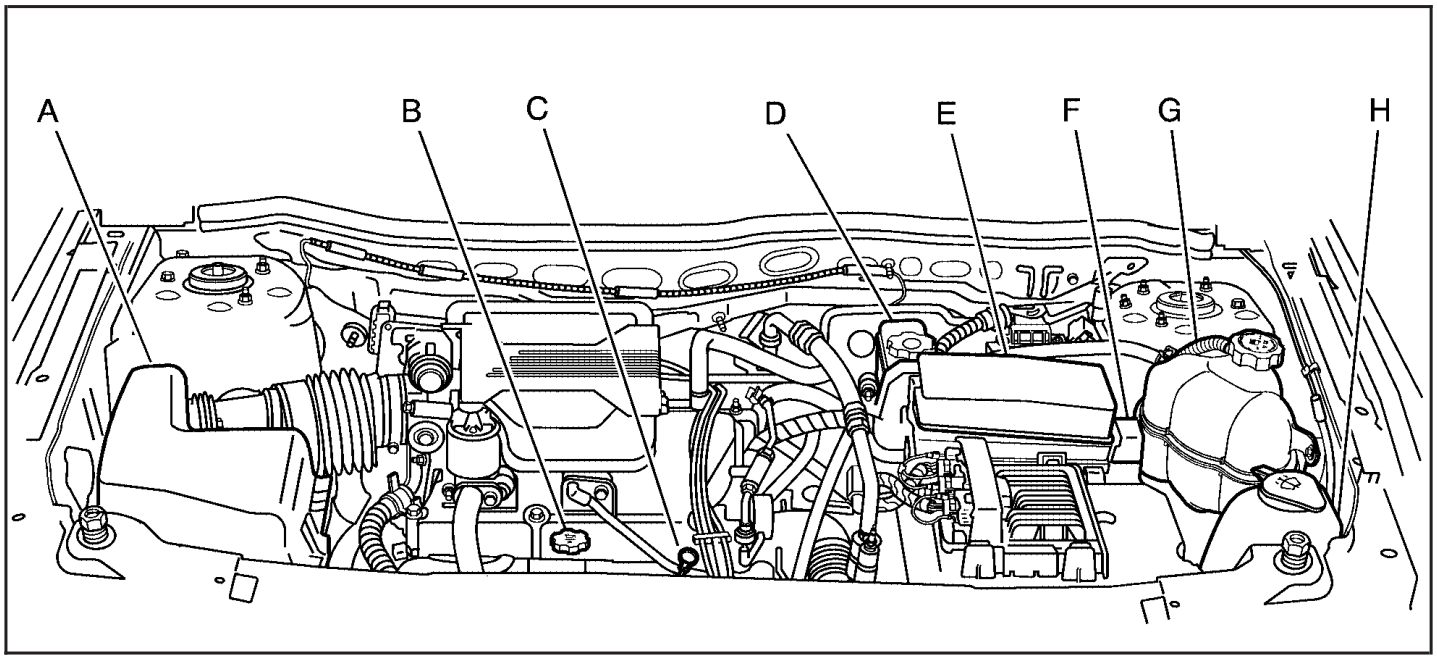

Downloaded from www.Manualslib.com manuals search engine

A. Engine Air Cleaner/Filter. See *Engine Air Cleaner/Filter on page 5-18*.

B. Engine Oil Fill Cap. See “When to Add Engine Oil” under *Engine Oil on page 5-13*.

C. Engine Oil Dipstick. See “Checking Engine Oil” under *Engine Oil on page 5-13*.

D. Brake Fluid Reservoir. See *Brakes on page 5-32*.

E. Engine Compartment Fuse Block. See *Fuses and Circuit Breakers on page 5-83*.

F. Remote Positive (+) Terminal. See *Jump Starting on page 5-34*.

G. Engine Coolant Surge Tank. See *Engine Coolant on page 5-21*.

H. Windshield Washer Fluid Reservoir. See *Windshield Washer Fluid on page 5-31*.

Engine Oil

Checking Engine Oil

It is a good idea to check your engine oil every time you get fuel. In order to get an accurate reading, the oil must be warm and the vehicle must be on level ground.

The engine oil dipstick handle is a yellow loop. See *Engine Compartment Overview on page 5-12* for the location of the engine oil dipstick.

1. Turn off the engine and give the oil several minutes to drain back into the oil pan. If you do not do this, the oil dipstick might not show the actual level.
2. Pull out the dipstick and clean it with a paper towel or cloth, then push it back in all the way. Remove it again, keeping the tip down, and check the level.

Downloaded from www.Manualslib.com manuals search engine

When to Add Engine Oil

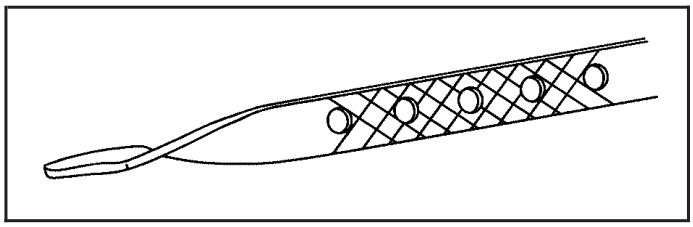

If the oil is below the cross-hatched area at the tip of the dipstick, you will need to add at least one quart/liter of oil. But you must use the right kind. This section explains what kind of oil to use. For engine oil crankcase capacity, see *Capacities and Specifications on page 5-88*.

Notice: **Do not add too much oil. If the engine has so much oil that the oil level gets above the cross-hatched area that shows the proper operating range, the engine could be damaged.**

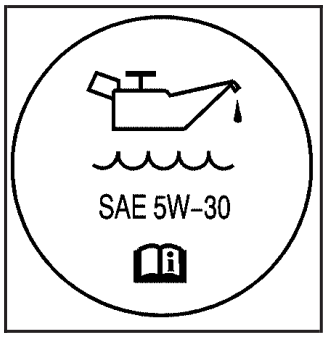

SAE 5W-30 may not appear on all caps.

See *Engine Compartment Overview on page 5-12* for the location of the engine oil fill cap.

Be sure to add enough oil to put the level somewhere in the proper operating range in the cross-hatched area. Push the dipstick all the way back in when you are through.

Downloaded from www.Manualslib.com manuals search engine

What Kind of Engine Oil to Use

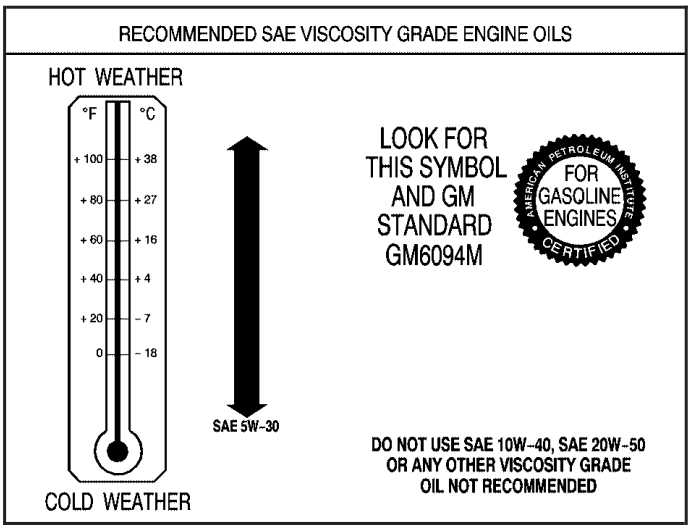

Look for two things:

- GM6094M

  Your vehicle's engine requires oil meeting GM Standard GM6094M. You should look for and use only an oil that meets GM Standard GM6094M.

- SAE 5W-30

  As shown in the viscosity chart, SAE 5W-30 is best for your vehicle.

  These numbers on an oil container show its viscosity, or thickness. Do not use other viscosity oils such as SAE 20W-50.

Oils meeting these requirements should also have the starburst symbol on the container. This symbol indicates that the oil has been certified by the American Petroleum Institute (API).

You should look for this information on the oil container, and use *only* those oils that are identified as meeting GM Standard GM6094M and have the starburst symbol on the front of the oil container.

Notice: **Use only engine oil identified as meeting GM Standard GM6094M and showing the American Petroleum Institute Certified For Gasoline Engines starburst symbol. Failure to use the recommended oil can result in engine damage not covered by your warranty.**

GM Goodwrench® oil meets all the requirements for your vehicle.

Downloaded from www.Manualslib.com manuals search engine

If you are in an area of extreme cold, where the temperature falls below –20°F (–29°C), it is recommended that you use either an SAE 5W-30 synthetic oil or an SAE 0W-30 oil. Both will provide easier cold starting and better protection for your engine at extremely low temperatures.

Engine Oil Additives

Do not add anything to your oil. The recommended oils with the starburst symbol meet GM Standard GM6094M are all you will need for good performance and engine protection.

Engine Oil Life System

When to Change Engine Oil

Your vehicle has a computer system that lets you know when to change the engine oil and filter. This is based on engine revolutions and engine temperature, and not on mileage. Based on driving conditions, the mileage at which an oil change will be indicated can vary considerably. For the oil life system to work properly, you must reset the system every time the oil is changed.

When the system has calculated that oil life has been diminished, it will indicate that an oil change is necessary. A change engine oil light will come on. Change your oil as soon as possible within the next 600 miles (1 000 km). It is possible that, if you are driving under the best conditions, the oil life system may not indicate that an oil change is necessary for over a year. However, your engine oil and filter must be changed at least once a year and at this time the system must be reset. Your dealer has GM-trained people who will perform this work using genuine GM parts and reset the system. It is also important to check your oil regularly and keep it at the proper level.

If the system is ever reset accidentally, you must change your oil at 3,000 miles (5 000 km) since your last oil change. Remember to reset the oil life system whenever the oil is changed.

Downloaded from www.Manualslib.com manuals search engine

How to Reset the Engine Oil Life System

The Engine Oil Life System calculates when to change your engine oil and filter based on vehicle use. Anytime your oil is changed, reset the system so it can calculate when the next oil change is required. If a situation occurs where you change your oil prior to a change engine oil light being turned on, reset the system.

1. Turn the ignition key to RUN with the engine off.
2. Fully press and release the accelerator pedal three times within five seconds.

   The change engine oil light will flash while the system is resetting.
3. Turn the key to LOCK.

If the change engine oil light comes back on and stays on when you start your vehicle, the engine oil life system has not reset. Repeat the procedure.

What to Do with Used Oil

Used engine oil contains certain elements that may be unhealthy for your skin and could even cause cancer. Do not let used oil stay on your skin for very long. Clean your skin and nails with soap and water, or a good hand cleaner. Wash or properly dispose of clothing or rags containing used engine oil. See the manufacturer's warnings about the use and disposal of oil products.

Used oil can be a threat to the environment. If you change your own oil, be sure to drain all the oil from the filter before disposal. Never dispose of oil by putting it in the trash, pouring it on the ground, into sewers, or into streams or bodies of water. Instead, recycle it by taking it to a place that collects used oil. If you have a problem properly disposing of your used oil, ask your dealer, a service station or a local recycling center for help.

Downloaded from www.Manualslib.com manuals search engine

Engine Air Cleaner/Filter

The engine air cleaner/filter is located in the engine compartment on the passenger's side of the vehicle. See *Engine Compartment Overview on page 5-12* for more information on location.

When to Inspect the Engine Air Cleaner/Filter

Inspect the air cleaner/filter at the Maintenance II intervals and replace it at the first oil change after each 50,000 mile (83 000 km) interval. See *Scheduled Maintenance on page 6-4* for more information.
If you are driving in dusty/dirty conditions, inspect the filter at each engine oil change.

How to Inspect the Engine Air Cleaner/Filter

To inspect the air cleaner/filter remove the filter from the vehicle and lightly shake the filter to release loose dust and dirt. If the filter remains caked with dirt, a new filter is required.

To inspect or replace the engine air cleaner/filter, do the following:

1. Turn off the engine.

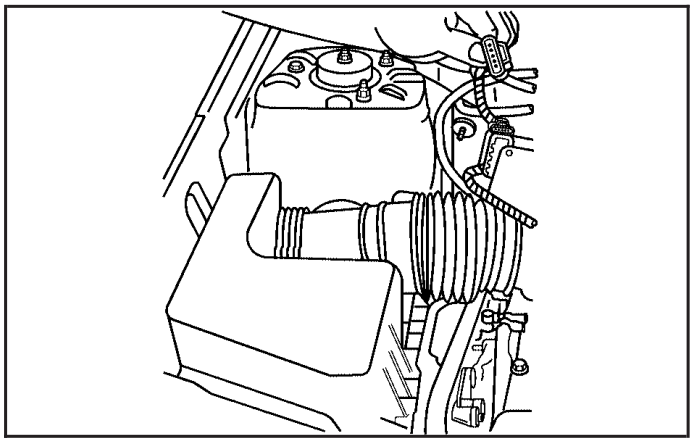

2. Disconnect the air flow sensor electrical connector.

Downloaded from www.Manualslib.com manuals search engine

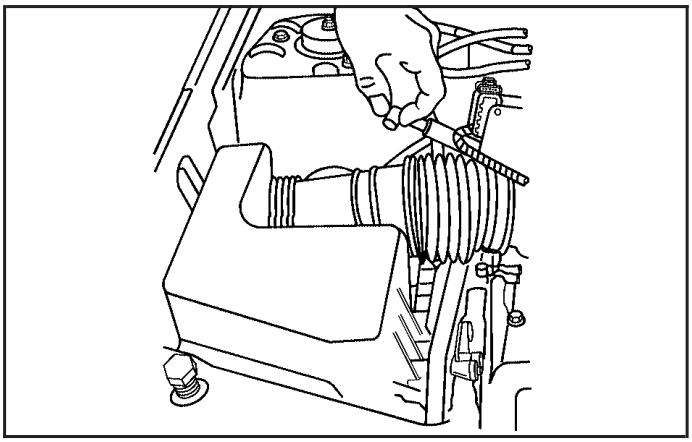

3. Disconnect the crank case ventilation tube.
4. Loosen the screws on the clamps holding the air outlet duct in place. Do not pry the clamps off.

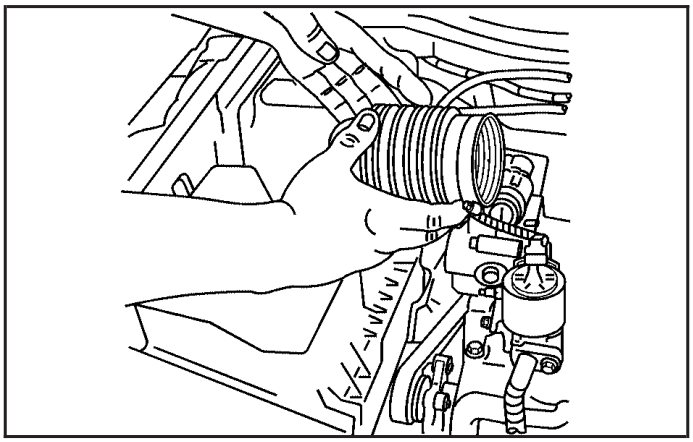

5. Remove the air outlet duct.

Downloaded from www.Manualslib.com manuals search engine

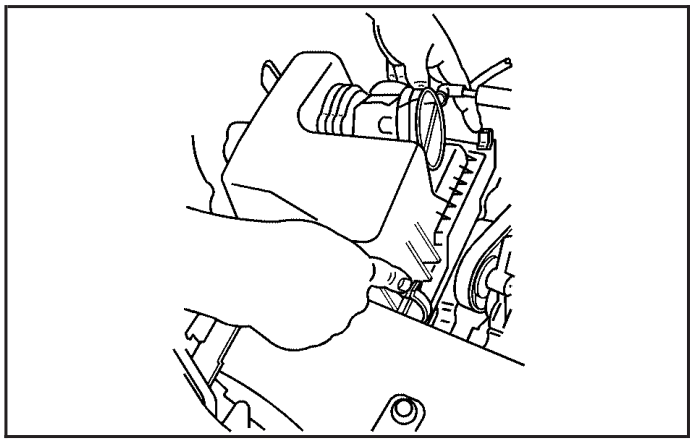

6. Undo the clamps on the filter cover. To remove the cover, pull up on the front and then pull the cover out.
7. Inspect or replace the engine air cleaner/filter.

   Wipe all dust from inside of the housing and inspect the air cleaner and air outlet duct for cracks, cuts, and deterioration. The air outlet duct must be replaced if damaged.
8. Reinstall the filter cover and latch the clamps.
9. Reattach the air outlet duct and tighten the screws on the clamps that hold the duct in place.
10. Reconnect the crank case ventilation tube.
11. Reconnect the air flow sensor electrical connector.

⚠ CAUTION:

Operating the engine with the air cleaner/filter off can cause you or others to be burned. The air cleaner not only cleans the air; it helps to stop flames if the engine backfires. If it is not there and the engine backfires, you could be burned. Do not drive with it off, and be careful working on the engine with the air cleaner/filter off.

Notice: **If the air cleaner/filter is off, a backfire can cause a damaging engine fire. And, dirt can easily get into your engine, which will damage it. Always have the air cleaner/filter in place when you are driving.**

Downloaded from www.Manualslib.com manuals search engine

Automatic Transaxle Fluid

It is not necessary to check the transaxle fluid level. A transaxle fluid leak is the only reason for fluid loss. If a leak occurs, take your vehicle to the dealership service department and have it repaired as soon as possible.

Change the fluid at the intervals listed in *Additional Required Services on page 6-6*, and be sure to use the transaxle fluid listed in *Recommended Fluids and Lubricants on page 6-11*.

Notice: **Use of the incorrect automatic transaxle fluid may damage your vehicle, and the damages may not be covered by your warranty. Always use the automatic transaxle fluid listed in *Recommended Fluids and Lubricants on page 6-11*.**

Engine Coolant

The cooling system in your vehicle is filled with DEX-COOL® engine coolant. This coolant is designed to remain in your vehicle for five years or 100,000 miles (166 000 km), whichever occurs first, if you add only DEX-COOL® extended life coolant.

The following explains your cooling system and how to add coolant when it is low. If you have a problem with engine overheating, see *Engine Overheating on page 5-23*.

A 50/50 mixture of clean, drinkable water and DEX-COOL® coolant will:

- Give freezing protection down to –34°F (–37°C).
- Give boiling protection up to 265°F (129°C).
- Protect against rust and corrosion.
- Help keep the proper engine temperature.
- Let the warning lights and gages work as they should.

Notice: **Using coolant other than DEX-COOL® may cause premature engine, heater core, or radiator corrosion. In addition, the engine coolant may require changing sooner, at the first maintenance service after each 30,000 miles (50 000 km) or 24 months, whichever occurs first. Any repairs would not be covered by your warranty. Always use DEX-COOL® (silicate-free) coolant in your vehicle.**

Downloaded from www.Manualslib.com manuals search engine

What to Use

Use a mixture of one-half clean, drinkable water and one-half DEX-COOL® coolant which will not damage aluminum parts. If you use this coolant mixture, you do not need to add anything else.

⚠ CAUTION:

Adding only plain water to your cooling system can be dangerous. Plain water, or some other liquid such as alcohol, can boil before the proper coolant mixture will. Your vehicle's coolant warning system is set for the proper coolant mixture. With plain water or the wrong mixture, your engine could get too hot but you would not get the overheat warning. Your engine could catch fire and you or others could be burned. Use a 50/50 mixture of clean, drinkable water and DEX-COOL® coolant.

Notice: **If you use an improper coolant mixture, your engine could overheat and be badly damaged. The repair cost would not be covered by your warranty. Too much water in the mixture can freeze and crack the engine, radiator, heater core and other parts.**

If you have to add coolant more than four times a year, have your dealer check your cooling system.

Notice: **If you use extra inhibitors and/or additives in your vehicle's cooling system, you could damage your vehicle. Use only the proper mixture of the engine coolant listed in this manual for the cooling system. See *Recommended Fluids and Lubricants on page 6-11* for more information.**

Checking Coolant

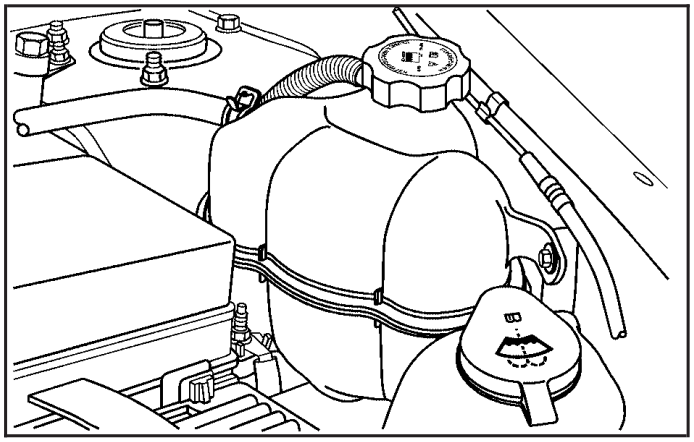

The surge tank is located on the driver's side of the engine compartment. See *Engine Compartment Overview on page 5-12* for more information on location.

Downloaded from www.Manualslib.com manuals search engine

⚠ CAUTION:

Turning the surge tank pressure cap when the engine and radiator are hot can allow steam and scalding liquids to blow out and burn you badly. Never turn the surge tank pressure cap — even a little — when the engine and radiator are hot.

The vehicle must be on a level surface. When your engine is cold, the coolant level should be at the COLD FILL line. When your engine is warm, the level should be at the COLD FILL line or a little higher.

Adding Coolant

If you need more coolant, add the proper DEX-COOL® coolant mixture at the surge tank, but only when the engine is cool.

⚠ CAUTION:

You can be burned if you spill coolant on hot engine parts. Coolant contains ethylene glycol, and it will burn if the engine parts are hot enough. Do not spill coolant on a hot engine.

When replacing the pressure cap, make sure it is hand-tight and fully seated.

Engine Overheating

You will find a coolant temperature gage on your vehicle's instrument panel. See *Engine Coolant Temperature Gage on page 3-31*.

Downloaded from www.Manualslib.com manuals search engine

If Steam Is Coming From Your Engine

⚠ CAUTION:

Steam from an overheated engine can burn you badly, even if you just open the hood. Stay away from the engine if you see or hear steam coming from it. Just turn it off and get everyone away from the vehicle until it cools down. Wait until there is no sign of steam or coolant before you open the hood.

If you keep driving when your engine is overheated, the liquids in it can catch fire. You or others could be badly burned. Stop your engine if it overheats, and get out of the vehicle until the engine is cool.

See *Overheated Engine Protection Operating Mode on page 5-25* for information on driving to a safe place in an emergency.

Notice: **If your engine catches fire because you keep driving with no coolant, your vehicle can be badly damaged. The costly repairs would not be covered by your warranty. See *Overheated Engine Protection Operating Mode on page 5-25* for information on driving to a safe place in an emergency.**

If No Steam Is Coming From Your Engine

An overheat warning can indicate a serious problem.

If you get an engine overheat warning, but see or hear no steam, the problem may not be too serious. Sometimes the engine can get a little too hot when you:

- Climb a long hill on a hot day.
- Stop after high-speed driving.
- Idle for long periods in traffic.
- Tow a trailer.

Downloaded from www.Manualslib.com manuals search engine

If you get the overheat warning with no sign of steam, try this for a minute or so:

1. If the air conditioner is on, turn it off.
2. Turn on your heater to full hot at the highest fan speed and open the windows as necessary.
3. Try to minimize engine load. If you are in a traffic jam, shift to NEUTRAL (N); otherwise, shift to the highest gear while driving.

If you no longer have the overheat warning, you can drive. Just to be safe, drive slower for about ten minutes. If the warning does not come back on, you can drive normally.

If the warning continues and you have not stopped, pull over, stop, and park your vehicle right away.

If there is still no sign of steam, you can idle the engine for three minutes while you are parked. If you still have the warning, turn off the engine and get everyone out of the vehicle until it cools down. Also, see “Overheated Engine Protection Operating Mode” later in this section.

You may decide not to lift the hood but to get service help right away.

Overheated Engine Protection Operating Mode

This emergency operating mode allows your vehicle to be driven to a safe place in an emergency situation. If an overheated engine condition exists, an overheat protection mode which alternates firing groups of cylinders helps prevent engine damage. In this mode, you will notice a significant loss in power and engine performance. The temperature gage will indicate an overheat condition exists. Driving extended miles (km) and/or towing a trailer in the overheat protection mode should be avoided.

Notice: **After driving in the overheated engine protection operating mode, to avoid engine damage, allow the engine to cool before attempting any repair. The engine oil will be severely degraded. Repair the cause of coolant loss, change the oil and reset the oil life system. See *Engine Oil on page 5-13*.**

Downloaded from www.Manualslib.com manuals search engine

Cooling System

When you decide it is safe to lift the hood, here is what you will see:

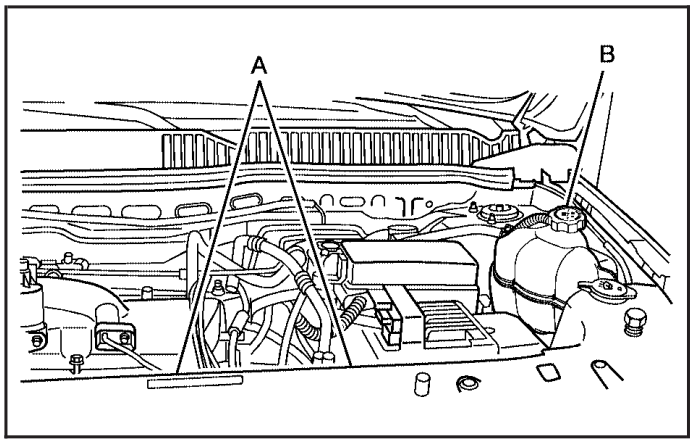

A. Electric Engine Cooling Fans

B. Coolant Surge Tank

⚠ CAUTION:

An electric engine cooling fan under the hood can start up even when the engine is not running and can injure you. Keep hands, clothing and tools away from any underhood electric fan.

If the coolant inside the coolant surge tank is boiling, do not do anything else until it cools down. The vehicle should be parked on a level surface.

The coolant level should be at the COLD FILL line. If it is not, you may have a leak at the radiator hoses, heater hoses, radiator, water pump, or somewhere else in the cooling system.

Downloaded from www.Manualslib.com manuals search engine

⚠ CAUTION:

Heater and radiator hoses, and other engine parts, can be very hot. Do not touch them. If you do, you can be burned.

Do not run the engine if there is a leak. If you run the engine, it could lose all coolant. That could cause an engine fire, and you could be burned. Get any leak fixed before you drive the vehicle.

If there seems to be no leak, with the engine on, check to see if the electric engine cooling fans are running. If the engine is overheating, both fans should be running. If they are not, your vehicle needs service. Turn off the engine.

Notice: **Engine damage from running your engine without coolant is not covered by your warranty. See *Overheated Engine Protection Operating Mode on page 5-25* for information on driving to a safe place in an emergency.**

Notice: **Using coolant other than DEX-COOL® may cause premature engine, heater core or radiator corrosion. In addition, the engine coolant may require changing sooner, at 30,000 miles (50 000 km) or 24 months, whichever occurs first. Any repairs would not be covered by your warranty. Always use DEX-COOL® (silicate-free) coolant in your vehicle.**

Downloaded from www.Manualslib.com manuals search engine

How to Add Coolant to the Coolant Surge Tank

Notice: **This vehicle has a specific coolant fill procedure. Failure to follow this procedure could cause your engine to overheat and be severely damaged.**

If you have not found a problem yet, check to see if coolant is visible in the surge tank. If coolant is visible but the coolant level is not at the COLD FILL line, add a 50/50 mixture of clean, drinkable water and DEX-COOL® coolant at the coolant surge tank, but be sure the cooling system, including the coolant surge tank pressure cap, is cool before you do it.

⚠ CAUTION:

Steam and scalding liquids from a hot cooling system can blow out and burn you badly. They are under pressure, and if you turn the coolant surge tank pressure cap — even a little — they can come out at high speed. Never turn the cap when the cooling system, including the coolant surge tank pressure cap, is hot. Wait for the cooling system and coolant surge tank pressure cap to cool if you ever have to turn the pressure cap.

Downloaded from www.Manualslib.com manuals search engine

⚠ CAUTION:

Adding only plain water to your cooling system can be dangerous. Plain water, or some other liquid such as alcohol, can boil before the proper coolant mixture will. Your vehicle's coolant warning system is set for the proper coolant mixture. With plain water or the wrong mixture, your engine could get too hot but you would not get the overheat warning. Your engine could catch fire and you or others could be burned. Use a 50/50 mixture of clean, drinkable water and DEX-COOL® coolant.

Notice: **In cold weather, water can freeze and crack the engine, radiator, heater core and other parts. Use the recommended coolant and the proper coolant mixture.**

⚠ CAUTION:

You can be burned if you spill coolant on hot engine parts. Coolant contains ethylene glycol and it will burn if the engine parts are hot enough. Do not spill coolant on a hot engine.

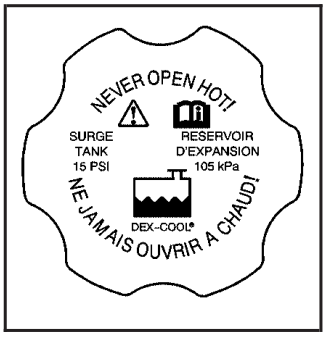

1. You can remove the coolant surge tank pressure cap when the cooling system, including the coolant surge tank pressure cap and upper radiator hose, is no longer hot.

   Turn the pressure cap slowly counterclockwise about one-quarter of a turn. If you hear a hiss, wait for that to stop. This will allow any pressure still left to be vented out the discharge hose.

2. Then keep turning the pressure cap slowly, and remove it.

Downloaded from www.Manualslib.com manuals search engine

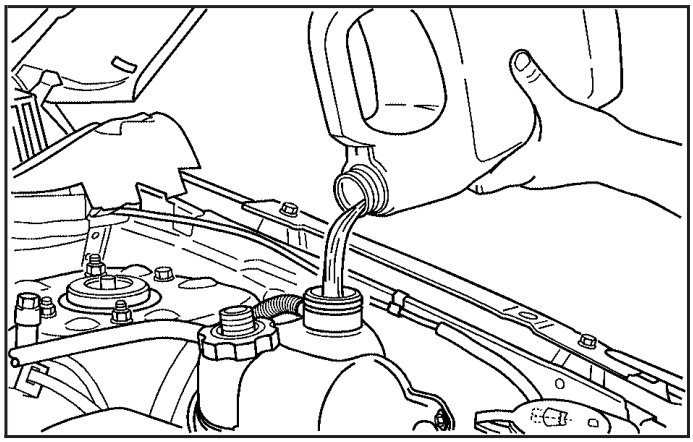

3. Fill the coolant surge tank with the proper DEX-COOL® coolant mixture, to the COLD FILL line.

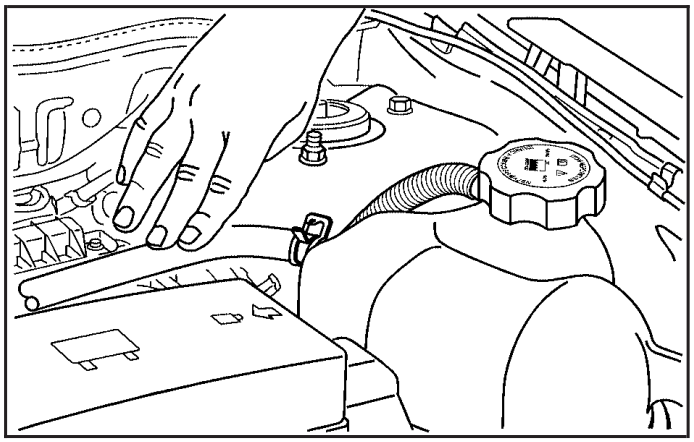

4. With the coolant surge tank pressure cap off, start the engine and let it run until you can feel the upper radiator hose getting hot. Watch out for the engine cooling fans.

   By this time, the coolant level inside the coolant surge tank may be lower. If the level is lower, add more of the proper DEX-COOL® coolant mixture to the coolant surge tank until the level reaches the COLD FILL line.

5. Then replace the pressure cap. Be sure the pressure cap is hand-tight.

Downloaded from www.Manualslib.com manuals search engine

Check the level in the surge tank when the cooling system has cooled down. If the coolant is not at the proper level, repeat Steps 1 through 3 and reinstall the pressure cap. If the coolant is not at the proper level when the system cools down again, see your dealer.

Windshield Washer Fluid

What to Use

When you need windshield or rear window washer fluid be sure to read the instructions before use. If you will be operating your vehicle in an area where the temperature may fall below freezing, use a fluid that has sufficient protection against freezing.

Adding Windshield Washer Fluid

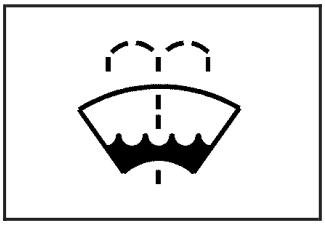

Open the cap with the washer symbol on it. Add washer fluid until the tank is full. See *Engine Compartment Overview on page 5-12* for reservoir location.

Notice:

- **When using concentrated washer fluid, follow the manufacturer's instructions for adding water.**
- **Do not mix water with ready-to-use washer fluid. Water can cause the solution to freeze and damage your washer fluid tank and other parts of the washer system. Also, water does not clean as well as washer fluid.**
- **Fill your washer fluid tank only three-quarters full when it is very cold. This allows for expansion if freezing occurs, which could damage the tank if it is completely full.**
- **Do not use engine coolant (antifreeze) in your windshield washer. It can damage your washer system and paint.**

Downloaded from www.Manualslib.com manuals search engine

Brakes

Brake Fluid

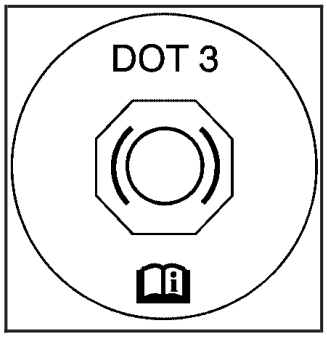

Your brake master cylinder reservoir is filled with DOT-3 brake fluid. See *Engine Compartment Overview on page 5-12* for the location of the reservoir.

There are only two reasons why the brake fluid level in the reservoir might go down. The first is that the brake fluid goes down to an acceptable level during normal brake lining wear. When new linings are put in, the fluid level goes back up. The other reason is that fluid is leaking out of the brake system. If it is, you should have your brake system fixed, since a leak means that sooner or later your brakes will not work well, or will not work at all.

So, it is not a good idea to top off your brake fluid. Adding brake fluid will not correct a leak. If you add fluid when your linings are worn, then you will have too much fluid when you get new brake linings.

You should add or remove brake fluid, as necessary, only when work is done on the brake hydraulic system.

⚠ CAUTION:

If you have too much brake fluid, it can spill on the engine. The fluid will burn if the engine is hot enough. You or others could be burned, and your vehicle could be damaged. Add brake fluid only when work is done on the brake hydraulic system.

When your brake fluid falls to a low level, your brake warning light will come on. See *Brake System Warning Light on page 3-28*.

Brake Wear

Your vehicle has front disc brakes and rear drum brakes.

Disc brake pads have built-in wear indicators that make a high-pitched warning sound when the brake pads are worn and new pads are needed. The sound may come and go or be heard all the time your vehicle is moving, except when you are pushing on the brake pedal firmly.

Downloaded from www.Manualslib.com manuals search engine

⚠ CAUTION:

The brake wear warning sound means that soon your brakes will not work well. That could lead to an accident. When you hear the brake wear warning sound, have your vehicle serviced.

Notice: **Continuing to drive with worn-out brake pads could result in costly brake repair.**

Some driving conditions or climates may cause a brake squeal when the brakes are first applied or lightly applied. This does not mean something is wrong with your brakes.

Properly torqued wheel nuts are necessary to help prevent brake pulsation. When tires are rotated, inspect brake pads for wear and evenly tighten wheel nuts in the proper sequence to GM torque specifications.

Your rear drum brakes do not have wear indicators, but if you ever hear a rear brake rubbing noise, have the rear brake linings inspected immediately. Also, the rear brake drums should be removed and inspected each time the tires are removed for rotation or changing. When you have the front brake pads replaced, have the rear brakes inspected, too.

Brake linings should always be replaced as complete axle sets.

Brake Pedal Travel

See your dealer if the brake pedal does not return to normal height, or if there is a rapid increase in pedal travel. This could be a sign of brake trouble.

Brake Adjustment

Every time you apply the brakes, with or without the vehicle moving, your brakes adjust for wear.

Replacing Brake System Parts

The braking system on a vehicle is complex. Its many parts have to be of top quality and work well together if the vehicle is to have really good braking. Your vehicle was designed and tested with top-quality GM brake parts. When you replace parts of your braking system — for example, when your brake linings wear down and you need new ones put in — be sure you get new approved GM replacement parts. If you do not, your brakes may no longer work properly. For example, if someone puts in brake linings that are wrong for your vehicle, the balance between your front and rear brakes can change — for the worse. The braking performance you have come to expect can change in many other ways if someone puts in the wrong replacement brake parts.

Downloaded from www.Manualslib.com manuals search engine

Battery

Your vehicle has a maintenance free battery. When it is time for a new battery, get one that has the replacement number shown on the original battery's label. We recommend an ACDelco® replacement battery.

For battery replacement, see your dealer or the service manual. To purchase a service manual, see *Service and Owner Publications* in *Service Publications Ordering Information on page 7-15*.

Warning: Battery posts, terminals, and related accessories contain lead and lead compounds, chemicals known to the State of California to cause cancer and reproductive harm. Wash hands after handling.

Vehicle Storage

If you are not going to drive your vehicle for 25 days or more, remove the black, negative (-) cable from the battery. This will help keep your battery from running down.

⚠ CAUTION:

Batteries have acid that can burn you and gas that can explode. You can be badly hurt if you are not careful. See *Jump Starting on page 5-34* for tips on working around a battery without getting hurt.

You must close all doors and the liftgate before reconnecting the battery. After reconnecting the battery, you must press the unlock button on the key transmitter. Failure to follow this procedure may result in a sounding alarm. Pressing unlock on the key transmitter would stop the sounding alarm.

Jump Starting

If your battery has run down, you may want to use another vehicle and some jumper cables to start your vehicle. Be sure to use the following steps to do it safely.

Downloaded from www.Manualslib.com manuals search engine

⚠ CAUTION:

Batteries can hurt you. They can be dangerous because:

- **They contain acid that can burn you.**
- **They contain gas that can explode or ignite.**
- **They contain enough electricity to burn you.**

If you do not follow these steps exactly, some or all of these things can hurt you.

Notice: **Ignoring these steps could result in costly damage to your vehicle that would not be covered by your warranty.**

Trying to start your vehicle by pushing or pulling it will not work, and it could damage your vehicle.

1. Check the other vehicle. It must have a 12-volt battery with a negative ground system.

Notice: **If the other vehicle's system is not a 12-volt system with a negative ground, both vehicles can be damaged. Only use vehicles with 12-volt systems with negative grounds to jump start your vehicle.**

2. Get the vehicles close enough so the jumper cables can reach, but be sure the vehicles are not touching each other. If they are, it could cause a ground connection you do not want. You would not be able to start your vehicle, and the bad grounding could damage the electrical systems.

   To avoid the possibility of the vehicles rolling, set the parking brake firmly on both vehicles involved in the jump start procedure. Put an automatic transaxle in PARK (P) or a manual transaxle in NEUTRAL before setting the parking brake.

Notice: **If you leave your radio or other accessories on during the jump starting procedure, they could be damaged. The repairs would not be covered by your warranty. Always turn off your radio and other accessories when jump starting your vehicle.**

3. Turn off the ignition on both vehicles. Unplug unnecessary accessories plugged into the cigarette lighter or the accessory power outlet. Turn off the radio and all lamps that are not needed. This will avoid sparks and help save both batteries. And it could save your radio!

Downloaded from www.Manualslib.com manuals search engine

4. Open the hoods and locate the positive (+) and negative (–) terminal locations on each vehicle.

   You will not need to access your battery for jump starting. Your vehicle has a remote positive (+) and a remote negative (–) jump starting terminal for that purpose.

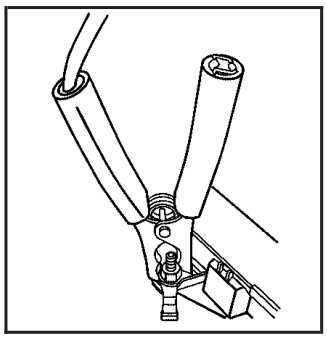

The remote positive (+) terminal is located under the engine compartment fuse block cover, and is marked with a plus (+) symbol on the cover. To access the terminal, remove the fuse block cover.

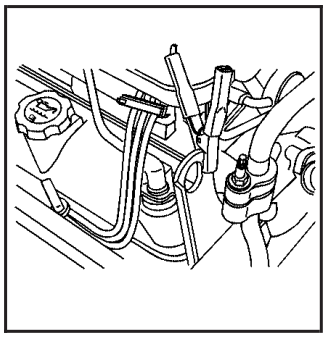

The remote negative (–) terminal is located in the front of the engine compartment, near the engine oil dipstick.

See *Engine Compartment Overview on page 5-12* for more information on the location of the remote positive (+) terminal and the engine oil dipstick.

⚠ CAUTION:

An electric fan can start up even when the engine is not running and can injure you. Keep hands, clothing and tools away from any underhood electric fan.

Downloaded from www.Manualslib.com manuals search engine

⚠ CAUTION:

Using a match near a battery can cause battery gas to explode. People have been hurt doing this, and some have been blinded. Use a flashlight if you need more light.

Be sure the battery has enough water. You do not need to add water to the battery installed in your new vehicle. But if a battery has filler caps, be sure the right amount of fluid is there. If it is low, add water to take care of that first. If you do not, explosive gas could be present.

Battery fluid contains acid that can burn you. Do not get it on you. If you accidentally get it in your eyes or on your skin, flush the place with water and get medical help immediately.

⚠ CAUTION:

Fans or other moving engine parts can injure you badly. Keep your hands away from moving parts once the engine is running.

5. Check that the jumper cables do not have loose or missing insulation. If they do, you could get a shock. The vehicles could be damaged, too.

   Before you connect the cables, here are some basic things you should know. Positive (+) will go to positive (+) or to a remote positive (+) terminal if the vehicle has one. Negative (–) will go to a heavy, unpainted metal engine part or to a remote negative (–) terminal if the vehicle has one.

   Do not connect positive (+) to negative (–) or you will get a short that would damage the battery and maybe other parts, too. And do not connect the negative (–) cable to the negative (–) terminal on the dead battery because this can cause sparks.

Downloaded from www.Manualslib.com manuals search engine

6. Connect the red positive (+) cable to the positive (+) terminal of the dead battery. Use a remote positive (+) terminal if the vehicle has one.
7. Do not let the other end touch metal. Connect it to the positive (+) terminal of the good battery. Use a remote positive (+) terminal if the vehicle has one.
8. Now connect the black negative (–) cable to the negative (–) terminal of the good battery. Use a remote negative (–) terminal if the vehicle has one.

   Do not let the other end touch anything until the next step. The other end of the negative (–) cable does not go to the dead battery. It goes to a heavy, unpainted metal engine part or to a remote negative (–) terminal on the vehicle with the dead battery.
9. Connect the other end of the negative (–) cable at least 18 inches (45 cm) away from the dead battery, but not near engine parts that move. The electrical connection is just as good there, and the chance of sparks getting back to the battery is much less.

   Your vehicle has a remote negative (–) terminal for this purpose.
10. Now start the vehicle with the good battery and run the engine for a while.
11. Press the unlock button on the remote keyless entry transmitter to disarm your content theft-deterrent system.
12. Try to start the vehicle that had the dead battery. If it will not start after a few tries, it probably needs service.

Notice: **If the jumper cables are connected or removed in the wrong order, electrical shorting may occur and damage the vehicle. The repairs would not be covered by your warranty. Always connect and remove the jumper cables in the correct order, making sure that the cables do not touch each other or other metal.**

Downloaded from www.Manualslib.com manuals search engine

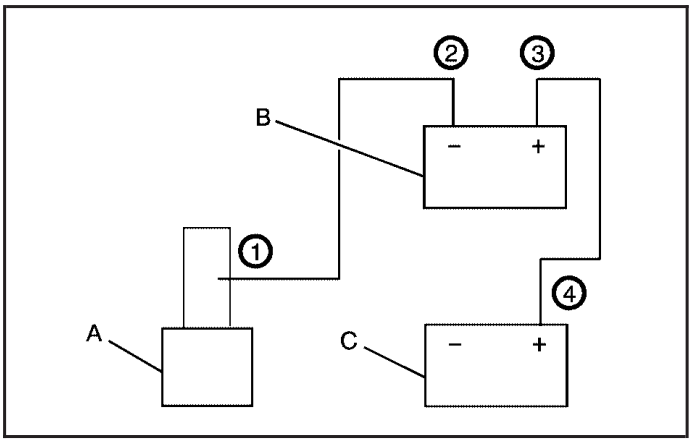

Jumper Cable Removal

A. Heavy, Unpainted Metal Engine Part or Remote Negative (–) Terminal

B. Good Battery or Remote Positive (+) and Remote Negative (–) Terminals

C. Dead Battery or Remote Positive (+) Terminal

To disconnect the jumper cables from both vehicles, do the following:

1. Disconnect the black negative (–) cable from the vehicle that had the dead battery.
2. Disconnect the black negative (–) cable from the vehicle with the good battery.
3. Disconnect the red positive (+) cable from the vehicle with the good battery.
4. Disconnect the red positive (+) cable from the other vehicle.
5. Return the fuse block cover to its original position.

Downloaded from www.Manualslib.com manuals search engine

All-Wheel Drive

If you have an all-wheel-drive vehicle, be sure to perform the lubricant checks described in this section. However, there are two additional systems that need lubrication.

Transfer Case (Power Transfer Unit)

When to Check Lubricant

Refer to the Maintenance Schedule to determine how often to check the lubricant. See *Scheduled Maintenance on page 6-4*.

How to Check Lubricant

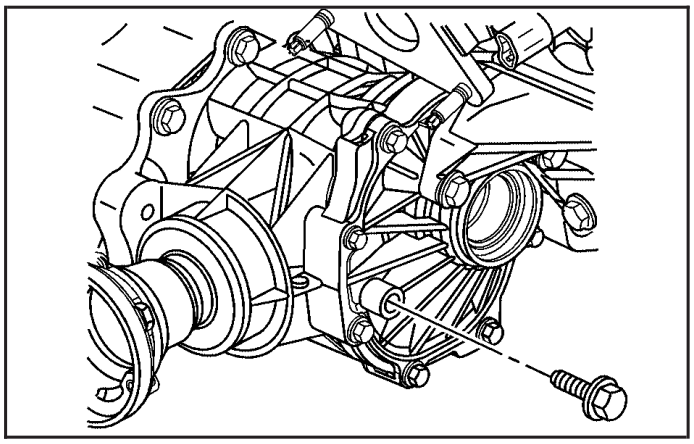

To get an accurate reading, the vehicle should be on a level surface.

If the level is below the bottom of the filler plug hole, you'll need to add some lubricant. Add enough lubricant to raise the level to the bottom of the filler plug hole.

What to Use

Refer to the Maintenance Schedule to determine what kind of lubricant to use. See *Recommended Fluids and Lubricants on page 6-11*.

Downloaded from www.Manualslib.com manuals search engine

Carrier Assembly-Differential (Rear Drive Module)

When to Check and Change Lubricant

Refer to the Maintenance Schedule to determine how often to check the lubricant and when to change it. See *Scheduled Maintenance on page 6-4*.

How to Check Lubricant

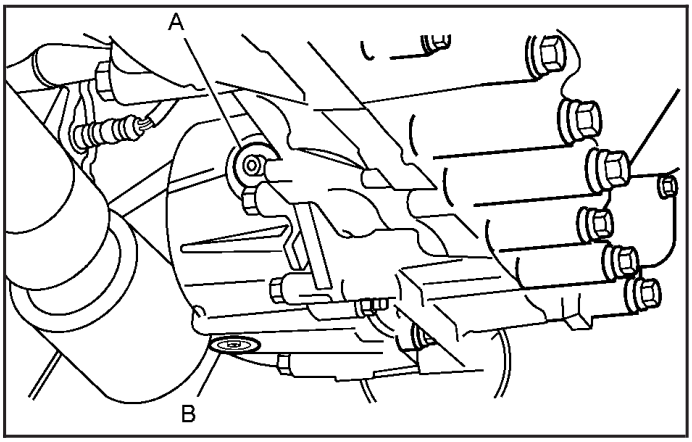

AWD Differential Case

A. Fill Plug

B. Drain Plug

To get an accurate reading, the vehicle should be on a level surface.

If the level is below the bottom of the filler plug hole, you'll need to add some lubricant. Add enough lubricant to raise the level to the bottom of the filler plug hole. A fluid loss could indicate a problem; check and have it repaired, if needed.

What to Use

Refer to the Maintenance Schedule to determine what kind of lubricant to use. See *Recommended Fluids and Lubricants on page 6-11*.

Downloaded from www.Manualslib.com manuals search engine

Bulb Replacement

For the proper type of replacement bulbs, see *Replacement Bulbs on page 5-44*.

For any bulb changing procedure not listed in this section, contact your dealer.

Halogen Bulbs

⚠ CAUTION:

Halogen bulbs have pressurized gas inside and can burst if you drop or scratch the bulb. You or others could be injured. Be sure to read and follow the instructions on the bulb package.

Headlamps, Front Turn Signal, Sidemarker, and Parking Lamps

To replace one of these bulbs, do the following:

1. Open the hood. See *Hood Release on page 5-11* for more information.

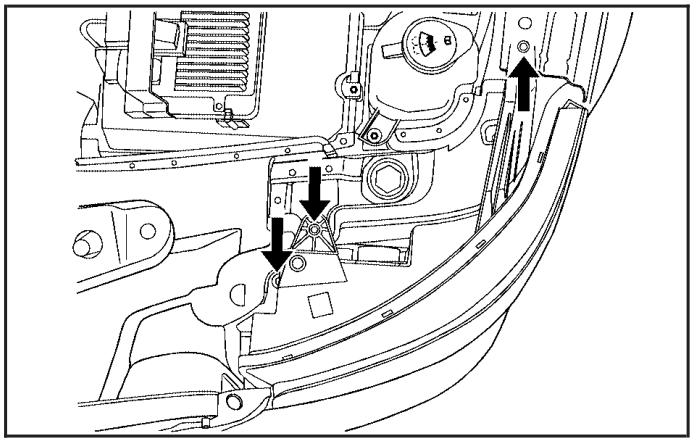

2. Remove the three headlamp assembly attachment screws.
3. Pull the headlamp assembly toward you to release it from the hidden, lower headlamp mount. The headlamp assembly will need to be carefully disengaged from the vehicle.

Downloaded from www.Manualslib.com manuals search engine

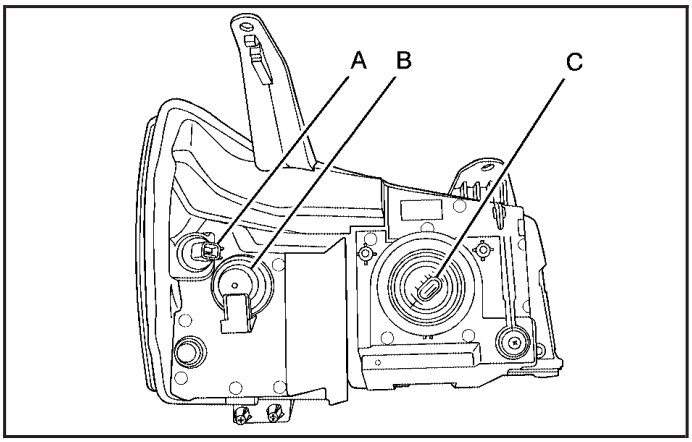

A. Sidemarker Lamp
B. Parking/Turn Signal Lamp
C. Low/High-Beam/ DRL Headlamp

4. Pull the locking tab back on the bulb socket and push the release tab in to release the wiring harness. Turn the bulb socket counterclockwise to remove it from the headlamp assembly.
5. Pull the bulb straight out from the socket.
6. Push the new bulb into the socket and reinstall the socket into the headlamp assembly by turning it clockwise.
7. Connect the electrical connector.
8. Reverse Steps 1 through 4 to reinstall the headlamp assembly. When reinstalling the three headlamp screws, do not overtighten.

Taillamps, Turn Signal, Stoplamps and Back-up Lamps

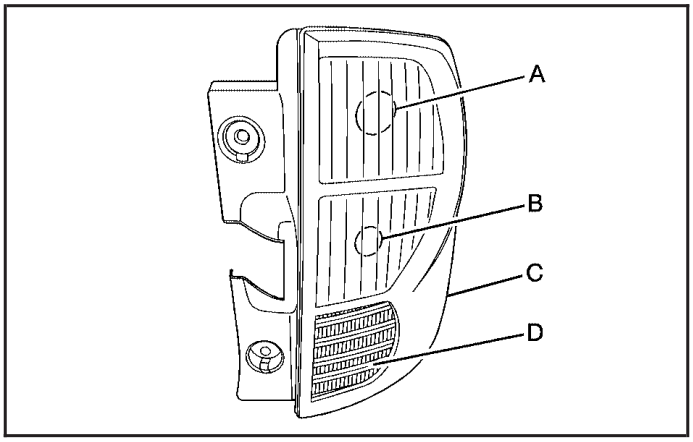

A. Stoplamp/Taillamp
B. Turn Signal Lamp/ Taillamp
C. Sidemarker Lamp
D. Back-Up Lamp

Downloaded from www.Manualslib.com manuals search engine

To replace one of these bulbs, do the following:

1. Open the liftgate. See *Liftgate on page 2-10* for more information.

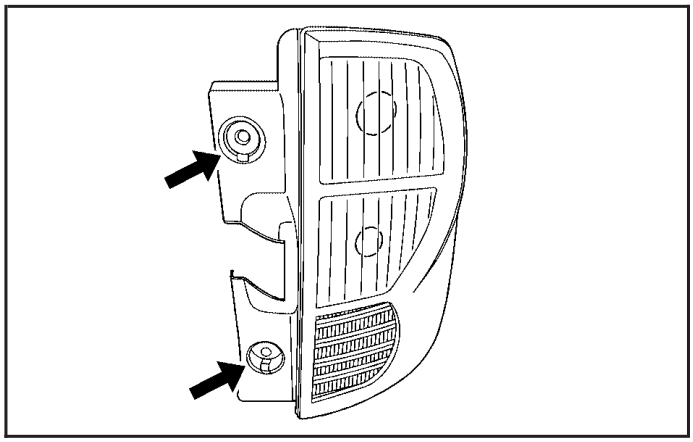

2. Remove the taillamp screws.
3. Slide the taillamp assembly sideways to disengage the cross-bar locating studs.
4. Turn the bulb socket counterclockwise to disconnect it from the taillamp assembly.
5. Pull the bulb out of the bulb socket.
6. Push the new bulb into the bulb socket.
7. Insert the bulb socket into the taillamp assembly and turn it clockwise to secure.
8. Reverse Steps 1 through 3 to reinstall the taillamp assembly. When reinstalling the screws, do not overtighten.

Replacement Bulbs

Exterior Lamp	Bulb Number
Back-Up, Rear Turn Signal, Stoplamp and Taillamp	3157
Front and Rear Sidemarker Lamp	194
Front Turn Signal Lamp	5702A
Low/High-Beam Headlamp/DRL	H13

For replacement bulbs not listed here, contact your dealer.

Downloaded from www.Manualslib.com manuals search engine

Windshield Wiper Blade Replacement

Windshield wiper blades should be inspected for wear or cracking. See *Scheduled Maintenance on page 6-4* for more information.

Replacement blades come in different types and are removed in different ways. For proper type and length, see *Normal Maintenance Replacement Parts on page 6-13*.

Here's how to replace the windshield wiper blades:

1. Make sure the front wipers are turned off.
2. Pull the windshield wiper arm away from the windshield.

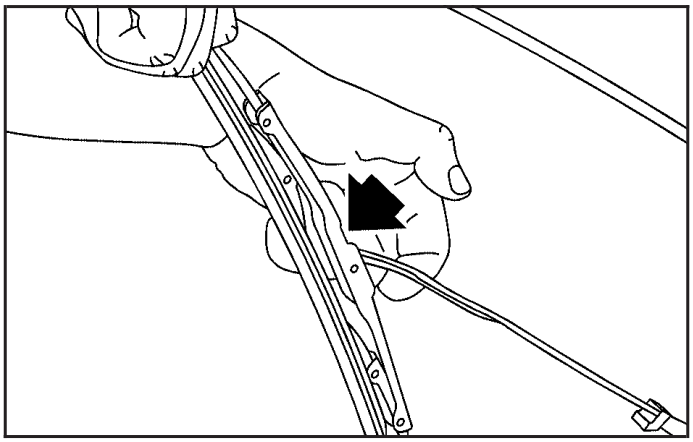

3. Pull up the release clip, located at the connecting point of the blade and the arm. Then, pull the blade assembly down toward the glass to remove it from the wiper arm.
4. Push the new wiper blade securely on the wiper arm until you hear the release clip "click" into place.
5. Push the release clip, from Step 3, down to secure the wiper blade into place.

Downloaded from www.Manualslib.com manuals search engine

Rear Window Wiper Blade Replacement

To replace the rear window wiper blade, do the following:

1. Make sure that the rear wiper is off.
2. Pull the wiper away from the rear window.
3. Pull up the release clip, located at the connecting point of the blade and the arm. Then, pull the blade assembly down toward the glass to remove it from the wiper arm.
4. Push the new wiper blade securely on the wiper arm until you hear the release clip “click” into place.
5. Push the release clip, from Step 3, down to secure the wiper blade into place.

Tires

Your new vehicle comes with high-quality tires made by a leading tire manufacturer. If you ever have questions about your tire warranty and where to obtain service, see your GM Warranty booklet for details. For additional information refer to the tire manufacturer’s booklet included with your vehicle’s Owner Manual.

⚠ CAUTION:

Poorly maintained and improperly used tires are dangerous.

- **Overloading your tires can cause overheating as a result of too much friction. You could have an air-out and a serious accident. See *Loading Your Vehicle on page 4-31*.**
- **Underinflated tires pose the same danger as overloaded tires. The resulting accident could cause serious injury. Check all tires frequently to maintain the recommended pressure. Tire pressure should be checked when your tires are cold. See *Inflation - Tire Pressure on page 5-52*.**
- **Overinflated tires are more likely to be cut, punctured, or broken by a sudden impact — such as when you hit a pothole. Keep tires at the recommended pressure.**
- **Worn, old tires can cause accidents. If your tread is badly worn, or if your tires have been damaged, replace them.**

Downloaded from www.Manualslib.com manuals search engine

Tire Sidewall Labeling

Useful information about a tire is molded into its sidewall. The examples below show a typical passenger vehicle tire and a compact spare tire sidewall.

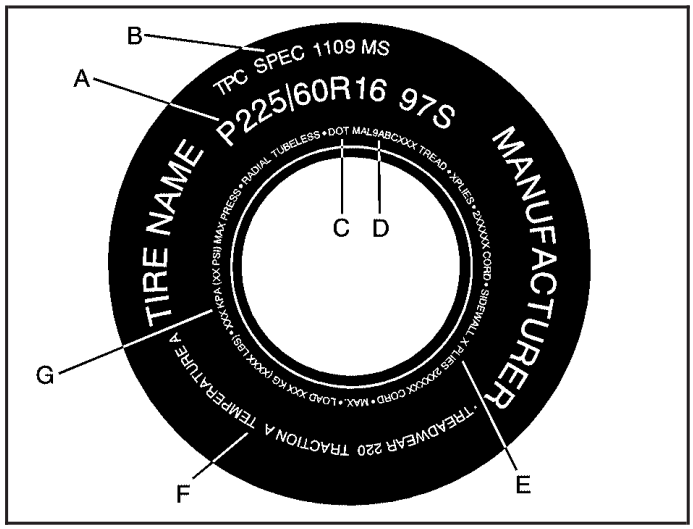

Passenger (P-Metric) Tire Example

(A) Tire Size: The tire size is a combination of letters and numbers used to define a particular tire's width, height, aspect ratio, construction type, and service description. See the "Tire Size" illustration later in this section for more detail.

(B) TPC Spec (Tire Performance Criteria Specification): Original equipment tires designed to GM's specific tire performance criteria have a TPC specification code molded onto the sidewall. GM's TPC specifications meet or exceed all federal safety guidelines.

(C) DOT (Department of Transportation): The Department of Transportation (DOT) code indicates that the tire is in compliance with the U.S. Department of Transportation Motor Vehicle Safety Standards.

(D) Tire Identification Number (TIN): The letters and numbers following DOT (Department of Transportation) code is the Tire Identification Number (TIN). The TIN shows the manufacturer and plant code, tire size, and date the tire was manufactured. The TIN is molded onto both sides of the tire, although only one side may have the date of manufacture.

(E) Tire Ply Material: The type of cord and number of plies in the sidewall and under the tread.

(F) Uniform Tire Quality Grading (UTQG): Tire manufacturers are required to grade tires based on three performance factors: treadwear, traction, and temperature resistance. For more information see *Uniform Tire Quality Grading on page 5-58*.

(G) Maximum Cold Inflation Load Limit: Maximum load that can be carried and the maximum pressure needed to support that load.

Downloaded from www.Manualslib.com manuals search engine

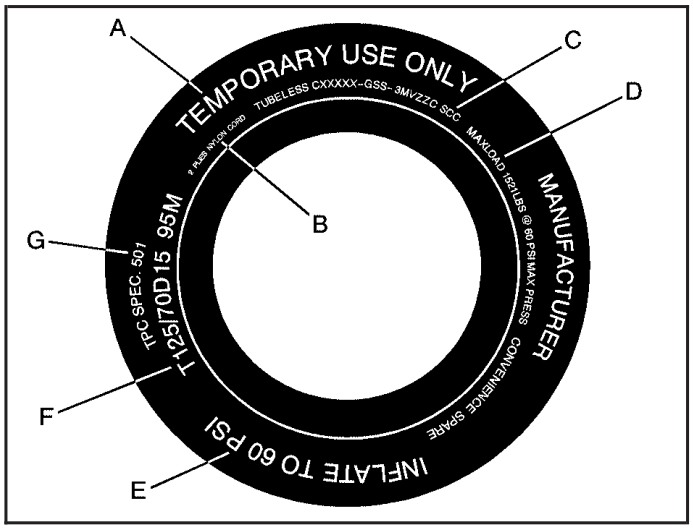

Compact Spare Tire Example

(A) Temporary Use Only: The compact spare tire or temporary use tire has a tread life of approximately 3,000 miles (5 000 km) and should not be driven at speeds over 65 mph (105 km/h). The compact spare tire is for emergency use when a regular road tire has lost air and gone flat. If your vehicle has a compact spare tire, see *Compact Spare Tire on page 5-73* and *If a Tire Goes Flat on page 5-62*.

(B) Tire Ply Material: The type of cord and number of plies in the sidewall and under the tread.

(C) Tire Identification Number (TIN): The letters and numbers following the DOT (Department of Transportation) code is the Tire Identification Number (TIN). The TIN shows the manufacturer and plant code, tire size, and date the tire was manufactured. The TIN is molded onto both sides of the tire, although only one side may have the date of manufacture.

(D) Maximum Cold Inflation Load Limit: Maximum load that can be carried and the maximum pressure needed to support that load.

(E) Tire Inflation: The temporary use tire or compact spare tire should be inflated to 60 psi (420 kPa). For more information on tire pressure and inflation see *Inflation - Tire Pressure on page 5-52*.

(F) Tire Size: A combination of letters and numbers define a tire's width, height, aspect ratio, construction type and service description. The letter T as the first character in the tire size means the tire is for temporary use only.

(G) TPC Spec (Tire Performance Criteria Specification): Original equipment tires designed to GM's specific tire performance criteria have a TPC specification code molded onto the sidewall. GM's TPC specifications meet or exceed all federal safety guidelines.

Downloaded from www.Manualslib.com manuals search engine

Tire Size

The following illustration shows an example of a typical passenger vehicle tire size.

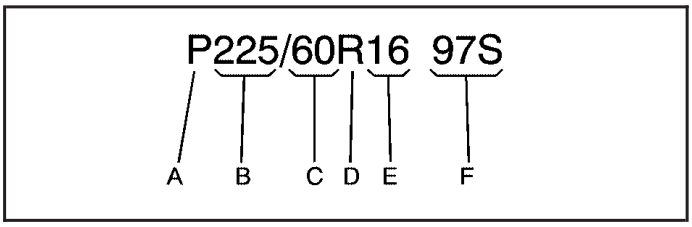

(A) Passenger (P-Metric) Tire: The United States version of a metric tire sizing system. The letter P as the first character in the tire size means a passenger vehicle tire engineered to standards set by the U.S. Tire and Rim Association.

(B) Tire Width: The three-digit number indicates the tire section width in millimeters from sidewall to sidewall.

(C) Aspect Ratio: A two-digit number that indicates the tire height-to-width measurements. For example, if the tire size aspect ratio is 60, as shown in item C of the illustration, it would mean that the tire's sidewall is 60 percent as high as it is wide.

(D) Construction Code: A letter code is used to indicate the type of ply construction in the tire. The letter R means radial ply construction; the letter D means diagonal or bias ply construction; and the letter B means belted-bias ply construction.

(E) Rim Diameter: Diameter of the wheel in inches.

(F) Service Description: These characters represent the load range and speed rating of the tire. The load index represents the load carry capacity a tire is certified to carry. The load index can range from 1 to 279. The speed rating is the maximum speed a tire is certified to carry a load. Speed ratings range from A to Z.

Downloaded from www.Manualslib.com manuals search engine

Tire Terminology and Definitions

Air Pressure: The amount of air inside the tire pressing outward on each square inch of the tire. Air pressure is expressed in pounds per square inch (psi) or kilopascal (kPa).

Accessory Weight: This means the combined weight of optional accessories. Some examples of optional accessories are, automatic transmission, power steering, power brakes, power windows, power seats, and air conditioning.

Aspect Ratio: The relationship of a tire's height to its width.

Belt: A rubber coated layer of cords that is located between the plies and the tread. Cords may be made from steel or other reinforcing materials.

Bead: The tire bead contains steel wires wrapped by steel cords that hold the tire onto the rim.

Bias Ply Tire: A pneumatic tire in which the plies are laid at alternate angles less than 90 degrees to the centerline of the tread.

Cold Inflation Pressure: The amount of air pressure in a tire, measured in pounds per square inch (psi) or kilopascals (kPa) before a tire has built up heat from driving. See *Inflation - Tire Pressure on page 5-52*.

Curb Weight: This means the weight of a motor vehicle with standard and optional equipment including the maximum capacity of fuel, oil and coolant, but without passengers and cargo.

DOT Markings: A code molded into the sidewall of a tire signifying that the tire is in compliance with the U.S. Department of Transportation (DOT) motor vehicle safety standards. The DOT code includes the Tire Identification Number (TIN), an alphanumeric designator which can also identify the tire manufacturer, production plant, brand and date of production.

GVWR: Gross Vehicle Weight Rating, see *Loading Your Vehicle on page 4-31*.

GAWR FRT: Gross Axle Weight Rating for the front axle, see *Loading Your Vehicle on page 4-31*.

GAWR RR: Gross Axle Weight Rating for the rear axle, see *Loading Your Vehicle on page 4-31*.

Intended Outboard Sidewall: The side of an asymmetrical tire, that must always face outward when mounted on a vehicle.

Kilopascal (kPa): The metric unit for air pressure.

Light Truck (LT-Metric) Tire: A tire used on light duty trucks and some multipurpose passenger vehicles.

Downloaded from www.Manualslib.com manuals search engine

Load Index: An assigned number ranging from 1 to 279 that corresponds to the load carrying capacity of a tire.

Maximum Inflation Pressure: The maximum air pressure to which a cold tire may be inflated. The maximum air pressure is molded onto the sidewall.

Maximum Load Rating: The load rating for a tire at the maximum permissible inflation pressure for that tire.

Maximum Loaded Vehicle Weight: The sum of curb weight; accessory weight; vehicle capacity weight; and production options weight.

Normal Occupant Weight: The number of occupants a vehicle is designed to seat multiplied by 150 lbs (68 kg). See *Loading Your Vehicle on page 4-31*.

Occupant Distribution: Designated seating positions.

Outward Facing Sidewall: The side of an asymmetrical tire that has a particular side that faces outward when mounted on a vehicle. The side of the tire that contains a whitewall, bears white lettering, or bears manufacturer, brand, and/or model name molding that is higher or deeper than the same moldings on the other sidewall of the tire.

Passenger (P-Metric) Tire: A tire used on passenger cars and some light duty trucks and multipurpose vehicles.

Recommended Inflation Pressure: Vehicle manufacturer's recommended tire inflation pressure and shown on the tire placard. See *Inflation - Tire Pressure on page 5-52* and *Loading Your Vehicle on page 4-31*.

Radial Ply Tire: A pneumatic tire in which the ply cords that extend to the beads are laid at 90 degrees to the centerline of the tread.

Rim: A metal support for a tire and upon which the tire beads are seated.

Sidewall: The portion of a tire between the tread and the bead.

Speed Rating: An alphanumeric code assigned to a tire indicating the maximum speed at which a tire can operate.

Traction: The friction between the tire and the road surface. The amount of grip provided.

Tread: The portion of a tire that comes into contact with the road.

Treadwear Indicators: Narrow bands, sometimes called wear bars, that show across the tread of a tire when only 1/16 inch (1.6 mm) of tread remains. See *When It Is Time for New Tires on page 5-55*.

Downloaded from www.Manualslib.com manuals search engine

UTQGS (Uniform Tire Quality Grading Standards): A tire information system that provides consumers with ratings for a tire's traction, temperature, and treadwear. Ratings are determined by tire manufacturers using government testing procedures. The ratings are molded into the sidewall of the tire. See *Uniform Tire Quality Grading on page 5-58*.

Vehicle Capacity Weight: The number of designated seating positions multiplied by 150 lbs (68 kg) plus the rated cargo load. See *Loading Your Vehicle on page 4-31*.

Vehicle Maximum Load on the Tire: Load on an individual tire due to curb weight, accessory weight, occupant weight, and cargo weight.

Vehicle Placard: A label permanently attached to a vehicle showing the vehicle's capacity weight and the original equipment tire size and recommended inflation pressure. See "Tire and Loading Information Label" under *Loading Your Vehicle on page 4-31*.

Inflation - Tire Pressure

Tires need the correct amount of air pressure to operate effectively.

Notice: **Do not let anyone tell you that under-inflation or over-inflation is all right. It is not. If your tires do not have enough air (under-inflation), you can get the following:**

- **Too much flexing**
- **Too much heat**
- **Tire overloading**
- **Premature or irregular wear**
- **Poor handling**
- **Reduced fuel economy**

If your tires have too much air (over-inflation), you can get the following:

- **Unusual wear**
- **Poor handling**
- **Rough ride**
- **Needless damage from road hazards**

Downloaded from www.Manualslib.com manuals search engine

A Tire and Loading Information label is attached to the vehicle's center pillar (B-pillar), below the driver's door latch. This label shows your vehicle's original equipment tires and the correct inflation pressures for your tires when they are cold. The recommended cold tire inflation pressure, shown on the label, is the minimum amount of air pressure needed to support your vehicle's maximum load carrying capacity.

For additional information regarding how much weight your vehicle can carry, and an example of the tire and loading information label, see *Loading Your Vehicle on page 4-31*. How you load your vehicle affects vehicle handling and ride comfort, never load your vehicle with more weight than it was designed to carry.

When to Check

Check your tires once a month or more. Do not forget to check the compact spare tire, it should be at 60 psi (420 kPa). For additional information regarding the compact spare tire, see *Compact Spare Tire on page 5-73*.

How to Check

Use a good quality pocket-type gage to check tire pressure. You cannot tell if your tires are properly inflated simply by looking at them. Radial tires may look properly inflated even when they are under-inflated. Check the tire's inflation pressure when the tires are cold. Cold means your vehicle has been sitting for at least three hours or driven no more than 1 mile (1.6 km).

Remove the valve cap from the tire valve stem. Press the tire gage firmly onto the valve to get a pressure measurement. If the cold tire inflation pressure matches the recommended pressure on the Tire and Loading Information label, no further adjustment is necessary. If the inflation pressure is low, add air until you reach the recommended amount.

If you overfill the tire, release air by pushing on the metal stem in the center of the tire valve. Re-check the tire pressure with the tire gage.

Be sure to put the valve caps back on the valve stems. They help prevent leaks by keeping out dirt and moisture.

Downloaded from www.Manualslib.com manuals search engine

Tire Inspection and Rotation

Tires should be rotated every 5,000 to 8,000 miles (8 000 to 13 000 km).

Any time you notice unusual wear, rotate your tires as soon as possible and check wheel alignment. Also check for damaged tires or wheels. See *When It Is Time for New Tires on page 5-55* and *Wheel Replacement on page 5-60* for more information.

The purpose of regular rotation is to achieve more uniform wear for all tires on the vehicle. The first rotation is the most important. See *Scheduled Maintenance on page 6-4*.

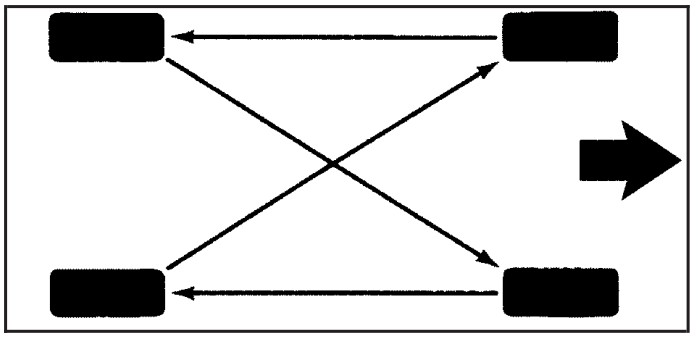

When rotating your tires, always use the correct rotation pattern shown here.

Do not include the compact spare tire in your tire rotation.

After the tires have been rotated, adjust the front and rear inflation pressures as shown on the Tire and Loading Information label.

Make certain that all wheel nuts are properly tightened. See “Wheel Nut Torque” under *Capacities and Specifications on page 5-88*.

Downloaded from www.Manualslib.com manuals search engine

⚠ CAUTION:

Rust or dirt on a wheel, or on the parts to which it is fastened, can make wheel nuts become loose after a time. The wheel could come off and cause an accident. When you change a wheel, remove any rust or dirt from places where the wheel attaches to the vehicle. In an emergency, you can use a cloth or a paper towel to do this; but be sure to use a scraper or wire brush later, if needed, to get all the rust or dirt off. See *Changing a Flat Tire on page 5-62*.

When It Is Time for New Tires

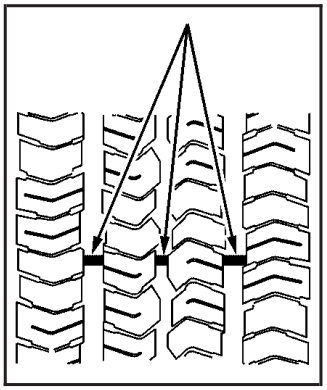

One way to tell when it is time for new tires is to check the treadwear indicators, which will appear when your tires have only 1/16 inch (1.6 mm) or less of tread remaining. Some commercial truck tires may not have treadwear indicators.

You need a new tire if any of the following statements are true:

- You can see the indicators at three or more places around the tire.
- You can see cord or fabric showing through the tire's rubber.
- The tread or sidewall is cracked, cut or snagged deep enough to show cord or fabric.
- The tire has a bump, bulge, or split.
- The tire has a puncture, cut, or other damage that cannot be repaired well because of the size or location of the damage.

Downloaded from www.Manualslib.com manuals search engine

Buying New Tires

GM has developed and matched specific tires for your vehicle. The original equipment tires installed on your vehicle, when it was new, were designed to meet General Motors Tire Performance Criteria Specification (TPC spec) system rating. If you need replacement tires, GM strongly recommends that you get tires with the same TPC Spec rating. This way, your vehicle will continue to have tires that are designed to give the same performance and vehicle safety, during normal use, as the original tires.

GM's exclusive TPC Spec system considers over a dozen critical specifications that impact the overall performance of your vehicle, including brake system performance, ride and handling, traction control, and tire pressure monitoring performance. GM's TPC Spec number is molded onto the tire's sidewall by the tire manufacturer. If the tires have an all-season tread design, the TPC spec number will be followed by an MS for mud and snow. See *Tire Sidewall Labeling on page 5-47* for additional information.

⚠ CAUTION:

Mixing tires could cause you to lose control while driving. If you mix tires of different sizes, brands, or types (radial and bias-belted tires), the vehicle may not handle properly, and you could have a crash. Using tires of different sizes, brands, or types may also cause damage to your vehicle. Be sure to use the correct size, brand, and type of tires on all wheels. It is all right to drive with your compact spare temporarily, as it was developed for use on your vehicle. See *Compact Spare Tire on page 5-73*.

Downloaded from www.Manualslib.com manuals search engine

⚠ CAUTION:

If you use bias-ply tires on your vehicle, the wheel rim flanges could develop cracks after many miles of driving. A tire and/or wheel could fail suddenly, causing a crash. Use only radial-ply tires with the wheels on your vehicle.

If you must replace your vehicle's tires with those that do not have a TPC Spec number, make sure they are the same size, load range, speed rating, and construction type (radial and bias-belted tires) as your vehicle's original tires.

Your vehicle's original equipment tires are listed on the Tire and Loading Information Label. This label is attached to the vehicle's center pillar (B-pillar). See *Loading Your Vehicle on page 4-31*, for more information about the Tire and Loading Information Label and its location on your vehicle.

Different Size Tires and Wheels

If you add wheels or tires that are a different size than your original equipment wheels and tires, this may affect the way your vehicle performs, including its braking, ride and handling characteristics, stability and resistance to rollover. Additionally, if your vehicle has electronic systems such as, anti-lock brakes, traction control, and electronic stability control, the performance of these systems can be affected.

⚠ CAUTION:

If you add different sized wheels, your vehicle may not provide an acceptable level of performance and safety if tires not recommended for those wheels are selected. You may increase the chance that you will crash and suffer serious injury. Only use GM specific wheel and tire systems developed for your vehicle, and have them properly installed by a GM certified technician.

See *Buying New Tires on page 5-56* and *Accessories and Modifications on page 5-3* for additional information.

Downloaded from www.Manualslib.com manuals search engine

Uniform Tire Quality Grading

Quality grades can be found where applicable on the tire sidewall between tread shoulder and maximum section width. For example:

Treadwear 200 Traction AA Temperature A

The following information relates to the system developed by the United States National Highway Traffic Safety Administration, which grades tires by treadwear, traction and temperature performance. (This applies only to vehicles sold in the United States.) The grades are molded on the sidewalls of most passenger car tires. The Uniform Tire Quality Grading system does not apply to deep tread, winter-type snow tires, space-saver or temporary use spare tires, tires with nominal rim diameters of 10 to 12 inches (25 to 30 cm), or to some limited-production tires.

While the tires available on General Motors passenger cars and light trucks may vary with respect to these grades, they must also conform to federal safety requirements and additional General Motors Tire Performance Criteria (TPC) standards.

Treadwear

The treadwear grade is a comparative rating based on the wear rate of the tire when tested under controlled conditions on a specified government test course. For example, a tire graded 150 would wear one and a half (1.5) times as well on the government course as a tire graded 100. The relative performance of tires depends upon the actual conditions of their use, however, and may depart significantly from the norm due to variations in driving habits, service practices and differences in road characteristics and climate.

Traction – AA, A, B, C

The traction grades, from highest to lowest, are AA, A, B, and C. Those grades represent the tire's ability to stop on wet pavement as measured under controlled conditions on specified government test surfaces of asphalt and concrete. A tire marked C may have poor traction performance. Warning: The traction grade assigned to this tire is based on straight-ahead braking traction tests, and does not include acceleration, cornering, hydroplaning, or peak traction characteristics.

Downloaded from www.Manualslib.com manuals search engine

Temperature – A, B, C

The temperature grades are A (the highest), B, and C, representing the tire's resistance to the generation of heat and its ability to dissipate heat when tested under controlled conditions on a specified indoor laboratory test wheel. Sustained high temperature can cause the material of the tire to degenerate and reduce tire life, and excessive temperature can lead to sudden tire failure. The grade C corresponds to a level of performance which all passenger car tires must meet under the Federal Motor Vehicle Safety Standard No. 109. Grades B and A represent higher levels of performance on the laboratory test wheel than the minimum required by law.

Warning: The temperature grade for this tire is established for a tire that is properly inflated and not overloaded. Excessive speed, underinflation, or excessive loading, either separately or in combination, can cause heat buildup and possible tire failure.

Wheel Alignment and Tire Balance

The tires and wheels on your vehicle were aligned and balanced carefully at the factory to give you the longest tire life and best overall performance. Adjustments to wheel alignment and tire balancing will not be necessary on a regular basis. However, if you notice unusual tire wear or your vehicle pulling to one side or the other, the alignment may need to be checked. If you notice your vehicle vibrating when driving on a smooth road, your tires and wheels may need to be rebalanced. See your dealer for proper diagnosis.

Downloaded from www.Manualslib.com manuals search engine

Wheel Replacement

Replace any wheel that is bent, cracked or badly rusted or corroded. If wheel nuts keep coming loose, the wheel, wheel bolts and wheel nuts should be replaced. If the wheel leaks air, replace it (except some aluminum wheels, which can sometimes be repaired). See your dealer if any of these conditions exist.

Your dealer will know the kind of wheel you need.

Each new wheel should have the same load-carrying capacity, diameter, width, offset and be mounted the same way as the one it replaces.

If you need to replace any of your wheels, wheel bolts or wheel nuts, replace them only with new GM original equipment parts. This way, you will be sure to have the right wheel, wheel bolts and wheel nuts for your vehicle.

⚠ CAUTION:

Using the wrong replacement wheels, wheel bolts, or wheel nuts on your vehicle can be dangerous. It could affect the braking and handling of your vehicle, make your tires lose air and make you lose control. You could have a collision in which you or others could be injured. Always use the correct wheel, wheel bolts and wheel nuts for replacement.

Notice: **The wrong wheel can also cause problems with bearing life, brake cooling, speedometer or odometer calibration, headlamp aim, bumper height, vehicle ground clearance, and tire or tire chain clearance to the body and chassis.**

See *Changing a Flat Tire on page 5-62* for more information.

Downloaded from www.Manualslib.com manuals search engine

Used Replacement Wheels

⚠ CAUTION:

Putting a used wheel on your vehicle is dangerous. You cannot know how it has been used or how far it has been driven. It could fail suddenly and cause a crash. If you have to replace a wheel, use a new GM original equipment wheel.

Tire Chains

⚠ CAUTION:

Do not use tire chains. There is not enough clearance. Tire chains used on a vehicle without the proper amount of clearance can cause damage to the brakes, suspension or other vehicle parts. The area damaged by the tire chains could cause you to lose control of your vehicle and you or others may be injured in a crash.

Use another type of traction device only if its manufacturer recommends it for use on your vehicle and tire size combination and road conditions. Follow that manufacturer's instructions. To help avoid damage to your vehicle, drive slowly, readjust or remove the device if it is contacting your vehicle, and do not spin your vehicle's wheels. If you do find traction devices that will fit, install them on the front tires.

Downloaded from www.Manualslib.com manuals search engine

If a Tire Goes Flat

It is unusual for a tire to blowout while you are driving, especially if you maintain your vehicle's tires properly. If air goes out of a tire, it is much more likely to leak out slowly. But if you should ever have a blowout, here are a few tips about what to expect and what to do:

If a front tire fails, the flat tire will create a drag that pulls the vehicle toward that side. Take your foot off the accelerator pedal and grip the steering wheel firmly. Steer to maintain lane position, and then gently brake to a stop well out of the traffic lane.

A rear blowout, particularly on a curve, acts much like a skid and may require the same correction you would use in a skid. In any rear blowout remove your foot from the accelerator pedal. Get the vehicle under control by steering the way you want the vehicle to go. It may be very bumpy and noisy, but you can still steer. Gently brake to a stop, well off the road if possible.

⚠ CAUTION:

Lifting a vehicle and getting under it to do maintenance or repairs is dangerous without the appropriate safety equipment and training. The jack provided with your vehicle is designed only for changing a flat tire. If it is used for anything else, you or others could be badly injured or killed if the vehicle slips off the jack. Use the jack provided with your vehicle only for changing a flat tire.

If a tire goes flat, the next part shows how to use the jacking equipment to change a flat tire safely.

Changing a Flat Tire

If a tire goes flat, avoid further tire and wheel damage by driving slowly to a level place. Turn on your vehicle's hazard warning flashers. See *Hazard Warning Flashers on page 3-6* for more information.

Downloaded from www.Manualslib.com manuals search engine

⚠ CAUTION:

Changing a tire can be dangerous. The vehicle can slip off the jack and roll over or fall on you or other people. You and they could be badly injured or even killed. Find a level place to change your tire. To help prevent the vehicle from moving:

1. **Set the parking brake firmly.**
2. **Put the shift lever in PARK (P).**
3. **Turn off the engine and do not restart while the vehicle is raised.**
4. **Do not allow passengers to remain in the vehicle.**

To be even more certain the vehicle will not move, you should put blocks at the front and rear of the tire farthest away from the one being changed. That would be the tire, on the other side, at the opposite end of the vehicle.

When your vehicle has a flat tire, use the following example as a guide to assist you in the placement of wheel blocks.

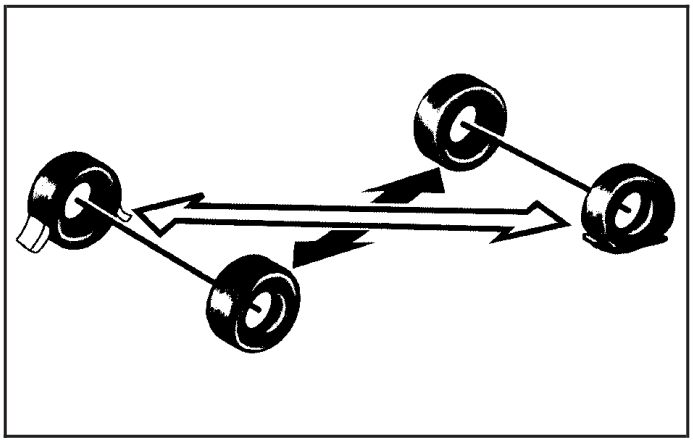

The following information will tell you next how to use the jack and change a tire.

Downloaded from www.Manualslib.com manuals search engine

Removing the Spare Tire and Tools

The spare tire is located under the load floor in the rear cargo area. You may need to remove the rear compartment storage panel/cover and/or the table to access the load floor. See *Rear Compartment Storage Panel/Cover on page 2-37* and *Table on page 2-39* for more information.

To access the spare tire and tools, do the following:

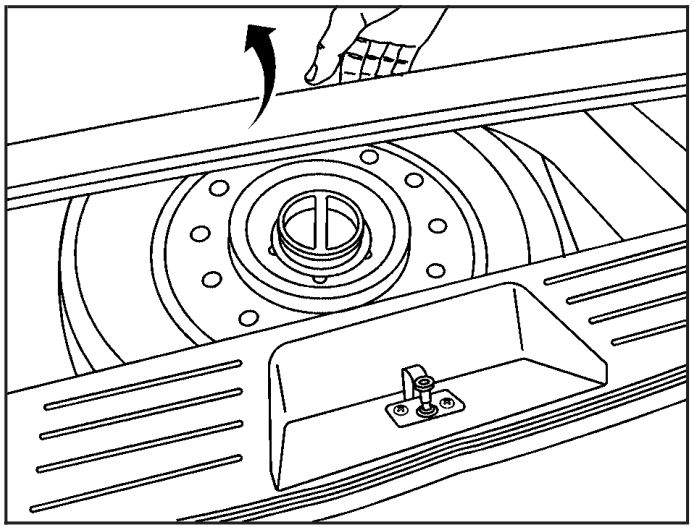

1. Lift the load floor up and pull it out of the vehicle and set it aside.

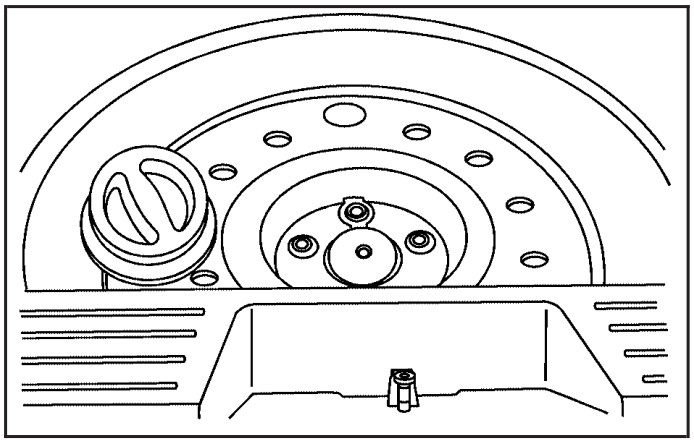

2. Remove the bolt retaining the spare tire.
3. Remove the compact spare tire. See *Compact Spare Tire on page 5-73* for more information.
4. Locate the jack and wheel wrench, which are located on the driver's side of the rear cargo area, behind an access door. Pull out the access door to reach them.

Downloaded from www.Manualslib.com manuals search engine

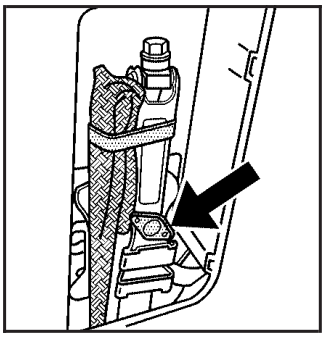

5. Remove the wing-bolt on the jack and then remove it.

6. Remove the hook and loop fastener straps holding the bag containing the wheel wrench. Remove the wheel wrench from the bag.
7. Fold out the socket portion of the wrench from the handle.

Removing the Flat Tire and Installing the Spare Tire

You must take off the wheel cover or hubcap, if equipped, to reach the wheel bolts.

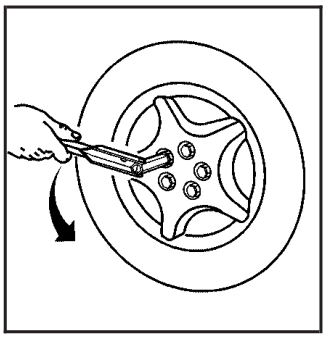

1. Loosen all five hex-shaped plastic caps by turning the wheel wrench counterclockwise. Do not try to remove plastic caps from the cover or center cap.

2. Pull the cover or center cap away from the wheel.
3. Use the wheel wrench to loosen all the wheel nuts. Do not remove them yet.

Downloaded from www.Manualslib.com manuals search engine

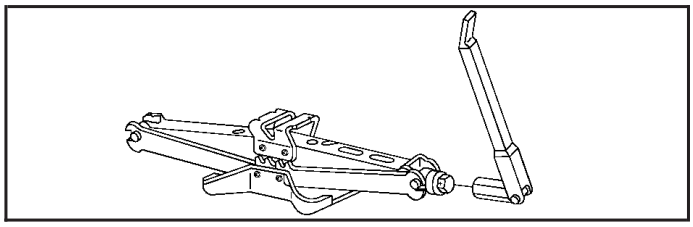

4. Attach the wheel wrench to the jack bolt head and rotate the wheel wrench clockwise. That will raise the lift head a little.
5. Place the jack near the flat tire.

Notice: **Make sure that the jack lift head is in the correct position or you may damage your vehicle. The repairs would not be covered by your warranty.**

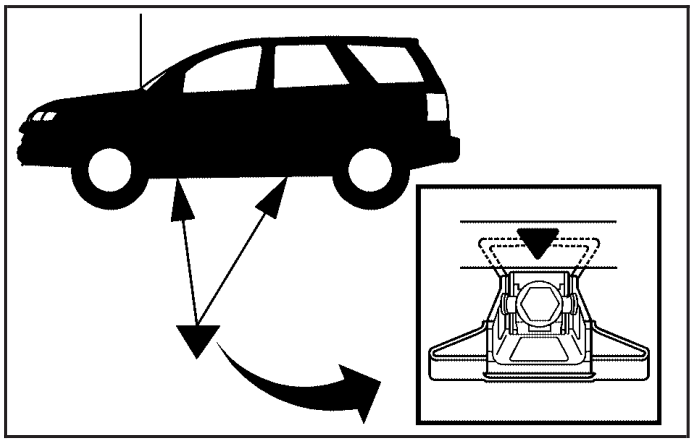

6. Find the arrow on the plastic lower body panel. Position the jack head under the metal jacking flange and not the plastic lower body panel.

Downloaded from www.Manualslib.com manuals search engine

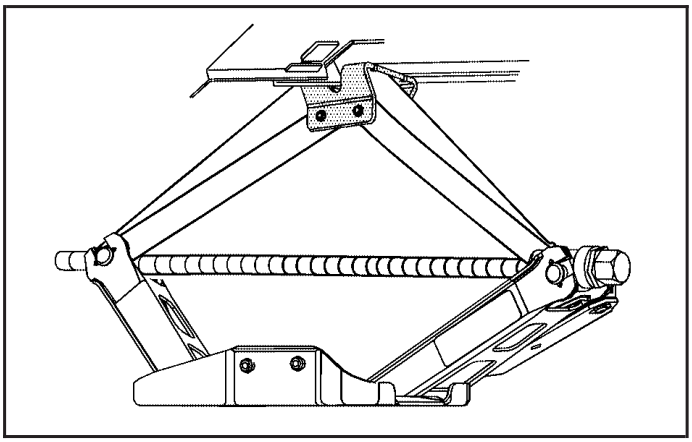

With the jack head positioned correctly on the metal jacking flange, it should look like this from underneath.

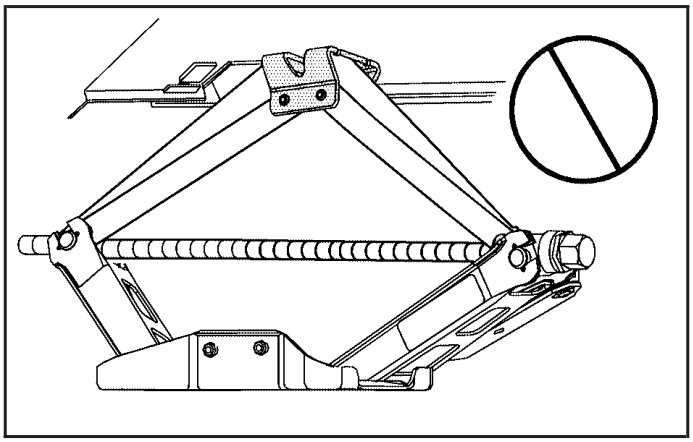

Do not lift the vehicle using the plastic lower body panel.

7. Put the compact spare tire near you.

⚠ CAUTION:

Getting under a vehicle when it is jacked up is dangerous. If the vehicle slips off the jack you could be badly injured or killed. Never get under a vehicle when it is supported only by a jack.

Downloaded from www.Manualslib.com manuals search engine

⚠ CAUTION:

Raising your vehicle with the jack improperly positioned can damage the vehicle and even make the vehicle fall. To help avoid personal injury and vehicle damage, be sure to fit the jack lift head into the proper location before raising the vehicle.

⚠ CAUTION:

Lifting a vehicle and getting under it to do maintenance or repairs is dangerous without the appropriate safety equipment and training. The jack provided with your vehicle is designed only for changing a flat tire. If it is used for anything else, you or others could be badly injured or killed if the vehicle slips off the jack. Use the jack provided with your vehicle only for changing a flat tire.

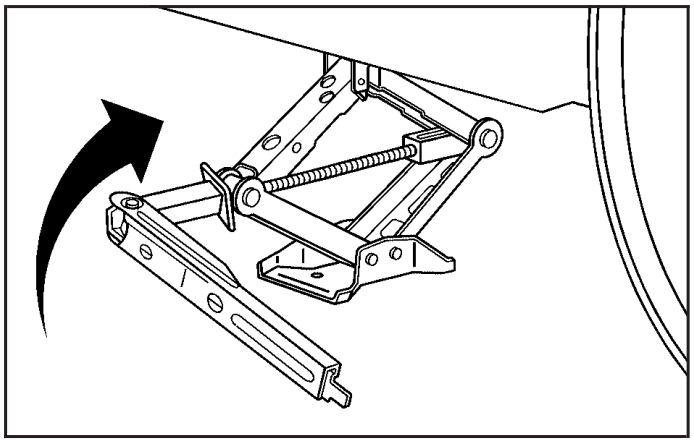

8. Raise the vehicle by turning the jack handle clockwise. Raise the vehicle far enough off the ground so there is enough room for the road tire to clear the ground.

Downloaded from www.Manualslib.com manuals search engine

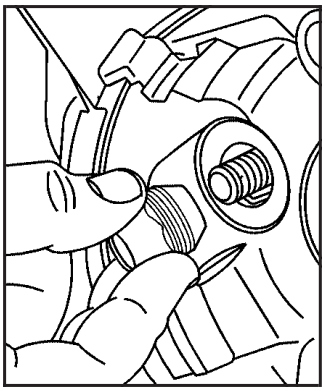

9. Remove all of the wheel nuts.

10. Remove the flat tire.

⚠ CAUTION:

Rust or dirt on the wheel, or on the parts to which it is fastened, can make the wheel nuts become loose after a time. The wheel could come off and cause an accident. When you change a wheel, remove any rust or dirt from the places where the wheel attaches to the vehicle. In an emergency, you can use a cloth or a paper towel to do this; but be sure to use a scraper or wire brush later, if needed, to get all the rust or dirt off.

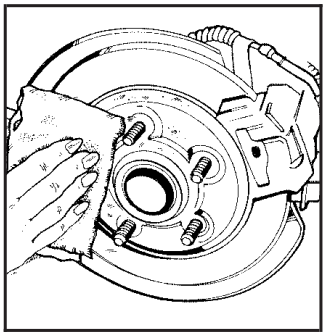

11. Remove any rust or dirt from the wheel bolts, mounting surfaces, and spare wheel.

Downloaded from www.Manualslib.com manuals search engine

12. Place the compact spare tire on the wheel-mounting surface.

⚠ CAUTION:

Never use oil or grease on studs or nuts. If you do, the nuts might come loose. Your wheel could fall off, causing a serious accident.

13. Reinstall the wheel nuts. Tighten each nut by hand until the wheel is held against the hub.

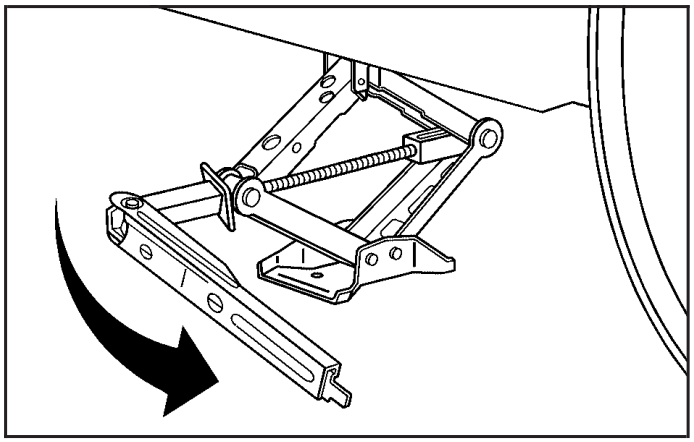

14. Lower the vehicle by turning the jack handle counterclockwise.

Downloaded from www.Manualslib.com manuals search engine

⚠ CAUTION:

Incorrect wheel nuts or improperly tightened wheel nuts can cause the wheel to come loose and even come off. This could lead to an accident. Be sure to use the correct wheel nuts. If you have to replace them, be sure to get new GM original equipment wheel nuts. Stop somewhere as soon as you can and have the nuts tightened with a torque wrench to the proper torque specification. See *Capacities and Specifications on page 5-88* for wheel nut torque specification.

Notice: **Improperly tightened wheel nuts can lead to brake pulsation and rotor damage. To avoid expensive brake repairs, evenly tighten the wheel nuts in the proper sequence and to the proper torque specification. See *Capacities and Specifications on page 5-88* for the wheel nut torque specification.**

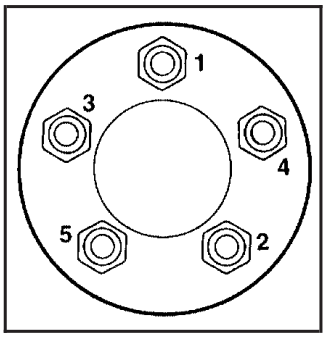

15. Tighten the wheel nuts firmly in a crisscross sequence, as shown.
16. Lower the jack all the way and remove the jack from under the vehicle.
17. Tighten the wheel nuts firmly with the wheel wrench.

When reinstalling the full plastic covers or center caps on the full-size tire, tighten all five plastic caps hand snug with the aid of the wheel wrench and tighten them with the wheel wrench an additional one-quarter of a turn.

Notice: **Wheel covers will not fit on your compact spare. If you try to put a wheel cover on the compact spare, you could damage the cover or the spare.**

Do not try to put a wheel cover on your compact spare tire. It will not fit. Store the wheel cover in the cargo area until you have the flat tire repaired or replaced.

Downloaded from www.Manualslib.com manuals search engine

Storing a Flat or Spare Tire and Tools

⚠ CAUTION:

Storing a jack, a tire, or other equipment in the passenger compartment of the vehicle could cause injury. In a sudden stop or collision, loose equipment could strike someone. Store all these in the proper place.

To store the flat or spare tire and tools, do the following:

1. Place the wheel wrench into the bag.
2. Use the hook and loop fastener straps to secure the bag to the jack.

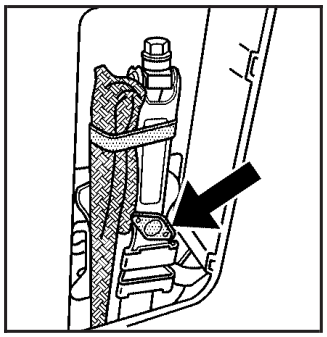

3. Install the jack in the left side panel of cargo area and secure with the wing bolt.

4. Remove the wheel stow rod from the left side of the floor compartment.

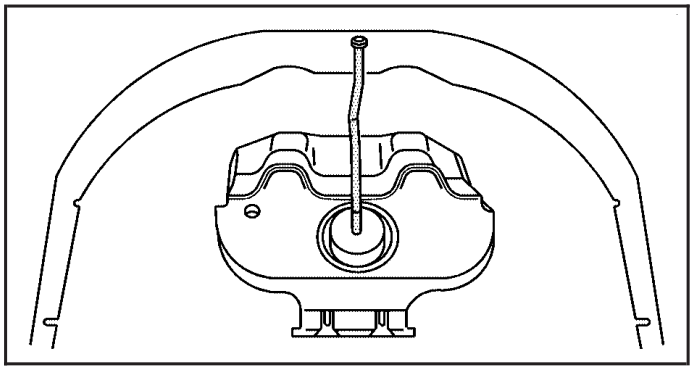

5. Screw the threaded wheel stow rod onto the spare tire bracket. The final position of the wheel stow rod must be rotated to the farthest forward position.

Downloaded from www.Manualslib.com manuals search engine

6. Replace the rear compartment storage panel/cover and/or table load floor over the wheel stow rod through the hole in the floor.
7. Place the flat, or damaged tire, face down, on the load floor with the threaded wheel stow rod sticking up through the center hole of the wheel.
8. Install the nut onto the wheel stow rod and tighten.

The compact spare is for temporary use only. Replace the compact spare tire with a full-size tire as soon as you can.

Compact Spare Tire

Although the compact spare tire was fully inflated when the vehicle was new, it can lose air after a time. Check the inflation pressure regularly. It should be 60 psi (420 kPa).

After installing the compact spare on the vehicle, stop as soon as possible and make sure the spare tire is correctly inflated. The compact spare is made to perform well at speeds up to 65 mph (105 km/h) for distances up to 3,000 miles (5 000 km), so you can finish your trip and have the full-size tire repaired or replaced at your convenience.

Of course, it is best to replace the spare with a full-size tire as soon as possible. The spare tire will last longer and be in good shape in case it is needed again.

Notice: **When the compact spare is installed, do not take your vehicle through an automatic car wash with guide rails. The compact spare can get caught on the rails. That can damage the tire and wheel, and maybe other parts of your vehicle.**

Do not use the compact spare on other vehicles.

And do not mix the compact spare tire or wheel with other wheels or tires. They will not fit. Keep the spare tire and its wheel together.

Notice: **Tire chains will not fit your compact spare. Using them can damage your vehicle and can damage the chains too. Do not use tire chains on your compact spare.**

Downloaded from www.Manualslib.com manuals search engine

Appearance Care

Cleaning the Inside of Your Vehicle

Your vehicle's interior will continue to look its best if it is cleaned often. Although not always visible, dust and dirt can accumulate on your upholstery. Dirt can damage carpet, fabric, leather, and plastic surfaces. Regular vacuuming is recommended to remove particles from your upholstery. It is important to keep your upholstery from becoming and remaining heavily soiled. Soils should be removed as quickly as possible. Your vehicle's interior may experience extremes of heat that could cause stains to set rapidly.

Lighter colored interiors may require more frequent cleaning. Use care because newspapers and garments that transfer color to your home furnishings may also transfer color to your vehicle's interior.

When cleaning your vehicle's interior, only use cleaners specifically designed for the surfaces being cleaned. Permanent damage may result from using cleaners on surfaces for which they were not intended. Use glass cleaner only on glass. Remove any accidental over-spray from other surfaces immediately. To prevent over-spray, apply cleaner directly to the cleaning cloth.

Notice: **If you use abrasive cleaners when cleaning glass surfaces on your vehicle, you could scratch the glass and/or cause damage to the rear window defogger. When cleaning the glass on your vehicle, use only a soft cloth and glass cleaner.**

Many cleaners contain solvents that may become concentrated in your vehicle's breathing space. Before using cleaners, read and adhere to all safety instructions on the label. While cleaning your vehicle's interior, maintain adequate ventilation by opening your vehicle's doors and windows.

Dust may be removed from small buttons and knobs using a small brush with soft bristles.

Your GM dealer has a product for cleaning your vehicle's glass. Should it become necessary, you can also obtain a product from your GM dealer to remove odors from your vehicle's upholstery.

Do not clean your vehicle using the following cleaners or techniques:

- Never use a knife or any other sharp object to remove a soil from any interior surface.
- Never use a stiff brush. It can cause damage to your vehicle's interior surfaces.
- Never apply heavy pressure or rub aggressively with a cleaning cloth. Use of heavy pressure can damage your interior and does not improve the effectiveness of soil removal.

Downloaded from www.Manualslib.com manuals search engine

- Use only mild, neutral-pH soaps. Avoid laundry detergents or dishwashing soaps with degreasers. Using too much soap will leave a residue that leaves streaks and attracts dirt. For liquid cleaners, about 20 drops per gallon (3.78 L) of water is a good guide.
- Do not heavily saturate your upholstery while cleaning.
- Damage to your vehicle's interior may result from the use of many organic solvents such as naptha, alcohol, etc.

Fabric/Carpet

Use a vacuum cleaner with a soft brush attachment frequently to remove dust and loose dirt. A canister vacuum with a beater bar in the nozzle may only be used on floor carpet and carpeted floor mats. For soils, always try to remove them first with plain water or club soda. Before cleaning, gently remove as much of the soil as possible using one of the following techniques:

- For liquids: gently blot the remaining soil with a paper towel. Allow the soil to absorb into the paper towel until no more can be removed.
- For solid dry soils: remove as much as possible and then vacuum.

To clean, use the following instructions:

1. Saturate a lint-free, clean white cloth with water or club soda.
2. Wring the cloth to remove excess moisture.
3. Start on the outside edge of the soil and gently rub toward the center. Continue cleaning, using a clean area of the cloth each time it becomes soiled.
4. Continue to gently rub the soiled area until the cleaning cloth remains clean.
5. If the soil is not completely removed, use a mild soap solution and repeat the cleaning process that was used with plain water.

If any of the soil remains, a commercial fabric cleaner or spot lifter may be necessary. When a commercial upholstery cleaner or spot lifter is to be used, test a small hidden area for colorfastness first. If the locally cleaned area gives any impression that a ring formation may result, clean the entire surface.

After the cleaning process has been completed, a paper towel can be used to blot excess moisture from the fabric or carpet.

Downloaded from www.Manualslib.com manuals search engine

Leather

A soft cloth dampened with water may be used to remove dust. If a more thorough cleaning is necessary, a soft cloth dampened with a mild soap solution can be used. Allow the leather to dry naturally. Do not use heat to dry. Never use steam to clean leather. Never use spot lifters or spot removers on leather. Many commercial leather cleaners and coatings that are sold to preserve and protect leather may permanently change the appearance and feel of your leather and are not recommended. Do not use silicone or wax-based products, or those containing organic solvents to clean your vehicle's interior because they can alter the appearance by increasing the gloss in a non-uniform manner. Never use shoe polish on your leather.

Instrument Panel, Vinyl, and Other Plastic Surfaces

A soft cloth dampened with water may be used to remove dust. If a more thorough cleaning is necessary, a clean soft cloth dampened with a mild soap solution can be used to gently remove dust and dirt. Never use spot lifters or removers on plastic surfaces. Many commercial cleaners and coatings that are sold to preserve and protect soft plastic surfaces may permanently change the appearance and feel of your interior and are not recommended. Do not use silicone or wax-based products, or those containing organic solvents to clean your vehicle's interior because they can alter the appearance by increasing the gloss in a non-uniform manner.

Some commercial products may increase gloss on your instrument panel. The increase in gloss may cause annoying reflections in the windshield and even make it difficult to see through the windshield under certain conditions.

Downloaded from www.Manualslib.com manuals search engine

Care of Safety Belts

Keep belts clean and dry.

> **⚠ CAUTION:**
>
> **Do not bleach or dye safety belts. If you do, it may severely weaken them. In a crash, they might not be able to provide adequate protection. Clean safety belts only with mild soap and lukewarm water.**

Weatherstrips

Silicone grease on weatherstrips will make them last longer, seal better, and not stick or squeak. Apply silicone grease with a clean cloth. During very cold, damp weather frequent application may be required. See *Recommended Fluids and Lubricants on page 6-11*.

Washing Your Vehicle

The paint finish on the vehicle provides beauty, depth of color, gloss retention, and durability.

The best way to preserve the vehicle's finish is to keep it clean by washing it often with lukewarm or cold water.

Do not wash the vehicle in the direct rays of the sun. Use a car washing soap. Do not use strong soaps or chemical detergents. Be sure to rinse the vehicle well, removing all soap residue completely. GM-approved cleaning products can be obtained from your dealer. See *Vehicle Care/Appearance Materials on page 5-81*. Do not use cleaning agents that are petroleum based, or that contain acid or abrasives. All cleaning agents should be flushed promptly and not allowed to dry on the surface, or they could stain. Dry the finish with a soft, clean chamois or an all-cotton towel to avoid surface scratches and water spotting.

High pressure car washes may cause water to enter the vehicle.

Downloaded from www.Manualslib.com manuals search engine

Cleaning Exterior Lamps/Lenses

Use only lukewarm or cold water, a soft cloth and a car washing soap to clean exterior lamps and lenses. Follow instructions under *Washing Your Vehicle on page 5-77*.

Finish Care

Occasional waxing or mild polishing of the vehicle by hand may be necessary to remove residue from the paint finish. GM-approved cleaning products can be obtained from your dealer. See *Vehicle Care/Appearance Materials on page 5-81*.

Notice: **Machine compounding or aggressive polishing on a basecoat/clearcoat paint finish may damage it. Use only non-abrasive waxes and polishes that are made for a basecoat/clearcoat paint finish on your vehicle.**

The vehicle has a “basecoat/clearcoat” paint finish. The clearcoat gives more depth and gloss to the colored basecoat. Always use waxes and polishes that are non-abrasive and made for a basecoat/clearcoat paint finish.

Foreign materials such as calcium chloride and other salts, ice melting agents, road oil and tar, tree sap, bird droppings, chemicals from industrial chimneys, etc., can damage the vehicle’s finish if they remain on painted surfaces. Wash the vehicle as soon as possible. If necessary, use non-abrasive cleaners that are marked safe for painted surfaces to remove foreign matter.

Exterior painted surfaces are subject to aging, weather, and chemical fallout that can take their toll over a period of years. To help keep the paint finish looking new, keep the vehicle in a garage or covered whenever possible.

Windshield and Wiper Blades

If the windshield is not clear after using the windshield washer, or if the wiper blade chatters when running, wax, sap, or other material may be on the blade or windshield.

Clean the outside of the windshield with a glass cleaning liquid or powder and water solution. The windshield is clean if beads do not form when it is rinsed with water.

Downloaded from www.Manualslib.com manuals search engine

Grime from the windshield will stick to the wiper blades and affect their performance. Clean the blade by wiping vigorously with a cloth soaked in full-strength windshield washer solvent. Then rinse the blade with water.

Check the wiper blades and clean them as necessary; replace blades that look worn.

Aluminum Wheels

Notice: **If you use strong soaps, chemicals, abrasive polishes, cleaners, brushes, or cleaners that contain acid on aluminum or chrome-plated wheels, you could damage the surface of the wheel(s). The repairs would not be covered by your warranty. Use only GM-approved cleaners on aluminum or chrome-plated wheels.**

Keep the wheels clean using a soft clean cloth with mild soap and water. Rinse with clean water. After rinsing thoroughly, dry with a soft clean towel. A wax may then be applied.

Notice: **Using chrome polish on aluminum wheels could damage the wheels. The repairs would not be covered by your warranty. Use chrome polish on chrome wheels only.**

The surface of these wheels is similar to the painted surface of the vehicle. Do not use strong soaps, chemicals, abrasive polishes, abrasive cleaners, cleaners with acid, or abrasive cleaning brushes on them because the surface could be damaged. Do not use chrome polish on aluminum wheels.

Notice: **If you drive your vehicle through an automatic car wash that has silicone carbide tire cleaning brushes, you could damage the aluminum or chrome-plated wheels. The repairs would not be covered by your warranty. Never drive a vehicle equipped with aluminum or chrome-plated wheels through an automatic car wash that uses silicone carbide tire cleaning brushes.**

Do not take the vehicle through an automatic car wash that has silicone carbide tire cleaning brushes. These brushes can also damage the surface of these wheels.

Downloaded from www.Manualslib.com manuals search engine

Tires

To clean the tires, use a stiff brush with tire cleaner.

Notice: **Using petroleum-based tire dressing products on your vehicle may damage the paint finish and/or tires. When applying a tire dressing, always wipe off any overspray from all painted surfaces on your vehicle.**

Sheet Metal Damage

If the vehicle is damaged and requires sheet metal repair or replacement, make sure the body repair shop applies anti-corrosion material to parts repaired or replaced to restore corrosion protection.

Original manufacturer replacement parts will provide the corrosion protection while maintaining the warranty.

Finish Damage

Any stone chips, fractures or deep scratches in the finish should be repaired right away. Bare metal will corrode quickly and may develop into major repair expense.

Minor chips and scratches can be repaired with touch-up materials available from your GM dealer. Larger areas of finish damage can be corrected in your GM dealer's body and paint shop.

Underbody Maintenance

Chemicals used for ice and snow removal and dust control can collect on the underbody. If these are not removed, corrosion and rust can develop on the underbody parts such as fuel lines, frame, floor pan, and exhaust system even though they have corrosion protection.

At least every spring, flush these materials from the underbody with plain water. Clean any areas where mud and debris can collect. Dirt packed in close areas of the frame should be loosened before being flushed. Your dealer or an underbody car washing system can do this for you.

Chemical Paint Spotting

Some weather and atmospheric conditions can create a chemical fallout. Airborne pollutants can fall upon and attack painted surfaces on the vehicle. This damage can take two forms: blotchy, ring-shaped discolorations, and small, irregular dark spots etched into the paint surface.

Although no defect in the paint job causes this, GM will repair, at no charge to the owner, the surfaces of new vehicles damaged by this fallout condition within 12 months or 12,000 miles (20 000 km) of purchase, whichever occurs first.

Downloaded from www.Manualslib.com manuals search engine

Vehicle Care/Appearance Materials

Description	Usage
Polishing Cloth Wax-Treated	Interior and exterior polishing cloth.
Tar and Road Oil Remover	Removes tar, road oil, and asphalt.
Chrome Cleaner and Polish	Use on chrome or stainless steel.
White Sidewall Tire Cleaner	Removes soil and black marks from whitewalls.
Vinyl Cleaner	Cleans vinyl.
Glass Cleaner	Removes dirt, grime, smoke and fingerprints.
Chrome and Wire Wheel Cleaner	Removes dirt and grime from chrome wheels and wire wheel covers.
Finish Enhancer	Removes dust, fingerprints, and surface contaminants. Spray on and wipe off.

Description	Usage
Swirl Remover Polish	Removes swirl marks, fine scratches, and other light surface contamination.
Cleaner Wax	Removes light scratches and protects finish.
Foaming Tire Shine Low Gloss	Cleans, shines, and protects in one step. No wiping necessary.
Wash Wax Concentrate	Medium foaming shampoo. Cleans and lightly waxes. Biodegradable and phosphate free.
Spot Lifter	Quickly removes spots and stains from carpets, vinyl, and cloth upholstery.
Odor Eliminator	Odorless spray odor eliminator used on fabrics, vinyl, leather and carpet.

Downloaded from www.Manualslib.com manuals search engine

Vehicle Identification

Vehicle Identification Number (VIN)

This is the legal identifier for your vehicle. It appears on a plate in the front corner of the instrument panel, on the driver's side. You can see it if you look through the windshield from outside your vehicle. The VIN also appears on the Vehicle Certification and Service Parts labels and the certificates of title and registration.

Engine Identification

The eighth character in the VIN is the engine code. This code will help you identify your vehicle's engine, specifications, and replacement parts.

Service Parts Identification Label

You will find this label on the inside of the glove box. It is very helpful if you ever need to order parts. On this label, you will find the following:

- VIN
- Model designation
- Paint information
- Production options and special equipment

Be sure that this label is not removed from the vehicle.

Downloaded from www.Manualslib.com manuals search engine

Electrical System

Add-On Electrical Equipment

Notice: **Don't add anything electrical to your vehicle unless you check with your dealer first. Some electrical equipment can damage your vehicle and the damage wouldn't be covered by your warranty. Some add-on electrical equipment can keep other components from working as they should.**

Your vehicle has an airbag system. Before attempting to add anything electrical to your vehicle, see *Servicing Your Airbag-Equipped Vehicle on page 1-61*.

Windshield Wiper Fuses

The windshield wiper motor is protected by a circuit breaker and a fuse. If the motor overheats due to heavy snow or ice, the wiper will stop until the motor cools. If the overload is caused by some electrical problem, have it fixed.

Power Windows and Other Power Options

Circuit breakers in the fuse panel protect the power seats. When the current load is too heavy, the circuit breaker opens and closes, protecting the circuit until the problem is fixed.

Fuses and Circuit Breakers

The wiring circuits in your vehicle are protected from short circuits by fuses. This greatly reduces the chance of circuit overload and fire caused by electrical problems.

There are two fuse blocks — the underhood fuse block, and the instrument panel fuse block.

To identify and check fuses and relays, refer to the Fuse Usage Chart on the inside surface of the fuse panel door.

Downloaded from www.Manualslib.com manuals search engine

Instrument Panel Fuse Block

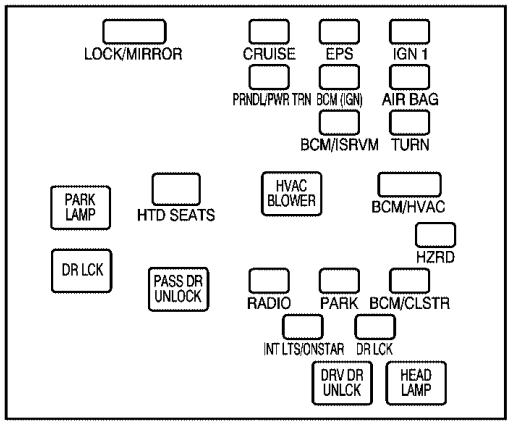

The instrument panel fuse block is located on the passenger's side of the center console, to the left of the glove box near the floor.

Fuses	Usage
LOCK/MIRROR	Door Lock, Power Mirror
CRUISE	Cruise Control System
EPS	Electric Power Steering
IGN 1	Switches, Instrument Panel Cluster
PRNDL/PWR TRN	PRNDL/Powertrain
BCM (IGN)	Body Control Module
AIRBAG	Airbag System
BCM/ISRVM	Body Control Module, Inside Rearview Mirror
TURN	Turn Signals
HTD SEATS	Heated Seats
BCM/HVAC	Body Control Module, Heating, Ventilation and Air Conditioning
HZRD	Hazard Warning Flashers
RADIO	Radio

Downloaded from www.Manualslib.com manuals search engine

Fuses	Usage
LOCK/MIRROR	Door Lock, Power Mirror
PARK	Parking Lamps
BCM/CLSTR	Body Control Module, Instrument Panel Cluster
INT LTS/ ONSTAR®	Interior Lights/OnStar®
DR LCK	Door Locks

Relays	Usage
PARK LAMP	Parking Lamps Relay
HVAC BLOWER	Heating, Ventilation and Air Conditioning Blower Motor
DR LCK	Door Locks Relay
PASS DR UNLOCK	Passenger Door Unlock Relay
DRV DR UNLCK	Driver Door Unlock Relay
HEAD LAMP	Headlamps

Engine Compartment Fuse Block

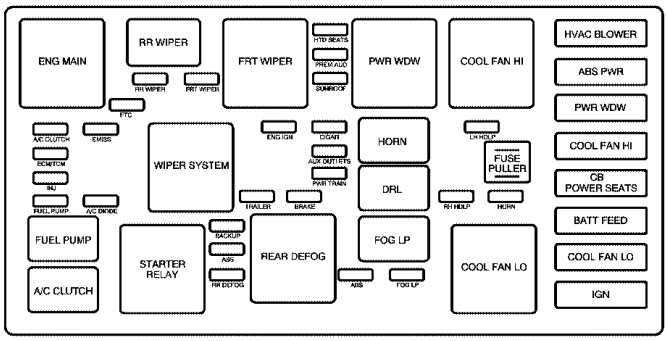

The engine compartment fuse block is located on the driver's side of the engine compartment.

See *Engine Compartment Overview on page 5-12* for more information on location.

Fuses	Usage
HTD SEATS	Heated Seats
HVAC BLOWER	Heating, Ventilation, Air Conditioning Blower Control

Downloaded from www.Manualslib.com manuals search engine

Fuses	Usage
HTD SEATS	Heated Seats
PREM AUD	Premium Audio System, Amplifier
ABS PWR	Anti-lock Brake System
RR WIPER	Rear Window Wiper
FRT WIPER	Front Window Wiper
SUNROOF	Sunroof
ETC	Electronic Throttle Control
PWR WDW	Power Windows
A/C CLUTCH	Air Conditioning Clutch
EMISS	Emissions
ENG IGN	Engine Ignition
CIGAR	Cigarette Lighter
LH HDLP	Driver's Side Headlamp
COOL FAN HI	Cooling Fan High

Fuses	Usage
HTD SEATS	Heated Seats
ECM/TCM	Engine Control Module, Transaxle Control Module
AUX OUTLETS	Accessory Power Outlets
FUSE PULLER	Fuse Puller
INJ	Fuel Injectors
PWR TRAIN	Powertrain
FUEL PUMP	Fuel Pump
A/C DIODE	Air Conditioning Diode
TRAILER	Trailer Lighting
BRAKE	Brake System
RH HDLP	Passenger's Side Headlamp
HORN	Horn
BACKUP	Back-up Lamps

Downloaded from www.Manualslib.com manuals search engine

Fuses	Usage
HTD SEATS	Heated Seats
BATT FEED	Battery
ABS	Anti-lock Brake System
COOL FAN LO	Cooling Fan Low
RR DEFOG	Rear Window Defogger
ABS	Anti-lock Brake System
FOG LP	Fog Lamps
IGN	Ignition Switch

Relays	Usage
ENG MAIN	Engine Relay
RR WIPER	Rear Window Wiper Relay
FRT WIPER	Front Window Wiper Relay
PWR WDW	Power Windows Relay
COOL FAN HI	Cooling Fan High Relay

Relays	Usage
WIPER SYSTEM	Wiper System Relay
HORN	Horn Relay
DRL	Daytime Running Lamps Relay
FUEL PUMP	Fuel Pump Relay
STARTER RELAY	Starter Relay
REAR DEFOG	Rear Window Defogger Relay
FOG LP	Fog Lamp Relay
COOL FAN LO	Cooling Fan Low Relay
A/C CLUTCH	Air Conditioning Clutch Relay

Circuit Breaker	Usage
POWER SEATS	Power Seats

Downloaded from www.Manualslib.com manuals search engine

Capacities and Specifications

The following approximate capacities are given in English and metric conversions. See *Recommended Fluids and Lubricants on page 6-11* for more information.

Application	Capacities	
	English	Metric
Cooling System	10.5 qt	9.9 L
Engine Oil with Filter	4.0 qt	3.8 L
Fuel Tank	16.6 gal	62.8 L
Transaxle Fluid	4.5 qt	4.2 L
Wheel Nut Torque	100 lb ft	140 N•m
All capacities are approximate. When adding, be sure to fill to the approximate level, as recommended in this manual. Recheck fluid level after filling.		

Engine Specifications

Engine	VIN Code	Transaxle	Spark Plug Gap
3.4L V6	F	Automatic	0.060 inches (1.52 mm)

Downloaded from www.Manualslib.com manuals search engine

Section 6 Maintenance Schedule

Maintenance Schedule 6-2
Introduction 6-2
Maintenance Requirements 6-2
Your Vehicle and the Environment 6-2
Using the Maintenance Schedule 6-2
Scheduled Maintenance 6-4
Additional Required Services 6-6
Maintenance Footnotes 6-7
Owner Checks and Services 6-8
At Each Fuel Fill 6-8
At Least Once a Month 6-9
At Least Once a Year 6-9
Recommended Fluids and Lubricants 6-11
Normal Maintenance Replacement Parts 6-13
Maintenance Record 6-14

Downloaded from www.Manualslib.com manuals search engine

Maintenance Schedule

Introduction

Important: Keep engine oil at the proper level and change as recommended.

Have you purchased the GM Protection Plan? The Plan supplements your new vehicle warranties. See your Warranty and Owner Assistance booklet or your dealer for details.

Maintenance Requirements

Notice: **Maintenance intervals, checks, inspections, replacement parts, and recommended fluids and lubricants as prescribed in this manual are necessary to keep your vehicle in good working condition. Any damage caused by failure to follow scheduled maintenance may not be covered by warranty.**

Your Vehicle and the Environment

Proper vehicle maintenance not only helps to keep your vehicle in good working condition, but also helps the environment. All recommended maintenance is important. Improper vehicle maintenance can even affect the quality of the air we breathe. Improper fluid levels or the wrong tire inflation can increase the level of emissions from your vehicle. To help protect our environment, and to keep your vehicle in good condition, be sure to maintain your vehicle properly.

Using the Maintenance Schedule

We at General Motors want to help you keep your vehicle in good working condition. But we do not know exactly how you will drive it. You may drive very short distances only a few times a week. Or you may drive long distances all the time in very hot, dusty weather. You may use your vehicle in making deliveries. Or you may drive it to work, to do errands, or in many other ways.

Because of all the different ways people use their vehicles, maintenance needs vary. You may need more frequent checks and replacements. So please read the following and note how you drive. If you have any questions on how to keep your vehicle in good condition, see your GM Goodwrench® dealer.

Downloaded from www.Manualslib.com manuals search engine

This schedule is for vehicles that:

- carry passengers and cargo within recommended limits. You will find these limits on the tire and loading information label. See *Loading Your Vehicle on page 4-31*.
- are driven on reasonable road surfaces within legal driving limits.
- use the recommended fuel. See *Gasoline Octane on page 5-5*.

The services in *Scheduled Maintenance on page 6-4* should be performed when indicated. See *Additional Required Services on page 6-6* and *Maintenance Footnotes on page 6-7* for further information.

⚠ CAUTION:

Performing maintenance work on a vehicle can be dangerous. In trying to do some jobs, you can be seriously injured. Do your own maintenance work only if you have the required know-how and the proper tools and equipment for the job. If you have any doubt, see your GM Goodwrench® dealer to have a qualified technician do the work.

Some maintenance services can be complex. So, unless you are technically qualified and have the necessary equipment, you should have your GM Goodwrench® dealer do these jobs.

When you go to your GM Goodwrench® dealer for your service needs, you will know that GM-trained and supported service technicians will perform the work using genuine GM parts.

If you want to purchase service information, see *Service Publications Ordering Information on page 7-15*.

Owner Checks and Services on page 6-8 tells you what should be checked, when to check it, and what you can easily do to help keep your vehicle in good condition.

The proper replacement parts, fluids, and lubricants to use are listed in *Recommended Fluids and Lubricants on page 6-11* and *Normal Maintenance Replacement Parts on page 6-13*. When your vehicle is serviced, make sure these are used. All parts should be replaced and all necessary repairs done before you or anyone else drives the vehicle. We recommend the use of genuine GM parts.

Downloaded from www.Manualslib.com manuals search engine

Scheduled Maintenance

When the change engine oil message comes on, it means that service is required for your vehicle. Have your vehicle serviced as soon as possible within the next 600 miles (1 000 km). It is possible that, if you are driving under the best conditions, the engine oil life system may not indicate that vehicle service is necessary for over a year. However, your engine oil and filter must be changed at least once a year and at this time the system must be reset. Your GM Goodwrench® dealer has GM-trained service technicians who will perform this work using genuine GM parts and reset the system.

If the engine oil life system is ever reset accidentally, you must service your vehicle within 3,000 miles (5 000 km) since your last service. Remember to reset the oil life system whenever the oil is changed. See *Engine Oil Life System on page 5-16* for information on the Engine Oil Life System and resetting the system.

When the change engine oil message appears, certain services, checks, and inspections are required. Required services are described in the following for “Maintenance I” and “Maintenance II.” Generally, it is recommended that your first service be Maintenance I, your second service be Maintenance II, and that you alternate Maintenance I and Maintenance II thereafter. However, in some cases, Maintenance II may be required more often.

Maintenance I — Use Maintenance I if the change engine oil message comes on within 10 months since the vehicle was purchased or Maintenance II was performed.

Maintenance II — Use Maintenance II if the previous service performed was Maintenance I. Always use Maintenance II whenever the message comes on 10 months or more since the last service or if the message has not come on at all for one year.

Downloaded from www.Manualslib.com manuals search engine

Scheduled Maintenance

Service	Maintenance I	Maintenance II
Change engine oil and filter. See *Engine Oil on page 5-13*. Reset oil life system. See *Engine Oil Life System on page 5-16*. *An Emission Control Service.*	•	•
Visually check for any leaks or damage. *See footnote (k).*	•	•
Inspect engine air cleaner filter. If necessary, replace filter. See *Engine Air Cleaner/Filter on page 5-18*. *See footnote (l).*		•
Rotate tires and check inflation pressures and wear. See *Tire Inspection and Rotation on page 5-54* and “Tire Wear Inspection” in *At Least Once a Month on page 6-9*.	•	•
Inspect brake system. *See footnote (a).*	•	•
Check engine coolant and windshield washer fluid levels and add fluid as needed.	•	•
Perform any needed additional services. See “Additional Required Services” in this section.	•	•
Inspect suspension and steering components. *See footnote (b).*		•
Inspect engine cooling system. *See footnote (c).*		•
Inspect wiper blades. *See footnote (d).*		•
Inspect restraint system components. *See footnote (e).*		•
Lubricate body components. *See footnote (f).*		•
Check transaxle fluid level and add fluid as needed.		•
Replace passenger compartment air filter. *See footnote (g).*		•
Inspect throttle system. *See footnote (j).*		•

Downloaded from www.Manualslib.com manuals search engine

Additional Required Services

The following services should be performed at the first maintenance service (I or II) after the indicated miles (kilometers) shown for each item.

Additional Required Services

Service and Miles (Kilometers)	25,000 (41 500)	50,000 (83 000)	75,000 (125 000)	100,000 (166 000)	125,000 (207 500)	150,000 (240 000)
Inspect fuel system for damage or leaks.	•	•	•	•	•	•
Inspect exhaust system for loose or damaged components.	•	•	•	•	•	•
Replace engine air cleaner filter. See *Engine Air Cleaner/Filter on page 5-18*.		•		•		•
Change automatic transaxle fluid (severe service). *See footnote (h).*		•		•		•
Change automatic transaxle fluid (normal service).				•		
Replace spark plugs and inspect spark plug wires. *An Emission Control Service.*				•		
Engine cooling system service (or every five years, whichever occurs first). *An Emission Control Service. See footnote (i).*						•
Inspect engine accessory drive belt. *An Emission Control Service. See footnote (m).*						•

Downloaded from www.Manualslib.com manuals search engine

Maintenance Footnotes

(a) *Visually inspect brake lines and hoses for proper hook-up, binding, leaks, cracks, chafing, etc. Inspect disc brake pads for wear and rotors for surface condition. Inspect drum brake linings/shoes for wear or cracks. Inspect other brake parts, including drums, wheel cylinders, calipers, parking brake, etc. Check parking brake adjustment.*

(b) *Visually inspect front and rear suspension and steering system for damaged, loose, or missing parts, signs of wear. Inspect power steering cables for proper hook-up, binding, cracks, chafing, etc.*

(c) *Visually inspect hoses and have them replaced if they are cracked, swollen, or deteriorated. Inspect all pipes, fittings and clamps; replace with genuine GM parts as needed. To help ensure proper operation, a pressure test of the cooling system and pressure cap and cleaning the outside of the radiator and air conditioning condenser is recommended at least once a year.*

(d) *Visually inspect wiper blades for wear or cracking. Replace wiper blades that appear worn or damaged or that streak or miss areas of the windshield.*

(e) *Make sure the safety belt reminder light and all your belts, buckles, latch plates, retractors, and anchorages are working properly. Look for any other loose or damaged safety belt system parts. If you see anything that might keep a safety belt system from doing its job, have it repaired. Have any torn or frayed safety belts replaced. Also look for any opened or broken airbag coverings, and have them repaired or replaced. The airbag system does not need regular maintenance.*

(f) *Lubricate all key lock cylinders, hood latch assemblies, secondary latches, pivots, spring anchor and release pawl, hood and door hinges, rear folding seats, and liftgate hinges. More frequent lubrication may be required when exposed to a corrosive environment. Applying silicone grease on weatherstrips with a clean cloth will make them last longer, seal better, and not stick or squeak.*

(g) *If you drive regularly under dusty conditions, the filter may require replacement more often.*

(h) *Change automatic transaxle fluid if the vehicle is mainly driven under one or more of these conditions:*

- *In heavy city traffic where the outside temperature regularly reaches 90°F (32°C) or higher.*
- *In hilly or mountainous terrain.*
- *When doing frequent trailer towing.*
- *Uses such as found in taxi, police, or delivery service.*

Downloaded from www.Manualslib.com manuals search engine

(i) *Drain, flush, and refill cooling system. This service can be complex; you should have your dealer perform this service. See Engine Coolant on page 5-21 for what to use. Inspect hoses. Clean radiator, condenser, pressure cap, and filler neck. Pressure test the cooling system and pressure cap.*

(j) *Check system for interference or binding and for damaged or missing parts. Replace parts as needed. Replace any components that have high effort or excessive wear. Do not lubricate accelerator or cruise control cables.*

(k) *A fluid loss in any vehicle system could indicate a problem. Have the system inspected and repaired and the fluid level checked. Add fluid if needed.*

(l) *If you drive regularly under dusty conditions, inspect the filter at each engine oil change.*

(m) *Visually inspect belt for fraying, excessive cracks, or obvious damage. Replace belt if necessary.*

Owner Checks and Services

These owner checks and services should be performed at the intervals specified to help ensure the safety, dependability, and emission control performance of your vehicle. Your GM Goodwrench® dealer can assist you with these checks and services.

Be sure any necessary repairs are completed at once. Whenever any fluids or lubricants are added to your vehicle, make sure they are the proper ones, as shown in *Recommended Fluids and Lubricants on page 6-11*.

At Each Fuel Fill

It is important to perform these underhood checks at each fuel fill.

Engine Oil Level Check

Check the engine oil level and add the proper oil if necessary. See *Engine Oil on page 5-13* for further details.

Notice: **It is important to check your oil regularly and keep it at the proper level. Failure to keep your engine oil at the proper level can cause damage to your engine not covered by your warranty.**

Downloaded from www.Manualslib.com manuals search engine

Engine Coolant Level Check

Check the engine coolant level and add DEX-COOL® coolant mixture if necessary. See *Engine Coolant on page 5-21* for further details.

Windshield Washer Fluid Level Check

Check the windshield washer fluid level in the windshield washer fluid reservoir and add the proper fluid if necessary.

At Least Once a Month

Tire Inflation Check

Visually inspect your vehicle's tires and make sure they are inflated to the correct pressures. Do not forget to check the spare tire. See *Tires on page 5-46* for further details. Check to make sure the spare tire is stored securely. See *Changing a Flat Tire on page 5-62*.

Tire Wear Inspection

Tire rotation may be required for high mileage highway drivers prior to the Engine Oil Life System service notification. Check the tires for wear and, if necessary, rotate the tires. See *Tire Inspection and Rotation on page 5-54*.

At Least Once a Year

Starter Switch Check

⚠ CAUTION:

When you are doing this inspection, the vehicle could move suddenly. If the vehicle moves, you or others could be injured.

1. Before you start, be sure you have enough room around the vehicle.
2. Firmly apply both the parking brake and the regular brake. See *Parking Brake on page 2-22*.

   Do not use the accelerator pedal, and be ready to turn off the engine immediately if it starts.
3. Try to start the engine in each gear. The vehicle should start only in PARK (P) or NEUTRAL (N). If the vehicle starts in any other position, contact your GM Goodwrench® dealer for service.

Downloaded from www.Manualslib.com manuals search engine

Automatic Transaxle Shift Lock Control System Check

⚠ CAUTION:

When you are doing this inspection, the vehicle could move suddenly. If the vehicle moves, you or others could be injured.

1. Before you start, be sure you have enough room around the vehicle. It should be parked on a level surface.
2. Firmly apply the parking brake. See *Parking Brake on page 2-22*.

   Be ready to apply the regular brake immediately if the vehicle begins to move.
3. With the engine off, turn the ignition to RUN, but do not start the engine. Without applying the regular brake, try to move the shift lever out of PARK (P) with normal effort. If the shift lever moves out of PARK (P), contact your GM Goodwrench® dealer for service.

Ignition Transaxle Lock Check

While parked, and with the parking brake set, try to turn the ignition to LOCK in each shift lever position.

- The ignition should turn to LOCK only when the shift lever is in PARK (P).
- The key should come out only in LOCK.

Contact your GM Goodwrench® dealer if service is required.

Parking Brake and Automatic Transaxle Park (P) Mechanism Check

⚠ CAUTION:

When you are doing this check, your vehicle could begin to move. You or others could be injured and property could be damaged. Make sure there is room in front of your vehicle in case it begins to roll. Be ready to apply the regular brake at once should the vehicle begin to move.

Downloaded from www.Manualslib.com manuals search engine

Park on a fairly steep hill, with the vehicle facing downhill. Keeping your foot on the regular brake, set the parking brake.

- To check the parking brake's holding ability: With the engine running and transaxle in NEUTRAL (N), slowly remove foot pressure from the regular brake pedal. Do this until the vehicle is held by the parking brake only.
- To check the PARK (P) mechanism's holding ability: With the engine running, shift to PARK (P). Then release the parking brake followed by the regular brake.

Contact your GM Goodwrench® dealer if service is required.

Underbody Flushing Service

At least every spring, use plain water to flush any corrosive materials from the underbody. Take care to clean thoroughly any areas where mud and other debris can collect.

Recommended Fluids and Lubricants

Fluids and lubricants identified below by name, part number, or specification may be obtained from your dealer.

Usage	Fluid/Lubricant
Engine Oil	Engine oil which meets GM Standard GM6094M and displays the American Petroleum Institute Certified for Gasoline Engines starburst symbol. GM Goodwrench® oil meets all the requirements for your vehicle. To determine the proper viscosity for your vehicle's engine, see *Engine Oil on page 5-13*.
Engine Coolant	50/50 mixture of clean, drinkable water and use only DEX-COOL® Coolant. See *Engine Coolant on page 5-21*.
Hydraulic Brake System	Delco® Supreme 11 Brake Fluid or equivalent DOT-3 brake fluid.

Downloaded from www.Manualslib.com manuals search engine

Usage	Fluid/Lubricant
Windshield Washer	GM Optikleen® Washer Solvent.
Automatic Transaxle	Use only T-IV Automatic Transmission Fluid (GM Part No. U.S. 88900925, in Canada 22689186). See *Automatic Transaxle Fluid on page 5-21*.
Key Lock Cylinders	Multi-Purpose Lubricant, Superlube (GM Part No. U.S. 12346241, in Canada 10953474).
Carrier Assembly — Differential (Rear Drive Module) and Transfer Case (Power Transfer Unit)	VERSATRAK® Fluid (GM Part No. U.S. 12378514, in Canada 88901045).

Usage	Fluid/Lubricant
Hood Latch Assembly, Secondary Latch, Pivots, Spring Anchor, and Release Pawl	Lubriplate Lubricant Aerosol (GM Part No. U.S. 12346293, in Canada 992723) or lubricant meeting requirements of NLGI #2, Category LB or GC-LB.
Hood and Door Hinges, Rear Folding Seat	Multi-Purpose Lubricant, Superlube (GM Part No. U.S. 12346241, in Canada 10953474).
Weatherstrip Conditioning	Dielectric Silicone Grease (GM Part No. U.S. 12345579, in Canada 992887).

Downloaded from www.Manualslib.com manuals search engine

Normal Maintenance Replacement Parts

Replacement parts identified below by name, part number, or specification can be obtained from your dealer.

Part	GM Part Number	ACDelco® Part Number
Engine Air Cleaner/Filter	22676970	—
Engine Oil Filter	25010792	PF47
Passenger Compartment Air Filter Element	15781507	CF137
Replacement Battery	15104967	75-6YR
Spark Plugs	12568387	41-101
Windshield Wiper Blades		
Driver's Side – 24 inches (60.0 cm)	22703508	—
Passenger's Side – 19 inches (47.5 cm)	22703507	—
Rear – 11 inches (28.0 cm)	89025824	—

Downloaded from www.Manualslib.com manuals search engine

Maintenance Record

After the scheduled services are performed, record the date, odometer reading, who performed the service, and the type of services performed in the boxes provided. See *Maintenance Requirements on page 6-2*. Any additional information from *Owner Checks and Services on page 6-8* can be added on the following record pages. You should retain all maintenance receipts.

Maintenance Record

Date	Odometer Reading	Serviced By	Maintenance I or Maintenance II	Services Performed

Downloaded from www.Manualslib.com manuals search engine

Maintenance Record (cont'd)

Date	Odometer Reading	Serviced By	Maintenance I or Maintenance II	Services Performed

Downloaded from www.Manualslib.com manuals search engine

Maintenance Record (cont'd)

Date	Odometer Reading	Serviced By	Maintenance I or Maintenance II	Services Performed

Downloaded from www.Manualslib.com manuals search engine

Section 7 Customer Assistance and Information

Customer Assistance and Information 7-2
Customer Satisfaction Procedure 7-2
Online Owner Center 7-4
Customer Assistance for Text Telephone (TTY) Users 7-4
Customer Assistance Offices 7-4
GM Mobility Reimbursement Program 7-6
Roadside Assistance Program 7-6
Courtesy Transportation 7-8
Vehicle Data Collection and Event Data Recorders 7-10
Collision Damage Repair 7-11
Reporting Safety Defects 7-14
Reporting Safety Defects to the United States Government 7-14
Reporting Safety Defects to the Canadian Government 7-15
Reporting Safety Defects to General Motors 7-15
Service Publications Ordering Information 7-15

Downloaded from www.Manualslib.com manuals search engine

Customer Assistance and Information

Customer Satisfaction Procedure

Your satisfaction and goodwill are important to your dealer and to Pontiac. Normally, any concerns with the sales transaction or the operation of your vehicle will be resolved by your dealer's sales or service departments. Sometimes, however, despite the best intentions of all concerned, misunderstandings can occur. If your concern has not been resolved to your satisfaction, the following steps should be taken:

STEP ONE: Discuss your concern with a member of dealership management. Normally, concerns can be quickly resolved at that level. If the matter has already been reviewed with the sales, service or parts manager, contact the owner of the dealership or the general manager.

STEP TWO: If after contacting a member of dealership management, it appears your concern cannot be resolved by the dealership without further help, contact the Pontiac Customer Assistance Center by calling 1-800-762-2737. In Canada, contact GM of Canada Customer Communication Centre in Oshawa by calling 1-800-263-3777 (English) or 1-800-263-7854 (French).

We encourage you to call the toll-free number in order to give your inquiry prompt attention. Please have the following information available to give the Customer Assistance Representative:

- Vehicle Identification Number (VIN). This is available from the vehicle registration or title, or the plate at the top left of the instrument panel and visible through the windshield.
- Dealership name and location.
- Vehicle delivery date and present mileage.

When contacting Pontiac, please remember that your concern will likely be resolved at a dealer's facility. That is why we suggest you follow Step One first if you have a concern.

Downloaded from www.Manualslib.com manuals search engine

STEP THREE: Both General Motors and your dealer are committed to making sure you are completely satisfied with your new vehicle. However, if you continue to remain unsatisfied after following the procedure outlined in Steps One and Two, you should file with the BBB Auto Line Program to enforce any additional rights you may have. Canadian owners refer to your Warranty and Owner Assistance Information booklet for information on the Canadian Motor Vehicle Arbitration Plan (CAMVAP).

The BBB Auto Line Program is an out of court program administered by the Council of Better Business Bureaus to settle automotive disputes regarding vehicle repairs or the interpretation of the New Vehicle Limited Warranty. Although you may be required to resort to this informal dispute resolution program prior to filing a court action, use of the program is free of charge and your case will generally be heard within 40 days. If you do not agree with the decision given in your case, you may reject it and proceed with any other venue for relief available to you.

You may contact the BBB Auto Line Program using the toll-free telephone number or write them at the following address:

BBB Auto Line Program
Council of Better Business Bureaus, Inc.
4200 Wilson Boulevard
Suite 800
Arlington, VA 22203-1838

Telephone: 1-800-955-5100

This program is available in all 50 states and the District of Columbia. Eligibility is limited by vehicle age, mileage and other factors. General Motors reserves the right to change eligibility limitations and/or discontinue its participation in this program.

Downloaded from www.Manualslib.com manuals search engine

Online Owner Center

The Owner Center is a resource for your GM ownership needs. Specific vehicle information can be found in one place.

The Online Owner Center allows you to:

- Get e-mail service reminders.
- Access information about your specific vehicle, including tips and videos and an electronic version of this owner's manual (United States only).
- Keep track of your vehicle's service history and maintenance schedule.
- Find GM dealers for service nationwide.
- Receive special promotions and privileges only available to members (United States only).

Refer to the web for updated information.

To register your vehicle, visit www.MyGMLink.com (United States) or My GM Canada within www.gmcanada.com (Canada).

Customer Assistance for Text Telephone (TTY) Users

To assist customers who are deaf, hard of hearing, or speech-impaired and who use Text Telephones (TTYs), Pontiac has TTY equipment available at its Customer Assistance Center. Any TTY user can communicate with Pontiac by dialing: 1-800-833-PONT (7668). (TTY users in Canada can dial 1-800-263-3830.)

Customer Assistance Offices

Pontiac encourages customers to call the toll-free number for assistance. However, if a customer wishes to write or e-mail Pontiac, refer to the addresses below.

Downloaded from www.Manualslib.com manuals search engine

United States — Customer Assistance

Pontiac Customer Assistance Center
P.O. Box 33172
Detroit, MI 48232-5172

www.Pontiac.com
1-800-762-2737 or
1-800-833-7668 (For Text Telephone devices (TTYs))
Roadside Assistance: 1-800-ROADSIDE (762-3743)
Fax Number: 313-381-0022

From Puerto Rico:
1-800-496-9992 (English)
1-800-496-9993 (Spanish)
Fax Number: 313-381-0022

From U.S. Virgin Islands:
1-800-496-9994
Fax Number: 313-381-0022

Canada — Customer Assistance

General Motors of Canada Limited
Customer Communication Centre, 163-005
1908 Colonel Sam Drive
Oshawa, Ontario L1H 8P7

1-800-263-3777 (English)
1-800-263-7854 (French)
1-800-263-3830 (For Text Telephone devices (TTYs))
Roadside Assistance: 1-800-268-6800

Overseas — Customer Assistance

Please contact the local General Motors Business Unit.

Mexico, Central America and Caribbean Islands/Countries (Except Puerto Rico and U.S. Virgin Islands) — Customer Assistance

General Motors de Mexico, S. de R.L. de C.V.
Customer Assistance Center
Paseo de la Reforma #2740
Col. Lomas de Bezares
C.P. 11910, Mexico, D.F.
01-800-508-0000
Long Distance: 011-52-53 29 0 800

Downloaded from www.Manualslib.com manuals search engine

GM Mobility Reimbursement Program

This program, available to qualified applicants, can reimburse you up to $1,000 of the cost of eligible aftermarket adaptive equipment required for your vehicle, such as hand controls or a wheelchair/scooter lift.

The offer is available for a very limited period of time from the date of vehicle purchase/lease. For more details, or to determine your vehicle's eligibility, visit gmmobility.com or call the GM Mobility Assistance Center at 1-800-323-9935. Text telephone (TTY) users, call 1-800-833-9935.

GM of Canada also has a Mobility Program. Call 1-800-GM-DRIVE (463-7483) for details. TTY users call 1-800-263-3830.

Roadside Assistance Program

As the owner of a new Pontiac vehicle, you are automatically enrolled in the Pontiac Roadside Assistance program. This value-added service is intended to provide you with peace of mind as you drive in the city or travel the open road. Contact Pontiac's Roadside Assistance toll-free at **1-800-ROADSIDE (762-3743)**. Roadside Assistance Representatives are available 24 hours a day, 365 days a year.

We will provide the following services during the Bumper-to-Bumper warranty period, at no expense to you:

- **Fuel Delivery:** Delivery of enough fuel ($5 maximum) for the customer to get to the nearest service station.
- **Lock-out Service (identification required):** Replacement keys or locksmith service will be covered at no charge if you are unable to gain entry into your vehicle. Delivery of the replacement key will be covered within 10 miles (16 km).
- **Emergency Tow:** Tow to the nearest dealership for warranty service or in the event of a vehicle-disabling accident. Assistance provided when the vehicle is mired in sand, mud, or snow.

Downloaded from www.Manualslib.com manuals search engine

- **Flat Tire Change:** Installation of a spare tire will be covered at no charge. The customer is responsible for the repair or replacement of the tire if not covered by a warrantable failure.
- **Jump Start:** No-start occurrences which require a battery jump start will be covered at no charge.
- **Dealer Locator Service**

In many instances, mechanical failures are covered under Pontiac's Bumper-to-Bumper warranty. However, when other services are utilized, our Roadside Assistance Representatives will explain any payment obligations you might incur.

For prompt and efficient assistance when calling, please provide the following to the Roadside Assistance Representative:

- Your name, home address, and home telephone number.
- Telephone number of your location.
- Location of the vehicle.
- Model, year, color, and license plate number of the vehicle.
- Mileage, Vehicle Identification Number (VIN), and delivery date of the vehicle.
- Description of the problem.

While we hope you never have the occasion to use our service, it is added security while traveling for you and your family. Remember, we are only a phone call away. Pontiac Roadside Assistance: **1-800-ROADSIDE (762-3743)**, text telephone (TTY) users, call **1-888-889-2438**.

Pontiac reserves the right to limit services or reimbursement to an owner or driver when, in Pontiac's judgement, the claims become excessive in frequency or type of occurrence.

Roadside Assistance is not part of or included in the coverage provided by the New Vehicle Limited Warranty. Pontiac reserves the right to make any changes or discontinue the Roadside Assistance program at any time without notification.

Canadian Roadside Assistance

Vehicles purchased in Canada have an extensive roadside assistance program accessible from anywhere in Canada or the United States. Please refer to the Warranty and Owner Assistance Information book.

Downloaded from www.Manualslib.com manuals search engine

Courtesy Transportation

To enhance your ownership experience, we and our participating dealers are proud to offer Courtesy Transportation, a customer support program for new vehicles.

The Courtesy Transportation program is offered to customers in conjunction with the Bumper-to-Bumper coverage provided by the New Vehicle Limited Warranty. Several transportation options are available when warranty repairs are required. This will reduce your inconvenience during warranty repairs.

Scheduling Service Appointments

When your vehicle requires warranty service, you should contact your dealer and request an appointment. By scheduling a service appointment and advising your service consultant of your transportation needs, your dealer can help minimize your inconvenience.

If your vehicle cannot be scheduled into the service department immediately, keep driving it until it can be scheduled for service, unless, of course, the problem is safety-related. If it is, please call your dealership, let them know this, and ask for instructions.

If the dealer requests that you simply drop the vehicle off for service, you are urged to do so as early in the work day as possible to allow for the same day repair.

Transportation Options

Warranty service can generally be completed while you wait. However, if you are unable to wait, GM helps to minimize your inconvenience by providing several transportation options. Depending on the circumstances, your dealer can offer you one of the following:

Shuttle Service

Participating dealers can provide you with shuttle service to get you to your destination with minimal interruption of your daily schedule. This includes one-way or round trip shuttle service to a destination up to 10 miles (16 km) from the dealership.

Public Transportation or Fuel Reimbursement

If your vehicle requires overnight warranty repairs, reimbursement of public transportation expenses may be available, for up to a maximum of five days. In addition, should you arrange transportation through a friend or relative, reimbursement for reasonable fuel expenses may be available, up to a five-day maximum. Claim amounts should reflect actual costs and be supported by original receipts.

Downloaded from www.Manualslib.com manuals search engine

Courtesy Rental Vehicle

Your dealer may arrange to provide you with a courtesy rental vehicle or reimburse you for a rental vehicle that you obtain if your vehicle is kept for a warranty repair. Reimbursement will be limited to a maximum amount per day and must be supported by receipts. This requires that you sign and complete a rental agreement and meet state, local and rental vehicle provider requirements. Requirements vary and may include minimum age requirements, insurance coverage, credit card, etc. You are responsible for fuel usage charges and may also be responsible for taxes, levies, usage fees, excessive mileage or rental usage beyond the completion of the repair.

Generally it is not possible to provide a like-vehicle as a courtesy rental.

Additional Program Information

Courtesy Transportation is available during the Bumper-to-Bumper warranty coverage period, but it is not part of the New Vehicle Limited Warranty. A separate booklet entitled *Warranty and Owner Assistance Information* furnished with each new vehicle provides detailed warranty coverage information.

Courtesy Transportation is available only at participating dealers and all program options, such as shuttle service, may not be available at every dealer. Please contact your dealer for specific information about availability. All Courtesy Transportation arrangements will be administered by appropriate dealer personnel.

Canadian Vehicles: For warranty repairs during the Complete Vehicle Coverage period of the General Motors of Canada New Vehicle Limited Warranty, alternative transportation may be available under the Courtesy Transportation Program. Please consult your dealer for details.

General Motors reserves the right to unilaterally modify, change or discontinue Courtesy Transportation at any time and to resolve all questions of claim eligibility pursuant to the terms and conditions described herein at its sole discretion.

Downloaded from www.Manualslib.com manuals search engine

Vehicle Data Collection and Event Data Recorders

Your vehicle, like other modern motor vehicles, has a number of sophisticated computer systems that monitor and control several aspects of the vehicle's performance. Your vehicle uses on-board vehicle computers to monitor emission control components to optimize fuel economy, to monitor conditions for airbag deployment and, if so equipped, to provide anti-lock braking and to help the driver control the vehicle in difficult driving situations. Some information may be stored during regular operations to facilitate repair of detected malfunctions; other information is stored only in a crash event by computer systems, such as those commonly called event data recorders (EDR).

In a crash event, computer systems, such as the Airbag Sensing and Diagnostic Module (SDM) in your vehicle may record information about the condition of the vehicle and how it was operated, such as data related to engine speed, brake application, throttle position, vehicle speed, safety belt usage, airbag readiness, airbag performance, and the severity of a collision. This information has been used to improve vehicle crash performance and may be used to improve crash performance of future vehicles and driving safety.

Unlike the data recorders on many airplanes, these on-board systems do not record sounds, such as conversation of vehicle occupants.

To read this information, special equipment is needed and access to the vehicle or the device that stores the data is required. GM will not access information about a crash event or share it with others other than:

- with the consent of the vehicle owner or, if the vehicle is leased, with the consent of the lessee,
- in response to an official request of police or similar government office,
- as part of GM's defense of litigation through the discovery process, or
- as required by law.

In addition, once GM collects or receives data, GM may:

- use the data for GM research needs,
- make it available for research where appropriate confidentiality is to be maintained and need is shown, or
- share summary data which is not tied to a specific vehicle with non-GM organizations for research purposes.

Downloaded from www.Manualslib.com manuals search engine

Others, such as law enforcement, may have access to the special equipment that can read the information if they have access to the vehicle or the device that stores the data.

If your vehicle is equipped with OnStar®, please check the OnStar® subscription service agreement or manual for information on its operations and data collection.

Collision Damage Repair

If your vehicle is involved in a collision and it is damaged, have the damage repaired by a qualified technician using the proper equipment and quality replacement parts. Poorly performed collision repairs will diminish your vehicle's resale value, and safety performance can be compromised in subsequent collisions.

Collision Parts

Genuine GM Collision parts are new parts made with the same materials and construction methods as the parts with which your vehicle was originally built. Genuine GM Collision parts are your best choice to assure that your vehicle's designed appearance, durability and safety are preserved. The use of Genuine GM parts can help maintain your GM New Vehicle Warranty.

Recycled original equipment parts may also be used for repair. These parts are typically removed from vehicles that were total losses in prior accidents. In most cases, the parts being recycled are from undamaged sections of the vehicle. A recycled original equipment GM part, may be an acceptable choice to maintain your vehicle's originally designed appearance and safety performance, however, the history of these parts is not known. Such parts are not covered by your GM New Vehicle Limited Warranty, and any related failures are not covered by that warranty.

Aftermarket collision parts are also available. These are made by companies other than GM and may not have been tested for your vehicle. As a result, these parts may fit poorly, exhibit premature durability/corrosion problems, and may not perform properly in subsequent collisions. Aftermarket parts are not covered by your GM New Vehicle Limited Warranty, and any vehicle failure related to such parts are not covered by that warranty.

Downloaded from www.Manualslib.com manuals search engine

Repair Facility

GM also recommends that you choose a collision repair facility that meets your needs before you ever need collision repairs. Your GM dealer may have a collision repair center with GM-trained technicians and state of the art equipment, or be able to recommend a collision repair center that has GM-trained technicians and comparable equipment.

Insuring Your Vehicle

Protect your investment in your GM vehicle with comprehensive and collision insurance coverage. There are significant differences in the quality of coverage afforded by various insurance policy terms. Many insurance policies provide reduced protection to your GM vehicle by limiting compensation for damage repairs by using aftermarket collision parts. Some insurance companies will not specify aftermarket collision parts. When purchasing insurance, we recommend that you assure your vehicle will be repaired with GM original equipment collision parts. If such insurance coverage is not available from your current insurance carrier, consider switching to another insurance carrier.

If your vehicle is leased, the leasing company may require you to have insurance that assures repairs with Genuine GM Original Equipment Manufacturer (OEM) parts or Genuine Manufacturer replacement parts. Read your lease carefully, as you may be charged at the end of your lease for poor quality repairs.

If an Accident Occurs

Here is what to do if you are involved in an accident.

- Try to relax and then check to make sure you are all right. If you are uninjured, make sure that no one else in your vehicle, or the other vehicle, is injured.
- If there has been an injury, call 911 for help. Do not leave the scene of an accident until all matters have been taken care of. Move your vehicle only if its position puts you in danger or you are instructed to move it by a police officer.
- Give only the necessary and requested information to police and other parties involved in the accident. Do not discuss your personal condition, mental frame of mind, or anything unrelated to the accident. This will help guard against post-accident legal action.

Downloaded from www.Manualslib.com manuals search engine

- If you need roadside assistance, call GM Roadside Assistance. See *Roadside Assistance Program on page 7-6* for more information.
- If your vehicle cannot be driven, know where the towing service will be taking it. Get a card from the tow truck operator or write down the driver's name, the service's name, and the phone number.
- Remove any valuables from your vehicle before it is towed away. Make sure this includes your insurance information and registration if you keep these items in your vehicle.
- Gather the important information you will need from the other driver. Things like name, address, phone number, driver's license number, vehicle license plate, vehicle make, model and model year, Vehicle Identification Number (VIN), insurance company and policy number, and a general description of the damage to the other vehicle.
- If possible, call your insurance company from the scene of the accident. They will walk you through the information they will need. If they ask for a police report, phone or go to the police department headquarters the next day and you can get a copy of the report for a nominal fee. In some states with "no fault" insurance laws, a report may not be necessary. This is especially true if there are no injuries and both vehicles are driveable.
- Choose a reputable collision repair facility for your vehicle. Whether you select a GM dealer or a private collision repair facility to fix the damage, make sure you are comfortable with them. Remember, you will have to feel comfortable with their work for a long time.
- Once you have an estimate, read it carefully and make sure you understand what work will be performed on your vehicle. If you have a question, ask for an explanation. Reputable shops welcome this opportunity.

Downloaded from www.Manualslib.com manuals search engine

Managing the Vehicle Damage Repair Process

In the event that your vehicle requires damage repairs, GM recommends that you take an active role in its repair. If you have a pre-determined repair facility of choice, take your vehicle there, or have it towed there. Specify to the facility that any required replacement collision parts be original equipment parts, either new Genuine GM parts or recycled original GM parts. Remember, recycled parts will not be covered by your GM vehicle warranty.

Insurance pays the bill for the repair, but you must live with the repair. Depending on your policy limits, your insurance company may initially value the repair using aftermarket parts. Discuss this with your repair professional, and insist on Genuine GM parts. Remember if your vehicle is leased you may be obligated to have the vehicle repaired with Genuine GM parts, even if your insurance coverage does not pay the full cost.

If another party's insurance company is paying for the repairs, you are not obligated to accept a repair valuation based on that insurance company's collision policy repair limits, as you have no contractual limits with that company. In such cases, you can have control of the repair and parts choices as long as cost stays within reasonable limits.

Reporting Safety Defects

Reporting Safety Defects to the United States Government

If you believe that your vehicle has a defect which could cause a crash or could cause injury or death, you should immediately inform the National Highway Traffic Safety Administration (NHTSA), in addition to notifying General Motors.

If NHTSA receives similar complaints, it may open an investigation, and if it finds that a safety defect exists in a group of vehicles, it may order a recall and remedy campaign. However, NHTSA cannot become involved in individual problems between you, your dealer, or General Motors.

To contact NHTSA, you may either call the Auto Safety Hotline toll-free at 1-800-424-9393 (or 366-0123 in the Washington, D.C. area) or write to:

NHTSA, U.S. Department of Transportation
Washington, D.C. 20590

You can also obtain other information about motor vehicle safety from the hotline.

Downloaded from www.Manualslib.com manuals search engine

Reporting Safety Defects to the Canadian Government

If you live in Canada, and you believe that your vehicle has a safety defect, you should immediately notify Transport Canada, in addition to notifying General Motors of Canada Limited. You may call them at 1-800-333-0510 or write to:

Transport Canada
Place de Ville Tower C
330 Sparks Street
Ottawa, Ontario K1A 0N5

Reporting Safety Defects to General Motors

In addition to notifying NHTSA (or Transport Canada) in a situation like this, we certainly hope you'll notify us. Please call us at 1-800-762-2737, or write:

Pontiac Customer Assistance Center
P.O. Box 33172
Detroit, MI 48232-5172

In Canada, please call us at 1-800-263-3777 (English) or 1-800-263-7854 (French). Or, write:

General Motors of Canada Limited
Customer Communication Centre, 163-005
1908 Colonel Sam Drive
Oshawa, Ontario L1H 8P7

Service Publications Ordering Information

Service Manuals

Service Manuals have the diagnosis and repair information on engines, transmission, axle suspension, brakes, electrical, steering, body, etc.

Transmission, Transaxle, Transfer Case Unit Repair Manual

This manual provides information on unit repair service procedures, adjustments, and specifications for GM transmissions, transaxles, and transfer cases.

Downloaded from www.Manualslib.com manuals search engine

Service Bulletins

Service Bulletins give technical service information needed to knowledgeably service General Motors cars and trucks. Each bulletin contains instructions to assist in the diagnosis and service of your vehicle.

In Canada, information pertaining to Product Service Bulletins can be obtained by contacting your General Motors dealer or by calling 1-800-GM-DRIVE (1-800-463-7483).

Owner's Information

Owner publications are written specifically for owners and intended to provide basic operational information about the vehicle. The owner's manual will include the Maintenance Schedule for all models.

In-Portfolio: Includes a Portfolio, Owner's Manual, and Warranty Booklet.

RETAIL SELL PRICE: $35.00

Without Portfolio: Owner's Manual only.

RETAIL SELL PRICE: $25.00

Current and Past Model Order Forms

Service Publications are available for current and past model GM vehicles. To request an order form, please specify year and model name of the vehicle.

ORDER TOLL FREE: 1-800-551-4123 Monday-Friday 8:00 AM - 6:00 PM Eastern Time

For Credit Card Orders Only
(VISA-MasterCard-Discover), visit Helm, Inc.
on the World Wide Web at: www.helminc.com

Or you can write to:

Helm, Incorporated
P.O. Box 07130
Detroit, MI 48207

Prices are subject to change without notice and without incurring obligation. Allow ample time for delivery.

Note to Canadian Customers: All listed prices are quoted in U.S. funds. Canadian residents are to make checks payable in U.S. funds.

Downloaded from www.Manualslib.com manuals search engine

A

Accessories and Modifications 5-3
Accessory Power Outlet(s) 3-18
Adding Equipment to Your Airbag-Equipped
  Vehicle 1-62
Additives, Fuel 5-6
Add-On Electrical Equipment 5-83
Air Cleaner/Filter, Engine 5-18
Air Conditioning 3-19
Airbag
  Readiness Light 3-26
Airbag Sensing and Diagnostic Module (SDM) 7-10
Airbag System 1-53
  Adding Equipment to Your Airbag-Equipped
    Vehicle 1-62
  How Does an Airbag Restrain? 1-59
  Servicing Your Airbag-Equipped Vehicle 1-61
  What Makes an Airbag Inflate? 1-59
  What Will You See After an Airbag Inflates? 1-60
  When Should an Airbag Inflate? 1-58
  Where Are the Airbags? 1-55
All-Wheel Drive 5-40
All-Wheel-Drive (AWD) System 4-10
Antenna, Fixed Mast 3-81
Antenna, XM™ Satellite Radio Antenna System 3-81
Anti-Lock Brake System (ABS) 4-7
Anti-Lock Brake, System Warning Light 3-29
Appearance Care
  Aluminum Wheels 5-79
  Care of Safety Belts 5-77
  Chemical Paint Spotting 5-80
  Cleaning Exterior Lamps/Lenses 5-78
  Cleaning the Inside of Your Vehicle 5-74
  Fabric/Carpet 5-75
  Finish Care 5-78
  Finish Damage 5-80
  Instrument Panel, Vinyl, and Other
    Plastic Surfaces 5-76
  Leather 5-76
  Sheet Metal Damage 5-80
  Tires 5-80
  Underbody Maintenance 5-80
  Vehicle Care/Appearance Materials 5-81
  Washing Your Vehicle 5-77
  Weatherstrips 5-77
  Windshield and Wiper Blades 5-78
Ashtray(s) 3-19
Audio System(s) 3-38
  Audio Steering Wheel Controls 3-79
  Care of Your CD Player 3-81
  Care of Your CDs 3-80
  Chime Level Adjustment 3-81
  Fixed Mast Antenna 3-81
  Radio with CD 3-40, 3-50
  Radio with Six-Disc CD 3-65

Downloaded from www.Manualslib.com manuals search engine

Audio System(s) (cont.)
Setting the Time 3-40
Theft-Deterrent Feature 3-79
Understanding Radio Reception 3-80
XM™ Satellite Radio Antenna System 3-81
Automatic Door Lock 2-8
Automatic Headlamp System 3-15
Automatic Transaxle
Fluid 5-21
Operation 2-19

B

Battery 5-34
Run-Down Protection 3-18
Battery Warning Light 3-27
Before Leaving on a Long Trip 4-22
Brake
Anti-Lock Brake System (ABS) 4-7
Emergencies 4-8
Parking 2-22
System Warning Light 3-28
Brakes 5-32
Braking 4-6
Braking in Emergencies 4-8
Break-In, New Vehicle 2-15
Bulb Replacement 5-42
Halogen Bulbs 5-42
Bulb Replacement (cont.)
Headlamps, Front Turn Signal, Sidemarker, and Parking Lamps 5-42
Replacement Bulbs 5-44
Taillamps, Turn Signal, Stoplamps and Back-up Lamps 5-43
Buying New Tires 5-56

C

California Fuel 5-6
California Proposition 65 Warning 5-4
Canadian Owners ii
Capacities and Specifications 5-88
Carbon Monoxide 2-10, 2-25, 4-26, 4-38
Care of
Safety Belts 5-77
Your CD Player 3-81
Your CDs 3-80
Cargo Lamp 3-17
Center Console Storage Area 2-35
Chains, Tire 5-61
Check
Engine Light 3-32
Checking Things Under the Hood 5-10
Chemical Paint Spotting 5-80
Child Restraints
Child Restraint Systems 1-36
Infants and Young Children 1-33

Downloaded from www.Manualslib.com manuals search engine

Child Restraints (cont.)
Lower Anchors and Tethers for Children 1-42
Older Children 1-30
Securing a Child Restraint in a Rear Seat Position 1-47
Securing a Child Restraint in the Right Front Seat Position 1-50
Where to Put the Restraint 1-40
Chime Level Adjustment 3-81
Cigarette Lighter 3-19
Cleaning
Aluminum Wheels 5-79
Exterior Lamps/Lenses 5-78
Fabric/Carpet 5-75
Finish Care 5-78
Inside of Your Vehicle 5-74
Instrument Panel, Vinyl, and Other Plastic Surfaces 5-76
Leather 5-76
Tires 5-80
Underbody Maintenance 5-80
Washing Your Vehicle 5-77
Weatherstrips 5-77
Windshield and Wiper Blades 5-78
Climate Control System 3-19
Air Filter, Passenger Compartment 3-22
Outlet Adjustment 3-22
Collision Damage Repair 7-11
Comfort Guides, Rear Safety Belt 1-27
Compact Spare Tire 5-73
Content Theft-Deterrent 2-13
Control of a Vehicle 4-5
Convenience Net 2-40
Coolant
Engine Temperature Gage 3-31
Engine Temperature Warning Light 3-31
Heater, Engine 2-18
Cooling System 5-26
Cruise Control 3-11
Cupholder(s) 2-34
Customer Assistance Information
Courtesy Transportation 7-8
Customer Assistance for Text Telephone (TTY) Users 7-4
Customer Assistance Offices 7-4
Customer Satisfaction Procedure 7-2
GM Mobility Reimbursement Program 7-6
Reporting Safety Defects to General Motors 7-15
Reporting Safety Defects to the Canadian Government 7-15
Reporting Safety Defects to the United States Government 7-14
Roadside Assistance Program 7-6
Service Publications Ordering Information 7-15

Downloaded from www.Manualslib.com manuals search engine

D

Daytime Running Lamps 3-14
Daytime Running Lamps Indicator Light 3-37
Defensive Driving 4-2
Delayed Locking 2-7
Doing Your Own Service Work 5-4
Dome Lamp 3-16
Door
  Automatic Door Lock 2-8
  Delayed Locking 2-7
  Locks 2-6
  Power Door Locks 2-7
  Programmable Automatic Door Unlock 2-8
  Rear Door Security Locks 2-8
Driver
  Position, Safety Belt 1-18
  Seat Height Adjuster 1-3
  Six-Way Power Seat 1-3
Driving
  At Night 4-16
  City 4-20
  Defensive 4-2
  Drunken 4-3
  Freeway 4-21
  Hill and Mountain Roads 4-24
  In Rain and on Wet Roads 4-17
  Rocking Your Vehicle to Get it Out 4-31
  Winter 4-26

E

Electrical System
  Add-On Equipment 5-83
  Engine Compartment Fuse Block 5-85
  Fuses and Circuit Breakers 5-83
  Instrument Panel Fuse Block 5-84
  Power Windows and Other Power Options 5-83
  Windshield Wiper Fuses 5-83
Engine
  Air Cleaner/Filter 5-18
  Battery 5-34
  Change Engine Oil Light 3-36
  Check and Service Engine Soon Light 3-32
  Coolant 5-21
  Coolant Heater 2-18
  Coolant Temperature Gage 3-31
  Coolant Temperature Warning Light 3-31
  Engine Compartment Overview 5-12
  Exhaust 2-25
  Oil 5-13
  Oil Life System 5-16
  Overheated Protection Operating Mode 5-25
  Overheating 5-23
  Reduced Power Light 3-36
  Starting 2-17
Entry Lighting 3-17
Event Data Recorders (EDR) 7-10
Extender, Safety Belt 1-30

Downloaded from www.Manualslib.com manuals search engine

F

Filter
Engine Air Cleaner 5-18
Finish Damage 5-80
Fixed Mast Antenna 3-81
Flash-to-Pass 3-8
Flat Tire 5-62
Flat Tire, Changing 5-62
Flat Tire, Storing 5-72
Fluid
Automatic Transaxle 5-21
Windshield Washer 5-31
Fog Lamps 3-15
Folding Rear Seat 1-10
Folding Seatback, Passenger 1-9
Fuel 5-5
Additives 5-6
California Fuel 5-6
Filling a Portable Fuel Container 5-10
Filling Your Tank 5-8
Fuels in Foreign Countries 5-7
Gage 3-37
Gasoline Octane 5-5
Gasoline Specifications 5-5
Low Warning Light 3-38
Fuses
Engine Compartment Fuse Block 5-85
Fuses and Circuit Breakers 5-83
Instrument Panel Fuse Block 5-84
Windshield Wiper 5-83

G

Gage
Engine Coolant Temperature 3-31
Fuel 3-37
Speedometer 3-25
Tachometer 3-25
Gasoline
Octane 5-5
Specifications 5-5
Gate Ajar Light 3-37
Glove Box 2-34
GM Mobility Reimbursement Program 7-6

H

Hazard Warning Flashers 3-6
Head Restraints 1-8
Headlamps 3-14
Automatic Headlamp System 3-15
Bulb Replacement 5-42

Downloaded from www.Manualslib.com manuals search engine

Headlamps (cont.)
Daytime Running Lamps 3-14
Flash-to-Pass 3-8
Halogen Bulbs 5-42
Headlamps, Front Turn Signal, Sidemarker, and Parking Lamps 5-42
High/Low Beam Changer 3-8
On Reminder 3-14
Heated Seats 1-4
Heater 3-19
Height Adjuster, Driver Seat 1-3
Highbeam On Light 3-37
Highway Hypnosis 4-23
Hill and Mountain Roads 4-24
Hood
Checking Things Under 5-10
Release 5-11
Horn 3-6
How to Use This Manual ii
How to Wear Safety Belts Properly 1-17

I

Ignition Positions 2-16
Infants and Young Children, Restraints 1-33
Inflation - Tire Pressure 5-52
Instrument Panel
Overview 3-4
Instrument Panel (I/P)
Brightness 3-16
Cluster 3-24

J

Jump Starting 5-34

K

Keyless Entry System 2-3
Keys 2-2

L

Labeling, Tire Sidewall 5-47
Lamps
Battery Run-Down Protection 3-18
Cargo 3-17
Dome 3-16
Fog 3-15
Map 3-17
LATCH System
Child Restraints 1-42
Liftgate 2-10
Light
Airbag Readiness 3-26
Anti-Lock Brake System Warning 3-29

Downloaded from www.Manualslib.com manuals search engine

Light (cont.)
Battery Warning 3-27
Brake System Warning 3-28
Change Engine Oil 3-36
Daytime Running Lamps Indicator 3-37
Engine Coolant Temperature Warning 3-31
Gate Ajar 3-37
Highbeam On 3-37
Low Fuel Warning 3-38
Low Traction 3-30
Malfunction Indicator 3-32
Oil Pressure 3-35
Reduced Engine Power 3-36
Safety Belt Reminder 3-26
Security 3-36
TCS Warning Light 3-30
Traction Control System (TCS) Warning 3-30
Lighting
Entry 3-17
Loading Your Vehicle 4-31
Lockout Protection 2-9
Locks
Automatic Door Lock 2-8
Delayed Locking 2-7
Door 2-6
Lockout Protection 2-9
Power Door 2-7
Programmable Automatic Door Unlock 2-8
Rear Door Security Locks 2-8
Loss of Control 4-15
Low Fuel Warning Light 3-38
Low Traction Light 3-30
Luggage Carrier 2-35
Lumbar
Manual Controls 1-4

M

Maintenance Schedule
Additional Required Services 6-6
At Each Fuel Fill 6-8
At Least Once a Month 6-9
At Least Once a Year 6-9
Introduction 6-2
Maintenance Footnotes 6-7
Maintenance Record 6-14
Maintenance Requirements 6-2
Normal Maintenance Replacement Parts 6-13
Owner Checks and Services 6-8
Recommended Fluids and Lubricants 6-11
Scheduled Maintenance 6-4
Using 6-2
Your Vehicle and the Environment 6-2
Malfunction Indicator Light 3-32
Manual Lumbar Controls 1-4
Manual Seats 1-2
Map Lamps 3-17

Downloaded from www.Manualslib.com manuals search engine

Mirrors
Automatic Dimming Rearview with Compass and Temperature Display 2-29
Automatic Dimming Rearview with OnStar®, Compass and Temperature Display 2-27
Manual Rearview Mirror 2-27
Outside Convex Mirrors 2-32
Outside Power Mirrors 2-31
MyGMLink.com 7-4

N

New Vehicle Break-In 2-15
Normal Maintenance Replacement Parts 6-13

O

Odometer 3-25
Odometer, Trip 3-25
Off-Road Recovery 4-13
Oil
Change Engine Oil Light 3-36
Engine 5-13
Pressure Light 3-35
Oil, Engine Oil Life System 5-16
Older Children, Restraints 1-30
Online Owner Center 7-4
OnStar® System, see OnStar® Manual 2-32
Other Warning Devices 3-6
Outlet Adjustment 3-22
Outside
Convex Mirrors 2-32
Power Mirrors 2-31
Overheated Engine Protection Operating Mode 5-25
Owner Checks and Services 6-8
Owners, Canadian ii

P

Park (P)
Shifting Into 2-23
Shifting Out of 2-24
Parking
Brake 2-22
Over Things That Burn 2-25
Passenger Compartment Air Filter 3-22
Passing 4-14
Passlock® 2-15
Power 1-3
Accessory Outlet(s) 3-18
Door Locks 2-7
Electrical System 5-83
Reduced Engine Light 3-36
Retained Accessory (RAP) 2-17
Windows 2-12
Pretensioners, Safety Belt 1-29
Programmable Automatic Door Unlock 2-8

Downloaded from www.Manualslib.com manuals search engine

Q

Questions and Answers About Safety Belts 1-17

R

Radios 3-38
Care of Your CD Player 3-81
Care of Your CDs 3-80
Radio with CD 3-40, 3-50
Radio with Six-Disc CD 3-65
Setting the Time 3-40
Theft-Deterrent 3-79
Understanding Reception 3-80
Rear Compartment Storage Panel/Cover 2-37
Rear Door Security Locks 2-8
Rear Safety Belt Comfort Guides 1-27
Rear Seat Passengers, Safety Belts 1-25
Rear Windshield Washer/Wiper 3-10
Rearview Mirror, Automatic Dimming with Compass and Temperature Display 2-29
Rearview Mirror, Automatic Dimming with OnStar®, Compass and Temperature Display 2-27
Rearview Mirrors 2-27
Reclining Seatbacks 1-5
Recommended Fluids and Lubricants 6-11
Recreational Vehicle Towing 4-36
Reduced Engine Power Light 3-36
Remote Keyless Entry System 2-3
Remote Keyless Entry System, Operation 2-4
Removing the Flat Tire and Installing the Spare Tire 5-65
Removing the Spare Tire and Tools 5-64
Replacement Bulbs 5-44
Reporting Safety Defects
Canadian Government 7-15
General Motors 7-15
United States Government 7-14
Restraint System Check
Checking the Restraint Systems 1-62
Replacing Restraint System Parts After a Crash 1-63
Retained Accessory Power (RAP) 2-17
Right Front Passenger Position, Safety Belts 1-25
Roadside Assistance Program 7-6
Rocking Your Vehicle to Get it Out 4-31
Running the Engine While Parked 2-26

S

Safety Belt
Pretensioners 1-29
Reminder Light 3-26
Safety Belts
Care of 5-77
Driver Position 1-18
How to Wear Safety Belts Properly 1-17

Downloaded from www.Manualslib.com manuals search engine

Safety Belts (cont.)
Questions and Answers About Safety Belts 1-17
Rear Safety Belt Comfort Guides 1-27
Rear Seat Passengers 1-25
Right Front Passenger Position 1-25
Safety Belt Extender 1-30
Safety Belt Use During Pregnancy 1-24
Safety Belts Are for Everyone 1-12
Shoulder Belt Height Adjuster 1-24
Safety Warnings and Symbols iii
Scheduled Maintenance 6-4
Seatback, Folding Passenger 1-9
Seats
Driver Seat Height Adjuster 1-3
Head Restraints 1-8
Heated Seats 1-4
Manual 1-2
Manual Lumbar 1-4
Passenger Folding Seatback 1-9
Reclining Seatbacks 1-5
Six-Way Power Driver 1-3
Split Folding Rear Seat 1-10
Securing a Child Restraint
Rear Seat Position 1-47
Right Front Seat Position 1-50
Security Light 3-36
Service 5-3
Accessories and Modifications 5-3
Adding Equipment to the Outside of
Your Vehicle 5-5
Service (cont.)
California Proposition 65 Warning 5-4
Doing Your Own Work 5-4
Engine Soon Light 3-32
Publications Ordering Information 7-15
Servicing Your Airbag-Equipped Vehicle 1-61
Setting the Time 3-40
Sheet Metal Damage 5-80
Shifting Into Park (P) 2-23
Shifting Out of Park (P) 2-24
Shoulder Belt Height Adjuster 1-24
Signals, Turn and Lane-Change 3-8
Spare Tire
Compact 5-73
Installing 5-65
Removing 5-64
Storing 5-72
Specifications, Capacities 5-88
Speedometer 3-25
Split Folding Rear Seat 1-10
Starting Your Engine 2-17
Steering 4-11
Steering Wheel Controls, Audio 3-79
Steering Wheel, Tilt Wheel 3-7
Storage Areas
Center Console Storage Area 2-35
Convenience Net 2-40
Cupholder(s) 2-34
Glove Box 2-34
Luggage Carrier 2-35

Downloaded from www.Manualslib.com manuals search engine

Storage Areas (cont.)
Rear Compartment Storage Panel/Cover 2-37
Table 2-39
Stuck in Sand, Mud, Ice or Snow 4-30
Sun Visors 2-12
Sunroof 2-40

T

Table 2-39
Tachometer 3-25
Taillamps
Turn Signal, Stoplamps and Back-up Lamps 5-43
TCS Warning Light 3-30
Theft-Deterrent, Radio 3-79
Theft-Deterrent Systems 2-13
Content Theft-Deterrent 2-13
Passlock® 2-15
Tilt Wheel 3-7
Tires 5-46
Aluminum Wheels, Cleaning 5-79
Buying New Tires 5-56
Chains 5-61
Changing a Flat Tire 5-62
Cleaning 5-80
Compact Spare Tire 5-73
Different Size 5-57
Tires (cont.)
If a Tire Goes Flat 5-62
Inflation - Tire Pressure 5-52
Inspection and Rotation 5-54
Installing the Spare Tire 5-65
Removing the Flat Tire 5-65
Removing the Spare Tire and Tools 5-64
Storing a Flat or Spare Tire and Tools 5-72
Tire Sidewall Labeling 5-47
Tire Terminology and Definitions 5-50
Uniform Tire Quality Grading 5-58
Wheel Alignment and Tire Balance 5-59
Wheel Replacement 5-60
When It Is Time for New Tires 5-55
Towing
Recreational Vehicle 4-36
Towing a Trailer 4-38
Your Vehicle 4-36
Traction
Control System (TCS) 4-9
Control System Warning Light 3-30
Low Light 3-30
Transaxle
Fluid, Automatic 5-21
Transaxle Operation, Automatic 2-19
Trip Odometer 3-25
Turn and Lane-Change Signals 3-8
Turn Signal/Multifunction Lever 3-7

Downloaded from www.Manualslib.com manuals search engine

U

Understanding Radio Reception 3-80
Uniform Tire Quality Grading 5-58

V

Vehicle
  Control 4-5
  Damage Warnings iv
  Loading 4-31
  Symbols iv
Vehicle Data Collection and Event Data
  Recorders 7-10
Vehicle Identification
  Number (VIN) 5-82
  Service Parts Identification Label 5-82
Ventilation Adjustment 3-22
Visors 2-12

W

Warning Lights, Gages and Indicators 3-23
Warnings
  Hazard Warning Flashers 3-6
  Other Warning Devices 3-6
  Safety and Symbols iii
  Vehicle Damage iv
Wheels
  Alignment and Tire Balance 5-59
  Different Size 5-57
  Replacement 5-60
Where to Put the Restraint 1-40
Windows 2-11
  Power 2-12
Windshield
  Washer 3-10
  Washer Fluid 5-31
  Wiper Blade Replacement 5-45
  Wiper Blades, Cleaning 5-78
  Wiper Fuses 5-83
  Wipers 3-8
Windshield, Rear Washer/Wiper 3-10
Winter Driving 4-26

X

XM™ Satellite Radio Antenna System 3-81

Y

Your Vehicle and the Environment 6-2

Downloaded from www.Manualslib.com manuals search engine